azienda casa emilia - romagna
provincia di bologna

Piazza della Resistenza 4 - 40122
Bologna - BO
tel. 051.292111 fax 051.554335
Codice Fiscale - Partita IVA e Registro
Imprese di Bologna n. 00322270372
sito web: www.acerbologna.it
posta elettronica: info@acerbologna.it

INTERVENTO

**FONDO COMPLEMENTARE AL PIANO NAZIONALE DI RIPRESA E RESILIENZA**
**PROGRAMMA "SICURO, VERDE E SOCIALE: RIQUALIFICAZIONE DELL'EDILIZIA RESIDENZIALE PUBBLICA"**

# PROGETTO DI MANUTENZIONE STRAORDINARIA PER IL RESTAURO E RISANAMENTO CONSERVATIVO DI DUE CASAMENTI A CORTE SITI IN COMUNE DI BOLOGNA LOCALITA' CIRENAICA. VIA LIBIA CIV. 29÷51 PER COMPLESSIVI 70 ALLOGGI DI ERP CON RELATIVE PERTINENZE E PARTI COMUNI

LOTTO **3053/PN_2**

## PROGETTO ESECUTIVO

| TAV. | OGGETTO | DATA |
|---|---|---|
| TAB_07 | TABULATI DI CALCOLO<br>CIVICO 37<br>STATO DI FATTO | Settembre 2022 |
| SCALA | | N. DISEGNO |

| VERSIONE | DESCRIZIONE | DATA | REDATTO | VERIFICATO | | APPROVATO |
|---|---|---|---|---|---|---|
| 00 | PRIMA EMISSIONE | Settembre 2022 | F. DALMONTE | N. LEONE | | N. LEONE |
| 01 | | | | | | |
| 02 | | | | | | |
| 03 | | | | | | |

Il Progettista Architettonico

Arch. Francesca Tovoli
Ing. Nicola Leone

SIDEL Ingegneria Srl
Via Isonzo, 13
40055 Villanova di Castenaso (BO)

Il Progettista Strutturale

Ing. Nicola Leone

SIDEL Ingegneria Srl
Via Isonzo, 13
40055 Villanova di Castenaso (BO)

Il Progettista Impianti Elettrici

Ing. Nicola Leone

SIDEL Ingegneria Srl
Via Isonzo, 13
40055 Villanova di Castenaso (BO)

Il Progettista Impianti Meccanici

Ing. Nicola Leone

SIDEL Ingegneria Srl
Via Isonzo, 13
40055 Villanova di Castenaso (BO)

Il Coordinatore della Sicurezza in Fase Progettuale

Ing. Nicola Leone

SIDEL Ingegneria Srl
Via Isonzo, 13
40055 Villanova di Castenaso (BO)

Il Coordinatore per la progettazione

Ing. Nicola Leone

SIDEL Ingegneria Srl
Via Isonzo, 13
40055 Villanova di Castenaso (BO)

Collaboratori Progettisti:

Ing. Marco Venturini
Ing. Federica Dalmonte
Geom. Alessio Breviglieri
Arch. Domenico Conaci
Geom. Arianna Danieli
P. I. Andrea Gamberini
Ing. Cesare Orsini

Responsabile del Procedimento

Ing. Antonio Frighi

ACER Bologna
Piazza della Resistenza, 4
40122 Bologna

Il Dirigente Responsabile del Servizio Tecnico

Ing. Antonio Frighi

ACER Bologna
Piazza della Resistenza, 4
40122 Bologna

Il Direttore Generale

Avv. Francesco Nitti

ACER Bologna
Piazza della Resistenza, 4
40122 Bologna

Il Presidente

Marco Bertuzzi

ACER Bologna
Piazza della Resistenza, 4
40122 Bologna

SIDEL
INGEGNERIA

# TABULATI DI CALCOLO
# CIVICO 37
# STATO DI FATTO

# Sommario


1 Risultati numerici ..... 3
1.1 Sollecitazioni ..... 3
1.1.1 Sollecitazioni aste ..... 3
1.1.1.1 Convenzioni di segno aste ..... 3
1.1.1.2 Sollecitazioni estreme aste ..... 5
1.1.2 Sollecitazioni gusci ..... 6
1.1.2.1 Convenzioni di segno gusci ..... 6
1.1.2.2 Sollecitazioni estreme gusci ..... 8
1.1.2.3 Sollecitazioni estreme gusci non verticali ..... 9
1.1.2.4 Sollecitazioni estreme gusci verticali ..... 11
1.1.3 Sollecitazioni gusci armati ..... 12
1.1.3.1 Convenzioni di segno gusci ..... 12
1.1.4 Sollecitazioni gusci muratura ..... 14
1.1.4.1 Convenzioni di segno gusci muratura ..... 14
1.1.5 Sollecitazioni aste in muratura ..... 16
1.1.5.1 Convenzioni di segno aste ..... 16
1.1.6 Sollecitazioni aste in muratura FRCM ..... 18
1.1.6.1 Convenzioni di segno aste ..... 18
1.1.7 Sollecitazioni aste in muratura armata ..... 21
1.1.7.1 Convenzioni di segno aste ..... 21
1.2 Reazioni nodali ..... 23
1.2.1 Reazioni nodali estreme ..... 23
1.2.2 Reazioni nodali in combinazioni di carico ..... 24
1.3 Risposta modale ..... 598
1.4 Equilibrio globale forze ..... 599
1.5 Risposta di spettro ..... 600
1.6 Annotazioni solutore ..... 600
1.7 Statistiche soluzione ..... 601

# 1 Risultati numerici

## 1.1 Sollecitazioni

### 1.1.1 Sollecitazioni aste

#### 1.1.1.1 Convenzioni di segno aste

Le abbreviazioni relative alle sollecitazioni sugli elementi aste sono da intendersi:

- F1 (N): sforzo normale nell'asta;
- F2: sforzo di taglio agente nella direzione dell'asse locale 2;
- F3: sforzo di taglio agente nella direzione dell'asse locale 3;
- M1 (Mt): momento attorno all'asse locale 1; equivale al momento torcente;
- M2: momento attorno all'asse locale 2;
- M3: momento attorno all'asse locale 3.

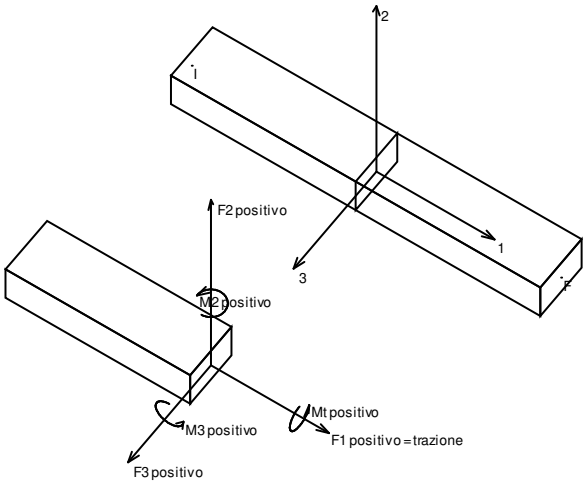


La convenzione sui segni per i parametri di sollecitazione delle aste è la seguente:
presa un'asta con nodo iniziale i e nodo finale f, asse 1 che va da i a f, assi 2 e 3 presi secondo quanto indicato nei paragrafi successivi relativi al sistema locale delle aste sezionando l'asta in un punto e considerando la sezione sinistra del punto in cui si è effettuato il taglio (sezione da cui esce il versore asse 1) i parametri di sollecitazione sono positivi se hanno verso e direzione concordi con il sistema di riferimento locale dell'asta 1, 2, 3 (per i momenti si adotta la regola della mano destra).

Il sistema è definito diversamente per tre categorie di aste, a seconda che siano originate da:

- aste verticali ad esempio pilastri e colonne;
- aste non verticali non di c.a., ad esempio travi di acciaio o legno;
- aste non verticali in c.a.: travi in c.a. di piano, falda o a quota generica.

Nel seguito si indica con 1, 2 e 3 il sistema locale dell'asta che non sempre coincide con gli assi principali della sezione. Si ricorda che per assi principali si intendono gli assi rispetto a cui si ha il raggio di inerzia minimo e massimo. Gli assi 1, 2 e 3 rispettano la regola della mano destra.

Sistema locale aste verticali

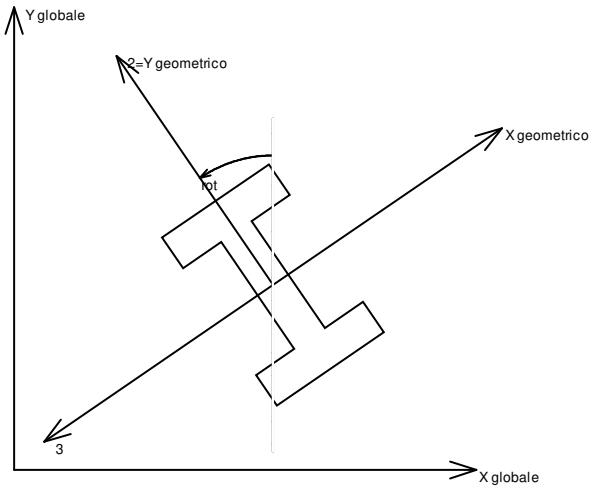


Nella figura si considera l'asse 1 uscente dal foglio (l'osservatore guarda in direzione opposta a quella dell'asse 1).

Sistema locale aste non verticali

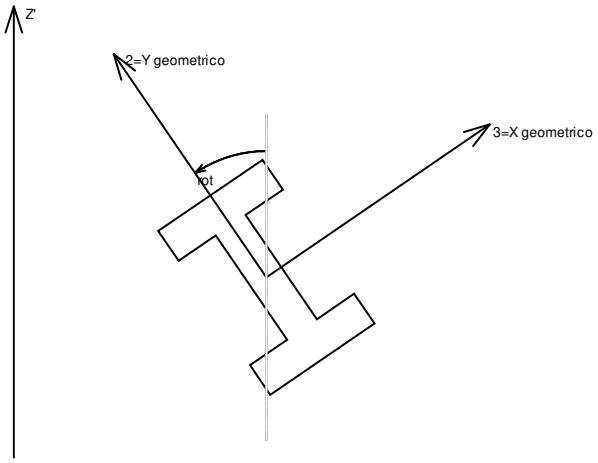


Nella figura si considera l'asse 1 entrante nel foglio (l'osservatore guarda in direzione coincidente a quella dell'asse 1).

L'asse Z' è illustrato nella figura seguente dove:

- P1 è il punto di inserimento iniziale dell'asta;
- P2 è il punto di inserimento finale dell'asta;
- N è la normale al piano o falda di inserimento;

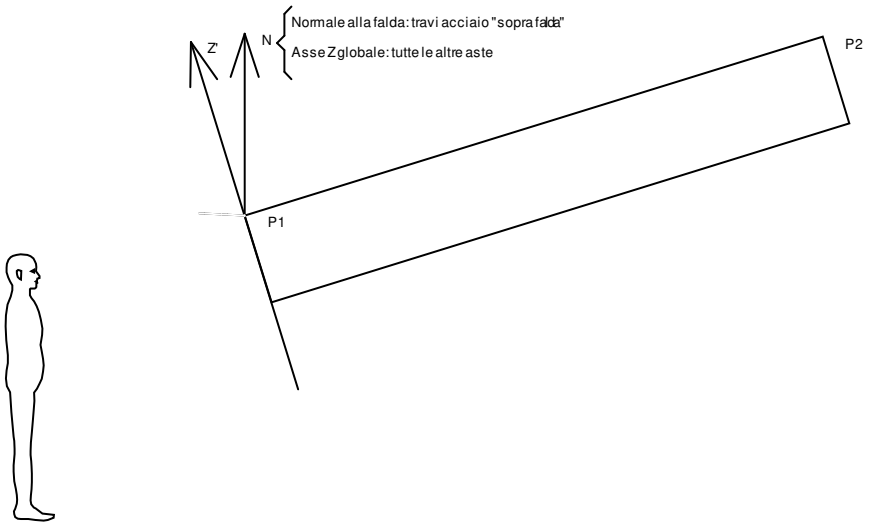


Z' è quindi l'intersezione tra il piano passante per P1, P2 contenente N e il piano della sezione iniziale dell'asta.

Sistema locale aste derivanti da travi in c.a.

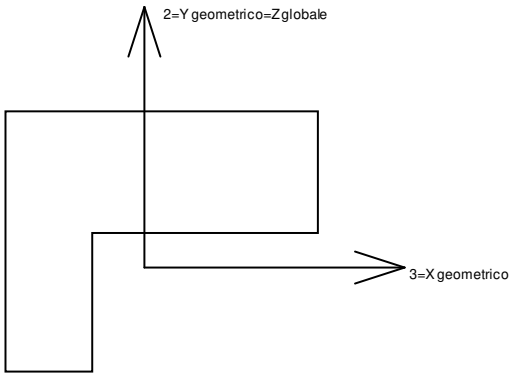


Nella figura si considera l'asse 1 entrante nel foglio (l'osservatore guarda in direzione coincidente a quella dell'asse 1). L'asse 2 è sempre verticale e quindi coincidente con l'asse Z globale nonché con l'asse y geometrico. L'asse 3 coincide con l'asse x geometrico. . Si sottolinea il fatto che gli assi 2 e 3 non corrispondono agli assi principali della sezione.

#### 1.1.1.2 Sollecitazioni estreme aste

***Asta***: *elemento asta a cui si riferiscono le sollecitazioni.*
***Ind.***: *indice dell'asta.*
***Cont.***: *contesto a cui si riferisce la sollecitazione*
***N.br.***: *nome breve della condizione o combinazione di carico.*
***Pos.***: *numero della sezione all'interno dell'asta (tra 1 e 31, dove 1 corrisponde alla sezione al nodo iniziale, 16 è la sezione in mezzeria, 31 corrisponde alla sezione al nodo finale).*
***Posizione***: *posizione a cui si riferisce la sollecitazione dell'asta.*
***X***: *componente X della posizione a cui si riferisce la sollecitazione dell'asta. [m]*
***Y***: *componente Y della posizione a cui si riferisce la sollecitazione dell'asta. [m]*
***Z***: *componente Z della posizione a cui si riferisce la sollecitazione dell'asta. [m]*
***Soll.traslazionale***: *componente traslazionale della sollecitazione dell'asta.*
***F1***: *componente F1 della sollecitazione dell'asta. [kN]*
***F2***: *componente F2 della sollecitazione dell'asta. [kN]*
***F3***: *componente F3 della sollecitazione dell'asta. [kN]*
***Soll.rotazionale***: *componente rotazionale della sollecitazione dell'asta.*
***M1***: *componente M1 della sollecitazione dell'asta. [kN*m]*
***M2***: *componente M2 della sollecitazione dell'asta. [kN*m]*
***M3***: *componente M3 della sollecitazione dell'asta. [kN*m]*

### Sollecitazioni con sforzo normale (N) minimo

Vengono mostrate le sole 5 aste più sollecitate.

| Asta | Cont. | Pos. | Posizione | | | Soll.traslazionale | | | Soll.rotazionale | | |
|---|---|---|---|---|---|---|---|---|---|---|---|
| Ind. | N.br. | | X | Y | Z | F1 | F2 | F3 | M1 | M2 | M3 |
| 118 | SLU 79 | 31 | -22.32 | -1.07 | 16.95 | -55.68 | 1.01 | 4.88 | -0.204 | 5.5836 | 15.1015 |
| 193 | SLV 7 | 1 | -13.72 | -3.49 | 15.61 | -54.91 | -0.85 | -0.18 | 0.0032 | 0.3153 | -1.1155 |
| 100 | SLV 7 | 31 | -19.12 | 6.14 | 15.89 | -53.83 | 3.06 | 1.49 | 0.0807 | 0.9867 | -2.9926 |
| 101 | SLV 7 | 31 | -19.56 | 6.6 | 15.69 | -53.79 | 6.71 | -1.3 | 0.5864 | 0.3178 | -4.6808 |
| 99 | SLV 7 | 31 | -18.45 | 5.43 | 16.19 | -52.99 | 3.13 | 1.29 | -0.2085 | 1.0023 | 1.9427 |

### Sollecitazioni con sforzo normale (N) massimo

Vengono mostrate le sole 5 aste più sollecitate.

| Asta | Cont. | Pos. | Posizione | | | Soll.traslazionale | | | Soll.rotazionale | | |
|---|---|---|---|---|---|---|---|---|---|---|---|
| Ind. | N.br. | | X | Y | Z | F1 | F2 | F3 | M1 | M2 | M3 |
| 193 | SLV 9 | 31 | -13.72 | -0.97 | 16.77 | 54.66 | -0.46 | 0.15 | -0.0029 | 0.1653 | 0.793 |
| 220 | SLV 9 | 31 | -17.77 | 3.92 | 16.67 | 40.33 | -2.47 | 0.98 | -0.1381 | 0.964 | 2.4564 |
| 219 | SLV 9 | 31 | -18.45 | 4.66 | 16.31 | 40.06 | -3.59 | 0.93 | -0.0045 | -0.4089 | 0.8873 |
| 101 | SLV 9 | 1 | -19.12 | 6.14 | 15.89 | 39.37 | -0.41 | 1.9 | 0.6477 | -0.5517 | -6.5464 |
| 221 | SLV 9 | 31 | -17.63 | 3.77 | 16.75 | 38.77 | -1.11 | 0.75 | 0.0988 | 0.8994 | 2.514 |

### Sollecitazioni con momento M2 minimo

Vengono mostrate le sole 5 aste più sollecitate.

| Asta | Cont. | Pos. | Posizione | | | Soll.traslazionale | | | Soll.rotazionale | | |
|---|---|---|---|---|---|---|---|---|---|---|---|
| Ind. | N.br. | | X | Y | Z | F1 | F2 | F3 | M1 | M2 | M3 |
| 113 | SLU 71 | 31 | -20.24 | 0.96 | 18.05 | -29.13 | 0.49 | -1.13 | -10.4408 | -11.1045 | -22.864 |
| 341 | SLV 7 | 1 | -13.72 | -0.97 | 16.77 | 9.01 | -5.12 | 9.21 | 0.4845 | -9.8297 | -2.3418 |
| 351 | SLV 7 | 31 | -13.72 | -0.97 | 16.77 | 9.02 | 6 | -12.98 | 0.238 | -9.8187 | -2.3427 |
| 30 | SLV Y | 1 | -13.72 | 1.05 | 17.71 | -3.15 | -0.12 | 5.33 | -0.4613 | -9.026 | 0.0303 |
| 29 | SLV Y | 31 | -13.72 | 1.05 | 17.71 | -2.2 | 0.18 | -12.16 | -0.666 | -8.8752 | -0.2126 |

### Sollecitazioni con momento M2 massimo

Vengono mostrate le sole 5 aste più sollecitate.

| Asta | Cont. | Pos. | Posizione | | | Soll.traslazionale | | | Soll.rotazionale | | |
|---|---|---|---|---|---|---|---|---|---|---|---|
| Ind. | N.br. | | X | Y | Z | F1 | F2 | F3 | M1 | M2 | M3 |
| 57 | SLU 71 | 1 | -4.75 | 1.05 | 18.08 | 1.77 | 15.88 | -11.76 | 12.4028 | 12.1536 | -13.449 |
| 351 | SLV 9 | 31 | -13.72 | -0.97 | 16.77 | -11.13 | -6.07 | 13.19 | -0.0102 | 10.8885 | 2.7442 |
| 341 | SLV 9 | 1 | -13.72 | -0.97 | 16.77 | -11.16 | 2.75 | -10.41 | 0.0867 | 10.8805 | 2.7332 |
| 30 | SLV 9 | 1 | -13.72 | 1.05 | 17.71 | -5.89 | 0.11 | -6.9 | 0.1213 | 10.4683 | 0.0198 |
| 29 | SLV 9 | 31 | -13.72 | 1.05 | 17.71 | -6.69 | -0.23 | 13.24 | 0.808 | 10.3422 | 0.1851 |

### Sollecitazioni con momento M3 minimo

Vengono mostrate le sole 5 aste più sollecitate.

| Asta | Cont. | Pos. | Posizione | | | Soll.traslazionale | | | Soll.rotazionale | | |
|---|---|---|---|---|---|---|---|---|---|---|---|
| Ind. | N.br. | | X | Y | Z | F1 | F2 | F3 | M1 | M2 | M3 |
| 8 | SLU 81 | 31 | -11 | -3.31 | 10.7 | 0 | 57.86 | 0 | 0 | 0 | -79.8134 |
| 112 | SLU 80 | 31 | -20.15 | 1.05 | 18.1 | -20.57 | 34.68 | -2.06 | 1.7992 | -6.7429 | -32.7188 |
| 90 | SLU 80 | 31 | -5.21 | 6.6 | 15.69 | -39.7 | 12.83 | -1.27 | -3.3669 | -3.1717 | -32.0868 |
| 101 | SLU 79 | 31 | -19.56 | 6.6 | 15.69 | -21.76 | 13.65 | 1.42 | 2.7059 | 2.2578 | -29.9296 |
| 114 | SLU 72 | 1 | -20.24 | 0.96 | 18.05 | -24.37 | -34.14 | -2.8 | -1.5391 | -2.3798 | -29.657 |

### Sollecitazioni con momento M3 massimo

Vengono mostrate le sole 5 aste più sollecitate.

| Asta | Cont. | Pos. | Posizione | | | Soll.traslazionale | | | Soll.rotazionale | | |
|---|---|---|---|---|---|---|---|---|---|---|---|
| Ind. | N.br. | | X | Y | Z | F1 | F2 | F3 | M1 | M2 | M3 |
| 84 | SLU 71 | 31 | -8.31 | 3.35 | 17.1 | -36.95 | -6.75 | 1.24 | 1.0035 | 6.8092 | 41.9387 |
| 95 | SLU 71 | 31 | -16.42 | 3.31 | 17.11 | -19.83 | -5.4 | -1.36 | -1.252 | -7.5402 | 41.7963 |
| 85 | SLU 71 | 1 | -8.31 | 3.35 | 17.1 | -37.58 | 0.66 | -0.41 | 0.8644 | 6.7503 | 41.6525 |
| 96 | SLU 71 | 1 | -16.42 | 3.31 | 17.11 | -19.72 | 1.86 | 0.71 | -1.0661 | -7.4286 | 41.4817 |
| 86 | SLU 71 | 1 | -7.92 | 3.77 | 16.92 | -40.11 | 8.6 | -1.48 | 4.3402 | 5.6702 | 37.6804 |

## 1.1.2 Sollecitazioni gusci

### 1.1.2.1 Convenzioni di segno gusci

Sono individuate distinte convenzioni di segno in relazione al tipo di elemento strutturale a cui il guscio si riferisce:

- convenzione per gusci non verticali, originati ad esempio da piastre e platee;
- convenzione per gusci verticali, originati ad esempio da pareti e muri.

### Convenzione di segno per gusci non verticali

Il sistema di riferimento nel quale sono espressi i parametri di sollecitazione è così definito: origine appartenente al piano dell'elemento, asse x e y contenuti nel piano dell'elemento e terzo asse (z) ortogonale al piano dell'elemento a formare una terna destrogira. In particolare l'asse x ha proiezione in pianta parallela ed equiversa all'asse globale X. Nel caso di piastre orizzontali (caso più comune) gli assi x, y e z locali all'elemento sono paralleli ed equiversi agli assi X, Y e Z globali. Si sottolinea che non ha alcun interesse collocare esattamente nel piano dell'elemento la posizione dell'origine in quanto i parametri di sollecitazione sono invarianti rispetto a tale posizione.
In figura è mostrato un elemento infinitesimo di shell orizzontale con indicato il sistema di riferimento e i parametri di sollecitazione Mxx, Myy, Mxy.

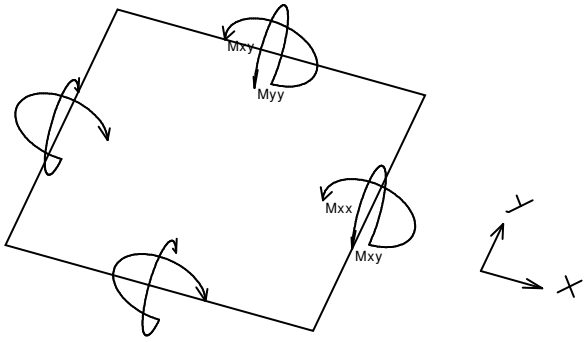


Si definiscono:

- Mxx: momento flettente [Forza*Lunghezza/Lunghezza] agente sul bordo di normale x (verso positivo indicato dalla freccia in figura che tende le fibre inferiori);
- Myy: momento flettente [Forza*Lunghezza/Lunghezza] agente sul bordo di normale y (verso positivo indicato dalla freccia in figura che tende le fibre inferiori);
- Mxy: momento torcente [Forza*Lunghezza/Lunghezza] agente sui bordi (verso positivo indicato dalla freccia in figura).

Per quanto riguarda le sollecitazioni estensionali si faccia riferimento alla figura seguente dove per lo stesso elemento infinitesimo di shell orizzontale con indicato il sistema di riferimento e i parametri di sollecitazione Fxx, Fyy, Fxy.

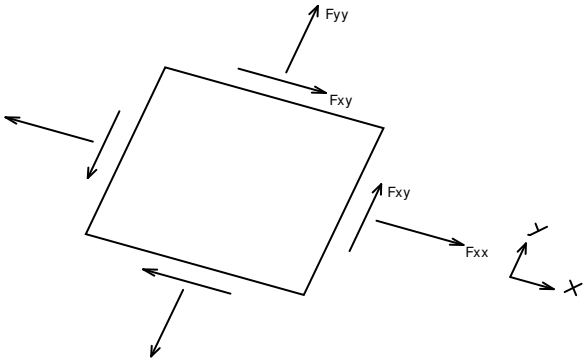


Si definiscono:

- Fxx: sforzo estensionale [Forza/Lunghezza] agente sul bordo di normale x (verso positivo indicato dalla freccia in figura che mette in trazione l'elemento);
- Fyy: sforzo estensionale [Forza/Lunghezza] agente sul bordo di normale all'asse y (verso positivo indicato dalla freccia in figura che mette in trazione l'elemento);
- Fxy: sforzo di taglio [Forza/Lunghezza] agente sui bordi (verso positivo indicato dalla freccia in figura).

Vengono riportati inoltre i tagli fuori dal piano dell'elemento guscio:

- Vx: taglio fuori piano [Forza/Lunghezza] applicato al bordo di normale parallela all'asse x;
- Vy: taglio fuori piano [Forza/Lunghezza] applicato al bordo di normale parallela all'asse y.

**Convenzione di segno per gusci verticali**

Il sistema di riferimento nel quale sono espressi i parametri di sollecitazione è così definito: origine appartenente al piano dell'elemento, asse O (ascisse) e z (ordinate) contenuti nel piano dell'elemento e terzo asse ortogonale al piano dell'elemento a formare una terna destrogira. In particolare l'asse O è orizzontale e l'asse z parallelo ed equiverso con l'asse Z globale. Si sottolinea che non ha alcun interesse collocare esattamente nel piano dell'elemento la posizione dell'origine in quanto i parametri di sollecitazione sono invarianti rispetto a tale posizione.In figura è mostrato un elemento infinitesimo di shell orizzontale con indicato il sistema di riferimento e i parametri di sollecitazione Moo, Mzz, Moz.

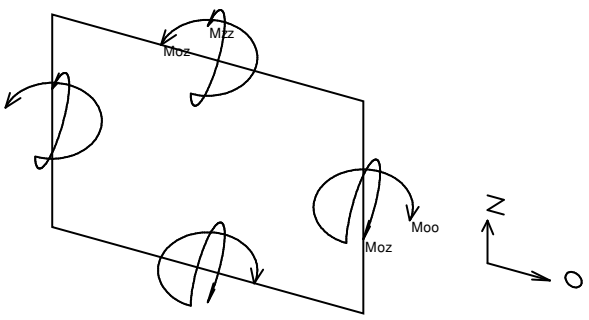


- Moo: momento flettente distribuito [Forza*Lunghezza/Lunghezza] applicato al bordo di normale parallela all'asse O (verso positivo indicato dalla freccia in figura che tende le fibre inferiori);
- Mzz: momento flettente distribuito [Forza*Lunghezza/Lunghezza] applicato al bordo di normale parallela all'asse z (verso positivo indicato dalla freccia in figura che tende le fibre inferiori);
- Moz: momento 'torcente' distribuito [Forza*Lunghezza/Lunghezza] applicato sui bordi (verso positivo indicato dalla freccia in figura).

Per quanto riguarda le sollecitazioni estensionali si faccia riferimento alla figura seguente dove per lo stesso elemento infinitesimo di shell con indicato il sistema di riferimento i parametri di sollecitazione Foo, Fzz, Foz sono rispettivamente:

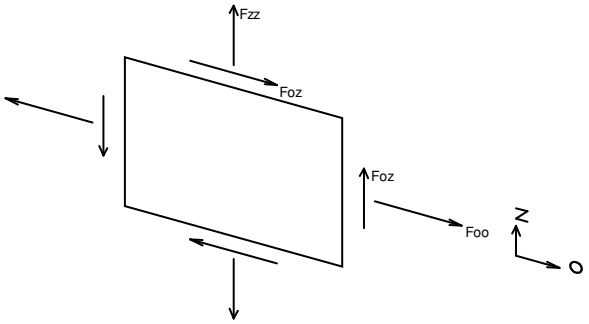


- Fzz: sforzo tensionale distribuito [Forza/Lunghezza] applicato al bordo di normale parallela all'asse z (verso positivo indicato dalla freccia in figura che mette in trazione l'elemento);
- Foo: sforzo tensionale distribuito [Forza/Lunghezza] applicato al bordo di normale parallela all'asse O (verso positivo indicato dalla freccia in figura che mette in trazione l'elemento);
- Foz: sforzo tagliante distribuito [Forza/Lunghezza] applicato sui bordi (verso positivo indicato dalla freccia in figura).

Vengono riportati inoltre i tagli fuori dal piano dell'elemento guscio:

- Vo: taglio fuori piano applicato al bordo di normale parallela all'asse O;
- Vz: taglio fuori piano applicato al bordo di normale parallela all'asse z.

#### 1.1.2.2 Sollecitazioni estreme gusci

***Shell***: *elemento guscio a cui si riferiscono le sollecitazioni.*
***Ind***: *indice del guscio.*
***Cont.***: *contesto a cui si riferiscono le sollecitazioni.*
***N.br.***: *nome breve della condizione o combinazione di carico.*
***Nodo***: *nodo su cui si basa il guscio a cui si riferisce la sollecitazione.*
***Ind***: *indice del nodo.*
***Sollecitazione***: *valori della sollecitazione.*
***M11***: *componente M11 della sollecitazione del guscio nel nodo indicato. [kN*m/m]*
***M12***: *componente M12 della sollecitazione del guscio nel nodo indicato. [kN*m/m]*
***M22***: *componente M22 della sollecitazione del guscio nel nodo indicato. [kN*m/m]*
***F11***: *componente F11 della sollecitazione del guscio nel nodo indicato. [kN/m]*
***F12***: *componente F12 della sollecitazione del guscio nel nodo indicato. [kN/m]*
***F22***: *componente F22 della sollecitazione del guscio nel nodo indicato. [kN/m]*
***V13***: *componente V13 della sollecitazione del guscio nel nodo indicato. [kN/m]*
***V23***: *componente V23 della sollecitazione del guscio nel nodo indicato. [kN/m]*

#### Sollecitazioni con momento M11 minimo

Vengono mostrati i soli 5 gusci più sollecitati.

| Shell | Cont. | Nodo | Sollecitazione | | | | | | | |
|---|---|---|---|---|---|---|---|---|---|---|
| Ind | N.br. | Ind | M11 | M12 | M22 | F11 | F12 | F22 | V13 | V23 |
| 4667 | SLU 81 | 11947 | -225.45 | -46.04 | -751.04 | -33 | 53 | -276 | 1450 | 13734 |
| 4577 | SLU 81 | 12180 | -133.3 | -58.8 | 39.21 | 28 | 67 | -27 | 51 | 769 |
| 4642 | SLU 81 | 12278 | -34.85 | 6.68 | -4.11 | -37 | 7 | 11 | -199 | 42 |
| 4666 | SLU 81 | 12278 | -32.81 | 8.73 | -3.02 | -54 | -27 | -18 | -277 | 59 |
| 4665 | SLU 81 | 11836 | -26.85 | 2.5 | -77.62 | -8 | 19 | -46 | -30 | -434 |

### Sollecitazioni con momento M11 massimo

Vengono mostrati i soli 5 gusci più sollecitati.

| Shell | Cont. | Nodo | Sollecitazione | | | | | | | |
|---|---|---|---|---|---|---|---|---|---|---|
| Ind | N.br. | Ind | M11 | M12 | M22 | F11 | F12 | F22 | V13 | V23 |
| 4577 | SLU 84 | 11836 | 135.79 | 7.35 | -36.78 | -13 | 67 | -42 | 51 | 769 |
| 4666 | SLU 84 | 11947 | 90.65 | -30.49 | 513.29 | 10 | 21 | 155 | -141 | 5186 |
| 4667 | SLU 84 | 11836 | 50.47 | -36.48 | -32.68 | -36 | 62 | -166 | -555 | 2690 |
| 4665 | SLU 84 | 12180 | 31.06 | -9.05 | 87.2 | 3 | 19 | -44 | 134 | -433 |
| 8971 | SLV 11 | 10472 | 28.51 | 4.72 | -10.08 | 217 | -32 | -159 | -157 | -46 |

### Sollecitazioni con momento M22 minimo

Vengono mostrati i soli 5 gusci più sollecitati.

| Shell | Cont. | Nodo | Sollecitazione | | | | | | | |
|---|---|---|---|---|---|---|---|---|---|---|
| Ind | N.br. | Ind | M11 | M12 | M22 | F11 | F12 | F22 | V13 | V23 |
| 4667 | SLU 83 | 11947 | -225.45 | -46.03 | -751.05 | -33 | 52 | -279 | 1450 | 13734 |
| 4665 | SLU 81 | 11836 | -26.85 | 2.5 | -77.62 | -8 | 19 | -46 | -30 | -434 |
| 4577 | SLU 81 | 11836 | 135.77 | 7.35 | -36.79 | -12 | 68 | -39 | 51 | 769 |
| 4666 | SLU 81 | 12180 | -21.99 | -50.18 | -30.05 | 3 | 52 | 47 | 58 | 1881 |
| 721 | SLU 83 | 3110 | -17.73 | -0.99 | -16.45 | 49 | 216 | -612 | -66 | 38 |

### Sollecitazioni con momento M22 massimo

Vengono mostrati i soli 5 gusci più sollecitati.

| Shell | Cont. | Nodo | Sollecitazione | | | | | | | |
|---|---|---|---|---|---|---|---|---|---|---|
| Ind | N.br. | Ind | M11 | M12 | M22 | F11 | F12 | F22 | V13 | V23 |
| 4666 | SLU 84 | 11947 | 90.65 | -30.49 | 513.29 | 10 | 21 | 155 | -141 | 5186 |
| 4665 | SLU 84 | 12180 | 31.06 | -9.05 | 87.2 | 3 | 19 | -44 | 134 | -433 |
| 4577 | SLU 84 | 11947 | -1.43 | 174 | 76.15 | 2 | 73 | -39 | 51 | 769 |
| 10004 | SLU 80 | 18310 | 7.06 | 3.68 | 39.19 | -48 | -29 | 0 | -23 | -162 |
| 10014 | SLU 80 | 18300 | 9.65 | 1.88 | 28.73 | -17 | -25 | -125 | -58 | -78 |

### Sollecitazioni con sforzo F11 minimo

Vengono mostrati i soli 5 gusci più sollecitati.

| Shell | Cont. | Nodo | Sollecitazione | | | | | | | |
|---|---|---|---|---|---|---|---|---|---|---|
| Ind | N.br. | Ind | M11 | M12 | M22 | F11 | F12 | F22 | V13 | V23 |
| 9657 | SLU 80 | 18268 | -3.2 | 0.4 | -3.41 | -2440 | -1071 | -1644 | 11 | -30 |
| 9658 | SLU 79 | 18277 | -0.15 | -0.38 | 3.17 | -1577 | -502 | -966 | -17 | -13 |
| 4907 | SLU 71 | 17067 | -0.71 | 0.78 | -4.1 | -1029 | -275 | -1258 | -544 | 4 |
| 4886 | SLU 71 | 17613 | -2.18 | -1.29 | -3.07 | -904 | -1116 | -2588 | 40 | 33 |
| 1293 | SLU 83 | 2288 | -0.01 | 0.02 | 0.01 | -839 | -620 | -837 | 0 | 0 |

### Sollecitazioni con sforzo F11 massimo

Vengono mostrati i soli 5 gusci più sollecitati.

| Shell | Cont. | Nodo | Sollecitazione | | | | | | | |
|---|---|---|---|---|---|---|---|---|---|---|
| Ind | N.br. | Ind | M11 | M12 | M22 | F11 | F12 | F22 | V13 | V23 |
| 9657 | SLU 72 | 18329 | 3.44 | -0.21 | 6.33 | 2498 | 344 | -180 | 11 | -30 |
| 9658 | SLU 72 | 18330 | -2.51 | -1.52 | 3.94 | 1638 | 897 | 1572 | -19 | -13 |
| 1293 | SLU 83 | 3079 | 0 | 0.01 | -0.01 | 1168 | 747 | 668 | 0 | 0 |
| 4886 | SLU 71 | 17068 | 8.78 | -0.57 | 3.65 | 1070 | 861 | 1303 | -497 | 98 |
| 4884 | SLU 80 | 17611 | 0.44 | -0.84 | 0.08 | 874 | -297 | 457 | 33 | -9 |

### Sollecitazioni con sforzo F22 minimo

Vengono mostrati i soli 5 gusci più sollecitati.

| Shell | Cont. | Nodo | Sollecitazione | | | | | | | |
|---|---|---|---|---|---|---|---|---|---|---|
| Ind | N.br. | Ind | M11 | M12 | M22 | F11 | F12 | F22 | V13 | V23 |
| 4886 | SLU 71 | 17613 | -2.18 | -1.29 | -3.07 | -904 | -1116 | -2588 | 40 | 33 |
| 9657 | SLU 72 | 18268 | -3.2 | 0.4 | -3.4 | -2433 | -1068 | -1650 | 11 | -30 |
| 9658 | SLU 72 | 18329 | 5.27 | -0.85 | 6.85 | 639 | -788 | -1643 | -19 | -13 |
| 15829 | SLV 9 | 3339 | 0.15 | -0.62 | 0.44 | 115 | -42 | -1625 | 2 | -2 |
| 4907 | SLU 80 | 17068 | 7.6 | 0.87 | -1.78 | -1009 | -249 | -1586 | -556 | -4 |

### Sollecitazioni con sforzo F22 massimo

Vengono mostrati i soli 5 gusci più sollecitati.

| Shell | Cont. | Nodo | Sollecitazione | | | | | | | |
|---|---|---|---|---|---|---|---|---|---|---|
| Ind | N.br. | Ind | M11 | M12 | M22 | F11 | F12 | F22 | V13 | V23 |
| 9658 | SLU 80 | 18330 | -2.51 | -1.51 | 3.94 | 1624 | 898 | 1578 | -19 | -13 |
| 7719 | SLV 13 | 16163 | 1.7 | 0 | -1.82 | 4 | 0 | 1364 | -2 | -7 |
| 7840 | SLV 13 | 16163 | 1.7 | 0 | -1.82 | 4 | 0 | 1363 | -2 | -7 |
| 4886 | SLU 29 | 17067 | 1.22 | 0.46 | 3.61 | 876 | 1264 | 1353 | -443 | 87 |
| 12804 | SLU 79 | 17012 | 0.81 | -0.89 | 0.66 | 645 | 766 | 1286 | 0 | 14 |

### 1.1.2.3 Sollecitazioni estreme gusci non verticali

***Shell**: elemento guscio a cui si riferiscono le sollecitazioni.*
***Ind**: indice del guscio.*
***Cont.**: contesto a cui si riferiscono le sollecitazioni.*
***N.br.**: nome breve della condizione o combinazione di carico.*
***Nodo**: nodo su cui si basa il guscio a cui si riferisce la sollecitazione.*

*Ind*: *indice del nodo.*
*Sollecitazione*: *valori della sollecitazione.*
*Mxx*: *componente Mxx della sollecitazione del guscio nel nodo indicato. [kN*m/m]*
*Mxy*: *componente Mxy della sollecitazione del guscio nel nodo indicato. [kN*m/m]*
*Myy*: *componente Myy della sollecitazione del guscio nel nodo indicato. [kN*m/m]*
*Fxx*: *componente Fxx della sollecitazione del guscio nel nodo indicato. [kN/m]*
*Fxy*: *componente Fxy della sollecitazione del guscio nel nodo indicato. [kN/m]*
*Fyy*: *componente Fyy della sollecitazione del guscio nel nodo indicato. [kN/m]*
*Vx*: *componente Vo della sollecitazione del guscio nel nodo indicato. [kN/m]*
*Vy*: *componente Vz della sollecitazione del guscio nel nodo indicato. [kN/m]*

### Sollecitazioni con momento Mxx minimo

Vengono mostrati i soli 5 gusci più sollecitati.

| Shell | Cont. | Nodo | Sollecitazione | | | | | | | |
|---|---|---|---|---|---|---|---|---|---|---|
| Ind | N.br. | Ind | Mxx | Mxy | Myy | Fxx | Fxy | Fyy | Vx | Vy |
| 16693 | SLV 7 | 10180 | -8.52 | 0.01 | -0.07 | 27 | 0 | 46 | 36 | 0 |
| 8114 | SLV 1 | 2872 | -7 | -0.36 | -3.39 | 31 | 88 | 77 | 18 | 9 |
| 8113 | SLV 1 | 2872 | -6.87 | 0.33 | -3.55 | 47 | -7 | 97 | 18 | -8 |
| 9735 | SLV 11 | 17474 | -5.92 | -0.35 | -6.65 | -7 | -10 | -35 | -17 | -27 |
| 8480 | SLV 15 | 2844 | -5.5 | -1.28 | 1.76 | -163 | -4 | 26 | -21 | -7 |

### Sollecitazioni con momento Mxx massimo

Vengono mostrati i soli 5 gusci più sollecitati.

| Shell | Cont. | Nodo | Sollecitazione | | | | | | | |
|---|---|---|---|---|---|---|---|---|---|---|
| Ind | N.br. | Ind | Mxx | Mxy | Myy | Fxx | Fxy | Fyy | Vx | Vy |
| 16693 | SLV 9 | 10180 | 8.23 | -0.01 | 0.16 | -59 | 0 | -221 | -31 | 0 |
| 9735 | SLV 5 | 17474 | 5.93 | 0.35 | 6.42 | -5 | 0 | -15 | 17 | 26 |
| 17197 | SLV 15 | 2847 | 5.36 | -0.16 | 4.02 | -97 | -46 | -21 | -21 | 1 |
| 9736 | SLV 9 | 17474 | 4.88 | -0.38 | 6.46 | -8 | -9 | -17 | -14 | 21 |
| 16702 | SLV 9 | 9846 | 4.7 | -0.01 | -0.08 | 26 | 0 | -74 | -6 | 0 |

### Sollecitazioni con momento Myy minimo

Vengono mostrati i soli 5 gusci più sollecitati.

| Shell | Cont. | Nodo | Sollecitazione | | | | | | | |
|---|---|---|---|---|---|---|---|---|---|---|
| Ind | N.br. | Ind | Mxx | Mxy | Myy | Fxx | Fxy | Fyy | Vx | Vy |
| 9735 | SLV 7 | 17474 | -5.54 | -0.27 | -7.09 | -16 | -12 | -32 | -18 | -25 |
| 16693 | SLV Y | 10179 | -2.84 | 0 | -6.83 | -19 | 0 | -93 | 36 | 32 |
| 9736 | SLV 7 | 17474 | -4.85 | 0.42 | -6.67 | -3 | 3 | -32 | 15 | -21 |
| 9731 | SLV 7 | 17478 | 2.67 | 0.22 | -5.04 | -25 | -8 | -17 | -12 | -20 |
| 9732 | SLV 11 | 17478 | 1.81 | 1.54 | -4.85 | -7 | -15 | 1 | 9 | -21 |

### Sollecitazioni con momento Myy massimo

Vengono mostrati i soli 5 gusci più sollecitati.

| Shell | Cont. | Nodo | Sollecitazione | | | | | | | |
|---|---|---|---|---|---|---|---|---|---|---|
| Ind | N.br. | Ind | Mxx | Mxy | Myy | Fxx | Fxy | Fyy | Vx | Vy |
| 16693 | SLV 5 | 10179 | 2.76 | 0 | 7.74 | 27 | 0 | -161 | -36 | -38 |
| 9735 | SLV 9 | 17474 | 5.55 | 0.27 | 6.86 | 5 | 2 | -18 | 18 | 24 |
| 9736 | SLV 9 | 17474 | 4.88 | -0.38 | 6.46 | -8 | -9 | -17 | -14 | 21 |
| 17197 | SLV 15 | 2847 | 5.36 | -0.16 | 4.02 | -97 | -46 | -21 | -21 | 1 |
| 9724 | SLV 9 | 17485 | 4.25 | -0.36 | 4 | -10 | 2 | -111 | 13 | 17 |

### Sollecitazioni con sforzo Fxx minimo

Vengono mostrati i soli 5 gusci più sollecitati.

| Shell | Cont. | Nodo | Sollecitazione | | | | | | | |
|---|---|---|---|---|---|---|---|---|---|---|
| Ind | N.br. | Ind | Mxx | Mxy | Myy | Fxx | Fxy | Fyy | Vx | Vy |
| 8123 | SLV 1 | 3250 | 0.71 | 0.51 | 0.53 | -442 | 91 | -98 | 8 | -2 |
| 8102 | SLV 7 | 3295 | 0.62 | -0.44 | 0.48 | -412 | -79 | -126 | 7 | 2 |
| 10129 | SLV 1 | 2659 | -0.2 | -0.13 | -0.01 | -354 | -22 | -66 | -1 | 3 |
| 10089 | SLV 9 | 2658 | -0.69 | -0.11 | -0.48 | -344 | -93 | -43 | -3 | 2 |
| 10130 | SLV 1 | 3387 | 0.52 | -0.18 | 0.54 | -327 | -25 | -36 | -2 | 0 |

### Sollecitazioni con sforzo Fxx massimo

Vengono mostrati i soli 5 gusci più sollecitati.

| Shell | Cont. | Nodo | Sollecitazione | | | | | | | |
|---|---|---|---|---|---|---|---|---|---|---|
| Ind | N.br. | Ind | Mxx | Mxy | Myy | Fxx | Fxy | Fyy | Vx | Vy |
| 8123 | SLV X | 3250 | -0.34 | -0.24 | -0.3 | 164 | -38 | 32 | -4 | 1 |
| 10129 | SLV X | 2659 | -0.13 | 0.05 | -0.26 | 156 | -21 | 34 | -1 | -2 |
| 10130 | SLV X | 3387 | -0.19 | 0.1 | -0.34 | 142 | -18 | 18 | 1 | -1 |
| 8124 | SLV X | 2674 | 0.26 | 0.26 | 0.86 | 140 | -19 | 62 | -2 | 0 |
| 8102 | SLV X | 3295 | -0.25 | 0.22 | 0.33 | 132 | -35 | 29 | -3 | -1 |

### Sollecitazioni con sforzo Fyy minimo

Vengono mostrati i soli 5 gusci più sollecitati.

| Shell | Cont. | Nodo | Sollecitazione | | | | | | | |
|---|---|---|---|---|---|---|---|---|---|---|
| Ind | N.br. | Ind | Mxx | Mxy | Myy | Fxx | Fxy | Fyy | Vx | Vy |
| 16693 | SLV 1 | 9925 | 0.18 | 0 | -0.16 | 10 | 0 | -540 | 1 | -11 |
| 16702 | SLU 78 | 9532 | -0.2 | 0 | -0.26 | -17 | -1 | -437 | -1 | -3 |
| 8124 | SLV 1 | 2791 | -1.5 | 0.58 | -2.13 | -297 | 167 | -424 | 7 | -3 |
| 8101 | SLV 7 | 3006 | -1.44 | -0.26 | -2.11 | -235 | -155 | -409 | 6 | 1 |
| 25 | SLU 84 | 67 | -0.03 | 0.02 | -0.11 | -71 | -13 | -357 | 0 | 0 |

### Sollecitazioni con sforzo Fyy massimo

Vengono mostrati i soli 5 gusci più sollecitati.

| Shell | Cont. | Nodo | Sollecitazione | | | | | | | |
|---|---|---|---|---|---|---|---|---|---|---|
| Ind | N.br. | Ind | Mxx | Mxy | Myy | Fxx | Fxy | Fyy | Vx | Vy |
| 16693 | SLV X | 9925 | 1.01 | 0 | 0.36 | -34 | 0 | 288 | -2 | 4 |
| 25 | SLV X | 389 | -0.08 | 0.2 | -0.79 | 20 | -48 | 200 | 0 | -5 |
| 8124 | SLV X | 2791 | 0.62 | -0.26 | 0.92 | 126 | -51 | 170 | -3 | 1 |
| 8101 | SLV X | 3006 | 0.54 | 0.16 | 0.85 | 104 | 33 | 147 | -3 | -1 |
| 2759 | SLU 84 | 3473 | -0.04 | 0.2 | -0.17 | 5 | 64 | 144 | 2 | -1 |

### 1.1.2.4 Sollecitazioni estreme gusci verticali

*Shell: elemento guscio a cui si riferiscono le sollecitazioni.*
*Ind: indice del guscio.*
*Cont.: contesto a cui si riferiscono le sollecitazioni.*
*N.br.: nome breve della condizione o combinazione di carico.*
*Nodo: nodo su cui si basa il guscio a cui si riferisce la sollecitazione.*
*Ind: indice del nodo.*
*Sollecitazione: valori della sollecitazione.*
*Moo: componente Moo della sollecitazione del guscio nel nodo indicato. [kN*m/m]*
*Moz: componente Moz della sollecitazione del guscio nel nodo indicato. [kN*m/m]*
*Mzz: componente Mzz della sollecitazione del guscio nel nodo indicato. [kN*m/m]*
*Foo: componente Foo della sollecitazione del guscio nel nodo indicato. [kN/m]*
*Foz: componente Foz della sollecitazione del guscio nel nodo indicato. [kN/m]*
*Fzz: componente Fzz della sollecitazione del guscio nel nodo indicato. [kN/m]*
*Vo: componente Vo della sollecitazione del guscio nel nodo indicato. [kN/m]*
*Vz: componente Vz della sollecitazione del guscio nel nodo indicato. [kN/m]*

### Sollecitazioni con momento Moo minimo

Vengono mostrati i soli 5 gusci più sollecitati.

| Shell | Cont. | Nodo | Sollecitazione | | | | | | | |
|---|---|---|---|---|---|---|---|---|---|---|
| Ind | N.br. | Ind | Moo | Moz | Mzz | Foo | Foz | Fzz | Vo | Vz |
| 4667 | SLU 81 | 11947 | -225.45 | -46.04 | -751.04 | -33 | 53 | -276 | 1450 | 13734 |
| 4577 | SLU 81 | 12180 | -133.3 | -58.8 | 39.21 | 28 | 67 | -27 | 51 | 769 |
| 4642 | SLU 81 | 12278 | -34.85 | 6.68 | -4.11 | -37 | 7 | 11 | -199 | 42 |
| 4666 | SLU 81 | 12278 | -32.81 | 8.73 | -3.02 | -54 | -27 | -18 | -277 | 59 |
| 4665 | SLU 81 | 11836 | -26.85 | 2.5 | -77.62 | -8 | 19 | -46 | -30 | -434 |

### Sollecitazioni con momento Moo massimo

Vengono mostrati i soli 5 gusci più sollecitati.

| Shell | Cont. | Nodo | Sollecitazione | | | | | | | |
|---|---|---|---|---|---|---|---|---|---|---|
| Ind | N.br. | Ind | Moo | Moz | Mzz | Foo | Foz | Fzz | Vo | Vz |
| 4577 | SLU 84 | 11836 | 135.79 | 7.35 | -36.78 | -13 | 67 | -42 | 51 | 769 |
| 4666 | SLU 84 | 11947 | 90.65 | -30.49 | 513.29 | 10 | 21 | 155 | -141 | 5186 |
| 4667 | SLU 84 | 11836 | 50.47 | -36.48 | -32.68 | -36 | 62 | -166 | -555 | 2690 |
| 4665 | SLU 84 | 12180 | 31.06 | -9.05 | 87.2 | 3 | 19 | -44 | 134 | -433 |
| 8971 | SLV 11 | 10472 | 28.51 | 4.72 | -10.08 | 217 | -32 | -159 | -157 | -46 |

### Sollecitazioni con momento Mzz minimo

Vengono mostrati i soli 5 gusci più sollecitati.

| Shell | Cont. | Nodo | Sollecitazione | | | | | | | |
|---|---|---|---|---|---|---|---|---|---|---|
| Ind | N.br. | Ind | Moo | Moz | Mzz | Foo | Foz | Fzz | Vo | Vz |
| 4667 | SLU 83 | 11947 | -225.45 | -46.03 | -751.05 | -33 | 52 | -279 | 1450 | 13734 |
| 4665 | SLU 81 | 11836 | -26.85 | 2.5 | -77.62 | -8 | 19 | -46 | -30 | -434 |
| 10004 | SLU 80 | 18310 | -7.06 | 3.68 | -39.19 | -48 | 29 | 0 | -23 | 162 |
| 4577 | SLU 81 | 11836 | 135.77 | 7.35 | -36.79 | -12 | 68 | -39 | 51 | 769 |
| 4666 | SLU 81 | 12180 | -21.99 | -50.18 | -30.05 | 3 | 52 | 47 | 58 | 1881 |

### Sollecitazioni con momento Mzz massimo

Vengono mostrati i soli 5 gusci più sollecitati.

| Shell | Cont. | Nodo | Sollecitazione | | | | | | | |
|---|---|---|---|---|---|---|---|---|---|---|
| Ind | N.br. | Ind | Moo | Moz | Mzz | Foo | Foz | Fzz | Vo | Vz |
| 4666 | SLU 84 | 11947 | 90.65 | -30.49 | 513.29 | 10 | 21 | 155 | -141 | 5186 |
| 4665 | SLU 84 | 12180 | 31.06 | -9.05 | 87.2 | 3 | 19 | -44 | 134 | -433 |
| 4577 | SLU 84 | 11947 | -1.43 | 174 | 76.15 | 2 | 73 | -39 | 51 | 769 |
| 12852 | SLU 71 | 17633 | 2.18 | 3.47 | 17.25 | -18 | 0 | -26 | -12 | -57 |
| 12850 | SLU 72 | 17635 | 0.67 | 4.19 | 15.11 | -12 | -4 | -18 | -8 | -47 |

### Sollecitazioni con sforzo Foo minimo

Vengono mostrati i soli 5 gusci più sollecitati.

| Shell | Cont. | Nodo | Sollecitazione | | | | | | | |
|---|---|---|---|---|---|---|---|---|---|---|
| Ind | N.br. | Ind | Moo | Moz | Mzz | Foo | Foz | Fzz | Vo | Vz |
| 9657 | SLU 80 | 18268 | 3.2 | 0.4 | 3.41 | -2440 | 1071 | -1644 | 11 | 30 |
| 9658 | SLU 79 | 18277 | 0.15 | -0.38 | -3.17 | -1577 | 502 | -966 | -17 | 13 |
| 4907 | SLU 71 | 17067 | -0.71 | 0.78 | -4.1 | -1029 | -275 | -1258 | -544 | 4 |
| 4886 | SLU 71 | 17613 | -2.18 | -1.29 | -3.07 | -904 | -1116 | -2588 | 40 | 33 |
| 1293 | SLU 83 | 2288 | -0.01 | 0.02 | 0.01 | -839 | -620 | -837 | 0 | 0 |

### Sollecitazioni con sforzo Foo massimo

Vengono mostrati i soli 5 gusci più sollecitati.

| Shell | Cont. | Nodo | Sollecitazione | | | | | | | |
|---|---|---|---|---|---|---|---|---|---|---|
| Ind | N.br. | Ind | Moo | Moz | Mzz | Foo | Foz | Fzz | Vo | Vz |
| 9657 | SLU 72 | 18329 | -3.44 | -0.21 | -6.33 | 2498 | -344 | -180 | 11 | 30 |
| 9658 | SLU 72 | 18330 | 2.51 | -1.52 | -3.94 | 1638 | -897 | 1572 | -19 | 13 |
| 1293 | SLU 83 | 3079 | 0 | 0.01 | -0.01 | 1168 | 747 | 668 | 0 | 0 |
| 4886 | SLU 71 | 17068 | 8.78 | -0.57 | 3.65 | 1070 | 861 | 1303 | -497 | 98 |
| 4884 | SLU 80 | 17611 | 0.44 | -0.84 | 0.08 | 874 | -297 | 457 | 33 | -9 |

### Sollecitazioni con sforzo Fzz minimo

Vengono mostrati i soli 5 gusci più sollecitati.

| Shell | Cont. | Nodo | Sollecitazione | | | | | | | |
|---|---|---|---|---|---|---|---|---|---|---|
| Ind | N.br. | Ind | Moo | Moz | Mzz | Foo | Foz | Fzz | Vo | Vz |
| 4886 | SLU 71 | 17613 | -2.18 | -1.29 | -3.07 | -904 | -1116 | -2588 | 40 | 33 |
| 9657 | SLU 72 | 18268 | 3.2 | 0.4 | 3.4 | -2433 | 1068 | -1650 | 11 | 30 |
| 9658 | SLU 72 | 18329 | -5.27 | -0.85 | -6.85 | 639 | 788 | -1643 | -19 | 13 |
| 15829 | SLV 9 | 3339 | 0.15 | -0.62 | 0.44 | 115 | -42 | -1625 | 2 | -2 |
| 4907 | SLU 80 | 17068 | 7.6 | 0.87 | -1.78 | -1009 | -249 | -1586 | -556 | -4 |

### Sollecitazioni con sforzo Fzz massimo

Vengono mostrati i soli 5 gusci più sollecitati.

| Shell | Cont. | Nodo | Sollecitazione | | | | | | | |
|---|---|---|---|---|---|---|---|---|---|---|
| Ind | N.br. | Ind | Moo | Moz | Mzz | Foo | Foz | Fzz | Vo | Vz |
| 9658 | SLU 80 | 18330 | 2.51 | -1.51 | -3.94 | 1624 | -898 | 1578 | -19 | 13 |
| 7719 | SLV 13 | 16163 | 1.7 | 0 | -1.82 | 4 | 0 | 1364 | -2 | -7 |
| 7840 | SLV 13 | 16163 | 1.7 | 0 | -1.82 | 4 | 0 | 1363 | -2 | -7 |
| 4886 | SLU 29 | 17067 | 1.22 | 0.46 | 3.61 | 876 | 1264 | 1353 | -443 | 87 |
| 12804 | SLU 79 | 17012 | 0.81 | -0.89 | 0.66 | 645 | 766 | 1286 | 0 | 14 |

## 1.1.3 Sollecitazioni gusci armati

### 1.1.3.1 Convenzioni di segno gusci

Sono individuate distinte convenzioni di segno in relazione al tipo di elemento strutturale a cui il guscio si riferisce:

- convenzione per gusci non verticali, originati ad esempio da piastre e platee;
- convenzione per gusci verticali, originati ad esempio da pareti e muri.

### Convenzione di segno per gusci non verticali

Il sistema di riferimento nel quale sono espressi i parametri di sollecitazione è così definito: origine appartenente al piano dell'elemento, asse x e y contenuti nel piano dell'elemento e terzo asse (z) ortogonale al piano dell'elemento a formare una terna destrogira. In particolare l'asse x ha proiezione in pianta parallela ed equiversa all'asse globale X. Nel caso di piastre orizzontali (caso più comune) gli assi x, y e z locali all'elemento sono paralleli ed equiversi agli assi X, Y e Z globali. Si sottolinea che non ha alcun interesse collocare esattamente nel piano dell'elemento la posizione dell'origine in quanto i parametri di sollecitazione sono invarianti rispetto a tale posizione.
In figura è mostrato un elemento infinitesimo di shell orizzontale con indicato il sistema di riferimento e i parametri di sollecitazione Mxx, Myy, Mxy.

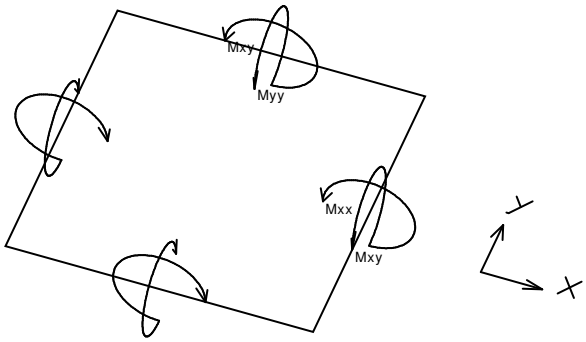


Si definiscono:

- Mxx: momento flettente [Forza*Lunghezza/Lunghezza] agente sul bordo di normale x (verso positivo indicato dalla freccia in figura che tende le fibre inferiori);
- Myy: momento flettente [Forza*Lunghezza/Lunghezza] agente sul bordo di normale y (verso positivo indicato dalla freccia in figura che tende le fibre inferiori);
- Mxy: momento torcente [Forza*Lunghezza/Lunghezza] agente sui bordi (verso positivo indicato dalla freccia in figura).

Per quanto riguarda le sollecitazioni estensionali si faccia riferimento alla figura seguente dove per lo stesso elemento infinitesimo di shell orizzontale con indicato il sistema di riferimento e i parametri di sollecitazione Fxx, Fyy, Fxy.

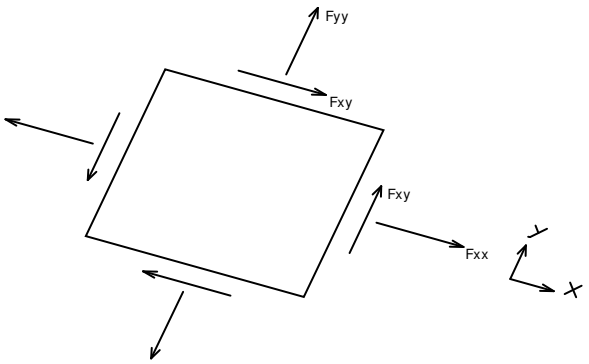


Si definiscono:

- Fxx: sforzo estensionale [Forza/Lunghezza] agente sul bordo di normale x (verso positivo indicato dalla freccia in figura che mette in trazione l'elemento);
- Fyy: sforzo estensionale [Forza/Lunghezza] agente sul bordo di normale all'asse y (verso positivo indicato dalla freccia in figura che mette in trazione l'elemento);
- Fxy: sforzo di taglio [Forza/Lunghezza] agente sui bordi (verso positivo indicato dalla freccia in figura).

Vengono riportati inoltre i tagli fuori dal piano dell'elemento guscio:

- Vx: taglio fuori piano [Forza/Lunghezza] applicato al bordo di normale parallela all'asse x;
- Vy: taglio fuori piano [Forza/Lunghezza] applicato al bordo di normale parallela all'asse y.

Convenzione di segno per gusci verticali

Il sistema di riferimento nel quale sono espressi i parametri di sollecitazione è così definito: origine appartenente al piano dell'elemento, asse O (ascisse) e z (ordinate) contenuti nel piano dell'elemento e terzo asse ortogonale al piano dell'elemento a formare una terna destrogira. In particolare l'asse O è orizzontale e l'asse z parallelo ed equiverso con l'asse Z globale. Si sottolinea che non ha alcun interesse collocare esattamente nel piano dell'elemento la posizione dell'origine in quanto i parametri di sollecitazione sono invarianti rispetto a tale posizione.In figura è mostrato un elemento infinitesimo di shell orizzontale con indicato il sistema di riferimento e i parametri di sollecitazione Moo, Mzz, Moz.

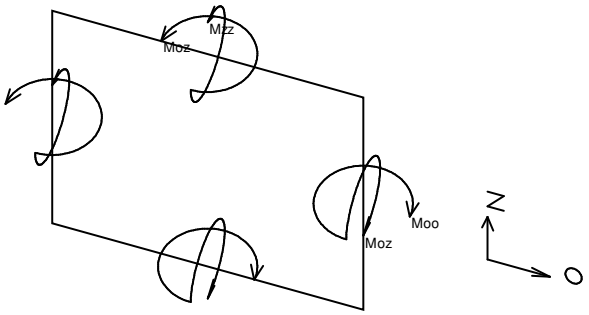


- Moo: momento flettente distribuito [Forza*Lunghezza/Lunghezza] applicato al bordo di normale parallela all'asse O (verso positivo indicato dalla freccia in figura che tende le fibre inferiori);
- Mzz: momento flettente distribuito [Forza*Lunghezza/Lunghezza] applicato al bordo di normale parallela all'asse z (verso positivo indicato dalla freccia in figura che tende le fibre inferiori);
- Moz: momento 'torcente' distribuito [Forza*Lunghezza/Lunghezza] applicato sui bordi (verso positivo indicato dalla freccia in figura).

Per quanto riguarda le sollecitazioni estensionali si faccia riferimento alla figura seguente dove per lo stesso elemento infinitesimo di shell con indicato il sistema di riferimento i parametri di sollecitazione Foo, Fzz, Foz sono rispettivamente:

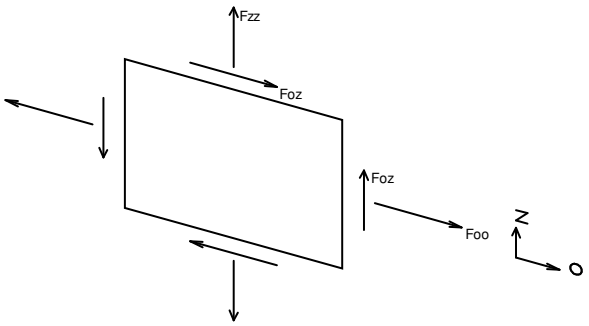


- Fzz: sforzo tensionale distribuito [Forza/Lunghezza] applicato al bordo di normale parallela all'asse z (verso positivo indicato dalla freccia in figura che mette in trazione l'elemento);
- Foo: sforzo tensionale distribuito [Forza/Lunghezza] applicato al bordo di normale parallela all'asse O (verso positivo indicato dalla freccia in figura che mette in trazione l'elemento);
- Foz: sforzo tagliante distribuito [Forza/Lunghezza] applicato sui bordi (verso positivo indicato dalla freccia in figura).

Vengono riportati inoltre i tagli fuori dal piano dell'elemento guscio:

- Vo: taglio fuori piano applicato al bordo di normale parallela all'asse O;
- Vz: taglio fuori piano applicato al bordo di normale parallela all'asse z.

## 1.1.4 Sollecitazioni gusci muratura

### 1.1.4.1 Convenzioni di segno gusci muratura

Sono individuate distinte convenzioni di segno in relazione al tipo di elemento strutturale a cui il guscio muratura si riferisce:

- convenzione per gusci non verticali, originati ad esempio da piastre e platee;
- convenzione per gusci verticali, originati ad esempio da pareti e muri.

**Convenzione di segno per gusci non verticali**

Il sistema di riferimento nel quale sono espressi i parametri di sollecitazione è così definito: origine appartenente al piano dell'elemento, asse x e y contenuti nel piano dell'elemento e terzo asse (z) ortogonale al piano dell'elemento a formare una terna destrogira. In particolare l'asse x ha proiezione in pianta parallela ed equiversa all'asse globale X. Nel caso di piastre orizzontali (caso più comune) gli assi x, y e z locali all'elemento sono paralleli ed equiversi agli assi X, Y e Z globali. Si sottolinea che non ha alcun interesse collocare esattamente nel piano dell'elemento la posizione dell'origine in quanto i parametri di sollecitazione sono invarianti rispetto a tale posizione.
In figura è mostrato un elemento infinitesimo di shell orizzontale con indicato il sistema di riferimento e i parametri di sollecitazione Mxx, Myy, Mxy.

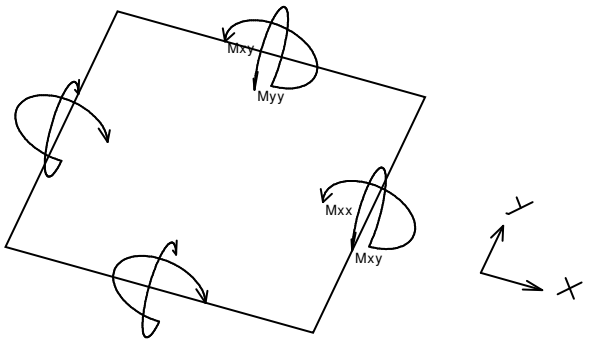


Si definiscono:

- Mxx: momento flettente [Forza*Lunghezza/Lunghezza] agente sul bordo di normale x (verso positivo indicato dalla freccia in figura che tende le fibre inferiori);
- Myy: momento flettente [Forza*Lunghezza/Lunghezza] agente sul bordo di normale y (verso positivo indicato dalla freccia in figura che tende le fibre inferiori);
- Mxy: momento torcente [Forza*Lunghezza/Lunghezza] agente sui bordi (verso positivo indicato dalla freccia in figura).

Per quanto riguarda le sollecitazioni estensionali si faccia riferimento alla figura seguente dove per lo stesso elemento infinitesimo di shell orizzontale con indicato il sistema di riferimento e i parametri di sollecitazione Fxx, Fyy, Fxy.

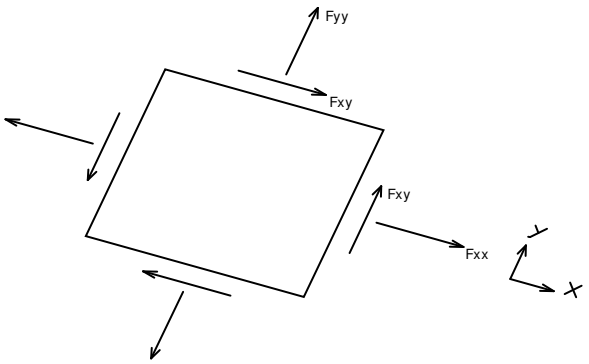


Si definiscono:

- Fxx: sforzo tensionale [Forza/Lunghezza] agente sul bordo di normale x (verso positivo indicato dalla freccia in figura che mette in trazione l'elemento);
- Fyy: sforzo tensionale [Forza/Lunghezza] agente sul bordo di normale all'asse y (verso positivo indicato dalla freccia in figura che mette in trazione l'elemento);
- Fxy: sforzo tagliante [Forza/Lunghezza] agente sui bordi (verso positivo indicato dalla freccia in figura).

**Convenzione di segno per gusci verticali**

Il sistema di riferimento nel quale sono espressi i parametri di sollecitazione è così definito: origine appartenente al piano dell'elemento, asse O (ascisse) e z (ordinate) contenuti nel piano dell'elemento e terzo asse ortogonale al piano dell'elemento a formare una terna destrogira. In particolare l'asse O è orizzontale e l'asse z parallelo ed equiverso con l'asse Z globale. Si sottolinea che non ha alcun interesse collocare esattamente nel piano dell'elemento la posizione dell'origine in quanto i parametri di sollecitazione sono invarianti rispetto a tale posizione.In figura è mostrato un elemento infinitesimo di shell orizzontale con indicato il sistema di riferimento e i parametri di sollecitazione Moo, Mzz, Moz.

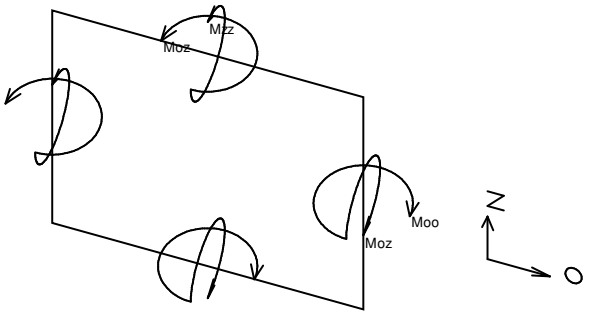


- Moo: momento flettente distribuito [Forza*Lunghezza/Lunghezza] applicato al bordo di normale parallela all'asse O (verso positivo indicato dalla freccia in figura che tende le fibre inferiori);
- Mzz: momento flettente distribuito [Forza*Lunghezza/Lunghezza] applicato al bordo di normale parallela all'asse z (verso positivo indicato dalla freccia in figura che tende le fibre inferiori);
- Moz: momento 'torcente' distribuito [Forza*Lunghezza/Lunghezza] applicato sui bordi (verso positivo indicato dalla freccia in figura).

Per quanto riguarda le sollecitazioni estensionali si faccia riferimento alla figura seguente dove per lo stesso elemento infinitesimo di shell con indicato il sistema di riferimento i parametri di sollecitazione Foo, Fzz, Foz sono rispettivamente:

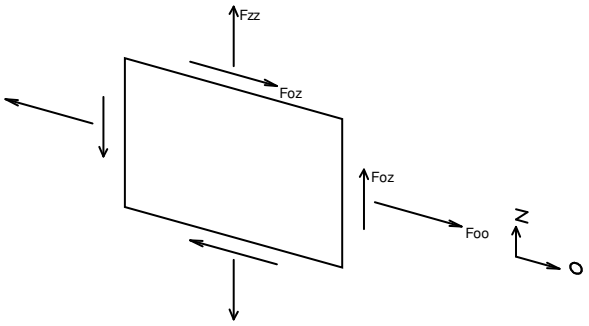


- Fzz: sforzo tensionale distribuito [Forza/Lunghezza] applicato al bordo di normale parallela all'asse z (verso positivo indicato dalla freccia in figura che mette

in trazione l'elemento);

- Foo: sforzo tensionale distribuito [Forza/Lunghezza] applicato al bordo di normale parallela all'asse O (verso positivo indicato dalla freccia in figura che mette in trazione l'elemento);
- Foz: sforzo tagliante distribuito [Forza/Lunghezza] applicato sui bordi (verso positivo indicato dalla freccia in figura).

## 1.1.5 Sollecitazioni aste in muratura

### 1.1.5.1 Convenzioni di segno aste

Le abbreviazioni relative alle sollecitazioni sugli elementi aste sono da intendersi:

- F1 (N): sforzo normale nell'asta;
- F2: sforzo di taglio agente nella direzione dell'asse locale 2;
- F3: sforzo di taglio agente nella direzione dell'asse locale 3;
- M1 (Mt): momento attorno all'asse locale 1; equivale al momento torcente;
- M2: momento attorno all'asse locale 2;
- M3: momento attorno all'asse locale 3.

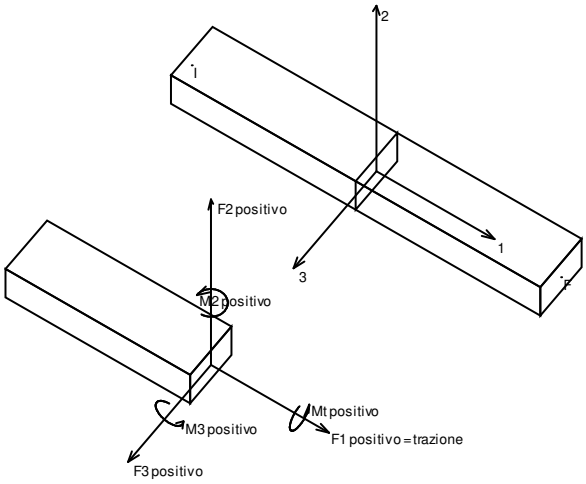


La convenzione sui segni per i parametri di sollecitazione delle aste è la seguente:
presa un'asta con nodo iniziale i e nodo finale f, asse 1 che va da i a f, assi 2 e 3 presi secondo quanto indicato nei paragrafi successivi relativi al sistema locale delle aste sezionando l'asta in un punto e considerando la sezione sinistra del punto in cui si è effettuato il taglio (sezione da cui esce il versore asse 1) i parametri di sollecitazione sono positivi se hanno verso e direzione concordi con il sistema di riferimento locale dell'asta 1, 2, 3 (per i momenti si adotta la regola della mano destra).

Il sistema è definito diversamente per tre categorie di aste, a seconda che siano originate da:

- aste verticali ad esempio pilastri e colonne;
- aste non verticali non di c.a., ad esempio travi di acciaio o legno;
- aste non verticali in c.a.: travi in c.a. di piano, falda o a quota generica.

Nel seguito si indica con 1, 2 e 3 il sistema locale dell'asta che non sempre coincide con gli assi principali della sezione. Si ricorda che per assi principali si intendono gli assi rispetto a cui si ha il raggio di inerzia minimo e massimo. Gli assi 1, 2 e 3 rispettano la regola della mano destra.

Sistema locale aste verticali

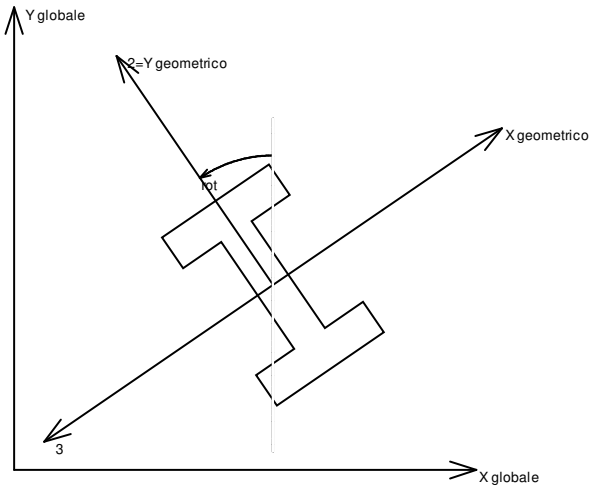


Nella figura si considera l'asse 1 uscente dal foglio (l'osservatore guarda in direzione opposta a quella dell'asse 1).

Sistema locale aste non verticali

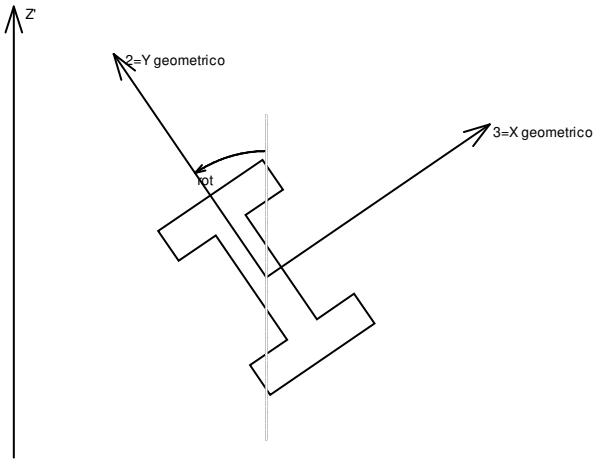


Nella figura si considera l'asse 1 entrante nel foglio (l'osservatore guarda in direzione coincidente a quella dell'asse 1).

L'asse Z' è illustrato nella figura seguente dove:

- P1 è il punto di inserimento iniziale dell'asta;
- P2 è il punto di inserimento finale dell'asta;
- N è la normale al piano o falda di inserimento;

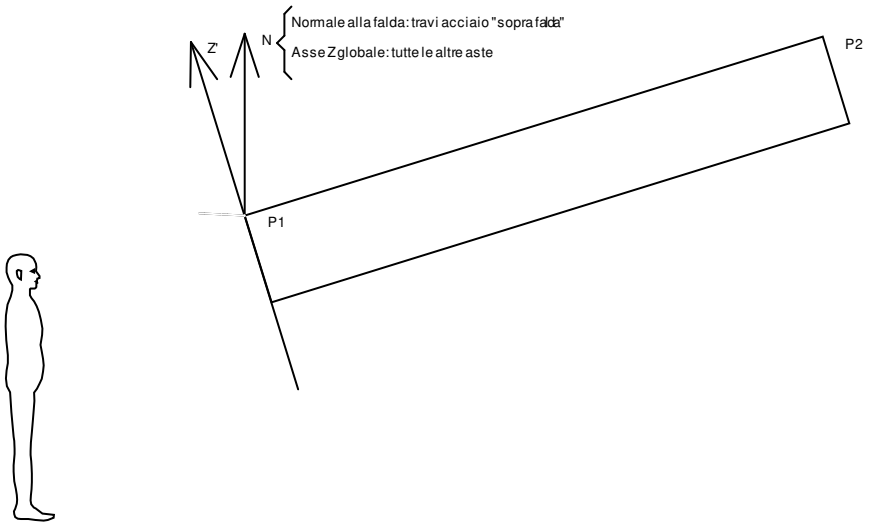


Z' è quindi l'intersezione tra il piano passante per P1, P2 contenente N e il piano della sezione iniziale dell'asta.

Sistema locale aste derivanti da travi in c.a.

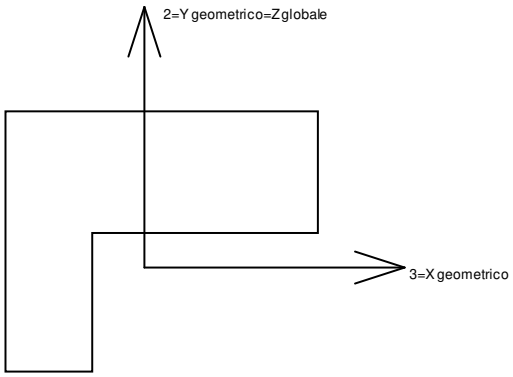


Nella figura si considera l'asse 1 entrante nel foglio (l'osservatore guarda in direzione coincidente a quella dell'asse 1). L'asse 2 è sempre verticale e quindi coincidente con l'asse Z globale nonché con l'asse y geometrico. L'asse 3 coincide con l'asse x geometrico. . Si sottolinea il fatto che gli assi 2 e 3 non corrispondono agli assi principali della sezione.

## 1.1.6 Sollecitazioni aste in muratura FRCM

### 1.1.6.1 Convenzioni di segno aste

Le abbreviazioni relative alle sollecitazioni sugli elementi aste sono da intendersi:

- F1 (N): sforzo normale nell'asta;
- F2: sforzo di taglio agente nella direzione dell'asse locale 2;
- F3: sforzo di taglio agente nella direzione dell'asse locale 3;
- M1 (Mt): momento attorno all'asse locale 1; equivale al momento torcente;
- M2: momento attorno all'asse locale 2;
- M3: momento attorno all'asse locale 3.

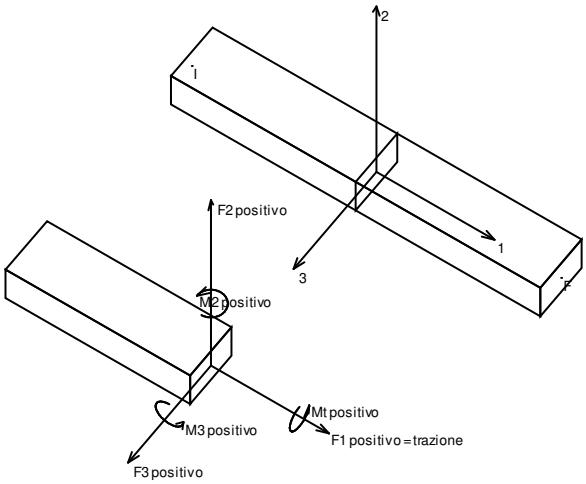


La convenzione sui segni per i parametri di sollecitazione delle aste è la seguente:
presa un'asta con nodo iniziale i e nodo finale f, asse 1 che va da i a f, assi 2 e 3 presi secondo quanto indicato nei paragrafi successivi relativi al sistema locale delle aste sezionando l'asta in un punto e considerando la sezione sinistra del punto in cui si è effettuato il taglio (sezione da cui esce il versore asse 1) i parametri di sollecitazione sono positivi se hanno verso e direzione concordi con il sistema di riferimento locale dell'asta 1, 2, 3 (per i momenti si adotta la regola della mano destra).

Il sistema è definito diversamente per tre categorie di aste, a seconda che siano originate da:

- aste verticali ad esempio pilastri e colonne;
- aste non verticali non di c.a., ad esempio travi di acciaio o legno;
- aste non verticali in c.a.: travi in c.a. di piano, falda o a quota generica.

Nel seguito si indica con 1, 2 e 3 il sistema locale dell'asta che non sempre coincide con gli assi principali della sezione. Si ricorda che per assi principali si intendono gli assi rispetto a cui si ha il raggio di inerzia minimo e massimo. Gli assi 1, 2 e 3 rispettano la regola della mano destra.

Sistema locale aste verticali

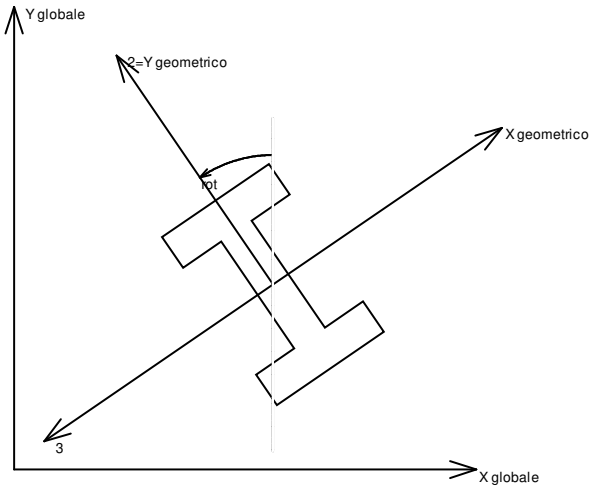


Nella figura si considera l'asse 1 uscente dal foglio (l'osservatore guarda in direzione opposta a quella dell'asse 1).

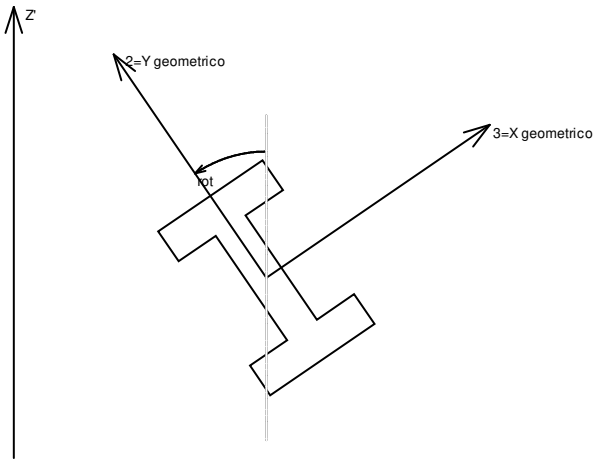


Nella figura si considera l'asse 1 entrante nel foglio (l'osservatore guarda in direzione coincidente a quella dell'asse 1).

L'asse Z' è illustrato nella figura seguente dove:

- P1 è il punto di inserimento iniziale dell'asta;
- P2 è il punto di inserimento finale dell'asta;
- N è la normale al piano o falda di inserimento;

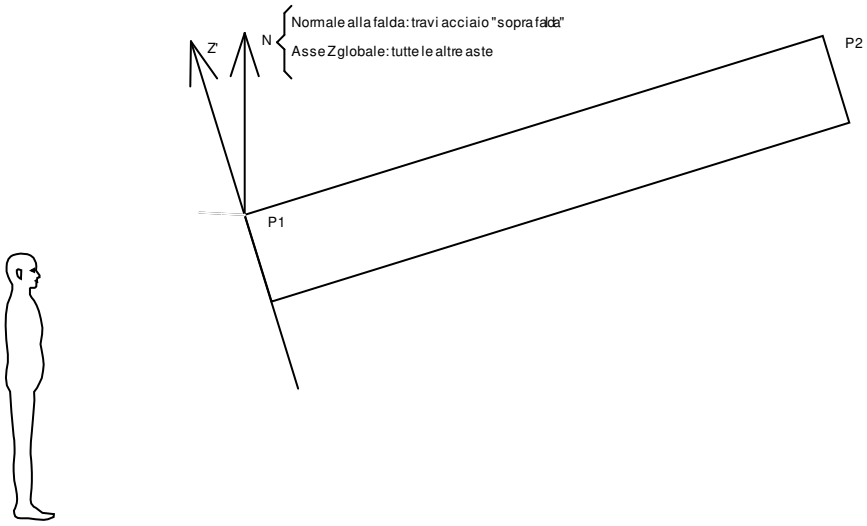


Z' è quindi l'intersezione tra il piano passante per P1, P2 contenente N e il piano della sezione iniziale dell'asta.

Sistema locale aste derivanti da travi in c.a.

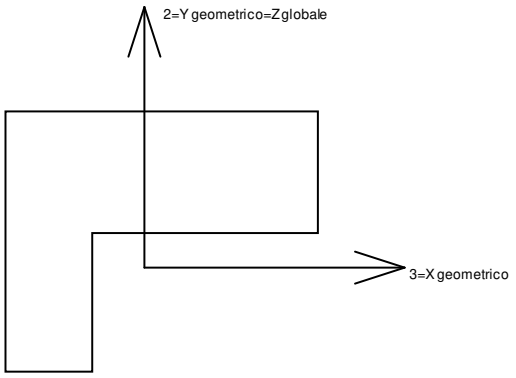


Nella figura si considera l'asse 1 entrante nel foglio (l'osservatore guarda in direzione coincidente a quella dell'asse 1). L'asse 2 è sempre verticale e quindi coincidente con l'asse Z globale nonché con l'asse y geometrico. L'asse 3 coincide con l'asse x geometrico. . Si sottolinea il fatto che gli assi 2 e 3 non corrispondono agli assi principali della sezione.

## 1.1.7 Sollecitazioni aste in muratura armata

### 1.1.7.1 Convenzioni di segno aste

Le abbreviazioni relative alle sollecitazioni sugli elementi aste sono da intendersi:

- F1 (N): sforzo normale nell'asta;
- F2: sforzo di taglio agente nella direzione dell'asse locale 2;
- F3: sforzo di taglio agente nella direzione dell'asse locale 3;
- M1 (Mt): momento attorno all'asse locale 1; equivale al momento torcente;
- M2: momento attorno all'asse locale 2;
- M3: momento attorno all'asse locale 3.

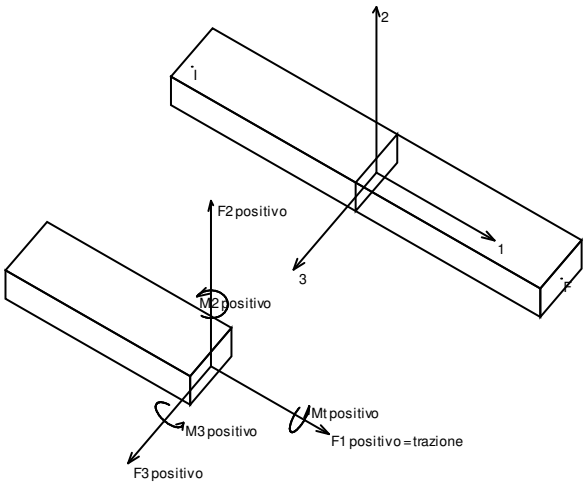


La convenzione sui segni per i parametri di sollecitazione delle aste è la seguente:
presa un'asta con nodo iniziale i e nodo finale f, asse 1 che va da i a f, assi 2 e 3 presi secondo quanto indicato nei paragrafi successivi relativi al sistema locale delle aste sezionando l'asta in un punto e considerando la sezione sinistra del punto in cui si è effettuato il taglio (sezione da cui esce il versore asse 1) i parametri di sollecitazione sono positivi se hanno verso e direzione concordi con il sistema di riferimento locale dell'asta 1, 2, 3 (per i momenti si adotta la regola della mano destra).

Il sistema è definito diversamente per tre categorie di aste, a seconda che siano originate da:

- aste verticali ad esempio pilastri e colonne;
- aste non verticali non di c.a., ad esempio travi di acciaio o legno;
- aste non verticali in c.a.: travi in c.a. di piano, falda o a quota generica.

Nel seguito si indica con 1, 2 e 3 il sistema locale dell'asta che non sempre coincide con gli assi principali della sezione. Si ricorda che per assi principali si intendono gli

assi rispetto a cui si ha il raggio di inerzia minimo e massimo. Gli assi 1, 2 e 3 rispettano la regola della mano destra.

Sistema locale aste verticali

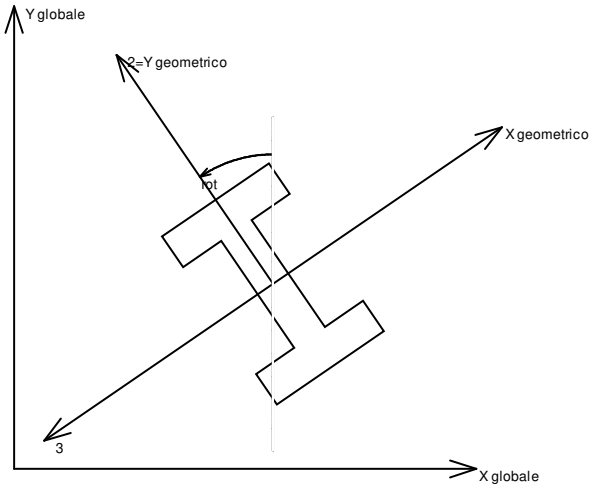


Nella figura si considera l'asse 1 uscente dal foglio (l'osservatore guarda in direzione opposta a quella dell'asse 1).

Sistema locale aste non verticali

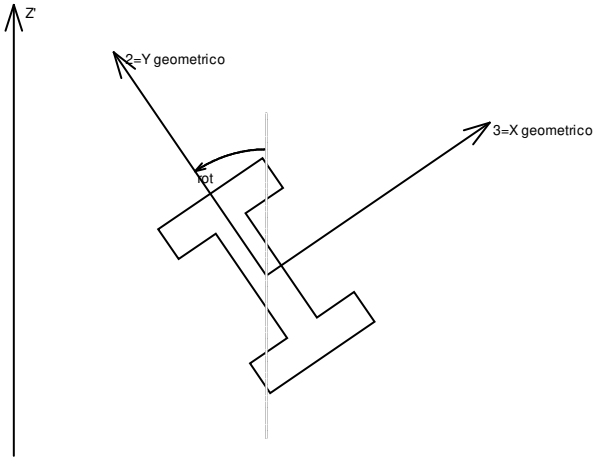


Nella figura si considera l'asse 1 entrante nel foglio (l'osservatore guarda in direzione coincidente a quella dell'asse 1).

L'asse Z' è illustrato nella figura seguente dove:

- P1 è il punto di inserimento iniziale dell'asta;
- P2 è il punto di inserimento finale dell'asta;
- N è la normale al piano o falda di inserimento;

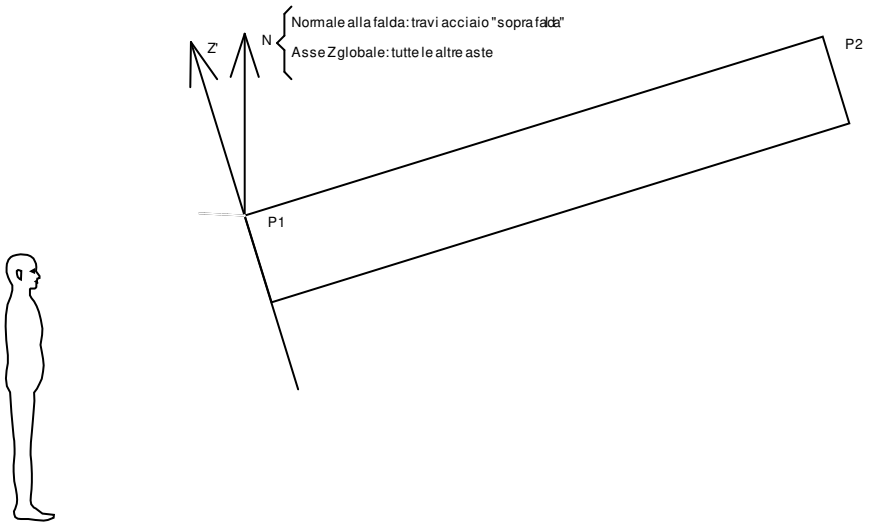


Z' è quindi l'intersezione tra il piano passante per P1, P2 contenente N e il piano della sezione iniziale dell'asta.

Sistema locale aste derivanti da travi in c.a.

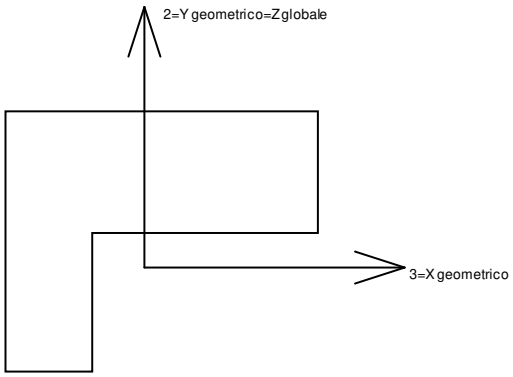


Nella figura si considera l'asse 1 entrante nel foglio (l'osservatore guarda in direzione coincidente a quella dell'asse 1). L'asse 2 è sempre verticale e quindi coincidente con l'asse Z globale nonché con l'asse y geometrico. L'asse 3 coincide con l'asse x geometrico. . Si sottolinea il fatto che gli assi 2 e 3 non corrispondono agli assi principali della sezione.

# 1.2 Reazioni nodali

## 1.2.1 Reazioni nodali estreme

*Nodo: Nodo sollecitato dalla reazione vincolare.*
*Ind.: indice del nodo.*
*Cont.: Contesto a cui si riferisce la reazione vincolare.*
*N.br.: nome breve della condizione o combinazione di carico.*
*Reazione a traslazione: reazione vincolare traslazionale del nodo.*
*x: componente X della reazione vincolare del nodo. [kN]*
*y: componente Y della reazione vincolare del nodo. [kN]*
*z: componente Z della reazione vincolare del nodo. [kN]*
*Reazione a rotazione: reazione vincolare rotazionale del nodo.*
*x: componente X della reazione a rotazione del nodo. [kN*m]*
*y: componente Y della reazione a rotazione del nodo. [kN*m]*
*z: componente Z della reazione a rotazione del nodo. [kN*m]*

Reazioni Fx minime

Vengono mostrati i soli 5 nodi più sollecitati.

| Nodo | Cont. | Reazione a traslazione | | | Reazione a rotazione | | |
|---|---|---|---|---|---|---|---|
| Ind. | N.br. | x | y | z | x | y | z |
| 219 | SLV 15 | -43.38 | 0 | 91.57 | 0.0875 | -1.9568 | -0.0001 |
| 218 | SLV 15 | -41.29 | 0.01 | 81.55 | 0.1845 | -1.7959 | 0.0004 |
| 217 | SLV 15 | -39.59 | -0.25 | 76.07 | 0.297 | -1.7221 | 0.0008 |
| 216 | SLV 15 | -38.44 | -0.37 | 71.38 | 0.2509 | -1.6756 | 0.0014 |
| 215 | SLV 15 | -37.47 | -0.48 | 67.21 | 0.3057 | -1.6383 | 0.0021 |

### Reazioni Fx massime

Vengono mostrati i soli 5 nodi più sollecitati.

| Nodo | Cont. | Reazione a traslazione | | | Reazione a rotazione | | |
|---|---|---|---|---|---|---|---|
| Ind. | N.br. | x | y | z | x | y | z |
| 181 | SLV 3 | 40.34 | 0.1 | 86.14 | 0.0741 | 1.2285 | 0.0007 |
| 180 | SLV 3 | 38.67 | 0.21 | 106.78 | 0.0135 | 1.8097 | 0.0108 |
| 165 | SLV 1 | 38.48 | -0.25 | 122.32 | 0.0051 | 2.0049 | -0.0013 |
| 182 | SLV 3 | 38.1 | -0.15 | 81.28 | 0.1717 | 1.472 | 0.0093 |
| 166 | SLV 1 | 37.66 | -0.28 | 103.78 | -0.0628 | 1.7315 | 0.0001 |

### Reazioni Fy minime

Vengono mostrati i soli 5 nodi più sollecitati.

| Nodo | Cont. | Reazione a traslazione | | | Reazione a rotazione | | |
|---|---|---|---|---|---|---|---|
| Ind. | N.br. | x | y | z | x | y | z |
| 315 | SLV 11 | 0.05 | -36.49 | 58.38 | 1.9636 | -0.019 | 0.0002 |
| 275 | SLV 7 | 0.67 | -32.89 | 106.13 | 1.7791 | -0.1635 | -0.001 |
| 274 | SLV 11 | 0.04 | -28.51 | 55.37 | 1.5707 | -0.1276 | -0.0001 |
| 264 | SLV 7 | -0.89 | -27.19 | 88.57 | 1.3879 | -0.3559 | 0.0028 |
| 356 | SLV 7 | -0.26 | -27.1 | 93.71 | 0.8423 | -0.0895 | -0.0134 |

### Reazioni Fy massime

Vengono mostrati i soli 5 nodi più sollecitati.

| Nodo | Cont. | Reazione a traslazione | | | Reazione a rotazione | | |
|---|---|---|---|---|---|---|---|
| Ind. | N.br. | x | y | z | x | y | z |
| 98 | SLV 5 | 0.6 | 34.04 | 115.86 | -1.8737 | -0.1623 | 0.0012 |
| 32 | SLV 5 | -0.07 | 33.48 | 59.7 | -1.5941 | -0.0312 | -0.0002 |
| 97 | SLV 9 | -0.61 | 31.34 | 112.78 | -1.5261 | 0.1308 | -0.0009 |
| 31 | SLV 9 | -0.04 | 29.51 | 50.42 | -1.3843 | -0.0112 | 0.0002 |
| 36 | SLV 5 | -0.18 | 28.34 | 63.53 | -1.1302 | -0.0546 | 0.0003 |

### Reazioni Fz minime

Vengono mostrati i soli 5 nodi più sollecitati.

| Nodo | Cont. | Reazione a traslazione | | | Reazione a rotazione | | |
|---|---|---|---|---|---|---|---|
| Ind. | N.br. | x | y | z | x | y | z |
| 221 | SLV X | -16.43 | 8.91 | -73.93 | 8.9108 | -0.6097 | -3.7001 |
| 198 | SLV X | -22.14 | 0.12 | -64.3 | -0.096 | -1.3326 | -0.0001 |
| 197 | SLV X | -20.46 | -0.52 | -59.23 | -0.0337 | -0.727 | -0.0092 |
| 163 | SLV X | -0.15 | 4.19 | -53.78 | -0.2211 | -0.0906 | 0.0008 |
| 44 | SLV X | -10.15 | -5.85 | -53.7 | 0.0954 | -0.3899 | 0.004 |

### Reazioni Fz massime

Vengono mostrati i soli 5 nodi più sollecitati.

| Nodo | Cont. | Reazione a traslazione | | | Reazione a rotazione | | |
|---|---|---|---|---|---|---|---|
| Ind. | N.br. | x | y | z | x | y | z |
| 220 | SLV 13 | -30.89 | 7.2 | 184.22 | -0.3292 | -1.1765 | -0.0006 |
| 221 | SLV 3 | 31.94 | -22.71 | 170.94 | -19.2948 | 1.0928 | 7.1326 |
| 64 | SLV 13 | -21.82 | -12.49 | 162.42 | -7.7339 | -1.3567 | -0.0255 |
| 186 | SLV 13 | -29.68 | 0.37 | 159.57 | -0.2811 | -2.5998 | -0.0057 |
| 179 | SLV 3 | 32.16 | -8.66 | 157.97 | 0.082 | 1.8374 | -0.0174 |

## 1.2.2 Reazioni nodali in combinazioni di carico

***Nodo***: *Nodo sollecitato dalla reazione vincolare.*
***Ind.***: *indice del nodo.*
***Cont.***: *Contesto a cui si riferisce la reazione vincolare.*
***N.br.***: *nome breve della condizione o combinazione di carico.*
***Reazione a traslazione***: *reazione vincolare traslazionale del nodo.*
***x***: *componente X della reazione vincolare del nodo. [kN]*
***y***: *componente Y della reazione vincolare del nodo. [kN]*
***z***: *componente Z della reazione vincolare del nodo. [kN]*
***Reazione a rotazione***: *reazione vincolare rotazionale del nodo.*
***x***: *componente X della reazione a rotazione del nodo. [kN*m]*
***y***: *componente Y della reazione a rotazione del nodo. [kN*m]*
***z***: *componente Z della reazione a rotazione del nodo. [kN*m]*

| Nodo | Cont. | Reazione a traslazione | | | Reazione a rotazione | | |
|---|---|---|---|---|---|---|---|
| Ind. | N.br. | x | y | z | x | y | z |
| 2 | SLU 1 | 3.94 | 3.24 | 21.31 | 2.7548 | 0.1096 | -0.8977 |
| 2 | SLU 2 | 3.95 | 2.51 | 18.56 | 2.6633 | 0.113 | -0.9006 |
| 2 | SLU 3 | 3.94 | 3.22 | 21.17 | 2.7451 | 0.1103 | -0.8997 |
| 2 | SLU 4 | 3.95 | 2.78 | 19.52 | 2.6903 | 0.1123 | -0.9014 |
| 2 | SLU 5 | 3.95 | 2.46 | 18.29 | 2.642 | 0.1135 | -0.9002 |
| 2 | SLU 6 | 3.94 | 3.16 | 20.9 | 2.7238 | 0.1109 | -0.8994 |
| 2 | SLU 7 | 3.95 | 2.73 | 19.25 | 2.669 | 0.1129 | -0.9011 |
| 2 | SLU 8 | 3.93 | 3.13 | 20.77 | 2.7122 | 0.1108 | -0.897 |

| Nodo | Cont. | Reazione a traslazione | | | Reazione a rotazione | | |
|---|---|---|---|---|---|---|---|
| Ind. | N.br. | x | y | z | x | y | z |
| 2 | SLU 9 | 3.94 | 2.69 | 19.12 | 2.6573 | 0.1128 | -0.8987 |
| 2 | SLU 10 | 4.15 | 2.73 | 19.15 | 2.7463 | 0.1199 | -0.9468 |
| 2 | SLU 11 | 4.14 | 3.43 | 21.76 | 2.8282 | 0.1173 | -0.946 |
| 2 | SLU 12 | 4.15 | 3 | 20.11 | 2.7733 | 0.1193 | -0.9477 |
| 2 | SLU 13 | 4.15 | 2.67 | 18.88 | 2.725 | 0.1205 | -0.9464 |
| 2 | SLU 14 | 4.14 | 3.38 | 21.49 | 2.8069 | 0.1178 | -0.9456 |
| 2 | SLU 15 | 4.15 | 2.94 | 19.83 | 2.752 | 0.1198 | -0.9473 |
| 2 | SLU 16 | 4.13 | 3.35 | 21.36 | 2.7952 | 0.1177 | -0.9432 |
| 2 | SLU 17 | 4.14 | 2.91 | 19.7 | 2.7403 | 0.1197 | -0.9449 |
| 2 | SLU 18 | 4.22 | 3.55 | 22.15 | 2.8734 | 0.1195 | -0.9638 |
| 2 | SLU 19 | 4.23 | 3.11 | 20.5 | 2.8185 | 0.1215 | -0.9655 |
| 2 | SLU 20 | 4.22 | 3.49 | 21.88 | 2.8521 | 0.1201 | -0.9634 |
| 2 | SLU 21 | 4.23 | 3.06 | 20.23 | 2.7972 | 0.1221 | -0.9651 |
| 2 | SLU 22 | 4.04 | 3.4 | 21.67 | 2.8001 | 0.1129 | -0.9213 |
| 2 | SLU 23 | 4.05 | 2.67 | 18.92 | 2.7087 | 0.1163 | -0.9241 |
| 2 | SLU 24 | 4.04 | 3.38 | 21.53 | 2.7905 | 0.1136 | -0.9233 |
| 2 | SLU 25 | 4.05 | 2.95 | 19.88 | 2.7357 | 0.1156 | -0.925 |
| 2 | SLU 26 | 4.05 | 2.62 | 18.65 | 2.6874 | 0.1168 | -0.9237 |
| 2 | SLU 27 | 4.04 | 3.33 | 21.26 | 2.7692 | 0.1142 | -0.9229 |
| 2 | SLU 28 | 4.05 | 2.89 | 19.6 | 2.7144 | 0.1162 | -0.9246 |
| 2 | SLU 29 | 4.03 | 3.3 | 21.13 | 2.7575 | 0.1141 | -0.9205 |
| 2 | SLU 30 | 4.04 | 2.86 | 19.47 | 2.7027 | 0.1161 | -0.9222 |
| 2 | SLU 31 | 4.25 | 2.89 | 19.51 | 2.7917 | 0.1232 | -0.9703 |
| 2 | SLU 32 | 4.24 | 3.6 | 22.12 | 2.8735 | 0.1206 | -0.9695 |
| 2 | SLU 33 | 4.25 | 3.16 | 20.46 | 2.8187 | 0.1226 | -0.9712 |
| 2 | SLU 34 | 4.25 | 2.84 | 19.23 | 2.7704 | 0.1238 | -0.97 |
| 2 | SLU 35 | 4.24 | 3.54 | 21.84 | 2.8522 | 0.1211 | -0.9692 |
| 2 | SLU 36 | 4.25 | 3.11 | 20.19 | 2.7974 | 0.1231 | -0.9709 |
| 2 | SLU 37 | 4.23 | 3.51 | 21.72 | 2.8406 | 0.121 | -0.9668 |
| 2 | SLU 38 | 4.24 | 3.07 | 20.06 | 2.7857 | 0.123 | -0.9685 |
| 2 | SLU 39 | 4.32 | 3.71 | 22.51 | 2.9187 | 0.1228 | -0.9873 |
| 2 | SLU 40 | 4.33 | 3.27 | 20.86 | 2.8639 | 0.1248 | -0.989 |
| 2 | SLU 41 | 4.32 | 3.66 | 22.24 | 2.8974 | 0.1234 | -0.9869 |
| 2 | SLU 42 | 4.33 | 3.22 | 20.59 | 2.8426 | 0.1254 | -0.9886 |
| 2 | SLU 43 | 5.08 | 4.15 | 27.59 | 3.5656 | 0.1414 | -1.159 |
| 2 | SLU 44 | 5.1 | 3.43 | 24.83 | 3.4742 | 0.1447 | -1.1618 |
| 2 | SLU 45 | 5.09 | 4.13 | 27.44 | 3.556 | 0.1421 | -1.161 |
| 2 | SLU 46 | 5.1 | 3.7 | 25.79 | 3.5011 | 0.1441 | -1.1627 |
| 2 | SLU 47 | 5.09 | 3.37 | 24.56 | 3.4529 | 0.1453 | -1.1614 |
| 2 | SLU 48 | 5.09 | 4.08 | 27.17 | 3.5347 | 0.1426 | -1.1606 |
| 2 | SLU 49 | 5.1 | 3.64 | 25.52 | 3.4798 | 0.1447 | -1.1623 |
| 2 | SLU 50 | 5.08 | 4.05 | 27.04 | 3.523 | 0.1425 | -1.1582 |
| 2 | SLU 51 | 5.09 | 3.61 | 25.39 | 3.4682 | 0.1445 | -1.1599 |
| 2 | SLU 52 | 5.29 | 3.64 | 25.42 | 3.5572 | 0.1517 | -1.208 |
| 2 | SLU 53 | 5.29 | 4.35 | 28.03 | 3.639 | 0.149 | -1.2072 |
| 2 | SLU 54 | 5.3 | 3.91 | 26.38 | 3.5842 | 0.151 | -1.2089 |
| 2 | SLU 55 | 5.29 | 3.59 | 25.15 | 3.5359 | 0.1522 | -1.2077 |
| 2 | SLU 56 | 5.29 | 4.3 | 27.76 | 3.6177 | 0.1496 | -1.2069 |
| 2 | SLU 57 | 5.3 | 3.86 | 26.11 | 3.5629 | 0.1516 | -1.2086 |
| 2 | SLU 58 | 5.28 | 4.26 | 27.63 | 3.606 | 0.1494 | -1.2045 |
| 2 | SLU 59 | 5.29 | 3.83 | 25.98 | 3.5512 | 0.1515 | -1.2062 |
| 2 | SLU 60 | 5.37 | 4.46 | 28.43 | 3.6842 | 0.1513 | -1.225 |
| 2 | SLU 61 | 5.37 | 4.03 | 26.77 | 3.6294 | 0.1533 | -1.2267 |
| 2 | SLU 62 | 5.36 | 4.41 | 28.15 | 3.6629 | 0.1518 | -1.2246 |
| 2 | SLU 63 | 5.37 | 3.97 | 26.5 | 3.6081 | 0.1539 | -1.2264 |
| 2 | SLU 64 | 5.18 | 4.32 | 27.94 | 3.611 | 0.1447 | -1.1825 |
| 2 | SLU 65 | 5.2 | 3.59 | 25.19 | 3.5196 | 0.148 | -1.1853 |
| 2 | SLU 66 | 5.19 | 4.3 | 27.8 | 3.6014 | 0.1454 | -1.1845 |
| 2 | SLU 67 | 5.2 | 3.86 | 26.15 | 3.5465 | 0.1474 | -1.1862 |
| 2 | SLU 68 | 5.19 | 3.54 | 24.92 | 3.4983 | 0.1486 | -1.185 |
| 2 | SLU 69 | 5.19 | 4.24 | 27.53 | 3.5801 | 0.1459 | -1.1842 |
| 2 | SLU 70 | 5.2 | 3.81 | 25.88 | 3.5252 | 0.148 | -1.1859 |
| 2 | SLU 71 | 5.18 | 4.21 | 27.4 | 3.5684 | 0.1458 | -1.1818 |
| 2 | SLU 72 | 5.19 | 3.77 | 25.75 | 3.5135 | 0.1478 | -1.1835 |
| 2 | SLU 73 | 5.39 | 3.81 | 25.78 | 3.6026 | 0.155 | -1.2316 |
| 2 | SLU 74 | 5.39 | 4.51 | 28.39 | 3.6844 | 0.1523 | -1.2308 |
| 2 | SLU 75 | 5.4 | 4.08 | 26.74 | 3.6295 | 0.1543 | -1.2325 |
| 2 | SLU 76 | 5.39 | 3.75 | 25.51 | 3.5813 | 0.1555 | -1.2312 |
| 2 | SLU 77 | 5.39 | 4.46 | 28.12 | 3.6631 | 0.1529 | -1.2304 |
| 2 | SLU 78 | 5.4 | 4.02 | 26.46 | 3.6082 | 0.1549 | -1.2321 |
| 2 | SLU 79 | 5.38 | 4.43 | 27.99 | 3.6514 | 0.1527 | -1.228 |
| 2 | SLU 80 | 5.39 | 3.99 | 26.33 | 3.5966 | 0.1548 | -1.2297 |
| 2 | SLU 81 | 5.47 | 4.63 | 28.78 | 3.7296 | 0.1546 | -1.2486 |
| 2 | SLU 82 | 5.47 | 4.19 | 27.13 | 3.6747 | 0.1566 | -1.2503 |
| 2 | SLU 83 | 5.46 | 4.57 | 28.51 | 3.7083 | 0.1551 | -1.2482 |
| 2 | SLU 84 | 5.47 | 4.14 | 26.86 | 3.6534 | 0.1572 | -1.2499 |
| 2 | SLE RA 1 | 3.96 | 3.29 | 21.42 | 2.7677 | 0.1106 | -0.9044 |
| 2 | SLE RA 2 | 3.97 | 2.8 | 19.58 | 2.7068 | 0.1128 | -0.9063 |
| 2 | SLE RA 3 | 3.97 | 3.27 | 21.32 | 2.7613 | 0.111 | -0.9058 |
| 2 | SLE RA 4 | 3.98 | 2.98 | 20.22 | 2.7247 | 0.1124 | -0.9069 |
| 2 | SLE RA 5 | 3.97 | 2.76 | 19.4 | 2.6926 | 0.1132 | -0.9061 |
| 2 | SLE RA 6 | 3.97 | 3.24 | 21.14 | 2.7471 | 0.1114 | -0.9055 |
| 2 | SLE RA 7 | 3.97 | 2.94 | 20.04 | 2.7105 | 0.1128 | -0.9067 |
| 2 | SLE RA 8 | 3.96 | 3.21 | 21.05 | 2.7393 | 0.1113 | -0.904 |
| 2 | SLE RA 9 | 3.97 | 2.92 | 19.95 | 2.7027 | 0.1127 | -0.9051 |
| 2 | SLE RA 10 | 4.11 | 2.94 | 19.97 | 2.7621 | 0.1174 | -0.9372 |
| 2 | SLE RA 11 | 4.1 | 3.42 | 21.71 | 2.8167 | 0.1157 | -0.9366 |
| 2 | SLE RA 12 | 4.11 | 3.12 | 20.61 | 2.7801 | 0.117 | -0.9378 |

| Nodo | Cont. | Reazione a traslazione | | | Reazione a rotazione | | |
|---|---|---|---|---|---|---|---|
| Ind. | N.br. | x | y | z | x | y | z |
| 2 | SLE RA 13 | 4.1 | 2.91 | 19.79 | 2.7479 | 0.1178 | -0.9369 |
| 2 | SLE RA 14 | 4.1 | 3.38 | 21.53 | 2.8025 | 0.116 | -0.9364 |
| 2 | SLE RA 15 | 4.11 | 3.09 | 20.43 | 2.7659 | 0.1174 | -0.9375 |
| 2 | SLE RA 16 | 4.09 | 3.36 | 21.45 | 2.7947 | 0.1159 | -0.9348 |
| 2 | SLE RA 17 | 4.1 | 3.07 | 20.34 | 2.7581 | 0.1173 | -0.9359 |
| 2 | SLE RA 18 | 4.15 | 3.49 | 21.98 | 2.8468 | 0.1172 | -0.9485 |
| 2 | SLE RA 19 | 4.16 | 3.2 | 20.87 | 2.8102 | 0.1185 | -0.9496 |
| 2 | SLE RA 20 | 4.15 | 3.46 | 21.79 | 2.8326 | 0.1175 | -0.9482 |
| 2 | SLE RA 21 | 4.16 | 3.16 | 20.69 | 2.796 | 0.1189 | -0.9494 |
| 2 | SLE FR 1 | 3.96 | 3.29 | 21.42 | 2.7677 | 0.1106 | -0.9044 |
| 2 | SLE FR 2 | 3.97 | 3.19 | 21.05 | 2.7555 | 0.111 | -0.9048 |
| 2 | SLE FR 3 | 3.96 | 3.27 | 21.34 | 2.762 | 0.1107 | -0.9043 |
| 2 | SLE FR 4 | 4.02 | 3.25 | 21.22 | 2.7793 | 0.113 | -0.918 |
| 2 | SLE FR 5 | 4.02 | 3.33 | 21.51 | 2.7858 | 0.1127 | -0.9176 |
| 2 | SLE FR 6 | 4.06 | 3.39 | 21.7 | 2.8073 | 0.1139 | -0.9265 |
| 2 | SLE QP 1 | 3.96 | 3.29 | 21.42 | 2.7677 | 0.1106 | -0.9044 |
| 2 | SLE QP 2 | 4.02 | 3.35 | 21.58 | 2.7914 | 0.1126 | -0.9177 |
| 2 | SLD 1 | 7.1 | 5.41 | 35.28 | 4.4644 | 0.2233 | -1.6138 |
| 2 | SLD 2 | 7.1 | 5.41 | 35.28 | 4.4644 | 0.2233 | -1.6138 |
| 2 | SLD 3 | 6.52 | 2.95 | 26.89 | 4.0983 | 0.2 | -1.4998 |
| 2 | SLD 4 | 6.52 | 2.95 | 26.89 | 4.0983 | 0.2 | -1.4998 |
| 2 | SLD 5 | 5.83 | 7.69 | 38.42 | 3.8486 | 0.1812 | -1.2995 |
| 2 | SLD 6 | 5.83 | 7.69 | 38.42 | 3.8486 | 0.1812 | -1.2995 |
| 2 | SLD 7 | 3.89 | -0.5 | 10.45 | 2.6282 | 0.1034 | -0.9193 |
| 2 | SLD 8 | 3.89 | -0.5 | 10.45 | 2.6282 | 0.1034 | -0.9193 |
| 2 | SLD 9 | 4.15 | 7.19 | 32.72 | 2.9547 | 0.1217 | -0.916 |
| 2 | SLD 10 | 4.15 | 7.19 | 32.72 | 2.9547 | 0.1217 | -0.916 |
| 2 | SLD 11 | 2.21 | -1 | 4.75 | 1.7343 | 0.0439 | -0.5358 |
| 2 | SLD 12 | 2.21 | -1 | 4.75 | 1.7343 | 0.0439 | -0.5358 |
| 2 | SLD 13 | 1.52 | 3.74 | 16.28 | 1.4846 | 0.0251 | -0.3355 |
| 2 | SLD 14 | 1.52 | 3.74 | 16.28 | 1.4846 | 0.0251 | -0.3355 |
| 2 | SLD 15 | 0.94 | 1.29 | 7.89 | 1.1184 | 0.0018 | -0.2215 |
| 2 | SLD 16 | 0.94 | 1.29 | 7.89 | 1.1184 | 0.0018 | -0.2215 |
| 2 | SLV 1 | 11.24 | 8.25 | 53.87 | 6.7223 | 0.372 | -2.5502 |
| 2 | SLV 2 | 11.24 | 8.25 | 53.87 | 6.7223 | 0.372 | -2.5502 |
| 2 | SLV 3 | 9.87 | 2.41 | 33.85 | 5.8437 | 0.317 | -2.28 |
| 2 | SLV 4 | 9.87 | 2.41 | 33.85 | 5.8437 | 0.317 | -2.28 |
| 2 | SLV 5 | 8.26 | 13.69 | 61.62 | 5.3033 | 0.2738 | -1.8172 |
| 2 | SLV 6 | 8.26 | 13.69 | 61.62 | 5.3033 | 0.2738 | -1.8172 |
| 2 | SLV 7 | 3.7 | -5.8 | -5.09 | 2.3745 | 0.0905 | -0.9166 |
| 2 | SLV 8 | 3.7 | -5.8 | -5.09 | 2.3745 | 0.0905 | -0.9166 |
| 2 | SLV 9 | 4.34 | 12.5 | 48.26 | 3.2084 | 0.1346 | -0.9187 |
| 2 | SLV 10 | 4.34 | 12.5 | 48.26 | 3.2084 | 0.1346 | -0.9187 |
| 2 | SLV 11 | -0.22 | -6.99 | -18.45 | 0.2796 | -0.0487 | -0.0181 |
| 2 | SLV 12 | -0.22 | -6.99 | -18.45 | 0.2796 | -0.0487 | -0.0181 |
| 2 | SLV 13 | -1.83 | 4.29 | 9.31 | -0.2608 | -0.0919 | 0.4447 |
| 2 | SLV 14 | -1.83 | 4.29 | 9.31 | -0.2608 | -0.0919 | 0.4447 |
| 2 | SLV 15 | -3.2 | -1.56 | -10.7 | -1.1395 | -0.1469 | 0.7149 |
| 2 | SLV 16 | -3.2 | -1.56 | -10.7 | -1.1395 | -0.1469 | 0.7149 |
| 4 | SLU 1 | 3.8 | -0.02 | 20.97 | 0.0211 | 0.1736 | 0.0001 |
| 4 | SLU 2 | 4.04 | -0.03 | 20.14 | 0.0236 | 0.1826 | 0.0001 |
| 4 | SLU 3 | 3.85 | -0.02 | 20.88 | 0.0213 | 0.1756 | 0.0001 |
| 4 | SLU 4 | 3.99 | -0.03 | 20.38 | 0.0228 | 0.181 | 0.0001 |
| 4 | SLU 5 | 4.09 | -0.03 | 19.94 | 0.0237 | 0.1846 | 0.0001 |
| 4 | SLU 6 | 3.9 | -0.02 | 20.68 | 0.0214 | 0.1776 | 0.0001 |
| 4 | SLU 7 | 4.04 | -0.03 | 20.18 | 0.0229 | 0.183 | 0.0001 |
| 4 | SLU 8 | 3.9 | -0.02 | 20.58 | 0.0213 | 0.1777 | 0.0001 |
| 4 | SLU 9 | 4.05 | -0.03 | 20.08 | 0.0228 | 0.1831 | 0.0001 |
| 4 | SLU 10 | 4.37 | -0.03 | 20.75 | 0.0259 | 0.1965 | 0.0001 |
| 4 | SLU 11 | 4.17 | -0.02 | 21.49 | 0.0237 | 0.1895 | 0.0001 |
| 4 | SLU 12 | 4.32 | -0.03 | 20.99 | 0.0251 | 0.1949 | 0.0001 |
| 4 | SLU 13 | 4.42 | -0.03 | 20.56 | 0.026 | 0.1986 | 0.0001 |
| 4 | SLU 14 | 4.23 | -0.02 | 21.29 | 0.0238 | 0.1916 | 0.0001 |
| 4 | SLU 15 | 4.37 | -0.03 | 20.79 | 0.0252 | 0.197 | 0.0001 |
| 4 | SLU 16 | 4.23 | -0.02 | 21.19 | 0.0237 | 0.1916 | 0.0001 |
| 4 | SLU 17 | 4.37 | -0.03 | 20.69 | 0.0251 | 0.197 | 0.0001 |
| 4 | SLU 18 | 4.27 | -0.03 | 21.85 | 0.0245 | 0.1935 | 0.0001 |
| 4 | SLU 19 | 4.41 | -0.03 | 21.35 | 0.026 | 0.1989 | 0.0001 |
| 4 | SLU 20 | 4.32 | -0.03 | 21.65 | 0.0246 | 0.1955 | 0.0001 |
| 4 | SLU 21 | 4.46 | -0.03 | 21.15 | 0.0261 | 0.2009 | 0.0001 |
| 4 | SLU 22 | 3.95 | -0.02 | 21.33 | 0.0226 | 0.1802 | 0.0001 |
| 4 | SLU 23 | 4.19 | -0.03 | 20.49 | 0.0251 | 0.1892 | 0.0001 |
| 4 | SLU 24 | 4 | -0.02 | 21.23 | 0.0228 | 0.1822 | 0.0001 |
| 4 | SLU 25 | 4.15 | -0.03 | 20.73 | 0.0243 | 0.1876 | 0.0001 |
| 4 | SLU 26 | 4.25 | -0.03 | 20.3 | 0.0252 | 0.1912 | 0.0001 |
| 4 | SLU 27 | 4.05 | -0.02 | 21.03 | 0.0229 | 0.1842 | 0.0001 |
| 4 | SLU 28 | 4.2 | -0.03 | 20.53 | 0.0244 | 0.1896 | 0.0001 |
| 4 | SLU 29 | 4.05 | -0.02 | 20.94 | 0.0228 | 0.1842 | 0.0001 |
| 4 | SLU 30 | 4.2 | -0.03 | 20.44 | 0.0243 | 0.1896 | 0.0001 |
| 4 | SLU 31 | 4.52 | -0.03 | 21.1 | 0.0274 | 0.2031 | 0.0001 |
| 4 | SLU 32 | 4.33 | -0.03 | 21.84 | 0.0252 | 0.1961 | 0.0001 |
| 4 | SLU 33 | 4.47 | -0.03 | 21.34 | 0.0266 | 0.2015 | 0.0001 |
| 4 | SLU 34 | 4.57 | -0.03 | 20.91 | 0.0275 | 0.2051 | 0.0001 |
| 4 | SLU 35 | 4.38 | -0.03 | 21.65 | 0.0252 | 0.1981 | 0.0001 |
| 4 | SLU 36 | 4.53 | -0.03 | 21.15 | 0.0267 | 0.2035 | 0.0001 |
| 4 | SLU 37 | 4.38 | -0.03 | 21.55 | 0.0251 | 0.1981 | 0.0001 |
| 4 | SLU 38 | 4.53 | -0.03 | 21.05 | 0.0266 | 0.2035 | 0.0001 |
| 4 | SLU 39 | 4.42 | -0.03 | 22.2 | 0.026 | 0.2 | 0.0001 |

| Nodo | Cont. | Reazione a traslazione | | | Reazione a rotazione | | |
|---|---|---|---|---|---|---|---|
| Ind. | N.br. | x | y | z | x | y | z |
| 4 | SLU 40 | 4.57 | -0.03 | 21.7 | 0.0275 | 0.2054 | 0.0001 |
| 4 | SLU 41 | 4.47 | -0.03 | 22 | 0.0261 | 0.2021 | 0.0001 |
| 4 | SLU 42 | 4.62 | -0.03 | 21.5 | 0.0276 | 0.2075 | 0.0001 |
| 4 | SLU 43 | 4.88 | -0.03 | 27.14 | 0.0269 | 0.2234 | 0.0001 |
| 4 | SLU 44 | 5.13 | -0.04 | 26.31 | 0.0294 | 0.2324 | 0.0001 |
| 4 | SLU 45 | 4.93 | -0.03 | 27.05 | 0.0271 | 0.2254 | 0.0001 |
| 4 | SLU 46 | 5.08 | -0.03 | 26.55 | 0.0286 | 0.2308 | 0.0001 |
| 4 | SLU 47 | 5.18 | -0.04 | 26.12 | 0.0295 | 0.2345 | 0.0001 |
| 4 | SLU 48 | 4.98 | -0.03 | 26.85 | 0.0272 | 0.2275 | 0.0001 |
| 4 | SLU 49 | 5.13 | -0.03 | 26.35 | 0.0287 | 0.2329 | 0.0001 |
| 4 | SLU 50 | 4.99 | -0.03 | 26.75 | 0.0271 | 0.2275 | 0.0001 |
| 4 | SLU 51 | 5.13 | -0.03 | 26.25 | 0.0286 | 0.2329 | 0.0001 |
| 4 | SLU 52 | 5.46 | -0.04 | 26.92 | 0.0318 | 0.2463 | 0.0001 |
| 4 | SLU 53 | 5.26 | -0.03 | 27.66 | 0.0295 | 0.2393 | 0.0001 |
| 4 | SLU 54 | 5.41 | -0.04 | 27.16 | 0.031 | 0.2448 | 0.0001 |
| 4 | SLU 55 | 5.51 | -0.04 | 26.73 | 0.0319 | 0.2484 | 0.0001 |
| 4 | SLU 56 | 5.31 | -0.03 | 27.46 | 0.0296 | 0.2414 | 0.0001 |
| 4 | SLU 57 | 5.46 | -0.04 | 26.96 | 0.0311 | 0.2468 | 0.0001 |
| 4 | SLU 58 | 5.31 | -0.03 | 27.36 | 0.0295 | 0.2414 | 0.0001 |
| 4 | SLU 59 | 5.46 | -0.04 | 26.86 | 0.031 | 0.2468 | 0.0001 |
| 4 | SLU 60 | 5.35 | -0.03 | 28.02 | 0.0303 | 0.2433 | 0.0001 |
| 4 | SLU 61 | 5.5 | -0.04 | 27.52 | 0.0318 | 0.2487 | 0.0001 |
| 4 | SLU 62 | 5.4 | -0.03 | 27.82 | 0.0304 | 0.2453 | 0.0001 |
| 4 | SLU 63 | 5.55 | -0.04 | 27.32 | 0.0319 | 0.2507 | 0.0001 |
| 4 | SLU 64 | 5.04 | -0.03 | 27.5 | 0.0284 | 0.23 | 0.0001 |
| 4 | SLU 65 | 5.28 | -0.04 | 26.66 | 0.0309 | 0.239 | 0.0001 |
| 4 | SLU 66 | 5.09 | -0.03 | 27.4 | 0.0286 | 0.232 | 0.0001 |
| 4 | SLU 67 | 5.23 | -0.04 | 26.9 | 0.0301 | 0.2374 | 0.0001 |
| 4 | SLU 68 | 5.33 | -0.04 | 26.47 | 0.031 | 0.241 | 0.0001 |
| 4 | SLU 69 | 5.14 | -0.03 | 27.2 | 0.0287 | 0.234 | 0.0001 |
| 4 | SLU 70 | 5.28 | -0.04 | 26.7 | 0.0302 | 0.2394 | 0.0001 |
| 4 | SLU 71 | 5.14 | -0.03 | 27.11 | 0.0286 | 0.234 | 0.0001 |
| 4 | SLU 72 | 5.29 | -0.04 | 26.61 | 0.0301 | 0.2394 | 0.0001 |
| 4 | SLU 73 | 5.61 | -0.04 | 27.28 | 0.0333 | 0.2529 | 0.0001 |
| 4 | SLU 74 | 5.41 | -0.03 | 28.01 | 0.031 | 0.2459 | 0.0001 |
| 4 | SLU 75 | 5.56 | -0.04 | 27.51 | 0.0325 | 0.2513 | 0.0001 |
| 4 | SLU 76 | 5.66 | -0.04 | 27.08 | 0.0333 | 0.2549 | 0.0001 |
| 4 | SLU 77 | 5.47 | -0.03 | 27.82 | 0.0311 | 0.2479 | 0.0001 |
| 4 | SLU 78 | 5.61 | -0.04 | 27.32 | 0.0325 | 0.2533 | 0.0001 |
| 4 | SLU 79 | 5.47 | -0.03 | 27.72 | 0.031 | 0.248 | 0.0001 |
| 4 | SLU 80 | 5.61 | -0.04 | 27.22 | 0.0324 | 0.2534 | 0.0001 |
| 4 | SLU 81 | 5.51 | -0.03 | 28.37 | 0.0318 | 0.2499 | 0.0001 |
| 4 | SLU 82 | 5.65 | -0.04 | 27.87 | 0.0333 | 0.2553 | 0.0001 |
| 4 | SLU 83 | 5.56 | -0.03 | 28.17 | 0.0319 | 0.2519 | 0.0001 |
| 4 | SLU 84 | 5.7 | -0.04 | 27.68 | 0.0334 | 0.2573 | 0.0001 |
| 4 | SLE RA 1 | 3.84 | -0.02 | 21.07 | 0.0215 | 0.1755 | 0.0001 |
| 4 | SLE RA 2 | 4 | -0.03 | 20.52 | 0.0232 | 0.1815 | 0.0001 |
| 4 | SLE RA 3 | 3.87 | -0.02 | 21.01 | 0.0217 | 0.1768 | 0.0001 |
| 4 | SLE RA 4 | 3.97 | -0.03 | 20.68 | 0.0226 | 0.1804 | 0.0001 |
| 4 | SLE RA 5 | 4.04 | -0.03 | 20.39 | 0.0232 | 0.1828 | 0.0001 |
| 4 | SLE RA 6 | 3.91 | -0.02 | 20.88 | 0.0217 | 0.1782 | 0.0001 |
| 4 | SLE RA 7 | 4.01 | -0.03 | 20.55 | 0.0227 | 0.1818 | 0.0001 |
| 4 | SLE RA 8 | 3.91 | -0.02 | 20.81 | 0.0216 | 0.1782 | 0.0001 |
| 4 | SLE RA 9 | 4.01 | -0.03 | 20.48 | 0.0226 | 0.1818 | 0.0001 |
| 4 | SLE RA 10 | 4.22 | -0.03 | 20.93 | 0.0248 | 0.1908 | 0.0001 |
| 4 | SLE RA 11 | 4.09 | -0.02 | 21.42 | 0.0232 | 0.1861 | 0.0001 |
| 4 | SLE RA 12 | 4.19 | -0.03 | 21.08 | 0.0242 | 0.1897 | 0.0001 |
| 4 | SLE RA 13 | 4.26 | -0.03 | 20.8 | 0.0248 | 0.1921 | 0.0001 |
| 4 | SLE RA 14 | 4.13 | -0.02 | 21.29 | 0.0233 | 0.1874 | 0.0001 |
| 4 | SLE RA 15 | 4.22 | -0.03 | 20.95 | 0.0243 | 0.191 | 0.0001 |
| 4 | SLE RA 16 | 4.13 | -0.02 | 21.22 | 0.0232 | 0.1875 | 0.0001 |
| 4 | SLE RA 17 | 4.23 | -0.03 | 20.89 | 0.0242 | 0.1911 | 0.0001 |
| 4 | SLE RA 18 | 4.15 | -0.02 | 21.66 | 0.0238 | 0.1887 | 0.0001 |
| 4 | SLE RA 19 | 4.25 | -0.03 | 21.32 | 0.0248 | 0.1923 | 0.0001 |
| 4 | SLE RA 20 | 4.19 | -0.02 | 21.53 | 0.0238 | 0.1901 | 0.0001 |
| 4 | SLE RA 21 | 4.29 | -0.03 | 21.19 | 0.0248 | 0.1937 | 0.0001 |
| 4 | SLE FR 1 | 3.84 | -0.02 | 21.07 | 0.0215 | 0.1755 | 0.0001 |
| 4 | SLE FR 2 | 3.87 | -0.02 | 20.96 | 0.0219 | 0.1767 | 0.0001 |
| 4 | SLE FR 3 | 3.85 | -0.02 | 21.02 | 0.0216 | 0.176 | 0.0001 |
| 4 | SLE FR 4 | 3.97 | -0.02 | 21.14 | 0.0225 | 0.1806 | 0.0001 |
| 4 | SLE FR 5 | 3.95 | -0.02 | 21.2 | 0.0222 | 0.18 | 0.0001 |
| 4 | SLE FR 6 | 4 | -0.02 | 21.36 | 0.0227 | 0.1821 | 0.0001 |
| 4 | SLE QP 1 | 3.84 | -0.02 | 21.07 | 0.0215 | 0.1755 | 0.0001 |
| 4 | SLE QP 2 | 3.93 | -0.02 | 21.25 | 0.0222 | 0.1794 | 0.0001 |
| 4 | SLD 1 | 8.09 | -0.05 | 30.92 | 0.0577 | 0.3803 | 0.0003 |
| 4 | SLD 2 | 8.09 | -0.05 | 30.92 | 0.0577 | 0.3803 | 0.0003 |
| 4 | SLD 3 | 7.15 | -0.1 | 28 | 0.0273 | 0.338 | 0.0002 |
| 4 | SLD 4 | 7.15 | -0.1 | 28 | 0.0273 | 0.338 | 0.0002 |
| 4 | SLD 5 | 6.61 | 0.04 | 28.59 | 0.079 | 0.3038 | 0.0003 |
| 4 | SLD 6 | 6.61 | 0.04 | 28.59 | 0.079 | 0.3038 | 0.0003 |
| 4 | SLD 7 | 3.47 | -0.12 | 18.84 | -0.0224 | 0.1629 | 0 |
| 4 | SLD 8 | 3.47 | -0.12 | 18.84 | -0.0224 | 0.1629 | 0 |
| 4 | SLD 9 | 4.4 | 0.07 | 23.66 | 0.0669 | 0.196 | 0.0002 |
| 4 | SLD 10 | 4.4 | 0.07 | 23.66 | 0.0669 | 0.196 | 0.0002 |
| 4 | SLD 11 | 1.26 | -0.09 | 13.91 | -0.0346 | 0.0551 | -0.0002 |
| 4 | SLD 12 | 1.26 | -0.09 | 13.91 | -0.0346 | 0.0551 | -0.0002 |
| 4 | SLD 13 | 0.72 | 0.05 | 14.5 | 0.0171 | 0.0209 | -0.0001 |
| 4 | SLD 14 | 0.72 | 0.05 | 14.5 | 0.0171 | 0.0209 | -0.0001 |

| Nodo | Cont. | Reazione a traslazione | | | Reazione a rotazione | | |
|---|---|---|---|---|---|---|---|
| Ind. | N.br. | x | y | z | x | y | z |
| 4 | SLD 15 | -0.22 | 0 | 11.57 | -0.0133 | -0.0214 | -0.0002 |
| 4 | SLD 16 | -0.22 | 0 | 11.57 | -0.0133 | -0.0214 | -0.0002 |
| 4 | SLV 1 | 13.69 | -0.09 | 44.04 | 0.1055 | 0.6501 | 0.0007 |
| 4 | SLV 2 | 13.69 | -0.09 | 44.04 | 0.1055 | 0.6501 | 0.0007 |
| 4 | SLV 3 | 11.45 | -0.2 | 37.02 | 0.0347 | 0.5501 | 0.0004 |
| 4 | SLV 4 | 11.45 | -0.2 | 37.02 | 0.0347 | 0.5501 | 0.0004 |
| 4 | SLV 5 | 10.26 | 0.13 | 38.72 | 0.1545 | 0.4723 | 0.0006 |
| 4 | SLV 6 | 10.26 | 0.13 | 38.72 | 0.1545 | 0.4723 | 0.0006 |
| 4 | SLV 7 | 2.79 | -0.25 | 15.34 | -0.0813 | 0.139 | -0.0002 |
| 4 | SLV 8 | 2.79 | -0.25 | 15.34 | -0.0813 | 0.139 | -0.0002 |
| 4 | SLV 9 | 5.08 | 0.2 | 27.15 | 0.1257 | 0.2199 | 0.0003 |
| 4 | SLV 10 | 5.08 | 0.2 | 27.15 | 0.1257 | 0.2199 | 0.0003 |
| 4 | SLV 11 | -2.39 | -0.18 | 3.77 | -0.11 | -0.1134 | -0.0005 |
| 4 | SLV 12 | -2.39 | -0.18 | 3.77 | -0.11 | -0.1134 | -0.0005 |
| 4 | SLV 13 | -3.58 | 0.16 | 5.47 | 0.0097 | -0.1912 | -0.0003 |
| 4 | SLV 14 | -3.58 | 0.16 | 5.47 | 0.0097 | -0.1912 | -0.0003 |
| 4 | SLV 15 | -5.82 | 0.04 | -1.54 | -0.0611 | -0.2912 | -0.0006 |
| 4 | SLV 16 | -5.82 | 0.04 | -1.54 | -0.0611 | -0.2912 | -0.0006 |
| 5 | SLU 1 | 3.36 | -0.08 | 20.66 | 0.0487 | 0.1444 | -0.0001 |
| 5 | SLU 2 | 3.61 | -0.08 | 20.13 | 0.0488 | 0.1538 | -0.0001 |
| 5 | SLU 3 | 3.43 | -0.08 | 20.6 | 0.049 | 0.1475 | -0.0001 |
| 5 | SLU 4 | 3.58 | -0.08 | 20.28 | 0.0491 | 0.1531 | -0.0001 |
| 5 | SLU 5 | 3.7 | -0.08 | 19.98 | 0.0489 | 0.1572 | -0.0001 |
| 5 | SLU 6 | 3.52 | -0.08 | 20.45 | 0.049 | 0.1509 | -0.0001 |
| 5 | SLU 7 | 3.67 | -0.08 | 20.13 | 0.0491 | 0.1565 | -0.0001 |
| 5 | SLU 8 | 3.53 | -0.08 | 20.37 | 0.0487 | 0.1513 | -0.0001 |
| 5 | SLU 9 | 3.68 | -0.08 | 20.05 | 0.0488 | 0.1569 | -0.0001 |
| 5 | SLU 10 | 4.02 | -0.08 | 20.87 | 0.0539 | 0.1708 | -0.0002 |
| 5 | SLU 11 | 3.85 | -0.08 | 21.34 | 0.0541 | 0.1645 | -0.0002 |
| 5 | SLU 12 | 4 | -0.08 | 21.02 | 0.0541 | 0.1701 | -0.0002 |
| 5 | SLU 13 | 4.11 | -0.08 | 20.73 | 0.0539 | 0.1743 | -0.0002 |
| 5 | SLU 14 | 3.93 | -0.08 | 21.19 | 0.0541 | 0.168 | -0.0002 |
| 5 | SLU 15 | 4.08 | -0.08 | 20.87 | 0.0542 | 0.1736 | -0.0002 |
| 5 | SLU 16 | 3.94 | -0.08 | 21.11 | 0.0538 | 0.1683 | -0.0002 |
| 5 | SLU 17 | 4.09 | -0.08 | 20.79 | 0.0539 | 0.1739 | -0.0002 |
| 5 | SLU 18 | 3.95 | -0.09 | 21.72 | 0.0559 | 0.1688 | -0.0002 |
| 5 | SLU 19 | 4.1 | -0.09 | 21.4 | 0.056 | 0.1744 | -0.0002 |
| 5 | SLU 20 | 4.03 | -0.08 | 21.57 | 0.0559 | 0.1722 | -0.0002 |
| 5 | SLU 21 | 4.18 | -0.09 | 21.26 | 0.056 | 0.1778 | -0.0002 |
| 5 | SLU 22 | 3.54 | -0.08 | 21.07 | 0.0518 | 0.1521 | -0.0001 |
| 5 | SLU 23 | 3.79 | -0.08 | 20.54 | 0.052 | 0.1615 | -0.0002 |
| 5 | SLU 24 | 3.62 | -0.08 | 21 | 0.0521 | 0.1552 | -0.0001 |
| 5 | SLU 25 | 3.77 | -0.08 | 20.69 | 0.0522 | 0.1608 | -0.0002 |
| 5 | SLU 26 | 3.88 | -0.08 | 20.39 | 0.052 | 0.1649 | -0.0002 |
| 5 | SLU 27 | 3.7 | -0.08 | 20.86 | 0.0521 | 0.1586 | -0.0001 |
| 5 | SLU 28 | 3.86 | -0.08 | 20.54 | 0.0522 | 0.1642 | -0.0001 |
| 5 | SLU 29 | 3.71 | -0.08 | 20.77 | 0.0519 | 0.159 | -0.0001 |
| 5 | SLU 30 | 3.87 | -0.08 | 20.45 | 0.052 | 0.1646 | -0.0001 |
| 5 | SLU 31 | 4.21 | -0.09 | 21.28 | 0.057 | 0.1785 | -0.0002 |
| 5 | SLU 32 | 4.03 | -0.09 | 21.75 | 0.0572 | 0.1722 | -0.0002 |
| 5 | SLU 33 | 4.18 | -0.09 | 21.43 | 0.0573 | 0.1778 | -0.0002 |
| 5 | SLU 34 | 4.29 | -0.09 | 21.13 | 0.0571 | 0.1819 | -0.0002 |
| 5 | SLU 35 | 4.12 | -0.09 | 21.6 | 0.0572 | 0.1756 | -0.0002 |
| 5 | SLU 36 | 4.27 | -0.09 | 21.28 | 0.0573 | 0.1812 | -0.0002 |
| 5 | SLU 37 | 4.13 | -0.09 | 21.51 | 0.0569 | 0.176 | -0.0002 |
| 5 | SLU 38 | 4.28 | -0.09 | 21.2 | 0.057 | 0.1816 | -0.0002 |
| 5 | SLU 39 | 4.13 | -0.09 | 22.13 | 0.0591 | 0.1765 | -0.0002 |
| 5 | SLU 40 | 4.28 | -0.09 | 21.81 | 0.0591 | 0.1821 | -0.0002 |
| 5 | SLU 41 | 4.22 | -0.09 | 21.98 | 0.0591 | 0.1799 | -0.0002 |
| 5 | SLU 42 | 4.37 | -0.09 | 21.66 | 0.0592 | 0.1855 | -0.0002 |
| 5 | SLU 43 | 4.3 | -0.1 | 26.72 | 0.0622 | 0.1851 | -0.0002 |
| 5 | SLU 44 | 4.55 | -0.1 | 26.19 | 0.0624 | 0.1945 | -0.0002 |
| 5 | SLU 45 | 4.38 | -0.1 | 26.66 | 0.0625 | 0.1882 | -0.0002 |
| 5 | SLU 46 | 4.53 | -0.1 | 26.34 | 0.0626 | 0.1938 | -0.0002 |
| 5 | SLU 47 | 4.64 | -0.1 | 26.04 | 0.0624 | 0.1979 | -0.0002 |
| 5 | SLU 48 | 4.46 | -0.1 | 26.51 | 0.0625 | 0.1916 | -0.0002 |
| 5 | SLU 49 | 4.61 | -0.1 | 26.19 | 0.0626 | 0.1972 | -0.0002 |
| 5 | SLU 50 | 4.47 | -0.1 | 26.42 | 0.0623 | 0.192 | -0.0002 |
| 5 | SLU 51 | 4.62 | -0.1 | 26.11 | 0.0624 | 0.1976 | -0.0002 |
| 5 | SLU 52 | 4.97 | -0.11 | 26.93 | 0.0674 | 0.2115 | -0.0002 |
| 5 | SLU 53 | 4.79 | -0.1 | 27.4 | 0.0676 | 0.2052 | -0.0002 |
| 5 | SLU 54 | 4.94 | -0.1 | 27.08 | 0.0677 | 0.2108 | -0.0002 |
| 5 | SLU 55 | 5.05 | -0.1 | 26.78 | 0.0675 | 0.215 | -0.0002 |
| 5 | SLU 56 | 4.88 | -0.1 | 27.25 | 0.0676 | 0.2087 | -0.0002 |
| 5 | SLU 57 | 5.03 | -0.1 | 26.93 | 0.0677 | 0.2143 | -0.0002 |
| 5 | SLU 58 | 4.89 | -0.1 | 27.17 | 0.0673 | 0.209 | -0.0002 |
| 5 | SLU 59 | 5.04 | -0.1 | 26.85 | 0.0674 | 0.2146 | -0.0002 |
| 5 | SLU 60 | 4.89 | -0.11 | 27.78 | 0.0695 | 0.2095 | -0.0002 |
| 5 | SLU 61 | 5.04 | -0.11 | 27.46 | 0.0695 | 0.2151 | -0.0002 |
| 5 | SLU 62 | 4.98 | -0.11 | 27.63 | 0.0695 | 0.2129 | -0.0002 |
| 5 | SLU 63 | 5.13 | -0.11 | 27.31 | 0.0696 | 0.2185 | -0.0002 |
| 5 | SLU 64 | 4.49 | -0.1 | 27.12 | 0.0653 | 0.1928 | -0.0002 |
| 5 | SLU 65 | 4.74 | -0.1 | 26.6 | 0.0655 | 0.2022 | -0.0002 |
| 5 | SLU 66 | 4.56 | -0.1 | 27.06 | 0.0656 | 0.1959 | -0.0002 |
| 5 | SLU 67 | 4.71 | -0.1 | 26.74 | 0.0657 | 0.2015 | -0.0002 |
| 5 | SLU 68 | 4.82 | -0.1 | 26.45 | 0.0655 | 0.2056 | -0.0002 |
| 5 | SLU 69 | 4.65 | -0.1 | 26.91 | 0.0657 | 0.1993 | -0.0002 |
| 5 | SLU 70 | 4.8 | -0.1 | 26.6 | 0.0658 | 0.2049 | -0.0002 |

| Nodo | Cont. | Reazione a traslazione | | | Reazione a rotazione | | |
|---|---|---|---|---|---|---|---|
| Ind. | N.br. | x | y | z | x | y | z |
| 5 | SLU 71 | 4.66 | -0.1 | 26.83 | 0.0654 | 0.1997 | -0.0002 |
| 5 | SLU 72 | 4.81 | -0.1 | 26.51 | 0.0655 | 0.2053 | -0.0002 |
| 5 | SLU 73 | 5.15 | -0.11 | 27.34 | 0.0706 | 0.2192 | -0.0002 |
| 5 | SLU 74 | 4.97 | -0.11 | 27.8 | 0.0707 | 0.2129 | -0.0002 |
| 5 | SLU 75 | 5.13 | -0.11 | 27.49 | 0.0708 | 0.2185 | -0.0002 |
| 5 | SLU 76 | 5.24 | -0.11 | 27.19 | 0.0706 | 0.2226 | -0.0002 |
| 5 | SLU 77 | 5.06 | -0.11 | 27.66 | 0.0707 | 0.2163 | -0.0002 |
| 5 | SLU 78 | 5.21 | -0.11 | 27.34 | 0.0708 | 0.2219 | -0.0002 |
| 5 | SLU 79 | 5.07 | -0.11 | 27.57 | 0.0705 | 0.2167 | -0.0002 |
| 5 | SLU 80 | 5.22 | -0.11 | 27.26 | 0.0706 | 0.2223 | -0.0002 |
| 5 | SLU 81 | 5.08 | -0.11 | 28.19 | 0.0726 | 0.2172 | -0.0002 |
| 5 | SLU 82 | 5.23 | -0.11 | 27.87 | 0.0727 | 0.2228 | -0.0002 |
| 5 | SLU 83 | 5.16 | -0.11 | 28.04 | 0.0726 | 0.2206 | -0.0002 |
| 5 | SLU 84 | 5.31 | -0.11 | 27.72 | 0.0727 | 0.2262 | -0.0002 |
| 5 | SLE RA 1 | 3.41 | -0.08 | 20.78 | 0.0496 | 0.1466 | -0.0001 |
| 5 | SLE RA 2 | 3.58 | -0.08 | 20.42 | 0.0497 | 0.1529 | -0.0001 |
| 5 | SLE RA 3 | 3.46 | -0.08 | 20.73 | 0.0498 | 0.1487 | -0.0001 |
| 5 | SLE RA 4 | 3.56 | -0.08 | 20.52 | 0.0498 | 0.1524 | -0.0001 |
| 5 | SLE RA 5 | 3.64 | -0.08 | 20.33 | 0.0497 | 0.1552 | -0.0001 |
| 5 | SLE RA 6 | 3.52 | -0.08 | 20.64 | 0.0498 | 0.1509 | -0.0001 |
| 5 | SLE RA 7 | 3.62 | -0.08 | 20.42 | 0.0499 | 0.1547 | -0.0001 |
| 5 | SLE RA 8 | 3.53 | -0.08 | 20.58 | 0.0496 | 0.1512 | -0.0001 |
| 5 | SLE RA 9 | 3.63 | -0.08 | 20.37 | 0.0497 | 0.1549 | -0.0001 |
| 5 | SLE RA 10 | 3.85 | -0.08 | 20.92 | 0.0531 | 0.1642 | -0.0002 |
| 5 | SLE RA 11 | 3.74 | -0.08 | 21.23 | 0.0532 | 0.16 | -0.0002 |
| 5 | SLE RA 12 | 3.84 | -0.08 | 21.02 | 0.0532 | 0.1638 | -0.0002 |
| 5 | SLE RA 13 | 3.91 | -0.08 | 20.82 | 0.0531 | 0.1665 | -0.0002 |
| 5 | SLE RA 14 | 3.79 | -0.08 | 21.13 | 0.0532 | 0.1623 | -0.0001 |
| 5 | SLE RA 15 | 3.89 | -0.08 | 20.92 | 0.0532 | 0.166 | -0.0002 |
| 5 | SLE RA 16 | 3.8 | -0.08 | 21.07 | 0.053 | 0.1626 | -0.0001 |
| 5 | SLE RA 17 | 3.9 | -0.08 | 20.86 | 0.053 | 0.1663 | -0.0002 |
| 5 | SLE RA 18 | 3.8 | -0.08 | 21.48 | 0.0544 | 0.1629 | -0.0002 |
| 5 | SLE RA 19 | 3.9 | -0.08 | 21.27 | 0.0545 | 0.1666 | -0.0002 |
| 5 | SLE RA 20 | 3.86 | -0.08 | 21.39 | 0.0544 | 0.1651 | -0.0002 |
| 5 | SLE RA 21 | 3.96 | -0.08 | 21.17 | 0.0545 | 0.1689 | -0.0002 |
| 5 | SLE FR 1 | 3.41 | -0.08 | 20.78 | 0.0496 | 0.1466 | -0.0001 |
| 5 | SLE FR 2 | 3.44 | -0.08 | 20.71 | 0.0496 | 0.1479 | -0.0001 |
| 5 | SLE FR 3 | 3.43 | -0.08 | 20.74 | 0.0496 | 0.1475 | -0.0001 |
| 5 | SLE FR 4 | 3.56 | -0.08 | 20.92 | 0.051 | 0.1528 | -0.0001 |
| 5 | SLE FR 5 | 3.55 | -0.08 | 20.95 | 0.051 | 0.1524 | -0.0001 |
| 5 | SLE FR 6 | 3.61 | -0.08 | 21.13 | 0.052 | 0.1548 | -0.0001 |
| 5 | SLE QP 1 | 3.41 | -0.08 | 20.78 | 0.0496 | 0.1466 | -0.0001 |
| 5 | SLE QP 2 | 3.53 | -0.08 | 20.99 | 0.051 | 0.1515 | -0.0001 |
| 5 | SLD 1 | 8.22 | -0.17 | 28.36 | 0.119 | 0.3632 | -0.0004 |
| 5 | SLD 2 | 8.22 | -0.17 | 28.36 | 0.119 | 0.3632 | -0.0004 |
| 5 | SLD 3 | 7.15 | -0.09 | 26.12 | 0.0633 | 0.3195 | -0.0002 |
| 5 | SLD 4 | 7.15 | -0.09 | 26.12 | 0.0633 | 0.3195 | -0.0002 |
| 5 | SLD 5 | 6.55 | -0.22 | 26.59 | 0.1559 | 0.2813 | -0.0005 |
| 5 | SLD 6 | 6.55 | -0.22 | 26.59 | 0.1559 | 0.2813 | -0.0005 |
| 5 | SLD 7 | 3 | 0.04 | 19.13 | -0.0298 | 0.1356 | 0.0001 |
| 5 | SLD 8 | 3 | 0.04 | 19.13 | -0.0298 | 0.1356 | 0.0001 |
| 5 | SLD 9 | 4.06 | -0.2 | 22.84 | 0.1318 | 0.1674 | -0.0004 |
| 5 | SLD 10 | 4.06 | -0.2 | 22.84 | 0.1318 | 0.1674 | -0.0004 |
| 5 | SLD 11 | 0.5 | 0.07 | 15.38 | -0.0539 | 0.0217 | 0.0002 |
| 5 | SLD 12 | 0.5 | 0.07 | 15.38 | -0.0539 | 0.0217 | 0.0002 |
| 5 | SLD 13 | -0.1 | -0.07 | 15.86 | 0.0387 | -0.0165 | -0.0001 |
| 5 | SLD 14 | -0.1 | -0.07 | 15.86 | 0.0387 | -0.0165 | -0.0001 |
| 5 | SLD 15 | -1.17 | 0.01 | 13.62 | -0.017 | -0.0602 | 0.0001 |
| 5 | SLD 16 | -1.17 | 0.01 | 13.62 | -0.017 | -0.0602 | 0.0001 |
| 5 | SLV 1 | 14.53 | -0.29 | 38.36 | 0.2106 | 0.6475 | -0.0007 |
| 5 | SLV 2 | 14.53 | -0.29 | 38.36 | 0.2106 | 0.6475 | -0.0007 |
| 5 | SLV 3 | 12 | -0.1 | 33.01 | 0.081 | 0.544 | -0.0003 |
| 5 | SLV 4 | 12 | -0.1 | 33.01 | 0.081 | 0.544 | -0.0003 |
| 5 | SLV 5 | 10.66 | -0.42 | 34.31 | 0.2956 | 0.4572 | -0.0009 |
| 5 | SLV 6 | 10.66 | -0.42 | 34.31 | 0.2956 | 0.4572 | -0.0009 |
| 5 | SLV 7 | 2.24 | 0.19 | 16.49 | -0.1366 | 0.1123 | 0.0004 |
| 5 | SLV 8 | 2.24 | 0.19 | 16.49 | -0.1366 | 0.1123 | 0.0004 |
| 5 | SLV 9 | 4.82 | -0.35 | 25.49 | 0.2387 | 0.1907 | -0.0007 |
| 5 | SLV 10 | 4.82 | -0.35 | 25.49 | 0.2387 | 0.1907 | -0.0007 |
| 5 | SLV 11 | -3.61 | 0.26 | 7.67 | -0.1935 | -0.1542 | 0.0006 |
| 5 | SLV 12 | -3.61 | 0.26 | 7.67 | -0.1935 | -0.1542 | 0.0006 |
| 5 | SLV 13 | -4.95 | -0.05 | 8.96 | 0.0211 | -0.241 | 0 |
| 5 | SLV 14 | -4.95 | -0.05 | 8.96 | 0.0211 | -0.241 | 0 |
| 5 | SLV 15 | -7.48 | 0.13 | 3.62 | -0.1086 | -0.3445 | 0.0004 |
| 5 | SLV 16 | -7.48 | 0.13 | 3.62 | -0.1086 | -0.3445 | 0.0004 |
| 6 | SLU 1 | 3.21 | -0.11 | 21.42 | 0.0675 | 0.1319 | -0.0002 |
| 6 | SLU 2 | 3.41 | -0.11 | 21.11 | 0.0656 | 0.1395 | -0.0002 |
| 6 | SLU 3 | 3.31 | -0.12 | 21.41 | 0.068 | 0.1356 | -0.0002 |
| 6 | SLU 4 | 3.42 | -0.11 | 21.23 | 0.0669 | 0.1402 | -0.0002 |
| 6 | SLU 5 | 3.52 | -0.11 | 21.03 | 0.0657 | 0.1438 | -0.0002 |
| 6 | SLU 6 | 3.41 | -0.11 | 21.34 | 0.0682 | 0.1399 | -0.0002 |
| 6 | SLU 7 | 3.53 | -0.11 | 21.15 | 0.067 | 0.1444 | -0.0002 |
| 6 | SLU 8 | 3.43 | -0.11 | 21.27 | 0.0678 | 0.1405 | -0.0002 |
| 6 | SLU 9 | 3.55 | -0.11 | 21.08 | 0.0667 | 0.145 | -0.0002 |
| 6 | SLU 10 | 3.9 | -0.12 | 22.12 | 0.0728 | 0.1587 | -0.0002 |
| 6 | SLU 11 | 3.8 | -0.12 | 22.42 | 0.0753 | 0.1548 | -0.0002 |
| 6 | SLU 12 | 3.91 | -0.12 | 22.24 | 0.0741 | 0.1594 | -0.0002 |
| 6 | SLU 13 | 4.01 | -0.12 | 22.05 | 0.073 | 0.163 | -0.0002 |

| Nodo | Cont. | Reazione a traslazione | | | Reazione a rotazione | | |
|---|---|---|---|---|---|---|---|
| Ind. | N.br. | x | y | z | x | y | z |
| 6 | SLU 14 | 3.9 | -0.12 | 22.35 | 0.0754 | 0.1591 | -0.0002 |
| 6 | SLU 15 | 4.02 | -0.12 | 22.17 | 0.0743 | 0.1637 | -0.0002 |
| 6 | SLU 16 | 3.92 | -0.12 | 22.28 | 0.075 | 0.1597 | -0.0002 |
| 6 | SLU 17 | 4.04 | -0.12 | 22.1 | 0.0739 | 0.1643 | -0.0002 |
| 6 | SLU 18 | 3.91 | -0.13 | 22.86 | 0.0779 | 0.1594 | -0.0002 |
| 6 | SLU 19 | 4.03 | -0.13 | 22.68 | 0.0767 | 0.1639 | -0.0002 |
| 6 | SLU 20 | 4.02 | -0.13 | 22.79 | 0.078 | 0.1637 | -0.0002 |
| 6 | SLU 21 | 4.14 | -0.13 | 22.6 | 0.0769 | 0.1682 | -0.0002 |
| 6 | SLU 22 | 3.43 | -0.12 | 21.94 | 0.0718 | 0.1403 | -0.0002 |
| 6 | SLU 23 | 3.62 | -0.12 | 21.63 | 0.0699 | 0.1478 | -0.0002 |
| 6 | SLU 24 | 3.52 | -0.12 | 21.93 | 0.0723 | 0.144 | -0.0002 |
| 6 | SLU 25 | 3.64 | -0.12 | 21.75 | 0.0712 | 0.1485 | -0.0002 |
| 6 | SLU 26 | 3.73 | -0.12 | 21.55 | 0.0701 | 0.1521 | -0.0002 |
| 6 | SLU 27 | 3.63 | -0.12 | 21.86 | 0.0725 | 0.1482 | -0.0002 |
| 6 | SLU 28 | 3.74 | -0.12 | 21.67 | 0.0713 | 0.1528 | -0.0002 |
| 6 | SLU 29 | 3.64 | -0.12 | 21.79 | 0.0721 | 0.1488 | -0.0002 |
| 6 | SLU 30 | 3.76 | -0.12 | 21.6 | 0.071 | 0.1534 | -0.0002 |
| 6 | SLU 31 | 4.11 | -0.13 | 22.64 | 0.0772 | 0.1671 | -0.0002 |
| 6 | SLU 32 | 4.01 | -0.13 | 22.95 | 0.0796 | 0.1632 | -0.0002 |
| 6 | SLU 33 | 4.13 | -0.13 | 22.76 | 0.0784 | 0.1677 | -0.0002 |
| 6 | SLU 34 | 4.22 | -0.13 | 22.57 | 0.0773 | 0.1714 | -0.0002 |
| 6 | SLU 35 | 4.12 | -0.13 | 22.87 | 0.0797 | 0.1675 | -0.0002 |
| 6 | SLU 36 | 4.23 | -0.13 | 22.69 | 0.0786 | 0.172 | -0.0002 |
| 6 | SLU 37 | 4.13 | -0.13 | 22.8 | 0.0794 | 0.1681 | -0.0002 |
| 6 | SLU 38 | 4.25 | -0.13 | 22.62 | 0.0782 | 0.1726 | -0.0002 |
| 6 | SLU 39 | 4.13 | -0.13 | 23.38 | 0.0822 | 0.1677 | -0.0002 |
| 6 | SLU 40 | 4.24 | -0.13 | 23.2 | 0.081 | 0.1723 | -0.0002 |
| 6 | SLU 41 | 4.23 | -0.13 | 23.31 | 0.0823 | 0.172 | -0.0002 |
| 6 | SLU 42 | 4.35 | -0.13 | 23.13 | 0.0812 | 0.1766 | -0.0002 |
| 6 | SLU 43 | 4.1 | -0.15 | 27.66 | 0.0863 | 0.1686 | -0.0002 |
| 6 | SLU 44 | 4.3 | -0.15 | 27.35 | 0.0844 | 0.1762 | -0.0002 |
| 6 | SLU 45 | 4.2 | -0.15 | 27.66 | 0.0868 | 0.1723 | -0.0002 |
| 6 | SLU 46 | 4.31 | -0.15 | 27.47 | 0.0856 | 0.1769 | -0.0002 |
| 6 | SLU 47 | 4.41 | -0.14 | 27.28 | 0.0845 | 0.1805 | -0.0002 |
| 6 | SLU 48 | 4.31 | -0.15 | 27.58 | 0.0869 | 0.1766 | -0.0002 |
| 6 | SLU 49 | 4.42 | -0.15 | 27.4 | 0.0858 | 0.1812 | -0.0002 |
| 6 | SLU 50 | 4.32 | -0.15 | 27.51 | 0.0866 | 0.1772 | -0.0002 |
| 6 | SLU 51 | 4.44 | -0.14 | 27.33 | 0.0854 | 0.1817 | -0.0002 |
| 6 | SLU 52 | 4.79 | -0.15 | 28.37 | 0.0916 | 0.1954 | -0.0003 |
| 6 | SLU 53 | 4.69 | -0.16 | 28.67 | 0.094 | 0.1916 | -0.0003 |
| 6 | SLU 54 | 4.8 | -0.16 | 28.49 | 0.0929 | 0.1961 | -0.0003 |
| 6 | SLU 55 | 4.9 | -0.15 | 28.29 | 0.0918 | 0.1997 | -0.0003 |
| 6 | SLU 56 | 4.8 | -0.16 | 28.6 | 0.0942 | 0.1958 | -0.0003 |
| 6 | SLU 57 | 4.91 | -0.16 | 28.41 | 0.093 | 0.2004 | -0.0003 |
| 6 | SLU 58 | 4.81 | -0.16 | 28.53 | 0.0938 | 0.1964 | -0.0003 |
| 6 | SLU 59 | 4.93 | -0.15 | 28.34 | 0.0927 | 0.201 | -0.0003 |
| 6 | SLU 60 | 4.8 | -0.16 | 29.11 | 0.0966 | 0.1961 | -0.0003 |
| 6 | SLU 61 | 4.92 | -0.16 | 28.92 | 0.0955 | 0.2006 | -0.0003 |
| 6 | SLU 62 | 4.91 | -0.16 | 29.04 | 0.0968 | 0.2004 | -0.0003 |
| 6 | SLU 63 | 5.03 | -0.16 | 28.85 | 0.0956 | 0.2049 | -0.0003 |
| 6 | SLU 64 | 4.32 | -0.15 | 28.18 | 0.0906 | 0.177 | -0.0003 |
| 6 | SLU 65 | 4.51 | -0.15 | 27.88 | 0.0887 | 0.1846 | -0.0003 |
| 6 | SLU 66 | 4.41 | -0.15 | 28.18 | 0.0911 | 0.1807 | -0.0003 |
| 6 | SLU 67 | 4.53 | -0.15 | 27.99 | 0.09 | 0.1852 | -0.0003 |
| 6 | SLU 68 | 4.62 | -0.15 | 27.8 | 0.0888 | 0.1888 | -0.0003 |
| 6 | SLU 69 | 4.52 | -0.15 | 28.1 | 0.0912 | 0.185 | -0.0003 |
| 6 | SLU 70 | 4.64 | -0.15 | 27.92 | 0.0901 | 0.1895 | -0.0003 |
| 6 | SLU 71 | 4.53 | -0.15 | 28.04 | 0.0909 | 0.1855 | -0.0003 |
| 6 | SLU 72 | 4.65 | -0.15 | 27.85 | 0.0897 | 0.1901 | -0.0003 |
| 6 | SLU 73 | 5 | -0.16 | 28.89 | 0.0959 | 0.2038 | -0.0003 |
| 6 | SLU 74 | 4.9 | -0.16 | 29.19 | 0.0983 | 0.1999 | -0.0003 |
| 6 | SLU 75 | 5.02 | -0.16 | 29.01 | 0.0972 | 0.2045 | -0.0003 |
| 6 | SLU 76 | 5.11 | -0.16 | 28.81 | 0.0961 | 0.2081 | -0.0003 |
| 6 | SLU 77 | 5.01 | -0.16 | 29.12 | 0.0985 | 0.2042 | -0.0003 |
| 6 | SLU 78 | 5.13 | -0.16 | 28.93 | 0.0974 | 0.2087 | -0.0003 |
| 6 | SLU 79 | 5.02 | -0.16 | 29.05 | 0.0981 | 0.2048 | -0.0003 |
| 6 | SLU 80 | 5.14 | -0.16 | 28.86 | 0.097 | 0.2093 | -0.0003 |
| 6 | SLU 81 | 5.02 | -0.17 | 29.63 | 0.1009 | 0.2045 | -0.0003 |
| 6 | SLU 82 | 5.13 | -0.17 | 29.45 | 0.0998 | 0.209 | -0.0003 |
| 6 | SLU 83 | 5.12 | -0.17 | 29.56 | 0.1011 | 0.2087 | -0.0003 |
| 6 | SLU 84 | 5.24 | -0.17 | 29.37 | 0.0999 | 0.2133 | -0.0003 |
| 6 | SLE RA 1 | 3.27 | -0.12 | 21.56 | 0.0687 | 0.1343 | -0.0002 |
| 6 | SLE RA 2 | 3.4 | -0.12 | 21.36 | 0.0675 | 0.1394 | -0.0002 |
| 6 | SLE RA 3 | 3.34 | -0.12 | 21.56 | 0.0691 | 0.1368 | -0.0002 |
| 6 | SLE RA 4 | 3.41 | -0.12 | 21.44 | 0.0683 | 0.1398 | -0.0002 |
| 6 | SLE RA 5 | 3.48 | -0.11 | 21.31 | 0.0676 | 0.1422 | -0.0002 |
| 6 | SLE RA 6 | 3.41 | -0.12 | 21.51 | 0.0692 | 0.1396 | -0.0002 |
| 6 | SLE RA 7 | 3.49 | -0.12 | 21.39 | 0.0684 | 0.1427 | -0.0002 |
| 6 | SLE RA 8 | 3.42 | -0.12 | 21.47 | 0.0689 | 0.14 | -0.0002 |
| 6 | SLE RA 9 | 3.5 | -0.11 | 21.34 | 0.0682 | 0.143 | -0.0002 |
| 6 | SLE RA 10 | 3.73 | -0.12 | 22.03 | 0.0723 | 0.1522 | -0.0002 |
| 6 | SLE RA 11 | 3.66 | -0.12 | 22.24 | 0.0739 | 0.1496 | -0.0002 |
| 6 | SLE RA 12 | 3.74 | -0.12 | 22.11 | 0.0731 | 0.1526 | -0.0002 |
| 6 | SLE RA 13 | 3.8 | -0.12 | 21.99 | 0.0724 | 0.155 | -0.0002 |
| 6 | SLE RA 14 | 3.73 | -0.12 | 22.19 | 0.074 | 0.1524 | -0.0002 |
| 6 | SLE RA 15 | 3.81 | -0.12 | 22.06 | 0.0732 | 0.1555 | -0.0002 |
| 6 | SLE RA 16 | 3.74 | -0.12 | 22.14 | 0.0738 | 0.1528 | -0.0002 |
| 6 | SLE RA 17 | 3.82 | -0.12 | 22.02 | 0.073 | 0.1559 | -0.0002 |

| Nodo | Cont. | Reazione a traslazione | | | Reazione a rotazione | | |
|---|---|---|---|---|---|---|---|
| Ind. | N.br. | x | y | z | x | y | z |
| 6 | SLE RA 18 | 3.74 | -0.13 | 22.53 | 0.0756 | 0.1526 | -0.0002 |
| 6 | SLE RA 19 | 3.82 | -0.13 | 22.41 | 0.0749 | 0.1557 | -0.0002 |
| 6 | SLE RA 20 | 3.81 | -0.13 | 22.48 | 0.0757 | 0.1555 | -0.0002 |
| 6 | SLE RA 21 | 3.89 | -0.12 | 22.36 | 0.075 | 0.1585 | -0.0002 |
| 6 | SLE FR 1 | 3.27 | -0.12 | 21.56 | 0.0687 | 0.1343 | -0.0002 |
| 6 | SLE FR 2 | 3.3 | -0.12 | 21.52 | 0.0685 | 0.1353 | -0.0002 |
| 6 | SLE FR 3 | 3.3 | -0.12 | 21.55 | 0.0688 | 0.1354 | -0.0002 |
| 6 | SLE FR 4 | 3.44 | -0.12 | 21.81 | 0.0706 | 0.1408 | -0.0002 |
| 6 | SLE FR 5 | 3.44 | -0.12 | 21.83 | 0.0708 | 0.1409 | -0.0002 |
| 6 | SLE FR 6 | 3.51 | -0.12 | 22.05 | 0.0722 | 0.1435 | -0.0002 |
| 6 | SLE QP 1 | 3.27 | -0.12 | 21.56 | 0.0687 | 0.1343 | -0.0002 |
| 6 | SLE QP 2 | 3.41 | -0.12 | 21.85 | 0.0708 | 0.1398 | -0.0002 |
| 6 | SLD 1 | 8.24 | -0.27 | 28.75 | 0.1701 | 0.3515 | -0.0005 |
| 6 | SLD 2 | 8.24 | -0.27 | 28.75 | 0.1701 | 0.3515 | -0.0005 |
| 6 | SLD 3 | 7.19 | -0.15 | 26.78 | 0.0927 | 0.3077 | -0.0003 |
| 6 | SLD 4 | 7.19 | -0.15 | 26.78 | 0.0927 | 0.3077 | -0.0003 |
| 6 | SLD 5 | 6.45 | -0.35 | 26.92 | 0.2179 | 0.2698 | -0.0006 |
| 6 | SLD 6 | 6.45 | -0.35 | 26.92 | 0.2179 | 0.2698 | -0.0006 |
| 6 | SLD 7 | 2.95 | 0.05 | 20.33 | -0.04 | 0.1237 | 0.0001 |
| 6 | SLD 8 | 2.95 | 0.05 | 20.33 | -0.04 | 0.1237 | 0.0001 |
| 6 | SLD 9 | 3.87 | -0.29 | 23.38 | 0.1816 | 0.1559 | -0.0005 |
| 6 | SLD 10 | 3.87 | -0.29 | 23.38 | 0.1816 | 0.1559 | -0.0005 |
| 6 | SLD 11 | 0.37 | 0.11 | 16.79 | -0.0763 | 0.0098 | 0.0002 |
| 6 | SLD 12 | 0.37 | 0.11 | 16.79 | -0.0763 | 0.0098 | 0.0002 |
| 6 | SLD 13 | -0.36 | -0.09 | 16.93 | 0.0489 | -0.0281 | -0.0001 |
| 6 | SLD 14 | -0.36 | -0.09 | 16.93 | 0.0489 | -0.0281 | -0.0001 |
| 6 | SLD 15 | -1.41 | 0.03 | 14.96 | -0.0285 | -0.0719 | 0.0001 |
| 6 | SLD 16 | -1.41 | 0.03 | 14.96 | -0.0285 | -0.0719 | 0.0001 |
| 6 | SLV 1 | 14.72 | -0.47 | 38.1 | 0.3038 | 0.6357 | -0.0009 |
| 6 | SLV 2 | 14.72 | -0.47 | 38.1 | 0.3038 | 0.6357 | -0.0009 |
| 6 | SLV 3 | 12.24 | -0.19 | 33.42 | 0.1235 | 0.5323 | -0.0004 |
| 6 | SLV 4 | 12.24 | -0.19 | 33.42 | 0.1235 | 0.5323 | -0.0004 |
| 6 | SLV 5 | 10.56 | -0.65 | 33.83 | 0.4142 | 0.4454 | -0.0012 |
| 6 | SLV 6 | 10.56 | -0.65 | 33.83 | 0.4142 | 0.4454 | -0.0012 |
| 6 | SLV 7 | 2.3 | 0.28 | 18.22 | -0.1868 | 0.1007 | 0.0005 |
| 6 | SLV 8 | 2.3 | 0.28 | 18.22 | -0.1868 | 0.1007 | 0.0005 |
| 6 | SLV 9 | 4.52 | -0.52 | 25.49 | 0.3284 | 0.1789 | -0.0009 |
| 6 | SLV 10 | 4.52 | -0.52 | 25.49 | 0.3284 | 0.1789 | -0.0009 |
| 6 | SLV 11 | -3.74 | 0.41 | 9.88 | -0.2726 | -0.1658 | 0.0008 |
| 6 | SLV 12 | -3.74 | 0.41 | 9.88 | -0.2726 | -0.1658 | 0.0008 |
| 6 | SLV 13 | -5.41 | -0.05 | 10.29 | 0.0181 | -0.2527 | 0 |
| 6 | SLV 14 | -5.41 | -0.05 | 10.29 | 0.0181 | -0.2527 | 0 |
| 6 | SLV 15 | -7.89 | 0.23 | 5.61 | -0.1622 | -0.3561 | 0.0005 |
| 6 | SLV 16 | -7.89 | 0.23 | 5.61 | -0.1622 | -0.3561 | 0.0005 |
| 7 | SLU 1 | 3.69 | -0.13 | 22.71 | 0.0753 | 0.1547 | -0.0002 |
| 7 | SLU 2 | 3.83 | -0.13 | 22.53 | 0.0717 | 0.16 | -0.0002 |
| 7 | SLU 3 | 3.8 | -0.13 | 22.77 | 0.076 | 0.1589 | -0.0002 |
| 7 | SLU 4 | 3.88 | -0.13 | 22.66 | 0.0739 | 0.1621 | -0.0002 |
| 7 | SLU 5 | 3.95 | -0.13 | 22.54 | 0.0721 | 0.1649 | -0.0002 |
| 7 | SLU 6 | 3.92 | -0.13 | 22.78 | 0.0764 | 0.1638 | -0.0002 |
| 7 | SLU 7 | 4 | -0.13 | 22.67 | 0.0743 | 0.167 | -0.0002 |
| 7 | SLU 8 | 3.93 | -0.13 | 22.73 | 0.0761 | 0.1644 | -0.0002 |
| 7 | SLU 9 | 4.02 | -0.13 | 22.62 | 0.0739 | 0.1676 | -0.0002 |
| 7 | SLU 10 | 4.43 | -0.14 | 23.9 | 0.0803 | 0.1846 | -0.0002 |
| 7 | SLU 11 | 4.4 | -0.14 | 24.15 | 0.0846 | 0.1834 | -0.0002 |
| 7 | SLU 12 | 4.48 | -0.14 | 24.04 | 0.0825 | 0.1867 | -0.0002 |
| 7 | SLU 13 | 4.55 | -0.14 | 23.91 | 0.0807 | 0.1894 | -0.0002 |
| 7 | SLU 14 | 4.52 | -0.14 | 24.16 | 0.085 | 0.1883 | -0.0002 |
| 7 | SLU 15 | 4.61 | -0.14 | 24.05 | 0.0829 | 0.1915 | -0.0002 |
| 7 | SLU 16 | 4.54 | -0.14 | 24.1 | 0.0847 | 0.1889 | -0.0002 |
| 7 | SLU 17 | 4.62 | -0.14 | 23.99 | 0.0825 | 0.1921 | -0.0002 |
| 7 | SLU 18 | 4.55 | -0.15 | 24.67 | 0.0875 | 0.1897 | -0.0002 |
| 7 | SLU 19 | 4.64 | -0.15 | 24.56 | 0.0854 | 0.1929 | -0.0002 |
| 7 | SLU 20 | 4.68 | -0.15 | 24.68 | 0.0879 | 0.1946 | -0.0002 |
| 7 | SLU 21 | 4.76 | -0.15 | 24.57 | 0.0858 | 0.1978 | -0.0002 |
| 7 | SLU 22 | 3.95 | -0.14 | 23.38 | 0.0802 | 0.1652 | -0.0002 |
| 7 | SLU 23 | 4.09 | -0.13 | 23.2 | 0.0767 | 0.1706 | -0.0002 |
| 7 | SLU 24 | 4.06 | -0.14 | 23.44 | 0.081 | 0.1695 | -0.0002 |
| 7 | SLU 25 | 4.14 | -0.13 | 23.34 | 0.0789 | 0.1727 | -0.0002 |
| 7 | SLU 26 | 4.21 | -0.13 | 23.21 | 0.0771 | 0.1754 | -0.0002 |
| 7 | SLU 27 | 4.18 | -0.14 | 23.46 | 0.0814 | 0.1743 | -0.0002 |
| 7 | SLU 28 | 4.26 | -0.13 | 23.35 | 0.0793 | 0.1776 | -0.0002 |
| 7 | SLU 29 | 4.19 | -0.14 | 23.4 | 0.0811 | 0.1749 | -0.0002 |
| 7 | SLU 30 | 4.28 | -0.13 | 23.29 | 0.0789 | 0.1781 | -0.0002 |
| 7 | SLU 31 | 4.69 | -0.14 | 24.58 | 0.0852 | 0.1951 | -0.0002 |
| 7 | SLU 32 | 4.66 | -0.15 | 24.82 | 0.0896 | 0.194 | -0.0003 |
| 7 | SLU 33 | 4.74 | -0.15 | 24.71 | 0.0874 | 0.1972 | -0.0002 |
| 7 | SLU 34 | 4.81 | -0.14 | 24.59 | 0.0857 | 0.2 | -0.0002 |
| 7 | SLU 35 | 4.78 | -0.15 | 24.83 | 0.09 | 0.1989 | -0.0003 |
| 7 | SLU 36 | 4.87 | -0.15 | 24.72 | 0.0878 | 0.2021 | -0.0002 |
| 7 | SLU 37 | 4.8 | -0.15 | 24.78 | 0.0896 | 0.1995 | -0.0003 |
| 7 | SLU 38 | 4.88 | -0.15 | 24.67 | 0.0875 | 0.2027 | -0.0002 |
| 7 | SLU 39 | 4.81 | -0.16 | 25.34 | 0.0925 | 0.2003 | -0.0003 |
| 7 | SLU 40 | 4.9 | -0.15 | 25.24 | 0.0903 | 0.2035 | -0.0003 |
| 7 | SLU 41 | 4.94 | -0.16 | 25.35 | 0.0929 | 0.2051 | -0.0003 |
| 7 | SLU 42 | 5.02 | -0.15 | 25.25 | 0.0908 | 0.2083 | -0.0003 |
| 7 | SLU 43 | 4.71 | -0.17 | 29.29 | 0.0961 | 0.1974 | -0.0003 |
| 7 | SLU 44 | 4.84 | -0.16 | 29.11 | 0.0926 | 0.2028 | -0.0003 |

| Nodo | Cont. | Reazione a traslazione | | | Reazione a rotazione | | |
|---|---|---|---|---|---|---|---|
| Ind. | N.br. | x | y | z | x | y | z |
| 7 | SLU 45 | 4.81 | -0.17 | 29.35 | 0.0969 | 0.2017 | -0.0003 |
| 7 | SLU 46 | 4.89 | -0.16 | 29.24 | 0.0948 | 0.2049 | -0.0003 |
| 7 | SLU 47 | 4.97 | -0.16 | 29.12 | 0.093 | 0.2076 | -0.0003 |
| 7 | SLU 48 | 4.94 | -0.17 | 29.36 | 0.0973 | 0.2065 | -0.0003 |
| 7 | SLU 49 | 5.02 | -0.16 | 29.25 | 0.0952 | 0.2098 | -0.0003 |
| 7 | SLU 50 | 4.95 | -0.17 | 29.31 | 0.097 | 0.2071 | -0.0003 |
| 7 | SLU 51 | 5.03 | -0.16 | 29.2 | 0.0948 | 0.2103 | -0.0003 |
| 7 | SLU 52 | 5.45 | -0.17 | 30.48 | 0.1011 | 0.2273 | -0.0003 |
| 7 | SLU 53 | 5.42 | -0.18 | 30.73 | 0.1055 | 0.2262 | -0.0003 |
| 7 | SLU 54 | 5.5 | -0.18 | 30.62 | 0.1033 | 0.2294 | -0.0003 |
| 7 | SLU 55 | 5.57 | -0.17 | 30.49 | 0.1015 | 0.2322 | -0.0003 |
| 7 | SLU 56 | 5.54 | -0.18 | 30.74 | 0.1059 | 0.2311 | -0.0003 |
| 7 | SLU 57 | 5.62 | -0.18 | 30.63 | 0.1037 | 0.2343 | -0.0003 |
| 7 | SLU 58 | 5.56 | -0.18 | 30.68 | 0.1055 | 0.2317 | -0.0003 |
| 7 | SLU 59 | 5.64 | -0.18 | 30.58 | 0.1034 | 0.2349 | -0.0003 |
| 7 | SLU 60 | 5.57 | -0.18 | 31.25 | 0.1084 | 0.2325 | -0.0003 |
| 7 | SLU 61 | 5.65 | -0.18 | 31.14 | 0.1062 | 0.2357 | -0.0003 |
| 7 | SLU 62 | 5.69 | -0.18 | 31.26 | 0.1088 | 0.2373 | -0.0003 |
| 7 | SLU 63 | 5.78 | -0.18 | 31.15 | 0.1066 | 0.2405 | -0.0003 |
| 7 | SLU 64 | 4.97 | -0.17 | 29.96 | 0.1011 | 0.208 | -0.0003 |
| 7 | SLU 65 | 5.1 | -0.17 | 29.78 | 0.0975 | 0.2134 | -0.0003 |
| 7 | SLU 66 | 5.07 | -0.17 | 30.03 | 0.1019 | 0.2123 | -0.0003 |
| 7 | SLU 67 | 5.16 | -0.17 | 29.92 | 0.0997 | 0.2155 | -0.0003 |
| 7 | SLU 68 | 5.23 | -0.17 | 29.79 | 0.098 | 0.2182 | -0.0003 |
| 7 | SLU 69 | 5.2 | -0.17 | 30.04 | 0.1023 | 0.2171 | -0.0003 |
| 7 | SLU 70 | 5.28 | -0.17 | 29.93 | 0.1001 | 0.2203 | -0.0003 |
| 7 | SLU 71 | 5.21 | -0.17 | 29.98 | 0.1019 | 0.2177 | -0.0003 |
| 7 | SLU 72 | 5.29 | -0.17 | 29.87 | 0.0998 | 0.2209 | -0.0003 |
| 7 | SLU 73 | 5.71 | -0.18 | 31.16 | 0.1061 | 0.2379 | -0.0003 |
| 7 | SLU 74 | 5.68 | -0.19 | 31.4 | 0.1104 | 0.2368 | -0.0003 |
| 7 | SLU 75 | 5.76 | -0.18 | 31.29 | 0.1083 | 0.24 | -0.0003 |
| 7 | SLU 76 | 5.83 | -0.18 | 31.17 | 0.1065 | 0.2427 | -0.0003 |
| 7 | SLU 77 | 5.8 | -0.19 | 31.41 | 0.1109 | 0.2416 | -0.0003 |
| 7 | SLU 78 | 5.88 | -0.18 | 31.3 | 0.1087 | 0.2449 | -0.0003 |
| 7 | SLU 79 | 5.82 | -0.19 | 31.36 | 0.1105 | 0.2422 | -0.0003 |
| 7 | SLU 80 | 5.9 | -0.18 | 31.25 | 0.1084 | 0.2455 | -0.0003 |
| 7 | SLU 81 | 5.83 | -0.19 | 31.93 | 0.1134 | 0.243 | -0.0003 |
| 7 | SLU 82 | 5.91 | -0.19 | 31.82 | 0.1112 | 0.2463 | -0.0003 |
| 7 | SLU 83 | 5.95 | -0.19 | 31.94 | 0.1138 | 0.2479 | -0.0003 |
| 7 | SLU 84 | 6.04 | -0.19 | 31.83 | 0.1116 | 0.2511 | -0.0003 |
| 7 | SLE RA 1 | 3.76 | -0.13 | 22.9 | 0.0767 | 0.1577 | -0.0002 |
| 7 | SLE RA 2 | 3.85 | -0.13 | 22.78 | 0.0743 | 0.1612 | -0.0002 |
| 7 | SLE RA 3 | 3.83 | -0.13 | 22.94 | 0.0772 | 0.1605 | -0.0002 |
| 7 | SLE RA 4 | 3.89 | -0.13 | 22.87 | 0.0758 | 0.1627 | -0.0002 |
| 7 | SLE RA 5 | 3.94 | -0.13 | 22.79 | 0.0746 | 0.1645 | -0.0002 |
| 7 | SLE RA 6 | 3.92 | -0.13 | 22.95 | 0.0775 | 0.1637 | -0.0002 |
| 7 | SLE RA 7 | 3.97 | -0.13 | 22.88 | 0.076 | 0.1659 | -0.0002 |
| 7 | SLE RA 8 | 3.93 | -0.13 | 22.91 | 0.0772 | 0.1641 | -0.0002 |
| 7 | SLE RA 9 | 3.98 | -0.13 | 22.84 | 0.0758 | 0.1663 | -0.0002 |
| 7 | SLE RA 10 | 4.26 | -0.14 | 23.7 | 0.08 | 0.1776 | -0.0002 |
| 7 | SLE RA 11 | 4.24 | -0.14 | 23.86 | 0.0829 | 0.1769 | -0.0002 |
| 7 | SLE RA 12 | 4.29 | -0.14 | 23.79 | 0.0815 | 0.179 | -0.0002 |
| 7 | SLE RA 13 | 4.34 | -0.14 | 23.7 | 0.0803 | 0.1808 | -0.0002 |
| 7 | SLE RA 14 | 4.32 | -0.14 | 23.87 | 0.0832 | 0.1801 | -0.0002 |
| 7 | SLE RA 15 | 4.37 | -0.14 | 23.79 | 0.0818 | 0.1823 | -0.0002 |
| 7 | SLE RA 16 | 4.33 | -0.14 | 23.83 | 0.0829 | 0.1805 | -0.0002 |
| 7 | SLE RA 17 | 4.39 | -0.14 | 23.76 | 0.0815 | 0.1826 | -0.0002 |
| 7 | SLE RA 18 | 4.34 | -0.14 | 24.21 | 0.0849 | 0.181 | -0.0002 |
| 7 | SLE RA 19 | 4.39 | -0.14 | 24.14 | 0.0834 | 0.1832 | -0.0002 |
| 7 | SLE RA 20 | 4.42 | -0.14 | 24.22 | 0.0851 | 0.1843 | -0.0002 |
| 7 | SLE RA 21 | 4.48 | -0.14 | 24.14 | 0.0837 | 0.1864 | -0.0002 |
| 7 | SLE FR 1 | 3.76 | -0.13 | 22.9 | 0.0767 | 0.1577 | -0.0002 |
| 7 | SLE FR 2 | 3.78 | -0.13 | 22.88 | 0.0762 | 0.1584 | -0.0002 |
| 7 | SLE FR 3 | 3.8 | -0.13 | 22.9 | 0.0768 | 0.159 | -0.0002 |
| 7 | SLE FR 4 | 3.95 | -0.14 | 23.27 | 0.0787 | 0.1654 | -0.0002 |
| 7 | SLE FR 5 | 3.97 | -0.14 | 23.29 | 0.0792 | 0.166 | -0.0002 |
| 7 | SLE FR 6 | 4.05 | -0.14 | 23.55 | 0.0808 | 0.1694 | -0.0002 |
| 7 | SLE QP 1 | 3.76 | -0.13 | 22.9 | 0.0767 | 0.1577 | -0.0002 |
| 7 | SLE QP 2 | 3.94 | -0.14 | 23.29 | 0.0791 | 0.1647 | -0.0002 |
| 7 | SLD 1 | 8.87 | -0.32 | 30.35 | 0.1982 | 0.3813 | -0.0006 |
| 7 | SLD 2 | 8.87 | -0.32 | 30.35 | 0.1982 | 0.3813 | -0.0006 |
| 7 | SLD 3 | 7.81 | -0.18 | 28.29 | 0.1106 | 0.337 | -0.0003 |
| 7 | SLD 4 | 7.81 | -0.18 | 28.29 | 0.1106 | 0.337 | -0.0003 |
| 7 | SLD 5 | 7.02 | -0.4 | 28.54 | 0.2477 | 0.2968 | -0.0007 |
| 7 | SLD 6 | 7.02 | -0.4 | 28.54 | 0.2477 | 0.2968 | -0.0007 |
| 7 | SLD 7 | 3.49 | 0.06 | 21.66 | -0.0443 | 0.1492 | 0.0001 |
| 7 | SLD 8 | 3.49 | 0.06 | 21.66 | -0.0443 | 0.1492 | 0.0001 |
| 7 | SLD 9 | 4.38 | -0.33 | 24.92 | 0.2025 | 0.1802 | -0.0005 |
| 7 | SLD 10 | 4.38 | -0.33 | 24.92 | 0.2025 | 0.1802 | -0.0005 |
| 7 | SLD 11 | 0.85 | 0.13 | 18.04 | -0.0894 | 0.0325 | 0.0002 |
| 7 | SLD 12 | 0.85 | 0.13 | 18.04 | -0.0894 | 0.0325 | 0.0002 |
| 7 | SLD 13 | 0.06 | -0.09 | 18.3 | 0.0477 | -0.0076 | -0.0001 |
| 7 | SLD 14 | 0.06 | -0.09 | 18.3 | 0.0477 | -0.0076 | -0.0001 |
| 7 | SLD 15 | -1 | 0.05 | 16.23 | -0.0399 | -0.0519 | 0.0001 |
| 7 | SLD 16 | -1 | 0.05 | 16.23 | -0.0399 | -0.0519 | 0.0001 |
| 7 | SLV 1 | 15.5 | -0.57 | 39.88 | 0.3586 | 0.6719 | -0.001 |
| 7 | SLV 2 | 15.5 | -0.57 | 39.88 | 0.3586 | 0.6719 | -0.001 |
| 7 | SLV 3 | 13.01 | -0.25 | 35.03 | 0.1544 | 0.5678 | -0.0005 |

| Nodo | Cont. | Reazione a traslazione | | | Reazione a rotazione | | |
|---|---|---|---|---|---|---|---|
| Ind. | N.br. | x | y | z | x | y | z |
| 7 | SLV 4 | 13.01 | -0.25 | 35.03 | 0.1544 | 0.5678 | -0.0005 |
| 7 | SLV 5 | 11.17 | -0.76 | 35.62 | 0.4727 | 0.4747 | -0.0013 |
| 7 | SLV 6 | 11.17 | -0.76 | 35.62 | 0.4727 | 0.4747 | -0.0013 |
| 7 | SLV 7 | 2.89 | 0.32 | 19.46 | -0.208 | 0.1278 | 0.0005 |
| 7 | SLV 8 | 2.89 | 0.32 | 19.46 | -0.208 | 0.1278 | 0.0005 |
| 7 | SLV 9 | 4.98 | -0.6 | 27.12 | 0.3663 | 0.2016 | -0.0009 |
| 7 | SLV 10 | 4.98 | -0.6 | 27.12 | 0.3663 | 0.2016 | -0.0009 |
| 7 | SLV 11 | -3.3 | 0.49 | 10.96 | -0.3144 | -0.1453 | 0.0008 |
| 7 | SLV 12 | -3.3 | 0.49 | 10.96 | -0.3144 | -0.1453 | 0.0008 |
| 7 | SLV 13 | -5.14 | -0.02 | 11.55 | 0.0039 | -0.2384 | 0 |
| 7 | SLV 14 | -5.14 | -0.02 | 11.55 | 0.0039 | -0.2384 | 0 |
| 7 | SLV 15 | -7.62 | 0.3 | 6.7 | -0.2003 | -0.3425 | 0.0005 |
| 7 | SLV 16 | -7.62 | 0.3 | 6.7 | -0.2003 | -0.3425 | 0.0005 |
| 8 | SLU 1 | 4.22 | -0.12 | 24.83 | 0.0702 | 0.168 | -0.0002 |
| 8 | SLU 2 | 4.31 | -0.11 | 24.72 | 0.0656 | 0.1719 | -0.0002 |
| 8 | SLU 3 | 4.33 | -0.12 | 24.97 | 0.0712 | 0.1726 | -0.0002 |
| 8 | SLU 4 | 4.39 | -0.12 | 24.91 | 0.0684 | 0.175 | -0.0002 |
| 8 | SLU 5 | 4.44 | -0.11 | 24.82 | 0.0662 | 0.1772 | -0.0002 |
| 8 | SLU 6 | 4.46 | -0.12 | 25.07 | 0.0718 | 0.1778 | -0.0002 |
| 8 | SLU 7 | 4.52 | -0.12 | 25.01 | 0.069 | 0.1802 | -0.0002 |
| 8 | SLU 8 | 4.48 | -0.12 | 25.03 | 0.0715 | 0.1784 | -0.0002 |
| 8 | SLU 9 | 4.53 | -0.12 | 24.97 | 0.0687 | 0.1808 | -0.0002 |
| 8 | SLU 10 | 5.02 | -0.13 | 26.57 | 0.0741 | 0.1998 | -0.0002 |
| 8 | SLU 11 | 5.04 | -0.14 | 26.82 | 0.0797 | 0.2004 | -0.0002 |
| 8 | SLU 12 | 5.1 | -0.13 | 26.76 | 0.0769 | 0.2028 | -0.0002 |
| 8 | SLU 13 | 5.15 | -0.13 | 26.67 | 0.0748 | 0.205 | -0.0002 |
| 8 | SLU 14 | 5.17 | -0.14 | 26.92 | 0.0804 | 0.2057 | -0.0002 |
| 8 | SLU 15 | 5.23 | -0.13 | 26.86 | 0.0776 | 0.208 | -0.0002 |
| 8 | SLU 16 | 5.19 | -0.14 | 26.88 | 0.0801 | 0.2063 | -0.0002 |
| 8 | SLU 17 | 5.24 | -0.13 | 26.82 | 0.0773 | 0.2086 | -0.0002 |
| 8 | SLU 18 | 5.23 | -0.14 | 27.47 | 0.0825 | 0.2077 | -0.0002 |
| 8 | SLU 19 | 5.29 | -0.14 | 27.41 | 0.0797 | 0.2101 | -0.0002 |
| 8 | SLU 20 | 5.36 | -0.14 | 27.57 | 0.0831 | 0.213 | -0.0002 |
| 8 | SLU 21 | 5.42 | -0.14 | 27.51 | 0.0803 | 0.2153 | -0.0002 |
| 8 | SLU 22 | 4.52 | -0.13 | 25.71 | 0.0751 | 0.1798 | -0.0002 |
| 8 | SLU 23 | 4.61 | -0.12 | 25.6 | 0.0705 | 0.1838 | -0.0002 |
| 8 | SLU 24 | 4.63 | -0.13 | 25.85 | 0.0761 | 0.1844 | -0.0002 |
| 8 | SLU 25 | 4.69 | -0.12 | 25.78 | 0.0733 | 0.1868 | -0.0002 |
| 8 | SLU 26 | 4.74 | -0.12 | 25.7 | 0.0711 | 0.189 | -0.0002 |
| 8 | SLU 27 | 4.76 | -0.13 | 25.95 | 0.0767 | 0.1897 | -0.0002 |
| 8 | SLU 28 | 4.82 | -0.13 | 25.88 | 0.0739 | 0.192 | -0.0002 |
| 8 | SLU 29 | 4.78 | -0.13 | 25.91 | 0.0764 | 0.1903 | -0.0002 |
| 8 | SLU 30 | 4.83 | -0.13 | 25.84 | 0.0736 | 0.1926 | -0.0002 |
| 8 | SLU 31 | 5.32 | -0.13 | 27.45 | 0.079 | 0.2116 | -0.0002 |
| 8 | SLU 32 | 5.34 | -0.14 | 27.7 | 0.0846 | 0.2123 | -0.0002 |
| 8 | SLU 33 | 5.4 | -0.14 | 27.63 | 0.0818 | 0.2147 | -0.0002 |
| 8 | SLU 34 | 5.45 | -0.13 | 27.55 | 0.0797 | 0.2168 | -0.0002 |
| 8 | SLU 35 | 5.47 | -0.14 | 27.8 | 0.0853 | 0.2175 | -0.0002 |
| 8 | SLU 36 | 5.53 | -0.14 | 27.73 | 0.0825 | 0.2199 | -0.0002 |
| 8 | SLU 37 | 5.49 | -0.14 | 27.76 | 0.085 | 0.2181 | -0.0002 |
| 8 | SLU 38 | 5.54 | -0.14 | 27.69 | 0.0822 | 0.2205 | -0.0002 |
| 8 | SLU 39 | 5.53 | -0.15 | 28.35 | 0.0874 | 0.2196 | -0.0002 |
| 8 | SLU 40 | 5.59 | -0.14 | 28.28 | 0.0846 | 0.222 | -0.0002 |
| 8 | SLU 41 | 5.66 | -0.15 | 28.45 | 0.088 | 0.2248 | -0.0002 |
| 8 | SLU 42 | 5.72 | -0.14 | 28.38 | 0.0852 | 0.2272 | -0.0002 |
| 8 | SLU 43 | 5.38 | -0.15 | 31.98 | 0.0896 | 0.2143 | -0.0003 |
| 8 | SLU 44 | 5.47 | -0.15 | 31.87 | 0.0849 | 0.2183 | -0.0002 |
| 8 | SLU 45 | 5.49 | -0.16 | 32.12 | 0.0905 | 0.2189 | -0.0003 |
| 8 | SLU 46 | 5.55 | -0.15 | 32.06 | 0.0877 | 0.2213 | -0.0002 |
| 8 | SLU 47 | 5.6 | -0.15 | 31.97 | 0.0856 | 0.2235 | -0.0002 |
| 8 | SLU 48 | 5.62 | -0.16 | 32.22 | 0.0912 | 0.2242 | -0.0003 |
| 8 | SLU 49 | 5.68 | -0.15 | 32.16 | 0.0884 | 0.2265 | -0.0003 |
| 8 | SLU 50 | 5.64 | -0.16 | 32.18 | 0.0909 | 0.2248 | -0.0003 |
| 8 | SLU 51 | 5.69 | -0.15 | 32.12 | 0.0881 | 0.2271 | -0.0002 |
| 8 | SLU 52 | 6.18 | -0.16 | 33.72 | 0.0935 | 0.2461 | -0.0003 |
| 8 | SLU 53 | 6.2 | -0.17 | 33.97 | 0.0991 | 0.2468 | -0.0003 |
| 8 | SLU 54 | 6.26 | -0.16 | 33.91 | 0.0963 | 0.2491 | -0.0003 |
| 8 | SLU 55 | 6.31 | -0.16 | 33.82 | 0.0942 | 0.2513 | -0.0003 |
| 8 | SLU 56 | 6.33 | -0.17 | 34.07 | 0.0997 | 0.252 | -0.0003 |
| 8 | SLU 57 | 6.39 | -0.17 | 34.01 | 0.0969 | 0.2544 | -0.0003 |
| 8 | SLU 58 | 6.35 | -0.17 | 34.03 | 0.0995 | 0.2526 | -0.0003 |
| 8 | SLU 59 | 6.4 | -0.16 | 33.97 | 0.0967 | 0.255 | -0.0003 |
| 8 | SLU 60 | 6.39 | -0.17 | 34.62 | 0.1018 | 0.2541 | -0.0003 |
| 8 | SLU 61 | 6.45 | -0.17 | 34.56 | 0.099 | 0.2564 | -0.0003 |
| 8 | SLU 62 | 6.52 | -0.17 | 34.72 | 0.1025 | 0.2593 | -0.0003 |
| 8 | SLU 63 | 6.58 | -0.17 | 34.66 | 0.0997 | 0.2617 | -0.0003 |
| 8 | SLU 64 | 5.68 | -0.16 | 32.86 | 0.0945 | 0.2261 | -0.0003 |
| 8 | SLU 65 | 5.78 | -0.15 | 32.75 | 0.0899 | 0.2301 | -0.0003 |
| 8 | SLU 66 | 5.8 | -0.16 | 33 | 0.0955 | 0.2308 | -0.0003 |
| 8 | SLU 67 | 5.85 | -0.16 | 32.93 | 0.0927 | 0.2331 | -0.0003 |
| 8 | SLU 68 | 5.9 | -0.16 | 32.85 | 0.0905 | 0.2353 | -0.0003 |
| 8 | SLU 69 | 5.93 | -0.16 | 33.1 | 0.0961 | 0.236 | -0.0003 |
| 8 | SLU 70 | 5.98 | -0.16 | 33.03 | 0.0933 | 0.2384 | -0.0003 |
| 8 | SLU 71 | 5.94 | -0.16 | 33.06 | 0.0958 | 0.2366 | -0.0003 |
| 8 | SLU 72 | 6 | -0.16 | 32.99 | 0.093 | 0.239 | -0.0003 |
| 8 | SLU 73 | 6.49 | -0.17 | 34.6 | 0.0984 | 0.2579 | -0.0003 |
| 8 | SLU 74 | 6.51 | -0.18 | 34.85 | 0.104 | 0.2586 | -0.0003 |
| 8 | SLU 75 | 6.56 | -0.17 | 34.78 | 0.1012 | 0.261 | -0.0003 |

| Nodo | Cont. | Reazione a traslazione | | | Reazione a rotazione | | |
|---|---|---|---|---|---|---|---|
| Ind. | N.br. | x | y | z | x | y | z |
| 8 | SLU 76 | 6.61 | -0.17 | 34.7 | 0.0991 | 0.2632 | -0.0003 |
| 8 | SLU 77 | 6.63 | -0.18 | 34.95 | 0.1047 | 0.2638 | -0.0003 |
| 8 | SLU 78 | 6.69 | -0.17 | 34.88 | 0.1019 | 0.2662 | -0.0003 |
| 8 | SLU 79 | 6.65 | -0.18 | 34.91 | 0.1044 | 0.2644 | -0.0003 |
| 8 | SLU 80 | 6.71 | -0.17 | 34.84 | 0.1016 | 0.2668 | -0.0003 |
| 8 | SLU 81 | 6.7 | -0.18 | 35.5 | 0.1068 | 0.2659 | -0.0003 |
| 8 | SLU 82 | 6.75 | -0.18 | 35.43 | 0.104 | 0.2683 | -0.0003 |
| 8 | SLU 83 | 6.82 | -0.18 | 35.6 | 0.1074 | 0.2711 | -0.0003 |
| 8 | SLU 84 | 6.88 | -0.18 | 35.53 | 0.1046 | 0.2735 | -0.0003 |
| 8 | SLE RA 1 | 4.3 | -0.12 | 25.08 | 0.0716 | 0.1714 | -0.0002 |
| 8 | SLE RA 2 | 4.37 | -0.12 | 25.01 | 0.0685 | 0.174 | -0.0002 |
| 8 | SLE RA 3 | 4.38 | -0.12 | 25.18 | 0.0723 | 0.1744 | -0.0002 |
| 8 | SLE RA 4 | 4.42 | -0.12 | 25.13 | 0.0704 | 0.176 | -0.0002 |
| 8 | SLE RA 5 | 4.45 | -0.12 | 25.08 | 0.069 | 0.1775 | -0.0002 |
| 8 | SLE RA 6 | 4.47 | -0.12 | 25.24 | 0.0727 | 0.1779 | -0.0002 |
| 8 | SLE RA 7 | 4.5 | -0.12 | 25.2 | 0.0708 | 0.1795 | -0.0002 |
| 8 | SLE RA 8 | 4.48 | -0.12 | 25.22 | 0.0725 | 0.1783 | -0.0002 |
| 8 | SLE RA 9 | 4.51 | -0.12 | 25.17 | 0.0706 | 0.1799 | -0.0002 |
| 8 | SLE RA 10 | 4.84 | -0.13 | 26.24 | 0.0742 | 0.1926 | -0.0002 |
| 8 | SLE RA 11 | 4.85 | -0.13 | 26.41 | 0.078 | 0.193 | -0.0002 |
| 8 | SLE RA 12 | 4.89 | -0.13 | 26.36 | 0.0761 | 0.1946 | -0.0002 |
| 8 | SLE RA 13 | 4.93 | -0.13 | 26.31 | 0.0747 | 0.196 | -0.0002 |
| 8 | SLE RA 14 | 4.94 | -0.13 | 26.48 | 0.0784 | 0.1965 | -0.0002 |
| 8 | SLE RA 15 | 4.98 | -0.13 | 26.43 | 0.0765 | 0.1981 | -0.0002 |
| 8 | SLE RA 16 | 4.95 | -0.13 | 26.45 | 0.0782 | 0.1969 | -0.0002 |
| 8 | SLE RA 17 | 4.99 | -0.13 | 26.4 | 0.0763 | 0.1985 | -0.0002 |
| 8 | SLE RA 18 | 4.98 | -0.14 | 26.84 | 0.0798 | 0.1979 | -0.0002 |
| 8 | SLE RA 19 | 5.02 | -0.13 | 26.8 | 0.0779 | 0.1995 | -0.0002 |
| 8 | SLE RA 20 | 5.07 | -0.14 | 26.91 | 0.0802 | 0.2014 | -0.0002 |
| 8 | SLE RA 21 | 5.1 | -0.13 | 26.87 | 0.0784 | 0.2029 | -0.0002 |
| 8 | SLE FR 1 | 4.3 | -0.12 | 25.08 | 0.0716 | 0.1714 | -0.0002 |
| 8 | SLE FR 2 | 4.32 | -0.12 | 25.07 | 0.071 | 0.1719 | -0.0002 |
| 8 | SLE FR 3 | 4.34 | -0.12 | 25.11 | 0.0718 | 0.1728 | -0.0002 |
| 8 | SLE FR 4 | 4.52 | -0.13 | 25.6 | 0.0735 | 0.1798 | -0.0002 |
| 8 | SLE FR 5 | 4.54 | -0.13 | 25.64 | 0.0743 | 0.1807 | -0.0002 |
| 8 | SLE FR 6 | 4.64 | -0.13 | 25.96 | 0.0757 | 0.1846 | -0.0002 |
| 8 | SLE QP 1 | 4.3 | -0.12 | 25.08 | 0.0716 | 0.1714 | -0.0002 |
| 8 | SLE QP 2 | 4.51 | -0.13 | 25.61 | 0.0741 | 0.1793 | -0.0002 |
| 8 | SLD 1 | 9.45 | -0.31 | 33.29 | 0.1946 | 0.3974 | -0.0005 |
| 8 | SLD 2 | 9.45 | -0.31 | 33.29 | 0.1946 | 0.3974 | -0.0005 |
| 8 | SLD 3 | 8.38 | -0.19 | 30.89 | 0.1117 | 0.3527 | -0.0003 |
| 8 | SLD 4 | 8.38 | -0.19 | 30.89 | 0.1117 | 0.3527 | -0.0003 |
| 8 | SLD 5 | 7.62 | -0.38 | 31.55 | 0.236 | 0.3125 | -0.0006 |
| 8 | SLD 6 | 7.62 | -0.38 | 31.55 | 0.236 | 0.3125 | -0.0006 |
| 8 | SLD 7 | 4.04 | 0.05 | 23.56 | -0.0403 | 0.1635 | 0 |
| 8 | SLD 8 | 4.04 | 0.05 | 23.56 | -0.0403 | 0.1635 | 0 |
| 8 | SLD 9 | 4.98 | -0.3 | 27.66 | 0.1885 | 0.1951 | -0.0005 |
| 8 | SLD 10 | 4.98 | -0.3 | 27.66 | 0.1885 | 0.1951 | -0.0005 |
| 8 | SLD 11 | 1.39 | 0.12 | 19.67 | -0.0878 | 0.0461 | 0.0002 |
| 8 | SLD 12 | 1.39 | 0.12 | 19.67 | -0.0878 | 0.0461 | 0.0002 |
| 8 | SLD 13 | 0.64 | -0.07 | 20.33 | 0.0364 | 0.0059 | -0.0001 |
| 8 | SLD 14 | 0.64 | -0.07 | 20.33 | 0.0364 | 0.0059 | -0.0001 |
| 8 | SLD 15 | -0.44 | 0.06 | 17.94 | -0.0465 | -0.0388 | 0.0001 |
| 8 | SLD 16 | -0.44 | 0.06 | 17.94 | -0.0465 | -0.0388 | 0.0001 |
| 8 | SLV 1 | 16.09 | -0.57 | 43.62 | 0.3571 | 0.6903 | -0.0009 |
| 8 | SLV 2 | 16.09 | -0.57 | 43.62 | 0.3571 | 0.6903 | -0.0009 |
| 8 | SLV 3 | 13.58 | -0.27 | 38.01 | 0.1637 | 0.5856 | -0.0005 |
| 8 | SLV 4 | 13.58 | -0.27 | 38.01 | 0.1637 | 0.5856 | -0.0005 |
| 8 | SLV 5 | 11.79 | -0.71 | 39.51 | 0.4523 | 0.4914 | -0.0011 |
| 8 | SLV 6 | 11.79 | -0.71 | 39.51 | 0.4523 | 0.4914 | -0.0011 |
| 8 | SLV 7 | 3.42 | 0.28 | 20.84 | -0.1923 | 0.1424 | 0.0004 |
| 8 | SLV 8 | 3.42 | 0.28 | 20.84 | -0.1923 | 0.1424 | 0.0004 |
| 8 | SLV 9 | 5.6 | -0.54 | 30.38 | 0.3405 | 0.2162 | -0.0008 |
| 8 | SLV 10 | 5.6 | -0.54 | 30.38 | 0.3405 | 0.2162 | -0.0008 |
| 8 | SLV 11 | -2.78 | 0.46 | 11.71 | -0.3041 | -0.1328 | 0.0007 |
| 8 | SLV 12 | -2.78 | 0.46 | 11.71 | -0.3041 | -0.1328 | 0.0007 |
| 8 | SLV 13 | -4.57 | 0.02 | 13.21 | -0.0156 | -0.227 | 0.0001 |
| 8 | SLV 14 | -4.57 | 0.02 | 13.21 | -0.0156 | -0.227 | 0.0001 |
| 8 | SLV 15 | -7.08 | 0.32 | 7.61 | -0.2089 | -0.3317 | 0.0005 |
| 8 | SLV 16 | -7.08 | 0.32 | 7.61 | -0.2089 | -0.3317 | 0.0005 |
| 9 | SLU 1 | 4.58 | -0.08 | 27.77 | 0.052 | 0.1868 | -0.0001 |
| 9 | SLU 2 | 4.64 | -0.08 | 27.68 | 0.047 | 0.1892 | -0.0001 |
| 9 | SLU 3 | 4.7 | -0.09 | 27.98 | 0.0528 | 0.1912 | -0.0001 |
| 9 | SLU 4 | 4.73 | -0.08 | 27.94 | 0.0499 | 0.1927 | -0.0001 |
| 9 | SLU 5 | 4.77 | -0.08 | 27.87 | 0.0477 | 0.194 | -0.0001 |
| 9 | SLU 6 | 4.82 | -0.09 | 28.17 | 0.0536 | 0.196 | -0.0001 |
| 9 | SLU 7 | 4.85 | -0.08 | 28.12 | 0.0506 | 0.1975 | -0.0001 |
| 9 | SLU 8 | 4.83 | -0.09 | 28.14 | 0.0534 | 0.1964 | -0.0001 |
| 9 | SLU 9 | 4.87 | -0.08 | 28.09 | 0.0504 | 0.1979 | -0.0001 |
| 9 | SLU 10 | 5.43 | -0.09 | 30.11 | 0.0538 | 0.2207 | -0.0001 |
| 9 | SLU 11 | 5.48 | -0.1 | 30.41 | 0.0596 | 0.2227 | -0.0001 |
| 9 | SLU 12 | 5.52 | -0.09 | 30.36 | 0.0566 | 0.2241 | -0.0001 |
| 9 | SLU 13 | 5.55 | -0.09 | 30.3 | 0.0545 | 0.2255 | -0.0001 |
| 9 | SLU 14 | 5.6 | -0.1 | 30.6 | 0.0603 | 0.2275 | -0.0001 |
| 9 | SLU 15 | 5.64 | -0.09 | 30.55 | 0.0573 | 0.229 | -0.0001 |
| 9 | SLU 16 | 5.61 | -0.1 | 30.57 | 0.0601 | 0.2279 | -0.0001 |
| 9 | SLU 17 | 5.65 | -0.09 | 30.52 | 0.0572 | 0.2294 | -0.0001 |
| 9 | SLU 18 | 5.71 | -0.1 | 31.23 | 0.0616 | 0.2317 | -0.0001 |

| Nodo | Cont. | Reazione a traslazione | | | Reazione a rotazione | | |
|---|---|---|---|---|---|---|---|
| Ind. | N.br. | x | y | z | x | y | z |
| 9 | SLU 19 | 5.74 | -0.09 | 31.19 | 0.0587 | 0.2332 | -0.0001 |
| 9 | SLU 20 | 5.83 | -0.1 | 31.42 | 0.0623 | 0.2366 | -0.0001 |
| 9 | SLU 21 | 5.86 | -0.1 | 31.37 | 0.0594 | 0.238 | -0.0001 |
| 9 | SLU 22 | 4.91 | -0.09 | 28.89 | 0.0559 | 0.2 | -0.0001 |
| 9 | SLU 23 | 4.97 | -0.08 | 28.81 | 0.051 | 0.2024 | -0.0001 |
| 9 | SLU 24 | 5.03 | -0.09 | 29.11 | 0.0568 | 0.2044 | -0.0001 |
| 9 | SLU 25 | 5.06 | -0.09 | 29.06 | 0.0538 | 0.2059 | -0.0001 |
| 9 | SLU 26 | 5.1 | -0.08 | 28.99 | 0.0517 | 0.2073 | -0.0001 |
| 9 | SLU 27 | 5.15 | -0.09 | 29.29 | 0.0575 | 0.2093 | -0.0001 |
| 9 | SLU 28 | 5.18 | -0.09 | 29.24 | 0.0545 | 0.2107 | -0.0001 |
| 9 | SLU 29 | 5.16 | -0.09 | 29.26 | 0.0573 | 0.2097 | -0.0001 |
| 9 | SLU 30 | 5.2 | -0.09 | 29.21 | 0.0544 | 0.2111 | -0.0001 |
| 9 | SLU 31 | 5.76 | -0.09 | 31.23 | 0.0577 | 0.2339 | -0.0001 |
| 9 | SLU 32 | 5.81 | -0.1 | 31.53 | 0.0636 | 0.2359 | -0.0001 |
| 9 | SLU 33 | 5.85 | -0.1 | 31.49 | 0.0606 | 0.2374 | -0.0001 |
| 9 | SLU 34 | 5.88 | -0.09 | 31.42 | 0.0584 | 0.2388 | -0.0001 |
| 9 | SLU 35 | 5.93 | -0.1 | 31.72 | 0.0643 | 0.2408 | -0.0001 |
| 9 | SLU 36 | 5.97 | -0.1 | 31.67 | 0.0613 | 0.2422 | -0.0001 |
| 9 | SLU 37 | 5.95 | -0.1 | 31.69 | 0.0641 | 0.2412 | -0.0001 |
| 9 | SLU 38 | 5.98 | -0.1 | 31.64 | 0.0611 | 0.2426 | -0.0001 |
| 9 | SLU 39 | 6.04 | -0.11 | 32.36 | 0.0656 | 0.245 | -0.0001 |
| 9 | SLU 40 | 6.07 | -0.1 | 32.31 | 0.0626 | 0.2464 | -0.0001 |
| 9 | SLU 41 | 6.16 | -0.11 | 32.54 | 0.0663 | 0.2498 | -0.0001 |
| 9 | SLU 42 | 6.19 | -0.1 | 32.49 | 0.0633 | 0.2513 | -0.0001 |
| 9 | SLU 43 | 5.84 | -0.11 | 35.71 | 0.0662 | 0.2382 | -0.0001 |
| 9 | SLU 44 | 5.9 | -0.1 | 35.63 | 0.0612 | 0.2407 | -0.0001 |
| 9 | SLU 45 | 5.96 | -0.11 | 35.93 | 0.0671 | 0.2427 | -0.0001 |
| 9 | SLU 46 | 5.99 | -0.1 | 35.88 | 0.0641 | 0.2441 | -0.0001 |
| 9 | SLU 47 | 6.03 | -0.1 | 35.82 | 0.0619 | 0.2455 | -0.0001 |
| 9 | SLU 48 | 6.08 | -0.11 | 36.12 | 0.0678 | 0.2475 | -0.0001 |
| 9 | SLU 49 | 6.12 | -0.1 | 36.07 | 0.0648 | 0.249 | -0.0001 |
| 9 | SLU 50 | 6.09 | -0.11 | 36.09 | 0.0676 | 0.2479 | -0.0001 |
| 9 | SLU 51 | 6.13 | -0.1 | 36.04 | 0.0646 | 0.2494 | -0.0001 |
| 9 | SLU 52 | 6.69 | -0.11 | 38.06 | 0.068 | 0.2722 | -0.0001 |
| 9 | SLU 53 | 6.74 | -0.12 | 38.36 | 0.0739 | 0.2742 | -0.0002 |
| 9 | SLU 54 | 6.78 | -0.11 | 38.31 | 0.0709 | 0.2756 | -0.0002 |
| 9 | SLU 55 | 6.81 | -0.11 | 38.25 | 0.0687 | 0.277 | -0.0001 |
| 9 | SLU 56 | 6.87 | -0.12 | 38.55 | 0.0746 | 0.279 | -0.0002 |
| 9 | SLU 57 | 6.9 | -0.12 | 38.5 | 0.0716 | 0.2805 | -0.0002 |
| 9 | SLU 58 | 6.88 | -0.12 | 38.51 | 0.0744 | 0.2794 | -0.0002 |
| 9 | SLU 59 | 6.91 | -0.12 | 38.47 | 0.0714 | 0.2809 | -0.0002 |
| 9 | SLU 60 | 6.97 | -0.12 | 39.18 | 0.0759 | 0.2832 | -0.0002 |
| 9 | SLU 61 | 7 | -0.12 | 39.13 | 0.0729 | 0.2847 | -0.0002 |
| 9 | SLU 62 | 7.09 | -0.12 | 39.37 | 0.0766 | 0.2881 | -0.0002 |
| 9 | SLU 63 | 7.13 | -0.12 | 39.32 | 0.0736 | 0.2895 | -0.0002 |
| 9 | SLU 64 | 6.18 | -0.11 | 36.83 | 0.0702 | 0.2515 | -0.0002 |
| 9 | SLU 65 | 6.24 | -0.11 | 36.75 | 0.0652 | 0.2539 | -0.0001 |
| 9 | SLU 66 | 6.29 | -0.11 | 37.05 | 0.0711 | 0.2559 | -0.0002 |
| 9 | SLU 67 | 6.32 | -0.11 | 37 | 0.0681 | 0.2574 | -0.0001 |
| 9 | SLU 68 | 6.36 | -0.11 | 36.94 | 0.0659 | 0.2588 | -0.0001 |
| 9 | SLU 69 | 6.41 | -0.12 | 37.24 | 0.0718 | 0.2608 | -0.0002 |
| 9 | SLU 70 | 6.45 | -0.11 | 37.19 | 0.0688 | 0.2622 | -0.0001 |
| 9 | SLU 71 | 6.42 | -0.12 | 37.21 | 0.0716 | 0.2612 | -0.0002 |
| 9 | SLU 72 | 6.46 | -0.11 | 37.16 | 0.0686 | 0.2626 | -0.0001 |
| 9 | SLU 73 | 7.02 | -0.12 | 39.18 | 0.072 | 0.2854 | -0.0002 |
| 9 | SLU 74 | 7.07 | -0.13 | 39.48 | 0.0778 | 0.2874 | -0.0002 |
| 9 | SLU 75 | 7.11 | -0.12 | 39.43 | 0.0748 | 0.2889 | -0.0002 |
| 9 | SLU 76 | 7.14 | -0.12 | 39.37 | 0.0727 | 0.2903 | -0.0002 |
| 9 | SLU 77 | 7.2 | -0.13 | 39.67 | 0.0785 | 0.2922 | -0.0002 |
| 9 | SLU 78 | 7.23 | -0.12 | 39.62 | 0.0755 | 0.2937 | -0.0002 |
| 9 | SLU 79 | 7.21 | -0.13 | 39.64 | 0.0783 | 0.2926 | -0.0002 |
| 9 | SLU 80 | 7.24 | -0.12 | 39.59 | 0.0754 | 0.2941 | -0.0002 |
| 9 | SLU 81 | 7.3 | -0.13 | 40.3 | 0.0798 | 0.2965 | -0.0002 |
| 9 | SLU 82 | 7.33 | -0.12 | 40.25 | 0.0769 | 0.2979 | -0.0002 |
| 9 | SLU 83 | 7.42 | -0.13 | 40.49 | 0.0805 | 0.3013 | -0.0002 |
| 9 | SLU 84 | 7.46 | -0.12 | 40.44 | 0.0776 | 0.3028 | -0.0002 |
| 9 | SLE RA 1 | 4.68 | -0.09 | 28.09 | 0.0531 | 0.1905 | -0.0001 |
| 9 | SLE RA 2 | 4.72 | -0.08 | 28.03 | 0.0498 | 0.1922 | -0.0001 |
| 9 | SLE RA 3 | 4.75 | -0.09 | 28.23 | 0.0537 | 0.1935 | -0.0001 |
| 9 | SLE RA 4 | 4.78 | -0.08 | 28.2 | 0.0517 | 0.1945 | -0.0001 |
| 9 | SLE RA 5 | 4.8 | -0.08 | 28.16 | 0.0503 | 0.1954 | -0.0001 |
| 9 | SLE RA 6 | 4.83 | -0.09 | 28.36 | 0.0542 | 0.1967 | -0.0001 |
| 9 | SLE RA 7 | 4.86 | -0.08 | 28.32 | 0.0522 | 0.1977 | -0.0001 |
| 9 | SLE RA 8 | 4.84 | -0.09 | 28.34 | 0.054 | 0.197 | -0.0001 |
| 9 | SLE RA 9 | 4.87 | -0.08 | 28.3 | 0.0521 | 0.198 | -0.0001 |
| 9 | SLE RA 10 | 5.24 | -0.09 | 29.65 | 0.0543 | 0.2132 | -0.0001 |
| 9 | SLE RA 11 | 5.28 | -0.09 | 29.85 | 0.0582 | 0.2145 | -0.0001 |
| 9 | SLE RA 12 | 5.3 | -0.09 | 29.82 | 0.0562 | 0.2155 | -0.0001 |
| 9 | SLE RA 13 | 5.32 | -0.09 | 29.78 | 0.0548 | 0.2164 | -0.0001 |
| 9 | SLE RA 14 | 5.36 | -0.09 | 29.98 | 0.0587 | 0.2177 | -0.0001 |
| 9 | SLE RA 15 | 5.38 | -0.09 | 29.94 | 0.0567 | 0.2187 | -0.0001 |
| 9 | SLE RA 16 | 5.37 | -0.09 | 29.95 | 0.0586 | 0.218 | -0.0001 |
| 9 | SLE RA 17 | 5.39 | -0.09 | 29.92 | 0.0566 | 0.219 | -0.0001 |
| 9 | SLE RA 18 | 5.43 | -0.1 | 30.4 | 0.0596 | 0.2205 | -0.0001 |
| 9 | SLE RA 19 | 5.45 | -0.09 | 30.37 | 0.0576 | 0.2215 | -0.0001 |
| 9 | SLE RA 20 | 5.51 | -0.1 | 30.52 | 0.06 | 0.2238 | -0.0001 |
| 9 | SLE RA 21 | 5.53 | -0.09 | 30.49 | 0.058 | 0.2247 | -0.0001 |
| 9 | SLE FR 1 | 4.68 | -0.09 | 28.09 | 0.0531 | 0.1905 | -0.0001 |

| Nodo | Cont. | Reazione a traslazione | | | Reazione a rotazione | | |
|---|---|---|---|---|---|---|---|
| Ind. | N.br. | x | y | z | x | y | z |
| 9 | SLE FR 2 | 4.69 | -0.09 | 28.07 | 0.0524 | 0.1909 | -0.0001 |
| 9 | SLE FR 3 | 4.71 | -0.09 | 28.14 | 0.0533 | 0.1918 | -0.0001 |
| 9 | SLE FR 4 | 4.91 | -0.09 | 28.77 | 0.0544 | 0.1999 | -0.0001 |
| 9 | SLE FR 5 | 4.93 | -0.09 | 28.83 | 0.0552 | 0.2008 | -0.0001 |
| 9 | SLE FR 6 | 5.05 | -0.09 | 29.24 | 0.0563 | 0.2055 | -0.0001 |
| 9 | SLE QP 1 | 4.68 | -0.09 | 28.09 | 0.0531 | 0.1905 | -0.0001 |
| 9 | SLE QP 2 | 4.9 | -0.09 | 28.78 | 0.055 | 0.1995 | -0.0001 |
| 9 | SLD 1 | 9.66 | -0.24 | 37.24 | 0.158 | 0.4076 | -0.0003 |
| 9 | SLD 2 | 9.66 | -0.24 | 37.24 | 0.158 | 0.4076 | -0.0003 |
| 9 | SLD 3 | 8.58 | -0.15 | 34.32 | 0.0924 | 0.3624 | -0.0002 |
| 9 | SLD 4 | 8.58 | -0.15 | 34.32 | 0.0924 | 0.3624 | -0.0002 |
| 9 | SLD 5 | 7.98 | -0.27 | 35.74 | 0.1855 | 0.3305 | -0.0003 |
| 9 | SLD 6 | 7.98 | -0.27 | 35.74 | 0.1855 | 0.3305 | -0.0003 |
| 9 | SLD 7 | 4.35 | 0.03 | 26.02 | -0.0333 | 0.1798 | 0 |
| 9 | SLD 8 | 4.35 | 0.03 | 26.02 | -0.0333 | 0.1798 | 0 |
| 9 | SLD 9 | 5.45 | -0.21 | 31.54 | 0.1434 | 0.2192 | -0.0002 |
| 9 | SLD 10 | 5.45 | -0.21 | 31.54 | 0.1434 | 0.2192 | -0.0002 |
| 9 | SLD 11 | 1.82 | 0.1 | 21.82 | -0.0754 | 0.0686 | 0.0001 |
| 9 | SLD 12 | 1.82 | 0.1 | 21.82 | -0.0754 | 0.0686 | 0.0001 |
| 9 | SLD 13 | 1.23 | -0.03 | 23.24 | 0.0177 | 0.0367 | 0 |
| 9 | SLD 14 | 1.23 | -0.03 | 23.24 | 0.0177 | 0.0367 | 0 |
| 9 | SLD 15 | 0.14 | 0.06 | 20.32 | -0.048 | -0.0085 | 0.0001 |
| 9 | SLD 16 | 0.14 | 0.06 | 20.32 | -0.048 | -0.0085 | 0.0001 |
| 9 | SLV 1 | 16.05 | -0.45 | 48.58 | 0.2968 | 0.6865 | -0.0006 |
| 9 | SLV 2 | 16.05 | -0.45 | 48.58 | 0.2968 | 0.6865 | -0.0006 |
| 9 | SLV 3 | 13.52 | -0.24 | 41.8 | 0.1434 | 0.5811 | -0.0004 |
| 9 | SLV 4 | 13.52 | -0.24 | 41.8 | 0.1434 | 0.5811 | -0.0004 |
| 9 | SLV 5 | 12.09 | -0.52 | 45.01 | 0.3602 | 0.5054 | -0.0006 |
| 9 | SLV 6 | 12.09 | -0.52 | 45.01 | 0.3602 | 0.5054 | -0.0006 |
| 9 | SLV 7 | 3.64 | 0.19 | 22.39 | -0.1511 | 0.1542 | 0.0002 |
| 9 | SLV 8 | 3.64 | 0.19 | 22.39 | -0.1511 | 0.1542 | 0.0002 |
| 9 | SLV 9 | 6.16 | -0.37 | 35.17 | 0.2611 | 0.2449 | -0.0004 |
| 9 | SLV 10 | 6.16 | -0.37 | 35.17 | 0.2611 | 0.2449 | -0.0004 |
| 9 | SLV 11 | -2.29 | 0.34 | 12.54 | -0.2501 | -0.1064 | 0.0004 |
| 9 | SLV 12 | -2.29 | 0.34 | 12.54 | -0.2501 | -0.1064 | 0.0004 |
| 9 | SLV 13 | -3.71 | 0.06 | 15.76 | -0.0333 | -0.182 | 0.0001 |
| 9 | SLV 14 | -3.71 | 0.06 | 15.76 | -0.0333 | -0.182 | 0.0001 |
| 9 | SLV 15 | -6.25 | 0.27 | 8.97 | -0.1867 | -0.2874 | 0.0004 |
| 9 | SLV 16 | -6.25 | 0.27 | 8.97 | -0.1867 | -0.2874 | 0.0004 |
| 10 | SLU 1 | 4.22 | -0.01 | 31.2 | 0.021 | 0.1635 | 0 |
| 10 | SLU 2 | 4.26 | -0.01 | 31.11 | 0.0168 | 0.1655 | 0 |
| 10 | SLU 3 | 4.33 | -0.01 | 31.49 | 0.0216 | 0.1678 | 0 |
| 10 | SLU 4 | 4.35 | -0.01 | 31.44 | 0.0191 | 0.1691 | 0 |
| 10 | SLU 5 | 4.38 | -0.01 | 31.38 | 0.0173 | 0.1703 | 0 |
| 10 | SLU 6 | 4.44 | -0.02 | 31.75 | 0.0221 | 0.1726 | 0 |
| 10 | SLU 7 | 4.46 | -0.01 | 31.7 | 0.0196 | 0.1738 | 0 |
| 10 | SLU 8 | 4.45 | -0.02 | 31.73 | 0.022 | 0.173 | 0 |
| 10 | SLU 9 | 4.47 | -0.01 | 31.68 | 0.0195 | 0.1742 | 0 |
| 10 | SLU 10 | 5.05 | -0.01 | 34.21 | 0.0197 | 0.1956 | 0 |
| 10 | SLU 11 | 5.11 | -0.02 | 34.58 | 0.0245 | 0.1979 | 0 |
| 10 | SLU 12 | 5.13 | -0.01 | 34.53 | 0.0219 | 0.1991 | 0 |
| 10 | SLU 13 | 5.16 | -0.01 | 34.47 | 0.0202 | 0.2003 | 0 |
| 10 | SLU 14 | 5.22 | -0.02 | 34.85 | 0.025 | 0.2026 | 0 |
| 10 | SLU 15 | 5.24 | -0.01 | 34.8 | 0.0224 | 0.2038 | 0 |
| 10 | SLU 16 | 5.23 | -0.02 | 34.82 | 0.0249 | 0.203 | 0 |
| 10 | SLU 17 | 5.25 | -0.01 | 34.77 | 0.0223 | 0.2042 | 0 |
| 10 | SLU 18 | 5.34 | -0.02 | 35.62 | 0.0251 | 0.2065 | 0 |
| 10 | SLU 19 | 5.36 | -0.01 | 35.57 | 0.0226 | 0.2077 | 0 |
| 10 | SLU 20 | 5.45 | -0.02 | 35.88 | 0.0256 | 0.2112 | 0 |
| 10 | SLU 21 | 5.48 | -0.01 | 35.83 | 0.0231 | 0.2124 | 0 |
| 10 | SLU 22 | 4.54 | -0.02 | 32.6 | 0.023 | 0.1759 | 0 |
| 10 | SLU 23 | 4.58 | -0.01 | 32.51 | 0.0188 | 0.1779 | 0 |
| 10 | SLU 24 | 4.65 | -0.02 | 32.89 | 0.0236 | 0.1802 | 0 |
| 10 | SLU 25 | 4.67 | -0.01 | 32.84 | 0.0211 | 0.1814 | 0 |
| 10 | SLU 26 | 4.7 | -0.01 | 32.78 | 0.0193 | 0.1826 | 0 |
| 10 | SLU 27 | 4.76 | -0.02 | 33.15 | 0.0241 | 0.1849 | 0 |
| 10 | SLU 28 | 4.78 | -0.01 | 33.1 | 0.0216 | 0.1861 | 0 |
| 10 | SLU 29 | 4.77 | -0.02 | 33.12 | 0.024 | 0.1853 | 0 |
| 10 | SLU 30 | 4.79 | -0.01 | 33.07 | 0.0215 | 0.1865 | 0 |
| 10 | SLU 31 | 5.37 | -0.01 | 35.61 | 0.0217 | 0.208 | 0 |
| 10 | SLU 32 | 5.43 | -0.02 | 35.98 | 0.0265 | 0.2103 | -0.0001 |
| 10 | SLU 33 | 5.45 | -0.01 | 35.93 | 0.0239 | 0.2115 | 0 |
| 10 | SLU 34 | 5.48 | -0.01 | 35.87 | 0.0222 | 0.2127 | 0 |
| 10 | SLU 35 | 5.54 | -0.02 | 36.25 | 0.027 | 0.215 | 0 |
| 10 | SLU 36 | 5.57 | -0.01 | 36.2 | 0.0244 | 0.2162 | 0 |
| 10 | SLU 37 | 5.55 | -0.02 | 36.22 | 0.0269 | 0.2154 | 0 |
| 10 | SLU 38 | 5.57 | -0.01 | 36.17 | 0.0244 | 0.2166 | 0 |
| 10 | SLU 39 | 5.66 | -0.02 | 37.02 | 0.0271 | 0.2189 | -0.0001 |
| 10 | SLU 40 | 5.69 | -0.02 | 36.97 | 0.0246 | 0.2201 | 0 |
| 10 | SLU 41 | 5.77 | -0.02 | 37.28 | 0.0276 | 0.2236 | -0.0001 |
| 10 | SLU 42 | 5.8 | -0.02 | 37.23 | 0.0251 | 0.2248 | 0 |
| 10 | SLU 43 | 5.38 | -0.02 | 40.08 | 0.0267 | 0.2083 | 0 |
| 10 | SLU 44 | 5.42 | -0.01 | 39.99 | 0.0224 | 0.2103 | 0 |
| 10 | SLU 45 | 5.48 | -0.02 | 40.37 | 0.0272 | 0.2127 | 0 |
| 10 | SLU 46 | 5.51 | -0.01 | 40.32 | 0.0247 | 0.2139 | 0 |
| 10 | SLU 47 | 5.53 | -0.01 | 40.26 | 0.0229 | 0.2151 | 0 |
| 10 | SLU 48 | 5.6 | -0.02 | 40.63 | 0.0277 | 0.2174 | 0 |
| 10 | SLU 49 | 5.62 | -0.01 | 40.58 | 0.0252 | 0.2186 | 0 |

| Nodo | Cont. | Reazione a traslazione | | | Reazione a rotazione | | |
|---|---|---|---|---|---|---|---|
| Ind. | N.br. | x | y | z | x | y | z |
| 10 | SLU 50 | 5.6 | -0.02 | 40.6 | 0.0276 | 0.2178 | 0 |
| 10 | SLU 51 | 5.63 | -0.01 | 40.55 | 0.0251 | 0.219 | 0 |
| 10 | SLU 52 | 6.2 | -0.01 | 43.09 | 0.0253 | 0.2404 | 0 |
| 10 | SLU 53 | 6.27 | -0.02 | 43.46 | 0.0301 | 0.2427 | -0.0001 |
| 10 | SLU 54 | 6.29 | -0.02 | 43.41 | 0.0275 | 0.2439 | 0 |
| 10 | SLU 55 | 6.31 | -0.01 | 43.35 | 0.0258 | 0.2451 | 0 |
| 10 | SLU 56 | 6.38 | -0.02 | 43.73 | 0.0306 | 0.2475 | -0.0001 |
| 10 | SLU 57 | 6.4 | -0.02 | 43.68 | 0.028 | 0.2487 | 0 |
| 10 | SLU 58 | 6.39 | -0.02 | 43.7 | 0.0305 | 0.2479 | -0.0001 |
| 10 | SLU 59 | 6.41 | -0.02 | 43.65 | 0.028 | 0.2491 | 0 |
| 10 | SLU 60 | 6.5 | -0.02 | 44.5 | 0.0307 | 0.2513 | -0.0001 |
| 10 | SLU 61 | 6.52 | -0.02 | 44.45 | 0.0282 | 0.2525 | 0 |
| 10 | SLU 62 | 6.61 | -0.02 | 44.76 | 0.0312 | 0.256 | -0.0001 |
| 10 | SLU 63 | 6.63 | -0.02 | 44.71 | 0.0287 | 0.2572 | 0 |
| 10 | SLU 64 | 5.7 | -0.02 | 41.47 | 0.0287 | 0.2207 | 0 |
| 10 | SLU 65 | 5.74 | -0.01 | 41.39 | 0.0244 | 0.2227 | 0 |
| 10 | SLU 66 | 5.81 | -0.02 | 41.77 | 0.0292 | 0.225 | 0 |
| 10 | SLU 67 | 5.83 | -0.02 | 41.72 | 0.0267 | 0.2262 | 0 |
| 10 | SLU 68 | 5.85 | -0.01 | 41.66 | 0.0249 | 0.2274 | 0 |
| 10 | SLU 69 | 5.92 | -0.02 | 42.03 | 0.0297 | 0.2298 | 0 |
| 10 | SLU 70 | 5.94 | -0.02 | 41.98 | 0.0272 | 0.231 | 0 |
| 10 | SLU 71 | 5.93 | -0.02 | 42 | 0.0297 | 0.2302 | 0 |
| 10 | SLU 72 | 5.95 | -0.02 | 41.95 | 0.0271 | 0.2314 | 0 |
| 10 | SLU 73 | 6.52 | -0.01 | 44.49 | 0.0273 | 0.2528 | 0 |
| 10 | SLU 74 | 6.59 | -0.02 | 44.86 | 0.0321 | 0.2551 | -0.0001 |
| 10 | SLU 75 | 6.61 | -0.02 | 44.81 | 0.0295 | 0.2563 | -0.0001 |
| 10 | SLU 76 | 6.64 | -0.01 | 44.75 | 0.0278 | 0.2575 | 0 |
| 10 | SLU 77 | 6.7 | -0.02 | 45.13 | 0.0326 | 0.2598 | -0.0001 |
| 10 | SLU 78 | 6.72 | -0.02 | 45.08 | 0.03 | 0.261 | 0 |
| 10 | SLU 79 | 6.71 | -0.02 | 45.1 | 0.0325 | 0.2602 | -0.0001 |
| 10 | SLU 80 | 6.73 | -0.02 | 45.05 | 0.03 | 0.2614 | 0 |
| 10 | SLU 81 | 6.82 | -0.02 | 45.9 | 0.0327 | 0.2637 | -0.0001 |
| 10 | SLU 82 | 6.84 | -0.02 | 45.85 | 0.0302 | 0.2649 | -0.0001 |
| 10 | SLU 83 | 6.93 | -0.02 | 46.16 | 0.0332 | 0.2684 | -0.0001 |
| 10 | SLU 84 | 6.95 | -0.02 | 46.11 | 0.0307 | 0.2696 | -0.0001 |
| 10 | SLE RA 1 | 4.32 | -0.01 | 31.6 | 0.0216 | 0.1671 | 0 |
| 10 | SLE RA 2 | 4.34 | -0.01 | 31.54 | 0.0188 | 0.1684 | 0 |
| 10 | SLE RA 3 | 4.38 | -0.02 | 31.79 | 0.022 | 0.1699 | 0 |
| 10 | SLE RA 4 | 4.4 | -0.01 | 31.76 | 0.0203 | 0.1707 | 0 |
| 10 | SLE RA 5 | 4.42 | -0.01 | 31.72 | 0.0191 | 0.1715 | 0 |
| 10 | SLE RA 6 | 4.46 | -0.02 | 31.97 | 0.0223 | 0.1731 | 0 |
| 10 | SLE RA 7 | 4.47 | -0.01 | 31.93 | 0.0206 | 0.1739 | 0 |
| 10 | SLE RA 8 | 4.46 | -0.02 | 31.95 | 0.0223 | 0.1734 | 0 |
| 10 | SLE RA 9 | 4.48 | -0.01 | 31.92 | 0.0206 | 0.1742 | 0 |
| 10 | SLE RA 10 | 4.86 | -0.01 | 33.6 | 0.0207 | 0.1884 | 0 |
| 10 | SLE RA 11 | 4.91 | -0.02 | 33.85 | 0.0239 | 0.19 | 0 |
| 10 | SLE RA 12 | 4.92 | -0.01 | 33.82 | 0.0222 | 0.1908 | 0 |
| 10 | SLE RA 13 | 4.94 | -0.01 | 33.78 | 0.021 | 0.1916 | 0 |
| 10 | SLE RA 14 | 4.98 | -0.02 | 34.03 | 0.0242 | 0.1931 | 0 |
| 10 | SLE RA 15 | 5 | -0.01 | 34 | 0.0225 | 0.1939 | 0 |
| 10 | SLE RA 16 | 4.99 | -0.02 | 34.01 | 0.0242 | 0.1934 | 0 |
| 10 | SLE RA 17 | 5 | -0.01 | 33.98 | 0.0225 | 0.1942 | 0 |
| 10 | SLE RA 18 | 5.06 | -0.02 | 34.54 | 0.0243 | 0.1957 | 0 |
| 10 | SLE RA 19 | 5.08 | -0.01 | 34.51 | 0.0226 | 0.1965 | 0 |
| 10 | SLE RA 20 | 5.13 | -0.02 | 34.72 | 0.0247 | 0.1988 | 0 |
| 10 | SLE RA 21 | 5.15 | -0.01 | 34.69 | 0.023 | 0.1996 | 0 |
| 10 | SLE FR 1 | 4.32 | -0.01 | 31.6 | 0.0216 | 0.1671 | 0 |
| 10 | SLE FR 2 | 4.32 | -0.01 | 31.58 | 0.021 | 0.1673 | 0 |
| 10 | SLE FR 3 | 4.35 | -0.02 | 31.67 | 0.0217 | 0.1683 | 0 |
| 10 | SLE FR 4 | 4.54 | -0.01 | 32.47 | 0.0219 | 0.1759 | 0 |
| 10 | SLE FR 5 | 4.57 | -0.02 | 32.55 | 0.0226 | 0.1769 | 0 |
| 10 | SLE FR 6 | 4.69 | -0.02 | 33.07 | 0.023 | 0.1814 | 0 |
| 10 | SLE QP 1 | 4.32 | -0.01 | 31.6 | 0.0216 | 0.1671 | 0 |
| 10 | SLE QP 2 | 4.54 | -0.02 | 32.48 | 0.0224 | 0.1757 | 0 |
| 10 | SLD 1 | 9.1 | -0.11 | 41.72 | 0.0933 | 0.3807 | -0.0002 |
| 10 | SLD 2 | 9.1 | -0.11 | 41.72 | 0.0933 | 0.3807 | -0.0002 |
| 10 | SLD 3 | 8.03 | -0.07 | 38.09 | 0.0509 | 0.3379 | -0.0001 |
| 10 | SLD 4 | 8.03 | -0.07 | 38.09 | 0.0509 | 0.3379 | -0.0001 |
| 10 | SLD 5 | 7.53 | -0.11 | 40.75 | 0.108 | 0.3021 | -0.0002 |
| 10 | SLD 6 | 7.53 | -0.11 | 40.75 | 0.108 | 0.3021 | -0.0002 |
| 10 | SLD 7 | 3.96 | 0.03 | 28.67 | -0.0333 | 0.1594 | 0.0001 |
| 10 | SLD 8 | 3.96 | 0.03 | 28.67 | -0.0333 | 0.1594 | 0.0001 |
| 10 | SLD 9 | 5.11 | -0.07 | 36.3 | 0.0782 | 0.1919 | -0.0002 |
| 10 | SLD 10 | 5.11 | -0.07 | 36.3 | 0.0782 | 0.1919 | -0.0002 |
| 10 | SLD 11 | 1.55 | 0.08 | 24.21 | -0.0631 | 0.0492 | 0.0001 |
| 10 | SLD 12 | 1.55 | 0.08 | 24.21 | -0.0631 | 0.0492 | 0.0001 |
| 10 | SLD 13 | 1.05 | 0.03 | 26.87 | -0.0061 | 0.0134 | 0 |
| 10 | SLD 14 | 1.05 | 0.03 | 26.87 | -0.0061 | 0.0134 | 0 |
| 10 | SLD 15 | -0.02 | 0.08 | 23.24 | -0.0485 | -0.0294 | 0.0001 |
| 10 | SLD 16 | -0.02 | 0.08 | 23.24 | -0.0485 | -0.0294 | 0.0001 |
| 10 | SLV 1 | 15.21 | -0.24 | 54.07 | 0.1887 | 0.6553 | -0.0004 |
| 10 | SLV 2 | 15.21 | -0.24 | 54.07 | 0.1887 | 0.6553 | -0.0004 |
| 10 | SLV 3 | 12.73 | -0.13 | 45.67 | 0.0894 | 0.5556 | -0.0002 |
| 10 | SLV 4 | 12.73 | -0.13 | 45.67 | 0.0894 | 0.5556 | -0.0002 |
| 10 | SLV 5 | 11.51 | -0.24 | 51.71 | 0.223 | 0.4707 | -0.0005 |
| 10 | SLV 6 | 11.51 | -0.24 | 51.71 | 0.223 | 0.4707 | -0.0005 |
| 10 | SLV 7 | 3.23 | 0.11 | 23.69 | -0.1081 | 0.1385 | 0.0002 |
| 10 | SLV 8 | 3.23 | 0.11 | 23.69 | -0.1081 | 0.1385 | 0.0002 |

| Nodo | Cont. | Reazione a traslazione | | | Reazione a rotazione | | |
|---|---|---|---|---|---|---|---|
| Ind. | N.br. | x | y | z | x | y | z |
| 10 | SLV 9 | 5.85 | -0.14 | 41.27 | 0.153 | 0.2128 | -0.0003 |
| 10 | SLV 10 | 5.85 | -0.14 | 41.27 | 0.153 | 0.2128 | -0.0003 |
| 10 | SLV 11 | -2.43 | 0.21 | 13.25 | -0.1781 | -0.1194 | 0.0004 |
| 10 | SLV 12 | -2.43 | 0.21 | 13.25 | -0.1781 | -0.1194 | 0.0004 |
| 10 | SLV 13 | -3.65 | 0.1 | 19.29 | -0.0446 | -0.2043 | 0.0001 |
| 10 | SLV 14 | -3.65 | 0.1 | 19.29 | -0.0446 | -0.2043 | 0.0001 |
| 10 | SLV 15 | -6.13 | 0.2 | 10.89 | -0.1439 | -0.304 | 0.0003 |
| 10 | SLV 16 | -6.13 | 0.2 | 10.89 | -0.1439 | -0.304 | 0.0003 |
| 11 | SLU 1 | 3.41 | 0.13 | 35.48 | -0.019 | 0.124 | 0.0005 |
| 11 | SLU 2 | 3.43 | 0.14 | 35.35 | -0.0212 | 0.125 | 0.0005 |
| 11 | SLU 3 | 3.5 | 0.13 | 35.83 | -0.0189 | 0.1273 | 0.0005 |
| 11 | SLU 4 | 3.51 | 0.14 | 35.75 | -0.0202 | 0.1279 | 0.0005 |
| 11 | SLU 5 | 3.52 | 0.14 | 35.67 | -0.021 | 0.1285 | 0.0005 |
| 11 | SLU 6 | 3.59 | 0.13 | 36.15 | -0.0188 | 0.1308 | 0.0005 |
| 11 | SLU 7 | 3.6 | 0.14 | 36.08 | -0.0201 | 0.1314 | 0.0005 |
| 11 | SLU 8 | 3.59 | 0.13 | 36.12 | -0.0187 | 0.131 | 0.0005 |
| 11 | SLU 9 | 3.61 | 0.14 | 36.04 | -0.02 | 0.1316 | 0.0005 |
| 11 | SLU 10 | 4.18 | 0.16 | 39.33 | -0.0244 | 0.1525 | 0.0005 |
| 11 | SLU 11 | 4.25 | 0.15 | 39.81 | -0.0222 | 0.1547 | 0.0005 |
| 11 | SLU 12 | 4.26 | 0.15 | 39.74 | -0.0235 | 0.1554 | 0.0005 |
| 11 | SLU 13 | 4.27 | 0.16 | 39.65 | -0.0243 | 0.156 | 0.0005 |
| 11 | SLU 14 | 4.34 | 0.15 | 40.14 | -0.022 | 0.1582 | 0.0005 |
| 11 | SLU 15 | 4.35 | 0.16 | 40.06 | -0.0233 | 0.1589 | 0.0005 |
| 11 | SLU 16 | 4.34 | 0.15 | 40.1 | -0.0219 | 0.1584 | 0.0005 |
| 11 | SLU 17 | 4.35 | 0.16 | 40.03 | -0.0233 | 0.1591 | 0.0005 |
| 11 | SLU 18 | 4.48 | 0.16 | 41.16 | -0.0236 | 0.1632 | 0.0006 |
| 11 | SLU 19 | 4.49 | 0.16 | 41.09 | -0.0249 | 0.1638 | 0.0006 |
| 11 | SLU 20 | 4.57 | 0.16 | 41.49 | -0.0235 | 0.1667 | 0.0006 |
| 11 | SLU 21 | 4.58 | 0.16 | 41.41 | -0.0248 | 0.1673 | 0.0006 |
| 11 | SLU 22 | 3.71 | 0.14 | 37.24 | -0.02 | 0.1347 | 0.0005 |
| 11 | SLU 23 | 3.73 | 0.14 | 37.11 | -0.0222 | 0.1358 | 0.0005 |
| 11 | SLU 24 | 3.8 | 0.14 | 37.59 | -0.0199 | 0.1381 | 0.0005 |
| 11 | SLU 25 | 3.81 | 0.14 | 37.51 | -0.0212 | 0.1387 | 0.0005 |
| 11 | SLU 26 | 3.82 | 0.14 | 37.43 | -0.022 | 0.1393 | 0.0005 |
| 11 | SLU 27 | 3.89 | 0.14 | 37.91 | -0.0198 | 0.1416 | 0.0005 |
| 11 | SLU 28 | 3.9 | 0.14 | 37.84 | -0.0211 | 0.1422 | 0.0005 |
| 11 | SLU 29 | 3.89 | 0.14 | 37.88 | -0.0197 | 0.1417 | 0.0005 |
| 11 | SLU 30 | 3.9 | 0.14 | 37.8 | -0.021 | 0.1424 | 0.0005 |
| 11 | SLU 31 | 4.47 | 0.16 | 41.09 | -0.0254 | 0.1632 | 0.0006 |
| 11 | SLU 32 | 4.54 | 0.16 | 41.57 | -0.0232 | 0.1655 | 0.0006 |
| 11 | SLU 33 | 4.55 | 0.16 | 41.5 | -0.0245 | 0.1661 | 0.0006 |
| 11 | SLU 34 | 4.57 | 0.16 | 41.41 | -0.0253 | 0.1667 | 0.0006 |
| 11 | SLU 35 | 4.63 | 0.16 | 41.9 | -0.023 | 0.169 | 0.0006 |
| 11 | SLU 36 | 4.65 | 0.16 | 41.82 | -0.0243 | 0.1696 | 0.0006 |
| 11 | SLU 37 | 4.64 | 0.16 | 41.86 | -0.0229 | 0.1692 | 0.0006 |
| 11 | SLU 38 | 4.65 | 0.16 | 41.79 | -0.0243 | 0.1698 | 0.0006 |
| 11 | SLU 39 | 4.78 | 0.17 | 42.92 | -0.0246 | 0.1739 | 0.0006 |
| 11 | SLU 40 | 4.79 | 0.17 | 42.85 | -0.0259 | 0.1746 | 0.0006 |
| 11 | SLU 41 | 4.87 | 0.17 | 43.25 | -0.0245 | 0.1774 | 0.0006 |
| 11 | SLU 42 | 4.88 | 0.17 | 43.17 | -0.0258 | 0.1781 | 0.0006 |
| 11 | SLU 43 | 4.33 | 0.17 | 45.52 | -0.0243 | 0.1575 | 0.0006 |
| 11 | SLU 44 | 4.35 | 0.17 | 45.39 | -0.0265 | 0.1585 | 0.0006 |
| 11 | SLU 45 | 4.42 | 0.17 | 45.87 | -0.0243 | 0.1608 | 0.0006 |
| 11 | SLU 46 | 4.43 | 0.17 | 45.79 | -0.0256 | 0.1614 | 0.0006 |
| 11 | SLU 47 | 4.44 | 0.17 | 45.71 | -0.0264 | 0.162 | 0.0006 |
| 11 | SLU 48 | 4.51 | 0.17 | 46.19 | -0.0241 | 0.1643 | 0.0006 |
| 11 | SLU 49 | 4.52 | 0.17 | 46.12 | -0.0254 | 0.1649 | 0.0006 |
| 11 | SLU 50 | 4.52 | 0.17 | 46.16 | -0.0241 | 0.1645 | 0.0006 |
| 11 | SLU 51 | 4.53 | 0.17 | 46.08 | -0.0254 | 0.1651 | 0.0006 |
| 11 | SLU 52 | 5.1 | 0.19 | 49.37 | -0.0298 | 0.186 | 0.0007 |
| 11 | SLU 53 | 5.17 | 0.19 | 49.85 | -0.0275 | 0.1882 | 0.0007 |
| 11 | SLU 54 | 5.18 | 0.19 | 49.77 | -0.0288 | 0.1889 | 0.0007 |
| 11 | SLU 55 | 5.19 | 0.19 | 49.69 | -0.0296 | 0.1895 | 0.0007 |
| 11 | SLU 56 | 5.26 | 0.19 | 50.18 | -0.0274 | 0.1917 | 0.0007 |
| 11 | SLU 57 | 5.27 | 0.19 | 50.1 | -0.0287 | 0.1924 | 0.0007 |
| 11 | SLU 58 | 5.26 | 0.19 | 50.14 | -0.0273 | 0.1919 | 0.0007 |
| 11 | SLU 59 | 5.27 | 0.19 | 50.07 | -0.0286 | 0.1926 | 0.0007 |
| 11 | SLU 60 | 5.4 | 0.2 | 51.2 | -0.029 | 0.1967 | 0.0007 |
| 11 | SLU 61 | 5.41 | 0.2 | 51.13 | -0.0303 | 0.1973 | 0.0007 |
| 11 | SLU 62 | 5.49 | 0.2 | 51.53 | -0.0288 | 0.2002 | 0.0007 |
| 11 | SLU 63 | 5.5 | 0.2 | 51.45 | -0.0301 | 0.2008 | 0.0007 |
| 11 | SLU 64 | 4.63 | 0.18 | 47.28 | -0.0253 | 0.1682 | 0.0006 |
| 11 | SLU 65 | 4.65 | 0.18 | 47.15 | -0.0275 | 0.1693 | 0.0006 |
| 11 | SLU 66 | 4.72 | 0.18 | 47.63 | -0.0253 | 0.1716 | 0.0006 |
| 11 | SLU 67 | 4.73 | 0.18 | 47.55 | -0.0266 | 0.1722 | 0.0006 |
| 11 | SLU 68 | 4.74 | 0.18 | 47.47 | -0.0274 | 0.1728 | 0.0006 |
| 11 | SLU 69 | 4.81 | 0.18 | 47.95 | -0.0251 | 0.1751 | 0.0006 |
| 11 | SLU 70 | 4.82 | 0.18 | 47.88 | -0.0264 | 0.1757 | 0.0006 |
| 11 | SLU 71 | 4.81 | 0.18 | 47.92 | -0.0251 | 0.1752 | 0.0006 |
| 11 | SLU 72 | 4.82 | 0.18 | 47.84 | -0.0264 | 0.1759 | 0.0006 |
| 11 | SLU 73 | 5.4 | 0.2 | 51.13 | -0.0308 | 0.1967 | 0.0007 |
| 11 | SLU 74 | 5.46 | 0.2 | 51.61 | -0.0285 | 0.199 | 0.0007 |
| 11 | SLU 75 | 5.48 | 0.2 | 51.53 | -0.0298 | 0.1996 | 0.0007 |
| 11 | SLU 76 | 5.49 | 0.2 | 51.45 | -0.0306 | 0.2002 | 0.0007 |
| 11 | SLU 77 | 5.56 | 0.2 | 51.94 | -0.0284 | 0.2025 | 0.0007 |
| 11 | SLU 78 | 5.57 | 0.2 | 51.86 | -0.0297 | 0.2031 | 0.0007 |
| 11 | SLU 79 | 5.56 | 0.2 | 51.9 | -0.0283 | 0.2027 | 0.0007 |
| 11 | SLU 80 | 5.57 | 0.2 | 51.83 | -0.0296 | 0.2033 | 0.0007 |

| Nodo | Cont. | Reazione a traslazione | | | Reazione a rotazione | | |
|---|---|---|---|---|---|---|---|
| Ind. | N.br. | x | y | z | x | y | z |
| 11 | SLU 81 | 5.7 | 0.2 | 52.96 | -0.03 | 0.2074 | 0.0007 |
| 11 | SLU 82 | 5.71 | 0.21 | 52.89 | -0.0313 | 0.2081 | 0.0007 |
| 11 | SLU 83 | 5.79 | 0.21 | 53.29 | -0.0298 | 0.2109 | 0.0007 |
| 11 | SLU 84 | 5.8 | 0.21 | 53.21 | -0.0311 | 0.2116 | 0.0007 |
| 11 | SLE RA 1 | 3.5 | 0.13 | 35.98 | -0.0193 | 0.127 | 0.0005 |
| 11 | SLE RA 2 | 3.51 | 0.14 | 35.89 | -0.0207 | 0.1277 | 0.0005 |
| 11 | SLE RA 3 | 3.55 | 0.13 | 36.22 | -0.0192 | 0.1293 | 0.0005 |
| 11 | SLE RA 4 | 3.56 | 0.14 | 36.16 | -0.0201 | 0.1297 | 0.0005 |
| 11 | SLE RA 5 | 3.57 | 0.14 | 36.11 | -0.0206 | 0.1301 | 0.0005 |
| 11 | SLE RA 6 | 3.62 | 0.13 | 36.43 | -0.0191 | 0.1316 | 0.0005 |
| 11 | SLE RA 7 | 3.62 | 0.14 | 36.38 | -0.02 | 0.132 | 0.0005 |
| 11 | SLE RA 8 | 3.62 | 0.13 | 36.41 | -0.0191 | 0.1317 | 0.0005 |
| 11 | SLE RA 9 | 3.63 | 0.14 | 36.36 | -0.02 | 0.1321 | 0.0005 |
| 11 | SLE RA 10 | 4.01 | 0.15 | 38.55 | -0.0229 | 0.146 | 0.0005 |
| 11 | SLE RA 11 | 4.05 | 0.15 | 38.87 | -0.0214 | 0.1476 | 0.0005 |
| 11 | SLE RA 12 | 4.06 | 0.15 | 38.82 | -0.0223 | 0.148 | 0.0005 |
| 11 | SLE RA 13 | 4.07 | 0.15 | 38.76 | -0.0228 | 0.1484 | 0.0005 |
| 11 | SLE RA 14 | 4.11 | 0.15 | 39.09 | -0.0213 | 0.1499 | 0.0005 |
| 11 | SLE RA 15 | 4.12 | 0.15 | 39.03 | -0.0222 | 0.1503 | 0.0005 |
| 11 | SLE RA 16 | 4.12 | 0.15 | 39.06 | -0.0212 | 0.15 | 0.0005 |
| 11 | SLE RA 17 | 4.12 | 0.15 | 39.01 | -0.0221 | 0.1504 | 0.0005 |
| 11 | SLE RA 18 | 4.21 | 0.15 | 39.77 | -0.0224 | 0.1532 | 0.0005 |
| 11 | SLE RA 19 | 4.22 | 0.15 | 39.72 | -0.0232 | 0.1536 | 0.0005 |
| 11 | SLE RA 20 | 4.27 | 0.15 | 39.99 | -0.0223 | 0.1555 | 0.0005 |
| 11 | SLE RA 21 | 4.28 | 0.15 | 39.93 | -0.0231 | 0.1559 | 0.0005 |
| 11 | SLE FR 1 | 3.5 | 0.13 | 35.98 | -0.0193 | 0.127 | 0.0005 |
| 11 | SLE FR 2 | 3.5 | 0.13 | 35.96 | -0.0196 | 0.1272 | 0.0005 |
| 11 | SLE FR 3 | 3.52 | 0.13 | 36.07 | -0.0192 | 0.128 | 0.0005 |
| 11 | SLE FR 4 | 3.71 | 0.14 | 37.1 | -0.0205 | 0.135 | 0.0005 |
| 11 | SLE FR 5 | 3.73 | 0.14 | 37.2 | -0.0202 | 0.1358 | 0.0005 |
| 11 | SLE FR 6 | 3.85 | 0.14 | 37.88 | -0.0208 | 0.1401 | 0.0005 |
| 11 | SLE QP 1 | 3.5 | 0.13 | 35.98 | -0.0193 | 0.127 | 0.0005 |
| 11 | SLE QP 2 | 3.71 | 0.14 | 37.12 | -0.0202 | 0.1349 | 0.0005 |
| 11 | SLD 1 | 8.01 | 0.12 | 47.16 | -0.0092 | 0.3229 | 0.0004 |
| 11 | SLD 2 | 8.01 | 0.12 | 47.16 | -0.0092 | 0.3229 | 0.0004 |
| 11 | SLD 3 | 6.94 | 0.1 | 42.29 | 0.0136 | 0.2832 | 0.0004 |
| 11 | SLD 4 | 6.94 | 0.1 | 42.29 | 0.0136 | 0.2832 | 0.0004 |
| 11 | SLD 5 | 6.62 | 0.16 | 47.52 | -0.0515 | 0.2515 | 0.0006 |
| 11 | SLD 6 | 6.62 | 0.16 | 47.52 | -0.0515 | 0.2515 | 0.0006 |
| 11 | SLD 7 | 3.06 | 0.1 | 31.28 | 0.0246 | 0.1191 | 0.0004 |
| 11 | SLD 8 | 3.06 | 0.1 | 31.28 | 0.0246 | 0.1191 | 0.0004 |
| 11 | SLD 9 | 4.36 | 0.18 | 42.95 | -0.065 | 0.1506 | 0.0006 |
| 11 | SLD 10 | 4.36 | 0.18 | 42.95 | -0.065 | 0.1506 | 0.0006 |
| 11 | SLD 11 | 0.8 | 0.12 | 26.72 | 0.0111 | 0.0183 | 0.0004 |
| 11 | SLD 12 | 0.8 | 0.12 | 26.72 | 0.0111 | 0.0183 | 0.0004 |
| 11 | SLD 13 | 0.48 | 0.18 | 31.94 | -0.054 | -0.0134 | 0.0006 |
| 11 | SLD 14 | 0.48 | 0.18 | 31.94 | -0.054 | -0.0134 | 0.0006 |
| 11 | SLD 15 | -0.59 | 0.16 | 27.07 | -0.0312 | -0.0531 | 0.0005 |
| 11 | SLD 16 | -0.59 | 0.16 | 27.07 | -0.0312 | -0.0531 | 0.0005 |
| 11 | SLV 1 | 13.75 | 0.09 | 60.53 | 0.0055 | 0.5731 | 0.0004 |
| 11 | SLV 2 | 13.75 | 0.09 | 60.53 | 0.0055 | 0.5731 | 0.0004 |
| 11 | SLV 3 | 11.27 | 0.04 | 49.28 | 0.0591 | 0.4811 | 0.0003 |
| 11 | SLV 4 | 11.27 | 0.04 | 49.28 | 0.0591 | 0.4811 | 0.0003 |
| 11 | SLV 5 | 10.47 | 0.19 | 61.21 | -0.0937 | 0.4059 | 0.0006 |
| 11 | SLV 6 | 10.47 | 0.19 | 61.21 | -0.0937 | 0.4059 | 0.0006 |
| 11 | SLV 7 | 2.23 | 0.04 | 23.7 | 0.0848 | 0.0992 | 0.0002 |
| 11 | SLV 8 | 2.23 | 0.04 | 23.7 | 0.0848 | 0.0992 | 0.0002 |
| 11 | SLV 9 | 5.19 | 0.24 | 50.54 | -0.1252 | 0.1705 | 0.0007 |
| 11 | SLV 10 | 5.19 | 0.24 | 50.54 | -0.1252 | 0.1705 | 0.0007 |
| 11 | SLV 11 | -3.05 | 0.09 | 13.02 | 0.0533 | -0.1361 | 0.0003 |
| 11 | SLV 12 | -3.05 | 0.09 | 13.02 | 0.0533 | -0.1361 | 0.0003 |
| 11 | SLV 13 | -3.86 | 0.23 | 24.95 | -0.0995 | -0.2114 | 0.0007 |
| 11 | SLV 14 | -3.86 | 0.23 | 24.95 | -0.0995 | -0.2114 | 0.0007 |
| 11 | SLV 15 | -6.33 | 0.19 | 13.7 | -0.0459 | -0.3034 | 0.0006 |
| 11 | SLV 16 | -6.33 | 0.19 | 13.7 | -0.0459 | -0.3034 | 0.0006 |
| 12 | SLU 1 | -0.13 | 8.45 | 57.38 | -0.2771 | 0.0119 | 0 |
| 12 | SLU 2 | -0.07 | 8.35 | 57.11 | -0.272 | 0.0145 | 0 |
| 12 | SLU 3 | -0.05 | 8.51 | 57.97 | -0.2784 | 0.0155 | 0 |
| 12 | SLU 4 | -0.01 | 8.45 | 57.81 | -0.2754 | 0.0171 | 0 |
| 12 | SLU 5 | 0.02 | 8.38 | 57.62 | -0.272 | 0.0187 | 0 |
| 12 | SLU 6 | 0.04 | 8.54 | 58.48 | -0.2784 | 0.0197 | 0 |
| 12 | SLU 7 | 0.08 | 8.48 | 58.32 | -0.2754 | 0.0213 | 0 |
| 12 | SLU 8 | 0.05 | 8.51 | 58.4 | -0.2771 | 0.0203 | 0 |
| 12 | SLU 9 | 0.09 | 8.45 | 58.24 | -0.274 | 0.0219 | 0 |
| 12 | SLU 10 | 0.18 | 9.81 | 64.48 | -0.3243 | 0.0267 | 0 |
| 12 | SLU 11 | 0.2 | 9.97 | 65.34 | -0.3307 | 0.0276 | 0 |
| 12 | SLU 12 | 0.23 | 9.91 | 65.18 | -0.3277 | 0.0292 | 0 |
| 12 | SLU 13 | 0.27 | 9.83 | 64.99 | -0.3243 | 0.0309 | 0 |
| 12 | SLU 14 | 0.29 | 9.99 | 65.86 | -0.3307 | 0.0318 | 0 |
| 12 | SLU 15 | 0.33 | 9.93 | 65.69 | -0.3276 | 0.0334 | 0 |
| 12 | SLU 16 | 0.3 | 9.96 | 65.78 | -0.3294 | 0.0324 | 0 |
| 12 | SLU 17 | 0.34 | 9.9 | 65.61 | -0.3263 | 0.034 | 0 |
| 12 | SLU 18 | 0.23 | 10.53 | 67.91 | -0.3518 | 0.0292 | 0 |
| 12 | SLU 19 | 0.26 | 10.47 | 67.75 | -0.3487 | 0.0308 | 0 |
| 12 | SLU 20 | 0.32 | 10.55 | 68.43 | -0.3518 | 0.0334 | 0 |
| 12 | SLU 21 | 0.36 | 10.49 | 68.26 | -0.3487 | 0.035 | 0 |
| 12 | SLU 22 | -0.05 | 9.1 | 60.62 | -0.2996 | 0.0162 | 0 |
| 12 | SLU 23 | 0.01 | 9 | 60.34 | -0.2945 | 0.0188 | 0 |

| Nodo | Cont. | Reazione a traslazione | | | Reazione a rotazione | | |
|---|---|---|---|---|---|---|---|
| Ind. | N.br. | x | y | z | x | y | z |
| 12 | SLU 24 | 0.03 | 9.16 | 61.21 | -0.301 | 0.0198 | 0 |
| 12 | SLU 25 | 0.07 | 9.1 | 61.04 | -0.2979 | 0.0214 | 0 |
| 12 | SLU 26 | 0.1 | 9.03 | 60.85 | -0.2945 | 0.023 | 0 |
| 12 | SLU 27 | 0.12 | 9.19 | 61.72 | -0.301 | 0.024 | 0 |
| 12 | SLU 28 | 0.16 | 9.13 | 61.55 | -0.2979 | 0.0256 | 0 |
| 12 | SLU 29 | 0.14 | 9.15 | 61.64 | -0.2996 | 0.0246 | 0 |
| 12 | SLU 30 | 0.17 | 9.09 | 61.48 | -0.2965 | 0.0262 | 0 |
| 12 | SLU 31 | 0.26 | 10.45 | 67.72 | -0.3468 | 0.031 | 0 |
| 12 | SLU 32 | 0.28 | 10.61 | 68.58 | -0.3533 | 0.0319 | 0 |
| 12 | SLU 33 | 0.32 | 10.55 | 68.42 | -0.3502 | 0.0335 | 0 |
| 12 | SLU 34 | 0.35 | 10.48 | 68.23 | -0.3468 | 0.0352 | 0 |
| 12 | SLU 35 | 0.37 | 10.64 | 69.09 | -0.3532 | 0.0361 | 0 |
| 12 | SLU 36 | 0.41 | 10.58 | 68.93 | -0.3502 | 0.0377 | 0 |
| 12 | SLU 37 | 0.38 | 10.6 | 69.01 | -0.3519 | 0.0367 | 0 |
| 12 | SLU 38 | 0.42 | 10.55 | 68.85 | -0.3488 | 0.0383 | 0 |
| 12 | SLU 39 | 0.31 | 11.17 | 71.15 | -0.3743 | 0.0335 | 0 |
| 12 | SLU 40 | 0.34 | 11.11 | 70.99 | -0.3713 | 0.0351 | 0 |
| 12 | SLU 41 | 0.4 | 11.2 | 71.66 | -0.3743 | 0.0377 | 0 |
| 12 | SLU 42 | 0.44 | 11.14 | 71.5 | -0.3712 | 0.0393 | 0 |
| 12 | SLU 43 | -0.19 | 10.77 | 73.49 | -0.3525 | 0.0139 | 0.0001 |
| 12 | SLU 44 | -0.13 | 10.67 | 73.21 | -0.3474 | 0.0166 | 0.0001 |
| 12 | SLU 45 | -0.12 | 10.83 | 74.08 | -0.3538 | 0.0175 | 0.0001 |
| 12 | SLU 46 | -0.08 | 10.77 | 73.91 | -0.3508 | 0.0191 | 0.0001 |
| 12 | SLU 47 | -0.04 | 10.69 | 73.72 | -0.3474 | 0.0208 | 0.0001 |
| 12 | SLU 48 | -0.02 | 10.85 | 74.59 | -0.3538 | 0.0218 | 0 |
| 12 | SLU 49 | 0.01 | 10.79 | 74.42 | -0.3508 | 0.0234 | 0 |
| 12 | SLU 50 | -0.01 | 10.82 | 74.51 | -0.3525 | 0.0223 | 0 |
| 12 | SLU 51 | 0.02 | 10.76 | 74.35 | -0.3494 | 0.0239 | 0 |
| 12 | SLU 52 | 0.12 | 12.12 | 80.59 | -0.3997 | 0.0288 | 0 |
| 12 | SLU 53 | 0.13 | 12.28 | 81.45 | -0.4061 | 0.0297 | 0 |
| 12 | SLU 54 | 0.17 | 12.22 | 81.29 | -0.4031 | 0.0313 | 0 |
| 12 | SLU 55 | 0.21 | 12.15 | 81.1 | -0.3997 | 0.033 | 0 |
| 12 | SLU 56 | 0.22 | 12.31 | 81.96 | -0.4061 | 0.0339 | 0 |
| 12 | SLU 57 | 0.26 | 12.25 | 81.8 | -0.403 | 0.0355 | 0 |
| 12 | SLU 58 | 0.24 | 12.27 | 81.88 | -0.4048 | 0.0345 | 0 |
| 12 | SLU 59 | 0.27 | 12.21 | 81.72 | -0.4017 | 0.0361 | 0 |
| 12 | SLU 60 | 0.16 | 12.84 | 84.02 | -0.4272 | 0.0313 | 0 |
| 12 | SLU 61 | 0.2 | 12.78 | 83.85 | -0.4241 | 0.0329 | 0 |
| 12 | SLU 62 | 0.25 | 12.87 | 84.53 | -0.4272 | 0.0355 | 0 |
| 12 | SLU 63 | 0.29 | 12.81 | 84.37 | -0.4241 | 0.0371 | 0 |
| 12 | SLU 64 | -0.11 | 11.41 | 76.72 | -0.375 | 0.0182 | 0.0001 |
| 12 | SLU 65 | -0.05 | 11.31 | 76.45 | -0.3699 | 0.0209 | 0.0001 |
| 12 | SLU 66 | -0.04 | 11.47 | 77.31 | -0.3764 | 0.0218 | 0 |
| 12 | SLU 67 | 0 | 11.41 | 77.15 | -0.3733 | 0.0234 | 0.0001 |
| 12 | SLU 68 | 0.04 | 11.34 | 76.96 | -0.3699 | 0.0251 | 0.0001 |
| 12 | SLU 69 | 0.06 | 11.5 | 77.82 | -0.3764 | 0.026 | 0 |
| 12 | SLU 70 | 0.09 | 11.44 | 77.66 | -0.3733 | 0.0276 | 0 |
| 12 | SLU 71 | 0.07 | 11.47 | 77.75 | -0.375 | 0.0266 | 0 |
| 12 | SLU 72 | 0.1 | 11.41 | 77.58 | -0.3719 | 0.0282 | 0 |
| 12 | SLU 73 | 0.2 | 12.77 | 83.82 | -0.4222 | 0.0331 | 0 |
| 12 | SLU 74 | 0.21 | 12.93 | 84.69 | -0.4287 | 0.034 | 0 |
| 12 | SLU 75 | 0.25 | 12.87 | 84.52 | -0.4256 | 0.0356 | 0 |
| 12 | SLU 76 | 0.29 | 12.79 | 84.33 | -0.4222 | 0.0373 | 0 |
| 12 | SLU 77 | 0.31 | 12.95 | 85.2 | -0.4286 | 0.0382 | 0 |
| 12 | SLU 78 | 0.34 | 12.89 | 85.03 | -0.4256 | 0.0398 | 0 |
| 12 | SLU 79 | 0.32 | 12.92 | 85.12 | -0.4273 | 0.0388 | 0 |
| 12 | SLU 80 | 0.35 | 12.86 | 84.95 | -0.4242 | 0.0404 | 0 |
| 12 | SLU 81 | 0.24 | 13.49 | 87.25 | -0.4497 | 0.0356 | 0 |
| 12 | SLU 82 | 0.28 | 13.43 | 87.09 | -0.4467 | 0.0372 | 0 |
| 12 | SLU 83 | 0.33 | 13.51 | 87.77 | -0.4497 | 0.0398 | 0 |
| 12 | SLU 84 | 0.37 | 13.46 | 87.6 | -0.4466 | 0.0414 | 0 |
| 12 | SLE RA 1 | -0.1 | 8.64 | 58.31 | -0.2835 | 0.0131 | 0 |
| 12 | SLE RA 2 | -0.07 | 8.57 | 58.12 | -0.2801 | 0.0149 | 0 |
| 12 | SLE RA 3 | -0.05 | 8.68 | 58.7 | -0.2844 | 0.0155 | 0 |
| 12 | SLE RA 4 | -0.03 | 8.64 | 58.59 | -0.2824 | 0.0166 | 0 |
| 12 | SLE RA 5 | 0 | 8.59 | 58.46 | -0.2801 | 0.0177 | 0 |
| 12 | SLE RA 6 | 0.01 | 8.7 | 59.04 | -0.2844 | 0.0183 | 0 |
| 12 | SLE RA 7 | 0.03 | 8.66 | 58.93 | -0.2824 | 0.0194 | 0 |
| 12 | SLE RA 8 | 0.02 | 8.67 | 58.99 | -0.2835 | 0.0187 | 0 |
| 12 | SLE RA 9 | 0.04 | 8.63 | 58.88 | -0.2815 | 0.0198 | 0 |
| 12 | SLE RA 10 | 0.1 | 9.54 | 63.04 | -0.315 | 0.023 | 0 |
| 12 | SLE RA 11 | 0.11 | 9.65 | 63.61 | -0.3193 | 0.0236 | 0 |
| 12 | SLE RA 12 | 0.14 | 9.61 | 63.51 | -0.3172 | 0.0247 | 0 |
| 12 | SLE RA 13 | 0.16 | 9.56 | 63.38 | -0.315 | 0.0258 | 0 |
| 12 | SLE RA 14 | 0.17 | 9.66 | 63.96 | -0.3193 | 0.0264 | 0 |
| 12 | SLE RA 15 | 0.2 | 9.62 | 63.85 | -0.3172 | 0.0275 | 0 |
| 12 | SLE RA 16 | 0.18 | 9.64 | 63.9 | -0.3184 | 0.0268 | 0 |
| 12 | SLE RA 17 | 0.21 | 9.6 | 63.79 | -0.3163 | 0.0279 | 0 |
| 12 | SLE RA 18 | 0.13 | 10.02 | 65.33 | -0.3333 | 0.0247 | 0 |
| 12 | SLE RA 19 | 0.16 | 9.98 | 65.22 | -0.3313 | 0.0257 | 0 |
| 12 | SLE RA 20 | 0.19 | 10.04 | 65.67 | -0.3333 | 0.0275 | 0 |
| 12 | SLE RA 21 | 0.22 | 10 | 65.56 | -0.3313 | 0.0285 | 0 |
| 12 | SLE FR 1 | -0.1 | 8.64 | 58.31 | -0.2835 | 0.0131 | 0 |
| 12 | SLE FR 2 | -0.1 | 8.62 | 58.27 | -0.2828 | 0.0134 | 0 |
| 12 | SLE FR 3 | -0.08 | 8.64 | 58.44 | -0.2835 | 0.0142 | 0 |
| 12 | SLE FR 4 | -0.03 | 9.04 | 60.38 | -0.2978 | 0.0169 | 0 |
| 12 | SLE FR 5 | -0.01 | 9.06 | 60.55 | -0.2985 | 0.0177 | 0 |
| 12 | SLE FR 6 | 0.01 | 9.33 | 61.82 | -0.3084 | 0.0189 | 0 |

| Nodo | Cont. | Reazione a traslazione | | | Reazione a rotazione | | |
|---|---|---|---|---|---|---|---|
| Ind. | N.br. | x | y | z | x | y | z |
| 12 | SLE QP 1 | -0.1 | 8.64 | 58.31 | -0.2835 | 0.0131 | 0 |
| 12 | SLE QP 2 | -0.03 | 9.05 | 60.41 | -0.2985 | 0.0166 | 0 |
| 12 | SLD 1 | 4.32 | 9.13 | 75.55 | -0.3164 | 0.2163 | -0.0004 |
| 12 | SLD 2 | 4.32 | 9.13 | 75.55 | -0.3164 | 0.2163 | -0.0004 |
| 12 | SLD 3 | 3.79 | 6.69 | 66.19 | -0.2058 | 0.1901 | -0.0004 |
| 12 | SLD 4 | 3.79 | 6.69 | 66.19 | -0.2058 | 0.1901 | -0.0004 |
| 12 | SLD 5 | 2.08 | 12.77 | 79.14 | -0.4715 | 0.1161 | -0.0001 |
| 12 | SLD 6 | 2.08 | 12.77 | 79.14 | -0.4715 | 0.1161 | -0.0001 |
| 12 | SLD 7 | 0.31 | 4.65 | 47.96 | -0.103 | 0.029 | 0 |
| 12 | SLD 8 | 0.31 | 4.65 | 47.96 | -0.103 | 0.029 | 0 |
| 12 | SLD 9 | -0.37 | 13.45 | 72.86 | -0.4939 | 0.0041 | 0.0001 |
| 12 | SLD 10 | -0.37 | 13.45 | 72.86 | -0.4939 | 0.0041 | 0.0001 |
| 12 | SLD 11 | -2.14 | 5.34 | 41.69 | -0.1254 | -0.083 | 0.0002 |
| 12 | SLD 12 | -2.14 | 5.34 | 41.69 | -0.1254 | -0.083 | 0.0002 |
| 12 | SLD 13 | -3.85 | 11.41 | 54.63 | -0.3911 | -0.157 | 0.0004 |
| 12 | SLD 14 | -3.85 | 11.41 | 54.63 | -0.3911 | -0.157 | 0.0004 |
| 12 | SLD 15 | -4.38 | 8.98 | 45.28 | -0.2805 | -0.1832 | 0.0005 |
| 12 | SLD 16 | -4.38 | 8.98 | 45.28 | -0.2805 | -0.1832 | 0.0005 |
| 12 | SLV 1 | 10.08 | 9.22 | 95.59 | -0.3398 | 0.4813 | -0.001 |
| 12 | SLV 2 | 10.08 | 9.22 | 95.59 | -0.3398 | 0.4813 | -0.001 |
| 12 | SLV 3 | 8.82 | 3.6 | 74.01 | -0.0847 | 0.4196 | -0.0009 |
| 12 | SLV 4 | 8.82 | 3.6 | 74.01 | -0.0847 | 0.4196 | -0.0009 |
| 12 | SLV 5 | 4.9 | 17.61 | 103.69 | -0.6977 | 0.2496 | -0.0004 |
| 12 | SLV 6 | 4.9 | 17.61 | 103.69 | -0.6977 | 0.2496 | -0.0004 |
| 12 | SLV 7 | 0.72 | -1.1 | 31.77 | 0.1525 | 0.0438 | -0.0001 |
| 12 | SLV 8 | 0.72 | -1.1 | 31.77 | 0.1525 | 0.0438 | -0.0001 |
| 12 | SLV 9 | -0.79 | 19.2 | 89.05 | -0.7494 | -0.0107 | 0.0002 |
| 12 | SLV 10 | -0.79 | 19.2 | 89.05 | -0.7494 | -0.0107 | 0.0002 |
| 12 | SLV 11 | -4.97 | 0.49 | 17.14 | 0.1008 | -0.2165 | 0.0004 |
| 12 | SLV 12 | -4.97 | 0.49 | 17.14 | 0.1008 | -0.2165 | 0.0004 |
| 12 | SLV 13 | -8.89 | 14.5 | 46.81 | -0.5122 | -0.3865 | 0.001 |
| 12 | SLV 14 | -8.89 | 14.5 | 46.81 | -0.5122 | -0.3865 | 0.001 |
| 12 | SLV 15 | -10.14 | 8.89 | 25.24 | -0.2571 | -0.4482 | 0.001 |
| 12 | SLV 16 | -10.14 | 8.89 | 25.24 | -0.2571 | -0.4482 | 0.001 |
| 13 | SLU 1 | -3.3 | 0.11 | 35.46 | -0.0254 | -0.1039 | -0.0006 |
| 13 | SLU 2 | -3.21 | 0.11 | 35.36 | -0.0209 | -0.1007 | -0.0006 |
| 13 | SLU 3 | -3.22 | 0.11 | 35.91 | -0.0255 | -0.1006 | -0.0006 |
| 13 | SLU 4 | -3.16 | 0.11 | 35.85 | -0.0228 | -0.0987 | -0.0006 |
| 13 | SLU 5 | -3.1 | 0.11 | 35.79 | -0.0208 | -0.0965 | -0.0006 |
| 13 | SLU 6 | -3.11 | 0.11 | 36.34 | -0.0254 | -0.0964 | -0.0006 |
| 13 | SLU 7 | -3.05 | 0.11 | 36.28 | -0.0227 | -0.0945 | -0.0006 |
| 13 | SLU 8 | -3.08 | 0.11 | 36.33 | -0.0252 | -0.0955 | -0.0006 |
| 13 | SLU 9 | -3.03 | 0.11 | 36.27 | -0.0225 | -0.0936 | -0.0006 |
| 13 | SLU 10 | -3.42 | 0.13 | 39.77 | -0.0271 | -0.1055 | -0.0007 |
| 13 | SLU 11 | -3.43 | 0.13 | 40.32 | -0.0317 | -0.1054 | -0.0007 |
| 13 | SLU 12 | -3.37 | 0.13 | 40.26 | -0.029 | -0.1035 | -0.0007 |
| 13 | SLU 13 | -3.31 | 0.13 | 40.2 | -0.027 | -0.1013 | -0.0007 |
| 13 | SLU 14 | -3.32 | 0.14 | 40.75 | -0.0315 | -0.1012 | -0.0007 |
| 13 | SLU 15 | -3.27 | 0.13 | 40.69 | -0.0288 | -0.0993 | -0.0007 |
| 13 | SLU 16 | -3.29 | 0.13 | 40.74 | -0.0314 | -0.1003 | -0.0007 |
| 13 | SLU 17 | -3.24 | 0.13 | 40.68 | -0.0287 | -0.0984 | -0.0007 |
| 13 | SLU 18 | -3.6 | 0.14 | 41.76 | -0.0342 | -0.1107 | -0.0007 |
| 13 | SLU 19 | -3.55 | 0.14 | 41.7 | -0.0315 | -0.1088 | -0.0007 |
| 13 | SLU 20 | -3.49 | 0.14 | 42.19 | -0.0341 | -0.1065 | -0.0008 |
| 13 | SLU 21 | -3.44 | 0.14 | 42.13 | -0.0314 | -0.1046 | -0.0007 |
| 13 | SLU 22 | -3.41 | 0.12 | 37.35 | -0.0282 | -0.1066 | -0.0006 |
| 13 | SLU 23 | -3.32 | 0.12 | 37.24 | -0.0237 | -0.1034 | -0.0006 |
| 13 | SLU 24 | -3.32 | 0.12 | 37.79 | -0.0283 | -0.1033 | -0.0006 |
| 13 | SLU 25 | -3.27 | 0.12 | 37.73 | -0.0256 | -0.1014 | -0.0006 |
| 13 | SLU 26 | -3.21 | 0.12 | 37.68 | -0.0236 | -0.0992 | -0.0006 |
| 13 | SLU 27 | -3.22 | 0.12 | 38.23 | -0.0282 | -0.0991 | -0.0006 |
| 13 | SLU 28 | -3.16 | 0.12 | 38.17 | -0.0254 | -0.0972 | -0.0006 |
| 13 | SLU 29 | -3.19 | 0.12 | 38.21 | -0.028 | -0.0982 | -0.0006 |
| 13 | SLU 30 | -3.14 | 0.12 | 38.15 | -0.0253 | -0.0963 | -0.0006 |
| 13 | SLU 31 | -3.53 | 0.14 | 41.65 | -0.0299 | -0.1082 | -0.0007 |
| 13 | SLU 32 | -3.54 | 0.14 | 42.2 | -0.0344 | -0.1081 | -0.0008 |
| 13 | SLU 33 | -3.48 | 0.14 | 42.14 | -0.0317 | -0.1062 | -0.0008 |
| 13 | SLU 34 | -3.42 | 0.14 | 42.09 | -0.0297 | -0.104 | -0.0007 |
| 13 | SLU 35 | -3.43 | 0.14 | 42.64 | -0.0343 | -0.1039 | -0.0008 |
| 13 | SLU 36 | -3.37 | 0.14 | 42.58 | -0.0316 | -0.102 | -0.0008 |
| 13 | SLU 37 | -3.4 | 0.14 | 42.62 | -0.0341 | -0.103 | -0.0008 |
| 13 | SLU 38 | -3.35 | 0.14 | 42.56 | -0.0314 | -0.1011 | -0.0008 |
| 13 | SLU 39 | -3.71 | 0.15 | 43.65 | -0.037 | -0.1134 | -0.0008 |
| 13 | SLU 40 | -3.66 | 0.15 | 43.58 | -0.0343 | -0.1115 | -0.0008 |
| 13 | SLU 41 | -3.6 | 0.15 | 44.08 | -0.0369 | -0.1092 | -0.0008 |
| 13 | SLU 42 | -3.55 | 0.15 | 44.02 | -0.0342 | -0.1073 | -0.0008 |
| 13 | SLU 43 | -4.25 | 0.14 | 45.45 | -0.0321 | -0.1341 | -0.0007 |
| 13 | SLU 44 | -4.16 | 0.14 | 45.35 | -0.0276 | -0.131 | -0.0007 |
| 13 | SLU 45 | -4.17 | 0.14 | 45.9 | -0.0322 | -0.1308 | -0.0007 |
| 13 | SLU 46 | -4.11 | 0.14 | 45.84 | -0.0295 | -0.1289 | -0.0007 |
| 13 | SLU 47 | -4.05 | 0.14 | 45.78 | -0.0275 | -0.1268 | -0.0007 |
| 13 | SLU 48 | -4.06 | 0.14 | 46.33 | -0.0321 | -0.1267 | -0.0007 |
| 13 | SLU 49 | -4.01 | 0.14 | 46.27 | -0.0294 | -0.1248 | -0.0007 |
| 13 | SLU 50 | -4.03 | 0.14 | 46.32 | -0.0319 | -0.1258 | -0.0007 |
| 13 | SLU 51 | -3.98 | 0.14 | 46.26 | -0.0292 | -0.1239 | -0.0007 |
| 13 | SLU 52 | -4.37 | 0.16 | 49.76 | -0.0338 | -0.1357 | -0.0008 |
| 13 | SLU 53 | -4.38 | 0.17 | 50.31 | -0.0383 | -0.1356 | -0.0009 |
| 13 | SLU 54 | -4.33 | 0.16 | 50.25 | -0.0356 | -0.1337 | -0.0009 |

| Nodo | Cont. | Reazione a traslazione | | | Reazione a rotazione | | |
|---|---|---|---|---|---|---|---|
| Ind. | N.br. | x | y | z | x | y | z |
| 13 | SLU 55 | -4.27 | 0.16 | 50.19 | -0.0337 | -0.1316 | -0.0008 |
| 13 | SLU 56 | -4.27 | 0.17 | 50.74 | -0.0382 | -0.1314 | -0.0009 |
| 13 | SLU 57 | -4.22 | 0.16 | 50.68 | -0.0355 | -0.1295 | -0.0009 |
| 13 | SLU 58 | -4.25 | 0.17 | 50.73 | -0.038 | -0.1305 | -0.0009 |
| 13 | SLU 59 | -4.19 | 0.16 | 50.67 | -0.0353 | -0.1286 | -0.0009 |
| 13 | SLU 60 | -4.55 | 0.17 | 51.75 | -0.0409 | -0.1409 | -0.0009 |
| 13 | SLU 61 | -4.5 | 0.17 | 51.69 | -0.0382 | -0.139 | -0.0009 |
| 13 | SLU 62 | -4.44 | 0.17 | 52.19 | -0.0408 | -0.1368 | -0.0009 |
| 13 | SLU 63 | -4.39 | 0.17 | 52.12 | -0.0381 | -0.1349 | -0.0009 |
| 13 | SLU 64 | -4.36 | 0.15 | 47.34 | -0.0349 | -0.1368 | -0.0008 |
| 13 | SLU 65 | -4.27 | 0.15 | 47.24 | -0.0304 | -0.1337 | -0.0008 |
| 13 | SLU 66 | -4.28 | 0.15 | 47.79 | -0.035 | -0.1335 | -0.0008 |
| 13 | SLU 67 | -4.22 | 0.15 | 47.72 | -0.0323 | -0.1316 | -0.0008 |
| 13 | SLU 68 | -4.16 | 0.15 | 47.67 | -0.0303 | -0.1295 | -0.0008 |
| 13 | SLU 69 | -4.17 | 0.15 | 48.22 | -0.0348 | -0.1293 | -0.0008 |
| 13 | SLU 70 | -4.12 | 0.15 | 48.16 | -0.0321 | -0.1275 | -0.0008 |
| 13 | SLU 71 | -4.14 | 0.15 | 48.2 | -0.0347 | -0.1285 | -0.0008 |
| 13 | SLU 72 | -4.09 | 0.15 | 48.14 | -0.032 | -0.1266 | -0.0008 |
| 13 | SLU 73 | -4.48 | 0.17 | 51.64 | -0.0365 | -0.1384 | -0.0009 |
| 13 | SLU 74 | -4.49 | 0.18 | 52.2 | -0.0411 | -0.1383 | -0.0009 |
| 13 | SLU 75 | -4.43 | 0.17 | 52.13 | -0.0384 | -0.1364 | -0.0009 |
| 13 | SLU 76 | -4.37 | 0.17 | 52.08 | -0.0364 | -0.1342 | -0.0009 |
| 13 | SLU 77 | -4.38 | 0.18 | 52.63 | -0.041 | -0.1341 | -0.0009 |
| 13 | SLU 78 | -4.33 | 0.17 | 52.57 | -0.0383 | -0.1322 | -0.0009 |
| 13 | SLU 79 | -4.36 | 0.17 | 52.61 | -0.0408 | -0.1332 | -0.0009 |
| 13 | SLU 80 | -4.3 | 0.17 | 52.55 | -0.0381 | -0.1313 | -0.0009 |
| 13 | SLU 81 | -4.66 | 0.18 | 53.64 | -0.0437 | -0.1436 | -0.001 |
| 13 | SLU 82 | -4.61 | 0.18 | 53.58 | -0.041 | -0.1417 | -0.0009 |
| 13 | SLU 83 | -4.55 | 0.18 | 54.07 | -0.0436 | -0.1394 | -0.001 |
| 13 | SLU 84 | -4.5 | 0.18 | 54.01 | -0.0409 | -0.1376 | -0.001 |
| 13 | SLE RA 1 | -3.33 | 0.12 | 36 | -0.0262 | -0.1047 | -0.0006 |
| 13 | SLE RA 2 | -3.27 | 0.11 | 35.93 | -0.0232 | -0.1026 | -0.0006 |
| 13 | SLE RA 3 | -3.27 | 0.12 | 36.3 | -0.0263 | -0.1025 | -0.0006 |
| 13 | SLE RA 4 | -3.24 | 0.11 | 36.26 | -0.0245 | -0.1012 | -0.0006 |
| 13 | SLE RA 5 | -3.2 | 0.11 | 36.22 | -0.0232 | -0.0998 | -0.0006 |
| 13 | SLE RA 6 | -3.2 | 0.12 | 36.59 | -0.0262 | -0.0997 | -0.0006 |
| 13 | SLE RA 7 | -3.17 | 0.12 | 36.55 | -0.0244 | -0.0984 | -0.0006 |
| 13 | SLE RA 8 | -3.19 | 0.12 | 36.58 | -0.0261 | -0.0991 | -0.0006 |
| 13 | SLE RA 9 | -3.15 | 0.11 | 36.54 | -0.0243 | -0.0978 | -0.0006 |
| 13 | SLE RA 10 | -3.41 | 0.13 | 38.87 | -0.0273 | -0.1057 | -0.0007 |
| 13 | SLE RA 11 | -3.41 | 0.13 | 39.24 | -0.0304 | -0.1056 | -0.0007 |
| 13 | SLE RA 12 | -3.38 | 0.13 | 39.2 | -0.0286 | -0.1044 | -0.0007 |
| 13 | SLE RA 13 | -3.34 | 0.13 | 39.16 | -0.0273 | -0.1029 | -0.0007 |
| 13 | SLE RA 14 | -3.34 | 0.13 | 39.53 | -0.0303 | -0.1029 | -0.0007 |
| 13 | SLE RA 15 | -3.31 | 0.13 | 39.49 | -0.0285 | -0.1016 | -0.0007 |
| 13 | SLE RA 16 | -3.33 | 0.13 | 39.52 | -0.0302 | -0.1023 | -0.0007 |
| 13 | SLE RA 17 | -3.29 | 0.13 | 39.48 | -0.0284 | -0.101 | -0.0007 |
| 13 | SLE RA 18 | -3.53 | 0.14 | 40.2 | -0.0321 | -0.1092 | -0.0007 |
| 13 | SLE RA 19 | -3.49 | 0.13 | 40.16 | -0.0303 | -0.1079 | -0.0007 |
| 13 | SLE RA 20 | -3.46 | 0.14 | 40.49 | -0.032 | -0.1064 | -0.0007 |
| 13 | SLE RA 21 | -3.42 | 0.13 | 40.45 | -0.0302 | -0.1051 | -0.0007 |
| 13 | SLE FR 1 | -3.33 | 0.12 | 36 | -0.0262 | -0.1047 | -0.0006 |
| 13 | SLE FR 2 | -3.32 | 0.12 | 35.99 | -0.0256 | -0.1042 | -0.0006 |
| 13 | SLE FR 3 | -3.3 | 0.12 | 36.12 | -0.0262 | -0.1035 | -0.0006 |
| 13 | SLE FR 4 | -3.38 | 0.12 | 37.25 | -0.0274 | -0.1056 | -0.0006 |
| 13 | SLE FR 5 | -3.36 | 0.12 | 37.38 | -0.028 | -0.1049 | -0.0006 |
| 13 | SLE FR 6 | -3.43 | 0.13 | 38.1 | -0.0292 | -0.1069 | -0.0006 |
| 13 | SLE QP 1 | -3.33 | 0.12 | 36 | -0.0262 | -0.1047 | -0.0006 |
| 13 | SLE QP 2 | -3.39 | 0.12 | 37.26 | -0.028 | -0.106 | -0.0006 |
| 13 | SLD 1 | 1.63 | 0.23 | 46.07 | -0.0679 | 0.1042 | -0.001 |
| 13 | SLD 2 | 1.63 | 0.23 | 46.07 | -0.0679 | 0.1042 | -0.001 |
| 13 | SLD 3 | 0.65 | 0.19 | 41.03 | -0.0364 | 0.0706 | -0.0008 |
| 13 | SLD 4 | 0.65 | 0.19 | 41.03 | -0.0364 | 0.0706 | -0.0008 |
| 13 | SLD 5 | -0.4 | 0.22 | 47.55 | -0.0877 | 0.0081 | -0.001 |
| 13 | SLD 6 | -0.4 | 0.22 | 47.55 | -0.0877 | 0.0081 | -0.001 |
| 13 | SLD 7 | -3.66 | 0.08 | 30.75 | 0.0172 | -0.1041 | -0.0004 |
| 13 | SLD 8 | -3.66 | 0.08 | 30.75 | 0.0172 | -0.1041 | -0.0004 |
| 13 | SLD 9 | -3.12 | 0.17 | 43.77 | -0.0732 | -0.108 | -0.0008 |
| 13 | SLD 10 | -3.12 | 0.17 | 43.77 | -0.0732 | -0.108 | -0.0008 |
| 13 | SLD 11 | -6.38 | 0.03 | 26.97 | 0.0317 | -0.2201 | -0.0003 |
| 13 | SLD 12 | -6.38 | 0.03 | 26.97 | 0.0317 | -0.2201 | -0.0003 |
| 13 | SLD 13 | -7.43 | 0.06 | 33.49 | -0.0195 | -0.2826 | -0.0004 |
| 13 | SLD 14 | -7.43 | 0.06 | 33.49 | -0.0195 | -0.2826 | -0.0004 |
| 13 | SLD 15 | -8.41 | 0.01 | 28.45 | 0.0119 | -0.3163 | -0.0002 |
| 13 | SLD 16 | -8.41 | 0.01 | 28.45 | 0.0119 | -0.3163 | -0.0002 |
| 13 | SLV 1 | 8.23 | 0.37 | 57.75 | -0.1206 | 0.3807 | -0.0015 |
| 13 | SLV 2 | 8.23 | 0.37 | 57.75 | -0.1206 | 0.3807 | -0.0015 |
| 13 | SLV 3 | 5.95 | 0.28 | 46.11 | -0.048 | 0.302 | -0.0011 |
| 13 | SLV 4 | 5.95 | 0.28 | 46.11 | -0.048 | 0.302 | -0.0011 |
| 13 | SLV 5 | 3.55 | 0.35 | 61.06 | -0.1659 | 0.1593 | -0.0015 |
| 13 | SLV 6 | 3.55 | 0.35 | 61.06 | -0.1659 | 0.1593 | -0.0015 |
| 13 | SLV 7 | -4.05 | 0.02 | 22.26 | 0.0761 | -0.1029 | -0.0002 |
| 13 | SLV 8 | -4.05 | 0.02 | 22.26 | 0.0761 | -0.1029 | -0.0002 |
| 13 | SLV 9 | -2.73 | 0.22 | 52.26 | -0.1321 | -0.1091 | -0.0011 |
| 13 | SLV 10 | -2.73 | 0.22 | 52.26 | -0.1321 | -0.1091 | -0.0011 |
| 13 | SLV 11 | -10.33 | -0.1 | 13.46 | 0.1099 | -0.3714 | 0.0002 |
| 13 | SLV 12 | -10.33 | -0.1 | 13.46 | 0.1099 | -0.3714 | 0.0002 |
| 13 | SLV 13 | -12.72 | -0.03 | 28.41 | -0.008 | -0.5141 | -0.0001 |

| Nodo | Cont. | Reazione a traslazione | | | Reazione a rotazione | | |
|---|---|---|---|---|---|---|---|
| Ind. | N.br. | x | y | z | x | y | z |
| 13 | SLV 14 | -12.72 | -0.03 | 28.41 | -0.008 | -0.5141 | -0.0001 |
| 13 | SLV 15 | -15 | -0.13 | 16.77 | 0.0647 | -0.5927 | 0.0003 |
| 13 | SLV 16 | -15 | -0.13 | 16.77 | 0.0647 | -0.5927 | 0.0003 |
| 14 | SLU 1 | -2.44 | -0.04 | 29.76 | 0.0083 | -0.0699 | 0.0001 |
| 14 | SLU 2 | -2.38 | -0.05 | 29.72 | 0.0165 | -0.0676 | 0.0001 |
| 14 | SLU 3 | -2.29 | -0.04 | 30.27 | 0.0088 | -0.0634 | 0.0001 |
| 14 | SLU 4 | -2.25 | -0.05 | 30.25 | 0.0137 | -0.0621 | 0.0001 |
| 14 | SLU 5 | -2.2 | -0.05 | 30.24 | 0.0171 | -0.06 | 0.0001 |
| 14 | SLU 6 | -2.11 | -0.05 | 30.79 | 0.0095 | -0.0558 | 0.0001 |
| 14 | SLU 7 | -2.07 | -0.05 | 30.77 | 0.0144 | -0.0545 | 0.0001 |
| 14 | SLU 8 | -2.08 | -0.05 | 30.81 | 0.0096 | -0.0546 | 0.0001 |
| 14 | SLU 9 | -2.04 | -0.05 | 30.78 | 0.0145 | -0.0533 | 0.0001 |
| 14 | SLU 10 | -2.43 | -0.05 | 33.53 | 0.0144 | -0.0653 | 0.0001 |
| 14 | SLU 11 | -2.33 | -0.04 | 34.07 | 0.0067 | -0.0611 | 0.0001 |
| 14 | SLU 12 | -2.3 | -0.05 | 34.05 | 0.0116 | -0.0598 | 0.0001 |
| 14 | SLU 13 | -2.25 | -0.05 | 34.05 | 0.0151 | -0.0577 | 0.0001 |
| 14 | SLU 14 | -2.15 | -0.05 | 34.59 | 0.0074 | -0.0535 | 0.0001 |
| 14 | SLU 15 | -2.12 | -0.05 | 34.57 | 0.0123 | -0.0521 | 0.0001 |
| 14 | SLU 16 | -2.12 | -0.05 | 34.61 | 0.0076 | -0.0523 | 0.0001 |
| 14 | SLU 17 | -2.09 | -0.05 | 34.58 | 0.0125 | -0.051 | 0.0001 |
| 14 | SLU 18 | -2.5 | -0.04 | 35.2 | 0.0054 | -0.0665 | 0.0001 |
| 14 | SLU 19 | -2.47 | -0.05 | 35.17 | 0.0103 | -0.0652 | 0.0001 |
| 14 | SLU 20 | -2.32 | -0.05 | 35.72 | 0.006 | -0.0589 | 0.0001 |
| 14 | SLU 21 | -2.29 | -0.05 | 35.69 | 0.0109 | -0.0576 | 0.0001 |
| 14 | SLU 22 | -2.44 | -0.04 | 31.38 | 0.0074 | -0.0681 | 0.0001 |
| 14 | SLU 23 | -2.38 | -0.05 | 31.33 | 0.0156 | -0.0659 | 0.0001 |
| 14 | SLU 24 | -2.29 | -0.04 | 31.88 | 0.0079 | -0.0617 | 0.0001 |
| 14 | SLU 25 | -2.26 | -0.05 | 31.86 | 0.0128 | -0.0604 | 0.0001 |
| 14 | SLU 26 | -2.2 | -0.05 | 31.85 | 0.0162 | -0.0583 | 0.0001 |
| 14 | SLU 27 | -2.11 | -0.05 | 32.4 | 0.0085 | -0.0541 | 0.0001 |
| 14 | SLU 28 | -2.08 | -0.05 | 32.38 | 0.0134 | -0.0528 | 0.0001 |
| 14 | SLU 29 | -2.08 | -0.05 | 32.42 | 0.0087 | -0.0529 | 0.0001 |
| 14 | SLU 30 | -2.05 | -0.05 | 32.39 | 0.0136 | -0.0516 | 0.0001 |
| 14 | SLU 31 | -2.43 | -0.05 | 35.14 | 0.0135 | -0.0636 | 0.0001 |
| 14 | SLU 32 | -2.34 | -0.05 | 35.68 | 0.0058 | -0.0594 | 0.0001 |
| 14 | SLU 33 | -2.3 | -0.05 | 35.66 | 0.0107 | -0.058 | 0.0001 |
| 14 | SLU 34 | -2.25 | -0.06 | 35.66 | 0.0142 | -0.0559 | 0.0001 |
| 14 | SLU 35 | -2.16 | -0.05 | 36.2 | 0.0065 | -0.0518 | 0.0001 |
| 14 | SLU 36 | -2.12 | -0.05 | 36.18 | 0.0114 | -0.0504 | 0.0001 |
| 14 | SLU 37 | -2.13 | -0.05 | 36.22 | 0.0066 | -0.0506 | 0.0001 |
| 14 | SLU 38 | -2.09 | -0.05 | 36.19 | 0.0116 | -0.0492 | 0.0001 |
| 14 | SLU 39 | -2.51 | -0.04 | 36.81 | 0.0045 | -0.0648 | 0.0001 |
| 14 | SLU 40 | -2.47 | -0.05 | 36.78 | 0.0094 | -0.0635 | 0.0001 |
| 14 | SLU 41 | -2.33 | -0.05 | 37.33 | 0.0051 | -0.0572 | 0.0001 |
| 14 | SLU 42 | -2.29 | -0.05 | 37.3 | 0.01 | -0.0558 | 0.0001 |
| 14 | SLU 43 | -3.17 | -0.05 | 38.14 | 0.0111 | -0.0914 | 0.0001 |
| 14 | SLU 44 | -3.11 | -0.06 | 38.1 | 0.0193 | -0.0892 | 0.0001 |
| 14 | SLU 45 | -3.02 | -0.06 | 38.65 | 0.0116 | -0.085 | 0.0001 |
| 14 | SLU 46 | -2.98 | -0.06 | 38.62 | 0.0165 | -0.0836 | 0.0001 |
| 14 | SLU 47 | -2.93 | -0.07 | 38.62 | 0.02 | -0.0815 | 0.0001 |
| 14 | SLU 48 | -2.84 | -0.06 | 39.17 | 0.0123 | -0.0774 | 0.0001 |
| 14 | SLU 49 | -2.8 | -0.06 | 39.14 | 0.0172 | -0.076 | 0.0001 |
| 14 | SLU 50 | -2.81 | -0.06 | 39.18 | 0.0124 | -0.0762 | 0.0001 |
| 14 | SLU 51 | -2.77 | -0.06 | 39.16 | 0.0173 | -0.0748 | 0.0001 |
| 14 | SLU 52 | -3.16 | -0.07 | 41.9 | 0.0172 | -0.0868 | 0.0001 |
| 14 | SLU 53 | -3.06 | -0.06 | 42.45 | 0.0096 | -0.0827 | 0.0001 |
| 14 | SLU 54 | -3.03 | -0.06 | 42.43 | 0.0145 | -0.0813 | 0.0001 |
| 14 | SLU 55 | -2.98 | -0.07 | 42.42 | 0.0179 | -0.0792 | 0.0001 |
| 14 | SLU 56 | -2.88 | -0.06 | 42.97 | 0.0102 | -0.075 | 0.0001 |
| 14 | SLU 57 | -2.85 | -0.06 | 42.95 | 0.0151 | -0.0737 | 0.0001 |
| 14 | SLU 58 | -2.85 | -0.06 | 42.99 | 0.0104 | -0.0739 | 0.0001 |
| 14 | SLU 59 | -2.82 | -0.07 | 42.96 | 0.0153 | -0.0725 | 0.0001 |
| 14 | SLU 60 | -3.23 | -0.06 | 43.57 | 0.0082 | -0.0881 | 0.0001 |
| 14 | SLU 61 | -3.2 | -0.06 | 43.55 | 0.0131 | -0.0867 | 0.0001 |
| 14 | SLU 62 | -3.05 | -0.06 | 44.09 | 0.0088 | -0.0805 | 0.0001 |
| 14 | SLU 63 | -3.02 | -0.06 | 44.07 | 0.0137 | -0.0791 | 0.0001 |
| 14 | SLU 64 | -3.17 | -0.05 | 39.75 | 0.0102 | -0.0897 | 0.0001 |
| 14 | SLU 65 | -3.11 | -0.06 | 39.71 | 0.0184 | -0.0874 | 0.0001 |
| 14 | SLU 66 | -3.02 | -0.06 | 40.26 | 0.0107 | -0.0833 | 0.0001 |
| 14 | SLU 67 | -2.99 | -0.06 | 40.23 | 0.0156 | -0.0819 | 0.0001 |
| 14 | SLU 68 | -2.93 | -0.07 | 40.23 | 0.019 | -0.0798 | 0.0001 |
| 14 | SLU 69 | -2.84 | -0.06 | 40.78 | 0.0113 | -0.0757 | 0.0001 |
| 14 | SLU 70 | -2.81 | -0.06 | 40.75 | 0.0163 | -0.0743 | 0.0001 |
| 14 | SLU 71 | -2.81 | -0.06 | 40.79 | 0.0115 | -0.0745 | 0.0001 |
| 14 | SLU 72 | -2.78 | -0.06 | 40.77 | 0.0164 | -0.0731 | 0.0001 |
| 14 | SLU 73 | -3.16 | -0.07 | 43.51 | 0.0163 | -0.0851 | 0.0001 |
| 14 | SLU 74 | -3.07 | -0.06 | 44.06 | 0.0086 | -0.0809 | 0.0001 |
| 14 | SLU 75 | -3.03 | -0.06 | 44.04 | 0.0135 | -0.0796 | 0.0001 |
| 14 | SLU 76 | -2.98 | -0.07 | 44.03 | 0.017 | -0.0775 | 0.0001 |
| 14 | SLU 77 | -2.89 | -0.06 | 44.58 | 0.0093 | -0.0733 | 0.0001 |
| 14 | SLU 78 | -2.85 | -0.07 | 44.56 | 0.0142 | -0.072 | 0.0001 |
| 14 | SLU 79 | -2.86 | -0.06 | 44.6 | 0.0095 | -0.0721 | 0.0001 |
| 14 | SLU 80 | -2.82 | -0.07 | 44.57 | 0.0144 | -0.0708 | 0.0001 |
| 14 | SLU 81 | -3.24 | -0.06 | 45.18 | 0.0073 | -0.0864 | 0.0001 |
| 14 | SLU 82 | -3.2 | -0.06 | 45.16 | 0.0122 | -0.085 | 0.0001 |
| 14 | SLU 83 | -3.06 | -0.06 | 45.71 | 0.0079 | -0.0787 | 0.0001 |
| 14 | SLU 84 | -3.02 | -0.06 | 45.68 | 0.0128 | -0.0774 | 0.0001 |
| 14 | SLE RA 1 | -2.44 | -0.04 | 30.22 | 0.0081 | -0.0694 | 0.0001 |

| Nodo | Cont. | Reazione a traslazione | | | Reazione a rotazione | | |
|---|---|---|---|---|---|---|---|
| Ind. | N.br. | x | y | z | x | y | z |
| 14 | SLE RA 2 | -2.4 | -0.05 | 30.2 | 0.0135 | -0.0679 | 0.0001 |
| 14 | SLE RA 3 | -2.34 | -0.04 | 30.56 | 0.0084 | -0.0651 | 0.0001 |
| 14 | SLE RA 4 | -2.31 | -0.05 | 30.55 | 0.0116 | -0.0642 | 0.0001 |
| 14 | SLE RA 5 | -2.28 | -0.05 | 30.54 | 0.0139 | -0.0628 | 0.0001 |
| 14 | SLE RA 6 | -2.22 | -0.04 | 30.91 | 0.0088 | -0.06 | 0.0001 |
| 14 | SLE RA 7 | -2.2 | -0.05 | 30.89 | 0.0121 | -0.0591 | 0.0001 |
| 14 | SLE RA 8 | -2.2 | -0.04 | 30.92 | 0.0089 | -0.0592 | 0.0001 |
| 14 | SLE RA 9 | -2.18 | -0.05 | 30.9 | 0.0122 | -0.0583 | 0.0001 |
| 14 | SLE RA 10 | -2.43 | -0.05 | 32.73 | 0.0121 | -0.0663 | 0.0001 |
| 14 | SLE RA 11 | -2.37 | -0.04 | 33.1 | 0.007 | -0.0635 | 0.0001 |
| 14 | SLE RA 12 | -2.35 | -0.05 | 33.08 | 0.0103 | -0.0626 | 0.0001 |
| 14 | SLE RA 13 | -2.31 | -0.05 | 33.08 | 0.0126 | -0.0612 | 0.0001 |
| 14 | SLE RA 14 | -2.25 | -0.05 | 33.44 | 0.0074 | -0.0585 | 0.0001 |
| 14 | SLE RA 15 | -2.23 | -0.05 | 33.43 | 0.0107 | -0.0576 | 0.0001 |
| 14 | SLE RA 16 | -2.23 | -0.05 | 33.45 | 0.0076 | -0.0577 | 0.0001 |
| 14 | SLE RA 17 | -2.21 | -0.05 | 33.44 | 0.0108 | -0.0568 | 0.0001 |
| 14 | SLE RA 18 | -2.48 | -0.04 | 33.85 | 0.0061 | -0.0672 | 0.0001 |
| 14 | SLE RA 19 | -2.46 | -0.05 | 33.83 | 0.0094 | -0.0663 | 0.0001 |
| 14 | SLE RA 20 | -2.36 | -0.04 | 34.19 | 0.0065 | -0.0621 | 0.0001 |
| 14 | SLE RA 21 | -2.34 | -0.05 | 34.18 | 0.0098 | -0.0612 | 0.0001 |
| 14 | SLE FR 1 | -2.44 | -0.04 | 30.22 | 0.0081 | -0.0694 | 0.0001 |
| 14 | SLE FR 2 | -2.43 | -0.04 | 30.22 | 0.0091 | -0.0691 | 0.0001 |
| 14 | SLE FR 3 | -2.39 | -0.04 | 30.36 | 0.0082 | -0.0673 | 0.0001 |
| 14 | SLE FR 4 | -2.44 | -0.04 | 31.31 | 0.0086 | -0.0684 | 0.0001 |
| 14 | SLE FR 5 | -2.4 | -0.04 | 31.45 | 0.0076 | -0.0667 | 0.0001 |
| 14 | SLE FR 6 | -2.46 | -0.04 | 32.04 | 0.0071 | -0.0683 | 0.0001 |
| 14 | SLE QP 1 | -2.44 | -0.04 | 30.22 | 0.0081 | -0.0694 | 0.0001 |
| 14 | SLE QP 2 | -2.45 | -0.04 | 31.31 | 0.0075 | -0.0687 | 0.0001 |
| 14 | SLD 1 | 2.72 | -0.02 | 37.8 | -0.0416 | 0.1524 | -0.0002 |
| 14 | SLD 2 | 2.72 | -0.02 | 37.8 | -0.0416 | 0.1524 | -0.0002 |
| 14 | SLD 3 | 1.82 | 0.07 | 33.99 | 0.0102 | 0.1165 | -0.0006 |
| 14 | SLD 4 | 1.82 | 0.07 | 33.99 | 0.0102 | 0.1165 | -0.0006 |
| 14 | SLD 5 | 0.47 | -0.16 | 39.04 | -0.0859 | 0.052 | 0.0005 |
| 14 | SLD 6 | 0.47 | -0.16 | 39.04 | -0.0859 | 0.052 | 0.0005 |
| 14 | SLD 7 | -2.54 | 0.12 | 26.33 | 0.087 | -0.0675 | -0.0006 |
| 14 | SLD 8 | -2.54 | 0.12 | 26.33 | 0.087 | -0.0675 | -0.0006 |
| 14 | SLD 9 | -2.36 | -0.2 | 36.29 | -0.072 | -0.0699 | 0.0008 |
| 14 | SLD 10 | -2.36 | -0.2 | 36.29 | -0.072 | -0.0699 | 0.0008 |
| 14 | SLD 11 | -5.37 | 0.08 | 23.58 | 0.1009 | -0.1894 | -0.0004 |
| 14 | SLD 12 | -5.37 | 0.08 | 23.58 | 0.1009 | -0.1894 | -0.0004 |
| 14 | SLD 13 | -6.72 | -0.15 | 28.63 | 0.0047 | -0.254 | 0.0007 |
| 14 | SLD 14 | -6.72 | -0.15 | 28.63 | 0.0047 | -0.254 | 0.0007 |
| 14 | SLD 15 | -7.62 | -0.07 | 24.82 | 0.0566 | -0.2898 | 0.0004 |
| 14 | SLD 16 | -7.62 | -0.07 | 24.82 | 0.0566 | -0.2898 | 0.0004 |
| 14 | SLV 1 | 9.51 | 0.02 | 46.42 | -0.1064 | 0.4436 | -0.0006 |
| 14 | SLV 2 | 9.51 | 0.02 | 46.42 | -0.1064 | 0.4436 | -0.0006 |
| 14 | SLV 3 | 7.39 | 0.22 | 37.58 | 0.0134 | 0.3591 | -0.0014 |
| 14 | SLV 4 | 7.39 | 0.22 | 37.58 | 0.0134 | 0.3591 | -0.0014 |
| 14 | SLV 5 | 4.35 | -0.32 | 49.25 | -0.2084 | 0.2133 | 0.0011 |
| 14 | SLV 6 | 4.35 | -0.32 | 49.25 | -0.2084 | 0.2133 | 0.0011 |
| 14 | SLV 7 | -2.71 | 0.33 | 19.78 | 0.1909 | -0.0687 | -0.0016 |
| 14 | SLV 8 | -2.71 | 0.33 | 19.78 | 0.1909 | -0.0687 | -0.0016 |
| 14 | SLV 9 | -2.19 | -0.42 | 42.84 | -0.176 | -0.0688 | 0.0017 |
| 14 | SLV 10 | -2.19 | -0.42 | 42.84 | -0.176 | -0.0688 | 0.0017 |
| 14 | SLV 11 | -9.25 | 0.24 | 13.37 | 0.2233 | -0.3507 | -0.0009 |
| 14 | SLV 12 | -9.25 | 0.24 | 13.37 | 0.2233 | -0.3507 | -0.0009 |
| 14 | SLV 13 | -12.29 | -0.3 | 25.04 | 0.0016 | -0.4965 | 0.0016 |
| 14 | SLV 14 | -12.29 | -0.3 | 25.04 | 0.0016 | -0.4965 | 0.0016 |
| 14 | SLV 15 | -14.41 | -0.1 | 16.2 | 0.1214 | -0.581 | 0.0008 |
| 14 | SLV 16 | -14.41 | -0.1 | 16.2 | 0.1214 | -0.581 | 0.0008 |
| 15 | SLU 1 | -0.96 | -0.1 | 27.18 | 0.0277 | -0.0483 | 0.0002 |
| 15 | SLU 2 | -0.95 | -0.11 | 27.13 | 0.0385 | -0.0472 | 0.0003 |
| 15 | SLU 3 | -0.74 | -0.1 | 27.84 | 0.0288 | -0.04 | 0.0002 |
| 15 | SLU 4 | -0.73 | -0.11 | 27.81 | 0.0352 | -0.0393 | 0.0002 |
| 15 | SLU 5 | -0.69 | -0.12 | 27.83 | 0.0398 | -0.0375 | 0.0003 |
| 15 | SLU 6 | -0.48 | -0.11 | 28.54 | 0.03 | -0.0303 | 0.0002 |
| 15 | SLU 7 | -0.47 | -0.12 | 28.51 | 0.0365 | -0.0296 | 0.0002 |
| 15 | SLU 8 | -0.45 | -0.11 | 28.59 | 0.0302 | -0.029 | 0.0002 |
| 15 | SLU 9 | -0.44 | -0.12 | 28.56 | 0.0367 | -0.0283 | 0.0002 |
| 15 | SLU 10 | -0.83 | -0.12 | 30.81 | 0.0389 | -0.045 | 0.0003 |
| 15 | SLU 11 | -0.63 | -0.11 | 31.52 | 0.0291 | -0.0378 | 0.0002 |
| 15 | SLU 12 | -0.62 | -0.12 | 31.49 | 0.0356 | -0.0371 | 0.0003 |
| 15 | SLU 13 | -0.58 | -0.13 | 31.51 | 0.0401 | -0.0353 | 0.0003 |
| 15 | SLU 14 | -0.37 | -0.12 | 32.22 | 0.0304 | -0.0281 | 0.0002 |
| 15 | SLU 15 | -0.36 | -0.13 | 32.19 | 0.0368 | -0.0275 | 0.0003 |
| 15 | SLU 16 | -0.33 | -0.12 | 32.27 | 0.0306 | -0.0268 | 0.0002 |
| 15 | SLU 17 | -0.32 | -0.13 | 32.24 | 0.037 | -0.0261 | 0.0003 |
| 15 | SLU 18 | -0.8 | -0.11 | 32.44 | 0.0283 | -0.0452 | 0.0002 |
| 15 | SLU 19 | -0.79 | -0.12 | 32.41 | 0.0347 | -0.0445 | 0.0003 |
| 15 | SLU 20 | -0.54 | -0.12 | 33.14 | 0.0295 | -0.0355 | 0.0002 |
| 15 | SLU 21 | -0.53 | -0.13 | 33.11 | 0.036 | -0.0348 | 0.0003 |
| 15 | SLU 22 | -0.84 | -0.1 | 28.77 | 0.028 | -0.0445 | 0.0002 |
| 15 | SLU 23 | -0.83 | -0.12 | 28.72 | 0.0388 | -0.0433 | 0.0003 |
| 15 | SLU 24 | -0.62 | -0.11 | 29.43 | 0.029 | -0.0362 | 0.0002 |
| 15 | SLU 25 | -0.61 | -0.12 | 29.4 | 0.0355 | -0.0355 | 0.0002 |
| 15 | SLU 26 | -0.57 | -0.12 | 29.42 | 0.04 | -0.0337 | 0.0003 |
| 15 | SLU 27 | -0.36 | -0.11 | 30.13 | 0.0303 | -0.0265 | 0.0002 |
| 15 | SLU 28 | -0.35 | -0.12 | 30.1 | 0.0367 | -0.0258 | 0.0002 |

| Nodo | Cont. | Reazione a traslazione | | | Reazione a rotazione | | |
|---|---|---|---|---|---|---|---|
| Ind. | N.br. | x | y | z | x | y | z |
| 15 | SLU 29 | -0.33 | -0.11 | 30.18 | 0.0305 | -0.0251 | 0.0002 |
| 15 | SLU 30 | -0.32 | -0.12 | 30.15 | 0.0369 | -0.0245 | 0.0003 |
| 15 | SLU 31 | -0.71 | -0.13 | 32.4 | 0.0391 | -0.0411 | 0.0003 |
| 15 | SLU 32 | -0.51 | -0.12 | 33.11 | 0.0294 | -0.034 | 0.0002 |
| 15 | SLU 33 | -0.5 | -0.13 | 33.08 | 0.0358 | -0.0333 | 0.0003 |
| 15 | SLU 34 | -0.46 | -0.13 | 33.1 | 0.0404 | -0.0315 | 0.0003 |
| 15 | SLU 35 | -0.25 | -0.12 | 33.81 | 0.0306 | -0.0243 | 0.0002 |
| 15 | SLU 36 | -0.24 | -0.13 | 33.78 | 0.0371 | -0.0236 | 0.0003 |
| 15 | SLU 37 | -0.21 | -0.12 | 33.86 | 0.0308 | -0.0229 | 0.0002 |
| 15 | SLU 38 | -0.2 | -0.13 | 33.83 | 0.0373 | -0.0223 | 0.0003 |
| 15 | SLU 39 | -0.68 | -0.12 | 34.03 | 0.0285 | -0.0413 | 0.0002 |
| 15 | SLU 40 | -0.67 | -0.13 | 34 | 0.035 | -0.0407 | 0.0003 |
| 15 | SLU 41 | -0.42 | -0.12 | 34.73 | 0.0297 | -0.0317 | 0.0002 |
| 15 | SLU 42 | -0.41 | -0.13 | 34.7 | 0.0362 | -0.031 | 0.0003 |
| 15 | SLU 43 | -1.29 | -0.13 | 34.79 | 0.036 | -0.0641 | 0.0003 |
| 15 | SLU 44 | -1.28 | -0.14 | 34.74 | 0.0468 | -0.063 | 0.0003 |
| 15 | SLU 45 | -1.07 | -0.13 | 35.45 | 0.037 | -0.0558 | 0.0003 |
| 15 | SLU 46 | -1.06 | -0.14 | 35.42 | 0.0435 | -0.0551 | 0.0003 |
| 15 | SLU 47 | -1.02 | -0.15 | 35.44 | 0.048 | -0.0533 | 0.0003 |
| 15 | SLU 48 | -0.81 | -0.14 | 36.15 | 0.0382 | -0.0461 | 0.0003 |
| 15 | SLU 49 | -0.8 | -0.14 | 36.12 | 0.0447 | -0.0455 | 0.0003 |
| 15 | SLU 50 | -0.78 | -0.14 | 36.2 | 0.0385 | -0.0448 | 0.0003 |
| 15 | SLU 51 | -0.77 | -0.15 | 36.16 | 0.0449 | -0.0441 | 0.0003 |
| 15 | SLU 52 | -1.16 | -0.15 | 38.42 | 0.0471 | -0.0608 | 0.0003 |
| 15 | SLU 53 | -0.96 | -0.14 | 39.13 | 0.0374 | -0.0536 | 0.0003 |
| 15 | SLU 54 | -0.95 | -0.15 | 39.1 | 0.0438 | -0.0529 | 0.0003 |
| 15 | SLU 55 | -0.91 | -0.16 | 39.12 | 0.0484 | -0.0511 | 0.0003 |
| 15 | SLU 56 | -0.7 | -0.14 | 39.83 | 0.0386 | -0.0439 | 0.0003 |
| 15 | SLU 57 | -0.69 | -0.15 | 39.8 | 0.0451 | -0.0433 | 0.0003 |
| 15 | SLU 58 | -0.66 | -0.15 | 39.88 | 0.0388 | -0.0426 | 0.0003 |
| 15 | SLU 59 | -0.65 | -0.15 | 39.85 | 0.0453 | -0.0419 | 0.0003 |
| 15 | SLU 60 | -1.13 | -0.14 | 40.05 | 0.0365 | -0.061 | 0.0003 |
| 15 | SLU 61 | -1.12 | -0.15 | 40.02 | 0.043 | -0.0603 | 0.0003 |
| 15 | SLU 62 | -0.87 | -0.14 | 40.75 | 0.0377 | -0.0513 | 0.0003 |
| 15 | SLU 63 | -0.86 | -0.15 | 40.72 | 0.0442 | -0.0506 | 0.0003 |
| 15 | SLU 64 | -1.17 | -0.13 | 36.38 | 0.0362 | -0.0603 | 0.0003 |
| 15 | SLU 65 | -1.16 | -0.15 | 36.33 | 0.047 | -0.0591 | 0.0003 |
| 15 | SLU 66 | -0.95 | -0.14 | 37.04 | 0.0373 | -0.052 | 0.0003 |
| 15 | SLU 67 | -0.94 | -0.15 | 37.01 | 0.0437 | -0.0513 | 0.0003 |
| 15 | SLU 68 | -0.9 | -0.15 | 37.03 | 0.0482 | -0.0495 | 0.0003 |
| 15 | SLU 69 | -0.69 | -0.14 | 37.74 | 0.0385 | -0.0423 | 0.0003 |
| 15 | SLU 70 | -0.68 | -0.15 | 37.71 | 0.045 | -0.0416 | 0.0003 |
| 15 | SLU 71 | -0.66 | -0.14 | 37.79 | 0.0387 | -0.041 | 0.0003 |
| 15 | SLU 72 | -0.65 | -0.15 | 37.76 | 0.0452 | -0.0403 | 0.0003 |
| 15 | SLU 73 | -1.04 | -0.16 | 40.01 | 0.0474 | -0.0569 | 0.0003 |
| 15 | SLU 74 | -0.84 | -0.14 | 40.72 | 0.0376 | -0.0498 | 0.0003 |
| 15 | SLU 75 | -0.83 | -0.15 | 40.69 | 0.0441 | -0.0491 | 0.0003 |
| 15 | SLU 76 | -0.79 | -0.16 | 40.71 | 0.0486 | -0.0473 | 0.0003 |
| 15 | SLU 77 | -0.58 | -0.15 | 41.42 | 0.0389 | -0.0401 | 0.0003 |
| 15 | SLU 78 | -0.57 | -0.16 | 41.39 | 0.0453 | -0.0394 | 0.0003 |
| 15 | SLU 79 | -0.54 | -0.15 | 41.47 | 0.0391 | -0.0388 | 0.0003 |
| 15 | SLU 80 | -0.53 | -0.16 | 41.44 | 0.0455 | -0.0381 | 0.0003 |
| 15 | SLU 81 | -1.01 | -0.15 | 41.64 | 0.0367 | -0.0571 | 0.0003 |
| 15 | SLU 82 | -1 | -0.15 | 41.61 | 0.0432 | -0.0565 | 0.0003 |
| 15 | SLU 83 | -0.75 | -0.15 | 42.34 | 0.038 | -0.0475 | 0.0003 |
| 15 | SLU 84 | -0.74 | -0.16 | 42.31 | 0.0444 | -0.0468 | 0.0003 |
| 15 | SLE RA 1 | -0.93 | -0.1 | 27.64 | 0.0278 | -0.0472 | 0.0002 |
| 15 | SLE RA 2 | -0.92 | -0.11 | 27.6 | 0.035 | -0.0465 | 0.0002 |
| 15 | SLE RA 3 | -0.78 | -0.1 | 28.07 | 0.0285 | -0.0417 | 0.0002 |
| 15 | SLE RA 4 | -0.77 | -0.11 | 28.05 | 0.0328 | -0.0412 | 0.0002 |
| 15 | SLE RA 5 | -0.75 | -0.11 | 28.07 | 0.0358 | -0.04 | 0.0002 |
| 15 | SLE RA 6 | -0.61 | -0.11 | 28.54 | 0.0293 | -0.0352 | 0.0002 |
| 15 | SLE RA 7 | -0.6 | -0.11 | 28.52 | 0.0336 | -0.0348 | 0.0002 |
| 15 | SLE RA 8 | -0.58 | -0.11 | 28.57 | 0.0295 | -0.0343 | 0.0002 |
| 15 | SLE RA 9 | -0.58 | -0.11 | 28.55 | 0.0338 | -0.0339 | 0.0002 |
| 15 | SLE RA 10 | -0.84 | -0.12 | 30.06 | 0.0352 | -0.045 | 0.0002 |
| 15 | SLE RA 11 | -0.71 | -0.11 | 30.53 | 0.0287 | -0.0402 | 0.0002 |
| 15 | SLE RA 12 | -0.7 | -0.12 | 30.51 | 0.033 | -0.0398 | 0.0002 |
| 15 | SLE RA 13 | -0.67 | -0.12 | 30.52 | 0.0361 | -0.0385 | 0.0003 |
| 15 | SLE RA 14 | -0.53 | -0.11 | 31 | 0.0296 | -0.0338 | 0.0002 |
| 15 | SLE RA 15 | -0.53 | -0.12 | 30.98 | 0.0339 | -0.0333 | 0.0002 |
| 15 | SLE RA 16 | -0.51 | -0.11 | 31.03 | 0.0297 | -0.0329 | 0.0002 |
| 15 | SLE RA 17 | -0.5 | -0.12 | 31.01 | 0.034 | -0.0324 | 0.0002 |
| 15 | SLE RA 18 | -0.82 | -0.11 | 31.14 | 0.0282 | -0.0451 | 0.0002 |
| 15 | SLE RA 19 | -0.82 | -0.12 | 31.12 | 0.0325 | -0.0447 | 0.0002 |
| 15 | SLE RA 20 | -0.65 | -0.11 | 31.61 | 0.029 | -0.0387 | 0.0002 |
| 15 | SLE RA 21 | -0.64 | -0.12 | 31.59 | 0.0333 | -0.0382 | 0.0002 |
| 15 | SLE FR 1 | -0.93 | -0.1 | 27.64 | 0.0278 | -0.0472 | 0.0002 |
| 15 | SLE FR 2 | -0.93 | -0.1 | 27.63 | 0.0292 | -0.0471 | 0.0002 |
| 15 | SLE FR 3 | -0.86 | -0.1 | 27.82 | 0.0281 | -0.0446 | 0.0002 |
| 15 | SLE FR 4 | -0.89 | -0.11 | 28.68 | 0.0294 | -0.0464 | 0.0002 |
| 15 | SLE FR 5 | -0.83 | -0.1 | 28.88 | 0.0282 | -0.044 | 0.0002 |
| 15 | SLE FR 6 | -0.88 | -0.11 | 29.39 | 0.028 | -0.0462 | 0.0002 |
| 15 | SLE QP 1 | -0.93 | -0.1 | 27.64 | 0.0278 | -0.0472 | 0.0002 |
| 15 | SLE QP 2 | -0.9 | -0.1 | 28.69 | 0.0279 | -0.0466 | 0.0002 |
| 15 | SLD 1 | 4.33 | -0.2 | 33.88 | 0.0768 | 0.1777 | 0.0002 |
| 15 | SLD 2 | 4.33 | -0.2 | 33.88 | 0.0768 | 0.1777 | 0.0002 |
| 15 | SLD 3 | 3.4 | -0.07 | 30.29 | 0.0102 | 0.1414 | -0.0002 |

| Nodo | Cont. | Reazione a traslazione | | | Reazione a rotazione | | |
|---|---|---|---|---|---|---|---|
| Ind. | N.br. | x | y | z | x | y | z |
| 15 | SLD 4 | 3.4 | -0.07 | 30.29 | 0.0102 | 0.1414 | -0.0002 |
| 15 | SLD 5 | 2.08 | -0.32 | 35.69 | 0.1436 | 0.0758 | 0.0007 |
| 15 | SLD 6 | 2.08 | -0.32 | 35.69 | 0.1436 | 0.0758 | 0.0007 |
| 15 | SLD 7 | -1.02 | 0.09 | 23.73 | -0.0784 | -0.0453 | -0.0004 |
| 15 | SLD 8 | -1.02 | 0.09 | 23.73 | -0.0784 | -0.0453 | -0.0004 |
| 15 | SLD 9 | -0.78 | -0.3 | 33.65 | 0.1343 | -0.0479 | 0.0009 |
| 15 | SLD 10 | -0.78 | -0.3 | 33.65 | 0.1343 | -0.0479 | 0.0009 |
| 15 | SLD 11 | -3.88 | 0.11 | 21.69 | -0.0878 | -0.169 | -0.0003 |
| 15 | SLD 12 | -3.88 | 0.11 | 21.69 | -0.0878 | -0.169 | -0.0003 |
| 15 | SLD 13 | -5.2 | -0.13 | 27.09 | 0.0456 | -0.2345 | 0.0006 |
| 15 | SLD 14 | -5.2 | -0.13 | 27.09 | 0.0456 | -0.2345 | 0.0006 |
| 15 | SLD 15 | -6.13 | -0.01 | 23.5 | -0.021 | -0.2709 | 0.0002 |
| 15 | SLD 16 | -6.13 | -0.01 | 23.5 | -0.021 | -0.2709 | 0.0002 |
| 15 | SLV 1 | 11.21 | -0.32 | 40.8 | 0.1411 | 0.4727 | 0.0002 |
| 15 | SLV 2 | 11.21 | -0.32 | 40.8 | 0.1411 | 0.4727 | 0.0002 |
| 15 | SLV 3 | 9 | -0.04 | 32.43 | -0.0126 | 0.3866 | -0.0006 |
| 15 | SLV 4 | 9 | -0.04 | 32.43 | -0.0126 | 0.3866 | -0.0006 |
| 15 | SLV 5 | 6.08 | -0.6 | 45.02 | 0.295 | 0.2398 | 0.0014 |
| 15 | SLV 6 | 6.08 | -0.6 | 45.02 | 0.295 | 0.2398 | 0.0014 |
| 15 | SLV 7 | -1.27 | 0.35 | 17.11 | -0.2173 | -0.0473 | -0.0013 |
| 15 | SLV 8 | -1.27 | 0.35 | 17.11 | -0.2173 | -0.0473 | -0.0013 |
| 15 | SLV 9 | -0.52 | -0.56 | 40.27 | 0.2732 | -0.0459 | 0.0017 |
| 15 | SLV 10 | -0.52 | -0.56 | 40.27 | 0.2732 | -0.0459 | 0.0017 |
| 15 | SLV 11 | -7.87 | 0.4 | 12.36 | -0.2391 | -0.333 | -0.001 |
| 15 | SLV 12 | -7.87 | 0.4 | 12.36 | -0.2391 | -0.333 | -0.001 |
| 15 | SLV 13 | -10.8 | -0.17 | 24.95 | 0.0684 | -0.4798 | 0.0011 |
| 15 | SLV 14 | -10.8 | -0.17 | 24.95 | 0.0684 | -0.4798 | 0.0011 |
| 15 | SLV 15 | -13 | 0.12 | 16.58 | -0.0853 | -0.5659 | 0.0003 |
| 15 | SLV 16 | -13 | 0.12 | 16.58 | -0.0853 | -0.5659 | 0.0003 |
| 16 | SLU 1 | 1.41 | -0.11 | 27.63 | 0.0298 | 0.0595 | 0.0003 |
| 16 | SLU 2 | 1.38 | -0.12 | 27.5 | 0.0409 | 0.0586 | 0.0003 |
| 16 | SLU 3 | 1.71 | -0.11 | 28.55 | 0.031 | 0.0715 | 0.0003 |
| 16 | SLU 4 | 1.69 | -0.12 | 28.47 | 0.0376 | 0.0709 | 0.0003 |
| 16 | SLU 5 | 1.72 | -0.13 | 28.49 | 0.0423 | 0.0721 | 0.0003 |
| 16 | SLU 6 | 2.06 | -0.12 | 29.54 | 0.0324 | 0.085 | 0.0003 |
| 16 | SLU 7 | 2.04 | -0.13 | 29.46 | 0.039 | 0.0845 | 0.0003 |
| 16 | SLU 8 | 2.1 | -0.12 | 29.63 | 0.0326 | 0.0866 | 0.0003 |
| 16 | SLU 9 | 2.08 | -0.13 | 29.55 | 0.0392 | 0.086 | 0.0003 |
| 16 | SLU 10 | 1.74 | -0.13 | 31.42 | 0.042 | 0.0743 | 0.0003 |
| 16 | SLU 11 | 2.08 | -0.12 | 32.47 | 0.0321 | 0.0873 | 0.0003 |
| 16 | SLU 12 | 2.06 | -0.13 | 32.39 | 0.0387 | 0.0867 | 0.0003 |
| 16 | SLU 13 | 2.09 | -0.14 | 32.42 | 0.0434 | 0.0879 | 0.0003 |
| 16 | SLU 14 | 2.43 | -0.13 | 33.47 | 0.0335 | 0.1008 | 0.0003 |
| 16 | SLU 15 | 2.41 | -0.14 | 33.39 | 0.0401 | 0.1002 | 0.0003 |
| 16 | SLU 16 | 2.47 | -0.13 | 33.55 | 0.0337 | 0.1024 | 0.0003 |
| 16 | SLU 17 | 2.45 | -0.14 | 33.47 | 0.0403 | 0.1018 | 0.0003 |
| 16 | SLU 18 | 1.93 | -0.12 | 33.24 | 0.0314 | 0.082 | 0.0003 |
| 16 | SLU 19 | 1.92 | -0.13 | 33.16 | 0.038 | 0.0815 | 0.0003 |
| 16 | SLU 20 | 2.28 | -0.13 | 34.23 | 0.0328 | 0.0956 | 0.0003 |
| 16 | SLU 21 | 2.26 | -0.14 | 34.15 | 0.0394 | 0.095 | 0.0003 |
| 16 | SLU 22 | 1.7 | -0.11 | 29.42 | 0.0304 | 0.0713 | 0.0003 |
| 16 | SLU 23 | 1.67 | -0.13 | 29.29 | 0.0415 | 0.0704 | 0.0003 |
| 16 | SLU 24 | 2 | -0.12 | 30.34 | 0.0315 | 0.0833 | 0.0003 |
| 16 | SLU 25 | 1.99 | -0.13 | 30.26 | 0.0382 | 0.0827 | 0.0003 |
| 16 | SLU 26 | 2.01 | -0.13 | 30.29 | 0.0428 | 0.0839 | 0.0003 |
| 16 | SLU 27 | 2.35 | -0.12 | 31.34 | 0.0329 | 0.0968 | 0.0003 |
| 16 | SLU 28 | 2.33 | -0.13 | 31.26 | 0.0395 | 0.0963 | 0.0003 |
| 16 | SLU 29 | 2.39 | -0.12 | 31.42 | 0.0331 | 0.0984 | 0.0003 |
| 16 | SLU 30 | 2.37 | -0.13 | 31.34 | 0.0398 | 0.0978 | 0.0003 |
| 16 | SLU 31 | 2.04 | -0.14 | 33.21 | 0.0425 | 0.0861 | 0.0003 |
| 16 | SLU 32 | 2.37 | -0.13 | 34.26 | 0.0326 | 0.099 | 0.0003 |
| 16 | SLU 33 | 2.35 | -0.14 | 34.18 | 0.0393 | 0.0985 | 0.0003 |
| 16 | SLU 34 | 2.38 | -0.15 | 34.21 | 0.0439 | 0.0997 | 0.0003 |
| 16 | SLU 35 | 2.72 | -0.13 | 35.26 | 0.034 | 0.1126 | 0.0003 |
| 16 | SLU 36 | 2.7 | -0.14 | 35.18 | 0.0406 | 0.112 | 0.0003 |
| 16 | SLU 37 | 2.76 | -0.14 | 35.34 | 0.0342 | 0.1141 | 0.0003 |
| 16 | SLU 38 | 2.74 | -0.14 | 35.26 | 0.0409 | 0.1136 | 0.0003 |
| 16 | SLU 39 | 2.23 | -0.13 | 35.03 | 0.0319 | 0.0938 | 0.0003 |
| 16 | SLU 40 | 2.21 | -0.14 | 34.95 | 0.0386 | 0.0933 | 0.0003 |
| 16 | SLU 41 | 2.57 | -0.13 | 36.03 | 0.0333 | 0.1074 | 0.0003 |
| 16 | SLU 42 | 2.55 | -0.14 | 35.95 | 0.04 | 0.1068 | 0.0003 |
| 16 | SLU 43 | 1.73 | -0.14 | 35.31 | 0.0386 | 0.0734 | 0.0003 |
| 16 | SLU 44 | 1.7 | -0.15 | 35.17 | 0.0497 | 0.0724 | 0.0004 |
| 16 | SLU 45 | 2.04 | -0.14 | 36.22 | 0.0397 | 0.0853 | 0.0003 |
| 16 | SLU 46 | 2.02 | -0.15 | 36.14 | 0.0464 | 0.0848 | 0.0003 |
| 16 | SLU 47 | 2.04 | -0.16 | 36.17 | 0.0511 | 0.0859 | 0.0004 |
| 16 | SLU 48 | 2.38 | -0.15 | 37.22 | 0.0411 | 0.0989 | 0.0003 |
| 16 | SLU 49 | 2.36 | -0.16 | 37.14 | 0.0478 | 0.0983 | 0.0004 |
| 16 | SLU 50 | 2.42 | -0.15 | 37.3 | 0.0414 | 0.1004 | 0.0003 |
| 16 | SLU 51 | 2.4 | -0.16 | 37.22 | 0.048 | 0.0999 | 0.0004 |
| 16 | SLU 52 | 2.07 | -0.17 | 39.1 | 0.0508 | 0.0882 | 0.0004 |
| 16 | SLU 53 | 2.4 | -0.15 | 40.14 | 0.0408 | 0.1011 | 0.0004 |
| 16 | SLU 54 | 2.39 | -0.16 | 40.06 | 0.0475 | 0.1005 | 0.0004 |
| 16 | SLU 55 | 2.41 | -0.17 | 40.09 | 0.0522 | 0.1017 | 0.0004 |
| 16 | SLU 56 | 2.75 | -0.16 | 41.14 | 0.0422 | 0.1146 | 0.0004 |
| 16 | SLU 57 | 2.73 | -0.17 | 41.06 | 0.0489 | 0.114 | 0.0004 |
| 16 | SLU 58 | 2.79 | -0.16 | 41.22 | 0.0425 | 0.1162 | 0.0004 |
| 16 | SLU 59 | 2.77 | -0.17 | 41.14 | 0.0491 | 0.1156 | 0.0004 |

| Nodo | Cont. | Reazione a traslazione | | | Reazione a rotazione | | |
|---|---|---|---|---|---|---|---|
| Ind. | N.br. | x | y | z | x | y | z |
| 16 | SLU 60 | 2.26 | -0.15 | 40.91 | 0.0402 | 0.0959 | 0.0004 |
| 16 | SLU 61 | 2.24 | -0.16 | 40.83 | 0.0468 | 0.0953 | 0.0004 |
| 16 | SLU 62 | 2.6 | -0.16 | 41.91 | 0.0415 | 0.1094 | 0.0004 |
| 16 | SLU 63 | 2.58 | -0.17 | 41.83 | 0.0482 | 0.1088 | 0.0004 |
| 16 | SLU 64 | 2.02 | -0.14 | 37.1 | 0.0391 | 0.0851 | 0.0003 |
| 16 | SLU 65 | 1.99 | -0.16 | 36.97 | 0.0502 | 0.0842 | 0.0004 |
| 16 | SLU 66 | 2.33 | -0.15 | 38.01 | 0.0403 | 0.0971 | 0.0003 |
| 16 | SLU 67 | 2.31 | -0.16 | 37.93 | 0.0469 | 0.0965 | 0.0004 |
| 16 | SLU 68 | 2.34 | -0.16 | 37.96 | 0.0516 | 0.0977 | 0.0004 |
| 16 | SLU 69 | 2.67 | -0.15 | 39.01 | 0.0417 | 0.1106 | 0.0004 |
| 16 | SLU 70 | 2.65 | -0.16 | 38.93 | 0.0483 | 0.1101 | 0.0004 |
| 16 | SLU 71 | 2.71 | -0.15 | 39.09 | 0.0419 | 0.1122 | 0.0004 |
| 16 | SLU 72 | 2.7 | -0.16 | 39.01 | 0.0485 | 0.1116 | 0.0004 |
| 16 | SLU 73 | 2.36 | -0.17 | 40.89 | 0.0513 | 0.0999 | 0.0004 |
| 16 | SLU 74 | 2.7 | -0.16 | 41.94 | 0.0414 | 0.1129 | 0.0004 |
| 16 | SLU 75 | 2.68 | -0.17 | 41.86 | 0.048 | 0.1123 | 0.0004 |
| 16 | SLU 76 | 2.7 | -0.18 | 41.89 | 0.0527 | 0.1135 | 0.0004 |
| 16 | SLU 77 | 3.04 | -0.16 | 42.93 | 0.0427 | 0.1264 | 0.0004 |
| 16 | SLU 78 | 3.02 | -0.17 | 42.85 | 0.0494 | 0.1258 | 0.0004 |
| 16 | SLU 79 | 3.08 | -0.17 | 43.02 | 0.043 | 0.128 | 0.0004 |
| 16 | SLU 80 | 3.06 | -0.18 | 42.94 | 0.0496 | 0.1274 | 0.0004 |
| 16 | SLU 81 | 2.55 | -0.16 | 42.7 | 0.0407 | 0.1076 | 0.0004 |
| 16 | SLU 82 | 2.53 | -0.17 | 42.62 | 0.0473 | 0.1071 | 0.0004 |
| 16 | SLU 83 | 2.9 | -0.17 | 43.7 | 0.0421 | 0.1212 | 0.0004 |
| 16 | SLU 84 | 2.88 | -0.17 | 43.62 | 0.0487 | 0.1206 | 0.0004 |
| 16 | SLE RA 1 | 1.49 | -0.11 | 28.14 | 0.03 | 0.0629 | 0.0003 |
| 16 | SLE RA 2 | 1.47 | -0.12 | 28.05 | 0.0374 | 0.0623 | 0.0003 |
| 16 | SLE RA 3 | 1.69 | -0.11 | 28.75 | 0.0307 | 0.0709 | 0.0003 |
| 16 | SLE RA 4 | 1.68 | -0.12 | 28.7 | 0.0352 | 0.0705 | 0.0003 |
| 16 | SLE RA 5 | 1.7 | -0.12 | 28.72 | 0.0383 | 0.0713 | 0.0003 |
| 16 | SLE RA 6 | 1.93 | -0.12 | 29.42 | 0.0317 | 0.0799 | 0.0003 |
| 16 | SLE RA 7 | 1.91 | -0.12 | 29.36 | 0.0361 | 0.0795 | 0.0003 |
| 16 | SLE RA 8 | 1.95 | -0.12 | 29.47 | 0.0318 | 0.0809 | 0.0003 |
| 16 | SLE RA 9 | 1.94 | -0.12 | 29.42 | 0.0363 | 0.0806 | 0.0003 |
| 16 | SLE RA 10 | 1.72 | -0.13 | 30.67 | 0.0381 | 0.0728 | 0.0003 |
| 16 | SLE RA 11 | 1.94 | -0.12 | 31.37 | 0.0315 | 0.0814 | 0.0003 |
| 16 | SLE RA 12 | 1.93 | -0.13 | 31.32 | 0.0359 | 0.081 | 0.0003 |
| 16 | SLE RA 13 | 1.95 | -0.13 | 31.33 | 0.039 | 0.0818 | 0.0003 |
| 16 | SLE RA 14 | 2.17 | -0.12 | 32.03 | 0.0324 | 0.0904 | 0.0003 |
| 16 | SLE RA 15 | 2.16 | -0.13 | 31.98 | 0.0368 | 0.09 | 0.0003 |
| 16 | SLE RA 16 | 2.2 | -0.12 | 32.09 | 0.0326 | 0.0915 | 0.0003 |
| 16 | SLE RA 17 | 2.19 | -0.13 | 32.04 | 0.037 | 0.0911 | 0.0003 |
| 16 | SLE RA 18 | 1.84 | -0.12 | 31.88 | 0.031 | 0.0779 | 0.0003 |
| 16 | SLE RA 19 | 1.83 | -0.13 | 31.83 | 0.0355 | 0.0775 | 0.0003 |
| 16 | SLE RA 20 | 2.07 | -0.12 | 32.55 | 0.0319 | 0.0869 | 0.0003 |
| 16 | SLE RA 21 | 2.06 | -0.13 | 32.49 | 0.0364 | 0.0866 | 0.0003 |
| 16 | SLE FR 1 | 1.49 | -0.11 | 28.14 | 0.03 | 0.0629 | 0.0003 |
| 16 | SLE FR 2 | 1.49 | -0.11 | 28.13 | 0.0315 | 0.0628 | 0.0003 |
| 16 | SLE FR 3 | 1.58 | -0.11 | 28.41 | 0.0303 | 0.0665 | 0.0003 |
| 16 | SLE FR 4 | 1.59 | -0.11 | 29.25 | 0.0318 | 0.0673 | 0.0003 |
| 16 | SLE FR 5 | 1.69 | -0.11 | 29.53 | 0.0307 | 0.071 | 0.0003 |
| 16 | SLE FR 6 | 1.67 | -0.11 | 30.01 | 0.0305 | 0.0704 | 0.0003 |
| 16 | SLE QP 1 | 1.49 | -0.11 | 28.14 | 0.03 | 0.0629 | 0.0003 |
| 16 | SLE QP 2 | 1.6 | -0.11 | 29.26 | 0.0303 | 0.0674 | 0.0003 |
| 16 | SLD 1 | 6.77 | -0.24 | 34.23 | 0.0902 | 0.2896 | 0.0003 |
| 16 | SLD 2 | 6.77 | -0.24 | 34.23 | 0.0902 | 0.2896 | 0.0003 |
| 16 | SLD 3 | 5.68 | -0.12 | 30.13 | 0.0241 | 0.2456 | 0.0001 |
| 16 | SLD 4 | 5.68 | -0.12 | 30.13 | 0.0241 | 0.2456 | 0.0001 |
| 16 | SLD 5 | 4.81 | -0.34 | 36.97 | 0.1485 | 0.2007 | 0.0007 |
| 16 | SLD 6 | 4.81 | -0.34 | 36.97 | 0.1485 | 0.2007 | 0.0007 |
| 16 | SLD 7 | 1.15 | 0.07 | 23.31 | -0.0718 | 0.0542 | -0.0002 |
| 16 | SLD 8 | 1.15 | 0.07 | 23.31 | -0.0718 | 0.0542 | -0.0002 |
| 16 | SLD 9 | 2.04 | -0.3 | 35.22 | 0.1324 | 0.0806 | 0.0007 |
| 16 | SLD 10 | 2.04 | -0.3 | 35.22 | 0.1324 | 0.0806 | 0.0007 |
| 16 | SLD 11 | -1.62 | 0.12 | 21.56 | -0.0879 | -0.0659 | -0.0001 |
| 16 | SLD 12 | -1.62 | 0.12 | 21.56 | -0.0879 | -0.0659 | -0.0001 |
| 16 | SLD 13 | -2.48 | -0.11 | 28.39 | 0.0365 | -0.1108 | 0.0005 |
| 16 | SLD 14 | -2.48 | -0.11 | 28.39 | 0.0365 | -0.1108 | 0.0005 |
| 16 | SLD 15 | -3.58 | 0.02 | 24.29 | -0.0296 | -0.1548 | 0.0002 |
| 16 | SLD 16 | -3.58 | 0.02 | 24.29 | -0.0296 | -0.1548 | 0.0002 |
| 16 | SLV 1 | 13.6 | -0.42 | 40.92 | 0.1695 | 0.5828 | 0.0003 |
| 16 | SLV 2 | 13.6 | -0.42 | 40.92 | 0.1695 | 0.5828 | 0.0003 |
| 16 | SLV 3 | 10.98 | -0.13 | 31.28 | 0.0171 | 0.478 | -0.0002 |
| 16 | SLV 4 | 10.98 | -0.13 | 31.28 | 0.0171 | 0.478 | -0.0002 |
| 16 | SLV 5 | 9.17 | -0.64 | 47.38 | 0.3033 | 0.3809 | 0.0012 |
| 16 | SLV 6 | 9.17 | -0.64 | 47.38 | 0.3033 | 0.3809 | 0.0012 |
| 16 | SLV 7 | 0.43 | 0.32 | 15.25 | -0.205 | 0.0316 | -0.0007 |
| 16 | SLV 8 | 0.43 | 0.32 | 15.25 | -0.205 | 0.0316 | -0.0007 |
| 16 | SLV 9 | 2.76 | -0.54 | 43.28 | 0.2655 | 0.1032 | 0.0013 |
| 16 | SLV 10 | 2.76 | -0.54 | 43.28 | 0.2655 | 0.1032 | 0.0013 |
| 16 | SLV 11 | -5.98 | 0.41 | 11.15 | -0.2428 | -0.2461 | -0.0006 |
| 16 | SLV 12 | -5.98 | 0.41 | 11.15 | -0.2428 | -0.2461 | -0.0006 |
| 16 | SLV 13 | -7.79 | -0.09 | 27.25 | 0.0435 | -0.3432 | 0.0008 |
| 16 | SLV 14 | -7.79 | -0.09 | 27.25 | 0.0435 | -0.3432 | 0.0008 |
| 16 | SLV 15 | -10.41 | 0.19 | 17.61 | -0.109 | -0.448 | 0.0002 |
| 16 | SLV 16 | -10.41 | 0.19 | 17.61 | -0.109 | -0.448 | 0.0002 |
| 17 | SLU 1 | 2.79 | -0.06 | 31.1 | 0.0124 | 0.0879 | 0.0002 |
| 17 | SLU 2 | 2.72 | -0.07 | 30.81 | 0.0214 | 0.0861 | 0.0002 |

| Nodo | Cont. | Reazione a traslazione | | | Reazione a rotazione | | |
|---|---|---|---|---|---|---|---|
| Ind. | N.br. | x | y | z | x | y | z |
| 17 | SLU 3 | 3.13 | -0.06 | 32.38 | 0.0127 | 0.1001 | 0.0002 |
| 17 | SLU 4 | 3.09 | -0.07 | 32.21 | 0.0181 | 0.0991 | 0.0002 |
| 17 | SLU 5 | 3.1 | -0.07 | 32.22 | 0.0219 | 0.0999 | 0.0002 |
| 17 | SLU 6 | 3.5 | -0.06 | 33.79 | 0.0131 | 0.1138 | 0.0002 |
| 17 | SLU 7 | 3.46 | -0.07 | 33.62 | 0.0185 | 0.1128 | 0.0002 |
| 17 | SLU 8 | 3.54 | -0.07 | 33.92 | 0.0133 | 0.1153 | 0.0002 |
| 17 | SLU 9 | 3.5 | -0.07 | 33.74 | 0.0187 | 0.1143 | 0.0002 |
| 17 | SLU 10 | 3.16 | -0.08 | 35.31 | 0.0209 | 0.1 | 0.0002 |
| 17 | SLU 11 | 3.57 | -0.07 | 36.88 | 0.0122 | 0.114 | 0.0002 |
| 17 | SLU 12 | 3.53 | -0.07 | 36.7 | 0.0176 | 0.1129 | 0.0002 |
| 17 | SLU 13 | 3.54 | -0.08 | 36.71 | 0.0213 | 0.1137 | 0.0002 |
| 17 | SLU 14 | 3.95 | -0.07 | 38.28 | 0.0126 | 0.1277 | 0.0002 |
| 17 | SLU 15 | 3.9 | -0.08 | 38.11 | 0.018 | 0.1267 | 0.0002 |
| 17 | SLU 16 | 3.99 | -0.07 | 38.41 | 0.0127 | 0.1292 | 0.0002 |
| 17 | SLU 17 | 3.94 | -0.08 | 38.23 | 0.0181 | 0.1282 | 0.0002 |
| 17 | SLU 18 | 3.42 | -0.07 | 37.52 | 0.0117 | 0.1077 | 0.0002 |
| 17 | SLU 19 | 3.38 | -0.07 | 37.35 | 0.0171 | 0.1066 | 0.0002 |
| 17 | SLU 20 | 3.8 | -0.07 | 38.93 | 0.0121 | 0.1214 | 0.0002 |
| 17 | SLU 21 | 3.76 | -0.08 | 38.75 | 0.0175 | 0.1204 | 0.0002 |
| 17 | SLU 22 | 3.16 | -0.06 | 33.32 | 0.0118 | 0.1007 | 0.0002 |
| 17 | SLU 23 | 3.09 | -0.07 | 33.03 | 0.0208 | 0.099 | 0.0002 |
| 17 | SLU 24 | 3.5 | -0.06 | 34.6 | 0.0121 | 0.1129 | 0.0002 |
| 17 | SLU 25 | 3.46 | -0.07 | 34.42 | 0.0175 | 0.1119 | 0.0002 |
| 17 | SLU 26 | 3.47 | -0.08 | 34.43 | 0.0212 | 0.1127 | 0.0002 |
| 17 | SLU 27 | 3.88 | -0.07 | 36 | 0.0125 | 0.1267 | 0.0002 |
| 17 | SLU 28 | 3.84 | -0.07 | 35.83 | 0.0179 | 0.1256 | 0.0002 |
| 17 | SLU 29 | 3.92 | -0.07 | 36.13 | 0.0126 | 0.1282 | 0.0002 |
| 17 | SLU 30 | 3.88 | -0.07 | 35.95 | 0.0181 | 0.1271 | 0.0002 |
| 17 | SLU 31 | 3.54 | -0.08 | 37.52 | 0.0203 | 0.1128 | 0.0002 |
| 17 | SLU 32 | 3.94 | -0.07 | 39.09 | 0.0115 | 0.1268 | 0.0002 |
| 17 | SLU 33 | 3.9 | -0.08 | 38.91 | 0.017 | 0.1258 | 0.0002 |
| 17 | SLU 34 | 3.91 | -0.08 | 38.92 | 0.0207 | 0.1266 | 0.0002 |
| 17 | SLU 35 | 4.32 | -0.07 | 40.49 | 0.012 | 0.1406 | 0.0002 |
| 17 | SLU 36 | 4.28 | -0.08 | 40.32 | 0.0174 | 0.1395 | 0.0002 |
| 17 | SLU 37 | 4.36 | -0.07 | 40.62 | 0.0121 | 0.142 | 0.0002 |
| 17 | SLU 38 | 4.32 | -0.08 | 40.44 | 0.0175 | 0.141 | 0.0002 |
| 17 | SLU 39 | 3.79 | -0.07 | 39.73 | 0.011 | 0.1205 | 0.0002 |
| 17 | SLU 40 | 3.75 | -0.08 | 39.56 | 0.0165 | 0.1195 | 0.0002 |
| 17 | SLU 41 | 4.17 | -0.07 | 41.14 | 0.0115 | 0.1343 | 0.0002 |
| 17 | SLU 42 | 4.13 | -0.08 | 40.96 | 0.0169 | 0.1332 | 0.0002 |
| 17 | SLU 43 | 3.5 | -0.08 | 39.68 | 0.0163 | 0.1098 | 0.0002 |
| 17 | SLU 44 | 3.43 | -0.09 | 39.39 | 0.0254 | 0.1081 | 0.0002 |
| 17 | SLU 45 | 3.83 | -0.08 | 40.96 | 0.0166 | 0.122 | 0.0002 |
| 17 | SLU 46 | 3.79 | -0.09 | 40.78 | 0.022 | 0.121 | 0.0002 |
| 17 | SLU 47 | 3.81 | -0.09 | 40.79 | 0.0258 | 0.1218 | 0.0002 |
| 17 | SLU 48 | 4.21 | -0.08 | 42.36 | 0.017 | 0.1358 | 0.0002 |
| 17 | SLU 49 | 4.17 | -0.09 | 42.19 | 0.0225 | 0.1347 | 0.0002 |
| 17 | SLU 50 | 4.25 | -0.08 | 42.49 | 0.0172 | 0.1373 | 0.0002 |
| 17 | SLU 51 | 4.21 | -0.09 | 42.32 | 0.0226 | 0.1362 | 0.0002 |
| 17 | SLU 52 | 3.87 | -0.09 | 43.88 | 0.0248 | 0.122 | 0.0003 |
| 17 | SLU 53 | 4.28 | -0.08 | 45.45 | 0.0161 | 0.1359 | 0.0003 |
| 17 | SLU 54 | 4.24 | -0.09 | 45.28 | 0.0215 | 0.1349 | 0.0003 |
| 17 | SLU 55 | 4.25 | -0.1 | 45.29 | 0.0253 | 0.1357 | 0.0003 |
| 17 | SLU 56 | 4.65 | -0.09 | 46.86 | 0.0165 | 0.1497 | 0.0003 |
| 17 | SLU 57 | 4.61 | -0.09 | 46.68 | 0.0219 | 0.1486 | 0.0003 |
| 17 | SLU 58 | 4.69 | -0.09 | 46.98 | 0.0167 | 0.1512 | 0.0003 |
| 17 | SLU 59 | 4.65 | -0.1 | 46.81 | 0.0221 | 0.1501 | 0.0003 |
| 17 | SLU 60 | 4.13 | -0.08 | 46.1 | 0.0156 | 0.1296 | 0.0003 |
| 17 | SLU 61 | 4.09 | -0.09 | 45.92 | 0.021 | 0.1286 | 0.0003 |
| 17 | SLU 62 | 4.51 | -0.09 | 47.5 | 0.016 | 0.1434 | 0.0003 |
| 17 | SLU 63 | 4.46 | -0.09 | 47.33 | 0.0214 | 0.1423 | 0.0003 |
| 17 | SLU 64 | 3.87 | -0.08 | 41.89 | 0.0157 | 0.1227 | 0.0002 |
| 17 | SLU 65 | 3.8 | -0.09 | 41.6 | 0.0247 | 0.1209 | 0.0002 |
| 17 | SLU 66 | 4.21 | -0.08 | 43.17 | 0.016 | 0.1349 | 0.0002 |
| 17 | SLU 67 | 4.17 | -0.09 | 42.99 | 0.0214 | 0.1339 | 0.0002 |
| 17 | SLU 68 | 4.18 | -0.09 | 43 | 0.0252 | 0.1347 | 0.0002 |
| 17 | SLU 69 | 4.59 | -0.08 | 44.57 | 0.0164 | 0.1486 | 0.0002 |
| 17 | SLU 70 | 4.54 | -0.09 | 44.4 | 0.0218 | 0.1476 | 0.0002 |
| 17 | SLU 71 | 4.63 | -0.08 | 44.7 | 0.0166 | 0.1501 | 0.0002 |
| 17 | SLU 72 | 4.58 | -0.09 | 44.53 | 0.022 | 0.1491 | 0.0002 |
| 17 | SLU 73 | 4.24 | -0.1 | 46.09 | 0.0242 | 0.1348 | 0.0003 |
| 17 | SLU 74 | 4.65 | -0.09 | 47.66 | 0.0155 | 0.1488 | 0.0003 |
| 17 | SLU 75 | 4.61 | -0.09 | 47.49 | 0.0209 | 0.1477 | 0.0003 |
| 17 | SLU 76 | 4.62 | -0.1 | 47.5 | 0.0246 | 0.1485 | 0.0003 |
| 17 | SLU 77 | 5.03 | -0.09 | 49.07 | 0.0159 | 0.1625 | 0.0003 |
| 17 | SLU 78 | 4.99 | -0.1 | 48.89 | 0.0213 | 0.1615 | 0.0003 |
| 17 | SLU 79 | 5.07 | -0.09 | 49.19 | 0.016 | 0.164 | 0.0003 |
| 17 | SLU 80 | 5.03 | -0.1 | 49.02 | 0.0215 | 0.163 | 0.0003 |
| 17 | SLU 81 | 4.5 | -0.09 | 48.31 | 0.015 | 0.1425 | 0.0003 |
| 17 | SLU 82 | 4.46 | -0.09 | 48.13 | 0.0204 | 0.1414 | 0.0003 |
| 17 | SLU 83 | 4.88 | -0.09 | 49.71 | 0.0154 | 0.1562 | 0.0003 |
| 17 | SLU 84 | 4.84 | -0.1 | 49.54 | 0.0208 | 0.1552 | 0.0003 |
| 17 | SLE RA 1 | 2.9 | -0.06 | 31.74 | 0.0122 | 0.0915 | 0.0002 |
| 17 | SLE RA 2 | 2.85 | -0.07 | 31.54 | 0.0182 | 0.0904 | 0.0002 |
| 17 | SLE RA 3 | 3.12 | -0.06 | 32.59 | 0.0124 | 0.0997 | 0.0002 |
| 17 | SLE RA 4 | 3.09 | -0.07 | 32.47 | 0.016 | 0.099 | 0.0002 |
| 17 | SLE RA 5 | 3.1 | -0.07 | 32.48 | 0.0185 | 0.0995 | 0.0002 |
| 17 | SLE RA 6 | 3.37 | -0.06 | 33.53 | 0.0127 | 0.1088 | 0.0002 |

| Nodo | Cont. | Reazione a traslazione | | | Reazione a rotazione | | |
|---|---|---|---|---|---|---|---|
| Ind. | N.br. | x | y | z | x | y | z |
| 17 | SLE RA 7 | 3.34 | -0.07 | 33.41 | 0.0163 | 0.1081 | 0.0002 |
| 17 | SLE RA 8 | 3.4 | -0.06 | 33.61 | 0.0128 | 0.1098 | 0.0002 |
| 17 | SLE RA 9 | 3.37 | -0.07 | 33.49 | 0.0164 | 0.1091 | 0.0002 |
| 17 | SLE RA 10 | 3.14 | -0.07 | 34.54 | 0.0179 | 0.0996 | 0.0002 |
| 17 | SLE RA 11 | 3.42 | -0.07 | 35.58 | 0.0121 | 0.1089 | 0.0002 |
| 17 | SLE RA 12 | 3.39 | -0.07 | 35.47 | 0.0157 | 0.1082 | 0.0002 |
| 17 | SLE RA 13 | 3.4 | -0.07 | 35.48 | 0.0182 | 0.1088 | 0.0002 |
| 17 | SLE RA 14 | 3.67 | -0.07 | 36.52 | 0.0123 | 0.1181 | 0.0002 |
| 17 | SLE RA 15 | 3.64 | -0.07 | 36.41 | 0.016 | 0.1174 | 0.0002 |
| 17 | SLE RA 16 | 3.69 | -0.07 | 36.61 | 0.0124 | 0.1191 | 0.0002 |
| 17 | SLE RA 17 | 3.67 | -0.07 | 36.49 | 0.0161 | 0.1184 | 0.0002 |
| 17 | SLE RA 18 | 3.32 | -0.07 | 36.02 | 0.0117 | 0.1047 | 0.0002 |
| 17 | SLE RA 19 | 3.29 | -0.07 | 35.9 | 0.0153 | 0.1041 | 0.0002 |
| 17 | SLE RA 20 | 3.57 | -0.07 | 36.95 | 0.012 | 0.1139 | 0.0002 |
| 17 | SLE RA 21 | 3.54 | -0.07 | 36.84 | 0.0156 | 0.1132 | 0.0002 |
| 17 | SLE FR 1 | 2.9 | -0.06 | 31.74 | 0.0122 | 0.0915 | 0.0002 |
| 17 | SLE FR 2 | 2.89 | -0.06 | 31.7 | 0.0134 | 0.0913 | 0.0002 |
| 17 | SLE FR 3 | 3 | -0.06 | 32.11 | 0.0123 | 0.0952 | 0.0002 |
| 17 | SLE FR 4 | 3.01 | -0.06 | 32.98 | 0.0133 | 0.0953 | 0.0002 |
| 17 | SLE FR 5 | 3.12 | -0.06 | 33.39 | 0.0122 | 0.0992 | 0.0002 |
| 17 | SLE FR 6 | 3.11 | -0.06 | 33.88 | 0.012 | 0.0981 | 0.0002 |
| 17 | SLE QP 1 | 2.9 | -0.06 | 31.74 | 0.0122 | 0.0915 | 0.0002 |
| 17 | SLE QP 2 | 3.02 | -0.06 | 33.02 | 0.0121 | 0.0955 | 0.0002 |
| 17 | SLD 1 | 8.03 | -0.2 | 39.02 | 0.0221 | 0.3114 | -0.0002 |
| 17 | SLD 2 | 8.03 | -0.2 | 39.02 | 0.0221 | 0.3114 | -0.0002 |
| 17 | SLD 3 | 6.84 | -0.12 | 33.74 | 0.0721 | 0.268 | 0.0001 |
| 17 | SLD 4 | 6.84 | -0.12 | 33.74 | 0.0721 | 0.268 | 0.0001 |
| 17 | SLD 5 | 6.33 | -0.23 | 42.82 | -0.0608 | 0.2261 | -0.0004 |
| 17 | SLD 6 | 6.33 | -0.23 | 42.82 | -0.0608 | 0.2261 | -0.0004 |
| 17 | SLD 7 | 2.37 | 0.05 | 25.23 | 0.106 | 0.0814 | 0.0007 |
| 17 | SLD 8 | 2.37 | 0.05 | 25.23 | 0.106 | 0.0814 | 0.0007 |
| 17 | SLD 9 | 3.68 | -0.17 | 40.81 | -0.0818 | 0.1096 | -0.0003 |
| 17 | SLD 10 | 3.68 | -0.17 | 40.81 | -0.0818 | 0.1096 | -0.0003 |
| 17 | SLD 11 | -0.28 | 0.11 | 23.22 | 0.0849 | -0.0351 | 0.0008 |
| 17 | SLD 12 | -0.28 | 0.11 | 23.22 | 0.0849 | -0.0351 | 0.0008 |
| 17 | SLD 13 | -0.8 | 0 | 32.3 | -0.048 | -0.077 | 0.0003 |
| 17 | SLD 14 | -0.8 | 0 | 32.3 | -0.048 | -0.077 | 0.0003 |
| 17 | SLD 15 | -1.99 | 0.08 | 27.02 | 0.002 | -0.1204 | 0.0006 |
| 17 | SLD 16 | -1.99 | 0.08 | 27.02 | 0.002 | -0.1204 | 0.0006 |
| 17 | SLV 1 | 14.64 | -0.39 | 47.12 | 0.0366 | 0.5963 | -0.0008 |
| 17 | SLV 2 | 14.64 | -0.39 | 47.12 | 0.0366 | 0.5963 | -0.0008 |
| 17 | SLV 3 | 11.8 | -0.19 | 34.65 | 0.1521 | 0.4927 | 0 |
| 17 | SLV 4 | 11.8 | -0.19 | 34.65 | 0.1521 | 0.4927 | 0 |
| 17 | SLV 5 | 10.81 | -0.45 | 56.16 | -0.1557 | 0.403 | -0.0012 |
| 17 | SLV 6 | 10.81 | -0.45 | 56.16 | -0.1557 | 0.403 | -0.0012 |
| 17 | SLV 7 | 1.36 | 0.19 | 14.6 | 0.2292 | 0.0574 | 0.0013 |
| 17 | SLV 8 | 1.36 | 0.19 | 14.6 | 0.2292 | 0.0574 | 0.0013 |
| 17 | SLV 9 | 4.69 | -0.31 | 51.44 | -0.2051 | 0.1336 | -0.0009 |
| 17 | SLV 10 | 4.69 | -0.31 | 51.44 | -0.2051 | 0.1336 | -0.0009 |
| 17 | SLV 11 | -4.76 | 0.33 | 9.88 | 0.1799 | -0.212 | 0.0016 |
| 17 | SLV 12 | -4.76 | 0.33 | 9.88 | 0.1799 | -0.212 | 0.0016 |
| 17 | SLV 13 | -5.76 | 0.07 | 31.39 | -0.1279 | -0.3017 | 0.0004 |
| 17 | SLV 14 | -5.76 | 0.07 | 31.39 | -0.1279 | -0.3017 | 0.0004 |
| 17 | SLV 15 | -8.59 | 0.27 | 18.92 | -0.0124 | -0.4053 | 0.0011 |
| 17 | SLV 16 | -8.59 | 0.27 | 18.92 | -0.0124 | -0.4053 | 0.0011 |
| 18 | SLU 1 | 3.15 | 0.11 | 37.43 | -0.024 | 0.0807 | 0.0005 |
| 18 | SLU 2 | 3.06 | 0.1 | 36.88 | -0.0183 | 0.0789 | 0.0005 |
| 18 | SLU 3 | 3.46 | 0.11 | 39.22 | -0.026 | 0.0903 | 0.0005 |
| 18 | SLU 4 | 3.41 | 0.11 | 38.89 | -0.0226 | 0.0892 | 0.0005 |
| 18 | SLU 5 | 3.41 | 0.11 | 38.84 | -0.0203 | 0.0895 | 0.0005 |
| 18 | SLU 6 | 3.81 | 0.12 | 41.18 | -0.028 | 0.1009 | 0.0006 |
| 18 | SLU 7 | 3.75 | 0.12 | 40.85 | -0.0246 | 0.0998 | 0.0006 |
| 18 | SLU 8 | 3.84 | 0.12 | 41.35 | -0.0281 | 0.1019 | 0.0006 |
| 18 | SLU 9 | 3.79 | 0.12 | 41.02 | -0.0247 | 0.1008 | 0.0006 |
| 18 | SLU 10 | 3.45 | 0.12 | 42.25 | -0.0233 | 0.0874 | 0.0006 |
| 18 | SLU 11 | 3.85 | 0.13 | 44.59 | -0.031 | 0.0988 | 0.0006 |
| 18 | SLU 12 | 3.8 | 0.13 | 44.26 | -0.0276 | 0.0977 | 0.0006 |
| 18 | SLU 13 | 3.79 | 0.13 | 44.21 | -0.0254 | 0.098 | 0.0006 |
| 18 | SLU 14 | 4.2 | 0.14 | 46.55 | -0.033 | 0.1094 | 0.0007 |
| 18 | SLU 15 | 4.14 | 0.14 | 46.22 | -0.0296 | 0.1083 | 0.0007 |
| 18 | SLU 16 | 4.23 | 0.14 | 46.72 | -0.0331 | 0.1104 | 0.0007 |
| 18 | SLU 17 | 4.17 | 0.14 | 46.39 | -0.0297 | 0.1093 | 0.0007 |
| 18 | SLU 18 | 3.71 | 0.13 | 45.1 | -0.0312 | 0.0928 | 0.0007 |
| 18 | SLU 19 | 3.65 | 0.13 | 44.77 | -0.0278 | 0.0918 | 0.0006 |
| 18 | SLU 20 | 4.05 | 0.14 | 47.06 | -0.0332 | 0.1034 | 0.0007 |
| 18 | SLU 21 | 4 | 0.14 | 46.73 | -0.0298 | 0.1024 | 0.0007 |
| 18 | SLU 22 | 3.53 | 0.12 | 40.32 | -0.0276 | 0.0915 | 0.0006 |
| 18 | SLU 23 | 3.44 | 0.11 | 39.76 | -0.0219 | 0.0897 | 0.0006 |
| 18 | SLU 24 | 3.84 | 0.13 | 42.1 | -0.0296 | 0.1011 | 0.0006 |
| 18 | SLU 25 | 3.79 | 0.12 | 41.77 | -0.0262 | 0.1 | 0.0006 |
| 18 | SLU 26 | 3.78 | 0.12 | 41.72 | -0.024 | 0.1003 | 0.0006 |
| 18 | SLU 27 | 4.19 | 0.13 | 44.06 | -0.0316 | 0.1117 | 0.0006 |
| 18 | SLU 28 | 4.13 | 0.13 | 43.73 | -0.0282 | 0.1106 | 0.0006 |
| 18 | SLU 29 | 4.22 | 0.13 | 44.24 | -0.0317 | 0.1127 | 0.0006 |
| 18 | SLU 30 | 4.16 | 0.13 | 43.9 | -0.0283 | 0.1116 | 0.0006 |
| 18 | SLU 31 | 3.83 | 0.13 | 45.13 | -0.0269 | 0.0982 | 0.0006 |
| 18 | SLU 32 | 4.23 | 0.15 | 47.47 | -0.0346 | 0.1096 | 0.0007 |
| 18 | SLU 33 | 4.18 | 0.14 | 47.14 | -0.0312 | 0.1085 | 0.0007 |

| Nodo | Cont. | Reazione a traslazione | | | Reazione a rotazione | | |
|---|---|---|---|---|---|---|---|
| Ind. | N.br. | x | y | z | x | y | z |
| 18 | SLU 34 | 4.17 | 0.14 | 47.09 | -0.029 | 0.1088 | 0.0007 |
| 18 | SLU 35 | 4.57 | 0.15 | 49.43 | -0.0366 | 0.1202 | 0.0007 |
| 18 | SLU 36 | 4.52 | 0.15 | 49.1 | -0.0332 | 0.1191 | 0.0007 |
| 18 | SLU 37 | 4.61 | 0.15 | 49.6 | -0.0367 | 0.1212 | 0.0007 |
| 18 | SLU 38 | 4.55 | 0.15 | 49.27 | -0.0333 | 0.1201 | 0.0007 |
| 18 | SLU 39 | 4.08 | 0.15 | 47.99 | -0.0348 | 0.1036 | 0.0007 |
| 18 | SLU 40 | 4.03 | 0.14 | 47.65 | -0.0314 | 0.1025 | 0.0007 |
| 18 | SLU 41 | 4.43 | 0.15 | 49.95 | -0.0368 | 0.1142 | 0.0007 |
| 18 | SLU 42 | 4.38 | 0.15 | 49.61 | -0.0334 | 0.1131 | 0.0007 |
| 18 | SLU 43 | 3.97 | 0.14 | 47.68 | -0.03 | 0.1012 | 0.0007 |
| 18 | SLU 44 | 3.88 | 0.13 | 47.12 | -0.0243 | 0.0994 | 0.0006 |
| 18 | SLU 45 | 4.28 | 0.14 | 49.46 | -0.0319 | 0.1108 | 0.0007 |
| 18 | SLU 46 | 4.22 | 0.14 | 49.13 | -0.0285 | 0.1097 | 0.0007 |
| 18 | SLU 47 | 4.22 | 0.14 | 49.08 | -0.0263 | 0.11 | 0.0007 |
| 18 | SLU 48 | 4.62 | 0.15 | 51.42 | -0.034 | 0.1214 | 0.0007 |
| 18 | SLU 49 | 4.57 | 0.15 | 51.09 | -0.0306 | 0.1203 | 0.0007 |
| 18 | SLU 50 | 4.65 | 0.15 | 51.6 | -0.0341 | 0.1224 | 0.0007 |
| 18 | SLU 51 | 4.6 | 0.15 | 51.26 | -0.0306 | 0.1213 | 0.0007 |
| 18 | SLU 52 | 4.27 | 0.15 | 52.49 | -0.0293 | 0.1079 | 0.0007 |
| 18 | SLU 53 | 4.67 | 0.16 | 54.83 | -0.037 | 0.1193 | 0.0008 |
| 18 | SLU 54 | 4.61 | 0.16 | 54.5 | -0.0335 | 0.1182 | 0.0008 |
| 18 | SLU 55 | 4.61 | 0.15 | 54.45 | -0.0313 | 0.1185 | 0.0008 |
| 18 | SLU 56 | 5.01 | 0.17 | 56.79 | -0.039 | 0.1299 | 0.0008 |
| 18 | SLU 57 | 4.96 | 0.16 | 56.46 | -0.0356 | 0.1288 | 0.0008 |
| 18 | SLU 58 | 5.04 | 0.17 | 56.97 | -0.0391 | 0.1309 | 0.0008 |
| 18 | SLU 59 | 4.99 | 0.16 | 56.63 | -0.0356 | 0.1298 | 0.0008 |
| 18 | SLU 60 | 4.52 | 0.16 | 55.35 | -0.0371 | 0.1133 | 0.0008 |
| 18 | SLU 61 | 4.47 | 0.16 | 55.01 | -0.0337 | 0.1123 | 0.0008 |
| 18 | SLU 62 | 4.87 | 0.17 | 57.31 | -0.0392 | 0.1239 | 0.0008 |
| 18 | SLU 63 | 4.81 | 0.16 | 56.97 | -0.0358 | 0.1229 | 0.0008 |
| 18 | SLU 64 | 4.34 | 0.15 | 50.56 | -0.0336 | 0.112 | 0.0007 |
| 18 | SLU 65 | 4.25 | 0.14 | 50 | -0.0279 | 0.1102 | 0.0007 |
| 18 | SLU 66 | 4.66 | 0.16 | 52.34 | -0.0356 | 0.1216 | 0.0007 |
| 18 | SLU 67 | 4.6 | 0.15 | 52.01 | -0.0321 | 0.1205 | 0.0007 |
| 18 | SLU 68 | 4.6 | 0.15 | 51.96 | -0.0299 | 0.1208 | 0.0007 |
| 18 | SLU 69 | 5 | 0.16 | 54.3 | -0.0376 | 0.1322 | 0.0008 |
| 18 | SLU 70 | 4.95 | 0.16 | 53.97 | -0.0342 | 0.1311 | 0.0008 |
| 18 | SLU 71 | 5.03 | 0.16 | 54.48 | -0.0377 | 0.1332 | 0.0008 |
| 18 | SLU 72 | 4.98 | 0.16 | 54.15 | -0.0342 | 0.1321 | 0.0008 |
| 18 | SLU 73 | 4.64 | 0.16 | 55.37 | -0.0329 | 0.1187 | 0.0008 |
| 18 | SLU 74 | 5.05 | 0.17 | 57.71 | -0.0406 | 0.1301 | 0.0008 |
| 18 | SLU 75 | 4.99 | 0.17 | 57.38 | -0.0372 | 0.129 | 0.0008 |
| 18 | SLU 76 | 4.99 | 0.17 | 57.33 | -0.0349 | 0.1293 | 0.0008 |
| 18 | SLU 77 | 5.39 | 0.18 | 59.67 | -0.0426 | 0.1407 | 0.0009 |
| 18 | SLU 78 | 5.34 | 0.18 | 59.34 | -0.0392 | 0.1396 | 0.0008 |
| 18 | SLU 79 | 5.42 | 0.18 | 59.85 | -0.0427 | 0.1417 | 0.0009 |
| 18 | SLU 80 | 5.37 | 0.18 | 59.51 | -0.0393 | 0.1406 | 0.0008 |
| 18 | SLU 81 | 4.9 | 0.17 | 58.23 | -0.0408 | 0.1241 | 0.0008 |
| 18 | SLU 82 | 4.85 | 0.17 | 57.9 | -0.0373 | 0.1231 | 0.0008 |
| 18 | SLU 83 | 5.24 | 0.18 | 60.19 | -0.0428 | 0.1347 | 0.0009 |
| 18 | SLU 84 | 5.19 | 0.18 | 59.86 | -0.0394 | 0.1336 | 0.0009 |
| 18 | SLE RA 1 | 3.26 | 0.11 | 38.26 | -0.0251 | 0.0838 | 0.0005 |
| 18 | SLE RA 2 | 3.2 | 0.11 | 37.89 | -0.0213 | 0.0826 | 0.0005 |
| 18 | SLE RA 3 | 3.47 | 0.12 | 39.45 | -0.0264 | 0.0902 | 0.0006 |
| 18 | SLE RA 4 | 3.43 | 0.11 | 39.23 | -0.0241 | 0.0895 | 0.0005 |
| 18 | SLE RA 5 | 3.43 | 0.11 | 39.19 | -0.0226 | 0.0897 | 0.0005 |
| 18 | SLE RA 6 | 3.7 | 0.12 | 40.75 | -0.0277 | 0.0972 | 0.0006 |
| 18 | SLE RA 7 | 3.66 | 0.12 | 40.53 | -0.0254 | 0.0965 | 0.0006 |
| 18 | SLE RA 8 | 3.72 | 0.12 | 40.87 | -0.0278 | 0.0979 | 0.0006 |
| 18 | SLE RA 9 | 3.68 | 0.12 | 40.65 | -0.0255 | 0.0972 | 0.0006 |
| 18 | SLE RA 10 | 3.46 | 0.12 | 41.47 | -0.0246 | 0.0883 | 0.0006 |
| 18 | SLE RA 11 | 3.73 | 0.13 | 43.03 | -0.0297 | 0.0958 | 0.0006 |
| 18 | SLE RA 12 | 3.69 | 0.12 | 42.81 | -0.0274 | 0.0951 | 0.0006 |
| 18 | SLE RA 13 | 3.69 | 0.12 | 42.77 | -0.0259 | 0.0953 | 0.0006 |
| 18 | SLE RA 14 | 3.96 | 0.13 | 44.33 | -0.0311 | 0.1029 | 0.0006 |
| 18 | SLE RA 15 | 3.92 | 0.13 | 44.11 | -0.0288 | 0.1022 | 0.0006 |
| 18 | SLE RA 16 | 3.98 | 0.13 | 44.45 | -0.0311 | 0.1035 | 0.0006 |
| 18 | SLE RA 17 | 3.94 | 0.13 | 44.23 | -0.0288 | 0.1028 | 0.0006 |
| 18 | SLE RA 18 | 3.63 | 0.13 | 43.37 | -0.0298 | 0.0918 | 0.0006 |
| 18 | SLE RA 19 | 3.59 | 0.13 | 43.15 | -0.0275 | 0.0911 | 0.0006 |
| 18 | SLE RA 20 | 3.86 | 0.13 | 44.68 | -0.0312 | 0.0989 | 0.0006 |
| 18 | SLE RA 21 | 3.82 | 0.13 | 44.46 | -0.0289 | 0.0982 | 0.0006 |
| 18 | SLE FR 1 | 3.26 | 0.11 | 38.26 | -0.0251 | 0.0838 | 0.0005 |
| 18 | SLE FR 2 | 3.25 | 0.11 | 38.18 | -0.0243 | 0.0835 | 0.0005 |
| 18 | SLE FR 3 | 3.35 | 0.11 | 38.78 | -0.0256 | 0.0866 | 0.0005 |
| 18 | SLE FR 4 | 3.36 | 0.12 | 39.72 | -0.0257 | 0.0859 | 0.0006 |
| 18 | SLE FR 5 | 3.46 | 0.12 | 40.31 | -0.027 | 0.089 | 0.0006 |
| 18 | SLE FR 6 | 3.44 | 0.12 | 40.81 | -0.0274 | 0.0878 | 0.0006 |
| 18 | SLE QP 1 | 3.26 | 0.11 | 38.26 | -0.0251 | 0.0838 | 0.0005 |
| 18 | SLE QP 2 | 3.37 | 0.12 | 39.79 | -0.0265 | 0.0862 | 0.0006 |
| 18 | SLD 1 | 8.09 | 0.06 | 47.95 | -0.0151 | 0.2852 | 0.0005 |
| 18 | SLD 2 | 8.09 | 0.06 | 47.95 | -0.0151 | 0.2852 | 0.0005 |
| 18 | SLD 3 | 6.93 | 0.02 | 40.65 | 0.0132 | 0.2501 | 0.0003 |
| 18 | SLD 4 | 6.93 | 0.02 | 40.65 | 0.0132 | 0.2501 | 0.0003 |
| 18 | SLD 5 | 6.54 | 0.15 | 53.3 | -0.0661 | 0.1991 | 0.0008 |
| 18 | SLD 6 | 6.54 | 0.15 | 53.3 | -0.0661 | 0.1991 | 0.0008 |
| 18 | SLD 7 | 2.68 | 0.03 | 28.99 | 0.0284 | 0.0821 | 0.0002 |
| 18 | SLD 8 | 2.68 | 0.03 | 28.99 | 0.0284 | 0.0821 | 0.0002 |

| Nodo | Cont. | Reazione a traslazione | | | Reazione a rotazione | | |
|---|---|---|---|---|---|---|---|
| Ind. | N.br. | x | y | z | x | y | z |
| 18 | SLD 9 | 4.06 | 0.2 | 50.6 | -0.0814 | 0.0902 | 0.0009 |
| 18 | SLD 10 | 4.06 | 0.2 | 50.6 | -0.0814 | 0.0902 | 0.0009 |
| 18 | SLD 11 | 0.19 | 0.08 | 26.28 | 0.0131 | -0.0268 | 0.0003 |
| 18 | SLD 12 | 0.19 | 0.08 | 26.28 | 0.0131 | -0.0268 | 0.0003 |
| 18 | SLD 13 | -0.19 | 0.21 | 38.93 | -0.0662 | -0.0778 | 0.0009 |
| 18 | SLD 14 | -0.19 | 0.21 | 38.93 | -0.0662 | -0.0778 | 0.0009 |
| 18 | SLD 15 | -1.35 | 0.18 | 31.64 | -0.0378 | -0.1129 | 0.0007 |
| 18 | SLD 16 | -1.35 | 0.18 | 31.64 | -0.0378 | -0.1129 | 0.0007 |
| 18 | SLV 1 | 14.32 | -0.02 | 59 | 0.0006 | 0.5482 | 0.0003 |
| 18 | SLV 2 | 14.32 | -0.02 | 59 | 0.0006 | 0.5482 | 0.0003 |
| 18 | SLV 3 | 11.57 | -0.11 | 41.74 | 0.0661 | 0.4648 | -0.0001 |
| 18 | SLV 4 | 11.57 | -0.11 | 41.74 | 0.0661 | 0.4648 | -0.0001 |
| 18 | SLV 5 | 10.83 | 0.21 | 71.74 | -0.1178 | 0.3512 | 0.0012 |
| 18 | SLV 6 | 10.83 | 0.21 | 71.74 | -0.1178 | 0.3512 | 0.0012 |
| 18 | SLV 7 | 1.65 | -0.08 | 14.19 | 0.1007 | 0.0734 | -0.0003 |
| 18 | SLV 8 | 1.65 | -0.08 | 14.19 | 0.1007 | 0.0734 | -0.0003 |
| 18 | SLV 9 | 5.09 | 0.31 | 65.39 | -0.1537 | 0.099 | 0.0014 |
| 18 | SLV 10 | 5.09 | 0.31 | 65.39 | -0.1537 | 0.099 | 0.0014 |
| 18 | SLV 11 | -4.09 | 0.03 | 7.85 | 0.0648 | -0.1788 | 0 |
| 18 | SLV 12 | -4.09 | 0.03 | 7.85 | 0.0648 | -0.1788 | 0 |
| 18 | SLV 13 | -4.83 | 0.34 | 37.85 | -0.1191 | -0.2924 | 0.0013 |
| 18 | SLV 14 | -4.83 | 0.34 | 37.85 | -0.1191 | -0.2924 | 0.0013 |
| 18 | SLV 15 | -7.59 | 0.25 | 20.58 | -0.0535 | -0.3758 | 0.0008 |
| 18 | SLV 16 | -7.59 | 0.25 | 20.58 | -0.0535 | -0.3758 | 0.0008 |
| 19 | SLU 1 | -0.21 | 9 | 60.52 | -0.2953 | -0.0219 | 0.0001 |
| 19 | SLU 2 | -0.2 | 8.73 | 59.35 | -0.2835 | -0.0206 | 0.0001 |
| 19 | SLU 3 | -0.18 | 9.62 | 63.68 | -0.3187 | -0.0211 | 0.0001 |
| 19 | SLU 4 | -0.17 | 9.45 | 62.98 | -0.3116 | -0.0203 | 0.0001 |
| 19 | SLU 5 | -0.16 | 9.38 | 62.79 | -0.3083 | -0.0196 | 0.0001 |
| 19 | SLU 6 | -0.15 | 10.27 | 67.13 | -0.3436 | -0.0202 | 0.0001 |
| 19 | SLU 7 | -0.14 | 10.1 | 66.42 | -0.3365 | -0.0194 | 0.0001 |
| 19 | SLU 8 | -0.14 | 10.31 | 67.41 | -0.345 | -0.02 | 0.0001 |
| 19 | SLU 9 | -0.13 | 10.14 | 66.7 | -0.3379 | -0.0192 | 0.0001 |
| 19 | SLU 10 | -0.4 | 10.17 | 68.01 | -0.3324 | -0.0295 | 0.0001 |
| 19 | SLU 11 | -0.38 | 11.06 | 72.35 | -0.3677 | -0.0301 | 0.0001 |
| 19 | SLU 12 | -0.37 | 10.9 | 71.65 | -0.3606 | -0.0293 | 0.0001 |
| 19 | SLU 13 | -0.36 | 10.83 | 71.46 | -0.3573 | -0.0286 | 0.0001 |
| 19 | SLU 14 | -0.35 | 11.71 | 75.79 | -0.3925 | -0.0292 | 0.0001 |
| 19 | SLU 15 | -0.33 | 11.55 | 75.09 | -0.3854 | -0.0284 | 0.0001 |
| 19 | SLU 16 | -0.34 | 11.75 | 76.07 | -0.394 | -0.029 | 0.0001 |
| 19 | SLU 17 | -0.33 | 11.59 | 75.37 | -0.3869 | -0.0282 | 0.0001 |
| 19 | SLU 18 | -0.5 | 11.07 | 72.9 | -0.3652 | -0.0347 | 0.0002 |
| 19 | SLU 19 | -0.49 | 10.9 | 72.2 | -0.3581 | -0.0339 | 0.0002 |
| 19 | SLU 20 | -0.46 | 11.72 | 76.34 | -0.3901 | -0.0338 | 0.0002 |
| 19 | SLU 21 | -0.45 | 11.55 | 75.64 | -0.383 | -0.033 | 0.0002 |
| 19 | SLU 22 | -0.22 | 10 | 65.58 | -0.3314 | -0.0231 | 0.0001 |
| 19 | SLU 23 | -0.21 | 9.73 | 64.41 | -0.3196 | -0.0218 | 0.0001 |
| 19 | SLU 24 | -0.19 | 10.62 | 68.74 | -0.3548 | -0.0223 | 0.0001 |
| 19 | SLU 25 | -0.18 | 10.45 | 68.04 | -0.3477 | -0.0215 | 0.0001 |
| 19 | SLU 26 | -0.17 | 10.38 | 67.85 | -0.3444 | -0.0209 | 0.0001 |
| 19 | SLU 27 | -0.16 | 11.27 | 72.19 | -0.3796 | -0.0214 | 0.0001 |
| 19 | SLU 28 | -0.15 | 11.1 | 71.48 | -0.3726 | -0.0206 | 0.0001 |
| 19 | SLU 29 | -0.15 | 11.31 | 72.47 | -0.3811 | -0.0213 | 0.0001 |
| 19 | SLU 30 | -0.14 | 11.14 | 71.76 | -0.374 | -0.0205 | 0.0001 |
| 19 | SLU 31 | -0.41 | 11.17 | 73.07 | -0.3685 | -0.0308 | 0.0001 |
| 19 | SLU 32 | -0.39 | 12.06 | 77.41 | -0.4037 | -0.0313 | 0.0002 |
| 19 | SLU 33 | -0.38 | 11.9 | 76.71 | -0.3966 | -0.0305 | 0.0001 |
| 19 | SLU 34 | -0.37 | 11.83 | 76.52 | -0.3934 | -0.0299 | 0.0001 |
| 19 | SLU 35 | -0.36 | 12.71 | 80.85 | -0.4286 | -0.0304 | 0.0001 |
| 19 | SLU 36 | -0.35 | 12.55 | 80.15 | -0.4215 | -0.0296 | 0.0001 |
| 19 | SLU 37 | -0.35 | 12.75 | 81.13 | -0.43 | -0.0303 | 0.0001 |
| 19 | SLU 38 | -0.34 | 12.59 | 80.43 | -0.4229 | -0.0295 | 0.0001 |
| 19 | SLU 39 | -0.51 | 12.07 | 77.96 | -0.4013 | -0.036 | 0.0002 |
| 19 | SLU 40 | -0.5 | 11.9 | 77.26 | -0.3942 | -0.0352 | 0.0002 |
| 19 | SLU 41 | -0.47 | 12.72 | 81.4 | -0.4261 | -0.035 | 0.0002 |
| 19 | SLU 42 | -0.46 | 12.56 | 80.7 | -0.4191 | -0.0342 | 0.0002 |
| 19 | SLU 43 | -0.27 | 11.36 | 76.94 | -0.3715 | -0.028 | 0.0002 |
| 19 | SLU 44 | -0.26 | 11.08 | 75.77 | -0.3597 | -0.0267 | 0.0001 |
| 19 | SLU 45 | -0.24 | 11.97 | 80.1 | -0.3949 | -0.0272 | 0.0001 |
| 19 | SLU 46 | -0.23 | 11.81 | 79.4 | -0.3878 | -0.0264 | 0.0001 |
| 19 | SLU 47 | -0.22 | 11.74 | 79.21 | -0.3846 | -0.0258 | 0.0001 |
| 19 | SLU 48 | -0.21 | 12.63 | 83.55 | -0.4198 | -0.0263 | 0.0001 |
| 19 | SLU 49 | -0.2 | 12.46 | 82.84 | -0.4127 | -0.0255 | 0.0001 |
| 19 | SLU 50 | -0.2 | 12.66 | 83.83 | -0.4212 | -0.0262 | 0.0001 |
| 19 | SLU 51 | -0.19 | 12.5 | 83.12 | -0.4141 | -0.0254 | 0.0001 |
| 19 | SLU 52 | -0.46 | 12.53 | 84.44 | -0.4087 | -0.0357 | 0.0002 |
| 19 | SLU 53 | -0.44 | 13.42 | 88.77 | -0.4439 | -0.0362 | 0.0002 |
| 19 | SLU 54 | -0.43 | 13.25 | 88.07 | -0.4368 | -0.0354 | 0.0002 |
| 19 | SLU 55 | -0.42 | 13.18 | 87.88 | -0.4335 | -0.0348 | 0.0002 |
| 19 | SLU 56 | -0.41 | 14.07 | 92.21 | -0.4687 | -0.0353 | 0.0002 |
| 19 | SLU 57 | -0.4 | 13.91 | 91.51 | -0.4616 | -0.0345 | 0.0002 |
| 19 | SLU 58 | -0.4 | 14.11 | 92.5 | -0.4702 | -0.0352 | 0.0002 |
| 19 | SLU 59 | -0.39 | 13.95 | 91.79 | -0.4631 | -0.0344 | 0.0002 |
| 19 | SLU 60 | -0.56 | 13.42 | 89.32 | -0.4414 | -0.0409 | 0.0002 |
| 19 | SLU 61 | -0.55 | 13.26 | 88.62 | -0.4344 | -0.0401 | 0.0002 |
| 19 | SLU 62 | -0.52 | 14.08 | 92.77 | -0.4663 | -0.0399 | 0.0002 |
| 19 | SLU 63 | -0.51 | 13.91 | 92.06 | -0.4592 | -0.0391 | 0.0002 |
| 19 | SLU 64 | -0.29 | 12.36 | 82 | -0.4076 | -0.0293 | 0.0002 |

| Nodo | Cont. | Reazione a traslazione | | | Reazione a rotazione | | |
|---|---|---|---|---|---|---|---|
| Ind. | N.br. | x | y | z | x | y | z |
| 19 | SLU 65 | -0.27 | 12.08 | 80.83 | -0.3958 | -0.0279 | 0.0001 |
| 19 | SLU 66 | -0.25 | 12.97 | 85.16 | -0.431 | -0.0285 | 0.0002 |
| 19 | SLU 67 | -0.24 | 12.81 | 84.46 | -0.4239 | -0.0277 | 0.0001 |
| 19 | SLU 68 | -0.23 | 12.74 | 84.27 | -0.4206 | -0.027 | 0.0001 |
| 19 | SLU 69 | -0.22 | 13.63 | 88.61 | -0.4559 | -0.0276 | 0.0001 |
| 19 | SLU 70 | -0.21 | 13.46 | 87.9 | -0.4488 | -0.0268 | 0.0001 |
| 19 | SLU 71 | -0.21 | 13.66 | 88.89 | -0.4573 | -0.0274 | 0.0001 |
| 19 | SLU 72 | -0.2 | 13.5 | 88.18 | -0.4502 | -0.0266 | 0.0001 |
| 19 | SLU 73 | -0.47 | 13.53 | 89.5 | -0.4447 | -0.0369 | 0.0002 |
| 19 | SLU 74 | -0.45 | 14.42 | 93.83 | -0.48 | -0.0375 | 0.0002 |
| 19 | SLU 75 | -0.44 | 14.26 | 93.13 | -0.4729 | -0.0367 | 0.0002 |
| 19 | SLU 76 | -0.43 | 14.18 | 92.94 | -0.4696 | -0.036 | 0.0002 |
| 19 | SLU 77 | -0.42 | 15.07 | 97.27 | -0.5048 | -0.0365 | 0.0002 |
| 19 | SLU 78 | -0.41 | 14.91 | 96.57 | -0.4977 | -0.0357 | 0.0002 |
| 19 | SLU 79 | -0.41 | 15.11 | 97.55 | -0.5062 | -0.0364 | 0.0002 |
| 19 | SLU 80 | -0.4 | 14.95 | 96.85 | -0.4992 | -0.0356 | 0.0002 |
| 19 | SLU 81 | -0.57 | 14.42 | 94.38 | -0.4775 | -0.0421 | 0.0002 |
| 19 | SLU 82 | -0.56 | 14.26 | 93.68 | -0.4704 | -0.0413 | 0.0002 |
| 19 | SLU 83 | -0.53 | 15.08 | 97.83 | -0.5024 | -0.0412 | 0.0002 |
| 19 | SLU 84 | -0.52 | 14.91 | 97.12 | -0.4953 | -0.0404 | 0.0002 |
| 19 | SLE RA 1 | -0.22 | 9.29 | 61.96 | -0.3056 | -0.0222 | 0.0001 |
| 19 | SLE RA 2 | -0.2 | 9.1 | 61.18 | -0.2977 | -0.0214 | 0.0001 |
| 19 | SLE RA 3 | -0.2 | 9.7 | 64.07 | -0.3212 | -0.0217 | 0.0001 |
| 19 | SLE RA 4 | -0.19 | 9.59 | 63.61 | -0.3165 | -0.0212 | 0.0001 |
| 19 | SLE RA 5 | -0.18 | 9.54 | 63.48 | -0.3143 | -0.0207 | 0.0001 |
| 19 | SLE RA 6 | -0.17 | 10.13 | 66.37 | -0.3378 | -0.0211 | 0.0001 |
| 19 | SLE RA 7 | -0.16 | 10.02 | 65.9 | -0.3331 | -0.0206 | 0.0001 |
| 19 | SLE RA 8 | -0.17 | 10.16 | 66.56 | -0.3387 | -0.021 | 0.0001 |
| 19 | SLE RA 9 | -0.16 | 10.05 | 66.09 | -0.334 | -0.0205 | 0.0001 |
| 19 | SLE RA 10 | -0.34 | 10.07 | 66.96 | -0.3304 | -0.0273 | 0.0001 |
| 19 | SLE RA 11 | -0.33 | 10.66 | 69.85 | -0.3538 | -0.0277 | 0.0001 |
| 19 | SLE RA 12 | -0.32 | 10.55 | 69.38 | -0.3491 | -0.0272 | 0.0001 |
| 19 | SLE RA 13 | -0.31 | 10.5 | 69.26 | -0.3469 | -0.0267 | 0.0001 |
| 19 | SLE RA 14 | -0.3 | 11.1 | 72.15 | -0.3704 | -0.0271 | 0.0001 |
| 19 | SLE RA 15 | -0.3 | 10.99 | 71.68 | -0.3657 | -0.0266 | 0.0001 |
| 19 | SLE RA 16 | -0.3 | 11.12 | 72.33 | -0.3714 | -0.027 | 0.0001 |
| 19 | SLE RA 17 | -0.29 | 11.01 | 71.87 | -0.3666 | -0.0265 | 0.0001 |
| 19 | SLE RA 18 | -0.41 | 10.66 | 70.22 | -0.3522 | -0.0308 | 0.0001 |
| 19 | SLE RA 19 | -0.4 | 10.55 | 69.75 | -0.3475 | -0.0303 | 0.0001 |
| 19 | SLE RA 20 | -0.38 | 11.1 | 72.52 | -0.3688 | -0.0302 | 0.0001 |
| 19 | SLE RA 21 | -0.38 | 10.99 | 72.05 | -0.3641 | -0.0296 | 0.0001 |
| 19 | SLE FR 1 | -0.22 | 9.29 | 61.96 | -0.3056 | -0.0222 | 0.0001 |
| 19 | SLE FR 2 | -0.21 | 9.25 | 61.81 | -0.304 | -0.0221 | 0.0001 |
| 19 | SLE FR 3 | -0.21 | 9.46 | 62.88 | -0.3122 | -0.022 | 0.0001 |
| 19 | SLE FR 4 | -0.27 | 9.66 | 64.28 | -0.318 | -0.0246 | 0.0001 |
| 19 | SLE FR 5 | -0.26 | 9.87 | 65.36 | -0.3262 | -0.0246 | 0.0001 |
| 19 | SLE FR 6 | -0.31 | 9.98 | 66.09 | -0.3289 | -0.0265 | 0.0001 |
| 19 | SLE QP 1 | -0.22 | 9.29 | 61.96 | -0.3056 | -0.0222 | 0.0001 |
| 19 | SLE QP 2 | -0.27 | 9.7 | 64.44 | -0.3196 | -0.0248 | 0.0001 |
| 19 | SLD 1 | 4.13 | 12.59 | 79.18 | -0.4327 | 0.1776 | -0.0003 |
| 19 | SLD 2 | 4.13 | 12.59 | 79.18 | -0.4327 | 0.1776 | -0.0003 |
| 19 | SLD 3 | 3.7 | 9.71 | 66.07 | -0.3101 | 0.1574 | -0.0003 |
| 19 | SLD 4 | 3.7 | 9.71 | 66.07 | -0.3101 | 0.1574 | -0.0003 |
| 19 | SLD 5 | 1.7 | 14.94 | 88.74 | -0.5396 | 0.0665 | -0.0001 |
| 19 | SLD 6 | 1.7 | 14.94 | 88.74 | -0.5396 | 0.0665 | -0.0001 |
| 19 | SLD 7 | 0.27 | 5.33 | 45.05 | -0.1307 | -0.0008 | 0.0001 |
| 19 | SLD 8 | 0.27 | 5.33 | 45.05 | -0.1307 | -0.0008 | 0.0001 |
| 19 | SLD 9 | -0.81 | 14.07 | 83.83 | -0.5085 | -0.0488 | 0.0002 |
| 19 | SLD 10 | -0.81 | 14.07 | 83.83 | -0.5085 | -0.0488 | 0.0002 |
| 19 | SLD 11 | -2.24 | 4.46 | 40.14 | -0.0996 | -0.1161 | 0.0004 |
| 19 | SLD 12 | -2.24 | 4.46 | 40.14 | -0.0996 | -0.1161 | 0.0004 |
| 19 | SLD 13 | -4.24 | 9.69 | 62.81 | -0.3291 | -0.207 | 0.0005 |
| 19 | SLD 14 | -4.24 | 9.69 | 62.81 | -0.3291 | -0.207 | 0.0005 |
| 19 | SLD 15 | -4.67 | 6.81 | 49.7 | -0.2064 | -0.2272 | 0.0006 |
| 19 | SLD 16 | -4.67 | 6.81 | 49.7 | -0.2064 | -0.2272 | 0.0006 |
| 19 | SLV 1 | 9.96 | 16.52 | 99.19 | -0.5861 | 0.446 | -0.0009 |
| 19 | SLV 2 | 9.96 | 16.52 | 99.19 | -0.5861 | 0.446 | -0.0009 |
| 19 | SLV 3 | 8.94 | 9.74 | 68.18 | -0.2984 | 0.398 | -0.0008 |
| 19 | SLV 4 | 8.94 | 9.74 | 68.18 | -0.2984 | 0.398 | -0.0008 |
| 19 | SLV 5 | 4.34 | 22.03 | 121.9 | -0.8359 | 0.1893 | -0.0004 |
| 19 | SLV 6 | 4.34 | 22.03 | 121.9 | -0.8359 | 0.1893 | -0.0004 |
| 19 | SLV 7 | 0.95 | -0.57 | 18.53 | 0.1231 | 0.0292 | 0.0001 |
| 19 | SLV 8 | 0.95 | -0.57 | 18.53 | 0.1231 | 0.0292 | 0.0001 |
| 19 | SLV 9 | -1.49 | 19.97 | 110.35 | -0.7623 | -0.0788 | 0.0002 |
| 19 | SLV 10 | -1.49 | 19.97 | 110.35 | -0.7623 | -0.0788 | 0.0002 |
| 19 | SLV 11 | -4.89 | -2.63 | 6.98 | 0.1967 | -0.2389 | 0.0007 |
| 19 | SLV 12 | -4.89 | -2.63 | 6.98 | 0.1967 | -0.2389 | 0.0007 |
| 19 | SLV 13 | -9.49 | 9.66 | 60.7 | -0.3407 | -0.4476 | 0.001 |
| 19 | SLV 14 | -9.49 | 9.66 | 60.7 | -0.3407 | -0.4476 | 0.001 |
| 19 | SLV 15 | -10.51 | 2.88 | 29.69 | -0.0531 | -0.4956 | 0.0012 |
| 19 | SLV 16 | -10.51 | 2.88 | 29.69 | -0.0531 | -0.4956 | 0.0012 |
| 20 | SLU 1 | -4.22 | 0.15 | 37.07 | -0.0252 | -0.1644 | -0.0008 |
| 20 | SLU 2 | -4.09 | 0.15 | 36.38 | -0.0271 | -0.1592 | -0.0008 |
| 20 | SLU 3 | -4.5 | 0.16 | 38.83 | -0.028 | -0.1746 | -0.0009 |
| 20 | SLU 4 | -4.42 | 0.16 | 38.42 | -0.0291 | -0.1715 | -0.0009 |
| 20 | SLU 5 | -4.39 | 0.16 | 38.32 | -0.0301 | -0.1703 | -0.0009 |
| 20 | SLU 6 | -4.8 | 0.17 | 40.77 | -0.031 | -0.1857 | -0.0009 |
| 20 | SLU 7 | -4.72 | 0.17 | 40.36 | -0.0321 | -0.1826 | -0.0009 |

| Nodo | Cont. | Reazione a traslazione | | | Reazione a rotazione | | |
|---|---|---|---|---|---|---|---|
| Ind. | N.br. | x | y | z | x | y | z |
| 20 | SLU 8 | -4.83 | 0.17 | 40.94 | -0.0312 | -0.1867 | -0.0009 |
| 20 | SLU 9 | -4.75 | 0.17 | 40.53 | -0.0323 | -0.1836 | -0.0009 |
| 20 | SLU 10 | -4.95 | 0.17 | 41.28 | -0.0308 | -0.1925 | -0.0009 |
| 20 | SLU 11 | -5.36 | 0.18 | 43.73 | -0.0317 | -0.208 | -0.001 |
| 20 | SLU 12 | -5.28 | 0.18 | 43.32 | -0.0328 | -0.2048 | -0.001 |
| 20 | SLU 13 | -5.25 | 0.18 | 43.22 | -0.0338 | -0.2037 | -0.001 |
| 20 | SLU 14 | -5.66 | 0.19 | 45.67 | -0.0347 | -0.2191 | -0.0011 |
| 20 | SLU 15 | -5.58 | 0.19 | 45.26 | -0.0358 | -0.216 | -0.0011 |
| 20 | SLU 16 | -5.69 | 0.19 | 45.84 | -0.035 | -0.2201 | -0.0011 |
| 20 | SLU 17 | -5.61 | 0.19 | 45.43 | -0.0361 | -0.2169 | -0.0011 |
| 20 | SLU 18 | -5.45 | 0.18 | 44.07 | -0.0306 | -0.2121 | -0.001 |
| 20 | SLU 19 | -5.37 | 0.18 | 43.66 | -0.0317 | -0.2089 | -0.001 |
| 20 | SLU 20 | -5.76 | 0.19 | 46.01 | -0.0336 | -0.2232 | -0.0011 |
| 20 | SLU 21 | -5.68 | 0.19 | 45.59 | -0.0347 | -0.2201 | -0.0011 |
| 20 | SLU 22 | -4.67 | 0.16 | 39.84 | -0.0283 | -0.1812 | -0.0009 |
| 20 | SLU 23 | -4.54 | 0.17 | 39.15 | -0.0302 | -0.176 | -0.0009 |
| 20 | SLU 24 | -4.95 | 0.17 | 41.61 | -0.0311 | -0.1914 | -0.001 |
| 20 | SLU 25 | -4.87 | 0.17 | 41.19 | -0.0322 | -0.1882 | -0.001 |
| 20 | SLU 26 | -4.84 | 0.18 | 41.09 | -0.0332 | -0.1871 | -0.001 |
| 20 | SLU 27 | -5.25 | 0.18 | 43.54 | -0.0341 | -0.2025 | -0.001 |
| 20 | SLU 28 | -5.17 | 0.19 | 43.13 | -0.0352 | -0.1994 | -0.001 |
| 20 | SLU 29 | -5.28 | 0.18 | 43.71 | -0.0343 | -0.2035 | -0.001 |
| 20 | SLU 30 | -5.2 | 0.19 | 43.3 | -0.0355 | -0.2004 | -0.001 |
| 20 | SLU 31 | -5.4 | 0.19 | 44.05 | -0.034 | -0.2093 | -0.001 |
| 20 | SLU 32 | -5.81 | 0.19 | 46.51 | -0.0348 | -0.2247 | -0.0011 |
| 20 | SLU 33 | -5.73 | 0.2 | 46.09 | -0.036 | -0.2216 | -0.0011 |
| 20 | SLU 34 | -5.7 | 0.2 | 45.99 | -0.037 | -0.2205 | -0.0011 |
| 20 | SLU 35 | -6.11 | 0.21 | 48.44 | -0.0378 | -0.2359 | -0.0012 |
| 20 | SLU 36 | -6.03 | 0.21 | 48.03 | -0.039 | -0.2327 | -0.0012 |
| 20 | SLU 37 | -6.14 | 0.21 | 48.62 | -0.0381 | -0.2369 | -0.0012 |
| 20 | SLU 38 | -6.06 | 0.21 | 48.2 | -0.0392 | -0.2337 | -0.0012 |
| 20 | SLU 39 | -5.9 | 0.19 | 46.84 | -0.0337 | -0.2288 | -0.0011 |
| 20 | SLU 40 | -5.82 | 0.2 | 46.43 | -0.0348 | -0.2257 | -0.0011 |
| 20 | SLU 41 | -6.2 | 0.2 | 48.78 | -0.0367 | -0.24 | -0.0012 |
| 20 | SLU 42 | -6.12 | 0.21 | 48.37 | -0.0378 | -0.2369 | -0.0012 |
| 20 | SLU 43 | -5.34 | 0.19 | 47.24 | -0.0317 | -0.208 | -0.001 |
| 20 | SLU 44 | -5.21 | 0.19 | 46.55 | -0.0336 | -0.2027 | -0.001 |
| 20 | SLU 45 | -5.61 | 0.2 | 49 | -0.0344 | -0.2182 | -0.0011 |
| 20 | SLU 46 | -5.53 | 0.2 | 48.59 | -0.0356 | -0.215 | -0.0011 |
| 20 | SLU 47 | -5.51 | 0.2 | 48.48 | -0.0366 | -0.2139 | -0.0011 |
| 20 | SLU 48 | -5.92 | 0.21 | 50.94 | -0.0374 | -0.2293 | -0.0012 |
| 20 | SLU 49 | -5.84 | 0.21 | 50.52 | -0.0386 | -0.2262 | -0.0012 |
| 20 | SLU 50 | -5.94 | 0.21 | 51.11 | -0.0377 | -0.2303 | -0.0012 |
| 20 | SLU 51 | -5.86 | 0.21 | 50.7 | -0.0388 | -0.2271 | -0.0012 |
| 20 | SLU 52 | -6.07 | 0.21 | 51.45 | -0.0373 | -0.2361 | -0.0012 |
| 20 | SLU 53 | -6.47 | 0.22 | 53.9 | -0.0382 | -0.2515 | -0.0012 |
| 20 | SLU 54 | -6.4 | 0.22 | 53.49 | -0.0393 | -0.2484 | -0.0012 |
| 20 | SLU 55 | -6.37 | 0.22 | 53.39 | -0.0403 | -0.2473 | -0.0012 |
| 20 | SLU 56 | -6.78 | 0.23 | 55.84 | -0.0412 | -0.2627 | -0.0013 |
| 20 | SLU 57 | -6.7 | 0.23 | 55.43 | -0.0423 | -0.2595 | -0.0013 |
| 20 | SLU 58 | -6.8 | 0.23 | 56.01 | -0.0415 | -0.2636 | -0.0013 |
| 20 | SLU 59 | -6.72 | 0.23 | 55.6 | -0.0426 | -0.2605 | -0.0013 |
| 20 | SLU 60 | -6.57 | 0.22 | 54.24 | -0.0371 | -0.2556 | -0.0012 |
| 20 | SLU 61 | -6.49 | 0.22 | 53.83 | -0.0382 | -0.2525 | -0.0012 |
| 20 | SLU 62 | -6.87 | 0.23 | 56.18 | -0.0401 | -0.2668 | -0.0013 |
| 20 | SLU 63 | -6.79 | 0.23 | 55.76 | -0.0412 | -0.2636 | -0.0013 |
| 20 | SLU 64 | -5.79 | 0.2 | 50.01 | -0.0348 | -0.2248 | -0.0011 |
| 20 | SLU 65 | -5.65 | 0.2 | 49.32 | -0.0367 | -0.2195 | -0.0011 |
| 20 | SLU 66 | -6.06 | 0.21 | 51.77 | -0.0376 | -0.2349 | -0.0012 |
| 20 | SLU 67 | -5.98 | 0.21 | 51.36 | -0.0387 | -0.2318 | -0.0012 |
| 20 | SLU 68 | -5.96 | 0.22 | 51.26 | -0.0397 | -0.2307 | -0.0012 |
| 20 | SLU 69 | -6.36 | 0.22 | 53.71 | -0.0406 | -0.2461 | -0.0012 |
| 20 | SLU 70 | -6.28 | 0.22 | 53.3 | -0.0417 | -0.243 | -0.0012 |
| 20 | SLU 71 | -6.39 | 0.22 | 53.88 | -0.0408 | -0.2471 | -0.0013 |
| 20 | SLU 72 | -6.31 | 0.23 | 53.47 | -0.042 | -0.2439 | -0.0013 |
| 20 | SLU 73 | -6.52 | 0.23 | 54.22 | -0.0404 | -0.2529 | -0.0013 |
| 20 | SLU 74 | -6.92 | 0.23 | 56.68 | -0.0413 | -0.2683 | -0.0013 |
| 20 | SLU 75 | -6.84 | 0.24 | 56.26 | -0.0424 | -0.2652 | -0.0013 |
| 20 | SLU 76 | -6.82 | 0.24 | 56.16 | -0.0435 | -0.264 | -0.0013 |
| 20 | SLU 77 | -7.22 | 0.24 | 58.61 | -0.0443 | -0.2795 | -0.0014 |
| 20 | SLU 78 | -7.15 | 0.25 | 58.2 | -0.0454 | -0.2763 | -0.0014 |
| 20 | SLU 79 | -7.25 | 0.25 | 58.79 | -0.0446 | -0.2804 | -0.0014 |
| 20 | SLU 80 | -7.17 | 0.25 | 58.37 | -0.0457 | -0.2773 | -0.0014 |
| 20 | SLU 81 | -7.02 | 0.23 | 57.01 | -0.0402 | -0.2724 | -0.0013 |
| 20 | SLU 82 | -6.94 | 0.23 | 56.6 | -0.0413 | -0.2693 | -0.0013 |
| 20 | SLU 83 | -7.32 | 0.24 | 58.95 | -0.0432 | -0.2836 | -0.0014 |
| 20 | SLU 84 | -7.24 | 0.25 | 58.54 | -0.0443 | -0.2804 | -0.0014 |
| 20 | SLE RA 1 | -4.35 | 0.15 | 37.86 | -0.0261 | -0.1692 | -0.0009 |
| 20 | SLE RA 2 | -4.26 | 0.15 | 37.4 | -0.0274 | -0.1657 | -0.0008 |
| 20 | SLE RA 3 | -4.54 | 0.16 | 39.04 | -0.0279 | -0.176 | -0.0009 |
| 20 | SLE RA 4 | -4.48 | 0.16 | 38.76 | -0.0287 | -0.1739 | -0.0009 |
| 20 | SLE RA 5 | -4.47 | 0.16 | 38.69 | -0.0294 | -0.1732 | -0.0009 |
| 20 | SLE RA 6 | -4.74 | 0.17 | 40.33 | -0.0299 | -0.1834 | -0.0009 |
| 20 | SLE RA 7 | -4.68 | 0.17 | 40.05 | -0.0307 | -0.1813 | -0.0009 |
| 20 | SLE RA 8 | -4.75 | 0.17 | 40.44 | -0.0301 | -0.1841 | -0.0009 |
| 20 | SLE RA 9 | -4.7 | 0.17 | 40.17 | -0.0309 | -0.182 | -0.0009 |
| 20 | SLE RA 10 | -4.84 | 0.17 | 40.67 | -0.0299 | -0.188 | -0.0009 |
| 20 | SLE RA 11 | -5.11 | 0.17 | 42.3 | -0.0304 | -0.1982 | -0.001 |

| Nodo | Cont. | Reazione a traslazione | | | Reazione a rotazione | | |
|---|---|---|---|---|---|---|---|
| Ind. | N.br. | x | y | z | x | y | z |
| 20 | SLE RA 12 | -5.06 | 0.17 | 42.03 | -0.0312 | -0.1961 | -0.001 |
| 20 | SLE RA 13 | -5.04 | 0.18 | 41.96 | -0.0319 | -0.1954 | -0.001 |
| 20 | SLE RA 14 | -5.31 | 0.18 | 43.6 | -0.0324 | -0.2057 | -0.001 |
| 20 | SLE RA 15 | -5.26 | 0.18 | 43.32 | -0.0332 | -0.2036 | -0.001 |
| 20 | SLE RA 16 | -5.33 | 0.18 | 43.71 | -0.0326 | -0.2063 | -0.001 |
| 20 | SLE RA 17 | -5.28 | 0.18 | 43.43 | -0.0334 | -0.2042 | -0.001 |
| 20 | SLE RA 18 | -5.17 | 0.17 | 42.53 | -0.0297 | -0.201 | -0.001 |
| 20 | SLE RA 19 | -5.12 | 0.17 | 42.25 | -0.0304 | -0.1989 | -0.001 |
| 20 | SLE RA 20 | -5.37 | 0.18 | 43.82 | -0.0317 | -0.2084 | -0.001 |
| 20 | SLE RA 21 | -5.32 | 0.18 | 43.54 | -0.0324 | -0.2063 | -0.001 |
| 20 | SLE FR 1 | -4.35 | 0.15 | 37.86 | -0.0261 | -0.1692 | -0.0009 |
| 20 | SLE FR 2 | -4.33 | 0.15 | 37.77 | -0.0264 | -0.1685 | -0.0009 |
| 20 | SLE FR 3 | -4.43 | 0.15 | 38.38 | -0.0269 | -0.1722 | -0.0009 |
| 20 | SLE FR 4 | -4.58 | 0.16 | 39.17 | -0.0274 | -0.178 | -0.0009 |
| 20 | SLE FR 5 | -4.68 | 0.16 | 39.78 | -0.028 | -0.1817 | -0.0009 |
| 20 | SLE FR 6 | -4.76 | 0.16 | 40.19 | -0.0279 | -0.1851 | -0.0009 |
| 20 | SLE QP 1 | -4.35 | 0.15 | 37.86 | -0.0261 | -0.1692 | -0.0009 |
| 20 | SLE QP 2 | -4.6 | 0.16 | 39.26 | -0.0272 | -0.1787 | -0.0009 |
| 20 | SLD 1 | -0.86 | 0.23 | 47.88 | -0.0642 | -0.0118 | -0.0012 |
| 20 | SLD 2 | -0.86 | 0.23 | 47.88 | -0.0642 | -0.0118 | -0.0012 |
| 20 | SLD 3 | 0.48 | 0.2 | 40.63 | -0.0377 | 0.0394 | -0.001 |
| 20 | SLD 4 | 0.48 | 0.2 | 40.63 | -0.0377 | 0.0394 | -0.001 |
| 20 | SLD 5 | -5.52 | 0.23 | 52.85 | -0.0785 | -0.2063 | -0.0013 |
| 20 | SLD 6 | -5.52 | 0.23 | 52.85 | -0.0785 | -0.2063 | -0.0013 |
| 20 | SLD 7 | -1.03 | 0.12 | 28.67 | 0.0099 | -0.0356 | -0.0006 |
| 20 | SLD 8 | -1.03 | 0.12 | 28.67 | 0.0099 | -0.0356 | -0.0006 |
| 20 | SLD 9 | -8.16 | 0.19 | 49.85 | -0.0642 | -0.3219 | -0.0012 |
| 20 | SLD 10 | -8.16 | 0.19 | 49.85 | -0.0642 | -0.3219 | -0.0012 |
| 20 | SLD 11 | -3.68 | 0.09 | 25.67 | 0.0242 | -0.1511 | -0.0005 |
| 20 | SLD 12 | -3.68 | 0.09 | 25.67 | 0.0242 | -0.1511 | -0.0005 |
| 20 | SLD 13 | -9.68 | 0.11 | 37.89 | -0.0166 | -0.3969 | -0.0008 |
| 20 | SLD 14 | -9.68 | 0.11 | 37.89 | -0.0166 | -0.3969 | -0.0008 |
| 20 | SLD 15 | -8.33 | 0.08 | 30.64 | 0.0099 | -0.3457 | -0.0006 |
| 20 | SLD 16 | -8.33 | 0.08 | 30.64 | 0.0099 | -0.3457 | -0.0006 |
| 20 | SLV 1 | 4.09 | 0.34 | 59.62 | -0.1143 | 0.2096 | -0.0017 |
| 20 | SLV 2 | 4.09 | 0.34 | 59.62 | -0.1143 | 0.2096 | -0.0017 |
| 20 | SLV 3 | 7.27 | 0.26 | 42.42 | -0.0521 | 0.3308 | -0.0012 |
| 20 | SLV 4 | 7.27 | 0.26 | 42.42 | -0.0521 | 0.3308 | -0.0012 |
| 20 | SLV 5 | -6.81 | 0.33 | 71.46 | -0.1476 | -0.246 | -0.0019 |
| 20 | SLV 6 | -6.81 | 0.33 | 71.46 | -0.1476 | -0.246 | -0.0019 |
| 20 | SLV 7 | 3.78 | 0.07 | 14.11 | 0.0597 | 0.1579 | -0.0002 |
| 20 | SLV 8 | 3.78 | 0.07 | 14.11 | 0.0597 | 0.1579 | -0.0002 |
| 20 | SLV 9 | -12.98 | 0.25 | 64.4 | -0.114 | -0.5153 | -0.0015 |
| 20 | SLV 10 | -12.98 | 0.25 | 64.4 | -0.114 | -0.5153 | -0.0015 |
| 20 | SLV 11 | -2.39 | -0.02 | 7.06 | 0.0933 | -0.1115 | 0.0001 |
| 20 | SLV 12 | -2.39 | -0.02 | 7.06 | 0.0933 | -0.1115 | 0.0001 |
| 20 | SLV 13 | -16.46 | 0.06 | 36.1 | -0.0022 | -0.6882 | -0.0006 |
| 20 | SLV 14 | -16.46 | 0.06 | 36.1 | -0.0022 | -0.6882 | -0.0006 |
| 20 | SLV 15 | -13.29 | -0.02 | 18.9 | 0.0599 | -0.5671 | -0.0001 |
| 20 | SLV 16 | -13.29 | -0.02 | 18.9 | 0.0599 | -0.5671 | -0.0001 |
| 21 | SLU 1 | -4.84 | 0 | 32.21 | 0.0134 | -0.1828 | 0 |
| 21 | SLU 2 | -4.73 | 0.01 | 31.61 | 0.0088 | -0.1784 | -0.0001 |
| 21 | SLU 3 | -5.15 | 0 | 33.56 | 0.0125 | -0.1944 | 0 |
| 21 | SLU 4 | -5.09 | 0.01 | 33.2 | 0.0097 | -0.1918 | -0.0001 |
| 21 | SLU 5 | -5.08 | 0.01 | 33.1 | 0.0077 | -0.1912 | -0.0001 |
| 21 | SLU 6 | -5.5 | 0 | 35.05 | 0.0113 | -0.2072 | 0 |
| 21 | SLU 7 | -5.44 | 0.01 | 34.69 | 0.0086 | -0.2046 | -0.0001 |
| 21 | SLU 8 | -5.54 | 0 | 35.18 | 0.0112 | -0.2085 | 0 |
| 21 | SLU 9 | -5.47 | 0.01 | 34.82 | 0.0084 | -0.2058 | -0.0001 |
| 21 | SLU 10 | -5.67 | 0.01 | 35.48 | 0.0109 | -0.2137 | -0.0001 |
| 21 | SLU 11 | -6.1 | 0 | 37.43 | 0.0146 | -0.2297 | 0 |
| 21 | SLU 12 | -6.03 | 0.01 | 37.07 | 0.0118 | -0.227 | -0.0001 |
| 21 | SLU 13 | -6.02 | 0.01 | 36.97 | 0.0098 | -0.2265 | -0.0001 |
| 21 | SLU 14 | -6.45 | 0 | 38.92 | 0.0135 | -0.2425 | 0 |
| 21 | SLU 15 | -6.38 | 0.01 | 38.56 | 0.0107 | -0.2399 | -0.0001 |
| 21 | SLU 16 | -6.48 | 0 | 39.05 | 0.0133 | -0.2437 | 0 |
| 21 | SLU 17 | -6.42 | 0.01 | 38.69 | 0.0105 | -0.2411 | -0.0001 |
| 21 | SLU 18 | -6.19 | 0 | 37.73 | 0.0164 | -0.2332 | 0 |
| 21 | SLU 19 | -6.12 | 0 | 37.38 | 0.0137 | -0.2306 | -0.0001 |
| 21 | SLU 20 | -6.54 | 0 | 39.22 | 0.0153 | -0.246 | 0 |
| 21 | SLU 21 | -6.47 | 0.01 | 38.87 | 0.0126 | -0.2434 | -0.0001 |
| 21 | SLU 22 | -5.33 | 0 | 34.36 | 0.0139 | -0.2011 | 0 |
| 21 | SLU 23 | -5.22 | 0.01 | 33.77 | 0.0093 | -0.1967 | -0.0001 |
| 21 | SLU 24 | -5.65 | 0 | 35.71 | 0.0129 | -0.2127 | 0 |
| 21 | SLU 25 | -5.58 | 0.01 | 35.36 | 0.0102 | -0.2101 | -0.0001 |
| 21 | SLU 26 | -5.57 | 0.01 | 35.26 | 0.0082 | -0.2095 | -0.0001 |
| 21 | SLU 27 | -6 | 0.01 | 37.2 | 0.0118 | -0.2255 | -0.0001 |
| 21 | SLU 28 | -5.93 | 0.01 | 36.85 | 0.0091 | -0.2229 | -0.0001 |
| 21 | SLU 29 | -6.03 | 0.01 | 37.33 | 0.0117 | -0.2267 | -0.0001 |
| 21 | SLU 30 | -5.97 | 0.01 | 36.98 | 0.0089 | -0.2241 | -0.0001 |
| 21 | SLU 31 | -6.17 | 0.01 | 37.64 | 0.0114 | -0.232 | -0.0001 |
| 21 | SLU 32 | -6.59 | 0 | 39.58 | 0.0151 | -0.248 | 0 |
| 21 | SLU 33 | -6.53 | 0.01 | 39.23 | 0.0123 | -0.2453 | -0.0001 |
| 21 | SLU 34 | -6.52 | 0.01 | 39.13 | 0.0103 | -0.2448 | -0.0001 |
| 21 | SLU 35 | -6.94 | 0 | 41.07 | 0.014 | -0.2608 | -0.0001 |
| 21 | SLU 36 | -6.88 | 0.01 | 40.71 | 0.0112 | -0.2581 | -0.0001 |
| 21 | SLU 37 | -6.98 | 0 | 41.2 | 0.0138 | -0.262 | -0.0001 |
| 21 | SLU 38 | -6.91 | 0.01 | 40.85 | 0.011 | -0.2594 | -0.0001 |

| Nodo | Cont. | Reazione a traslazione | | | Reazione a rotazione | | |
|---|---|---|---|---|---|---|---|
| Ind. | N.br. | x | y | z | x | y | z |
| 21 | SLU 39 | -6.68 | 0 | 39.89 | 0.0169 | -0.2515 | 0 |
| 21 | SLU 40 | -6.62 | 0 | 39.53 | 0.0142 | -0.2489 | -0.0001 |
| 21 | SLU 41 | -7.03 | 0 | 41.38 | 0.0158 | -0.2643 | 0 |
| 21 | SLU 42 | -6.97 | 0.01 | 41.02 | 0.0131 | -0.2617 | -0.0001 |
| 21 | SLU 43 | -6.12 | 0 | 41.13 | 0.0172 | -0.2314 | 0 |
| 21 | SLU 44 | -6.01 | 0.01 | 40.54 | 0.0127 | -0.227 | -0.0001 |
| 21 | SLU 45 | -6.43 | 0 | 42.48 | 0.0163 | -0.243 | 0 |
| 21 | SLU 46 | -6.37 | 0.01 | 42.13 | 0.0136 | -0.2404 | -0.0001 |
| 21 | SLU 47 | -6.36 | 0.01 | 42.02 | 0.0116 | -0.2398 | -0.0001 |
| 21 | SLU 48 | -6.78 | 0 | 43.97 | 0.0152 | -0.2558 | -0.0001 |
| 21 | SLU 49 | -6.72 | 0.01 | 43.61 | 0.0124 | -0.2532 | -0.0001 |
| 21 | SLU 50 | -6.82 | 0 | 44.1 | 0.015 | -0.257 | -0.0001 |
| 21 | SLU 51 | -6.75 | 0.01 | 43.75 | 0.0123 | -0.2544 | -0.0001 |
| 21 | SLU 52 | -6.95 | 0.01 | 44.41 | 0.0148 | -0.2623 | -0.0001 |
| 21 | SLU 53 | -7.38 | 0 | 46.35 | 0.0184 | -0.2783 | 0 |
| 21 | SLU 54 | -7.31 | 0.01 | 46 | 0.0157 | -0.2756 | -0.0001 |
| 21 | SLU 55 | -7.3 | 0.01 | 45.89 | 0.0137 | -0.2751 | -0.0001 |
| 21 | SLU 56 | -7.73 | 0 | 47.84 | 0.0173 | -0.2911 | -0.0001 |
| 21 | SLU 57 | -7.66 | 0.01 | 47.48 | 0.0146 | -0.2884 | -0.0001 |
| 21 | SLU 58 | -7.76 | 0 | 47.97 | 0.0171 | -0.2923 | -0.0001 |
| 21 | SLU 59 | -7.7 | 0.01 | 47.62 | 0.0144 | -0.2897 | -0.0001 |
| 21 | SLU 60 | -7.47 | 0 | 46.66 | 0.0203 | -0.2818 | 0 |
| 21 | SLU 61 | -7.4 | 0 | 46.3 | 0.0175 | -0.2792 | -0.0001 |
| 21 | SLU 62 | -7.82 | 0 | 48.15 | 0.0192 | -0.2946 | 0 |
| 21 | SLU 63 | -7.75 | 0.01 | 47.79 | 0.0164 | -0.292 | -0.0001 |
| 21 | SLU 64 | -6.61 | 0 | 43.28 | 0.0177 | -0.2497 | 0 |
| 21 | SLU 65 | -6.5 | 0.01 | 42.69 | 0.0132 | -0.2453 | -0.0001 |
| 21 | SLU 66 | -6.93 | 0 | 44.64 | 0.0168 | -0.2613 | 0 |
| 21 | SLU 67 | -6.86 | 0.01 | 44.28 | 0.014 | -0.2586 | -0.0001 |
| 21 | SLU 68 | -6.85 | 0.01 | 44.18 | 0.012 | -0.2581 | -0.0001 |
| 21 | SLU 69 | -7.28 | 0 | 46.12 | 0.0157 | -0.2741 | -0.0001 |
| 21 | SLU 70 | -7.21 | 0.01 | 45.77 | 0.0129 | -0.2714 | -0.0001 |
| 21 | SLU 71 | -7.31 | 0.01 | 46.26 | 0.0155 | -0.2753 | -0.0001 |
| 21 | SLU 72 | -7.25 | 0.01 | 45.9 | 0.0128 | -0.2727 | -0.0001 |
| 21 | SLU 73 | -7.45 | 0.01 | 46.56 | 0.0153 | -0.2806 | -0.0001 |
| 21 | SLU 74 | -7.87 | 0 | 48.51 | 0.0189 | -0.2966 | 0 |
| 21 | SLU 75 | -7.81 | 0.01 | 48.15 | 0.0162 | -0.2939 | -0.0001 |
| 21 | SLU 76 | -7.8 | 0.01 | 48.05 | 0.0142 | -0.2934 | -0.0001 |
| 21 | SLU 77 | -8.22 | 0 | 49.99 | 0.0178 | -0.3094 | -0.0001 |
| 21 | SLU 78 | -8.16 | 0.01 | 49.64 | 0.0151 | -0.3067 | -0.0001 |
| 21 | SLU 79 | -8.26 | 0 | 50.13 | 0.0176 | -0.3106 | -0.0001 |
| 21 | SLU 80 | -8.19 | 0.01 | 49.77 | 0.0149 | -0.308 | -0.0001 |
| 21 | SLU 81 | -7.96 | 0 | 48.81 | 0.0208 | -0.3001 | 0 |
| 21 | SLU 82 | -7.9 | 0 | 48.46 | 0.018 | -0.2975 | -0.0001 |
| 21 | SLU 83 | -8.31 | 0 | 50.3 | 0.0197 | -0.3129 | 0 |
| 21 | SLU 84 | -8.25 | 0.01 | 49.94 | 0.0169 | -0.3103 | -0.0001 |
| 21 | SLE RA 1 | -4.98 | 0 | 32.82 | 0.0135 | -0.1881 | 0 |
| 21 | SLE RA 2 | -4.91 | 0.01 | 32.43 | 0.0105 | -0.1851 | -0.0001 |
| 21 | SLE RA 3 | -5.19 | 0 | 33.72 | 0.0129 | -0.1958 | 0 |
| 21 | SLE RA 4 | -5.15 | 0.01 | 33.49 | 0.0111 | -0.194 | -0.0001 |
| 21 | SLE RA 5 | -5.14 | 0.01 | 33.42 | 0.0097 | -0.1937 | -0.0001 |
| 21 | SLE RA 6 | -5.42 | 0 | 34.72 | 0.0122 | -0.2043 | 0 |
| 21 | SLE RA 7 | -5.38 | 0.01 | 34.48 | 0.0103 | -0.2026 | -0.0001 |
| 21 | SLE RA 8 | -5.44 | 0 | 34.8 | 0.012 | -0.2051 | 0 |
| 21 | SLE RA 9 | -5.4 | 0.01 | 34.57 | 0.0102 | -0.2034 | -0.0001 |
| 21 | SLE RA 10 | -5.54 | 0.01 | 35.01 | 0.0119 | -0.2087 | -0.0001 |
| 21 | SLE RA 11 | -5.82 | 0 | 36.3 | 0.0143 | -0.2193 | 0 |
| 21 | SLE RA 12 | -5.78 | 0 | 36.07 | 0.0125 | -0.2175 | -0.0001 |
| 21 | SLE RA 13 | -5.77 | 0.01 | 36 | 0.0112 | -0.2172 | -0.0001 |
| 21 | SLE RA 14 | -6.05 | 0 | 37.3 | 0.0136 | -0.2278 | 0 |
| 21 | SLE RA 15 | -6.01 | 0.01 | 37.06 | 0.0118 | -0.2261 | -0.0001 |
| 21 | SLE RA 16 | -6.07 | 0 | 37.38 | 0.0135 | -0.2287 | 0 |
| 21 | SLE RA 17 | -6.03 | 0.01 | 37.15 | 0.0116 | -0.2269 | -0.0001 |
| 21 | SLE RA 18 | -5.88 | 0 | 36.51 | 0.0156 | -0.2217 | 0 |
| 21 | SLE RA 19 | -5.83 | 0 | 36.27 | 0.0137 | -0.2199 | 0 |
| 21 | SLE RA 20 | -6.11 | 0 | 37.5 | 0.0148 | -0.2302 | 0 |
| 21 | SLE RA 21 | -6.07 | 0 | 37.26 | 0.013 | -0.2284 | -0.0001 |
| 21 | SLE FR 1 | -4.98 | 0 | 32.82 | 0.0135 | -0.1881 | 0 |
| 21 | SLE FR 2 | -4.96 | 0 | 32.74 | 0.0129 | -0.1875 | 0 |
| 21 | SLE FR 3 | -5.07 | 0 | 33.22 | 0.0132 | -0.1915 | 0 |
| 21 | SLE FR 4 | -5.23 | 0 | 33.85 | 0.0135 | -0.1976 | 0 |
| 21 | SLE FR 5 | -5.34 | 0 | 34.32 | 0.0138 | -0.2016 | 0 |
| 21 | SLE FR 6 | -5.43 | 0 | 34.66 | 0.0145 | -0.2049 | 0 |
| 21 | SLE QP 1 | -4.98 | 0 | 32.82 | 0.0135 | -0.1881 | 0 |
| 21 | SLE QP 2 | -5.25 | 0 | 33.93 | 0.0141 | -0.1981 | 0 |
| 21 | SLD 1 | -1.28 | 0.09 | 41.22 | -0.0488 | -0.017 | -0.0005 |
| 21 | SLD 2 | -1.28 | 0.09 | 41.22 | -0.0488 | -0.017 | -0.0005 |
| 21 | SLD 3 | 0.05 | 0.05 | 35.58 | -0.0053 | 0.0333 | -0.0003 |
| 21 | SLD 4 | 0.05 | 0.05 | 35.58 | -0.0053 | 0.0333 | -0.0003 |
| 21 | SLD 5 | -6.08 | 0.09 | 44.67 | -0.0706 | -0.2201 | -0.0005 |
| 21 | SLD 6 | -6.08 | 0.09 | 44.67 | -0.0706 | -0.2201 | -0.0005 |
| 21 | SLD 7 | -1.64 | -0.05 | 25.87 | 0.0742 | -0.0524 | 0.0002 |
| 21 | SLD 8 | -1.64 | -0.05 | 25.87 | 0.0742 | -0.0524 | 0.0002 |
| 21 | SLD 9 | -8.86 | 0.05 | 41.99 | -0.0459 | -0.3439 | -0.0002 |
| 21 | SLD 10 | -8.86 | 0.05 | 41.99 | -0.0459 | -0.3439 | -0.0002 |
| 21 | SLD 11 | -4.42 | -0.09 | 23.19 | 0.0989 | -0.1762 | 0.0004 |
| 21 | SLD 12 | -4.42 | -0.09 | 23.19 | 0.0989 | -0.1762 | 0.0004 |
| 21 | SLD 13 | -10.55 | -0.05 | 32.28 | 0.0336 | -0.4296 | 0.0003 |

| Nodo | Cont. | Reazione a traslazione | | | Reazione a rotazione | | |
|---|---|---|---|---|---|---|---|
| Ind. | N.br. | x | y | z | x | y | z |
| 21 | SLD 14 | -10.55 | -0.05 | 32.28 | 0.0336 | -0.4296 | 0.0003 |
| 21 | SLD 15 | -9.22 | -0.09 | 26.64 | 0.077 | -0.3793 | 0.0005 |
| 21 | SLD 16 | -9.22 | -0.09 | 26.64 | 0.077 | -0.3793 | 0.0005 |
| 21 | SLV 1 | 4.01 | 0.21 | 51.16 | -0.1334 | 0.2244 | -0.0012 |
| 21 | SLV 2 | 4.01 | 0.21 | 51.16 | -0.1334 | 0.2244 | -0.0012 |
| 21 | SLV 3 | 7.16 | 0.11 | 37.76 | -0.0319 | 0.3435 | -0.0007 |
| 21 | SLV 4 | 7.16 | 0.11 | 37.76 | -0.0319 | 0.3435 | -0.0007 |
| 21 | SLV 5 | -7.26 | 0.22 | 59.43 | -0.1841 | -0.2521 | -0.0011 |
| 21 | SLV 6 | -7.26 | 0.22 | 59.43 | -0.1841 | -0.2521 | -0.0011 |
| 21 | SLV 7 | 3.26 | -0.13 | 14.74 | 0.1543 | 0.145 | 0.0005 |
| 21 | SLV 8 | 3.26 | -0.13 | 14.74 | 0.1543 | 0.145 | 0.0005 |
| 21 | SLV 9 | -13.76 | 0.13 | 53.11 | -0.126 | -0.5413 | -0.0006 |
| 21 | SLV 10 | -13.76 | 0.13 | 53.11 | -0.126 | -0.5413 | -0.0006 |
| 21 | SLV 11 | -3.24 | -0.22 | 8.43 | 0.2124 | -0.1442 | 0.0011 |
| 21 | SLV 12 | -3.24 | -0.22 | 8.43 | 0.2124 | -0.1442 | 0.0011 |
| 21 | SLV 13 | -17.66 | -0.11 | 30.1 | 0.0602 | -0.7398 | 0.0007 |
| 21 | SLV 14 | -17.66 | -0.11 | 30.1 | 0.0602 | -0.7398 | 0.0007 |
| 21 | SLV 15 | -14.5 | -0.21 | 16.69 | 0.1617 | -0.6207 | 0.0012 |
| 21 | SLV 16 | -14.5 | -0.21 | 16.69 | 0.1617 | -0.6207 | 0.0012 |
| 22 | SLU 1 | -5.1 | -0.07 | 28.42 | 0.0428 | -0.2129 | 0.0005 |
| 22 | SLU 2 | -5.03 | -0.06 | 27.83 | 0.0373 | -0.2097 | 0.0004 |
| 22 | SLU 3 | -5.43 | -0.07 | 29.44 | 0.0431 | -0.2265 | 0.0005 |
| 22 | SLU 4 | -5.39 | -0.06 | 29.09 | 0.0398 | -0.2245 | 0.0004 |
| 22 | SLU 5 | -5.4 | -0.06 | 28.96 | 0.0375 | -0.2248 | 0.0004 |
| 22 | SLU 6 | -5.81 | -0.07 | 30.57 | 0.0432 | -0.2415 | 0.0005 |
| 22 | SLU 7 | -5.77 | -0.06 | 30.22 | 0.0399 | -0.2396 | 0.0004 |
| 22 | SLU 8 | -5.85 | -0.07 | 30.67 | 0.0431 | -0.243 | 0.0005 |
| 22 | SLU 9 | -5.81 | -0.06 | 30.31 | 0.0398 | -0.2411 | 0.0004 |
| 22 | SLU 10 | -6.01 | -0.07 | 30.84 | 0.0433 | -0.2495 | 0.0005 |
| 22 | SLU 11 | -6.41 | -0.08 | 32.45 | 0.0491 | -0.2663 | 0.0005 |
| 22 | SLU 12 | -6.37 | -0.07 | 32.1 | 0.0458 | -0.2644 | 0.0005 |
| 22 | SLU 13 | -6.38 | -0.07 | 31.97 | 0.0435 | -0.2646 | 0.0005 |
| 22 | SLU 14 | -6.79 | -0.08 | 33.58 | 0.0492 | -0.2813 | 0.0005 |
| 22 | SLU 15 | -6.75 | -0.07 | 33.23 | 0.0459 | -0.2794 | 0.0005 |
| 22 | SLU 16 | -6.82 | -0.08 | 33.68 | 0.0491 | -0.2828 | 0.0005 |
| 22 | SLU 17 | -6.78 | -0.07 | 33.33 | 0.0458 | -0.2809 | 0.0005 |
| 22 | SLU 18 | -6.49 | -0.08 | 32.72 | 0.0514 | -0.2698 | 0.0006 |
| 22 | SLU 19 | -6.45 | -0.08 | 32.37 | 0.0481 | -0.2679 | 0.0005 |
| 22 | SLU 20 | -6.87 | -0.08 | 33.84 | 0.0515 | -0.2848 | 0.0006 |
| 22 | SLU 21 | -6.83 | -0.08 | 33.49 | 0.0482 | -0.2829 | 0.0005 |
| 22 | SLU 22 | -5.62 | -0.07 | 30.08 | 0.0456 | -0.2341 | 0.0005 |
| 22 | SLU 23 | -5.55 | -0.06 | 29.5 | 0.0401 | -0.2309 | 0.0004 |
| 22 | SLU 24 | -5.96 | -0.07 | 31.11 | 0.0459 | -0.2476 | 0.0005 |
| 22 | SLU 25 | -5.92 | -0.07 | 30.76 | 0.0426 | -0.2457 | 0.0005 |
| 22 | SLU 26 | -5.93 | -0.06 | 30.62 | 0.0403 | -0.2459 | 0.0004 |
| 22 | SLU 27 | -6.33 | -0.07 | 32.23 | 0.0461 | -0.2627 | 0.0005 |
| 22 | SLU 28 | -6.29 | -0.07 | 31.88 | 0.0428 | -0.2608 | 0.0005 |
| 22 | SLU 29 | -6.37 | -0.07 | 32.33 | 0.046 | -0.2642 | 0.0005 |
| 22 | SLU 30 | -6.33 | -0.07 | 31.98 | 0.0427 | -0.2623 | 0.0005 |
| 22 | SLU 31 | -6.53 | -0.07 | 32.51 | 0.0462 | -0.2707 | 0.0005 |
| 22 | SLU 32 | -6.93 | -0.08 | 34.12 | 0.0519 | -0.2874 | 0.0006 |
| 22 | SLU 33 | -6.89 | -0.08 | 33.77 | 0.0486 | -0.2855 | 0.0005 |
| 22 | SLU 34 | -6.91 | -0.07 | 33.63 | 0.0463 | -0.2858 | 0.0005 |
| 22 | SLU 35 | -7.31 | -0.08 | 35.25 | 0.0521 | -0.3025 | 0.0006 |
| 22 | SLU 36 | -7.27 | -0.08 | 34.89 | 0.0488 | -0.3006 | 0.0005 |
| 22 | SLU 37 | -7.35 | -0.08 | 35.34 | 0.052 | -0.304 | 0.0006 |
| 22 | SLU 38 | -7.31 | -0.08 | 34.99 | 0.0487 | -0.3021 | 0.0005 |
| 22 | SLU 39 | -7.02 | -0.09 | 34.39 | 0.0542 | -0.2909 | 0.0006 |
| 22 | SLU 40 | -6.98 | -0.08 | 34.03 | 0.0509 | -0.289 | 0.0006 |
| 22 | SLU 41 | -7.39 | -0.09 | 35.51 | 0.0544 | -0.306 | 0.0006 |
| 22 | SLU 42 | -7.35 | -0.08 | 35.16 | 0.0511 | -0.3041 | 0.0006 |
| 22 | SLU 43 | -6.45 | -0.09 | 36.37 | 0.0546 | -0.2695 | 0.0006 |
| 22 | SLU 44 | -6.38 | -0.08 | 35.79 | 0.0491 | -0.2663 | 0.0005 |
| 22 | SLU 45 | -6.78 | -0.09 | 37.4 | 0.0549 | -0.2831 | 0.0006 |
| 22 | SLU 46 | -6.74 | -0.08 | 37.05 | 0.0516 | -0.2812 | 0.0006 |
| 22 | SLU 47 | -6.75 | -0.08 | 36.91 | 0.0493 | -0.2814 | 0.0005 |
| 22 | SLU 48 | -7.16 | -0.09 | 38.52 | 0.0551 | -0.2981 | 0.0006 |
| 22 | SLU 49 | -7.12 | -0.08 | 38.17 | 0.0518 | -0.2962 | 0.0006 |
| 22 | SLU 50 | -7.2 | -0.09 | 38.62 | 0.055 | -0.2996 | 0.0006 |
| 22 | SLU 51 | -7.16 | -0.08 | 38.27 | 0.0517 | -0.2977 | 0.0006 |
| 22 | SLU 52 | -7.36 | -0.09 | 38.8 | 0.0551 | -0.3061 | 0.0006 |
| 22 | SLU 53 | -7.76 | -0.1 | 40.41 | 0.0609 | -0.3229 | 0.0007 |
| 22 | SLU 54 | -7.72 | -0.09 | 40.06 | 0.0576 | -0.321 | 0.0006 |
| 22 | SLU 55 | -7.73 | -0.09 | 39.92 | 0.0553 | -0.3212 | 0.0006 |
| 22 | SLU 56 | -8.14 | -0.1 | 41.53 | 0.0611 | -0.3379 | 0.0007 |
| 22 | SLU 57 | -8.1 | -0.09 | 41.18 | 0.0578 | -0.336 | 0.0006 |
| 22 | SLU 58 | -8.17 | -0.1 | 41.63 | 0.061 | -0.3394 | 0.0007 |
| 22 | SLU 59 | -8.13 | -0.09 | 41.28 | 0.0577 | -0.3375 | 0.0006 |
| 22 | SLU 60 | -7.84 | -0.1 | 40.67 | 0.0632 | -0.3264 | 0.0007 |
| 22 | SLU 61 | -7.8 | -0.1 | 40.32 | 0.0599 | -0.3245 | 0.0007 |
| 22 | SLU 62 | -8.22 | -0.1 | 41.8 | 0.0634 | -0.3414 | 0.0007 |
| 22 | SLU 63 | -8.18 | -0.1 | 41.45 | 0.0601 | -0.3395 | 0.0007 |
| 22 | SLU 64 | -6.97 | -0.09 | 38.04 | 0.0575 | -0.2907 | 0.0006 |
| 22 | SLU 65 | -6.9 | -0.08 | 37.45 | 0.052 | -0.2875 | 0.0006 |
| 22 | SLU 66 | -7.31 | -0.09 | 39.06 | 0.0578 | -0.3042 | 0.0006 |
| 22 | SLU 67 | -7.27 | -0.09 | 38.71 | 0.0545 | -0.3023 | 0.0006 |
| 22 | SLU 68 | -7.28 | -0.08 | 38.58 | 0.0522 | -0.3025 | 0.0006 |
| 22 | SLU 69 | -7.68 | -0.09 | 40.19 | 0.0579 | -0.3193 | 0.0006 |

| Nodo | Cont. | Reazione a traslazione | | | Reazione a rotazione | | |
|---|---|---|---|---|---|---|---|
| Ind. | N.br. | x | y | z | x | y | z |
| 22 | SLU 70 | -7.64 | -0.09 | 39.84 | 0.0547 | -0.3174 | 0.0006 |
| 22 | SLU 71 | -7.72 | -0.09 | 40.29 | 0.0578 | -0.3208 | 0.0006 |
| 22 | SLU 72 | -7.68 | -0.09 | 39.93 | 0.0545 | -0.3189 | 0.0006 |
| 22 | SLU 73 | -7.88 | -0.09 | 40.46 | 0.058 | -0.3273 | 0.0006 |
| 22 | SLU 74 | -8.28 | -0.1 | 42.07 | 0.0638 | -0.3441 | 0.0007 |
| 22 | SLU 75 | -8.24 | -0.1 | 41.72 | 0.0605 | -0.3421 | 0.0007 |
| 22 | SLU 76 | -8.25 | -0.09 | 41.59 | 0.0582 | -0.3424 | 0.0006 |
| 22 | SLU 77 | -8.66 | -0.1 | 43.2 | 0.064 | -0.3591 | 0.0007 |
| 22 | SLU 78 | -8.62 | -0.1 | 42.85 | 0.0607 | -0.3572 | 0.0007 |
| 22 | SLU 79 | -8.7 | -0.1 | 43.3 | 0.0638 | -0.3606 | 0.0007 |
| 22 | SLU 80 | -8.66 | -0.1 | 42.95 | 0.0605 | -0.3587 | 0.0007 |
| 22 | SLU 81 | -8.36 | -0.11 | 42.34 | 0.0661 | -0.3475 | 0.0007 |
| 22 | SLU 82 | -8.33 | -0.1 | 41.99 | 0.0628 | -0.3456 | 0.0007 |
| 22 | SLU 83 | -8.74 | -0.11 | 43.46 | 0.0662 | -0.3626 | 0.0007 |
| 22 | SLU 84 | -8.7 | -0.1 | 43.11 | 0.0629 | -0.3607 | 0.0007 |
| 22 | SLE RA 1 | -5.25 | -0.07 | 28.89 | 0.0436 | -0.2189 | 0.0005 |
| 22 | SLE RA 2 | -5.2 | -0.06 | 28.5 | 0.0399 | -0.2168 | 0.0004 |
| 22 | SLE RA 3 | -5.47 | -0.07 | 29.58 | 0.0438 | -0.228 | 0.0005 |
| 22 | SLE RA 4 | -5.44 | -0.07 | 29.34 | 0.0416 | -0.2267 | 0.0005 |
| 22 | SLE RA 5 | -5.45 | -0.06 | 29.25 | 0.04 | -0.2269 | 0.0004 |
| 22 | SLE RA 6 | -5.72 | -0.07 | 30.33 | 0.0439 | -0.238 | 0.0005 |
| 22 | SLE RA 7 | -5.69 | -0.07 | 30.09 | 0.0417 | -0.2367 | 0.0005 |
| 22 | SLE RA 8 | -5.75 | -0.07 | 30.39 | 0.0438 | -0.239 | 0.0005 |
| 22 | SLE RA 9 | -5.72 | -0.07 | 30.16 | 0.0416 | -0.2377 | 0.0005 |
| 22 | SLE RA 10 | -5.85 | -0.07 | 30.51 | 0.0439 | -0.2434 | 0.0005 |
| 22 | SLE RA 11 | -6.12 | -0.08 | 31.58 | 0.0478 | -0.2545 | 0.0005 |
| 22 | SLE RA 12 | -6.1 | -0.07 | 31.35 | 0.0456 | -0.2533 | 0.0005 |
| 22 | SLE RA 13 | -6.1 | -0.07 | 31.26 | 0.0441 | -0.2534 | 0.0005 |
| 22 | SLE RA 14 | -6.37 | -0.08 | 32.33 | 0.0479 | -0.2646 | 0.0005 |
| 22 | SLE RA 15 | -6.35 | -0.07 | 32.1 | 0.0457 | -0.2633 | 0.0005 |
| 22 | SLE RA 16 | -6.4 | -0.08 | 32.4 | 0.0478 | -0.2656 | 0.0005 |
| 22 | SLE RA 17 | -6.37 | -0.07 | 32.17 | 0.0456 | -0.2643 | 0.0005 |
| 22 | SLE RA 18 | -6.18 | -0.08 | 31.76 | 0.0493 | -0.2569 | 0.0005 |
| 22 | SLE RA 19 | -6.15 | -0.07 | 31.53 | 0.0471 | -0.2556 | 0.0005 |
| 22 | SLE RA 20 | -6.43 | -0.08 | 32.51 | 0.0494 | -0.2669 | 0.0005 |
| 22 | SLE RA 21 | -6.4 | -0.08 | 32.28 | 0.0472 | -0.2656 | 0.0005 |
| 22 | SLE FR 1 | -5.25 | -0.07 | 28.89 | 0.0436 | -0.2189 | 0.0005 |
| 22 | SLE FR 2 | -5.24 | -0.07 | 28.82 | 0.0429 | -0.2185 | 0.0005 |
| 22 | SLE FR 3 | -5.35 | -0.07 | 29.19 | 0.0436 | -0.2229 | 0.0005 |
| 22 | SLE FR 4 | -5.52 | -0.07 | 29.68 | 0.0446 | -0.2299 | 0.0005 |
| 22 | SLE FR 5 | -5.62 | -0.07 | 30.05 | 0.0454 | -0.2343 | 0.0005 |
| 22 | SLE FR 6 | -5.71 | -0.07 | 30.33 | 0.0465 | -0.2379 | 0.0005 |
| 22 | SLE QP 1 | -5.25 | -0.07 | 28.89 | 0.0436 | -0.2189 | 0.0005 |
| 22 | SLE QP 2 | -5.52 | -0.07 | 29.75 | 0.0453 | -0.2303 | 0.0005 |
| 22 | SLD 1 | -1.45 | -0.04 | 27.86 | -0.0397 | -0.0506 | 0.0002 |
| 22 | SLD 2 | -1.45 | -0.04 | 27.86 | -0.0397 | -0.0506 | 0.0002 |
| 22 | SLD 3 | -0.13 | 0.05 | 23.27 | 0.0253 | 0.005 | -0.0004 |
| 22 | SLD 4 | -0.13 | 0.05 | 23.27 | 0.0253 | 0.005 | -0.0004 |
| 22 | SLD 5 | -6.3 | -0.2 | 36.15 | -0.0789 | -0.2607 | 0.0014 |
| 22 | SLD 6 | -6.3 | -0.2 | 36.15 | -0.0789 | -0.2607 | 0.0014 |
| 22 | SLD 7 | -1.91 | 0.1 | 20.85 | 0.138 | -0.0754 | -0.0008 |
| 22 | SLD 8 | -1.91 | 0.1 | 20.85 | 0.138 | -0.0754 | -0.0008 |
| 22 | SLD 9 | -9.14 | -0.25 | 38.66 | -0.0474 | -0.3852 | 0.0018 |
| 22 | SLD 10 | -9.14 | -0.25 | 38.66 | -0.0474 | -0.3852 | 0.0018 |
| 22 | SLD 11 | -4.75 | 0.05 | 23.36 | 0.1695 | -0.1999 | -0.0004 |
| 22 | SLD 12 | -4.75 | 0.05 | 23.36 | 0.1695 | -0.1999 | -0.0004 |
| 22 | SLD 13 | -10.92 | -0.2 | 36.24 | 0.0653 | -0.4656 | 0.0014 |
| 22 | SLD 14 | -10.92 | -0.2 | 36.24 | 0.0653 | -0.4656 | 0.0014 |
| 22 | SLD 15 | -9.6 | -0.11 | 31.65 | 0.1304 | -0.4101 | 0.0008 |
| 22 | SLD 16 | -9.6 | -0.11 | 31.65 | 0.1304 | -0.4101 | 0.0008 |
| 22 | SLV 1 | 3.99 | 0.01 | 25.34 | -0.1542 | 0.189 | -0.0001 |
| 22 | SLV 2 | 3.99 | 0.01 | 25.34 | -0.1542 | 0.189 | -0.0001 |
| 22 | SLV 3 | 7.1 | 0.23 | 14.4 | -0.0026 | 0.3204 | -0.0016 |
| 22 | SLV 4 | 7.1 | 0.23 | 14.4 | -0.0026 | 0.3204 | -0.0016 |
| 22 | SLV 5 | -7.4 | -0.37 | 45.02 | -0.2444 | -0.3039 | 0.0026 |
| 22 | SLV 6 | -7.4 | -0.37 | 45.02 | -0.2444 | -0.3039 | 0.0026 |
| 22 | SLV 7 | 2.99 | 0.34 | 8.56 | 0.2608 | 0.1343 | -0.0024 |
| 22 | SLV 8 | 2.99 | 0.34 | 8.56 | 0.2608 | 0.1343 | -0.0024 |
| 22 | SLV 9 | -14.04 | -0.48 | 50.95 | -0.1702 | -0.5949 | 0.0034 |
| 22 | SLV 10 | -14.04 | -0.48 | 50.95 | -0.1702 | -0.5949 | 0.0034 |
| 22 | SLV 11 | -3.65 | 0.22 | 14.49 | 0.335 | -0.1567 | -0.0016 |
| 22 | SLV 12 | -3.65 | 0.22 | 14.49 | 0.335 | -0.1567 | -0.0016 |
| 22 | SLV 13 | -18.15 | -0.37 | 45.1 | 0.0932 | -0.781 | 0.0027 |
| 22 | SLV 14 | -18.15 | -0.37 | 45.1 | 0.0932 | -0.781 | 0.0027 |
| 22 | SLV 15 | -15.03 | -0.16 | 34.17 | 0.2448 | -0.6496 | 0.0011 |
| 22 | SLV 16 | -15.03 | -0.16 | 34.17 | 0.2448 | -0.6496 | 0.0011 |
| 23 | SLU 1 | -4.39 | -0.1 | 25.35 | 0.0596 | -0.1741 | 0.0008 |
| 23 | SLU 2 | -4.4 | -0.1 | 24.7 | 0.0546 | -0.1741 | 0.0008 |
| 23 | SLU 3 | -4.69 | -0.1 | 26.09 | 0.0605 | -0.1857 | 0.0008 |
| 23 | SLU 4 | -4.7 | -0.1 | 25.69 | 0.0575 | -0.1856 | 0.0008 |
| 23 | SLU 5 | -4.74 | -0.1 | 25.5 | 0.0554 | -0.187 | 0.0008 |
| 23 | SLU 6 | -5.03 | -0.11 | 26.89 | 0.0614 | -0.1985 | 0.0009 |
| 23 | SLU 7 | -5.03 | -0.1 | 26.49 | 0.0584 | -0.1985 | 0.0008 |
| 23 | SLU 8 | -5.06 | -0.11 | 26.95 | 0.0613 | -0.1999 | 0.0009 |
| 23 | SLU 9 | -5.07 | -0.1 | 26.56 | 0.0583 | -0.1998 | 0.0008 |
| 23 | SLU 10 | -5.25 | -0.11 | 26.95 | 0.0623 | -0.2068 | 0.0009 |
| 23 | SLU 11 | -5.54 | -0.12 | 28.34 | 0.0683 | -0.2184 | 0.0009 |
| 23 | SLU 12 | -5.55 | -0.11 | 27.95 | 0.0653 | -0.2184 | 0.0009 |

| Nodo | Cont. | Reazione a traslazione | | | Reazione a rotazione | | |
|---|---|---|---|---|---|---|---|
| Ind. | N.br. | x | y | z | x | y | z |
| 23 | SLU 13 | -5.59 | -0.11 | 27.75 | 0.0632 | -0.2197 | 0.0009 |
| 23 | SLU 14 | -5.88 | -0.12 | 29.14 | 0.0691 | -0.2313 | 0.001 |
| 23 | SLU 15 | -5.88 | -0.11 | 28.75 | 0.0661 | -0.2313 | 0.0009 |
| 23 | SLU 16 | -5.91 | -0.12 | 29.2 | 0.069 | -0.2326 | 0.001 |
| 23 | SLU 17 | -5.92 | -0.11 | 28.81 | 0.066 | -0.2326 | 0.0009 |
| 23 | SLU 18 | -5.6 | -0.12 | 28.57 | 0.0707 | -0.2209 | 0.001 |
| 23 | SLU 19 | -5.61 | -0.12 | 28.18 | 0.0677 | -0.2209 | 0.0009 |
| 23 | SLU 20 | -5.94 | -0.12 | 29.37 | 0.0715 | -0.2338 | 0.001 |
| 23 | SLU 21 | -5.95 | -0.12 | 28.98 | 0.0685 | -0.2338 | 0.0009 |
| 23 | SLU 22 | -4.85 | -0.11 | 26.59 | 0.0636 | -0.1919 | 0.0009 |
| 23 | SLU 23 | -4.87 | -0.1 | 25.93 | 0.0586 | -0.1919 | 0.0008 |
| 23 | SLU 24 | -5.15 | -0.11 | 27.32 | 0.0645 | -0.2035 | 0.0009 |
| 23 | SLU 25 | -5.16 | -0.11 | 26.93 | 0.0615 | -0.2035 | 0.0009 |
| 23 | SLU 26 | -5.2 | -0.1 | 26.73 | 0.0594 | -0.2048 | 0.0008 |
| 23 | SLU 27 | -5.49 | -0.11 | 28.12 | 0.0654 | -0.2164 | 0.0009 |
| 23 | SLU 28 | -5.5 | -0.11 | 27.73 | 0.0624 | -0.2163 | 0.0009 |
| 23 | SLU 29 | -5.53 | -0.11 | 28.19 | 0.0653 | -0.2177 | 0.0009 |
| 23 | SLU 30 | -5.53 | -0.11 | 27.79 | 0.0623 | -0.2176 | 0.0009 |
| 23 | SLU 31 | -5.72 | -0.11 | 28.19 | 0.0663 | -0.2246 | 0.0009 |
| 23 | SLU 32 | -6 | -0.12 | 29.57 | 0.0723 | -0.2362 | 0.001 |
| 23 | SLU 33 | -6.01 | -0.12 | 29.18 | 0.0693 | -0.2362 | 0.001 |
| 23 | SLU 34 | -6.05 | -0.12 | 28.99 | 0.0672 | -0.2375 | 0.0009 |
| 23 | SLU 35 | -6.34 | -0.13 | 30.37 | 0.0731 | -0.2491 | 0.001 |
| 23 | SLU 36 | -6.35 | -0.12 | 29.98 | 0.0701 | -0.2491 | 0.001 |
| 23 | SLU 37 | -6.38 | -0.13 | 30.44 | 0.073 | -0.2504 | 0.001 |
| 23 | SLU 38 | -6.38 | -0.12 | 30.05 | 0.07 | -0.2504 | 0.001 |
| 23 | SLU 39 | -6.07 | -0.13 | 29.8 | 0.0747 | -0.2387 | 0.001 |
| 23 | SLU 40 | -6.08 | -0.12 | 29.41 | 0.0717 | -0.2387 | 0.001 |
| 23 | SLU 41 | -6.4 | -0.13 | 30.6 | 0.0755 | -0.2516 | 0.001 |
| 23 | SLU 42 | -6.41 | -0.12 | 30.21 | 0.0725 | -0.2516 | 0.001 |
| 23 | SLU 43 | -5.55 | -0.13 | 32.53 | 0.0761 | -0.2203 | 0.0011 |
| 23 | SLU 44 | -5.56 | -0.12 | 31.88 | 0.0711 | -0.2202 | 0.001 |
| 23 | SLU 45 | -5.85 | -0.13 | 33.27 | 0.0771 | -0.2318 | 0.0011 |
| 23 | SLU 46 | -5.86 | -0.13 | 32.88 | 0.0741 | -0.2318 | 0.001 |
| 23 | SLU 47 | -5.9 | -0.13 | 32.68 | 0.0719 | -0.2331 | 0.001 |
| 23 | SLU 48 | -6.18 | -0.14 | 34.07 | 0.0779 | -0.2447 | 0.0011 |
| 23 | SLU 49 | -6.19 | -0.13 | 33.68 | 0.0749 | -0.2447 | 0.001 |
| 23 | SLU 50 | -6.22 | -0.14 | 34.13 | 0.0778 | -0.246 | 0.0011 |
| 23 | SLU 51 | -6.23 | -0.13 | 33.74 | 0.0748 | -0.246 | 0.001 |
| 23 | SLU 52 | -6.41 | -0.14 | 34.13 | 0.0789 | -0.253 | 0.0011 |
| 23 | SLU 53 | -6.7 | -0.15 | 35.52 | 0.0848 | -0.2646 | 0.0012 |
| 23 | SLU 54 | -6.71 | -0.14 | 35.13 | 0.0818 | -0.2645 | 0.0011 |
| 23 | SLU 55 | -6.75 | -0.14 | 34.93 | 0.0797 | -0.2658 | 0.0011 |
| 23 | SLU 56 | -7.03 | -0.15 | 36.32 | 0.0856 | -0.2774 | 0.0012 |
| 23 | SLU 57 | -7.04 | -0.14 | 35.93 | 0.0826 | -0.2774 | 0.0011 |
| 23 | SLU 58 | -7.07 | -0.15 | 36.38 | 0.0855 | -0.2788 | 0.0012 |
| 23 | SLU 59 | -7.08 | -0.14 | 35.99 | 0.0825 | -0.2787 | 0.0011 |
| 23 | SLU 60 | -6.76 | -0.15 | 35.75 | 0.0872 | -0.2671 | 0.0012 |
| 23 | SLU 61 | -6.77 | -0.14 | 35.36 | 0.0842 | -0.267 | 0.0012 |
| 23 | SLU 62 | -7.1 | -0.15 | 36.55 | 0.088 | -0.2799 | 0.0012 |
| 23 | SLU 63 | -7.11 | -0.15 | 36.16 | 0.085 | -0.2799 | 0.0012 |
| 23 | SLU 64 | -6.01 | -0.14 | 33.77 | 0.0801 | -0.2381 | 0.0011 |
| 23 | SLU 65 | -6.02 | -0.13 | 33.11 | 0.0751 | -0.238 | 0.001 |
| 23 | SLU 66 | -6.31 | -0.14 | 34.5 | 0.0811 | -0.2496 | 0.0011 |
| 23 | SLU 67 | -6.32 | -0.14 | 34.11 | 0.0781 | -0.2496 | 0.0011 |
| 23 | SLU 68 | -6.36 | -0.13 | 33.91 | 0.076 | -0.2509 | 0.0011 |
| 23 | SLU 69 | -6.65 | -0.14 | 35.3 | 0.0819 | -0.2625 | 0.0011 |
| 23 | SLU 70 | -6.66 | -0.14 | 34.91 | 0.0789 | -0.2625 | 0.0011 |
| 23 | SLU 71 | -6.68 | -0.14 | 35.37 | 0.0818 | -0.2638 | 0.0011 |
| 23 | SLU 72 | -6.69 | -0.14 | 34.98 | 0.0788 | -0.2638 | 0.0011 |
| 23 | SLU 73 | -6.87 | -0.14 | 35.37 | 0.0829 | -0.2708 | 0.0011 |
| 23 | SLU 74 | -7.16 | -0.15 | 36.76 | 0.0888 | -0.2824 | 0.0012 |
| 23 | SLU 75 | -7.17 | -0.15 | 36.36 | 0.0858 | -0.2823 | 0.0012 |
| 23 | SLU 76 | -7.21 | -0.14 | 36.17 | 0.0837 | -0.2836 | 0.0012 |
| 23 | SLU 77 | -7.5 | -0.15 | 37.56 | 0.0896 | -0.2952 | 0.0012 |
| 23 | SLU 78 | -7.51 | -0.15 | 37.16 | 0.0866 | -0.2952 | 0.0012 |
| 23 | SLU 79 | -7.53 | -0.15 | 37.62 | 0.0895 | -0.2966 | 0.0012 |
| 23 | SLU 80 | -7.54 | -0.15 | 37.23 | 0.0865 | -0.2965 | 0.0012 |
| 23 | SLU 81 | -7.22 | -0.16 | 36.99 | 0.0912 | -0.2849 | 0.0012 |
| 23 | SLU 82 | -7.23 | -0.15 | 36.59 | 0.0882 | -0.2848 | 0.0012 |
| 23 | SLU 83 | -7.56 | -0.16 | 37.79 | 0.092 | -0.2977 | 0.0013 |
| 23 | SLU 84 | -7.57 | -0.15 | 37.39 | 0.089 | -0.2977 | 0.0012 |
| 23 | SLE RA 1 | -4.52 | -0.1 | 25.7 | 0.0608 | -0.1792 | 0.0008 |
| 23 | SLE RA 2 | -4.53 | -0.1 | 25.27 | 0.0574 | -0.1792 | 0.0008 |
| 23 | SLE RA 3 | -4.72 | -0.11 | 26.19 | 0.0614 | -0.1869 | 0.0009 |
| 23 | SLE RA 4 | -4.73 | -0.1 | 25.93 | 0.0594 | -0.1869 | 0.0008 |
| 23 | SLE RA 5 | -4.75 | -0.1 | 25.8 | 0.058 | -0.1878 | 0.0008 |
| 23 | SLE RA 6 | -4.95 | -0.11 | 26.73 | 0.0619 | -0.1955 | 0.0009 |
| 23 | SLE RA 7 | -4.95 | -0.1 | 26.47 | 0.0599 | -0.1955 | 0.0008 |
| 23 | SLE RA 8 | -4.97 | -0.11 | 26.77 | 0.0619 | -0.1964 | 0.0009 |
| 23 | SLE RA 9 | -4.97 | -0.1 | 26.51 | 0.0599 | -0.1964 | 0.0008 |
| 23 | SLE RA 10 | -5.1 | -0.11 | 26.77 | 0.0626 | -0.201 | 0.0009 |
| 23 | SLE RA 11 | -5.29 | -0.11 | 27.7 | 0.0665 | -0.2088 | 0.0009 |
| 23 | SLE RA 12 | -5.29 | -0.11 | 27.43 | 0.0645 | -0.2087 | 0.0009 |
| 23 | SLE RA 13 | -5.32 | -0.11 | 27.3 | 0.0631 | -0.2096 | 0.0009 |
| 23 | SLE RA 14 | -5.51 | -0.12 | 28.23 | 0.0671 | -0.2173 | 0.0009 |
| 23 | SLE RA 15 | -5.52 | -0.11 | 27.97 | 0.0651 | -0.2173 | 0.0009 |
| 23 | SLE RA 16 | -5.54 | -0.12 | 28.27 | 0.067 | -0.2182 | 0.0009 |

| Nodo | Cont. | Reazione a traslazione | | | Reazione a rotazione | | |
|---|---|---|---|---|---|---|---|
| Ind. | N.br. | x | y | z | x | y | z |
| 23 | SLE RA 17 | -5.54 | -0.11 | 28.01 | 0.065 | -0.2182 | 0.0009 |
| 23 | SLE RA 18 | -5.33 | -0.12 | 27.85 | 0.0681 | -0.2104 | 0.0009 |
| 23 | SLE RA 19 | -5.34 | -0.11 | 27.59 | 0.0661 | -0.2104 | 0.0009 |
| 23 | SLE RA 20 | -5.56 | -0.12 | 28.38 | 0.0687 | -0.219 | 0.0009 |
| 23 | SLE RA 21 | -5.56 | -0.11 | 28.12 | 0.0667 | -0.219 | 0.0009 |
| 23 | SLE FR 1 | -4.52 | -0.1 | 25.7 | 0.0608 | -0.1792 | 0.0008 |
| 23 | SLE FR 2 | -4.52 | -0.1 | 25.62 | 0.0601 | -0.1792 | 0.0008 |
| 23 | SLE FR 3 | -4.61 | -0.11 | 25.92 | 0.061 | -0.1827 | 0.0008 |
| 23 | SLE FR 4 | -4.77 | -0.11 | 26.26 | 0.0623 | -0.1886 | 0.0009 |
| 23 | SLE FR 5 | -4.85 | -0.11 | 26.56 | 0.0632 | -0.192 | 0.0009 |
| 23 | SLE FR 6 | -4.93 | -0.11 | 26.78 | 0.0644 | -0.1948 | 0.0009 |
| 23 | SLE QP 1 | -4.52 | -0.1 | 25.7 | 0.0608 | -0.1792 | 0.0008 |
| 23 | SLE QP 2 | -4.76 | -0.11 | 26.35 | 0.063 | -0.1886 | 0.0009 |
| 23 | SLD 1 | -0.56 | -0.09 | 24.16 | 0.0484 | 0.0008 | 0.0007 |
| 23 | SLD 2 | -0.56 | -0.09 | 24.16 | 0.0484 | 0.0008 | 0.0007 |
| 23 | SLD 3 | 0.53 | 0.04 | 20.29 | -0.0326 | 0.044 | -0.0003 |
| 23 | SLD 4 | 0.53 | 0.04 | 20.29 | -0.0326 | 0.044 | -0.0003 |
| 23 | SLD 5 | -5.17 | -0.3 | 31.55 | 0.1815 | -0.1973 | 0.0024 |
| 23 | SLD 6 | -5.17 | -0.3 | 31.55 | 0.1815 | -0.1973 | 0.0024 |
| 23 | SLD 7 | -1.51 | 0.13 | 18.67 | -0.0885 | -0.0532 | -0.001 |
| 23 | SLD 8 | -1.51 | 0.13 | 18.67 | -0.0885 | -0.0532 | -0.001 |
| 23 | SLD 9 | -8.02 | -0.35 | 34.03 | 0.2145 | -0.3239 | 0.0028 |
| 23 | SLD 10 | -8.02 | -0.35 | 34.03 | 0.2145 | -0.3239 | 0.0028 |
| 23 | SLD 11 | -4.36 | 0.08 | 21.14 | -0.0555 | -0.1798 | -0.0006 |
| 23 | SLD 12 | -4.36 | 0.08 | 21.14 | -0.0555 | -0.1798 | -0.0006 |
| 23 | SLD 13 | -10.06 | -0.26 | 32.4 | 0.1585 | -0.4212 | 0.0021 |
| 23 | SLD 14 | -10.06 | -0.26 | 32.4 | 0.1585 | -0.4212 | 0.0021 |
| 23 | SLD 15 | -8.97 | -0.13 | 28.54 | 0.0775 | -0.378 | 0.001 |
| 23 | SLD 16 | -8.97 | -0.13 | 28.54 | 0.0775 | -0.378 | 0.001 |
| 23 | SLV 1 | 5.05 | -0.06 | 21.24 | 0.0274 | 0.2536 | 0.0004 |
| 23 | SLV 2 | 5.05 | -0.06 | 21.24 | 0.0274 | 0.2536 | 0.0004 |
| 23 | SLV 3 | 7.63 | 0.24 | 11.99 | -0.1611 | 0.3557 | -0.0019 |
| 23 | SLV 4 | 7.63 | 0.24 | 11.99 | -0.1611 | 0.3557 | -0.0019 |
| 23 | SLV 5 | -5.74 | -0.54 | 38.85 | 0.3383 | -0.2107 | 0.0043 |
| 23 | SLV 6 | -5.74 | -0.54 | 38.85 | 0.3383 | -0.2107 | 0.0043 |
| 23 | SLV 7 | 2.88 | 0.44 | 8 | -0.2902 | 0.1295 | -0.0036 |
| 23 | SLV 8 | 2.88 | 0.44 | 8 | -0.2902 | 0.1295 | -0.0036 |
| 23 | SLV 9 | -12.41 | -0.66 | 44.69 | 0.4161 | -0.5066 | 0.0053 |
| 23 | SLV 10 | -12.41 | -0.66 | 44.69 | 0.4161 | -0.5066 | 0.0053 |
| 23 | SLV 11 | -3.79 | 0.33 | 13.84 | -0.2123 | -0.1664 | -0.0026 |
| 23 | SLV 12 | -3.79 | 0.33 | 13.84 | -0.2123 | -0.1664 | -0.0026 |
| 23 | SLV 13 | -17.16 | -0.45 | 40.71 | 0.287 | -0.7328 | 0.0037 |
| 23 | SLV 14 | -17.16 | -0.45 | 40.71 | 0.287 | -0.7328 | 0.0037 |
| 23 | SLV 15 | -14.58 | -0.16 | 31.45 | 0.0985 | -0.6308 | 0.0013 |
| 23 | SLV 16 | -14.58 | -0.16 | 31.45 | 0.0985 | -0.6308 | 0.0013 |
| 24 | SLU 1 | -3.61 | -0.11 | 23.38 | 0.0636 | -0.1556 | 0.0009 |
| 24 | SLU 2 | -3.73 | -0.11 | 22.56 | 0.06 | -0.1592 | 0.0009 |
| 24 | SLU 3 | -3.87 | -0.11 | 23.88 | 0.0647 | -0.1657 | 0.0009 |
| 24 | SLU 4 | -3.93 | -0.11 | 23.38 | 0.0625 | -0.1679 | 0.0009 |
| 24 | SLU 5 | -4.01 | -0.11 | 23.09 | 0.061 | -0.1705 | 0.0009 |
| 24 | SLU 6 | -4.15 | -0.11 | 24.41 | 0.0657 | -0.177 | 0.0009 |
| 24 | SLU 7 | -4.21 | -0.11 | 23.91 | 0.0635 | -0.1792 | 0.0009 |
| 24 | SLU 8 | -4.18 | -0.11 | 24.44 | 0.0656 | -0.1782 | 0.0009 |
| 24 | SLU 9 | -4.24 | -0.11 | 23.95 | 0.0634 | -0.1804 | 0.0009 |
| 24 | SLU 10 | -4.43 | -0.12 | 24.21 | 0.0676 | -0.1878 | 0.0009 |
| 24 | SLU 11 | -4.56 | -0.12 | 25.53 | 0.0723 | -0.1943 | 0.001 |
| 24 | SLU 12 | -4.63 | -0.12 | 25.03 | 0.0702 | -0.1965 | 0.001 |
| 24 | SLU 13 | -4.71 | -0.12 | 24.74 | 0.0686 | -0.1991 | 0.001 |
| 24 | SLU 14 | -4.85 | -0.13 | 26.06 | 0.0733 | -0.2056 | 0.001 |
| 24 | SLU 15 | -4.91 | -0.12 | 25.57 | 0.0712 | -0.2078 | 0.001 |
| 24 | SLU 16 | -4.88 | -0.13 | 26.1 | 0.0732 | -0.2068 | 0.001 |
| 24 | SLU 17 | -4.94 | -0.12 | 25.6 | 0.0711 | -0.209 | 0.001 |
| 24 | SLU 18 | -4.61 | -0.13 | 25.74 | 0.0745 | -0.1965 | 0.001 |
| 24 | SLU 19 | -4.68 | -0.12 | 25.24 | 0.0723 | -0.1986 | 0.001 |
| 24 | SLU 20 | -4.89 | -0.13 | 26.27 | 0.0755 | -0.2078 | 0.0011 |
| 24 | SLU 21 | -4.96 | -0.13 | 25.78 | 0.0733 | -0.2099 | 0.001 |
| 24 | SLU 22 | -4 | -0.12 | 24.27 | 0.0677 | -0.1714 | 0.0009 |
| 24 | SLU 23 | -4.11 | -0.11 | 23.44 | 0.0641 | -0.175 | 0.0009 |
| 24 | SLU 24 | -4.25 | -0.12 | 24.76 | 0.0688 | -0.1815 | 0.001 |
| 24 | SLU 25 | -4.32 | -0.12 | 24.27 | 0.0666 | -0.1837 | 0.0009 |
| 24 | SLU 26 | -4.4 | -0.11 | 23.98 | 0.0651 | -0.1863 | 0.0009 |
| 24 | SLU 27 | -4.53 | -0.12 | 25.3 | 0.0698 | -0.1928 | 0.001 |
| 24 | SLU 28 | -4.6 | -0.12 | 24.8 | 0.0676 | -0.195 | 0.001 |
| 24 | SLU 29 | -4.56 | -0.12 | 25.33 | 0.0697 | -0.1939 | 0.001 |
| 24 | SLU 30 | -4.63 | -0.12 | 24.84 | 0.0675 | -0.1961 | 0.001 |
| 24 | SLU 31 | -4.81 | -0.12 | 25.09 | 0.0718 | -0.2036 | 0.001 |
| 24 | SLU 32 | -4.95 | -0.13 | 26.42 | 0.0764 | -0.2101 | 0.0011 |
| 24 | SLU 33 | -5.02 | -0.13 | 25.92 | 0.0743 | -0.2123 | 0.001 |
| 24 | SLU 34 | -5.1 | -0.13 | 25.63 | 0.0728 | -0.2149 | 0.001 |
| 24 | SLU 35 | -5.23 | -0.13 | 26.95 | 0.0774 | -0.2214 | 0.0011 |
| 24 | SLU 36 | -5.3 | -0.13 | 26.45 | 0.0753 | -0.2236 | 0.0011 |
| 24 | SLU 37 | -5.26 | -0.13 | 26.98 | 0.0773 | -0.2225 | 0.0011 |
| 24 | SLU 38 | -5.33 | -0.13 | 26.49 | 0.0752 | -0.2247 | 0.0011 |
| 24 | SLU 39 | -5 | -0.13 | 26.63 | 0.0786 | -0.2122 | 0.0011 |
| 24 | SLU 40 | -5.07 | -0.13 | 26.13 | 0.0765 | -0.2144 | 0.0011 |
| 24 | SLU 41 | -5.28 | -0.14 | 27.16 | 0.0796 | -0.2235 | 0.0011 |
| 24 | SLU 42 | -5.35 | -0.13 | 26.66 | 0.0775 | -0.2257 | 0.0011 |
| 24 | SLU 43 | -4.56 | -0.14 | 30.09 | 0.0812 | -0.1969 | 0.0011 |

| Nodo | Cont. | Reazione a traslazione | | | Reazione a rotazione | | |
|---|---|---|---|---|---|---|---|
| Ind. | N.br. | x | y | z | x | y | z |
| 24 | SLU 44 | -4.68 | -0.14 | 29.27 | 0.0777 | -0.2005 | 0.0011 |
| 24 | SLU 45 | -4.82 | -0.14 | 30.59 | 0.0823 | -0.207 | 0.0012 |
| 24 | SLU 46 | -4.88 | -0.14 | 30.09 | 0.0802 | -0.2092 | 0.0011 |
| 24 | SLU 47 | -4.96 | -0.14 | 29.8 | 0.0786 | -0.2118 | 0.0011 |
| 24 | SLU 48 | -5.1 | -0.15 | 31.12 | 0.0833 | -0.2183 | 0.0012 |
| 24 | SLU 49 | -5.17 | -0.14 | 30.62 | 0.0812 | -0.2205 | 0.0012 |
| 24 | SLU 50 | -5.13 | -0.15 | 31.15 | 0.0832 | -0.2195 | 0.0012 |
| 24 | SLU 51 | -5.2 | -0.14 | 30.66 | 0.0811 | -0.2216 | 0.0012 |
| 24 | SLU 52 | -5.38 | -0.15 | 30.92 | 0.0853 | -0.2291 | 0.0012 |
| 24 | SLU 53 | -5.52 | -0.16 | 32.24 | 0.09 | -0.2356 | 0.0013 |
| 24 | SLU 54 | -5.58 | -0.15 | 31.74 | 0.0878 | -0.2378 | 0.0012 |
| 24 | SLU 55 | -5.66 | -0.15 | 31.45 | 0.0863 | -0.2404 | 0.0012 |
| 24 | SLU 56 | -5.8 | -0.16 | 32.77 | 0.091 | -0.2469 | 0.0013 |
| 24 | SLU 57 | -5.87 | -0.15 | 32.28 | 0.0888 | -0.2491 | 0.0013 |
| 24 | SLU 58 | -5.83 | -0.16 | 32.8 | 0.0909 | -0.2481 | 0.0013 |
| 24 | SLU 59 | -5.89 | -0.15 | 32.31 | 0.0887 | -0.2503 | 0.0012 |
| 24 | SLU 60 | -5.56 | -0.16 | 32.45 | 0.0922 | -0.2377 | 0.0013 |
| 24 | SLU 61 | -5.63 | -0.16 | 31.95 | 0.09 | -0.2399 | 0.0013 |
| 24 | SLU 62 | -5.85 | -0.16 | 32.98 | 0.0932 | -0.249 | 0.0013 |
| 24 | SLU 63 | -5.91 | -0.16 | 32.49 | 0.091 | -0.2512 | 0.0013 |
| 24 | SLU 64 | -4.95 | -0.15 | 30.98 | 0.0854 | -0.2126 | 0.0012 |
| 24 | SLU 65 | -5.07 | -0.14 | 30.15 | 0.0818 | -0.2163 | 0.0012 |
| 24 | SLU 66 | -5.2 | -0.15 | 31.47 | 0.0865 | -0.2228 | 0.0012 |
| 24 | SLU 67 | -5.27 | -0.15 | 30.98 | 0.0843 | -0.2249 | 0.0012 |
| 24 | SLU 68 | -5.35 | -0.14 | 30.69 | 0.0828 | -0.2276 | 0.0012 |
| 24 | SLU 69 | -5.49 | -0.15 | 32.01 | 0.0874 | -0.2341 | 0.0012 |
| 24 | SLU 70 | -5.55 | -0.15 | 31.51 | 0.0853 | -0.2362 | 0.0012 |
| 24 | SLU 71 | -5.52 | -0.15 | 32.04 | 0.0874 | -0.2352 | 0.0012 |
| 24 | SLU 72 | -5.58 | -0.15 | 31.55 | 0.0852 | -0.2374 | 0.0012 |
| 24 | SLU 73 | -5.76 | -0.15 | 31.8 | 0.0894 | -0.2449 | 0.0013 |
| 24 | SLU 74 | -5.9 | -0.16 | 33.12 | 0.0941 | -0.2514 | 0.0013 |
| 24 | SLU 75 | -5.97 | -0.16 | 32.63 | 0.0919 | -0.2535 | 0.0013 |
| 24 | SLU 76 | -6.05 | -0.16 | 32.34 | 0.0904 | -0.2562 | 0.0013 |
| 24 | SLU 77 | -6.19 | -0.16 | 33.66 | 0.0951 | -0.2627 | 0.0013 |
| 24 | SLU 78 | -6.25 | -0.16 | 33.16 | 0.0929 | -0.2648 | 0.0013 |
| 24 | SLU 79 | -6.21 | -0.16 | 33.69 | 0.095 | -0.2638 | 0.0013 |
| 24 | SLU 80 | -6.28 | -0.16 | 33.2 | 0.0928 | -0.266 | 0.0013 |
| 24 | SLU 81 | -5.95 | -0.16 | 33.34 | 0.0963 | -0.2535 | 0.0013 |
| 24 | SLU 82 | -6.02 | -0.16 | 32.84 | 0.0941 | -0.2557 | 0.0013 |
| 24 | SLU 83 | -6.23 | -0.17 | 33.87 | 0.0973 | -0.2648 | 0.0014 |
| 24 | SLU 84 | -6.3 | -0.16 | 33.37 | 0.0951 | -0.267 | 0.0013 |
| 24 | SLE RA 1 | -3.72 | -0.11 | 23.63 | 0.0648 | -0.1601 | 0.0009 |
| 24 | SLE RA 2 | -3.8 | -0.11 | 23.08 | 0.0624 | -0.1625 | 0.0009 |
| 24 | SLE RA 3 | -3.89 | -0.11 | 23.96 | 0.0655 | -0.1668 | 0.0009 |
| 24 | SLE RA 4 | -3.94 | -0.11 | 23.64 | 0.064 | -0.1683 | 0.0009 |
| 24 | SLE RA 5 | -3.99 | -0.11 | 23.44 | 0.063 | -0.1701 | 0.0009 |
| 24 | SLE RA 6 | -4.08 | -0.11 | 24.32 | 0.0661 | -0.1744 | 0.0009 |
| 24 | SLE RA 7 | -4.13 | -0.11 | 23.99 | 0.0647 | -0.1758 | 0.0009 |
| 24 | SLE RA 8 | -4.1 | -0.11 | 24.34 | 0.0661 | -0.1752 | 0.0009 |
| 24 | SLE RA 9 | -4.14 | -0.11 | 24.01 | 0.0647 | -0.1766 | 0.0009 |
| 24 | SLE RA 10 | -4.27 | -0.12 | 24.18 | 0.0675 | -0.1816 | 0.0009 |
| 24 | SLE RA 11 | -4.36 | -0.12 | 25.07 | 0.0706 | -0.1859 | 0.001 |
| 24 | SLE RA 12 | -4.4 | -0.12 | 24.74 | 0.0691 | -0.1874 | 0.001 |
| 24 | SLE RA 13 | -4.45 | -0.12 | 24.54 | 0.0681 | -0.1891 | 0.001 |
| 24 | SLE RA 14 | -4.55 | -0.12 | 25.42 | 0.0712 | -0.1934 | 0.001 |
| 24 | SLE RA 15 | -4.59 | -0.12 | 25.09 | 0.0698 | -0.1949 | 0.001 |
| 24 | SLE RA 16 | -4.57 | -0.12 | 25.44 | 0.0712 | -0.1942 | 0.001 |
| 24 | SLE RA 17 | -4.61 | -0.12 | 25.11 | 0.0697 | -0.1957 | 0.001 |
| 24 | SLE RA 18 | -4.39 | -0.12 | 25.21 | 0.072 | -0.1873 | 0.001 |
| 24 | SLE RA 19 | -4.44 | -0.12 | 24.88 | 0.0706 | -0.1888 | 0.001 |
| 24 | SLE RA 20 | -4.58 | -0.12 | 25.56 | 0.0727 | -0.1949 | 0.001 |
| 24 | SLE RA 21 | -4.62 | -0.12 | 25.23 | 0.0713 | -0.1963 | 0.001 |
| 24 | SLE FR 1 | -3.72 | -0.11 | 23.63 | 0.0648 | -0.1601 | 0.0009 |
| 24 | SLE FR 2 | -3.74 | -0.11 | 23.52 | 0.0643 | -0.1606 | 0.0009 |
| 24 | SLE FR 3 | -3.8 | -0.11 | 23.78 | 0.065 | -0.1631 | 0.0009 |
| 24 | SLE FR 4 | -3.94 | -0.12 | 24 | 0.0665 | -0.1688 | 0.0009 |
| 24 | SLE FR 5 | -4 | -0.12 | 24.25 | 0.0672 | -0.1713 | 0.0009 |
| 24 | SLE FR 6 | -4.06 | -0.12 | 24.42 | 0.0684 | -0.1737 | 0.001 |
| 24 | SLE QP 1 | -3.72 | -0.11 | 23.63 | 0.0648 | -0.1601 | 0.0009 |
| 24 | SLE QP 2 | -3.92 | -0.12 | 24.1 | 0.0669 | -0.1683 | 0.0009 |
| 24 | SLD 1 | 0.2 | -0.11 | 21.49 | 0.06 | 0.0147 | 0.0009 |
| 24 | SLD 2 | 0.2 | -0.11 | 21.49 | 0.06 | 0.0147 | 0.0009 |
| 24 | SLD 3 | 1.1 | 0.02 | 17.88 | -0.0242 | 0.0535 | -0.0002 |
| 24 | SLD 4 | 1.1 | 0.02 | 17.88 | -0.0242 | 0.0535 | -0.0002 |
| 24 | SLD 5 | -4.05 | -0.32 | 28.79 | 0.1925 | -0.1722 | 0.0026 |
| 24 | SLD 6 | -4.05 | -0.32 | 28.79 | 0.1925 | -0.1722 | 0.0026 |
| 24 | SLD 7 | -1.05 | 0.13 | 16.77 | -0.0881 | -0.0429 | -0.0011 |
| 24 | SLD 8 | -1.05 | 0.13 | 16.77 | -0.0881 | -0.0429 | -0.0011 |
| 24 | SLD 9 | -6.8 | -0.37 | 31.44 | 0.222 | -0.2936 | 0.003 |
| 24 | SLD 10 | -6.8 | -0.37 | 31.44 | 0.222 | -0.2936 | 0.003 |
| 24 | SLD 11 | -3.8 | 0.09 | 19.42 | -0.0587 | -0.1644 | -0.0007 |
| 24 | SLD 12 | -3.8 | 0.09 | 19.42 | -0.0587 | -0.1644 | -0.0007 |
| 24 | SLD 13 | -8.95 | -0.26 | 30.33 | 0.1581 | -0.39 | 0.0021 |
| 24 | SLD 14 | -8.95 | -0.26 | 30.33 | 0.1581 | -0.39 | 0.0021 |
| 24 | SLD 15 | -8.05 | -0.12 | 26.72 | 0.0739 | -0.3513 | 0.001 |
| 24 | SLD 16 | -8.05 | -0.12 | 26.72 | 0.0739 | -0.3513 | 0.001 |
| 24 | SLV 1 | 5.7 | -0.11 | 18.01 | 0.0489 | 0.2586 | 0.0008 |
| 24 | SLV 2 | 5.7 | -0.11 | 18.01 | 0.0489 | 0.2586 | 0.0008 |

| Nodo | Cont. | Reazione a traslazione | | | Reazione a rotazione | | |
|---|---|---|---|---|---|---|---|
| Ind. | N.br. | x | y | z | x | y | z |
| 24 | SLV 3 | 7.83 | 0.21 | 9.32 | -0.147 | 0.3499 | -0.0018 |
| 24 | SLV 4 | 7.83 | 0.21 | 9.32 | -0.147 | 0.3499 | -0.0018 |
| 24 | SLV 5 | -4.25 | -0.6 | 35.46 | 0.3586 | -0.1787 | 0.0048 |
| 24 | SLV 6 | -4.25 | -0.6 | 35.46 | 0.3586 | -0.1787 | 0.0048 |
| 24 | SLV 7 | 2.82 | 0.47 | 6.49 | -0.2943 | 0.1256 | -0.0038 |
| 24 | SLV 8 | 2.82 | 0.47 | 6.49 | -0.2943 | 0.1256 | -0.0038 |
| 24 | SLV 9 | -10.67 | -0.7 | 41.72 | 0.4282 | -0.4622 | 0.0057 |
| 24 | SLV 10 | -10.67 | -0.7 | 41.72 | 0.4282 | -0.4622 | 0.0057 |
| 24 | SLV 11 | -3.59 | 0.37 | 12.75 | -0.2247 | -0.1579 | -0.003 |
| 24 | SLV 12 | -3.59 | 0.37 | 12.75 | -0.2247 | -0.1579 | -0.003 |
| 24 | SLV 13 | -15.67 | -0.44 | 38.89 | 0.2809 | -0.6864 | 0.0037 |
| 24 | SLV 14 | -15.67 | -0.44 | 38.89 | 0.2809 | -0.6864 | 0.0037 |
| 24 | SLV 15 | -13.55 | -0.13 | 30.2 | 0.085 | -0.5951 | 0.0011 |
| 24 | SLV 16 | -13.55 | -0.13 | 30.2 | 0.085 | -0.5951 | 0.0011 |
| 25 | SLU 1 | -2.87 | -0.1 | 22.51 | 0.0553 | -0.12 | 0.0007 |
| 25 | SLU 2 | -3.09 | -0.09 | 21.39 | 0.0537 | -0.1273 | 0.0007 |
| 25 | SLU 3 | -3.06 | -0.1 | 22.82 | 0.0563 | -0.1272 | 0.0007 |
| 25 | SLU 4 | -3.19 | -0.1 | 22.15 | 0.0553 | -0.1316 | 0.0007 |
| 25 | SLU 5 | -3.3 | -0.1 | 21.71 | 0.0545 | -0.1354 | 0.0007 |
| 25 | SLU 6 | -3.27 | -0.1 | 23.15 | 0.0571 | -0.1353 | 0.0008 |
| 25 | SLU 7 | -3.41 | -0.1 | 22.47 | 0.0561 | -0.1397 | 0.0007 |
| 25 | SLU 8 | -3.3 | -0.1 | 23.16 | 0.057 | -0.1362 | 0.0007 |
| 25 | SLU 9 | -3.43 | -0.1 | 22.48 | 0.056 | -0.1406 | 0.0007 |
| 25 | SLU 10 | -3.61 | -0.1 | 22.6 | 0.0599 | -0.1474 | 0.0008 |
| 25 | SLU 11 | -3.58 | -0.11 | 24.04 | 0.0625 | -0.1473 | 0.0008 |
| 25 | SLU 12 | -3.71 | -0.1 | 23.36 | 0.0615 | -0.1517 | 0.0008 |
| 25 | SLU 13 | -3.82 | -0.1 | 22.92 | 0.0608 | -0.1555 | 0.0008 |
| 25 | SLU 14 | -3.8 | -0.11 | 24.36 | 0.0633 | -0.1554 | 0.0008 |
| 25 | SLU 15 | -3.93 | -0.11 | 23.69 | 0.0623 | -0.1598 | 0.0008 |
| 25 | SLU 16 | -3.82 | -0.11 | 24.37 | 0.0633 | -0.1563 | 0.0008 |
| 25 | SLU 17 | -3.95 | -0.11 | 23.7 | 0.0623 | -0.1607 | 0.0008 |
| 25 | SLU 18 | -3.62 | -0.11 | 24.24 | 0.0642 | -0.1487 | 0.0008 |
| 25 | SLU 19 | -3.75 | -0.11 | 23.57 | 0.0632 | -0.1531 | 0.0008 |
| 25 | SLU 20 | -3.83 | -0.11 | 24.57 | 0.0651 | -0.1568 | 0.0008 |
| 25 | SLU 21 | -3.96 | -0.11 | 23.89 | 0.0641 | -0.1612 | 0.0008 |
| 25 | SLU 22 | -3.17 | -0.1 | 23.14 | 0.0588 | -0.1313 | 0.0008 |
| 25 | SLU 23 | -3.38 | -0.1 | 22.01 | 0.0571 | -0.1386 | 0.0008 |
| 25 | SLU 24 | -3.36 | -0.1 | 23.45 | 0.0597 | -0.1385 | 0.0008 |
| 25 | SLU 25 | -3.49 | -0.1 | 22.78 | 0.0587 | -0.1429 | 0.0008 |
| 25 | SLU 26 | -3.6 | -0.1 | 22.34 | 0.058 | -0.1467 | 0.0008 |
| 25 | SLU 27 | -3.57 | -0.1 | 23.77 | 0.0606 | -0.1467 | 0.0008 |
| 25 | SLU 28 | -3.7 | -0.1 | 23.1 | 0.0596 | -0.151 | 0.0008 |
| 25 | SLU 29 | -3.59 | -0.1 | 23.79 | 0.0605 | -0.1475 | 0.0008 |
| 25 | SLU 30 | -3.72 | -0.1 | 23.11 | 0.0595 | -0.1519 | 0.0008 |
| 25 | SLU 31 | -3.91 | -0.11 | 23.22 | 0.0634 | -0.1587 | 0.0008 |
| 25 | SLU 32 | -3.88 | -0.11 | 24.66 | 0.066 | -0.1586 | 0.0008 |
| 25 | SLU 33 | -4.01 | -0.11 | 23.99 | 0.065 | -0.163 | 0.0008 |
| 25 | SLU 34 | -4.12 | -0.11 | 23.55 | 0.0642 | -0.1668 | 0.0008 |
| 25 | SLU 35 | -4.09 | -0.11 | 24.99 | 0.0668 | -0.1668 | 0.0009 |
| 25 | SLU 36 | -4.22 | -0.11 | 24.31 | 0.0658 | -0.1711 | 0.0008 |
| 25 | SLU 37 | -4.12 | -0.11 | 25 | 0.0667 | -0.1676 | 0.0009 |
| 25 | SLU 38 | -4.25 | -0.11 | 24.32 | 0.0657 | -0.172 | 0.0008 |
| 25 | SLU 39 | -3.91 | -0.11 | 24.87 | 0.0677 | -0.16 | 0.0009 |
| 25 | SLU 40 | -4.04 | -0.11 | 24.19 | 0.0667 | -0.1644 | 0.0009 |
| 25 | SLU 41 | -4.13 | -0.11 | 25.19 | 0.0686 | -0.1681 | 0.0009 |
| 25 | SLU 42 | -4.26 | -0.11 | 24.52 | 0.0676 | -0.1725 | 0.0009 |
| 25 | SLU 43 | -3.63 | -0.12 | 29.05 | 0.0707 | -0.1521 | 0.0009 |
| 25 | SLU 44 | -3.85 | -0.12 | 27.92 | 0.0691 | -0.1594 | 0.0009 |
| 25 | SLU 45 | -3.82 | -0.12 | 29.36 | 0.0717 | -0.1593 | 0.0009 |
| 25 | SLU 46 | -3.95 | -0.12 | 28.69 | 0.0707 | -0.1637 | 0.0009 |
| 25 | SLU 47 | -4.06 | -0.12 | 28.25 | 0.0699 | -0.1675 | 0.0009 |
| 25 | SLU 48 | -4.03 | -0.12 | 29.69 | 0.0725 | -0.1675 | 0.001 |
| 25 | SLU 49 | -4.17 | -0.12 | 29.01 | 0.0715 | -0.1718 | 0.0009 |
| 25 | SLU 50 | -4.06 | -0.12 | 29.7 | 0.0724 | -0.1683 | 0.001 |
| 25 | SLU 51 | -4.19 | -0.12 | 29.02 | 0.0714 | -0.1727 | 0.0009 |
| 25 | SLU 52 | -4.37 | -0.13 | 29.14 | 0.0753 | -0.1795 | 0.001 |
| 25 | SLU 53 | -4.34 | -0.13 | 30.58 | 0.0779 | -0.1794 | 0.001 |
| 25 | SLU 54 | -4.47 | -0.13 | 29.9 | 0.0769 | -0.1838 | 0.001 |
| 25 | SLU 55 | -4.58 | -0.13 | 29.46 | 0.0762 | -0.1876 | 0.001 |
| 25 | SLU 56 | -4.56 | -0.13 | 30.9 | 0.0787 | -0.1876 | 0.001 |
| 25 | SLU 57 | -4.69 | -0.13 | 30.22 | 0.0777 | -0.1919 | 0.001 |
| 25 | SLU 58 | -4.58 | -0.13 | 30.91 | 0.0787 | -0.1884 | 0.001 |
| 25 | SLU 59 | -4.71 | -0.13 | 30.23 | 0.0777 | -0.1928 | 0.001 |
| 25 | SLU 60 | -4.38 | -0.13 | 30.78 | 0.0796 | -0.1808 | 0.001 |
| 25 | SLU 61 | -4.51 | -0.13 | 30.11 | 0.0786 | -0.1852 | 0.001 |
| 25 | SLU 62 | -4.59 | -0.14 | 31.11 | 0.0805 | -0.1889 | 0.001 |
| 25 | SLU 63 | -4.72 | -0.13 | 30.43 | 0.0795 | -0.1933 | 0.001 |
| 25 | SLU 64 | -3.93 | -0.13 | 29.68 | 0.0742 | -0.1634 | 0.001 |
| 25 | SLU 65 | -4.14 | -0.13 | 28.55 | 0.0726 | -0.1707 | 0.001 |
| 25 | SLU 66 | -4.12 | -0.13 | 29.99 | 0.0751 | -0.1707 | 0.001 |
| 25 | SLU 67 | -4.25 | -0.13 | 29.31 | 0.0741 | -0.175 | 0.001 |
| 25 | SLU 68 | -4.36 | -0.13 | 28.87 | 0.0734 | -0.1788 | 0.001 |
| 25 | SLU 69 | -4.33 | -0.13 | 30.31 | 0.076 | -0.1788 | 0.001 |
| 25 | SLU 70 | -4.46 | -0.13 | 29.64 | 0.075 | -0.1832 | 0.001 |
| 25 | SLU 71 | -4.35 | -0.13 | 30.32 | 0.0759 | -0.1796 | 0.001 |
| 25 | SLU 72 | -4.48 | -0.13 | 29.65 | 0.0749 | -0.184 | 0.001 |
| 25 | SLU 73 | -4.67 | -0.13 | 29.76 | 0.0788 | -0.1908 | 0.001 |
| 25 | SLU 74 | -4.64 | -0.14 | 31.2 | 0.0814 | -0.1908 | 0.0011 |

| Nodo | Cont. | Reazione a traslazione | | | Reazione a rotazione | | |
|---|---|---|---|---|---|---|---|
| Ind. | N.br. | x | y | z | x | y | z |
| 25 | SLU 75 | -4.77 | -0.14 | 30.53 | 0.0804 | -0.1951 | 0.001 |
| 25 | SLU 76 | -4.88 | -0.14 | 30.09 | 0.0796 | -0.1989 | 0.001 |
| 25 | SLU 77 | -4.85 | -0.14 | 31.53 | 0.0822 | -0.1989 | 0.0011 |
| 25 | SLU 78 | -4.98 | -0.14 | 30.85 | 0.0812 | -0.2033 | 0.0011 |
| 25 | SLU 79 | -4.88 | -0.14 | 31.54 | 0.0821 | -0.1997 | 0.0011 |
| 25 | SLU 80 | -5.01 | -0.14 | 30.86 | 0.0811 | -0.2041 | 0.0011 |
| 25 | SLU 81 | -4.67 | -0.14 | 31.41 | 0.0831 | -0.1921 | 0.0011 |
| 25 | SLU 82 | -4.8 | -0.14 | 30.73 | 0.0821 | -0.1965 | 0.0011 |
| 25 | SLU 83 | -4.89 | -0.14 | 31.73 | 0.084 | -0.2002 | 0.0011 |
| 25 | SLU 84 | -5.02 | -0.14 | 31.06 | 0.083 | -0.2046 | 0.0011 |
| 25 | SLE RA 1 | -2.96 | -0.1 | 22.69 | 0.0563 | -0.1232 | 0.0007 |
| 25 | SLE RA 2 | -3.1 | -0.1 | 21.94 | 0.0552 | -0.1281 | 0.0007 |
| 25 | SLE RA 3 | -3.08 | -0.1 | 22.9 | 0.0569 | -0.1281 | 0.0007 |
| 25 | SLE RA 4 | -3.17 | -0.1 | 22.45 | 0.0563 | -0.131 | 0.0007 |
| 25 | SLE RA 5 | -3.24 | -0.1 | 22.16 | 0.0558 | -0.1335 | 0.0007 |
| 25 | SLE RA 6 | -3.22 | -0.1 | 23.11 | 0.0575 | -0.1335 | 0.0008 |
| 25 | SLE RA 7 | -3.31 | -0.1 | 22.66 | 0.0568 | -0.1364 | 0.0007 |
| 25 | SLE RA 8 | -3.24 | -0.1 | 23.12 | 0.0574 | -0.134 | 0.0008 |
| 25 | SLE RA 9 | -3.33 | -0.1 | 22.67 | 0.0568 | -0.137 | 0.0007 |
| 25 | SLE RA 10 | -3.45 | -0.1 | 22.75 | 0.0594 | -0.1415 | 0.0008 |
| 25 | SLE RA 11 | -3.43 | -0.1 | 23.71 | 0.0611 | -0.1415 | 0.0008 |
| 25 | SLE RA 12 | -3.52 | -0.1 | 23.26 | 0.0604 | -0.1444 | 0.0008 |
| 25 | SLE RA 13 | -3.59 | -0.1 | 22.96 | 0.0599 | -0.1469 | 0.0008 |
| 25 | SLE RA 14 | -3.57 | -0.1 | 23.92 | 0.0617 | -0.1469 | 0.0008 |
| 25 | SLE RA 15 | -3.66 | -0.1 | 23.47 | 0.061 | -0.1498 | 0.0008 |
| 25 | SLE RA 16 | -3.59 | -0.1 | 23.93 | 0.0616 | -0.1474 | 0.0008 |
| 25 | SLE RA 17 | -3.68 | -0.1 | 23.48 | 0.0609 | -0.1504 | 0.0008 |
| 25 | SLE RA 18 | -3.45 | -0.1 | 23.84 | 0.0623 | -0.1424 | 0.0008 |
| 25 | SLE RA 19 | -3.54 | -0.1 | 23.39 | 0.0616 | -0.1453 | 0.0008 |
| 25 | SLE RA 20 | -3.59 | -0.11 | 24.06 | 0.0628 | -0.1478 | 0.0008 |
| 25 | SLE RA 21 | -3.68 | -0.1 | 23.61 | 0.0622 | -0.1507 | 0.0008 |
| 25 | SLE FR 1 | -2.96 | -0.1 | 22.69 | 0.0563 | -0.1232 | 0.0007 |
| 25 | SLE FR 2 | -2.98 | -0.1 | 22.54 | 0.0561 | -0.1242 | 0.0007 |
| 25 | SLE FR 3 | -3.01 | -0.1 | 22.78 | 0.0565 | -0.1254 | 0.0007 |
| 25 | SLE FR 4 | -3.13 | -0.1 | 22.89 | 0.0579 | -0.1299 | 0.0008 |
| 25 | SLE FR 5 | -3.16 | -0.1 | 23.12 | 0.0583 | -0.1311 | 0.0008 |
| 25 | SLE FR 6 | -3.2 | -0.1 | 23.27 | 0.0593 | -0.1328 | 0.0008 |
| 25 | SLE QP 1 | -2.96 | -0.1 | 22.69 | 0.0563 | -0.1232 | 0.0007 |
| 25 | SLE QP 2 | -3.1 | -0.1 | 23.04 | 0.0581 | -0.129 | 0.0008 |
| 25 | SLD 1 | 0.87 | -0.1 | 19.8 | 0.0554 | 0.051 | 0.0008 |
| 25 | SLD 2 | 0.87 | -0.1 | 19.8 | 0.0554 | 0.051 | 0.0008 |
| 25 | SLD 3 | 1.62 | 0.02 | 15.84 | -0.0171 | 0.0791 | -0.0001 |
| 25 | SLD 4 | 1.62 | 0.02 | 15.84 | -0.0171 | 0.0791 | -0.0001 |
| 25 | SLD 5 | -3.04 | -0.27 | 28.07 | 0.1672 | -0.1175 | 0.0021 |
| 25 | SLD 6 | -3.04 | -0.27 | 28.07 | 0.1672 | -0.1175 | 0.0021 |
| 25 | SLD 7 | -0.56 | 0.11 | 14.87 | -0.0744 | -0.024 | -0.0009 |
| 25 | SLD 8 | -0.56 | 0.11 | 14.87 | -0.0744 | -0.024 | -0.0009 |
| 25 | SLD 9 | -5.65 | -0.31 | 31.2 | 0.1906 | -0.2339 | 0.0024 |
| 25 | SLD 10 | -5.65 | -0.31 | 31.2 | 0.1906 | -0.2339 | 0.0024 |
| 25 | SLD 11 | -3.17 | 0.07 | 18 | -0.051 | -0.1404 | -0.0006 |
| 25 | SLD 12 | -3.17 | 0.07 | 18 | -0.051 | -0.1404 | -0.0006 |
| 25 | SLD 13 | -7.82 | -0.22 | 30.24 | 0.1333 | -0.337 | 0.0017 |
| 25 | SLD 14 | -7.82 | -0.22 | 30.24 | 0.1333 | -0.337 | 0.0017 |
| 25 | SLD 15 | -7.08 | -0.1 | 26.27 | 0.0608 | -0.3089 | 0.0008 |
| 25 | SLD 16 | -7.08 | -0.1 | 26.27 | 0.0608 | -0.3089 | 0.0008 |
| 25 | SLV 1 | 6.16 | -0.09 | 15.52 | 0.0501 | 0.2904 | 0.0007 |
| 25 | SLV 2 | 6.16 | -0.09 | 15.52 | 0.0501 | 0.2904 | 0.0007 |
| 25 | SLV 3 | 7.93 | 0.17 | 5.92 | -0.1185 | 0.3573 | -0.0014 |
| 25 | SLV 4 | 7.93 | 0.17 | 5.92 | -0.1185 | 0.3573 | -0.0014 |
| 25 | SLV 5 | -3.01 | -0.5 | 35.34 | 0.3113 | -0.1046 | 0.0039 |
| 25 | SLV 6 | -3.01 | -0.5 | 35.34 | 0.3113 | -0.1046 | 0.0039 |
| 25 | SLV 7 | 2.89 | 0.39 | 3.34 | -0.2505 | 0.1183 | -0.003 |
| 25 | SLV 8 | 2.89 | 0.39 | 3.34 | -0.2505 | 0.1183 | -0.003 |
| 25 | SLV 9 | -9.1 | -0.58 | 42.73 | 0.3667 | -0.3763 | 0.0045 |
| 25 | SLV 10 | -9.1 | -0.58 | 42.73 | 0.3667 | -0.3763 | 0.0045 |
| 25 | SLV 11 | -3.2 | 0.3 | 10.74 | -0.1951 | -0.1533 | -0.0024 |
| 25 | SLV 12 | -3.2 | 0.3 | 10.74 | -0.1951 | -0.1533 | -0.0024 |
| 25 | SLV 13 | -14.14 | -0.37 | 40.15 | 0.2347 | -0.6152 | 0.0029 |
| 25 | SLV 14 | -14.14 | -0.37 | 40.15 | 0.2347 | -0.6152 | 0.0029 |
| 25 | SLV 15 | -12.37 | -0.11 | 30.56 | 0.0661 | -0.5483 | 0.0008 |
| 25 | SLV 16 | -12.37 | -0.11 | 30.56 | 0.0661 | -0.5483 | 0.0008 |
| 26 | SLU 1 | -2.86 | -0.05 | 22.43 | 0.0352 | -0.1285 | 0.0003 |
| 26 | SLU 2 | -3.16 | -0.05 | 20.85 | 0.0356 | -0.1384 | 0.0003 |
| 26 | SLU 3 | -3.01 | -0.05 | 22.61 | 0.0357 | -0.1344 | 0.0003 |
| 26 | SLU 4 | -3.19 | -0.05 | 21.66 | 0.036 | -0.1403 | 0.0003 |
| 26 | SLU 5 | -3.32 | -0.05 | 21.01 | 0.0361 | -0.145 | 0.0003 |
| 26 | SLU 6 | -3.17 | -0.05 | 22.77 | 0.0363 | -0.141 | 0.0003 |
| 26 | SLU 7 | -3.35 | -0.05 | 21.82 | 0.0365 | -0.1469 | 0.0003 |
| 26 | SLU 8 | -3.19 | -0.05 | 22.76 | 0.0362 | -0.1417 | 0.0003 |
| 26 | SLU 9 | -3.37 | -0.05 | 21.81 | 0.0365 | -0.1476 | 0.0003 |
| 26 | SLU 10 | -3.57 | -0.06 | 21.75 | 0.0395 | -0.1554 | 0.0003 |
| 26 | SLU 11 | -3.42 | -0.05 | 23.52 | 0.0396 | -0.1514 | 0.0003 |
| 26 | SLU 12 | -3.6 | -0.05 | 22.56 | 0.0399 | -0.1574 | 0.0003 |
| 26 | SLU 13 | -3.73 | -0.06 | 21.92 | 0.04 | -0.162 | 0.0003 |
| 26 | SLU 14 | -3.58 | -0.05 | 23.68 | 0.0401 | -0.158 | 0.0003 |
| 26 | SLU 15 | -3.76 | -0.06 | 22.73 | 0.0404 | -0.164 | 0.0003 |
| 26 | SLU 16 | -3.6 | -0.05 | 23.67 | 0.0401 | -0.1587 | 0.0003 |
| 26 | SLU 17 | -3.78 | -0.06 | 22.72 | 0.0403 | -0.1647 | 0.0003 |

| Nodo | Cont. | Reazione a traslazione | | | Reazione a rotazione | | |
|---|---|---|---|---|---|---|---|
| Ind. | N.br. | x | y | z | x | y | z |
| 26 | SLU 18 | -3.44 | -0.05 | 23.73 | 0.0406 | -0.1528 | 0.0003 |
| 26 | SLU 19 | -3.62 | -0.06 | 22.78 | 0.0409 | -0.1587 | 0.0003 |
| 26 | SLU 20 | -3.61 | -0.05 | 23.9 | 0.0412 | -0.1594 | 0.0003 |
| 26 | SLU 21 | -3.79 | -0.06 | 22.94 | 0.0414 | -0.1654 | 0.0003 |
| 26 | SLU 22 | -3.1 | -0.05 | 22.87 | 0.0373 | -0.1381 | 0.0003 |
| 26 | SLU 23 | -3.39 | -0.05 | 21.28 | 0.0378 | -0.148 | 0.0003 |
| 26 | SLU 24 | -3.24 | -0.05 | 23.05 | 0.0379 | -0.144 | 0.0003 |
| 26 | SLU 25 | -3.42 | -0.05 | 22.09 | 0.0382 | -0.15 | 0.0003 |
| 26 | SLU 26 | -3.56 | -0.05 | 21.45 | 0.0383 | -0.1546 | 0.0003 |
| 26 | SLU 27 | -3.41 | -0.05 | 23.21 | 0.0385 | -0.1506 | 0.0003 |
| 26 | SLU 28 | -3.59 | -0.05 | 22.26 | 0.0387 | -0.1566 | 0.0003 |
| 26 | SLU 29 | -3.43 | -0.05 | 23.2 | 0.0384 | -0.1513 | 0.0003 |
| 26 | SLU 30 | -3.6 | -0.05 | 22.25 | 0.0387 | -0.1573 | 0.0003 |
| 26 | SLU 31 | -3.8 | -0.06 | 22.19 | 0.0416 | -0.1651 | 0.0003 |
| 26 | SLU 32 | -3.65 | -0.06 | 23.95 | 0.0418 | -0.1611 | 0.0003 |
| 26 | SLU 33 | -3.83 | -0.06 | 23 | 0.042 | -0.167 | 0.0003 |
| 26 | SLU 34 | -3.96 | -0.06 | 22.36 | 0.0422 | -0.1717 | 0.0003 |
| 26 | SLU 35 | -3.81 | -0.06 | 24.12 | 0.0423 | -0.1677 | 0.0003 |
| 26 | SLU 36 | -3.99 | -0.06 | 23.17 | 0.0426 | -0.1736 | 0.0003 |
| 26 | SLU 37 | -3.83 | -0.06 | 24.11 | 0.0423 | -0.1684 | 0.0003 |
| 26 | SLU 38 | -4.01 | -0.06 | 23.16 | 0.0425 | -0.1743 | 0.0003 |
| 26 | SLU 39 | -3.68 | -0.06 | 24.17 | 0.0428 | -0.1625 | 0.0003 |
| 26 | SLU 40 | -3.86 | -0.06 | 23.22 | 0.0431 | -0.1684 | 0.0003 |
| 26 | SLU 41 | -3.84 | -0.06 | 24.33 | 0.0434 | -0.1691 | 0.0003 |
| 26 | SLU 42 | -4.02 | -0.06 | 23.38 | 0.0436 | -0.175 | 0.0003 |
| 26 | SLU 43 | -3.64 | -0.06 | 29.01 | 0.0449 | -0.1637 | 0.0004 |
| 26 | SLU 44 | -3.94 | -0.07 | 27.43 | 0.0454 | -0.1736 | 0.0004 |
| 26 | SLU 45 | -3.79 | -0.06 | 29.19 | 0.0455 | -0.1696 | 0.0004 |
| 26 | SLU 46 | -3.97 | -0.07 | 28.24 | 0.0458 | -0.1756 | 0.0004 |
| 26 | SLU 47 | -4.1 | -0.07 | 27.59 | 0.0459 | -0.1802 | 0.0004 |
| 26 | SLU 48 | -3.95 | -0.06 | 29.35 | 0.0461 | -0.1762 | 0.0004 |
| 26 | SLU 49 | -4.13 | -0.07 | 28.4 | 0.0463 | -0.1822 | 0.0004 |
| 26 | SLU 50 | -3.97 | -0.06 | 29.34 | 0.046 | -0.1769 | 0.0004 |
| 26 | SLU 51 | -4.15 | -0.07 | 28.39 | 0.0463 | -0.1828 | 0.0004 |
| 26 | SLU 52 | -4.35 | -0.07 | 28.33 | 0.0492 | -0.1906 | 0.0004 |
| 26 | SLU 53 | -4.2 | -0.07 | 30.1 | 0.0494 | -0.1867 | 0.0004 |
| 26 | SLU 54 | -4.37 | -0.07 | 29.14 | 0.0496 | -0.1926 | 0.0004 |
| 26 | SLU 55 | -4.51 | -0.07 | 28.5 | 0.0498 | -0.1972 | 0.0004 |
| 26 | SLU 56 | -4.36 | -0.07 | 30.26 | 0.0499 | -0.1933 | 0.0004 |
| 26 | SLU 57 | -4.54 | -0.07 | 29.31 | 0.0502 | -0.1992 | 0.0004 |
| 26 | SLU 58 | -4.38 | -0.07 | 30.25 | 0.0499 | -0.1939 | 0.0004 |
| 26 | SLU 59 | -4.56 | -0.07 | 29.3 | 0.0501 | -0.1999 | 0.0004 |
| 26 | SLU 60 | -4.22 | -0.07 | 30.31 | 0.0504 | -0.188 | 0.0004 |
| 26 | SLU 61 | -4.4 | -0.07 | 29.36 | 0.0507 | -0.194 | 0.0004 |
| 26 | SLU 62 | -4.39 | -0.07 | 30.48 | 0.051 | -0.1946 | 0.0004 |
| 26 | SLU 63 | -4.57 | -0.07 | 29.52 | 0.0512 | -0.2006 | 0.0004 |
| 26 | SLU 64 | -3.87 | -0.07 | 29.45 | 0.0471 | -0.1733 | 0.0004 |
| 26 | SLU 65 | -4.17 | -0.07 | 27.86 | 0.0476 | -0.1832 | 0.0004 |
| 26 | SLU 66 | -4.02 | -0.07 | 29.63 | 0.0477 | -0.1793 | 0.0004 |
| 26 | SLU 67 | -4.2 | -0.07 | 28.67 | 0.048 | -0.1852 | 0.0004 |
| 26 | SLU 68 | -4.34 | -0.07 | 28.03 | 0.0481 | -0.1899 | 0.0004 |
| 26 | SLU 69 | -4.19 | -0.07 | 29.79 | 0.0483 | -0.1859 | 0.0004 |
| 26 | SLU 70 | -4.36 | -0.07 | 28.84 | 0.0485 | -0.1918 | 0.0004 |
| 26 | SLU 71 | -4.2 | -0.07 | 29.78 | 0.0482 | -0.1866 | 0.0004 |
| 26 | SLU 72 | -4.38 | -0.07 | 28.83 | 0.0485 | -0.1925 | 0.0004 |
| 26 | SLU 73 | -4.58 | -0.07 | 28.77 | 0.0514 | -0.2003 | 0.0004 |
| 26 | SLU 74 | -4.43 | -0.07 | 30.53 | 0.0516 | -0.1963 | 0.0004 |
| 26 | SLU 75 | -4.61 | -0.07 | 29.58 | 0.0518 | -0.2022 | 0.0004 |
| 26 | SLU 76 | -4.74 | -0.07 | 28.94 | 0.052 | -0.2069 | 0.0004 |
| 26 | SLU 77 | -4.59 | -0.07 | 30.7 | 0.0521 | -0.2029 | 0.0004 |
| 26 | SLU 78 | -4.77 | -0.07 | 29.75 | 0.0524 | -0.2089 | 0.0004 |
| 26 | SLU 79 | -4.61 | -0.07 | 30.69 | 0.0521 | -0.2036 | 0.0004 |
| 26 | SLU 80 | -4.79 | -0.07 | 29.74 | 0.0523 | -0.2095 | 0.0004 |
| 26 | SLU 81 | -4.46 | -0.07 | 30.75 | 0.0526 | -0.1977 | 0.0004 |
| 26 | SLU 82 | -4.63 | -0.07 | 29.8 | 0.0529 | -0.2036 | 0.0004 |
| 26 | SLU 83 | -4.62 | -0.07 | 30.91 | 0.0532 | -0.2043 | 0.0004 |
| 26 | SLU 84 | -4.8 | -0.07 | 29.96 | 0.0534 | -0.2102 | 0.0004 |
| 26 | SLE RA 1 | -2.93 | -0.05 | 22.56 | 0.0358 | -0.1312 | 0.0003 |
| 26 | SLE RA 2 | -3.13 | -0.05 | 21.5 | 0.0361 | -0.1378 | 0.0003 |
| 26 | SLE RA 3 | -3.03 | -0.05 | 22.68 | 0.0362 | -0.1352 | 0.0003 |
| 26 | SLE RA 4 | -3.15 | -0.05 | 22.04 | 0.0364 | -0.1391 | 0.0003 |
| 26 | SLE RA 5 | -3.24 | -0.05 | 21.61 | 0.0364 | -0.1422 | 0.0003 |
| 26 | SLE RA 6 | -3.14 | -0.05 | 22.79 | 0.0365 | -0.1396 | 0.0003 |
| 26 | SLE RA 7 | -3.26 | -0.05 | 22.15 | 0.0367 | -0.1435 | 0.0003 |
| 26 | SLE RA 8 | -3.15 | -0.05 | 22.78 | 0.0365 | -0.14 | 0.0003 |
| 26 | SLE RA 9 | -3.27 | -0.05 | 22.14 | 0.0367 | -0.144 | 0.0003 |
| 26 | SLE RA 10 | -3.4 | -0.05 | 22.11 | 0.0386 | -0.1492 | 0.0003 |
| 26 | SLE RA 11 | -3.3 | -0.05 | 23.28 | 0.0387 | -0.1465 | 0.0003 |
| 26 | SLE RA 12 | -3.42 | -0.05 | 22.65 | 0.0389 | -0.1505 | 0.0003 |
| 26 | SLE RA 13 | -3.51 | -0.05 | 22.22 | 0.039 | -0.1536 | 0.0003 |
| 26 | SLE RA 14 | -3.41 | -0.05 | 23.39 | 0.0391 | -0.1509 | 0.0003 |
| 26 | SLE RA 15 | -3.53 | -0.05 | 22.76 | 0.0393 | -0.1549 | 0.0003 |
| 26 | SLE RA 16 | -3.42 | -0.05 | 23.38 | 0.0391 | -0.1514 | 0.0003 |
| 26 | SLE RA 17 | -3.54 | -0.05 | 22.75 | 0.0392 | -0.1553 | 0.0003 |
| 26 | SLE RA 18 | -3.32 | -0.05 | 23.42 | 0.0394 | -0.1474 | 0.0003 |
| 26 | SLE RA 19 | -3.44 | -0.05 | 22.79 | 0.0396 | -0.1514 | 0.0003 |
| 26 | SLE RA 20 | -3.43 | -0.05 | 23.53 | 0.0398 | -0.1519 | 0.0003 |
| 26 | SLE RA 21 | -3.55 | -0.05 | 22.9 | 0.04 | -0.1558 | 0.0003 |

| Nodo | Cont. | Reazione a traslazione | | | Reazione a rotazione | | |
|---|---|---|---|---|---|---|---|
| Ind. | N.br. | x | y | z | x | y | z |
| 26 | SLE FR 1 | -2.93 | -0.05 | 22.56 | 0.0358 | -0.1312 | 0.0003 |
| 26 | SLE FR 2 | -2.97 | -0.05 | 22.35 | 0.0358 | -0.1325 | 0.0003 |
| 26 | SLE FR 3 | -2.97 | -0.05 | 22.6 | 0.0359 | -0.133 | 0.0003 |
| 26 | SLE FR 4 | -3.09 | -0.05 | 22.61 | 0.0369 | -0.1374 | 0.0003 |
| 26 | SLE FR 5 | -3.09 | -0.05 | 22.86 | 0.037 | -0.1378 | 0.0003 |
| 26 | SLE FR 6 | -3.12 | -0.05 | 22.99 | 0.0376 | -0.1393 | 0.0003 |
| 26 | SLE QP 1 | -2.93 | -0.05 | 22.56 | 0.0358 | -0.1312 | 0.0003 |
| 26 | SLE QP 2 | -3.05 | -0.05 | 22.82 | 0.0369 | -0.1361 | 0.0003 |
| 26 | SLD 1 | 0.66 | -0.16 | 18.82 | 0.0315 | 0.0354 | 0.0009 |
| 26 | SLD 2 | 0.66 | -0.16 | 18.82 | 0.0315 | 0.0354 | 0.0009 |
| 26 | SLD 3 | 1.46 | -0.09 | 13.81 | -0.0183 | 0.0654 | 0.0004 |
| 26 | SLD 4 | 1.46 | -0.09 | 13.81 | -0.0183 | 0.0654 | 0.0004 |
| 26 | SLD 5 | -3.15 | -0.19 | 29.22 | 0.1108 | -0.1302 | 0.0012 |
| 26 | SLD 6 | -3.15 | -0.19 | 29.22 | 0.1108 | -0.1302 | 0.0012 |
| 26 | SLD 7 | -0.48 | 0.04 | 12.51 | -0.0552 | -0.03 | -0.0005 |
| 26 | SLD 8 | -0.48 | 0.04 | 12.51 | -0.0552 | -0.03 | -0.0005 |
| 26 | SLD 9 | -5.61 | -0.14 | 33.12 | 0.129 | -0.2421 | 0.001 |
| 26 | SLD 10 | -5.61 | -0.14 | 33.12 | 0.129 | -0.2421 | 0.001 |
| 26 | SLD 11 | -2.94 | 0.08 | 16.42 | -0.0371 | -0.1419 | -0.0006 |
| 26 | SLD 12 | -2.94 | 0.08 | 16.42 | -0.0371 | -0.1419 | -0.0006 |
| 26 | SLD 13 | -7.55 | -0.01 | 31.83 | 0.092 | -0.3376 | 0.0002 |
| 26 | SLD 14 | -7.55 | -0.01 | 31.83 | 0.092 | -0.3376 | 0.0002 |
| 26 | SLD 15 | -6.75 | 0.06 | 26.82 | 0.0422 | -0.3075 | -0.0003 |
| 26 | SLD 16 | -6.75 | 0.06 | 26.82 | 0.0422 | -0.3075 | -0.0003 |
| 26 | SLV 1 | 5.57 | -0.3 | 13.54 | 0.0233 | 0.2631 | 0.0016 |
| 26 | SLV 2 | 5.57 | -0.3 | 13.54 | 0.0233 | 0.2631 | 0.0016 |
| 26 | SLV 3 | 7.49 | -0.14 | 1.38 | -0.0923 | 0.3349 | 0.0005 |
| 26 | SLV 4 | 7.49 | -0.14 | 1.38 | -0.0923 | 0.3349 | 0.0005 |
| 26 | SLV 5 | -3.38 | -0.36 | 38.48 | 0.2081 | -0.1252 | 0.0025 |
| 26 | SLV 6 | -3.38 | -0.36 | 38.48 | 0.2081 | -0.1252 | 0.0025 |
| 26 | SLV 7 | 3.03 | 0.16 | -2.05 | -0.1772 | 0.1141 | -0.0014 |
| 26 | SLV 8 | 3.03 | 0.16 | -2.05 | -0.1772 | 0.1141 | -0.0014 |
| 26 | SLV 9 | -9.12 | -0.26 | 47.69 | 0.251 | -0.3862 | 0.002 |
| 26 | SLV 10 | -9.12 | -0.26 | 47.69 | 0.251 | -0.3862 | 0.002 |
| 26 | SLV 11 | -2.72 | 0.26 | 7.16 | -0.1344 | -0.147 | -0.0019 |
| 26 | SLV 12 | -2.72 | 0.26 | 7.16 | -0.1344 | -0.147 | -0.0019 |
| 26 | SLV 13 | -13.59 | 0.04 | 44.25 | 0.1661 | -0.607 | 0.0001 |
| 26 | SLV 14 | -13.59 | 0.04 | 44.25 | 0.1661 | -0.607 | 0.0001 |
| 26 | SLV 15 | -11.66 | 0.2 | 32.09 | 0.0505 | -0.5353 | -0.001 |
| 26 | SLV 16 | -11.66 | 0.2 | 32.09 | 0.0505 | -0.5353 | -0.001 |
| 27 | SLU 1 | -3.21 | 0.03 | 23.85 | 0.0095 | -0.1575 | 0.0001 |
| 27 | SLU 2 | -3.53 | 0.02 | 21.5 | 0.012 | -0.165 | 0.0001 |
| 27 | SLU 3 | -3.32 | 0.03 | 23.94 | 0.0097 | -0.1615 | 0.0001 |
| 27 | SLU 4 | -3.51 | 0.02 | 22.52 | 0.0113 | -0.166 | 0.0001 |
| 27 | SLU 5 | -3.65 | 0.02 | 21.55 | 0.0123 | -0.1694 | 0.0001 |
| 27 | SLU 6 | -3.43 | 0.03 | 23.99 | 0.01 | -0.1659 | 0.0001 |
| 27 | SLU 7 | -3.62 | 0.02 | 22.58 | 0.0115 | -0.1704 | 0.0001 |
| 27 | SLU 8 | -3.45 | 0.03 | 23.96 | 0.01 | -0.1663 | 0.0001 |
| 27 | SLU 9 | -3.64 | 0.02 | 22.54 | 0.0115 | -0.1708 | 0.0001 |
| 27 | SLU 10 | -3.81 | 0.02 | 22.32 | 0.0133 | -0.1773 | 0.0001 |
| 27 | SLU 11 | -3.59 | 0.03 | 24.75 | 0.011 | -0.1737 | 0.0001 |
| 27 | SLU 12 | -3.78 | 0.03 | 23.34 | 0.0125 | -0.1782 | 0.0001 |
| 27 | SLU 13 | -3.92 | 0.02 | 22.37 | 0.0135 | -0.1817 | 0.0002 |
| 27 | SLU 14 | -3.71 | 0.03 | 24.8 | 0.0112 | -0.1781 | 0.0001 |
| 27 | SLU 15 | -3.9 | 0.03 | 23.39 | 0.0127 | -0.1826 | 0.0001 |
| 27 | SLU 16 | -3.72 | 0.03 | 24.77 | 0.0112 | -0.1786 | 0.0001 |
| 27 | SLU 17 | -3.91 | 0.03 | 23.36 | 0.0128 | -0.1831 | 0.0001 |
| 27 | SLU 18 | -3.61 | 0.03 | 25.02 | 0.0113 | -0.175 | 0.0001 |
| 27 | SLU 19 | -3.8 | 0.03 | 23.6 | 0.0128 | -0.1795 | 0.0001 |
| 27 | SLU 20 | -3.73 | 0.03 | 25.07 | 0.0115 | -0.1794 | 0.0001 |
| 27 | SLU 21 | -3.92 | 0.03 | 23.66 | 0.013 | -0.1839 | 0.0001 |
| 27 | SLU 22 | -3.36 | 0.03 | 24.23 | 0.0102 | -0.1642 | 0.0001 |
| 27 | SLU 23 | -3.68 | 0.02 | 21.88 | 0.0128 | -0.1717 | 0.0001 |
| 27 | SLU 24 | -3.47 | 0.03 | 24.31 | 0.0105 | -0.1681 | 0.0001 |
| 27 | SLU 25 | -3.66 | 0.03 | 22.9 | 0.012 | -0.1726 | 0.0001 |
| 27 | SLU 26 | -3.8 | 0.02 | 21.93 | 0.013 | -0.1761 | 0.0001 |
| 27 | SLU 27 | -3.58 | 0.03 | 24.36 | 0.0107 | -0.1725 | 0.0001 |
| 27 | SLU 28 | -3.77 | 0.03 | 22.95 | 0.0122 | -0.177 | 0.0001 |
| 27 | SLU 29 | -3.6 | 0.03 | 24.33 | 0.0107 | -0.173 | 0.0001 |
| 27 | SLU 30 | -3.79 | 0.03 | 22.92 | 0.0122 | -0.1775 | 0.0001 |
| 27 | SLU 31 | -3.96 | 0.02 | 22.69 | 0.014 | -0.1839 | 0.0002 |
| 27 | SLU 32 | -3.74 | 0.03 | 25.12 | 0.0117 | -0.1804 | 0.0001 |
| 27 | SLU 33 | -3.93 | 0.03 | 23.71 | 0.0132 | -0.1849 | 0.0002 |
| 27 | SLU 34 | -4.07 | 0.02 | 22.74 | 0.0143 | -0.1883 | 0.0002 |
| 27 | SLU 35 | -3.86 | 0.03 | 25.17 | 0.012 | -0.1848 | 0.0001 |
| 27 | SLU 36 | -4.05 | 0.03 | 23.76 | 0.0135 | -0.1893 | 0.0002 |
| 27 | SLU 37 | -3.87 | 0.03 | 25.14 | 0.012 | -0.1852 | 0.0001 |
| 27 | SLU 38 | -4.06 | 0.03 | 23.73 | 0.0135 | -0.1897 | 0.0002 |
| 27 | SLU 39 | -3.76 | 0.03 | 25.39 | 0.012 | -0.1817 | 0.0001 |
| 27 | SLU 40 | -3.95 | 0.03 | 23.98 | 0.0135 | -0.1862 | 0.0002 |
| 27 | SLU 41 | -3.88 | 0.03 | 25.44 | 0.0123 | -0.1861 | 0.0001 |
| 27 | SLU 42 | -4.07 | 0.03 | 24.03 | 0.0138 | -0.1906 | 0.0002 |
| 27 | SLU 43 | -4.12 | 0.04 | 30.88 | 0.0121 | -0.2025 | 0.0002 |
| 27 | SLU 44 | -4.44 | 0.03 | 28.53 | 0.0147 | -0.21 | 0.0002 |
| 27 | SLU 45 | -4.23 | 0.04 | 30.96 | 0.0124 | -0.2065 | 0.0002 |
| 27 | SLU 46 | -4.42 | 0.03 | 29.55 | 0.0139 | -0.211 | 0.0002 |
| 27 | SLU 47 | -4.56 | 0.03 | 28.58 | 0.0149 | -0.2144 | 0.0002 |
| 27 | SLU 48 | -4.34 | 0.04 | 31.01 | 0.0126 | -0.2109 | 0.0002 |

| Nodo | Cont. | Reazione a traslazione | | | Reazione a rotazione | | |
|---|---|---|---|---|---|---|---|
| Ind. | N.br. | x | y | z | x | y | z |
| 27 | SLU 49 | -4.53 | 0.03 | 29.6 | 0.0141 | -0.2154 | 0.0002 |
| 27 | SLU 50 | -4.36 | 0.04 | 30.98 | 0.0126 | -0.2113 | 0.0002 |
| 27 | SLU 51 | -4.55 | 0.03 | 29.57 | 0.0141 | -0.2158 | 0.0002 |
| 27 | SLU 52 | -4.72 | 0.03 | 29.34 | 0.0159 | -0.2223 | 0.0002 |
| 27 | SLU 53 | -4.51 | 0.04 | 31.78 | 0.0136 | -0.2187 | 0.0002 |
| 27 | SLU 54 | -4.7 | 0.03 | 30.37 | 0.0151 | -0.2232 | 0.0002 |
| 27 | SLU 55 | -4.84 | 0.03 | 29.39 | 0.0161 | -0.2267 | 0.0002 |
| 27 | SLU 56 | -4.62 | 0.04 | 31.83 | 0.0138 | -0.2231 | 0.0002 |
| 27 | SLU 57 | -4.81 | 0.03 | 30.42 | 0.0154 | -0.2276 | 0.0002 |
| 27 | SLU 58 | -4.64 | 0.04 | 31.8 | 0.0138 | -0.2236 | 0.0002 |
| 27 | SLU 59 | -4.83 | 0.03 | 30.39 | 0.0154 | -0.2281 | 0.0002 |
| 27 | SLU 60 | -4.52 | 0.04 | 32.04 | 0.0139 | -0.22 | 0.0002 |
| 27 | SLU 61 | -4.71 | 0.03 | 30.63 | 0.0154 | -0.2245 | 0.0002 |
| 27 | SLU 62 | -4.64 | 0.04 | 32.09 | 0.0141 | -0.2244 | 0.0002 |
| 27 | SLU 63 | -4.83 | 0.04 | 30.68 | 0.0156 | -0.2289 | 0.0002 |
| 27 | SLU 64 | -4.28 | 0.04 | 31.25 | 0.0129 | -0.2091 | 0.0002 |
| 27 | SLU 65 | -4.59 | 0.03 | 28.9 | 0.0154 | -0.2166 | 0.0002 |
| 27 | SLU 66 | -4.38 | 0.04 | 31.34 | 0.0131 | -0.2131 | 0.0002 |
| 27 | SLU 67 | -4.57 | 0.03 | 29.93 | 0.0146 | -0.2176 | 0.0002 |
| 27 | SLU 68 | -4.71 | 0.03 | 28.95 | 0.0156 | -0.221 | 0.0002 |
| 27 | SLU 69 | -4.49 | 0.04 | 31.39 | 0.0133 | -0.2175 | 0.0002 |
| 27 | SLU 70 | -4.68 | 0.03 | 29.98 | 0.0148 | -0.222 | 0.0002 |
| 27 | SLU 71 | -4.51 | 0.04 | 31.36 | 0.0133 | -0.2179 | 0.0002 |
| 27 | SLU 72 | -4.7 | 0.03 | 29.95 | 0.0148 | -0.2224 | 0.0002 |
| 27 | SLU 73 | -4.87 | 0.03 | 29.72 | 0.0166 | -0.2289 | 0.0002 |
| 27 | SLU 74 | -4.66 | 0.04 | 32.15 | 0.0143 | -0.2254 | 0.0002 |
| 27 | SLU 75 | -4.85 | 0.04 | 30.74 | 0.0158 | -0.2299 | 0.0002 |
| 27 | SLU 76 | -4.99 | 0.03 | 29.77 | 0.0169 | -0.2333 | 0.0002 |
| 27 | SLU 77 | -4.77 | 0.04 | 32.2 | 0.0146 | -0.2298 | 0.0002 |
| 27 | SLU 78 | -4.96 | 0.04 | 30.79 | 0.0161 | -0.2343 | 0.0002 |
| 27 | SLU 79 | -4.79 | 0.04 | 32.17 | 0.0146 | -0.2302 | 0.0002 |
| 27 | SLU 80 | -4.98 | 0.04 | 30.76 | 0.0161 | -0.2347 | 0.0002 |
| 27 | SLU 81 | -4.67 | 0.04 | 32.42 | 0.0146 | -0.2267 | 0.0002 |
| 27 | SLU 82 | -4.86 | 0.04 | 31.01 | 0.0161 | -0.2312 | 0.0002 |
| 27 | SLU 83 | -4.79 | 0.04 | 32.47 | 0.0149 | -0.2311 | 0.0002 |
| 27 | SLU 84 | -4.98 | 0.04 | 31.06 | 0.0164 | -0.2356 | 0.0002 |
| 27 | SLE RA 1 | -3.26 | 0.03 | 23.96 | 0.0097 | -0.1594 | 0.0001 |
| 27 | SLE RA 2 | -3.47 | 0.02 | 22.39 | 0.0114 | -0.1644 | 0.0001 |
| 27 | SLE RA 3 | -3.32 | 0.03 | 24.01 | 0.0099 | -0.1621 | 0.0001 |
| 27 | SLE RA 4 | -3.45 | 0.03 | 23.07 | 0.0109 | -0.1651 | 0.0001 |
| 27 | SLE RA 5 | -3.54 | 0.02 | 22.43 | 0.0116 | -0.1674 | 0.0001 |
| 27 | SLE RA 6 | -3.4 | 0.03 | 24.05 | 0.01 | -0.165 | 0.0001 |
| 27 | SLE RA 7 | -3.53 | 0.03 | 23.11 | 0.0111 | -0.168 | 0.0001 |
| 27 | SLE RA 8 | -3.41 | 0.03 | 24.03 | 0.01 | -0.1653 | 0.0001 |
| 27 | SLE RA 9 | -3.54 | 0.03 | 23.09 | 0.0111 | -0.1683 | 0.0001 |
| 27 | SLE RA 10 | -3.65 | 0.02 | 22.93 | 0.0122 | -0.1726 | 0.0001 |
| 27 | SLE RA 11 | -3.51 | 0.03 | 24.56 | 0.0107 | -0.1702 | 0.0001 |
| 27 | SLE RA 12 | -3.64 | 0.03 | 23.62 | 0.0117 | -0.1732 | 0.0001 |
| 27 | SLE RA 13 | -3.73 | 0.02 | 22.97 | 0.0124 | -0.1755 | 0.0001 |
| 27 | SLE RA 14 | -3.59 | 0.03 | 24.59 | 0.0109 | -0.1732 | 0.0001 |
| 27 | SLE RA 15 | -3.71 | 0.03 | 23.65 | 0.0119 | -0.1762 | 0.0001 |
| 27 | SLE RA 16 | -3.6 | 0.03 | 24.57 | 0.0109 | -0.1735 | 0.0001 |
| 27 | SLE RA 17 | -3.72 | 0.03 | 23.63 | 0.0119 | -0.1765 | 0.0001 |
| 27 | SLE RA 18 | -3.52 | 0.03 | 24.73 | 0.0109 | -0.1711 | 0.0001 |
| 27 | SLE RA 19 | -3.65 | 0.03 | 23.79 | 0.0119 | -0.1741 | 0.0001 |
| 27 | SLE RA 20 | -3.6 | 0.03 | 24.77 | 0.0111 | -0.174 | 0.0001 |
| 27 | SLE RA 21 | -3.72 | 0.03 | 23.83 | 0.0121 | -0.177 | 0.0001 |
| 27 | SLE FR 1 | -3.26 | 0.03 | 23.96 | 0.0097 | -0.1594 | 0.0001 |
| 27 | SLE FR 2 | -3.3 | 0.03 | 23.65 | 0.0101 | -0.1604 | 0.0001 |
| 27 | SLE FR 3 | -3.29 | 0.03 | 23.97 | 0.0098 | -0.1606 | 0.0001 |
| 27 | SLE FR 4 | -3.38 | 0.03 | 23.88 | 0.0104 | -0.1639 | 0.0001 |
| 27 | SLE FR 5 | -3.37 | 0.03 | 24.21 | 0.0101 | -0.1641 | 0.0001 |
| 27 | SLE FR 6 | -3.39 | 0.03 | 24.35 | 0.0103 | -0.1653 | 0.0001 |
| 27 | SLE QP 1 | -3.26 | 0.03 | 23.96 | 0.0097 | -0.1594 | 0.0001 |
| 27 | SLE QP 2 | -3.33 | 0.03 | 24.19 | 0.0101 | -0.1629 | 0.0001 |
| 27 | SLD 1 | 0.01 | -0.03 | 18.95 | 0.0181 | 0.0066 | -0.0001 |
| 27 | SLD 2 | 0.01 | -0.03 | 18.95 | 0.0181 | 0.0066 | -0.0001 |
| 27 | SLD 3 | 0.94 | -0.06 | 11.58 | 0.0433 | 0.0318 | -0.0002 |
| 27 | SLD 4 | 0.94 | -0.06 | 11.58 | 0.0433 | 0.0318 | -0.0002 |
| 27 | SLD 5 | -3.75 | 0.06 | 33.8 | -0.0256 | -0.1504 | 0.0003 |
| 27 | SLD 6 | -3.75 | 0.06 | 33.8 | -0.0256 | -0.1504 | 0.0003 |
| 27 | SLD 7 | -0.64 | -0.04 | 9.23 | 0.0582 | -0.0662 | -0.0002 |
| 27 | SLD 8 | -0.64 | -0.04 | 9.23 | 0.0582 | -0.0662 | -0.0002 |
| 27 | SLD 9 | -6.03 | 0.1 | 39.15 | -0.038 | -0.2597 | 0.0004 |
| 27 | SLD 10 | -6.03 | 0.1 | 39.15 | -0.038 | -0.2597 | 0.0004 |
| 27 | SLD 11 | -2.92 | 0 | 14.59 | 0.0458 | -0.1755 | 0 |
| 27 | SLD 12 | -2.92 | 0 | 14.59 | 0.0458 | -0.1755 | 0 |
| 27 | SLD 13 | -7.61 | 0.12 | 36.8 | -0.0231 | -0.3577 | 0.0005 |
| 27 | SLD 14 | -7.61 | 0.12 | 36.8 | -0.0231 | -0.3577 | 0.0005 |
| 27 | SLD 15 | -6.68 | 0.09 | 29.43 | 0.002 | -0.3324 | 0.0003 |
| 27 | SLD 16 | -6.68 | 0.09 | 29.43 | 0.002 | -0.3324 | 0.0003 |
| 27 | SLV 1 | 4.45 | -0.12 | 12.07 | 0.0292 | 0.2324 | -0.0003 |
| 27 | SLV 2 | 4.45 | -0.12 | 12.07 | 0.0292 | 0.2324 | -0.0003 |
| 27 | SLV 3 | 6.68 | -0.18 | -5.74 | 0.0873 | 0.2925 | -0.0006 |
| 27 | SLV 4 | 6.68 | -0.18 | -5.74 | 0.0873 | 0.2925 | -0.0006 |
| 27 | SLV 5 | -4.37 | 0.09 | 47.57 | -0.0723 | -0.1354 | 0.0005 |
| 27 | SLV 6 | -4.37 | 0.09 | 47.57 | -0.0723 | -0.1354 | 0.0005 |
| 27 | SLV 7 | 3.05 | -0.14 | -11.8 | 0.1214 | 0.0648 | -0.0005 |

| Nodo | Cont. | Reazione a traslazione | | | Reazione a rotazione | | |
|---|---|---|---|---|---|---|---|
| Ind. | N.br. | x | y | z | x | y | z |
| 27 | SLV 8 | 3.05 | -0.14 | -11.8 | 0.1214 | 0.0648 | -0.0005 |
| 27 | SLV 9 | -9.72 | 0.2 | 60.19 | -0.1012 | -0.3906 | 0.0008 |
| 27 | SLV 10 | -9.72 | 0.2 | 60.19 | -0.1012 | -0.3906 | 0.0008 |
| 27 | SLV 11 | -2.3 | -0.03 | 0.82 | 0.0925 | -0.1905 | -0.0002 |
| 27 | SLV 12 | -2.3 | -0.03 | 0.82 | 0.0925 | -0.1905 | -0.0002 |
| 27 | SLV 13 | -13.35 | 0.24 | 54.13 | -0.0672 | -0.6183 | 0.0009 |
| 27 | SLV 14 | -13.35 | 0.24 | 54.13 | -0.0672 | -0.6183 | 0.0009 |
| 27 | SLV 15 | -11.12 | 0.17 | 36.32 | -0.0091 | -0.5583 | 0.0006 |
| 27 | SLV 16 | -11.12 | 0.17 | 36.32 | -0.0091 | -0.5583 | 0.0006 |
| 28 | SLU 1 | -4.11 | 2.53 | 30.02 | 0.1292 | -0.1146 | -0.0002 |
| 28 | SLU 2 | -3.98 | 1.84 | 26.74 | 0.1517 | -0.1158 | 0.0001 |
| 28 | SLU 3 | -4.16 | 2.52 | 30.12 | 0.1328 | -0.1166 | -0.0002 |
| 28 | SLU 4 | -4.08 | 2.11 | 28.15 | 0.1463 | -0.1173 | 0 |
| 28 | SLU 5 | -4.03 | 1.82 | 26.77 | 0.1549 | -0.118 | 0.0002 |
| 28 | SLU 6 | -4.21 | 2.51 | 30.15 | 0.136 | -0.1188 | -0.0001 |
| 28 | SLU 7 | -4.13 | 2.09 | 28.19 | 0.1495 | -0.1195 | 0 |
| 28 | SLU 8 | -4.21 | 2.49 | 30.08 | 0.1355 | -0.119 | -0.0001 |
| 28 | SLU 9 | -4.13 | 2.08 | 28.12 | 0.149 | -0.1197 | 0 |
| 28 | SLU 10 | -4.18 | 2.03 | 28.09 | 0.1665 | -0.1227 | 0.0001 |
| 28 | SLU 11 | -4.36 | 2.71 | 31.47 | 0.1476 | -0.1235 | -0.0002 |
| 28 | SLU 12 | -4.28 | 2.3 | 29.5 | 0.1611 | -0.1243 | 0 |
| 28 | SLU 13 | -4.23 | 2.01 | 28.12 | 0.1697 | -0.1249 | 0.0001 |
| 28 | SLU 14 | -4.41 | 2.7 | 31.5 | 0.1507 | -0.1257 | -0.0002 |
| 28 | SLU 15 | -4.33 | 2.28 | 29.54 | 0.1643 | -0.1264 | 0 |
| 28 | SLU 16 | -4.42 | 2.68 | 31.43 | 0.1503 | -0.1259 | -0.0002 |
| 28 | SLU 17 | -4.33 | 2.27 | 29.47 | 0.1638 | -0.1266 | 0 |
| 28 | SLU 18 | -4.4 | 2.8 | 31.94 | 0.1503 | -0.1245 | -0.0002 |
| 28 | SLU 19 | -4.32 | 2.38 | 29.98 | 0.1638 | -0.1252 | -0.0001 |
| 28 | SLU 20 | -4.45 | 2.78 | 31.98 | 0.1535 | -0.1267 | -0.0002 |
| 28 | SLU 21 | -4.37 | 2.37 | 30.01 | 0.167 | -0.1274 | 0 |
| 28 | SLU 22 | -4.21 | 2.65 | 30.77 | 0.1397 | -0.1182 | -0.0002 |
| 28 | SLU 23 | -4.08 | 1.96 | 27.49 | 0.1622 | -0.1194 | 0.0001 |
| 28 | SLU 24 | -4.26 | 2.65 | 30.87 | 0.1433 | -0.1202 | -0.0002 |
| 28 | SLU 25 | -4.18 | 2.23 | 28.9 | 0.1569 | -0.1209 | 0 |
| 28 | SLU 26 | -4.13 | 1.94 | 27.52 | 0.1654 | -0.1215 | 0.0001 |
| 28 | SLU 27 | -4.31 | 2.63 | 30.9 | 0.1465 | -0.1223 | -0.0002 |
| 28 | SLU 28 | -4.23 | 2.22 | 28.94 | 0.16 | -0.1231 | 0 |
| 28 | SLU 29 | -4.31 | 2.62 | 30.83 | 0.146 | -0.1225 | -0.0002 |
| 28 | SLU 30 | -4.23 | 2.2 | 28.87 | 0.1595 | -0.1232 | 0 |
| 28 | SLU 31 | -4.28 | 2.15 | 28.84 | 0.177 | -0.1263 | 0.0001 |
| 28 | SLU 32 | -4.47 | 2.84 | 32.22 | 0.1581 | -0.1271 | -0.0002 |
| 28 | SLU 33 | -4.38 | 2.42 | 30.25 | 0.1716 | -0.1278 | -0.0001 |
| 28 | SLU 34 | -4.33 | 2.13 | 28.87 | 0.1802 | -0.1285 | 0.0001 |
| 28 | SLU 35 | -4.52 | 2.82 | 32.25 | 0.1613 | -0.1293 | -0.0002 |
| 28 | SLU 36 | -4.43 | 2.41 | 30.29 | 0.1748 | -0.13 | 0 |
| 28 | SLU 37 | -4.52 | 2.81 | 32.18 | 0.1608 | -0.1295 | -0.0002 |
| 28 | SLU 38 | -4.43 | 2.39 | 30.22 | 0.1743 | -0.1302 | 0 |
| 28 | SLU 39 | -4.5 | 2.92 | 32.7 | 0.1608 | -0.1281 | -0.0003 |
| 28 | SLU 40 | -4.42 | 2.51 | 30.73 | 0.1743 | -0.1288 | -0.0001 |
| 28 | SLU 41 | -4.55 | 2.91 | 32.73 | 0.164 | -0.1303 | -0.0003 |
| 28 | SLU 42 | -4.47 | 2.49 | 30.76 | 0.1775 | -0.131 | -0.0001 |
| 28 | SLU 43 | -5.31 | 3.24 | 38.76 | 0.1643 | -0.1478 | -0.0002 |
| 28 | SLU 44 | -5.17 | 2.55 | 35.49 | 0.1869 | -0.149 | 0.0001 |
| 28 | SLU 45 | -5.36 | 3.24 | 38.86 | 0.168 | -0.1498 | -0.0002 |
| 28 | SLU 46 | -5.28 | 2.82 | 36.9 | 0.1815 | -0.1505 | 0 |
| 28 | SLU 47 | -5.22 | 2.53 | 35.52 | 0.19 | -0.1511 | 0.0001 |
| 28 | SLU 48 | -5.41 | 3.22 | 38.9 | 0.1711 | -0.1519 | -0.0002 |
| 28 | SLU 49 | -5.33 | 2.81 | 36.93 | 0.1846 | -0.1527 | 0 |
| 28 | SLU 50 | -5.41 | 3.21 | 38.83 | 0.1706 | -0.1521 | -0.0002 |
| 28 | SLU 51 | -5.33 | 2.79 | 36.87 | 0.1842 | -0.1528 | 0 |
| 28 | SLU 52 | -5.38 | 2.74 | 36.84 | 0.2017 | -0.1559 | 0.0001 |
| 28 | SLU 53 | -5.56 | 3.43 | 40.22 | 0.1827 | -0.1567 | -0.0002 |
| 28 | SLU 54 | -5.48 | 3.01 | 38.25 | 0.1963 | -0.1574 | -0.0001 |
| 28 | SLU 55 | -5.43 | 2.72 | 36.87 | 0.2048 | -0.1581 | 0.0001 |
| 28 | SLU 56 | -5.61 | 3.41 | 40.25 | 0.1859 | -0.1589 | -0.0002 |
| 28 | SLU 57 | -5.53 | 3 | 38.28 | 0.1994 | -0.1596 | 0 |
| 28 | SLU 58 | -5.62 | 3.4 | 40.18 | 0.1854 | -0.1591 | -0.0002 |
| 28 | SLU 59 | -5.53 | 2.98 | 38.22 | 0.1989 | -0.1598 | 0 |
| 28 | SLU 60 | -5.6 | 3.51 | 40.69 | 0.1854 | -0.1577 | -0.0003 |
| 28 | SLU 61 | -5.52 | 3.1 | 38.73 | 0.199 | -0.1584 | -0.0001 |
| 28 | SLU 62 | -5.65 | 3.5 | 40.73 | 0.1886 | -0.1598 | -0.0003 |
| 28 | SLU 63 | -5.57 | 3.08 | 38.76 | 0.2021 | -0.1606 | -0.0001 |
| 28 | SLU 64 | -5.41 | 3.37 | 39.51 | 0.1748 | -0.1513 | -0.0002 |
| 28 | SLU 65 | -5.28 | 2.68 | 36.24 | 0.1974 | -0.1525 | 0.0001 |
| 28 | SLU 66 | -5.46 | 3.36 | 39.61 | 0.1785 | -0.1533 | -0.0002 |
| 28 | SLU 67 | -5.38 | 2.95 | 37.65 | 0.192 | -0.1541 | -0.0001 |
| 28 | SLU 68 | -5.33 | 2.66 | 36.27 | 0.2005 | -0.1547 | 0.0001 |
| 28 | SLU 69 | -5.51 | 3.35 | 39.65 | 0.1816 | -0.1555 | -0.0002 |
| 28 | SLU 70 | -5.43 | 2.93 | 37.68 | 0.1952 | -0.1562 | 0 |
| 28 | SLU 71 | -5.51 | 3.33 | 39.58 | 0.1811 | -0.1557 | -0.0002 |
| 28 | SLU 72 | -5.43 | 2.92 | 37.62 | 0.1947 | -0.1564 | 0 |
| 28 | SLU 73 | -5.48 | 2.87 | 37.59 | 0.2122 | -0.1595 | 0 |
| 28 | SLU 74 | -5.66 | 3.55 | 40.97 | 0.1933 | -0.1603 | -0.0003 |
| 28 | SLU 75 | -5.58 | 3.14 | 39 | 0.2068 | -0.161 | -0.0001 |
| 28 | SLU 76 | -5.53 | 2.85 | 37.62 | 0.2153 | -0.1616 | 0 |
| 28 | SLU 77 | -5.71 | 3.54 | 41 | 0.1964 | -0.1624 | -0.0003 |
| 28 | SLU 78 | -5.63 | 3.12 | 39.03 | 0.2099 | -0.1632 | -0.0001 |
| 28 | SLU 79 | -5.72 | 3.52 | 40.93 | 0.1959 | -0.1626 | -0.0003 |

| Nodo | Cont. | Reazione a traslazione | | | Reazione a rotazione | | |
|---|---|---|---|---|---|---|---|
| Ind. | N.br. | x | y | z | x | y | z |
| 28 | SLU 80 | -5.63 | 3.11 | 38.97 | 0.2095 | -0.1633 | -0.0001 |
| 28 | SLU 81 | -5.7 | 3.64 | 41.44 | 0.196 | -0.1612 | -0.0003 |
| 28 | SLU 82 | -5.62 | 3.22 | 39.48 | 0.2095 | -0.162 | -0.0001 |
| 28 | SLU 83 | -5.75 | 3.62 | 41.48 | 0.1991 | -0.1634 | -0.0003 |
| 28 | SLU 84 | -5.67 | 3.21 | 39.51 | 0.2126 | -0.1641 | -0.0001 |
| 28 | SLE RA 1 | -4.14 | 2.56 | 30.23 | 0.1322 | -0.1156 | -0.0002 |
| 28 | SLE RA 2 | -4.05 | 2.1 | 28.05 | 0.1472 | -0.1164 | 0 |
| 28 | SLE RA 3 | -4.17 | 2.56 | 30.3 | 0.1346 | -0.117 | -0.0002 |
| 28 | SLE RA 4 | -4.12 | 2.28 | 28.99 | 0.1436 | -0.1174 | 0 |
| 28 | SLE RA 5 | -4.08 | 2.09 | 28.07 | 0.1493 | -0.1179 | 0 |
| 28 | SLE RA 6 | -4.21 | 2.55 | 30.32 | 0.1367 | -0.1184 | -0.0002 |
| 28 | SLE RA 7 | -4.15 | 2.27 | 29.01 | 0.1457 | -0.1189 | 0 |
| 28 | SLE RA 8 | -4.21 | 2.54 | 30.28 | 0.1364 | -0.1185 | -0.0002 |
| 28 | SLE RA 9 | -4.15 | 2.26 | 28.96 | 0.1454 | -0.119 | 0 |
| 28 | SLE RA 10 | -4.19 | 2.23 | 28.95 | 0.1571 | -0.121 | 0 |
| 28 | SLE RA 11 | -4.31 | 2.69 | 31.2 | 0.1445 | -0.1216 | -0.0002 |
| 28 | SLE RA 12 | -4.25 | 2.41 | 29.89 | 0.1535 | -0.1221 | -0.0001 |
| 28 | SLE RA 13 | -4.22 | 2.22 | 28.97 | 0.1592 | -0.1225 | 0 |
| 28 | SLE RA 14 | -4.34 | 2.68 | 31.22 | 0.1466 | -0.123 | -0.0002 |
| 28 | SLE RA 15 | -4.29 | 2.4 | 29.91 | 0.1556 | -0.1235 | -0.0001 |
| 28 | SLE RA 16 | -4.34 | 2.67 | 31.18 | 0.1462 | -0.1231 | -0.0002 |
| 28 | SLE RA 17 | -4.29 | 2.39 | 29.86 | 0.1553 | -0.1236 | -0.0001 |
| 28 | SLE RA 18 | -4.34 | 2.74 | 31.52 | 0.1463 | -0.1222 | -0.0002 |
| 28 | SLE RA 19 | -4.28 | 2.47 | 30.21 | 0.1553 | -0.1227 | -0.0001 |
| 28 | SLE RA 20 | -4.37 | 2.73 | 31.54 | 0.1484 | -0.1237 | -0.0002 |
| 28 | SLE RA 21 | -4.31 | 2.46 | 30.23 | 0.1574 | -0.1242 | -0.0001 |
| 28 | SLE FR 1 | -4.14 | 2.56 | 30.23 | 0.1322 | -0.1156 | -0.0002 |
| 28 | SLE FR 2 | -4.12 | 2.47 | 29.79 | 0.1352 | -0.1158 | -0.0001 |
| 28 | SLE FR 3 | -4.16 | 2.56 | 30.24 | 0.133 | -0.1162 | -0.0002 |
| 28 | SLE FR 4 | -4.18 | 2.53 | 30.18 | 0.1394 | -0.1178 | -0.0002 |
| 28 | SLE FR 5 | -4.21 | 2.61 | 30.62 | 0.1372 | -0.1182 | -0.0002 |
| 28 | SLE FR 6 | -4.24 | 2.65 | 30.87 | 0.1392 | -0.1189 | -0.0002 |
| 28 | SLE QP 1 | -4.14 | 2.56 | 30.23 | 0.1322 | -0.1156 | -0.0002 |
| 28 | SLE QP 2 | -4.2 | 2.62 | 30.62 | 0.1364 | -0.1176 | -0.0002 |
| 28 | SLD 1 | -1.72 | 2.96 | 23.63 | 0.1301 | -0.0171 | -0.0019 |
| 28 | SLD 2 | -1.72 | 2.96 | 23.63 | 0.1301 | -0.0171 | -0.0019 |
| 28 | SLD 3 | -1.04 | 0.27 | 12.46 | 0.0365 | -0.0029 | -0.0008 |
| 28 | SLD 4 | -1.04 | 0.27 | 12.46 | 0.0365 | -0.0029 | -0.0008 |
| 28 | SLD 5 | -4.48 | 6.8 | 45.46 | 0.2765 | -0.109 | -0.0024 |
| 28 | SLD 6 | -4.48 | 6.8 | 45.46 | 0.2765 | -0.109 | -0.0024 |
| 28 | SLD 7 | -2.23 | -2.16 | 8.23 | -0.0355 | -0.0616 | 0.0013 |
| 28 | SLD 8 | -2.23 | -2.16 | 8.23 | -0.0355 | -0.0616 | 0.0013 |
| 28 | SLD 9 | -6.17 | 7.4 | 53 | 0.3083 | -0.1736 | -0.0017 |
| 28 | SLD 10 | -6.17 | 7.4 | 53 | 0.3083 | -0.1736 | -0.0017 |
| 28 | SLD 11 | -3.92 | -1.56 | 15.78 | -0.0037 | -0.1262 | 0.002 |
| 28 | SLD 12 | -3.92 | -1.56 | 15.78 | -0.0037 | -0.1262 | 0.002 |
| 28 | SLD 13 | -7.36 | 4.97 | 48.77 | 0.2363 | -0.2323 | 0.0004 |
| 28 | SLD 14 | -7.36 | 4.97 | 48.77 | 0.2363 | -0.2323 | 0.0004 |
| 28 | SLD 15 | -6.68 | 2.28 | 37.6 | 0.1427 | -0.2181 | 0.0016 |
| 28 | SLD 16 | -6.68 | 2.28 | 37.6 | 0.1427 | -0.2181 | 0.0016 |
| 28 | SLV 1 | 1.6 | 3.43 | 14.45 | 0.1211 | 0.1171 | -0.0043 |
| 28 | SLV 2 | 1.6 | 3.43 | 14.45 | 0.1211 | 0.1171 | -0.0043 |
| 28 | SLV 3 | 3.22 | -2.94 | -12.4 | -0.0971 | 0.1506 | -0.0016 |
| 28 | SLV 4 | 3.22 | -2.94 | -12.4 | -0.0971 | 0.1506 | -0.0016 |
| 28 | SLV 5 | -4.92 | 12.51 | 66.49 | 0.4628 | -0.0981 | -0.0054 |
| 28 | SLV 6 | -4.92 | 12.51 | 66.49 | 0.4628 | -0.0981 | -0.0054 |
| 28 | SLV 7 | 0.49 | -8.7 | -23.01 | -0.2646 | 0.0138 | 0.0034 |
| 28 | SLV 8 | 0.49 | -8.7 | -23.01 | -0.2646 | 0.0138 | 0.0034 |
| 28 | SLV 9 | -8.89 | 13.93 | 84.24 | 0.5374 | -0.249 | -0.0038 |
| 28 | SLV 10 | -8.89 | 13.93 | 84.24 | 0.5374 | -0.249 | -0.0038 |
| 28 | SLV 11 | -3.48 | -7.27 | -5.25 | -0.19 | -0.1371 | 0.0051 |
| 28 | SLV 12 | -3.48 | -7.27 | -5.25 | -0.19 | -0.1371 | 0.0051 |
| 28 | SLV 13 | -11.62 | 8.17 | 73.63 | 0.3699 | -0.3859 | 0.0013 |
| 28 | SLV 14 | -11.62 | 8.17 | 73.63 | 0.3699 | -0.3859 | 0.0013 |
| 28 | SLV 15 | -10 | 1.81 | 46.78 | 0.1517 | -0.3523 | 0.0039 |
| 28 | SLV 16 | -10 | 1.81 | 46.78 | 0.1517 | -0.3523 | 0.0039 |
| 29 | SLU 1 | 0.06 | 3.04 | 17.54 | -0.0904 | 0.0051 | 0.0002 |
| 29 | SLU 2 | 0.06 | 2.47 | 15.01 | -0.0488 | 0.0057 | 0.0002 |
| 29 | SLU 3 | 0.06 | 3.05 | 17.43 | -0.0898 | 0.0051 | 0.0002 |
| 29 | SLU 4 | 0.06 | 2.71 | 15.91 | -0.0648 | 0.0055 | 0.0002 |
| 29 | SLU 5 | 0.06 | 2.43 | 14.76 | -0.0465 | 0.0057 | 0.0002 |
| 29 | SLU 6 | 0.06 | 3.01 | 17.17 | -0.0875 | 0.0051 | 0.0002 |
| 29 | SLU 7 | 0.06 | 2.67 | 15.66 | -0.0625 | 0.0055 | 0.0002 |
| 29 | SLU 8 | 0.06 | 2.97 | 17.02 | -0.0858 | 0.0052 | 0.0002 |
| 29 | SLU 9 | 0.06 | 2.62 | 15.51 | -0.0609 | 0.0055 | 0.0002 |
| 29 | SLU 10 | 0.07 | 2.95 | 15.85 | -0.0619 | 0.0059 | 0.0002 |
| 29 | SLU 11 | 0.07 | 3.53 | 18.26 | -0.1029 | 0.0053 | 0.0002 |
| 29 | SLU 12 | 0.07 | 3.19 | 16.75 | -0.0779 | 0.0057 | 0.0002 |
| 29 | SLU 13 | 0.07 | 2.91 | 15.59 | -0.0596 | 0.0059 | 0.0002 |
| 29 | SLU 14 | 0.07 | 3.49 | 18.01 | -0.1006 | 0.0054 | 0.0002 |
| 29 | SLU 15 | 0.07 | 3.15 | 16.49 | -0.0756 | 0.0057 | 0.0002 |
| 29 | SLU 16 | 0.07 | 3.45 | 17.86 | -0.0989 | 0.0054 | 0.0002 |
| 29 | SLU 17 | 0.07 | 3.1 | 16.34 | -0.074 | 0.0057 | 0.0002 |
| 29 | SLU 18 | 0.07 | 3.73 | 18.73 | -0.1092 | 0.0054 | 0.0002 |
| 29 | SLU 19 | 0.07 | 3.39 | 17.21 | -0.0842 | 0.0058 | 0.0002 |
| 29 | SLU 20 | 0.07 | 3.69 | 18.47 | -0.1069 | 0.0054 | 0.0002 |
| 29 | SLU 21 | 0.07 | 3.35 | 16.96 | -0.0819 | 0.0058 | 0.0002 |
| 29 | SLU 22 | 0.07 | 3.43 | 18.17 | -0.101 | 0.0052 | 0.0002 |

| Nodo | Cont. | Reazione a traslazione | | | Reazione a rotazione | | |
|---|---|---|---|---|---|---|---|
| Ind. | N.br. | x | y | z | x | y | z |
| 29 | SLU 23 | 0.06 | 2.85 | 15.65 | -0.0594 | 0.0057 | 0.0002 |
| 29 | SLU 24 | 0.07 | 3.43 | 18.06 | -0.1003 | 0.0052 | 0.0002 |
| 29 | SLU 25 | 0.07 | 3.09 | 16.55 | -0.0754 | 0.0055 | 0.0002 |
| 29 | SLU 26 | 0.06 | 2.81 | 15.39 | -0.0571 | 0.0058 | 0.0002 |
| 29 | SLU 27 | 0.07 | 3.4 | 17.81 | -0.098 | 0.0052 | 0.0002 |
| 29 | SLU 28 | 0.07 | 3.05 | 16.29 | -0.0731 | 0.0056 | 0.0002 |
| 29 | SLU 29 | 0.07 | 3.35 | 17.66 | -0.0964 | 0.0052 | 0.0002 |
| 29 | SLU 30 | 0.07 | 3.01 | 16.14 | -0.0714 | 0.0056 | 0.0002 |
| 29 | SLU 31 | 0.07 | 3.33 | 16.48 | -0.0725 | 0.006 | 0.0002 |
| 29 | SLU 32 | 0.07 | 3.92 | 18.9 | -0.1134 | 0.0054 | 0.0003 |
| 29 | SLU 33 | 0.07 | 3.57 | 17.38 | -0.0885 | 0.0058 | 0.0003 |
| 29 | SLU 34 | 0.07 | 3.3 | 16.23 | -0.0702 | 0.006 | 0.0002 |
| 29 | SLU 35 | 0.07 | 3.88 | 18.64 | -0.1111 | 0.0054 | 0.0003 |
| 29 | SLU 36 | 0.07 | 3.53 | 17.13 | -0.0862 | 0.0058 | 0.0003 |
| 29 | SLU 37 | 0.07 | 3.83 | 18.49 | -0.1095 | 0.0055 | 0.0003 |
| 29 | SLU 38 | 0.07 | 3.49 | 16.98 | -0.0845 | 0.0058 | 0.0003 |
| 29 | SLU 39 | 0.07 | 4.11 | 19.36 | -0.1197 | 0.0055 | 0.0003 |
| 29 | SLU 40 | 0.07 | 3.77 | 17.85 | -0.0948 | 0.0058 | 0.0003 |
| 29 | SLU 41 | 0.07 | 4.08 | 19.11 | -0.1174 | 0.0055 | 0.0003 |
| 29 | SLU 42 | 0.07 | 3.73 | 17.59 | -0.0925 | 0.0059 | 0.0003 |
| 29 | SLU 43 | 0.08 | 3.82 | 22.58 | -0.114 | 0.0066 | 0.0003 |
| 29 | SLU 44 | 0.08 | 3.25 | 20.06 | -0.0723 | 0.0072 | 0.0003 |
| 29 | SLU 45 | 0.08 | 3.83 | 22.47 | -0.1133 | 0.0066 | 0.0003 |
| 29 | SLU 46 | 0.08 | 3.49 | 20.96 | -0.0883 | 0.007 | 0.0003 |
| 29 | SLU 47 | 0.08 | 3.21 | 19.8 | -0.07 | 0.0072 | 0.0003 |
| 29 | SLU 48 | 0.08 | 3.79 | 22.21 | -0.111 | 0.0066 | 0.0003 |
| 29 | SLU 49 | 0.08 | 3.45 | 20.7 | -0.086 | 0.007 | 0.0003 |
| 29 | SLU 50 | 0.08 | 3.75 | 22.07 | -0.1093 | 0.0067 | 0.0003 |
| 29 | SLU 51 | 0.08 | 3.4 | 20.55 | -0.0844 | 0.007 | 0.0003 |
| 29 | SLU 52 | 0.08 | 3.73 | 20.89 | -0.0855 | 0.0074 | 0.0003 |
| 29 | SLU 53 | 0.09 | 4.31 | 23.31 | -0.1264 | 0.0068 | 0.0003 |
| 29 | SLU 54 | 0.09 | 3.97 | 21.79 | -0.1015 | 0.0072 | 0.0003 |
| 29 | SLU 55 | 0.08 | 3.69 | 20.63 | -0.0832 | 0.0074 | 0.0003 |
| 29 | SLU 56 | 0.09 | 4.27 | 23.05 | -0.1241 | 0.0069 | 0.0003 |
| 29 | SLU 57 | 0.09 | 3.93 | 21.53 | -0.0991 | 0.0072 | 0.0003 |
| 29 | SLU 58 | 0.09 | 4.23 | 22.9 | -0.1225 | 0.0069 | 0.0003 |
| 29 | SLU 59 | 0.09 | 3.88 | 21.39 | -0.0975 | 0.0072 | 0.0003 |
| 29 | SLU 60 | 0.09 | 4.51 | 23.77 | -0.1327 | 0.0069 | 0.0003 |
| 29 | SLU 61 | 0.09 | 4.17 | 22.26 | -0.1077 | 0.0073 | 0.0003 |
| 29 | SLU 62 | 0.09 | 4.47 | 23.52 | -0.1304 | 0.0069 | 0.0003 |
| 29 | SLU 63 | 0.09 | 4.13 | 22 | -0.1054 | 0.0073 | 0.0003 |
| 29 | SLU 64 | 0.08 | 4.21 | 23.22 | -0.1245 | 0.0067 | 0.0003 |
| 29 | SLU 65 | 0.08 | 3.63 | 20.69 | -0.0829 | 0.0072 | 0.0003 |
| 29 | SLU 66 | 0.08 | 4.22 | 23.11 | -0.1238 | 0.0067 | 0.0003 |
| 29 | SLU 67 | 0.08 | 3.87 | 21.59 | -0.0989 | 0.007 | 0.0003 |
| 29 | SLU 68 | 0.08 | 3.6 | 20.44 | -0.0806 | 0.0073 | 0.0003 |
| 29 | SLU 69 | 0.08 | 4.18 | 22.85 | -0.1215 | 0.0067 | 0.0003 |
| 29 | SLU 70 | 0.08 | 3.83 | 21.34 | -0.0966 | 0.0071 | 0.0003 |
| 29 | SLU 71 | 0.08 | 4.13 | 22.7 | -0.1199 | 0.0067 | 0.0003 |
| 29 | SLU 72 | 0.08 | 3.79 | 21.19 | -0.0949 | 0.0071 | 0.0003 |
| 29 | SLU 73 | 0.09 | 4.12 | 21.53 | -0.096 | 0.0075 | 0.0003 |
| 29 | SLU 74 | 0.09 | 4.7 | 23.94 | -0.137 | 0.0069 | 0.0003 |
| 29 | SLU 75 | 0.09 | 4.35 | 22.43 | -0.112 | 0.0073 | 0.0003 |
| 29 | SLU 76 | 0.09 | 4.08 | 21.27 | -0.0937 | 0.0075 | 0.0003 |
| 29 | SLU 77 | 0.09 | 4.66 | 23.68 | -0.1347 | 0.0069 | 0.0003 |
| 29 | SLU 78 | 0.09 | 4.31 | 22.17 | -0.1097 | 0.0073 | 0.0003 |
| 29 | SLU 79 | 0.09 | 4.61 | 23.54 | -0.133 | 0.007 | 0.0003 |
| 29 | SLU 80 | 0.09 | 4.27 | 22.02 | -0.108 | 0.0073 | 0.0003 |
| 29 | SLU 81 | 0.09 | 4.9 | 24.41 | -0.1432 | 0.007 | 0.0003 |
| 29 | SLU 82 | 0.09 | 4.55 | 22.89 | -0.1183 | 0.0073 | 0.0003 |
| 29 | SLU 83 | 0.09 | 4.86 | 24.15 | -0.1409 | 0.007 | 0.0003 |
| 29 | SLU 84 | 0.09 | 4.51 | 22.64 | -0.116 | 0.0074 | 0.0003 |
| 29 | SLE RA 1 | 0.06 | 3.15 | 17.72 | -0.0935 | 0.0051 | 0.0002 |
| 29 | SLE RA 2 | 0.06 | 2.77 | 16.04 | -0.0657 | 0.0055 | 0.0002 |
| 29 | SLE RA 3 | 0.06 | 3.16 | 17.65 | -0.093 | 0.0051 | 0.0002 |
| 29 | SLE RA 4 | 0.06 | 2.93 | 16.64 | -0.0764 | 0.0053 | 0.0002 |
| 29 | SLE RA 5 | 0.06 | 2.74 | 15.87 | -0.0642 | 0.0055 | 0.0002 |
| 29 | SLE RA 6 | 0.06 | 3.13 | 17.47 | -0.0915 | 0.0051 | 0.0002 |
| 29 | SLE RA 7 | 0.06 | 2.9 | 16.47 | -0.0748 | 0.0054 | 0.0002 |
| 29 | SLE RA 8 | 0.06 | 3.1 | 17.38 | -0.0904 | 0.0052 | 0.0002 |
| 29 | SLE RA 9 | 0.06 | 2.87 | 16.37 | -0.0737 | 0.0054 | 0.0002 |
| 29 | SLE RA 10 | 0.07 | 3.09 | 16.59 | -0.0745 | 0.0056 | 0.0002 |
| 29 | SLE RA 11 | 0.07 | 3.48 | 18.2 | -0.1018 | 0.0053 | 0.0002 |
| 29 | SLE RA 12 | 0.07 | 3.25 | 17.19 | -0.0851 | 0.0055 | 0.0002 |
| 29 | SLE RA 13 | 0.07 | 3.06 | 16.42 | -0.0729 | 0.0057 | 0.0002 |
| 29 | SLE RA 14 | 0.07 | 3.45 | 18.03 | -0.1002 | 0.0053 | 0.0002 |
| 29 | SLE RA 15 | 0.07 | 3.22 | 17.02 | -0.0836 | 0.0055 | 0.0002 |
| 29 | SLE RA 16 | 0.07 | 3.42 | 17.93 | -0.0991 | 0.0053 | 0.0002 |
| 29 | SLE RA 17 | 0.07 | 3.19 | 16.92 | -0.0825 | 0.0055 | 0.0002 |
| 29 | SLE RA 18 | 0.07 | 3.61 | 18.51 | -0.1059 | 0.0053 | 0.0002 |
| 29 | SLE RA 19 | 0.07 | 3.38 | 17.5 | -0.0893 | 0.0056 | 0.0002 |
| 29 | SLE RA 20 | 0.07 | 3.58 | 18.34 | -0.1044 | 0.0053 | 0.0002 |
| 29 | SLE RA 21 | 0.07 | 3.36 | 17.33 | -0.0878 | 0.0056 | 0.0002 |
| 29 | SLE FR 1 | 0.06 | 3.15 | 17.72 | -0.0935 | 0.0051 | 0.0002 |
| 29 | SLE FR 2 | 0.06 | 3.08 | 17.38 | -0.0879 | 0.0052 | 0.0002 |
| 29 | SLE FR 3 | 0.06 | 3.14 | 17.65 | -0.0928 | 0.0051 | 0.0002 |
| 29 | SLE FR 4 | 0.07 | 3.21 | 17.62 | -0.0917 | 0.0052 | 0.0002 |
| 29 | SLE FR 5 | 0.07 | 3.28 | 17.89 | -0.0966 | 0.0052 | 0.0002 |

| Nodo | Cont. | Reazione a traslazione | | | Reazione a rotazione | | |
|---|---|---|---|---|---|---|---|
| Ind. | N.br. | x | y | z | x | y | z |
| 29 | SLE FR 6 | 0.07 | 3.38 | 18.12 | -0.0997 | 0.0052 | 0.0002 |
| 29 | SLE QP 1 | 0.06 | 3.15 | 17.72 | -0.0935 | 0.0051 | 0.0002 |
| 29 | SLE QP 2 | 0.07 | 3.29 | 17.96 | -0.0972 | 0.0052 | 0.0002 |
| 29 | SLD 1 | 0.12 | 3.75 | 26.13 | -0.1293 | 0.0165 | 0.0004 |
| 29 | SLD 2 | 0.12 | 3.75 | 26.13 | -0.1293 | 0.0165 | 0.0004 |
| 29 | SLD 3 | 0.09 | 1.28 | 18.41 | 0.0219 | 0.0139 | 0.0003 |
| 29 | SLD 4 | 0.09 | 1.28 | 18.41 | 0.0219 | 0.0139 | 0.0003 |
| 29 | SLD 5 | 0.12 | 7.17 | 32.12 | -0.336 | 0.0125 | 0.0003 |
| 29 | SLD 6 | 0.12 | 7.17 | 32.12 | -0.336 | 0.0125 | 0.0003 |
| 29 | SLD 7 | 0.03 | -1.05 | 6.38 | 0.1677 | 0.0039 | 0.0002 |
| 29 | SLD 8 | 0.03 | -1.05 | 6.38 | 0.1677 | 0.0039 | 0.0002 |
| 29 | SLD 9 | 0.1 | 7.64 | 29.54 | -0.3621 | 0.0064 | 0.0003 |
| 29 | SLD 10 | 0.1 | 7.64 | 29.54 | -0.3621 | 0.0064 | 0.0003 |
| 29 | SLD 11 | 0.01 | -0.59 | 3.79 | 0.1416 | -0.0021 | 0.0001 |
| 29 | SLD 12 | 0.01 | -0.59 | 3.79 | 0.1416 | -0.0021 | 0.0001 |
| 29 | SLD 13 | 0.04 | 5.3 | 17.51 | -0.2163 | -0.0036 | 0.0001 |
| 29 | SLD 14 | 0.04 | 5.3 | 17.51 | -0.2163 | -0.0036 | 0.0001 |
| 29 | SLD 15 | 0.02 | 2.83 | 9.78 | -0.0652 | -0.0062 | 0.0001 |
| 29 | SLD 16 | 0.02 | 2.83 | 9.78 | -0.0652 | -0.0062 | 0.0001 |
| 29 | SLV 1 | 0.19 | 4.37 | 37.38 | -0.1723 | 0.0315 | 0.0006 |
| 29 | SLV 2 | 0.19 | 4.37 | 37.38 | -0.1723 | 0.0315 | 0.0006 |
| 29 | SLV 3 | 0.12 | -1.49 | 18.89 | 0.1864 | 0.0254 | 0.0005 |
| 29 | SLV 4 | 0.12 | -1.49 | 18.89 | 0.1864 | 0.0254 | 0.0005 |
| 29 | SLV 5 | 0.2 | 12.5 | 51.83 | -0.6637 | 0.0223 | 0.0005 |
| 29 | SLV 6 | 0.2 | 12.5 | 51.83 | -0.6637 | 0.0223 | 0.0005 |
| 29 | SLV 7 | -0.01 | -7.03 | -9.81 | 0.5318 | 0.0021 | 0.0002 |
| 29 | SLV 8 | -0.01 | -7.03 | -9.81 | 0.5318 | 0.0021 | 0.0002 |
| 29 | SLV 9 | 0.14 | 13.61 | 45.73 | -0.7262 | 0.0083 | 0.0003 |
| 29 | SLV 10 | 0.14 | 13.61 | 45.73 | -0.7262 | 0.0083 | 0.0003 |
| 29 | SLV 11 | -0.06 | -5.92 | -15.92 | 0.4693 | -0.0119 | 0 |
| 29 | SLV 12 | -0.06 | -5.92 | -15.92 | 0.4693 | -0.0119 | 0 |
| 29 | SLV 13 | 0.01 | 8.07 | 17.03 | -0.3808 | -0.0151 | 0 |
| 29 | SLV 14 | 0.01 | 8.07 | 17.03 | -0.3808 | -0.0151 | 0 |
| 29 | SLV 15 | -0.05 | 2.21 | -1.47 | -0.0221 | -0.0212 | -0.0001 |
| 29 | SLV 16 | -0.05 | 2.21 | -1.47 | -0.0221 | -0.0212 | -0.0001 |
| 30 | SLU 1 | 0.04 | 2.66 | 22.89 | -0.109 | 0.0068 | 0.0001 |
| 30 | SLU 2 | 0.04 | 2.01 | 22.02 | -0.0741 | 0.008 | 0.0001 |
| 30 | SLU 3 | 0.04 | 2.67 | 22.89 | -0.1094 | 0.0068 | 0.0001 |
| 30 | SLU 4 | 0.04 | 2.28 | 22.37 | -0.0884 | 0.0075 | 0.0001 |
| 30 | SLU 5 | 0.04 | 1.98 | 21.81 | -0.0725 | 0.008 | 0.0001 |
| 30 | SLU 6 | 0.04 | 2.64 | 22.68 | -0.1078 | 0.0068 | 0.0001 |
| 30 | SLU 7 | 0.04 | 2.25 | 22.16 | -0.0868 | 0.0076 | 0.0001 |
| 30 | SLU 8 | 0.04 | 2.59 | 22.46 | -0.1059 | 0.0068 | 0.0001 |
| 30 | SLU 9 | 0.04 | 2.2 | 21.94 | -0.0849 | 0.0076 | 0.0001 |
| 30 | SLU 10 | 0.04 | 2.55 | 24.09 | -0.0932 | 0.0087 | 0.0001 |
| 30 | SLU 11 | 0.04 | 3.21 | 24.96 | -0.1285 | 0.0075 | 0.0002 |
| 30 | SLU 12 | 0.04 | 2.82 | 24.44 | -0.1075 | 0.0082 | 0.0002 |
| 30 | SLU 13 | 0.04 | 2.51 | 23.88 | -0.0916 | 0.0087 | 0.0001 |
| 30 | SLU 14 | 0.04 | 3.17 | 24.74 | -0.1269 | 0.0075 | 0.0002 |
| 30 | SLU 15 | 0.04 | 2.79 | 24.23 | -0.1059 | 0.0082 | 0.0002 |
| 30 | SLU 16 | 0.04 | 3.13 | 24.53 | -0.125 | 0.0075 | 0.0002 |
| 30 | SLU 17 | 0.04 | 2.74 | 24.01 | -0.104 | 0.0082 | 0.0001 |
| 30 | SLU 18 | 0.04 | 3.42 | 25.84 | -0.1363 | 0.0078 | 0.0002 |
| 30 | SLU 19 | 0.04 | 3.04 | 25.32 | -0.1154 | 0.0085 | 0.0002 |
| 30 | SLU 20 | 0.04 | 3.39 | 25.62 | -0.1347 | 0.0078 | 0.0002 |
| 30 | SLU 21 | 0.04 | 3 | 25.11 | -0.1138 | 0.0085 | 0.0002 |
| 30 | SLU 22 | 0.04 | 3.09 | 24.51 | -0.1245 | 0.0073 | 0.0001 |
| 30 | SLU 23 | 0.04 | 2.44 | 23.65 | -0.0896 | 0.0084 | 0.0001 |
| 30 | SLU 24 | 0.04 | 3.1 | 24.51 | -0.1248 | 0.0073 | 0.0001 |
| 30 | SLU 25 | 0.04 | 2.71 | 24 | -0.1039 | 0.008 | 0.0001 |
| 30 | SLU 26 | 0.04 | 2.41 | 23.43 | -0.088 | 0.0085 | 0.0001 |
| 30 | SLU 27 | 0.04 | 3.07 | 24.3 | -0.1233 | 0.0073 | 0.0001 |
| 30 | SLU 28 | 0.04 | 2.68 | 23.78 | -0.1023 | 0.008 | 0.0001 |
| 30 | SLU 29 | 0.04 | 3.02 | 24.08 | -0.1213 | 0.0073 | 0.0001 |
| 30 | SLU 30 | 0.04 | 2.63 | 23.57 | -0.1004 | 0.008 | 0.0001 |
| 30 | SLU 31 | 0.05 | 2.98 | 25.71 | -0.1087 | 0.0091 | 0.0002 |
| 30 | SLU 32 | 0.04 | 3.64 | 26.58 | -0.1439 | 0.008 | 0.0002 |
| 30 | SLU 33 | 0.04 | 3.25 | 26.06 | -0.123 | 0.0087 | 0.0002 |
| 30 | SLU 34 | 0.04 | 2.94 | 25.5 | -0.1071 | 0.0092 | 0.0002 |
| 30 | SLU 35 | 0.04 | 3.6 | 26.37 | -0.1423 | 0.008 | 0.0002 |
| 30 | SLU 36 | 0.04 | 3.22 | 25.85 | -0.1214 | 0.0087 | 0.0002 |
| 30 | SLU 37 | 0.04 | 3.56 | 26.15 | -0.1404 | 0.008 | 0.0002 |
| 30 | SLU 38 | 0.04 | 3.17 | 25.63 | -0.1195 | 0.0087 | 0.0002 |
| 30 | SLU 39 | 0.05 | 3.85 | 27.46 | -0.1518 | 0.0082 | 0.0002 |
| 30 | SLU 40 | 0.05 | 3.47 | 26.94 | -0.1308 | 0.009 | 0.0002 |
| 30 | SLU 41 | 0.05 | 3.82 | 27.25 | -0.1502 | 0.0083 | 0.0002 |
| 30 | SLU 42 | 0.05 | 3.43 | 26.73 | -0.1292 | 0.009 | 0.0002 |
| 30 | SLU 43 | 0.05 | 3.31 | 29.2 | -0.1364 | 0.0087 | 0.0002 |
| 30 | SLU 44 | 0.05 | 2.66 | 28.33 | -0.1015 | 0.0099 | 0.0002 |
| 30 | SLU 45 | 0.05 | 3.32 | 29.2 | -0.1368 | 0.0087 | 0.0002 |
| 30 | SLU 46 | 0.05 | 2.94 | 28.68 | -0.1158 | 0.0094 | 0.0002 |
| 30 | SLU 47 | 0.05 | 2.63 | 28.12 | -0.0999 | 0.0099 | 0.0002 |
| 30 | SLU 48 | 0.05 | 3.29 | 28.99 | -0.1352 | 0.0087 | 0.0002 |
| 30 | SLU 49 | 0.05 | 2.9 | 28.47 | -0.1142 | 0.0094 | 0.0002 |
| 30 | SLU 50 | 0.05 | 3.24 | 28.77 | -0.1333 | 0.0087 | 0.0002 |
| 30 | SLU 51 | 0.05 | 2.85 | 28.25 | -0.1123 | 0.0094 | 0.0002 |
| 30 | SLU 52 | 0.05 | 3.2 | 30.4 | -0.1206 | 0.0105 | 0.0002 |
| 30 | SLU 53 | 0.05 | 3.86 | 31.27 | -0.1559 | 0.0094 | 0.0002 |

| Nodo | Cont. | Reazione a traslazione | | | Reazione a rotazione | | |
|---|---|---|---|---|---|---|---|
| Ind. | N.br. | x | y | z | x | y | z |
| 30 | SLU 54 | 0.05 | 3.47 | 30.75 | -0.1349 | 0.0101 | 0.0002 |
| 30 | SLU 55 | 0.05 | 3.16 | 30.19 | -0.119 | 0.0106 | 0.0002 |
| 30 | SLU 56 | 0.05 | 3.82 | 31.05 | -0.1543 | 0.0094 | 0.0002 |
| 30 | SLU 57 | 0.05 | 3.44 | 30.54 | -0.1333 | 0.0101 | 0.0002 |
| 30 | SLU 58 | 0.05 | 3.78 | 30.84 | -0.1524 | 0.0094 | 0.0002 |
| 30 | SLU 59 | 0.05 | 3.39 | 30.32 | -0.1314 | 0.0101 | 0.0002 |
| 30 | SLU 60 | 0.05 | 4.07 | 32.15 | -0.1637 | 0.0097 | 0.0002 |
| 30 | SLU 61 | 0.05 | 3.69 | 31.63 | -0.1428 | 0.0104 | 0.0002 |
| 30 | SLU 62 | 0.05 | 4.04 | 31.93 | -0.1621 | 0.0097 | 0.0002 |
| 30 | SLU 63 | 0.05 | 3.65 | 31.42 | -0.1412 | 0.0104 | 0.0002 |
| 30 | SLU 64 | 0.05 | 3.74 | 30.82 | -0.1519 | 0.0091 | 0.0002 |
| 30 | SLU 65 | 0.05 | 3.09 | 29.96 | -0.117 | 0.0103 | 0.0002 |
| 30 | SLU 66 | 0.05 | 3.75 | 30.83 | -0.1522 | 0.0092 | 0.0002 |
| 30 | SLU 67 | 0.05 | 3.37 | 30.31 | -0.1313 | 0.0099 | 0.0002 |
| 30 | SLU 68 | 0.05 | 3.06 | 29.74 | -0.1154 | 0.0103 | 0.0002 |
| 30 | SLU 69 | 0.05 | 3.72 | 30.61 | -0.1507 | 0.0092 | 0.0002 |
| 30 | SLU 70 | 0.05 | 3.33 | 30.09 | -0.1297 | 0.0099 | 0.0002 |
| 30 | SLU 71 | 0.05 | 3.67 | 30.39 | -0.1487 | 0.0092 | 0.0002 |
| 30 | SLU 72 | 0.05 | 3.28 | 29.88 | -0.1278 | 0.0099 | 0.0002 |
| 30 | SLU 73 | 0.06 | 3.63 | 32.02 | -0.1361 | 0.011 | 0.0002 |
| 30 | SLU 74 | 0.06 | 4.29 | 32.89 | -0.1713 | 0.0099 | 0.0002 |
| 30 | SLU 75 | 0.06 | 3.9 | 32.37 | -0.1504 | 0.0106 | 0.0002 |
| 30 | SLU 76 | 0.06 | 3.59 | 31.81 | -0.1345 | 0.011 | 0.0002 |
| 30 | SLU 77 | 0.06 | 4.25 | 32.68 | -0.1697 | 0.0099 | 0.0002 |
| 30 | SLU 78 | 0.06 | 3.87 | 32.16 | -0.1488 | 0.0106 | 0.0002 |
| 30 | SLU 79 | 0.05 | 4.21 | 32.46 | -0.1678 | 0.0099 | 0.0002 |
| 30 | SLU 80 | 0.06 | 3.82 | 31.94 | -0.1469 | 0.0106 | 0.0002 |
| 30 | SLU 81 | 0.06 | 4.5 | 33.77 | -0.1792 | 0.0101 | 0.0002 |
| 30 | SLU 82 | 0.06 | 4.12 | 33.25 | -0.1582 | 0.0108 | 0.0002 |
| 30 | SLU 83 | 0.06 | 4.47 | 33.56 | -0.1776 | 0.0101 | 0.0002 |
| 30 | SLU 84 | 0.06 | 4.08 | 33.04 | -0.1567 | 0.0109 | 0.0002 |
| 30 | SLE RA 1 | 0.04 | 2.78 | 23.35 | -0.1134 | 0.0069 | 0.0001 |
| 30 | SLE RA 2 | 0.04 | 2.35 | 22.78 | -0.0902 | 0.0077 | 0.0001 |
| 30 | SLE RA 3 | 0.04 | 2.79 | 23.35 | -0.1137 | 0.0069 | 0.0001 |
| 30 | SLE RA 4 | 0.04 | 2.53 | 23.01 | -0.0997 | 0.0074 | 0.0001 |
| 30 | SLE RA 5 | 0.04 | 2.33 | 22.63 | -0.0891 | 0.0077 | 0.0001 |
| 30 | SLE RA 6 | 0.04 | 2.77 | 23.21 | -0.1126 | 0.007 | 0.0001 |
| 30 | SLE RA 7 | 0.04 | 2.51 | 22.87 | -0.0987 | 0.0074 | 0.0001 |
| 30 | SLE RA 8 | 0.04 | 2.74 | 23.07 | -0.1113 | 0.007 | 0.0001 |
| 30 | SLE RA 9 | 0.04 | 2.48 | 22.72 | -0.0974 | 0.0074 | 0.0001 |
| 30 | SLE RA 10 | 0.04 | 2.71 | 24.15 | -0.1029 | 0.0082 | 0.0001 |
| 30 | SLE RA 11 | 0.04 | 3.15 | 24.73 | -0.1264 | 0.0074 | 0.0002 |
| 30 | SLE RA 12 | 0.04 | 2.89 | 24.39 | -0.1124 | 0.0079 | 0.0001 |
| 30 | SLE RA 13 | 0.04 | 2.68 | 24.01 | -0.1019 | 0.0082 | 0.0001 |
| 30 | SLE RA 14 | 0.04 | 3.13 | 24.59 | -0.1253 | 0.0074 | 0.0002 |
| 30 | SLE RA 15 | 0.04 | 2.87 | 24.24 | -0.1114 | 0.0079 | 0.0001 |
| 30 | SLE RA 16 | 0.04 | 3.09 | 24.44 | -0.1241 | 0.0074 | 0.0002 |
| 30 | SLE RA 17 | 0.04 | 2.83 | 24.1 | -0.1101 | 0.0079 | 0.0001 |
| 30 | SLE RA 18 | 0.04 | 3.29 | 25.32 | -0.1316 | 0.0076 | 0.0002 |
| 30 | SLE RA 19 | 0.04 | 3.03 | 24.97 | -0.1177 | 0.0081 | 0.0002 |
| 30 | SLE RA 20 | 0.04 | 3.27 | 25.18 | -0.1306 | 0.0076 | 0.0002 |
| 30 | SLE RA 21 | 0.04 | 3.01 | 24.83 | -0.1166 | 0.0081 | 0.0002 |
| 30 | SLE FR 1 | 0.04 | 2.78 | 23.35 | -0.1134 | 0.0069 | 0.0001 |
| 30 | SLE FR 2 | 0.04 | 2.7 | 23.24 | -0.1088 | 0.0071 | 0.0001 |
| 30 | SLE FR 3 | 0.04 | 2.77 | 23.29 | -0.113 | 0.0069 | 0.0001 |
| 30 | SLE FR 4 | 0.04 | 2.85 | 23.83 | -0.1142 | 0.0073 | 0.0001 |
| 30 | SLE FR 5 | 0.04 | 2.93 | 23.88 | -0.1185 | 0.0071 | 0.0001 |
| 30 | SLE FR 6 | 0.04 | 3.04 | 24.33 | -0.1225 | 0.0073 | 0.0001 |
| 30 | SLE QP 1 | 0.04 | 2.78 | 23.35 | -0.1134 | 0.0069 | 0.0001 |
| 30 | SLE QP 2 | 0.04 | 2.94 | 23.94 | -0.1189 | 0.0071 | 0.0001 |
| 30 | SLD 1 | 0.11 | 3.33 | 23.58 | -0.1545 | 0.0382 | 0.0003 |
| 30 | SLD 2 | 0.11 | 3.33 | 23.58 | -0.1545 | 0.0382 | 0.0003 |
| 30 | SLD 3 | 0.07 | 0.31 | 19.5 | -0.0022 | 0.028 | 0.0002 |
| 30 | SLD 4 | 0.07 | 0.31 | 19.5 | -0.0022 | 0.028 | 0.0002 |
| 30 | SLD 5 | 0.13 | 7.63 | 30.03 | -0.3606 | 0.032 | 0.0004 |
| 30 | SLD 6 | 0.13 | 7.63 | 30.03 | -0.3606 | 0.032 | 0.0004 |
| 30 | SLD 7 | -0.02 | -2.43 | 16.41 | 0.1471 | -0.0022 | -0.0001 |
| 30 | SLD 8 | -0.02 | -2.43 | 16.41 | 0.1471 | -0.0022 | -0.0001 |
| 30 | SLD 9 | 0.1 | 8.3 | 31.47 | -0.3849 | 0.0164 | 0.0003 |
| 30 | SLD 10 | 0.1 | 8.3 | 31.47 | -0.3849 | 0.0164 | 0.0003 |
| 30 | SLD 11 | -0.05 | -1.76 | 17.85 | 0.1228 | -0.0177 | -0.0001 |
| 30 | SLD 12 | -0.05 | -1.76 | 17.85 | 0.1228 | -0.0177 | -0.0001 |
| 30 | SLD 13 | 0.01 | 5.56 | 28.39 | -0.2356 | -0.0137 | 0.0001 |
| 30 | SLD 14 | 0.01 | 5.56 | 28.39 | -0.2356 | -0.0137 | 0.0001 |
| 30 | SLD 15 | -0.03 | 2.54 | 24.3 | -0.0833 | -0.024 | 0 |
| 30 | SLD 16 | -0.03 | 2.54 | 24.3 | -0.0833 | -0.024 | 0 |
| 30 | SLV 1 | 0.21 | 3.87 | 23.2 | -0.2023 | 0.0795 | 0.0005 |
| 30 | SLV 2 | 0.21 | 3.87 | 23.2 | -0.2023 | 0.0795 | 0.0005 |
| 30 | SLV 3 | 0.11 | -3.27 | 13.25 | 0.1579 | 0.0551 | 0.0002 |
| 30 | SLV 4 | 0.11 | -3.27 | 13.25 | 0.1579 | 0.0551 | 0.0002 |
| 30 | SLV 5 | 0.25 | 14.04 | 38.81 | -0.6902 | 0.0659 | 0.0007 |
| 30 | SLV 6 | 0.25 | 14.04 | 38.81 | -0.6902 | 0.0659 | 0.0007 |
| 30 | SLV 7 | -0.1 | -9.75 | 5.64 | 0.5104 | -0.0156 | -0.0003 |
| 30 | SLV 8 | -0.1 | -9.75 | 5.64 | 0.5104 | -0.0156 | -0.0003 |
| 30 | SLV 9 | 0.18 | 15.63 | 42.24 | -0.7482 | 0.0298 | 0.0006 |
| 30 | SLV 10 | 0.18 | 15.63 | 42.24 | -0.7482 | 0.0298 | 0.0006 |
| 30 | SLV 11 | -0.17 | -8.17 | 9.08 | 0.4524 | -0.0517 | -0.0005 |
| 30 | SLV 12 | -0.17 | -8.17 | 9.08 | 0.4524 | -0.0517 | -0.0005 |

| Nodo | Cont. | Reazione a traslazione | | | Reazione a rotazione | | |
|---|---|---|---|---|---|---|---|
| Ind. | N.br. | x | y | z | x | y | z |
| 30 | SLV 13 | -0.03 | 9.14 | 34.64 | -0.3957 | -0.0408 | 0.0001 |
| 30 | SLV 14 | -0.03 | 9.14 | 34.64 | -0.3957 | -0.0408 | 0.0001 |
| 30 | SLV 15 | -0.13 | 2 | 24.69 | -0.0355 | -0.0653 | -0.0002 |
| 30 | SLV 16 | -0.13 | 2 | 24.69 | -0.0355 | -0.0653 | -0.0002 |
| 31 | SLU 1 | 0 | 11.88 | 31.9 | -0.557 | -0.0004 | 0 |
| 31 | SLU 2 | 0.01 | 11.72 | 31.94 | -0.549 | 0.0004 | 0 |
| 31 | SLU 3 | 0 | 11.95 | 32.25 | -0.5608 | -0.0004 | 0 |
| 31 | SLU 4 | 0 | 11.86 | 32.27 | -0.556 | 0.0001 | 0 |
| 31 | SLU 5 | 0.01 | 11.73 | 32.2 | -0.5503 | 0.0005 | 0 |
| 31 | SLU 6 | 0 | 11.97 | 32.51 | -0.5621 | -0.0004 | 0 |
| 31 | SLU 7 | 0 | 11.87 | 32.53 | -0.5573 | 0.0001 | 0 |
| 31 | SLU 8 | 0 | 11.9 | 32.42 | -0.5596 | -0.0003 | 0 |
| 31 | SLU 9 | 0 | 11.81 | 32.44 | -0.5548 | 0.0001 | 0 |
| 31 | SLU 10 | 0.01 | 13.98 | 36.39 | -0.6511 | 0.0003 | 0 |
| 31 | SLU 11 | 0 | 14.22 | 36.71 | -0.6629 | -0.0006 | 0 |
| 31 | SLU 12 | 0 | 14.12 | 36.73 | -0.6581 | -0.0001 | 0 |
| 31 | SLU 13 | 0.01 | 13.99 | 36.65 | -0.6524 | 0.0003 | 0 |
| 31 | SLU 14 | 0 | 14.23 | 36.97 | -0.6642 | -0.0005 | 0 |
| 31 | SLU 15 | 0 | 14.13 | 36.99 | -0.6594 | -0.0001 | 0 |
| 31 | SLU 16 | 0 | 14.17 | 36.88 | -0.6617 | -0.0005 | 0 |
| 31 | SLU 17 | 0 | 14.07 | 36.9 | -0.6569 | 0 | 0 |
| 31 | SLU 18 | 0 | 15.11 | 38.27 | -0.7028 | -0.0007 | 0 |
| 31 | SLU 19 | 0 | 15.01 | 38.29 | -0.698 | -0.0002 | 0 |
| 31 | SLU 20 | 0 | 15.12 | 38.53 | -0.7041 | -0.0006 | 0 |
| 31 | SLU 21 | 0 | 15.03 | 38.55 | -0.6993 | -0.0001 | 0 |
| 31 | SLU 22 | 0 | 12.91 | 34.04 | -0.6029 | -0.0006 | 0 |
| 31 | SLU 23 | 0.01 | 12.75 | 34.07 | -0.5949 | 0.0003 | 0 |
| 31 | SLU 24 | 0 | 12.98 | 34.38 | -0.6067 | -0.0005 | 0 |
| 31 | SLU 25 | 0.01 | 12.89 | 34.4 | -0.6019 | -0.0001 | 0 |
| 31 | SLU 26 | 0.01 | 12.76 | 34.33 | -0.5962 | 0.0003 | 0 |
| 31 | SLU 27 | 0 | 13 | 34.64 | -0.608 | -0.0005 | 0 |
| 31 | SLU 28 | 0 | 12.9 | 34.66 | -0.6032 | 0 | 0 |
| 31 | SLU 29 | 0 | 12.94 | 34.56 | -0.6055 | -0.0005 | 0 |
| 31 | SLU 30 | 0 | 12.84 | 34.58 | -0.6007 | 0 | 0 |
| 31 | SLU 31 | 0.01 | 15.01 | 38.53 | -0.697 | 0.0001 | 0 |
| 31 | SLU 32 | 0 | 15.25 | 38.84 | -0.7088 | -0.0007 | 0 |
| 31 | SLU 33 | 0.01 | 15.15 | 38.86 | -0.704 | -0.0002 | 0 |
| 31 | SLU 34 | 0.01 | 15.02 | 38.79 | -0.6983 | 0.0001 | 0 |
| 31 | SLU 35 | 0 | 15.26 | 39.1 | -0.7101 | -0.0007 | 0 |
| 31 | SLU 36 | 0.01 | 15.16 | 39.12 | -0.7053 | -0.0002 | 0 |
| 31 | SLU 37 | 0 | 15.2 | 39.02 | -0.7076 | -0.0007 | 0 |
| 31 | SLU 38 | 0 | 15.1 | 39.03 | -0.7028 | -0.0002 | 0 |
| 31 | SLU 39 | 0 | 16.14 | 40.41 | -0.7487 | -0.0008 | 0 |
| 31 | SLU 40 | 0.01 | 16.05 | 40.43 | -0.7439 | -0.0003 | 0 |
| 31 | SLU 41 | 0 | 16.16 | 40.67 | -0.75 | -0.0008 | 0 |
| 31 | SLU 42 | 0.01 | 16.06 | 40.69 | -0.7453 | -0.0003 | 0 |
| 31 | SLU 43 | 0 | 15.09 | 40.74 | -0.7083 | -0.0004 | 0 |
| 31 | SLU 44 | 0.01 | 14.93 | 40.78 | -0.7003 | 0.0004 | 0 |
| 31 | SLU 45 | 0 | 15.16 | 41.09 | -0.7121 | -0.0004 | 0 |
| 31 | SLU 46 | 0.01 | 15.07 | 41.11 | -0.7073 | 0.0001 | 0 |
| 31 | SLU 47 | 0.01 | 14.94 | 41.03 | -0.7016 | 0.0004 | 0 |
| 31 | SLU 48 | 0 | 15.18 | 41.35 | -0.7134 | -0.0004 | 0 |
| 31 | SLU 49 | 0.01 | 15.08 | 41.37 | -0.7086 | 0.0001 | 0 |
| 31 | SLU 50 | 0 | 15.11 | 41.26 | -0.7109 | -0.0004 | 0 |
| 31 | SLU 51 | 0.01 | 15.02 | 41.28 | -0.7061 | 0.0001 | 0 |
| 31 | SLU 52 | 0.01 | 17.19 | 45.23 | -0.8024 | 0.0002 | 0 |
| 31 | SLU 53 | 0 | 17.43 | 45.55 | -0.8142 | -0.0006 | 0 |
| 31 | SLU 54 | 0.01 | 17.33 | 45.57 | -0.8094 | -0.0001 | 0 |
| 31 | SLU 55 | 0.01 | 17.2 | 45.49 | -0.8037 | 0.0002 | 0 |
| 31 | SLU 56 | 0 | 17.44 | 45.81 | -0.8155 | -0.0006 | 0 |
| 31 | SLU 57 | 0.01 | 17.34 | 45.83 | -0.8107 | -0.0001 | 0 |
| 31 | SLU 58 | 0 | 17.38 | 45.72 | -0.813 | -0.0006 | 0 |
| 31 | SLU 59 | 0.01 | 17.28 | 45.74 | -0.8082 | -0.0001 | 0 |
| 31 | SLU 60 | 0 | 18.32 | 47.11 | -0.8542 | -0.0007 | 0 |
| 31 | SLU 61 | 0.01 | 18.22 | 47.13 | -0.8494 | -0.0002 | 0 |
| 31 | SLU 62 | 0 | 18.33 | 47.37 | -0.8555 | -0.0007 | 0 |
| 31 | SLU 63 | 0.01 | 18.24 | 47.39 | -0.8507 | -0.0002 | 0 |
| 31 | SLU 64 | 0 | 16.12 | 42.88 | -0.7542 | -0.0006 | 0 |
| 31 | SLU 65 | 0.01 | 15.96 | 42.91 | -0.7462 | 0.0002 | 0 |
| 31 | SLU 66 | 0 | 16.19 | 43.22 | -0.758 | -0.0006 | 0 |
| 31 | SLU 67 | 0.01 | 16.1 | 43.24 | -0.7532 | -0.0001 | 0 |
| 31 | SLU 68 | 0.01 | 15.97 | 43.17 | -0.7475 | 0.0002 | 0 |
| 31 | SLU 69 | 0 | 16.21 | 43.48 | -0.7593 | -0.0006 | 0 |
| 31 | SLU 70 | 0.01 | 16.11 | 43.5 | -0.7545 | -0.0001 | 0 |
| 31 | SLU 71 | 0 | 16.14 | 43.4 | -0.7568 | -0.0006 | 0 |
| 31 | SLU 72 | 0.01 | 16.05 | 43.42 | -0.752 | -0.0001 | 0 |
| 31 | SLU 73 | 0.01 | 18.22 | 47.37 | -0.8483 | 0 | 0 |
| 31 | SLU 74 | 0 | 18.46 | 47.68 | -0.8601 | -0.0008 | 0 |
| 31 | SLU 75 | 0.01 | 18.36 | 47.7 | -0.8553 | -0.0003 | 0 |
| 31 | SLU 76 | 0.01 | 18.23 | 47.63 | -0.8496 | 0 | 0 |
| 31 | SLU 77 | 0 | 18.47 | 47.94 | -0.8614 | -0.0008 | 0 |
| 31 | SLU 78 | 0.01 | 18.37 | 47.96 | -0.8567 | -0.0003 | 0 |
| 31 | SLU 79 | 0 | 18.41 | 47.86 | -0.8589 | -0.0008 | 0 |
| 31 | SLU 80 | 0.01 | 18.31 | 47.87 | -0.8541 | -0.0003 | 0 |
| 31 | SLU 81 | 0 | 19.35 | 49.25 | -0.9001 | -0.0009 | 0 |
| 31 | SLU 82 | 0.01 | 19.25 | 49.27 | -0.8953 | -0.0004 | 0 |
| 31 | SLU 83 | 0 | 19.37 | 49.51 | -0.9014 | -0.0009 | 0 |
| 31 | SLU 84 | 0.01 | 19.27 | 49.53 | -0.8966 | -0.0004 | 0 |

| Nodo | Cont. | Reazione a traslazione | | | Reazione a rotazione | | |
|---|---|---|---|---|---|---|---|
| Ind. | N.br. | x | y | z | x | y | z |
| 31 | SLE RA 1 | 0 | 12.17 | 32.51 | -0.5701 | -0.0004 | 0 |
| 31 | SLE RA 2 | 0.01 | 12.06 | 32.54 | -0.5647 | 0.0001 | 0 |
| 31 | SLE RA 3 | 0 | 12.22 | 32.74 | -0.5726 | -0.0004 | 0 |
| 31 | SLE RA 4 | 0 | 12.16 | 32.76 | -0.5694 | -0.0001 | 0 |
| 31 | SLE RA 5 | 0.01 | 12.07 | 32.71 | -0.5656 | 0.0001 | 0 |
| 31 | SLE RA 6 | 0 | 12.23 | 32.92 | -0.5735 | -0.0004 | 0 |
| 31 | SLE RA 7 | 0 | 12.17 | 32.93 | -0.5703 | -0.0001 | 0 |
| 31 | SLE RA 8 | 0 | 12.19 | 32.86 | -0.5718 | -0.0004 | 0 |
| 31 | SLE RA 9 | 0 | 12.13 | 32.87 | -0.5686 | -0.0001 | 0 |
| 31 | SLE RA 10 | 0.01 | 13.57 | 35.51 | -0.6328 | 0 | 0 |
| 31 | SLE RA 11 | 0 | 13.73 | 35.72 | -0.6407 | -0.0006 | 0 |
| 31 | SLE RA 12 | 0 | 13.67 | 35.73 | -0.6375 | -0.0002 | 0 |
| 31 | SLE RA 13 | 0.01 | 13.58 | 35.68 | -0.6337 | 0 | 0 |
| 31 | SLE RA 14 | 0 | 13.74 | 35.89 | -0.6416 | -0.0005 | 0 |
| 31 | SLE RA 15 | 0 | 13.68 | 35.9 | -0.6384 | -0.0002 | 0 |
| 31 | SLE RA 16 | 0 | 13.7 | 35.83 | -0.6399 | -0.0005 | 0 |
| 31 | SLE RA 17 | 0 | 13.63 | 35.84 | -0.6367 | -0.0002 | 0 |
| 31 | SLE RA 18 | 0 | 14.33 | 36.76 | -0.6673 | -0.0006 | 0 |
| 31 | SLE RA 19 | 0 | 14.26 | 36.77 | -0.6641 | -0.0003 | 0 |
| 31 | SLE RA 20 | 0 | 14.34 | 36.93 | -0.6682 | -0.0006 | 0 |
| 31 | SLE RA 21 | 0 | 14.27 | 36.95 | -0.665 | -0.0003 | 0 |
| 31 | SLE FR 1 | 0 | 12.17 | 32.51 | -0.5701 | -0.0004 | 0 |
| 31 | SLE FR 2 | 0 | 12.15 | 32.52 | -0.569 | -0.0003 | 0 |
| 31 | SLE FR 3 | 0 | 12.17 | 32.58 | -0.5704 | -0.0004 | 0 |
| 31 | SLE FR 4 | 0 | 12.8 | 33.79 | -0.5982 | -0.0004 | 0 |
| 31 | SLE FR 5 | 0 | 12.82 | 33.86 | -0.5996 | -0.0005 | 0 |
| 31 | SLE FR 6 | 0 | 13.25 | 34.64 | -0.6187 | -0.0005 | 0 |
| 31 | SLE QP 1 | 0 | 12.17 | 32.51 | -0.5701 | -0.0004 | 0 |
| 31 | SLE QP 2 | 0 | 12.82 | 33.79 | -0.5993 | -0.0005 | 0 |
| 31 | SLD 1 | -0.02 | 13.3 | 30.73 | -0.6182 | -0.0147 | -0.0001 |
| 31 | SLD 2 | -0.02 | 13.3 | 30.73 | -0.6182 | -0.0147 | -0.0001 |
| 31 | SLD 3 | -0.01 | 9.24 | 27.28 | -0.4277 | -0.0098 | -0.0001 |
| 31 | SLD 4 | -0.01 | 9.24 | 27.28 | -0.4277 | -0.0098 | -0.0001 |
| 31 | SLD 5 | -0.03 | 19.12 | 38.09 | -0.8939 | -0.0121 | 0 |
| 31 | SLD 6 | -0.03 | 19.12 | 38.09 | -0.8939 | -0.0121 | 0 |
| 31 | SLD 7 | 0.02 | 5.58 | 26.61 | -0.2588 | 0.004 | -0.0001 |
| 31 | SLD 8 | 0.02 | 5.58 | 26.61 | -0.2588 | 0.004 | -0.0001 |
| 31 | SLD 9 | -0.01 | 20.05 | 40.97 | -0.9397 | -0.005 | 0.0001 |
| 31 | SLD 10 | -0.01 | 20.05 | 40.97 | -0.9397 | -0.005 | 0.0001 |
| 31 | SLD 11 | 0.03 | 6.51 | 29.48 | -0.3046 | 0.0111 | 0 |
| 31 | SLD 12 | 0.03 | 6.51 | 29.48 | -0.3046 | 0.0111 | 0 |
| 31 | SLD 13 | 0.02 | 16.4 | 40.3 | -0.7708 | 0.0088 | 0.0001 |
| 31 | SLD 14 | 0.02 | 16.4 | 40.3 | -0.7708 | 0.0088 | 0.0001 |
| 31 | SLD 15 | 0.03 | 12.34 | 36.85 | -0.5803 | 0.0137 | 0.0001 |
| 31 | SLD 16 | 0.03 | 12.34 | 36.85 | -0.5803 | 0.0137 | 0.0001 |
| 31 | SLV 1 | -0.06 | 13.93 | 26.63 | -0.643 | -0.0334 | -0.0002 |
| 31 | SLV 2 | -0.06 | 13.93 | 26.63 | -0.643 | -0.0334 | -0.0002 |
| 31 | SLV 3 | -0.03 | 4.56 | 18.66 | -0.2036 | -0.0221 | -0.0003 |
| 31 | SLV 4 | -0.03 | 4.56 | 18.66 | -0.2036 | -0.0221 | -0.0003 |
| 31 | SLV 5 | -0.06 | 27.37 | 43.74 | -1.2788 | -0.0276 | 0.0001 |
| 31 | SLV 6 | -0.06 | 27.37 | 43.74 | -1.2788 | -0.0276 | 0.0001 |
| 31 | SLV 7 | 0.04 | -3.87 | 17.15 | 0.1858 | 0.0102 | -0.0002 |
| 31 | SLV 8 | 0.04 | -3.87 | 17.15 | 0.1858 | 0.0102 | -0.0002 |
| 31 | SLV 9 | -0.04 | 29.51 | 50.42 | -1.3843 | -0.0112 | 0.0002 |
| 31 | SLV 10 | -0.04 | 29.51 | 50.42 | -1.3843 | -0.0112 | 0.0002 |
| 31 | SLV 11 | 0.07 | -1.73 | 23.84 | 0.0803 | 0.0266 | -0.0001 |
| 31 | SLV 12 | 0.07 | -1.73 | 23.84 | 0.0803 | 0.0266 | -0.0001 |
| 31 | SLV 13 | 0.03 | 21.07 | 48.92 | -0.9949 | 0.0211 | 0.0003 |
| 31 | SLV 14 | 0.03 | 21.07 | 48.92 | -0.9949 | 0.0211 | 0.0003 |
| 31 | SLV 15 | 0.06 | 11.7 | 40.94 | -0.5555 | 0.0324 | 0.0002 |
| 31 | SLV 16 | 0.06 | 11.7 | 40.94 | -0.5555 | 0.0324 | 0.0002 |
| 32 | SLU 1 | -0.01 | 12.75 | 33.12 | -0.6082 | -0.002 | 0 |
| 32 | SLU 2 | -0.01 | 12.31 | 32.72 | -0.5872 | -0.0029 | 0 |
| 32 | SLU 3 | -0.01 | 13.68 | 34.66 | -0.6529 | -0.0022 | 0 |
| 32 | SLU 4 | -0.01 | 13.42 | 34.41 | -0.6403 | -0.0027 | 0 |
| 32 | SLU 5 | -0.01 | 13.3 | 34.33 | -0.6346 | -0.0031 | 0 |
| 32 | SLU 6 | -0.01 | 14.67 | 36.27 | -0.7003 | -0.0024 | 0 |
| 32 | SLU 7 | -0.01 | 14.41 | 36.03 | -0.6876 | -0.0029 | 0 |
| 32 | SLU 8 | -0.01 | 14.72 | 36.35 | -0.7029 | -0.0024 | 0 |
| 32 | SLU 9 | -0.01 | 14.46 | 36.11 | -0.6903 | -0.0029 | 0 |
| 32 | SLU 10 | -0.01 | 14.46 | 37.67 | -0.6883 | -0.003 | 0 |
| 32 | SLU 11 | -0.01 | 15.84 | 39.61 | -0.754 | -0.0023 | 0 |
| 32 | SLU 12 | -0.01 | 15.57 | 39.37 | -0.7414 | -0.0028 | 0 |
| 32 | SLU 13 | -0.01 | 15.45 | 39.29 | -0.7356 | -0.0032 | 0 |
| 32 | SLU 14 | -0.01 | 16.82 | 41.22 | -0.8013 | -0.0025 | 0 |
| 32 | SLU 15 | -0.01 | 16.56 | 40.98 | -0.7887 | -0.003 | 0 |
| 32 | SLU 16 | -0.01 | 16.87 | 41.31 | -0.804 | -0.0025 | 0 |
| 32 | SLU 17 | -0.01 | 16.61 | 41.06 | -0.7914 | -0.003 | 0 |
| 32 | SLU 18 | -0.01 | 15.82 | 40.2 | -0.7526 | -0.0021 | 0 |
| 32 | SLU 19 | -0.01 | 15.56 | 39.95 | -0.74 | -0.0027 | 0 |
| 32 | SLU 20 | -0.01 | 16.8 | 41.81 | -0.8 | -0.0023 | 0 |
| 32 | SLU 21 | -0.01 | 16.54 | 41.57 | -0.7874 | -0.0029 | 0 |
| 32 | SLU 22 | -0.01 | 14.31 | 36.07 | -0.6809 | -0.0022 | 0 |
| 32 | SLU 23 | -0.01 | 13.88 | 35.67 | -0.6598 | -0.0031 | 0 |
| 32 | SLU 24 | -0.01 | 15.25 | 37.6 | -0.7255 | -0.0024 | 0 |
| 32 | SLU 25 | -0.01 | 14.99 | 37.36 | -0.7129 | -0.0029 | 0 |
| 32 | SLU 26 | -0.01 | 14.87 | 37.28 | -0.7072 | -0.0032 | 0 |
| 32 | SLU 27 | -0.01 | 16.24 | 39.22 | -0.7729 | -0.0026 | 0 |

| Nodo | Cont. | Reazione a traslazione | | | Reazione a rotazione | | |
|---|---|---|---|---|---|---|---|
| Ind. | N.br. | x | y | z | x | y | z |
| 32 | SLU 28 | -0.01 | 15.98 | 38.98 | -0.7603 | -0.0031 | 0 |
| 32 | SLU 29 | -0.01 | 16.29 | 39.3 | -0.7755 | -0.0026 | 0 |
| 32 | SLU 30 | -0.01 | 16.03 | 39.06 | -0.7629 | -0.0031 | 0 |
| 32 | SLU 31 | -0.01 | 16.03 | 40.62 | -0.7609 | -0.0031 | 0 |
| 32 | SLU 32 | -0.01 | 17.4 | 42.55 | -0.8266 | -0.0024 | 0 |
| 32 | SLU 33 | -0.01 | 17.14 | 42.31 | -0.814 | -0.003 | 0 |
| 32 | SLU 34 | -0.01 | 17.02 | 42.23 | -0.8083 | -0.0033 | 0 |
| 32 | SLU 35 | -0.01 | 18.39 | 44.17 | -0.874 | -0.0026 | 0 |
| 32 | SLU 36 | -0.01 | 18.13 | 43.93 | -0.8614 | -0.0032 | 0 |
| 32 | SLU 37 | -0.01 | 18.44 | 44.25 | -0.8766 | -0.0026 | 0 |
| 32 | SLU 38 | -0.01 | 18.18 | 44.01 | -0.864 | -0.0032 | 0 |
| 32 | SLU 39 | -0.01 | 17.39 | 43.14 | -0.8253 | -0.0023 | 0 |
| 32 | SLU 40 | -0.01 | 17.12 | 42.9 | -0.8127 | -0.0028 | 0 |
| 32 | SLU 41 | -0.01 | 18.37 | 44.76 | -0.8726 | -0.0025 | 0 |
| 32 | SLU 42 | -0.01 | 18.11 | 44.52 | -0.86 | -0.003 | 0 |
| 32 | SLU 43 | -0.01 | 16.03 | 42.05 | -0.7658 | -0.0026 | 0 |
| 32 | SLU 44 | -0.01 | 15.6 | 41.65 | -0.7448 | -0.0035 | 0 |
| 32 | SLU 45 | -0.01 | 16.97 | 43.58 | -0.8105 | -0.0028 | 0 |
| 32 | SLU 46 | -0.01 | 16.71 | 43.34 | -0.7979 | -0.0033 | 0 |
| 32 | SLU 47 | -0.01 | 16.58 | 43.26 | -0.7921 | -0.0037 | 0 |
| 32 | SLU 48 | -0.01 | 17.96 | 45.2 | -0.8578 | -0.003 | 0 |
| 32 | SLU 49 | -0.01 | 17.7 | 44.96 | -0.8452 | -0.0035 | 0 |
| 32 | SLU 50 | -0.01 | 18 | 45.28 | -0.8605 | -0.003 | 0 |
| 32 | SLU 51 | -0.01 | 17.74 | 45.04 | -0.8479 | -0.0035 | 0 |
| 32 | SLU 52 | -0.01 | 17.75 | 46.6 | -0.8459 | -0.0035 | 0 |
| 32 | SLU 53 | -0.01 | 19.12 | 48.53 | -0.9116 | -0.0028 | 0 |
| 32 | SLU 54 | -0.01 | 18.86 | 48.29 | -0.899 | -0.0034 | 0 |
| 32 | SLU 55 | -0.01 | 18.73 | 48.21 | -0.8932 | -0.0037 | 0 |
| 32 | SLU 56 | -0.01 | 20.11 | 50.15 | -0.9589 | -0.003 | 0 |
| 32 | SLU 57 | -0.01 | 19.85 | 49.91 | -0.9463 | -0.0036 | 0 |
| 32 | SLU 58 | -0.01 | 20.15 | 50.23 | -0.9616 | -0.003 | 0 |
| 32 | SLU 59 | -0.01 | 19.89 | 49.99 | -0.949 | -0.0036 | 0 |
| 32 | SLU 60 | -0.01 | 19.1 | 49.12 | -0.9102 | -0.0027 | 0 |
| 32 | SLU 61 | -0.01 | 18.84 | 48.88 | -0.8976 | -0.0032 | 0 |
| 32 | SLU 62 | -0.01 | 20.09 | 50.74 | -0.9576 | -0.0029 | 0 |
| 32 | SLU 63 | -0.01 | 19.83 | 50.5 | -0.9449 | -0.0034 | 0 |
| 32 | SLU 64 | -0.01 | 17.6 | 45 | -0.8384 | -0.0027 | 0 |
| 32 | SLU 65 | -0.01 | 17.16 | 44.59 | -0.8174 | -0.0036 | 0 |
| 32 | SLU 66 | -0.01 | 18.54 | 46.53 | -0.8831 | -0.0029 | 0 |
| 32 | SLU 67 | -0.01 | 18.28 | 46.29 | -0.8705 | -0.0034 | 0 |
| 32 | SLU 68 | -0.01 | 18.15 | 46.21 | -0.8648 | -0.0038 | 0 |
| 32 | SLU 69 | -0.01 | 19.53 | 48.15 | -0.9305 | -0.0031 | 0 |
| 32 | SLU 70 | -0.01 | 19.26 | 47.9 | -0.9178 | -0.0036 | 0 |
| 32 | SLU 71 | -0.01 | 19.57 | 48.23 | -0.9331 | -0.0031 | 0 |
| 32 | SLU 72 | -0.01 | 19.31 | 47.98 | -0.9205 | -0.0036 | 0 |
| 32 | SLU 73 | -0.01 | 19.31 | 49.54 | -0.9185 | -0.0037 | 0 |
| 32 | SLU 74 | -0.01 | 20.69 | 51.48 | -0.9842 | -0.003 | 0 |
| 32 | SLU 75 | -0.01 | 20.43 | 51.24 | -0.9716 | -0.0035 | 0 |
| 32 | SLU 76 | -0.01 | 20.3 | 51.16 | -0.9658 | -0.0039 | 0 |
| 32 | SLU 77 | -0.01 | 21.68 | 53.1 | -1.0315 | -0.0032 | 0 |
| 32 | SLU 78 | -0.01 | 21.42 | 52.85 | -1.0189 | -0.0037 | 0 |
| 32 | SLU 79 | -0.01 | 21.72 | 53.18 | -1.0342 | -0.0032 | 0 |
| 32 | SLU 80 | -0.01 | 21.46 | 52.94 | -1.0216 | -0.0037 | 0 |
| 32 | SLU 81 | -0.01 | 20.67 | 52.07 | -0.9828 | -0.0029 | 0 |
| 32 | SLU 82 | -0.01 | 20.41 | 51.83 | -0.9702 | -0.0034 | 0 |
| 32 | SLU 83 | -0.01 | 21.66 | 53.69 | -1.0302 | -0.003 | 0 |
| 32 | SLU 84 | -0.01 | 21.4 | 53.44 | -1.0176 | -0.0036 | 0 |
| 32 | SLE RA 1 | -0.01 | 13.19 | 33.97 | -0.629 | -0.0021 | 0 |
| 32 | SLE RA 2 | -0.01 | 12.9 | 33.7 | -0.615 | -0.0027 | 0 |
| 32 | SLE RA 3 | -0.01 | 13.82 | 34.99 | -0.6588 | -0.0022 | 0 |
| 32 | SLE RA 4 | -0.01 | 13.65 | 34.83 | -0.6504 | -0.0025 | 0 |
| 32 | SLE RA 5 | -0.01 | 13.56 | 34.77 | -0.6465 | -0.0028 | 0 |
| 32 | SLE RA 6 | -0.01 | 14.48 | 36.06 | -0.6903 | -0.0023 | 0 |
| 32 | SLE RA 7 | -0.01 | 14.3 | 35.9 | -0.6819 | -0.0027 | 0 |
| 32 | SLE RA 8 | -0.01 | 14.51 | 36.12 | -0.6921 | -0.0023 | 0 |
| 32 | SLE RA 9 | -0.01 | 14.33 | 35.96 | -0.6837 | -0.0027 | 0 |
| 32 | SLE RA 10 | -0.01 | 14.34 | 37 | -0.6824 | -0.0027 | 0 |
| 32 | SLE RA 11 | -0.01 | 15.25 | 38.29 | -0.7262 | -0.0022 | 0 |
| 32 | SLE RA 12 | -0.01 | 15.08 | 38.13 | -0.7178 | -0.0026 | 0 |
| 32 | SLE RA 13 | -0.01 | 14.99 | 38.07 | -0.7139 | -0.0028 | 0 |
| 32 | SLE RA 14 | -0.01 | 15.91 | 39.37 | -0.7577 | -0.0024 | 0 |
| 32 | SLE RA 15 | -0.01 | 15.74 | 39.2 | -0.7493 | -0.0027 | 0 |
| 32 | SLE RA 16 | -0.01 | 15.94 | 39.42 | -0.7595 | -0.0024 | 0 |
| 32 | SLE RA 17 | -0.01 | 15.77 | 39.26 | -0.7511 | -0.0027 | 0 |
| 32 | SLE RA 18 | -0.01 | 15.24 | 38.68 | -0.7253 | -0.0022 | 0 |
| 32 | SLE RA 19 | -0.01 | 15.07 | 38.52 | -0.7169 | -0.0025 | 0 |
| 32 | SLE RA 20 | -0.01 | 15.9 | 39.76 | -0.7568 | -0.0023 | 0 |
| 32 | SLE RA 21 | -0.01 | 15.73 | 39.6 | -0.7484 | -0.0026 | 0 |
| 32 | SLE FR 1 | -0.01 | 13.19 | 33.97 | -0.629 | -0.0021 | 0 |
| 32 | SLE FR 2 | -0.01 | 13.14 | 33.91 | -0.6262 | -0.0022 | 0 |
| 32 | SLE FR 3 | -0.01 | 13.46 | 34.4 | -0.6416 | -0.0021 | 0 |
| 32 | SLE FR 4 | -0.01 | 13.75 | 35.33 | -0.6551 | -0.0022 | 0 |
| 32 | SLE FR 5 | -0.01 | 14.07 | 35.81 | -0.6705 | -0.0021 | 0 |
| 32 | SLE FR 6 | -0.01 | 14.22 | 36.32 | -0.6771 | -0.0021 | 0 |
| 32 | SLE QP 1 | -0.01 | 13.19 | 33.97 | -0.629 | -0.0021 | 0 |
| 32 | SLE QP 2 | -0.01 | 13.81 | 35.38 | -0.6579 | -0.0021 | 0 |
| 32 | SLD 1 | -0.03 | 18.27 | 42.55 | -0.8697 | -0.017 | -0.0001 |
| 32 | SLD 2 | -0.03 | 18.27 | 42.55 | -0.8697 | -0.017 | -0.0001 |

| Nodo | Cont. | Reazione a traslazione | | | Reazione a rotazione | | |
|---|---|---|---|---|---|---|---|
| Ind. | N.br. | x | y | z | x | y | z |
| 32 | SLD 3 | -0.02 | 13.63 | 37.2 | -0.6489 | -0.0118 | -0.0001 |
| 32 | SLD 4 | -0.02 | 13.63 | 37.2 | -0.6489 | -0.0118 | -0.0001 |
| 32 | SLD 5 | -0.03 | 22.18 | 45.64 | -1.0563 | -0.0145 | -0.0001 |
| 32 | SLD 6 | -0.03 | 22.18 | 45.64 | -1.0563 | -0.0145 | -0.0001 |
| 32 | SLD 7 | 0.01 | 6.72 | 27.82 | -0.3203 | 0.0029 | 0.0001 |
| 32 | SLD 8 | 0.01 | 6.72 | 27.82 | -0.3203 | 0.0029 | 0.0001 |
| 32 | SLD 9 | -0.02 | 20.9 | 42.94 | -0.9954 | -0.0071 | 0 |
| 32 | SLD 10 | -0.02 | 20.9 | 42.94 | -0.9954 | -0.0071 | 0 |
| 32 | SLD 11 | 0.02 | 5.43 | 25.12 | -0.2595 | 0.0103 | 0.0001 |
| 32 | SLD 12 | 0.02 | 5.43 | 25.12 | -0.2595 | 0.0103 | 0.0001 |
| 32 | SLD 13 | 0.01 | 13.99 | 33.56 | -0.6669 | 0.0076 | 0.0001 |
| 32 | SLD 14 | 0.01 | 13.99 | 33.56 | -0.6669 | 0.0076 | 0.0001 |
| 32 | SLD 15 | 0.02 | 9.35 | 28.21 | -0.4461 | 0.0128 | 0.0001 |
| 32 | SLD 16 | 0.02 | 9.35 | 28.21 | -0.4461 | 0.0128 | 0.0001 |
| 32 | SLV 1 | -0.07 | 24.31 | 52.28 | -1.1567 | -0.0373 | -0.0002 |
| 32 | SLV 2 | -0.07 | 24.31 | 52.28 | -1.1567 | -0.0373 | -0.0002 |
| 32 | SLV 3 | -0.04 | 13.42 | 39.59 | -0.6381 | -0.025 | -0.0001 |
| 32 | SLV 4 | -0.04 | 13.42 | 39.59 | -0.6381 | -0.025 | -0.0001 |
| 32 | SLV 5 | -0.07 | 33.48 | 59.7 | -1.5941 | -0.0312 | -0.0002 |
| 32 | SLV 6 | -0.07 | 33.48 | 59.7 | -1.5941 | -0.0312 | -0.0002 |
| 32 | SLV 7 | 0.03 | -2.83 | 17.39 | 0.1346 | 0.0096 | 0.0001 |
| 32 | SLV 8 | 0.03 | -2.83 | 17.39 | 0.1346 | 0.0096 | 0.0001 |
| 32 | SLV 9 | -0.04 | 30.44 | 53.37 | -1.4504 | -0.0138 | -0.0001 |
| 32 | SLV 10 | -0.04 | 30.44 | 53.37 | -1.4504 | -0.0138 | -0.0001 |
| 32 | SLV 11 | 0.06 | -5.86 | 11.06 | 0.2783 | 0.027 | 0.0002 |
| 32 | SLV 12 | 0.06 | -5.86 | 11.06 | 0.2783 | 0.027 | 0.0002 |
| 32 | SLV 13 | 0.03 | 14.19 | 31.17 | -0.6776 | 0.0208 | 0.0002 |
| 32 | SLV 14 | 0.03 | 14.19 | 31.17 | -0.6776 | 0.0208 | 0.0002 |
| 32 | SLV 15 | 0.06 | 3.3 | 18.48 | -0.159 | 0.0331 | 0.0003 |
| 32 | SLV 16 | 0.06 | 3.3 | 18.48 | -0.159 | 0.0331 | 0.0003 |
| 33 | SLU 1 | -0.06 | 6.54 | 30.1 | -0.6286 | -0.0157 | -0.0006 |
| 33 | SLU 2 | -0.05 | 5.64 | 28.62 | -0.5717 | -0.0157 | -0.0006 |
| 33 | SLU 3 | -0.06 | 6.65 | 30.34 | -0.6388 | -0.0158 | -0.0006 |
| 33 | SLU 4 | -0.05 | 6.11 | 29.45 | -0.6047 | -0.0158 | -0.0006 |
| 33 | SLU 5 | -0.05 | 5.7 | 28.74 | -0.5785 | -0.0158 | -0.0006 |
| 33 | SLU 6 | -0.06 | 6.71 | 30.47 | -0.6456 | -0.0159 | -0.0006 |
| 33 | SLU 7 | -0.06 | 6.17 | 29.58 | -0.6114 | -0.0159 | -0.0006 |
| 33 | SLU 8 | -0.06 | 6.66 | 30.35 | -0.6421 | -0.0159 | -0.0006 |
| 33 | SLU 9 | -0.06 | 6.13 | 29.46 | -0.608 | -0.016 | -0.0006 |
| 33 | SLU 10 | -0.06 | 6.58 | 30.9 | -0.6447 | -0.0168 | -0.0006 |
| 33 | SLU 11 | -0.06 | 7.58 | 32.62 | -0.7118 | -0.0169 | -0.0007 |
| 33 | SLU 12 | -0.06 | 7.05 | 31.73 | -0.6777 | -0.0169 | -0.0007 |
| 33 | SLU 13 | -0.06 | 6.64 | 31.03 | -0.6515 | -0.0169 | -0.0007 |
| 33 | SLU 14 | -0.06 | 7.65 | 32.75 | -0.7186 | -0.017 | -0.0007 |
| 33 | SLU 15 | -0.06 | 7.11 | 31.86 | -0.6845 | -0.017 | -0.0007 |
| 33 | SLU 16 | -0.06 | 7.6 | 32.64 | -0.7152 | -0.017 | -0.0007 |
| 33 | SLU 17 | -0.06 | 7.07 | 31.75 | -0.681 | -0.017 | -0.0007 |
| 33 | SLU 18 | -0.06 | 7.88 | 33.36 | -0.7329 | -0.0173 | -0.0007 |
| 33 | SLU 19 | -0.06 | 7.34 | 32.47 | -0.6988 | -0.0173 | -0.0007 |
| 33 | SLU 20 | -0.06 | 7.94 | 33.49 | -0.7397 | -0.0174 | -0.0007 |
| 33 | SLU 21 | -0.06 | 7.4 | 32.6 | -0.7056 | -0.0174 | -0.0007 |
| 33 | SLU 22 | -0.06 | 7.21 | 31.68 | -0.6793 | -0.0162 | -0.0006 |
| 33 | SLU 23 | -0.05 | 6.32 | 30.19 | -0.6225 | -0.0163 | -0.0006 |
| 33 | SLU 24 | -0.06 | 7.32 | 31.92 | -0.6895 | -0.0164 | -0.0006 |
| 33 | SLU 25 | -0.06 | 6.78 | 31.03 | -0.6554 | -0.0164 | -0.0006 |
| 33 | SLU 26 | -0.06 | 6.38 | 30.32 | -0.6292 | -0.0164 | -0.0006 |
| 33 | SLU 27 | -0.06 | 7.38 | 32.04 | -0.6963 | -0.0165 | -0.0006 |
| 33 | SLU 28 | -0.06 | 6.85 | 31.15 | -0.6622 | -0.0165 | -0.0006 |
| 33 | SLU 29 | -0.06 | 7.34 | 31.93 | -0.6929 | -0.0165 | -0.0006 |
| 33 | SLU 30 | -0.06 | 6.8 | 31.04 | -0.6588 | -0.0165 | -0.0006 |
| 33 | SLU 31 | -0.06 | 7.25 | 32.48 | -0.6955 | -0.0174 | -0.0007 |
| 33 | SLU 32 | -0.06 | 8.26 | 34.2 | -0.7626 | -0.0175 | -0.0007 |
| 33 | SLU 33 | -0.06 | 7.72 | 33.31 | -0.7285 | -0.0175 | -0.0007 |
| 33 | SLU 34 | -0.06 | 7.32 | 32.61 | -0.7023 | -0.0175 | -0.0007 |
| 33 | SLU 35 | -0.06 | 8.32 | 34.33 | -0.7694 | -0.0176 | -0.0007 |
| 33 | SLU 36 | -0.06 | 7.79 | 33.44 | -0.7352 | -0.0176 | -0.0007 |
| 33 | SLU 37 | -0.06 | 8.28 | 34.22 | -0.7659 | -0.0176 | -0.0007 |
| 33 | SLU 38 | -0.06 | 7.74 | 33.33 | -0.7318 | -0.0176 | -0.0007 |
| 33 | SLU 39 | -0.06 | 8.55 | 34.94 | -0.7837 | -0.0178 | -0.0007 |
| 33 | SLU 40 | -0.06 | 8.02 | 34.05 | -0.7496 | -0.0178 | -0.0007 |
| 33 | SLU 41 | -0.06 | 8.62 | 35.07 | -0.7905 | -0.0179 | -0.0007 |
| 33 | SLU 42 | -0.06 | 8.08 | 34.18 | -0.7563 | -0.0179 | -0.0007 |
| 33 | SLU 43 | -0.07 | 8.27 | 38.59 | -0.7997 | -0.0202 | -0.0007 |
| 33 | SLU 44 | -0.07 | 7.37 | 37.1 | -0.7429 | -0.0202 | -0.0007 |
| 33 | SLU 45 | -0.07 | 8.38 | 38.83 | -0.81 | -0.0203 | -0.0007 |
| 33 | SLU 46 | -0.07 | 7.84 | 37.94 | -0.7758 | -0.0203 | -0.0007 |
| 33 | SLU 47 | -0.07 | 7.43 | 37.23 | -0.7496 | -0.0204 | -0.0007 |
| 33 | SLU 48 | -0.07 | 8.44 | 38.95 | -0.8167 | -0.0205 | -0.0007 |
| 33 | SLU 49 | -0.07 | 7.9 | 38.06 | -0.7826 | -0.0205 | -0.0007 |
| 33 | SLU 50 | -0.07 | 8.39 | 38.84 | -0.8133 | -0.0205 | -0.0007 |
| 33 | SLU 51 | -0.07 | 7.86 | 37.95 | -0.7792 | -0.0205 | -0.0007 |
| 33 | SLU 52 | -0.07 | 8.31 | 39.39 | -0.8159 | -0.0213 | -0.0008 |
| 33 | SLU 53 | -0.08 | 9.31 | 41.11 | -0.883 | -0.0214 | -0.0008 |
| 33 | SLU 54 | -0.07 | 8.78 | 40.22 | -0.8489 | -0.0214 | -0.0008 |
| 33 | SLU 55 | -0.07 | 8.37 | 39.52 | -0.8227 | -0.0215 | -0.0008 |
| 33 | SLU 56 | -0.08 | 9.38 | 41.24 | -0.8898 | -0.0215 | -0.0008 |
| 33 | SLU 57 | -0.08 | 8.84 | 40.35 | -0.8557 | -0.0216 | -0.0008 |
| 33 | SLU 58 | -0.08 | 9.33 | 41.13 | -0.8863 | -0.0216 | -0.0008 |

| Nodo | Cont. | Reazione a traslazione | | | Reazione a rotazione | | |
|---|---|---|---|---|---|---|---|
| Ind. | N.br. | x | y | z | x | y | z |
| 33 | SLU 59 | -0.08 | 8.8 | 40.24 | -0.8522 | -0.0216 | -0.0008 |
| 33 | SLU 60 | -0.08 | 9.61 | 41.85 | -0.9041 | -0.0218 | -0.0008 |
| 33 | SLU 61 | -0.08 | 9.07 | 40.96 | -0.87 | -0.0218 | -0.0008 |
| 33 | SLU 62 | -0.08 | 9.67 | 41.98 | -0.9109 | -0.0219 | -0.0008 |
| 33 | SLU 63 | -0.08 | 9.13 | 41.09 | -0.8768 | -0.0219 | -0.0008 |
| 33 | SLU 64 | -0.07 | 8.94 | 40.17 | -0.8505 | -0.0208 | -0.0008 |
| 33 | SLU 65 | -0.07 | 8.05 | 38.68 | -0.7936 | -0.0208 | -0.0008 |
| 33 | SLU 66 | -0.07 | 9.05 | 40.41 | -0.8607 | -0.0209 | -0.0008 |
| 33 | SLU 67 | -0.07 | 8.51 | 39.52 | -0.8266 | -0.0209 | -0.0008 |
| 33 | SLU 68 | -0.07 | 8.11 | 38.81 | -0.8004 | -0.0209 | -0.0008 |
| 33 | SLU 69 | -0.08 | 9.11 | 40.53 | -0.8675 | -0.021 | -0.0008 |
| 33 | SLU 70 | -0.07 | 8.58 | 39.64 | -0.8334 | -0.021 | -0.0008 |
| 33 | SLU 71 | -0.08 | 9.07 | 40.42 | -0.8641 | -0.021 | -0.0008 |
| 33 | SLU 72 | -0.07 | 8.53 | 39.53 | -0.8299 | -0.021 | -0.0008 |
| 33 | SLU 73 | -0.07 | 8.98 | 40.97 | -0.8667 | -0.0219 | -0.0008 |
| 33 | SLU 74 | -0.08 | 9.99 | 42.69 | -0.9338 | -0.022 | -0.0009 |
| 33 | SLU 75 | -0.08 | 9.45 | 41.8 | -0.8996 | -0.022 | -0.0009 |
| 33 | SLU 76 | -0.08 | 9.05 | 41.09 | -0.8735 | -0.022 | -0.0009 |
| 33 | SLU 77 | -0.08 | 10.05 | 42.82 | -0.9405 | -0.0221 | -0.0009 |
| 33 | SLU 78 | -0.08 | 9.52 | 41.93 | -0.9064 | -0.0221 | -0.0009 |
| 33 | SLU 79 | -0.08 | 10.01 | 42.71 | -0.9371 | -0.0221 | -0.0009 |
| 33 | SLU 80 | -0.08 | 9.47 | 41.82 | -0.903 | -0.0221 | -0.0009 |
| 33 | SLU 81 | -0.08 | 10.28 | 43.43 | -0.9549 | -0.0223 | -0.0009 |
| 33 | SLU 82 | -0.08 | 9.75 | 42.54 | -0.9207 | -0.0223 | -0.0009 |
| 33 | SLU 83 | -0.08 | 10.35 | 43.56 | -0.9616 | -0.0225 | -0.0009 |
| 33 | SLU 84 | -0.08 | 9.81 | 42.67 | -0.9275 | -0.0225 | -0.0009 |
| 33 | SLE RA 1 | -0.06 | 6.73 | 30.55 | -0.6431 | -0.0159 | -0.0006 |
| 33 | SLE RA 2 | -0.05 | 6.13 | 29.56 | -0.6052 | -0.0159 | -0.0006 |
| 33 | SLE RA 3 | -0.06 | 6.8 | 30.71 | -0.6499 | -0.0159 | -0.0006 |
| 33 | SLE RA 4 | -0.06 | 6.44 | 30.12 | -0.6271 | -0.0159 | -0.0006 |
| 33 | SLE RA 5 | -0.05 | 6.17 | 29.65 | -0.6097 | -0.016 | -0.0006 |
| 33 | SLE RA 6 | -0.06 | 6.84 | 30.79 | -0.6544 | -0.016 | -0.0006 |
| 33 | SLE RA 7 | -0.06 | 6.49 | 30.2 | -0.6316 | -0.016 | -0.0006 |
| 33 | SLE RA 8 | -0.06 | 6.81 | 30.72 | -0.6521 | -0.016 | -0.0006 |
| 33 | SLE RA 9 | -0.06 | 6.46 | 30.13 | -0.6294 | -0.016 | -0.0006 |
| 33 | SLE RA 10 | -0.06 | 6.76 | 31.08 | -0.6539 | -0.0166 | -0.0006 |
| 33 | SLE RA 11 | -0.06 | 7.43 | 32.23 | -0.6986 | -0.0167 | -0.0006 |
| 33 | SLE RA 12 | -0.06 | 7.07 | 31.64 | -0.6758 | -0.0167 | -0.0006 |
| 33 | SLE RA 13 | -0.06 | 6.8 | 31.17 | -0.6584 | -0.0167 | -0.0006 |
| 33 | SLE RA 14 | -0.06 | 7.47 | 32.32 | -0.7031 | -0.0167 | -0.0006 |
| 33 | SLE RA 15 | -0.06 | 7.11 | 31.72 | -0.6803 | -0.0168 | -0.0006 |
| 33 | SLE RA 16 | -0.06 | 7.44 | 32.24 | -0.7008 | -0.0167 | -0.0006 |
| 33 | SLE RA 17 | -0.06 | 7.08 | 31.65 | -0.6781 | -0.0168 | -0.0006 |
| 33 | SLE RA 18 | -0.06 | 7.62 | 32.73 | -0.7127 | -0.0169 | -0.0007 |
| 33 | SLE RA 19 | -0.06 | 7.27 | 32.13 | -0.6899 | -0.0169 | -0.0007 |
| 33 | SLE RA 20 | -0.06 | 7.67 | 32.81 | -0.7172 | -0.017 | -0.0007 |
| 33 | SLE RA 21 | -0.06 | 7.31 | 32.22 | -0.6944 | -0.017 | -0.0007 |
| 33 | SLE FR 1 | -0.06 | 6.73 | 30.55 | -0.6431 | -0.0159 | -0.0006 |
| 33 | SLE FR 2 | -0.06 | 6.61 | 30.35 | -0.6355 | -0.0159 | -0.0006 |
| 33 | SLE FR 3 | -0.06 | 6.75 | 30.58 | -0.6449 | -0.0159 | -0.0006 |
| 33 | SLE FR 4 | -0.06 | 6.88 | 31 | -0.6564 | -0.0162 | -0.0006 |
| 33 | SLE FR 5 | -0.06 | 7.01 | 31.24 | -0.6658 | -0.0162 | -0.0006 |
| 33 | SLE FR 6 | -0.06 | 7.18 | 31.64 | -0.6779 | -0.0164 | -0.0006 |
| 33 | SLE QP 1 | -0.06 | 6.73 | 30.55 | -0.6431 | -0.0159 | -0.0006 |
| 33 | SLE QP 2 | -0.06 | 7 | 31.2 | -0.664 | -0.0162 | -0.0006 |
| 33 | SLD 1 | 0 | 7.48 | 27.05 | -0.6501 | 0.0105 | -0.0005 |
| 33 | SLD 2 | 0 | 7.48 | 27.05 | -0.6501 | 0.0105 | -0.0005 |
| 33 | SLD 3 | 0.05 | 3.28 | 20.4 | -0.3931 | 0.0268 | -0.0004 |
| 33 | SLD 4 | 0.05 | 3.28 | 20.4 | -0.3931 | 0.0268 | -0.0004 |
| 33 | SLD 5 | -0.12 | 13.51 | 40.04 | -1.0497 | -0.0328 | -0.0006 |
| 33 | SLD 6 | -0.12 | 13.51 | 40.04 | -1.0497 | -0.0328 | -0.0006 |
| 33 | SLD 7 | 0.06 | -0.48 | 17.88 | -0.1928 | 0.0214 | -0.0005 |
| 33 | SLD 8 | 0.06 | -0.48 | 17.88 | -0.1928 | 0.0214 | -0.0005 |
| 33 | SLD 9 | -0.17 | 14.48 | 44.52 | -1.1351 | -0.0537 | -0.0007 |
| 33 | SLD 10 | -0.17 | 14.48 | 44.52 | -1.1351 | -0.0537 | -0.0007 |
| 33 | SLD 11 | 0.01 | 0.49 | 22.37 | -0.2782 | 0.0005 | -0.0006 |
| 33 | SLD 12 | 0.01 | 0.49 | 22.37 | -0.2782 | 0.0005 | -0.0006 |
| 33 | SLD 13 | -0.17 | 10.71 | 42 | -0.9349 | -0.0591 | -0.0008 |
| 33 | SLD 14 | -0.17 | 10.71 | 42 | -0.9349 | -0.0591 | -0.0008 |
| 33 | SLD 15 | -0.11 | 6.52 | 35.35 | -0.6778 | -0.0429 | -0.0007 |
| 33 | SLD 16 | -0.11 | 6.52 | 35.35 | -0.6778 | -0.0429 | -0.0007 |
| 33 | SLV 1 | 0.07 | 8.17 | 21.6 | -0.6372 | 0.0454 | -0.0003 |
| 33 | SLV 2 | 0.07 | 8.17 | 21.6 | -0.6372 | 0.0454 | -0.0003 |
| 33 | SLV 3 | 0.2 | -1.82 | 5.49 | -0.0168 | 0.0839 | -0.0002 |
| 33 | SLV 4 | 0.2 | -1.82 | 5.49 | -0.0168 | 0.0839 | -0.0002 |
| 33 | SLV 5 | -0.21 | 22.5 | 52.74 | -1.5968 | -0.0561 | -0.0007 |
| 33 | SLV 6 | -0.21 | 22.5 | 52.74 | -1.5968 | -0.0561 | -0.0007 |
| 33 | SLV 7 | 0.21 | -10.8 | -0.93 | 0.4711 | 0.0722 | -0.0003 |
| 33 | SLV 8 | 0.21 | -10.8 | -0.93 | 0.4711 | 0.0722 | -0.0003 |
| 33 | SLV 9 | -0.33 | 24.79 | 63.34 | -1.799 | -0.1046 | -0.0009 |
| 33 | SLV 10 | -0.33 | 24.79 | 63.34 | -1.799 | -0.1046 | -0.0009 |
| 33 | SLV 11 | 0.1 | -8.51 | 9.66 | 0.2689 | 0.0237 | -0.0005 |
| 33 | SLV 12 | 0.1 | -8.51 | 9.66 | 0.2689 | 0.0237 | -0.0005 |
| 33 | SLV 13 | -0.32 | 15.82 | 56.91 | -1.3111 | -0.1162 | -0.001 |
| 33 | SLV 14 | -0.32 | 15.82 | 56.91 | -1.3111 | -0.1162 | -0.001 |
| 33 | SLV 15 | -0.19 | 5.83 | 40.81 | -0.6907 | -0.0777 | -0.0009 |
| 33 | SLV 16 | -0.19 | 5.83 | 40.81 | -0.6907 | -0.0777 | -0.0009 |
| 34 | SLU 1 | 0.01 | 0.83 | 29.2 | 0.0356 | 0.0018 | 0.0001 |

| Nodo | Cont. | Reazione a traslazione | | | Reazione a rotazione | | |
|---|---|---|---|---|---|---|---|
| Ind. | N.br. | x | y | z | x | y | z |
| 34 | SLU 2 | 0.01 | 0.14 | 29.66 | 0.0814 | 0.004 | 0.0001 |
| 34 | SLU 3 | 0.01 | 0.83 | 29.31 | 0.0369 | 0.0018 | 0.0001 |
| 34 | SLU 4 | 0.01 | 0.42 | 29.59 | 0.0644 | 0.0032 | 0.0001 |
| 34 | SLU 5 | 0.01 | 0.11 | 29.47 | 0.0832 | 0.0041 | 0.0001 |
| 34 | SLU 6 | 0.01 | 0.8 | 29.12 | 0.0387 | 0.0019 | 0.0001 |
| 34 | SLU 7 | 0.01 | 0.39 | 29.4 | 0.0662 | 0.0033 | 0.0001 |
| 34 | SLU 8 | 0.01 | 0.77 | 28.82 | 0.0391 | 0.002 | 0.0001 |
| 34 | SLU 9 | 0.01 | 0.36 | 29.1 | 0.0666 | 0.0033 | 0.0001 |
| 34 | SLU 10 | 0.02 | 0.47 | 33.07 | 0.079 | 0.0044 | 0.0001 |
| 34 | SLU 11 | 0.01 | 1.16 | 32.72 | 0.0345 | 0.0022 | 0.0001 |
| 34 | SLU 12 | 0.01 | 0.74 | 33 | 0.062 | 0.0036 | 0.0001 |
| 34 | SLU 13 | 0.01 | 0.44 | 32.88 | 0.0808 | 0.0045 | 0.0001 |
| 34 | SLU 14 | 0.01 | 1.13 | 32.53 | 0.0363 | 0.0023 | 0.0001 |
| 34 | SLU 15 | 0.01 | 0.71 | 32.81 | 0.0638 | 0.0037 | 0.0001 |
| 34 | SLU 16 | 0.01 | 1.1 | 32.23 | 0.0367 | 0.0023 | 0.0001 |
| 34 | SLU 17 | 0.01 | 0.69 | 32.51 | 0.0642 | 0.0037 | 0.0001 |
| 34 | SLU 18 | 0.01 | 1.3 | 34.08 | 0.0322 | 0.0023 | 0.0001 |
| 34 | SLU 19 | 0.01 | 0.88 | 34.35 | 0.0597 | 0.0037 | 0.0001 |
| 34 | SLU 20 | 0.01 | 1.27 | 33.89 | 0.034 | 0.0024 | 0.0001 |
| 34 | SLU 21 | 0.01 | 0.86 | 34.16 | 0.0615 | 0.0038 | 0.0001 |
| 34 | SLU 22 | 0.01 | 1.09 | 31.9 | 0.0341 | 0.0021 | 0.0001 |
| 34 | SLU 23 | 0.01 | 0.4 | 32.35 | 0.0799 | 0.0044 | 0.0001 |
| 34 | SLU 24 | 0.01 | 1.09 | 32.01 | 0.0354 | 0.0022 | 0.0001 |
| 34 | SLU 25 | 0.01 | 0.67 | 32.28 | 0.0629 | 0.0035 | 0.0001 |
| 34 | SLU 26 | 0.01 | 0.37 | 32.16 | 0.0816 | 0.0045 | 0.0001 |
| 34 | SLU 27 | 0.01 | 1.06 | 31.82 | 0.0371 | 0.0023 | 0.0001 |
| 34 | SLU 28 | 0.01 | 0.64 | 32.09 | 0.0646 | 0.0036 | 0.0001 |
| 34 | SLU 29 | 0.01 | 1.03 | 31.52 | 0.0376 | 0.0023 | 0.0001 |
| 34 | SLU 30 | 0.01 | 0.62 | 31.79 | 0.0651 | 0.0037 | 0.0001 |
| 34 | SLU 31 | 0.02 | 0.73 | 35.76 | 0.0775 | 0.0048 | 0.0001 |
| 34 | SLU 32 | 0.01 | 1.41 | 35.42 | 0.033 | 0.0025 | 0.0001 |
| 34 | SLU 33 | 0.01 | 1 | 35.69 | 0.0605 | 0.0039 | 0.0001 |
| 34 | SLU 34 | 0.02 | 0.7 | 35.57 | 0.0793 | 0.0049 | 0.0001 |
| 34 | SLU 35 | 0.01 | 1.39 | 35.23 | 0.0347 | 0.0026 | 0.0001 |
| 34 | SLU 36 | 0.01 | 0.97 | 35.5 | 0.0622 | 0.004 | 0.0001 |
| 34 | SLU 37 | 0.01 | 1.36 | 34.93 | 0.0352 | 0.0027 | 0.0001 |
| 34 | SLU 38 | 0.01 | 0.94 | 35.2 | 0.0627 | 0.004 | 0.0001 |
| 34 | SLU 39 | 0.01 | 1.56 | 36.77 | 0.0306 | 0.0027 | 0.0001 |
| 34 | SLU 40 | 0.01 | 1.14 | 37.04 | 0.0581 | 0.004 | 0.0001 |
| 34 | SLU 41 | 0.01 | 1.53 | 36.58 | 0.0324 | 0.0027 | 0.0001 |
| 34 | SLU 42 | 0.01 | 1.11 | 36.85 | 0.0599 | 0.0041 | 0.0001 |
| 34 | SLU 43 | 0.01 | 0.99 | 37.04 | 0.0468 | 0.0022 | 0.0001 |
| 34 | SLU 44 | 0.02 | 0.3 | 37.5 | 0.0927 | 0.0045 | 0.0001 |
| 34 | SLU 45 | 0.01 | 0.99 | 37.15 | 0.0481 | 0.0022 | 0.0001 |
| 34 | SLU 46 | 0.01 | 0.58 | 37.42 | 0.0756 | 0.0036 | 0.0001 |
| 34 | SLU 47 | 0.02 | 0.27 | 37.31 | 0.0944 | 0.0046 | 0.0001 |
| 34 | SLU 48 | 0.01 | 0.96 | 36.96 | 0.0499 | 0.0023 | 0.0001 |
| 34 | SLU 49 | 0.01 | 0.55 | 37.23 | 0.0774 | 0.0037 | 0.0001 |
| 34 | SLU 50 | 0.01 | 0.93 | 36.66 | 0.0504 | 0.0024 | 0.0001 |
| 34 | SLU 51 | 0.01 | 0.52 | 36.93 | 0.0779 | 0.0037 | 0.0001 |
| 34 | SLU 52 | 0.02 | 0.63 | 40.91 | 0.0903 | 0.0048 | 0.0001 |
| 34 | SLU 53 | 0.01 | 1.32 | 40.56 | 0.0457 | 0.0026 | 0.0001 |
| 34 | SLU 54 | 0.01 | 0.91 | 40.84 | 0.0732 | 0.004 | 0.0001 |
| 34 | SLU 55 | 0.02 | 0.6 | 40.72 | 0.092 | 0.0049 | 0.0001 |
| 34 | SLU 56 | 0.01 | 1.29 | 40.37 | 0.0475 | 0.0027 | 0.0001 |
| 34 | SLU 57 | 0.01 | 0.88 | 40.64 | 0.075 | 0.0041 | 0.0001 |
| 34 | SLU 58 | 0.01 | 1.26 | 40.07 | 0.048 | 0.0028 | 0.0001 |
| 34 | SLU 59 | 0.01 | 0.85 | 40.34 | 0.0755 | 0.0041 | 0.0001 |
| 34 | SLU 60 | 0.01 | 1.46 | 41.91 | 0.0434 | 0.0027 | 0.0001 |
| 34 | SLU 61 | 0.02 | 1.05 | 42.19 | 0.0709 | 0.0041 | 0.0001 |
| 34 | SLU 62 | 0.01 | 1.43 | 41.72 | 0.0452 | 0.0028 | 0.0001 |
| 34 | SLU 63 | 0.02 | 1.02 | 42 | 0.0727 | 0.0042 | 0.0001 |
| 34 | SLU 64 | 0.01 | 1.25 | 39.73 | 0.0453 | 0.0025 | 0.0001 |
| 34 | SLU 65 | 0.02 | 0.56 | 40.19 | 0.0911 | 0.0048 | 0.0001 |
| 34 | SLU 66 | 0.01 | 1.25 | 39.85 | 0.0466 | 0.0026 | 0.0001 |
| 34 | SLU 67 | 0.01 | 0.84 | 40.12 | 0.0741 | 0.004 | 0.0001 |
| 34 | SLU 68 | 0.02 | 0.53 | 40 | 0.0929 | 0.0049 | 0.0001 |
| 34 | SLU 69 | 0.01 | 1.22 | 39.65 | 0.0484 | 0.0027 | 0.0001 |
| 34 | SLU 70 | 0.01 | 0.81 | 39.93 | 0.0758 | 0.004 | 0.0001 |
| 34 | SLU 71 | 0.01 | 1.19 | 39.35 | 0.0488 | 0.0027 | 0.0001 |
| 34 | SLU 72 | 0.01 | 0.78 | 39.63 | 0.0763 | 0.0041 | 0.0001 |
| 34 | SLU 73 | 0.02 | 0.89 | 43.6 | 0.0887 | 0.0052 | 0.0001 |
| 34 | SLU 74 | 0.01 | 1.58 | 43.26 | 0.0442 | 0.003 | 0.0001 |
| 34 | SLU 75 | 0.02 | 1.16 | 43.53 | 0.0717 | 0.0043 | 0.0001 |
| 34 | SLU 76 | 0.02 | 0.86 | 43.41 | 0.0905 | 0.0053 | 0.0001 |
| 34 | SLU 77 | 0.01 | 1.55 | 43.06 | 0.046 | 0.0031 | 0.0001 |
| 34 | SLU 78 | 0.02 | 1.13 | 43.34 | 0.0734 | 0.0044 | 0.0001 |
| 34 | SLU 79 | 0.01 | 1.52 | 42.76 | 0.0464 | 0.0031 | 0.0001 |
| 34 | SLU 80 | 0.02 | 1.1 | 43.04 | 0.0739 | 0.0045 | 0.0001 |
| 34 | SLU 81 | 0.01 | 1.72 | 44.61 | 0.0419 | 0.0031 | 0.0001 |
| 34 | SLU 82 | 0.02 | 1.3 | 44.88 | 0.0694 | 0.0044 | 0.0001 |
| 34 | SLU 83 | 0.01 | 1.69 | 44.42 | 0.0436 | 0.0032 | 0.0001 |
| 34 | SLU 84 | 0.02 | 1.27 | 44.69 | 0.0711 | 0.0045 | 0.0001 |
| 34 | SLE RA 1 | 0.01 | 0.91 | 29.97 | 0.0352 | 0.0019 | 0.0001 |
| 34 | SLE RA 2 | 0.01 | 0.45 | 30.28 | 0.0657 | 0.0034 | 0.0001 |
| 34 | SLE RA 3 | 0.01 | 0.9 | 30.05 | 0.036 | 0.0019 | 0.0001 |
| 34 | SLE RA 4 | 0.01 | 0.63 | 30.23 | 0.0544 | 0.0028 | 0.0001 |
| 34 | SLE RA 5 | 0.01 | 0.43 | 30.15 | 0.0669 | 0.0035 | 0.0001 |

| Nodo | Cont. | Reazione a traslazione | | | Reazione a rotazione | | |
|---|---|---|---|---|---|---|---|
| Ind. | N.br. | x | y | z | x | y | z |
| 34 | SLE RA 6 | 0.01 | 0.89 | 29.92 | 0.0372 | 0.002 | 0.0001 |
| 34 | SLE RA 7 | 0.01 | 0.61 | 30.1 | 0.0555 | 0.0029 | 0.0001 |
| 34 | SLE RA 8 | 0.01 | 0.87 | 29.72 | 0.0375 | 0.002 | 0.0001 |
| 34 | SLE RA 9 | 0.01 | 0.59 | 29.9 | 0.0559 | 0.0029 | 0.0001 |
| 34 | SLE RA 10 | 0.01 | 0.66 | 32.55 | 0.0641 | 0.0036 | 0.0001 |
| 34 | SLE RA 11 | 0.01 | 1.12 | 32.32 | 0.0344 | 0.0022 | 0.0001 |
| 34 | SLE RA 12 | 0.01 | 0.85 | 32.5 | 0.0528 | 0.0031 | 0.0001 |
| 34 | SLE RA 13 | 0.01 | 0.64 | 32.42 | 0.0653 | 0.0037 | 0.0001 |
| 34 | SLE RA 14 | 0.01 | 1.1 | 32.19 | 0.0356 | 0.0022 | 0.0001 |
| 34 | SLE RA 15 | 0.01 | 0.83 | 32.38 | 0.054 | 0.0031 | 0.0001 |
| 34 | SLE RA 16 | 0.01 | 1.08 | 31.99 | 0.0359 | 0.0023 | 0.0001 |
| 34 | SLE RA 17 | 0.01 | 0.81 | 32.17 | 0.0543 | 0.0032 | 0.0001 |
| 34 | SLE RA 18 | 0.01 | 1.22 | 33.22 | 0.0329 | 0.0022 | 0.0001 |
| 34 | SLE RA 19 | 0.01 | 0.94 | 33.4 | 0.0512 | 0.0031 | 0.0001 |
| 34 | SLE RA 20 | 0.01 | 1.2 | 33.09 | 0.0341 | 0.0023 | 0.0001 |
| 34 | SLE RA 21 | 0.01 | 0.92 | 33.28 | 0.0524 | 0.0032 | 0.0001 |
| 34 | SLE FR 1 | 0.01 | 0.91 | 29.97 | 0.0352 | 0.0019 | 0.0001 |
| 34 | SLE FR 2 | 0.01 | 0.81 | 30.03 | 0.0413 | 0.0022 | 0.0001 |
| 34 | SLE FR 3 | 0.01 | 0.9 | 29.92 | 0.0356 | 0.0019 | 0.0001 |
| 34 | SLE FR 4 | 0.01 | 0.91 | 31.01 | 0.0406 | 0.0023 | 0.0001 |
| 34 | SLE FR 5 | 0.01 | 0.99 | 30.9 | 0.035 | 0.002 | 0.0001 |
| 34 | SLE FR 6 | 0.01 | 1.06 | 31.6 | 0.034 | 0.0021 | 0.0001 |
| 34 | SLE QP 1 | 0.01 | 0.91 | 29.97 | 0.0352 | 0.0019 | 0.0001 |
| 34 | SLE QP 2 | 0.01 | 1 | 30.95 | 0.0345 | 0.002 | 0.0001 |
| 34 | SLD 1 | 0.11 | 1.36 | 29.89 | 0.0058 | 0.0427 | 0.0002 |
| 34 | SLD 2 | 0.11 | 1.36 | 29.89 | 0.0058 | 0.0427 | 0.0002 |
| 34 | SLD 3 | 0.06 | -1.65 | 27.16 | 0.1736 | 0.0288 | 0.0002 |
| 34 | SLD 4 | 0.06 | -1.65 | 27.16 | 0.1736 | 0.0288 | 0.0002 |
| 34 | SLD 5 | 0.1 | 5.67 | 34.77 | -0.2285 | 0.0353 | 0.0003 |
| 34 | SLD 6 | 0.1 | 5.67 | 34.77 | -0.2285 | 0.0353 | 0.0003 |
| 34 | SLD 7 | -0.04 | -4.36 | 25.68 | 0.3306 | -0.0111 | 0 |
| 34 | SLD 8 | -0.04 | -4.36 | 25.68 | 0.3306 | -0.0111 | 0 |
| 34 | SLD 9 | 0.06 | 6.36 | 36.22 | -0.2617 | 0.0151 | 0.0002 |
| 34 | SLD 10 | 0.06 | 6.36 | 36.22 | -0.2617 | 0.0151 | 0.0002 |
| 34 | SLD 11 | -0.08 | -3.68 | 27.13 | 0.2975 | -0.0314 | -0.0001 |
| 34 | SLD 12 | -0.08 | -3.68 | 27.13 | 0.2975 | -0.0314 | -0.0001 |
| 34 | SLD 13 | -0.05 | 3.65 | 34.73 | -0.1046 | -0.0248 | 0 |
| 34 | SLD 14 | -0.05 | 3.65 | 34.73 | -0.1046 | -0.0248 | 0 |
| 34 | SLD 15 | -0.09 | 0.64 | 32 | 0.0632 | -0.0388 | -0.0001 |
| 34 | SLD 16 | -0.09 | 0.64 | 32 | 0.0632 | -0.0388 | -0.0001 |
| 34 | SLV 1 | 0.24 | 1.84 | 28.61 | -0.0327 | 0.0968 | 0.0005 |
| 34 | SLV 2 | 0.24 | 1.84 | 28.61 | -0.0327 | 0.0968 | 0.0005 |
| 34 | SLV 3 | 0.14 | -5.26 | 21.84 | 0.3635 | 0.0633 | 0.0003 |
| 34 | SLV 4 | 0.14 | -5.26 | 21.84 | 0.3635 | 0.0633 | 0.0003 |
| 34 | SLV 5 | 0.23 | 12.03 | 40.51 | -0.5865 | 0.0812 | 0.0005 |
| 34 | SLV 6 | 0.23 | 12.03 | 40.51 | -0.5865 | 0.0812 | 0.0005 |
| 34 | SLV 7 | -0.11 | -11.66 | 17.95 | 0.7341 | -0.0304 | -0.0002 |
| 34 | SLV 8 | -0.11 | -11.66 | 17.95 | 0.7341 | -0.0304 | -0.0002 |
| 34 | SLV 9 | 0.12 | 13.65 | 43.94 | -0.6651 | 0.0343 | 0.0003 |
| 34 | SLV 10 | 0.12 | 13.65 | 43.94 | -0.6651 | 0.0343 | 0.0003 |
| 34 | SLV 11 | -0.21 | -10.03 | 21.38 | 0.6555 | -0.0772 | -0.0004 |
| 34 | SLV 12 | -0.21 | -10.03 | 21.38 | 0.6555 | -0.0772 | -0.0004 |
| 34 | SLV 13 | -0.12 | 7.26 | 40.05 | -0.2945 | -0.0593 | -0.0001 |
| 34 | SLV 14 | -0.12 | 7.26 | 40.05 | -0.2945 | -0.0593 | -0.0001 |
| 34 | SLV 15 | -0.22 | 0.15 | 33.28 | 0.1017 | -0.0928 | -0.0003 |
| 34 | SLV 16 | -0.22 | 0.15 | 33.28 | 0.1017 | -0.0928 | -0.0003 |
| 35 | SLU 1 | 0.01 | 8.76 | 37.67 | -0.3032 | -0.0016 | -0.0001 |
| 35 | SLU 2 | 0.02 | 8.62 | 37.89 | -0.2952 | -0.0006 | -0.0001 |
| 35 | SLU 3 | 0.01 | 8.79 | 38.08 | -0.3036 | -0.0016 | -0.0001 |
| 35 | SLU 4 | 0.02 | 8.71 | 38.22 | -0.2988 | -0.001 | -0.0001 |
| 35 | SLU 5 | 0.02 | 8.59 | 38.16 | -0.2932 | -0.0006 | -0.0001 |
| 35 | SLU 6 | 0.01 | 8.76 | 38.35 | -0.3016 | -0.0016 | -0.0001 |
| 35 | SLU 7 | 0.02 | 8.67 | 38.48 | -0.2968 | -0.001 | -0.0001 |
| 35 | SLU 8 | 0.01 | 8.7 | 38.2 | -0.2994 | -0.0016 | -0.0001 |
| 35 | SLU 9 | 0.02 | 8.61 | 38.33 | -0.2945 | -0.001 | -0.0001 |
| 35 | SLU 10 | 0.02 | 10.51 | 43.64 | -0.3636 | -0.0011 | -0.0001 |
| 35 | SLU 11 | 0.02 | 10.68 | 43.83 | -0.372 | -0.0021 | -0.0002 |
| 35 | SLU 12 | 0.02 | 10.6 | 43.97 | -0.3672 | -0.0015 | -0.0002 |
| 35 | SLU 13 | 0.02 | 10.48 | 43.91 | -0.3617 | -0.0011 | -0.0001 |
| 35 | SLU 14 | 0.02 | 10.65 | 44.1 | -0.3701 | -0.0021 | -0.0002 |
| 35 | SLU 15 | 0.02 | 10.56 | 44.23 | -0.3652 | -0.0015 | -0.0002 |
| 35 | SLU 16 | 0.01 | 10.58 | 43.95 | -0.3678 | -0.0021 | -0.0002 |
| 35 | SLU 17 | 0.02 | 10.5 | 44.08 | -0.3629 | -0.0015 | -0.0002 |
| 35 | SLU 18 | 0.02 | 11.46 | 45.88 | -0.401 | -0.0023 | -0.0002 |
| 35 | SLU 19 | 0.02 | 11.38 | 46.02 | -0.3962 | -0.0017 | -0.0002 |
| 35 | SLU 20 | 0.02 | 11.43 | 46.15 | -0.399 | -0.0023 | -0.0002 |
| 35 | SLU 21 | 0.02 | 11.34 | 46.28 | -0.3942 | -0.0017 | -0.0002 |
| 35 | SLU 22 | 0.02 | 9.66 | 40.61 | -0.3336 | -0.002 | -0.0001 |
| 35 | SLU 23 | 0.02 | 9.51 | 40.83 | -0.3256 | -0.0009 | -0.0001 |
| 35 | SLU 24 | 0.02 | 9.69 | 41.02 | -0.334 | -0.002 | -0.0001 |
| 35 | SLU 25 | 0.02 | 9.6 | 41.15 | -0.3291 | -0.0014 | -0.0001 |
| 35 | SLU 26 | 0.02 | 9.48 | 41.09 | -0.3236 | -0.0009 | -0.0001 |
| 35 | SLU 27 | 0.01 | 9.65 | 41.28 | -0.332 | -0.002 | -0.0001 |
| 35 | SLU 28 | 0.02 | 9.57 | 41.42 | -0.3272 | -0.0014 | -0.0001 |
| 35 | SLU 29 | 0.01 | 9.59 | 41.13 | -0.3297 | -0.002 | -0.0001 |
| 35 | SLU 30 | 0.02 | 9.5 | 41.27 | -0.3249 | -0.0013 | -0.0001 |
| 35 | SLU 31 | 0.02 | 11.4 | 46.58 | -0.394 | -0.0014 | -0.0002 |
| 35 | SLU 32 | 0.02 | 11.57 | 46.77 | -0.4024 | -0.0025 | -0.0002 |

| Nodo | Cont. | Reazione a traslazione | | | Reazione a rotazione | | |
|---|---|---|---|---|---|---|---|
| Ind. | N.br. | x | y | z | x | y | z |
| 35 | SLU 33 | 0.02 | 11.49 | 46.9 | -0.3975 | -0.0019 | -0.0002 |
| 35 | SLU 34 | 0.02 | 11.37 | 46.84 | -0.392 | -0.0014 | -0.0002 |
| 35 | SLU 35 | 0.02 | 11.54 | 47.03 | -0.4004 | -0.0025 | -0.0002 |
| 35 | SLU 36 | 0.02 | 11.46 | 47.17 | -0.3956 | -0.0019 | -0.0002 |
| 35 | SLU 37 | 0.02 | 11.48 | 46.88 | -0.3981 | -0.0025 | -0.0002 |
| 35 | SLU 38 | 0.02 | 11.39 | 47.02 | -0.3933 | -0.0018 | -0.0002 |
| 35 | SLU 39 | 0.02 | 12.35 | 48.82 | -0.4314 | -0.0027 | -0.0002 |
| 35 | SLU 40 | 0.02 | 12.27 | 48.95 | -0.4265 | -0.0021 | -0.0002 |
| 35 | SLU 41 | 0.02 | 12.32 | 49.08 | -0.4294 | -0.0027 | -0.0002 |
| 35 | SLU 42 | 0.02 | 12.23 | 49.22 | -0.4246 | -0.0021 | -0.0002 |
| 35 | SLU 43 | 0.02 | 11.09 | 47.96 | -0.3838 | -0.002 | -0.0002 |
| 35 | SLU 44 | 0.02 | 10.95 | 48.19 | -0.3757 | -0.0009 | -0.0001 |
| 35 | SLU 45 | 0.02 | 11.12 | 48.38 | -0.3841 | -0.002 | -0.0002 |
| 35 | SLU 46 | 0.02 | 11.03 | 48.51 | -0.3793 | -0.0014 | -0.0002 |
| 35 | SLU 47 | 0.02 | 10.91 | 48.45 | -0.3738 | -0.0009 | -0.0001 |
| 35 | SLU 48 | 0.02 | 11.08 | 48.64 | -0.3822 | -0.002 | -0.0002 |
| 35 | SLU 49 | 0.02 | 11 | 48.78 | -0.3774 | -0.0014 | -0.0002 |
| 35 | SLU 50 | 0.02 | 11.02 | 48.49 | -0.3799 | -0.002 | -0.0002 |
| 35 | SLU 51 | 0.02 | 10.93 | 48.62 | -0.3751 | -0.0013 | -0.0002 |
| 35 | SLU 52 | 0.02 | 12.83 | 53.94 | -0.4442 | -0.0014 | -0.0002 |
| 35 | SLU 53 | 0.02 | 13.01 | 54.13 | -0.4526 | -0.0025 | -0.0002 |
| 35 | SLU 54 | 0.02 | 12.92 | 54.26 | -0.4477 | -0.0019 | -0.0002 |
| 35 | SLU 55 | 0.02 | 12.8 | 54.2 | -0.4422 | -0.0014 | -0.0002 |
| 35 | SLU 56 | 0.02 | 12.97 | 54.39 | -0.4506 | -0.0025 | -0.0002 |
| 35 | SLU 57 | 0.02 | 12.89 | 54.52 | -0.4458 | -0.0019 | -0.0002 |
| 35 | SLU 58 | 0.02 | 12.91 | 54.24 | -0.4483 | -0.0025 | -0.0002 |
| 35 | SLU 59 | 0.02 | 12.82 | 54.37 | -0.4435 | -0.0019 | -0.0002 |
| 35 | SLU 60 | 0.02 | 13.79 | 56.18 | -0.4815 | -0.0027 | -0.0002 |
| 35 | SLU 61 | 0.02 | 13.7 | 56.31 | -0.4767 | -0.0021 | -0.0002 |
| 35 | SLU 62 | 0.02 | 13.75 | 56.44 | -0.4796 | -0.0027 | -0.0002 |
| 35 | SLU 63 | 0.02 | 13.67 | 56.57 | -0.4748 | -0.0021 | -0.0002 |
| 35 | SLU 64 | 0.02 | 11.98 | 50.9 | -0.4142 | -0.0023 | -0.0002 |
| 35 | SLU 65 | 0.02 | 11.84 | 51.12 | -0.4061 | -0.0013 | -0.0002 |
| 35 | SLU 66 | 0.02 | 12.01 | 51.31 | -0.4145 | -0.0023 | -0.0002 |
| 35 | SLU 67 | 0.02 | 11.92 | 51.45 | -0.4097 | -0.0017 | -0.0002 |
| 35 | SLU 68 | 0.02 | 11.8 | 51.39 | -0.4042 | -0.0013 | -0.0002 |
| 35 | SLU 69 | 0.02 | 11.97 | 51.58 | -0.4126 | -0.0023 | -0.0002 |
| 35 | SLU 70 | 0.02 | 11.89 | 51.71 | -0.4077 | -0.0017 | -0.0002 |
| 35 | SLU 71 | 0.02 | 11.91 | 51.43 | -0.4103 | -0.0023 | -0.0002 |
| 35 | SLU 72 | 0.02 | 11.83 | 51.56 | -0.4055 | -0.0017 | -0.0002 |
| 35 | SLU 73 | 0.02 | 13.73 | 56.87 | -0.4745 | -0.0018 | -0.0002 |
| 35 | SLU 74 | 0.02 | 13.9 | 57.06 | -0.4829 | -0.0028 | -0.0002 |
| 35 | SLU 75 | 0.02 | 13.81 | 57.2 | -0.4781 | -0.0022 | -0.0002 |
| 35 | SLU 76 | 0.02 | 13.69 | 57.14 | -0.4726 | -0.0018 | -0.0002 |
| 35 | SLU 77 | 0.02 | 13.86 | 57.33 | -0.481 | -0.0028 | -0.0002 |
| 35 | SLU 78 | 0.02 | 13.78 | 57.46 | -0.4762 | -0.0022 | -0.0002 |
| 35 | SLU 79 | 0.02 | 13.8 | 57.18 | -0.4787 | -0.0028 | -0.0002 |
| 35 | SLU 80 | 0.02 | 13.71 | 57.31 | -0.4739 | -0.0022 | -0.0002 |
| 35 | SLU 81 | 0.02 | 14.68 | 59.11 | -0.5119 | -0.003 | -0.0002 |
| 35 | SLU 82 | 0.02 | 14.59 | 59.25 | -0.5071 | -0.0024 | -0.0002 |
| 35 | SLU 83 | 0.02 | 14.64 | 59.38 | -0.51 | -0.003 | -0.0002 |
| 35 | SLU 84 | 0.02 | 14.56 | 59.51 | -0.5051 | -0.0024 | -0.0002 |
| 35 | SLE RA 1 | 0.01 | 9.02 | 38.51 | -0.3119 | -0.0017 | -0.0001 |
| 35 | SLE RA 2 | 0.02 | 8.92 | 38.66 | -0.3066 | -0.001 | -0.0001 |
| 35 | SLE RA 3 | 0.01 | 9.04 | 38.78 | -0.3122 | -0.0017 | -0.0001 |
| 35 | SLE RA 4 | 0.02 | 8.98 | 38.87 | -0.3089 | -0.0013 | -0.0001 |
| 35 | SLE RA 5 | 0.02 | 8.9 | 38.83 | -0.3053 | -0.001 | -0.0001 |
| 35 | SLE RA 6 | 0.01 | 9.02 | 38.96 | -0.3109 | -0.0017 | -0.0001 |
| 35 | SLE RA 7 | 0.02 | 8.96 | 39.05 | -0.3076 | -0.0013 | -0.0001 |
| 35 | SLE RA 8 | 0.01 | 8.97 | 38.86 | -0.3093 | -0.0017 | -0.0001 |
| 35 | SLE RA 9 | 0.02 | 8.92 | 38.95 | -0.3061 | -0.0013 | -0.0001 |
| 35 | SLE RA 10 | 0.02 | 10.18 | 42.49 | -0.3522 | -0.0014 | -0.0001 |
| 35 | SLE RA 11 | 0.02 | 10.3 | 42.62 | -0.3578 | -0.0021 | -0.0002 |
| 35 | SLE RA 12 | 0.02 | 10.24 | 42.71 | -0.3545 | -0.0016 | -0.0001 |
| 35 | SLE RA 13 | 0.02 | 10.16 | 42.67 | -0.3509 | -0.0014 | -0.0001 |
| 35 | SLE RA 14 | 0.02 | 10.28 | 42.79 | -0.3565 | -0.0021 | -0.0002 |
| 35 | SLE RA 15 | 0.02 | 10.22 | 42.88 | -0.3532 | -0.0016 | -0.0001 |
| 35 | SLE RA 16 | 0.01 | 10.23 | 42.69 | -0.3549 | -0.002 | -0.0002 |
| 35 | SLE RA 17 | 0.02 | 10.18 | 42.78 | -0.3517 | -0.0016 | -0.0001 |
| 35 | SLE RA 18 | 0.02 | 10.82 | 43.98 | -0.3771 | -0.0022 | -0.0002 |
| 35 | SLE RA 19 | 0.02 | 10.76 | 44.07 | -0.3739 | -0.0018 | -0.0002 |
| 35 | SLE RA 20 | 0.02 | 10.8 | 44.16 | -0.3758 | -0.0022 | -0.0002 |
| 35 | SLE RA 21 | 0.02 | 10.74 | 44.25 | -0.3726 | -0.0018 | -0.0002 |
| 35 | SLE FR 1 | 0.01 | 9.02 | 38.51 | -0.3119 | -0.0017 | -0.0001 |
| 35 | SLE FR 2 | 0.01 | 9 | 38.54 | -0.3108 | -0.0016 | -0.0001 |
| 35 | SLE FR 3 | 0.01 | 9.01 | 38.58 | -0.3114 | -0.0017 | -0.0001 |
| 35 | SLE FR 4 | 0.02 | 9.54 | 40.18 | -0.3304 | -0.0017 | -0.0001 |
| 35 | SLE FR 5 | 0.01 | 9.55 | 40.22 | -0.331 | -0.0019 | -0.0001 |
| 35 | SLE FR 6 | 0.01 | 9.92 | 41.25 | -0.3445 | -0.002 | -0.0001 |
| 35 | SLE QP 1 | 0.01 | 9.02 | 38.51 | -0.3119 | -0.0017 | -0.0001 |
| 35 | SLE QP 2 | 0.01 | 9.56 | 40.15 | -0.3315 | -0.0019 | -0.0001 |
| 35 | SLD 1 | -0.05 | 10.06 | 36.99 | -0.3646 | -0.0249 | -0.0003 |
| 35 | SLD 2 | -0.05 | 10.06 | 36.99 | -0.3646 | -0.0249 | -0.0003 |
| 35 | SLD 3 | -0.02 | 6.07 | 34.07 | -0.1872 | -0.0164 | -0.0003 |
| 35 | SLD 4 | -0.02 | 6.07 | 34.07 | -0.1872 | -0.0164 | -0.0003 |
| 35 | SLD 5 | -0.04 | 15.76 | 43.63 | -0.6104 | -0.0217 | -0.0003 |
| 35 | SLD 6 | -0.04 | 15.76 | 43.63 | -0.6104 | -0.0217 | -0.0003 |
| 35 | SLD 7 | 0.04 | 2.46 | 33.9 | -0.0192 | 0.0067 | -0.0001 |

| Nodo | Cont. | Reazione a traslazione | | | Reazione a rotazione | | |
|---|---|---|---|---|---|---|---|
| Ind. | N.br. | x | y | z | x | y | z |
| 35 | SLD 8 | 0.04 | 2.46 | 33.9 | -0.0192 | 0.0067 | -0.0001 |
| 35 | SLD 9 | -0.01 | 16.65 | 46.41 | -0.6437 | -0.0104 | -0.0002 |
| 35 | SLD 10 | -0.01 | 16.65 | 46.41 | -0.6437 | -0.0104 | -0.0002 |
| 35 | SLD 11 | 0.07 | 3.36 | 36.67 | -0.0526 | 0.018 | 0 |
| 35 | SLD 12 | 0.07 | 3.36 | 36.67 | -0.0526 | 0.018 | 0 |
| 35 | SLD 13 | 0.05 | 13.05 | 46.23 | -0.4757 | 0.0127 | 0 |
| 35 | SLD 14 | 0.05 | 13.05 | 46.23 | -0.4757 | 0.0127 | 0 |
| 35 | SLD 15 | 0.08 | 9.06 | 43.31 | -0.2984 | 0.0212 | 0.0001 |
| 35 | SLD 16 | 0.08 | 9.06 | 43.31 | -0.2984 | 0.0212 | 0.0001 |
| 35 | SLV 1 | -0.13 | 10.73 | 32.85 | -0.4083 | -0.0559 | -0.0006 |
| 35 | SLV 2 | -0.13 | 10.73 | 32.85 | -0.4083 | -0.0559 | -0.0006 |
| 35 | SLV 3 | -0.07 | 1.52 | 26.03 | 0.0012 | -0.0359 | -0.0005 |
| 35 | SLV 4 | -0.07 | 1.52 | 26.03 | 0.0012 | -0.0359 | -0.0005 |
| 35 | SLV 5 | -0.12 | 23.87 | 48.29 | -0.9757 | -0.0483 | -0.0005 |
| 35 | SLV 6 | -0.12 | 23.87 | 48.29 | -0.9757 | -0.0483 | -0.0005 |
| 35 | SLV 7 | 0.08 | -6.82 | 25.58 | 0.3895 | 0.0182 | 0 |
| 35 | SLV 8 | 0.08 | -6.82 | 25.58 | 0.3895 | 0.0182 | 0 |
| 35 | SLV 9 | -0.05 | 25.93 | 54.72 | -1.0524 | -0.0219 | -0.0003 |
| 35 | SLV 10 | -0.05 | 25.93 | 54.72 | -1.0524 | -0.0219 | -0.0003 |
| 35 | SLV 11 | 0.15 | -4.76 | 32.01 | 0.3127 | 0.0446 | 0.0002 |
| 35 | SLV 12 | 0.15 | -4.76 | 32.01 | 0.3127 | 0.0446 | 0.0002 |
| 35 | SLV 13 | 0.1 | 17.6 | 54.27 | -0.6642 | 0.0322 | 0.0002 |
| 35 | SLV 14 | 0.1 | 17.6 | 54.27 | -0.6642 | 0.0322 | 0.0002 |
| 35 | SLV 15 | 0.16 | 8.39 | 47.46 | -0.2546 | 0.0521 | 0.0003 |
| 35 | SLV 16 | 0.16 | 8.39 | 47.46 | -0.2546 | 0.0521 | 0.0003 |
| 36 | SLU 1 | -0.02 | 9.38 | 38.37 | -0.3199 | -0.0025 | 0.0001 |
| 36 | SLU 2 | -0.03 | 9 | 38.13 | -0.3022 | -0.0037 | 0.0001 |
| 36 | SLU 3 | -0.02 | 10.17 | 39.96 | -0.3518 | -0.0028 | 0.0001 |
| 36 | SLU 4 | -0.03 | 9.94 | 39.82 | -0.3411 | -0.0035 | 0.0001 |
| 36 | SLU 5 | -0.03 | 9.82 | 39.75 | -0.3356 | -0.0039 | 0.0001 |
| 36 | SLU 6 | -0.03 | 10.99 | 41.58 | -0.3852 | -0.0031 | 0.0001 |
| 36 | SLU 7 | -0.03 | 10.76 | 41.43 | -0.3746 | -0.0038 | 0.0001 |
| 36 | SLU 8 | -0.03 | 11.01 | 41.59 | -0.3868 | -0.0031 | 0.0001 |
| 36 | SLU 9 | -0.03 | 10.79 | 41.45 | -0.3761 | -0.0038 | 0.0001 |
| 36 | SLU 10 | -0.03 | 10.7 | 44.12 | -0.3606 | -0.0035 | 0.0001 |
| 36 | SLU 11 | -0.03 | 11.87 | 45.95 | -0.4101 | -0.0027 | 0.0001 |
| 36 | SLU 12 | -0.03 | 11.64 | 45.81 | -0.3995 | -0.0034 | 0.0001 |
| 36 | SLU 13 | -0.03 | 11.52 | 45.73 | -0.394 | -0.0038 | 0.0001 |
| 36 | SLU 14 | -0.03 | 12.68 | 47.56 | -0.4435 | -0.003 | 0.0001 |
| 36 | SLU 15 | -0.03 | 12.46 | 47.42 | -0.4329 | -0.0036 | 0.0001 |
| 36 | SLU 16 | -0.03 | 12.71 | 47.58 | -0.4451 | -0.003 | 0.0001 |
| 36 | SLU 17 | -0.03 | 12.49 | 47.44 | -0.4345 | -0.0036 | 0.0001 |
| 36 | SLU 18 | -0.03 | 11.81 | 46.92 | -0.4033 | -0.0024 | 0.0001 |
| 36 | SLU 19 | -0.03 | 11.58 | 46.78 | -0.3926 | -0.003 | 0.0001 |
| 36 | SLU 20 | -0.03 | 12.63 | 48.54 | -0.4367 | -0.0026 | 0.0001 |
| 36 | SLU 21 | -0.03 | 12.4 | 48.39 | -0.426 | -0.0033 | 0.0001 |
| 36 | SLU 22 | -0.03 | 10.72 | 42.03 | -0.3681 | -0.0028 | 0.0001 |
| 36 | SLU 23 | -0.03 | 10.34 | 41.79 | -0.3504 | -0.0039 | 0.0001 |
| 36 | SLU 24 | -0.03 | 11.5 | 43.62 | -0.3999 | -0.003 | 0.0001 |
| 36 | SLU 25 | -0.03 | 11.28 | 43.48 | -0.3893 | -0.0037 | 0.0001 |
| 36 | SLU 26 | -0.03 | 11.16 | 43.4 | -0.3838 | -0.0042 | 0.0001 |
| 36 | SLU 27 | -0.03 | 12.32 | 45.23 | -0.4333 | -0.0033 | 0.0001 |
| 36 | SLU 28 | -0.03 | 12.1 | 45.09 | -0.4227 | -0.004 | 0.0001 |
| 36 | SLU 29 | -0.03 | 12.35 | 45.25 | -0.4349 | -0.0033 | 0.0001 |
| 36 | SLU 30 | -0.03 | 12.13 | 45.11 | -0.4243 | -0.004 | 0.0001 |
| 36 | SLU 31 | -0.03 | 12.04 | 47.78 | -0.4087 | -0.0038 | 0.0001 |
| 36 | SLU 32 | -0.03 | 13.2 | 49.61 | -0.4582 | -0.0029 | 0.0001 |
| 36 | SLU 33 | -0.03 | 12.98 | 49.47 | -0.4476 | -0.0036 | 0.0001 |
| 36 | SLU 34 | -0.03 | 12.86 | 49.39 | -0.4421 | -0.004 | 0.0001 |
| 36 | SLU 35 | -0.03 | 14.02 | 51.22 | -0.4916 | -0.0032 | 0.0001 |
| 36 | SLU 36 | -0.03 | 13.79 | 51.08 | -0.481 | -0.0039 | 0.0001 |
| 36 | SLU 37 | -0.03 | 14.05 | 51.24 | -0.4932 | -0.0032 | 0.0001 |
| 36 | SLU 38 | -0.03 | 13.82 | 51.1 | -0.4826 | -0.0039 | 0.0001 |
| 36 | SLU 39 | -0.03 | 13.14 | 50.58 | -0.4514 | -0.0026 | 0.0001 |
| 36 | SLU 40 | -0.03 | 12.92 | 50.44 | -0.4408 | -0.0033 | 0.0001 |
| 36 | SLU 41 | -0.03 | 13.96 | 52.19 | -0.4848 | -0.0029 | 0.0001 |
| 36 | SLU 42 | -0.03 | 13.74 | 52.05 | -0.4742 | -0.0035 | 0.0001 |
| 36 | SLU 43 | -0.03 | 11.74 | 48.63 | -0.3994 | -0.0032 | 0.0001 |
| 36 | SLU 44 | -0.03 | 11.36 | 48.39 | -0.3817 | -0.0043 | 0.0001 |
| 36 | SLU 45 | -0.03 | 12.52 | 50.22 | -0.4312 | -0.0035 | 0.0001 |
| 36 | SLU 46 | -0.03 | 12.3 | 50.08 | -0.4206 | -0.0042 | 0.0001 |
| 36 | SLU 47 | -0.03 | 12.18 | 50 | -0.4151 | -0.0046 | 0.0001 |
| 36 | SLU 48 | -0.03 | 13.34 | 51.83 | -0.4647 | -0.0038 | 0.0001 |
| 36 | SLU 49 | -0.03 | 13.11 | 51.69 | -0.454 | -0.0044 | 0.0001 |
| 36 | SLU 50 | -0.03 | 13.37 | 51.85 | -0.4662 | -0.0038 | 0.0001 |
| 36 | SLU 51 | -0.03 | 13.14 | 51.71 | -0.4556 | -0.0044 | 0.0001 |
| 36 | SLU 52 | -0.04 | 13.06 | 54.38 | -0.44 | -0.0042 | 0.0001 |
| 36 | SLU 53 | -0.03 | 14.22 | 56.21 | -0.4896 | -0.0034 | 0.0001 |
| 36 | SLU 54 | -0.04 | 14 | 56.06 | -0.4789 | -0.004 | 0.0001 |
| 36 | SLU 55 | -0.04 | 13.88 | 55.99 | -0.4734 | -0.0045 | 0.0001 |
| 36 | SLU 56 | -0.03 | 15.04 | 57.82 | -0.523 | -0.0036 | 0.0001 |
| 36 | SLU 57 | -0.04 | 14.81 | 57.68 | -0.5124 | -0.0043 | 0.0001 |
| 36 | SLU 58 | -0.03 | 15.07 | 57.84 | -0.5246 | -0.0036 | 0.0001 |
| 36 | SLU 59 | -0.04 | 14.84 | 57.7 | -0.5139 | -0.0043 | 0.0001 |
| 36 | SLU 60 | -0.03 | 14.16 | 57.18 | -0.4827 | -0.003 | 0.0002 |
| 36 | SLU 61 | -0.04 | 13.94 | 57.04 | -0.4721 | -0.0037 | 0.0001 |
| 36 | SLU 62 | -0.03 | 14.98 | 58.79 | -0.5161 | -0.0033 | 0.0002 |
| 36 | SLU 63 | -0.04 | 14.75 | 58.65 | -0.5055 | -0.004 | 0.0001 |

| Nodo | Cont. | Reazione a traslazione | | | Reazione a rotazione | | |
|---|---|---|---|---|---|---|---|
| Ind. | N.br. | x | y | z | x | y | z |
| 36 | SLU 64 | -0.03 | 13.07 | 52.29 | -0.4475 | -0.0034 | 0.0001 |
| 36 | SLU 65 | -0.04 | 12.7 | 52.05 | -0.4298 | -0.0046 | 0.0001 |
| 36 | SLU 66 | -0.03 | 13.86 | 53.88 | -0.4794 | -0.0037 | 0.0001 |
| 36 | SLU 67 | -0.04 | 13.63 | 53.74 | -0.4687 | -0.0044 | 0.0001 |
| 36 | SLU 68 | -0.04 | 13.51 | 53.66 | -0.4633 | -0.0049 | 0.0001 |
| 36 | SLU 69 | -0.04 | 14.68 | 55.49 | -0.5128 | -0.004 | 0.0001 |
| 36 | SLU 70 | -0.04 | 14.45 | 55.35 | -0.5022 | -0.0047 | 0.0001 |
| 36 | SLU 71 | -0.03 | 14.71 | 55.51 | -0.5144 | -0.004 | 0.0001 |
| 36 | SLU 72 | -0.04 | 14.48 | 55.37 | -0.5038 | -0.0047 | 0.0001 |
| 36 | SLU 73 | -0.04 | 14.39 | 58.04 | -0.4882 | -0.0044 | 0.0001 |
| 36 | SLU 74 | -0.04 | 15.56 | 59.87 | -0.5377 | -0.0036 | 0.0002 |
| 36 | SLU 75 | -0.04 | 15.33 | 59.72 | -0.5271 | -0.0043 | 0.0001 |
| 36 | SLU 76 | -0.04 | 15.21 | 59.65 | -0.5216 | -0.0047 | 0.0001 |
| 36 | SLU 77 | -0.04 | 16.38 | 61.48 | -0.5711 | -0.0039 | 0.0002 |
| 36 | SLU 78 | -0.04 | 16.15 | 61.34 | -0.5605 | -0.0046 | 0.0002 |
| 36 | SLU 79 | -0.04 | 16.41 | 61.5 | -0.5727 | -0.0039 | 0.0002 |
| 36 | SLU 80 | -0.04 | 16.18 | 61.35 | -0.5621 | -0.0045 | 0.0001 |
| 36 | SLU 81 | -0.04 | 15.5 | 60.84 | -0.5309 | -0.0033 | 0.0002 |
| 36 | SLU 82 | -0.04 | 15.27 | 60.7 | -0.5202 | -0.0039 | 0.0002 |
| 36 | SLU 83 | -0.04 | 16.32 | 62.45 | -0.5643 | -0.0035 | 0.0002 |
| 36 | SLU 84 | -0.04 | 16.09 | 62.31 | -0.5537 | -0.0042 | 0.0002 |
| 36 | SLE RA 1 | -0.02 | 9.76 | 39.42 | -0.3337 | -0.0026 | 0.0001 |
| 36 | SLE RA 2 | -0.03 | 9.51 | 39.26 | -0.3219 | -0.0034 | 0.0001 |
| 36 | SLE RA 3 | -0.03 | 10.29 | 40.48 | -0.3549 | -0.0028 | 0.0001 |
| 36 | SLE RA 4 | -0.03 | 10.14 | 40.38 | -0.3478 | -0.0032 | 0.0001 |
| 36 | SLE RA 5 | -0.03 | 10.06 | 40.33 | -0.3442 | -0.0035 | 0.0001 |
| 36 | SLE RA 6 | -0.03 | 10.83 | 41.55 | -0.3772 | -0.003 | 0.0001 |
| 36 | SLE RA 7 | -0.03 | 10.68 | 41.46 | -0.3701 | -0.0034 | 0.0001 |
| 36 | SLE RA 8 | -0.03 | 10.85 | 41.57 | -0.3782 | -0.003 | 0.0001 |
| 36 | SLE RA 9 | -0.03 | 10.7 | 41.47 | -0.3712 | -0.0034 | 0.0001 |
| 36 | SLE RA 10 | -0.03 | 10.64 | 43.25 | -0.3608 | -0.0033 | 0.0001 |
| 36 | SLE RA 11 | -0.03 | 11.42 | 44.47 | -0.3938 | -0.0027 | 0.0001 |
| 36 | SLE RA 12 | -0.03 | 11.27 | 44.37 | -0.3867 | -0.0032 | 0.0001 |
| 36 | SLE RA 13 | -0.03 | 11.19 | 44.32 | -0.383 | -0.0035 | 0.0001 |
| 36 | SLE RA 14 | -0.03 | 11.96 | 45.54 | -0.4161 | -0.0029 | 0.0001 |
| 36 | SLE RA 15 | -0.03 | 11.81 | 45.45 | -0.409 | -0.0033 | 0.0001 |
| 36 | SLE RA 16 | -0.03 | 11.98 | 45.56 | -0.4171 | -0.0029 | 0.0001 |
| 36 | SLE RA 17 | -0.03 | 11.83 | 45.46 | -0.41 | -0.0033 | 0.0001 |
| 36 | SLE RA 18 | -0.03 | 11.38 | 45.12 | -0.3892 | -0.0025 | 0.0001 |
| 36 | SLE RA 19 | -0.03 | 11.23 | 45.02 | -0.3821 | -0.0029 | 0.0001 |
| 36 | SLE RA 20 | -0.03 | 11.93 | 46.19 | -0.4115 | -0.0027 | 0.0001 |
| 36 | SLE RA 21 | -0.03 | 11.77 | 46.1 | -0.4044 | -0.0031 | 0.0001 |
| 36 | SLE FR 1 | -0.02 | 9.76 | 39.42 | -0.3337 | -0.0026 | 0.0001 |
| 36 | SLE FR 2 | -0.03 | 9.71 | 39.38 | -0.3313 | -0.0027 | 0.0001 |
| 36 | SLE FR 3 | -0.02 | 9.98 | 39.85 | -0.3426 | -0.0027 | 0.0001 |
| 36 | SLE FR 4 | -0.03 | 10.2 | 41.09 | -0.348 | -0.0027 | 0.0001 |
| 36 | SLE FR 5 | -0.03 | 10.47 | 41.56 | -0.3593 | -0.0026 | 0.0001 |
| 36 | SLE FR 6 | -0.03 | 10.57 | 42.27 | -0.3615 | -0.0025 | 0.0001 |
| 36 | SLE QP 1 | -0.02 | 9.76 | 39.42 | -0.3337 | -0.0026 | 0.0001 |
| 36 | SLE QP 2 | -0.03 | 10.25 | 41.13 | -0.3503 | -0.0026 | 0.0001 |
| 36 | SLD 1 | -0.09 | 14.06 | 48.64 | -0.5074 | -0.0279 | 0 |
| 36 | SLD 2 | -0.09 | 14.06 | 48.64 | -0.5074 | -0.0279 | 0 |
| 36 | SLD 3 | -0.07 | 9.72 | 43.91 | -0.3189 | -0.0184 | -0.0001 |
| 36 | SLD 4 | -0.07 | 9.72 | 43.91 | -0.3189 | -0.0184 | -0.0001 |
| 36 | SLD 5 | -0.09 | 17.97 | 50.56 | -0.6835 | -0.0245 | 0.0002 |
| 36 | SLD 6 | -0.09 | 17.97 | 50.56 | -0.6835 | -0.0245 | 0.0002 |
| 36 | SLD 7 | 0 | 3.51 | 34.78 | -0.0549 | 0.0071 | -0.0001 |
| 36 | SLD 8 | 0 | 3.51 | 34.78 | -0.0549 | 0.0071 | -0.0001 |
| 36 | SLD 9 | -0.06 | 16.99 | 47.47 | -0.6458 | -0.0122 | 0.0003 |
| 36 | SLD 10 | -0.06 | 16.99 | 47.47 | -0.6458 | -0.0122 | 0.0003 |
| 36 | SLD 11 | 0.04 | 2.53 | 31.69 | -0.0172 | 0.0194 | 0 |
| 36 | SLD 12 | 0.04 | 2.53 | 31.69 | -0.0172 | 0.0194 | 0 |
| 36 | SLD 13 | 0.02 | 10.78 | 38.35 | -0.3818 | 0.0132 | 0.0003 |
| 36 | SLD 14 | 0.02 | 10.78 | 38.35 | -0.3818 | 0.0132 | 0.0003 |
| 36 | SLD 15 | 0.04 | 6.44 | 33.61 | -0.1933 | 0.0227 | 0.0003 |
| 36 | SLD 16 | 0.04 | 6.44 | 33.61 | -0.1933 | 0.0227 | 0.0003 |
| 36 | SLV 1 | -0.19 | 19.21 | 58.81 | -0.7203 | -0.063 | -0.0002 |
| 36 | SLV 2 | -0.19 | 19.21 | 58.81 | -0.7203 | -0.063 | -0.0002 |
| 36 | SLV 3 | -0.13 | 9.06 | 47.54 | -0.2793 | -0.0407 | -0.0004 |
| 36 | SLV 4 | -0.13 | 9.06 | 47.54 | -0.2793 | -0.0407 | -0.0004 |
| 36 | SLV 5 | -0.18 | 28.34 | 63.53 | -1.1302 | -0.0546 | 0.0003 |
| 36 | SLV 6 | -0.18 | 28.34 | 63.53 | -1.1302 | -0.0546 | 0.0003 |
| 36 | SLV 7 | 0.04 | -5.51 | 25.96 | 0.3399 | 0.0198 | -0.0003 |
| 36 | SLV 8 | 0.04 | -5.51 | 25.96 | 0.3399 | 0.0198 | -0.0003 |
| 36 | SLV 9 | -0.09 | 26.01 | 56.29 | -1.0405 | -0.025 | 0.0005 |
| 36 | SLV 10 | -0.09 | 26.01 | 56.29 | -1.0405 | -0.025 | 0.0005 |
| 36 | SLV 11 | 0.12 | -7.84 | 18.73 | 0.4295 | 0.0494 | 0 |
| 36 | SLV 12 | 0.12 | -7.84 | 18.73 | 0.4295 | 0.0494 | 0 |
| 36 | SLV 13 | 0.08 | 11.44 | 34.71 | -0.4214 | 0.0356 | 0.0006 |
| 36 | SLV 14 | 0.08 | 11.44 | 34.71 | -0.4214 | 0.0356 | 0.0006 |
| 36 | SLV 15 | 0.14 | 1.28 | 23.44 | 0.0196 | 0.0579 | 0.0004 |
| 36 | SLV 16 | 0.14 | 1.28 | 23.44 | 0.0196 | 0.0579 | 0.0004 |
| 37 | SLU 1 | -0.07 | -2.4 | 33.88 | 0.4879 | -0.0197 | 0.0002 |
| 37 | SLU 2 | -0.08 | -3.14 | 34.16 | 0.5224 | -0.0216 | 0.0002 |
| 37 | SLU 3 | -0.07 | -2.44 | 34.34 | 0.4977 | -0.0199 | 0.0002 |
| 37 | SLU 4 | -0.08 | -2.89 | 34.51 | 0.5184 | -0.0211 | 0.0002 |
| 37 | SLU 5 | -0.08 | -3.19 | 34.45 | 0.5302 | -0.0218 | 0.0002 |
| 37 | SLU 6 | -0.08 | -2.49 | 34.63 | 0.5055 | -0.0201 | 0.0002 |

| Nodo | Cont. | Reazione a traslazione | | | Reazione a rotazione | | |
|---|---|---|---|---|---|---|---|
| Ind. | N.br. | x | y | z | x | y | z |
| 37 | SLU 7 | -0.08 | -2.93 | 34.8 | 0.5262 | -0.0213 | 0.0002 |
| 37 | SLU 8 | -0.07 | -2.49 | 34.46 | 0.5035 | -0.02 | 0.0002 |
| 37 | SLU 9 | -0.08 | -2.93 | 34.63 | 0.5242 | -0.0212 | 0.0002 |
| 37 | SLU 10 | -0.09 | -3.13 | 37.91 | 0.5708 | -0.0241 | 0.0002 |
| 37 | SLU 11 | -0.09 | -2.43 | 38.09 | 0.5461 | -0.0223 | 0.0002 |
| 37 | SLU 12 | -0.09 | -2.88 | 38.26 | 0.5668 | -0.0235 | 0.0002 |
| 37 | SLU 13 | -0.09 | -3.18 | 38.2 | 0.5786 | -0.0243 | 0.0002 |
| 37 | SLU 14 | -0.09 | -2.48 | 38.38 | 0.5539 | -0.0225 | 0.0002 |
| 37 | SLU 15 | -0.09 | -2.92 | 38.55 | 0.5746 | -0.0237 | 0.0002 |
| 37 | SLU 16 | -0.09 | -2.48 | 38.21 | 0.5519 | -0.0225 | 0.0002 |
| 37 | SLU 17 | -0.09 | -2.92 | 38.38 | 0.5726 | -0.0236 | 0.0002 |
| 37 | SLU 18 | -0.09 | -2.39 | 39.23 | 0.557 | -0.0232 | 0.0002 |
| 37 | SLU 19 | -0.09 | -2.83 | 39.4 | 0.5778 | -0.0243 | 0.0002 |
| 37 | SLU 20 | -0.09 | -2.43 | 39.53 | 0.5648 | -0.0233 | 0.0002 |
| 37 | SLU 21 | -0.09 | -2.88 | 39.7 | 0.5855 | -0.0245 | 0.0002 |
| 37 | SLU 22 | -0.08 | -2.39 | 36.66 | 0.5223 | -0.0214 | 0.0002 |
| 37 | SLU 23 | -0.09 | -3.12 | 36.94 | 0.5568 | -0.0233 | 0.0002 |
| 37 | SLU 24 | -0.08 | -2.43 | 37.12 | 0.532 | -0.0216 | 0.0002 |
| 37 | SLU 25 | -0.09 | -2.87 | 37.29 | 0.5528 | -0.0228 | 0.0002 |
| 37 | SLU 26 | -0.09 | -3.17 | 37.23 | 0.5646 | -0.0235 | 0.0002 |
| 37 | SLU 27 | -0.08 | -2.47 | 37.41 | 0.5398 | -0.0218 | 0.0002 |
| 37 | SLU 28 | -0.09 | -2.91 | 37.58 | 0.5605 | -0.0229 | 0.0002 |
| 37 | SLU 29 | -0.08 | -2.47 | 37.24 | 0.5378 | -0.0217 | 0.0002 |
| 37 | SLU 30 | -0.09 | -2.91 | 37.41 | 0.5586 | -0.0229 | 0.0002 |
| 37 | SLU 31 | -0.1 | -3.11 | 40.69 | 0.6052 | -0.0258 | 0.0002 |
| 37 | SLU 32 | -0.09 | -2.41 | 40.87 | 0.5804 | -0.024 | 0.0002 |
| 37 | SLU 33 | -0.1 | -2.86 | 41.04 | 0.6012 | -0.0252 | 0.0002 |
| 37 | SLU 34 | -0.1 | -3.16 | 40.98 | 0.613 | -0.0259 | 0.0002 |
| 37 | SLU 35 | -0.09 | -2.46 | 41.16 | 0.5882 | -0.0242 | 0.0002 |
| 37 | SLU 36 | -0.1 | -2.9 | 41.33 | 0.6089 | -0.0254 | 0.0002 |
| 37 | SLU 37 | -0.09 | -2.46 | 40.99 | 0.5862 | -0.0242 | 0.0002 |
| 37 | SLU 38 | -0.1 | -2.9 | 41.16 | 0.607 | -0.0253 | 0.0002 |
| 37 | SLU 39 | -0.1 | -2.37 | 42.01 | 0.5914 | -0.0249 | 0.0002 |
| 37 | SLU 40 | -0.1 | -2.81 | 42.18 | 0.6121 | -0.026 | 0.0002 |
| 37 | SLU 41 | -0.1 | -2.41 | 42.31 | 0.5992 | -0.025 | 0.0002 |
| 37 | SLU 42 | -0.1 | -2.86 | 42.48 | 0.6199 | -0.0262 | 0.0002 |
| 37 | SLU 43 | -0.09 | -3.13 | 43.08 | 0.6225 | -0.025 | 0.0002 |
| 37 | SLU 44 | -0.1 | -3.87 | 43.37 | 0.657 | -0.027 | 0.0002 |
| 37 | SLU 45 | -0.09 | -3.17 | 43.55 | 0.6323 | -0.0252 | 0.0002 |
| 37 | SLU 46 | -0.1 | -3.62 | 43.72 | 0.653 | -0.0264 | 0.0002 |
| 37 | SLU 47 | -0.1 | -3.91 | 43.66 | 0.6648 | -0.0271 | 0.0002 |
| 37 | SLU 48 | -0.09 | -3.22 | 43.84 | 0.6401 | -0.0254 | 0.0002 |
| 37 | SLU 49 | -0.1 | -3.66 | 44.01 | 0.6608 | -0.0266 | 0.0002 |
| 37 | SLU 50 | -0.09 | -3.22 | 43.67 | 0.6381 | -0.0254 | 0.0002 |
| 37 | SLU 51 | -0.1 | -3.66 | 43.84 | 0.6588 | -0.0265 | 0.0002 |
| 37 | SLU 52 | -0.11 | -3.86 | 47.12 | 0.7054 | -0.0294 | 0.0002 |
| 37 | SLU 53 | -0.11 | -3.16 | 47.3 | 0.6807 | -0.0277 | 0.0002 |
| 37 | SLU 54 | -0.11 | -3.61 | 47.47 | 0.7014 | -0.0288 | 0.0002 |
| 37 | SLU 55 | -0.11 | -3.9 | 47.41 | 0.7132 | -0.0296 | 0.0002 |
| 37 | SLU 56 | -0.11 | -3.21 | 47.59 | 0.6885 | -0.0278 | 0.0002 |
| 37 | SLU 57 | -0.11 | -3.65 | 47.76 | 0.7092 | -0.029 | 0.0002 |
| 37 | SLU 58 | -0.11 | -3.21 | 47.42 | 0.6865 | -0.0278 | 0.0002 |
| 37 | SLU 59 | -0.11 | -3.65 | 47.59 | 0.7072 | -0.029 | 0.0002 |
| 37 | SLU 60 | -0.11 | -3.12 | 48.44 | 0.6916 | -0.0285 | 0.0002 |
| 37 | SLU 61 | -0.11 | -3.56 | 48.61 | 0.7124 | -0.0297 | 0.0002 |
| 37 | SLU 62 | -0.11 | -3.16 | 48.73 | 0.6994 | -0.0287 | 0.0002 |
| 37 | SLU 63 | -0.11 | -3.6 | 48.91 | 0.7201 | -0.0298 | 0.0002 |
| 37 | SLU 64 | -0.1 | -3.11 | 45.87 | 0.6569 | -0.0267 | 0.0002 |
| 37 | SLU 65 | -0.11 | -3.85 | 46.15 | 0.6914 | -0.0287 | 0.0002 |
| 37 | SLU 66 | -0.1 | -3.15 | 46.33 | 0.6666 | -0.0269 | 0.0002 |
| 37 | SLU 67 | -0.11 | -3.6 | 46.5 | 0.6874 | -0.0281 | 0.0002 |
| 37 | SLU 68 | -0.11 | -3.89 | 46.44 | 0.6992 | -0.0288 | 0.0002 |
| 37 | SLU 69 | -0.1 | -3.2 | 46.62 | 0.6744 | -0.0271 | 0.0002 |
| 37 | SLU 70 | -0.11 | -3.64 | 46.79 | 0.6951 | -0.0283 | 0.0002 |
| 37 | SLU 71 | -0.1 | -3.2 | 46.45 | 0.6724 | -0.027 | 0.0002 |
| 37 | SLU 72 | -0.11 | -3.64 | 46.62 | 0.6931 | -0.0282 | 0.0002 |
| 37 | SLU 73 | -0.12 | -3.84 | 49.9 | 0.7398 | -0.0311 | 0.0003 |
| 37 | SLU 74 | -0.11 | -3.14 | 50.08 | 0.715 | -0.0293 | 0.0003 |
| 37 | SLU 75 | -0.12 | -3.59 | 50.25 | 0.7357 | -0.0305 | 0.0003 |
| 37 | SLU 76 | -0.12 | -3.88 | 50.19 | 0.7476 | -0.0313 | 0.0003 |
| 37 | SLU 77 | -0.11 | -3.19 | 50.37 | 0.7228 | -0.0295 | 0.0003 |
| 37 | SLU 78 | -0.12 | -3.63 | 50.54 | 0.7435 | -0.0307 | 0.0003 |
| 37 | SLU 79 | -0.11 | -3.19 | 50.2 | 0.7208 | -0.0295 | 0.0003 |
| 37 | SLU 80 | -0.12 | -3.63 | 50.37 | 0.7415 | -0.0307 | 0.0003 |
| 37 | SLU 81 | -0.12 | -3.1 | 51.22 | 0.726 | -0.0302 | 0.0003 |
| 37 | SLU 82 | -0.12 | -3.54 | 51.39 | 0.7467 | -0.0314 | 0.0003 |
| 37 | SLU 83 | -0.12 | -3.14 | 51.52 | 0.7338 | -0.0304 | 0.0003 |
| 37 | SLU 84 | -0.12 | -3.58 | 51.69 | 0.7545 | -0.0315 | 0.0003 |
| 37 | SLE RA 1 | -0.08 | -2.4 | 34.67 | 0.4977 | -0.0202 | 0.0002 |
| 37 | SLE RA 2 | -0.08 | -2.89 | 34.86 | 0.5207 | -0.0215 | 0.0002 |
| 37 | SLE RA 3 | -0.08 | -2.43 | 34.98 | 0.5042 | -0.0203 | 0.0002 |
| 37 | SLE RA 4 | -0.08 | -2.72 | 35.09 | 0.5181 | -0.0211 | 0.0002 |
| 37 | SLE RA 5 | -0.08 | -2.92 | 35.06 | 0.5259 | -0.0216 | 0.0002 |
| 37 | SLE RA 6 | -0.08 | -2.45 | 35.17 | 0.5094 | -0.0204 | 0.0002 |
| 37 | SLE RA 7 | -0.08 | -2.75 | 35.29 | 0.5232 | -0.0212 | 0.0002 |
| 37 | SLE RA 8 | -0.08 | -2.46 | 35.06 | 0.5081 | -0.0204 | 0.0002 |
| 37 | SLE RA 9 | -0.08 | -2.75 | 35.17 | 0.5219 | -0.0212 | 0.0002 |
| 37 | SLE RA 10 | -0.09 | -2.88 | 37.36 | 0.553 | -0.0231 | 0.0002 |

| Nodo | Cont. | Reazione a traslazione | | | Reazione a rotazione | | |
|---|---|---|---|---|---|---|---|
| Ind. | N.br. | x | y | z | x | y | z |
| 37 | SLE RA 11 | -0.08 | -2.42 | 37.48 | 0.5365 | -0.0219 | 0.0002 |
| 37 | SLE RA 12 | -0.09 | -2.71 | 37.59 | 0.5503 | -0.0227 | 0.0002 |
| 37 | SLE RA 13 | -0.09 | -2.91 | 37.56 | 0.5582 | -0.0232 | 0.0002 |
| 37 | SLE RA 14 | -0.08 | -2.45 | 37.67 | 0.5417 | -0.0221 | 0.0002 |
| 37 | SLE RA 15 | -0.09 | -2.74 | 37.79 | 0.5555 | -0.0228 | 0.0002 |
| 37 | SLE RA 16 | -0.08 | -2.45 | 37.56 | 0.5404 | -0.022 | 0.0002 |
| 37 | SLE RA 17 | -0.09 | -2.75 | 37.67 | 0.5542 | -0.0228 | 0.0002 |
| 37 | SLE RA 18 | -0.09 | -2.39 | 38.24 | 0.5438 | -0.0225 | 0.0002 |
| 37 | SLE RA 19 | -0.09 | -2.68 | 38.36 | 0.5576 | -0.0233 | 0.0002 |
| 37 | SLE RA 20 | -0.09 | -2.42 | 38.44 | 0.549 | -0.0226 | 0.0002 |
| 37 | SLE RA 21 | -0.09 | -2.71 | 38.55 | 0.5628 | -0.0234 | 0.0002 |
| 37 | SLE FR 1 | -0.08 | -2.4 | 34.67 | 0.4977 | -0.0202 | 0.0002 |
| 37 | SLE FR 2 | -0.08 | -2.5 | 34.71 | 0.5023 | -0.0204 | 0.0002 |
| 37 | SLE FR 3 | -0.08 | -2.41 | 34.75 | 0.4998 | -0.0202 | 0.0002 |
| 37 | SLE FR 4 | -0.08 | -2.49 | 35.78 | 0.5162 | -0.0211 | 0.0002 |
| 37 | SLE FR 5 | -0.08 | -2.41 | 35.82 | 0.5136 | -0.0209 | 0.0002 |
| 37 | SLE FR 6 | -0.08 | -2.39 | 36.46 | 0.5208 | -0.0213 | 0.0002 |
| 37 | SLE QP 1 | -0.08 | -2.4 | 34.67 | 0.4977 | -0.0202 | 0.0002 |
| 37 | SLE QP 2 | -0.08 | -2.4 | 35.74 | 0.5116 | -0.0209 | 0.0002 |
| 37 | SLD 1 | -0.21 | 1.34 | 33.34 | 0.4579 | 0.011 | 0.0005 |
| 37 | SLD 2 | -0.21 | 1.34 | 33.34 | 0.4579 | 0.011 | 0.0005 |
| 37 | SLD 3 | -0.15 | -2.26 | 29.94 | 0.2841 | 0.0327 | 0.0003 |
| 37 | SLD 4 | -0.15 | -2.26 | 29.94 | 0.2841 | 0.0327 | 0.0003 |
| 37 | SLD 5 | -0.21 | 4.19 | 40.19 | 0.759 | -0.0441 | 0.0006 |
| 37 | SLD 6 | -0.21 | 4.19 | 40.19 | 0.759 | -0.0441 | 0.0006 |
| 37 | SLD 7 | -0.01 | -7.82 | 28.83 | 0.1797 | 0.028 | -0.0001 |
| 37 | SLD 8 | -0.01 | -7.82 | 28.83 | 0.1797 | 0.028 | -0.0001 |
| 37 | SLD 9 | -0.15 | 3.03 | 42.65 | 0.8434 | -0.0697 | 0.0004 |
| 37 | SLD 10 | -0.15 | 3.03 | 42.65 | 0.8434 | -0.0697 | 0.0004 |
| 37 | SLD 11 | 0.05 | -8.98 | 31.29 | 0.2641 | 0.0024 | -0.0002 |
| 37 | SLD 12 | 0.05 | -8.98 | 31.29 | 0.2641 | 0.0024 | -0.0002 |
| 37 | SLD 13 | -0.01 | -2.53 | 41.55 | 0.739 | -0.0744 | 0 |
| 37 | SLD 14 | -0.01 | -2.53 | 41.55 | 0.739 | -0.0744 | 0 |
| 37 | SLD 15 | 0.05 | -6.13 | 38.14 | 0.5652 | -0.0528 | -0.0002 |
| 37 | SLD 16 | 0.05 | -6.13 | 38.14 | 0.5652 | -0.0528 | -0.0002 |
| 37 | SLV 1 | -0.38 | 6.37 | 30.22 | 0.3845 | 0.0523 | 0.001 |
| 37 | SLV 2 | -0.38 | 6.37 | 30.22 | 0.3845 | 0.0523 | 0.001 |
| 37 | SLV 3 | -0.24 | -2.05 | 21.92 | -0.0213 | 0.1038 | 0.0006 |
| 37 | SLV 4 | -0.24 | -2.05 | 21.92 | -0.0213 | 0.1038 | 0.0006 |
| 37 | SLV 5 | -0.4 | 12.99 | 46.68 | 1.0889 | -0.0771 | 0.0011 |
| 37 | SLV 6 | -0.4 | 12.99 | 46.68 | 1.0889 | -0.0771 | 0.0011 |
| 37 | SLV 7 | 0.1 | -15.05 | 18.99 | -0.2638 | 0.0947 | -0.0003 |
| 37 | SLV 8 | 0.1 | -15.05 | 18.99 | -0.2638 | 0.0947 | -0.0003 |
| 37 | SLV 9 | -0.26 | 10.25 | 52.49 | 1.2869 | -0.1364 | 0.0007 |
| 37 | SLV 10 | -0.26 | 10.25 | 52.49 | 1.2869 | -0.1364 | 0.0007 |
| 37 | SLV 11 | 0.24 | -17.78 | 24.8 | -0.0658 | 0.0354 | -0.0007 |
| 37 | SLV 12 | 0.24 | -17.78 | 24.8 | -0.0658 | 0.0354 | -0.0007 |
| 37 | SLV 13 | 0.08 | -2.75 | 49.57 | 1.0444 | -0.1455 | -0.0002 |
| 37 | SLV 14 | 0.08 | -2.75 | 49.57 | 1.0444 | -0.1455 | -0.0002 |
| 37 | SLV 15 | 0.23 | -11.16 | 41.26 | 0.6386 | -0.094 | -0.0006 |
| 37 | SLV 16 | 0.23 | -11.16 | 41.26 | 0.6386 | -0.094 | -0.0006 |
| 38 | SLU 1 | -0.02 | -1.14 | 36.1 | 0.0601 | -0.0039 | 0 |
| 38 | SLU 2 | -0.01 | -1.81 | 38.08 | 0.0943 | -0.0008 | 0 |
| 38 | SLU 3 | -0.02 | -1.15 | 36.32 | 0.0606 | -0.0037 | 0 |
| 38 | SLU 4 | -0.01 | -1.56 | 37.5 | 0.0812 | -0.0019 | 0 |
| 38 | SLU 5 | -0.01 | -1.83 | 37.9 | 0.0948 | -0.0005 | 0 |
| 38 | SLU 6 | -0.02 | -1.17 | 36.15 | 0.0612 | -0.0035 | 0 |
| 38 | SLU 7 | -0.01 | -1.57 | 37.33 | 0.0817 | -0.0016 | 0 |
| 38 | SLU 8 | -0.02 | -1.17 | 35.76 | 0.0611 | -0.0033 | 0 |
| 38 | SLU 9 | -0.01 | -1.58 | 36.94 | 0.0817 | -0.0015 | 0 |
| 38 | SLU 10 | -0.01 | -1.76 | 42.89 | 0.0966 | -0.001 | 0 |
| 38 | SLU 11 | -0.02 | -1.1 | 41.13 | 0.0629 | -0.0039 | 0 |
| 38 | SLU 12 | -0.01 | -1.51 | 42.31 | 0.0834 | -0.0021 | 0 |
| 38 | SLU 13 | -0.01 | -1.78 | 42.71 | 0.0971 | -0.0007 | 0 |
| 38 | SLU 14 | -0.02 | -1.12 | 40.96 | 0.0634 | -0.0036 | 0 |
| 38 | SLU 15 | -0.01 | -1.53 | 42.14 | 0.0839 | -0.0018 | 0 |
| 38 | SLU 16 | -0.02 | -1.12 | 40.57 | 0.0634 | -0.0035 | 0 |
| 38 | SLU 17 | -0.01 | -1.53 | 41.75 | 0.0839 | -0.0017 | 0 |
| 38 | SLU 18 | -0.02 | -1.07 | 42.98 | 0.0633 | -0.0042 | 0 |
| 38 | SLU 19 | -0.01 | -1.47 | 44.16 | 0.0839 | -0.0023 | 0 |
| 38 | SLU 20 | -0.02 | -1.08 | 42.81 | 0.0638 | -0.0039 | 0 |
| 38 | SLU 21 | -0.01 | -1.49 | 43.99 | 0.0844 | -0.002 | 0 |
| 38 | SLU 22 | -0.02 | -1.1 | 39.91 | 0.0617 | -0.0038 | 0 |
| 38 | SLU 23 | -0.01 | -1.78 | 41.88 | 0.0959 | -0.0008 | 0 |
| 38 | SLU 24 | -0.02 | -1.11 | 40.12 | 0.0622 | -0.0037 | 0 |
| 38 | SLU 25 | -0.01 | -1.52 | 41.3 | 0.0827 | -0.0018 | 0 |
| 38 | SLU 26 | -0.01 | -1.79 | 41.71 | 0.0964 | -0.0005 | 0 |
| 38 | SLU 27 | -0.02 | -1.13 | 39.95 | 0.0627 | -0.0034 | 0 |
| 38 | SLU 28 | -0.01 | -1.54 | 41.13 | 0.0832 | -0.0016 | 0 |
| 38 | SLU 29 | -0.02 | -1.14 | 39.56 | 0.0627 | -0.0033 | 0 |
| 38 | SLU 30 | -0.01 | -1.54 | 40.74 | 0.0832 | -0.0014 | 0 |
| 38 | SLU 31 | -0.01 | -1.73 | 46.69 | 0.0981 | -0.0009 | 0 |
| 38 | SLU 32 | -0.02 | -1.06 | 44.93 | 0.0644 | -0.0039 | 0 |
| 38 | SLU 33 | -0.01 | -1.47 | 46.12 | 0.085 | -0.002 | 0 |
| 38 | SLU 34 | -0.01 | -1.74 | 46.52 | 0.0986 | -0.0007 | 0 |
| 38 | SLU 35 | -0.02 | -1.08 | 44.76 | 0.0649 | -0.0036 | 0 |
| 38 | SLU 36 | -0.01 | -1.49 | 45.94 | 0.0855 | -0.0018 | 0 |
| 38 | SLU 37 | -0.02 | -1.09 | 44.37 | 0.0649 | -0.0035 | 0 |

| Nodo | Cont. | Reazione a traslazione | | | Reazione a rotazione | | |
|---|---|---|---|---|---|---|---|
| Ind. | N.br. | x | y | z | x | y | z |
| 38 | SLU 38 | -0.01 | -1.49 | 45.56 | 0.0855 | -0.0016 | 0 |
| 38 | SLU 39 | -0.02 | -1.03 | 46.78 | 0.0649 | -0.0041 | 0 |
| 38 | SLU 40 | -0.01 | -1.44 | 47.96 | 0.0854 | -0.0023 | 0 |
| 38 | SLU 41 | -0.02 | -1.05 | 46.61 | 0.0654 | -0.0038 | 0 |
| 38 | SLU 42 | -0.01 | -1.45 | 47.79 | 0.0859 | -0.002 | 0 |
| 38 | SLU 43 | -0.02 | -1.49 | 45.63 | 0.0776 | -0.0051 | 0 |
| 38 | SLU 44 | -0.01 | -2.17 | 47.6 | 0.1118 | -0.002 | 0 |
| 38 | SLU 45 | -0.02 | -1.5 | 45.85 | 0.0782 | -0.0049 | 0 |
| 38 | SLU 46 | -0.02 | -1.91 | 47.03 | 0.0987 | -0.0031 | 0 |
| 38 | SLU 47 | -0.01 | -2.18 | 47.43 | 0.1123 | -0.0017 | 0 |
| 38 | SLU 48 | -0.02 | -1.52 | 45.67 | 0.0787 | -0.0046 | 0 |
| 38 | SLU 49 | -0.01 | -1.93 | 46.85 | 0.0992 | -0.0028 | 0 |
| 38 | SLU 50 | -0.02 | -1.53 | 45.29 | 0.0787 | -0.0045 | 0 |
| 38 | SLU 51 | -0.01 | -1.93 | 46.47 | 0.0992 | -0.0026 | 0 |
| 38 | SLU 52 | -0.01 | -2.12 | 52.41 | 0.1141 | -0.0022 | 0 |
| 38 | SLU 53 | -0.02 | -1.45 | 50.66 | 0.0804 | -0.0051 | 0 |
| 38 | SLU 54 | -0.02 | -1.86 | 51.84 | 0.1009 | -0.0032 | 0 |
| 38 | SLU 55 | -0.01 | -2.14 | 52.24 | 0.1146 | -0.0019 | 0 |
| 38 | SLU 56 | -0.02 | -1.47 | 50.48 | 0.0809 | -0.0048 | 0 |
| 38 | SLU 57 | -0.02 | -1.88 | 51.67 | 0.1014 | -0.003 | 0 |
| 38 | SLU 58 | -0.02 | -1.48 | 50.1 | 0.0809 | -0.0047 | 0 |
| 38 | SLU 59 | -0.02 | -1.88 | 51.28 | 0.1014 | -0.0028 | 0 |
| 38 | SLU 60 | -0.02 | -1.42 | 52.51 | 0.0808 | -0.0053 | 0 |
| 38 | SLU 61 | -0.02 | -1.83 | 53.69 | 0.1014 | -0.0035 | 0 |
| 38 | SLU 62 | -0.02 | -1.44 | 52.33 | 0.0814 | -0.0051 | 0 |
| 38 | SLU 63 | -0.02 | -1.84 | 53.52 | 0.1019 | -0.0032 | 0 |
| 38 | SLU 64 | -0.02 | -1.45 | 49.43 | 0.0792 | -0.005 | 0 |
| 38 | SLU 65 | -0.01 | -2.13 | 51.41 | 0.1134 | -0.0019 | 0 |
| 38 | SLU 66 | -0.02 | -1.47 | 49.65 | 0.0797 | -0.0049 | 0 |
| 38 | SLU 67 | -0.02 | -1.87 | 50.83 | 0.1002 | -0.003 | 0 |
| 38 | SLU 68 | -0.01 | -2.15 | 51.23 | 0.1139 | -0.0017 | 0 |
| 38 | SLU 69 | -0.02 | -1.48 | 49.48 | 0.0802 | -0.0046 | 0 |
| 38 | SLU 70 | -0.01 | -1.89 | 50.66 | 0.1007 | -0.0027 | 0 |
| 38 | SLU 71 | -0.02 | -1.49 | 49.09 | 0.0802 | -0.0045 | 0 |
| 38 | SLU 72 | -0.01 | -1.9 | 50.27 | 0.1007 | -0.0026 | 0 |
| 38 | SLU 73 | -0.01 | -2.08 | 56.22 | 0.1156 | -0.0021 | 0 |
| 38 | SLU 74 | -0.02 | -1.42 | 54.46 | 0.0819 | -0.0051 | 0 |
| 38 | SLU 75 | -0.02 | -1.82 | 55.64 | 0.1025 | -0.0032 | 0 |
| 38 | SLU 76 | -0.01 | -2.1 | 56.05 | 0.1161 | -0.0018 | 0 |
| 38 | SLU 77 | -0.02 | -1.44 | 54.29 | 0.0825 | -0.0048 | 0 |
| 38 | SLU 78 | -0.02 | -1.84 | 55.47 | 0.103 | -0.0029 | 0 |
| 38 | SLU 79 | -0.02 | -1.44 | 53.9 | 0.0824 | -0.0047 | 0 |
| 38 | SLU 80 | -0.01 | -1.85 | 55.08 | 0.103 | -0.0028 | 0 |
| 38 | SLU 81 | -0.02 | -1.38 | 56.31 | 0.0824 | -0.0053 | 0 |
| 38 | SLU 82 | -0.02 | -1.79 | 57.49 | 0.1029 | -0.0034 | 0 |
| 38 | SLU 83 | -0.02 | -1.4 | 56.14 | 0.0829 | -0.005 | 0 |
| 38 | SLU 84 | -0.02 | -1.81 | 57.32 | 0.1034 | -0.0032 | 0 |
| 38 | SLE RA 1 | -0.02 | -1.13 | 37.19 | 0.0606 | -0.0039 | 0 |
| 38 | SLE RA 2 | -0.01 | -1.58 | 38.5 | 0.0834 | -0.0018 | 0 |
| 38 | SLE RA 3 | -0.02 | -1.13 | 37.33 | 0.0609 | -0.0038 | 0 |
| 38 | SLE RA 4 | -0.01 | -1.41 | 38.12 | 0.0746 | -0.0025 | 0 |
| 38 | SLE RA 5 | -0.01 | -1.59 | 38.39 | 0.0837 | -0.0016 | 0 |
| 38 | SLE RA 6 | -0.02 | -1.15 | 37.22 | 0.0613 | -0.0036 | 0 |
| 38 | SLE RA 7 | -0.01 | -1.42 | 38.01 | 0.0749 | -0.0024 | 0 |
| 38 | SLE RA 8 | -0.02 | -1.15 | 36.96 | 0.0612 | -0.0035 | 0 |
| 38 | SLE RA 9 | -0.01 | -1.42 | 37.75 | 0.0749 | -0.0023 | 0 |
| 38 | SLE RA 10 | -0.01 | -1.54 | 41.71 | 0.0849 | -0.0019 | 0 |
| 38 | SLE RA 11 | -0.02 | -1.1 | 40.54 | 0.0624 | -0.0039 | 0 |
| 38 | SLE RA 12 | -0.01 | -1.37 | 41.33 | 0.0761 | -0.0027 | 0 |
| 38 | SLE RA 13 | -0.01 | -1.56 | 41.6 | 0.0852 | -0.0018 | 0 |
| 38 | SLE RA 14 | -0.02 | -1.11 | 40.43 | 0.0628 | -0.0037 | 0 |
| 38 | SLE RA 15 | -0.01 | -1.38 | 41.21 | 0.0764 | -0.0025 | 0 |
| 38 | SLE RA 16 | -0.02 | -1.12 | 40.17 | 0.0627 | -0.0036 | 0 |
| 38 | SLE RA 17 | -0.01 | -1.39 | 40.96 | 0.0764 | -0.0024 | 0 |
| 38 | SLE RA 18 | -0.02 | -1.08 | 41.77 | 0.0627 | -0.0041 | 0 |
| 38 | SLE RA 19 | -0.01 | -1.35 | 42.56 | 0.0764 | -0.0028 | 0 |
| 38 | SLE RA 20 | -0.02 | -1.09 | 41.66 | 0.063 | -0.0039 | 0 |
| 38 | SLE RA 21 | -0.01 | -1.36 | 42.45 | 0.0767 | -0.0026 | 0 |
| 38 | SLE FR 1 | -0.02 | -1.13 | 37.19 | 0.0606 | -0.0039 | 0 |
| 38 | SLE FR 2 | -0.02 | -1.22 | 37.45 | 0.0651 | -0.0035 | 0 |
| 38 | SLE FR 3 | -0.02 | -1.13 | 37.14 | 0.0607 | -0.0038 | 0 |
| 38 | SLE FR 4 | -0.02 | -1.2 | 38.83 | 0.0658 | -0.0035 | 0 |
| 38 | SLE FR 5 | -0.02 | -1.12 | 38.52 | 0.0613 | -0.0038 | 0 |
| 38 | SLE FR 6 | -0.02 | -1.1 | 39.48 | 0.0616 | -0.004 | 0 |
| 38 | SLE QP 1 | -0.02 | -1.13 | 37.19 | 0.0606 | -0.0039 | 0 |
| 38 | SLE QP 2 | -0.02 | -1.11 | 38.57 | 0.0612 | -0.0039 | 0 |
| 38 | SLD 1 | 0.07 | -0.75 | 36.39 | 0.0342 | 0.0349 | -0.0001 |
| 38 | SLD 2 | 0.07 | -0.75 | 36.39 | 0.0342 | 0.0349 | -0.0001 |
| 38 | SLD 3 | 0.03 | -3.69 | 32.27 | 0.1748 | 0.0209 | -0.0001 |
| 38 | SLD 4 | 0.03 | -3.69 | 32.27 | 0.1748 | 0.0209 | -0.0001 |
| 38 | SLD 5 | 0.08 | 3.45 | 44.17 | -0.1602 | 0.029 | 0.0001 |
| 38 | SLD 6 | 0.08 | 3.45 | 44.17 | -0.1602 | 0.029 | 0.0001 |
| 38 | SLD 7 | -0.07 | -6.34 | 30.43 | 0.3085 | -0.0177 | -0.0001 |
| 38 | SLD 8 | -0.07 | -6.34 | 30.43 | 0.3085 | -0.0177 | -0.0001 |
| 38 | SLD 9 | 0.04 | 4.12 | 46.71 | -0.1861 | 0.0099 | 0.0001 |
| 38 | SLD 10 | 0.04 | 4.12 | 46.71 | -0.1861 | 0.0099 | 0.0001 |
| 38 | SLD 11 | -0.11 | -5.67 | 32.97 | 0.2826 | -0.0368 | 0 |
| 38 | SLD 12 | -0.11 | -5.67 | 32.97 | 0.2826 | -0.0368 | 0 |

| Nodo | Cont. | Reazione a traslazione | | | Reazione a rotazione | | |
|---|---|---|---|---|---|---|---|
| Ind. | N.br. | x | y | z | x | y | z |
| 38 | SLD 13 | -0.06 | 1.47 | 44.86 | -0.0524 | -0.0287 | 0.0002 |
| 38 | SLD 14 | -0.06 | 1.47 | 44.86 | -0.0524 | -0.0287 | 0.0002 |
| 38 | SLD 15 | -0.11 | -1.47 | 40.74 | 0.0882 | -0.0427 | 0.0001 |
| 38 | SLD 16 | -0.11 | -1.47 | 40.74 | 0.0882 | -0.0427 | 0.0001 |
| 38 | SLV 1 | 0.2 | -0.27 | 33.6 | -0.002 | 0.0863 | -0.0002 |
| 38 | SLV 2 | 0.2 | -0.27 | 33.6 | -0.002 | 0.0863 | -0.0002 |
| 38 | SLV 3 | 0.08 | -7.18 | 23.71 | 0.329 | 0.0524 | -0.0003 |
| 38 | SLV 4 | 0.08 | -7.18 | 23.71 | 0.329 | 0.0524 | -0.0003 |
| 38 | SLV 5 | 0.22 | 9.62 | 52.08 | -0.4598 | 0.0746 | 0.0001 |
| 38 | SLV 6 | 0.22 | 9.62 | 52.08 | -0.4598 | 0.0746 | 0.0001 |
| 38 | SLV 7 | -0.16 | -13.41 | 19.1 | 0.6436 | -0.0385 | -0.0002 |
| 38 | SLV 8 | -0.16 | -13.41 | 19.1 | 0.6436 | -0.0385 | -0.0002 |
| 38 | SLV 9 | 0.12 | 11.19 | 58.03 | -0.5212 | 0.0306 | 0.0003 |
| 38 | SLV 10 | 0.12 | 11.19 | 58.03 | -0.5212 | 0.0306 | 0.0003 |
| 38 | SLV 11 | -0.25 | -11.84 | 25.05 | 0.5822 | -0.0824 | -0.0001 |
| 38 | SLV 12 | -0.25 | -11.84 | 25.05 | 0.5822 | -0.0824 | -0.0001 |
| 38 | SLV 13 | -0.12 | 4.96 | 53.42 | -0.2066 | -0.0602 | 0.0004 |
| 38 | SLV 14 | -0.12 | 4.96 | 53.42 | -0.2066 | -0.0602 | 0.0004 |
| 38 | SLV 15 | -0.23 | -1.95 | 43.53 | 0.1244 | -0.0941 | 0.0003 |
| 38 | SLV 16 | -0.23 | -1.95 | 43.53 | 0.1244 | -0.0941 | 0.0003 |
| 39 | SLU 1 | -0.02 | 8.43 | 45.26 | -0.3534 | -0.0083 | 0.0003 |
| 39 | SLU 2 | -0.01 | 8.34 | 45.82 | -0.3473 | -0.0078 | 0.0003 |
| 39 | SLU 3 | -0.02 | 8.45 | 45.72 | -0.3545 | -0.0083 | 0.0003 |
| 39 | SLU 4 | -0.01 | 8.4 | 46.06 | -0.3509 | -0.008 | 0.0003 |
| 39 | SLU 5 | -0.01 | 8.29 | 46.03 | -0.3459 | -0.0078 | 0.0003 |
| 39 | SLU 6 | -0.02 | 8.41 | 45.93 | -0.3532 | -0.0083 | 0.0003 |
| 39 | SLU 7 | -0.01 | 8.35 | 46.27 | -0.3495 | -0.008 | 0.0003 |
| 39 | SLU 8 | -0.02 | 8.34 | 45.68 | -0.3506 | -0.0083 | 0.0003 |
| 39 | SLU 9 | -0.02 | 8.28 | 46.02 | -0.347 | -0.008 | 0.0003 |
| 39 | SLU 10 | -0.01 | 10.17 | 53.31 | -0.4218 | -0.0093 | 0.0003 |
| 39 | SLU 11 | -0.02 | 10.28 | 53.21 | -0.429 | -0.0099 | 0.0003 |
| 39 | SLU 12 | -0.02 | 10.23 | 53.54 | -0.4254 | -0.0096 | 0.0003 |
| 39 | SLU 13 | -0.01 | 10.12 | 53.52 | -0.4204 | -0.0093 | 0.0003 |
| 39 | SLU 14 | -0.02 | 10.24 | 53.41 | -0.4276 | -0.0099 | 0.0003 |
| 39 | SLU 15 | -0.02 | 10.18 | 53.75 | -0.424 | -0.0096 | 0.0003 |
| 39 | SLU 16 | -0.02 | 10.17 | 53.16 | -0.4251 | -0.0098 | 0.0003 |
| 39 | SLU 17 | -0.02 | 10.11 | 53.5 | -0.4215 | -0.0095 | 0.0003 |
| 39 | SLU 18 | -0.02 | 11.05 | 55.95 | -0.4598 | -0.0105 | 0.0003 |
| 39 | SLU 19 | -0.02 | 10.99 | 56.29 | -0.4562 | -0.0102 | 0.0003 |
| 39 | SLU 20 | -0.02 | 11 | 56.16 | -0.4584 | -0.0105 | 0.0003 |
| 39 | SLU 21 | -0.02 | 10.94 | 56.5 | -0.4548 | -0.0102 | 0.0003 |
| 39 | SLU 22 | -0.01 | 9.38 | 49.39 | -0.3898 | -0.0093 | 0.0003 |
| 39 | SLU 23 | -0.01 | 9.29 | 49.95 | -0.3838 | -0.0088 | 0.0003 |
| 39 | SLU 24 | -0.02 | 9.4 | 49.85 | -0.391 | -0.0094 | 0.0003 |
| 39 | SLU 25 | -0.01 | 9.35 | 50.19 | -0.3873 | -0.0091 | 0.0003 |
| 39 | SLU 26 | -0.01 | 9.24 | 50.16 | -0.3824 | -0.0088 | 0.0003 |
| 39 | SLU 27 | -0.02 | 9.35 | 50.06 | -0.3896 | -0.0094 | 0.0003 |
| 39 | SLU 28 | -0.01 | 9.3 | 50.4 | -0.386 | -0.0091 | 0.0003 |
| 39 | SLU 29 | -0.02 | 9.28 | 49.81 | -0.3871 | -0.0093 | 0.0003 |
| 39 | SLU 30 | -0.01 | 9.23 | 50.15 | -0.3834 | -0.009 | 0.0003 |
| 39 | SLU 31 | -0.01 | 11.12 | 57.44 | -0.4582 | -0.0104 | 0.0003 |
| 39 | SLU 32 | -0.02 | 11.23 | 57.34 | -0.4655 | -0.0109 | 0.0003 |
| 39 | SLU 33 | -0.02 | 11.18 | 57.68 | -0.4618 | -0.0106 | 0.0003 |
| 39 | SLU 34 | -0.01 | 11.07 | 57.65 | -0.4569 | -0.0104 | 0.0003 |
| 39 | SLU 35 | -0.02 | 11.18 | 57.55 | -0.4641 | -0.0109 | 0.0003 |
| 39 | SLU 36 | -0.02 | 11.13 | 57.89 | -0.4604 | -0.0106 | 0.0003 |
| 39 | SLU 37 | -0.02 | 11.11 | 57.3 | -0.4616 | -0.0109 | 0.0003 |
| 39 | SLU 38 | -0.02 | 11.06 | 57.63 | -0.4579 | -0.0106 | 0.0003 |
| 39 | SLU 39 | -0.02 | 11.99 | 60.08 | -0.4962 | -0.0115 | 0.0004 |
| 39 | SLU 40 | -0.02 | 11.94 | 60.42 | -0.4926 | -0.0113 | 0.0004 |
| 39 | SLU 41 | -0.02 | 11.95 | 60.29 | -0.4949 | -0.0115 | 0.0004 |
| 39 | SLU 42 | -0.02 | 11.89 | 60.63 | -0.4912 | -0.0113 | 0.0004 |
| 39 | SLU 43 | -0.02 | 10.64 | 57.42 | -0.4469 | -0.0104 | 0.0003 |
| 39 | SLU 44 | -0.02 | 10.55 | 57.98 | -0.4409 | -0.0099 | 0.0003 |
| 39 | SLU 45 | -0.02 | 10.66 | 57.88 | -0.4481 | -0.0104 | 0.0003 |
| 39 | SLU 46 | -0.02 | 10.6 | 58.22 | -0.4444 | -0.0102 | 0.0003 |
| 39 | SLU 47 | -0.02 | 10.5 | 58.19 | -0.4395 | -0.0099 | 0.0003 |
| 39 | SLU 48 | -0.02 | 10.61 | 58.09 | -0.4467 | -0.0104 | 0.0003 |
| 39 | SLU 49 | -0.02 | 10.56 | 58.43 | -0.443 | -0.0101 | 0.0003 |
| 39 | SLU 50 | -0.02 | 10.54 | 57.84 | -0.4442 | -0.0104 | 0.0003 |
| 39 | SLU 51 | -0.02 | 10.49 | 58.18 | -0.4405 | -0.0101 | 0.0003 |
| 39 | SLU 52 | -0.02 | 12.38 | 65.47 | -0.5153 | -0.0115 | 0.0004 |
| 39 | SLU 53 | -0.02 | 12.49 | 65.37 | -0.5226 | -0.012 | 0.0004 |
| 39 | SLU 54 | -0.02 | 12.44 | 65.7 | -0.5189 | -0.0117 | 0.0004 |
| 39 | SLU 55 | -0.02 | 12.33 | 65.68 | -0.5139 | -0.0115 | 0.0004 |
| 39 | SLU 56 | -0.02 | 12.44 | 65.58 | -0.5212 | -0.012 | 0.0004 |
| 39 | SLU 57 | -0.02 | 12.39 | 65.91 | -0.5175 | -0.0117 | 0.0004 |
| 39 | SLU 58 | -0.03 | 12.37 | 65.32 | -0.5186 | -0.0119 | 0.0004 |
| 39 | SLU 59 | -0.02 | 12.32 | 65.66 | -0.515 | -0.0117 | 0.0004 |
| 39 | SLU 60 | -0.02 | 13.25 | 68.11 | -0.5533 | -0.0126 | 0.0004 |
| 39 | SLU 61 | -0.02 | 13.2 | 68.45 | -0.5497 | -0.0123 | 0.0004 |
| 39 | SLU 62 | -0.03 | 13.2 | 68.32 | -0.5519 | -0.0126 | 0.0004 |
| 39 | SLU 63 | -0.02 | 13.15 | 68.66 | -0.5483 | -0.0123 | 0.0004 |
| 39 | SLU 64 | -0.02 | 11.58 | 61.55 | -0.4834 | -0.0114 | 0.0004 |
| 39 | SLU 65 | -0.02 | 11.49 | 62.12 | -0.4773 | -0.011 | 0.0004 |
| 39 | SLU 66 | -0.02 | 11.61 | 62.01 | -0.4845 | -0.0115 | 0.0004 |
| 39 | SLU 67 | -0.02 | 11.55 | 62.35 | -0.4809 | -0.0112 | 0.0004 |
| 39 | SLU 68 | -0.02 | 11.44 | 62.32 | -0.4759 | -0.0109 | 0.0004 |

| Nodo | Cont. | Reazione a traslazione | | | Reazione a rotazione | | |
|---|---|---|---|---|---|---|---|
| Ind. | N.br. | x | y | z | x | y | z |
| 39 | SLU 69 | -0.02 | 11.56 | 62.22 | -0.4831 | -0.0115 | 0.0004 |
| 39 | SLU 70 | -0.02 | 11.5 | 62.56 | -0.4795 | -0.0112 | 0.0004 |
| 39 | SLU 71 | -0.02 | 11.49 | 61.97 | -0.4806 | -0.0114 | 0.0004 |
| 39 | SLU 72 | -0.02 | 11.43 | 62.31 | -0.477 | -0.0111 | 0.0004 |
| 39 | SLU 73 | -0.02 | 13.32 | 69.6 | -0.5518 | -0.0125 | 0.0004 |
| 39 | SLU 74 | -0.02 | 13.44 | 69.5 | -0.559 | -0.013 | 0.0004 |
| 39 | SLU 75 | -0.02 | 13.38 | 69.84 | -0.5553 | -0.0128 | 0.0004 |
| 39 | SLU 76 | -0.02 | 13.27 | 69.81 | -0.5504 | -0.0125 | 0.0004 |
| 39 | SLU 77 | -0.02 | 13.39 | 69.71 | -0.5576 | -0.013 | 0.0004 |
| 39 | SLU 78 | -0.02 | 13.33 | 70.05 | -0.554 | -0.0128 | 0.0004 |
| 39 | SLU 79 | -0.02 | 13.32 | 69.46 | -0.5551 | -0.013 | 0.0004 |
| 39 | SLU 80 | -0.02 | 13.26 | 69.79 | -0.5514 | -0.0127 | 0.0004 |
| 39 | SLU 81 | -0.02 | 14.2 | 72.25 | -0.5898 | -0.0137 | 0.0004 |
| 39 | SLU 82 | -0.02 | 14.14 | 72.58 | -0.5861 | -0.0134 | 0.0004 |
| 39 | SLU 83 | -0.02 | 14.15 | 72.45 | -0.5884 | -0.0137 | 0.0004 |
| 39 | SLU 84 | -0.02 | 14.1 | 72.79 | -0.5847 | -0.0134 | 0.0004 |
| 39 | SLE RA 1 | -0.02 | 8.7 | 46.44 | -0.3638 | -0.0086 | 0.0003 |
| 39 | SLE RA 2 | -0.01 | 8.64 | 46.82 | -0.3598 | -0.0082 | 0.0003 |
| 39 | SLE RA 3 | -0.02 | 8.72 | 46.75 | -0.3646 | -0.0086 | 0.0003 |
| 39 | SLE RA 4 | -0.01 | 8.68 | 46.97 | -0.3621 | -0.0084 | 0.0003 |
| 39 | SLE RA 5 | -0.01 | 8.61 | 46.95 | -0.3588 | -0.0082 | 0.0003 |
| 39 | SLE RA 6 | -0.02 | 8.68 | 46.89 | -0.3637 | -0.0086 | 0.0003 |
| 39 | SLE RA 7 | -0.01 | 8.65 | 47.11 | -0.3612 | -0.0084 | 0.0003 |
| 39 | SLE RA 8 | -0.02 | 8.64 | 46.72 | -0.362 | -0.0086 | 0.0003 |
| 39 | SLE RA 9 | -0.02 | 8.6 | 46.94 | -0.3595 | -0.0084 | 0.0003 |
| 39 | SLE RA 10 | -0.01 | 9.86 | 51.81 | -0.4094 | -0.0093 | 0.0003 |
| 39 | SLE RA 11 | -0.02 | 9.94 | 51.74 | -0.4142 | -0.0096 | 0.0003 |
| 39 | SLE RA 12 | -0.02 | 9.9 | 51.96 | -0.4118 | -0.0095 | 0.0003 |
| 39 | SLE RA 13 | -0.01 | 9.83 | 51.95 | -0.4085 | -0.0093 | 0.0003 |
| 39 | SLE RA 14 | -0.02 | 9.91 | 51.88 | -0.4133 | -0.0096 | 0.0003 |
| 39 | SLE RA 15 | -0.02 | 9.87 | 52.1 | -0.4109 | -0.0094 | 0.0003 |
| 39 | SLE RA 16 | -0.02 | 9.86 | 51.71 | -0.4116 | -0.0096 | 0.0003 |
| 39 | SLE RA 17 | -0.02 | 9.82 | 51.93 | -0.4092 | -0.0094 | 0.0003 |
| 39 | SLE RA 18 | -0.02 | 10.45 | 53.57 | -0.4347 | -0.0101 | 0.0003 |
| 39 | SLE RA 19 | -0.02 | 10.41 | 53.79 | -0.4323 | -0.0099 | 0.0003 |
| 39 | SLE RA 20 | -0.02 | 10.41 | 53.71 | -0.4338 | -0.0101 | 0.0003 |
| 39 | SLE RA 21 | -0.02 | 10.38 | 53.93 | -0.4314 | -0.0099 | 0.0003 |
| 39 | SLE FR 1 | -0.02 | 8.7 | 46.44 | -0.3638 | -0.0086 | 0.0003 |
| 39 | SLE FR 2 | -0.01 | 8.69 | 46.51 | -0.363 | -0.0085 | 0.0003 |
| 39 | SLE FR 3 | -0.02 | 8.69 | 46.5 | -0.3634 | -0.0086 | 0.0003 |
| 39 | SLE FR 4 | -0.02 | 9.21 | 48.65 | -0.3843 | -0.0089 | 0.0003 |
| 39 | SLE FR 5 | -0.02 | 9.21 | 48.63 | -0.3847 | -0.009 | 0.0003 |
| 39 | SLE FR 6 | -0.02 | 9.57 | 50 | -0.3993 | -0.0093 | 0.0003 |
| 39 | SLE QP 1 | -0.02 | 8.7 | 46.44 | -0.3638 | -0.0086 | 0.0003 |
| 39 | SLE QP 2 | -0.02 | 9.23 | 48.58 | -0.3851 | -0.009 | 0.0003 |
| 39 | SLD 1 | -0.08 | 9.33 | 44.41 | -0.4054 | -0.0274 | -0.0001 |
| 39 | SLD 2 | -0.08 | 9.33 | 44.41 | -0.4054 | -0.0274 | -0.0001 |
| 39 | SLD 3 | -0.05 | 5.37 | 41.62 | -0.227 | -0.0199 | 0.0001 |
| 39 | SLD 4 | -0.05 | 5.37 | 41.62 | -0.227 | -0.0199 | 0.0001 |
| 39 | SLD 5 | -0.09 | 15.26 | 51.56 | -0.6617 | -0.026 | -0.0001 |
| 39 | SLD 6 | -0.09 | 15.26 | 51.56 | -0.6617 | -0.026 | -0.0001 |
| 39 | SLD 7 | 0.02 | 2.06 | 42.26 | -0.0672 | -0.0008 | 0.0005 |
| 39 | SLD 8 | 0.02 | 2.06 | 42.26 | -0.0672 | -0.0008 | 0.0005 |
| 39 | SLD 9 | -0.05 | 16.39 | 54.9 | -0.703 | -0.0172 | 0.0001 |
| 39 | SLD 10 | -0.05 | 16.39 | 54.9 | -0.703 | -0.0172 | 0.0001 |
| 39 | SLD 11 | 0.05 | 3.19 | 45.6 | -0.1085 | 0.008 | 0.0006 |
| 39 | SLD 12 | 0.05 | 3.19 | 45.6 | -0.1085 | 0.008 | 0.0006 |
| 39 | SLD 13 | 0.02 | 13.08 | 55.53 | -0.5432 | 0.0018 | 0.0005 |
| 39 | SLD 14 | 0.02 | 13.08 | 55.53 | -0.5432 | 0.0018 | 0.0005 |
| 39 | SLD 15 | 0.05 | 9.12 | 52.74 | -0.3648 | 0.0094 | 0.0006 |
| 39 | SLD 16 | 0.05 | 9.12 | 52.74 | -0.3648 | 0.0094 | 0.0006 |
| 39 | SLV 1 | -0.18 | 9.5 | 39.07 | -0.433 | -0.0523 | -0.0006 |
| 39 | SLV 2 | -0.18 | 9.5 | 39.07 | -0.433 | -0.0523 | -0.0006 |
| 39 | SLV 3 | -0.1 | 0.35 | 32.51 | -0.0212 | -0.0346 | -0.0002 |
| 39 | SLV 4 | -0.1 | 0.35 | 32.51 | -0.0212 | -0.0346 | -0.0002 |
| 39 | SLV 5 | -0.18 | 23.18 | 55.68 | -1.0241 | -0.0489 | -0.0005 |
| 39 | SLV 6 | -0.18 | 23.18 | 55.68 | -1.0241 | -0.0489 | -0.0005 |
| 39 | SLV 7 | 0.07 | -7.31 | 33.8 | 0.3487 | 0.0102 | 0.0007 |
| 39 | SLV 8 | 0.07 | -7.31 | 33.8 | 0.3487 | 0.0102 | 0.0007 |
| 39 | SLV 9 | -0.1 | 25.76 | 63.35 | -1.1189 | -0.0282 | -0.0001 |
| 39 | SLV 10 | -0.1 | 25.76 | 63.35 | -1.1189 | -0.0282 | -0.0001 |
| 39 | SLV 11 | 0.15 | -4.73 | 41.48 | 0.2539 | 0.0308 | 0.0011 |
| 39 | SLV 12 | 0.15 | -4.73 | 41.48 | 0.2539 | 0.0308 | 0.0011 |
| 39 | SLV 13 | 0.07 | 18.1 | 64.65 | -0.749 | 0.0165 | 0.0008 |
| 39 | SLV 14 | 0.07 | 18.1 | 64.65 | -0.749 | 0.0165 | 0.0008 |
| 39 | SLV 15 | 0.15 | 8.95 | 58.09 | -0.3372 | 0.0343 | 0.0011 |
| 39 | SLV 16 | 0.15 | 8.95 | 58.09 | -0.3372 | 0.0343 | 0.0011 |
| 40 | SLU 1 | 0.01 | 9.27 | 45.17 | -0.4223 | 0.0043 | -0.0004 |
| 40 | SLU 2 | 0.01 | 8.95 | 45.22 | -0.4064 | 0.0037 | -0.0004 |
| 40 | SLU 3 | 0.01 | 10.03 | 46.85 | -0.4576 | 0.0042 | -0.0004 |
| 40 | SLU 4 | 0.01 | 9.84 | 46.88 | -0.448 | 0.0039 | -0.0004 |
| 40 | SLU 5 | 0.01 | 9.73 | 46.84 | -0.4431 | 0.0036 | -0.0004 |
| 40 | SLU 6 | 0.01 | 10.82 | 48.48 | -0.4942 | 0.0042 | -0.0004 |
| 40 | SLU 7 | 0.01 | 10.63 | 48.51 | -0.4847 | 0.0038 | -0.0004 |
| 40 | SLU 8 | 0.01 | 10.84 | 48.41 | -0.4956 | 0.0041 | -0.0004 |
| 40 | SLU 9 | 0.01 | 10.65 | 48.44 | -0.4861 | 0.0038 | -0.0004 |
| 40 | SLU 10 | 0.01 | 10.71 | 52.65 | -0.4847 | 0.0049 | -0.0004 |
| 40 | SLU 11 | 0.02 | 11.8 | 54.29 | -0.5359 | 0.0055 | -0.0004 |

| Nodo | Cont. | Reazione a traslazione | | | Reazione a rotazione | | |
|---|---|---|---|---|---|---|---|
| Ind. | N.br. | x | y | z | x | y | z |
| 40 | SLU 12 | 0.01 | 11.61 | 54.32 | -0.5264 | 0.0051 | -0.0004 |
| 40 | SLU 13 | 0.01 | 11.5 | 54.28 | -0.5214 | 0.0049 | -0.0004 |
| 40 | SLU 14 | 0.02 | 12.59 | 55.91 | -0.5726 | 0.0054 | -0.0004 |
| 40 | SLU 15 | 0.02 | 12.39 | 55.94 | -0.5631 | 0.0051 | -0.0004 |
| 40 | SLU 16 | 0.02 | 12.61 | 55.85 | -0.574 | 0.0054 | -0.0004 |
| 40 | SLU 17 | 0.02 | 12.41 | 55.88 | -0.5645 | 0.0051 | -0.0004 |
| 40 | SLU 18 | 0.02 | 11.79 | 55.79 | -0.5342 | 0.0061 | -0.0004 |
| 40 | SLU 19 | 0.02 | 11.6 | 55.82 | -0.5247 | 0.0057 | -0.0004 |
| 40 | SLU 20 | 0.02 | 12.58 | 57.41 | -0.5709 | 0.006 | -0.0004 |
| 40 | SLU 21 | 0.02 | 12.38 | 57.44 | -0.5614 | 0.0057 | -0.0004 |
| 40 | SLU 22 | 0.01 | 10.68 | 49.88 | -0.4838 | 0.0048 | -0.0004 |
| 40 | SLU 23 | 0.01 | 10.35 | 49.93 | -0.4679 | 0.0042 | -0.0004 |
| 40 | SLU 24 | 0.01 | 11.44 | 51.57 | -0.5191 | 0.0047 | -0.0004 |
| 40 | SLU 25 | 0.01 | 11.25 | 51.6 | -0.5095 | 0.0044 | -0.0004 |
| 40 | SLU 26 | 0.01 | 11.14 | 51.56 | -0.5045 | 0.0041 | -0.0004 |
| 40 | SLU 27 | 0.01 | 12.23 | 53.19 | -0.5557 | 0.0047 | -0.0004 |
| 40 | SLU 28 | 0.01 | 12.03 | 53.22 | -0.5462 | 0.0043 | -0.0004 |
| 40 | SLU 29 | 0.01 | 12.25 | 53.13 | -0.5571 | 0.0047 | -0.0004 |
| 40 | SLU 30 | 0.01 | 12.05 | 53.16 | -0.5476 | 0.0043 | -0.0004 |
| 40 | SLU 31 | 0.01 | 12.12 | 57.37 | -0.5462 | 0.0055 | -0.0005 |
| 40 | SLU 32 | 0.02 | 13.21 | 59 | -0.5974 | 0.006 | -0.0005 |
| 40 | SLU 33 | 0.01 | 13.01 | 59.03 | -0.5879 | 0.0057 | -0.0005 |
| 40 | SLU 34 | 0.01 | 12.9 | 58.99 | -0.5829 | 0.0054 | -0.0005 |
| 40 | SLU 35 | 0.02 | 13.99 | 60.63 | -0.6341 | 0.006 | -0.0005 |
| 40 | SLU 36 | 0.02 | 13.8 | 60.66 | -0.6246 | 0.0056 | -0.0005 |
| 40 | SLU 37 | 0.02 | 14.01 | 60.56 | -0.6355 | 0.0059 | -0.0005 |
| 40 | SLU 38 | 0.02 | 13.82 | 60.59 | -0.626 | 0.0056 | -0.0005 |
| 40 | SLU 39 | 0.02 | 13.2 | 60.5 | -0.5957 | 0.0066 | -0.0005 |
| 40 | SLU 40 | 0.02 | 13 | 60.53 | -0.5862 | 0.0063 | -0.0005 |
| 40 | SLU 41 | 0.02 | 13.99 | 62.13 | -0.6324 | 0.0066 | -0.0005 |
| 40 | SLU 42 | 0.02 | 13.79 | 62.16 | -0.6229 | 0.0062 | -0.0005 |
| 40 | SLU 43 | 0.02 | 11.57 | 57.1 | -0.5279 | 0.0054 | -0.0004 |
| 40 | SLU 44 | 0.01 | 11.24 | 57.15 | -0.512 | 0.0048 | -0.0005 |
| 40 | SLU 45 | 0.02 | 12.33 | 58.79 | -0.5632 | 0.0053 | -0.0005 |
| 40 | SLU 46 | 0.02 | 12.14 | 58.82 | -0.5536 | 0.005 | -0.0005 |
| 40 | SLU 47 | 0.01 | 12.03 | 58.77 | -0.5486 | 0.0047 | -0.0005 |
| 40 | SLU 48 | 0.02 | 13.12 | 60.41 | -0.5998 | 0.0053 | -0.0005 |
| 40 | SLU 49 | 0.02 | 12.93 | 60.44 | -0.5903 | 0.0049 | -0.0005 |
| 40 | SLU 50 | 0.02 | 13.14 | 60.35 | -0.6012 | 0.0052 | -0.0005 |
| 40 | SLU 51 | 0.02 | 12.95 | 60.38 | -0.5917 | 0.0049 | -0.0005 |
| 40 | SLU 52 | 0.02 | 13.01 | 64.59 | -0.5903 | 0.006 | -0.0005 |
| 40 | SLU 53 | 0.02 | 14.1 | 66.22 | -0.6415 | 0.0066 | -0.0005 |
| 40 | SLU 54 | 0.02 | 13.91 | 66.25 | -0.632 | 0.0062 | -0.0005 |
| 40 | SLU 55 | 0.02 | 13.8 | 66.21 | -0.627 | 0.006 | -0.0005 |
| 40 | SLU 56 | 0.02 | 14.89 | 67.84 | -0.6782 | 0.0065 | -0.0005 |
| 40 | SLU 57 | 0.02 | 14.69 | 67.87 | -0.6687 | 0.0062 | -0.0005 |
| 40 | SLU 58 | 0.02 | 14.91 | 67.78 | -0.6796 | 0.0065 | -0.0005 |
| 40 | SLU 59 | 0.02 | 14.71 | 67.81 | -0.6701 | 0.0062 | -0.0005 |
| 40 | SLU 60 | 0.02 | 14.09 | 67.72 | -0.6398 | 0.0072 | -0.0005 |
| 40 | SLU 61 | 0.02 | 13.9 | 67.75 | -0.6303 | 0.0068 | -0.0005 |
| 40 | SLU 62 | 0.02 | 14.88 | 69.34 | -0.6765 | 0.0071 | -0.0005 |
| 40 | SLU 63 | 0.02 | 14.68 | 69.37 | -0.667 | 0.0068 | -0.0005 |
| 40 | SLU 64 | 0.02 | 12.97 | 61.82 | -0.5894 | 0.0059 | -0.0005 |
| 40 | SLU 65 | 0.01 | 12.65 | 61.87 | -0.5735 | 0.0053 | -0.0005 |
| 40 | SLU 66 | 0.02 | 13.74 | 63.5 | -0.6247 | 0.0058 | -0.0005 |
| 40 | SLU 67 | 0.02 | 13.55 | 63.53 | -0.6151 | 0.0055 | -0.0005 |
| 40 | SLU 68 | 0.01 | 13.44 | 63.49 | -0.6101 | 0.0052 | -0.0005 |
| 40 | SLU 69 | 0.02 | 14.53 | 65.12 | -0.6613 | 0.0058 | -0.0005 |
| 40 | SLU 70 | 0.02 | 14.33 | 65.15 | -0.6518 | 0.0054 | -0.0005 |
| 40 | SLU 71 | 0.02 | 14.55 | 65.06 | -0.6627 | 0.0058 | -0.0005 |
| 40 | SLU 72 | 0.02 | 14.35 | 65.09 | -0.6532 | 0.0054 | -0.0005 |
| 40 | SLU 73 | 0.02 | 14.42 | 69.3 | -0.6518 | 0.0066 | -0.0005 |
| 40 | SLU 74 | 0.02 | 15.51 | 70.94 | -0.703 | 0.0071 | -0.0005 |
| 40 | SLU 75 | 0.02 | 15.31 | 70.97 | -0.6935 | 0.0068 | -0.0006 |
| 40 | SLU 76 | 0.02 | 15.2 | 70.92 | -0.6885 | 0.0065 | -0.0006 |
| 40 | SLU 77 | 0.02 | 16.29 | 72.56 | -0.7397 | 0.0071 | -0.0006 |
| 40 | SLU 78 | 0.02 | 16.1 | 72.59 | -0.7302 | 0.0067 | -0.0006 |
| 40 | SLU 79 | 0.02 | 16.31 | 72.5 | -0.7411 | 0.007 | -0.0006 |
| 40 | SLU 80 | 0.02 | 16.12 | 72.53 | -0.7316 | 0.0067 | -0.0006 |
| 40 | SLU 81 | 0.02 | 15.5 | 72.44 | -0.7013 | 0.0077 | -0.0006 |
| 40 | SLU 82 | 0.02 | 15.3 | 72.47 | -0.6918 | 0.0074 | -0.0006 |
| 40 | SLU 83 | 0.02 | 16.28 | 74.06 | -0.738 | 0.0077 | -0.0006 |
| 40 | SLU 84 | 0.02 | 16.09 | 74.09 | -0.7285 | 0.0073 | -0.0006 |
| 40 | SLE RA 1 | 0.01 | 9.67 | 46.51 | -0.4398 | 0.0044 | -0.0004 |
| 40 | SLE RA 2 | 0.01 | 9.45 | 46.55 | -0.4292 | 0.004 | -0.0004 |
| 40 | SLE RA 3 | 0.01 | 10.18 | 47.64 | -0.4634 | 0.0044 | -0.0004 |
| 40 | SLE RA 4 | 0.01 | 10.05 | 47.66 | -0.457 | 0.0041 | -0.0004 |
| 40 | SLE RA 5 | 0.01 | 9.98 | 47.63 | -0.4537 | 0.004 | -0.0004 |
| 40 | SLE RA 6 | 0.01 | 10.71 | 48.72 | -0.4878 | 0.0043 | -0.0004 |
| 40 | SLE RA 7 | 0.01 | 10.58 | 48.74 | -0.4815 | 0.0041 | -0.0004 |
| 40 | SLE RA 8 | 0.01 | 10.72 | 48.68 | -0.4887 | 0.0043 | -0.0004 |
| 40 | SLE RA 9 | 0.01 | 10.59 | 48.7 | -0.4824 | 0.0041 | -0.0004 |
| 40 | SLE RA 10 | 0.01 | 10.63 | 51.5 | -0.4815 | 0.0049 | -0.0004 |
| 40 | SLE RA 11 | 0.02 | 11.36 | 52.59 | -0.5156 | 0.0052 | -0.0004 |
| 40 | SLE RA 12 | 0.01 | 11.23 | 52.62 | -0.5093 | 0.005 | -0.0004 |
| 40 | SLE RA 13 | 0.01 | 11.16 | 52.59 | -0.5059 | 0.0048 | -0.0004 |
| 40 | SLE RA 14 | 0.02 | 11.88 | 53.68 | -0.5401 | 0.0052 | -0.0004 |
| 40 | SLE RA 15 | 0.01 | 11.75 | 53.7 | -0.5337 | 0.005 | -0.0004 |

| Nodo | Cont. | Reazione a traslazione | | | Reazione a rotazione | | |
|---|---|---|---|---|---|---|---|
| Ind. | N.br. | x | y | z | x | y | z |
| 40 | SLE RA 16 | 0.02 | 11.9 | 53.63 | -0.541 | 0.0052 | -0.0004 |
| 40 | SLE RA 17 | 0.01 | 11.77 | 53.65 | -0.5346 | 0.0049 | -0.0004 |
| 40 | SLE RA 18 | 0.02 | 11.35 | 53.6 | -0.5145 | 0.0056 | -0.0004 |
| 40 | SLE RA 19 | 0.02 | 11.22 | 53.62 | -0.5081 | 0.0054 | -0.0004 |
| 40 | SLE RA 20 | 0.02 | 11.88 | 54.68 | -0.5389 | 0.0056 | -0.0004 |
| 40 | SLE RA 21 | 0.02 | 11.75 | 54.7 | -0.5326 | 0.0054 | -0.0004 |
| 40 | SLE FR 1 | 0.01 | 9.67 | 46.51 | -0.4398 | 0.0044 | -0.0004 |
| 40 | SLE FR 2 | 0.01 | 9.63 | 46.52 | -0.4377 | 0.0043 | -0.0004 |
| 40 | SLE FR 3 | 0.01 | 9.88 | 46.95 | -0.4496 | 0.0044 | -0.0004 |
| 40 | SLE FR 4 | 0.01 | 10.13 | 48.65 | -0.4601 | 0.0047 | -0.0004 |
| 40 | SLE FR 5 | 0.01 | 10.39 | 49.07 | -0.472 | 0.0048 | -0.0004 |
| 40 | SLE FR 6 | 0.01 | 10.51 | 50.05 | -0.4772 | 0.005 | -0.0004 |
| 40 | SLE QP 1 | 0.01 | 9.67 | 46.51 | -0.4398 | 0.0044 | -0.0004 |
| 40 | SLE QP 2 | 0.01 | 10.18 | 48.64 | -0.4622 | 0.0048 | -0.0004 |
| 40 | SLD 1 | -0.04 | 13.94 | 57.07 | -0.6316 | -0.008 | -0.0008 |
| 40 | SLD 2 | -0.04 | 13.94 | 57.07 | -0.6316 | -0.008 | -0.0008 |
| 40 | SLD 3 | -0.07 | 9.62 | 52.73 | -0.4342 | -0.0164 | -0.0007 |
| 40 | SLD 4 | -0.07 | 9.62 | 52.73 | -0.4342 | -0.0164 | -0.0007 |
| 40 | SLD 5 | 0.05 | 17.86 | 57.76 | -0.8124 | 0.0136 | -0.0008 |
| 40 | SLD 6 | 0.05 | 17.86 | 57.76 | -0.8124 | 0.0136 | -0.0008 |
| 40 | SLD 7 | -0.06 | 3.46 | 43.28 | -0.1545 | -0.0143 | -0.0002 |
| 40 | SLD 8 | -0.06 | 3.46 | 43.28 | -0.1545 | -0.0143 | -0.0002 |
| 40 | SLD 9 | 0.09 | 16.89 | 54 | -0.77 | 0.0238 | -0.0006 |
| 40 | SLD 10 | 0.09 | 16.89 | 54 | -0.77 | 0.0238 | -0.0006 |
| 40 | SLD 11 | -0.02 | 2.49 | 39.52 | -0.1121 | -0.0041 | 0 |
| 40 | SLD 12 | -0.02 | 2.49 | 39.52 | -0.1121 | -0.0041 | 0 |
| 40 | SLD 13 | 0.1 | 10.73 | 44.55 | -0.4902 | 0.0259 | -0.0001 |
| 40 | SLD 14 | 0.1 | 10.73 | 44.55 | -0.4902 | 0.0259 | -0.0001 |
| 40 | SLD 15 | 0.07 | 6.41 | 40.21 | -0.2929 | 0.0176 | 0.0001 |
| 40 | SLD 16 | 0.07 | 6.41 | 40.21 | -0.2929 | 0.0176 | 0.0001 |
| 40 | SLV 1 | -0.12 | 19.01 | 68.38 | -0.8604 | -0.0266 | -0.0015 |
| 40 | SLV 2 | -0.12 | 19.01 | 68.38 | -0.8604 | -0.0266 | -0.0015 |
| 40 | SLV 3 | -0.19 | 8.91 | 58.03 | -0.3984 | -0.0462 | -0.0011 |
| 40 | SLV 4 | -0.19 | 8.91 | 58.03 | -0.3984 | -0.0462 | -0.0011 |
| 40 | SLV 5 | 0.09 | 28.15 | 70.26 | -1.2824 | 0.0252 | -0.0013 |
| 40 | SLV 6 | 0.09 | 28.15 | 70.26 | -1.2824 | 0.0252 | -0.0013 |
| 40 | SLV 7 | -0.17 | -5.53 | 35.76 | 0.2576 | -0.0404 | 0.0001 |
| 40 | SLV 8 | -0.17 | -5.53 | 35.76 | 0.2576 | -0.0404 | 0.0001 |
| 40 | SLV 9 | 0.2 | 25.88 | 61.52 | -1.1821 | 0.0499 | -0.0008 |
| 40 | SLV 10 | 0.2 | 25.88 | 61.52 | -1.1821 | 0.0499 | -0.0008 |
| 40 | SLV 11 | -0.07 | -7.8 | 27.02 | 0.3579 | -0.0157 | 0.0006 |
| 40 | SLV 12 | -0.07 | -7.8 | 27.02 | 0.3579 | -0.0157 | 0.0006 |
| 40 | SLV 13 | 0.22 | 11.44 | 39.25 | -0.5261 | 0.0558 | 0.0003 |
| 40 | SLV 14 | 0.22 | 11.44 | 39.25 | -0.5261 | 0.0558 | 0.0003 |
| 40 | SLV 15 | 0.14 | 1.34 | 28.9 | -0.0641 | 0.0361 | 0.0007 |
| 40 | SLV 16 | 0.14 | 1.34 | 28.9 | -0.0641 | 0.0361 | 0.0007 |
| 41 | SLU 1 | 0.38 | 1.15 | 38.12 | -0.3651 | 0.0688 | -0.0236 |
| 41 | SLU 2 | 0.36 | 0.19 | 40.05 | -0.3063 | 0.0662 | -0.0229 |
| 41 | SLU 3 | 0.39 | 1.18 | 38.8 | -0.3717 | 0.07 | -0.024 |
| 41 | SLU 4 | 0.37 | 0.6 | 39.96 | -0.3365 | 0.0684 | -0.0236 |
| 41 | SLU 5 | 0.36 | 0.2 | 40.5 | -0.3107 | 0.0668 | -0.0231 |
| 41 | SLU 6 | 0.39 | 1.19 | 39.25 | -0.3761 | 0.0706 | -0.0242 |
| 41 | SLU 7 | 0.38 | 0.61 | 40.41 | -0.3408 | 0.0691 | -0.0238 |
| 41 | SLU 8 | 0.39 | 1.17 | 39.02 | -0.3738 | 0.0701 | -0.024 |
| 41 | SLU 9 | 0.37 | 0.59 | 40.18 | -0.3385 | 0.0685 | -0.0236 |
| 41 | SLU 10 | 0.41 | 0.53 | 45.3 | -0.3518 | 0.0766 | -0.0266 |
| 41 | SLU 11 | 0.45 | 1.51 | 44.06 | -0.4172 | 0.0803 | -0.0276 |
| 41 | SLU 12 | 0.43 | 0.94 | 45.22 | -0.3819 | 0.0788 | -0.0272 |
| 41 | SLU 13 | 0.42 | 0.53 | 45.76 | -0.3561 | 0.0772 | -0.0268 |
| 41 | SLU 14 | 0.45 | 1.52 | 44.51 | -0.4215 | 0.081 | -0.0278 |
| 41 | SLU 15 | 0.43 | 0.94 | 45.67 | -0.3862 | 0.0794 | -0.0275 |
| 41 | SLU 16 | 0.45 | 1.5 | 44.28 | -0.4192 | 0.0804 | -0.0277 |
| 41 | SLU 17 | 0.43 | 0.92 | 45.44 | -0.384 | 0.0789 | -0.0273 |
| 41 | SLU 18 | 0.46 | 1.63 | 45.63 | -0.43 | 0.0836 | -0.0288 |
| 41 | SLU 19 | 0.45 | 1.05 | 46.79 | -0.3948 | 0.082 | -0.0284 |
| 41 | SLU 20 | 0.47 | 1.64 | 46.08 | -0.4344 | 0.0842 | -0.029 |
| 41 | SLU 21 | 0.45 | 1.06 | 47.24 | -0.3991 | 0.0827 | -0.0286 |
| 41 | SLU 22 | 0.42 | 1.38 | 42.12 | -0.3958 | 0.0767 | -0.0263 |
| 41 | SLU 23 | 0.4 | 0.42 | 44.06 | -0.337 | 0.0741 | -0.0256 |
| 41 | SLU 24 | 0.43 | 1.4 | 42.81 | -0.4024 | 0.0779 | -0.0267 |
| 41 | SLU 25 | 0.42 | 0.83 | 43.97 | -0.3671 | 0.0763 | -0.0263 |
| 41 | SLU 26 | 0.4 | 0.42 | 44.51 | -0.3413 | 0.0747 | -0.0259 |
| 41 | SLU 27 | 0.43 | 1.41 | 43.26 | -0.4067 | 0.0785 | -0.0269 |
| 41 | SLU 28 | 0.42 | 0.83 | 44.42 | -0.3714 | 0.0769 | -0.0265 |
| 41 | SLU 29 | 0.43 | 1.39 | 43.03 | -0.4044 | 0.0779 | -0.0267 |
| 41 | SLU 30 | 0.42 | 0.81 | 44.19 | -0.3692 | 0.0764 | -0.0264 |
| 41 | SLU 31 | 0.46 | 0.75 | 49.31 | -0.3824 | 0.0844 | -0.0293 |
| 41 | SLU 32 | 0.49 | 1.74 | 48.06 | -0.4478 | 0.0882 | -0.0303 |
| 41 | SLU 33 | 0.48 | 1.16 | 49.22 | -0.4126 | 0.0867 | -0.0299 |
| 41 | SLU 34 | 0.46 | 0.76 | 49.76 | -0.3868 | 0.0851 | -0.0295 |
| 41 | SLU 35 | 0.49 | 1.74 | 48.52 | -0.4522 | 0.0888 | -0.0306 |
| 41 | SLU 36 | 0.48 | 1.17 | 49.67 | -0.4169 | 0.0873 | -0.0302 |
| 41 | SLU 37 | 0.49 | 1.72 | 48.28 | -0.4499 | 0.0883 | -0.0304 |
| 41 | SLU 38 | 0.48 | 1.15 | 49.44 | -0.4146 | 0.0867 | -0.03 |
| 41 | SLU 39 | 0.51 | 1.86 | 49.63 | -0.4607 | 0.0914 | -0.0315 |
| 41 | SLU 40 | 0.49 | 1.28 | 50.79 | -0.4254 | 0.0899 | -0.0311 |
| 41 | SLU 41 | 0.51 | 1.86 | 50.09 | -0.465 | 0.0921 | -0.0317 |
| 41 | SLU 42 | 0.5 | 1.28 | 51.24 | -0.4297 | 0.0905 | -0.0313 |

| Nodo | Cont. | Reazione a traslazione | | | Reazione a rotazione | | |
|---|---|---|---|---|---|---|---|
| Ind. | N.br. | x | y | z | x | y | z |
| 41 | SLU 43 | 0.48 | 1.42 | 48.18 | -0.4641 | 0.0867 | -0.0297 |
| 41 | SLU 44 | 0.46 | 0.46 | 50.11 | -0.4053 | 0.0842 | -0.0291 |
| 41 | SLU 45 | 0.49 | 1.45 | 48.86 | -0.4708 | 0.0879 | -0.0301 |
| 41 | SLU 46 | 0.47 | 0.87 | 50.02 | -0.4355 | 0.0864 | -0.0297 |
| 41 | SLU 47 | 0.46 | 0.47 | 50.56 | -0.4097 | 0.0848 | -0.0293 |
| 41 | SLU 48 | 0.49 | 1.46 | 49.31 | -0.4751 | 0.0886 | -0.0303 |
| 41 | SLU 49 | 0.48 | 0.88 | 50.47 | -0.4398 | 0.087 | -0.0299 |
| 41 | SLU 50 | 0.49 | 1.44 | 49.08 | -0.4728 | 0.088 | -0.0302 |
| 41 | SLU 51 | 0.47 | 0.86 | 50.24 | -0.4375 | 0.0864 | -0.0298 |
| 41 | SLU 52 | 0.51 | 0.8 | 55.37 | -0.4508 | 0.0945 | -0.0327 |
| 41 | SLU 53 | 0.54 | 1.78 | 54.12 | -0.5162 | 0.0983 | -0.0337 |
| 41 | SLU 54 | 0.53 | 1.21 | 55.28 | -0.4809 | 0.0967 | -0.0334 |
| 41 | SLU 55 | 0.52 | 0.8 | 55.82 | -0.4551 | 0.0951 | -0.0329 |
| 41 | SLU 56 | 0.55 | 1.79 | 54.57 | -0.5205 | 0.0989 | -0.034 |
| 41 | SLU 57 | 0.53 | 1.21 | 55.73 | -0.4853 | 0.0974 | -0.0336 |
| 41 | SLU 58 | 0.55 | 1.77 | 54.34 | -0.5183 | 0.0983 | -0.0338 |
| 41 | SLU 59 | 0.53 | 1.19 | 55.5 | -0.483 | 0.0968 | -0.0334 |
| 41 | SLU 60 | 0.56 | 1.9 | 55.69 | -0.5291 | 0.1015 | -0.0349 |
| 41 | SLU 61 | 0.55 | 1.32 | 56.85 | -0.4938 | 0.1 | -0.0345 |
| 41 | SLU 62 | 0.57 | 1.91 | 56.14 | -0.5334 | 0.1021 | -0.0351 |
| 41 | SLU 63 | 0.55 | 1.33 | 57.3 | -0.4981 | 0.1006 | -0.0347 |
| 41 | SLU 64 | 0.52 | 1.65 | 52.19 | -0.4948 | 0.0946 | -0.0324 |
| 41 | SLU 65 | 0.5 | 0.69 | 54.12 | -0.436 | 0.092 | -0.0318 |
| 41 | SLU 66 | 0.53 | 1.67 | 52.87 | -0.5014 | 0.0958 | -0.0328 |
| 41 | SLU 67 | 0.52 | 1.1 | 54.03 | -0.4661 | 0.0942 | -0.0324 |
| 41 | SLU 68 | 0.5 | 0.69 | 54.57 | -0.4403 | 0.0927 | -0.032 |
| 41 | SLU 69 | 0.53 | 1.68 | 53.32 | -0.5058 | 0.0964 | -0.0331 |
| 41 | SLU 70 | 0.52 | 1.1 | 54.48 | -0.4705 | 0.0949 | -0.0327 |
| 41 | SLU 71 | 0.53 | 1.66 | 53.09 | -0.5035 | 0.0959 | -0.0329 |
| 41 | SLU 72 | 0.52 | 1.08 | 54.25 | -0.4682 | 0.0943 | -0.0325 |
| 41 | SLU 73 | 0.56 | 1.02 | 59.37 | -0.4814 | 0.1024 | -0.0354 |
| 41 | SLU 74 | 0.59 | 2.01 | 58.12 | -0.5469 | 0.1061 | -0.0365 |
| 41 | SLU 75 | 0.57 | 1.43 | 59.28 | -0.5116 | 0.1046 | -0.0361 |
| 41 | SLU 76 | 0.56 | 1.03 | 59.82 | -0.4858 | 0.103 | -0.0356 |
| 41 | SLU 77 | 0.59 | 2.01 | 58.58 | -0.5512 | 0.1068 | -0.0367 |
| 41 | SLU 78 | 0.58 | 1.44 | 59.73 | -0.5159 | 0.1052 | -0.0363 |
| 41 | SLU 79 | 0.59 | 1.99 | 58.35 | -0.5489 | 0.1062 | -0.0365 |
| 41 | SLU 80 | 0.57 | 1.42 | 59.5 | -0.5136 | 0.1047 | -0.0361 |
| 41 | SLU 81 | 0.61 | 2.12 | 59.7 | -0.5597 | 0.1094 | -0.0376 |
| 41 | SLU 82 | 0.59 | 1.55 | 60.85 | -0.5244 | 0.1078 | -0.0372 |
| 41 | SLU 83 | 0.61 | 2.13 | 60.15 | -0.5641 | 0.11 | -0.0378 |
| 41 | SLU 84 | 0.6 | 1.55 | 61.31 | -0.5288 | 0.1085 | -0.0375 |
| 41 | SLE RA 1 | 0.39 | 1.22 | 39.26 | -0.3739 | 0.071 | -0.0243 |
| 41 | SLE RA 2 | 0.38 | 0.58 | 40.55 | -0.3347 | 0.0693 | -0.0239 |
| 41 | SLE RA 3 | 0.4 | 1.24 | 39.72 | -0.3783 | 0.0718 | -0.0246 |
| 41 | SLE RA 4 | 0.39 | 0.85 | 40.49 | -0.3548 | 0.0708 | -0.0243 |
| 41 | SLE RA 5 | 0.38 | 0.58 | 40.85 | -0.3376 | 0.0697 | -0.0241 |
| 41 | SLE RA 6 | 0.4 | 1.24 | 40.02 | -0.3812 | 0.0723 | -0.0248 |
| 41 | SLE RA 7 | 0.39 | 0.86 | 40.79 | -0.3577 | 0.0712 | -0.0245 |
| 41 | SLE RA 8 | 0.4 | 1.23 | 39.86 | -0.3797 | 0.0719 | -0.0246 |
| 41 | SLE RA 9 | 0.39 | 0.84 | 40.64 | -0.3561 | 0.0709 | -0.0244 |
| 41 | SLE RA 10 | 0.42 | 0.8 | 44.05 | -0.365 | 0.0762 | -0.0263 |
| 41 | SLE RA 11 | 0.44 | 1.46 | 43.22 | -0.4086 | 0.0787 | -0.027 |
| 41 | SLE RA 12 | 0.43 | 1.07 | 43.99 | -0.3851 | 0.0777 | -0.0268 |
| 41 | SLE RA 13 | 0.42 | 0.8 | 44.35 | -0.3679 | 0.0766 | -0.0265 |
| 41 | SLE RA 14 | 0.44 | 1.46 | 43.52 | -0.4115 | 0.0792 | -0.0272 |
| 41 | SLE RA 15 | 0.43 | 1.08 | 44.29 | -0.388 | 0.0781 | -0.0269 |
| 41 | SLE RA 16 | 0.44 | 1.45 | 43.37 | -0.41 | 0.0788 | -0.0271 |
| 41 | SLE RA 17 | 0.43 | 1.06 | 44.14 | -0.3864 | 0.0777 | -0.0268 |
| 41 | SLE RA 18 | 0.45 | 1.54 | 44.27 | -0.4172 | 0.0809 | -0.0278 |
| 41 | SLE RA 19 | 0.44 | 1.15 | 45.04 | -0.3936 | 0.0799 | -0.0275 |
| 41 | SLE RA 20 | 0.45 | 1.54 | 44.57 | -0.42 | 0.0813 | -0.028 |
| 41 | SLE RA 21 | 0.44 | 1.16 | 45.34 | -0.3965 | 0.0803 | -0.0277 |
| 41 | SLE FR 1 | 0.39 | 1.22 | 39.26 | -0.3739 | 0.071 | -0.0243 |
| 41 | SLE FR 2 | 0.39 | 1.09 | 39.52 | -0.366 | 0.0707 | -0.0243 |
| 41 | SLE FR 3 | 0.39 | 1.22 | 39.38 | -0.375 | 0.0712 | -0.0244 |
| 41 | SLE FR 4 | 0.41 | 1.19 | 41.02 | -0.379 | 0.0737 | -0.0253 |
| 41 | SLE FR 5 | 0.41 | 1.32 | 40.88 | -0.388 | 0.0742 | -0.0254 |
| 41 | SLE FR 6 | 0.42 | 1.38 | 41.77 | -0.3955 | 0.076 | -0.0261 |
| 41 | SLE QP 1 | 0.39 | 1.22 | 39.26 | -0.3739 | 0.071 | -0.0243 |
| 41 | SLE QP 2 | 0.41 | 1.31 | 40.76 | -0.3869 | 0.074 | -0.0254 |
| 41 | SLD 1 | 0.59 | 4.76 | 47.5 | -0.3847 | 0.1246 | -0.0328 |
| 41 | SLD 2 | 0.59 | 4.76 | 47.5 | -0.3847 | 0.1246 | -0.0328 |
| 41 | SLD 3 | 0.5 | 0.89 | 44.52 | -0.1538 | 0.109 | -0.0264 |
| 41 | SLD 4 | 0.5 | 0.89 | 44.52 | -0.1538 | 0.109 | -0.0264 |
| 41 | SLD 5 | 0.6 | 8.21 | 47.32 | -0.7364 | 0.1128 | -0.0372 |
| 41 | SLD 6 | 0.6 | 8.21 | 47.32 | -0.7364 | 0.1128 | -0.0372 |
| 41 | SLD 7 | 0.3 | -4.68 | 37.36 | 0.0332 | 0.0609 | -0.016 |
| 41 | SLD 8 | 0.3 | -4.68 | 37.36 | 0.0332 | 0.0609 | -0.016 |
| 41 | SLD 9 | 0.52 | 7.31 | 44.17 | -0.807 | 0.0871 | -0.0347 |
| 41 | SLD 10 | 0.52 | 7.31 | 44.17 | -0.807 | 0.0871 | -0.0347 |
| 41 | SLD 11 | 0.22 | -5.59 | 34.21 | -0.0373 | 0.0352 | -0.0135 |
| 41 | SLD 12 | 0.22 | -5.59 | 34.21 | -0.0373 | 0.0352 | -0.0135 |
| 41 | SLD 13 | 0.32 | 1.74 | 37.01 | -0.6199 | 0.039 | -0.0243 |
| 41 | SLD 14 | 0.32 | 1.74 | 37.01 | -0.6199 | 0.039 | -0.0243 |
| 41 | SLD 15 | 0.23 | -2.13 | 34.02 | -0.389 | 0.0234 | -0.018 |
| 41 | SLD 16 | 0.23 | -2.13 | 34.02 | -0.389 | 0.0234 | -0.018 |
| 41 | SLV 1 | 0.82 | 9.43 | 56.43 | -0.3857 | 0.1906 | -0.0425 |

| Nodo | Cont. | Reazione a traslazione | | | Reazione a rotazione | | |
|---|---|---|---|---|---|---|---|
| Ind. | N.br. | x | y | z | x | y | z |
| 41 | SLV 2 | 0.82 | 9.43 | 56.43 | -0.3857 | 0.1906 | -0.0425 |
| 41 | SLV 3 | 0.61 | 0.32 | 49.35 | 0.1678 | 0.1542 | -0.0276 |
| 41 | SLV 4 | 0.61 | 0.32 | 49.35 | 0.1678 | 0.1542 | -0.0276 |
| 41 | SLV 5 | 0.85 | 17.58 | 56.21 | -1.2259 | 0.1642 | -0.0532 |
| 41 | SLV 6 | 0.85 | 17.58 | 56.21 | -1.2259 | 0.1642 | -0.0532 |
| 41 | SLV 7 | 0.15 | -12.81 | 32.59 | 0.619 | 0.0429 | -0.0034 |
| 41 | SLV 8 | 0.15 | -12.81 | 32.59 | 0.619 | 0.0429 | -0.0034 |
| 41 | SLV 9 | 0.67 | 15.44 | 48.93 | -1.3927 | 0.1051 | -0.0473 |
| 41 | SLV 10 | 0.67 | 15.44 | 48.93 | -1.3927 | 0.1051 | -0.0473 |
| 41 | SLV 11 | -0.04 | -14.95 | 25.32 | 0.4522 | -0.0162 | 0.0024 |
| 41 | SLV 12 | -0.04 | -14.95 | 25.32 | 0.4522 | -0.0162 | 0.0024 |
| 41 | SLV 13 | 0.21 | 2.31 | 32.18 | -0.9415 | -0.0062 | -0.0231 |
| 41 | SLV 14 | 0.21 | 2.31 | 32.18 | -0.9415 | -0.0062 | -0.0231 |
| 41 | SLV 15 | 0 | -6.81 | 25.1 | -0.388 | -0.0426 | -0.0082 |
| 41 | SLV 16 | 0 | -6.81 | 25.1 | -0.388 | -0.0426 | -0.0082 |
| 42 | SLU 1 | -0.05 | -0.15 | 0.35 | 0.0148 | -0.0133 | 0.0027 |
| 42 | SLU 2 | -0.06 | -0.15 | 0.35 | 0.0149 | -0.0137 | 0.0027 |
| 42 | SLU 3 | -0.05 | -0.21 | 0.18 | 0.0166 | -0.0134 | 0.0027 |
| 42 | SLU 4 | -0.06 | -0.21 | 0.18 | 0.0167 | -0.0137 | 0.0027 |
| 42 | SLU 5 | -0.06 | -0.19 | 0.25 | 0.0159 | -0.0137 | 0.0027 |
| 42 | SLU 6 | -0.06 | -0.24 | 0.08 | 0.0177 | -0.0134 | 0.0027 |
| 42 | SLU 7 | -0.06 | -0.24 | 0.08 | 0.0177 | -0.0136 | 0.0027 |
| 42 | SLU 8 | -0.06 | -0.22 | 0.15 | 0.0169 | -0.0132 | 0.0027 |
| 42 | SLU 9 | -0.06 | -0.22 | 0.15 | 0.017 | -0.0135 | 0.0027 |
| 42 | SLU 10 | -0.09 | 0.28 | 2.47 | 0.0111 | -0.0256 | 0.005 |
| 42 | SLU 11 | -0.09 | 0.23 | 2.31 | 0.0128 | -0.0253 | 0.0049 |
| 42 | SLU 12 | -0.09 | 0.22 | 2.3 | 0.0128 | -0.0255 | 0.005 |
| 42 | SLU 13 | -0.09 | 0.25 | 2.37 | 0.0121 | -0.0256 | 0.005 |
| 42 | SLU 14 | -0.09 | 0.19 | 2.21 | 0.0138 | -0.0252 | 0.0049 |
| 42 | SLU 15 | -0.09 | 0.19 | 2.2 | 0.0139 | -0.0255 | 0.005 |
| 42 | SLU 16 | -0.09 | 0.22 | 2.28 | 0.0131 | -0.0251 | 0.0049 |
| 42 | SLU 17 | -0.09 | 0.22 | 2.27 | 0.0131 | -0.0254 | 0.005 |
| 42 | SLU 18 | -0.11 | 0.47 | 3.39 | 0.0094 | -0.0303 | 0.0059 |
| 42 | SLU 19 | -0.11 | 0.47 | 3.38 | 0.0094 | -0.0305 | 0.0059 |
| 42 | SLU 20 | -0.11 | 0.44 | 3.29 | 0.0104 | -0.0302 | 0.0059 |
| 42 | SLU 21 | -0.11 | 0.43 | 3.28 | 0.0105 | -0.0305 | 0.0059 |
| 42 | SLU 22 | -0.06 | -0.3 | 0.02 | 0.0208 | -0.016 | 0.0032 |
| 42 | SLU 23 | -0.06 | -0.3 | 0.01 | 0.0209 | -0.0164 | 0.0033 |
| 42 | SLU 24 | -0.06 | -0.35 | -0.16 | 0.0226 | -0.0161 | 0.0032 |
| 42 | SLU 25 | -0.07 | -0.36 | -0.16 | 0.0227 | -0.0163 | 0.0032 |
| 42 | SLU 26 | -0.07 | -0.33 | -0.09 | 0.022 | -0.0164 | 0.0033 |
| 42 | SLU 27 | -0.07 | -0.39 | -0.26 | 0.0237 | -0.016 | 0.0032 |
| 42 | SLU 28 | -0.07 | -0.39 | -0.26 | 0.0237 | -0.0163 | 0.0032 |
| 42 | SLU 29 | -0.06 | -0.36 | -0.18 | 0.0229 | -0.0159 | 0.0032 |
| 42 | SLU 30 | -0.07 | -0.36 | -0.19 | 0.023 | -0.0162 | 0.0032 |
| 42 | SLU 31 | -0.1 | 0.13 | 2.13 | 0.0171 | -0.0283 | 0.0055 |
| 42 | SLU 32 | -0.1 | 0.08 | 1.97 | 0.0188 | -0.0279 | 0.0055 |
| 42 | SLU 33 | -0.1 | 0.08 | 1.96 | 0.0189 | -0.0282 | 0.0055 |
| 42 | SLU 34 | -0.1 | 0.1 | 2.03 | 0.0181 | -0.0282 | 0.0055 |
| 42 | SLU 35 | -0.1 | 0.05 | 1.87 | 0.0198 | -0.0279 | 0.0055 |
| 42 | SLU 36 | -0.1 | 0.05 | 1.86 | 0.0199 | -0.0282 | 0.0055 |
| 42 | SLU 37 | -0.1 | 0.07 | 1.94 | 0.0191 | -0.0278 | 0.0054 |
| 42 | SLU 38 | -0.1 | 0.07 | 1.94 | 0.0191 | -0.028 | 0.0055 |
| 42 | SLU 39 | -0.11 | 0.32 | 3.05 | 0.0154 | -0.0329 | 0.0064 |
| 42 | SLU 40 | -0.12 | 0.32 | 3.05 | 0.0154 | -0.0332 | 0.0065 |
| 42 | SLU 41 | -0.12 | 0.29 | 2.95 | 0.0164 | -0.0329 | 0.0064 |
| 42 | SLU 42 | -0.12 | 0.29 | 2.95 | 0.0165 | -0.0332 | 0.0065 |
| 42 | SLU 43 | -0.07 | -0.15 | 0.57 | 0.0172 | -0.0164 | 0.0033 |
| 42 | SLU 44 | -0.07 | -0.15 | 0.57 | 0.0173 | -0.0168 | 0.0034 |
| 42 | SLU 45 | -0.07 | -0.2 | 0.4 | 0.019 | -0.0165 | 0.0033 |
| 42 | SLU 46 | -0.07 | -0.21 | 0.4 | 0.0191 | -0.0167 | 0.0033 |
| 42 | SLU 47 | -0.07 | -0.18 | 0.47 | 0.0183 | -0.0168 | 0.0034 |
| 42 | SLU 48 | -0.07 | -0.24 | 0.3 | 0.0201 | -0.0165 | 0.0033 |
| 42 | SLU 49 | -0.07 | -0.24 | 0.3 | 0.0201 | -0.0167 | 0.0033 |
| 42 | SLU 50 | -0.07 | -0.21 | 0.38 | 0.0193 | -0.0163 | 0.0033 |
| 42 | SLU 51 | -0.07 | -0.21 | 0.37 | 0.0193 | -0.0166 | 0.0033 |
| 42 | SLU 52 | -0.1 | 0.28 | 2.69 | 0.0135 | -0.0287 | 0.0056 |
| 42 | SLU 53 | -0.1 | 0.23 | 2.53 | 0.0152 | -0.0283 | 0.0056 |
| 42 | SLU 54 | -0.1 | 0.23 | 2.52 | 0.0152 | -0.0286 | 0.0056 |
| 42 | SLU 55 | -0.1 | 0.25 | 2.59 | 0.0145 | -0.0287 | 0.0056 |
| 42 | SLU 56 | -0.1 | 0.2 | 2.43 | 0.0162 | -0.0283 | 0.0056 |
| 42 | SLU 57 | -0.11 | 0.2 | 2.42 | 0.0163 | -0.0286 | 0.0056 |
| 42 | SLU 58 | -0.1 | 0.22 | 2.5 | 0.0155 | -0.0282 | 0.0055 |
| 42 | SLU 59 | -0.1 | 0.22 | 2.5 | 0.0155 | -0.0285 | 0.0056 |
| 42 | SLU 60 | -0.12 | 0.47 | 3.61 | 0.0118 | -0.0333 | 0.0065 |
| 42 | SLU 61 | -0.12 | 0.47 | 3.6 | 0.0118 | -0.0336 | 0.0066 |
| 42 | SLU 62 | -0.12 | 0.44 | 3.51 | 0.0128 | -0.0333 | 0.0065 |
| 42 | SLU 63 | -0.12 | 0.44 | 3.51 | 0.0128 | -0.0336 | 0.0066 |
| 42 | SLU 64 | -0.08 | -0.29 | 0.24 | 0.0232 | -0.0191 | 0.0038 |
| 42 | SLU 65 | -0.08 | -0.3 | 0.23 | 0.0233 | -0.0195 | 0.0039 |
| 42 | SLU 66 | -0.08 | -0.35 | 0.07 | 0.025 | -0.0191 | 0.0038 |
| 42 | SLU 67 | -0.08 | -0.35 | 0.06 | 0.0251 | -0.0194 | 0.0039 |
| 42 | SLU 68 | -0.08 | -0.33 | 0.13 | 0.0243 | -0.0194 | 0.0039 |
| 42 | SLU 69 | -0.08 | -0.38 | -0.03 | 0.0261 | -0.0191 | 0.0038 |
| 42 | SLU 70 | -0.08 | -0.38 | -0.04 | 0.0261 | -0.0194 | 0.0039 |
| 42 | SLU 71 | -0.08 | -0.36 | 0.04 | 0.0253 | -0.019 | 0.0038 |
| 42 | SLU 72 | -0.08 | -0.36 | 0.03 | 0.0253 | -0.0192 | 0.0038 |
| 42 | SLU 73 | -0.11 | 0.14 | 2.35 | 0.0195 | -0.0313 | 0.0061 |

| Nodo | Cont. | Reazione a traslazione | | | Reazione a rotazione | | |
|---|---|---|---|---|---|---|---|
| Ind. | N.br. | x | y | z | x | y | z |
| 42 | SLU 74 | -0.11 | 0.08 | 2.19 | 0.0212 | -0.031 | 0.0061 |
| 42 | SLU 75 | -0.11 | 0.08 | 2.19 | 0.0212 | -0.0313 | 0.0061 |
| 42 | SLU 76 | -0.11 | 0.11 | 2.25 | 0.0205 | -0.0313 | 0.0061 |
| 42 | SLU 77 | -0.11 | 0.05 | 2.09 | 0.0222 | -0.031 | 0.0061 |
| 42 | SLU 78 | -0.11 | 0.05 | 2.09 | 0.0223 | -0.0312 | 0.0061 |
| 42 | SLU 79 | -0.11 | 0.08 | 2.16 | 0.0215 | -0.0309 | 0.0061 |
| 42 | SLU 80 | -0.11 | 0.07 | 2.16 | 0.0215 | -0.0311 | 0.0061 |
| 42 | SLU 81 | -0.13 | 0.33 | 3.27 | 0.0178 | -0.036 | 0.007 |
| 42 | SLU 82 | -0.13 | 0.33 | 3.27 | 0.0178 | -0.0363 | 0.0071 |
| 42 | SLU 83 | -0.13 | 0.29 | 3.17 | 0.0188 | -0.036 | 0.007 |
| 42 | SLU 84 | -0.13 | 0.29 | 3.17 | 0.0189 | -0.0362 | 0.0071 |
| 42 | SLE RA 1 | -0.06 | -0.19 | 0.26 | 0.0165 | -0.0141 | 0.0028 |
| 42 | SLE RA 2 | -0.06 | -0.2 | 0.25 | 0.0166 | -0.0144 | 0.0029 |
| 42 | SLE RA 3 | -0.06 | -0.23 | 0.14 | 0.0177 | -0.0141 | 0.0028 |
| 42 | SLE RA 4 | -0.06 | -0.23 | 0.14 | 0.0178 | -0.0143 | 0.0029 |
| 42 | SLE RA 5 | -0.06 | -0.22 | 0.19 | 0.0173 | -0.0143 | 0.0029 |
| 42 | SLE RA 6 | -0.06 | -0.25 | 0.08 | 0.0184 | -0.0141 | 0.0028 |
| 42 | SLE RA 7 | -0.06 | -0.25 | 0.07 | 0.0185 | -0.0143 | 0.0029 |
| 42 | SLE RA 8 | -0.06 | -0.24 | 0.12 | 0.0179 | -0.014 | 0.0028 |
| 42 | SLE RA 9 | -0.06 | -0.24 | 0.12 | 0.018 | -0.0142 | 0.0028 |
| 42 | SLE RA 10 | -0.08 | 0.09 | 1.67 | 0.0141 | -0.0223 | 0.0044 |
| 42 | SLE RA 11 | -0.08 | 0.06 | 1.56 | 0.0152 | -0.022 | 0.0043 |
| 42 | SLE RA 12 | -0.08 | 0.06 | 1.56 | 0.0152 | -0.0222 | 0.0044 |
| 42 | SLE RA 13 | -0.08 | 0.07 | 1.6 | 0.0147 | -0.0222 | 0.0044 |
| 42 | SLE RA 14 | -0.08 | 0.04 | 1.49 | 0.0159 | -0.022 | 0.0043 |
| 42 | SLE RA 15 | -0.08 | 0.04 | 1.49 | 0.0159 | -0.0222 | 0.0044 |
| 42 | SLE RA 16 | -0.08 | 0.05 | 1.54 | 0.0154 | -0.0219 | 0.0043 |
| 42 | SLE RA 17 | -0.08 | 0.05 | 1.54 | 0.0154 | -0.0221 | 0.0043 |
| 42 | SLE RA 18 | -0.09 | 0.22 | 2.28 | 0.0129 | -0.0254 | 0.005 |
| 42 | SLE RA 19 | -0.09 | 0.22 | 2.28 | 0.0129 | -0.0255 | 0.005 |
| 42 | SLE RA 20 | -0.09 | 0.2 | 2.21 | 0.0136 | -0.0254 | 0.005 |
| 42 | SLE RA 21 | -0.09 | 0.2 | 2.21 | 0.0136 | -0.0255 | 0.005 |
| 42 | SLE FR 1 | -0.06 | -0.19 | 0.26 | 0.0165 | -0.0141 | 0.0028 |
| 42 | SLE FR 2 | -0.06 | -0.19 | 0.26 | 0.0166 | -0.0141 | 0.0028 |
| 42 | SLE FR 3 | -0.06 | -0.2 | 0.23 | 0.0168 | -0.0141 | 0.0028 |
| 42 | SLE FR 4 | -0.07 | -0.07 | 0.86 | 0.0155 | -0.0175 | 0.0035 |
| 42 | SLE FR 5 | -0.07 | -0.08 | 0.84 | 0.0157 | -0.0175 | 0.0034 |
| 42 | SLE FR 6 | -0.07 | 0.01 | 1.27 | 0.0147 | -0.0197 | 0.0039 |
| 42 | SLE QP 1 | -0.06 | -0.19 | 0.26 | 0.0165 | -0.0141 | 0.0028 |
| 42 | SLE QP 2 | -0.07 | -0.07 | 0.86 | 0.0155 | -0.0175 | 0.0034 |
| 42 | SLD 1 | -0.33 | 0.79 | 3.39 | -0.0127 | -0.0611 | 0.0126 |
| 42 | SLD 2 | -0.33 | 0.79 | 3.39 | -0.0127 | -0.0611 | 0.0126 |
| 42 | SLD 3 | -0.3 | -0.23 | 0.46 | 0.0209 | -0.057 | 0.0117 |
| 42 | SLD 4 | -0.3 | -0.23 | 0.46 | 0.0209 | -0.057 | 0.0117 |
| 42 | SLD 5 | -0.19 | 1.73 | 6.05 | -0.0438 | -0.0369 | 0.0076 |
| 42 | SLD 6 | -0.19 | 1.73 | 6.05 | -0.0438 | -0.0369 | 0.0076 |
| 42 | SLD 7 | -0.09 | -1.65 | -3.69 | 0.0679 | -0.023 | 0.0045 |
| 42 | SLD 8 | -0.09 | -1.65 | -3.69 | 0.0679 | -0.023 | 0.0045 |
| 42 | SLD 9 | -0.04 | 1.52 | 5.41 | -0.037 | -0.0119 | 0.0024 |
| 42 | SLD 10 | -0.04 | 1.52 | 5.41 | -0.037 | -0.0119 | 0.0024 |
| 42 | SLD 11 | 0.05 | -1.87 | -4.32 | 0.0747 | 0.002 | -0.0007 |
| 42 | SLD 12 | 0.05 | -1.87 | -4.32 | 0.0747 | 0.002 | -0.0007 |
| 42 | SLD 13 | 0.16 | 0.09 | 1.26 | 0.0101 | 0.022 | -0.0048 |
| 42 | SLD 14 | 0.16 | 0.09 | 1.26 | 0.0101 | 0.022 | -0.0048 |
| 42 | SLD 15 | 0.19 | -0.93 | -1.66 | 0.0436 | 0.0262 | -0.0057 |
| 42 | SLD 16 | 0.19 | -0.93 | -1.66 | 0.0436 | 0.0262 | -0.0057 |
| 42 | SLV 1 | -0.71 | 1.94 | 6.78 | -0.0505 | -0.1231 | 0.0257 |
| 42 | SLV 2 | -0.71 | 1.94 | 6.78 | -0.0505 | -0.1231 | 0.0257 |
| 42 | SLV 3 | -0.64 | -0.43 | -0.07 | 0.028 | -0.1128 | 0.0234 |
| 42 | SLV 4 | -0.64 | -0.43 | -0.07 | 0.028 | -0.1128 | 0.0234 |
| 42 | SLV 5 | -0.37 | 4.14 | 13.02 | -0.1234 | -0.0648 | 0.0136 |
| 42 | SLV 6 | -0.37 | 4.14 | 13.02 | -0.1234 | -0.0648 | 0.0136 |
| 42 | SLV 7 | -0.13 | -3.78 | -9.79 | 0.1383 | -0.0304 | 0.006 |
| 42 | SLV 8 | -0.13 | -3.78 | -9.79 | 0.1383 | -0.0304 | 0.006 |
| 42 | SLV 9 | -0.01 | 3.64 | 11.52 | -0.1074 | -0.0046 | 0.0009 |
| 42 | SLV 10 | -0.01 | 3.64 | 11.52 | -0.1074 | -0.0046 | 0.0009 |
| 42 | SLV 11 | 0.24 | -4.28 | -11.29 | 0.1543 | 0.0299 | -0.0067 |
| 42 | SLV 12 | 0.24 | -4.28 | -11.29 | 0.1543 | 0.0299 | -0.0067 |
| 42 | SLV 13 | 0.5 | 0.29 | 1.79 | 0.0029 | 0.0778 | -0.0165 |
| 42 | SLV 14 | 0.5 | 0.29 | 1.79 | 0.0029 | 0.0778 | -0.0165 |
| 42 | SLV 15 | 0.58 | -2.08 | -5.05 | 0.0814 | 0.0882 | -0.0188 |
| 42 | SLV 16 | 0.58 | -2.08 | -5.05 | 0.0814 | 0.0882 | -0.0188 |
| 44 | SLU 1 | 6.82 | 9.63 | 69.3 | -0.1686 | 0.1182 | 0.0012 |
| 44 | SLU 2 | 6.18 | 10.83 | 72.55 | -0.2047 | 0.073 | 0.002 |
| 44 | SLU 3 | 7.17 | 10.12 | 72.85 | -0.1768 | 0.1245 | 0.0012 |
| 44 | SLU 4 | 6.79 | 10.84 | 74.8 | -0.1984 | 0.0974 | 0.0017 |
| 44 | SLU 5 | 6.5 | 11.25 | 75.66 | -0.2117 | 0.0793 | 0.002 |
| 44 | SLU 6 | 7.49 | 10.54 | 75.96 | -0.1838 | 0.1308 | 0.0013 |
| 44 | SLU 7 | 7.11 | 11.26 | 77.91 | -0.2054 | 0.1036 | 0.0018 |
| 44 | SLU 8 | 7.46 | 10.46 | 75.51 | -0.1826 | 0.1307 | 0.0013 |
| 44 | SLU 9 | 7.08 | 11.19 | 77.46 | -0.2043 | 0.1036 | 0.0018 |
| 44 | SLU 10 | 7.12 | 11.88 | 80.8 | -0.2204 | 0.0918 | 0.0021 |
| 44 | SLU 11 | 8.1 | 11.16 | 81.11 | -0.1925 | 0.1433 | 0.0013 |
| 44 | SLU 12 | 7.72 | 11.89 | 83.06 | -0.2141 | 0.1162 | 0.0018 |
| 44 | SLU 13 | 7.44 | 12.3 | 83.91 | -0.2274 | 0.0981 | 0.0021 |
| 44 | SLU 14 | 8.42 | 11.58 | 84.21 | -0.1995 | 0.1496 | 0.0013 |
| 44 | SLU 15 | 8.04 | 12.31 | 86.17 | -0.2212 | 0.1225 | 0.0018 |
| 44 | SLU 16 | 8.39 | 11.51 | 83.77 | -0.1983 | 0.1496 | 0.0013 |

| Nodo | Cont. | Reazione a traslazione | | | Reazione a rotazione | | |
|---|---|---|---|---|---|---|---|
| Ind. | N.br. | x | y | z | x | y | z |
| 44 | SLU 17 | 8.01 | 12.23 | 85.72 | -0.22 | 0.1224 | 0.0018 |
| 44 | SLU 18 | 8.15 | 11.12 | 81.09 | -0.191 | 0.1451 | 0.0013 |
| 44 | SLU 19 | 7.77 | 11.84 | 83.04 | -0.2127 | 0.1179 | 0.0018 |
| 44 | SLU 20 | 8.47 | 11.54 | 84.2 | -0.1981 | 0.1513 | 0.0013 |
| 44 | SLU 21 | 8.09 | 12.26 | 86.15 | -0.2197 | 0.1242 | 0.0018 |
| 44 | SLU 22 | 7.83 | 10.82 | 78.55 | -0.1866 | 0.1379 | 0.0013 |
| 44 | SLU 23 | 7.19 | 12.02 | 81.8 | -0.2227 | 0.0928 | 0.0021 |
| 44 | SLU 24 | 8.18 | 11.31 | 82.1 | -0.1948 | 0.1442 | 0.0013 |
| 44 | SLU 25 | 7.79 | 12.03 | 84.05 | -0.2164 | 0.1171 | 0.0018 |
| 44 | SLU 26 | 7.51 | 12.44 | 84.91 | -0.2297 | 0.099 | 0.0021 |
| 44 | SLU 27 | 8.49 | 11.73 | 85.21 | -0.2018 | 0.1505 | 0.0014 |
| 44 | SLU 28 | 8.11 | 12.45 | 87.16 | -0.2234 | 0.1234 | 0.0019 |
| 44 | SLU 29 | 8.47 | 11.66 | 84.76 | -0.2006 | 0.1505 | 0.0013 |
| 44 | SLU 30 | 8.08 | 12.38 | 86.71 | -0.2223 | 0.1234 | 0.0018 |
| 44 | SLU 31 | 8.13 | 13.07 | 90.06 | -0.2384 | 0.1116 | 0.0022 |
| 44 | SLU 32 | 9.11 | 12.35 | 90.36 | -0.2105 | 0.1631 | 0.0014 |
| 44 | SLU 33 | 8.73 | 13.08 | 92.31 | -0.2321 | 0.1359 | 0.0019 |
| 44 | SLU 34 | 8.45 | 13.49 | 93.16 | -0.2454 | 0.1179 | 0.0022 |
| 44 | SLU 35 | 9.43 | 12.77 | 93.47 | -0.2175 | 0.1693 | 0.0014 |
| 44 | SLU 36 | 9.05 | 13.5 | 95.42 | -0.2392 | 0.1422 | 0.0019 |
| 44 | SLU 37 | 9.4 | 12.7 | 93.02 | -0.2163 | 0.1693 | 0.0014 |
| 44 | SLU 38 | 9.02 | 13.43 | 94.97 | -0.238 | 0.1422 | 0.0019 |
| 44 | SLU 39 | 9.16 | 12.31 | 90.34 | -0.209 | 0.1648 | 0.0014 |
| 44 | SLU 40 | 8.78 | 13.03 | 92.29 | -0.2307 | 0.1377 | 0.0019 |
| 44 | SLU 41 | 9.48 | 12.73 | 93.45 | -0.2161 | 0.1711 | 0.0014 |
| 44 | SLU 42 | 9.1 | 13.45 | 95.4 | -0.2377 | 0.144 | 0.0019 |
| 44 | SLU 43 | 8.52 | 12.1 | 86.92 | -0.213 | 0.1468 | 0.0015 |
| 44 | SLU 44 | 7.88 | 13.31 | 90.17 | -0.2491 | 0.1017 | 0.0023 |
| 44 | SLU 45 | 8.87 | 12.6 | 90.47 | -0.2212 | 0.1531 | 0.0016 |
| 44 | SLU 46 | 8.49 | 13.32 | 92.42 | -0.2428 | 0.126 | 0.0021 |
| 44 | SLU 47 | 8.2 | 13.73 | 93.27 | -0.2561 | 0.1079 | 0.0024 |
| 44 | SLU 48 | 9.19 | 13.01 | 93.58 | -0.2282 | 0.1594 | 0.0016 |
| 44 | SLU 49 | 8.81 | 13.74 | 95.53 | -0.2499 | 0.1323 | 0.0021 |
| 44 | SLU 50 | 9.16 | 12.94 | 93.13 | -0.227 | 0.1594 | 0.0016 |
| 44 | SLU 51 | 8.78 | 13.67 | 95.08 | -0.2487 | 0.1323 | 0.0021 |
| 44 | SLU 52 | 8.82 | 14.36 | 98.42 | -0.2648 | 0.1205 | 0.0024 |
| 44 | SLU 53 | 9.8 | 13.64 | 98.72 | -0.2369 | 0.172 | 0.0016 |
| 44 | SLU 54 | 9.42 | 14.37 | 100.68 | -0.2585 | 0.1449 | 0.0021 |
| 44 | SLU 55 | 9.14 | 14.78 | 101.53 | -0.2718 | 0.1268 | 0.0024 |
| 44 | SLU 56 | 10.12 | 14.06 | 101.83 | -0.2439 | 0.1782 | 0.0017 |
| 44 | SLU 57 | 9.74 | 14.78 | 103.78 | -0.2656 | 0.1511 | 0.0022 |
| 44 | SLU 58 | 10.09 | 13.99 | 101.38 | -0.2427 | 0.1782 | 0.0016 |
| 44 | SLU 59 | 9.71 | 14.71 | 103.34 | -0.2644 | 0.1511 | 0.0021 |
| 44 | SLU 60 | 9.85 | 13.6 | 98.71 | -0.2355 | 0.1737 | 0.0016 |
| 44 | SLU 61 | 9.47 | 14.32 | 100.66 | -0.2571 | 0.1466 | 0.0021 |
| 44 | SLU 62 | 10.17 | 14.02 | 101.81 | -0.2425 | 0.18 | 0.0016 |
| 44 | SLU 63 | 9.79 | 14.74 | 103.77 | -0.2641 | 0.1529 | 0.0021 |
| 44 | SLU 64 | 9.53 | 13.3 | 96.17 | -0.231 | 0.1666 | 0.0016 |
| 44 | SLU 65 | 8.89 | 14.5 | 99.42 | -0.2671 | 0.1214 | 0.0024 |
| 44 | SLU 66 | 9.88 | 13.79 | 99.72 | -0.2392 | 0.1729 | 0.0016 |
| 44 | SLU 67 | 9.49 | 14.51 | 101.67 | -0.2608 | 0.1458 | 0.0021 |
| 44 | SLU 68 | 9.21 | 14.92 | 102.52 | -0.2741 | 0.1277 | 0.0025 |
| 44 | SLU 69 | 10.19 | 14.21 | 102.83 | -0.2462 | 0.1792 | 0.0017 |
| 44 | SLU 70 | 9.81 | 14.93 | 104.78 | -0.2679 | 0.1521 | 0.0022 |
| 44 | SLU 71 | 10.17 | 14.13 | 102.38 | -0.245 | 0.1792 | 0.0017 |
| 44 | SLU 72 | 9.79 | 14.86 | 104.33 | -0.2667 | 0.1521 | 0.0022 |
| 44 | SLU 73 | 9.83 | 15.55 | 107.67 | -0.2828 | 0.1402 | 0.0025 |
| 44 | SLU 74 | 10.81 | 14.83 | 107.98 | -0.2549 | 0.1917 | 0.0017 |
| 44 | SLU 75 | 10.43 | 15.56 | 109.93 | -0.2765 | 0.1646 | 0.0022 |
| 44 | SLU 76 | 10.15 | 15.97 | 110.78 | -0.2898 | 0.1465 | 0.0025 |
| 44 | SLU 77 | 11.13 | 15.25 | 111.08 | -0.2619 | 0.198 | 0.0017 |
| 44 | SLU 78 | 10.75 | 15.98 | 113.03 | -0.2836 | 0.1709 | 0.0022 |
| 44 | SLU 79 | 11.1 | 15.18 | 110.63 | -0.2607 | 0.198 | 0.0017 |
| 44 | SLU 80 | 10.72 | 15.9 | 112.59 | -0.2824 | 0.1709 | 0.0022 |
| 44 | SLU 81 | 10.86 | 14.79 | 107.96 | -0.2535 | 0.1935 | 0.0017 |
| 44 | SLU 82 | 10.48 | 15.51 | 109.91 | -0.2751 | 0.1664 | 0.0022 |
| 44 | SLU 83 | 11.18 | 15.21 | 111.07 | -0.2605 | 0.1998 | 0.0017 |
| 44 | SLU 84 | 10.8 | 15.93 | 113.02 | -0.2821 | 0.1727 | 0.0022 |
| 44 | SLE RA 1 | 7.11 | 9.97 | 71.94 | -0.1737 | 0.1238 | 0.0012 |
| 44 | SLE RA 2 | 6.68 | 10.77 | 74.11 | -0.1978 | 0.0937 | 0.0018 |
| 44 | SLE RA 3 | 7.34 | 10.29 | 74.31 | -0.1792 | 0.128 | 0.0012 |
| 44 | SLE RA 4 | 7.09 | 10.78 | 75.61 | -0.1936 | 0.1099 | 0.0016 |
| 44 | SLE RA 5 | 6.9 | 11.05 | 76.18 | -0.2025 | 0.0979 | 0.0018 |
| 44 | SLE RA 6 | 7.55 | 10.57 | 76.38 | -0.1839 | 0.1322 | 0.0013 |
| 44 | SLE RA 7 | 7.3 | 11.06 | 77.68 | -0.1983 | 0.1141 | 0.0016 |
| 44 | SLE RA 8 | 7.53 | 10.53 | 76.08 | -0.1831 | 0.1322 | 0.0013 |
| 44 | SLE RA 9 | 7.28 | 11.01 | 77.38 | -0.1975 | 0.1141 | 0.0016 |
| 44 | SLE RA 10 | 7.31 | 11.47 | 79.61 | -0.2083 | 0.1062 | 0.0018 |
| 44 | SLE RA 11 | 7.96 | 10.99 | 79.81 | -0.1897 | 0.1406 | 0.0013 |
| 44 | SLE RA 12 | 7.71 | 11.47 | 81.11 | -0.2041 | 0.1225 | 0.0016 |
| 44 | SLE RA 13 | 7.52 | 11.75 | 81.68 | -0.213 | 0.1104 | 0.0018 |
| 44 | SLE RA 14 | 8.18 | 11.27 | 81.89 | -0.1943 | 0.1448 | 0.0013 |
| 44 | SLE RA 15 | 7.92 | 11.75 | 83.19 | -0.2088 | 0.1267 | 0.0016 |
| 44 | SLE RA 16 | 8.16 | 11.22 | 81.59 | -0.1936 | 0.1447 | 0.0013 |
| 44 | SLE RA 17 | 7.9 | 11.7 | 82.89 | -0.208 | 0.1267 | 0.0016 |
| 44 | SLE RA 18 | 8 | 10.96 | 79.8 | -0.1887 | 0.1417 | 0.0013 |
| 44 | SLE RA 19 | 7.74 | 11.44 | 81.1 | -0.2031 | 0.1237 | 0.0016 |
| 44 | SLE RA 20 | 8.21 | 11.24 | 81.87 | -0.1934 | 0.1459 | 0.0013 |

| Nodo | Cont. | Reazione a traslazione | | | Reazione a rotazione | | |
|---|---|---|---|---|---|---|---|
| Ind. | N.br. | x | y | z | x | y | z |
| 44 | SLE RA 21 | 7.96 | 11.72 | 83.17 | -0.2078 | 0.1279 | 0.0016 |
| 44 | SLE FR 1 | 7.11 | 9.97 | 71.94 | -0.1737 | 0.1238 | 0.0012 |
| 44 | SLE FR 2 | 7.02 | 10.13 | 72.37 | -0.1786 | 0.1178 | 0.0013 |
| 44 | SLE FR 3 | 7.19 | 10.08 | 72.77 | -0.1756 | 0.1255 | 0.0012 |
| 44 | SLE FR 4 | 7.29 | 10.43 | 74.73 | -0.183 | 0.1232 | 0.0013 |
| 44 | SLE FR 5 | 7.46 | 10.38 | 75.13 | -0.1801 | 0.1309 | 0.0012 |
| 44 | SLE FR 6 | 7.55 | 10.46 | 75.87 | -0.1812 | 0.1328 | 0.0012 |
| 44 | SLE QP 1 | 7.11 | 9.97 | 71.94 | -0.1737 | 0.1238 | 0.0012 |
| 44 | SLE QP 2 | 7.37 | 10.26 | 74.3 | -0.1782 | 0.1292 | 0.0012 |
| 44 | SLD 1 | 12.3 | 14.38 | 103.86 | -0.2789 | 0.2786 | 0.0001 |
| 44 | SLD 2 | 12.3 | 14.38 | 103.86 | -0.2789 | 0.2786 | 0.0001 |
| 44 | SLD 3 | 11.23 | 11.15 | 90.77 | -0.1585 | 0.3182 | -0.0012 |
| 44 | SLD 4 | 11.23 | 11.15 | 90.77 | -0.1585 | 0.3182 | -0.0012 |
| 44 | SLD 5 | 10.48 | 16.39 | 103.01 | -0.3911 | 0.114 | 0.0028 |
| 44 | SLD 6 | 10.48 | 16.39 | 103.01 | -0.3911 | 0.114 | 0.0028 |
| 44 | SLD 7 | 6.9 | 5.64 | 59.4 | 0.0104 | 0.2459 | -0.0014 |
| 44 | SLD 8 | 6.9 | 5.64 | 59.4 | 0.0104 | 0.2459 | -0.0014 |
| 44 | SLD 9 | 7.84 | 14.89 | 89.2 | -0.3668 | 0.0125 | 0.0038 |
| 44 | SLD 10 | 7.84 | 14.89 | 89.2 | -0.3668 | 0.0125 | 0.0038 |
| 44 | SLD 11 | 4.27 | 4.14 | 45.59 | 0.0346 | 0.1443 | -0.0003 |
| 44 | SLD 12 | 4.27 | 4.14 | 45.59 | 0.0346 | 0.1443 | -0.0003 |
| 44 | SLD 13 | 3.52 | 9.38 | 57.83 | -0.198 | -0.0598 | 0.0036 |
| 44 | SLD 14 | 3.52 | 9.38 | 57.83 | -0.198 | -0.0598 | 0.0036 |
| 44 | SLD 15 | 2.45 | 6.15 | 44.74 | -0.0775 | -0.0202 | 0.0023 |
| 44 | SLD 16 | 2.45 | 6.15 | 44.74 | -0.0775 | -0.0202 | 0.0023 |
| 44 | SLV 1 | 18.82 | 19.87 | 143.27 | -0.4138 | 0.4691 | -0.0013 |
| 44 | SLV 2 | 18.82 | 19.87 | 143.27 | -0.4138 | 0.4691 | -0.0013 |
| 44 | SLV 3 | 16.24 | 12.36 | 112.74 | -0.1335 | 0.569 | -0.0043 |
| 44 | SLV 4 | 16.24 | 12.36 | 112.74 | -0.1335 | 0.569 | -0.0043 |
| 44 | SLV 5 | 14.72 | 24.53 | 141.29 | -0.6741 | 0.0797 | 0.0049 |
| 44 | SLV 6 | 14.72 | 24.53 | 141.29 | -0.6741 | 0.0797 | 0.0049 |
| 44 | SLV 7 | 6.12 | -0.49 | 39.53 | 0.2604 | 0.4126 | -0.0049 |
| 44 | SLV 8 | 6.12 | -0.49 | 39.53 | 0.2604 | 0.4126 | -0.0049 |
| 44 | SLV 9 | 8.63 | 21.02 | 109.06 | -0.6168 | -0.1542 | 0.0073 |
| 44 | SLV 10 | 8.63 | 21.02 | 109.06 | -0.6168 | -0.1542 | 0.0073 |
| 44 | SLV 11 | 0.02 | -4 | 7.31 | 0.3176 | 0.1787 | -0.0025 |
| 44 | SLV 12 | 0.02 | -4 | 7.31 | 0.3176 | 0.1787 | -0.0025 |
| 44 | SLV 13 | -1.49 | 8.17 | 35.86 | -0.223 | -0.3106 | 0.0067 |
| 44 | SLV 14 | -1.49 | 8.17 | 35.86 | -0.223 | -0.3106 | 0.0067 |
| 44 | SLV 15 | -4.07 | 0.66 | 5.33 | 0.0573 | -0.2108 | 0.0038 |
| 44 | SLV 16 | -4.07 | 0.66 | 5.33 | 0.0573 | -0.2108 | 0.0038 |
| 45 | SLU 1 | 3.39 | 0.13 | 51.13 | -0.0121 | 0.285 | -0.0005 |
| 45 | SLU 2 | 1.69 | 0.14 | 53.5 | -0.0469 | 0.2246 | -0.0006 |
| 45 | SLU 3 | 3.56 | 0.13 | 53.6 | -0.0126 | 0.3011 | -0.0005 |
| 45 | SLU 4 | 2.54 | 0.14 | 55.02 | -0.0335 | 0.2648 | -0.0006 |
| 45 | SLU 5 | 1.87 | 0.15 | 55.64 | -0.0474 | 0.2398 | -0.0006 |
| 45 | SLU 6 | 3.74 | 0.14 | 55.75 | -0.0132 | 0.3163 | -0.0006 |
| 45 | SLU 7 | 2.73 | 0.15 | 57.17 | -0.0341 | 0.2801 | -0.0006 |
| 45 | SLU 8 | 3.75 | 0.14 | 55.42 | -0.0131 | 0.3155 | -0.0006 |
| 45 | SLU 9 | 2.73 | 0.15 | 56.84 | -0.034 | 0.2792 | -0.0006 |
| 45 | SLU 10 | 2.33 | 0.16 | 59.67 | -0.0486 | 0.2685 | -0.0006 |
| 45 | SLU 11 | 4.2 | 0.15 | 59.77 | -0.0143 | 0.345 | -0.0006 |
| 45 | SLU 12 | 3.18 | 0.16 | 61.19 | -0.0352 | 0.3087 | -0.0006 |
| 45 | SLU 13 | 2.51 | 0.16 | 61.81 | -0.0491 | 0.2837 | -0.0007 |
| 45 | SLU 14 | 4.38 | 0.15 | 61.92 | -0.0149 | 0.3602 | -0.0006 |
| 45 | SLU 15 | 3.36 | 0.16 | 63.34 | -0.0357 | 0.324 | -0.0007 |
| 45 | SLU 16 | 4.39 | 0.15 | 61.58 | -0.0148 | 0.3594 | -0.0006 |
| 45 | SLU 17 | 3.37 | 0.16 | 63.01 | -0.0357 | 0.3231 | -0.0007 |
| 45 | SLU 18 | 4.3 | 0.15 | 59.94 | -0.0145 | 0.3477 | -0.0006 |
| 45 | SLU 19 | 3.28 | 0.16 | 61.36 | -0.0354 | 0.3115 | -0.0006 |
| 45 | SLU 20 | 4.48 | 0.15 | 62.08 | -0.015 | 0.363 | -0.0006 |
| 45 | SLU 21 | 3.46 | 0.16 | 63.51 | -0.0359 | 0.3267 | -0.0007 |
| 45 | SLU 22 | 4.03 | 0.14 | 57.88 | -0.0138 | 0.3324 | -0.0006 |
| 45 | SLU 23 | 2.33 | 0.16 | 60.26 | -0.0486 | 0.2719 | -0.0006 |
| 45 | SLU 24 | 4.2 | 0.15 | 60.36 | -0.0143 | 0.3485 | -0.0006 |
| 45 | SLU 25 | 3.19 | 0.16 | 61.78 | -0.0352 | 0.3122 | -0.0006 |
| 45 | SLU 26 | 2.51 | 0.16 | 62.4 | -0.0491 | 0.2872 | -0.0007 |
| 45 | SLU 27 | 4.39 | 0.16 | 62.51 | -0.0148 | 0.3637 | -0.0006 |
| 45 | SLU 28 | 3.37 | 0.16 | 63.93 | -0.0357 | 0.3274 | -0.0007 |
| 45 | SLU 29 | 4.39 | 0.15 | 62.18 | -0.0148 | 0.3629 | -0.0006 |
| 45 | SLU 30 | 3.37 | 0.16 | 63.6 | -0.0357 | 0.3266 | -0.0007 |
| 45 | SLU 31 | 2.97 | 0.17 | 66.43 | -0.0503 | 0.3158 | -0.0007 |
| 45 | SLU 32 | 4.84 | 0.17 | 66.53 | -0.016 | 0.3923 | -0.0007 |
| 45 | SLU 33 | 3.82 | 0.17 | 67.95 | -0.0369 | 0.3561 | -0.0007 |
| 45 | SLU 34 | 3.15 | 0.18 | 68.57 | -0.0508 | 0.3311 | -0.0007 |
| 45 | SLU 35 | 5.02 | 0.17 | 68.67 | -0.0165 | 0.4076 | -0.0007 |
| 45 | SLU 36 | 4.01 | 0.18 | 70.1 | -0.0374 | 0.3713 | -0.0007 |
| 45 | SLU 37 | 5.03 | 0.17 | 68.34 | -0.0165 | 0.4068 | -0.0007 |
| 45 | SLU 38 | 4.01 | 0.18 | 69.77 | -0.0374 | 0.3705 | -0.0007 |
| 45 | SLU 39 | 4.94 | 0.17 | 66.7 | -0.0162 | 0.3951 | -0.0007 |
| 45 | SLU 40 | 3.92 | 0.18 | 68.12 | -0.0371 | 0.3588 | -0.0007 |
| 45 | SLU 41 | 5.12 | 0.17 | 68.84 | -0.0167 | 0.4103 | -0.0007 |
| 45 | SLU 42 | 4.1 | 0.18 | 70.27 | -0.0376 | 0.3741 | -0.0007 |
| 45 | SLU 43 | 4.18 | 0.16 | 64.15 | -0.0151 | 0.3543 | -0.0007 |
| 45 | SLU 44 | 2.48 | 0.17 | 66.52 | -0.05 | 0.2938 | -0.0007 |
| 45 | SLU 45 | 4.36 | 0.17 | 66.62 | -0.0157 | 0.3703 | -0.0007 |
| 45 | SLU 46 | 3.34 | 0.17 | 68.04 | -0.0366 | 0.3341 | -0.0007 |
| 45 | SLU 47 | 2.67 | 0.18 | 68.66 | -0.0505 | 0.3091 | -0.0007 |

| Nodo | Cont. | Reazione a traslazione | | | Reazione a rotazione | | |
|---|---|---|---|---|---|---|---|
| Ind. | N.br. | x | y | z | x | y | z |
| 45 | SLU 48 | 4.54 | 0.17 | 68.77 | -0.0162 | 0.3856 | -0.0007 |
| 45 | SLU 49 | 3.52 | 0.18 | 70.19 | -0.0371 | 0.3493 | -0.0007 |
| 45 | SLU 50 | 4.55 | 0.17 | 68.44 | -0.0162 | 0.3848 | -0.0007 |
| 45 | SLU 51 | 3.53 | 0.18 | 69.86 | -0.0371 | 0.3485 | -0.0007 |
| 45 | SLU 52 | 3.12 | 0.19 | 72.69 | -0.0516 | 0.3377 | -0.0008 |
| 45 | SLU 53 | 5 | 0.18 | 72.79 | -0.0174 | 0.4142 | -0.0007 |
| 45 | SLU 54 | 3.98 | 0.19 | 74.21 | -0.0383 | 0.378 | -0.0008 |
| 45 | SLU 55 | 3.3 | 0.2 | 74.83 | -0.0522 | 0.353 | -0.0008 |
| 45 | SLU 56 | 5.18 | 0.19 | 74.94 | -0.0179 | 0.4295 | -0.0008 |
| 45 | SLU 57 | 4.16 | 0.2 | 76.36 | -0.0388 | 0.3932 | -0.0008 |
| 45 | SLU 58 | 5.18 | 0.18 | 74.61 | -0.0179 | 0.4287 | -0.0008 |
| 45 | SLU 59 | 4.16 | 0.19 | 76.03 | -0.0388 | 0.3924 | -0.0008 |
| 45 | SLU 60 | 5.09 | 0.18 | 72.96 | -0.0175 | 0.417 | -0.0007 |
| 45 | SLU 61 | 4.07 | 0.19 | 74.38 | -0.0384 | 0.3807 | -0.0008 |
| 45 | SLU 62 | 5.27 | 0.19 | 75.1 | -0.0181 | 0.4322 | -0.0008 |
| 45 | SLU 63 | 4.26 | 0.2 | 76.53 | -0.039 | 0.396 | -0.0008 |
| 45 | SLU 64 | 4.82 | 0.18 | 70.91 | -0.0168 | 0.4016 | -0.0007 |
| 45 | SLU 65 | 3.13 | 0.19 | 73.28 | -0.0516 | 0.3412 | -0.0008 |
| 45 | SLU 66 | 5 | 0.18 | 73.38 | -0.0174 | 0.4177 | -0.0008 |
| 45 | SLU 67 | 3.98 | 0.19 | 74.8 | -0.0383 | 0.3814 | -0.0008 |
| 45 | SLU 68 | 3.31 | 0.2 | 75.42 | -0.0522 | 0.3564 | -0.0008 |
| 45 | SLU 69 | 5.18 | 0.19 | 75.53 | -0.0179 | 0.433 | -0.0008 |
| 45 | SLU 70 | 4.16 | 0.2 | 76.95 | -0.0388 | 0.3967 | -0.0008 |
| 45 | SLU 71 | 5.19 | 0.19 | 75.2 | -0.0179 | 0.4321 | -0.0008 |
| 45 | SLU 72 | 4.17 | 0.2 | 76.62 | -0.0388 | 0.3959 | -0.0008 |
| 45 | SLU 73 | 3.76 | 0.21 | 79.45 | -0.0533 | 0.3851 | -0.0008 |
| 45 | SLU 74 | 5.64 | 0.2 | 79.55 | -0.0191 | 0.4616 | -0.0008 |
| 45 | SLU 75 | 4.62 | 0.21 | 80.97 | -0.0399 | 0.4253 | -0.0008 |
| 45 | SLU 76 | 3.95 | 0.21 | 81.59 | -0.0539 | 0.4003 | -0.0009 |
| 45 | SLU 77 | 5.82 | 0.2 | 81.69 | -0.0196 | 0.4769 | -0.0008 |
| 45 | SLU 78 | 4.8 | 0.21 | 83.12 | -0.0405 | 0.4406 | -0.0009 |
| 45 | SLU 79 | 5.83 | 0.2 | 81.36 | -0.0196 | 0.476 | -0.0008 |
| 45 | SLU 80 | 4.81 | 0.21 | 82.79 | -0.0405 | 0.4398 | -0.0009 |
| 45 | SLU 81 | 5.73 | 0.2 | 79.72 | -0.0192 | 0.4644 | -0.0008 |
| 45 | SLU 82 | 4.72 | 0.21 | 81.14 | -0.0401 | 0.4281 | -0.0008 |
| 45 | SLU 83 | 5.92 | 0.2 | 81.86 | -0.0197 | 0.4796 | -0.0008 |
| 45 | SLU 84 | 4.9 | 0.21 | 83.29 | -0.0406 | 0.4433 | -0.0009 |
| 45 | SLE RA 1 | 3.57 | 0.13 | 53.06 | -0.0126 | 0.2985 | -0.0005 |
| 45 | SLE RA 2 | 2.44 | 0.14 | 54.64 | -0.0358 | 0.2582 | -0.0006 |
| 45 | SLE RA 3 | 3.69 | 0.14 | 54.71 | -0.0129 | 0.3093 | -0.0006 |
| 45 | SLE RA 4 | 3.01 | 0.14 | 55.66 | -0.0269 | 0.2851 | -0.0006 |
| 45 | SLE RA 5 | 2.56 | 0.15 | 56.07 | -0.0361 | 0.2684 | -0.0006 |
| 45 | SLE RA 6 | 3.81 | 0.14 | 56.14 | -0.0133 | 0.3194 | -0.0006 |
| 45 | SLE RA 7 | 3.13 | 0.15 | 57.09 | -0.0272 | 0.2952 | -0.0006 |
| 45 | SLE RA 8 | 3.81 | 0.14 | 55.92 | -0.0133 | 0.3189 | -0.0006 |
| 45 | SLE RA 9 | 3.13 | 0.14 | 56.87 | -0.0272 | 0.2947 | -0.0006 |
| 45 | SLE RA 10 | 2.86 | 0.15 | 58.75 | -0.0369 | 0.2875 | -0.0006 |
| 45 | SLE RA 11 | 4.11 | 0.15 | 58.82 | -0.0141 | 0.3385 | -0.0006 |
| 45 | SLE RA 12 | 3.43 | 0.15 | 59.77 | -0.028 | 0.3143 | -0.0006 |
| 45 | SLE RA 13 | 2.98 | 0.16 | 60.18 | -0.0373 | 0.2977 | -0.0006 |
| 45 | SLE RA 14 | 4.23 | 0.15 | 60.25 | -0.0144 | 0.3487 | -0.0006 |
| 45 | SLE RA 15 | 3.55 | 0.16 | 61.2 | -0.0283 | 0.3245 | -0.0006 |
| 45 | SLE RA 16 | 4.24 | 0.15 | 60.03 | -0.0144 | 0.3481 | -0.0006 |
| 45 | SLE RA 17 | 3.56 | 0.16 | 60.98 | -0.0283 | 0.324 | -0.0006 |
| 45 | SLE RA 18 | 4.18 | 0.15 | 58.93 | -0.0142 | 0.3404 | -0.0006 |
| 45 | SLE RA 19 | 3.5 | 0.15 | 59.88 | -0.0281 | 0.3162 | -0.0006 |
| 45 | SLE RA 20 | 4.3 | 0.15 | 60.36 | -0.0145 | 0.3505 | -0.0006 |
| 45 | SLE RA 21 | 3.62 | 0.16 | 61.31 | -0.0285 | 0.3263 | -0.0006 |
| 45 | SLE FR 1 | 3.57 | 0.13 | 53.06 | -0.0126 | 0.2985 | -0.0005 |
| 45 | SLE FR 2 | 3.34 | 0.13 | 53.37 | -0.0172 | 0.2905 | -0.0005 |
| 45 | SLE FR 3 | 3.62 | 0.13 | 53.63 | -0.0127 | 0.3026 | -0.0005 |
| 45 | SLE FR 4 | 3.53 | 0.14 | 55.14 | -0.0177 | 0.303 | -0.0006 |
| 45 | SLE FR 5 | 3.8 | 0.14 | 55.39 | -0.0132 | 0.3152 | -0.0006 |
| 45 | SLE FR 6 | 3.87 | 0.14 | 55.99 | -0.0134 | 0.3194 | -0.0006 |
| 45 | SLE QP 1 | 3.57 | 0.13 | 53.06 | -0.0126 | 0.2985 | -0.0005 |
| 45 | SLE QP 2 | 3.75 | 0.14 | 54.82 | -0.013 | 0.3111 | -0.0006 |
| 45 | SLD 1 | 9.24 | 0.27 | 74.02 | -0.0051 | 0.6419 | -0.0008 |
| 45 | SLD 2 | 9.24 | 0.27 | 74.02 | -0.0051 | 0.6419 | -0.0008 |
| 45 | SLD 3 | 10.67 | 0.22 | 65.45 | 0.0482 | 0.5798 | -0.0007 |
| 45 | SLD 4 | 10.67 | 0.22 | 65.45 | 0.0482 | 0.5798 | -0.0007 |
| 45 | SLD 5 | 3.22 | 0.24 | 73.57 | -0.0915 | 0.5045 | -0.0008 |
| 45 | SLD 6 | 3.22 | 0.24 | 73.57 | -0.0915 | 0.5045 | -0.0008 |
| 45 | SLD 7 | 8 | 0.09 | 45.02 | 0.0862 | 0.2975 | -0.0005 |
| 45 | SLD 8 | 8 | 0.09 | 45.02 | 0.0862 | 0.2975 | -0.0005 |
| 45 | SLD 9 | -0.5 | 0.18 | 64.62 | -0.1123 | 0.3247 | -0.0006 |
| 45 | SLD 10 | -0.5 | 0.18 | 64.62 | -0.1123 | 0.3247 | -0.0006 |
| 45 | SLD 11 | 4.28 | 0.03 | 36.07 | 0.0654 | 0.1177 | -0.0004 |
| 45 | SLD 12 | 4.28 | 0.03 | 36.07 | 0.0654 | 0.1177 | -0.0004 |
| 45 | SLD 13 | -3.17 | 0.05 | 44.19 | -0.0743 | 0.0424 | -0.0004 |
| 45 | SLD 14 | -3.17 | 0.05 | 44.19 | -0.0743 | 0.0424 | -0.0004 |
| 45 | SLD 15 | -1.74 | 0 | 35.62 | -0.021 | -0.0197 | -0.0003 |
| 45 | SLD 16 | -1.74 | 0 | 35.62 | -0.021 | -0.0197 | -0.0003 |
| 45 | SLV 1 | 16.28 | 0.44 | 99.7 | 0.0033 | 1.0792 | -0.0011 |
| 45 | SLV 2 | 16.28 | 0.44 | 99.7 | 0.0033 | 1.0792 | -0.0011 |
| 45 | SLV 3 | 19.81 | 0.34 | 79.69 | 0.1364 | 0.9262 | -0.0009 |
| 45 | SLV 4 | 19.81 | 0.34 | 79.69 | 0.1364 | 0.9262 | -0.0009 |
| 45 | SLV 5 | 2.16 | 0.39 | 98.62 | -0.2101 | 0.7734 | -0.001 |
| 45 | SLV 6 | 2.16 | 0.39 | 98.62 | -0.2101 | 0.7734 | -0.001 |

| Nodo | Cont. | Reazione a traslazione | | | Reazione a rotazione | | |
|---|---|---|---|---|---|---|---|
| Ind. | N.br. | x | y | z | x | y | z |
| 45 | SLV 7 | 13.92 | 0.04 | 31.94 | 0.2337 | 0.2637 | -0.0004 |
| 45 | SLV 8 | 13.92 | 0.04 | 31.94 | 0.2337 | 0.2637 | -0.0004 |
| 45 | SLV 9 | -6.42 | 0.24 | 77.69 | -0.2598 | 0.3585 | -0.0008 |
| 45 | SLV 10 | -6.42 | 0.24 | 77.69 | -0.2598 | 0.3585 | -0.0008 |
| 45 | SLV 11 | 5.35 | -0.12 | 11.02 | 0.184 | -0.1513 | -0.0001 |
| 45 | SLV 12 | 5.35 | -0.12 | 11.02 | 0.184 | -0.1513 | -0.0001 |
| 45 | SLV 13 | -12.31 | -0.07 | 29.94 | -0.1625 | -0.3041 | -0.0002 |
| 45 | SLV 14 | -12.31 | -0.07 | 29.94 | -0.1625 | -0.3041 | -0.0002 |
| 45 | SLV 15 | -8.78 | -0.17 | 9.94 | -0.0294 | -0.457 | 0 |
| 45 | SLV 16 | -8.78 | -0.17 | 9.94 | -0.0294 | -0.457 | 0 |
| 46 | SLU 1 | 0.02 | -0.05 | 42.55 | 0.0383 | -0.0323 | 0 |
| 46 | SLU 2 | -1.87 | -0.02 | 44.42 | -0.0287 | -0.1176 | 0 |
| 46 | SLU 3 | 0.04 | -0.05 | 44.41 | 0.0403 | -0.0326 | 0 |
| 46 | SLU 4 | -1.09 | -0.03 | 45.53 | 0.0002 | -0.0838 | 0 |
| 46 | SLU 5 | -1.82 | -0.02 | 46.01 | -0.0271 | -0.1162 | 0 |
| 46 | SLU 6 | 0.1 | -0.05 | 46 | 0.0419 | -0.0311 | 0 |
| 46 | SLU 7 | -1.04 | -0.03 | 47.12 | 0.0018 | -0.0823 | 0 |
| 46 | SLU 8 | 0.13 | -0.05 | 45.72 | 0.0415 | -0.0294 | 0 |
| 46 | SLU 9 | -1 | -0.03 | 46.85 | 0.0013 | -0.0806 | 0 |
| 46 | SLU 10 | -1.67 | -0.02 | 49.66 | -0.0248 | -0.1139 | 0 |
| 46 | SLU 11 | 0.24 | -0.05 | 49.65 | 0.0442 | -0.0289 | 0 |
| 46 | SLU 12 | -0.89 | -0.04 | 50.78 | 0.004 | -0.0801 | 0 |
| 46 | SLU 13 | -1.61 | -0.02 | 51.25 | -0.0232 | -0.1124 | 0 |
| 46 | SLU 14 | 0.3 | -0.05 | 51.24 | 0.0458 | -0.0274 | 0 |
| 46 | SLU 15 | -0.83 | -0.04 | 52.36 | 0.0056 | -0.0786 | 0 |
| 46 | SLU 16 | 0.33 | -0.05 | 50.97 | 0.0454 | -0.0257 | 0 |
| 46 | SLU 17 | -0.8 | -0.04 | 52.09 | 0.0052 | -0.0769 | 0 |
| 46 | SLU 18 | 0.31 | -0.05 | 50.04 | 0.0438 | -0.027 | 0 |
| 46 | SLU 19 | -0.83 | -0.04 | 51.16 | 0.0036 | -0.0782 | 0 |
| 46 | SLU 20 | 0.36 | -0.05 | 51.63 | 0.0454 | -0.0255 | 0 |
| 46 | SLU 21 | -0.77 | -0.04 | 52.75 | 0.0052 | -0.0767 | 0 |
| 46 | SLU 22 | 0.2 | -0.05 | 48.08 | 0.0431 | -0.0295 | 0 |
| 46 | SLU 23 | -1.69 | -0.02 | 49.95 | -0.0239 | -0.1148 | 0 |
| 46 | SLU 24 | 0.22 | -0.05 | 49.94 | 0.0451 | -0.0298 | 0 |
| 46 | SLU 25 | -0.91 | -0.04 | 51.07 | 0.005 | -0.081 | 0 |
| 46 | SLU 26 | -1.64 | -0.03 | 51.54 | -0.0223 | -0.1134 | 0 |
| 46 | SLU 27 | 0.28 | -0.05 | 51.53 | 0.0467 | -0.0284 | 0 |
| 46 | SLU 28 | -0.86 | -0.04 | 52.66 | 0.0066 | -0.0796 | 0 |
| 46 | SLU 29 | 0.31 | -0.05 | 51.26 | 0.0463 | -0.0266 | 0 |
| 46 | SLU 30 | -0.82 | -0.04 | 52.38 | 0.0061 | -0.0778 | 0 |
| 46 | SLU 31 | -1.49 | -0.03 | 55.2 | -0.02 | -0.1111 | 0 |
| 46 | SLU 32 | 0.42 | -0.06 | 55.19 | 0.049 | -0.0261 | 0.0001 |
| 46 | SLU 33 | -0.71 | -0.04 | 56.31 | 0.0088 | -0.0773 | 0 |
| 46 | SLU 34 | -1.44 | -0.03 | 56.79 | -0.0184 | -0.1097 | 0 |
| 46 | SLU 35 | 0.48 | -0.06 | 56.78 | 0.0506 | -0.0246 | 0.0001 |
| 46 | SLU 36 | -0.66 | -0.04 | 57.9 | 0.0104 | -0.0758 | 0 |
| 46 | SLU 37 | 0.51 | -0.06 | 56.5 | 0.0502 | -0.0229 | 0.0001 |
| 46 | SLU 38 | -0.62 | -0.04 | 57.63 | 0.01 | -0.0741 | 0 |
| 46 | SLU 39 | 0.49 | -0.06 | 55.57 | 0.0486 | -0.0242 | 0.0001 |
| 46 | SLU 40 | -0.65 | -0.04 | 56.7 | 0.0084 | -0.0754 | 0 |
| 46 | SLU 41 | 0.54 | -0.06 | 57.16 | 0.0502 | -0.0227 | 0.0001 |
| 46 | SLU 42 | -0.59 | -0.04 | 58.29 | 0.01 | -0.0739 | 0 |
| 46 | SLU 43 | -0.04 | -0.06 | 53.41 | 0.0481 | -0.0429 | 0.0001 |
| 46 | SLU 44 | -1.93 | -0.03 | 55.28 | -0.0189 | -0.1283 | 0 |
| 46 | SLU 45 | -0.01 | -0.06 | 55.27 | 0.0502 | -0.0433 | 0.0001 |
| 46 | SLU 46 | -1.15 | -0.04 | 56.4 | 0.01 | -0.0944 | 0.0001 |
| 46 | SLU 47 | -1.87 | -0.03 | 56.87 | -0.0173 | -0.1268 | 0 |
| 46 | SLU 48 | 0.04 | -0.06 | 56.86 | 0.0518 | -0.0418 | 0.0001 |
| 46 | SLU 49 | -1.09 | -0.04 | 57.99 | 0.0116 | -0.093 | 0.0001 |
| 46 | SLU 50 | 0.08 | -0.06 | 56.59 | 0.0513 | -0.04 | 0.0001 |
| 46 | SLU 51 | -1.06 | -0.04 | 57.71 | 0.0111 | -0.0912 | 0.0001 |
| 46 | SLU 52 | -1.73 | -0.03 | 60.53 | -0.015 | -0.1246 | 0.0001 |
| 46 | SLU 53 | 0.19 | -0.06 | 60.52 | 0.0541 | -0.0395 | 0.0001 |
| 46 | SLU 54 | -0.95 | -0.05 | 61.64 | 0.0139 | -0.0907 | 0.0001 |
| 46 | SLU 55 | -1.67 | -0.04 | 62.12 | -0.0134 | -0.1231 | 0.0001 |
| 46 | SLU 56 | 0.24 | -0.07 | 62.11 | 0.0557 | -0.0381 | 0.0001 |
| 46 | SLU 57 | -0.89 | -0.05 | 63.23 | 0.0155 | -0.0893 | 0.0001 |
| 46 | SLU 58 | 0.28 | -0.07 | 61.83 | 0.0552 | -0.0363 | 0.0001 |
| 46 | SLU 59 | -0.86 | -0.05 | 62.96 | 0.015 | -0.0875 | 0.0001 |
| 46 | SLU 60 | 0.25 | -0.06 | 60.9 | 0.0536 | -0.0376 | 0.0001 |
| 46 | SLU 61 | -0.88 | -0.05 | 62.03 | 0.0135 | -0.0888 | 0.0001 |
| 46 | SLU 62 | 0.31 | -0.07 | 62.49 | 0.0552 | -0.0362 | 0.0001 |
| 46 | SLU 63 | -0.83 | -0.05 | 63.62 | 0.0151 | -0.0874 | 0.0001 |
| 46 | SLU 64 | 0.14 | -0.06 | 58.95 | 0.0529 | -0.0402 | 0.0001 |
| 46 | SLU 65 | -1.75 | -0.04 | 60.82 | -0.0141 | -0.1255 | 0.0001 |
| 46 | SLU 66 | 0.17 | -0.07 | 60.81 | 0.055 | -0.0405 | 0.0001 |
| 46 | SLU 67 | -0.97 | -0.05 | 61.93 | 0.0148 | -0.0917 | 0.0001 |
| 46 | SLU 68 | -1.69 | -0.04 | 62.41 | -0.0125 | -0.124 | 0.0001 |
| 46 | SLU 69 | 0.22 | -0.07 | 62.4 | 0.0566 | -0.039 | 0.0001 |
| 46 | SLU 70 | -0.91 | -0.05 | 63.52 | 0.0164 | -0.0902 | 0.0001 |
| 46 | SLU 71 | 0.26 | -0.07 | 62.12 | 0.0561 | -0.0372 | 0.0001 |
| 46 | SLU 72 | -0.88 | -0.05 | 63.25 | 0.0159 | -0.0884 | 0.0001 |
| 46 | SLU 73 | -1.55 | -0.04 | 66.07 | -0.0102 | -0.1218 | 0.0001 |
| 46 | SLU 74 | 0.37 | -0.07 | 66.05 | 0.0589 | -0.0368 | 0.0001 |
| 46 | SLU 75 | -0.77 | -0.05 | 67.18 | 0.0187 | -0.088 | 0.0001 |
| 46 | SLU 76 | -1.49 | -0.04 | 67.65 | -0.0086 | -0.1203 | 0.0001 |
| 46 | SLU 77 | 0.42 | -0.07 | 67.64 | 0.0605 | -0.0353 | 0.0001 |
| 46 | SLU 78 | -0.71 | -0.06 | 68.77 | 0.0203 | -0.0865 | 0.0001 |

| Nodo | Cont. | Reazione a traslazione | | | Reazione a rotazione | | |
|---|---|---|---|---|---|---|---|
| Ind. | N.br. | x | y | z | x | y | z |
| 46 | SLU 79 | 0.46 | -0.07 | 67.37 | 0.06 | -0.0335 | 0.0001 |
| 46 | SLU 80 | -0.68 | -0.05 | 68.49 | 0.0198 | -0.0847 | 0.0001 |
| 46 | SLU 81 | 0.43 | -0.07 | 66.44 | 0.0584 | -0.0349 | 0.0001 |
| 46 | SLU 82 | -0.7 | -0.05 | 67.56 | 0.0183 | -0.0861 | 0.0001 |
| 46 | SLU 83 | 0.49 | -0.07 | 68.03 | 0.06 | -0.0334 | 0.0001 |
| 46 | SLU 84 | -0.65 | -0.06 | 69.15 | 0.0199 | -0.0846 | 0.0001 |
| 46 | SLE RA 1 | 0.07 | -0.05 | 44.13 | 0.0396 | -0.0315 | 0 |
| 46 | SLE RA 2 | -1.19 | -0.03 | 45.38 | -0.005 | -0.0884 | 0 |
| 46 | SLE RA 3 | 0.09 | -0.05 | 45.37 | 0.041 | -0.0317 | 0 |
| 46 | SLE RA 4 | -0.67 | -0.04 | 46.12 | 0.0142 | -0.0658 | 0 |
| 46 | SLE RA 5 | -1.15 | -0.03 | 46.44 | -0.0039 | -0.0874 | 0 |
| 46 | SLE RA 6 | 0.12 | -0.05 | 46.43 | 0.0421 | -0.0307 | 0 |
| 46 | SLE RA 7 | -0.63 | -0.04 | 47.18 | 0.0153 | -0.0649 | 0 |
| 46 | SLE RA 8 | 0.15 | -0.05 | 46.25 | 0.0418 | -0.0295 | 0 |
| 46 | SLE RA 9 | -0.61 | -0.04 | 47 | 0.015 | -0.0637 | 0 |
| 46 | SLE RA 10 | -1.06 | -0.03 | 48.87 | -0.0024 | -0.0859 | 0 |
| 46 | SLE RA 11 | 0.22 | -0.05 | 48.87 | 0.0436 | -0.0292 | 0 |
| 46 | SLE RA 12 | -0.54 | -0.04 | 49.61 | 0.0168 | -0.0634 | 0 |
| 46 | SLE RA 13 | -1.02 | -0.03 | 49.93 | -0.0014 | -0.0849 | 0 |
| 46 | SLE RA 14 | 0.26 | -0.05 | 49.92 | 0.0447 | -0.0283 | 0 |
| 46 | SLE RA 15 | -0.5 | -0.04 | 50.67 | 0.0179 | -0.0624 | 0 |
| 46 | SLE RA 16 | 0.28 | -0.05 | 49.74 | 0.0444 | -0.0271 | 0 |
| 46 | SLE RA 17 | -0.48 | -0.04 | 50.49 | 0.0176 | -0.0612 | 0 |
| 46 | SLE RA 18 | 0.26 | -0.05 | 49.12 | 0.0433 | -0.028 | 0 |
| 46 | SLE RA 19 | -0.49 | -0.04 | 49.87 | 0.0165 | -0.0621 | 0 |
| 46 | SLE RA 20 | 0.3 | -0.05 | 50.18 | 0.0444 | -0.027 | 0 |
| 46 | SLE RA 21 | -0.46 | -0.04 | 50.93 | 0.0176 | -0.0611 | 0 |
| 46 | SLE FR 1 | 0.07 | -0.05 | 44.13 | 0.0396 | -0.0315 | 0 |
| 46 | SLE FR 2 | -0.18 | -0.04 | 44.38 | 0.0307 | -0.0429 | 0 |
| 46 | SLE FR 3 | 0.09 | -0.05 | 44.55 | 0.0401 | -0.0311 | 0 |
| 46 | SLE FR 4 | -0.12 | -0.04 | 45.88 | 0.0318 | -0.0418 | 0 |
| 46 | SLE FR 5 | 0.14 | -0.05 | 46.05 | 0.0412 | -0.03 | 0 |
| 46 | SLE FR 6 | 0.17 | -0.05 | 46.63 | 0.0415 | -0.0297 | 0 |
| 46 | SLE QP 1 | 0.07 | -0.05 | 44.13 | 0.0396 | -0.0315 | 0 |
| 46 | SLE QP 2 | 0.13 | -0.05 | 45.63 | 0.0407 | -0.0304 | 0 |
| 46 | SLD 1 | 6.21 | -0.2 | 59.05 | 0.0454 | 0.241 | 0.0005 |
| 46 | SLD 2 | 6.21 | -0.2 | 59.05 | 0.0454 | 0.241 | 0.0005 |
| 46 | SLD 3 | 7.49 | -0.11 | 52.83 | 0.1532 | 0.2991 | 0.0003 |
| 46 | SLD 4 | 7.49 | -0.11 | 52.83 | 0.1532 | 0.2991 | 0.0003 |
| 46 | SLD 5 | 0.01 | -0.23 | 59.08 | -0.1213 | -0.0371 | 0.0004 |
| 46 | SLD 6 | 0.01 | -0.23 | 59.08 | -0.1213 | -0.0371 | 0.0004 |
| 46 | SLD 7 | 4.27 | 0.07 | 38.36 | 0.2379 | 0.1565 | -0.0001 |
| 46 | SLD 8 | 4.27 | 0.07 | 38.36 | 0.2379 | 0.1565 | -0.0001 |
| 46 | SLD 9 | -4.02 | -0.17 | 52.89 | -0.1564 | -0.2174 | 0.0002 |
| 46 | SLD 10 | -4.02 | -0.17 | 52.89 | -0.1564 | -0.2174 | 0.0002 |
| 46 | SLD 11 | 0.24 | 0.14 | 32.18 | 0.2028 | -0.0238 | -0.0003 |
| 46 | SLD 12 | 0.24 | 0.14 | 32.18 | 0.2028 | -0.0238 | -0.0003 |
| 46 | SLD 13 | -7.23 | 0.01 | 38.42 | -0.0717 | -0.36 | -0.0003 |
| 46 | SLD 14 | -7.23 | 0.01 | 38.42 | -0.0717 | -0.36 | -0.0003 |
| 46 | SLD 15 | -5.95 | 0.1 | 32.21 | 0.0361 | -0.3019 | -0.0004 |
| 46 | SLD 16 | -5.95 | 0.1 | 32.21 | 0.0361 | -0.3019 | -0.0004 |
| 46 | SLV 1 | 13.99 | -0.42 | 77.06 | 0.0466 | 0.5877 | 0.0011 |
| 46 | SLV 2 | 13.99 | -0.42 | 77.06 | 0.0466 | 0.5877 | 0.0011 |
| 46 | SLV 3 | 17.18 | -0.2 | 62.51 | 0.3174 | 0.7338 | 0.0008 |
| 46 | SLV 4 | 17.18 | -0.2 | 62.51 | 0.3174 | 0.7338 | 0.0008 |
| 46 | SLV 5 | -0.55 | -0.49 | 77.12 | -0.3682 | -0.0667 | 0.0009 |
| 46 | SLV 6 | -0.55 | -0.49 | 77.12 | -0.3682 | -0.0667 | 0.0009 |
| 46 | SLV 7 | 10.09 | 0.24 | 28.63 | 0.5344 | 0.4205 | -0.0003 |
| 46 | SLV 8 | 10.09 | 0.24 | 28.63 | 0.5344 | 0.4205 | -0.0003 |
| 46 | SLV 9 | -9.83 | -0.34 | 62.62 | -0.453 | -0.4814 | 0.0004 |
| 46 | SLV 10 | -9.83 | -0.34 | 62.62 | -0.453 | -0.4814 | 0.0004 |
| 46 | SLV 11 | 0.81 | 0.39 | 14.14 | 0.4497 | 0.0058 | -0.0008 |
| 46 | SLV 12 | 0.81 | 0.39 | 14.14 | 0.4497 | 0.0058 | -0.0008 |
| 46 | SLV 13 | -16.93 | 0.1 | 28.74 | -0.2359 | -0.7947 | -0.0007 |
| 46 | SLV 14 | -16.93 | 0.1 | 28.74 | -0.2359 | -0.7947 | -0.0007 |
| 46 | SLV 15 | -13.74 | 0.32 | 14.2 | 0.0349 | -0.6485 | -0.001 |
| 46 | SLV 16 | -13.74 | 0.32 | 14.2 | 0.0349 | -0.6485 | -0.001 |
| 47 | SLU 1 | 0.26 | -0.16 | 36.52 | 0.0842 | 0.0978 | 0.0006 |
| 47 | SLU 2 | -1.33 | -0.1 | 37.95 | -0.018 | 0.0385 | 0.0004 |
| 47 | SLU 3 | 0.33 | -0.17 | 37.94 | 0.0887 | 0.1065 | 0.0006 |
| 47 | SLU 4 | -0.62 | -0.13 | 38.8 | 0.0273 | 0.0709 | 0.0005 |
| 47 | SLU 5 | -1.22 | -0.11 | 39.14 | -0.0145 | 0.0477 | 0.0004 |
| 47 | SLU 6 | 0.44 | -0.17 | 39.13 | 0.0921 | 0.1158 | 0.0006 |
| 47 | SLU 7 | -0.51 | -0.14 | 39.99 | 0.0308 | 0.0802 | 0.0005 |
| 47 | SLU 8 | 0.47 | -0.17 | 38.9 | 0.0912 | 0.1164 | 0.0006 |
| 47 | SLU 9 | -0.48 | -0.14 | 39.76 | 0.0298 | 0.0808 | 0.0005 |
| 47 | SLU 10 | -1.14 | -0.12 | 42.57 | -0.009 | 0.0569 | 0.0005 |
| 47 | SLU 11 | 0.52 | -0.19 | 42.56 | 0.0977 | 0.1249 | 0.0007 |
| 47 | SLU 12 | -0.43 | -0.15 | 43.42 | 0.0363 | 0.0893 | 0.0006 |
| 47 | SLU 13 | -1.03 | -0.13 | 43.76 | -0.0055 | 0.0662 | 0.0005 |
| 47 | SLU 14 | 0.63 | -0.19 | 43.75 | 0.1012 | 0.1342 | 0.0007 |
| 47 | SLU 15 | -0.32 | -0.16 | 44.61 | 0.0398 | 0.0986 | 0.0006 |
| 47 | SLU 16 | 0.66 | -0.19 | 43.52 | 0.1002 | 0.1348 | 0.0007 |
| 47 | SLU 17 | -0.29 | -0.16 | 44.38 | 0.0389 | 0.0992 | 0.0006 |
| 47 | SLU 18 | 0.53 | -0.19 | 43.12 | 0.0971 | 0.1241 | 0.0007 |
| 47 | SLU 19 | -0.42 | -0.15 | 43.98 | 0.0358 | 0.0885 | 0.0006 |
| 47 | SLU 20 | 0.63 | -0.19 | 44.31 | 0.1006 | 0.1334 | 0.0007 |
| 47 | SLU 21 | -0.32 | -0.16 | 45.17 | 0.0392 | 0.0978 | 0.0006 |

| Nodo | Cont. | Reazione a traslazione | | | Reazione a rotazione | | |
|---|---|---|---|---|---|---|---|
| Ind. | N.br. | x | y | z | x | y | z |
| 47 | SLU 22 | 0.47 | -0.18 | 41.2 | 0.095 | 0.1195 | 0.0007 |
| 47 | SLU 23 | -1.11 | -0.12 | 42.63 | -0.0073 | 0.0602 | 0.0005 |
| 47 | SLU 24 | 0.55 | -0.19 | 42.62 | 0.0994 | 0.1282 | 0.0007 |
| 47 | SLU 25 | -0.4 | -0.15 | 43.48 | 0.038 | 0.0926 | 0.0006 |
| 47 | SLU 26 | -1 | -0.13 | 43.82 | -0.0038 | 0.0695 | 0.0005 |
| 47 | SLU 27 | 0.66 | -0.2 | 43.81 | 0.1029 | 0.1375 | 0.0007 |
| 47 | SLU 28 | -0.29 | -0.16 | 44.67 | 0.0415 | 0.1019 | 0.0006 |
| 47 | SLU 29 | 0.69 | -0.19 | 43.58 | 0.1019 | 0.1381 | 0.0007 |
| 47 | SLU 30 | -0.26 | -0.16 | 44.44 | 0.0406 | 0.1025 | 0.0006 |
| 47 | SLU 31 | -0.92 | -0.14 | 47.25 | 0.0017 | 0.0786 | 0.0006 |
| 47 | SLU 32 | 0.74 | -0.21 | 47.24 | 0.1084 | 0.1466 | 0.0008 |
| 47 | SLU 33 | -0.21 | -0.17 | 48.1 | 0.0471 | 0.111 | 0.0007 |
| 47 | SLU 34 | -0.81 | -0.15 | 48.44 | 0.0052 | 0.0879 | 0.0006 |
| 47 | SLU 35 | 0.85 | -0.21 | 48.43 | 0.1119 | 0.1559 | 0.0008 |
| 47 | SLU 36 | -0.1 | -0.18 | 49.29 | 0.0506 | 0.1203 | 0.0007 |
| 47 | SLU 37 | 0.88 | -0.21 | 48.2 | 0.111 | 0.1565 | 0.0008 |
| 47 | SLU 38 | -0.07 | -0.18 | 49.06 | 0.0496 | 0.1209 | 0.0007 |
| 47 | SLU 39 | 0.74 | -0.21 | 47.8 | 0.1078 | 0.1458 | 0.0008 |
| 47 | SLU 40 | -0.21 | -0.17 | 48.65 | 0.0465 | 0.1102 | 0.0007 |
| 47 | SLU 41 | 0.85 | -0.21 | 48.99 | 0.1113 | 0.1551 | 0.0008 |
| 47 | SLU 42 | -0.1 | -0.18 | 49.84 | 0.05 | 0.1195 | 0.0007 |
| 47 | SLU 43 | 0.26 | -0.2 | 45.87 | 0.1058 | 0.1197 | 0.0007 |
| 47 | SLU 44 | -1.32 | -0.14 | 47.31 | 0.0036 | 0.0603 | 0.0006 |
| 47 | SLU 45 | 0.34 | -0.21 | 47.29 | 0.1102 | 0.1284 | 0.0008 |
| 47 | SLU 46 | -0.61 | -0.17 | 48.15 | 0.0489 | 0.0928 | 0.0007 |
| 47 | SLU 47 | -1.21 | -0.15 | 48.5 | 0.007 | 0.0696 | 0.0006 |
| 47 | SLU 48 | 0.44 | -0.22 | 48.48 | 0.1137 | 0.1377 | 0.0008 |
| 47 | SLU 49 | -0.5 | -0.18 | 49.34 | 0.0524 | 0.1021 | 0.0007 |
| 47 | SLU 50 | 0.47 | -0.21 | 48.25 | 0.1128 | 0.1383 | 0.0008 |
| 47 | SLU 51 | -0.47 | -0.18 | 49.11 | 0.0514 | 0.1027 | 0.0007 |
| 47 | SLU 52 | -1.13 | -0.16 | 51.92 | 0.0126 | 0.0787 | 0.0006 |
| 47 | SLU 53 | 0.53 | -0.23 | 51.91 | 0.1193 | 0.1468 | 0.0008 |
| 47 | SLU 54 | -0.42 | -0.19 | 52.77 | 0.0579 | 0.1112 | 0.0007 |
| 47 | SLU 55 | -1.03 | -0.17 | 53.11 | 0.0161 | 0.088 | 0.0007 |
| 47 | SLU 56 | 0.63 | -0.23 | 53.1 | 0.1227 | 0.1561 | 0.0009 |
| 47 | SLU 57 | -0.32 | -0.2 | 53.96 | 0.0614 | 0.1205 | 0.0008 |
| 47 | SLU 58 | 0.66 | -0.23 | 52.87 | 0.1218 | 0.1567 | 0.0009 |
| 47 | SLU 59 | -0.29 | -0.2 | 53.73 | 0.0604 | 0.1211 | 0.0008 |
| 47 | SLU 60 | 0.53 | -0.23 | 52.47 | 0.1187 | 0.146 | 0.0008 |
| 47 | SLU 61 | -0.42 | -0.19 | 53.33 | 0.0573 | 0.1104 | 0.0007 |
| 47 | SLU 62 | 0.64 | -0.23 | 53.66 | 0.1222 | 0.1553 | 0.0009 |
| 47 | SLU 63 | -0.31 | -0.2 | 54.52 | 0.0608 | 0.1197 | 0.0008 |
| 47 | SLU 64 | 0.48 | -0.22 | 50.55 | 0.1165 | 0.1414 | 0.0008 |
| 47 | SLU 65 | -1.11 | -0.16 | 51.98 | 0.0143 | 0.0821 | 0.0006 |
| 47 | SLU 66 | 0.55 | -0.23 | 51.97 | 0.121 | 0.1501 | 0.0008 |
| 47 | SLU 67 | -0.4 | -0.2 | 52.83 | 0.0596 | 0.1145 | 0.0007 |
| 47 | SLU 68 | -1 | -0.17 | 53.17 | 0.0178 | 0.0914 | 0.0007 |
| 47 | SLU 69 | 0.66 | -0.24 | 53.16 | 0.1245 | 0.1594 | 0.0009 |
| 47 | SLU 70 | -0.29 | -0.2 | 54.02 | 0.0631 | 0.1238 | 0.0008 |
| 47 | SLU 71 | 0.69 | -0.23 | 52.93 | 0.1235 | 0.16 | 0.0009 |
| 47 | SLU 72 | -0.26 | -0.2 | 53.79 | 0.0622 | 0.1244 | 0.0008 |
| 47 | SLU 73 | -0.92 | -0.18 | 56.6 | 0.0233 | 0.1005 | 0.0007 |
| 47 | SLU 74 | 0.74 | -0.25 | 56.59 | 0.13 | 0.1685 | 0.0009 |
| 47 | SLU 75 | -0.21 | -0.21 | 57.45 | 0.0687 | 0.1329 | 0.0008 |
| 47 | SLU 76 | -0.81 | -0.19 | 57.79 | 0.0268 | 0.1098 | 0.0007 |
| 47 | SLU 77 | 0.85 | -0.26 | 57.78 | 0.1335 | 0.1778 | 0.0009 |
| 47 | SLU 78 | -0.1 | -0.22 | 58.64 | 0.0721 | 0.1422 | 0.0008 |
| 47 | SLU 79 | 0.88 | -0.25 | 57.55 | 0.1325 | 0.1784 | 0.0009 |
| 47 | SLU 80 | -0.07 | -0.22 | 58.41 | 0.0712 | 0.1428 | 0.0008 |
| 47 | SLU 81 | 0.75 | -0.25 | 57.15 | 0.1294 | 0.1677 | 0.0009 |
| 47 | SLU 82 | -0.2 | -0.21 | 58.01 | 0.0681 | 0.1321 | 0.0008 |
| 47 | SLU 83 | 0.85 | -0.26 | 58.34 | 0.1329 | 0.177 | 0.0009 |
| 47 | SLU 84 | -0.1 | -0.22 | 59.2 | 0.0716 | 0.1414 | 0.0008 |
| 47 | SLE RA 1 | 0.32 | -0.17 | 37.86 | 0.0873 | 0.104 | 0.0006 |
| 47 | SLE RA 2 | -0.74 | -0.13 | 38.81 | 0.0191 | 0.0644 | 0.0005 |
| 47 | SLE RA 3 | 0.37 | -0.17 | 38.8 | 0.0902 | 0.1098 | 0.0006 |
| 47 | SLE RA 4 | -0.26 | -0.15 | 39.38 | 0.0493 | 0.0861 | 0.0006 |
| 47 | SLE RA 5 | -0.66 | -0.13 | 39.61 | 0.0215 | 0.0706 | 0.0005 |
| 47 | SLE RA 6 | 0.44 | -0.18 | 39.6 | 0.0926 | 0.116 | 0.0006 |
| 47 | SLE RA 7 | -0.19 | -0.15 | 40.17 | 0.0517 | 0.0923 | 0.0006 |
| 47 | SLE RA 8 | 0.46 | -0.17 | 39.44 | 0.0919 | 0.1164 | 0.0006 |
| 47 | SLE RA 9 | -0.17 | -0.15 | 40.02 | 0.051 | 0.0927 | 0.0006 |
| 47 | SLE RA 10 | -0.61 | -0.14 | 41.89 | 0.0251 | 0.0767 | 0.0005 |
| 47 | SLE RA 11 | 0.5 | -0.18 | 41.88 | 0.0963 | 0.1221 | 0.0007 |
| 47 | SLE RA 12 | -0.14 | -0.16 | 42.46 | 0.0554 | 0.0983 | 0.0006 |
| 47 | SLE RA 13 | -0.54 | -0.14 | 42.68 | 0.0275 | 0.0829 | 0.0006 |
| 47 | SLE RA 14 | 0.57 | -0.19 | 42.68 | 0.0986 | 0.1283 | 0.0007 |
| 47 | SLE RA 15 | -0.07 | -0.17 | 43.25 | 0.0577 | 0.1045 | 0.0006 |
| 47 | SLE RA 16 | 0.59 | -0.19 | 42.52 | 0.0979 | 0.1287 | 0.0007 |
| 47 | SLE RA 17 | -0.04 | -0.16 | 43.1 | 0.0571 | 0.1049 | 0.0006 |
| 47 | SLE RA 18 | 0.5 | -0.18 | 42.26 | 0.0959 | 0.1215 | 0.0007 |
| 47 | SLE RA 19 | -0.13 | -0.16 | 42.83 | 0.055 | 0.0978 | 0.0006 |
| 47 | SLE RA 20 | 0.57 | -0.19 | 43.05 | 0.0982 | 0.1277 | 0.0007 |
| 47 | SLE RA 21 | -0.06 | -0.17 | 43.62 | 0.0573 | 0.104 | 0.0006 |
| 47 | SLE FR 1 | 0.32 | -0.17 | 37.86 | 0.0873 | 0.104 | 0.0006 |
| 47 | SLE FR 2 | 0.11 | -0.16 | 38.05 | 0.0737 | 0.0961 | 0.0006 |
| 47 | SLE FR 3 | 0.35 | -0.17 | 38.18 | 0.0882 | 0.1065 | 0.0006 |
| 47 | SLE FR 4 | 0.16 | -0.16 | 39.37 | 0.0762 | 0.1013 | 0.0006 |

| Nodo | Cont. | Reazione a traslazione | | | Reazione a rotazione | | |
|---|---|---|---|---|---|---|---|
| Ind. | N.br. | x | y | z | x | y | z |
| 47 | SLE FR 5 | 0.4 | -0.17 | 39.49 | 0.0908 | 0.1117 | 0.0006 |
| 47 | SLE FR 6 | 0.41 | -0.18 | 40.06 | 0.0916 | 0.1128 | 0.0006 |
| 47 | SLE QP 1 | 0.32 | -0.17 | 37.86 | 0.0873 | 0.104 | 0.0006 |
| 47 | SLE QP 2 | 0.37 | -0.17 | 39.18 | 0.0899 | 0.1093 | 0.0006 |
| 47 | SLD 1 | 6.99 | -0.37 | 48.87 | 0.0834 | 0.4018 | 0.0014 |
| 47 | SLD 2 | 6.99 | -0.37 | 48.87 | 0.0834 | 0.4018 | 0.0014 |
| 47 | SLD 3 | 8.07 | -0.21 | 43.9 | 0.2502 | 0.4486 | 0.0008 |
| 47 | SLD 4 | 8.07 | -0.21 | 43.9 | 0.2502 | 0.4486 | 0.0008 |
| 47 | SLD 5 | 0.71 | -0.48 | 49.63 | -0.165 | 0.1259 | 0.0018 |
| 47 | SLD 6 | 0.71 | -0.48 | 49.63 | -0.165 | 0.1259 | 0.0018 |
| 47 | SLD 7 | 4.33 | 0.06 | 33.05 | 0.391 | 0.2822 | -0.0002 |
| 47 | SLD 8 | 4.33 | 0.06 | 33.05 | 0.391 | 0.2822 | -0.0002 |
| 47 | SLD 9 | -3.59 | -0.4 | 45.31 | -0.2112 | -0.0636 | 0.0015 |
| 47 | SLD 10 | -3.59 | -0.4 | 45.31 | -0.2112 | -0.0636 | 0.0015 |
| 47 | SLD 11 | 0.03 | 0.13 | 28.73 | 0.3448 | 0.0926 | -0.0005 |
| 47 | SLD 12 | 0.03 | 0.13 | 28.73 | 0.3448 | 0.0926 | -0.0005 |
| 47 | SLD 13 | -7.33 | -0.13 | 34.46 | -0.0705 | -0.2301 | 0.0005 |
| 47 | SLD 14 | -7.33 | -0.13 | 34.46 | -0.0705 | -0.2301 | 0.0005 |
| 47 | SLD 15 | -6.24 | 0.03 | 29.49 | 0.0963 | -0.1832 | -0.0001 |
| 47 | SLD 16 | -6.24 | 0.03 | 29.49 | 0.0963 | -0.1832 | -0.0001 |
| 47 | SLV 1 | 15.49 | -0.65 | 61.94 | 0.0651 | 0.7784 | 0.0025 |
| 47 | SLV 2 | 15.49 | -0.65 | 61.94 | 0.0651 | 0.7784 | 0.0025 |
| 47 | SLV 3 | 18.2 | -0.26 | 50.2 | 0.4854 | 0.8954 | 0.001 |
| 47 | SLV 4 | 18.2 | -0.26 | 50.2 | 0.4854 | 0.8954 | 0.001 |
| 47 | SLV 5 | 0.8 | -0.91 | 63.81 | -0.555 | 0.1325 | 0.0034 |
| 47 | SLV 6 | 0.8 | -0.91 | 63.81 | -0.555 | 0.1325 | 0.0034 |
| 47 | SLV 7 | 9.83 | 0.4 | 24.68 | 0.846 | 0.5226 | -0.0015 |
| 47 | SLV 8 | 9.83 | 0.4 | 24.68 | 0.846 | 0.5226 | -0.0015 |
| 47 | SLV 9 | -9.09 | -0.74 | 53.67 | -0.6663 | -0.3041 | 0.0027 |
| 47 | SLV 10 | -9.09 | -0.74 | 53.67 | -0.6663 | -0.3041 | 0.0027 |
| 47 | SLV 11 | -0.05 | 0.57 | 14.55 | 0.7348 | 0.086 | -0.0021 |
| 47 | SLV 12 | -0.05 | 0.57 | 14.55 | 0.7348 | 0.086 | -0.0021 |
| 47 | SLV 13 | -17.46 | -0.09 | 28.15 | -0.3057 | -0.6769 | 0.0002 |
| 47 | SLV 14 | -17.46 | -0.09 | 28.15 | -0.3057 | -0.6769 | 0.0002 |
| 47 | SLV 15 | -14.75 | 0.3 | 16.42 | 0.1146 | -0.5598 | -0.0012 |
| 47 | SLV 16 | -14.75 | 0.3 | 16.42 | 0.1146 | -0.5598 | -0.0012 |
| 48 | SLU 1 | -0.83 | -0.21 | 31.41 | 0.113 | -0.0596 | 0.0011 |
| 48 | SLU 2 | -2.22 | -0.12 | 32.52 | -0.0233 | -0.1221 | 0.0007 |
| 48 | SLU 3 | -0.78 | -0.22 | 32.47 | 0.1189 | -0.0584 | 0.0012 |
| 48 | SLU 4 | -1.61 | -0.17 | 33.13 | 0.0371 | -0.0959 | 0.0009 |
| 48 | SLU 5 | -2.12 | -0.13 | 33.39 | -0.0188 | -0.1191 | 0.0008 |
| 48 | SLU 6 | -0.68 | -0.23 | 33.34 | 0.1235 | -0.0554 | 0.0012 |
| 48 | SLU 7 | -1.52 | -0.18 | 34 | 0.0416 | -0.0929 | 0.001 |
| 48 | SLU 8 | -0.65 | -0.23 | 33.14 | 0.1222 | -0.0535 | 0.0012 |
| 48 | SLU 9 | -1.48 | -0.18 | 33.81 | 0.0404 | -0.091 | 0.0009 |
| 48 | SLU 10 | -2.22 | -0.15 | 36.58 | -0.0112 | -0.1257 | 0.0008 |
| 48 | SLU 11 | -0.78 | -0.25 | 36.53 | 0.131 | -0.0619 | 0.0013 |
| 48 | SLU 12 | -1.61 | -0.19 | 37.2 | 0.0492 | -0.0995 | 0.0011 |
| 48 | SLU 13 | -2.13 | -0.16 | 37.45 | -0.0067 | -0.1226 | 0.0009 |
| 48 | SLU 14 | -0.69 | -0.26 | 37.4 | 0.1356 | -0.0589 | 0.0013 |
| 48 | SLU 15 | -1.52 | -0.2 | 38.07 | 0.0537 | -0.0964 | 0.0011 |
| 48 | SLU 16 | -0.65 | -0.26 | 37.21 | 0.1343 | -0.057 | 0.0013 |
| 48 | SLU 17 | -1.48 | -0.2 | 37.87 | 0.0525 | -0.0945 | 0.0011 |
| 48 | SLU 18 | -0.84 | -0.25 | 37.22 | 0.1303 | -0.0646 | 0.0013 |
| 48 | SLU 19 | -1.67 | -0.2 | 37.88 | 0.0485 | -0.1021 | 0.0011 |
| 48 | SLU 20 | -0.75 | -0.26 | 38.08 | 0.1349 | -0.0616 | 0.0013 |
| 48 | SLU 21 | -1.58 | -0.2 | 38.75 | 0.0531 | -0.0991 | 0.0011 |
| 48 | SLU 22 | -0.78 | -0.24 | 35.36 | 0.1274 | -0.0609 | 0.0013 |
| 48 | SLU 23 | -2.17 | -0.15 | 36.47 | -0.009 | -0.1235 | 0.0009 |
| 48 | SLU 24 | -0.73 | -0.25 | 36.42 | 0.1332 | -0.0598 | 0.0013 |
| 48 | SLU 25 | -1.56 | -0.2 | 37.08 | 0.0514 | -0.0973 | 0.0011 |
| 48 | SLU 26 | -2.07 | -0.16 | 37.34 | -0.0044 | -0.1204 | 0.0009 |
| 48 | SLU 27 | -0.63 | -0.26 | 37.28 | 0.1378 | -0.0567 | 0.0013 |
| 48 | SLU 28 | -1.46 | -0.21 | 37.95 | 0.056 | -0.0943 | 0.0011 |
| 48 | SLU 29 | -0.59 | -0.26 | 37.09 | 0.1365 | -0.0548 | 0.0013 |
| 48 | SLU 30 | -1.42 | -0.2 | 37.76 | 0.0547 | -0.0924 | 0.0011 |
| 48 | SLU 31 | -2.17 | -0.18 | 40.53 | 0.0031 | -0.127 | 0.001 |
| 48 | SLU 32 | -0.73 | -0.28 | 40.48 | 0.1453 | -0.0633 | 0.0014 |
| 48 | SLU 33 | -1.56 | -0.22 | 41.15 | 0.0635 | -0.1008 | 0.0012 |
| 48 | SLU 34 | -2.08 | -0.18 | 41.4 | 0.0077 | -0.124 | 0.001 |
| 48 | SLU 35 | -0.64 | -0.29 | 41.35 | 0.1499 | -0.0603 | 0.0015 |
| 48 | SLU 36 | -1.47 | -0.23 | 42.02 | 0.0681 | -0.0978 | 0.0012 |
| 48 | SLU 37 | -0.6 | -0.28 | 41.16 | 0.1487 | -0.0584 | 0.0015 |
| 48 | SLU 38 | -1.43 | -0.23 | 41.82 | 0.0668 | -0.0959 | 0.0012 |
| 48 | SLU 39 | -0.79 | -0.28 | 41.16 | 0.1447 | -0.066 | 0.0014 |
| 48 | SLU 40 | -1.62 | -0.22 | 41.83 | 0.0628 | -0.1035 | 0.0012 |
| 48 | SLU 41 | -0.69 | -0.29 | 42.03 | 0.1493 | -0.0629 | 0.0015 |
| 48 | SLU 42 | -1.52 | -0.23 | 42.7 | 0.0674 | -0.1005 | 0.0012 |
| 48 | SLU 43 | -1.1 | -0.27 | 39.48 | 0.142 | -0.077 | 0.0014 |
| 48 | SLU 44 | -2.49 | -0.18 | 40.59 | 0.0056 | -0.1395 | 0.001 |
| 48 | SLU 45 | -1.05 | -0.28 | 40.54 | 0.1479 | -0.0758 | 0.0014 |
| 48 | SLU 46 | -1.88 | -0.22 | 41.2 | 0.066 | -0.1133 | 0.0012 |
| 48 | SLU 47 | -2.39 | -0.19 | 41.45 | 0.0102 | -0.1365 | 0.001 |
| 48 | SLU 48 | -0.95 | -0.29 | 41.4 | 0.1525 | -0.0727 | 0.0015 |
| 48 | SLU 49 | -1.78 | -0.23 | 42.07 | 0.0706 | -0.1103 | 0.0012 |
| 48 | SLU 50 | -0.91 | -0.29 | 41.21 | 0.1512 | -0.0709 | 0.0015 |
| 48 | SLU 51 | -1.74 | -0.23 | 41.88 | 0.0694 | -0.1084 | 0.0012 |
| 48 | SLU 52 | -2.49 | -0.2 | 44.65 | 0.0178 | -0.143 | 0.0011 |

| Nodo | Cont. | Reazione a traslazione | | | Reazione a rotazione | | |
|---|---|---|---|---|---|---|---|
| Ind. | N.br. | x | y | z | x | y | z |
| 48 | SLU 53 | -1.05 | -0.3 | 44.6 | 0.16 | -0.0793 | 0.0016 |
| 48 | SLU 54 | -1.88 | -0.25 | 45.27 | 0.0782 | -0.1169 | 0.0013 |
| 48 | SLU 55 | -2.4 | -0.21 | 45.52 | 0.0223 | -0.14 | 0.0012 |
| 48 | SLU 56 | -0.96 | -0.31 | 45.47 | 0.1646 | -0.0763 | 0.0016 |
| 48 | SLU 57 | -1.79 | -0.26 | 46.13 | 0.0827 | -0.1138 | 0.0014 |
| 48 | SLU 58 | -0.92 | -0.31 | 45.28 | 0.1633 | -0.0744 | 0.0016 |
| 48 | SLU 59 | -1.75 | -0.26 | 45.94 | 0.0815 | -0.1119 | 0.0014 |
| 48 | SLU 60 | -1.11 | -0.3 | 45.28 | 0.1593 | -0.082 | 0.0016 |
| 48 | SLU 61 | -1.94 | -0.25 | 45.95 | 0.0775 | -0.1195 | 0.0013 |
| 48 | SLU 62 | -1.01 | -0.31 | 46.15 | 0.1639 | -0.079 | 0.0016 |
| 48 | SLU 63 | -1.84 | -0.26 | 46.82 | 0.0821 | -0.1165 | 0.0014 |
| 48 | SLU 64 | -1.05 | -0.3 | 43.43 | 0.1564 | -0.0783 | 0.0015 |
| 48 | SLU 65 | -2.43 | -0.21 | 44.54 | 0.02 | -0.1409 | 0.0011 |
| 48 | SLU 66 | -0.99 | -0.31 | 44.49 | 0.1622 | -0.0772 | 0.0016 |
| 48 | SLU 67 | -1.83 | -0.25 | 45.15 | 0.0804 | -0.1147 | 0.0013 |
| 48 | SLU 68 | -2.34 | -0.21 | 45.4 | 0.0246 | -0.1378 | 0.0012 |
| 48 | SLU 69 | -0.9 | -0.32 | 45.35 | 0.1668 | -0.0741 | 0.0016 |
| 48 | SLU 70 | -1.73 | -0.26 | 46.02 | 0.085 | -0.1117 | 0.0014 |
| 48 | SLU 71 | -0.86 | -0.31 | 45.16 | 0.1655 | -0.0722 | 0.0016 |
| 48 | SLU 72 | -1.69 | -0.26 | 45.83 | 0.0837 | -0.1098 | 0.0014 |
| 48 | SLU 73 | -2.44 | -0.23 | 48.6 | 0.0321 | -0.1444 | 0.0013 |
| 48 | SLU 74 | -1 | -0.33 | 48.55 | 0.1743 | -0.0807 | 0.0017 |
| 48 | SLU 75 | -1.83 | -0.28 | 49.22 | 0.0925 | -0.1182 | 0.0015 |
| 48 | SLU 76 | -2.34 | -0.24 | 49.47 | 0.0367 | -0.1414 | 0.0013 |
| 48 | SLU 77 | -0.9 | -0.34 | 49.42 | 0.1789 | -0.0777 | 0.0018 |
| 48 | SLU 78 | -1.74 | -0.29 | 50.08 | 0.0971 | -0.1152 | 0.0015 |
| 48 | SLU 79 | -0.87 | -0.34 | 49.23 | 0.1776 | -0.0758 | 0.0017 |
| 48 | SLU 80 | -1.7 | -0.28 | 49.89 | 0.0958 | -0.1133 | 0.0015 |
| 48 | SLU 81 | -1.05 | -0.33 | 49.23 | 0.1737 | -0.0834 | 0.0017 |
| 48 | SLU 82 | -1.89 | -0.28 | 49.9 | 0.0918 | -0.1209 | 0.0015 |
| 48 | SLU 83 | -0.96 | -0.34 | 50.1 | 0.1782 | -0.0803 | 0.0018 |
| 48 | SLU 84 | -1.79 | -0.29 | 50.77 | 0.0964 | -0.1179 | 0.0015 |
| 48 | SLE RA 1 | -0.82 | -0.22 | 32.54 | 0.1171 | -0.0599 | 0.0011 |
| 48 | SLE RA 2 | -1.74 | -0.16 | 33.28 | 0.0262 | -0.1016 | 0.0009 |
| 48 | SLE RA 3 | -0.78 | -0.23 | 33.24 | 0.121 | -0.0592 | 0.0012 |
| 48 | SLE RA 4 | -1.34 | -0.19 | 33.69 | 0.0665 | -0.0842 | 0.001 |
| 48 | SLE RA 5 | -1.68 | -0.17 | 33.86 | 0.0293 | -0.0996 | 0.0009 |
| 48 | SLE RA 6 | -0.72 | -0.23 | 33.82 | 0.1241 | -0.0571 | 0.0012 |
| 48 | SLE RA 7 | -1.27 | -0.2 | 34.27 | 0.0695 | -0.0822 | 0.0011 |
| 48 | SLE RA 8 | -0.69 | -0.23 | 33.69 | 0.1232 | -0.0559 | 0.0012 |
| 48 | SLE RA 9 | -1.25 | -0.2 | 34.14 | 0.0687 | -0.0809 | 0.001 |
| 48 | SLE RA 10 | -1.74 | -0.18 | 35.99 | 0.0343 | -0.104 | 0.001 |
| 48 | SLE RA 11 | -0.78 | -0.25 | 35.95 | 0.1291 | -0.0615 | 0.0013 |
| 48 | SLE RA 12 | -1.34 | -0.21 | 36.4 | 0.0745 | -0.0866 | 0.0011 |
| 48 | SLE RA 13 | -1.68 | -0.18 | 36.56 | 0.0373 | -0.102 | 0.001 |
| 48 | SLE RA 14 | -0.72 | -0.25 | 36.53 | 0.1322 | -0.0595 | 0.0013 |
| 48 | SLE RA 15 | -1.28 | -0.21 | 36.98 | 0.0776 | -0.0845 | 0.0011 |
| 48 | SLE RA 16 | -0.7 | -0.25 | 36.4 | 0.1313 | -0.0582 | 0.0013 |
| 48 | SLE RA 17 | -1.25 | -0.21 | 36.85 | 0.0768 | -0.0833 | 0.0011 |
| 48 | SLE RA 18 | -0.82 | -0.25 | 36.41 | 0.1287 | -0.0633 | 0.0013 |
| 48 | SLE RA 19 | -1.38 | -0.21 | 36.85 | 0.0741 | -0.0883 | 0.0011 |
| 48 | SLE RA 20 | -0.76 | -0.25 | 36.99 | 0.1317 | -0.0613 | 0.0013 |
| 48 | SLE RA 21 | -1.31 | -0.21 | 37.43 | 0.0772 | -0.0863 | 0.0011 |
| 48 | SLE FR 1 | -0.82 | -0.22 | 32.54 | 0.1171 | -0.0599 | 0.0011 |
| 48 | SLE FR 2 | -1 | -0.21 | 32.69 | 0.0989 | -0.0683 | 0.0011 |
| 48 | SLE FR 3 | -0.79 | -0.22 | 32.77 | 0.1184 | -0.0591 | 0.0012 |
| 48 | SLE FR 4 | -1 | -0.22 | 33.85 | 0.1024 | -0.0693 | 0.0011 |
| 48 | SLE FR 5 | -0.79 | -0.23 | 33.93 | 0.1218 | -0.0601 | 0.0012 |
| 48 | SLE FR 6 | -0.82 | -0.23 | 34.47 | 0.1229 | -0.0616 | 0.0012 |
| 48 | SLE QP 1 | -0.82 | -0.22 | 32.54 | 0.1171 | -0.0599 | 0.0011 |
| 48 | SLE QP 2 | -0.82 | -0.23 | 33.7 | 0.1206 | -0.061 | 0.0012 |
| 48 | SLD 1 | 6.38 | -0.47 | 40.67 | 0.099 | 0.2496 | 0.0024 |
| 48 | SLD 2 | 6.38 | -0.47 | 40.67 | 0.099 | 0.2496 | 0.0024 |
| 48 | SLD 3 | 7.39 | -0.25 | 36.4 | 0.3203 | 0.2962 | 0.0013 |
| 48 | SLD 4 | 7.39 | -0.25 | 36.4 | 0.3203 | 0.2962 | 0.0013 |
| 48 | SLD 5 | -0.19 | -0.63 | 42.26 | -0.2216 | -0.0384 | 0.0031 |
| 48 | SLD 6 | -0.19 | -0.63 | 42.26 | -0.2216 | -0.0384 | 0.0031 |
| 48 | SLD 7 | 3.17 | 0.09 | 28.04 | 0.5162 | 0.1168 | -0.0004 |
| 48 | SLD 8 | 3.17 | 0.09 | 28.04 | 0.5162 | 0.1168 | -0.0004 |
| 48 | SLD 9 | -4.81 | -0.55 | 39.36 | -0.275 | -0.2387 | 0.0027 |
| 48 | SLD 10 | -4.81 | -0.55 | 39.36 | -0.275 | -0.2387 | 0.0027 |
| 48 | SLD 11 | -1.45 | 0.17 | 25.14 | 0.4628 | -0.0835 | -0.0008 |
| 48 | SLD 12 | -1.45 | 0.17 | 25.14 | 0.4628 | -0.0835 | -0.0008 |
| 48 | SLD 13 | -9.03 | -0.21 | 31 | -0.0791 | -0.4181 | 0.0011 |
| 48 | SLD 14 | -9.03 | -0.21 | 31 | -0.0791 | -0.4181 | 0.0011 |
| 48 | SLD 15 | -8.02 | 0.01 | 26.73 | 0.1422 | -0.3716 | 0 |
| 48 | SLD 16 | -8.02 | 0.01 | 26.73 | 0.1422 | -0.3716 | 0 |
| 48 | SLV 1 | 15.65 | -0.8 | 50.16 | 0.0548 | 0.6488 | 0.004 |
| 48 | SLV 2 | 15.65 | -0.8 | 50.16 | 0.0548 | 0.6488 | 0.004 |
| 48 | SLV 3 | 18.16 | -0.27 | 39.92 | 0.614 | 0.7654 | 0.0014 |
| 48 | SLV 4 | 18.16 | -0.27 | 39.92 | 0.614 | 0.7654 | 0.0014 |
| 48 | SLV 5 | 0.31 | -1.21 | 54.17 | -0.7472 | -0.0248 | 0.0059 |
| 48 | SLV 6 | 0.31 | -1.21 | 54.17 | -0.7472 | -0.0248 | 0.0059 |
| 48 | SLV 7 | 8.69 | 0.57 | 20.03 | 1.1167 | 0.3637 | -0.0026 |
| 48 | SLV 8 | 8.69 | 0.57 | 20.03 | 1.1167 | 0.3637 | -0.0026 |
| 48 | SLV 9 | -10.33 | -1.03 | 47.36 | -0.8755 | -0.4856 | 0.005 |
| 48 | SLV 10 | -10.33 | -1.03 | 47.36 | -0.8755 | -0.4856 | 0.005 |
| 48 | SLV 11 | -1.95 | 0.75 | 13.23 | 0.9884 | -0.0972 | -0.0036 |

| Nodo | Cont. | Reazione a traslazione | | | Reazione a rotazione | | |
|---|---|---|---|---|---|---|---|
| Ind. | N.br. | x | y | z | x | y | z |
| 48 | SLV 12 | -1.95 | 0.75 | 13.23 | 0.9884 | -0.0972 | -0.0036 |
| 48 | SLV 13 | -19.8 | -0.19 | 27.48 | -0.3728 | -0.8873 | 0.0009 |
| 48 | SLV 14 | -19.8 | -0.19 | 27.48 | -0.3728 | -0.8873 | 0.0009 |
| 48 | SLV 15 | -17.28 | 0.34 | 17.24 | 0.1863 | -0.7708 | -0.0016 |
| 48 | SLV 16 | -17.28 | 0.34 | 17.24 | 0.1863 | -0.7708 | -0.0016 |
| 49 | SLU 1 | 0.8 | -0.22 | 27.37 | 0.1259 | 0.0893 | 0.0013 |
| 49 | SLU 2 | -0.16 | -0.1 | 28.24 | -0.0394 | 0.0532 | 0.0007 |
| 49 | SLU 3 | 0.98 | -0.23 | 28.16 | 0.1322 | 0.1006 | 0.0014 |
| 49 | SLU 4 | 0.4 | -0.16 | 28.68 | 0.033 | 0.0789 | 0.001 |
| 49 | SLU 5 | 0.05 | -0.11 | 28.87 | -0.0345 | 0.0652 | 0.0008 |
| 49 | SLU 6 | 1.19 | -0.24 | 28.79 | 0.1371 | 0.1126 | 0.0014 |
| 49 | SLU 7 | 0.61 | -0.17 | 29.31 | 0.0379 | 0.091 | 0.0011 |
| 49 | SLU 8 | 1.21 | -0.24 | 28.63 | 0.1357 | 0.1133 | 0.0014 |
| 49 | SLU 9 | 0.64 | -0.17 | 29.15 | 0.0365 | 0.0917 | 0.0011 |
| 49 | SLU 10 | -0.01 | -0.13 | 31.85 | -0.026 | 0.0665 | 0.0009 |
| 49 | SLU 11 | 1.13 | -0.26 | 31.77 | 0.1456 | 0.1139 | 0.0015 |
| 49 | SLU 12 | 0.56 | -0.19 | 32.29 | 0.0464 | 0.0922 | 0.0012 |
| 49 | SLU 13 | 0.2 | -0.13 | 32.48 | -0.0211 | 0.0785 | 0.0009 |
| 49 | SLU 14 | 1.34 | -0.27 | 32.4 | 0.1505 | 0.1259 | 0.0016 |
| 49 | SLU 15 | 0.77 | -0.19 | 32.92 | 0.0513 | 0.1042 | 0.0012 |
| 49 | SLU 16 | 1.37 | -0.26 | 32.24 | 0.1491 | 0.1266 | 0.0016 |
| 49 | SLU 17 | 0.79 | -0.19 | 32.76 | 0.0499 | 0.1049 | 0.0012 |
| 49 | SLU 18 | 1.02 | -0.26 | 32.53 | 0.145 | 0.1083 | 0.0015 |
| 49 | SLU 19 | 0.44 | -0.19 | 33.05 | 0.0458 | 0.0866 | 0.0012 |
| 49 | SLU 20 | 1.23 | -0.27 | 33.16 | 0.1499 | 0.1203 | 0.0016 |
| 49 | SLU 21 | 0.65 | -0.19 | 33.68 | 0.0507 | 0.0986 | 0.0012 |
| 49 | SLU 22 | 1.08 | -0.25 | 30.75 | 0.1417 | 0.1095 | 0.0015 |
| 49 | SLU 23 | 0.12 | -0.13 | 31.62 | -0.0236 | 0.0734 | 0.0009 |
| 49 | SLU 24 | 1.26 | -0.26 | 31.54 | 0.148 | 0.1208 | 0.0016 |
| 49 | SLU 25 | 0.69 | -0.19 | 32.06 | 0.0488 | 0.0991 | 0.0012 |
| 49 | SLU 26 | 0.33 | -0.14 | 32.24 | -0.0187 | 0.0854 | 0.0009 |
| 49 | SLU 27 | 1.47 | -0.27 | 32.17 | 0.1529 | 0.1328 | 0.0016 |
| 49 | SLU 28 | 0.89 | -0.2 | 32.69 | 0.0537 | 0.1111 | 0.0012 |
| 49 | SLU 29 | 1.49 | -0.27 | 32 | 0.1514 | 0.1335 | 0.0016 |
| 49 | SLU 30 | 0.92 | -0.19 | 32.52 | 0.0523 | 0.1118 | 0.0012 |
| 49 | SLU 31 | 0.28 | -0.16 | 35.22 | -0.0102 | 0.0867 | 0.001 |
| 49 | SLU 32 | 1.42 | -0.29 | 35.15 | 0.1614 | 0.1341 | 0.0017 |
| 49 | SLU 33 | 0.84 | -0.21 | 35.67 | 0.0622 | 0.1124 | 0.0013 |
| 49 | SLU 34 | 0.48 | -0.16 | 35.85 | -0.0053 | 0.0987 | 0.0011 |
| 49 | SLU 35 | 1.62 | -0.29 | 35.78 | 0.1663 | 0.1461 | 0.0018 |
| 49 | SLU 36 | 1.05 | -0.22 | 36.3 | 0.0671 | 0.1244 | 0.0014 |
| 49 | SLU 37 | 1.65 | -0.29 | 35.61 | 0.1648 | 0.1468 | 0.0017 |
| 49 | SLU 38 | 1.07 | -0.22 | 36.13 | 0.0657 | 0.1251 | 0.0014 |
| 49 | SLU 39 | 1.3 | -0.29 | 35.9 | 0.1608 | 0.1285 | 0.0017 |
| 49 | SLU 40 | 0.73 | -0.21 | 36.42 | 0.0616 | 0.1068 | 0.0014 |
| 49 | SLU 41 | 1.51 | -0.29 | 36.53 | 0.1657 | 0.1405 | 0.0018 |
| 49 | SLU 42 | 0.93 | -0.22 | 37.05 | 0.0665 | 0.1188 | 0.0014 |
| 49 | SLU 43 | 0.94 | -0.28 | 34.43 | 0.1582 | 0.1092 | 0.0017 |
| 49 | SLU 44 | -0.02 | -0.16 | 35.3 | -0.0071 | 0.073 | 0.0011 |
| 49 | SLU 45 | 1.12 | -0.29 | 35.22 | 0.1645 | 0.1205 | 0.0017 |
| 49 | SLU 46 | 0.55 | -0.22 | 35.74 | 0.0654 | 0.0988 | 0.0014 |
| 49 | SLU 47 | 0.19 | -0.17 | 35.92 | -0.0022 | 0.0851 | 0.0011 |
| 49 | SLU 48 | 1.33 | -0.3 | 35.85 | 0.1694 | 0.1325 | 0.0018 |
| 49 | SLU 49 | 0.75 | -0.22 | 36.37 | 0.0703 | 0.1108 | 0.0014 |
| 49 | SLU 50 | 1.35 | -0.29 | 35.68 | 0.168 | 0.1332 | 0.0017 |
| 49 | SLU 51 | 0.78 | -0.22 | 36.2 | 0.0688 | 0.1115 | 0.0014 |
| 49 | SLU 52 | 0.14 | -0.18 | 38.91 | 0.0063 | 0.0863 | 0.0012 |
| 49 | SLU 53 | 1.28 | -0.31 | 38.83 | 0.1779 | 0.1338 | 0.0019 |
| 49 | SLU 54 | 0.7 | -0.24 | 39.35 | 0.0788 | 0.1121 | 0.0015 |
| 49 | SLU 55 | 0.34 | -0.19 | 39.53 | 0.0112 | 0.0983 | 0.0013 |
| 49 | SLU 56 | 1.48 | -0.32 | 39.46 | 0.1828 | 0.1458 | 0.0019 |
| 49 | SLU 57 | 0.91 | -0.25 | 39.98 | 0.0837 | 0.1241 | 0.0016 |
| 49 | SLU 58 | 1.51 | -0.32 | 39.29 | 0.1814 | 0.1465 | 0.0019 |
| 49 | SLU 59 | 0.93 | -0.25 | 39.81 | 0.0822 | 0.1248 | 0.0015 |
| 49 | SLU 60 | 1.16 | -0.31 | 39.58 | 0.1774 | 0.1281 | 0.0019 |
| 49 | SLU 61 | 0.59 | -0.24 | 40.11 | 0.0782 | 0.1065 | 0.0015 |
| 49 | SLU 62 | 1.37 | -0.32 | 40.21 | 0.1822 | 0.1402 | 0.0019 |
| 49 | SLU 63 | 0.79 | -0.25 | 40.73 | 0.0831 | 0.1185 | 0.0016 |
| 49 | SLU 64 | 1.22 | -0.31 | 37.8 | 0.174 | 0.1294 | 0.0018 |
| 49 | SLU 65 | 0.26 | -0.19 | 38.67 | 0.0087 | 0.0932 | 0.0012 |
| 49 | SLU 66 | 1.4 | -0.32 | 38.59 | 0.1803 | 0.1407 | 0.0019 |
| 49 | SLU 67 | 0.83 | -0.25 | 39.11 | 0.0812 | 0.119 | 0.0015 |
| 49 | SLU 68 | 0.47 | -0.19 | 39.3 | 0.0136 | 0.1052 | 0.0013 |
| 49 | SLU 69 | 1.61 | -0.33 | 39.22 | 0.1852 | 0.1527 | 0.0019 |
| 49 | SLU 70 | 1.04 | -0.25 | 39.74 | 0.0861 | 0.131 | 0.0016 |
| 49 | SLU 71 | 1.64 | -0.32 | 39.06 | 0.1838 | 0.1534 | 0.0019 |
| 49 | SLU 72 | 1.06 | -0.25 | 39.58 | 0.0846 | 0.1317 | 0.0016 |
| 49 | SLU 73 | 0.42 | -0.21 | 42.28 | 0.0221 | 0.1065 | 0.0014 |
| 49 | SLU 74 | 1.56 | -0.34 | 42.2 | 0.1937 | 0.154 | 0.002 |
| 49 | SLU 75 | 0.98 | -0.27 | 42.72 | 0.0946 | 0.1323 | 0.0017 |
| 49 | SLU 76 | 0.63 | -0.22 | 42.91 | 0.027 | 0.1185 | 0.0014 |
| 49 | SLU 77 | 1.77 | -0.35 | 42.83 | 0.1986 | 0.166 | 0.0021 |
| 49 | SLU 78 | 1.19 | -0.28 | 43.35 | 0.0994 | 0.1443 | 0.0017 |
| 49 | SLU 79 | 1.79 | -0.35 | 42.67 | 0.1972 | 0.1667 | 0.0021 |
| 49 | SLU 80 | 1.22 | -0.28 | 43.19 | 0.098 | 0.145 | 0.0017 |
| 49 | SLU 81 | 1.44 | -0.34 | 42.96 | 0.1931 | 0.1483 | 0.002 |
| 49 | SLU 82 | 0.87 | -0.27 | 43.48 | 0.094 | 0.1267 | 0.0017 |
| 49 | SLU 83 | 1.65 | -0.35 | 43.59 | 0.198 | 0.1603 | 0.0021 |

| Nodo | Cont. | Reazione a traslazione | | | Reazione a rotazione | | |
|---|---|---|---|---|---|---|---|
| Ind. | N.br. | x | y | z | x | y | z |
| 49 | SLU 84 | 1.08 | -0.28 | 44.11 | 0.0989 | 0.1387 | 0.0017 |
| 49 | SLE RA 1 | 0.88 | -0.23 | 28.34 | 0.1304 | 0.0951 | 0.0014 |
| 49 | SLE RA 2 | 0.24 | -0.15 | 28.92 | 0.0202 | 0.071 | 0.001 |
| 49 | SLE RA 3 | 1 | -0.24 | 28.86 | 0.1346 | 0.1026 | 0.0014 |
| 49 | SLE RA 4 | 0.62 | -0.19 | 29.21 | 0.0685 | 0.0882 | 0.0012 |
| 49 | SLE RA 5 | 0.38 | -0.15 | 29.33 | 0.0235 | 0.079 | 0.001 |
| 49 | SLE RA 6 | 1.14 | -0.24 | 29.28 | 0.1379 | 0.1106 | 0.0014 |
| 49 | SLE RA 7 | 0.75 | -0.19 | 29.63 | 0.0717 | 0.0962 | 0.0012 |
| 49 | SLE RA 8 | 1.15 | -0.24 | 29.17 | 0.1369 | 0.1111 | 0.0014 |
| 49 | SLE RA 9 | 0.77 | -0.19 | 29.52 | 0.0708 | 0.0966 | 0.0012 |
| 49 | SLE RA 10 | 0.34 | -0.17 | 31.32 | 0.0291 | 0.0798 | 0.0011 |
| 49 | SLE RA 11 | 1.1 | -0.25 | 31.27 | 0.1435 | 0.1115 | 0.0015 |
| 49 | SLE RA 12 | 0.72 | -0.21 | 31.62 | 0.0774 | 0.097 | 0.0013 |
| 49 | SLE RA 13 | 0.48 | -0.17 | 31.74 | 0.0324 | 0.0879 | 0.0011 |
| 49 | SLE RA 14 | 1.24 | -0.26 | 31.69 | 0.1468 | 0.1195 | 0.0015 |
| 49 | SLE RA 15 | 0.86 | -0.21 | 32.04 | 0.0807 | 0.105 | 0.0013 |
| 49 | SLE RA 16 | 1.26 | -0.26 | 31.58 | 0.1458 | 0.1199 | 0.0015 |
| 49 | SLE RA 17 | 0.87 | -0.21 | 31.93 | 0.0797 | 0.1055 | 0.0013 |
| 49 | SLE RA 18 | 1.03 | -0.25 | 31.77 | 0.1431 | 0.1077 | 0.0015 |
| 49 | SLE RA 19 | 0.64 | -0.21 | 32.12 | 0.077 | 0.0933 | 0.0013 |
| 49 | SLE RA 20 | 1.16 | -0.26 | 32.19 | 0.1464 | 0.1157 | 0.0015 |
| 49 | SLE RA 21 | 0.78 | -0.21 | 32.54 | 0.0803 | 0.1013 | 0.0013 |
| 49 | SLE FR 1 | 0.88 | -0.23 | 28.34 | 0.1304 | 0.0951 | 0.0014 |
| 49 | SLE FR 2 | 0.75 | -0.21 | 28.45 | 0.1083 | 0.0903 | 0.0013 |
| 49 | SLE FR 3 | 0.93 | -0.23 | 28.5 | 0.1317 | 0.0983 | 0.0014 |
| 49 | SLE FR 4 | 0.79 | -0.22 | 29.48 | 0.1122 | 0.094 | 0.0013 |
| 49 | SLE FR 5 | 0.98 | -0.24 | 29.54 | 0.1355 | 0.1021 | 0.0014 |
| 49 | SLE FR 6 | 0.95 | -0.24 | 30.06 | 0.1368 | 0.1014 | 0.0014 |
| 49 | SLE QP 1 | 0.88 | -0.23 | 28.34 | 0.1304 | 0.0951 | 0.0014 |
| 49 | SLE QP 2 | 0.92 | -0.24 | 29.37 | 0.1342 | 0.0989 | 0.0014 |
| 49 | SLD 1 | 8.84 | -0.49 | 34.56 | 0.0954 | 0.4449 | 0.0028 |
| 49 | SLD 2 | 8.84 | -0.49 | 34.56 | 0.0954 | 0.4449 | 0.0028 |
| 49 | SLD 3 | 9.74 | -0.23 | 30.61 | 0.362 | 0.4861 | 0.0014 |
| 49 | SLD 4 | 9.74 | -0.23 | 30.61 | 0.362 | 0.4861 | 0.0014 |
| 49 | SLD 5 | 1.94 | -0.71 | 36.91 | -0.2819 | 0.1402 | 0.0039 |
| 49 | SLD 6 | 1.94 | -0.71 | 36.91 | -0.2819 | 0.1402 | 0.0039 |
| 49 | SLD 7 | 4.93 | 0.16 | 23.76 | 0.607 | 0.2775 | -0.0007 |
| 49 | SLD 8 | 4.93 | 0.16 | 23.76 | 0.607 | 0.2775 | -0.0007 |
| 49 | SLD 9 | -3.08 | -0.63 | 34.98 | -0.3386 | -0.0798 | 0.0035 |
| 49 | SLD 10 | -3.08 | -0.63 | 34.98 | -0.3386 | -0.0798 | 0.0035 |
| 49 | SLD 11 | -0.1 | 0.23 | 21.83 | 0.5503 | 0.0575 | -0.0011 |
| 49 | SLD 12 | -0.1 | 0.23 | 21.83 | 0.5503 | 0.0575 | -0.0011 |
| 49 | SLD 13 | -7.89 | -0.24 | 28.12 | -0.0936 | -0.2884 | 0.0014 |
| 49 | SLD 14 | -7.89 | -0.24 | 28.12 | -0.0936 | -0.2884 | 0.0014 |
| 49 | SLD 15 | -7 | 0.02 | 24.18 | 0.1731 | -0.2472 | 0 |
| 49 | SLD 16 | -7 | 0.02 | 24.18 | 0.1731 | -0.2472 | 0 |
| 49 | SLV 1 | 19.08 | -0.86 | 41.74 | 0.023 | 0.8928 | 0.0048 |
| 49 | SLV 2 | 19.08 | -0.86 | 41.74 | 0.023 | 0.8928 | 0.0048 |
| 49 | SLV 3 | 21.3 | -0.21 | 32.09 | 0.698 | 0.9944 | 0.0014 |
| 49 | SLV 4 | 21.3 | -0.21 | 32.09 | 0.698 | 0.9944 | 0.0014 |
| 49 | SLV 5 | 3.01 | -1.41 | 47.71 | -0.9229 | 0.183 | 0.0076 |
| 49 | SLV 6 | 3.01 | -1.41 | 47.71 | -0.9229 | 0.183 | 0.0076 |
| 49 | SLV 7 | 10.4 | 0.75 | 15.55 | 1.3271 | 0.5215 | -0.0038 |
| 49 | SLV 8 | 10.4 | 0.75 | 15.55 | 1.3271 | 0.5215 | -0.0038 |
| 49 | SLV 9 | -8.55 | -1.23 | 43.18 | -1.0587 | -0.3238 | 0.0066 |
| 49 | SLV 10 | -8.55 | -1.23 | 43.18 | -1.0587 | -0.3238 | 0.0066 |
| 49 | SLV 11 | -1.16 | 0.93 | 11.02 | 1.1913 | 0.0147 | -0.0048 |
| 49 | SLV 12 | -1.16 | 0.93 | 11.02 | 1.1913 | 0.0147 | -0.0048 |
| 49 | SLV 13 | -19.45 | -0.26 | 26.64 | -0.4296 | -0.7966 | 0.0015 |
| 49 | SLV 14 | -19.45 | -0.26 | 26.64 | -0.4296 | -0.7966 | 0.0015 |
| 49 | SLV 15 | -17.24 | 0.39 | 16.99 | 0.2454 | -0.6951 | -0.002 |
| 49 | SLV 16 | -17.24 | 0.39 | 16.99 | 0.2454 | -0.6951 | -0.002 |
| 50 | SLU 1 | 1.25 | -0.21 | 25 | 0.132 | 0.0357 | 0.0012 |
| 50 | SLU 2 | 0.54 | -0.07 | 25.67 | -0.054 | 0.0029 | 0.0005 |
| 50 | SLU 3 | 1.46 | -0.22 | 25.63 | 0.1382 | 0.0438 | 0.0012 |
| 50 | SLU 4 | 1.04 | -0.14 | 26.03 | 0.0267 | 0.0242 | 0.0008 |
| 50 | SLU 5 | 0.78 | -0.08 | 26.15 | -0.0493 | 0.0121 | 0.0005 |
| 50 | SLU 6 | 1.7 | -0.23 | 26.11 | 0.1429 | 0.053 | 0.0013 |
| 50 | SLU 7 | 1.28 | -0.15 | 26.51 | 0.0314 | 0.0333 | 0.0009 |
| 50 | SLU 8 | 1.72 | -0.23 | 25.96 | 0.1414 | 0.0541 | 0.0012 |
| 50 | SLU 9 | 1.3 | -0.14 | 26.36 | 0.0298 | 0.0344 | 0.0008 |
| 50 | SLU 10 | 0.73 | -0.1 | 29.02 | -0.0398 | 0.0087 | 0.0006 |
| 50 | SLU 11 | 1.65 | -0.25 | 28.98 | 0.1524 | 0.0496 | 0.0014 |
| 50 | SLU 12 | 1.23 | -0.16 | 29.38 | 0.0408 | 0.0299 | 0.001 |
| 50 | SLU 13 | 0.97 | -0.11 | 29.5 | -0.0351 | 0.0179 | 0.0007 |
| 50 | SLU 14 | 1.89 | -0.25 | 29.46 | 0.1571 | 0.0588 | 0.0014 |
| 50 | SLU 15 | 1.46 | -0.17 | 29.86 | 0.0455 | 0.0391 | 0.001 |
| 50 | SLU 16 | 1.91 | -0.25 | 29.31 | 0.1555 | 0.0598 | 0.0014 |
| 50 | SLU 17 | 1.49 | -0.17 | 29.71 | 0.044 | 0.0402 | 0.001 |
| 50 | SLU 18 | 1.51 | -0.25 | 29.79 | 0.1522 | 0.0439 | 0.0014 |
| 50 | SLU 19 | 1.09 | -0.16 | 30.19 | 0.0406 | 0.0243 | 0.001 |
| 50 | SLU 20 | 1.75 | -0.26 | 30.27 | 0.1569 | 0.0531 | 0.0014 |
| 50 | SLU 21 | 1.33 | -0.17 | 30.67 | 0.0453 | 0.0334 | 0.001 |
| 50 | SLU 22 | 1.58 | -0.24 | 28.05 | 0.1484 | 0.0475 | 0.0013 |
| 50 | SLU 23 | 0.88 | -0.1 | 28.71 | -0.0376 | 0.0147 | 0.0006 |
| 50 | SLU 24 | 1.8 | -0.25 | 28.67 | 0.1546 | 0.0556 | 0.0014 |
| 50 | SLU 25 | 1.38 | -0.17 | 29.07 | 0.043 | 0.0359 | 0.001 |
| 50 | SLU 26 | 1.12 | -0.11 | 29.19 | -0.0329 | 0.0239 | 0.0007 |

| Nodo | Cont. | Reazione a traslazione | | | Reazione a rotazione | | |
|---|---|---|---|---|---|---|---|
| Ind. | N.br. | x | y | z | x | y | z |
| 50 | SLU 27 | 2.04 | -0.26 | 29.15 | 0.1593 | 0.0648 | 0.0014 |
| 50 | SLU 28 | 1.62 | -0.17 | 29.55 | 0.0477 | 0.0451 | 0.001 |
| 50 | SLU 29 | 2.06 | -0.26 | 29.01 | 0.1577 | 0.0658 | 0.0014 |
| 50 | SLU 30 | 1.64 | -0.17 | 29.4 | 0.0462 | 0.0462 | 0.001 |
| 50 | SLU 31 | 1.06 | -0.13 | 32.06 | -0.0234 | 0.0204 | 0.0008 |
| 50 | SLU 32 | 1.99 | -0.27 | 32.02 | 0.1688 | 0.0614 | 0.0015 |
| 50 | SLU 33 | 1.56 | -0.19 | 32.42 | 0.0572 | 0.0417 | 0.0011 |
| 50 | SLU 34 | 1.3 | -0.13 | 32.54 | -0.0187 | 0.0296 | 0.0008 |
| 50 | SLU 35 | 2.22 | -0.28 | 32.5 | 0.1735 | 0.0706 | 0.0015 |
| 50 | SLU 36 | 1.8 | -0.2 | 32.9 | 0.0619 | 0.0509 | 0.0011 |
| 50 | SLU 37 | 2.24 | -0.28 | 32.36 | 0.1719 | 0.0716 | 0.0015 |
| 50 | SLU 38 | 1.82 | -0.2 | 32.75 | 0.0603 | 0.0519 | 0.0011 |
| 50 | SLU 39 | 1.85 | -0.28 | 32.83 | 0.1686 | 0.0557 | 0.0015 |
| 50 | SLU 40 | 1.43 | -0.19 | 33.23 | 0.057 | 0.036 | 0.0011 |
| 50 | SLU 41 | 2.09 | -0.28 | 33.31 | 0.1733 | 0.0649 | 0.0016 |
| 50 | SLU 42 | 1.66 | -0.2 | 33.71 | 0.0617 | 0.0452 | 0.0011 |
| 50 | SLU 43 | 1.51 | -0.27 | 31.46 | 0.166 | 0.0424 | 0.0015 |
| 50 | SLU 44 | 0.8 | -0.13 | 32.13 | -0.02 | 0.0096 | 0.0008 |
| 50 | SLU 45 | 1.72 | -0.28 | 32.09 | 0.1722 | 0.0505 | 0.0015 |
| 50 | SLU 46 | 1.3 | -0.19 | 32.49 | 0.0607 | 0.0308 | 0.0011 |
| 50 | SLU 47 | 1.04 | -0.14 | 32.61 | -0.0153 | 0.0188 | 0.0008 |
| 50 | SLU 48 | 1.96 | -0.29 | 32.57 | 0.1769 | 0.0597 | 0.0016 |
| 50 | SLU 49 | 1.54 | -0.2 | 32.96 | 0.0653 | 0.04 | 0.0012 |
| 50 | SLU 50 | 1.98 | -0.28 | 32.42 | 0.1753 | 0.0607 | 0.0015 |
| 50 | SLU 51 | 1.56 | -0.2 | 32.82 | 0.0638 | 0.0411 | 0.0011 |
| 50 | SLU 52 | 0.99 | -0.15 | 35.48 | -0.0058 | 0.0154 | 0.0009 |
| 50 | SLU 53 | 1.91 | -0.3 | 35.44 | 0.1864 | 0.0563 | 0.0017 |
| 50 | SLU 54 | 1.49 | -0.22 | 35.84 | 0.0748 | 0.0366 | 0.0013 |
| 50 | SLU 55 | 1.22 | -0.16 | 35.96 | -0.0011 | 0.0245 | 0.001 |
| 50 | SLU 56 | 2.15 | -0.31 | 35.92 | 0.1911 | 0.0655 | 0.0017 |
| 50 | SLU 57 | 1.72 | -0.23 | 36.32 | 0.0795 | 0.0458 | 0.0013 |
| 50 | SLU 58 | 2.17 | -0.31 | 35.77 | 0.1895 | 0.0665 | 0.0017 |
| 50 | SLU 59 | 1.74 | -0.22 | 36.17 | 0.0779 | 0.0468 | 0.0013 |
| 50 | SLU 60 | 1.77 | -0.3 | 36.25 | 0.1862 | 0.0506 | 0.0017 |
| 50 | SLU 61 | 1.35 | -0.22 | 36.65 | 0.0746 | 0.0309 | 0.0013 |
| 50 | SLU 62 | 2.01 | -0.31 | 36.73 | 0.1909 | 0.0598 | 0.0017 |
| 50 | SLU 63 | 1.59 | -0.23 | 37.13 | 0.0793 | 0.0401 | 0.0013 |
| 50 | SLU 64 | 1.84 | -0.3 | 34.51 | 0.1823 | 0.0541 | 0.0016 |
| 50 | SLU 65 | 1.14 | -0.16 | 35.17 | -0.0036 | 0.0214 | 0.0009 |
| 50 | SLU 66 | 2.06 | -0.31 | 35.13 | 0.1886 | 0.0623 | 0.0017 |
| 50 | SLU 67 | 1.64 | -0.22 | 35.53 | 0.077 | 0.0426 | 0.0013 |
| 50 | SLU 68 | 1.38 | -0.16 | 35.65 | 0.0011 | 0.0305 | 0.001 |
| 50 | SLU 69 | 2.3 | -0.31 | 35.61 | 0.1933 | 0.0715 | 0.0017 |
| 50 | SLU 70 | 1.87 | -0.23 | 36.01 | 0.0817 | 0.0518 | 0.0013 |
| 50 | SLU 71 | 2.32 | -0.31 | 35.46 | 0.1917 | 0.0725 | 0.0017 |
| 50 | SLU 72 | 1.9 | -0.23 | 35.86 | 0.0802 | 0.0528 | 0.0013 |
| 50 | SLU 73 | 1.32 | -0.18 | 38.52 | 0.0106 | 0.0271 | 0.0011 |
| 50 | SLU 74 | 2.24 | -0.33 | 38.48 | 0.2028 | 0.0681 | 0.0018 |
| 50 | SLU 75 | 1.82 | -0.25 | 38.88 | 0.0912 | 0.0484 | 0.0014 |
| 50 | SLU 76 | 1.56 | -0.19 | 39 | 0.0152 | 0.0363 | 0.0011 |
| 50 | SLU 77 | 2.48 | -0.34 | 38.96 | 0.2074 | 0.0772 | 0.0018 |
| 50 | SLU 78 | 2.06 | -0.25 | 39.36 | 0.0959 | 0.0576 | 0.0014 |
| 50 | SLU 79 | 2.5 | -0.33 | 38.82 | 0.2059 | 0.0783 | 0.0018 |
| 50 | SLU 80 | 2.08 | -0.25 | 39.21 | 0.0943 | 0.0586 | 0.0014 |
| 50 | SLU 81 | 2.11 | -0.33 | 39.29 | 0.2026 | 0.0624 | 0.0018 |
| 50 | SLU 82 | 1.68 | -0.25 | 39.69 | 0.091 | 0.0427 | 0.0014 |
| 50 | SLU 83 | 2.35 | -0.34 | 39.77 | 0.2073 | 0.0716 | 0.0019 |
| 50 | SLU 84 | 1.92 | -0.25 | 40.17 | 0.0957 | 0.0519 | 0.0014 |
| 50 | SLE RA 1 | 1.34 | -0.22 | 25.87 | 0.1367 | 0.0391 | 0.0012 |
| 50 | SLE RA 2 | 0.87 | -0.13 | 26.32 | 0.0127 | 0.0172 | 0.0008 |
| 50 | SLE RA 3 | 1.49 | -0.23 | 26.29 | 0.1408 | 0.0445 | 0.0012 |
| 50 | SLE RA 4 | 1.21 | -0.17 | 26.56 | 0.0665 | 0.0314 | 0.001 |
| 50 | SLE RA 5 | 1.03 | -0.13 | 26.64 | 0.0158 | 0.0233 | 0.0008 |
| 50 | SLE RA 6 | 1.65 | -0.23 | 26.61 | 0.144 | 0.0506 | 0.0013 |
| 50 | SLE RA 7 | 1.36 | -0.18 | 26.88 | 0.0696 | 0.0375 | 0.001 |
| 50 | SLE RA 8 | 1.66 | -0.23 | 26.51 | 0.1429 | 0.0513 | 0.0013 |
| 50 | SLE RA 9 | 1.38 | -0.17 | 26.78 | 0.0685 | 0.0382 | 0.001 |
| 50 | SLE RA 10 | 1 | -0.14 | 28.55 | 0.0221 | 0.021 | 0.0009 |
| 50 | SLE RA 11 | 1.61 | -0.24 | 28.52 | 0.1503 | 0.0483 | 0.0013 |
| 50 | SLE RA 12 | 1.33 | -0.19 | 28.79 | 0.0759 | 0.0352 | 0.0011 |
| 50 | SLE RA 13 | 1.16 | -0.15 | 28.87 | 0.0253 | 0.0272 | 0.0009 |
| 50 | SLE RA 14 | 1.77 | -0.25 | 28.84 | 0.1534 | 0.0545 | 0.0014 |
| 50 | SLE RA 15 | 1.49 | -0.19 | 29.11 | 0.079 | 0.0413 | 0.0011 |
| 50 | SLE RA 16 | 1.78 | -0.25 | 28.75 | 0.1524 | 0.0551 | 0.0014 |
| 50 | SLE RA 17 | 1.5 | -0.19 | 29.01 | 0.078 | 0.042 | 0.0011 |
| 50 | SLE RA 18 | 1.52 | -0.24 | 29.07 | 0.1502 | 0.0446 | 0.0013 |
| 50 | SLE RA 19 | 1.24 | -0.19 | 29.33 | 0.0758 | 0.0314 | 0.0011 |
| 50 | SLE RA 20 | 1.68 | -0.25 | 29.39 | 0.1533 | 0.0507 | 0.0014 |
| 50 | SLE RA 21 | 1.4 | -0.19 | 29.65 | 0.0789 | 0.0376 | 0.0011 |
| 50 | SLE FR 1 | 1.34 | -0.22 | 25.87 | 0.1367 | 0.0391 | 0.0012 |
| 50 | SLE FR 2 | 1.25 | -0.2 | 25.96 | 0.1119 | 0.0347 | 0.0011 |
| 50 | SLE FR 3 | 1.41 | -0.22 | 26 | 0.1379 | 0.0415 | 0.0012 |
| 50 | SLE FR 4 | 1.3 | -0.21 | 26.92 | 0.1159 | 0.0363 | 0.0012 |
| 50 | SLE FR 5 | 1.46 | -0.23 | 26.96 | 0.142 | 0.0432 | 0.0013 |
| 50 | SLE FR 6 | 1.43 | -0.23 | 27.47 | 0.1434 | 0.0418 | 0.0013 |
| 50 | SLE QP 1 | 1.34 | -0.22 | 25.87 | 0.1367 | 0.0391 | 0.0012 |
| 50 | SLE QP 2 | 1.4 | -0.23 | 26.83 | 0.1407 | 0.0407 | 0.0013 |
| 50 | SLD 1 | 9.77 | -0.2 | 31.09 | 0.0862 | 0.3979 | 0.0026 |

| Nodo | Cont. | Reazione a traslazione | | | Reazione a rotazione | | |
|---|---|---|---|---|---|---|---|
| Ind. | N.br. | x | y | z | x | y | z |
| 50 | SLD 2 | 9.77 | -0.2 | 31.09 | 0.0862 | 0.3979 | 0.0026 |
| 50 | SLD 3 | 10.64 | -0.5 | 27.25 | 0.3863 | 0.4352 | 0.0011 |
| 50 | SLD 4 | 10.64 | -0.5 | 27.25 | 0.3863 | 0.4352 | 0.0011 |
| 50 | SLD 5 | 2.59 | 0.22 | 33.92 | -0.3309 | 0.0915 | 0.0038 |
| 50 | SLD 6 | 2.59 | 0.22 | 33.92 | -0.3309 | 0.0915 | 0.0038 |
| 50 | SLD 7 | 5.48 | -0.75 | 21.14 | 0.6696 | 0.2155 | -0.0009 |
| 50 | SLD 8 | 5.48 | -0.75 | 21.14 | 0.6696 | 0.2155 | -0.0009 |
| 50 | SLD 9 | -2.69 | 0.29 | 32.52 | -0.3882 | -0.1341 | 0.0034 |
| 50 | SLD 10 | -2.69 | 0.29 | 32.52 | -0.3882 | -0.1341 | 0.0034 |
| 50 | SLD 11 | 0.2 | -0.68 | 19.74 | 0.6123 | -0.01 | -0.0013 |
| 50 | SLD 12 | 0.2 | -0.68 | 19.74 | 0.6123 | -0.01 | -0.0013 |
| 50 | SLD 13 | -7.84 | 0.04 | 26.41 | -0.1049 | -0.3537 | 0.0014 |
| 50 | SLD 14 | -7.84 | 0.04 | 26.41 | -0.1049 | -0.3537 | 0.0014 |
| 50 | SLD 15 | -6.98 | -0.25 | 22.58 | 0.1953 | -0.3165 | -0.0001 |
| 50 | SLD 16 | -6.98 | -0.25 | 22.58 | 0.1953 | -0.3165 | -0.0001 |
| 50 | SLV 1 | 20.61 | -0.15 | 37.07 | -0.0111 | 0.86 | 0.0045 |
| 50 | SLV 2 | 20.61 | -0.15 | 37.07 | -0.0111 | 0.86 | 0.0045 |
| 50 | SLV 3 | 22.74 | -0.88 | 27.57 | 0.7494 | 0.952 | 0.0009 |
| 50 | SLV 4 | 22.74 | -0.88 | 27.57 | 0.7494 | 0.952 | 0.0009 |
| 50 | SLV 5 | 3.92 | 0.9 | 44.31 | -1.0582 | 0.1469 | 0.0076 |
| 50 | SLV 6 | 3.92 | 0.9 | 44.31 | -1.0582 | 0.1469 | 0.0076 |
| 50 | SLV 7 | 11.04 | -1.53 | 12.64 | 1.4767 | 0.4537 | -0.0043 |
| 50 | SLV 8 | 11.04 | -1.53 | 12.64 | 1.4767 | 0.4537 | -0.0043 |
| 50 | SLV 9 | -8.24 | 1.07 | 41.02 | -1.1953 | -0.3723 | 0.0068 |
| 50 | SLV 10 | -8.24 | 1.07 | 41.02 | -1.1953 | -0.3723 | 0.0068 |
| 50 | SLV 11 | -1.13 | -1.36 | 9.35 | 1.3397 | -0.0655 | -0.0051 |
| 50 | SLV 12 | -1.13 | -1.36 | 9.35 | 1.3397 | -0.0655 | -0.0051 |
| 50 | SLV 13 | -19.95 | 0.42 | 26.09 | -0.468 | -0.8706 | 0.0016 |
| 50 | SLV 14 | -19.95 | 0.42 | 26.09 | -0.468 | -0.8706 | 0.0016 |
| 50 | SLV 15 | -17.82 | -0.31 | 16.59 | 0.2925 | -0.7786 | -0.0019 |
| 50 | SLV 16 | -17.82 | -0.31 | 16.59 | 0.2925 | -0.7786 | -0.0019 |
| 51 | SLU 1 | 2.88 | -0.22 | 24.01 | 0.1415 | 0.1442 | 0.0008 |
| 51 | SLU 2 | 2.54 | -0.07 | 24.42 | -0.0551 | 0.1342 | 0.0003 |
| 51 | SLU 3 | 3.2 | -0.23 | 24.54 | 0.1476 | 0.1596 | 0.0008 |
| 51 | SLU 4 | 2.99 | -0.14 | 24.79 | 0.0296 | 0.1536 | 0.0005 |
| 51 | SLU 5 | 2.86 | -0.08 | 24.81 | -0.0507 | 0.1499 | 0.0003 |
| 51 | SLU 6 | 3.52 | -0.24 | 24.93 | 0.1519 | 0.1752 | 0.0008 |
| 51 | SLU 7 | 3.32 | -0.15 | 25.18 | 0.0339 | 0.1693 | 0.0005 |
| 51 | SLU 8 | 3.53 | -0.23 | 24.79 | 0.1501 | 0.1755 | 0.0008 |
| 51 | SLU 9 | 3.32 | -0.14 | 25.04 | 0.0322 | 0.1695 | 0.0005 |
| 51 | SLU 10 | 2.91 | -0.1 | 27.68 | -0.0393 | 0.1521 | 0.0004 |
| 51 | SLU 11 | 3.57 | -0.26 | 27.81 | 0.1633 | 0.1775 | 0.0009 |
| 51 | SLU 12 | 3.37 | -0.17 | 28.05 | 0.0454 | 0.1715 | 0.0006 |
| 51 | SLU 13 | 3.24 | -0.1 | 28.08 | -0.035 | 0.1678 | 0.0004 |
| 51 | SLU 14 | 3.89 | -0.26 | 28.2 | 0.1676 | 0.1931 | 0.0009 |
| 51 | SLU 15 | 3.69 | -0.17 | 28.45 | 0.0497 | 0.1872 | 0.0006 |
| 51 | SLU 16 | 3.9 | -0.26 | 28.06 | 0.1659 | 0.1934 | 0.0009 |
| 51 | SLU 17 | 3.7 | -0.17 | 28.31 | 0.0479 | 0.1874 | 0.0006 |
| 51 | SLU 18 | 3.41 | -0.26 | 28.67 | 0.164 | 0.1698 | 0.0009 |
| 51 | SLU 19 | 3.21 | -0.17 | 28.92 | 0.046 | 0.1638 | 0.0006 |
| 51 | SLU 20 | 3.74 | -0.26 | 29.07 | 0.1683 | 0.1854 | 0.0009 |
| 51 | SLU 21 | 3.53 | -0.17 | 29.31 | 0.0503 | 0.1794 | 0.0006 |
| 51 | SLU 22 | 3.44 | -0.25 | 26.91 | 0.159 | 0.1713 | 0.0009 |
| 51 | SLU 23 | 3.1 | -0.1 | 27.32 | -0.0375 | 0.1613 | 0.0004 |
| 51 | SLU 24 | 3.76 | -0.26 | 27.45 | 0.1651 | 0.1867 | 0.0009 |
| 51 | SLU 25 | 3.56 | -0.17 | 27.69 | 0.0472 | 0.1807 | 0.0006 |
| 51 | SLU 26 | 3.43 | -0.11 | 27.72 | -0.0332 | 0.177 | 0.0004 |
| 51 | SLU 27 | 4.08 | -0.26 | 27.84 | 0.1694 | 0.2024 | 0.0009 |
| 51 | SLU 28 | 3.88 | -0.17 | 28.09 | 0.0515 | 0.1964 | 0.0006 |
| 51 | SLU 29 | 4.09 | -0.26 | 27.7 | 0.1676 | 0.2026 | 0.0009 |
| 51 | SLU 30 | 3.89 | -0.17 | 27.95 | 0.0497 | 0.1966 | 0.0006 |
| 51 | SLU 31 | 3.48 | -0.13 | 30.59 | -0.0218 | 0.1792 | 0.0005 |
| 51 | SLU 32 | 4.13 | -0.28 | 30.72 | 0.1808 | 0.2046 | 0.001 |
| 51 | SLU 33 | 3.93 | -0.19 | 30.96 | 0.0629 | 0.1986 | 0.0007 |
| 51 | SLU 34 | 3.8 | -0.13 | 30.98 | -0.0175 | 0.1949 | 0.0005 |
| 51 | SLU 35 | 4.46 | -0.29 | 31.11 | 0.1851 | 0.2203 | 0.001 |
| 51 | SLU 36 | 4.25 | -0.2 | 31.36 | 0.0672 | 0.2143 | 0.0007 |
| 51 | SLU 37 | 4.46 | -0.29 | 30.97 | 0.1834 | 0.2205 | 0.001 |
| 51 | SLU 38 | 4.26 | -0.2 | 31.21 | 0.0654 | 0.2145 | 0.0007 |
| 51 | SLU 39 | 3.97 | -0.29 | 31.58 | 0.1815 | 0.1969 | 0.001 |
| 51 | SLU 40 | 3.77 | -0.2 | 31.83 | 0.0635 | 0.1909 | 0.0007 |
| 51 | SLU 41 | 4.3 | -0.29 | 31.98 | 0.1858 | 0.2125 | 0.001 |
| 51 | SLU 42 | 4.09 | -0.2 | 32.22 | 0.0678 | 0.2065 | 0.0007 |
| 51 | SLU 43 | 3.55 | -0.28 | 30.21 | 0.178 | 0.1781 | 0.001 |
| 51 | SLU 44 | 3.21 | -0.13 | 30.62 | -0.0186 | 0.1682 | 0.0005 |
| 51 | SLU 45 | 3.87 | -0.29 | 30.74 | 0.184 | 0.1935 | 0.001 |
| 51 | SLU 46 | 3.66 | -0.2 | 30.99 | 0.0661 | 0.1876 | 0.0007 |
| 51 | SLU 47 | 3.54 | -0.13 | 31.01 | -0.0143 | 0.1838 | 0.0005 |
| 51 | SLU 48 | 4.19 | -0.29 | 31.14 | 0.1883 | 0.2092 | 0.001 |
| 51 | SLU 49 | 3.99 | -0.2 | 31.38 | 0.0704 | 0.2032 | 0.0007 |
| 51 | SLU 50 | 4.2 | -0.29 | 31 | 0.1866 | 0.2094 | 0.001 |
| 51 | SLU 51 | 3.99 | -0.2 | 31.24 | 0.0686 | 0.2034 | 0.0007 |
| 51 | SLU 52 | 3.58 | -0.15 | 33.89 | -0.0029 | 0.1861 | 0.0006 |
| 51 | SLU 53 | 4.24 | -0.31 | 34.01 | 0.1998 | 0.2115 | 0.0011 |
| 51 | SLU 54 | 4.04 | -0.22 | 34.26 | 0.0818 | 0.2055 | 0.0008 |
| 51 | SLU 55 | 3.91 | -0.16 | 34.28 | 0.0014 | 0.2017 | 0.0006 |
| 51 | SLU 56 | 4.56 | -0.32 | 34.41 | 0.2041 | 0.2271 | 0.0011 |
| 51 | SLU 57 | 4.36 | -0.23 | 34.65 | 0.0861 | 0.2211 | 0.0008 |

| Nodo | Cont. | Reazione a traslazione | | | Reazione a rotazione | | |
|---|---|---|---|---|---|---|---|
| Ind. | N.br. | x | y | z | x | y | z |
| 51 | SLU 58 | 4.57 | -0.32 | 34.26 | 0.2023 | 0.2273 | 0.0011 |
| 51 | SLU 59 | 4.37 | -0.23 | 34.51 | 0.0844 | 0.2213 | 0.0008 |
| 51 | SLU 60 | 4.08 | -0.31 | 34.88 | 0.2004 | 0.2037 | 0.0011 |
| 51 | SLU 61 | 3.88 | -0.23 | 35.12 | 0.0825 | 0.1977 | 0.0008 |
| 51 | SLU 62 | 4.41 | -0.32 | 35.27 | 0.2047 | 0.2194 | 0.0011 |
| 51 | SLU 63 | 4.2 | -0.23 | 35.52 | 0.0868 | 0.2134 | 0.0008 |
| 51 | SLU 64 | 4.11 | -0.31 | 33.12 | 0.1955 | 0.2052 | 0.0011 |
| 51 | SLU 65 | 3.77 | -0.16 | 33.53 | -0.0011 | 0.1953 | 0.0006 |
| 51 | SLU 66 | 4.43 | -0.31 | 33.65 | 0.2016 | 0.2207 | 0.0011 |
| 51 | SLU 67 | 4.23 | -0.22 | 33.9 | 0.0836 | 0.2147 | 0.0008 |
| 51 | SLU 68 | 4.1 | -0.16 | 33.92 | 0.0032 | 0.2109 | 0.0006 |
| 51 | SLU 69 | 4.75 | -0.32 | 34.05 | 0.2059 | 0.2363 | 0.0011 |
| 51 | SLU 70 | 4.55 | -0.23 | 34.29 | 0.0879 | 0.2303 | 0.0008 |
| 51 | SLU 71 | 4.76 | -0.32 | 33.91 | 0.2041 | 0.2365 | 0.0011 |
| 51 | SLU 72 | 4.56 | -0.23 | 34.15 | 0.0862 | 0.2306 | 0.0008 |
| 51 | SLU 73 | 4.15 | -0.18 | 36.8 | 0.0146 | 0.2132 | 0.0007 |
| 51 | SLU 74 | 4.8 | -0.34 | 36.92 | 0.2173 | 0.2386 | 0.0012 |
| 51 | SLU 75 | 4.6 | -0.25 | 37.17 | 0.0993 | 0.2326 | 0.0009 |
| 51 | SLU 76 | 4.47 | -0.19 | 37.19 | 0.0189 | 0.2288 | 0.0007 |
| 51 | SLU 77 | 5.13 | -0.35 | 37.31 | 0.2216 | 0.2542 | 0.0012 |
| 51 | SLU 78 | 4.92 | -0.26 | 37.56 | 0.1036 | 0.2482 | 0.0009 |
| 51 | SLU 79 | 5.13 | -0.34 | 37.17 | 0.2198 | 0.2544 | 0.0012 |
| 51 | SLU 80 | 4.93 | -0.25 | 37.42 | 0.1019 | 0.2485 | 0.0009 |
| 51 | SLU 81 | 4.65 | -0.34 | 37.79 | 0.2179 | 0.2308 | 0.0012 |
| 51 | SLU 82 | 4.44 | -0.25 | 38.03 | 0.1 | 0.2248 | 0.0009 |
| 51 | SLU 83 | 4.97 | -0.35 | 38.18 | 0.2222 | 0.2465 | 0.0012 |
| 51 | SLU 84 | 4.77 | -0.26 | 38.43 | 0.1043 | 0.2405 | 0.0009 |
| 51 | SLE RA 1 | 3.04 | -0.23 | 24.84 | 0.1465 | 0.1519 | 0.0008 |
| 51 | SLE RA 2 | 2.81 | -0.13 | 25.11 | 0.0155 | 0.1453 | 0.0005 |
| 51 | SLE RA 3 | 3.25 | -0.23 | 25.19 | 0.1506 | 0.1622 | 0.0008 |
| 51 | SLE RA 4 | 3.12 | -0.18 | 25.36 | 0.0719 | 0.1582 | 0.0006 |
| 51 | SLE RA 5 | 3.03 | -0.13 | 25.37 | 0.0183 | 0.1557 | 0.0005 |
| 51 | SLE RA 6 | 3.47 | -0.24 | 25.46 | 0.1534 | 0.1726 | 0.0008 |
| 51 | SLE RA 7 | 3.33 | -0.18 | 25.62 | 0.0748 | 0.1686 | 0.0006 |
| 51 | SLE RA 8 | 3.47 | -0.24 | 25.36 | 0.1523 | 0.1728 | 0.0008 |
| 51 | SLE RA 9 | 3.34 | -0.18 | 25.53 | 0.0736 | 0.1688 | 0.0006 |
| 51 | SLE RA 10 | 3.06 | -0.15 | 27.29 | 0.026 | 0.1572 | 0.0005 |
| 51 | SLE RA 11 | 3.5 | -0.25 | 27.37 | 0.161 | 0.1741 | 0.0009 |
| 51 | SLE RA 12 | 3.36 | -0.19 | 27.54 | 0.0824 | 0.1702 | 0.0007 |
| 51 | SLE RA 13 | 3.28 | -0.15 | 27.55 | 0.0288 | 0.1676 | 0.0006 |
| 51 | SLE RA 14 | 3.72 | -0.26 | 27.63 | 0.1639 | 0.1846 | 0.0009 |
| 51 | SLE RA 15 | 3.58 | -0.2 | 27.8 | 0.0853 | 0.1806 | 0.0007 |
| 51 | SLE RA 16 | 3.72 | -0.25 | 27.54 | 0.1627 | 0.1847 | 0.0009 |
| 51 | SLE RA 17 | 3.58 | -0.19 | 27.7 | 0.0841 | 0.1807 | 0.0007 |
| 51 | SLE RA 18 | 3.4 | -0.25 | 27.95 | 0.1615 | 0.169 | 0.0009 |
| 51 | SLE RA 19 | 3.26 | -0.19 | 28.11 | 0.0829 | 0.165 | 0.0007 |
| 51 | SLE RA 20 | 3.61 | -0.26 | 28.21 | 0.1644 | 0.1794 | 0.0009 |
| 51 | SLE RA 21 | 3.48 | -0.2 | 28.37 | 0.0857 | 0.1754 | 0.0007 |
| 51 | SLE FR 1 | 3.04 | -0.23 | 24.84 | 0.1465 | 0.1519 | 0.0008 |
| 51 | SLE FR 2 | 3 | -0.21 | 24.89 | 0.1203 | 0.1506 | 0.0007 |
| 51 | SLE FR 3 | 3.13 | -0.23 | 24.94 | 0.1477 | 0.1561 | 0.0008 |
| 51 | SLE FR 4 | 3.1 | -0.22 | 25.83 | 0.1248 | 0.1557 | 0.0008 |
| 51 | SLE FR 5 | 3.23 | -0.24 | 25.88 | 0.1522 | 0.1612 | 0.0008 |
| 51 | SLE FR 6 | 3.22 | -0.24 | 26.39 | 0.154 | 0.1604 | 0.0008 |
| 51 | SLE QP 1 | 3.04 | -0.23 | 24.84 | 0.1465 | 0.1519 | 0.0008 |
| 51 | SLE QP 2 | 3.15 | -0.24 | 25.77 | 0.151 | 0.157 | 0.0008 |
| 51 | SLD 1 | 12.8 | -0.2 | 29.76 | 0.0854 | 0.5767 | 0.0007 |
| 51 | SLD 2 | 12.8 | -0.2 | 29.76 | 0.0854 | 0.5767 | 0.0007 |
| 51 | SLD 3 | 11.86 | -0.51 | 26.06 | 0.4055 | 0.5342 | 0.0017 |
| 51 | SLD 4 | 11.86 | -0.51 | 26.06 | 0.4055 | 0.5342 | 0.0017 |
| 51 | SLD 5 | 7.47 | 0.25 | 32.59 | -0.3542 | 0.3474 | -0.0008 |
| 51 | SLD 6 | 7.47 | 0.25 | 32.59 | -0.3542 | 0.3474 | -0.0008 |
| 51 | SLD 7 | 4.34 | -0.79 | 20.23 | 0.7129 | 0.2058 | 0.0027 |
| 51 | SLD 8 | 4.34 | -0.79 | 20.23 | 0.7129 | 0.2058 | 0.0027 |
| 51 | SLD 9 | 1.96 | 0.32 | 31.31 | -0.4109 | 0.1083 | -0.001 |
| 51 | SLD 10 | 1.96 | 0.32 | 31.31 | -0.4109 | 0.1083 | -0.001 |
| 51 | SLD 11 | -1.18 | -0.72 | 18.95 | 0.6562 | -0.0333 | 0.0024 |
| 51 | SLD 12 | -1.18 | -0.72 | 18.95 | 0.6562 | -0.0333 | 0.0024 |
| 51 | SLD 13 | -5.57 | 0.04 | 25.49 | -0.1035 | -0.2202 | -0.0001 |
| 51 | SLD 14 | -5.57 | 0.04 | 25.49 | -0.1035 | -0.2202 | -0.0001 |
| 51 | SLD 15 | -6.51 | -0.28 | 21.78 | 0.2167 | -0.2626 | 0.001 |
| 51 | SLD 16 | -6.51 | -0.28 | 21.78 | 0.2167 | -0.2626 | 0.001 |
| 51 | SLV 1 | 25.45 | -0.12 | 35.39 | -0.0292 | 1.1268 | 0.0005 |
| 51 | SLV 2 | 25.45 | -0.12 | 35.39 | -0.0292 | 1.1268 | 0.0005 |
| 51 | SLV 3 | 23.17 | -0.9 | 26.16 | 0.7822 | 1.0244 | 0.003 |
| 51 | SLV 4 | 23.17 | -0.9 | 26.16 | 0.7822 | 1.0244 | 0.003 |
| 51 | SLV 5 | 13.29 | 0.98 | 42.66 | -1.1337 | 0.6033 | -0.0032 |
| 51 | SLV 6 | 13.29 | 0.98 | 42.66 | -1.1337 | 0.6033 | -0.0032 |
| 51 | SLV 7 | 5.7 | -1.62 | 11.89 | 1.571 | 0.2619 | 0.0054 |
| 51 | SLV 8 | 5.7 | -1.62 | 11.89 | 1.571 | 0.2619 | 0.0054 |
| 51 | SLV 9 | 0.6 | 1.15 | 39.66 | -1.269 | 0.0522 | -0.0037 |
| 51 | SLV 10 | 0.6 | 1.15 | 39.66 | -1.269 | 0.0522 | -0.0037 |
| 51 | SLV 11 | -7 | -1.46 | 8.88 | 1.4357 | -0.2892 | 0.0048 |
| 51 | SLV 12 | -7 | -1.46 | 8.88 | 1.4357 | -0.2892 | 0.0048 |
| 51 | SLV 13 | -16.88 | 0.43 | 25.38 | -0.4802 | -0.7103 | -0.0014 |
| 51 | SLV 14 | -16.88 | 0.43 | 25.38 | -0.4802 | -0.7103 | -0.0014 |
| 51 | SLV 15 | -19.16 | -0.35 | 16.15 | 0.3312 | -0.8127 | 0.0012 |
| 51 | SLV 16 | -19.16 | -0.35 | 16.15 | 0.3312 | -0.8127 | 0.0012 |

| Nodo | Cont. | Reazione a traslazione | | | Reazione a rotazione | | |
|---|---|---|---|---|---|---|---|
| Ind. | N.br. | x | y | z | x | y | z |
| 52 | SLU 1 | 3.45 | -0.25 | 24.49 | 0.159 | 0.1316 | 0.0003 |
| 52 | SLU 2 | 3.37 | -0.11 | 24.59 | -0.0375 | 0.1272 | 0.0001 |
| 52 | SLU 3 | 3.78 | -0.26 | 25 | 0.165 | 0.1448 | 0.0003 |
| 52 | SLU 4 | 3.73 | -0.18 | 25.05 | 0.0471 | 0.1422 | 0.0002 |
| 52 | SLU 5 | 3.7 | -0.11 | 24.94 | -0.0335 | 0.1405 | 0.0001 |
| 52 | SLU 6 | 4.11 | -0.27 | 25.35 | 0.169 | 0.1581 | 0.0003 |
| 52 | SLU 7 | 4.06 | -0.18 | 25.41 | 0.0511 | 0.1555 | 0.0002 |
| 52 | SLU 8 | 4.11 | -0.27 | 25.2 | 0.1669 | 0.1582 | 0.0003 |
| 52 | SLU 9 | 4.06 | -0.18 | 25.25 | 0.049 | 0.1556 | 0.0002 |
| 52 | SLU 10 | 3.82 | -0.14 | 27.98 | -0.0189 | 0.1443 | 0.0001 |
| 52 | SLU 11 | 4.22 | -0.29 | 28.39 | 0.1836 | 0.1618 | 0.0004 |
| 52 | SLU 12 | 4.18 | -0.21 | 28.44 | 0.0657 | 0.1592 | 0.0002 |
| 52 | SLU 13 | 4.14 | -0.14 | 28.33 | -0.0149 | 0.1576 | 0.0001 |
| 52 | SLU 14 | 4.55 | -0.3 | 28.74 | 0.1876 | 0.1751 | 0.0004 |
| 52 | SLU 15 | 4.51 | -0.21 | 28.8 | 0.0697 | 0.1725 | 0.0002 |
| 52 | SLU 16 | 4.55 | -0.3 | 28.59 | 0.1855 | 0.1752 | 0.0004 |
| 52 | SLU 17 | 4.5 | -0.21 | 28.65 | 0.0676 | 0.1726 | 0.0002 |
| 52 | SLU 18 | 4.08 | -0.3 | 29.34 | 0.1856 | 0.1559 | 0.0004 |
| 52 | SLU 19 | 4.04 | -0.21 | 29.39 | 0.0676 | 0.1533 | 0.0002 |
| 52 | SLU 20 | 4.41 | -0.31 | 29.69 | 0.1895 | 0.1692 | 0.0004 |
| 52 | SLU 21 | 4.37 | -0.22 | 29.75 | 0.0716 | 0.1666 | 0.0002 |
| 52 | SLU 22 | 4.07 | -0.29 | 27.48 | 0.1788 | 0.156 | 0.0003 |
| 52 | SLU 23 | 4 | -0.14 | 27.57 | -0.0177 | 0.1516 | 0.0001 |
| 52 | SLU 24 | 4.4 | -0.3 | 27.98 | 0.1848 | 0.1692 | 0.0004 |
| 52 | SLU 25 | 4.36 | -0.21 | 28.04 | 0.0669 | 0.1666 | 0.0002 |
| 52 | SLU 26 | 4.32 | -0.15 | 27.92 | -0.0137 | 0.1649 | 0.0001 |
| 52 | SLU 27 | 4.73 | -0.3 | 28.34 | 0.1888 | 0.1825 | 0.0004 |
| 52 | SLU 28 | 4.69 | -0.21 | 28.39 | 0.0709 | 0.1799 | 0.0002 |
| 52 | SLU 29 | 4.73 | -0.3 | 28.18 | 0.1868 | 0.1826 | 0.0004 |
| 52 | SLU 30 | 4.69 | -0.21 | 28.24 | 0.0688 | 0.18 | 0.0002 |
| 52 | SLU 31 | 4.44 | -0.17 | 30.96 | 0.0009 | 0.1687 | 0.0002 |
| 52 | SLU 32 | 4.85 | -0.33 | 31.37 | 0.2034 | 0.1862 | 0.0004 |
| 52 | SLU 33 | 4.8 | -0.24 | 31.43 | 0.0855 | 0.1836 | 0.0003 |
| 52 | SLU 34 | 4.77 | -0.18 | 31.32 | 0.0049 | 0.182 | 0.0002 |
| 52 | SLU 35 | 5.18 | -0.33 | 31.73 | 0.2074 | 0.1995 | 0.0004 |
| 52 | SLU 36 | 5.13 | -0.24 | 31.78 | 0.0895 | 0.1969 | 0.0003 |
| 52 | SLU 37 | 5.18 | -0.33 | 31.58 | 0.2054 | 0.1996 | 0.0004 |
| 52 | SLU 38 | 5.13 | -0.24 | 31.63 | 0.0874 | 0.197 | 0.0003 |
| 52 | SLU 39 | 4.71 | -0.33 | 32.32 | 0.2054 | 0.1803 | 0.0004 |
| 52 | SLU 40 | 4.66 | -0.24 | 32.38 | 0.0875 | 0.1777 | 0.0003 |
| 52 | SLU 41 | 5.04 | -0.34 | 32.68 | 0.2093 | 0.1936 | 0.0004 |
| 52 | SLU 42 | 4.99 | -0.25 | 32.73 | 0.0914 | 0.191 | 0.0003 |
| 52 | SLU 43 | 4.27 | -0.32 | 30.81 | 0.1999 | 0.1627 | 0.0004 |
| 52 | SLU 44 | 4.19 | -0.17 | 30.91 | 0.0034 | 0.1584 | 0.0002 |
| 52 | SLU 45 | 4.6 | -0.33 | 31.32 | 0.2059 | 0.1759 | 0.0004 |
| 52 | SLU 46 | 4.56 | -0.24 | 31.38 | 0.088 | 0.1733 | 0.0003 |
| 52 | SLU 47 | 4.52 | -0.18 | 31.26 | 0.0074 | 0.1717 | 0.0002 |
| 52 | SLU 48 | 4.93 | -0.33 | 31.67 | 0.2099 | 0.1892 | 0.0004 |
| 52 | SLU 49 | 4.88 | -0.25 | 31.73 | 0.092 | 0.1866 | 0.0003 |
| 52 | SLU 50 | 4.93 | -0.33 | 31.52 | 0.2078 | 0.1893 | 0.0004 |
| 52 | SLU 51 | 4.88 | -0.24 | 31.58 | 0.0899 | 0.1867 | 0.0003 |
| 52 | SLU 52 | 4.64 | -0.2 | 34.3 | 0.022 | 0.1754 | 0.0002 |
| 52 | SLU 53 | 5.04 | -0.36 | 34.71 | 0.2245 | 0.1929 | 0.0004 |
| 52 | SLU 54 | 5 | -0.27 | 34.77 | 0.1066 | 0.1903 | 0.0003 |
| 52 | SLU 55 | 4.97 | -0.21 | 34.65 | 0.026 | 0.1887 | 0.0002 |
| 52 | SLU 56 | 5.37 | -0.37 | 35.06 | 0.2285 | 0.2062 | 0.0004 |
| 52 | SLU 57 | 5.33 | -0.28 | 35.12 | 0.1106 | 0.2036 | 0.0003 |
| 52 | SLU 58 | 5.37 | -0.36 | 34.91 | 0.2264 | 0.2063 | 0.0004 |
| 52 | SLU 59 | 5.33 | -0.27 | 34.97 | 0.1085 | 0.2037 | 0.0003 |
| 52 | SLU 60 | 4.91 | -0.36 | 35.66 | 0.2265 | 0.187 | 0.0004 |
| 52 | SLU 61 | 4.86 | -0.28 | 35.72 | 0.1086 | 0.1844 | 0.0003 |
| 52 | SLU 62 | 5.23 | -0.37 | 36.01 | 0.2304 | 0.2003 | 0.0004 |
| 52 | SLU 63 | 5.19 | -0.28 | 36.07 | 0.1125 | 0.1977 | 0.0003 |
| 52 | SLU 64 | 4.9 | -0.35 | 33.8 | 0.2197 | 0.1871 | 0.0004 |
| 52 | SLU 65 | 4.82 | -0.21 | 33.9 | 0.0232 | 0.1828 | 0.0002 |
| 52 | SLU 66 | 5.23 | -0.36 | 34.31 | 0.2257 | 0.2003 | 0.0004 |
| 52 | SLU 67 | 5.18 | -0.27 | 34.36 | 0.1078 | 0.1977 | 0.0003 |
| 52 | SLU 68 | 5.15 | -0.21 | 34.25 | 0.0272 | 0.196 | 0.0002 |
| 52 | SLU 69 | 5.55 | -0.37 | 34.66 | 0.2297 | 0.2136 | 0.0004 |
| 52 | SLU 70 | 5.51 | -0.28 | 34.72 | 0.1118 | 0.211 | 0.0003 |
| 52 | SLU 71 | 5.55 | -0.36 | 34.51 | 0.2277 | 0.2137 | 0.0004 |
| 52 | SLU 72 | 5.51 | -0.28 | 34.56 | 0.1097 | 0.2111 | 0.0003 |
| 52 | SLU 73 | 5.26 | -0.24 | 37.29 | 0.0418 | 0.1998 | 0.0003 |
| 52 | SLU 74 | 5.67 | -0.39 | 37.7 | 0.2443 | 0.2173 | 0.0005 |
| 52 | SLU 75 | 5.62 | -0.3 | 37.75 | 0.1264 | 0.2147 | 0.0003 |
| 52 | SLU 76 | 5.59 | -0.24 | 37.64 | 0.0458 | 0.2131 | 0.0003 |
| 52 | SLU 77 | 6 | -0.4 | 38.05 | 0.2483 | 0.2306 | 0.0005 |
| 52 | SLU 78 | 5.95 | -0.31 | 38.11 | 0.1304 | 0.228 | 0.0004 |
| 52 | SLU 79 | 6 | -0.39 | 37.9 | 0.2463 | 0.2307 | 0.0005 |
| 52 | SLU 80 | 5.95 | -0.31 | 37.96 | 0.1284 | 0.2281 | 0.0003 |
| 52 | SLU 81 | 5.53 | -0.4 | 38.65 | 0.2463 | 0.2114 | 0.0005 |
| 52 | SLU 82 | 5.48 | -0.31 | 38.7 | 0.1284 | 0.2088 | 0.0004 |
| 52 | SLU 83 | 5.86 | -0.4 | 39 | 0.2502 | 0.2247 | 0.0005 |
| 52 | SLU 84 | 5.81 | -0.31 | 39.06 | 0.1323 | 0.2221 | 0.0004 |
| 52 | SLE RA 1 | 3.63 | -0.26 | 25.34 | 0.1646 | 0.1386 | 0.0003 |
| 52 | SLE RA 2 | 3.58 | -0.17 | 25.41 | 0.0336 | 0.1357 | 0.0002 |
| 52 | SLE RA 3 | 3.85 | -0.27 | 25.68 | 0.1687 | 0.1473 | 0.0003 |
| 52 | SLE RA 4 | 3.82 | -0.21 | 25.72 | 0.0901 | 0.1456 | 0.0002 |

| Nodo | Cont. | Reazione a traslazione | | | Reazione a rotazione | | |
|---|---|---|---|---|---|---|---|
| Ind. | N.br. | x | y | z | x | y | z |
| 52 | SLE RA 5 | 3.8 | -0.17 | 25.64 | 0.0363 | 0.1445 | 0.0002 |
| 52 | SLE RA 6 | 4.07 | -0.27 | 25.92 | 0.1713 | 0.1562 | 0.0003 |
| 52 | SLE RA 7 | 4.04 | -0.21 | 25.95 | 0.0927 | 0.1545 | 0.0002 |
| 52 | SLE RA 8 | 4.07 | -0.27 | 25.82 | 0.1699 | 0.1563 | 0.0003 |
| 52 | SLE RA 9 | 4.04 | -0.21 | 25.85 | 0.0913 | 0.1545 | 0.0002 |
| 52 | SLE RA 10 | 3.87 | -0.19 | 27.67 | 0.046 | 0.147 | 0.0002 |
| 52 | SLE RA 11 | 4.14 | -0.29 | 27.94 | 0.1811 | 0.1587 | 0.0003 |
| 52 | SLE RA 12 | 4.11 | -0.23 | 27.98 | 0.1025 | 0.157 | 0.0003 |
| 52 | SLE RA 13 | 4.09 | -0.19 | 27.9 | 0.0487 | 0.1559 | 0.0002 |
| 52 | SLE RA 14 | 4.36 | -0.29 | 28.18 | 0.1837 | 0.1675 | 0.0004 |
| 52 | SLE RA 15 | 4.33 | -0.24 | 28.22 | 0.1051 | 0.1658 | 0.0003 |
| 52 | SLE RA 16 | 4.36 | -0.29 | 28.08 | 0.1824 | 0.1676 | 0.0004 |
| 52 | SLE RA 17 | 4.33 | -0.23 | 28.11 | 0.1037 | 0.1659 | 0.0003 |
| 52 | SLE RA 18 | 4.05 | -0.29 | 28.57 | 0.1824 | 0.1548 | 0.0004 |
| 52 | SLE RA 19 | 4.02 | -0.23 | 28.61 | 0.1038 | 0.153 | 0.0003 |
| 52 | SLE RA 20 | 4.27 | -0.3 | 28.81 | 0.185 | 0.1636 | 0.0004 |
| 52 | SLE RA 21 | 4.24 | -0.24 | 28.85 | 0.1064 | 0.1619 | 0.0003 |
| 52 | SLE FR 1 | 3.63 | -0.26 | 25.34 | 0.1646 | 0.1386 | 0.0003 |
| 52 | SLE FR 2 | 3.62 | -0.24 | 25.36 | 0.1384 | 0.138 | 0.0003 |
| 52 | SLE FR 3 | 3.72 | -0.27 | 25.44 | 0.1657 | 0.1421 | 0.0003 |
| 52 | SLE FR 4 | 3.75 | -0.25 | 26.33 | 0.1438 | 0.1428 | 0.0003 |
| 52 | SLE FR 5 | 3.84 | -0.27 | 26.41 | 0.171 | 0.147 | 0.0003 |
| 52 | SLE FR 6 | 3.84 | -0.28 | 26.96 | 0.1735 | 0.1467 | 0.0003 |
| 52 | SLE QP 1 | 3.63 | -0.26 | 25.34 | 0.1646 | 0.1386 | 0.0003 |
| 52 | SLE QP 2 | 3.76 | -0.27 | 26.31 | 0.17 | 0.1434 | 0.0003 |
| 52 | SLD 1 | 13.33 | -0.23 | 30.49 | 0.0989 | 0.5522 | 0.0003 |
| 52 | SLD 2 | 13.33 | -0.23 | 30.49 | 0.0989 | 0.5522 | 0.0003 |
| 52 | SLD 3 | 12.38 | -0.55 | 26.97 | 0.4244 | 0.5141 | 0.0007 |
| 52 | SLD 4 | 12.38 | -0.55 | 26.97 | 0.4244 | 0.5141 | 0.0007 |
| 52 | SLD 5 | 8.07 | 0.22 | 32.92 | -0.345 | 0.3238 | -0.0004 |
| 52 | SLD 6 | 8.07 | 0.22 | 32.92 | -0.345 | 0.3238 | -0.0004 |
| 52 | SLD 7 | 4.91 | -0.84 | 21.16 | 0.7399 | 0.1968 | 0.0011 |
| 52 | SLD 8 | 4.91 | -0.84 | 21.16 | 0.7399 | 0.1968 | 0.0011 |
| 52 | SLD 9 | 2.61 | 0.29 | 31.47 | -0.4 | 0.09 | -0.0005 |
| 52 | SLD 10 | 2.61 | 0.29 | 31.47 | -0.4 | 0.09 | -0.0005 |
| 52 | SLD 11 | -0.56 | -0.77 | 19.71 | 0.6849 | -0.037 | 0.001 |
| 52 | SLD 12 | -0.56 | -0.77 | 19.71 | 0.6849 | -0.037 | 0.001 |
| 52 | SLD 13 | -4.87 | 0 | 25.66 | -0.0844 | -0.2273 | 0 |
| 52 | SLD 14 | -4.87 | 0 | 25.66 | -0.0844 | -0.2273 | 0 |
| 52 | SLD 15 | -5.82 | -0.32 | 22.13 | 0.241 | -0.2654 | 0.0004 |
| 52 | SLD 16 | -5.82 | -0.32 | 22.13 | 0.241 | -0.2654 | 0.0004 |
| 52 | SLV 1 | 25.87 | -0.14 | 36.31 | -0.0238 | 1.087 | 0.0001 |
| 52 | SLV 2 | 25.87 | -0.14 | 36.31 | -0.0238 | 1.087 | 0.0001 |
| 52 | SLV 3 | 23.6 | -0.94 | 27.54 | 0.801 | 0.9957 | 0.0012 |
| 52 | SLV 4 | 23.6 | -0.94 | 27.54 | 0.801 | 0.9957 | 0.0012 |
| 52 | SLV 5 | 13.84 | 0.98 | 42.61 | -1.1392 | 0.565 | -0.0014 |
| 52 | SLV 6 | 13.84 | 0.98 | 42.61 | -1.1392 | 0.565 | -0.0014 |
| 52 | SLV 7 | 6.26 | -1.68 | 13.38 | 1.6103 | 0.2606 | 0.0023 |
| 52 | SLV 8 | 6.26 | -1.68 | 13.38 | 1.6103 | 0.2606 | 0.0023 |
| 52 | SLV 9 | 1.25 | 1.14 | 39.25 | -1.2704 | 0.0262 | -0.0017 |
| 52 | SLV 10 | 1.25 | 1.14 | 39.25 | -1.2704 | 0.0262 | -0.0017 |
| 52 | SLV 11 | -6.33 | -1.52 | 10.01 | 1.4791 | -0.2782 | 0.0021 |
| 52 | SLV 12 | -6.33 | -1.52 | 10.01 | 1.4791 | -0.2782 | 0.0021 |
| 52 | SLV 13 | -16.08 | 0.39 | 25.09 | -0.4611 | -0.7089 | -0.0006 |
| 52 | SLV 14 | -16.08 | 0.39 | 25.09 | -0.4611 | -0.7089 | -0.0006 |
| 52 | SLV 15 | -18.36 | -0.4 | 16.32 | 0.3637 | -0.8002 | 0.0005 |
| 52 | SLV 16 | -18.36 | -0.4 | 16.32 | 0.3637 | -0.8002 | 0.0005 |
| 53 | SLU 1 | 4.07 | -0.31 | 25.72 | 0.1816 | 0.1766 | 0 |
| 53 | SLU 2 | 4.41 | -0.17 | 25.49 | -0.0043 | 0.1958 | -0.0001 |
| 53 | SLU 3 | 4.44 | -0.31 | 26.21 | 0.1878 | 0.1935 | 0 |
| 53 | SLU 4 | 4.64 | -0.23 | 26.07 | 0.0762 | 0.205 | -0.0001 |
| 53 | SLU 5 | 4.77 | -0.18 | 25.81 | -0.0006 | 0.2125 | -0.0001 |
| 53 | SLU 6 | 4.79 | -0.32 | 26.53 | 0.1915 | 0.2102 | 0 |
| 53 | SLU 7 | 5 | -0.24 | 26.39 | 0.08 | 0.2217 | -0.0001 |
| 53 | SLU 8 | 4.79 | -0.32 | 26.36 | 0.1891 | 0.2101 | 0 |
| 53 | SLU 9 | 4.99 | -0.24 | 26.22 | 0.0776 | 0.2215 | -0.0001 |
| 53 | SLU 10 | 4.91 | -0.21 | 29.11 | 0.018 | 0.2162 | -0.0001 |
| 53 | SLU 11 | 4.93 | -0.35 | 29.83 | 0.2101 | 0.2139 | 0 |
| 53 | SLU 12 | 5.13 | -0.27 | 29.69 | 0.0986 | 0.2254 | -0.0001 |
| 53 | SLU 13 | 5.26 | -0.22 | 29.42 | 0.0218 | 0.2329 | -0.0001 |
| 53 | SLU 14 | 5.29 | -0.36 | 30.15 | 0.2139 | 0.2306 | 0 |
| 53 | SLU 15 | 5.49 | -0.28 | 30.01 | 0.1023 | 0.2421 | -0.0001 |
| 53 | SLU 16 | 5.28 | -0.36 | 29.98 | 0.2115 | 0.2305 | 0 |
| 53 | SLU 17 | 5.48 | -0.28 | 29.84 | 0.0999 | 0.242 | -0.0001 |
| 53 | SLU 18 | 4.78 | -0.36 | 30.89 | 0.2136 | 0.2058 | 0 |
| 53 | SLU 19 | 4.98 | -0.28 | 30.75 | 0.102 | 0.2173 | -0.0001 |
| 53 | SLU 20 | 5.13 | -0.37 | 31.21 | 0.2173 | 0.2225 | 0 |
| 53 | SLU 21 | 5.34 | -0.29 | 31.07 | 0.1057 | 0.234 | -0.0001 |
| 53 | SLU 22 | 4.76 | -0.34 | 28.88 | 0.2045 | 0.2065 | 0 |
| 53 | SLU 23 | 5.1 | -0.21 | 28.64 | 0.0186 | 0.2256 | -0.0001 |
| 53 | SLU 24 | 5.12 | -0.35 | 29.37 | 0.2107 | 0.2233 | 0 |
| 53 | SLU 25 | 5.32 | -0.27 | 29.23 | 0.0991 | 0.2348 | -0.0001 |
| 53 | SLU 26 | 5.45 | -0.22 | 28.96 | 0.0223 | 0.2423 | -0.0001 |
| 53 | SLU 27 | 5.48 | -0.36 | 29.69 | 0.2144 | 0.24 | 0 |
| 53 | SLU 28 | 5.68 | -0.28 | 29.55 | 0.1029 | 0.2515 | -0.0001 |
| 53 | SLU 29 | 5.47 | -0.36 | 29.51 | 0.212 | 0.2399 | 0 |
| 53 | SLU 30 | 5.67 | -0.28 | 29.37 | 0.1004 | 0.2513 | -0.0001 |
| 53 | SLU 31 | 5.59 | -0.25 | 32.26 | 0.0409 | 0.246 | -0.0001 |

| Nodo | Cont. | Reazione a traslazione | | | Reazione a rotazione | | |
|---|---|---|---|---|---|---|---|
| Ind. | N.br. | x | y | z | x | y | z |
| 53 | SLU 32 | 5.61 | -0.39 | 32.99 | 0.233 | 0.2437 | 0 |
| 53 | SLU 33 | 5.82 | -0.31 | 32.84 | 0.1215 | 0.2552 | -0.0001 |
| 53 | SLU 34 | 5.95 | -0.26 | 32.58 | 0.0447 | 0.2627 | -0.0001 |
| 53 | SLU 35 | 5.97 | -0.4 | 33.3 | 0.2368 | 0.2604 | 0 |
| 53 | SLU 36 | 6.17 | -0.32 | 33.16 | 0.1252 | 0.2719 | -0.0001 |
| 53 | SLU 37 | 5.96 | -0.4 | 33.13 | 0.2344 | 0.2603 | 0 |
| 53 | SLU 38 | 6.17 | -0.31 | 32.99 | 0.1228 | 0.2718 | -0.0001 |
| 53 | SLU 39 | 5.46 | -0.4 | 34.05 | 0.2364 | 0.2356 | 0 |
| 53 | SLU 40 | 5.66 | -0.32 | 33.9 | 0.1249 | 0.2471 | -0.0001 |
| 53 | SLU 41 | 5.82 | -0.41 | 34.36 | 0.2402 | 0.2523 | 0 |
| 53 | SLU 42 | 6.02 | -0.33 | 34.22 | 0.1286 | 0.2638 | -0.0001 |
| 53 | SLU 43 | 5.06 | -0.38 | 32.36 | 0.2283 | 0.2194 | 0 |
| 53 | SLU 44 | 5.4 | -0.25 | 32.12 | 0.0423 | 0.2385 | -0.0001 |
| 53 | SLU 45 | 5.42 | -0.39 | 32.85 | 0.2344 | 0.2363 | 0 |
| 53 | SLU 46 | 5.63 | -0.31 | 32.71 | 0.1228 | 0.2477 | -0.0001 |
| 53 | SLU 47 | 5.76 | -0.25 | 32.44 | 0.0461 | 0.2552 | -0.0001 |
| 53 | SLU 48 | 5.78 | -0.4 | 33.17 | 0.2382 | 0.253 | 0 |
| 53 | SLU 49 | 5.98 | -0.32 | 33.03 | 0.1266 | 0.2644 | -0.0001 |
| 53 | SLU 50 | 5.77 | -0.39 | 32.99 | 0.2358 | 0.2528 | 0 |
| 53 | SLU 51 | 5.98 | -0.31 | 32.85 | 0.1242 | 0.2643 | -0.0001 |
| 53 | SLU 52 | 5.89 | -0.29 | 35.74 | 0.0647 | 0.259 | -0.0001 |
| 53 | SLU 53 | 5.92 | -0.43 | 36.47 | 0.2568 | 0.2567 | 0 |
| 53 | SLU 54 | 6.12 | -0.35 | 36.32 | 0.1452 | 0.2682 | -0.0001 |
| 53 | SLU 55 | 6.25 | -0.29 | 36.06 | 0.0684 | 0.2757 | -0.0001 |
| 53 | SLU 56 | 6.27 | -0.44 | 36.78 | 0.2605 | 0.2734 | -0.0001 |
| 53 | SLU 57 | 6.48 | -0.36 | 36.64 | 0.149 | 0.2849 | -0.0001 |
| 53 | SLU 58 | 6.27 | -0.43 | 36.61 | 0.2581 | 0.2733 | -0.0001 |
| 53 | SLU 59 | 6.47 | -0.35 | 36.47 | 0.1465 | 0.2847 | -0.0001 |
| 53 | SLU 60 | 5.76 | -0.44 | 37.53 | 0.2602 | 0.2486 | 0 |
| 53 | SLU 61 | 5.97 | -0.36 | 37.38 | 0.1486 | 0.2601 | -0.0001 |
| 53 | SLU 62 | 6.12 | -0.45 | 37.84 | 0.2639 | 0.2653 | -0.0001 |
| 53 | SLU 63 | 6.32 | -0.36 | 37.7 | 0.1524 | 0.2768 | -0.0001 |
| 53 | SLU 64 | 5.74 | -0.42 | 35.51 | 0.2511 | 0.2492 | 0 |
| 53 | SLU 65 | 6.08 | -0.29 | 35.28 | 0.0652 | 0.2683 | -0.0001 |
| 53 | SLU 66 | 6.11 | -0.43 | 36 | 0.2573 | 0.2661 | 0 |
| 53 | SLU 67 | 6.31 | -0.35 | 35.86 | 0.1457 | 0.2775 | -0.0001 |
| 53 | SLU 68 | 6.44 | -0.29 | 35.6 | 0.069 | 0.2851 | -0.0001 |
| 53 | SLU 69 | 6.46 | -0.44 | 36.32 | 0.2611 | 0.2828 | -0.0001 |
| 53 | SLU 70 | 6.67 | -0.36 | 36.18 | 0.1495 | 0.2943 | -0.0001 |
| 53 | SLU 71 | 6.46 | -0.43 | 36.15 | 0.2586 | 0.2826 | -0.0001 |
| 53 | SLU 72 | 6.66 | -0.35 | 36.01 | 0.1471 | 0.2941 | -0.0001 |
| 53 | SLU 73 | 6.58 | -0.33 | 38.89 | 0.0876 | 0.2888 | -0.0001 |
| 53 | SLU 74 | 6.6 | -0.47 | 39.62 | 0.2797 | 0.2865 | -0.0001 |
| 53 | SLU 75 | 6.8 | -0.39 | 39.48 | 0.1681 | 0.298 | -0.0001 |
| 53 | SLU 76 | 6.93 | -0.33 | 39.21 | 0.0913 | 0.3055 | -0.0001 |
| 53 | SLU 77 | 6.96 | -0.48 | 39.94 | 0.2834 | 0.3032 | -0.0001 |
| 53 | SLU 78 | 7.16 | -0.4 | 39.8 | 0.1718 | 0.3147 | -0.0001 |
| 53 | SLU 79 | 6.95 | -0.47 | 39.77 | 0.281 | 0.3031 | -0.0001 |
| 53 | SLU 80 | 7.15 | -0.39 | 39.63 | 0.1694 | 0.3145 | -0.0001 |
| 53 | SLU 81 | 6.45 | -0.48 | 40.68 | 0.2831 | 0.2784 | -0.0001 |
| 53 | SLU 82 | 6.65 | -0.4 | 40.54 | 0.1715 | 0.2899 | -0.0001 |
| 53 | SLU 83 | 6.8 | -0.48 | 41 | 0.2868 | 0.2951 | -0.0001 |
| 53 | SLU 84 | 7.01 | -0.4 | 40.86 | 0.1753 | 0.3066 | -0.0001 |
| 53 | SLE RA 1 | 4.27 | -0.32 | 26.62 | 0.1882 | 0.1852 | 0 |
| 53 | SLE RA 2 | 4.49 | -0.23 | 26.47 | 0.0642 | 0.1979 | -0.0001 |
| 53 | SLE RA 3 | 4.51 | -0.32 | 26.95 | 0.1923 | 0.1964 | 0 |
| 53 | SLE RA 4 | 4.65 | -0.27 | 26.86 | 0.1179 | 0.204 | -0.0001 |
| 53 | SLE RA 5 | 4.73 | -0.23 | 26.68 | 0.0667 | 0.209 | -0.0001 |
| 53 | SLE RA 6 | 4.75 | -0.33 | 27.16 | 0.1948 | 0.2075 | 0 |
| 53 | SLE RA 7 | 4.88 | -0.27 | 27.07 | 0.1204 | 0.2152 | -0.0001 |
| 53 | SLE RA 8 | 4.74 | -0.32 | 27.05 | 0.1932 | 0.2074 | 0 |
| 53 | SLE RA 9 | 4.88 | -0.27 | 26.95 | 0.1188 | 0.2151 | -0.0001 |
| 53 | SLE RA 10 | 4.82 | -0.25 | 28.88 | 0.0791 | 0.2115 | -0.0001 |
| 53 | SLE RA 11 | 4.84 | -0.35 | 29.36 | 0.2072 | 0.21 | 0 |
| 53 | SLE RA 12 | 4.97 | -0.3 | 29.27 | 0.1328 | 0.2177 | -0.0001 |
| 53 | SLE RA 13 | 5.06 | -0.26 | 29.09 | 0.0816 | 0.2227 | -0.0001 |
| 53 | SLE RA 14 | 5.08 | -0.35 | 29.58 | 0.2097 | 0.2211 | 0 |
| 53 | SLE RA 15 | 5.21 | -0.3 | 29.48 | 0.1353 | 0.2288 | -0.0001 |
| 53 | SLE RA 16 | 5.07 | -0.35 | 29.46 | 0.2081 | 0.2211 | 0 |
| 53 | SLE RA 17 | 5.21 | -0.3 | 29.37 | 0.1337 | 0.2287 | -0.0001 |
| 53 | SLE RA 18 | 4.74 | -0.35 | 30.07 | 0.2094 | 0.2046 | 0 |
| 53 | SLE RA 19 | 4.87 | -0.3 | 29.98 | 0.1351 | 0.2123 | -0.0001 |
| 53 | SLE RA 20 | 4.97 | -0.36 | 30.28 | 0.2119 | 0.2158 | 0 |
| 53 | SLE RA 21 | 5.11 | -0.3 | 30.19 | 0.1376 | 0.2234 | -0.0001 |
| 53 | SLE FR 1 | 4.27 | -0.32 | 26.62 | 0.1882 | 0.1852 | 0 |
| 53 | SLE FR 2 | 4.31 | -0.3 | 26.59 | 0.1634 | 0.1877 | 0 |
| 53 | SLE FR 3 | 4.36 | -0.32 | 26.71 | 0.1892 | 0.1896 | 0 |
| 53 | SLE FR 4 | 4.45 | -0.31 | 27.62 | 0.1698 | 0.1935 | 0 |
| 53 | SLE FR 5 | 4.5 | -0.33 | 27.74 | 0.1955 | 0.1955 | 0 |
| 53 | SLE FR 6 | 4.5 | -0.34 | 28.35 | 0.1988 | 0.1949 | 0 |
| 53 | SLE QP 1 | 4.27 | -0.32 | 26.62 | 0.1882 | 0.1852 | 0 |
| 53 | SLE QP 2 | 4.41 | -0.33 | 27.66 | 0.1945 | 0.191 | 0 |
| 53 | SLD 1 | 13.9 | -0.59 | 31.93 | 0.1231 | 0.6087 | -0.0001 |
| 53 | SLD 2 | 13.9 | -0.59 | 31.93 | 0.1231 | 0.6087 | -0.0001 |
| 53 | SLD 3 | 12.9 | -0.28 | 28.63 | 0.4385 | 0.5649 | 0 |
| 53 | SLD 4 | 12.9 | -0.28 | 28.63 | 0.4385 | 0.5649 | 0 |
| 53 | SLD 5 | 8.78 | -0.88 | 33.94 | -0.3053 | 0.3827 | -0.0002 |
| 53 | SLD 6 | 8.78 | -0.88 | 33.94 | -0.3053 | 0.3827 | -0.0002 |

| Nodo | Cont. | Reazione a traslazione | | | Reazione a rotazione | | |
|---|---|---|---|---|---|---|---|
| Ind. | N.br. | x | y | z | x | y | z |
| 53 | SLD 7 | 5.43 | 0.16 | 22.95 | 0.7461 | 0.2368 | 0.0001 |
| 53 | SLD 8 | 5.43 | 0.16 | 22.95 | 0.7461 | 0.2368 | 0.0001 |
| 53 | SLD 9 | 3.39 | -0.81 | 32.36 | -0.3571 | 0.1452 | -0.0002 |
| 53 | SLD 10 | 3.39 | -0.81 | 32.36 | -0.3571 | 0.1452 | -0.0002 |
| 53 | SLD 11 | 0.04 | 0.22 | 21.37 | 0.6944 | -0.0007 | 0.0002 |
| 53 | SLD 12 | 0.04 | 0.22 | 21.37 | 0.6944 | -0.0007 | 0.0002 |
| 53 | SLD 13 | -4.08 | -0.38 | 26.68 | -0.0494 | -0.1829 | 0 |
| 53 | SLD 14 | -4.08 | -0.38 | 26.68 | -0.0494 | -0.1829 | 0 |
| 53 | SLD 15 | -5.09 | -0.07 | 23.38 | 0.266 | -0.2267 | 0.0001 |
| 53 | SLD 16 | -5.09 | -0.07 | 23.38 | 0.266 | -0.2267 | 0.0001 |
| 53 | SLV 1 | 26.34 | -0.97 | 37.79 | 0.0006 | 1.1557 | -0.0003 |
| 53 | SLV 2 | 26.34 | -0.97 | 37.79 | 0.0006 | 1.1557 | -0.0003 |
| 53 | SLV 3 | 23.95 | -0.19 | 29.66 | 0.7996 | 1.052 | 0 |
| 53 | SLV 4 | 23.95 | -0.19 | 29.66 | 0.7996 | 1.052 | 0 |
| 53 | SLV 5 | 14.61 | -1.7 | 43.02 | -1.0755 | 0.6378 | -0.0005 |
| 53 | SLV 6 | 14.61 | -1.7 | 43.02 | -1.0755 | 0.6378 | -0.0005 |
| 53 | SLV 7 | 6.65 | 0.89 | 15.93 | 1.588 | 0.2919 | 0.0004 |
| 53 | SLV 8 | 6.65 | 0.89 | 15.93 | 1.588 | 0.2919 | 0.0004 |
| 53 | SLV 9 | 2.17 | -1.55 | 39.38 | -1.1989 | 0.0901 | -0.0005 |
| 53 | SLV 10 | 2.17 | -1.55 | 39.38 | -1.1989 | 0.0901 | -0.0005 |
| 53 | SLV 11 | -5.79 | 1.04 | 12.29 | 1.4646 | -0.2558 | 0.0005 |
| 53 | SLV 12 | -5.79 | 1.04 | 12.29 | 1.4646 | -0.2558 | 0.0005 |
| 53 | SLV 13 | -15.13 | -0.46 | 25.65 | -0.4106 | -0.67 | -0.0001 |
| 53 | SLV 14 | -15.13 | -0.46 | 25.65 | -0.4106 | -0.67 | -0.0001 |
| 53 | SLV 15 | -17.52 | 0.32 | 17.52 | 0.3885 | -0.7737 | 0.0002 |
| 53 | SLV 16 | -17.52 | 0.32 | 17.52 | 0.3885 | -0.7737 | 0.0002 |
| 54 | SLU 1 | 4.02 | -0.35 | 27.54 | 0.2015 | 0.1635 | -0.0002 |
| 54 | SLU 2 | 4.72 | -0.24 | 27.06 | 0.0357 | 0.1923 | -0.0003 |
| 54 | SLU 3 | 4.36 | -0.36 | 28.02 | 0.2077 | 0.1779 | -0.0002 |
| 54 | SLU 4 | 4.78 | -0.3 | 27.74 | 0.1083 | 0.1952 | -0.0003 |
| 54 | SLU 5 | 5.05 | -0.25 | 27.35 | 0.0393 | 0.2064 | -0.0003 |
| 54 | SLU 6 | 4.7 | -0.37 | 28.3 | 0.2113 | 0.192 | -0.0003 |
| 54 | SLU 7 | 5.11 | -0.3 | 28.02 | 0.1118 | 0.2093 | -0.0003 |
| 54 | SLU 8 | 4.69 | -0.37 | 28.1 | 0.2086 | 0.1916 | -0.0003 |
| 54 | SLU 9 | 5.1 | -0.3 | 27.82 | 0.1091 | 0.2089 | -0.0003 |
| 54 | SLU 10 | 5.18 | -0.29 | 30.98 | 0.0615 | 0.2114 | -0.0003 |
| 54 | SLU 11 | 4.83 | -0.41 | 31.94 | 0.2335 | 0.197 | -0.0003 |
| 54 | SLU 12 | 5.25 | -0.34 | 31.66 | 0.1341 | 0.2143 | -0.0003 |
| 54 | SLU 13 | 5.52 | -0.29 | 31.26 | 0.0651 | 0.2255 | -0.0003 |
| 54 | SLU 14 | 5.16 | -0.42 | 32.22 | 0.2371 | 0.2111 | -0.0003 |
| 54 | SLU 15 | 5.58 | -0.35 | 31.94 | 0.1376 | 0.2283 | -0.0003 |
| 54 | SLU 16 | 5.15 | -0.41 | 32.02 | 0.2344 | 0.2107 | -0.0003 |
| 54 | SLU 17 | 5.57 | -0.35 | 31.73 | 0.1349 | 0.228 | -0.0003 |
| 54 | SLU 18 | 4.69 | -0.42 | 33.14 | 0.2383 | 0.1908 | -0.0003 |
| 54 | SLU 19 | 5.1 | -0.35 | 32.85 | 0.1389 | 0.2081 | -0.0003 |
| 54 | SLU 20 | 5.02 | -0.43 | 33.42 | 0.2419 | 0.2048 | -0.0003 |
| 54 | SLU 21 | 5.44 | -0.36 | 33.13 | 0.1424 | 0.2221 | -0.0003 |
| 54 | SLU 22 | 4.66 | -0.4 | 30.92 | 0.2272 | 0.19 | -0.0003 |
| 54 | SLU 23 | 5.36 | -0.29 | 30.45 | 0.0614 | 0.2188 | -0.0003 |
| 54 | SLU 24 | 5.01 | -0.41 | 31.4 | 0.2334 | 0.2044 | -0.0003 |
| 54 | SLU 25 | 5.42 | -0.34 | 31.12 | 0.134 | 0.2217 | -0.0003 |
| 54 | SLU 26 | 5.69 | -0.29 | 30.73 | 0.0649 | 0.2329 | -0.0003 |
| 54 | SLU 27 | 5.34 | -0.42 | 31.69 | 0.237 | 0.2185 | -0.0003 |
| 54 | SLU 28 | 5.76 | -0.35 | 31.4 | 0.1375 | 0.2358 | -0.0003 |
| 54 | SLU 29 | 5.33 | -0.41 | 31.48 | 0.2342 | 0.2181 | -0.0003 |
| 54 | SLU 30 | 5.75 | -0.34 | 31.2 | 0.1348 | 0.2354 | -0.0003 |
| 54 | SLU 31 | 5.82 | -0.34 | 34.37 | 0.0872 | 0.2379 | -0.0003 |
| 54 | SLU 32 | 5.47 | -0.46 | 35.32 | 0.2592 | 0.2235 | -0.0003 |
| 54 | SLU 33 | 5.89 | -0.39 | 35.04 | 0.1598 | 0.2408 | -0.0003 |
| 54 | SLU 34 | 6.16 | -0.34 | 34.65 | 0.0907 | 0.252 | -0.0003 |
| 54 | SLU 35 | 5.81 | -0.46 | 35.6 | 0.2627 | 0.2376 | -0.0003 |
| 54 | SLU 36 | 6.22 | -0.4 | 35.32 | 0.1633 | 0.2548 | -0.0003 |
| 54 | SLU 37 | 5.8 | -0.46 | 35.4 | 0.26 | 0.2372 | -0.0003 |
| 54 | SLU 38 | 6.21 | -0.39 | 35.12 | 0.1606 | 0.2545 | -0.0003 |
| 54 | SLU 39 | 5.33 | -0.47 | 36.52 | 0.264 | 0.2173 | -0.0003 |
| 54 | SLU 40 | 5.75 | -0.4 | 36.23 | 0.1646 | 0.2346 | -0.0003 |
| 54 | SLU 41 | 5.66 | -0.47 | 36.8 | 0.2676 | 0.2313 | -0.0003 |
| 54 | SLU 42 | 6.08 | -0.41 | 36.52 | 0.1681 | 0.2486 | -0.0003 |
| 54 | SLU 43 | 5.01 | -0.44 | 34.64 | 0.2531 | 0.2035 | -0.0003 |
| 54 | SLU 44 | 5.7 | -0.33 | 34.17 | 0.0874 | 0.2323 | -0.0003 |
| 54 | SLU 45 | 5.35 | -0.45 | 35.12 | 0.2594 | 0.2179 | -0.0003 |
| 54 | SLU 46 | 5.77 | -0.39 | 34.84 | 0.1599 | 0.2352 | -0.0003 |
| 54 | SLU 47 | 6.04 | -0.34 | 34.45 | 0.0909 | 0.2464 | -0.0003 |
| 54 | SLU 48 | 5.68 | -0.46 | 35.41 | 0.2629 | 0.232 | -0.0003 |
| 54 | SLU 49 | 6.1 | -0.39 | 35.12 | 0.1635 | 0.2492 | -0.0003 |
| 54 | SLU 50 | 5.67 | -0.46 | 35.2 | 0.2602 | 0.2316 | -0.0003 |
| 54 | SLU 51 | 6.09 | -0.39 | 34.92 | 0.1608 | 0.2489 | -0.0003 |
| 54 | SLU 52 | 6.17 | -0.38 | 38.09 | 0.1132 | 0.2514 | -0.0004 |
| 54 | SLU 53 | 5.82 | -0.5 | 39.04 | 0.2852 | 0.237 | -0.0003 |
| 54 | SLU 54 | 6.23 | -0.43 | 38.76 | 0.1857 | 0.2543 | -0.0004 |
| 54 | SLU 55 | 6.5 | -0.39 | 38.37 | 0.1167 | 0.2654 | -0.0004 |
| 54 | SLU 56 | 6.15 | -0.51 | 39.32 | 0.2887 | 0.251 | -0.0003 |
| 54 | SLU 57 | 6.57 | -0.44 | 39.04 | 0.1893 | 0.2683 | -0.0004 |
| 54 | SLU 58 | 6.14 | -0.5 | 39.12 | 0.286 | 0.2507 | -0.0003 |
| 54 | SLU 59 | 6.56 | -0.44 | 38.84 | 0.1866 | 0.268 | -0.0004 |
| 54 | SLU 60 | 5.67 | -0.51 | 40.24 | 0.29 | 0.2308 | -0.0003 |
| 54 | SLU 61 | 6.09 | -0.44 | 39.95 | 0.1905 | 0.248 | -0.0004 |
| 54 | SLU 62 | 6.01 | -0.52 | 40.52 | 0.2935 | 0.2448 | -0.0004 |

| Nodo | Cont. | Reazione a traslazione | | | Reazione a rotazione | | |
|---|---|---|---|---|---|---|---|
| Ind. | N.br. | x | y | z | x | y | z |
| 54 | SLU 63 | 6.42 | -0.45 | 40.24 | 0.1941 | 0.2621 | -0.0004 |
| 54 | SLU 64 | 5.65 | -0.49 | 38.02 | 0.2788 | 0.23 | -0.0003 |
| 54 | SLU 65 | 6.34 | -0.38 | 37.55 | 0.1131 | 0.2588 | -0.0004 |
| 54 | SLU 66 | 5.99 | -0.5 | 38.51 | 0.2851 | 0.2444 | -0.0003 |
| 54 | SLU 67 | 6.41 | -0.43 | 38.22 | 0.1856 | 0.2617 | -0.0004 |
| 54 | SLU 68 | 6.68 | -0.38 | 37.83 | 0.1166 | 0.2729 | -0.0004 |
| 54 | SLU 69 | 6.33 | -0.51 | 38.79 | 0.2886 | 0.2585 | -0.0003 |
| 54 | SLU 70 | 6.74 | -0.44 | 38.5 | 0.1891 | 0.2757 | -0.0004 |
| 54 | SLU 71 | 6.32 | -0.5 | 38.59 | 0.2859 | 0.2581 | -0.0003 |
| 54 | SLU 72 | 6.73 | -0.43 | 38.3 | 0.1864 | 0.2754 | -0.0004 |
| 54 | SLU 73 | 6.81 | -0.43 | 41.47 | 0.1389 | 0.2779 | -0.0004 |
| 54 | SLU 74 | 6.46 | -0.55 | 42.43 | 0.3109 | 0.2635 | -0.0004 |
| 54 | SLU 75 | 6.88 | -0.48 | 42.14 | 0.2114 | 0.2808 | -0.0004 |
| 54 | SLU 76 | 7.14 | -0.43 | 41.75 | 0.1424 | 0.2919 | -0.0004 |
| 54 | SLU 77 | 6.79 | -0.55 | 42.71 | 0.3144 | 0.2775 | -0.0004 |
| 54 | SLU 78 | 7.21 | -0.49 | 42.42 | 0.2149 | 0.2948 | -0.0004 |
| 54 | SLU 79 | 6.78 | -0.55 | 42.5 | 0.3117 | 0.2772 | -0.0004 |
| 54 | SLU 80 | 7.2 | -0.48 | 42.22 | 0.2122 | 0.2945 | -0.0004 |
| 54 | SLU 81 | 6.31 | -0.56 | 43.62 | 0.3157 | 0.2573 | -0.0004 |
| 54 | SLU 82 | 6.73 | -0.49 | 43.34 | 0.2162 | 0.2745 | -0.0004 |
| 54 | SLU 83 | 6.65 | -0.56 | 43.9 | 0.3192 | 0.2713 | -0.0004 |
| 54 | SLU 84 | 7.07 | -0.5 | 43.62 | 0.2198 | 0.2886 | -0.0004 |
| 54 | SLE RA 1 | 4.2 | -0.37 | 28.51 | 0.2088 | 0.1711 | -0.0003 |
| 54 | SLE RA 2 | 4.67 | -0.29 | 28.19 | 0.0983 | 0.1903 | -0.0003 |
| 54 | SLE RA 3 | 4.43 | -0.37 | 28.83 | 0.213 | 0.1807 | -0.0003 |
| 54 | SLE RA 4 | 4.71 | -0.33 | 28.64 | 0.1467 | 0.1922 | -0.0003 |
| 54 | SLE RA 5 | 4.89 | -0.3 | 28.38 | 0.1007 | 0.1997 | -0.0003 |
| 54 | SLE RA 6 | 4.66 | -0.38 | 29.01 | 0.2154 | 0.1901 | -0.0003 |
| 54 | SLE RA 7 | 4.93 | -0.33 | 28.82 | 0.1491 | 0.2016 | -0.0003 |
| 54 | SLE RA 8 | 4.65 | -0.37 | 28.88 | 0.2135 | 0.1898 | -0.0003 |
| 54 | SLE RA 9 | 4.93 | -0.33 | 28.69 | 0.1472 | 0.2014 | -0.0003 |
| 54 | SLE RA 10 | 4.98 | -0.32 | 30.8 | 0.1155 | 0.203 | -0.0003 |
| 54 | SLE RA 11 | 4.74 | -0.41 | 31.44 | 0.2302 | 0.1934 | -0.0003 |
| 54 | SLE RA 12 | 5.02 | -0.36 | 31.25 | 0.1639 | 0.2049 | -0.0003 |
| 54 | SLE RA 13 | 5.2 | -0.33 | 30.99 | 0.1179 | 0.2124 | -0.0003 |
| 54 | SLE RA 14 | 4.97 | -0.41 | 31.63 | 0.2326 | 0.2028 | -0.0003 |
| 54 | SLE RA 15 | 5.24 | -0.36 | 31.44 | 0.1663 | 0.2143 | -0.0003 |
| 54 | SLE RA 16 | 4.96 | -0.41 | 31.49 | 0.2307 | 0.2026 | -0.0003 |
| 54 | SLE RA 17 | 5.24 | -0.36 | 31.3 | 0.1644 | 0.2141 | -0.0003 |
| 54 | SLE RA 18 | 4.65 | -0.41 | 32.24 | 0.2334 | 0.1893 | -0.0003 |
| 54 | SLE RA 19 | 4.93 | -0.37 | 32.05 | 0.1671 | 0.2008 | -0.0003 |
| 54 | SLE RA 20 | 4.87 | -0.42 | 32.43 | 0.2358 | 0.1986 | -0.0003 |
| 54 | SLE RA 21 | 5.15 | -0.37 | 32.24 | 0.1695 | 0.2102 | -0.0003 |
| 54 | SLE FR 1 | 4.2 | -0.37 | 28.51 | 0.2088 | 0.1711 | -0.0003 |
| 54 | SLE FR 2 | 4.3 | -0.35 | 28.44 | 0.1867 | 0.1749 | -0.0003 |
| 54 | SLE FR 3 | 4.29 | -0.37 | 28.58 | 0.2098 | 0.1749 | -0.0003 |
| 54 | SLE FR 4 | 4.43 | -0.37 | 29.56 | 0.1941 | 0.1804 | -0.0003 |
| 54 | SLE FR 5 | 4.43 | -0.38 | 29.7 | 0.2171 | 0.1803 | -0.0003 |
| 54 | SLE FR 6 | 4.43 | -0.39 | 30.37 | 0.2211 | 0.1802 | -0.0003 |
| 54 | SLE QP 1 | 4.2 | -0.37 | 28.51 | 0.2088 | 0.1711 | -0.0003 |
| 54 | SLE QP 2 | 4.34 | -0.38 | 29.63 | 0.2162 | 0.1766 | -0.0003 |
| 54 | SLD 1 | 13.52 | -0.62 | 33.73 | 0.1484 | 0.5755 | -0.0004 |
| 54 | SLD 2 | 13.52 | -0.62 | 33.73 | 0.1484 | 0.5755 | -0.0004 |
| 54 | SLD 3 | 12.52 | -0.33 | 30.61 | 0.4385 | 0.5336 | -0.0003 |
| 54 | SLD 4 | 12.52 | -0.33 | 30.61 | 0.4385 | 0.5336 | -0.0003 |
| 54 | SLD 5 | 8.61 | -0.89 | 35.59 | -0.2441 | 0.3598 | -0.0004 |
| 54 | SLD 6 | 8.61 | -0.89 | 35.59 | -0.2441 | 0.3598 | -0.0004 |
| 54 | SLD 7 | 5.27 | 0.07 | 25.19 | 0.7229 | 0.2201 | -0.0002 |
| 54 | SLD 8 | 5.27 | 0.07 | 25.19 | 0.7229 | 0.2201 | -0.0002 |
| 54 | SLD 9 | 3.4 | -0.83 | 34.07 | -0.2905 | 0.133 | -0.0004 |
| 54 | SLD 10 | 3.4 | -0.83 | 34.07 | -0.2905 | 0.133 | -0.0004 |
| 54 | SLD 11 | 0.06 | 0.12 | 23.66 | 0.6765 | -0.0067 | -0.0001 |
| 54 | SLD 12 | 0.06 | 0.12 | 23.66 | 0.6765 | -0.0067 | -0.0001 |
| 54 | SLD 13 | -3.85 | -0.43 | 28.64 | -0.0061 | -0.1805 | -0.0002 |
| 54 | SLD 14 | -3.85 | -0.43 | 28.64 | -0.0061 | -0.1805 | -0.0002 |
| 54 | SLD 15 | -4.85 | -0.14 | 25.52 | 0.284 | -0.2224 | -0.0002 |
| 54 | SLD 16 | -4.85 | -0.14 | 25.52 | 0.284 | -0.2224 | -0.0002 |
| 54 | SLV 1 | 25.55 | -0.96 | 39.3 | 0.0331 | 1.0975 | -0.0005 |
| 54 | SLV 2 | 25.55 | -0.96 | 39.3 | 0.0331 | 1.0975 | -0.0005 |
| 54 | SLV 3 | 23.18 | -0.25 | 31.7 | 0.7673 | 0.9984 | -0.0003 |
| 54 | SLV 4 | 23.18 | -0.25 | 31.7 | 0.7673 | 0.9984 | -0.0003 |
| 54 | SLV 5 | 14.3 | -1.64 | 44.06 | -0.9522 | 0.6032 | -0.0006 |
| 54 | SLV 6 | 14.3 | -1.64 | 44.06 | -0.9522 | 0.6032 | -0.0006 |
| 54 | SLV 7 | 6.39 | 0.74 | 18.72 | 1.495 | 0.2727 | 0 |
| 54 | SLV 8 | 6.39 | 0.74 | 18.72 | 1.495 | 0.2727 | 0 |
| 54 | SLV 9 | 2.28 | -1.5 | 40.54 | -1.0626 | 0.0804 | -0.0005 |
| 54 | SLV 10 | 2.28 | -1.5 | 40.54 | -1.0626 | 0.0804 | -0.0005 |
| 54 | SLV 11 | -5.62 | 0.88 | 15.19 | 1.3846 | -0.2501 | 0 |
| 54 | SLV 12 | -5.62 | 0.88 | 15.19 | 1.3846 | -0.2501 | 0 |
| 54 | SLV 13 | -14.51 | -0.51 | 27.56 | -0.3349 | -0.6452 | -0.0002 |
| 54 | SLV 14 | -14.51 | -0.51 | 27.56 | -0.3349 | -0.6452 | -0.0002 |
| 54 | SLV 15 | -16.88 | 0.2 | 19.95 | 0.3993 | -0.7444 | 0 |
| 54 | SLV 16 | -16.88 | 0.2 | 19.95 | 0.3993 | -0.7444 | 0 |
| 55 | SLU 1 | 3.7 | -0.38 | 29.42 | 0.2089 | 0.1495 | -0.0003 |
| 55 | SLU 2 | 4.84 | -0.3 | 28.87 | 0.0712 | 0.2013 | -0.0003 |
| 55 | SLU 3 | 4.04 | -0.39 | 29.88 | 0.2149 | 0.1651 | -0.0003 |
| 55 | SLU 4 | 4.73 | -0.34 | 29.54 | 0.1324 | 0.1962 | -0.0003 |
| 55 | SLU 5 | 5.18 | -0.3 | 29.09 | 0.0745 | 0.217 | -0.0003 |

| Nodo | Cont. | Reazione a traslazione | | | Reazione a rotazione | | |
|---|---|---|---|---|---|---|---|
| Ind. | N.br. | x | y | z | x | y | z |
| 55 | SLU 6 | 4.38 | -0.39 | 30.1 | 0.2182 | 0.1808 | -0.0003 |
| 55 | SLU 7 | 5.06 | -0.35 | 29.77 | 0.1356 | 0.2119 | -0.0003 |
| 55 | SLU 8 | 4.37 | -0.39 | 29.86 | 0.2154 | 0.1809 | -0.0003 |
| 55 | SLU 9 | 5.06 | -0.34 | 29.53 | 0.1328 | 0.212 | -0.0003 |
| 55 | SLU 10 | 5.22 | -0.35 | 33.08 | 0.0987 | 0.2156 | -0.0004 |
| 55 | SLU 11 | 4.42 | -0.44 | 34.09 | 0.2424 | 0.1794 | -0.0004 |
| 55 | SLU 12 | 5.11 | -0.39 | 33.76 | 0.1598 | 0.2105 | -0.0004 |
| 55 | SLU 13 | 5.56 | -0.35 | 33.3 | 0.102 | 0.2313 | -0.0004 |
| 55 | SLU 14 | 4.76 | -0.45 | 34.31 | 0.2457 | 0.1951 | -0.0004 |
| 55 | SLU 15 | 5.44 | -0.4 | 33.98 | 0.1631 | 0.2262 | -0.0004 |
| 55 | SLU 16 | 4.75 | -0.44 | 34.07 | 0.2429 | 0.1952 | -0.0004 |
| 55 | SLU 17 | 5.44 | -0.39 | 33.74 | 0.1603 | 0.2263 | -0.0004 |
| 55 | SLU 18 | 4.24 | -0.45 | 35.44 | 0.2481 | 0.1699 | -0.0004 |
| 55 | SLU 19 | 4.93 | -0.4 | 35.1 | 0.1655 | 0.201 | -0.0004 |
| 55 | SLU 20 | 4.58 | -0.46 | 35.66 | 0.2514 | 0.1856 | -0.0004 |
| 55 | SLU 21 | 5.26 | -0.41 | 35.32 | 0.1688 | 0.2167 | -0.0004 |
| 55 | SLU 22 | 4.26 | -0.43 | 33.01 | 0.2357 | 0.1728 | -0.0004 |
| 55 | SLU 23 | 5.41 | -0.35 | 32.45 | 0.098 | 0.2247 | -0.0004 |
| 55 | SLU 24 | 4.6 | -0.44 | 33.47 | 0.2418 | 0.1885 | -0.0004 |
| 55 | SLU 25 | 5.29 | -0.39 | 33.13 | 0.1592 | 0.2196 | -0.0004 |
| 55 | SLU 26 | 5.74 | -0.35 | 32.68 | 0.1013 | 0.2404 | -0.0004 |
| 55 | SLU 27 | 4.94 | -0.44 | 33.69 | 0.245 | 0.2042 | -0.0004 |
| 55 | SLU 28 | 5.63 | -0.39 | 33.35 | 0.1624 | 0.2353 | -0.0004 |
| 55 | SLU 29 | 4.94 | -0.44 | 33.45 | 0.2422 | 0.2043 | -0.0004 |
| 55 | SLU 30 | 5.62 | -0.39 | 33.12 | 0.1596 | 0.2354 | -0.0004 |
| 55 | SLU 31 | 5.79 | -0.4 | 36.67 | 0.1255 | 0.2389 | -0.0004 |
| 55 | SLU 32 | 4.98 | -0.49 | 37.68 | 0.2692 | 0.2027 | -0.0004 |
| 55 | SLU 33 | 5.67 | -0.44 | 37.35 | 0.1867 | 0.2338 | -0.0004 |
| 55 | SLU 34 | 6.12 | -0.4 | 36.89 | 0.1288 | 0.2546 | -0.0004 |
| 55 | SLU 35 | 5.32 | -0.49 | 37.9 | 0.2725 | 0.2184 | -0.0004 |
| 55 | SLU 36 | 6.01 | -0.45 | 37.57 | 0.1899 | 0.2495 | -0.0004 |
| 55 | SLU 37 | 5.31 | -0.49 | 37.66 | 0.2697 | 0.2185 | -0.0004 |
| 55 | SLU 38 | 6 | -0.44 | 37.33 | 0.1871 | 0.2496 | -0.0004 |
| 55 | SLU 39 | 4.8 | -0.5 | 39.03 | 0.2749 | 0.1932 | -0.0004 |
| 55 | SLU 40 | 5.49 | -0.45 | 38.69 | 0.1924 | 0.2243 | -0.0004 |
| 55 | SLU 41 | 5.14 | -0.51 | 39.25 | 0.2782 | 0.2089 | -0.0004 |
| 55 | SLU 42 | 5.83 | -0.46 | 38.91 | 0.1956 | 0.24 | -0.0004 |
| 55 | SLU 43 | 4.62 | -0.48 | 37.02 | 0.2623 | 0.1864 | -0.0004 |
| 55 | SLU 44 | 5.76 | -0.39 | 36.46 | 0.1247 | 0.2382 | -0.0004 |
| 55 | SLU 45 | 4.96 | -0.49 | 37.47 | 0.2684 | 0.202 | -0.0004 |
| 55 | SLU 46 | 5.64 | -0.44 | 37.14 | 0.1858 | 0.2331 | -0.0004 |
| 55 | SLU 47 | 6.1 | -0.4 | 36.68 | 0.1279 | 0.2539 | -0.0004 |
| 55 | SLU 48 | 5.29 | -0.49 | 37.7 | 0.2717 | 0.2177 | -0.0004 |
| 55 | SLU 49 | 5.98 | -0.44 | 37.36 | 0.1891 | 0.2488 | -0.0004 |
| 55 | SLU 50 | 5.29 | -0.49 | 37.46 | 0.2688 | 0.2178 | -0.0004 |
| 55 | SLU 51 | 5.97 | -0.44 | 37.13 | 0.1863 | 0.2489 | -0.0004 |
| 55 | SLU 52 | 6.14 | -0.45 | 40.67 | 0.1522 | 0.2524 | -0.0005 |
| 55 | SLU 53 | 5.34 | -0.54 | 41.69 | 0.2959 | 0.2162 | -0.0004 |
| 55 | SLU 54 | 6.02 | -0.49 | 41.35 | 0.2133 | 0.2473 | -0.0005 |
| 55 | SLU 55 | 6.48 | -0.45 | 40.89 | 0.1554 | 0.2681 | -0.0005 |
| 55 | SLU 56 | 5.67 | -0.54 | 41.91 | 0.2991 | 0.2319 | -0.0004 |
| 55 | SLU 57 | 6.36 | -0.49 | 41.57 | 0.2166 | 0.263 | -0.0005 |
| 55 | SLU 58 | 5.67 | -0.54 | 41.67 | 0.2963 | 0.232 | -0.0004 |
| 55 | SLU 59 | 6.35 | -0.49 | 41.34 | 0.2137 | 0.2631 | -0.0005 |
| 55 | SLU 60 | 5.16 | -0.55 | 43.03 | 0.3016 | 0.2067 | -0.0005 |
| 55 | SLU 61 | 5.84 | -0.5 | 42.7 | 0.219 | 0.2378 | -0.0005 |
| 55 | SLU 62 | 5.49 | -0.55 | 43.26 | 0.3048 | 0.2224 | -0.0005 |
| 55 | SLU 63 | 6.18 | -0.51 | 42.92 | 0.2223 | 0.2535 | -0.0005 |
| 55 | SLU 64 | 5.18 | -0.52 | 40.61 | 0.2891 | 0.2097 | -0.0004 |
| 55 | SLU 65 | 6.32 | -0.44 | 40.05 | 0.1515 | 0.2615 | -0.0005 |
| 55 | SLU 66 | 5.52 | -0.53 | 41.06 | 0.2952 | 0.2253 | -0.0004 |
| 55 | SLU 67 | 6.21 | -0.49 | 40.73 | 0.2126 | 0.2564 | -0.0005 |
| 55 | SLU 68 | 6.66 | -0.45 | 40.27 | 0.1548 | 0.2772 | -0.0005 |
| 55 | SLU 69 | 5.86 | -0.54 | 41.29 | 0.2985 | 0.241 | -0.0004 |
| 55 | SLU 70 | 6.54 | -0.49 | 40.95 | 0.2159 | 0.2721 | -0.0005 |
| 55 | SLU 71 | 5.85 | -0.53 | 41.05 | 0.2957 | 0.2411 | -0.0004 |
| 55 | SLU 72 | 6.54 | -0.49 | 40.71 | 0.2131 | 0.2722 | -0.0005 |
| 55 | SLU 73 | 6.7 | -0.49 | 44.26 | 0.179 | 0.2758 | -0.0005 |
| 55 | SLU 74 | 5.9 | -0.59 | 45.28 | 0.3227 | 0.2396 | -0.0005 |
| 55 | SLU 75 | 6.59 | -0.54 | 44.94 | 0.2401 | 0.2707 | -0.0005 |
| 55 | SLU 76 | 7.04 | -0.5 | 44.48 | 0.1822 | 0.2915 | -0.0005 |
| 55 | SLU 77 | 6.24 | -0.59 | 45.5 | 0.326 | 0.2553 | -0.0005 |
| 55 | SLU 78 | 6.92 | -0.54 | 45.16 | 0.2434 | 0.2864 | -0.0005 |
| 55 | SLU 79 | 6.23 | -0.59 | 45.26 | 0.3231 | 0.2554 | -0.0005 |
| 55 | SLU 80 | 6.92 | -0.54 | 44.93 | 0.2406 | 0.2865 | -0.0005 |
| 55 | SLU 81 | 5.72 | -0.6 | 46.62 | 0.3284 | 0.2301 | -0.0005 |
| 55 | SLU 82 | 6.41 | -0.55 | 46.29 | 0.2458 | 0.2612 | -0.0005 |
| 55 | SLU 83 | 6.06 | -0.6 | 46.84 | 0.3317 | 0.2458 | -0.0005 |
| 55 | SLU 84 | 6.74 | -0.55 | 46.51 | 0.2491 | 0.2769 | -0.0005 |
| 55 | SLE RA 1 | 3.86 | -0.39 | 30.45 | 0.2165 | 0.1562 | -0.0003 |
| 55 | SLE RA 2 | 4.62 | -0.34 | 30.08 | 0.1248 | 0.1907 | -0.0003 |
| 55 | SLE RA 3 | 4.09 | -0.4 | 30.75 | 0.2206 | 0.1666 | -0.0003 |
| 55 | SLE RA 4 | 4.55 | -0.37 | 30.53 | 0.1655 | 0.1873 | -0.0003 |
| 55 | SLE RA 5 | 4.85 | -0.34 | 30.22 | 0.1269 | 0.2012 | -0.0003 |
| 55 | SLE RA 6 | 4.31 | -0.4 | 30.9 | 0.2227 | 0.1771 | -0.0003 |
| 55 | SLE RA 7 | 4.77 | -0.37 | 30.68 | 0.1677 | 0.1978 | -0.0003 |
| 55 | SLE RA 8 | 4.31 | -0.4 | 30.74 | 0.2209 | 0.1771 | -0.0003 |
| 55 | SLE RA 9 | 4.77 | -0.37 | 30.52 | 0.1658 | 0.1978 | -0.0003 |

| Nodo | Cont. | Reazione a traslazione | | | Reazione a rotazione | | |
|---|---|---|---|---|---|---|---|
| Ind. | N.br. | x | y | z | x | y | z |
| 55 | SLE RA 10 | 4.88 | -0.37 | 32.88 | 0.1431 | 0.2002 | -0.0004 |
| 55 | SLE RA 11 | 4.34 | -0.43 | 33.56 | 0.2389 | 0.1761 | -0.0004 |
| 55 | SLE RA 12 | 4.8 | -0.4 | 33.34 | 0.1838 | 0.1968 | -0.0004 |
| 55 | SLE RA 13 | 5.1 | -0.38 | 33.03 | 0.1453 | 0.2107 | -0.0004 |
| 55 | SLE RA 14 | 4.57 | -0.44 | 33.71 | 0.2411 | 0.1866 | -0.0004 |
| 55 | SLE RA 15 | 5.02 | -0.4 | 33.48 | 0.186 | 0.2073 | -0.0004 |
| 55 | SLE RA 16 | 4.56 | -0.43 | 33.55 | 0.2392 | 0.1866 | -0.0004 |
| 55 | SLE RA 17 | 5.02 | -0.4 | 33.33 | 0.1841 | 0.2073 | -0.0004 |
| 55 | SLE RA 18 | 4.22 | -0.44 | 34.46 | 0.2427 | 0.1697 | -0.0004 |
| 55 | SLE RA 19 | 4.68 | -0.41 | 34.24 | 0.1876 | 0.1905 | -0.0004 |
| 55 | SLE RA 20 | 4.45 | -0.45 | 34.61 | 0.2449 | 0.1802 | -0.0004 |
| 55 | SLE RA 21 | 4.9 | -0.41 | 34.38 | 0.1898 | 0.2009 | -0.0004 |
| 55 | SLE FR 1 | 3.86 | -0.39 | 30.45 | 0.2165 | 0.1562 | -0.0003 |
| 55 | SLE FR 2 | 4.01 | -0.38 | 30.37 | 0.1982 | 0.1631 | -0.0003 |
| 55 | SLE FR 3 | 3.95 | -0.39 | 30.51 | 0.2174 | 0.1604 | -0.0003 |
| 55 | SLE FR 4 | 4.12 | -0.4 | 31.58 | 0.206 | 0.1672 | -0.0003 |
| 55 | SLE FR 5 | 4.06 | -0.41 | 31.71 | 0.2252 | 0.1644 | -0.0003 |
| 55 | SLE FR 6 | 4.04 | -0.42 | 32.45 | 0.2296 | 0.163 | -0.0003 |
| 55 | SLE QP 1 | 3.86 | -0.39 | 30.45 | 0.2165 | 0.1562 | -0.0003 |
| 55 | SLE QP 2 | 3.97 | -0.41 | 31.65 | 0.2244 | 0.1602 | -0.0003 |
| 55 | SLD 1 | 13.08 | -0.61 | 35.36 | 0.1639 | 0.5644 | -0.0004 |
| 55 | SLD 2 | 13.08 | -0.61 | 35.36 | 0.1639 | 0.5644 | -0.0004 |
| 55 | SLD 3 | 12.05 | -0.36 | 32.3 | 0.4148 | 0.5205 | -0.0003 |
| 55 | SLD 4 | 12.05 | -0.36 | 32.3 | 0.4148 | 0.5205 | -0.0003 |
| 55 | SLD 5 | 8.27 | -0.84 | 37.41 | -0.1743 | 0.3481 | -0.0005 |
| 55 | SLD 6 | 8.27 | -0.84 | 37.41 | -0.1743 | 0.3481 | -0.0005 |
| 55 | SLD 7 | 4.83 | -0.02 | 27.2 | 0.662 | 0.2018 | -0.0002 |
| 55 | SLD 8 | 4.83 | -0.02 | 27.2 | 0.662 | 0.2018 | -0.0002 |
| 55 | SLD 9 | 3.11 | -0.79 | 36.11 | -0.2133 | 0.1187 | -0.0005 |
| 55 | SLD 10 | 3.11 | -0.79 | 36.11 | -0.2133 | 0.1187 | -0.0005 |
| 55 | SLD 11 | -0.33 | 0.03 | 25.89 | 0.623 | -0.0276 | -0.0002 |
| 55 | SLD 12 | -0.33 | 0.03 | 25.89 | 0.623 | -0.0276 | -0.0002 |
| 55 | SLD 13 | -4.11 | -0.45 | 31.01 | 0.0339 | -0.2 | -0.0003 |
| 55 | SLD 14 | -4.11 | -0.45 | 31.01 | 0.0339 | -0.2 | -0.0003 |
| 55 | SLD 15 | -5.15 | -0.21 | 27.94 | 0.2848 | -0.2439 | -0.0002 |
| 55 | SLD 16 | -5.15 | -0.21 | 27.94 | 0.2848 | -0.2439 | -0.0002 |
| 55 | SLV 1 | 25.03 | -0.89 | 40.35 | 0.0625 | 1.0944 | -0.0006 |
| 55 | SLV 2 | 25.03 | -0.89 | 40.35 | 0.0625 | 1.0944 | -0.0006 |
| 55 | SLV 3 | 22.58 | -0.28 | 32.99 | 0.6963 | 0.9899 | -0.0004 |
| 55 | SLV 4 | 22.58 | -0.28 | 32.99 | 0.6963 | 0.9899 | -0.0004 |
| 55 | SLV 5 | 14 | -1.48 | 45.42 | -0.7854 | 0.599 | -0.0008 |
| 55 | SLV 6 | 14 | -1.48 | 45.42 | -0.7854 | 0.599 | -0.0008 |
| 55 | SLV 7 | 5.84 | 0.56 | 20.89 | 1.3272 | 0.2507 | 0 |
| 55 | SLV 8 | 5.84 | 0.56 | 20.89 | 1.3272 | 0.2507 | 0 |
| 55 | SLV 9 | 2.1 | -1.37 | 42.41 | -0.8784 | 0.0698 | -0.0007 |
| 55 | SLV 10 | 2.1 | -1.37 | 42.41 | -0.8784 | 0.0698 | -0.0007 |
| 55 | SLV 11 | -6.07 | 0.66 | 17.88 | 1.2342 | -0.2785 | 0.0001 |
| 55 | SLV 12 | -6.07 | 0.66 | 17.88 | 1.2342 | -0.2785 | 0.0001 |
| 55 | SLV 13 | -14.64 | -0.53 | 30.31 | -0.2475 | -0.6694 | -0.0003 |
| 55 | SLV 14 | -14.64 | -0.53 | 30.31 | -0.2475 | -0.6694 | -0.0003 |
| 55 | SLV 15 | -17.09 | 0.08 | 22.96 | 0.3863 | -0.7739 | -0.0001 |
| 55 | SLV 16 | -17.09 | 0.08 | 22.96 | 0.3863 | -0.7739 | -0.0001 |
| 56 | SLU 1 | 3.24 | -0.36 | 31.44 | 0.1949 | 0.1366 | -0.0002 |
| 56 | SLU 2 | 4.71 | -0.31 | 31.03 | 0.0906 | 0.1979 | -0.0003 |
| 56 | SLU 3 | 3.57 | -0.37 | 31.86 | 0.2004 | 0.1505 | -0.0003 |
| 56 | SLU 4 | 4.45 | -0.34 | 31.62 | 0.1378 | 0.1873 | -0.0003 |
| 56 | SLU 5 | 5.03 | -0.32 | 31.18 | 0.0935 | 0.2117 | -0.0003 |
| 56 | SLU 6 | 3.88 | -0.37 | 32.01 | 0.2032 | 0.1643 | -0.0003 |
| 56 | SLU 7 | 4.76 | -0.34 | 31.76 | 0.1407 | 0.2011 | -0.0003 |
| 56 | SLU 8 | 3.88 | -0.37 | 31.73 | 0.2006 | 0.1642 | -0.0003 |
| 56 | SLU 9 | 4.76 | -0.34 | 31.49 | 0.138 | 0.201 | -0.0003 |
| 56 | SLU 10 | 5.01 | -0.36 | 35.53 | 0.1167 | 0.2105 | -0.0004 |
| 56 | SLU 11 | 3.86 | -0.42 | 36.37 | 0.2265 | 0.1631 | -0.0003 |
| 56 | SLU 12 | 4.74 | -0.39 | 36.12 | 0.1639 | 0.1999 | -0.0003 |
| 56 | SLU 13 | 5.32 | -0.37 | 35.68 | 0.1196 | 0.2243 | -0.0004 |
| 56 | SLU 14 | 4.18 | -0.42 | 36.51 | 0.2293 | 0.1769 | -0.0003 |
| 56 | SLU 15 | 5.06 | -0.39 | 36.26 | 0.1668 | 0.2137 | -0.0003 |
| 56 | SLU 16 | 4.18 | -0.42 | 36.23 | 0.2267 | 0.1768 | -0.0003 |
| 56 | SLU 17 | 5.06 | -0.39 | 35.99 | 0.1641 | 0.2136 | -0.0003 |
| 56 | SLU 18 | 3.67 | -0.43 | 37.87 | 0.2322 | 0.1545 | -0.0003 |
| 56 | SLU 19 | 4.55 | -0.4 | 37.62 | 0.1696 | 0.1913 | -0.0003 |
| 56 | SLU 20 | 3.98 | -0.43 | 38.02 | 0.235 | 0.1684 | -0.0003 |
| 56 | SLU 21 | 4.86 | -0.41 | 37.77 | 0.1725 | 0.2052 | -0.0003 |
| 56 | SLU 22 | 3.72 | -0.4 | 35.23 | 0.2201 | 0.157 | -0.0003 |
| 56 | SLU 23 | 5.19 | -0.36 | 34.82 | 0.1158 | 0.2183 | -0.0004 |
| 56 | SLU 24 | 4.04 | -0.41 | 35.65 | 0.2256 | 0.1709 | -0.0003 |
| 56 | SLU 25 | 4.92 | -0.39 | 35.41 | 0.163 | 0.2077 | -0.0003 |
| 56 | SLU 26 | 5.5 | -0.36 | 34.97 | 0.1186 | 0.2322 | -0.0004 |
| 56 | SLU 27 | 4.36 | -0.42 | 35.8 | 0.2284 | 0.1848 | -0.0003 |
| 56 | SLU 28 | 5.24 | -0.39 | 35.55 | 0.1658 | 0.2216 | -0.0003 |
| 56 | SLU 29 | 4.35 | -0.41 | 35.52 | 0.2258 | 0.1847 | -0.0003 |
| 56 | SLU 30 | 5.23 | -0.39 | 35.28 | 0.1632 | 0.2215 | -0.0003 |
| 56 | SLU 31 | 5.48 | -0.41 | 39.32 | 0.1419 | 0.2309 | -0.0004 |
| 56 | SLU 32 | 4.33 | -0.46 | 40.15 | 0.2516 | 0.1835 | -0.0003 |
| 56 | SLU 33 | 5.21 | -0.44 | 39.91 | 0.1891 | 0.2203 | -0.0004 |
| 56 | SLU 34 | 5.8 | -0.41 | 39.47 | 0.1447 | 0.2448 | -0.0004 |
| 56 | SLU 35 | 4.65 | -0.47 | 40.3 | 0.2545 | 0.1973 | -0.0003 |
| 56 | SLU 36 | 5.53 | -0.44 | 40.05 | 0.1919 | 0.2342 | -0.0004 |

| Nodo | Cont. | Reazione a traslazione | | | Reazione a rotazione | | |
|---|---|---|---|---|---|---|---|
| Ind. | N.br. | x | y | z | x | y | z |
| 56 | SLU 37 | 4.65 | -0.46 | 40.02 | 0.2519 | 0.1973 | -0.0003 |
| 56 | SLU 38 | 5.53 | -0.44 | 39.78 | 0.1893 | 0.2341 | -0.0004 |
| 56 | SLU 39 | 4.14 | -0.47 | 41.66 | 0.2574 | 0.175 | -0.0003 |
| 56 | SLU 40 | 5.02 | -0.45 | 41.41 | 0.1948 | 0.2118 | -0.0004 |
| 56 | SLU 41 | 4.46 | -0.48 | 41.81 | 0.2602 | 0.1888 | -0.0003 |
| 56 | SLU 42 | 5.34 | -0.45 | 41.56 | 0.1976 | 0.2256 | -0.0004 |
| 56 | SLU 43 | 4.06 | -0.45 | 39.58 | 0.2448 | 0.1705 | -0.0003 |
| 56 | SLU 44 | 5.52 | -0.4 | 39.16 | 0.1405 | 0.2319 | -0.0004 |
| 56 | SLU 45 | 4.38 | -0.46 | 40 | 0.2502 | 0.1845 | -0.0003 |
| 56 | SLU 46 | 5.26 | -0.43 | 39.75 | 0.1877 | 0.2213 | -0.0004 |
| 56 | SLU 47 | 5.84 | -0.41 | 39.31 | 0.1433 | 0.2457 | -0.0004 |
| 56 | SLU 48 | 4.69 | -0.46 | 40.14 | 0.2531 | 0.1983 | -0.0003 |
| 56 | SLU 49 | 5.57 | -0.44 | 39.9 | 0.1905 | 0.2351 | -0.0004 |
| 56 | SLU 50 | 4.69 | -0.46 | 39.87 | 0.2505 | 0.1982 | -0.0003 |
| 56 | SLU 51 | 5.57 | -0.43 | 39.62 | 0.1879 | 0.235 | -0.0004 |
| 56 | SLU 52 | 5.82 | -0.45 | 43.67 | 0.1666 | 0.2444 | -0.0004 |
| 56 | SLU 53 | 4.67 | -0.51 | 44.5 | 0.2763 | 0.197 | -0.0003 |
| 56 | SLU 54 | 5.55 | -0.48 | 44.25 | 0.2138 | 0.2338 | -0.0004 |
| 56 | SLU 55 | 6.14 | -0.46 | 43.81 | 0.1694 | 0.2583 | -0.0004 |
| 56 | SLU 56 | 4.99 | -0.51 | 44.64 | 0.2792 | 0.2109 | -0.0004 |
| 56 | SLU 57 | 5.87 | -0.49 | 44.4 | 0.2166 | 0.2477 | -0.0004 |
| 56 | SLU 58 | 4.99 | -0.51 | 44.37 | 0.2765 | 0.2108 | -0.0003 |
| 56 | SLU 59 | 5.87 | -0.48 | 44.12 | 0.214 | 0.2476 | -0.0004 |
| 56 | SLU 60 | 4.48 | -0.52 | 46 | 0.282 | 0.1885 | -0.0004 |
| 56 | SLU 61 | 5.36 | -0.49 | 45.76 | 0.2195 | 0.2253 | -0.0004 |
| 56 | SLU 62 | 4.8 | -0.52 | 46.15 | 0.2849 | 0.2023 | -0.0004 |
| 56 | SLU 63 | 5.68 | -0.5 | 45.9 | 0.2223 | 0.2391 | -0.0004 |
| 56 | SLU 64 | 4.53 | -0.5 | 43.36 | 0.2699 | 0.191 | -0.0003 |
| 56 | SLU 65 | 6 | -0.45 | 42.95 | 0.1656 | 0.2523 | -0.0004 |
| 56 | SLU 66 | 4.85 | -0.51 | 43.79 | 0.2754 | 0.2049 | -0.0003 |
| 56 | SLU 67 | 5.73 | -0.48 | 43.54 | 0.2128 | 0.2417 | -0.0004 |
| 56 | SLU 68 | 6.31 | -0.46 | 43.1 | 0.1685 | 0.2661 | -0.0004 |
| 56 | SLU 69 | 5.17 | -0.51 | 43.93 | 0.2782 | 0.2187 | -0.0004 |
| 56 | SLU 70 | 6.05 | -0.48 | 43.69 | 0.2157 | 0.2555 | -0.0004 |
| 56 | SLU 71 | 5.17 | -0.5 | 43.66 | 0.2756 | 0.2186 | -0.0003 |
| 56 | SLU 72 | 6.05 | -0.48 | 43.41 | 0.213 | 0.2554 | -0.0004 |
| 56 | SLU 73 | 6.29 | -0.5 | 47.45 | 0.1917 | 0.2649 | -0.0004 |
| 56 | SLU 74 | 5.15 | -0.55 | 48.29 | 0.3015 | 0.2175 | -0.0004 |
| 56 | SLU 75 | 6.03 | -0.53 | 48.04 | 0.2389 | 0.2543 | -0.0004 |
| 56 | SLU 76 | 6.61 | -0.5 | 47.6 | 0.1946 | 0.2787 | -0.0004 |
| 56 | SLU 77 | 5.46 | -0.56 | 48.43 | 0.3043 | 0.2313 | -0.0004 |
| 56 | SLU 78 | 6.34 | -0.53 | 48.19 | 0.2418 | 0.2681 | -0.0004 |
| 56 | SLU 79 | 5.46 | -0.55 | 48.16 | 0.3017 | 0.2312 | -0.0004 |
| 56 | SLU 80 | 6.34 | -0.53 | 47.91 | 0.2391 | 0.268 | -0.0004 |
| 56 | SLU 81 | 4.95 | -0.57 | 49.79 | 0.3072 | 0.2089 | -0.0004 |
| 56 | SLU 82 | 5.83 | -0.54 | 49.55 | 0.2446 | 0.2457 | -0.0004 |
| 56 | SLU 83 | 5.27 | -0.57 | 49.94 | 0.31 | 0.2228 | -0.0004 |
| 56 | SLU 84 | 6.15 | -0.54 | 49.69 | 0.2475 | 0.2596 | -0.0004 |
| 56 | SLE RA 1 | 3.38 | -0.37 | 32.52 | 0.2021 | 0.1424 | -0.0003 |
| 56 | SLE RA 2 | 4.36 | -0.34 | 32.25 | 0.1326 | 0.1833 | -0.0003 |
| 56 | SLE RA 3 | 3.59 | -0.38 | 32.81 | 0.2058 | 0.1517 | -0.0003 |
| 56 | SLE RA 4 | 4.18 | -0.36 | 32.64 | 0.164 | 0.1762 | -0.0003 |
| 56 | SLE RA 5 | 4.57 | -0.34 | 32.35 | 0.1345 | 0.1925 | -0.0003 |
| 56 | SLE RA 6 | 3.81 | -0.38 | 32.9 | 0.2077 | 0.1609 | -0.0003 |
| 56 | SLE RA 7 | 4.39 | -0.36 | 32.74 | 0.1659 | 0.1854 | -0.0003 |
| 56 | SLE RA 8 | 3.8 | -0.38 | 32.72 | 0.2059 | 0.1608 | -0.0003 |
| 56 | SLE RA 9 | 4.39 | -0.36 | 32.55 | 0.1642 | 0.1854 | -0.0003 |
| 56 | SLE RA 10 | 4.56 | -0.37 | 35.25 | 0.15 | 0.1917 | -0.0003 |
| 56 | SLE RA 11 | 3.79 | -0.41 | 35.81 | 0.2232 | 0.1601 | -0.0003 |
| 56 | SLE RA 12 | 4.38 | -0.39 | 35.64 | 0.1814 | 0.1846 | -0.0003 |
| 56 | SLE RA 13 | 4.77 | -0.38 | 35.35 | 0.1519 | 0.2009 | -0.0003 |
| 56 | SLE RA 14 | 4 | -0.41 | 35.9 | 0.225 | 0.1693 | -0.0003 |
| 56 | SLE RA 15 | 4.59 | -0.4 | 35.74 | 0.1833 | 0.1938 | -0.0003 |
| 56 | SLE RA 16 | 4 | -0.41 | 35.72 | 0.2233 | 0.1692 | -0.0003 |
| 56 | SLE RA 17 | 4.59 | -0.39 | 35.56 | 0.1816 | 0.1938 | -0.0003 |
| 56 | SLE RA 18 | 3.66 | -0.42 | 36.81 | 0.227 | 0.1544 | -0.0003 |
| 56 | SLE RA 19 | 4.25 | -0.4 | 36.65 | 0.1852 | 0.1789 | -0.0003 |
| 56 | SLE RA 20 | 3.87 | -0.42 | 36.91 | 0.2289 | 0.1636 | -0.0003 |
| 56 | SLE RA 21 | 4.46 | -0.4 | 36.74 | 0.1871 | 0.1881 | -0.0003 |
| 56 | SLE FR 1 | 3.38 | -0.37 | 32.52 | 0.2021 | 0.1424 | -0.0003 |
| 56 | SLE FR 2 | 3.58 | -0.37 | 32.47 | 0.1882 | 0.1506 | -0.0003 |
| 56 | SLE FR 3 | 3.46 | -0.37 | 32.56 | 0.2029 | 0.1461 | -0.0003 |
| 56 | SLE FR 4 | 3.66 | -0.38 | 33.76 | 0.1957 | 0.1542 | -0.0003 |
| 56 | SLE FR 5 | 3.55 | -0.39 | 33.85 | 0.2103 | 0.1497 | -0.0003 |
| 56 | SLE FR 6 | 3.52 | -0.39 | 34.67 | 0.2145 | 0.1484 | -0.0003 |
| 56 | SLE QP 1 | 3.38 | -0.37 | 32.52 | 0.2021 | 0.1424 | -0.0003 |
| 56 | SLE QP 2 | 3.46 | -0.39 | 33.81 | 0.2096 | 0.146 | -0.0003 |
| 56 | SLD 1 | 12.57 | -0.54 | 37.25 | 0.161 | 0.5475 | -0.0004 |
| 56 | SLD 2 | 12.57 | -0.54 | 37.25 | 0.161 | 0.5475 | -0.0004 |
| 56 | SLD 3 | 11.47 | -0.35 | 34.04 | 0.3616 | 0.499 | -0.0003 |
| 56 | SLD 4 | 11.47 | -0.35 | 34.04 | 0.3616 | 0.499 | -0.0003 |
| 56 | SLD 5 | 7.86 | -0.73 | 39.71 | -0.1092 | 0.3401 | -0.0005 |
| 56 | SLD 6 | 7.86 | -0.73 | 39.71 | -0.1092 | 0.3401 | -0.0005 |
| 56 | SLD 7 | 4.21 | -0.08 | 29.01 | 0.5594 | 0.1783 | -0.0001 |
| 56 | SLD 8 | 4.21 | -0.08 | 29.01 | 0.5594 | 0.1783 | -0.0001 |
| 56 | SLD 9 | 2.72 | -0.69 | 38.61 | -0.1403 | 0.1137 | -0.0004 |
| 56 | SLD 10 | 2.72 | -0.69 | 38.61 | -0.1403 | 0.1137 | -0.0004 |
| 56 | SLD 11 | -0.93 | -0.05 | 27.91 | 0.5284 | -0.0481 | -0.0001 |

| Nodo | Cont. | Reazione a traslazione | | | Reazione a rotazione | | |
|---|---|---|---|---|---|---|---|
| Ind. | N.br. | x | y | z | x | y | z |
| 56 | SLD 12 | -0.93 | -0.05 | 27.91 | 0.5284 | -0.0481 | -0.0001 |
| 56 | SLD 13 | -4.54 | -0.42 | 33.58 | 0.0576 | -0.207 | -0.0003 |
| 56 | SLD 14 | -4.54 | -0.42 | 33.58 | 0.0576 | -0.207 | -0.0003 |
| 56 | SLD 15 | -5.64 | -0.23 | 30.38 | 0.2582 | -0.2555 | -0.0002 |
| 56 | SLD 16 | -5.64 | -0.23 | 30.38 | 0.2582 | -0.2555 | -0.0002 |
| 56 | SLV 1 | 24.52 | -0.76 | 41.86 | 0.0803 | 1.0746 | -0.0005 |
| 56 | SLV 2 | 24.52 | -0.76 | 41.86 | 0.0803 | 1.0746 | -0.0005 |
| 56 | SLV 3 | 21.88 | -0.28 | 34.23 | 0.5855 | 0.9576 | -0.0002 |
| 56 | SLV 4 | 21.88 | -0.28 | 34.23 | 0.5855 | 0.9576 | -0.0002 |
| 56 | SLV 5 | 13.78 | -1.22 | 47.8 | -0.5954 | 0.6021 | -0.0007 |
| 56 | SLV 6 | 13.78 | -1.22 | 47.8 | -0.5954 | 0.6021 | -0.0007 |
| 56 | SLV 7 | 4.99 | 0.36 | 22.37 | 1.0885 | 0.212 | 0.0001 |
| 56 | SLV 8 | 4.99 | 0.36 | 22.37 | 1.0885 | 0.212 | 0.0001 |
| 56 | SLV 9 | 1.93 | -1.13 | 45.26 | -0.6694 | 0.08 | -0.0006 |
| 56 | SLV 10 | 1.93 | -1.13 | 45.26 | -0.6694 | 0.08 | -0.0006 |
| 56 | SLV 11 | -6.85 | 0.45 | 19.82 | 1.0145 | -0.3101 | 0.0002 |
| 56 | SLV 12 | -6.85 | 0.45 | 19.82 | 1.0145 | -0.3101 | 0.0002 |
| 56 | SLV 13 | -14.95 | -0.49 | 33.39 | -0.1664 | -0.6656 | -0.0003 |
| 56 | SLV 14 | -14.95 | -0.49 | 33.39 | -0.1664 | -0.6656 | -0.0003 |
| 56 | SLV 15 | -17.59 | -0.01 | 25.76 | 0.3388 | -0.7826 | 0 |
| 56 | SLV 16 | -17.59 | -0.01 | 25.76 | 0.3388 | -0.7826 | 0 |
| 57 | SLU 1 | 2.24 | -0.28 | 33.3 | 0.1551 | 0.0826 | -0.0001 |
| 57 | SLU 2 | 3.99 | -0.27 | 33.25 | 0.0854 | 0.1583 | -0.0002 |
| 57 | SLU 3 | 2.55 | -0.28 | 33.68 | 0.1594 | 0.0969 | -0.0001 |
| 57 | SLU 4 | 3.6 | -0.28 | 33.65 | 0.1176 | 0.1423 | -0.0002 |
| 57 | SLU 5 | 4.31 | -0.27 | 33.31 | 0.0877 | 0.1736 | -0.0002 |
| 57 | SLU 6 | 2.88 | -0.29 | 33.73 | 0.1617 | 0.1122 | -0.0001 |
| 57 | SLU 7 | 3.93 | -0.28 | 33.7 | 0.1199 | 0.1576 | -0.0002 |
| 57 | SLU 8 | 2.89 | -0.28 | 33.42 | 0.1597 | 0.1132 | -0.0001 |
| 57 | SLU 9 | 3.94 | -0.28 | 33.39 | 0.1179 | 0.1586 | -0.0002 |
| 57 | SLU 10 | 4.12 | -0.31 | 38.01 | 0.1063 | 0.1613 | -0.0002 |
| 57 | SLU 11 | 2.68 | -0.32 | 38.43 | 0.1804 | 0.0999 | -0.0001 |
| 57 | SLU 12 | 3.73 | -0.32 | 38.4 | 0.1386 | 0.1453 | -0.0002 |
| 57 | SLU 13 | 4.44 | -0.31 | 38.06 | 0.1086 | 0.1766 | -0.0002 |
| 57 | SLU 14 | 3 | -0.32 | 38.49 | 0.1827 | 0.1152 | -0.0001 |
| 57 | SLU 15 | 4.05 | -0.32 | 38.46 | 0.1409 | 0.1606 | -0.0002 |
| 57 | SLU 16 | 3.02 | -0.32 | 38.17 | 0.1806 | 0.1162 | -0.0001 |
| 57 | SLU 17 | 4.07 | -0.32 | 38.14 | 0.1388 | 0.1617 | -0.0002 |
| 57 | SLU 18 | 2.42 | -0.33 | 40.09 | 0.185 | 0.0869 | -0.0001 |
| 57 | SLU 19 | 3.47 | -0.33 | 40.06 | 0.1431 | 0.1323 | -0.0002 |
| 57 | SLU 20 | 2.75 | -0.33 | 40.15 | 0.1873 | 0.1022 | -0.0001 |
| 57 | SLU 21 | 3.8 | -0.33 | 40.12 | 0.1455 | 0.1477 | -0.0002 |
| 57 | SLU 22 | 2.56 | -0.31 | 37.25 | 0.1752 | 0.0951 | -0.0001 |
| 57 | SLU 23 | 4.31 | -0.31 | 37.2 | 0.1055 | 0.1708 | -0.0002 |
| 57 | SLU 24 | 2.87 | -0.32 | 37.62 | 0.1795 | 0.1094 | -0.0001 |
| 57 | SLU 25 | 3.92 | -0.31 | 37.59 | 0.1377 | 0.1548 | -0.0002 |
| 57 | SLU 26 | 4.63 | -0.31 | 37.26 | 0.1078 | 0.1861 | -0.0002 |
| 57 | SLU 27 | 3.2 | -0.32 | 37.68 | 0.1818 | 0.1247 | -0.0001 |
| 57 | SLU 28 | 4.25 | -0.32 | 37.65 | 0.14 | 0.1701 | -0.0002 |
| 57 | SLU 29 | 3.21 | -0.32 | 37.36 | 0.1798 | 0.1257 | -0.0001 |
| 57 | SLU 30 | 4.26 | -0.31 | 37.33 | 0.138 | 0.1712 | -0.0002 |
| 57 | SLU 31 | 4.44 | -0.34 | 41.95 | 0.1264 | 0.1738 | -0.0002 |
| 57 | SLU 32 | 3 | -0.36 | 42.38 | 0.2005 | 0.1124 | -0.0001 |
| 57 | SLU 33 | 4.05 | -0.35 | 42.35 | 0.1587 | 0.1578 | -0.0002 |
| 57 | SLU 34 | 4.76 | -0.35 | 42.01 | 0.1287 | 0.1892 | -0.0002 |
| 57 | SLU 35 | 3.32 | -0.36 | 42.43 | 0.2028 | 0.1277 | -0.0001 |
| 57 | SLU 36 | 4.37 | -0.36 | 42.4 | 0.161 | 0.1731 | -0.0002 |
| 57 | SLU 37 | 3.34 | -0.36 | 42.11 | 0.2007 | 0.1288 | -0.0001 |
| 57 | SLU 38 | 4.39 | -0.35 | 42.08 | 0.1589 | 0.1742 | -0.0002 |
| 57 | SLU 39 | 2.74 | -0.37 | 44.04 | 0.2051 | 0.0994 | -0.0001 |
| 57 | SLU 40 | 3.79 | -0.36 | 44.01 | 0.1632 | 0.1449 | -0.0002 |
| 57 | SLU 41 | 3.07 | -0.37 | 44.09 | 0.2074 | 0.1147 | -0.0001 |
| 57 | SLU 42 | 4.12 | -0.37 | 44.06 | 0.1656 | 0.1602 | -0.0002 |
| 57 | SLU 43 | 2.8 | -0.35 | 41.94 | 0.1947 | 0.1031 | -0.0001 |
| 57 | SLU 44 | 4.55 | -0.34 | 41.89 | 0.125 | 0.1788 | -0.0002 |
| 57 | SLU 45 | 3.11 | -0.35 | 42.32 | 0.1991 | 0.1174 | -0.0001 |
| 57 | SLU 46 | 4.16 | -0.35 | 42.29 | 0.1572 | 0.1628 | -0.0002 |
| 57 | SLU 47 | 4.88 | -0.34 | 41.95 | 0.1273 | 0.1941 | -0.0002 |
| 57 | SLU 48 | 3.44 | -0.36 | 42.37 | 0.2014 | 0.1327 | -0.0001 |
| 57 | SLU 49 | 4.49 | -0.35 | 42.34 | 0.1596 | 0.1781 | -0.0002 |
| 57 | SLU 50 | 3.45 | -0.35 | 42.06 | 0.1993 | 0.1337 | -0.0001 |
| 57 | SLU 51 | 4.5 | -0.35 | 42.03 | 0.1575 | 0.1791 | -0.0002 |
| 57 | SLU 52 | 4.68 | -0.38 | 46.64 | 0.1459 | 0.1818 | -0.0002 |
| 57 | SLU 53 | 3.24 | -0.39 | 47.07 | 0.22 | 0.1204 | -0.0001 |
| 57 | SLU 54 | 4.29 | -0.39 | 47.04 | 0.1782 | 0.1658 | -0.0002 |
| 57 | SLU 55 | 5 | -0.38 | 46.7 | 0.1482 | 0.1971 | -0.0002 |
| 57 | SLU 56 | 3.57 | -0.39 | 47.12 | 0.2223 | 0.1357 | -0.0001 |
| 57 | SLU 57 | 4.61 | -0.39 | 47.09 | 0.1805 | 0.1811 | -0.0002 |
| 57 | SLU 58 | 3.58 | -0.39 | 46.81 | 0.2202 | 0.1367 | -0.0001 |
| 57 | SLU 59 | 4.63 | -0.39 | 46.78 | 0.1784 | 0.1822 | -0.0002 |
| 57 | SLU 60 | 2.98 | -0.4 | 48.73 | 0.2246 | 0.1074 | -0.0001 |
| 57 | SLU 61 | 4.03 | -0.4 | 48.7 | 0.1828 | 0.1528 | -0.0002 |
| 57 | SLU 62 | 3.31 | -0.4 | 48.79 | 0.2269 | 0.1227 | -0.0001 |
| 57 | SLU 63 | 4.36 | -0.4 | 48.76 | 0.1851 | 0.1681 | -0.0002 |
| 57 | SLU 64 | 3.12 | -0.38 | 45.89 | 0.2148 | 0.1156 | -0.0001 |
| 57 | SLU 65 | 4.87 | -0.38 | 45.84 | 0.1451 | 0.1913 | -0.0002 |
| 57 | SLU 66 | 3.44 | -0.39 | 46.26 | 0.2192 | 0.1299 | -0.0001 |
| 57 | SLU 67 | 4.48 | -0.38 | 46.23 | 0.1773 | 0.1753 | -0.0002 |

| Nodo | Cont. | Reazione a traslazione | | | Reazione a rotazione | | |
|---|---|---|---|---|---|---|---|
| Ind. | N.br. | x | y | z | x | y | z |
| 57 | SLU 68 | 5.2 | -0.38 | 45.9 | 0.1474 | 0.2066 | -0.0002 |
| 57 | SLU 69 | 3.76 | -0.39 | 46.32 | 0.2215 | 0.1452 | -0.0001 |
| 57 | SLU 70 | 4.81 | -0.39 | 46.29 | 0.1797 | 0.1906 | -0.0002 |
| 57 | SLU 71 | 3.77 | -0.39 | 46 | 0.2194 | 0.1462 | -0.0001 |
| 57 | SLU 72 | 4.82 | -0.38 | 45.97 | 0.1776 | 0.1916 | -0.0002 |
| 57 | SLU 73 | 5 | -0.41 | 50.59 | 0.166 | 0.1943 | -0.0002 |
| 57 | SLU 74 | 3.56 | -0.43 | 51.01 | 0.2401 | 0.1329 | -0.0001 |
| 57 | SLU 75 | 4.61 | -0.42 | 50.98 | 0.1983 | 0.1783 | -0.0002 |
| 57 | SLU 76 | 5.32 | -0.42 | 50.65 | 0.1683 | 0.2096 | -0.0003 |
| 57 | SLU 77 | 3.89 | -0.43 | 51.07 | 0.2424 | 0.1482 | -0.0001 |
| 57 | SLU 78 | 4.94 | -0.43 | 51.04 | 0.2006 | 0.1936 | -0.0002 |
| 57 | SLU 79 | 3.9 | -0.43 | 50.75 | 0.2403 | 0.1492 | -0.0001 |
| 57 | SLU 80 | 4.95 | -0.42 | 50.72 | 0.1985 | 0.1947 | -0.0002 |
| 57 | SLU 81 | 3.31 | -0.44 | 52.68 | 0.2447 | 0.1199 | -0.0001 |
| 57 | SLU 82 | 4.35 | -0.43 | 52.65 | 0.2029 | 0.1654 | -0.0002 |
| 57 | SLU 83 | 3.63 | -0.44 | 52.73 | 0.247 | 0.1352 | -0.0001 |
| 57 | SLU 84 | 4.68 | -0.44 | 52.7 | 0.2052 | 0.1807 | -0.0002 |
| 57 | SLE RA 1 | 2.33 | -0.29 | 34.43 | 0.1608 | 0.0862 | -0.0001 |
| 57 | SLE RA 2 | 3.5 | -0.28 | 34.4 | 0.1143 | 0.1367 | -0.0002 |
| 57 | SLE RA 3 | 2.54 | -0.29 | 34.68 | 0.1637 | 0.0957 | -0.0001 |
| 57 | SLE RA 4 | 3.24 | -0.29 | 34.66 | 0.1358 | 0.126 | -0.0001 |
| 57 | SLE RA 5 | 3.71 | -0.28 | 34.44 | 0.1159 | 0.1469 | -0.0002 |
| 57 | SLE RA 6 | 2.76 | -0.29 | 34.72 | 0.1653 | 0.1059 | -0.0001 |
| 57 | SLE RA 7 | 3.46 | -0.29 | 34.7 | 0.1374 | 0.1362 | -0.0001 |
| 57 | SLE RA 8 | 2.77 | -0.29 | 34.51 | 0.1639 | 0.1066 | -0.0001 |
| 57 | SLE RA 9 | 3.46 | -0.29 | 34.49 | 0.136 | 0.1369 | -0.0001 |
| 57 | SLE RA 10 | 3.58 | -0.31 | 37.57 | 0.1283 | 0.1387 | -0.0002 |
| 57 | SLE RA 11 | 2.62 | -0.32 | 37.85 | 0.1777 | 0.0977 | -0.0001 |
| 57 | SLE RA 12 | 3.32 | -0.31 | 37.83 | 0.1498 | 0.128 | -0.0001 |
| 57 | SLE RA 13 | 3.8 | -0.31 | 37.6 | 0.1298 | 0.1489 | -0.0002 |
| 57 | SLE RA 14 | 2.84 | -0.32 | 37.89 | 0.1792 | 0.1079 | -0.0001 |
| 57 | SLE RA 15 | 3.54 | -0.32 | 37.87 | 0.1513 | 0.1382 | -0.0001 |
| 57 | SLE RA 16 | 2.85 | -0.32 | 37.67 | 0.1778 | 0.1086 | -0.0001 |
| 57 | SLE RA 17 | 3.55 | -0.31 | 37.65 | 0.15 | 0.1389 | -0.0001 |
| 57 | SLE RA 18 | 2.45 | -0.32 | 38.96 | 0.1807 | 0.0891 | -0.0001 |
| 57 | SLE RA 19 | 3.15 | -0.32 | 38.94 | 0.1529 | 0.1193 | -0.0001 |
| 57 | SLE RA 20 | 2.67 | -0.32 | 38.99 | 0.1823 | 0.0993 | -0.0001 |
| 57 | SLE RA 21 | 3.37 | -0.32 | 38.97 | 0.1544 | 0.1295 | -0.0001 |
| 57 | SLE FR 1 | 2.33 | -0.29 | 34.43 | 0.1608 | 0.0862 | -0.0001 |
| 57 | SLE FR 2 | 2.57 | -0.28 | 34.43 | 0.1515 | 0.0963 | -0.0001 |
| 57 | SLE FR 3 | 2.42 | -0.29 | 34.45 | 0.1614 | 0.0903 | -0.0001 |
| 57 | SLE FR 4 | 2.6 | -0.3 | 35.78 | 0.1575 | 0.0971 | -0.0001 |
| 57 | SLE FR 5 | 2.46 | -0.3 | 35.8 | 0.1674 | 0.0911 | -0.0001 |
| 57 | SLE FR 6 | 2.39 | -0.3 | 36.69 | 0.1708 | 0.0876 | -0.0001 |
| 57 | SLE QP 1 | 2.33 | -0.29 | 34.43 | 0.1608 | 0.0862 | -0.0001 |
| 57 | SLE QP 2 | 2.37 | -0.3 | 35.79 | 0.1668 | 0.087 | -0.0001 |
| 57 | SLD 1 | 11.64 | -0.31 | 35.68 | 0.1348 | 0.5009 | -0.0002 |
| 57 | SLD 2 | 11.64 | -0.31 | 35.68 | 0.1348 | 0.5009 | -0.0002 |
| 57 | SLD 3 | 10.53 | -0.19 | 32.17 | 0.278 | 0.4543 | -0.0001 |
| 57 | SLD 4 | 10.53 | -0.19 | 32.17 | 0.278 | 0.4543 | -0.0001 |
| 57 | SLD 5 | 6.84 | -0.5 | 41.08 | -0.0599 | 0.2819 | -0.0003 |
| 57 | SLD 6 | 6.84 | -0.5 | 41.08 | -0.0599 | 0.2819 | -0.0003 |
| 57 | SLD 7 | 3.12 | -0.07 | 29.38 | 0.4173 | 0.1266 | 0.0001 |
| 57 | SLD 8 | 3.12 | -0.07 | 29.38 | 0.4173 | 0.1266 | 0.0001 |
| 57 | SLD 9 | 1.61 | -0.53 | 42.2 | -0.0837 | 0.0475 | -0.0003 |
| 57 | SLD 10 | 1.61 | -0.53 | 42.2 | -0.0837 | 0.0475 | -0.0003 |
| 57 | SLD 11 | -2.11 | -0.09 | 30.5 | 0.3935 | -0.1078 | 0.0001 |
| 57 | SLD 12 | -2.11 | -0.09 | 30.5 | 0.3935 | -0.1078 | 0.0001 |
| 57 | SLD 13 | -5.79 | -0.41 | 39.41 | 0.0556 | -0.2802 | -0.0001 |
| 57 | SLD 14 | -5.79 | -0.41 | 39.41 | 0.0556 | -0.2802 | -0.0001 |
| 57 | SLD 15 | -6.9 | -0.28 | 35.9 | 0.1987 | -0.3268 | 0 |
| 57 | SLD 16 | -6.9 | -0.28 | 35.9 | 0.1987 | -0.3268 | 0 |
| 57 | SLV 1 | 23.84 | -0.34 | 35.58 | 0.0816 | 1.0454 | -0.0003 |
| 57 | SLV 2 | 23.84 | -0.34 | 35.58 | 0.0816 | 1.0454 | -0.0003 |
| 57 | SLV 3 | 21.12 | -0.03 | 27.27 | 0.4407 | 0.9316 | 0 |
| 57 | SLV 4 | 21.12 | -0.03 | 27.27 | 0.4407 | 0.9316 | 0 |
| 57 | SLV 5 | 12.94 | -0.78 | 48.33 | -0.4033 | 0.5471 | -0.0007 |
| 57 | SLV 6 | 12.94 | -0.78 | 48.33 | -0.4033 | 0.5471 | -0.0007 |
| 57 | SLV 7 | 3.87 | 0.25 | 20.63 | 0.7935 | 0.1678 | 0.0004 |
| 57 | SLV 8 | 3.87 | 0.25 | 20.63 | 0.7935 | 0.1678 | 0.0004 |
| 57 | SLV 9 | 0.87 | -0.85 | 50.95 | -0.4599 | 0.0063 | -0.0006 |
| 57 | SLV 10 | 0.87 | -0.85 | 50.95 | -0.4599 | 0.0063 | -0.0006 |
| 57 | SLV 11 | -8.2 | 0.19 | 23.25 | 0.7369 | -0.373 | 0.0005 |
| 57 | SLV 12 | -8.2 | 0.19 | 23.25 | 0.7369 | -0.373 | 0.0005 |
| 57 | SLV 13 | -16.38 | -0.56 | 44.31 | -0.1071 | -0.7575 | -0.0002 |
| 57 | SLV 14 | -16.38 | -0.56 | 44.31 | -0.1071 | -0.7575 | -0.0002 |
| 57 | SLV 15 | -19.1 | -0.25 | 36 | 0.2519 | -0.8713 | 0.0002 |
| 57 | SLV 16 | -19.1 | -0.25 | 36 | 0.2519 | -0.8713 | 0.0002 |
| 58 | SLU 1 | 1.35 | -0.12 | 34.9 | 0.0929 | 0.0563 | 0.0001 |
| 58 | SLU 2 | 3.24 | -0.15 | 35.46 | 0.0533 | 0.1338 | 0 |
| 58 | SLU 3 | 1.64 | -0.13 | 35.21 | 0.0958 | 0.0693 | 0.0001 |
| 58 | SLU 4 | 2.78 | -0.14 | 35.55 | 0.0721 | 0.1159 | 0 |
| 58 | SLU 5 | 3.56 | -0.15 | 35.42 | 0.055 | 0.1481 | 0 |
| 58 | SLU 6 | 1.96 | -0.13 | 35.17 | 0.0976 | 0.0836 | 0.0001 |
| 58 | SLU 7 | 3.1 | -0.14 | 35.5 | 0.0738 | 0.1302 | 0 |
| 58 | SLU 8 | 1.99 | -0.13 | 34.81 | 0.0964 | 0.0848 | 0.0001 |
| 58 | SLU 9 | 3.13 | -0.14 | 35.14 | 0.0726 | 0.1314 | 0 |
| 58 | SLU 10 | 3.25 | -0.16 | 40.41 | 0.0658 | 0.1341 | 0 |

| Nodo | Cont. | Reazione a traslazione | | | Reazione a rotazione | | |
|---|---|---|---|---|---|---|---|
| Ind. | N.br. | x | y | z | x | y | z |
| 58 | SLU 11 | 1.64 | -0.14 | 40.16 | 0.1084 | 0.0695 | 0.0001 |
| 58 | SLU 12 | 2.78 | -0.16 | 40.5 | 0.0846 | 0.1161 | 0 |
| 58 | SLU 13 | 3.57 | -0.17 | 40.36 | 0.0676 | 0.1483 | 0 |
| 58 | SLU 14 | 1.96 | -0.15 | 40.11 | 0.1102 | 0.0838 | 0.0001 |
| 58 | SLU 15 | 3.1 | -0.16 | 40.45 | 0.0864 | 0.1304 | 0 |
| 58 | SLU 16 | 1.99 | -0.15 | 39.76 | 0.109 | 0.085 | 0.0001 |
| 58 | SLU 17 | 3.13 | -0.16 | 40.09 | 0.0852 | 0.1316 | 0 |
| 58 | SLU 18 | 1.35 | -0.15 | 41.97 | 0.1109 | 0.0566 | 0.0001 |
| 58 | SLU 19 | 2.49 | -0.16 | 42.31 | 0.0871 | 0.1031 | 0 |
| 58 | SLU 20 | 1.67 | -0.15 | 41.92 | 0.1126 | 0.0708 | 0.0001 |
| 58 | SLU 21 | 2.81 | -0.16 | 42.26 | 0.0888 | 0.1174 | 0 |
| 58 | SLU 22 | 1.54 | -0.14 | 38.95 | 0.1051 | 0.0652 | 0.0001 |
| 58 | SLU 23 | 3.44 | -0.16 | 39.51 | 0.0655 | 0.1428 | 0 |
| 58 | SLU 24 | 1.84 | -0.14 | 39.26 | 0.108 | 0.0783 | 0.0001 |
| 58 | SLU 25 | 2.97 | -0.16 | 39.6 | 0.0843 | 0.1248 | 0 |
| 58 | SLU 26 | 3.76 | -0.17 | 39.47 | 0.0672 | 0.157 | 0 |
| 58 | SLU 27 | 2.15 | -0.15 | 39.22 | 0.1098 | 0.0925 | 0.0001 |
| 58 | SLU 28 | 3.29 | -0.16 | 39.55 | 0.086 | 0.1391 | 0 |
| 58 | SLU 29 | 2.18 | -0.14 | 38.86 | 0.1086 | 0.0937 | 0.0001 |
| 58 | SLU 30 | 3.32 | -0.16 | 39.2 | 0.0848 | 0.1403 | 0 |
| 58 | SLU 31 | 3.44 | -0.18 | 44.46 | 0.078 | 0.143 | 0 |
| 58 | SLU 32 | 1.84 | -0.16 | 44.21 | 0.1206 | 0.0785 | 0.0001 |
| 58 | SLU 33 | 2.97 | -0.17 | 44.55 | 0.0968 | 0.125 | 0 |
| 58 | SLU 34 | 3.76 | -0.18 | 44.41 | 0.0798 | 0.1572 | 0 |
| 58 | SLU 35 | 2.16 | -0.16 | 44.16 | 0.1224 | 0.0927 | 0.0001 |
| 58 | SLU 36 | 3.29 | -0.18 | 44.5 | 0.0986 | 0.1393 | 0 |
| 58 | SLU 37 | 2.18 | -0.16 | 43.81 | 0.1212 | 0.094 | 0.0001 |
| 58 | SLU 38 | 3.32 | -0.18 | 44.14 | 0.0974 | 0.1405 | 0 |
| 58 | SLU 39 | 1.54 | -0.16 | 46.02 | 0.1231 | 0.0655 | 0.0001 |
| 58 | SLU 40 | 2.68 | -0.18 | 46.36 | 0.0993 | 0.112 | 0 |
| 58 | SLU 41 | 1.86 | -0.17 | 45.97 | 0.1248 | 0.0798 | 0.0001 |
| 58 | SLU 42 | 3 | -0.18 | 46.31 | 0.101 | 0.1263 | 0 |
| 58 | SLU 43 | 1.69 | -0.16 | 43.98 | 0.1166 | 0.0701 | 0.0001 |
| 58 | SLU 44 | 3.58 | -0.18 | 44.54 | 0.077 | 0.1477 | 0 |
| 58 | SLU 45 | 1.98 | -0.16 | 44.29 | 0.1195 | 0.0832 | 0.0001 |
| 58 | SLU 46 | 3.12 | -0.17 | 44.63 | 0.0957 | 0.1297 | 0 |
| 58 | SLU 47 | 3.9 | -0.18 | 44.5 | 0.0787 | 0.162 | 0 |
| 58 | SLU 48 | 2.3 | -0.16 | 44.25 | 0.1213 | 0.0974 | 0.0001 |
| 58 | SLU 49 | 3.44 | -0.18 | 44.58 | 0.0975 | 0.144 | 0 |
| 58 | SLU 50 | 2.32 | -0.16 | 43.89 | 0.1201 | 0.0987 | 0.0001 |
| 58 | SLU 51 | 3.46 | -0.17 | 44.23 | 0.0963 | 0.1452 | 0 |
| 58 | SLU 52 | 3.58 | -0.2 | 49.49 | 0.0895 | 0.1479 | 0 |
| 58 | SLU 53 | 1.98 | -0.18 | 49.24 | 0.1321 | 0.0834 | 0.0001 |
| 58 | SLU 54 | 3.12 | -0.19 | 49.58 | 0.1083 | 0.1299 | 0 |
| 58 | SLU 55 | 3.9 | -0.2 | 49.44 | 0.0913 | 0.1622 | 0 |
| 58 | SLU 56 | 2.3 | -0.18 | 49.2 | 0.1339 | 0.0977 | 0.0001 |
| 58 | SLU 57 | 3.44 | -0.19 | 49.53 | 0.1101 | 0.1442 | 0 |
| 58 | SLU 58 | 2.33 | -0.18 | 48.84 | 0.1327 | 0.0989 | 0.0001 |
| 58 | SLU 59 | 3.46 | -0.19 | 49.17 | 0.1089 | 0.1454 | 0 |
| 58 | SLU 60 | 1.69 | -0.18 | 51.05 | 0.1346 | 0.0704 | 0.0001 |
| 58 | SLU 61 | 2.82 | -0.19 | 51.39 | 0.1108 | 0.1169 | 0.0001 |
| 58 | SLU 62 | 2.01 | -0.18 | 51 | 0.1363 | 0.0847 | 0.0001 |
| 58 | SLU 63 | 3.14 | -0.2 | 51.34 | 0.1125 | 0.1312 | 0.0001 |
| 58 | SLU 64 | 1.88 | -0.17 | 48.04 | 0.1288 | 0.079 | 0.0001 |
| 58 | SLU 65 | 3.78 | -0.19 | 48.6 | 0.0891 | 0.1566 | 0 |
| 58 | SLU 66 | 2.17 | -0.18 | 48.35 | 0.1317 | 0.0921 | 0.0001 |
| 58 | SLU 67 | 3.31 | -0.19 | 48.68 | 0.1079 | 0.1386 | 0 |
| 58 | SLU 68 | 4.1 | -0.2 | 48.55 | 0.0909 | 0.1709 | 0 |
| 58 | SLU 69 | 2.49 | -0.18 | 48.3 | 0.1335 | 0.1064 | 0.0001 |
| 58 | SLU 70 | 3.63 | -0.19 | 48.64 | 0.1097 | 0.1529 | 0 |
| 58 | SLU 71 | 2.52 | -0.18 | 47.94 | 0.1323 | 0.1076 | 0.0001 |
| 58 | SLU 72 | 3.66 | -0.19 | 48.28 | 0.1085 | 0.1541 | 0 |
| 58 | SLU 73 | 3.78 | -0.21 | 53.54 | 0.1017 | 0.1568 | 0 |
| 58 | SLU 74 | 2.17 | -0.19 | 53.29 | 0.1443 | 0.0923 | 0.0001 |
| 58 | SLU 75 | 3.31 | -0.21 | 53.63 | 0.1205 | 0.1388 | 0.0001 |
| 58 | SLU 76 | 4.1 | -0.21 | 53.5 | 0.1035 | 0.1711 | 0 |
| 58 | SLU 77 | 2.49 | -0.19 | 53.25 | 0.1461 | 0.1066 | 0.0001 |
| 58 | SLU 78 | 3.63 | -0.21 | 53.58 | 0.1223 | 0.1531 | 0.0001 |
| 58 | SLU 79 | 2.52 | -0.19 | 52.89 | 0.1449 | 0.1078 | 0.0001 |
| 58 | SLU 80 | 3.66 | -0.21 | 53.22 | 0.1211 | 0.1543 | 0.0001 |
| 58 | SLU 81 | 1.88 | -0.2 | 55.1 | 0.1468 | 0.0793 | 0.0002 |
| 58 | SLU 82 | 3.02 | -0.21 | 55.44 | 0.123 | 0.1258 | 0.0001 |
| 58 | SLU 83 | 2.2 | -0.2 | 55.06 | 0.1485 | 0.0936 | 0.0002 |
| 58 | SLU 84 | 3.34 | -0.21 | 55.39 | 0.1247 | 0.1401 | 0.0001 |
| 58 | SLE RA 1 | 1.4 | -0.13 | 36.06 | 0.0964 | 0.0588 | 0.0001 |
| 58 | SLE RA 2 | 2.67 | -0.14 | 36.43 | 0.07 | 0.1105 | 0 |
| 58 | SLE RA 3 | 1.6 | -0.13 | 36.27 | 0.0984 | 0.0675 | 0.0001 |
| 58 | SLE RA 4 | 2.36 | -0.14 | 36.49 | 0.0825 | 0.0986 | 0 |
| 58 | SLE RA 5 | 2.88 | -0.15 | 36.4 | 0.0711 | 0.1201 | 0 |
| 58 | SLE RA 6 | 1.81 | -0.13 | 36.24 | 0.0995 | 0.0771 | 0.0001 |
| 58 | SLE RA 7 | 2.57 | -0.14 | 36.46 | 0.0837 | 0.1081 | 0 |
| 58 | SLE RA 8 | 1.83 | -0.13 | 36 | 0.0987 | 0.0779 | 0.0001 |
| 58 | SLE RA 9 | 2.59 | -0.14 | 36.22 | 0.0829 | 0.1089 | 0 |
| 58 | SLE RA 10 | 2.67 | -0.16 | 39.73 | 0.0783 | 0.1107 | 0 |
| 58 | SLE RA 11 | 1.6 | -0.14 | 39.57 | 0.1067 | 0.0677 | 0.0001 |
| 58 | SLE RA 12 | 2.36 | -0.15 | 39.79 | 0.0909 | 0.0987 | 0.0001 |
| 58 | SLE RA 13 | 2.88 | -0.16 | 39.7 | 0.0795 | 0.1202 | 0 |
| 58 | SLE RA 14 | 1.81 | -0.14 | 39.53 | 0.1079 | 0.0772 | 0.0001 |

| Nodo | Cont. | Reazione a traslazione | | | Reazione a rotazione | | |
|---|---|---|---|---|---|---|---|
| Ind. | N.br. | x | y | z | x | y | z |
| 58 | SLE RA 15 | 2.57 | -0.15 | 39.76 | 0.092 | 0.1082 | 0.0001 |
| 58 | SLE RA 16 | 1.83 | -0.14 | 39.3 | 0.1071 | 0.078 | 0.0001 |
| 58 | SLE RA 17 | 2.59 | -0.15 | 39.52 | 0.0913 | 0.109 | 0.0001 |
| 58 | SLE RA 18 | 1.4 | -0.14 | 40.77 | 0.1084 | 0.059 | 0.0001 |
| 58 | SLE RA 19 | 2.16 | -0.15 | 41 | 0.0925 | 0.09 | 0.0001 |
| 58 | SLE RA 20 | 1.62 | -0.15 | 40.74 | 0.1095 | 0.0685 | 0.0001 |
| 58 | SLE RA 21 | 2.38 | -0.16 | 40.96 | 0.0937 | 0.0996 | 0.0001 |
| 58 | SLE FR 1 | 1.4 | -0.13 | 36.06 | 0.0964 | 0.0588 | 0.0001 |
| 58 | SLE FR 2 | 1.66 | -0.13 | 36.13 | 0.0911 | 0.0692 | 0.0001 |
| 58 | SLE FR 3 | 1.49 | -0.13 | 36.05 | 0.0969 | 0.0626 | 0.0001 |
| 58 | SLE FR 4 | 1.66 | -0.14 | 37.55 | 0.0947 | 0.0692 | 0.0001 |
| 58 | SLE FR 5 | 1.49 | -0.13 | 37.46 | 0.1005 | 0.0627 | 0.0001 |
| 58 | SLE FR 6 | 1.4 | -0.14 | 38.42 | 0.1024 | 0.0589 | 0.0001 |
| 58 | SLE QP 1 | 1.4 | -0.13 | 36.06 | 0.0964 | 0.0588 | 0.0001 |
| 58 | SLE QP 2 | 1.4 | -0.13 | 37.47 | 0.1 | 0.0589 | 0.0001 |
| 58 | SLD 1 | 10.87 | -0.11 | 37.09 | 0.0871 | 0.4783 | -0.0001 |
| 58 | SLD 2 | 10.87 | -0.11 | 37.09 | 0.0871 | 0.4783 | -0.0001 |
| 58 | SLD 3 | 9.65 | -0.06 | 33.13 | 0.1723 | 0.4239 | 0.0001 |
| 58 | SLD 4 | 9.65 | -0.06 | 33.13 | 0.1723 | 0.4239 | 0.0001 |
| 58 | SLD 5 | 6.1 | -0.21 | 43.37 | -0.0331 | 0.2672 | -0.0003 |
| 58 | SLD 6 | 6.1 | -0.21 | 43.37 | -0.0331 | 0.2672 | -0.0003 |
| 58 | SLD 7 | 2.03 | -0.03 | 30.16 | 0.2509 | 0.0859 | 0.0004 |
| 58 | SLD 8 | 2.03 | -0.03 | 30.16 | 0.2509 | 0.0859 | 0.0004 |
| 58 | SLD 9 | 0.78 | -0.24 | 44.79 | -0.0509 | 0.0318 | -0.0002 |
| 58 | SLD 10 | 0.78 | -0.24 | 44.79 | -0.0509 | 0.0318 | -0.0002 |
| 58 | SLD 11 | -3.29 | -0.06 | 31.58 | 0.2331 | -0.1494 | 0.0005 |
| 58 | SLD 12 | -3.29 | -0.06 | 31.58 | 0.2331 | -0.1494 | 0.0005 |
| 58 | SLD 13 | -6.85 | -0.21 | 41.82 | 0.0277 | -0.3062 | 0.0001 |
| 58 | SLD 14 | -6.85 | -0.21 | 41.82 | 0.0277 | -0.3062 | 0.0001 |
| 58 | SLD 15 | -8.07 | -0.15 | 37.86 | 0.1129 | -0.3605 | 0.0003 |
| 58 | SLD 16 | -8.07 | -0.15 | 37.86 | 0.1129 | -0.3605 | 0.0003 |
| 58 | SLV 1 | 23.36 | -0.09 | 36.6 | 0.0639 | 1.0311 | -0.0003 |
| 58 | SLV 2 | 23.36 | -0.09 | 36.6 | 0.0639 | 1.0311 | -0.0003 |
| 58 | SLV 3 | 20.34 | 0.04 | 27.22 | 0.2767 | 0.8964 | 0.0002 |
| 58 | SLV 4 | 20.34 | 0.04 | 27.22 | 0.2767 | 0.8964 | 0.0002 |
| 58 | SLV 5 | 12.57 | -0.31 | 51.45 | -0.2336 | 0.5548 | -0.0009 |
| 58 | SLV 6 | 12.57 | -0.31 | 51.45 | -0.2336 | 0.5548 | -0.0009 |
| 58 | SLV 7 | 2.51 | 0.11 | 20.16 | 0.4758 | 0.1059 | 0.001 |
| 58 | SLV 8 | 2.51 | 0.11 | 20.16 | 0.4758 | 0.1059 | 0.001 |
| 58 | SLV 9 | 0.3 | -0.38 | 54.79 | -0.2758 | 0.0119 | -0.0008 |
| 58 | SLV 10 | 0.3 | -0.38 | 54.79 | -0.2758 | 0.0119 | -0.0008 |
| 58 | SLV 11 | -9.76 | 0.04 | 23.5 | 0.4336 | -0.4371 | 0.0011 |
| 58 | SLV 12 | -9.76 | 0.04 | 23.5 | 0.4336 | -0.4371 | 0.0011 |
| 58 | SLV 13 | -17.53 | -0.31 | 47.73 | -0.0767 | -0.7787 | 0 |
| 58 | SLV 14 | -17.53 | -0.31 | 47.73 | -0.0767 | -0.7787 | 0 |
| 58 | SLV 15 | -20.55 | -0.18 | 38.34 | 0.1361 | -0.9134 | 0.0005 |
| 58 | SLV 16 | -20.55 | -0.18 | 38.34 | 0.1361 | -0.9134 | 0.0005 |
| 59 | SLU 1 | 0.21 | 0.05 | 36.3 | 0.0296 | 0.0007 | 0.0002 |
| 59 | SLU 2 | 2.24 | 0.04 | 37.96 | 0.0093 | 0.085 | 0.0003 |
| 59 | SLU 3 | 0.5 | 0.05 | 36.51 | 0.0313 | 0.0142 | 0.0002 |
| 59 | SLU 4 | 1.71 | 0.04 | 37.5 | 0.0191 | 0.0648 | 0.0002 |
| 59 | SLU 5 | 2.57 | 0.04 | 37.77 | 0.0108 | 0.1013 | 0.0003 |
| 59 | SLU 6 | 0.83 | 0.05 | 36.32 | 0.0327 | 0.0305 | 0.0002 |
| 59 | SLU 7 | 2.04 | 0.04 | 37.31 | 0.0206 | 0.0811 | 0.0002 |
| 59 | SLU 8 | 0.88 | 0.04 | 35.91 | 0.0325 | 0.0332 | 0.0002 |
| 59 | SLU 9 | 2.09 | 0.04 | 36.91 | 0.0203 | 0.0838 | 0.0002 |
| 59 | SLU 10 | 2.08 | 0.04 | 43.05 | 0.0135 | 0.0768 | 0.0003 |
| 59 | SLU 11 | 0.34 | 0.05 | 41.6 | 0.0355 | 0.0061 | 0.0002 |
| 59 | SLU 12 | 1.56 | 0.05 | 42.59 | 0.0233 | 0.0567 | 0.0003 |
| 59 | SLU 13 | 2.42 | 0.04 | 42.86 | 0.0149 | 0.0931 | 0.0003 |
| 59 | SLU 14 | 0.67 | 0.05 | 41.4 | 0.0369 | 0.0223 | 0.0002 |
| 59 | SLU 15 | 1.89 | 0.05 | 42.4 | 0.0247 | 0.0729 | 0.0003 |
| 59 | SLU 16 | 0.72 | 0.05 | 41 | 0.0367 | 0.025 | 0.0002 |
| 59 | SLU 17 | 1.94 | 0.04 | 42 | 0.0245 | 0.0756 | 0.0002 |
| 59 | SLU 18 | -0.01 | 0.06 | 43.57 | 0.0355 | -0.011 | 0.0002 |
| 59 | SLU 19 | 1.21 | 0.05 | 44.56 | 0.0234 | 0.0396 | 0.0003 |
| 59 | SLU 20 | 0.32 | 0.06 | 43.38 | 0.037 | 0.0052 | 0.0002 |
| 59 | SLU 21 | 1.54 | 0.05 | 44.37 | 0.0248 | 0.0558 | 0.0003 |
| 59 | SLU 22 | 0.26 | 0.05 | 40.39 | 0.034 | 0.0022 | 0.0002 |
| 59 | SLU 23 | 2.28 | 0.04 | 42.05 | 0.0137 | 0.0865 | 0.0003 |
| 59 | SLU 24 | 0.54 | 0.05 | 40.6 | 0.0357 | 0.0158 | 0.0002 |
| 59 | SLU 25 | 1.75 | 0.05 | 41.59 | 0.0235 | 0.0664 | 0.0003 |
| 59 | SLU 26 | 2.61 | 0.04 | 41.86 | 0.0152 | 0.1028 | 0.0003 |
| 59 | SLU 27 | 0.87 | 0.05 | 40.4 | 0.0371 | 0.032 | 0.0002 |
| 59 | SLU 28 | 2.09 | 0.04 | 41.4 | 0.025 | 0.0826 | 0.0002 |
| 59 | SLU 29 | 0.92 | 0.05 | 40 | 0.0369 | 0.0347 | 0.0002 |
| 59 | SLU 30 | 2.14 | 0.04 | 41 | 0.0247 | 0.0853 | 0.0002 |
| 59 | SLU 31 | 2.13 | 0.05 | 47.14 | 0.0179 | 0.0783 | 0.0003 |
| 59 | SLU 32 | 0.38 | 0.06 | 45.69 | 0.0399 | 0.0076 | 0.0002 |
| 59 | SLU 33 | 1.6 | 0.05 | 46.68 | 0.0277 | 0.0582 | 0.0003 |
| 59 | SLU 34 | 2.46 | 0.05 | 46.94 | 0.0194 | 0.0946 | 0.0003 |
| 59 | SLU 35 | 0.72 | 0.06 | 45.49 | 0.0413 | 0.0238 | 0.0002 |
| 59 | SLU 36 | 1.93 | 0.05 | 46.49 | 0.0292 | 0.0744 | 0.0003 |
| 59 | SLU 37 | 0.77 | 0.06 | 45.09 | 0.0411 | 0.0265 | 0.0002 |
| 59 | SLU 38 | 1.98 | 0.05 | 46.09 | 0.0289 | 0.0771 | 0.0003 |
| 59 | SLU 39 | 0.03 | 0.06 | 47.66 | 0.04 | -0.0095 | 0.0003 |
| 59 | SLU 40 | 1.25 | 0.06 | 48.65 | 0.0278 | 0.0411 | 0.0003 |
| 59 | SLU 41 | 0.37 | 0.06 | 47.46 | 0.0414 | 0.0067 | 0.0002 |

| Nodo | Cont. | Reazione a traslazione | | | Reazione a rotazione | | |
|---|---|---|---|---|---|---|---|
| Ind. | N.br. | x | y | z | x | y | z |
| 59 | SLU 42 | 1.58 | 0.05 | 48.46 | 0.0293 | 0.0573 | 0.0003 |
| 59 | SLU 43 | 0.26 | 0.06 | 45.79 | 0.0369 | 0.0004 | 0.0003 |
| 59 | SLU 44 | 2.29 | 0.05 | 47.45 | 0.0167 | 0.0847 | 0.0003 |
| 59 | SLU 45 | 0.54 | 0.06 | 46 | 0.0386 | 0.0139 | 0.0003 |
| 59 | SLU 46 | 1.76 | 0.05 | 46.99 | 0.0265 | 0.0645 | 0.0003 |
| 59 | SLU 47 | 2.62 | 0.05 | 47.25 | 0.0181 | 0.101 | 0.0003 |
| 59 | SLU 48 | 0.88 | 0.06 | 45.8 | 0.0401 | 0.0302 | 0.0002 |
| 59 | SLU 49 | 2.09 | 0.05 | 46.8 | 0.0279 | 0.0808 | 0.0003 |
| 59 | SLU 50 | 0.93 | 0.06 | 45.4 | 0.0398 | 0.0329 | 0.0002 |
| 59 | SLU 51 | 2.14 | 0.05 | 46.4 | 0.0277 | 0.0835 | 0.0003 |
| 59 | SLU 52 | 2.13 | 0.06 | 52.54 | 0.0209 | 0.0765 | 0.0003 |
| 59 | SLU 53 | 0.39 | 0.07 | 51.08 | 0.0428 | 0.0058 | 0.0003 |
| 59 | SLU 54 | 1.6 | 0.06 | 52.08 | 0.0307 | 0.0564 | 0.0003 |
| 59 | SLU 55 | 2.47 | 0.06 | 52.34 | 0.0223 | 0.0928 | 0.0003 |
| 59 | SLU 56 | 0.72 | 0.07 | 50.89 | 0.0443 | 0.022 | 0.0003 |
| 59 | SLU 57 | 1.94 | 0.06 | 51.89 | 0.0321 | 0.0726 | 0.0003 |
| 59 | SLU 58 | 0.77 | 0.06 | 50.49 | 0.044 | 0.0247 | 0.0003 |
| 59 | SLU 59 | 1.99 | 0.06 | 51.49 | 0.0319 | 0.0753 | 0.0003 |
| 59 | SLU 60 | 0.04 | 0.07 | 53.06 | 0.0429 | -0.0113 | 0.0003 |
| 59 | SLU 61 | 1.26 | 0.07 | 54.05 | 0.0307 | 0.0393 | 0.0003 |
| 59 | SLU 62 | 0.37 | 0.07 | 52.86 | 0.0444 | 0.0049 | 0.0003 |
| 59 | SLU 63 | 1.59 | 0.06 | 53.86 | 0.0322 | 0.0555 | 0.0003 |
| 59 | SLU 64 | 0.31 | 0.07 | 49.88 | 0.0414 | 0.0019 | 0.0003 |
| 59 | SLU 65 | 2.33 | 0.06 | 51.54 | 0.0211 | 0.0862 | 0.0003 |
| 59 | SLU 66 | 0.59 | 0.07 | 50.09 | 0.0431 | 0.0154 | 0.0003 |
| 59 | SLU 67 | 1.8 | 0.06 | 51.08 | 0.0309 | 0.066 | 0.0003 |
| 59 | SLU 68 | 2.66 | 0.05 | 51.34 | 0.0225 | 0.1025 | 0.0003 |
| 59 | SLU 69 | 0.92 | 0.06 | 49.89 | 0.0445 | 0.0317 | 0.0003 |
| 59 | SLU 70 | 2.14 | 0.06 | 50.89 | 0.0323 | 0.0823 | 0.0003 |
| 59 | SLU 71 | 0.97 | 0.06 | 49.49 | 0.0443 | 0.0344 | 0.0003 |
| 59 | SLU 72 | 2.19 | 0.06 | 50.49 | 0.0321 | 0.085 | 0.0003 |
| 59 | SLU 73 | 2.18 | 0.06 | 56.62 | 0.0253 | 0.078 | 0.0004 |
| 59 | SLU 74 | 0.43 | 0.07 | 55.17 | 0.0472 | 0.0073 | 0.0003 |
| 59 | SLU 75 | 1.65 | 0.07 | 56.17 | 0.0351 | 0.0579 | 0.0003 |
| 59 | SLU 76 | 2.51 | 0.06 | 56.43 | 0.0267 | 0.0943 | 0.0004 |
| 59 | SLU 77 | 0.77 | 0.07 | 54.98 | 0.0487 | 0.0235 | 0.0003 |
| 59 | SLU 78 | 1.98 | 0.06 | 55.98 | 0.0365 | 0.0741 | 0.0003 |
| 59 | SLU 79 | 0.82 | 0.07 | 54.58 | 0.0484 | 0.0262 | 0.0003 |
| 59 | SLU 80 | 2.03 | 0.06 | 55.58 | 0.0363 | 0.0768 | 0.0003 |
| 59 | SLU 81 | 0.08 | 0.08 | 57.15 | 0.0473 | -0.0098 | 0.0003 |
| 59 | SLU 82 | 1.3 | 0.07 | 58.14 | 0.0352 | 0.0408 | 0.0004 |
| 59 | SLU 83 | 0.42 | 0.07 | 56.95 | 0.0488 | 0.0064 | 0.0003 |
| 59 | SLU 84 | 1.63 | 0.07 | 57.95 | 0.0366 | 0.057 | 0.0003 |
| 59 | SLE RA 1 | 0.23 | 0.05 | 37.47 | 0.0308 | 0.0011 | 0.0002 |
| 59 | SLE RA 2 | 1.58 | 0.04 | 38.57 | 0.0173 | 0.0573 | 0.0002 |
| 59 | SLE RA 3 | 0.41 | 0.05 | 37.61 | 0.032 | 0.0102 | 0.0002 |
| 59 | SLE RA 4 | 1.22 | 0.05 | 38.27 | 0.0239 | 0.0439 | 0.0002 |
| 59 | SLE RA 5 | 1.8 | 0.04 | 38.45 | 0.0183 | 0.0682 | 0.0002 |
| 59 | SLE RA 6 | 0.64 | 0.05 | 37.48 | 0.0329 | 0.021 | 0.0002 |
| 59 | SLE RA 7 | 1.45 | 0.04 | 38.14 | 0.0248 | 0.0547 | 0.0002 |
| 59 | SLE RA 8 | 0.67 | 0.05 | 37.21 | 0.0328 | 0.0228 | 0.0002 |
| 59 | SLE RA 9 | 1.48 | 0.04 | 37.88 | 0.0247 | 0.0565 | 0.0002 |
| 59 | SLE RA 10 | 1.47 | 0.05 | 41.97 | 0.0201 | 0.0519 | 0.0003 |
| 59 | SLE RA 11 | 0.31 | 0.05 | 41 | 0.0348 | 0.0047 | 0.0002 |
| 59 | SLE RA 12 | 1.12 | 0.05 | 41.66 | 0.0267 | 0.0384 | 0.0002 |
| 59 | SLE RA 13 | 1.69 | 0.05 | 41.84 | 0.0211 | 0.0627 | 0.0003 |
| 59 | SLE RA 14 | 0.53 | 0.05 | 40.87 | 0.0357 | 0.0155 | 0.0002 |
| 59 | SLE RA 15 | 1.34 | 0.05 | 41.53 | 0.0276 | 0.0493 | 0.0002 |
| 59 | SLE RA 16 | 0.57 | 0.05 | 40.6 | 0.0356 | 0.0173 | 0.0002 |
| 59 | SLE RA 17 | 1.38 | 0.05 | 41.27 | 0.0275 | 0.0511 | 0.0002 |
| 59 | SLE RA 18 | 0.08 | 0.06 | 42.31 | 0.0348 | -0.0067 | 0.0002 |
| 59 | SLE RA 19 | 0.89 | 0.05 | 42.98 | 0.0267 | 0.0271 | 0.0003 |
| 59 | SLE RA 20 | 0.3 | 0.06 | 42.19 | 0.0358 | 0.0042 | 0.0002 |
| 59 | SLE RA 21 | 1.11 | 0.05 | 42.85 | 0.0277 | 0.0379 | 0.0003 |
| 59 | SLE FR 1 | 0.23 | 0.05 | 37.47 | 0.0308 | 0.0011 | 0.0002 |
| 59 | SLE FR 2 | 0.5 | 0.05 | 37.69 | 0.0281 | 0.0124 | 0.0002 |
| 59 | SLE FR 3 | 0.31 | 0.05 | 37.42 | 0.0312 | 0.0055 | 0.0002 |
| 59 | SLE FR 4 | 0.45 | 0.05 | 39.14 | 0.0293 | 0.01 | 0.0002 |
| 59 | SLE FR 5 | 0.27 | 0.05 | 38.87 | 0.0324 | 0.0031 | 0.0002 |
| 59 | SLE FR 6 | 0.15 | 0.05 | 39.89 | 0.0328 | -0.0028 | 0.0002 |
| 59 | SLE QP 1 | 0.23 | 0.05 | 37.47 | 0.0308 | 0.0011 | 0.0002 |
| 59 | SLE QP 2 | 0.18 | 0.05 | 38.92 | 0.032 | -0.0012 | 0.0002 |
| 59 | SLD 1 | 9.93 | 0.02 | 38.09 | 0.0315 | 0.4353 | 0.0002 |
| 59 | SLD 2 | 9.93 | 0.02 | 38.09 | 0.0315 | 0.4353 | 0.0002 |
| 59 | SLD 3 | 8.68 | -0.02 | 33.27 | 0.0712 | 0.3871 | 0.0001 |
| 59 | SLD 4 | 8.68 | -0.02 | 33.27 | 0.0712 | 0.3871 | 0.0001 |
| 59 | SLD 5 | 5.01 | 0.1 | 45.98 | -0.0283 | 0.2029 | 0.0003 |
| 59 | SLD 6 | 5.01 | 0.1 | 45.98 | -0.0283 | 0.2029 | 0.0003 |
| 59 | SLD 7 | 0.83 | -0.02 | 29.91 | 0.104 | 0.0422 | 0.0001 |
| 59 | SLD 8 | 0.83 | -0.02 | 29.91 | 0.104 | 0.0422 | 0.0001 |
| 59 | SLD 9 | -0.47 | 0.13 | 47.93 | -0.0399 | -0.0446 | 0.0004 |
| 59 | SLD 10 | -0.47 | 0.13 | 47.93 | -0.0399 | -0.0446 | 0.0004 |
| 59 | SLD 11 | -4.64 | 0.01 | 31.86 | 0.0924 | -0.2053 | 0.0001 |
| 59 | SLD 12 | -4.64 | 0.01 | 31.86 | 0.0924 | -0.2053 | 0.0001 |
| 59 | SLD 13 | -8.32 | 0.12 | 44.57 | -0.0071 | -0.3895 | 0.0004 |
| 59 | SLD 14 | -8.32 | 0.12 | 44.57 | -0.0071 | -0.3895 | 0.0004 |
| 59 | SLD 15 | -9.57 | 0.08 | 39.75 | 0.0326 | -0.4377 | 0.0003 |
| 59 | SLD 16 | -9.57 | 0.08 | 39.75 | 0.0326 | -0.4377 | 0.0003 |

| Nodo | Cont. | Reazione a traslazione | | | Reazione a rotazione | | |
|---|---|---|---|---|---|---|---|
| Ind. | N.br. | x | y | z | x | y | z |
| 59 | SLV 1 | 22.8 | -0.02 | 37 | 0.0281 | 1.0113 | 0.0001 |
| 59 | SLV 2 | 22.8 | -0.02 | 37 | 0.0281 | 1.0113 | 0.0001 |
| 59 | SLV 3 | 19.67 | -0.11 | 25.57 | 0.1267 | 0.8906 | -0.0001 |
| 59 | SLV 4 | 19.67 | -0.11 | 25.57 | 0.1267 | 0.8906 | -0.0001 |
| 59 | SLV 5 | 11.72 | 0.16 | 55.68 | -0.1186 | 0.4856 | 0.0005 |
| 59 | SLV 6 | 11.72 | 0.16 | 55.68 | -0.1186 | 0.4856 | 0.0005 |
| 59 | SLV 7 | 1.28 | -0.13 | 17.58 | 0.2099 | 0.0833 | -0.0002 |
| 59 | SLV 8 | 1.28 | -0.13 | 17.58 | 0.2099 | 0.0833 | -0.0002 |
| 59 | SLV 9 | -0.92 | 0.23 | 60.26 | -0.1458 | -0.0857 | 0.0006 |
| 59 | SLV 10 | -0.92 | 0.23 | 60.26 | -0.1458 | -0.0857 | 0.0006 |
| 59 | SLV 11 | -11.35 | -0.06 | 22.16 | 0.1827 | -0.488 | 0 |
| 59 | SLV 12 | -11.35 | -0.06 | 22.16 | 0.1827 | -0.488 | 0 |
| 59 | SLV 13 | -19.31 | 0.21 | 52.27 | -0.0626 | -0.893 | 0.0005 |
| 59 | SLV 14 | -19.31 | 0.21 | 52.27 | -0.0626 | -0.893 | 0.0005 |
| 59 | SLV 15 | -22.44 | 0.13 | 40.84 | 0.0359 | -1.0137 | 0.0004 |
| 59 | SLV 16 | -22.44 | 0.13 | 40.84 | 0.0359 | -1.0137 | 0.0004 |
| 60 | SLU 1 | -0.27 | 1.61 | 48.89 | 0.0796 | -0.0347 | -0.0001 |
| 60 | SLU 2 | 1.22 | 2.89 | 53.19 | 0.0301 | 0.0261 | -0.0002 |
| 60 | SLU 3 | 0.05 | 1.46 | 48.96 | 0.0885 | -0.021 | -0.0001 |
| 60 | SLU 4 | 0.94 | 2.23 | 51.55 | 0.0588 | 0.0155 | -0.0002 |
| 60 | SLU 5 | 1.61 | 2.7 | 52.68 | 0.039 | 0.0432 | -0.0002 |
| 60 | SLU 6 | 0.44 | 1.28 | 48.45 | 0.0975 | -0.0039 | -0.0001 |
| 60 | SLU 7 | 1.33 | 2.05 | 51.04 | 0.0678 | 0.0325 | -0.0002 |
| 60 | SLU 8 | 0.51 | 1.24 | 47.87 | 0.0975 | -0.0005 | -0.0001 |
| 60 | SLU 9 | 1.4 | 2 | 50.45 | 0.0678 | 0.0359 | -0.0002 |
| 60 | SLU 10 | 1.09 | 2.99 | 59.92 | 0.0473 | 0.0173 | -0.0002 |
| 60 | SLU 11 | -0.08 | 1.57 | 55.69 | 0.1058 | -0.0298 | -0.0001 |
| 60 | SLU 12 | 0.81 | 2.34 | 58.27 | 0.0761 | 0.0067 | -0.0002 |
| 60 | SLU 13 | 1.48 | 2.81 | 59.41 | 0.0563 | 0.0344 | -0.0002 |
| 60 | SLU 14 | 0.31 | 1.39 | 55.18 | 0.1148 | -0.0127 | -0.0001 |
| 60 | SLU 15 | 1.2 | 2.15 | 57.76 | 0.0851 | 0.0237 | -0.0002 |
| 60 | SLU 16 | 0.38 | 1.34 | 54.59 | 0.1148 | -0.0093 | -0.0001 |
| 60 | SLU 17 | 1.27 | 2.11 | 57.17 | 0.0851 | 0.0271 | -0.0002 |
| 60 | SLU 18 | -0.45 | 1.76 | 58.49 | 0.1043 | -0.0472 | -0.0001 |
| 60 | SLU 19 | 0.44 | 2.53 | 61.08 | 0.0745 | -0.0108 | -0.0002 |
| 60 | SLU 20 | -0.06 | 1.58 | 57.98 | 0.1132 | -0.0301 | -0.0001 |
| 60 | SLU 21 | 0.83 | 2.34 | 60.56 | 0.0835 | 0.0063 | -0.0002 |
| 60 | SLU 22 | -0.22 | 1.62 | 54.17 | 0.0981 | -0.0347 | -0.0001 |
| 60 | SLU 23 | 1.27 | 2.9 | 58.47 | 0.0485 | 0.026 | -0.0002 |
| 60 | SLU 24 | 0.1 | 1.48 | 54.25 | 0.107 | -0.0211 | -0.0001 |
| 60 | SLU 25 | 0.99 | 2.25 | 56.83 | 0.0773 | 0.0154 | -0.0002 |
| 60 | SLU 26 | 1.66 | 2.72 | 57.96 | 0.0575 | 0.0431 | -0.0003 |
| 60 | SLU 27 | 0.49 | 1.3 | 53.73 | 0.116 | -0.004 | -0.0002 |
| 60 | SLU 28 | 1.38 | 2.06 | 56.32 | 0.0863 | 0.0324 | -0.0002 |
| 60 | SLU 29 | 0.56 | 1.25 | 53.15 | 0.116 | -0.0006 | -0.0002 |
| 60 | SLU 30 | 1.45 | 2.02 | 55.73 | 0.0863 | 0.0358 | -0.0002 |
| 60 | SLU 31 | 1.14 | 3.01 | 65.2 | 0.0658 | 0.0172 | -0.0002 |
| 60 | SLU 32 | -0.03 | 1.59 | 60.97 | 0.1243 | -0.0299 | -0.0001 |
| 60 | SLU 33 | 0.86 | 2.36 | 63.55 | 0.0946 | 0.0066 | -0.0002 |
| 60 | SLU 34 | 1.53 | 2.82 | 64.69 | 0.0748 | 0.0343 | -0.0003 |
| 60 | SLU 35 | 0.36 | 1.4 | 60.46 | 0.1332 | -0.0128 | -0.0002 |
| 60 | SLU 36 | 1.25 | 2.17 | 63.04 | 0.1035 | 0.0236 | -0.0002 |
| 60 | SLU 37 | 0.43 | 1.36 | 59.87 | 0.1333 | -0.0094 | -0.0002 |
| 60 | SLU 38 | 1.32 | 2.13 | 62.45 | 0.1036 | 0.027 | -0.0002 |
| 60 | SLU 39 | -0.4 | 1.78 | 63.77 | 0.1227 | -0.0473 | -0.0001 |
| 60 | SLU 40 | 0.49 | 2.54 | 66.36 | 0.093 | -0.0108 | -0.0002 |
| 60 | SLU 41 | -0.01 | 1.59 | 63.26 | 0.1317 | -0.0302 | -0.0001 |
| 60 | SLU 42 | 0.88 | 2.36 | 65.85 | 0.102 | 0.0062 | -0.0002 |
| 60 | SLU 43 | -0.36 | 2.08 | 61.75 | 0.0972 | -0.045 | -0.0001 |
| 60 | SLU 44 | 1.12 | 3.36 | 66.05 | 0.0476 | 0.0157 | -0.0002 |
| 60 | SLU 45 | -0.05 | 1.94 | 61.82 | 0.1061 | -0.0314 | -0.0001 |
| 60 | SLU 46 | 0.84 | 2.71 | 64.4 | 0.0764 | 0.0051 | -0.0002 |
| 60 | SLU 47 | 1.51 | 3.18 | 65.54 | 0.0566 | 0.0328 | -0.0003 |
| 60 | SLU 48 | 0.34 | 1.76 | 61.31 | 0.1151 | -0.0143 | -0.0002 |
| 60 | SLU 49 | 1.23 | 2.52 | 63.89 | 0.0853 | 0.0221 | -0.0002 |
| 60 | SLU 50 | 0.41 | 1.71 | 60.73 | 0.1151 | -0.0109 | -0.0002 |
| 60 | SLU 51 | 1.3 | 2.48 | 63.31 | 0.0854 | 0.0256 | -0.0002 |
| 60 | SLU 52 | 0.99 | 3.47 | 72.77 | 0.0649 | 0.0069 | -0.0002 |
| 60 | SLU 53 | -0.18 | 2.05 | 68.54 | 0.1234 | -0.0401 | -0.0001 |
| 60 | SLU 54 | 0.71 | 2.82 | 71.13 | 0.0936 | -0.0037 | -0.0002 |
| 60 | SLU 55 | 1.38 | 3.28 | 72.26 | 0.0739 | 0.024 | -0.0003 |
| 60 | SLU 56 | 0.21 | 1.86 | 68.03 | 0.1323 | -0.0231 | -0.0002 |
| 60 | SLU 57 | 1.1 | 2.63 | 70.61 | 0.1026 | 0.0134 | -0.0002 |
| 60 | SLU 58 | 0.28 | 1.82 | 67.45 | 0.1324 | -0.0197 | -0.0002 |
| 60 | SLU 59 | 1.17 | 2.59 | 70.03 | 0.1026 | 0.0168 | -0.0002 |
| 60 | SLU 60 | -0.55 | 2.24 | 71.35 | 0.1218 | -0.0576 | -0.0001 |
| 60 | SLU 61 | 0.34 | 3 | 73.93 | 0.0921 | -0.0211 | -0.0002 |
| 60 | SLU 62 | -0.16 | 2.05 | 70.84 | 0.1308 | -0.0405 | -0.0001 |
| 60 | SLU 63 | 0.73 | 2.82 | 73.42 | 0.1011 | -0.0041 | -0.0002 |
| 60 | SLU 64 | -0.31 | 2.1 | 67.03 | 0.1156 | -0.0451 | -0.0001 |
| 60 | SLU 65 | 1.17 | 3.38 | 71.33 | 0.0661 | 0.0156 | -0.0002 |
| 60 | SLU 66 | 0 | 1.96 | 67.1 | 0.1246 | -0.0314 | -0.0002 |
| 60 | SLU 67 | 0.89 | 2.72 | 69.68 | 0.0948 | 0.005 | -0.0002 |
| 60 | SLU 68 | 1.56 | 3.19 | 70.82 | 0.0751 | 0.0327 | -0.0003 |
| 60 | SLU 69 | 0.39 | 1.77 | 66.59 | 0.1335 | -0.0144 | -0.0002 |
| 60 | SLU 70 | 1.28 | 2.54 | 69.17 | 0.1038 | 0.0221 | -0.0002 |
| 60 | SLU 71 | 0.46 | 1.73 | 66.01 | 0.1336 | -0.011 | -0.0002 |
| 60 | SLU 72 | 1.35 | 2.5 | 68.59 | 0.1039 | 0.0255 | -0.0003 |

| Nodo | Cont. | Reazione a traslazione | | | Reazione a rotazione | | |
|---|---|---|---|---|---|---|---|
| Ind. | N.br. | x | y | z | x | y | z |
| 60 | SLU 73 | 1.04 | 3.49 | 78.05 | 0.0834 | 0.0068 | -0.0003 |
| 60 | SLU 74 | -0.13 | 2.06 | 73.82 | 0.1418 | -0.0402 | -0.0002 |
| 60 | SLU 75 | 0.76 | 2.83 | 76.41 | 0.1121 | -0.0038 | -0.0002 |
| 60 | SLU 76 | 1.43 | 3.3 | 77.54 | 0.0923 | 0.0239 | -0.0003 |
| 60 | SLU 77 | 0.26 | 1.88 | 73.31 | 0.1508 | -0.0232 | -0.0002 |
| 60 | SLU 78 | 1.15 | 2.65 | 75.9 | 0.1211 | 0.0133 | -0.0003 |
| 60 | SLU 79 | 0.33 | 1.84 | 72.73 | 0.1508 | -0.0198 | -0.0002 |
| 60 | SLU 80 | 1.22 | 2.6 | 75.31 | 0.1211 | 0.0167 | -0.0003 |
| 60 | SLU 81 | -0.5 | 2.25 | 76.63 | 0.1403 | -0.0577 | -0.0001 |
| 60 | SLU 82 | 0.39 | 3.02 | 79.21 | 0.1106 | -0.0212 | -0.0002 |
| 60 | SLU 83 | -0.11 | 2.07 | 76.12 | 0.1493 | -0.0406 | -0.0002 |
| 60 | SLU 84 | 0.78 | 2.84 | 78.7 | 0.1195 | -0.0041 | -0.0002 |
| 60 | SLE RA 1 | -0.25 | 1.61 | 50.4 | 0.0849 | -0.0347 | -0.0001 |
| 60 | SLE RA 2 | 0.74 | 2.46 | 53.27 | 0.0519 | 0.0058 | -0.0002 |
| 60 | SLE RA 3 | -0.04 | 1.52 | 50.45 | 0.0908 | -0.0256 | -0.0001 |
| 60 | SLE RA 4 | 0.55 | 2.03 | 52.17 | 0.071 | -0.0013 | -0.0002 |
| 60 | SLE RA 5 | 1 | 2.34 | 52.93 | 0.0578 | 0.0172 | -0.0002 |
| 60 | SLE RA 6 | 0.22 | 1.39 | 50.11 | 0.0968 | -0.0142 | -0.0001 |
| 60 | SLE RA 7 | 0.81 | 1.9 | 51.83 | 0.077 | 0.0101 | -0.0002 |
| 60 | SLE RA 8 | 0.26 | 1.36 | 49.72 | 0.0968 | -0.0119 | -0.0001 |
| 60 | SLE RA 9 | 0.86 | 1.88 | 51.44 | 0.077 | 0.0124 | -0.0002 |
| 60 | SLE RA 10 | 0.65 | 2.54 | 57.75 | 0.0634 | 0 | -0.0002 |
| 60 | SLE RA 11 | -0.13 | 1.59 | 54.93 | 0.1024 | -0.0314 | -0.0001 |
| 60 | SLE RA 12 | 0.47 | 2.1 | 56.65 | 0.0825 | -0.0071 | -0.0002 |
| 60 | SLE RA 13 | 0.91 | 2.41 | 57.41 | 0.0694 | 0.0113 | -0.0002 |
| 60 | SLE RA 14 | 0.13 | 1.46 | 54.59 | 0.1083 | -0.0201 | -0.0001 |
| 60 | SLE RA 15 | 0.72 | 1.98 | 56.31 | 0.0885 | 0.0042 | -0.0002 |
| 60 | SLE RA 16 | 0.18 | 1.44 | 54.2 | 0.1084 | -0.0178 | -0.0001 |
| 60 | SLE RA 17 | 0.77 | 1.95 | 55.92 | 0.0885 | 0.0065 | -0.0002 |
| 60 | SLE RA 18 | -0.37 | 1.71 | 56.8 | 0.1013 | -0.043 | -0.0001 |
| 60 | SLE RA 19 | 0.22 | 2.23 | 58.52 | 0.0815 | -0.0187 | -0.0001 |
| 60 | SLE RA 20 | -0.12 | 1.59 | 56.46 | 0.1073 | -0.0317 | -0.0001 |
| 60 | SLE RA 21 | 0.48 | 2.1 | 58.18 | 0.0875 | -0.0074 | -0.0002 |
| 60 | SLE FR 1 | -0.25 | 1.61 | 50.4 | 0.0849 | -0.0347 | -0.0001 |
| 60 | SLE FR 2 | -0.05 | 1.78 | 50.97 | 0.0783 | -0.0266 | -0.0001 |
| 60 | SLE FR 3 | -0.15 | 1.56 | 50.26 | 0.0873 | -0.0301 | -0.0001 |
| 60 | SLE FR 4 | -0.09 | 1.81 | 52.89 | 0.0832 | -0.0291 | -0.0001 |
| 60 | SLE FR 5 | -0.19 | 1.59 | 52.18 | 0.0922 | -0.0326 | -0.0001 |
| 60 | SLE FR 6 | -0.31 | 1.66 | 53.6 | 0.0931 | -0.0389 | -0.0001 |
| 60 | SLE QP 1 | -0.25 | 1.61 | 50.4 | 0.0849 | -0.0347 | -0.0001 |
| 60 | SLE QP 2 | -0.29 | 1.64 | 52.32 | 0.0898 | -0.0372 | -0.0001 |
| 60 | SLD 1 | 9.13 | 1.83 | 50.7 | 0.075 | 0.389 | -0.0008 |
| 60 | SLD 2 | 9.13 | 1.83 | 50.7 | 0.075 | 0.389 | -0.0008 |
| 60 | SLD 3 | 8.17 | -0.34 | 42.51 | 0.17 | 0.343 | -0.0007 |
| 60 | SLD 4 | 8.17 | -0.34 | 42.51 | 0.17 | 0.343 | -0.0007 |
| 60 | SLD 5 | 3.99 | 4.99 | 64.26 | -0.0587 | 0.1604 | -0.0005 |
| 60 | SLD 6 | 3.99 | 4.99 | 64.26 | -0.0587 | 0.1604 | -0.0005 |
| 60 | SLD 7 | 0.8 | -2.24 | 36.95 | 0.2579 | 0.0071 | -0.0001 |
| 60 | SLD 8 | 0.8 | -2.24 | 36.95 | 0.2579 | 0.0071 | -0.0001 |
| 60 | SLD 9 | -1.37 | 5.53 | 67.69 | -0.0783 | -0.0815 | -0.0001 |
| 60 | SLD 10 | -1.37 | 5.53 | 67.69 | -0.0783 | -0.0815 | -0.0001 |
| 60 | SLD 11 | -4.56 | -1.71 | 40.38 | 0.2383 | -0.2348 | 0.0003 |
| 60 | SLD 12 | -4.56 | -1.71 | 40.38 | 0.2383 | -0.2348 | 0.0003 |
| 60 | SLD 13 | -8.75 | 3.63 | 62.13 | 0.0097 | -0.4173 | 0.0005 |
| 60 | SLD 14 | -8.75 | 3.63 | 62.13 | 0.0097 | -0.4173 | 0.0005 |
| 60 | SLD 15 | -9.7 | 1.45 | 53.93 | 0.1047 | -0.4633 | 0.0006 |
| 60 | SLD 16 | -9.7 | 1.45 | 53.93 | 0.1047 | -0.4633 | 0.0006 |
| 60 | SLV 1 | 21.54 | 2.08 | 48.59 | 0.056 | 0.9512 | -0.0017 |
| 60 | SLV 2 | 21.54 | 2.08 | 48.59 | 0.056 | 0.9512 | -0.0017 |
| 60 | SLV 3 | 19.16 | -3.09 | 29.12 | 0.2815 | 0.836 | -0.0015 |
| 60 | SLV 4 | 19.16 | -3.09 | 29.12 | 0.2815 | 0.836 | -0.0015 |
| 60 | SLV 5 | 9.88 | 9.61 | 80.72 | -0.2624 | 0.4339 | -0.001 |
| 60 | SLV 6 | 9.88 | 9.61 | 80.72 | -0.2624 | 0.4339 | -0.001 |
| 60 | SLV 7 | 1.93 | -7.62 | 15.84 | 0.4894 | 0.0502 | -0.0001 |
| 60 | SLV 8 | 1.93 | -7.62 | 15.84 | 0.4894 | 0.0502 | -0.0001 |
| 60 | SLV 9 | -2.51 | 10.9 | 88.8 | -0.3098 | -0.1246 | -0.0001 |
| 60 | SLV 10 | -2.51 | 10.9 | 88.8 | -0.3098 | -0.1246 | -0.0001 |
| 60 | SLV 11 | -10.46 | -6.33 | 23.92 | 0.442 | -0.5083 | 0.0008 |
| 60 | SLV 12 | -10.46 | -6.33 | 23.92 | 0.442 | -0.5083 | 0.0008 |
| 60 | SLV 13 | -19.73 | 6.38 | 75.52 | -0.1019 | -0.9104 | 0.0013 |
| 60 | SLV 14 | -19.73 | 6.38 | 75.52 | -0.1019 | -0.9104 | 0.0013 |
| 60 | SLV 15 | -22.12 | 1.21 | 56.05 | 0.1236 | -1.0255 | 0.0015 |
| 60 | SLV 16 | -22.12 | 1.21 | 56.05 | 0.1236 | -1.0255 | 0.0015 |
| 61 | SLU 1 | 0.23 | 0.07 | 38.05 | -0.0117 | 0.0282 | -0.0003 |
| 61 | SLU 2 | 1.31 | 0.06 | 40.59 | -0.0093 | 0.0855 | -0.0003 |
| 61 | SLU 3 | 0.59 | 0.07 | 38.24 | -0.0113 | 0.0451 | -0.0003 |
| 61 | SLU 4 | 1.24 | 0.06 | 39.76 | -0.0099 | 0.0795 | -0.0003 |
| 61 | SLU 5 | 1.76 | 0.06 | 40.35 | -0.0086 | 0.106 | -0.0003 |
| 61 | SLU 6 | 1.04 | 0.07 | 38 | -0.0107 | 0.0657 | -0.0003 |
| 61 | SLU 7 | 1.69 | 0.06 | 39.53 | -0.0092 | 0.1001 | -0.0003 |
| 61 | SLU 8 | 1.12 | 0.07 | 37.58 | -0.0105 | 0.0693 | -0.0003 |
| 61 | SLU 9 | 1.77 | 0.06 | 39.1 | -0.009 | 0.1037 | -0.0003 |
| 61 | SLU 10 | 1.35 | 0.07 | 46.05 | -0.0101 | 0.0883 | -0.0004 |
| 61 | SLU 11 | 0.63 | 0.08 | 43.7 | -0.0122 | 0.0479 | -0.0004 |
| 61 | SLU 12 | 1.28 | 0.07 | 45.23 | -0.0107 | 0.0823 | -0.0004 |
| 61 | SLU 13 | 1.8 | 0.06 | 45.81 | -0.0095 | 0.1088 | -0.0004 |
| 61 | SLU 14 | 1.08 | 0.07 | 43.46 | -0.0115 | 0.0685 | -0.0004 |
| 61 | SLU 15 | 1.73 | 0.07 | 44.99 | -0.0101 | 0.1029 | -0.0004 |

| Nodo | Cont. | Reazione a traslazione | | | Reazione a rotazione | | |
|---|---|---|---|---|---|---|---|
| Ind. | N.br. | x | y | z | x | y | z |
| 61 | SLU 16 | 1.16 | 0.07 | 43.04 | -0.0113 | 0.0721 | -0.0004 |
| 61 | SLU 17 | 1.81 | 0.07 | 44.56 | -0.0098 | 0.1065 | -0.0004 |
| 61 | SLU 18 | 0.28 | 0.08 | 45.86 | -0.0129 | 0.0322 | -0.0004 |
| 61 | SLU 19 | 0.93 | 0.07 | 47.38 | -0.0114 | 0.0666 | -0.0004 |
| 61 | SLU 20 | 0.73 | 0.08 | 45.62 | -0.0123 | 0.0527 | -0.0004 |
| 61 | SLU 21 | 1.38 | 0.07 | 47.14 | -0.0108 | 0.0871 | -0.0004 |
| 61 | SLU 22 | 0.41 | 0.08 | 42.35 | -0.0122 | 0.038 | -0.0004 |
| 61 | SLU 23 | 1.5 | 0.06 | 44.89 | -0.0098 | 0.0953 | -0.0004 |
| 61 | SLU 24 | 0.78 | 0.08 | 42.54 | -0.0118 | 0.055 | -0.0004 |
| 61 | SLU 25 | 1.43 | 0.07 | 44.06 | -0.0104 | 0.0894 | -0.0004 |
| 61 | SLU 26 | 1.95 | 0.06 | 44.65 | -0.0092 | 0.1159 | -0.0004 |
| 61 | SLU 27 | 1.22 | 0.07 | 42.3 | -0.0112 | 0.0755 | -0.0004 |
| 61 | SLU 28 | 1.88 | 0.07 | 43.82 | -0.0098 | 0.1099 | -0.0004 |
| 61 | SLU 29 | 1.31 | 0.07 | 41.87 | -0.011 | 0.0791 | -0.0003 |
| 61 | SLU 30 | 1.96 | 0.07 | 43.4 | -0.0095 | 0.1135 | -0.0003 |
| 61 | SLU 31 | 1.54 | 0.07 | 50.35 | -0.0106 | 0.0981 | -0.0004 |
| 61 | SLU 32 | 0.81 | 0.08 | 48 | -0.0127 | 0.0578 | -0.0004 |
| 61 | SLU 33 | 1.47 | 0.08 | 49.52 | -0.0112 | 0.0922 | -0.0004 |
| 61 | SLU 34 | 1.99 | 0.07 | 50.11 | -0.01 | 0.1187 | -0.0004 |
| 61 | SLU 35 | 1.26 | 0.08 | 47.76 | -0.0121 | 0.0783 | -0.0004 |
| 61 | SLU 36 | 1.92 | 0.07 | 49.28 | -0.0106 | 0.1127 | -0.0004 |
| 61 | SLU 37 | 1.35 | 0.08 | 47.34 | -0.0118 | 0.0819 | -0.0004 |
| 61 | SLU 38 | 2 | 0.07 | 48.86 | -0.0103 | 0.1163 | -0.0004 |
| 61 | SLU 39 | 0.47 | 0.09 | 50.15 | -0.0134 | 0.042 | -0.0004 |
| 61 | SLU 40 | 1.12 | 0.08 | 51.68 | -0.0119 | 0.0764 | -0.0004 |
| 61 | SLU 41 | 0.91 | 0.08 | 49.91 | -0.0128 | 0.0626 | -0.0004 |
| 61 | SLU 42 | 1.57 | 0.08 | 51.44 | -0.0113 | 0.0969 | -0.0004 |
| 61 | SLU 43 | 0.23 | 0.09 | 48 | -0.015 | 0.0333 | -0.0004 |
| 61 | SLU 44 | 1.32 | 0.08 | 50.54 | -0.0126 | 0.0906 | -0.0004 |
| 61 | SLU 45 | 0.6 | 0.09 | 48.19 | -0.0147 | 0.0502 | -0.0004 |
| 61 | SLU 46 | 1.25 | 0.08 | 49.71 | -0.0132 | 0.0846 | -0.0004 |
| 61 | SLU 47 | 1.77 | 0.08 | 50.3 | -0.012 | 0.1111 | -0.0004 |
| 61 | SLU 48 | 1.04 | 0.09 | 47.95 | -0.014 | 0.0708 | -0.0004 |
| 61 | SLU 49 | 1.7 | 0.08 | 49.47 | -0.0126 | 0.1051 | -0.0004 |
| 61 | SLU 50 | 1.13 | 0.09 | 47.52 | -0.0138 | 0.0744 | -0.0004 |
| 61 | SLU 51 | 1.78 | 0.08 | 49.04 | -0.0123 | 0.1087 | -0.0004 |
| 61 | SLU 52 | 1.36 | 0.08 | 56 | -0.0134 | 0.0934 | -0.0005 |
| 61 | SLU 53 | 0.63 | 0.1 | 53.65 | -0.0155 | 0.053 | -0.0005 |
| 61 | SLU 54 | 1.29 | 0.09 | 55.17 | -0.014 | 0.0874 | -0.0005 |
| 61 | SLU 55 | 1.81 | 0.08 | 55.76 | -0.0128 | 0.1139 | -0.0005 |
| 61 | SLU 56 | 1.08 | 0.09 | 53.41 | -0.0149 | 0.0736 | -0.0004 |
| 61 | SLU 57 | 1.73 | 0.09 | 54.93 | -0.0134 | 0.1079 | -0.0004 |
| 61 | SLU 58 | 1.17 | 0.09 | 52.98 | -0.0146 | 0.0772 | -0.0004 |
| 61 | SLU 59 | 1.82 | 0.09 | 54.5 | -0.0132 | 0.1115 | -0.0004 |
| 61 | SLU 60 | 0.29 | 0.1 | 55.8 | -0.0162 | 0.0373 | -0.0005 |
| 61 | SLU 61 | 0.94 | 0.09 | 57.32 | -0.0148 | 0.0717 | -0.0005 |
| 61 | SLU 62 | 0.73 | 0.1 | 55.56 | -0.0156 | 0.0578 | -0.0005 |
| 61 | SLU 63 | 1.39 | 0.09 | 57.08 | -0.0141 | 0.0922 | -0.0005 |
| 61 | SLU 64 | 0.42 | 0.09 | 52.29 | -0.0155 | 0.0431 | -0.0005 |
| 61 | SLU 65 | 1.5 | 0.08 | 54.83 | -0.0131 | 0.1004 | -0.0005 |
| 61 | SLU 66 | 0.78 | 0.09 | 52.48 | -0.0152 | 0.0601 | -0.0004 |
| 61 | SLU 67 | 1.43 | 0.09 | 54 | -0.0137 | 0.0944 | -0.0005 |
| 61 | SLU 68 | 1.95 | 0.08 | 54.59 | -0.0125 | 0.1209 | -0.0004 |
| 61 | SLU 69 | 1.23 | 0.09 | 52.24 | -0.0145 | 0.0806 | -0.0004 |
| 61 | SLU 70 | 1.88 | 0.09 | 53.77 | -0.0131 | 0.115 | -0.0004 |
| 61 | SLU 71 | 1.31 | 0.09 | 51.82 | -0.0143 | 0.0842 | -0.0004 |
| 61 | SLU 72 | 1.96 | 0.08 | 53.34 | -0.0128 | 0.1186 | -0.0004 |
| 61 | SLU 73 | 1.54 | 0.09 | 60.29 | -0.0139 | 0.1032 | -0.0005 |
| 61 | SLU 74 | 0.82 | 0.1 | 57.94 | -0.016 | 0.0629 | -0.0005 |
| 61 | SLU 75 | 1.47 | 0.09 | 59.47 | -0.0145 | 0.0972 | -0.0005 |
| 61 | SLU 76 | 1.99 | 0.09 | 60.05 | -0.0133 | 0.1237 | -0.0005 |
| 61 | SLU 77 | 1.27 | 0.1 | 57.7 | -0.0154 | 0.0834 | -0.0005 |
| 61 | SLU 78 | 1.92 | 0.09 | 59.23 | -0.0139 | 0.1178 | -0.0005 |
| 61 | SLU 79 | 1.35 | 0.1 | 57.28 | -0.0151 | 0.087 | -0.0005 |
| 61 | SLU 80 | 2 | 0.09 | 58.8 | -0.0137 | 0.1214 | -0.0005 |
| 61 | SLU 81 | 0.47 | 0.1 | 60.1 | -0.0167 | 0.0471 | -0.0005 |
| 61 | SLU 82 | 1.12 | 0.1 | 61.62 | -0.0153 | 0.0815 | -0.0005 |
| 61 | SLU 83 | 0.92 | 0.1 | 59.86 | -0.0161 | 0.0677 | -0.0005 |
| 61 | SLU 84 | 1.57 | 0.1 | 61.38 | -0.0147 | 0.102 | -0.0005 |
| 61 | SLE RA 1 | 0.28 | 0.07 | 39.28 | -0.0118 | 0.031 | -0.0003 |
| 61 | SLE RA 2 | 1.01 | 0.06 | 40.97 | -0.0102 | 0.0692 | -0.0003 |
| 61 | SLE RA 3 | 0.52 | 0.07 | 39.41 | -0.0116 | 0.0423 | -0.0003 |
| 61 | SLE RA 4 | 0.96 | 0.07 | 40.42 | -0.0106 | 0.0652 | -0.0003 |
| 61 | SLE RA 5 | 1.3 | 0.06 | 40.81 | -0.0098 | 0.0829 | -0.0003 |
| 61 | SLE RA 6 | 0.82 | 0.07 | 39.25 | -0.0112 | 0.056 | -0.0003 |
| 61 | SLE RA 7 | 1.26 | 0.07 | 40.26 | -0.0102 | 0.0789 | -0.0003 |
| 61 | SLE RA 8 | 0.88 | 0.07 | 38.96 | -0.011 | 0.0584 | -0.0003 |
| 61 | SLE RA 9 | 1.31 | 0.06 | 39.98 | -0.01 | 0.0813 | -0.0003 |
| 61 | SLE RA 10 | 1.03 | 0.07 | 44.61 | -0.0108 | 0.0711 | -0.0004 |
| 61 | SLE RA 11 | 0.55 | 0.08 | 43.05 | -0.0121 | 0.0442 | -0.0004 |
| 61 | SLE RA 12 | 0.98 | 0.07 | 44.06 | -0.0112 | 0.0671 | -0.0004 |
| 61 | SLE RA 13 | 1.33 | 0.07 | 44.46 | -0.0104 | 0.0848 | -0.0004 |
| 61 | SLE RA 14 | 0.85 | 0.07 | 42.89 | -0.0117 | 0.0579 | -0.0004 |
| 61 | SLE RA 15 | 1.28 | 0.07 | 43.9 | -0.0108 | 0.0808 | -0.0004 |
| 61 | SLE RA 16 | 0.9 | 0.07 | 42.61 | -0.0116 | 0.0603 | -0.0004 |
| 61 | SLE RA 17 | 1.34 | 0.07 | 43.62 | -0.0106 | 0.0832 | -0.0004 |
| 61 | SLE RA 18 | 0.32 | 0.08 | 44.48 | -0.0126 | 0.0337 | -0.0004 |
| 61 | SLE RA 19 | 0.75 | 0.07 | 45.5 | -0.0117 | 0.0566 | -0.0004 |

| Nodo | Cont. | Reazione a traslazione | | | Reazione a rotazione | | |
|---|---|---|---|---|---|---|---|
| Ind. | N.br. | x | y | z | x | y | z |
| 61 | SLE RA 20 | 0.61 | 0.08 | 44.32 | -0.0122 | 0.0474 | -0.0004 |
| 61 | SLE RA 21 | 1.05 | 0.07 | 45.34 | -0.0112 | 0.0703 | -0.0004 |
| 61 | SLE FR 1 | 0.28 | 0.07 | 39.28 | -0.0118 | 0.031 | -0.0003 |
| 61 | SLE FR 2 | 0.43 | 0.07 | 39.62 | -0.0115 | 0.0386 | -0.0003 |
| 61 | SLE FR 3 | 0.4 | 0.07 | 39.22 | -0.0117 | 0.0365 | -0.0003 |
| 61 | SLE FR 4 | 0.44 | 0.07 | 41.18 | -0.0117 | 0.0394 | -0.0004 |
| 61 | SLE FR 5 | 0.41 | 0.07 | 40.78 | -0.0119 | 0.0373 | -0.0003 |
| 61 | SLE FR 6 | 0.3 | 0.07 | 41.88 | -0.0122 | 0.0323 | -0.0004 |
| 61 | SLE QP 1 | 0.28 | 0.07 | 39.28 | -0.0118 | 0.031 | -0.0003 |
| 61 | SLE QP 2 | 0.29 | 0.07 | 40.84 | -0.0121 | 0.0318 | -0.0004 |
| 61 | SLD 1 | 8.31 | 0.05 | 38.75 | -0.0047 | 0.408 | -0.0003 |
| 61 | SLD 2 | 8.31 | 0.05 | 38.75 | -0.0047 | 0.408 | -0.0003 |
| 61 | SLD 3 | 9.49 | 0 | 34.41 | 0.0094 | 0.4559 | -0.0001 |
| 61 | SLD 4 | 9.49 | 0 | 34.41 | 0.0094 | 0.4559 | -0.0001 |
| 61 | SLD 5 | 0.92 | 0.14 | 46.8 | -0.0313 | 0.072 | -0.0006 |
| 61 | SLD 6 | 0.92 | 0.14 | 46.8 | -0.0313 | 0.072 | -0.0006 |
| 61 | SLD 7 | 4.83 | -0.03 | 32.33 | 0.0157 | 0.2317 | 0 |
| 61 | SLD 8 | 4.83 | -0.03 | 32.33 | 0.0157 | 0.2317 | 0 |
| 61 | SLD 9 | -4.25 | 0.17 | 49.36 | -0.0399 | -0.1681 | -0.0007 |
| 61 | SLD 10 | -4.25 | 0.17 | 49.36 | -0.0399 | -0.1681 | -0.0007 |
| 61 | SLD 11 | -0.34 | 0 | 34.88 | 0.0071 | -0.0084 | -0.0001 |
| 61 | SLD 12 | -0.34 | 0 | 34.88 | 0.0071 | -0.0084 | -0.0001 |
| 61 | SLD 13 | -8.91 | 0.15 | 47.28 | -0.0335 | -0.3923 | -0.0006 |
| 61 | SLD 14 | -8.91 | 0.15 | 47.28 | -0.0335 | -0.3923 | -0.0006 |
| 61 | SLD 15 | -7.73 | 0.1 | 42.93 | -0.0194 | -0.3443 | -0.0004 |
| 61 | SLD 16 | -7.73 | 0.1 | 42.93 | -0.0194 | -0.3443 | -0.0004 |
| 61 | SLV 1 | 18.8 | 0.02 | 36.02 | 0.0041 | 0.8992 | -0.0003 |
| 61 | SLV 2 | 18.8 | 0.02 | 36.02 | 0.0041 | 0.8992 | -0.0003 |
| 61 | SLV 3 | 21.58 | -0.11 | 25.65 | 0.0386 | 1.0139 | 0.0001 |
| 61 | SLV 4 | 21.58 | -0.11 | 25.65 | 0.0386 | 1.0139 | 0.0001 |
| 61 | SLV 5 | 1.63 | 0.25 | 55.14 | -0.0595 | 0.1179 | -0.0009 |
| 61 | SLV 6 | 1.63 | 0.25 | 55.14 | -0.0595 | 0.1179 | -0.0009 |
| 61 | SLV 7 | 10.89 | -0.18 | 20.54 | 0.0554 | 0.5005 | 0.0004 |
| 61 | SLV 8 | 10.89 | -0.18 | 20.54 | 0.0554 | 0.5005 | 0.0004 |
| 61 | SLV 9 | -10.31 | 0.32 | 61.14 | -0.0795 | -0.4369 | -0.0011 |
| 61 | SLV 10 | -10.31 | 0.32 | 61.14 | -0.0795 | -0.4369 | -0.0011 |
| 61 | SLV 11 | -1.05 | -0.1 | 26.55 | 0.0353 | -0.0543 | 0.0002 |
| 61 | SLV 12 | -1.05 | -0.1 | 26.55 | 0.0353 | -0.0543 | 0.0002 |
| 61 | SLV 13 | -21 | 0.26 | 56.04 | -0.0627 | -0.9503 | -0.0008 |
| 61 | SLV 14 | -21 | 0.26 | 56.04 | -0.0627 | -0.9503 | -0.0008 |
| 61 | SLV 15 | -18.22 | 0.13 | 45.66 | -0.0283 | -0.8356 | -0.0004 |
| 61 | SLV 16 | -18.22 | 0.13 | 45.66 | -0.0283 | -0.8356 | -0.0004 |
| 62 | SLU 1 | 0.11 | 0.02 | 42.14 | -0.0035 | -0.0816 | 0 |
| 62 | SLU 2 | 1.21 | 0 | 44.7 | 0.0041 | -0.0428 | 0.0001 |
| 62 | SLU 3 | 0.43 | 0.03 | 42.41 | -0.0035 | -0.069 | 0 |
| 62 | SLU 4 | 1.09 | 0.01 | 43.95 | 0.001 | -0.0457 | 0 |
| 62 | SLU 5 | 1.61 | 0 | 44.51 | 0.0041 | -0.0258 | 0.0001 |
| 62 | SLU 6 | 0.83 | 0.03 | 42.22 | -0.0034 | -0.052 | 0 |
| 62 | SLU 7 | 1.49 | 0.01 | 43.76 | 0.0011 | -0.0287 | 0 |
| 62 | SLU 8 | 0.91 | 0.03 | 41.76 | -0.0033 | -0.0476 | 0 |
| 62 | SLU 9 | 1.57 | 0.01 | 43.3 | 0.0012 | -0.0243 | 0 |
| 62 | SLU 10 | 1.3 | 0 | 50.96 | 0.0043 | -0.0523 | 0.0001 |
| 62 | SLU 11 | 0.52 | 0.03 | 48.67 | -0.0033 | -0.0785 | -0.0001 |
| 62 | SLU 12 | 1.18 | 0.01 | 50.21 | 0.0012 | -0.0552 | 0 |
| 62 | SLU 13 | 1.7 | 0 | 50.77 | 0.0043 | -0.0353 | 0.0001 |
| 62 | SLU 14 | 0.92 | 0.03 | 48.48 | -0.0032 | -0.0614 | -0.0001 |
| 62 | SLU 15 | 1.58 | 0.01 | 50.02 | 0.0013 | -0.0382 | 0 |
| 62 | SLU 16 | 1 | 0.03 | 48.02 | -0.0032 | -0.0571 | -0.0001 |
| 62 | SLU 17 | 1.66 | 0.01 | 49.56 | 0.0014 | -0.0338 | 0 |
| 62 | SLU 18 | 0.23 | 0.03 | 51.08 | -0.0032 | -0.0951 | -0.0001 |
| 62 | SLU 19 | 0.89 | 0.01 | 52.62 | 0.0013 | -0.0718 | 0 |
| 62 | SLU 20 | 0.63 | 0.03 | 50.89 | -0.0031 | -0.0781 | -0.0001 |
| 62 | SLU 21 | 1.3 | 0.01 | 52.43 | 0.0014 | -0.0548 | 0 |
| 62 | SLU 22 | 0.3 | 0.03 | 47.05 | -0.0033 | -0.0842 | -0.0001 |
| 62 | SLU 23 | 1.4 | 0 | 49.61 | 0.0042 | -0.0454 | 0.0001 |
| 62 | SLU 24 | 0.62 | 0.03 | 47.33 | -0.0033 | -0.0716 | -0.0001 |
| 62 | SLU 25 | 1.28 | 0.01 | 48.86 | 0.0012 | -0.0483 | 0 |
| 62 | SLU 26 | 1.81 | 0 | 49.43 | 0.0043 | -0.0284 | 0.0001 |
| 62 | SLU 27 | 1.03 | 0.03 | 47.14 | -0.0033 | -0.0546 | -0.0001 |
| 62 | SLU 28 | 1.69 | 0.01 | 48.67 | 0.0013 | -0.0313 | 0 |
| 62 | SLU 29 | 1.11 | 0.03 | 46.68 | -0.0032 | -0.0502 | -0.0001 |
| 62 | SLU 30 | 1.77 | 0.01 | 48.21 | 0.0014 | -0.0269 | 0 |
| 62 | SLU 31 | 1.49 | 0 | 55.87 | 0.0044 | -0.0548 | 0.0001 |
| 62 | SLU 32 | 0.71 | 0.03 | 53.58 | -0.0031 | -0.081 | -0.0001 |
| 62 | SLU 33 | 1.37 | 0.01 | 55.12 | 0.0014 | -0.0577 | 0 |
| 62 | SLU 34 | 1.89 | 0 | 55.68 | 0.0045 | -0.0378 | 0.0001 |
| 62 | SLU 35 | 1.11 | 0.03 | 53.4 | -0.0031 | -0.064 | -0.0001 |
| 62 | SLU 36 | 1.77 | 0.01 | 54.93 | 0.0015 | -0.0407 | 0 |
| 62 | SLU 37 | 1.19 | 0.03 | 52.94 | -0.003 | -0.0597 | -0.0001 |
| 62 | SLU 38 | 1.85 | 0.01 | 54.47 | 0.0015 | -0.0364 | 0 |
| 62 | SLU 39 | 0.42 | 0.03 | 55.99 | -0.003 | -0.0977 | -0.0001 |
| 62 | SLU 40 | 1.09 | 0.01 | 57.53 | 0.0015 | -0.0744 | 0 |
| 62 | SLU 41 | 0.83 | 0.03 | 55.81 | -0.003 | -0.0807 | -0.0001 |
| 62 | SLU 42 | 1.49 | 0.01 | 57.34 | 0.0016 | -0.0574 | 0 |
| 62 | SLU 43 | 0.07 | 0.03 | 53.1 | -0.0046 | -0.1052 | -0.0001 |
| 62 | SLU 44 | 1.17 | 0.01 | 55.66 | 0.003 | -0.0664 | 0.0001 |
| 62 | SLU 45 | 0.39 | 0.03 | 53.37 | -0.0046 | -0.0926 | -0.0001 |
| 62 | SLU 46 | 1.06 | 0.02 | 54.9 | -0.0001 | -0.0693 | 0 |

| Nodo | Cont. | Reazione a traslazione | | | Reazione a rotazione | | |
|---|---|---|---|---|---|---|---|
| Ind. | N.br. | x | y | z | x | y | z |
| 62 | SLU 47 | 1.58 | 0.01 | 55.47 | 0.003 | -0.0494 | 0.0001 |
| 62 | SLU 48 | 0.8 | 0.03 | 53.18 | -0.0045 | -0.0756 | -0.0001 |
| 62 | SLU 49 | 1.46 | 0.02 | 54.72 | 0 | -0.0523 | 0 |
| 62 | SLU 50 | 0.88 | 0.03 | 52.72 | -0.0044 | -0.0712 | -0.0001 |
| 62 | SLU 51 | 1.54 | 0.02 | 54.26 | 0.0001 | -0.0479 | 0 |
| 62 | SLU 52 | 1.26 | 0.01 | 61.91 | 0.0032 | -0.0759 | 0.0001 |
| 62 | SLU 53 | 0.48 | 0.03 | 59.63 | -0.0044 | -0.1021 | -0.0001 |
| 62 | SLU 54 | 1.14 | 0.02 | 61.16 | 0.0001 | -0.0788 | 0 |
| 62 | SLU 55 | 1.66 | 0.01 | 61.73 | 0.0032 | -0.0589 | 0.0001 |
| 62 | SLU 56 | 0.88 | 0.03 | 59.44 | -0.0043 | -0.0851 | -0.0001 |
| 62 | SLU 57 | 1.55 | 0.02 | 60.97 | 0.0002 | -0.0618 | 0 |
| 62 | SLU 58 | 0.96 | 0.03 | 58.98 | -0.0043 | -0.0807 | -0.0001 |
| 62 | SLU 59 | 1.63 | 0.02 | 60.51 | 0.0003 | -0.0574 | 0 |
| 62 | SLU 60 | 0.2 | 0.03 | 62.04 | -0.0043 | -0.1187 | -0.0001 |
| 62 | SLU 61 | 0.86 | 0.02 | 63.57 | 0.0002 | -0.0954 | 0 |
| 62 | SLU 62 | 0.6 | 0.03 | 61.85 | -0.0042 | -0.1017 | -0.0001 |
| 62 | SLU 63 | 1.26 | 0.02 | 63.38 | 0.0003 | -0.0784 | 0 |
| 62 | SLU 64 | 0.26 | 0.03 | 58.01 | -0.0044 | -0.1078 | -0.0001 |
| 62 | SLU 65 | 1.37 | 0.01 | 60.57 | 0.0031 | -0.069 | 0.0001 |
| 62 | SLU 66 | 0.59 | 0.03 | 58.28 | -0.0044 | -0.0952 | -0.0001 |
| 62 | SLU 67 | 1.25 | 0.02 | 59.82 | 0.0001 | -0.0719 | 0 |
| 62 | SLU 68 | 1.77 | 0.01 | 60.38 | 0.0032 | -0.052 | 0.0001 |
| 62 | SLU 69 | 0.99 | 0.03 | 58.09 | -0.0044 | -0.0782 | -0.0001 |
| 62 | SLU 70 | 1.65 | 0.02 | 59.63 | 0.0002 | -0.0549 | 0 |
| 62 | SLU 71 | 1.07 | 0.03 | 57.64 | -0.0043 | -0.0738 | -0.0001 |
| 62 | SLU 72 | 1.73 | 0.02 | 59.17 | 0.0003 | -0.0505 | 0 |
| 62 | SLU 73 | 1.46 | 0.01 | 66.83 | 0.0033 | -0.0784 | 0.0001 |
| 62 | SLU 74 | 0.67 | 0.04 | 64.54 | -0.0042 | -0.1046 | -0.0001 |
| 62 | SLU 75 | 1.34 | 0.02 | 66.08 | 0.0003 | -0.0813 | 0 |
| 62 | SLU 76 | 1.86 | 0.01 | 66.64 | 0.0034 | -0.0614 | 0.0001 |
| 62 | SLU 77 | 1.08 | 0.04 | 64.35 | -0.0042 | -0.0876 | -0.0001 |
| 62 | SLU 78 | 1.74 | 0.02 | 65.89 | 0.0004 | -0.0643 | 0 |
| 62 | SLU 79 | 1.16 | 0.04 | 63.89 | -0.0041 | -0.0833 | -0.0001 |
| 62 | SLU 80 | 1.82 | 0.02 | 65.43 | 0.0004 | -0.06 | 0 |
| 62 | SLU 81 | 0.39 | 0.04 | 66.95 | -0.0041 | -0.1213 | -0.0001 |
| 62 | SLU 82 | 1.05 | 0.02 | 68.49 | 0.0004 | -0.098 | 0 |
| 62 | SLU 83 | 0.79 | 0.04 | 66.76 | -0.0041 | -0.1043 | -0.0001 |
| 62 | SLU 84 | 1.45 | 0.02 | 68.3 | 0.0005 | -0.081 | 0 |
| 62 | SLE RA 1 | 0.16 | 0.02 | 43.54 | -0.0034 | -0.0824 | 0 |
| 62 | SLE RA 2 | 0.9 | 0.01 | 45.25 | 0.0016 | -0.0565 | 0.0001 |
| 62 | SLE RA 3 | 0.38 | 0.03 | 43.72 | -0.0034 | -0.074 | 0 |
| 62 | SLE RA 4 | 0.82 | 0.02 | 44.75 | -0.0004 | -0.0584 | 0 |
| 62 | SLE RA 5 | 1.17 | 0.01 | 45.13 | 0.0016 | -0.0452 | 0.0001 |
| 62 | SLE RA 6 | 0.65 | 0.03 | 43.6 | -0.0034 | -0.0626 | 0 |
| 62 | SLE RA 7 | 1.09 | 0.02 | 44.62 | -0.0004 | -0.0471 | 0 |
| 62 | SLE RA 8 | 0.7 | 0.03 | 43.29 | -0.0033 | -0.0597 | 0 |
| 62 | SLE RA 9 | 1.14 | 0.02 | 44.32 | -0.0003 | -0.0442 | 0 |
| 62 | SLE RA 10 | 0.95 | 0.01 | 49.42 | 0.0017 | -0.0628 | 0.0001 |
| 62 | SLE RA 11 | 0.43 | 0.03 | 47.9 | -0.0033 | -0.0803 | -0.0001 |
| 62 | SLE RA 12 | 0.88 | 0.02 | 48.92 | -0.0003 | -0.0647 | 0 |
| 62 | SLE RA 13 | 1.22 | 0.01 | 49.3 | 0.0018 | -0.0515 | 0.0001 |
| 62 | SLE RA 14 | 0.7 | 0.03 | 47.77 | -0.0033 | -0.0689 | -0.0001 |
| 62 | SLE RA 15 | 1.14 | 0.02 | 48.8 | -0.0002 | -0.0534 | 0 |
| 62 | SLE RA 16 | 0.76 | 0.03 | 47.47 | -0.0032 | -0.066 | -0.0001 |
| 62 | SLE RA 17 | 1.2 | 0.02 | 48.49 | -0.0002 | -0.0505 | 0 |
| 62 | SLE RA 18 | 0.24 | 0.03 | 49.5 | -0.0032 | -0.0914 | -0.0001 |
| 62 | SLE RA 19 | 0.69 | 0.02 | 50.53 | -0.0002 | -0.0758 | 0 |
| 62 | SLE RA 20 | 0.51 | 0.03 | 49.38 | -0.0032 | -0.08 | -0.0001 |
| 62 | SLE RA 21 | 0.95 | 0.02 | 50.4 | -0.0002 | -0.0645 | 0 |
| 62 | SLE FR 1 | 0.16 | 0.02 | 43.54 | -0.0034 | -0.0824 | 0 |
| 62 | SLE FR 2 | 0.31 | 0.02 | 43.89 | -0.0024 | -0.0772 | 0 |
| 62 | SLE FR 3 | 0.27 | 0.02 | 43.49 | -0.0034 | -0.0778 | 0 |
| 62 | SLE FR 4 | 0.33 | 0.02 | 45.67 | -0.0024 | -0.0799 | 0 |
| 62 | SLE FR 5 | 0.29 | 0.03 | 45.28 | -0.0033 | -0.0805 | 0 |
| 62 | SLE FR 6 | 0.2 | 0.03 | 46.52 | -0.0033 | -0.0869 | 0 |
| 62 | SLE QP 1 | 0.16 | 0.02 | 43.54 | -0.0034 | -0.0824 | 0 |
| 62 | SLE QP 2 | 0.19 | 0.03 | 45.33 | -0.0034 | -0.0851 | 0 |
| 62 | SLD 1 | 7.53 | 0.07 | 42.04 | -0.0327 | 0.2982 | -0.0001 |
| 62 | SLD 2 | 7.53 | 0.07 | 42.04 | -0.0327 | 0.2982 | -0.0001 |
| 62 | SLD 3 | 8.73 | 0.12 | 38.21 | -0.0153 | 0.2481 | -0.0004 |
| 62 | SLD 4 | 8.73 | 0.12 | 38.21 | -0.0153 | 0.2481 | -0.0004 |
| 62 | SLD 5 | 0.56 | -0.04 | 50.16 | -0.0386 | 0.1058 | 0.0003 |
| 62 | SLD 6 | 0.56 | -0.04 | 50.16 | -0.0386 | 0.1058 | 0.0003 |
| 62 | SLD 7 | 4.57 | 0.13 | 37.38 | 0.0195 | -0.061 | -0.0005 |
| 62 | SLD 8 | 4.57 | 0.13 | 37.38 | 0.0195 | -0.061 | -0.0005 |
| 62 | SLD 9 | -4.2 | -0.08 | 53.28 | -0.0262 | -0.1091 | 0.0004 |
| 62 | SLD 10 | -4.2 | -0.08 | 53.28 | -0.0262 | -0.1091 | 0.0004 |
| 62 | SLD 11 | -0.19 | 0.09 | 40.51 | 0.0319 | -0.2759 | -0.0004 |
| 62 | SLD 12 | -0.19 | 0.09 | 40.51 | 0.0319 | -0.2759 | -0.0004 |
| 62 | SLD 13 | -8.36 | -0.07 | 52.46 | 0.0086 | -0.4183 | 0.0003 |
| 62 | SLD 14 | -8.36 | -0.07 | 52.46 | 0.0086 | -0.4183 | 0.0003 |
| 62 | SLD 15 | -7.15 | -0.02 | 48.63 | 0.026 | -0.4683 | 0 |
| 62 | SLD 16 | -7.15 | -0.02 | 48.63 | 0.026 | -0.4683 | 0 |
| 62 | SLV 1 | 17.09 | 0.11 | 37.76 | -0.0727 | 0.8033 | -0.0002 |
| 62 | SLV 2 | 17.09 | 0.11 | 37.76 | -0.0727 | 0.8033 | -0.0002 |
| 62 | SLV 3 | 19.98 | 0.25 | 28.52 | -0.0295 | 0.6815 | -0.0008 |
| 62 | SLV 4 | 19.98 | 0.25 | 28.52 | -0.0295 | 0.6815 | -0.0008 |
| 62 | SLV 5 | 0.88 | -0.15 | 57.07 | -0.0897 | 0.3663 | 0.0009 |

| Nodo | Cont. | Reazione a traslazione | | | Reazione a rotazione | | |
|---|---|---|---|---|---|---|---|
| Ind. | N.br. | x | y | z | x | y | z |
| 62 | SLV 6 | 0.88 | -0.15 | 57.07 | -0.0897 | 0.3663 | 0.0009 |
| 62 | SLV 7 | 10.5 | 0.29 | 26.28 | 0.0543 | -0.0399 | -0.0013 |
| 62 | SLV 8 | 10.5 | 0.29 | 26.28 | 0.0543 | -0.0399 | -0.0013 |
| 62 | SLV 9 | -10.13 | -0.24 | 64.38 | -0.0611 | -0.1302 | 0.0012 |
| 62 | SLV 10 | -10.13 | -0.24 | 64.38 | -0.0611 | -0.1302 | 0.0012 |
| 62 | SLV 11 | -0.51 | 0.2 | 33.6 | 0.083 | -0.5364 | -0.001 |
| 62 | SLV 12 | -0.51 | 0.2 | 33.6 | 0.083 | -0.5364 | -0.001 |
| 62 | SLV 13 | -19.61 | -0.2 | 62.14 | 0.0228 | -0.8516 | 0.0007 |
| 62 | SLV 14 | -19.61 | -0.2 | 62.14 | 0.0228 | -0.8516 | 0.0007 |
| 62 | SLV 15 | -16.72 | -0.06 | 52.91 | 0.066 | -0.9735 | 0.0001 |
| 62 | SLV 16 | -16.72 | -0.06 | 52.91 | 0.066 | -0.9735 | 0.0001 |
| 63 | SLU 1 | 1.33 | -0.05 | 49.15 | 0.0116 | 0.0902 | 0.0001 |
| 63 | SLU 2 | 2.66 | -0.06 | 52.5 | 0.0183 | 0.1561 | 0.0002 |
| 63 | SLU 3 | 1.65 | -0.05 | 49.47 | 0.0116 | 0.1064 | 0.0001 |
| 63 | SLU 4 | 2.45 | -0.05 | 51.48 | 0.0157 | 0.146 | 0.0002 |
| 63 | SLU 5 | 3.04 | -0.06 | 52.28 | 0.0182 | 0.1751 | 0.0002 |
| 63 | SLU 6 | 2.02 | -0.04 | 49.25 | 0.0115 | 0.1254 | 0.0001 |
| 63 | SLU 7 | 2.82 | -0.05 | 51.26 | 0.0155 | 0.1649 | 0.0002 |
| 63 | SLU 8 | 2.08 | -0.04 | 48.71 | 0.0114 | 0.128 | 0.0001 |
| 63 | SLU 9 | 2.88 | -0.05 | 50.72 | 0.0154 | 0.1676 | 0.0002 |
| 63 | SLU 10 | 2.95 | -0.07 | 59.99 | 0.0203 | 0.172 | 0.0002 |
| 63 | SLU 11 | 1.93 | -0.05 | 56.97 | 0.0135 | 0.1223 | 0.0001 |
| 63 | SLU 12 | 2.73 | -0.06 | 58.98 | 0.0176 | 0.1619 | 0.0002 |
| 63 | SLU 13 | 3.32 | -0.07 | 59.77 | 0.0202 | 0.191 | 0.0002 |
| 63 | SLU 14 | 2.31 | -0.05 | 56.75 | 0.0134 | 0.1412 | 0.0001 |
| 63 | SLU 15 | 3.11 | -0.06 | 58.76 | 0.0175 | 0.1808 | 0.0002 |
| 63 | SLU 16 | 2.37 | -0.05 | 56.2 | 0.0133 | 0.1439 | 0.0001 |
| 63 | SLU 17 | 3.17 | -0.06 | 58.21 | 0.0173 | 0.1835 | 0.0002 |
| 63 | SLU 18 | 1.73 | -0.05 | 59.86 | 0.0143 | 0.1128 | 0.0001 |
| 63 | SLU 19 | 2.53 | -0.06 | 61.87 | 0.0184 | 0.1524 | 0.0002 |
| 63 | SLU 20 | 2.11 | -0.05 | 59.64 | 0.0142 | 0.1318 | 0.0001 |
| 63 | SLU 21 | 2.91 | -0.06 | 61.65 | 0.0183 | 0.1714 | 0.0002 |
| 63 | SLU 22 | 1.68 | -0.05 | 55.03 | 0.0131 | 0.1095 | 0.0001 |
| 63 | SLU 23 | 3.02 | -0.07 | 58.38 | 0.0199 | 0.1755 | 0.0002 |
| 63 | SLU 24 | 2 | -0.05 | 55.35 | 0.0131 | 0.1258 | 0.0001 |
| 63 | SLU 25 | 2.8 | -0.06 | 57.36 | 0.0172 | 0.1654 | 0.0002 |
| 63 | SLU 26 | 3.39 | -0.06 | 58.16 | 0.0198 | 0.1944 | 0.0002 |
| 63 | SLU 27 | 2.37 | -0.05 | 55.13 | 0.013 | 0.1447 | 0.0001 |
| 63 | SLU 28 | 3.17 | -0.06 | 57.14 | 0.0171 | 0.1843 | 0.0002 |
| 63 | SLU 29 | 2.43 | -0.05 | 54.59 | 0.0129 | 0.1474 | 0.0001 |
| 63 | SLU 30 | 3.23 | -0.06 | 56.59 | 0.017 | 0.187 | 0.0002 |
| 63 | SLU 31 | 3.3 | -0.07 | 65.87 | 0.0218 | 0.1914 | 0.0002 |
| 63 | SLU 32 | 2.28 | -0.06 | 62.85 | 0.0151 | 0.1416 | 0.0001 |
| 63 | SLU 33 | 3.08 | -0.07 | 64.86 | 0.0191 | 0.1812 | 0.0002 |
| 63 | SLU 34 | 3.67 | -0.07 | 65.65 | 0.0217 | 0.2103 | 0.0002 |
| 63 | SLU 35 | 2.66 | -0.06 | 62.63 | 0.015 | 0.1606 | 0.0001 |
| 63 | SLU 36 | 3.46 | -0.06 | 64.64 | 0.019 | 0.2002 | 0.0002 |
| 63 | SLU 37 | 2.72 | -0.05 | 62.08 | 0.0148 | 0.1633 | 0.0001 |
| 63 | SLU 38 | 3.52 | -0.06 | 64.09 | 0.0189 | 0.2029 | 0.0002 |
| 63 | SLU 39 | 2.08 | -0.06 | 65.74 | 0.0159 | 0.1322 | 0.0001 |
| 63 | SLU 40 | 2.89 | -0.07 | 67.75 | 0.0199 | 0.1718 | 0.0002 |
| 63 | SLU 41 | 2.46 | -0.06 | 65.52 | 0.0158 | 0.1511 | 0.0001 |
| 63 | SLU 42 | 3.26 | -0.07 | 67.53 | 0.0198 | 0.1907 | 0.0002 |
| 63 | SLU 43 | 1.61 | -0.06 | 61.88 | 0.0145 | 0.1106 | 0.0001 |
| 63 | SLU 44 | 2.94 | -0.07 | 65.23 | 0.0213 | 0.1766 | 0.0002 |
| 63 | SLU 45 | 1.92 | -0.06 | 62.2 | 0.0146 | 0.1268 | 0.0001 |
| 63 | SLU 46 | 2.73 | -0.07 | 64.21 | 0.0186 | 0.1664 | 0.0002 |
| 63 | SLU 47 | 3.32 | -0.07 | 65 | 0.0212 | 0.1955 | 0.0002 |
| 63 | SLU 48 | 2.3 | -0.06 | 61.98 | 0.0144 | 0.1458 | 0.0001 |
| 63 | SLU 49 | 3.1 | -0.06 | 63.99 | 0.0185 | 0.1854 | 0.0002 |
| 63 | SLU 50 | 2.36 | -0.06 | 61.44 | 0.0143 | 0.1485 | 0.0001 |
| 63 | SLU 51 | 3.16 | -0.06 | 63.44 | 0.0184 | 0.188 | 0.0002 |
| 63 | SLU 52 | 3.23 | -0.08 | 72.72 | 0.0232 | 0.1924 | 0.0003 |
| 63 | SLU 53 | 2.21 | -0.06 | 69.7 | 0.0165 | 0.1427 | 0.0001 |
| 63 | SLU 54 | 3.01 | -0.07 | 71.71 | 0.0205 | 0.1823 | 0.0002 |
| 63 | SLU 55 | 3.6 | -0.08 | 72.5 | 0.0231 | 0.2114 | 0.0002 |
| 63 | SLU 56 | 2.58 | -0.06 | 69.48 | 0.0164 | 0.1616 | 0.0001 |
| 63 | SLU 57 | 3.39 | -0.07 | 71.49 | 0.0204 | 0.2012 | 0.0002 |
| 63 | SLU 58 | 2.64 | -0.06 | 68.93 | 0.0162 | 0.1643 | 0.0001 |
| 63 | SLU 59 | 3.44 | -0.07 | 70.94 | 0.0203 | 0.2039 | 0.0002 |
| 63 | SLU 60 | 2.01 | -0.07 | 72.59 | 0.0173 | 0.1333 | 0.0001 |
| 63 | SLU 61 | 2.81 | -0.08 | 74.6 | 0.0213 | 0.1728 | 0.0002 |
| 63 | SLU 62 | 2.39 | -0.07 | 72.37 | 0.0172 | 0.1522 | 0.0001 |
| 63 | SLU 63 | 3.19 | -0.07 | 74.38 | 0.0212 | 0.1918 | 0.0002 |
| 63 | SLU 64 | 1.96 | -0.06 | 67.76 | 0.0161 | 0.1299 | 0.0001 |
| 63 | SLU 65 | 3.29 | -0.08 | 71.11 | 0.0228 | 0.1959 | 0.0002 |
| 63 | SLU 66 | 2.28 | -0.06 | 68.08 | 0.0161 | 0.1462 | 0.0001 |
| 63 | SLU 67 | 3.08 | -0.07 | 70.09 | 0.0201 | 0.1858 | 0.0002 |
| 63 | SLU 68 | 3.67 | -0.08 | 70.88 | 0.0227 | 0.2149 | 0.0002 |
| 63 | SLU 69 | 2.65 | -0.06 | 67.86 | 0.016 | 0.1651 | 0.0001 |
| 63 | SLU 70 | 3.45 | -0.07 | 69.87 | 0.02 | 0.2047 | 0.0002 |
| 63 | SLU 71 | 2.71 | -0.06 | 67.32 | 0.0159 | 0.1678 | 0.0001 |
| 63 | SLU 72 | 3.51 | -0.07 | 69.32 | 0.0199 | 0.2074 | 0.0002 |
| 63 | SLU 73 | 3.58 | -0.08 | 78.6 | 0.0248 | 0.2118 | 0.0003 |
| 63 | SLU 74 | 2.56 | -0.07 | 75.58 | 0.018 | 0.1621 | 0.0001 |
| 63 | SLU 75 | 3.36 | -0.08 | 77.59 | 0.0221 | 0.2016 | 0.0002 |
| 63 | SLU 76 | 3.95 | -0.08 | 78.38 | 0.0246 | 0.2307 | 0.0003 |
| 63 | SLU 77 | 2.94 | -0.07 | 75.36 | 0.0179 | 0.181 | 0.0001 |

| Nodo | Cont. | Reazione a traslazione | | | Reazione a rotazione | | |
|---|---|---|---|---|---|---|---|
| Ind. | N.br. | x | y | z | x | y | z |
| 63 | SLU 78 | 3.74 | -0.08 | 77.37 | 0.022 | 0.2206 | 0.0002 |
| 63 | SLU 79 | 2.99 | -0.07 | 74.81 | 0.0178 | 0.1837 | 0.0001 |
| 63 | SLU 80 | 3.8 | -0.08 | 76.82 | 0.0218 | 0.2233 | 0.0002 |
| 63 | SLU 81 | 2.36 | -0.07 | 78.47 | 0.0188 | 0.1526 | 0.0001 |
| 63 | SLU 82 | 3.16 | -0.08 | 80.48 | 0.0229 | 0.1922 | 0.0002 |
| 63 | SLU 83 | 2.74 | -0.07 | 78.25 | 0.0187 | 0.1716 | 0.0001 |
| 63 | SLU 84 | 3.54 | -0.08 | 80.26 | 0.0228 | 0.2111 | 0.0002 |
| 63 | SLE RA 1 | 1.43 | -0.05 | 50.83 | 0.012 | 0.0957 | 0.0001 |
| 63 | SLE RA 2 | 2.32 | -0.06 | 53.06 | 0.0165 | 0.1397 | 0.0002 |
| 63 | SLE RA 3 | 1.64 | -0.05 | 51.05 | 0.012 | 0.1065 | 0.0001 |
| 63 | SLE RA 4 | 2.17 | -0.05 | 52.38 | 0.0147 | 0.1329 | 0.0001 |
| 63 | SLE RA 5 | 2.57 | -0.06 | 52.91 | 0.0165 | 0.1523 | 0.0002 |
| 63 | SLE RA 6 | 1.89 | -0.05 | 50.9 | 0.012 | 0.1192 | 0.0001 |
| 63 | SLE RA 7 | 2.43 | -0.05 | 52.24 | 0.0147 | 0.1455 | 0.0001 |
| 63 | SLE RA 8 | 1.93 | -0.05 | 50.53 | 0.0119 | 0.121 | 0.0001 |
| 63 | SLE RA 9 | 2.47 | -0.05 | 51.87 | 0.0146 | 0.1473 | 0.0001 |
| 63 | SLE RA 10 | 2.51 | -0.06 | 58.06 | 0.0178 | 0.1503 | 0.0002 |
| 63 | SLE RA 11 | 1.83 | -0.05 | 56.04 | 0.0133 | 0.1171 | 0.0001 |
| 63 | SLE RA 12 | 2.36 | -0.06 | 57.38 | 0.016 | 0.1435 | 0.0001 |
| 63 | SLE RA 13 | 2.76 | -0.06 | 57.91 | 0.0177 | 0.1629 | 0.0002 |
| 63 | SLE RA 14 | 2.08 | -0.05 | 55.9 | 0.0132 | 0.1297 | 0.0001 |
| 63 | SLE RA 15 | 2.61 | -0.06 | 57.24 | 0.0159 | 0.1561 | 0.0001 |
| 63 | SLE RA 16 | 2.12 | -0.05 | 55.53 | 0.0132 | 0.1315 | 0.0001 |
| 63 | SLE RA 17 | 2.65 | -0.06 | 56.87 | 0.0159 | 0.1579 | 0.0001 |
| 63 | SLE RA 18 | 1.7 | -0.05 | 57.97 | 0.0139 | 0.1108 | 0.0001 |
| 63 | SLE RA 19 | 2.23 | -0.06 | 59.31 | 0.0166 | 0.1372 | 0.0001 |
| 63 | SLE RA 20 | 1.95 | -0.05 | 57.82 | 0.0138 | 0.1234 | 0.0001 |
| 63 | SLE RA 21 | 2.48 | -0.06 | 59.16 | 0.0165 | 0.1498 | 0.0001 |
| 63 | SLE FR 1 | 1.43 | -0.05 | 50.83 | 0.012 | 0.0957 | 0.0001 |
| 63 | SLE FR 2 | 1.61 | -0.05 | 51.28 | 0.0129 | 0.1045 | 0.0001 |
| 63 | SLE FR 3 | 1.53 | -0.05 | 50.77 | 0.012 | 0.1008 | 0.0001 |
| 63 | SLE FR 4 | 1.69 | -0.05 | 53.42 | 0.0135 | 0.109 | 0.0001 |
| 63 | SLE FR 5 | 1.61 | -0.05 | 52.91 | 0.0126 | 0.1053 | 0.0001 |
| 63 | SLE FR 6 | 1.56 | -0.05 | 54.4 | 0.0129 | 0.1033 | 0.0001 |
| 63 | SLE QP 1 | 1.43 | -0.05 | 50.83 | 0.012 | 0.0957 | 0.0001 |
| 63 | SLE QP 2 | 1.51 | -0.05 | 52.97 | 0.0126 | 0.1002 | 0.0001 |
| 63 | SLD 1 | 8.08 | 0 | 47.78 | 0.0026 | 0.4326 | 0.0005 |
| 63 | SLD 2 | 8.08 | 0 | 47.78 | 0.0026 | 0.4326 | 0.0005 |
| 63 | SLD 3 | 9.29 | 0.02 | 43.3 | -0.011 | 0.4824 | 0.0002 |
| 63 | SLD 4 | 9.29 | 0.02 | 43.3 | -0.011 | 0.4824 | 0.0002 |
| 63 | SLD 5 | 1.64 | -0.08 | 58.2 | 0.0301 | 0.1245 | 0.0006 |
| 63 | SLD 6 | 1.64 | -0.08 | 58.2 | 0.0301 | 0.1245 | 0.0006 |
| 63 | SLD 7 | 5.69 | 0.02 | 43.29 | -0.015 | 0.2903 | -0.0003 |
| 63 | SLD 8 | 5.69 | 0.02 | 43.29 | -0.015 | 0.2903 | -0.0003 |
| 63 | SLD 9 | -2.67 | -0.11 | 62.65 | 0.0402 | -0.0898 | 0.0004 |
| 63 | SLD 10 | -2.67 | -0.11 | 62.65 | 0.0402 | -0.0898 | 0.0004 |
| 63 | SLD 11 | 1.38 | -0.02 | 47.75 | -0.0049 | 0.0759 | -0.0004 |
| 63 | SLD 12 | 1.38 | -0.02 | 47.75 | -0.0049 | 0.0759 | -0.0004 |
| 63 | SLD 13 | -6.27 | -0.12 | 62.64 | 0.0361 | -0.2819 | -0.0001 |
| 63 | SLD 14 | -6.27 | -0.12 | 62.64 | 0.0361 | -0.2819 | -0.0001 |
| 63 | SLD 15 | -5.06 | -0.09 | 58.17 | 0.0226 | -0.2322 | -0.0003 |
| 63 | SLD 16 | -5.06 | -0.09 | 58.17 | 0.0226 | -0.2322 | -0.0003 |
| 63 | SLV 1 | 16.63 | 0.05 | 41.03 | -0.01 | 0.8656 | 0.001 |
| 63 | SLV 2 | 16.63 | 0.05 | 41.03 | -0.01 | 0.8656 | 0.001 |
| 63 | SLV 3 | 19.56 | 0.12 | 30.23 | -0.0425 | 0.9864 | 0.0004 |
| 63 | SLV 4 | 19.56 | 0.12 | 30.23 | -0.0425 | 0.9864 | 0.0004 |
| 63 | SLV 5 | 1.6 | -0.12 | 65.77 | 0.0552 | 0.1466 | 0.0013 |
| 63 | SLV 6 | 1.6 | -0.12 | 65.77 | 0.0552 | 0.1466 | 0.0013 |
| 63 | SLV 7 | 11.37 | 0.11 | 29.77 | -0.0533 | 0.5494 | -0.0008 |
| 63 | SLV 8 | 11.37 | 0.11 | 29.77 | -0.0533 | 0.5494 | -0.0008 |
| 63 | SLV 9 | -8.35 | -0.2 | 76.17 | 0.0785 | -0.3489 | 0.0009 |
| 63 | SLV 10 | -8.35 | -0.2 | 76.17 | 0.0785 | -0.3489 | 0.0009 |
| 63 | SLV 11 | 1.42 | 0.02 | 40.18 | -0.03 | 0.0539 | -0.0012 |
| 63 | SLV 12 | 1.42 | 0.02 | 40.18 | -0.03 | 0.0539 | -0.0012 |
| 63 | SLV 13 | -16.54 | -0.22 | 75.71 | 0.0677 | -0.786 | -0.0002 |
| 63 | SLV 14 | -16.54 | -0.22 | 75.71 | 0.0677 | -0.786 | -0.0002 |
| 63 | SLV 15 | -13.61 | -0.15 | 64.91 | 0.0351 | -0.6651 | -0.0009 |
| 63 | SLV 16 | -13.61 | -0.15 | 64.91 | 0.0351 | -0.6651 | -0.0009 |
| 64 | SLU 1 | -4.65 | -6.36 | 95.19 | -4.8343 | -0.3964 | -0.0073 |
| 64 | SLU 2 | -3.95 | -7.25 | 102.22 | -5.2171 | -0.3799 | -0.0057 |
| 64 | SLU 3 | -4.44 | -6.42 | 95.63 | -4.8675 | -0.3881 | -0.0071 |
| 64 | SLU 4 | -4.02 | -6.95 | 99.85 | -5.0972 | -0.3782 | -0.0062 |
| 64 | SLU 5 | -3.63 | -7.24 | 101.54 | -5.198 | -0.3639 | -0.0054 |
| 64 | SLU 6 | -4.12 | -6.42 | 94.95 | -4.8485 | -0.372 | -0.0068 |
| 64 | SLU 7 | -3.7 | -6.95 | 99.17 | -5.0781 | -0.3622 | -0.0059 |
| 64 | SLU 8 | -4 | -6.36 | 93.83 | -4.7963 | -0.3643 | -0.0067 |
| 64 | SLU 9 | -3.58 | -6.89 | 98.04 | -5.0259 | -0.3544 | -0.0057 |
| 64 | SLU 10 | -4.56 | -8.04 | 116.66 | -5.892 | -0.4368 | -0.0066 |
| 64 | SLU 11 | -5.05 | -7.22 | 110.07 | -5.5425 | -0.445 | -0.008 |
| 64 | SLU 12 | -4.63 | -7.75 | 114.29 | -5.7721 | -0.4351 | -0.007 |
| 64 | SLU 13 | -4.23 | -8.04 | 115.98 | -5.8729 | -0.4208 | -0.0063 |
| 64 | SLU 14 | -4.72 | -7.21 | 109.39 | -5.5234 | -0.429 | -0.0077 |
| 64 | SLU 15 | -4.3 | -7.74 | 113.61 | -5.753 | -0.4191 | -0.0067 |
| 64 | SLU 16 | -4.61 | -7.15 | 108.27 | -5.4712 | -0.4212 | -0.0075 |
| 64 | SLU 17 | -4.19 | -7.68 | 112.49 | -5.7008 | -0.4113 | -0.0066 |
| 64 | SLU 18 | -5.52 | -7.5 | 115.82 | -5.7985 | -0.4777 | -0.0085 |
| 64 | SLU 19 | -5.1 | -8.03 | 120.04 | -6.0281 | -0.4678 | -0.0076 |
| 64 | SLU 20 | -5.19 | -7.5 | 115.14 | -5.7795 | -0.4616 | -0.0082 |

| Nodo | Cont. | Reazione a traslazione | | | Reazione a rotazione | | |
|---|---|---|---|---|---|---|---|
| Ind. | N.br. | x | y | z | x | y | z |
| 64 | SLU 21 | -4.77 | -8.03 | 119.36 | -6.0091 | -0.4518 | -0.0073 |
| 64 | SLU 22 | -5.03 | -7 | 106.47 | -5.3678 | -0.4375 | -0.0079 |
| 64 | SLU 23 | -4.33 | -7.88 | 113.5 | -5.7505 | -0.421 | -0.0063 |
| 64 | SLU 24 | -4.82 | -7.06 | 106.91 | -5.401 | -0.4292 | -0.0077 |
| 64 | SLU 25 | -4.4 | -7.59 | 111.13 | -5.6306 | -0.4193 | -0.0067 |
| 64 | SLU 26 | -4.01 | -7.88 | 112.81 | -5.7315 | -0.4049 | -0.0059 |
| 64 | SLU 27 | -4.5 | -7.05 | 106.23 | -5.382 | -0.4131 | -0.0074 |
| 64 | SLU 28 | -4.08 | -7.58 | 110.44 | -5.6116 | -0.4032 | -0.0064 |
| 64 | SLU 29 | -4.39 | -6.99 | 105.1 | -5.3297 | -0.4054 | -0.0072 |
| 64 | SLU 30 | -3.97 | -7.52 | 109.32 | -5.5593 | -0.3955 | -0.0063 |
| 64 | SLU 31 | -4.94 | -8.68 | 127.94 | -6.4254 | -0.4779 | -0.0071 |
| 64 | SLU 32 | -5.43 | -7.85 | 121.35 | -6.0759 | -0.4861 | -0.0086 |
| 64 | SLU 33 | -5.01 | -8.38 | 125.57 | -6.3055 | -0.4762 | -0.0076 |
| 64 | SLU 34 | -4.61 | -8.68 | 127.26 | -6.4064 | -0.4618 | -0.0068 |
| 64 | SLU 35 | -5.11 | -7.85 | 120.67 | -6.0569 | -0.47 | -0.0082 |
| 64 | SLU 36 | -4.68 | -8.38 | 124.89 | -6.2865 | -0.4601 | -0.0073 |
| 64 | SLU 37 | -4.99 | -7.79 | 119.55 | -6.0046 | -0.4623 | -0.0081 |
| 64 | SLU 38 | -4.57 | -8.32 | 123.76 | -6.2343 | -0.4524 | -0.0071 |
| 64 | SLU 39 | -5.9 | -8.14 | 127.1 | -6.332 | -0.5188 | -0.0091 |
| 64 | SLU 40 | -5.48 | -8.67 | 131.32 | -6.5616 | -0.5089 | -0.0081 |
| 64 | SLU 41 | -5.57 | -8.13 | 126.42 | -6.3129 | -0.5027 | -0.0088 |
| 64 | SLU 42 | -5.15 | -8.66 | 130.64 | -6.5426 | -0.4928 | -0.0078 |
| 64 | SLU 43 | -5.92 | -8.05 | 119.88 | -6.1017 | -0.5012 | -0.0093 |
| 64 | SLU 44 | -5.22 | -8.94 | 126.91 | -6.4845 | -0.4847 | -0.0077 |
| 64 | SLU 45 | -5.71 | -8.11 | 120.32 | -6.1349 | -0.4929 | -0.0092 |
| 64 | SLU 46 | -5.29 | -8.64 | 124.54 | -6.3646 | -0.483 | -0.0082 |
| 64 | SLU 47 | -4.89 | -8.93 | 126.23 | -6.4654 | -0.4687 | -0.0074 |
| 64 | SLU 48 | -5.38 | -8.11 | 119.64 | -6.1159 | -0.4769 | -0.0088 |
| 64 | SLU 49 | -4.96 | -8.64 | 123.86 | -6.3455 | -0.467 | -0.0079 |
| 64 | SLU 50 | -5.27 | -8.05 | 118.52 | -6.0637 | -0.4691 | -0.0087 |
| 64 | SLU 51 | -4.85 | -8.58 | 122.73 | -6.2933 | -0.4592 | -0.0077 |
| 64 | SLU 52 | -5.82 | -9.74 | 141.35 | -7.1594 | -0.5416 | -0.0086 |
| 64 | SLU 53 | -6.31 | -8.91 | 134.76 | -6.8099 | -0.5498 | -0.01 |
| 64 | SLU 54 | -5.89 | -9.44 | 138.98 | -7.0395 | -0.5399 | -0.0091 |
| 64 | SLU 55 | -5.5 | -9.73 | 140.67 | -7.1403 | -0.5256 | -0.0083 |
| 64 | SLU 56 | -5.99 | -8.9 | 134.08 | -6.7908 | -0.5338 | -0.0097 |
| 64 | SLU 57 | -5.57 | -9.43 | 138.3 | -7.0204 | -0.5239 | -0.0087 |
| 64 | SLU 58 | -5.87 | -8.84 | 132.96 | -6.7386 | -0.526 | -0.0096 |
| 64 | SLU 59 | -5.45 | -9.37 | 137.17 | -6.9682 | -0.5161 | -0.0086 |
| 64 | SLU 60 | -6.78 | -9.19 | 140.51 | -7.0659 | -0.5825 | -0.0105 |
| 64 | SLU 61 | -6.36 | -9.72 | 144.73 | -7.2955 | -0.5726 | -0.0096 |
| 64 | SLU 62 | -6.46 | -9.19 | 139.83 | -7.0469 | -0.5665 | -0.0102 |
| 64 | SLU 63 | -6.04 | -9.72 | 144.05 | -7.2765 | -0.5566 | -0.0093 |
| 64 | SLU 64 | -6.3 | -8.69 | 131.16 | -6.6352 | -0.5423 | -0.0099 |
| 64 | SLU 65 | -5.6 | -9.57 | 138.19 | -7.0179 | -0.5258 | -0.0083 |
| 64 | SLU 66 | -6.09 | -8.75 | 131.6 | -6.6684 | -0.534 | -0.0097 |
| 64 | SLU 67 | -5.67 | -9.28 | 135.82 | -6.898 | -0.5241 | -0.0087 |
| 64 | SLU 68 | -5.27 | -9.57 | 137.5 | -6.9989 | -0.5098 | -0.0079 |
| 64 | SLU 69 | -5.77 | -8.74 | 130.92 | -6.6494 | -0.5179 | -0.0094 |
| 64 | SLU 70 | -5.34 | -9.27 | 135.13 | -6.879 | -0.5081 | -0.0084 |
| 64 | SLU 71 | -5.65 | -8.68 | 129.79 | -6.5971 | -0.5102 | -0.0092 |
| 64 | SLU 72 | -5.23 | -9.21 | 134.01 | -6.8267 | -0.5003 | -0.0083 |
| 64 | SLU 73 | -6.2 | -10.37 | 152.63 | -7.6928 | -0.5827 | -0.0091 |
| 64 | SLU 74 | -6.69 | -9.54 | 146.04 | -7.3433 | -0.5909 | -0.0106 |
| 64 | SLU 75 | -6.27 | -10.07 | 150.26 | -7.5729 | -0.581 | -0.0096 |
| 64 | SLU 76 | -5.88 | -10.37 | 151.95 | -7.6738 | -0.5667 | -0.0088 |
| 64 | SLU 77 | -6.37 | -9.54 | 145.36 | -7.3243 | -0.5749 | -0.0103 |
| 64 | SLU 78 | -5.95 | -10.07 | 149.58 | -7.5539 | -0.565 | -0.0093 |
| 64 | SLU 79 | -6.26 | -9.48 | 144.24 | -7.272 | -0.5671 | -0.0101 |
| 64 | SLU 80 | -5.84 | -10.01 | 148.45 | -7.5017 | -0.5572 | -0.0091 |
| 64 | SLU 81 | -7.16 | -9.83 | 151.79 | -7.5994 | -0.6236 | -0.0111 |
| 64 | SLU 82 | -6.74 | -10.36 | 156.01 | -7.829 | -0.6137 | -0.0101 |
| 64 | SLU 83 | -6.84 | -9.82 | 151.11 | -7.5803 | -0.6075 | -0.0108 |
| 64 | SLU 84 | -6.42 | -10.36 | 155.33 | -7.81 | -0.5977 | -0.0098 |
| 64 | SLE RA 1 | -4.76 | -6.54 | 98.41 | -4.9868 | -0.4081 | -0.0075 |
| 64 | SLE RA 2 | -4.29 | -7.13 | 103.1 | -5.2419 | -0.3971 | -0.0064 |
| 64 | SLE RA 3 | -4.62 | -6.58 | 98.71 | -5.0089 | -0.4026 | -0.0074 |
| 64 | SLE RA 4 | -4.34 | -6.94 | 101.52 | -5.162 | -0.396 | -0.0067 |
| 64 | SLE RA 5 | -4.08 | -7.13 | 102.64 | -5.2292 | -0.3864 | -0.0062 |
| 64 | SLE RA 6 | -4.41 | -6.58 | 98.25 | -4.9962 | -0.3919 | -0.0072 |
| 64 | SLE RA 7 | -4.13 | -6.93 | 101.06 | -5.1493 | -0.3853 | -0.0065 |
| 64 | SLE RA 8 | -4.33 | -6.54 | 97.5 | -4.9614 | -0.3867 | -0.0071 |
| 64 | SLE RA 9 | -4.05 | -6.89 | 100.31 | -5.1145 | -0.3801 | -0.0064 |
| 64 | SLE RA 10 | -4.7 | -7.67 | 112.73 | -5.6918 | -0.4351 | -0.007 |
| 64 | SLE RA 11 | -5.02 | -7.11 | 108.33 | -5.4588 | -0.4405 | -0.0079 |
| 64 | SLE RA 12 | -4.74 | -7.47 | 111.15 | -5.6119 | -0.4339 | -0.0073 |
| 64 | SLE RA 13 | -4.48 | -7.66 | 112.27 | -5.6791 | -0.4244 | -0.0068 |
| 64 | SLE RA 14 | -4.81 | -7.11 | 107.88 | -5.4461 | -0.4298 | -0.0077 |
| 64 | SLE RA 15 | -4.53 | -7.47 | 110.69 | -5.5992 | -0.4232 | -0.0071 |
| 64 | SLE RA 16 | -4.73 | -7.07 | 107.13 | -5.4113 | -0.4247 | -0.0076 |
| 64 | SLE RA 17 | -4.45 | -7.42 | 109.94 | -5.5644 | -0.4181 | -0.007 |
| 64 | SLE RA 18 | -5.34 | -7.3 | 112.17 | -5.6295 | -0.4623 | -0.0083 |
| 64 | SLE RA 19 | -5.06 | -7.66 | 114.98 | -5.7826 | -0.4557 | -0.0076 |
| 64 | SLE RA 20 | -5.12 | -7.3 | 111.71 | -5.6168 | -0.4516 | -0.0081 |
| 64 | SLE RA 21 | -4.84 | -7.65 | 114.52 | -5.7699 | -0.445 | -0.0074 |
| 64 | SLE FR 1 | -4.76 | -6.54 | 98.41 | -4.9868 | -0.4081 | -0.0075 |
| 64 | SLE FR 2 | -4.67 | -6.66 | 99.35 | -5.0378 | -0.4059 | -0.0073 |
| 64 | SLE FR 3 | -4.67 | -6.54 | 98.23 | -4.9817 | -0.4038 | -0.0074 |

| Nodo | Cont. | Reazione a traslazione | | | Reazione a rotazione | | |
|---|---|---|---|---|---|---|---|
| Ind. | N.br. | x | y | z | x | y | z |
| 64 | SLE FR 4 | -4.84 | -6.89 | 103.48 | -5.2306 | -0.4222 | -0.0075 |
| 64 | SLE FR 5 | -4.85 | -6.77 | 102.36 | -5.1745 | -0.4201 | -0.0076 |
| 64 | SLE FR 6 | -5.05 | -6.92 | 105.29 | -5.3081 | -0.4352 | -0.0079 |
| 64 | SLE QP 1 | -4.76 | -6.54 | 98.41 | -4.9868 | -0.4081 | -0.0075 |
| 64 | SLE QP 2 | -4.93 | -6.77 | 102.54 | -5.1796 | -0.4244 | -0.0077 |
| 64 | SLD 1 | 1.21 | -7.02 | 87.98 | -4.9028 | -0.0834 | 0.0045 |
| 64 | SLD 2 | 1.21 | -7.02 | 87.98 | -4.9028 | -0.0834 | 0.0045 |
| 64 | SLD 3 | 2.33 | -4.34 | 76.96 | -4.0933 | -0.0229 | 0.0002 |
| 64 | SLD 4 | 2.33 | -4.34 | 76.96 | -4.0933 | -0.0229 | 0.0002 |
| 64 | SLD 5 | -4.78 | -10.91 | 114.9 | -6.3243 | -0.4139 | 0.0025 |
| 64 | SLD 6 | -4.78 | -10.91 | 114.9 | -6.3243 | -0.4139 | 0.0025 |
| 64 | SLD 7 | -1.06 | -1.98 | 78.13 | -3.626 | -0.2121 | -0.0119 |
| 64 | SLD 8 | -1.06 | -1.98 | 78.13 | -3.626 | -0.2121 | -0.0119 |
| 64 | SLD 9 | -8.81 | -11.57 | 126.94 | -6.7332 | -0.6367 | -0.0035 |
| 64 | SLD 10 | -8.81 | -11.57 | 126.94 | -6.7332 | -0.6367 | -0.0035 |
| 64 | SLD 11 | -5.08 | -2.63 | 90.18 | -4.0349 | -0.4348 | -0.0179 |
| 64 | SLD 12 | -5.08 | -2.63 | 90.18 | -4.0349 | -0.4348 | -0.0179 |
| 64 | SLD 13 | -12.2 | -9.2 | 128.12 | -6.2659 | -0.8259 | -0.0156 |
| 64 | SLD 14 | -12.2 | -9.2 | 128.12 | -6.2659 | -0.8259 | -0.0156 |
| 64 | SLD 15 | -11.08 | -6.52 | 117.09 | -5.4564 | -0.7653 | -0.0199 |
| 64 | SLD 16 | -11.08 | -6.52 | 117.09 | -5.4564 | -0.7653 | -0.0199 |
| 64 | SLV 1 | 9.18 | -7.37 | 69.09 | -4.5467 | 0.3585 | 0.0207 |
| 64 | SLV 2 | 9.18 | -7.37 | 69.09 | -4.5467 | 0.3585 | 0.0207 |
| 64 | SLV 3 | 11.95 | -1.05 | 42.65 | -2.6253 | 0.5079 | 0.01 |
| 64 | SLV 4 | 11.95 | -1.05 | 42.65 | -2.6253 | 0.5079 | 0.01 |
| 64 | SLV 5 | -4.91 | -16.53 | 132.61 | -7.9039 | -0.4161 | 0.017 |
| 64 | SLV 6 | -4.91 | -16.53 | 132.61 | -7.9039 | -0.4161 | 0.017 |
| 64 | SLV 7 | 4.34 | 4.52 | 44.47 | -1.4991 | 0.0819 | -0.0186 |
| 64 | SLV 8 | 4.34 | 4.52 | 44.47 | -1.4991 | 0.0819 | -0.0186 |
| 64 | SLV 9 | -14.21 | -18.07 | 160.61 | -8.8601 | -0.9307 | 0.0032 |
| 64 | SLV 10 | -14.21 | -18.07 | 160.61 | -8.8601 | -0.9307 | 0.0032 |
| 64 | SLV 11 | -4.96 | 2.99 | 72.47 | -2.4553 | -0.4326 | -0.0324 |
| 64 | SLV 12 | -4.96 | 2.99 | 72.47 | -2.4553 | -0.4326 | -0.0324 |
| 64 | SLV 13 | -21.82 | -12.49 | 162.42 | -7.7339 | -1.3567 | -0.0255 |
| 64 | SLV 14 | -21.82 | -12.49 | 162.42 | -7.7339 | -1.3567 | -0.0255 |
| 64 | SLV 15 | -19.05 | -6.18 | 135.98 | -5.8125 | -1.2072 | -0.0361 |
| 64 | SLV 16 | -19.05 | -6.18 | 135.98 | -5.8125 | -1.2072 | -0.0361 |
| 65 | SLU 1 | -9.33 | -0.01 | 53.62 | 0.0108 | -0.1942 | 0.001 |
| 65 | SLU 2 | -9.36 | -0.01 | 56.86 | 0.0112 | -0.1805 | 0.0009 |
| 65 | SLU 3 | -9.2 | -0.01 | 53.61 | 0.0111 | -0.187 | 0.0011 |
| 65 | SLU 4 | -9.22 | -0.01 | 55.55 | 0.0114 | -0.1788 | 0.001 |
| 65 | SLU 5 | -9.07 | -0.01 | 56.12 | 0.0114 | -0.1689 | 0.001 |
| 65 | SLU 6 | -8.91 | -0.01 | 52.88 | 0.0114 | -0.1754 | 0.0011 |
| 65 | SLU 7 | -8.92 | -0.01 | 54.82 | 0.0117 | -0.1672 | 0.0011 |
| 65 | SLU 8 | -8.75 | -0.01 | 52.16 | 0.0114 | -0.171 | 0.0011 |
| 65 | SLU 9 | -8.77 | -0.01 | 54.1 | 0.0116 | -0.1628 | 0.0011 |
| 65 | SLU 10 | -10.78 | 0 | 65.28 | 0.0121 | -0.2096 | 0.001 |
| 65 | SLU 11 | -10.62 | -0.01 | 62.04 | 0.0121 | -0.216 | 0.0011 |
| 65 | SLU 12 | -10.64 | -0.01 | 63.98 | 0.0123 | -0.2078 | 0.0011 |
| 65 | SLU 13 | -10.49 | -0.01 | 64.55 | 0.0124 | -0.198 | 0.0011 |
| 65 | SLU 14 | -10.33 | -0.01 | 61.3 | 0.0124 | -0.2044 | 0.0012 |
| 65 | SLU 15 | -10.34 | -0.01 | 63.24 | 0.0126 | -0.1962 | 0.0011 |
| 65 | SLU 16 | -10.17 | -0.01 | 60.58 | 0.0124 | -0.2 | 0.0012 |
| 65 | SLU 17 | -10.19 | -0.01 | 62.52 | 0.0126 | -0.1918 | 0.0011 |
| 65 | SLU 18 | -11.36 | -0.01 | 65.66 | 0.0122 | -0.2357 | 0.0011 |
| 65 | SLU 19 | -11.38 | -0.01 | 67.6 | 0.0124 | -0.2275 | 0.0011 |
| 65 | SLU 20 | -11.07 | -0.01 | 64.93 | 0.0125 | -0.2241 | 0.0012 |
| 65 | SLU 21 | -11.09 | -0.01 | 66.87 | 0.0127 | -0.2159 | 0.0011 |
| 65 | SLU 22 | -10.37 | -0.01 | 60.1 | 0.0115 | -0.2134 | 0.001 |
| 65 | SLU 23 | -10.39 | 0 | 63.33 | 0.0118 | -0.1998 | 0.001 |
| 65 | SLU 24 | -10.23 | -0.01 | 60.09 | 0.0118 | -0.2062 | 0.0011 |
| 65 | SLU 25 | -10.25 | -0.01 | 62.03 | 0.012 | -0.198 | 0.0011 |
| 65 | SLU 26 | -10.1 | -0.01 | 62.6 | 0.0121 | -0.1882 | 0.001 |
| 65 | SLU 27 | -9.94 | -0.01 | 59.36 | 0.0121 | -0.1946 | 0.0011 |
| 65 | SLU 28 | -9.96 | -0.01 | 61.3 | 0.0123 | -0.1864 | 0.0011 |
| 65 | SLU 29 | -9.78 | -0.01 | 58.64 | 0.0121 | -0.1902 | 0.0011 |
| 65 | SLU 30 | -9.8 | -0.01 | 60.58 | 0.0123 | -0.182 | 0.0011 |
| 65 | SLU 31 | -11.81 | 0 | 71.76 | 0.0128 | -0.2288 | 0.001 |
| 65 | SLU 32 | -11.65 | -0.01 | 68.51 | 0.0128 | -0.2353 | 0.0012 |
| 65 | SLU 33 | -11.67 | -0.01 | 70.45 | 0.013 | -0.2271 | 0.0011 |
| 65 | SLU 34 | -11.52 | -0.01 | 71.03 | 0.0131 | -0.2172 | 0.0011 |
| 65 | SLU 35 | -11.36 | -0.01 | 67.78 | 0.0131 | -0.2237 | 0.0012 |
| 65 | SLU 36 | -11.38 | -0.01 | 69.72 | 0.0133 | -0.2155 | 0.0012 |
| 65 | SLU 37 | -11.2 | -0.01 | 67.06 | 0.013 | -0.2193 | 0.0012 |
| 65 | SLU 38 | -11.22 | -0.01 | 69 | 0.0133 | -0.2111 | 0.0012 |
| 65 | SLU 39 | -12.39 | -0.01 | 72.14 | 0.0129 | -0.2549 | 0.0011 |
| 65 | SLU 40 | -12.41 | -0.01 | 74.08 | 0.0131 | -0.2467 | 0.0011 |
| 65 | SLU 41 | -12.1 | -0.01 | 71.4 | 0.0132 | -0.2433 | 0.0012 |
| 65 | SLU 42 | -12.12 | -0.01 | 73.34 | 0.0134 | -0.2351 | 0.0012 |
| 65 | SLU 43 | -11.78 | -0.02 | 67.49 | 0.0138 | -0.2458 | 0.0013 |
| 65 | SLU 44 | -11.81 | -0.01 | 70.72 | 0.0142 | -0.2322 | 0.0012 |
| 65 | SLU 45 | -11.65 | -0.02 | 67.48 | 0.0141 | -0.2386 | 0.0013 |
| 65 | SLU 46 | -11.66 | -0.01 | 69.42 | 0.0144 | -0.2304 | 0.0013 |
| 65 | SLU 47 | -11.51 | -0.01 | 69.99 | 0.0145 | -0.2206 | 0.0013 |
| 65 | SLU 48 | -11.35 | -0.02 | 66.74 | 0.0144 | -0.227 | 0.0014 |
| 65 | SLU 49 | -11.37 | -0.01 | 68.68 | 0.0147 | -0.2188 | 0.0014 |
| 65 | SLU 50 | -11.2 | -0.02 | 66.02 | 0.0144 | -0.2226 | 0.0014 |
| 65 | SLU 51 | -11.21 | -0.01 | 67.96 | 0.0146 | -0.2144 | 0.0014 |

| Nodo | Cont. | Reazione a traslazione | | | Reazione a rotazione | | |
|---|---|---|---|---|---|---|---|
| Ind. | N.br. | x | y | z | x | y | z |
| 65 | SLU 52 | -13.23 | -0.01 | 79.15 | 0.0151 | -0.2612 | 0.0013 |
| 65 | SLU 53 | -13.07 | -0.02 | 75.9 | 0.0151 | -0.2677 | 0.0014 |
| 65 | SLU 54 | -13.08 | -0.01 | 77.84 | 0.0154 | -0.2595 | 0.0014 |
| 65 | SLU 55 | -12.93 | -0.01 | 78.41 | 0.0154 | -0.2496 | 0.0013 |
| 65 | SLU 56 | -12.77 | -0.02 | 75.17 | 0.0154 | -0.2561 | 0.0015 |
| 65 | SLU 57 | -12.79 | -0.01 | 77.11 | 0.0157 | -0.2479 | 0.0014 |
| 65 | SLU 58 | -12.62 | -0.02 | 74.45 | 0.0154 | -0.2517 | 0.0015 |
| 65 | SLU 59 | -12.63 | -0.01 | 76.39 | 0.0156 | -0.2435 | 0.0014 |
| 65 | SLU 60 | -13.81 | -0.02 | 79.52 | 0.0152 | -0.2873 | 0.0014 |
| 65 | SLU 61 | -13.82 | -0.01 | 81.46 | 0.0154 | -0.2791 | 0.0014 |
| 65 | SLU 62 | -13.52 | -0.02 | 78.79 | 0.0155 | -0.2757 | 0.0014 |
| 65 | SLU 63 | -13.53 | -0.01 | 80.73 | 0.0157 | -0.2675 | 0.0014 |
| 65 | SLU 64 | -12.81 | -0.02 | 73.97 | 0.0145 | -0.2651 | 0.0013 |
| 65 | SLU 65 | -12.84 | -0.01 | 77.2 | 0.0148 | -0.2514 | 0.0013 |
| 65 | SLU 66 | -12.68 | -0.02 | 73.95 | 0.0148 | -0.2579 | 0.0014 |
| 65 | SLU 67 | -12.69 | -0.01 | 75.89 | 0.015 | -0.2497 | 0.0013 |
| 65 | SLU 68 | -12.55 | -0.01 | 76.47 | 0.0151 | -0.2398 | 0.0013 |
| 65 | SLU 69 | -12.39 | -0.02 | 73.22 | 0.0151 | -0.2463 | 0.0014 |
| 65 | SLU 70 | -12.4 | -0.01 | 75.16 | 0.0153 | -0.2381 | 0.0014 |
| 65 | SLU 71 | -12.23 | -0.02 | 72.5 | 0.0151 | -0.2419 | 0.0014 |
| 65 | SLU 72 | -12.25 | -0.01 | 74.44 | 0.0153 | -0.2337 | 0.0014 |
| 65 | SLU 73 | -14.26 | -0.01 | 85.62 | 0.0158 | -0.2805 | 0.0013 |
| 65 | SLU 74 | -14.1 | -0.02 | 82.38 | 0.0158 | -0.2869 | 0.0015 |
| 65 | SLU 75 | -14.11 | -0.01 | 84.32 | 0.016 | -0.2787 | 0.0014 |
| 65 | SLU 76 | -13.97 | -0.01 | 84.89 | 0.0161 | -0.2689 | 0.0014 |
| 65 | SLU 77 | -13.81 | -0.02 | 81.65 | 0.0161 | -0.2753 | 0.0015 |
| 65 | SLU 78 | -13.82 | -0.01 | 83.59 | 0.0163 | -0.2671 | 0.0015 |
| 65 | SLU 79 | -13.65 | -0.02 | 80.93 | 0.0161 | -0.2709 | 0.0015 |
| 65 | SLU 80 | -13.67 | -0.01 | 82.87 | 0.0163 | -0.2627 | 0.0015 |
| 65 | SLU 81 | -14.84 | -0.01 | 86 | 0.0159 | -0.3066 | 0.0014 |
| 65 | SLU 82 | -14.86 | -0.01 | 87.94 | 0.0161 | -0.2984 | 0.0014 |
| 65 | SLU 83 | -14.55 | -0.02 | 85.27 | 0.0162 | -0.295 | 0.0015 |
| 65 | SLU 84 | -14.57 | -0.01 | 87.21 | 0.0164 | -0.2868 | 0.0014 |
| 65 | SLE RA 1 | -9.63 | -0.01 | 55.47 | 0.011 | -0.1997 | 0.001 |
| 65 | SLE RA 2 | -9.65 | -0.01 | 57.63 | 0.0112 | -0.1906 | 0.001 |
| 65 | SLE RA 3 | -9.54 | -0.01 | 55.47 | 0.0112 | -0.1949 | 0.0011 |
| 65 | SLE RA 4 | -9.55 | -0.01 | 56.76 | 0.0114 | -0.1894 | 0.001 |
| 65 | SLE RA 5 | -9.45 | -0.01 | 57.14 | 0.0114 | -0.1828 | 0.001 |
| 65 | SLE RA 6 | -9.35 | -0.01 | 54.98 | 0.0114 | -0.1871 | 0.0011 |
| 65 | SLE RA 7 | -9.36 | -0.01 | 56.27 | 0.0116 | -0.1817 | 0.0011 |
| 65 | SLE RA 8 | -9.24 | -0.01 | 54.5 | 0.0114 | -0.1842 | 0.0011 |
| 65 | SLE RA 9 | -9.25 | -0.01 | 55.79 | 0.0115 | -0.1788 | 0.0011 |
| 65 | SLE RA 10 | -10.59 | -0.01 | 63.25 | 0.0119 | -0.2099 | 0.001 |
| 65 | SLE RA 11 | -10.49 | -0.01 | 61.08 | 0.0119 | -0.2142 | 0.0011 |
| 65 | SLE RA 12 | -10.5 | -0.01 | 62.38 | 0.012 | -0.2088 | 0.0011 |
| 65 | SLE RA 13 | -10.4 | -0.01 | 62.76 | 0.0121 | -0.2022 | 0.0011 |
| 65 | SLE RA 14 | -10.29 | -0.01 | 60.59 | 0.0121 | -0.2065 | 0.0011 |
| 65 | SLE RA 15 | -10.3 | -0.01 | 61.89 | 0.0122 | -0.201 | 0.0011 |
| 65 | SLE RA 16 | -10.19 | -0.01 | 60.11 | 0.012 | -0.2036 | 0.0011 |
| 65 | SLE RA 17 | -10.2 | -0.01 | 61.41 | 0.0122 | -0.1981 | 0.0011 |
| 65 | SLE RA 18 | -10.98 | -0.01 | 63.5 | 0.0119 | -0.2273 | 0.0011 |
| 65 | SLE RA 19 | -10.99 | -0.01 | 64.79 | 0.0121 | -0.2219 | 0.0011 |
| 65 | SLE RA 20 | -10.79 | -0.01 | 63.01 | 0.0121 | -0.2196 | 0.0011 |
| 65 | SLE RA 21 | -10.8 | -0.01 | 64.3 | 0.0123 | -0.2141 | 0.0011 |
| 65 | SLE FR 1 | -9.63 | -0.01 | 55.47 | 0.011 | -0.1997 | 0.001 |
| 65 | SLE FR 2 | -9.63 | -0.01 | 55.9 | 0.011 | -0.1979 | 0.001 |
| 65 | SLE FR 3 | -9.55 | -0.01 | 55.28 | 0.0111 | -0.1966 | 0.001 |
| 65 | SLE FR 4 | -10.04 | -0.01 | 58.31 | 0.0113 | -0.2062 | 0.001 |
| 65 | SLE FR 5 | -9.96 | -0.01 | 57.69 | 0.0113 | -0.2049 | 0.0011 |
| 65 | SLE FR 6 | -10.3 | -0.01 | 59.49 | 0.0114 | -0.2135 | 0.0011 |
| 65 | SLE QP 1 | -9.63 | -0.01 | 55.47 | 0.011 | -0.1997 | 0.001 |
| 65 | SLE QP 2 | -10.03 | -0.01 | 57.88 | 0.0113 | -0.208 | 0.001 |
| 65 | SLD 1 | -4.25 | -0.06 | 41.53 | 0.0166 | 0.0131 | 0.002 |
| 65 | SLD 2 | -4.25 | -0.06 | 41.53 | 0.0166 | 0.0131 | 0.002 |
| 65 | SLD 3 | -3.11 | -0.12 | 36.65 | 0.0385 | 0.0454 | 0.005 |
| 65 | SLD 4 | -3.11 | -0.12 | 36.65 | 0.0385 | 0.0454 | 0.005 |
| 65 | SLD 5 | -10.03 | 0.07 | 60.37 | -0.0203 | -0.1907 | -0.0031 |
| 65 | SLD 6 | -10.03 | 0.07 | 60.37 | -0.0203 | -0.1907 | -0.0031 |
| 65 | SLD 7 | -6.23 | -0.15 | 44.12 | 0.0526 | -0.0829 | 0.0067 |
| 65 | SLD 8 | -6.23 | -0.15 | 44.12 | 0.0526 | -0.0829 | 0.0067 |
| 65 | SLD 9 | -13.84 | 0.12 | 71.64 | -0.0301 | -0.3331 | -0.0046 |
| 65 | SLD 10 | -13.84 | 0.12 | 71.64 | -0.0301 | -0.3331 | -0.0046 |
| 65 | SLD 11 | -10.04 | -0.1 | 55.39 | 0.0429 | -0.2252 | 0.0052 |
| 65 | SLD 12 | -10.04 | -0.1 | 55.39 | 0.0429 | -0.2252 | 0.0052 |
| 65 | SLD 13 | -16.96 | 0.1 | 79.11 | -0.016 | -0.4614 | -0.0029 |
| 65 | SLD 14 | -16.96 | 0.1 | 79.11 | -0.016 | -0.4614 | -0.0029 |
| 65 | SLD 15 | -15.82 | 0.03 | 74.23 | 0.0059 | -0.429 | 0.0001 |
| 65 | SLD 16 | -15.82 | 0.03 | 74.23 | 0.0059 | -0.429 | 0.0001 |
| 65 | SLV 1 | 3.28 | -0.12 | 20.23 | 0.0227 | 0.3012 | 0.0032 |
| 65 | SLV 2 | 3.28 | -0.12 | 20.23 | 0.0227 | 0.3012 | 0.0032 |
| 65 | SLV 3 | 6.05 | -0.28 | 8.44 | 0.0748 | 0.3802 | 0.0102 |
| 65 | SLV 4 | 6.05 | -0.28 | 8.44 | 0.0748 | 0.3802 | 0.0102 |
| 65 | SLV 5 | -10.24 | 0.2 | 64.47 | -0.0644 | -0.175 | -0.009 |
| 65 | SLV 6 | -10.24 | 0.2 | 64.47 | -0.0644 | -0.175 | -0.009 |
| 65 | SLV 7 | -1.01 | -0.33 | 25.17 | 0.1094 | 0.0882 | 0.0145 |
| 65 | SLV 8 | -1.01 | -0.33 | 25.17 | 0.1094 | 0.0882 | 0.0145 |
| 65 | SLV 9 | -19.06 | 0.31 | 90.59 | -0.0869 | -0.5042 | -0.0124 |
| 65 | SLV 10 | -19.06 | 0.31 | 90.59 | -0.0869 | -0.5042 | -0.0124 |

| Nodo | Cont. | Reazione a traslazione | | | Reazione a rotazione | | |
|---|---|---|---|---|---|---|---|
| Ind. | N.br. | x | y | z | x | y | z |
| 65 | SLV 11 | -9.83 | -0.22 | 51.29 | 0.0869 | -0.241 | 0.0111 |
| 65 | SLV 12 | -9.83 | -0.22 | 51.29 | 0.0869 | -0.241 | 0.0111 |
| 65 | SLV 13 | -26.12 | 0.25 | 107.32 | -0.0523 | -0.7962 | -0.0081 |
| 65 | SLV 14 | -26.12 | 0.25 | 107.32 | -0.0523 | -0.7962 | -0.0081 |
| 65 | SLV 15 | -23.35 | 0.09 | 95.53 | -0.0001 | -0.7172 | -0.0011 |
| 65 | SLV 16 | -23.35 | 0.09 | 95.53 | -0.0001 | -0.7172 | -0.0011 |
| 66 | SLU 1 | -3.71 | 0.14 | 16.29 | 0.0208 | -0.3974 | 0.022 |
| 66 | SLU 2 | -4.2 | 0.15 | 15.06 | 0.02 | -0.4216 | 0.0232 |
| 66 | SLU 3 | -3.63 | 0.13 | 16.89 | 0.0223 | -0.3959 | 0.0219 |
| 66 | SLU 4 | -3.92 | 0.14 | 16.15 | 0.0218 | -0.4104 | 0.0226 |
| 66 | SLU 5 | -4.03 | 0.14 | 15.77 | 0.0218 | -0.4149 | 0.0227 |
| 66 | SLU 6 | -3.46 | 0.12 | 17.61 | 0.0241 | -0.3893 | 0.0214 |
| 66 | SLU 7 | -3.75 | 0.13 | 16.87 | 0.0236 | -0.4038 | 0.0221 |
| 66 | SLU 8 | -3.37 | 0.12 | 17.72 | 0.0245 | -0.3841 | 0.0211 |
| 66 | SLU 9 | -3.67 | 0.13 | 16.98 | 0.024 | -0.3986 | 0.0218 |
| 66 | SLU 10 | -4.99 | 0.19 | 17.94 | 0.0217 | -0.5035 | 0.028 |
| 66 | SLU 11 | -4.42 | 0.17 | 19.78 | 0.024 | -0.4778 | 0.0267 |
| 66 | SLU 12 | -4.71 | 0.18 | 19.04 | 0.0235 | -0.4923 | 0.0274 |
| 66 | SLU 13 | -4.83 | 0.18 | 18.66 | 0.0235 | -0.4968 | 0.0275 |
| 66 | SLU 14 | -4.25 | 0.16 | 20.49 | 0.0259 | -0.4712 | 0.0262 |
| 66 | SLU 15 | -4.54 | 0.17 | 19.75 | 0.0253 | -0.4857 | 0.0269 |
| 66 | SLU 16 | -4.17 | 0.16 | 20.61 | 0.0263 | -0.4661 | 0.0259 |
| 66 | SLU 17 | -4.46 | 0.17 | 19.87 | 0.0257 | -0.4806 | 0.0266 |
| 66 | SLU 18 | -4.85 | 0.19 | 20.41 | 0.0233 | -0.5145 | 0.0289 |
| 66 | SLU 19 | -5.14 | 0.2 | 19.67 | 0.0228 | -0.5289 | 0.0296 |
| 66 | SLU 20 | -4.68 | 0.18 | 21.13 | 0.0252 | -0.5078 | 0.0284 |
| 66 | SLU 21 | -4.97 | 0.19 | 20.39 | 0.0246 | -0.5223 | 0.0291 |
| 66 | SLU 22 | -4.62 | 0.18 | 16.45 | 0.0183 | -0.4623 | 0.0261 |
| 66 | SLU 23 | -5.11 | 0.19 | 15.22 | 0.0174 | -0.4865 | 0.0273 |
| 66 | SLU 24 | -4.54 | 0.18 | 17.06 | 0.0197 | -0.4608 | 0.026 |
| 66 | SLU 25 | -4.83 | 0.18 | 16.32 | 0.0192 | -0.4753 | 0.0267 |
| 66 | SLU 26 | -4.94 | 0.19 | 15.94 | 0.0192 | -0.4798 | 0.0269 |
| 66 | SLU 27 | -4.37 | 0.17 | 17.77 | 0.0215 | -0.4542 | 0.0256 |
| 66 | SLU 28 | -4.66 | 0.18 | 17.03 | 0.021 | -0.4687 | 0.0263 |
| 66 | SLU 29 | -4.28 | 0.17 | 17.88 | 0.0219 | -0.4491 | 0.0253 |
| 66 | SLU 30 | -4.58 | 0.17 | 17.14 | 0.0214 | -0.4635 | 0.026 |
| 66 | SLU 31 | -5.9 | 0.23 | 18.1 | 0.0191 | -0.5684 | 0.0321 |
| 66 | SLU 32 | -5.33 | 0.22 | 19.94 | 0.0214 | -0.5428 | 0.0308 |
| 66 | SLU 33 | -5.62 | 0.22 | 19.2 | 0.0209 | -0.5572 | 0.0315 |
| 66 | SLU 34 | -5.74 | 0.22 | 18.82 | 0.021 | -0.5618 | 0.0317 |
| 66 | SLU 35 | -5.16 | 0.21 | 20.65 | 0.0233 | -0.5361 | 0.0304 |
| 66 | SLU 36 | -5.45 | 0.21 | 19.91 | 0.0227 | -0.5506 | 0.0311 |
| 66 | SLU 37 | -5.08 | 0.2 | 20.77 | 0.0237 | -0.531 | 0.0301 |
| 66 | SLU 38 | -5.37 | 0.21 | 20.03 | 0.0231 | -0.5455 | 0.0308 |
| 66 | SLU 39 | -5.76 | 0.24 | 20.57 | 0.0207 | -0.5794 | 0.033 |
| 66 | SLU 40 | -6.05 | 0.24 | 19.83 | 0.0202 | -0.5938 | 0.0337 |
| 66 | SLU 41 | -5.59 | 0.23 | 21.29 | 0.0226 | -0.5727 | 0.0326 |
| 66 | SLU 42 | -5.88 | 0.23 | 20.55 | 0.022 | -0.5872 | 0.0333 |
| 66 | SLU 43 | -4.51 | 0.16 | 21.13 | 0.028 | -0.4944 | 0.0272 |
| 66 | SLU 44 | -5 | 0.18 | 19.89 | 0.0271 | -0.5185 | 0.0283 |
| 66 | SLU 45 | -4.43 | 0.16 | 21.73 | 0.0294 | -0.4929 | 0.027 |
| 66 | SLU 46 | -4.72 | 0.17 | 20.99 | 0.0289 | -0.5074 | 0.0277 |
| 66 | SLU 47 | -4.83 | 0.17 | 20.61 | 0.029 | -0.5119 | 0.0279 |
| 66 | SLU 48 | -4.26 | 0.15 | 22.44 | 0.0313 | -0.4863 | 0.0266 |
| 66 | SLU 49 | -4.55 | 0.16 | 21.7 | 0.0307 | -0.5007 | 0.0273 |
| 66 | SLU 50 | -4.18 | 0.15 | 22.56 | 0.0317 | -0.4811 | 0.0263 |
| 66 | SLU 51 | -4.47 | 0.15 | 21.82 | 0.0311 | -0.4956 | 0.027 |
| 66 | SLU 52 | -5.8 | 0.21 | 22.77 | 0.0288 | -0.6005 | 0.0331 |
| 66 | SLU 53 | -5.22 | 0.2 | 24.61 | 0.0312 | -0.5748 | 0.0319 |
| 66 | SLU 54 | -5.51 | 0.2 | 23.87 | 0.0306 | -0.5893 | 0.0325 |
| 66 | SLU 55 | -5.63 | 0.21 | 23.49 | 0.0307 | -0.5938 | 0.0327 |
| 66 | SLU 56 | -5.05 | 0.19 | 25.32 | 0.033 | -0.5682 | 0.0314 |
| 66 | SLU 57 | -5.35 | 0.2 | 24.58 | 0.0325 | -0.5827 | 0.0321 |
| 66 | SLU 58 | -4.97 | 0.18 | 25.44 | 0.0334 | -0.563 | 0.0311 |
| 66 | SLU 59 | -5.26 | 0.19 | 24.7 | 0.0329 | -0.5775 | 0.0318 |
| 66 | SLU 60 | -5.65 | 0.22 | 25.24 | 0.0305 | -0.6114 | 0.0341 |
| 66 | SLU 61 | -5.94 | 0.23 | 24.5 | 0.0299 | -0.6259 | 0.0347 |
| 66 | SLU 62 | -5.48 | 0.21 | 25.96 | 0.0323 | -0.6048 | 0.0336 |
| 66 | SLU 63 | -5.77 | 0.22 | 25.22 | 0.0318 | -0.6193 | 0.0343 |
| 66 | SLU 64 | -5.42 | 0.21 | 21.29 | 0.0254 | -0.5593 | 0.0313 |
| 66 | SLU 65 | -5.91 | 0.22 | 20.05 | 0.0245 | -0.5834 | 0.0325 |
| 66 | SLU 66 | -5.34 | 0.2 | 21.89 | 0.0268 | -0.5578 | 0.0312 |
| 66 | SLU 67 | -5.63 | 0.21 | 21.15 | 0.0263 | -0.5723 | 0.0319 |
| 66 | SLU 68 | -5.74 | 0.21 | 20.77 | 0.0264 | -0.5768 | 0.032 |
| 66 | SLU 69 | -5.17 | 0.19 | 22.6 | 0.0287 | -0.5512 | 0.0307 |
| 66 | SLU 70 | -5.46 | 0.2 | 21.86 | 0.0281 | -0.5657 | 0.0314 |
| 66 | SLU 71 | -5.09 | 0.19 | 22.72 | 0.0291 | -0.546 | 0.0305 |
| 66 | SLU 72 | -5.38 | 0.2 | 21.98 | 0.0286 | -0.5605 | 0.0311 |
| 66 | SLU 73 | -6.71 | 0.26 | 22.94 | 0.0263 | -0.6654 | 0.0373 |
| 66 | SLU 74 | -6.13 | 0.24 | 24.77 | 0.0286 | -0.6397 | 0.036 |
| 66 | SLU 75 | -6.42 | 0.25 | 24.03 | 0.028 | -0.6542 | 0.0367 |
| 66 | SLU 76 | -6.54 | 0.25 | 23.65 | 0.0281 | -0.6587 | 0.0369 |
| 66 | SLU 77 | -5.96 | 0.23 | 25.49 | 0.0304 | -0.6331 | 0.0356 |
| 66 | SLU 78 | -6.26 | 0.24 | 24.75 | 0.0299 | -0.6476 | 0.0362 |
| 66 | SLU 79 | -5.88 | 0.23 | 25.6 | 0.0308 | -0.6279 | 0.0353 |
| 66 | SLU 80 | -6.17 | 0.24 | 24.86 | 0.0303 | -0.6424 | 0.036 |
| 66 | SLU 81 | -6.56 | 0.26 | 25.41 | 0.0279 | -0.6763 | 0.0382 |
| 66 | SLU 82 | -6.85 | 0.27 | 24.67 | 0.0273 | -0.6908 | 0.0389 |

| Nodo | Cont. | Reazione a traslazione | | | Reazione a rotazione | | |
|---|---|---|---|---|---|---|---|
| Ind. | N.br. | x | y | z | x | y | z |
| 66 | SLU 83 | -6.39 | 0.25 | 26.12 | 0.0297 | -0.6697 | 0.0378 |
| 66 | SLU 84 | -6.68 | 0.26 | 25.38 | 0.0292 | -0.6842 | 0.0384 |
| 66 | SLE RA 1 | -3.97 | 0.15 | 16.34 | 0.0201 | -0.416 | 0.0232 |
| 66 | SLE RA 2 | -4.3 | 0.16 | 15.52 | 0.0195 | -0.4321 | 0.0239 |
| 66 | SLE RA 3 | -3.91 | 0.15 | 16.74 | 0.0211 | -0.415 | 0.0231 |
| 66 | SLE RA 4 | -4.11 | 0.15 | 16.25 | 0.0207 | -0.4246 | 0.0235 |
| 66 | SLE RA 5 | -4.18 | 0.15 | 15.99 | 0.0207 | -0.4276 | 0.0237 |
| 66 | SLE RA 6 | -3.8 | 0.14 | 17.22 | 0.0223 | -0.4105 | 0.0228 |
| 66 | SLE RA 7 | -4 | 0.15 | 16.72 | 0.0219 | -0.4202 | 0.0233 |
| 66 | SLE RA 8 | -3.75 | 0.14 | 17.29 | 0.0226 | -0.4071 | 0.0226 |
| 66 | SLE RA 9 | -3.94 | 0.14 | 16.8 | 0.0222 | -0.4168 | 0.0231 |
| 66 | SLE RA 10 | -4.83 | 0.18 | 17.44 | 0.0207 | -0.4867 | 0.0272 |
| 66 | SLE RA 11 | -4.44 | 0.17 | 18.66 | 0.0222 | -0.4696 | 0.0263 |
| 66 | SLE RA 12 | -4.64 | 0.18 | 18.17 | 0.0219 | -0.4792 | 0.0268 |
| 66 | SLE RA 13 | -4.71 | 0.18 | 17.92 | 0.0219 | -0.4822 | 0.0269 |
| 66 | SLE RA 14 | -4.33 | 0.17 | 19.14 | 0.0234 | -0.4652 | 0.026 |
| 66 | SLE RA 15 | -4.53 | 0.17 | 18.65 | 0.0231 | -0.4748 | 0.0265 |
| 66 | SLE RA 16 | -4.28 | 0.16 | 19.21 | 0.0237 | -0.4617 | 0.0258 |
| 66 | SLE RA 17 | -4.47 | 0.17 | 18.72 | 0.0234 | -0.4714 | 0.0263 |
| 66 | SLE RA 18 | -4.73 | 0.19 | 19.08 | 0.0218 | -0.494 | 0.0278 |
| 66 | SLE RA 19 | -4.92 | 0.19 | 18.59 | 0.0214 | -0.5036 | 0.0282 |
| 66 | SLE RA 20 | -4.62 | 0.18 | 19.56 | 0.023 | -0.4896 | 0.0275 |
| 66 | SLE RA 21 | -4.81 | 0.19 | 19.07 | 0.0226 | -0.4992 | 0.0279 |
| 66 | SLE FR 1 | -3.97 | 0.15 | 16.34 | 0.0201 | -0.416 | 0.0232 |
| 66 | SLE FR 2 | -4.04 | 0.15 | 16.17 | 0.02 | -0.4192 | 0.0233 |
| 66 | SLE FR 3 | -3.93 | 0.15 | 16.53 | 0.0206 | -0.4142 | 0.0231 |
| 66 | SLE FR 4 | -4.26 | 0.16 | 17 | 0.0205 | -0.4426 | 0.0247 |
| 66 | SLE FR 5 | -4.15 | 0.16 | 17.35 | 0.0211 | -0.4376 | 0.0244 |
| 66 | SLE FR 6 | -4.35 | 0.17 | 17.71 | 0.0209 | -0.455 | 0.0255 |
| 66 | SLE QP 1 | -3.97 | 0.15 | 16.34 | 0.0201 | -0.416 | 0.0232 |
| 66 | SLE QP 2 | -4.2 | 0.16 | 17.16 | 0.0206 | -0.4394 | 0.0246 |
| 66 | SLD 1 | -0.16 | -0.1 | 30.56 | 0.0642 | -0.2414 | 0.0112 |
| 66 | SLD 2 | -0.16 | -0.1 | 30.56 | 0.0642 | -0.2414 | 0.0112 |
| 66 | SLD 3 | 0.29 | -0.28 | 28.75 | 0.1005 | -0.2141 | 0.0046 |
| 66 | SLD 4 | 0.29 | -0.28 | 28.75 | 0.1005 | -0.2141 | 0.0046 |
| 66 | SLD 5 | -3.67 | 0.35 | 23.92 | -0.0213 | -0.4214 | 0.0305 |
| 66 | SLD 6 | -3.67 | 0.35 | 23.92 | -0.0213 | -0.4214 | 0.0305 |
| 66 | SLD 7 | -2.18 | -0.24 | 17.9 | 0.0996 | -0.3303 | 0.0086 |
| 66 | SLD 8 | -2.18 | -0.24 | 17.9 | 0.0996 | -0.3303 | 0.0086 |
| 66 | SLD 9 | -6.22 | 0.56 | 16.43 | -0.0584 | -0.5484 | 0.0405 |
| 66 | SLD 10 | -6.22 | 0.56 | 16.43 | -0.0584 | -0.5484 | 0.0405 |
| 66 | SLD 11 | -4.73 | -0.03 | 10.4 | 0.0625 | -0.4573 | 0.0186 |
| 66 | SLD 12 | -4.73 | -0.03 | 10.4 | 0.0625 | -0.4573 | 0.0186 |
| 66 | SLD 13 | -8.68 | 0.6 | 5.57 | -0.0593 | -0.6647 | 0.0445 |
| 66 | SLD 14 | -8.68 | 0.6 | 5.57 | -0.0593 | -0.6647 | 0.0445 |
| 66 | SLD 15 | -8.24 | 0.42 | 3.77 | -0.023 | -0.6374 | 0.0379 |
| 66 | SLD 16 | -8.24 | 0.42 | 3.77 | -0.023 | -0.6374 | 0.0379 |
| 66 | SLV 1 | 5.1 | -0.44 | 48.3 | 0.1216 | 0.0154 | -0.0061 |
| 66 | SLV 2 | 5.1 | -0.44 | 48.3 | 0.1216 | 0.0154 | -0.0061 |
| 66 | SLV 3 | 6.2 | -0.86 | 44.03 | 0.2065 | 0.0821 | -0.0215 |
| 66 | SLV 4 | 6.2 | -0.86 | 44.03 | 0.2065 | 0.0821 | -0.0215 |
| 66 | SLV 5 | -3.07 | 0.61 | 32.98 | -0.0779 | -0.4042 | 0.0388 |
| 66 | SLV 6 | -3.07 | 0.61 | 32.98 | -0.0779 | -0.4042 | 0.0388 |
| 66 | SLV 7 | 0.58 | -0.77 | 18.75 | 0.2052 | -0.1817 | -0.0127 |
| 66 | SLV 8 | 0.58 | -0.77 | 18.75 | 0.2052 | -0.1817 | -0.0127 |
| 66 | SLV 9 | -8.98 | 1.09 | 15.57 | -0.164 | -0.6971 | 0.0618 |
| 66 | SLV 10 | -8.98 | 1.09 | 15.57 | -0.164 | -0.6971 | 0.0618 |
| 66 | SLV 11 | -5.33 | -0.28 | 1.35 | 0.1191 | -0.4745 | 0.0103 |
| 66 | SLV 12 | -5.33 | -0.28 | 1.35 | 0.1191 | -0.4745 | 0.0103 |
| 66 | SLV 13 | -14.59 | 1.18 | -9.71 | -0.1653 | -0.9609 | 0.0706 |
| 66 | SLV 14 | -14.59 | 1.18 | -9.71 | -0.1653 | -0.9609 | 0.0706 |
| 66 | SLV 15 | -13.5 | 0.77 | -13.98 | -0.0804 | -0.8941 | 0.0552 |
| 66 | SLV 16 | -13.5 | 0.77 | -13.98 | -0.0804 | -0.8941 | 0.0552 |
| 67 | SLU 1 | -8.96 | 1.33 | 88.13 | -0.4899 | -0.32 | -0.0833 |
| 67 | SLU 2 | -9.28 | 1.03 | 89.08 | -0.4736 | -0.3459 | -0.0867 |
| 67 | SLU 3 | -9.01 | 1.31 | 89.16 | -0.4956 | -0.3182 | -0.0836 |
| 67 | SLU 4 | -9.2 | 1.13 | 89.73 | -0.4859 | -0.3338 | -0.0857 |
| 67 | SLU 5 | -9.25 | 1 | 89.61 | -0.4771 | -0.3396 | -0.0863 |
| 67 | SLU 6 | -8.99 | 1.28 | 89.68 | -0.4991 | -0.3119 | -0.0831 |
| 67 | SLU 7 | -9.18 | 1.1 | 90.25 | -0.4893 | -0.3274 | -0.0852 |
| 67 | SLU 8 | -8.91 | 1.26 | 89.18 | -0.4969 | -0.3074 | -0.0823 |
| 67 | SLU 9 | -9.1 | 1.08 | 89.75 | -0.4871 | -0.3229 | -0.0844 |
| 67 | SLU 10 | -10.83 | 1.51 | 104.5 | -0.5716 | -0.3907 | -0.1009 |
| 67 | SLU 11 | -10.56 | 1.79 | 104.57 | -0.5936 | -0.363 | -0.0978 |
| 67 | SLU 12 | -10.76 | 1.62 | 105.14 | -0.5839 | -0.3786 | -0.0998 |
| 67 | SLU 13 | -10.81 | 1.48 | 105.02 | -0.5751 | -0.3844 | -0.1004 |
| 67 | SLU 14 | -10.54 | 1.76 | 105.09 | -0.5971 | -0.3567 | -0.0973 |
| 67 | SLU 15 | -10.73 | 1.58 | 105.66 | -0.5873 | -0.3722 | -0.0994 |
| 67 | SLU 16 | -10.47 | 1.75 | 104.59 | -0.5948 | -0.3522 | -0.0965 |
| 67 | SLU 17 | -10.66 | 1.57 | 105.16 | -0.5851 | -0.3677 | -0.0986 |
| 67 | SLU 18 | -11.18 | 2.02 | 110.15 | -0.6299 | -0.384 | -0.1036 |
| 67 | SLU 19 | -11.37 | 1.84 | 110.72 | -0.6201 | -0.3996 | -0.1056 |
| 67 | SLU 20 | -11.16 | 1.99 | 110.67 | -0.6334 | -0.3777 | -0.1031 |
| 67 | SLU 21 | -11.35 | 1.81 | 111.24 | -0.6236 | -0.3932 | -0.1051 |
| 67 | SLU 22 | -10.08 | 1.45 | 96.55 | -0.5312 | -0.3698 | -0.0941 |
| 67 | SLU 23 | -10.39 | 1.15 | 97.5 | -0.515 | -0.3957 | -0.0975 |
| 67 | SLU 24 | -10.13 | 1.43 | 97.58 | -0.5369 | -0.368 | -0.0944 |
| 67 | SLU 25 | -10.32 | 1.26 | 98.15 | -0.5272 | -0.3835 | -0.0965 |

| Nodo | Cont. | Reazione a traslazione | | | Reazione a rotazione | | |
|---|---|---|---|---|---|---|---|
| Ind. | N.br. | x | y | z | x | y | z |
| 67 | SLU 26 | -10.37 | 1.12 | 98.03 | -0.5185 | -0.3894 | -0.0971 |
| 67 | SLU 27 | -10.11 | 1.4 | 98.1 | -0.5404 | -0.3616 | -0.0939 |
| 67 | SLU 28 | -10.3 | 1.22 | 98.67 | -0.5307 | -0.3772 | -0.096 |
| 67 | SLU 29 | -10.03 | 1.39 | 97.6 | -0.5382 | -0.3571 | -0.0931 |
| 67 | SLU 30 | -10.22 | 1.21 | 98.17 | -0.5284 | -0.3727 | -0.0952 |
| 67 | SLU 31 | -11.95 | 1.64 | 112.92 | -0.613 | -0.4405 | -0.1117 |
| 67 | SLU 32 | -11.68 | 1.92 | 112.99 | -0.6349 | -0.4128 | -0.1086 |
| 67 | SLU 33 | -11.87 | 1.74 | 113.56 | -0.6252 | -0.4283 | -0.1107 |
| 67 | SLU 34 | -11.93 | 1.61 | 113.44 | -0.6164 | -0.4342 | -0.1113 |
| 67 | SLU 35 | -11.66 | 1.89 | 113.51 | -0.6384 | -0.4064 | -0.1081 |
| 67 | SLU 36 | -11.85 | 1.71 | 114.09 | -0.6287 | -0.422 | -0.1102 |
| 67 | SLU 37 | -11.59 | 1.87 | 113.01 | -0.6362 | -0.4019 | -0.1073 |
| 67 | SLU 38 | -11.78 | 1.69 | 113.58 | -0.6264 | -0.4175 | -0.1094 |
| 67 | SLU 39 | -12.3 | 2.15 | 118.57 | -0.6712 | -0.4338 | -0.1144 |
| 67 | SLU 40 | -12.49 | 1.97 | 119.14 | -0.6615 | -0.4493 | -0.1164 |
| 67 | SLU 41 | -12.27 | 2.11 | 119.09 | -0.6747 | -0.4274 | -0.1139 |
| 67 | SLU 42 | -12.46 | 1.93 | 119.66 | -0.6649 | -0.443 | -0.116 |
| 67 | SLU 43 | -11.26 | 1.68 | 111.69 | -0.6227 | -0.399 | -0.1046 |
| 67 | SLU 44 | -11.58 | 1.38 | 112.64 | -0.6064 | -0.4249 | -0.108 |
| 67 | SLU 45 | -11.31 | 1.66 | 112.71 | -0.6284 | -0.3972 | -0.1049 |
| 67 | SLU 46 | -11.5 | 1.48 | 113.28 | -0.6187 | -0.4127 | -0.1069 |
| 67 | SLU 47 | -11.56 | 1.35 | 113.16 | -0.6099 | -0.4185 | -0.1075 |
| 67 | SLU 48 | -11.29 | 1.63 | 113.24 | -0.6319 | -0.3908 | -0.1044 |
| 67 | SLU 49 | -11.48 | 1.45 | 113.81 | -0.6221 | -0.4064 | -0.1064 |
| 67 | SLU 50 | -11.22 | 1.62 | 112.73 | -0.6296 | -0.3863 | -0.1036 |
| 67 | SLU 51 | -11.41 | 1.44 | 113.3 | -0.6199 | -0.4019 | -0.1057 |
| 67 | SLU 52 | -13.13 | 1.87 | 128.05 | -0.7044 | -0.4697 | -0.1222 |
| 67 | SLU 53 | -12.87 | 2.15 | 128.12 | -0.7264 | -0.442 | -0.119 |
| 67 | SLU 54 | -13.06 | 1.97 | 128.69 | -0.7166 | -0.4575 | -0.1211 |
| 67 | SLU 55 | -13.11 | 1.84 | 128.57 | -0.7079 | -0.4633 | -0.1217 |
| 67 | SLU 56 | -12.85 | 2.12 | 128.65 | -0.7299 | -0.4356 | -0.1186 |
| 67 | SLU 57 | -13.04 | 1.94 | 129.22 | -0.7201 | -0.4512 | -0.1206 |
| 67 | SLU 58 | -12.77 | 2.1 | 128.14 | -0.7276 | -0.4311 | -0.1178 |
| 67 | SLU 59 | -12.96 | 1.92 | 128.71 | -0.7179 | -0.4467 | -0.1199 |
| 67 | SLU 60 | -13.48 | 2.37 | 133.7 | -0.7627 | -0.463 | -0.1248 |
| 67 | SLU 61 | -13.67 | 2.2 | 134.27 | -0.7529 | -0.4785 | -0.1269 |
| 67 | SLU 62 | -13.46 | 2.34 | 134.23 | -0.7661 | -0.4566 | -0.1243 |
| 67 | SLU 63 | -13.65 | 2.16 | 134.8 | -0.7564 | -0.4722 | -0.1264 |
| 67 | SLU 64 | -12.38 | 1.81 | 120.11 | -0.664 | -0.4487 | -0.1154 |
| 67 | SLU 65 | -12.7 | 1.51 | 121.06 | -0.6478 | -0.4746 | -0.1188 |
| 67 | SLU 66 | -12.43 | 1.79 | 121.13 | -0.6697 | -0.4469 | -0.1157 |
| 67 | SLU 67 | -12.62 | 1.61 | 121.7 | -0.66 | -0.4625 | -0.1177 |
| 67 | SLU 68 | -12.68 | 1.48 | 121.58 | -0.6513 | -0.4683 | -0.1183 |
| 67 | SLU 69 | -12.41 | 1.76 | 121.66 | -0.6732 | -0.4406 | -0.1152 |
| 67 | SLU 70 | -12.6 | 1.58 | 122.23 | -0.6635 | -0.4561 | -0.1173 |
| 67 | SLU 71 | -12.33 | 1.74 | 121.15 | -0.671 | -0.4361 | -0.1144 |
| 67 | SLU 72 | -12.53 | 1.56 | 121.72 | -0.6612 | -0.4516 | -0.1165 |
| 67 | SLU 73 | -14.25 | 1.99 | 136.47 | -0.7458 | -0.5194 | -0.133 |
| 67 | SLU 74 | -13.99 | 2.27 | 136.54 | -0.7677 | -0.4917 | -0.1299 |
| 67 | SLU 75 | -14.18 | 2.1 | 137.11 | -0.758 | -0.5073 | -0.1319 |
| 67 | SLU 76 | -14.23 | 1.96 | 136.99 | -0.7492 | -0.5131 | -0.1325 |
| 67 | SLU 77 | -13.96 | 2.24 | 137.07 | -0.7712 | -0.4854 | -0.1294 |
| 67 | SLU 78 | -14.16 | 2.06 | 137.64 | -0.7615 | -0.5009 | -0.1314 |
| 67 | SLU 79 | -13.89 | 2.23 | 136.56 | -0.769 | -0.4809 | -0.1286 |
| 67 | SLU 80 | -14.08 | 2.05 | 137.13 | -0.7592 | -0.4964 | -0.1307 |
| 67 | SLU 81 | -14.6 | 2.5 | 142.12 | -0.804 | -0.5127 | -0.1356 |
| 67 | SLU 82 | -14.79 | 2.32 | 142.69 | -0.7943 | -0.5283 | -0.1377 |
| 67 | SLU 83 | -14.58 | 2.47 | 142.65 | -0.8075 | -0.5064 | -0.1352 |
| 67 | SLU 84 | -14.77 | 2.29 | 143.22 | -0.7977 | -0.5219 | -0.1372 |
| 67 | SLE RA 1 | -9.28 | 1.36 | 90.54 | -0.5017 | -0.3342 | -0.0864 |
| 67 | SLE RA 2 | -9.49 | 1.16 | 91.17 | -0.4909 | -0.3515 | -0.0887 |
| 67 | SLE RA 3 | -9.31 | 1.35 | 91.22 | -0.5055 | -0.333 | -0.0866 |
| 67 | SLE RA 4 | -9.44 | 1.23 | 91.6 | -0.499 | -0.3434 | -0.0879 |
| 67 | SLE RA 5 | -9.47 | 1.14 | 91.52 | -0.4932 | -0.3473 | -0.0884 |
| 67 | SLE RA 6 | -9.3 | 1.33 | 91.57 | -0.5078 | -0.3288 | -0.0862 |
| 67 | SLE RA 7 | -9.42 | 1.21 | 91.95 | -0.5013 | -0.3392 | -0.0876 |
| 67 | SLE RA 8 | -9.25 | 1.32 | 91.24 | -0.5063 | -0.3258 | -0.0857 |
| 67 | SLE RA 9 | -9.37 | 1.2 | 91.62 | -0.4998 | -0.3362 | -0.0871 |
| 67 | SLE RA 10 | -10.53 | 1.49 | 101.45 | -0.5562 | -0.3814 | -0.0981 |
| 67 | SLE RA 11 | -10.35 | 1.67 | 101.5 | -0.5708 | -0.3629 | -0.096 |
| 67 | SLE RA 12 | -10.48 | 1.56 | 101.88 | -0.5643 | -0.3733 | -0.0974 |
| 67 | SLE RA 13 | -10.51 | 1.47 | 101.8 | -0.5585 | -0.3772 | -0.0978 |
| 67 | SLE RA 14 | -10.33 | 1.65 | 101.85 | -0.5732 | -0.3587 | -0.0957 |
| 67 | SLE RA 15 | -10.46 | 1.53 | 102.23 | -0.5667 | -0.369 | -0.0971 |
| 67 | SLE RA 16 | -10.28 | 1.64 | 101.51 | -0.5717 | -0.3557 | -0.0952 |
| 67 | SLE RA 17 | -10.41 | 1.52 | 101.89 | -0.5652 | -0.366 | -0.0966 |
| 67 | SLE RA 18 | -10.76 | 1.82 | 105.22 | -0.595 | -0.3769 | -0.0999 |
| 67 | SLE RA 19 | -10.88 | 1.7 | 105.6 | -0.5885 | -0.3873 | -0.1013 |
| 67 | SLE RA 20 | -10.74 | 1.8 | 105.57 | -0.5973 | -0.3727 | -0.0996 |
| 67 | SLE RA 21 | -10.87 | 1.68 | 105.95 | -0.5908 | -0.383 | -0.1009 |
| 67 | SLE FR 1 | -9.28 | 1.36 | 90.54 | -0.5017 | -0.3342 | -0.0864 |
| 67 | SLE FR 2 | -9.32 | 1.32 | 90.67 | -0.4995 | -0.3377 | -0.0868 |
| 67 | SLE FR 3 | -9.27 | 1.35 | 90.68 | -0.5026 | -0.3325 | -0.0862 |
| 67 | SLE FR 4 | -9.76 | 1.46 | 95.07 | -0.5275 | -0.3505 | -0.0909 |
| 67 | SLE FR 5 | -9.71 | 1.49 | 95.08 | -0.5306 | -0.3453 | -0.0903 |
| 67 | SLE FR 6 | -10.02 | 1.59 | 97.88 | -0.5484 | -0.3556 | -0.0931 |
| 67 | SLE QP 1 | -9.28 | 1.36 | 90.54 | -0.5017 | -0.3342 | -0.0864 |
| 67 | SLE QP 2 | -9.72 | 1.5 | 94.94 | -0.5297 | -0.347 | -0.0904 |

| Nodo | Cont. | Reazione a traslazione | | | Reazione a rotazione | | |
|---|---|---|---|---|---|---|---|
| Ind. | N.br. | x | y | z | x | y | z |
| 67 | SLD 1 | -7.76 | 2.78 | 89.25 | -0.5887 | -0.1525 | -0.0668 |
| 67 | SLD 2 | -7.76 | 2.78 | 89.25 | -0.5887 | -0.1525 | -0.0668 |
| 67 | SLD 3 | -7.32 | -1.25 | 84.63 | -0.3797 | -0.1314 | -0.0622 |
| 67 | SLD 4 | -7.32 | -1.25 | 84.63 | -0.3797 | -0.1314 | -0.0622 |
| 67 | SLD 5 | -9.79 | 7.98 | 100.24 | -0.8643 | -0.3206 | -0.0903 |
| 67 | SLD 6 | -9.79 | 7.98 | 100.24 | -0.8643 | -0.3206 | -0.0903 |
| 67 | SLD 7 | -8.34 | -5.42 | 84.84 | -0.1678 | -0.2504 | -0.075 |
| 67 | SLD 8 | -8.34 | -5.42 | 84.84 | -0.1678 | -0.2504 | -0.075 |
| 67 | SLD 9 | -11.1 | 8.42 | 105.04 | -0.8916 | -0.4437 | -0.1058 |
| 67 | SLD 10 | -11.1 | 8.42 | 105.04 | -0.8916 | -0.4437 | -0.1058 |
| 67 | SLD 11 | -9.65 | -4.98 | 89.65 | -0.1951 | -0.3735 | -0.0906 |
| 67 | SLD 12 | -9.65 | -4.98 | 89.65 | -0.1951 | -0.3735 | -0.0906 |
| 67 | SLD 13 | -12.12 | 4.25 | 105.26 | -0.6796 | -0.5627 | -0.1187 |
| 67 | SLD 14 | -12.12 | 4.25 | 105.26 | -0.6796 | -0.5627 | -0.1187 |
| 67 | SLD 15 | -11.68 | 0.22 | 100.64 | -0.4707 | -0.5416 | -0.1141 |
| 67 | SLD 16 | -11.68 | 0.22 | 100.64 | -0.4707 | -0.5416 | -0.1141 |
| 67 | SLV 1 | -5.23 | 4.44 | 81.9 | -0.6617 | 0.1008 | -0.0361 |
| 67 | SLV 2 | -5.23 | 4.44 | 81.9 | -0.6617 | 0.1008 | -0.0361 |
| 67 | SLV 3 | -4.18 | -4.86 | 70.99 | -0.1792 | 0.1531 | -0.0252 |
| 67 | SLV 4 | -4.18 | -4.86 | 70.99 | -0.1792 | 0.1531 | -0.0252 |
| 67 | SLV 5 | -9.97 | 16.49 | 107.57 | -1.3011 | -0.2919 | -0.0907 |
| 67 | SLV 6 | -9.97 | 16.49 | 107.57 | -1.3011 | -0.2919 | -0.0907 |
| 67 | SLV 7 | -6.47 | -14.52 | 71.22 | 0.3073 | -0.1177 | -0.0542 |
| 67 | SLV 8 | -6.47 | -14.52 | 71.22 | 0.3073 | -0.1177 | -0.0542 |
| 67 | SLV 9 | -12.97 | 17.52 | 118.67 | -1.3667 | -0.5763 | -0.1266 |
| 67 | SLV 10 | -12.97 | 17.52 | 118.67 | -1.3667 | -0.5763 | -0.1266 |
| 67 | SLV 11 | -9.48 | -13.49 | 82.31 | 0.2418 | -0.4021 | -0.0901 |
| 67 | SLV 12 | -9.48 | -13.49 | 82.31 | 0.2418 | -0.4021 | -0.0901 |
| 67 | SLV 13 | -15.26 | 7.86 | 118.89 | -0.8802 | -0.8471 | -0.1557 |
| 67 | SLV 14 | -15.26 | 7.86 | 118.89 | -0.8802 | -0.8471 | -0.1557 |
| 67 | SLV 15 | -14.21 | -1.44 | 107.98 | -0.3977 | -0.7949 | -0.1447 |
| 67 | SLV 16 | -14.21 | -1.44 | 107.98 | -0.3977 | -0.7949 | -0.1447 |
| 68 | SLU 1 | 8.03 | 2.39 | 86.76 | -0.5353 | 0.2512 | 0.0752 |
| 68 | SLU 2 | 8.23 | 1.95 | 86.9 | -0.5097 | 0.2686 | 0.0774 |
| 68 | SLU 3 | 8.24 | 2.94 | 89.84 | -0.5777 | 0.2542 | 0.0772 |
| 68 | SLU 4 | 8.37 | 2.68 | 89.93 | -0.5623 | 0.2647 | 0.0785 |
| 68 | SLU 5 | 8.42 | 2.54 | 89.77 | -0.5533 | 0.2699 | 0.0791 |
| 68 | SLU 6 | 8.43 | 3.53 | 92.71 | -0.6213 | 0.2555 | 0.0789 |
| 68 | SLU 7 | 8.55 | 3.27 | 92.8 | -0.6059 | 0.2659 | 0.0803 |
| 68 | SLU 8 | 8.4 | 3.57 | 92.5 | -0.6225 | 0.2537 | 0.0786 |
| 68 | SLU 9 | 8.52 | 3.3 | 92.58 | -0.6071 | 0.2641 | 0.08 |
| 68 | SLU 10 | 9.75 | 2.52 | 101.54 | -0.6048 | 0.327 | 0.092 |
| 68 | SLU 11 | 9.77 | 3.52 | 104.48 | -0.6727 | 0.3125 | 0.0918 |
| 68 | SLU 12 | 9.89 | 3.26 | 104.57 | -0.6573 | 0.323 | 0.0931 |
| 68 | SLU 13 | 9.94 | 3.11 | 104.41 | -0.6484 | 0.3282 | 0.0937 |
| 68 | SLU 14 | 9.95 | 4.11 | 107.35 | -0.7163 | 0.3138 | 0.0935 |
| 68 | SLU 15 | 10.08 | 3.85 | 107.44 | -0.7009 | 0.3243 | 0.0949 |
| 68 | SLU 16 | 9.92 | 4.15 | 107.14 | -0.7176 | 0.312 | 0.0932 |
| 68 | SLU 17 | 10.05 | 3.88 | 107.22 | -0.7022 | 0.3225 | 0.0946 |
| 68 | SLU 18 | 10.2 | 3.21 | 107.67 | -0.6711 | 0.3345 | 0.096 |
| 68 | SLU 19 | 10.33 | 2.95 | 107.76 | -0.6558 | 0.345 | 0.0974 |
| 68 | SLU 20 | 10.39 | 3.8 | 110.54 | -0.7147 | 0.3358 | 0.0978 |
| 68 | SLU 21 | 10.51 | 3.54 | 110.63 | -0.6994 | 0.3462 | 0.0991 |
| 68 | SLU 22 | 9.04 | 2.99 | 96.09 | -0.6043 | 0.2905 | 0.0851 |
| 68 | SLU 23 | 9.25 | 2.55 | 96.23 | -0.5786 | 0.3079 | 0.0873 |
| 68 | SLU 24 | 9.26 | 3.55 | 99.17 | -0.6466 | 0.2935 | 0.0871 |
| 68 | SLU 25 | 9.38 | 3.28 | 99.26 | -0.6312 | 0.304 | 0.0885 |
| 68 | SLU 26 | 9.44 | 3.14 | 99.1 | -0.6222 | 0.3092 | 0.0891 |
| 68 | SLU 27 | 9.45 | 4.14 | 102.04 | -0.6902 | 0.2948 | 0.0889 |
| 68 | SLU 28 | 9.57 | 3.87 | 102.13 | -0.6748 | 0.3052 | 0.0902 |
| 68 | SLU 29 | 9.42 | 4.17 | 101.83 | -0.6915 | 0.293 | 0.0886 |
| 68 | SLU 30 | 9.54 | 3.91 | 101.91 | -0.6761 | 0.3035 | 0.0899 |
| 68 | SLU 31 | 10.77 | 3.13 | 110.87 | -0.6737 | 0.3663 | 0.1019 |
| 68 | SLU 32 | 10.78 | 4.13 | 113.81 | -0.7417 | 0.3519 | 0.1017 |
| 68 | SLU 33 | 10.91 | 3.86 | 113.9 | -0.7263 | 0.3623 | 0.1031 |
| 68 | SLU 34 | 10.96 | 3.72 | 113.74 | -0.7173 | 0.3675 | 0.1037 |
| 68 | SLU 35 | 10.97 | 4.72 | 116.68 | -0.7853 | 0.3531 | 0.1035 |
| 68 | SLU 36 | 11.09 | 4.45 | 116.77 | -0.7699 | 0.3636 | 0.1048 |
| 68 | SLU 37 | 10.94 | 4.75 | 116.47 | -0.7865 | 0.3513 | 0.1032 |
| 68 | SLU 38 | 11.06 | 4.49 | 116.55 | -0.7712 | 0.3618 | 0.1045 |
| 68 | SLU 39 | 11.22 | 3.82 | 117 | -0.7401 | 0.3738 | 0.106 |
| 68 | SLU 40 | 11.34 | 3.55 | 117.09 | -0.7247 | 0.3843 | 0.1073 |
| 68 | SLU 41 | 11.41 | 4.41 | 119.87 | -0.7837 | 0.3751 | 0.1077 |
| 68 | SLU 42 | 11.53 | 4.14 | 119.96 | -0.7683 | 0.3856 | 0.109 |
| 68 | SLU 43 | 10.08 | 2.9 | 109.58 | -0.6723 | 0.313 | 0.0943 |
| 68 | SLU 44 | 10.29 | 2.46 | 109.73 | -0.6467 | 0.3305 | 0.0965 |
| 68 | SLU 45 | 10.3 | 3.45 | 112.67 | -0.7146 | 0.3161 | 0.0964 |
| 68 | SLU 46 | 10.42 | 3.19 | 112.76 | -0.6992 | 0.3265 | 0.0977 |
| 68 | SLU 47 | 10.48 | 3.05 | 112.6 | -0.6903 | 0.3317 | 0.0983 |
| 68 | SLU 48 | 10.49 | 4.04 | 115.54 | -0.7582 | 0.3173 | 0.0981 |
| 68 | SLU 49 | 10.61 | 3.78 | 115.63 | -0.7428 | 0.3278 | 0.0994 |
| 68 | SLU 50 | 10.46 | 4.08 | 115.32 | -0.7595 | 0.3156 | 0.0978 |
| 68 | SLU 51 | 10.58 | 3.81 | 115.41 | -0.7441 | 0.326 | 0.0991 |
| 68 | SLU 52 | 11.81 | 3.03 | 124.37 | -0.7417 | 0.3888 | 0.1111 |
| 68 | SLU 53 | 11.82 | 4.03 | 127.31 | -0.8097 | 0.3744 | 0.111 |
| 68 | SLU 54 | 11.95 | 3.76 | 127.4 | -0.7943 | 0.3849 | 0.1123 |
| 68 | SLU 55 | 12 | 3.62 | 127.24 | -0.7853 | 0.3901 | 0.1129 |
| 68 | SLU 56 | 12.01 | 4.62 | 130.18 | -0.8533 | 0.3757 | 0.1127 |

| Nodo | Cont. | Reazione a traslazione | | | Reazione a rotazione | | |
|---|---|---|---|---|---|---|---|
| Ind. | N.br. | x | y | z | x | y | z |
| 68 | SLU 57 | 12.13 | 4.35 | 130.27 | -0.8379 | 0.3861 | 0.114 |
| 68 | SLU 58 | 11.98 | 4.65 | 129.96 | -0.8546 | 0.3739 | 0.1124 |
| 68 | SLU 59 | 12.1 | 4.39 | 130.05 | -0.8392 | 0.3844 | 0.1137 |
| 68 | SLU 60 | 12.26 | 3.72 | 130.5 | -0.8081 | 0.3964 | 0.1152 |
| 68 | SLU 61 | 12.38 | 3.46 | 130.58 | -0.7927 | 0.4069 | 0.1165 |
| 68 | SLU 62 | 12.45 | 4.31 | 133.37 | -0.8517 | 0.3977 | 0.1169 |
| 68 | SLU 63 | 12.57 | 4.05 | 133.45 | -0.8363 | 0.4081 | 0.1182 |
| 68 | SLU 64 | 11.1 | 3.5 | 118.91 | -0.7412 | 0.3524 | 0.1043 |
| 68 | SLU 65 | 11.31 | 3.06 | 119.06 | -0.7156 | 0.3698 | 0.1065 |
| 68 | SLU 66 | 11.32 | 4.06 | 122 | -0.7836 | 0.3554 | 0.1063 |
| 68 | SLU 67 | 11.44 | 3.79 | 122.09 | -0.7682 | 0.3658 | 0.1076 |
| 68 | SLU 68 | 11.5 | 3.65 | 121.93 | -0.7592 | 0.371 | 0.1082 |
| 68 | SLU 69 | 11.51 | 4.65 | 124.87 | -0.8272 | 0.3566 | 0.108 |
| 68 | SLU 70 | 11.63 | 4.38 | 124.96 | -0.8118 | 0.3671 | 0.1093 |
| 68 | SLU 71 | 11.48 | 4.68 | 124.65 | -0.8284 | 0.3549 | 0.1077 |
| 68 | SLU 72 | 11.6 | 4.42 | 124.74 | -0.8131 | 0.3653 | 0.109 |
| 68 | SLU 73 | 12.83 | 3.64 | 133.7 | -0.8107 | 0.4281 | 0.1211 |
| 68 | SLU 74 | 12.84 | 4.63 | 136.64 | -0.8786 | 0.4137 | 0.1209 |
| 68 | SLU 75 | 12.97 | 4.37 | 136.73 | -0.8632 | 0.4242 | 0.1222 |
| 68 | SLU 76 | 13.02 | 4.23 | 136.57 | -0.8543 | 0.4294 | 0.1228 |
| 68 | SLU 77 | 13.03 | 5.22 | 139.51 | -0.9222 | 0.415 | 0.1226 |
| 68 | SLU 78 | 13.15 | 4.96 | 139.6 | -0.9068 | 0.4254 | 0.1239 |
| 68 | SLU 79 | 13 | 5.26 | 139.29 | -0.9235 | 0.4132 | 0.1223 |
| 68 | SLU 80 | 13.12 | 4.99 | 139.38 | -0.9081 | 0.4237 | 0.1236 |
| 68 | SLU 81 | 13.28 | 4.33 | 139.83 | -0.877 | 0.4357 | 0.1251 |
| 68 | SLU 82 | 13.4 | 4.06 | 139.91 | -0.8617 | 0.4462 | 0.1264 |
| 68 | SLU 83 | 13.47 | 4.92 | 142.7 | -0.9206 | 0.437 | 0.1268 |
| 68 | SLU 84 | 13.59 | 4.65 | 142.78 | -0.9053 | 0.4474 | 0.1282 |
| 68 | SLE RA 1 | 8.32 | 2.56 | 89.42 | -0.555 | 0.2624 | 0.078 |
| 68 | SLE RA 2 | 8.45 | 2.27 | 89.52 | -0.5379 | 0.274 | 0.0795 |
| 68 | SLE RA 3 | 8.46 | 2.93 | 91.48 | -0.5833 | 0.2644 | 0.0794 |
| 68 | SLE RA 4 | 8.54 | 2.75 | 91.54 | -0.573 | 0.2714 | 0.0802 |
| 68 | SLE RA 5 | 8.58 | 2.66 | 91.43 | -0.567 | 0.2749 | 0.0806 |
| 68 | SLE RA 6 | 8.59 | 3.32 | 93.39 | -0.6123 | 0.2653 | 0.0805 |
| 68 | SLE RA 7 | 8.67 | 3.15 | 93.45 | -0.6021 | 0.2722 | 0.0814 |
| 68 | SLE RA 8 | 8.57 | 3.35 | 93.25 | -0.6132 | 0.2641 | 0.0803 |
| 68 | SLE RA 9 | 8.65 | 3.17 | 93.31 | -0.6029 | 0.2711 | 0.0812 |
| 68 | SLE RA 10 | 9.47 | 2.65 | 99.28 | -0.6013 | 0.3129 | 0.0892 |
| 68 | SLE RA 11 | 9.48 | 3.32 | 101.24 | -0.6466 | 0.3033 | 0.0891 |
| 68 | SLE RA 12 | 9.56 | 3.14 | 101.3 | -0.6364 | 0.3103 | 0.09 |
| 68 | SLE RA 13 | 9.59 | 3.04 | 101.19 | -0.6304 | 0.3138 | 0.0904 |
| 68 | SLE RA 14 | 9.6 | 3.71 | 103.15 | -0.6757 | 0.3042 | 0.0902 |
| 68 | SLE RA 15 | 9.68 | 3.53 | 103.21 | -0.6654 | 0.3111 | 0.0911 |
| 68 | SLE RA 16 | 9.58 | 3.73 | 103.01 | -0.6765 | 0.303 | 0.0901 |
| 68 | SLE RA 17 | 9.66 | 3.56 | 103.07 | -0.6663 | 0.31 | 0.0909 |
| 68 | SLE RA 18 | 9.77 | 3.11 | 103.36 | -0.6456 | 0.318 | 0.0919 |
| 68 | SLE RA 19 | 9.85 | 2.93 | 103.42 | -0.6353 | 0.3249 | 0.0928 |
| 68 | SLE RA 20 | 9.89 | 3.5 | 105.28 | -0.6746 | 0.3188 | 0.0931 |
| 68 | SLE RA 21 | 9.97 | 3.33 | 105.33 | -0.6644 | 0.3258 | 0.094 |
| 68 | SLE FR 1 | 8.32 | 2.56 | 89.42 | -0.555 | 0.2624 | 0.078 |
| 68 | SLE FR 2 | 8.34 | 2.5 | 89.44 | -0.5516 | 0.2647 | 0.0783 |
| 68 | SLE FR 3 | 8.37 | 2.72 | 90.19 | -0.5667 | 0.2627 | 0.0785 |
| 68 | SLE FR 4 | 8.78 | 2.67 | 93.62 | -0.5788 | 0.2814 | 0.0825 |
| 68 | SLE FR 5 | 8.8 | 2.88 | 94.37 | -0.5938 | 0.2794 | 0.0826 |
| 68 | SLE FR 6 | 9.04 | 2.84 | 96.39 | -0.6003 | 0.2902 | 0.085 |
| 68 | SLE QP 1 | 8.32 | 2.56 | 89.42 | -0.555 | 0.2624 | 0.078 |
| 68 | SLE QP 2 | 8.75 | 2.73 | 93.6 | -0.5822 | 0.2791 | 0.0822 |
| 68 | SLD 1 | 10.79 | 5.67 | 107.17 | -0.6037 | 0.4533 | 0.1066 |
| 68 | SLD 2 | 10.79 | 5.67 | 107.17 | -0.6037 | 0.4533 | 0.1066 |
| 68 | SLD 3 | 10.31 | 1.8 | 100.55 | -0.391 | 0.4402 | 0.1012 |
| 68 | SLD 4 | 10.31 | 1.8 | 100.55 | -0.391 | 0.4402 | 0.1012 |
| 68 | SLD 5 | 10.09 | 9.48 | 107.72 | -0.9112 | 0.3512 | 0.0977 |
| 68 | SLD 6 | 10.09 | 9.48 | 107.72 | -0.9112 | 0.3512 | 0.0977 |
| 68 | SLD 7 | 8.49 | -3.42 | 85.64 | -0.2022 | 0.3076 | 0.0797 |
| 68 | SLD 8 | 8.49 | -3.42 | 85.64 | -0.2022 | 0.3076 | 0.0797 |
| 68 | SLD 9 | 9.01 | 8.87 | 101.56 | -0.9622 | 0.2506 | 0.0847 |
| 68 | SLD 10 | 9.01 | 8.87 | 101.56 | -0.9622 | 0.2506 | 0.0847 |
| 68 | SLD 11 | 7.41 | -4.03 | 79.49 | -0.2531 | 0.207 | 0.0667 |
| 68 | SLD 12 | 7.41 | -4.03 | 79.49 | -0.2531 | 0.207 | 0.0667 |
| 68 | SLD 13 | 7.19 | 3.65 | 86.66 | -0.7734 | 0.118 | 0.0632 |
| 68 | SLD 14 | 7.19 | 3.65 | 86.66 | -0.7734 | 0.118 | 0.0632 |
| 68 | SLD 15 | 6.71 | -0.22 | 80.04 | -0.5607 | 0.1049 | 0.0578 |
| 68 | SLD 16 | 6.71 | -0.22 | 80.04 | -0.5607 | 0.1049 | 0.0578 |
| 68 | SLV 1 | 13.45 | 9.63 | 125.45 | -0.631 | 0.6806 | 0.1384 |
| 68 | SLV 2 | 13.45 | 9.63 | 125.45 | -0.631 | 0.6806 | 0.1384 |
| 68 | SLV 3 | 12.3 | 0.6 | 109.66 | -0.1328 | 0.649 | 0.1256 |
| 68 | SLV 4 | 12.3 | 0.6 | 109.66 | -0.1328 | 0.649 | 0.1256 |
| 68 | SLV 5 | 11.89 | 18.5 | 127.1 | -1.3524 | 0.4474 | 0.1185 |
| 68 | SLV 6 | 11.89 | 18.5 | 127.1 | -1.3524 | 0.4474 | 0.1185 |
| 68 | SLV 7 | 8.09 | -11.61 | 74.48 | 0.3082 | 0.3422 | 0.0758 |
| 68 | SLV 8 | 8.09 | -11.61 | 74.48 | 0.3082 | 0.3422 | 0.0758 |
| 68 | SLV 9 | 9.42 | 17.06 | 112.73 | -1.4726 | 0.216 | 0.0886 |
| 68 | SLV 10 | 9.42 | 17.06 | 112.73 | -1.4726 | 0.216 | 0.0886 |
| 68 | SLV 11 | 5.61 | -13.05 | 60.11 | 0.188 | 0.1107 | 0.0459 |
| 68 | SLV 12 | 5.61 | -13.05 | 60.11 | 0.188 | 0.1107 | 0.0459 |
| 68 | SLV 13 | 5.2 | 4.85 | 77.55 | -1.0316 | -0.0909 | 0.0388 |
| 68 | SLV 14 | 5.2 | 4.85 | 77.55 | -1.0316 | -0.0909 | 0.0388 |
| 68 | SLV 15 | 4.06 | -4.18 | 61.76 | -0.5334 | -0.1225 | 0.026 |

| Nodo | Cont. | Reazione a traslazione | | | Reazione a rotazione | | |
|---|---|---|---|---|---|---|---|
| Ind. | N.br. | x | y | z | x | y | z |
| 68 | SLV 16 | 4.06 | -4.18 | 61.76 | -0.5334 | -0.1225 | 0.026 |
| 69 | SLU 1 | 1.28 | -0.03 | 23.39 | 0.0485 | 0.2443 | -0.0147 |
| 69 | SLU 2 | 1.7 | -0.02 | 22.27 | 0.0482 | 0.2636 | -0.0158 |
| 69 | SLU 3 | 1.18 | -0.03 | 24.6 | 0.0507 | 0.2464 | -0.0147 |
| 69 | SLU 4 | 1.43 | -0.03 | 23.92 | 0.0506 | 0.258 | -0.0154 |
| 69 | SLU 5 | 1.57 | -0.03 | 23.49 | 0.0504 | 0.264 | -0.0157 |
| 69 | SLU 6 | 1.05 | -0.04 | 25.82 | 0.0529 | 0.2468 | -0.0146 |
| 69 | SLU 7 | 1.3 | -0.04 | 25.15 | 0.0528 | 0.2584 | -0.0153 |
| 69 | SLU 8 | 1.02 | -0.04 | 25.85 | 0.0529 | 0.2451 | -0.0146 |
| 69 | SLU 9 | 1.28 | -0.04 | 25.17 | 0.0527 | 0.2567 | -0.0152 |
| 69 | SLU 10 | 2.12 | 0 | 25.57 | 0.0528 | 0.3116 | -0.0192 |
| 69 | SLU 11 | 1.6 | -0.02 | 27.9 | 0.0553 | 0.2944 | -0.0182 |
| 69 | SLU 12 | 1.85 | -0.01 | 27.23 | 0.0552 | 0.306 | -0.0188 |
| 69 | SLU 13 | 1.99 | -0.01 | 26.8 | 0.055 | 0.312 | -0.0192 |
| 69 | SLU 14 | 1.47 | -0.03 | 29.13 | 0.0575 | 0.2948 | -0.0181 |
| 69 | SLU 15 | 1.73 | -0.02 | 28.45 | 0.0574 | 0.3064 | -0.0188 |
| 69 | SLU 16 | 1.44 | -0.03 | 29.15 | 0.0575 | 0.2931 | -0.018 |
| 69 | SLU 17 | 1.7 | -0.02 | 28.48 | 0.0573 | 0.3047 | -0.0187 |
| 69 | SLU 18 | 1.88 | 0 | 28.11 | 0.055 | 0.3129 | -0.0197 |
| 69 | SLU 19 | 2.13 | 0.01 | 27.44 | 0.0549 | 0.3245 | -0.0203 |
| 69 | SLU 20 | 1.75 | -0.01 | 29.34 | 0.0572 | 0.3133 | -0.0196 |
| 69 | SLU 21 | 2.01 | 0 | 28.67 | 0.0571 | 0.3249 | -0.0202 |
| 69 | SLU 22 | 1.74 | -0.01 | 25.04 | 0.0506 | 0.2853 | -0.0176 |
| 69 | SLU 23 | 2.17 | 0 | 23.92 | 0.0503 | 0.3046 | -0.0186 |
| 69 | SLU 24 | 1.64 | -0.02 | 26.25 | 0.0528 | 0.2874 | -0.0176 |
| 69 | SLU 25 | 1.9 | -0.01 | 25.57 | 0.0527 | 0.299 | -0.0182 |
| 69 | SLU 26 | 2.04 | -0.01 | 25.15 | 0.0525 | 0.305 | -0.0185 |
| 69 | SLU 27 | 1.52 | -0.03 | 27.48 | 0.0551 | 0.2878 | -0.0175 |
| 69 | SLU 28 | 1.77 | -0.02 | 26.8 | 0.0549 | 0.2994 | -0.0181 |
| 69 | SLU 29 | 1.49 | -0.03 | 27.5 | 0.055 | 0.2861 | -0.0174 |
| 69 | SLU 30 | 1.74 | -0.02 | 26.82 | 0.0548 | 0.2976 | -0.018 |
| 69 | SLU 31 | 2.59 | 0.02 | 27.22 | 0.0549 | 0.3526 | -0.0221 |
| 69 | SLU 32 | 2.07 | 0 | 29.55 | 0.0574 | 0.3354 | -0.021 |
| 69 | SLU 33 | 2.32 | 0.01 | 28.88 | 0.0573 | 0.347 | -0.0217 |
| 69 | SLU 34 | 2.46 | 0.01 | 28.45 | 0.0571 | 0.353 | -0.022 |
| 69 | SLU 35 | 1.94 | -0.01 | 30.78 | 0.0597 | 0.3358 | -0.0209 |
| 69 | SLU 36 | 2.19 | 0 | 30.11 | 0.0595 | 0.3474 | -0.0216 |
| 69 | SLU 37 | 1.91 | -0.01 | 30.8 | 0.0596 | 0.3341 | -0.0209 |
| 69 | SLU 38 | 2.17 | 0 | 30.13 | 0.0594 | 0.3457 | -0.0215 |
| 69 | SLU 39 | 2.35 | 0.02 | 29.76 | 0.0571 | 0.3539 | -0.0225 |
| 69 | SLU 40 | 2.6 | 0.02 | 29.09 | 0.057 | 0.3655 | -0.0231 |
| 69 | SLU 41 | 2.22 | 0.01 | 30.99 | 0.0594 | 0.3543 | -0.0224 |
| 69 | SLU 42 | 2.47 | 0.01 | 30.32 | 0.0592 | 0.3659 | -0.0231 |
| 69 | SLU 43 | 1.5 | -0.04 | 29.84 | 0.0623 | 0.3035 | -0.0182 |
| 69 | SLU 44 | 1.92 | -0.03 | 28.72 | 0.062 | 0.3228 | -0.0192 |
| 69 | SLU 45 | 1.4 | -0.05 | 31.05 | 0.0645 | 0.3057 | -0.0182 |
| 69 | SLU 46 | 1.65 | -0.04 | 30.37 | 0.0644 | 0.3172 | -0.0188 |
| 69 | SLU 47 | 1.79 | -0.04 | 29.95 | 0.0642 | 0.3232 | -0.0191 |
| 69 | SLU 48 | 1.27 | -0.06 | 32.27 | 0.0667 | 0.3061 | -0.0181 |
| 69 | SLU 49 | 1.53 | -0.05 | 31.6 | 0.0666 | 0.3176 | -0.0187 |
| 69 | SLU 50 | 1.25 | -0.06 | 32.3 | 0.0667 | 0.3043 | -0.018 |
| 69 | SLU 51 | 1.5 | -0.05 | 31.62 | 0.0665 | 0.3159 | -0.0186 |
| 69 | SLU 52 | 2.34 | -0.01 | 32.02 | 0.0666 | 0.3708 | -0.0227 |
| 69 | SLU 53 | 1.82 | -0.03 | 34.35 | 0.0691 | 0.3537 | -0.0216 |
| 69 | SLU 54 | 2.08 | -0.02 | 33.68 | 0.069 | 0.3653 | -0.0223 |
| 69 | SLU 55 | 2.22 | -0.02 | 33.25 | 0.0688 | 0.3712 | -0.0226 |
| 69 | SLU 56 | 1.7 | -0.04 | 35.58 | 0.0714 | 0.3541 | -0.0215 |
| 69 | SLU 57 | 1.95 | -0.03 | 34.91 | 0.0712 | 0.3656 | -0.0222 |
| 69 | SLU 58 | 1.67 | -0.04 | 35.6 | 0.0713 | 0.3524 | -0.0215 |
| 69 | SLU 59 | 1.92 | -0.03 | 34.93 | 0.0711 | 0.3639 | -0.0221 |
| 69 | SLU 60 | 2.1 | -0.01 | 34.56 | 0.0688 | 0.3721 | -0.0231 |
| 69 | SLU 61 | 2.35 | -0.01 | 33.89 | 0.0687 | 0.3837 | -0.0237 |
| 69 | SLU 62 | 1.97 | -0.02 | 35.79 | 0.0711 | 0.3725 | -0.023 |
| 69 | SLU 63 | 2.23 | -0.02 | 35.12 | 0.0709 | 0.3841 | -0.0237 |
| 69 | SLU 64 | 1.97 | -0.02 | 31.49 | 0.0644 | 0.3445 | -0.021 |
| 69 | SLU 65 | 2.39 | -0.01 | 30.37 | 0.0641 | 0.3638 | -0.0221 |
| 69 | SLU 66 | 1.87 | -0.03 | 32.7 | 0.0667 | 0.3466 | -0.021 |
| 69 | SLU 67 | 2.12 | -0.03 | 32.02 | 0.0665 | 0.3582 | -0.0216 |
| 69 | SLU 68 | 2.26 | -0.02 | 31.6 | 0.0663 | 0.3642 | -0.022 |
| 69 | SLU 69 | 1.74 | -0.04 | 33.93 | 0.0689 | 0.347 | -0.0209 |
| 69 | SLU 70 | 1.99 | -0.03 | 33.25 | 0.0687 | 0.3586 | -0.0216 |
| 69 | SLU 71 | 1.71 | -0.04 | 33.95 | 0.0688 | 0.3453 | -0.0208 |
| 69 | SLU 72 | 1.97 | -0.04 | 33.27 | 0.0687 | 0.3569 | -0.0215 |
| 69 | SLU 73 | 2.81 | 0.01 | 33.67 | 0.0687 | 0.4118 | -0.0255 |
| 69 | SLU 74 | 2.29 | -0.01 | 36 | 0.0713 | 0.3947 | -0.0245 |
| 69 | SLU 75 | 2.54 | -0.01 | 35.33 | 0.0711 | 0.4062 | -0.0251 |
| 69 | SLU 76 | 2.68 | 0 | 34.9 | 0.0709 | 0.4122 | -0.0254 |
| 69 | SLU 77 | 2.16 | -0.02 | 37.23 | 0.0735 | 0.3951 | -0.0244 |
| 69 | SLU 78 | 2.42 | -0.02 | 36.56 | 0.0733 | 0.4066 | -0.025 |
| 69 | SLU 79 | 2.13 | -0.02 | 37.25 | 0.0734 | 0.3933 | -0.0243 |
| 69 | SLU 80 | 2.39 | -0.02 | 36.58 | 0.0733 | 0.4049 | -0.0249 |
| 69 | SLU 81 | 2.57 | 0 | 36.22 | 0.071 | 0.4131 | -0.0259 |
| 69 | SLU 82 | 2.82 | 0.01 | 35.54 | 0.0708 | 0.4247 | -0.0266 |
| 69 | SLU 83 | 2.44 | -0.01 | 37.44 | 0.0732 | 0.4135 | -0.0259 |
| 69 | SLU 84 | 2.69 | 0 | 36.77 | 0.073 | 0.4251 | -0.0265 |
| 69 | SLE RA 1 | 1.41 | -0.02 | 23.86 | 0.0491 | 0.256 | -0.0155 |
| 69 | SLE RA 2 | 1.69 | -0.01 | 23.11 | 0.0489 | 0.2689 | -0.0162 |
| 69 | SLE RA 3 | 1.34 | -0.03 | 24.67 | 0.0506 | 0.2574 | -0.0155 |

| Nodo | Cont. | Reazione a traslazione | | | Reazione a rotazione | | |
|---|---|---|---|---|---|---|---|
| Ind. | N.br. | x | y | z | x | y | z |
| 69 | SLE RA 4 | 1.51 | -0.02 | 24.22 | 0.0505 | 0.2651 | -0.016 |
| 69 | SLE RA 5 | 1.61 | -0.02 | 23.93 | 0.0504 | 0.2691 | -0.0162 |
| 69 | SLE RA 6 | 1.26 | -0.03 | 25.48 | 0.052 | 0.2577 | -0.0155 |
| 69 | SLE RA 7 | 1.43 | -0.03 | 25.03 | 0.0519 | 0.2654 | -0.0159 |
| 69 | SLE RA 8 | 1.24 | -0.03 | 25.5 | 0.052 | 0.2565 | -0.0154 |
| 69 | SLE RA 9 | 1.41 | -0.03 | 25.05 | 0.0519 | 0.2642 | -0.0158 |
| 69 | SLE RA 10 | 1.97 | 0 | 25.32 | 0.052 | 0.3009 | -0.0185 |
| 69 | SLE RA 11 | 1.62 | -0.01 | 26.87 | 0.0536 | 0.2894 | -0.0178 |
| 69 | SLE RA 12 | 1.79 | -0.01 | 26.42 | 0.0535 | 0.2972 | -0.0183 |
| 69 | SLE RA 13 | 1.89 | -0.01 | 26.14 | 0.0534 | 0.3011 | -0.0185 |
| 69 | SLE RA 14 | 1.54 | -0.02 | 27.69 | 0.0551 | 0.2897 | -0.0178 |
| 69 | SLE RA 15 | 1.71 | -0.02 | 27.24 | 0.055 | 0.2974 | -0.0182 |
| 69 | SLE RA 16 | 1.52 | -0.02 | 27.7 | 0.0551 | 0.2886 | -0.0177 |
| 69 | SLE RA 17 | 1.69 | -0.02 | 27.25 | 0.055 | 0.2963 | -0.0182 |
| 69 | SLE RA 18 | 1.81 | 0 | 27.01 | 0.0534 | 0.3017 | -0.0188 |
| 69 | SLE RA 19 | 1.98 | 0 | 26.56 | 0.0533 | 0.3095 | -0.0193 |
| 69 | SLE RA 20 | 1.73 | -0.01 | 27.83 | 0.0549 | 0.302 | -0.0188 |
| 69 | SLE RA 21 | 1.9 | -0.01 | 27.38 | 0.0548 | 0.3097 | -0.0192 |
| 69 | SLE FR 1 | 1.41 | -0.02 | 23.86 | 0.0491 | 0.256 | -0.0155 |
| 69 | SLE FR 2 | 1.47 | -0.02 | 23.71 | 0.049 | 0.2586 | -0.0157 |
| 69 | SLE FR 3 | 1.38 | -0.02 | 24.19 | 0.0496 | 0.2561 | -0.0155 |
| 69 | SLE FR 4 | 1.59 | -0.01 | 24.66 | 0.0503 | 0.2723 | -0.0167 |
| 69 | SLE FR 5 | 1.5 | -0.02 | 25.13 | 0.051 | 0.2698 | -0.0165 |
| 69 | SLE FR 6 | 1.61 | -0.01 | 25.44 | 0.0512 | 0.2789 | -0.0172 |
| 69 | SLE QP 1 | 1.41 | -0.02 | 23.86 | 0.0491 | 0.256 | -0.0155 |
| 69 | SLE QP 2 | 1.53 | -0.02 | 24.81 | 0.0504 | 0.2697 | -0.0165 |
| 69 | SLD 1 | 5.07 | 0.49 | 14.78 | -0.0406 | 0.4633 | -0.038 |
| 69 | SLD 2 | 5.07 | 0.49 | 14.78 | -0.0406 | 0.4633 | -0.038 |
| 69 | SLD 3 | 5.55 | 0.3 | 12.24 | -0.0023 | 0.4342 | -0.0306 |
| 69 | SLD 4 | 5.55 | 0.3 | 12.24 | -0.0023 | 0.4342 | -0.0306 |
| 69 | SLD 5 | 1.87 | 0.43 | 25.64 | -0.0351 | 0.3721 | -0.0342 |
| 69 | SLD 6 | 1.87 | 0.43 | 25.64 | -0.0351 | 0.3721 | -0.0342 |
| 69 | SLD 7 | 3.46 | -0.21 | 17.2 | 0.0927 | 0.2748 | -0.0095 |
| 69 | SLD 8 | 3.46 | -0.21 | 17.2 | 0.0927 | 0.2748 | -0.0095 |
| 69 | SLD 9 | -0.4 | 0.18 | 32.41 | 0.008 | 0.2647 | -0.0236 |
| 69 | SLD 10 | -0.4 | 0.18 | 32.41 | 0.008 | 0.2647 | -0.0236 |
| 69 | SLD 11 | 1.19 | -0.46 | 23.98 | 0.1358 | 0.1674 | 0.0012 |
| 69 | SLD 12 | 1.19 | -0.46 | 23.98 | 0.1358 | 0.1674 | 0.0012 |
| 69 | SLD 13 | -2.49 | -0.33 | 37.37 | 0.1031 | 0.1053 | -0.0025 |
| 69 | SLD 14 | -2.49 | -0.33 | 37.37 | 0.1031 | 0.1053 | -0.0025 |
| 69 | SLD 15 | -2.02 | -0.52 | 34.84 | 0.1414 | 0.0761 | 0.005 |
| 69 | SLD 16 | -2.02 | -0.52 | 34.84 | 0.1414 | 0.0761 | 0.005 |
| 69 | SLV 1 | 9.68 | 1.19 | 1.66 | -0.1668 | 0.7157 | -0.0668 |
| 69 | SLV 2 | 9.68 | 1.19 | 1.66 | -0.1668 | 0.7157 | -0.0668 |
| 69 | SLV 3 | 10.81 | 0.74 | -4.37 | -0.077 | 0.6465 | -0.0494 |
| 69 | SLV 4 | 10.81 | 0.74 | -4.37 | -0.077 | 0.6465 | -0.0494 |
| 69 | SLV 5 | 2.25 | 1.03 | 27 | -0.1509 | 0.5085 | -0.058 |
| 69 | SLV 6 | 2.25 | 1.03 | 27 | -0.1509 | 0.5085 | -0.058 |
| 69 | SLV 7 | 6.03 | -0.48 | 6.92 | 0.1483 | 0.2778 | 0 |
| 69 | SLV 8 | 6.03 | -0.48 | 6.92 | 0.1483 | 0.2778 | 0 |
| 69 | SLV 9 | -2.97 | 0.45 | 42.7 | -0.0475 | 0.2616 | -0.0331 |
| 69 | SLV 10 | -2.97 | 0.45 | 42.7 | -0.0475 | 0.2616 | -0.0331 |
| 69 | SLV 11 | 0.81 | -1.07 | 22.61 | 0.2516 | 0.031 | 0.025 |
| 69 | SLV 12 | 0.81 | -1.07 | 22.61 | 0.2516 | 0.031 | 0.025 |
| 69 | SLV 13 | -7.75 | -0.77 | 53.98 | 0.1778 | -0.107 | 0.0164 |
| 69 | SLV 14 | -7.75 | -0.77 | 53.98 | 0.1778 | -0.107 | 0.0164 |
| 69 | SLV 15 | -6.62 | -1.22 | 47.96 | 0.2675 | -0.1762 | 0.0338 |
| 69 | SLV 16 | -6.62 | -1.22 | 47.96 | 0.2675 | -0.1762 | 0.0338 |
| 70 | SLU 1 | 7.53 | -0.02 | 40.08 | 0.0127 | 0.1794 | -0.0012 |
| 70 | SLU 2 | 7.57 | -0.01 | 42.54 | 0.0125 | 0.1716 | -0.001 |
| 70 | SLU 3 | 7.6 | -0.02 | 40.78 | 0.0133 | 0.1794 | -0.0013 |
| 70 | SLU 4 | 7.62 | -0.02 | 42.25 | 0.0132 | 0.1747 | -0.0012 |
| 70 | SLU 5 | 7.56 | -0.01 | 42.91 | 0.013 | 0.1693 | -0.0011 |
| 70 | SLU 6 | 7.58 | -0.02 | 41.15 | 0.0138 | 0.177 | -0.0013 |
| 70 | SLU 7 | 7.61 | -0.02 | 42.62 | 0.0137 | 0.1723 | -0.0012 |
| 70 | SLU 8 | 7.5 | -0.02 | 40.83 | 0.0137 | 0.1747 | -0.0013 |
| 70 | SLU 9 | 7.53 | -0.02 | 42.3 | 0.0136 | 0.17 | -0.0012 |
| 70 | SLU 10 | 8.73 | -0.01 | 49.03 | 0.0144 | 0.1977 | -0.0012 |
| 70 | SLU 11 | 8.75 | -0.02 | 47.27 | 0.0153 | 0.2055 | -0.0014 |
| 70 | SLU 12 | 8.77 | -0.02 | 48.74 | 0.0151 | 0.2008 | -0.0013 |
| 70 | SLU 13 | 8.71 | -0.02 | 49.4 | 0.015 | 0.1954 | -0.0013 |
| 70 | SLU 14 | 8.74 | -0.03 | 47.64 | 0.0158 | 0.2031 | -0.0015 |
| 70 | SLU 15 | 8.76 | -0.02 | 49.11 | 0.0156 | 0.1984 | -0.0014 |
| 70 | SLU 16 | 8.66 | -0.03 | 47.32 | 0.0157 | 0.2008 | -0.0015 |
| 70 | SLU 17 | 8.68 | -0.02 | 48.79 | 0.0156 | 0.1961 | -0.0014 |
| 70 | SLU 18 | 9.18 | -0.02 | 49.36 | 0.0155 | 0.2167 | -0.0015 |
| 70 | SLU 19 | 9.21 | -0.02 | 50.83 | 0.0154 | 0.212 | -0.0013 |
| 70 | SLU 20 | 9.17 | -0.02 | 49.73 | 0.016 | 0.2144 | -0.0015 |
| 70 | SLU 21 | 9.19 | -0.02 | 51.2 | 0.0159 | 0.2097 | -0.0014 |
| 70 | SLU 22 | 8.43 | -0.02 | 45.09 | 0.0142 | 0.2 | -0.0013 |
| 70 | SLU 23 | 8.47 | -0.01 | 47.55 | 0.0139 | 0.1921 | -0.0011 |
| 70 | SLU 24 | 8.49 | -0.02 | 45.78 | 0.0148 | 0.1999 | -0.0014 |
| 70 | SLU 25 | 8.51 | -0.02 | 47.26 | 0.0146 | 0.1952 | -0.0013 |
| 70 | SLU 26 | 8.45 | -0.01 | 47.92 | 0.0145 | 0.1898 | -0.0012 |
| 70 | SLU 27 | 8.48 | -0.02 | 46.16 | 0.0153 | 0.1975 | -0.0015 |
| 70 | SLU 28 | 8.5 | -0.02 | 47.63 | 0.0152 | 0.1928 | -0.0014 |
| 70 | SLU 29 | 8.4 | -0.02 | 45.83 | 0.0152 | 0.1953 | -0.0014 |
| 70 | SLU 30 | 8.42 | -0.02 | 47.31 | 0.0151 | 0.1906 | -0.0013 |

| Nodo | Cont. | Reazione a traslazione | | | Reazione a rotazione | | |
|---|---|---|---|---|---|---|---|
| Ind. | N.br. | x | y | z | x | y | z |
| 70 | SLU 31 | 9.62 | -0.02 | 54.04 | 0.0159 | 0.2182 | -0.0013 |
| 70 | SLU 32 | 9.64 | -0.03 | 52.28 | 0.0168 | 0.226 | -0.0016 |
| 70 | SLU 33 | 9.67 | -0.02 | 53.75 | 0.0166 | 0.2213 | -0.0015 |
| 70 | SLU 34 | 9.61 | -0.02 | 54.41 | 0.0164 | 0.2159 | -0.0014 |
| 70 | SLU 35 | 9.63 | -0.03 | 52.65 | 0.0173 | 0.2236 | -0.0016 |
| 70 | SLU 36 | 9.65 | -0.02 | 54.12 | 0.0171 | 0.2189 | -0.0015 |
| 70 | SLU 37 | 9.55 | -0.03 | 52.33 | 0.0172 | 0.2214 | -0.0016 |
| 70 | SLU 38 | 9.58 | -0.02 | 53.8 | 0.017 | 0.2167 | -0.0015 |
| 70 | SLU 39 | 10.07 | -0.03 | 54.37 | 0.017 | 0.2373 | -0.0016 |
| 70 | SLU 40 | 10.1 | -0.02 | 55.84 | 0.0169 | 0.2326 | -0.0015 |
| 70 | SLU 41 | 10.06 | -0.03 | 54.74 | 0.0175 | 0.2349 | -0.0017 |
| 70 | SLU 42 | 10.09 | -0.02 | 56.21 | 0.0174 | 0.2302 | -0.0016 |
| 70 | SLU 43 | 9.48 | -0.02 | 50.39 | 0.016 | 0.2262 | -0.0015 |
| 70 | SLU 44 | 9.53 | -0.02 | 52.85 | 0.0158 | 0.2184 | -0.0013 |
| 70 | SLU 45 | 9.55 | -0.03 | 51.09 | 0.0166 | 0.2262 | -0.0016 |
| 70 | SLU 46 | 9.57 | -0.02 | 52.56 | 0.0165 | 0.2215 | -0.0015 |
| 70 | SLU 47 | 9.51 | -0.02 | 53.22 | 0.0163 | 0.216 | -0.0014 |
| 70 | SLU 48 | 9.53 | -0.03 | 51.46 | 0.0171 | 0.2238 | -0.0016 |
| 70 | SLU 49 | 9.56 | -0.02 | 52.93 | 0.017 | 0.2191 | -0.0015 |
| 70 | SLU 50 | 9.46 | -0.03 | 51.14 | 0.017 | 0.2215 | -0.0016 |
| 70 | SLU 51 | 9.48 | -0.02 | 52.61 | 0.0169 | 0.2168 | -0.0015 |
| 70 | SLU 52 | 10.68 | -0.02 | 59.34 | 0.0177 | 0.2445 | -0.0015 |
| 70 | SLU 53 | 10.7 | -0.03 | 57.58 | 0.0186 | 0.2523 | -0.0017 |
| 70 | SLU 54 | 10.73 | -0.02 | 59.05 | 0.0184 | 0.2476 | -0.0016 |
| 70 | SLU 55 | 10.67 | -0.02 | 59.71 | 0.0183 | 0.2421 | -0.0016 |
| 70 | SLU 56 | 10.69 | -0.03 | 57.95 | 0.0191 | 0.2499 | -0.0018 |
| 70 | SLU 57 | 10.71 | -0.03 | 59.42 | 0.019 | 0.2452 | -0.0017 |
| 70 | SLU 58 | 10.61 | -0.03 | 57.63 | 0.019 | 0.2476 | -0.0018 |
| 70 | SLU 59 | 10.64 | -0.03 | 59.1 | 0.0189 | 0.2429 | -0.0017 |
| 70 | SLU 60 | 11.13 | -0.03 | 59.67 | 0.0188 | 0.2635 | -0.0018 |
| 70 | SLU 61 | 11.16 | -0.02 | 61.14 | 0.0187 | 0.2588 | -0.0017 |
| 70 | SLU 62 | 11.12 | -0.03 | 60.04 | 0.0194 | 0.2612 | -0.0018 |
| 70 | SLU 63 | 11.14 | -0.02 | 61.51 | 0.0192 | 0.2565 | -0.0017 |
| 70 | SLU 64 | 10.38 | -0.03 | 55.4 | 0.0175 | 0.2468 | -0.0016 |
| 70 | SLU 65 | 10.42 | -0.02 | 57.86 | 0.0173 | 0.2389 | -0.0015 |
| 70 | SLU 66 | 10.44 | -0.03 | 56.09 | 0.0181 | 0.2467 | -0.0017 |
| 70 | SLU 67 | 10.47 | -0.02 | 57.57 | 0.0179 | 0.242 | -0.0016 |
| 70 | SLU 68 | 10.41 | -0.02 | 58.23 | 0.0178 | 0.2366 | -0.0015 |
| 70 | SLU 69 | 10.43 | -0.03 | 56.46 | 0.0186 | 0.2443 | -0.0018 |
| 70 | SLU 70 | 10.45 | -0.02 | 57.94 | 0.0185 | 0.2396 | -0.0017 |
| 70 | SLU 71 | 10.35 | -0.03 | 56.14 | 0.0185 | 0.2421 | -0.0018 |
| 70 | SLU 72 | 10.38 | -0.02 | 57.62 | 0.0184 | 0.2374 | -0.0017 |
| 70 | SLU 73 | 11.57 | -0.02 | 64.35 | 0.0192 | 0.265 | -0.0016 |
| 70 | SLU 74 | 11.6 | -0.03 | 62.59 | 0.0201 | 0.2728 | -0.0019 |
| 70 | SLU 75 | 11.62 | -0.03 | 64.06 | 0.0199 | 0.2681 | -0.0018 |
| 70 | SLU 76 | 11.56 | -0.02 | 64.72 | 0.0197 | 0.2627 | -0.0017 |
| 70 | SLU 77 | 11.58 | -0.03 | 62.96 | 0.0206 | 0.2704 | -0.002 |
| 70 | SLU 78 | 11.61 | -0.03 | 64.43 | 0.0204 | 0.2657 | -0.0019 |
| 70 | SLU 79 | 11.51 | -0.03 | 62.63 | 0.0205 | 0.2682 | -0.0019 |
| 70 | SLU 80 | 11.53 | -0.03 | 64.11 | 0.0204 | 0.2635 | -0.0018 |
| 70 | SLU 81 | 12.03 | -0.03 | 64.67 | 0.0203 | 0.284 | -0.0019 |
| 70 | SLU 82 | 12.05 | -0.03 | 66.15 | 0.0202 | 0.2793 | -0.0018 |
| 70 | SLU 83 | 12.01 | -0.03 | 65.05 | 0.0208 | 0.2817 | -0.002 |
| 70 | SLU 84 | 12.04 | -0.03 | 66.52 | 0.0207 | 0.277 | -0.0019 |
| 70 | SLE RA 1 | 7.79 | -0.02 | 41.52 | 0.0131 | 0.1853 | -0.0012 |
| 70 | SLE RA 2 | 7.81 | -0.01 | 43.15 | 0.013 | 0.1801 | -0.0011 |
| 70 | SLE RA 3 | 7.83 | -0.02 | 41.98 | 0.0135 | 0.1853 | -0.0013 |
| 70 | SLE RA 4 | 7.85 | -0.02 | 42.96 | 0.0134 | 0.1821 | -0.0012 |
| 70 | SLE RA 5 | 7.8 | -0.02 | 43.4 | 0.0133 | 0.1785 | -0.0011 |
| 70 | SLE RA 6 | 7.82 | -0.02 | 42.22 | 0.0139 | 0.1837 | -0.0013 |
| 70 | SLE RA 7 | 7.84 | -0.02 | 43.21 | 0.0138 | 0.1806 | -0.0012 |
| 70 | SLE RA 8 | 7.77 | -0.02 | 42.01 | 0.0138 | 0.1822 | -0.0013 |
| 70 | SLE RA 9 | 7.78 | -0.02 | 42.99 | 0.0137 | 0.179 | -0.0012 |
| 70 | SLE RA 10 | 8.58 | -0.02 | 47.48 | 0.0143 | 0.1975 | -0.0012 |
| 70 | SLE RA 11 | 8.6 | -0.02 | 46.31 | 0.0148 | 0.2027 | -0.0014 |
| 70 | SLE RA 12 | 8.62 | -0.02 | 47.29 | 0.0148 | 0.1995 | -0.0013 |
| 70 | SLE RA 13 | 8.57 | -0.02 | 47.73 | 0.0146 | 0.1959 | -0.0013 |
| 70 | SLE RA 14 | 8.59 | -0.02 | 46.55 | 0.0152 | 0.2011 | -0.0014 |
| 70 | SLE RA 15 | 8.61 | -0.02 | 47.53 | 0.0151 | 0.198 | -0.0014 |
| 70 | SLE RA 16 | 8.54 | -0.02 | 46.34 | 0.0151 | 0.1996 | -0.0014 |
| 70 | SLE RA 17 | 8.55 | -0.02 | 47.32 | 0.015 | 0.1964 | -0.0014 |
| 70 | SLE RA 18 | 8.89 | -0.02 | 47.7 | 0.015 | 0.2102 | -0.0014 |
| 70 | SLE RA 19 | 8.9 | -0.02 | 48.68 | 0.0149 | 0.207 | -0.0013 |
| 70 | SLE RA 20 | 8.88 | -0.02 | 47.95 | 0.0154 | 0.2086 | -0.0014 |
| 70 | SLE RA 21 | 8.89 | -0.02 | 48.93 | 0.0153 | 0.2055 | -0.0014 |
| 70 | SLE FR 1 | 7.79 | -0.02 | 41.52 | 0.0131 | 0.1853 | -0.0012 |
| 70 | SLE FR 2 | 7.79 | -0.02 | 41.84 | 0.0131 | 0.1843 | -0.0012 |
| 70 | SLE FR 3 | 7.78 | -0.02 | 41.61 | 0.0133 | 0.1847 | -0.0012 |
| 70 | SLE FR 4 | 8.12 | -0.02 | 43.7 | 0.0137 | 0.1917 | -0.0012 |
| 70 | SLE FR 5 | 8.11 | -0.02 | 43.47 | 0.0138 | 0.1921 | -0.0013 |
| 70 | SLE FR 6 | 8.34 | -0.02 | 44.61 | 0.0141 | 0.1977 | -0.0013 |
| 70 | SLE QP 1 | 7.79 | -0.02 | 41.52 | 0.0131 | 0.1853 | -0.0012 |
| 70 | SLE QP 2 | 8.12 | -0.02 | 43.37 | 0.0137 | 0.1928 | -0.0013 |
| 70 | SLD 1 | 14.81 | 0.11 | 62.99 | -0.0192 | 0.4299 | 0.0033 |
| 70 | SLD 2 | 14.81 | 0.11 | 62.99 | -0.0192 | 0.4299 | 0.0033 |
| 70 | SLD 3 | 13.79 | 0.01 | 59.14 | 0.009 | 0.4007 | -0.0005 |
| 70 | SLD 4 | 13.79 | 0.01 | 59.14 | 0.009 | 0.4007 | -0.0005 |
| 70 | SLD 5 | 11.67 | 0.17 | 55.09 | -0.0389 | 0.3082 | 0.0059 |

| Nodo | Cont. | Reazione a traslazione | | | Reazione a rotazione | | |
|---|---|---|---|---|---|---|---|
| Ind. | N.br. | x | y | z | x | y | z |
| 70 | SLD 6 | 11.67 | 0.17 | 55.09 | -0.0389 | 0.3082 | 0.0059 |
| 70 | SLD 7 | 8.27 | -0.16 | 42.27 | 0.055 | 0.2109 | -0.0068 |
| 70 | SLD 8 | 8.27 | -0.16 | 42.27 | 0.055 | 0.2109 | -0.0068 |
| 70 | SLD 9 | 7.97 | 0.12 | 44.47 | -0.0276 | 0.1746 | 0.0042 |
| 70 | SLD 10 | 7.97 | 0.12 | 44.47 | -0.0276 | 0.1746 | 0.0042 |
| 70 | SLD 11 | 4.56 | -0.21 | 31.65 | 0.0663 | 0.0773 | -0.0084 |
| 70 | SLD 12 | 4.56 | -0.21 | 31.65 | 0.0663 | 0.0773 | -0.0084 |
| 70 | SLD 13 | 2.45 | -0.05 | 27.6 | 0.0184 | -0.0152 | -0.0021 |
| 70 | SLD 14 | 2.45 | -0.05 | 27.6 | 0.0184 | -0.0152 | -0.0021 |
| 70 | SLD 15 | 1.42 | -0.15 | 23.75 | 0.0466 | -0.0444 | -0.0059 |
| 70 | SLD 16 | 1.42 | -0.15 | 23.75 | 0.0466 | -0.0444 | -0.0059 |
| 70 | SLV 1 | 23.65 | 0.28 | 88.88 | -0.0635 | 0.7428 | 0.0095 |
| 70 | SLV 2 | 23.65 | 0.28 | 88.88 | -0.0635 | 0.7428 | 0.0095 |
| 70 | SLV 3 | 21.12 | 0.05 | 79.6 | 0.0036 | 0.6699 | 0.0005 |
| 70 | SLV 4 | 21.12 | 0.05 | 79.6 | 0.0036 | 0.6699 | 0.0005 |
| 70 | SLV 5 | 16.61 | 0.43 | 71.1 | -0.1112 | 0.4684 | 0.0157 |
| 70 | SLV 6 | 16.61 | 0.43 | 71.1 | -0.1112 | 0.4684 | 0.0157 |
| 70 | SLV 7 | 8.18 | -0.36 | 40.16 | 0.1124 | 0.2253 | -0.0144 |
| 70 | SLV 8 | 8.18 | -0.36 | 40.16 | 0.1124 | 0.2253 | -0.0144 |
| 70 | SLV 9 | 8.05 | 0.31 | 46.58 | -0.085 | 0.1602 | 0.0119 |
| 70 | SLV 10 | 8.05 | 0.31 | 46.58 | -0.085 | 0.1602 | 0.0119 |
| 70 | SLV 11 | -0.38 | -0.47 | 15.64 | 0.1386 | -0.0829 | -0.0182 |
| 70 | SLV 12 | -0.38 | -0.47 | 15.64 | 0.1386 | -0.0829 | -0.0182 |
| 70 | SLV 13 | -4.88 | -0.09 | 7.14 | 0.0238 | -0.2843 | -0.003 |
| 70 | SLV 14 | -4.88 | -0.09 | 7.14 | 0.0238 | -0.2843 | -0.003 |
| 70 | SLV 15 | -7.41 | -0.33 | -2.14 | 0.0909 | -0.3573 | -0.012 |
| 70 | SLV 16 | -7.41 | -0.33 | -2.14 | 0.0909 | -0.3573 | -0.012 |
| 71 | SLU 1 | 4.3 | -7.36 | 78.67 | 0.3773 | 0.0725 | -0.0516 |
| 71 | SLU 2 | 3.65 | -8.15 | 84.89 | 0.4053 | 0.0294 | -0.0568 |
| 71 | SLU 3 | 4.24 | -7.51 | 80.21 | 0.3852 | 0.0674 | -0.0526 |
| 71 | SLU 4 | 3.85 | -7.98 | 83.95 | 0.402 | 0.0416 | -0.0558 |
| 71 | SLU 5 | 3.53 | -8.26 | 85.88 | 0.4114 | 0.0218 | -0.0576 |
| 71 | SLU 6 | 4.12 | -7.62 | 81.2 | 0.3913 | 0.0598 | -0.0535 |
| 71 | SLU 7 | 3.73 | -8.09 | 84.94 | 0.4081 | 0.0339 | -0.0566 |
| 71 | SLU 8 | 4.05 | -7.58 | 80.65 | 0.3894 | 0.0573 | -0.0532 |
| 71 | SLU 9 | 3.66 | -8.05 | 84.38 | 0.4062 | 0.0314 | -0.0563 |
| 71 | SLU 10 | 4.23 | -9.1 | 97.21 | 0.4509 | 0.0413 | -0.0634 |
| 71 | SLU 11 | 4.82 | -8.46 | 92.53 | 0.4308 | 0.0793 | -0.0593 |
| 71 | SLU 12 | 4.43 | -8.93 | 96.26 | 0.4477 | 0.0534 | -0.0624 |
| 71 | SLU 13 | 4.11 | -9.21 | 98.2 | 0.457 | 0.0336 | -0.0642 |
| 71 | SLU 14 | 4.7 | -8.57 | 93.52 | 0.4369 | 0.0717 | -0.0601 |
| 71 | SLU 15 | 4.31 | -9.04 | 97.25 | 0.4537 | 0.0458 | -0.0632 |
| 71 | SLU 16 | 4.63 | -8.53 | 92.96 | 0.435 | 0.0691 | -0.0598 |
| 71 | SLU 17 | 4.24 | -9.01 | 96.7 | 0.4518 | 0.0433 | -0.0629 |
| 71 | SLU 18 | 5.13 | -8.71 | 96.26 | 0.4424 | 0.0894 | -0.061 |
| 71 | SLU 19 | 4.74 | -9.19 | 100 | 0.4592 | 0.0636 | -0.0641 |
| 71 | SLU 20 | 5 | -8.83 | 97.25 | 0.4485 | 0.0818 | -0.0618 |
| 71 | SLU 21 | 4.61 | -9.3 | 100.99 | 0.4653 | 0.056 | -0.065 |
| 71 | SLU 22 | 4.74 | -8.08 | 88.18 | 0.4111 | 0.0813 | -0.0566 |
| 71 | SLU 23 | 4.09 | -8.88 | 94.4 | 0.4391 | 0.0382 | -0.0618 |
| 71 | SLU 24 | 4.69 | -8.23 | 89.72 | 0.4191 | 0.0763 | -0.0577 |
| 71 | SLU 25 | 4.3 | -8.71 | 93.45 | 0.4359 | 0.0504 | -0.0608 |
| 71 | SLU 26 | 3.97 | -8.99 | 95.39 | 0.4452 | 0.0306 | -0.0626 |
| 71 | SLU 27 | 4.57 | -8.34 | 90.71 | 0.4251 | 0.0687 | -0.0585 |
| 71 | SLU 28 | 4.18 | -8.82 | 94.44 | 0.4419 | 0.0428 | -0.0616 |
| 71 | SLU 29 | 4.5 | -8.31 | 90.15 | 0.4232 | 0.0661 | -0.0582 |
| 71 | SLU 30 | 4.11 | -8.78 | 93.89 | 0.44 | 0.0403 | -0.0613 |
| 71 | SLU 31 | 4.67 | -9.83 | 106.71 | 0.4847 | 0.0501 | -0.0684 |
| 71 | SLU 32 | 5.27 | -9.18 | 102.03 | 0.4647 | 0.0881 | -0.0643 |
| 71 | SLU 33 | 4.88 | -9.66 | 105.77 | 0.4815 | 0.0623 | -0.0674 |
| 71 | SLU 34 | 4.55 | -9.94 | 107.7 | 0.4908 | 0.0425 | -0.0692 |
| 71 | SLU 35 | 5.15 | -9.29 | 103.02 | 0.4707 | 0.0805 | -0.0651 |
| 71 | SLU 36 | 4.76 | -9.77 | 106.76 | 0.4876 | 0.0546 | -0.0682 |
| 71 | SLU 37 | 5.08 | -9.26 | 102.47 | 0.4688 | 0.078 | -0.0648 |
| 71 | SLU 38 | 4.69 | -9.73 | 106.2 | 0.4857 | 0.0521 | -0.068 |
| 71 | SLU 39 | 5.57 | -9.44 | 105.77 | 0.4762 | 0.0983 | -0.066 |
| 71 | SLU 40 | 5.18 | -9.92 | 109.5 | 0.4931 | 0.0724 | -0.0692 |
| 71 | SLU 41 | 5.45 | -9.55 | 106.76 | 0.4823 | 0.0907 | -0.0668 |
| 71 | SLU 42 | 5.06 | -10.03 | 110.49 | 0.4991 | 0.0648 | -0.07 |
| 71 | SLU 43 | 5.43 | -9.31 | 99.01 | 0.4788 | 0.0912 | -0.0653 |
| 71 | SLU 44 | 4.79 | -10.11 | 105.24 | 0.5069 | 0.0481 | -0.0705 |
| 71 | SLU 45 | 5.38 | -9.47 | 100.55 | 0.4868 | 0.0861 | -0.0664 |
| 71 | SLU 46 | 4.99 | -9.94 | 104.29 | 0.5036 | 0.0603 | -0.0695 |
| 71 | SLU 47 | 4.66 | -10.22 | 106.23 | 0.5129 | 0.0405 | -0.0714 |
| 71 | SLU 48 | 5.26 | -9.58 | 101.54 | 0.4929 | 0.0785 | -0.0672 |
| 71 | SLU 49 | 4.87 | -10.05 | 105.28 | 0.5097 | 0.0527 | -0.0703 |
| 71 | SLU 50 | 5.19 | -9.54 | 100.99 | 0.491 | 0.076 | -0.0669 |
| 71 | SLU 51 | 4.8 | -10.01 | 104.72 | 0.5078 | 0.0501 | -0.0701 |
| 71 | SLU 52 | 5.37 | -11.06 | 117.55 | 0.5525 | 0.06 | -0.0772 |
| 71 | SLU 53 | 5.96 | -10.42 | 112.87 | 0.5324 | 0.098 | -0.073 |
| 71 | SLU 54 | 5.57 | -10.89 | 116.6 | 0.5492 | 0.0721 | -0.0761 |
| 71 | SLU 55 | 5.24 | -11.17 | 118.54 | 0.5586 | 0.0524 | -0.078 |
| 71 | SLU 56 | 5.84 | -10.53 | 113.86 | 0.5385 | 0.0904 | -0.0738 |
| 71 | SLU 57 | 5.45 | -11 | 117.59 | 0.5553 | 0.0645 | -0.077 |
| 71 | SLU 58 | 5.77 | -10.49 | 113.3 | 0.5366 | 0.0879 | -0.0736 |
| 71 | SLU 59 | 5.38 | -10.96 | 117.04 | 0.5534 | 0.062 | -0.0767 |
| 71 | SLU 60 | 6.26 | -10.67 | 116.6 | 0.544 | 0.1082 | -0.0748 |
| 71 | SLU 61 | 5.87 | -11.15 | 120.34 | 0.5608 | 0.0823 | -0.0779 |

| Nodo | Cont. | Reazione a traslazione | | | Reazione a rotazione | | |
|---|---|---|---|---|---|---|---|
| Ind. | N.br. | x | y | z | x | y | z |
| 71 | SLU 62 | 6.14 | -10.78 | 117.59 | 0.5501 | 0.1006 | -0.0756 |
| 71 | SLU 63 | 5.75 | -11.26 | 121.33 | 0.5669 | 0.0747 | -0.0787 |
| 71 | SLU 64 | 5.88 | -10.04 | 108.52 | 0.5127 | 0.1001 | -0.0703 |
| 71 | SLU 65 | 5.23 | -10.83 | 114.74 | 0.5407 | 0.057 | -0.0756 |
| 71 | SLU 66 | 5.82 | -10.19 | 110.06 | 0.5206 | 0.095 | -0.0714 |
| 71 | SLU 67 | 5.44 | -10.67 | 113.8 | 0.5375 | 0.0691 | -0.0745 |
| 71 | SLU 68 | 5.11 | -10.94 | 115.73 | 0.5468 | 0.0493 | -0.0764 |
| 71 | SLU 69 | 5.7 | -10.3 | 111.05 | 0.5267 | 0.0874 | -0.0722 |
| 71 | SLU 70 | 5.31 | -10.78 | 114.78 | 0.5435 | 0.0615 | -0.0754 |
| 71 | SLU 71 | 5.63 | -10.26 | 110.5 | 0.5248 | 0.0848 | -0.072 |
| 71 | SLU 72 | 5.24 | -10.74 | 114.23 | 0.5416 | 0.059 | -0.0751 |
| 71 | SLU 73 | 5.81 | -11.78 | 127.06 | 0.5863 | 0.0688 | -0.0822 |
| 71 | SLU 74 | 6.4 | -11.14 | 122.38 | 0.5662 | 0.1068 | -0.078 |
| 71 | SLU 75 | 6.02 | -11.62 | 126.11 | 0.5831 | 0.081 | -0.0812 |
| 71 | SLU 76 | 5.69 | -11.9 | 128.05 | 0.5924 | 0.0612 | -0.083 |
| 71 | SLU 77 | 6.28 | -11.25 | 123.36 | 0.5723 | 0.0992 | -0.0788 |
| 71 | SLU 78 | 5.89 | -11.73 | 127.1 | 0.5891 | 0.0734 | -0.082 |
| 71 | SLU 79 | 6.21 | -11.21 | 122.81 | 0.5704 | 0.0967 | -0.0786 |
| 71 | SLU 80 | 5.83 | -11.69 | 126.55 | 0.5872 | 0.0708 | -0.0817 |
| 71 | SLU 81 | 6.71 | -11.4 | 126.11 | 0.5778 | 0.117 | -0.0798 |
| 71 | SLU 82 | 6.32 | -11.87 | 129.84 | 0.5946 | 0.0911 | -0.0829 |
| 71 | SLU 83 | 6.59 | -11.51 | 127.1 | 0.5839 | 0.1094 | -0.0806 |
| 71 | SLU 84 | 6.2 | -11.99 | 130.83 | 0.6007 | 0.0835 | -0.0837 |
| 71 | SLE RA 1 | 4.42 | -7.56 | 81.39 | 0.3869 | 0.075 | -0.053 |
| 71 | SLE RA 2 | 3.99 | -8.09 | 85.54 | 0.4056 | 0.0463 | -0.0565 |
| 71 | SLE RA 3 | 4.39 | -7.66 | 82.41 | 0.3922 | 0.0716 | -0.0537 |
| 71 | SLE RA 4 | 4.13 | -7.98 | 84.9 | 0.4034 | 0.0544 | -0.0558 |
| 71 | SLE RA 5 | 3.91 | -8.17 | 86.19 | 0.4097 | 0.0412 | -0.057 |
| 71 | SLE RA 6 | 4.31 | -7.74 | 83.07 | 0.3963 | 0.0666 | -0.0543 |
| 71 | SLE RA 7 | 4.05 | -8.06 | 85.56 | 0.4075 | 0.0493 | -0.0564 |
| 71 | SLE RA 8 | 4.26 | -7.71 | 82.7 | 0.395 | 0.0649 | -0.0541 |
| 71 | SLE RA 9 | 4 | -8.03 | 85.19 | 0.4062 | 0.0476 | -0.0562 |
| 71 | SLE RA 10 | 4.38 | -8.73 | 93.74 | 0.436 | 0.0542 | -0.0609 |
| 71 | SLE RA 11 | 4.77 | -8.3 | 90.62 | 0.4226 | 0.0795 | -0.0581 |
| 71 | SLE RA 12 | 4.52 | -8.62 | 93.11 | 0.4339 | 0.0623 | -0.0602 |
| 71 | SLE RA 13 | 4.3 | -8.8 | 94.4 | 0.4401 | 0.0491 | -0.0614 |
| 71 | SLE RA 14 | 4.69 | -8.37 | 91.28 | 0.4267 | 0.0745 | -0.0587 |
| 71 | SLE RA 15 | 4.43 | -8.69 | 93.77 | 0.4379 | 0.0572 | -0.0608 |
| 71 | SLE RA 16 | 4.65 | -8.35 | 90.91 | 0.4254 | 0.0728 | -0.0585 |
| 71 | SLE RA 17 | 4.39 | -8.66 | 93.4 | 0.4366 | 0.0555 | -0.0606 |
| 71 | SLE RA 18 | 4.98 | -8.47 | 93.11 | 0.4304 | 0.0863 | -0.0593 |
| 71 | SLE RA 19 | 4.72 | -8.79 | 95.6 | 0.4416 | 0.0691 | -0.0614 |
| 71 | SLE RA 20 | 4.9 | -8.54 | 93.77 | 0.4344 | 0.0812 | -0.0598 |
| 71 | SLE RA 21 | 4.64 | -8.86 | 96.26 | 0.4456 | 0.064 | -0.0619 |
| 71 | SLE FR 1 | 4.42 | -7.56 | 81.39 | 0.3869 | 0.075 | -0.053 |
| 71 | SLE FR 2 | 4.34 | -7.67 | 82.22 | 0.3907 | 0.0693 | -0.0537 |
| 71 | SLE FR 3 | 4.39 | -7.59 | 81.65 | 0.3885 | 0.073 | -0.0532 |
| 71 | SLE FR 4 | 4.5 | -7.94 | 85.73 | 0.4037 | 0.0727 | -0.0556 |
| 71 | SLE FR 5 | 4.56 | -7.87 | 85.17 | 0.4016 | 0.0764 | -0.0551 |
| 71 | SLE FR 6 | 4.7 | -8.02 | 87.25 | 0.4086 | 0.0807 | -0.0561 |
| 71 | SLE QP 1 | 4.42 | -7.56 | 81.39 | 0.3869 | 0.075 | -0.053 |
| 71 | SLE QP 2 | 4.59 | -7.84 | 84.9 | 0.4 | 0.0784 | -0.0549 |
| 71 | SLD 1 | 12.18 | -10.35 | 109.25 | 0.3757 | 0.4778 | -0.0529 |
| 71 | SLD 2 | 12.18 | -10.35 | 109.25 | 0.3757 | 0.4778 | -0.0529 |
| 71 | SLD 3 | 11.03 | -8.12 | 99.81 | 0.2691 | 0.416 | -0.0385 |
| 71 | SLD 4 | 11.03 | -8.12 | 99.81 | 0.2691 | 0.416 | -0.0385 |
| 71 | SLD 5 | 8.6 | -11.97 | 106.53 | 0.5544 | 0.292 | -0.0761 |
| 71 | SLD 6 | 8.6 | -11.97 | 106.53 | 0.5544 | 0.292 | -0.0761 |
| 71 | SLD 7 | 4.79 | -4.55 | 75.05 | 0.199 | 0.0859 | -0.0282 |
| 71 | SLD 8 | 4.79 | -4.55 | 75.05 | 0.199 | 0.0859 | -0.0282 |
| 71 | SLD 9 | 4.39 | -11.13 | 94.75 | 0.601 | 0.0709 | -0.0816 |
| 71 | SLD 10 | 4.39 | -11.13 | 94.75 | 0.601 | 0.0709 | -0.0816 |
| 71 | SLD 11 | 0.58 | -3.71 | 63.28 | 0.2455 | -0.1352 | -0.0337 |
| 71 | SLD 12 | 0.58 | -3.71 | 63.28 | 0.2455 | -0.1352 | -0.0337 |
| 71 | SLD 13 | -1.85 | -7.55 | 70 | 0.5308 | -0.2592 | -0.0713 |
| 71 | SLD 14 | -1.85 | -7.55 | 70 | 0.5308 | -0.2592 | -0.0713 |
| 71 | SLD 15 | -3 | -5.32 | 60.56 | 0.4242 | -0.321 | -0.0569 |
| 71 | SLD 16 | -3 | -5.32 | 60.56 | 0.4242 | -0.321 | -0.0569 |
| 71 | SLV 1 | 22.2 | -13.72 | 141.54 | 0.3427 | 1.0036 | -0.0501 |
| 71 | SLV 2 | 22.2 | -13.72 | 141.54 | 0.3427 | 1.0036 | -0.0501 |
| 71 | SLV 3 | 19.35 | -8.51 | 119.09 | 0.0936 | 0.8534 | -0.0165 |
| 71 | SLV 4 | 19.35 | -8.51 | 119.09 | 0.0936 | 0.8534 | -0.0165 |
| 71 | SLV 5 | 14.19 | -17.5 | 135.95 | 0.7606 | 0.5837 | -0.1044 |
| 71 | SLV 6 | 14.19 | -17.5 | 135.95 | 0.7606 | 0.5837 | -0.1044 |
| 71 | SLV 7 | 4.7 | -0.14 | 61.1 | -0.0698 | 0.0832 | 0.0075 |
| 71 | SLV 8 | 4.7 | -0.14 | 61.1 | -0.0698 | 0.0832 | 0.0075 |
| 71 | SLV 9 | 4.48 | -15.53 | 108.71 | 0.8697 | 0.0737 | -0.1173 |
| 71 | SLV 10 | 4.48 | -15.53 | 108.71 | 0.8697 | 0.0737 | -0.1173 |
| 71 | SLV 11 | -5.01 | 1.83 | 33.85 | 0.0393 | -0.4269 | -0.0054 |
| 71 | SLV 12 | -5.01 | 1.83 | 33.85 | 0.0393 | -0.4269 | -0.0054 |
| 71 | SLV 13 | -10.17 | -7.16 | 50.72 | 0.7063 | -0.6966 | -0.0932 |
| 71 | SLV 14 | -10.17 | -7.16 | 50.72 | 0.7063 | -0.6966 | -0.0932 |
| 71 | SLV 15 | -13.01 | -1.95 | 28.27 | 0.4572 | -0.8467 | -0.0597 |
| 71 | SLV 16 | -13.01 | -1.95 | 28.27 | 0.4572 | -0.8467 | -0.0597 |
| 72 | SLU 1 | 0.26 | -0.07 | 39.33 | 0.0078 | 0.0147 | -0.0001 |
| 72 | SLU 2 | -0.91 | -0.08 | 42.27 | 0.0141 | -0.0377 | -0.0002 |
| 72 | SLU 3 | 0.09 | -0.07 | 40.1 | 0.0078 | 0.0066 | -0.0001 |
| 72 | SLU 4 | -0.61 | -0.08 | 41.87 | 0.0116 | -0.0248 | -0.0002 |

| Nodo | Cont. | Reazione a traslazione | | | Reazione a rotazione | | |
|---|---|---|---|---|---|---|---|
| Ind. | N.br. | x | y | z | x | y | z |
| 72 | SLU 5 | -1.13 | -0.08 | 42.76 | 0.0142 | -0.048 | -0.0002 |
| 72 | SLU 6 | -0.14 | -0.07 | 40.59 | 0.0079 | -0.0036 | -0.0001 |
| 72 | SLU 7 | -0.84 | -0.08 | 42.36 | 0.0117 | -0.035 | -0.0002 |
| 72 | SLU 8 | -0.18 | -0.07 | 40.31 | 0.0079 | -0.0058 | -0.0001 |
| 72 | SLU 9 | -0.88 | -0.08 | 42.07 | 0.0117 | -0.0373 | -0.0002 |
| 72 | SLU 10 | -0.98 | -0.09 | 48.37 | 0.0153 | -0.0406 | -0.0002 |
| 72 | SLU 11 | 0.01 | -0.08 | 46.2 | 0.009 | 0.0037 | -0.0001 |
| 72 | SLU 12 | -0.69 | -0.09 | 47.96 | 0.0128 | -0.0277 | -0.0002 |
| 72 | SLU 13 | -1.2 | -0.09 | 48.85 | 0.0153 | -0.0509 | -0.0002 |
| 72 | SLU 14 | -0.21 | -0.08 | 46.69 | 0.009 | -0.0065 | -0.0001 |
| 72 | SLU 15 | -0.91 | -0.09 | 48.45 | 0.0128 | -0.038 | -0.0002 |
| 72 | SLU 16 | -0.26 | -0.08 | 46.4 | 0.009 | -0.0088 | -0.0001 |
| 72 | SLU 17 | -0.96 | -0.09 | 48.17 | 0.0128 | -0.0402 | -0.0002 |
| 72 | SLU 18 | 0.15 | -0.08 | 48.04 | 0.0094 | 0.0105 | -0.0001 |
| 72 | SLU 19 | -0.55 | -0.09 | 49.8 | 0.0132 | -0.0209 | -0.0002 |
| 72 | SLU 20 | -0.07 | -0.08 | 48.53 | 0.0095 | 0.0002 | -0.0001 |
| 72 | SLU 21 | -0.77 | -0.09 | 50.29 | 0.0133 | -0.0312 | -0.0002 |
| 72 | SLU 22 | 0.2 | -0.08 | 44.05 | 0.0086 | 0.0125 | -0.0001 |
| 72 | SLU 23 | -0.96 | -0.09 | 46.99 | 0.015 | -0.0399 | -0.0002 |
| 72 | SLU 24 | 0.03 | -0.08 | 44.82 | 0.0087 | 0.0045 | -0.0001 |
| 72 | SLU 25 | -0.67 | -0.09 | 46.59 | 0.0125 | -0.027 | -0.0002 |
| 72 | SLU 26 | -1.19 | -0.09 | 47.48 | 0.015 | -0.0501 | -0.0002 |
| 72 | SLU 27 | -0.19 | -0.08 | 45.31 | 0.0087 | -0.0058 | -0.0001 |
| 72 | SLU 28 | -0.89 | -0.09 | 47.07 | 0.0125 | -0.0372 | -0.0002 |
| 72 | SLU 29 | -0.24 | -0.08 | 45.03 | 0.0087 | -0.008 | -0.0001 |
| 72 | SLU 30 | -0.94 | -0.08 | 46.79 | 0.0125 | -0.0394 | -0.0002 |
| 72 | SLU 31 | -1.04 | -0.1 | 53.09 | 0.0161 | -0.0428 | -0.0002 |
| 72 | SLU 32 | -0.04 | -0.09 | 50.92 | 0.0098 | 0.0015 | -0.0001 |
| 72 | SLU 33 | -0.75 | -0.09 | 52.68 | 0.0136 | -0.0299 | -0.0002 |
| 72 | SLU 34 | -1.26 | -0.1 | 53.57 | 0.0162 | -0.0531 | -0.0002 |
| 72 | SLU 35 | -0.27 | -0.09 | 51.4 | 0.0099 | -0.0087 | -0.0001 |
| 72 | SLU 36 | -0.97 | -0.09 | 53.17 | 0.0137 | -0.0401 | -0.0002 |
| 72 | SLU 37 | -0.31 | -0.09 | 51.12 | 0.0099 | -0.0109 | -0.0001 |
| 72 | SLU 38 | -1.02 | -0.09 | 52.89 | 0.0137 | -0.0424 | -0.0002 |
| 72 | SLU 39 | 0.1 | -0.09 | 52.76 | 0.0103 | 0.0083 | -0.0001 |
| 72 | SLU 40 | -0.6 | -0.1 | 54.52 | 0.0141 | -0.0231 | -0.0002 |
| 72 | SLU 41 | -0.12 | -0.09 | 53.25 | 0.0103 | -0.0019 | -0.0001 |
| 72 | SLU 42 | -0.82 | -0.1 | 55.01 | 0.0141 | -0.0334 | -0.0002 |
| 72 | SLU 43 | 0.36 | -0.09 | 49.52 | 0.0098 | 0.0198 | -0.0001 |
| 72 | SLU 44 | -0.81 | -0.1 | 52.45 | 0.0162 | -0.0326 | -0.0002 |
| 72 | SLU 45 | 0.18 | -0.09 | 50.29 | 0.0098 | 0.0118 | -0.0001 |
| 72 | SLU 46 | -0.52 | -0.1 | 52.05 | 0.0137 | -0.0196 | -0.0002 |
| 72 | SLU 47 | -1.03 | -0.1 | 52.94 | 0.0162 | -0.0428 | -0.0002 |
| 72 | SLU 48 | -0.04 | -0.09 | 50.77 | 0.0099 | 0.0015 | -0.0001 |
| 72 | SLU 49 | -0.74 | -0.1 | 52.54 | 0.0137 | -0.0299 | -0.0002 |
| 72 | SLU 50 | -0.09 | -0.09 | 50.49 | 0.0099 | -0.0007 | -0.0001 |
| 72 | SLU 51 | -0.79 | -0.1 | 52.26 | 0.0137 | -0.0321 | -0.0002 |
| 72 | SLU 52 | -0.88 | -0.11 | 58.55 | 0.0173 | -0.0355 | -0.0002 |
| 72 | SLU 53 | 0.11 | -0.1 | 56.38 | 0.011 | 0.0089 | -0.0001 |
| 72 | SLU 54 | -0.59 | -0.11 | 58.14 | 0.0148 | -0.0226 | -0.0002 |
| 72 | SLU 55 | -1.11 | -0.11 | 59.04 | 0.0174 | -0.0457 | -0.0002 |
| 72 | SLU 56 | -0.11 | -0.1 | 56.87 | 0.011 | -0.0014 | -0.0001 |
| 72 | SLU 57 | -0.81 | -0.11 | 58.63 | 0.0149 | -0.0328 | -0.0002 |
| 72 | SLU 58 | -0.16 | -0.1 | 56.59 | 0.011 | -0.0036 | -0.0001 |
| 72 | SLU 59 | -0.86 | -0.11 | 58.35 | 0.0149 | -0.035 | -0.0002 |
| 72 | SLU 60 | 0.25 | -0.1 | 58.22 | 0.0114 | 0.0156 | -0.0001 |
| 72 | SLU 61 | -0.45 | -0.11 | 59.98 | 0.0153 | -0.0158 | -0.0002 |
| 72 | SLU 62 | 0.03 | -0.1 | 58.71 | 0.0115 | 0.0054 | -0.0001 |
| 72 | SLU 63 | -0.67 | -0.11 | 60.47 | 0.0153 | -0.026 | -0.0002 |
| 72 | SLU 64 | 0.3 | -0.1 | 54.24 | 0.0107 | 0.0176 | -0.0001 |
| 72 | SLU 65 | -0.87 | -0.11 | 57.17 | 0.017 | -0.0347 | -0.0002 |
| 72 | SLU 66 | 0.13 | -0.1 | 55 | 0.0107 | 0.0096 | -0.0001 |
| 72 | SLU 67 | -0.57 | -0.1 | 56.77 | 0.0145 | -0.0218 | -0.0002 |
| 72 | SLU 68 | -1.09 | -0.11 | 57.66 | 0.0171 | -0.045 | -0.0002 |
| 72 | SLU 69 | -0.1 | -0.1 | 55.49 | 0.0108 | -0.0006 | -0.0001 |
| 72 | SLU 70 | -0.8 | -0.1 | 57.26 | 0.0146 | -0.0321 | -0.0002 |
| 72 | SLU 71 | -0.14 | -0.1 | 55.21 | 0.0108 | -0.0029 | -0.0001 |
| 72 | SLU 72 | -0.84 | -0.1 | 56.98 | 0.0146 | -0.0343 | -0.0002 |
| 72 | SLU 73 | -0.94 | -0.12 | 63.27 | 0.0182 | -0.0377 | -0.0002 |
| 72 | SLU 74 | 0.05 | -0.1 | 61.1 | 0.0119 | 0.0067 | -0.0001 |
| 72 | SLU 75 | -0.65 | -0.11 | 62.86 | 0.0157 | -0.0247 | -0.0002 |
| 72 | SLU 76 | -1.16 | -0.12 | 63.76 | 0.0182 | -0.0479 | -0.0002 |
| 72 | SLU 77 | -0.17 | -0.1 | 61.59 | 0.0119 | -0.0036 | -0.0001 |
| 72 | SLU 78 | -0.87 | -0.11 | 63.35 | 0.0157 | -0.035 | -0.0002 |
| 72 | SLU 79 | -0.22 | -0.1 | 61.31 | 0.0119 | -0.0058 | -0.0001 |
| 72 | SLU 80 | -0.92 | -0.11 | 63.07 | 0.0157 | -0.0372 | -0.0002 |
| 72 | SLU 81 | 0.19 | -0.11 | 62.94 | 0.0123 | 0.0135 | -0.0001 |
| 72 | SLU 82 | -0.51 | -0.12 | 64.7 | 0.0161 | -0.018 | -0.0002 |
| 72 | SLU 83 | -0.03 | -0.11 | 63.43 | 0.0124 | 0.0032 | -0.0001 |
| 72 | SLU 84 | -0.73 | -0.12 | 65.19 | 0.0162 | -0.0282 | -0.0002 |
| 72 | SLE RA 1 | 0.24 | -0.07 | 40.68 | 0.008 | 0.014 | -0.0001 |
| 72 | SLE RA 2 | -0.53 | -0.08 | 42.64 | 0.0123 | -0.0209 | -0.0002 |
| 72 | SLE RA 3 | 0.13 | -0.07 | 41.2 | 0.008 | 0.0087 | -0.0001 |
| 72 | SLE RA 4 | -0.34 | -0.08 | 42.37 | 0.0106 | -0.0123 | -0.0001 |
| 72 | SLE RA 5 | -0.68 | -0.08 | 42.97 | 0.0123 | -0.0277 | -0.0002 |
| 72 | SLE RA 6 | -0.02 | -0.07 | 41.52 | 0.0081 | 0.0019 | -0.0001 |
| 72 | SLE RA 7 | -0.49 | -0.08 | 42.7 | 0.0106 | -0.0191 | -0.0001 |
| 72 | SLE RA 8 | -0.05 | -0.07 | 41.33 | 0.0081 | 0.0004 | -0.0001 |

| Nodo | Cont. | Reazione a traslazione | | | Reazione a rotazione | | |
|---|---|---|---|---|---|---|---|
| Ind. | N.br. | x | y | z | x | y | z |
| 72 | SLE RA 9 | -0.52 | -0.08 | 42.51 | 0.0106 | -0.0206 | -0.0001 |
| 72 | SLE RA 10 | -0.58 | -0.09 | 46.7 | 0.013 | -0.0228 | -0.0002 |
| 72 | SLE RA 11 | 0.08 | -0.08 | 45.26 | 0.0088 | 0.0067 | -0.0001 |
| 72 | SLE RA 12 | -0.39 | -0.08 | 46.43 | 0.0114 | -0.0142 | -0.0001 |
| 72 | SLE RA 13 | -0.73 | -0.09 | 47.03 | 0.013 | -0.0297 | -0.0002 |
| 72 | SLE RA 14 | -0.07 | -0.08 | 45.58 | 0.0088 | -0.0001 | -0.0001 |
| 72 | SLE RA 15 | -0.54 | -0.08 | 46.76 | 0.0114 | -0.021 | -0.0001 |
| 72 | SLE RA 16 | -0.1 | -0.08 | 45.4 | 0.0088 | -0.0016 | -0.0001 |
| 72 | SLE RA 17 | -0.57 | -0.08 | 46.57 | 0.0114 | -0.0225 | -0.0001 |
| 72 | SLE RA 18 | 0.17 | -0.08 | 46.49 | 0.0091 | 0.0113 | -0.0001 |
| 72 | SLE RA 19 | -0.29 | -0.09 | 47.66 | 0.0116 | -0.0097 | -0.0001 |
| 72 | SLE RA 20 | 0.03 | -0.08 | 46.81 | 0.0091 | 0.0044 | -0.0001 |
| 72 | SLE RA 21 | -0.44 | -0.09 | 47.99 | 0.0117 | -0.0165 | -0.0001 |
| 72 | SLE FR 1 | 0.24 | -0.07 | 40.68 | 0.008 | 0.014 | -0.0001 |
| 72 | SLE FR 2 | 0.09 | -0.07 | 41.07 | 0.0089 | 0.0071 | -0.0001 |
| 72 | SLE FR 3 | 0.18 | -0.07 | 40.81 | 0.008 | 0.0113 | -0.0001 |
| 72 | SLE FR 4 | 0.07 | -0.08 | 42.82 | 0.0092 | 0.0062 | -0.0001 |
| 72 | SLE FR 5 | 0.16 | -0.07 | 42.55 | 0.0084 | 0.0105 | -0.0001 |
| 72 | SLE FR 6 | 0.21 | -0.08 | 43.58 | 0.0086 | 0.0127 | -0.0001 |
| 72 | SLE QP 1 | 0.24 | -0.07 | 40.68 | 0.008 | 0.014 | -0.0001 |
| 72 | SLE QP 2 | 0.22 | -0.07 | 42.42 | 0.0083 | 0.0132 | -0.0001 |
| 72 | SLD 1 | 8.37 | -0.15 | 50.54 | 0.0299 | 0.4036 | 0 |
| 72 | SLD 2 | 8.37 | -0.15 | 50.54 | 0.0299 | 0.4036 | 0 |
| 72 | SLD 3 | 6.73 | -0.11 | 46.58 | 0.0177 | 0.3355 | 0.0002 |
| 72 | SLD 4 | 6.73 | -0.11 | 46.58 | 0.0177 | 0.3355 | 0.0002 |
| 72 | SLD 5 | 5.15 | -0.16 | 50.87 | 0.0333 | 0.2336 | -0.0005 |
| 72 | SLD 6 | 5.15 | -0.16 | 50.87 | 0.0333 | 0.2336 | -0.0005 |
| 72 | SLD 7 | -0.31 | -0.02 | 37.66 | -0.0074 | 0.0066 | 0.0004 |
| 72 | SLD 8 | -0.31 | -0.02 | 37.66 | -0.0074 | 0.0066 | 0.0004 |
| 72 | SLD 9 | 0.75 | -0.13 | 47.19 | 0.0241 | 0.0198 | -0.0006 |
| 72 | SLD 10 | 0.75 | -0.13 | 47.19 | 0.0241 | 0.0198 | -0.0006 |
| 72 | SLD 11 | -4.7 | 0.02 | 33.98 | -0.0167 | -0.2072 | 0.0003 |
| 72 | SLD 12 | -4.7 | 0.02 | 33.98 | -0.0167 | -0.2072 | 0.0003 |
| 72 | SLD 13 | -6.29 | -0.04 | 38.27 | -0.001 | -0.3091 | -0.0004 |
| 72 | SLD 14 | -6.29 | -0.04 | 38.27 | -0.001 | -0.3091 | -0.0004 |
| 72 | SLD 15 | -7.92 | 0 | 34.31 | -0.0132 | -0.3772 | -0.0002 |
| 72 | SLD 16 | -7.92 | 0 | 34.31 | -0.0132 | -0.3772 | -0.0002 |
| 72 | SLV 1 | 19.05 | -0.25 | 61.42 | 0.0595 | 0.9158 | 0.0001 |
| 72 | SLV 2 | 19.05 | -0.25 | 61.42 | 0.0595 | 0.9158 | 0.0001 |
| 72 | SLV 3 | 15.19 | -0.15 | 51.94 | 0.0296 | 0.7546 | 0.0007 |
| 72 | SLV 4 | 15.19 | -0.15 | 51.94 | 0.0296 | 0.7546 | 0.0007 |
| 72 | SLV 5 | 11.72 | -0.29 | 62.49 | 0.0691 | 0.5285 | -0.001 |
| 72 | SLV 6 | 11.72 | -0.29 | 62.49 | 0.0691 | 0.5285 | -0.001 |
| 72 | SLV 7 | -1.14 | 0.06 | 30.91 | -0.0306 | -0.0089 | 0.0011 |
| 72 | SLV 8 | -1.14 | 0.06 | 30.91 | -0.0306 | -0.0089 | 0.0011 |
| 72 | SLV 9 | 1.58 | -0.21 | 53.94 | 0.0473 | 0.0353 | -0.0013 |
| 72 | SLV 10 | 1.58 | -0.21 | 53.94 | 0.0473 | 0.0353 | -0.0013 |
| 72 | SLV 11 | -11.28 | 0.14 | 22.36 | -0.0524 | -0.502 | 0.0008 |
| 72 | SLV 12 | -11.28 | 0.14 | 22.36 | -0.0524 | -0.502 | 0.0008 |
| 72 | SLV 13 | -14.75 | 0 | 32.9 | -0.0129 | -0.7281 | -0.0009 |
| 72 | SLV 14 | -14.75 | 0 | 32.9 | -0.0129 | -0.7281 | -0.0009 |
| 72 | SLV 15 | -18.61 | 0.1 | 23.43 | -0.0428 | -0.8893 | -0.0003 |
| 72 | SLV 16 | -18.61 | 0.1 | 23.43 | -0.0428 | -0.8893 | -0.0003 |
| 73 | SLU 1 | 1.21 | 0.05 | 35.79 | -0.014 | 0.0877 | 0.0001 |
| 73 | SLU 2 | 0.21 | 0.02 | 38.17 | -0.0065 | 0.0472 | -0.0001 |
| 73 | SLU 3 | 1.05 | 0.05 | 36.42 | -0.0143 | 0.082 | 0.0001 |
| 73 | SLU 4 | 0.45 | 0.03 | 37.85 | -0.0098 | 0.0576 | 0 |
| 73 | SLU 5 | -0.01 | 0.02 | 38.52 | -0.0065 | 0.0388 | -0.0001 |
| 73 | SLU 6 | 0.82 | 0.05 | 36.77 | -0.0144 | 0.0737 | 0.0001 |
| 73 | SLU 7 | 0.22 | 0.03 | 38.2 | -0.0098 | 0.0493 | 0 |
| 73 | SLU 8 | 0.77 | 0.05 | 36.5 | -0.0141 | 0.0711 | 0.0001 |
| 73 | SLU 9 | 0.17 | 0.03 | 37.92 | -0.0096 | 0.0468 | 0 |
| 73 | SLU 10 | 0.32 | 0.03 | 43.53 | -0.0083 | 0.0591 | -0.0001 |
| 73 | SLU 11 | 1.16 | 0.05 | 41.78 | -0.0161 | 0.094 | 0.0001 |
| 73 | SLU 12 | 0.56 | 0.04 | 43.2 | -0.0116 | 0.0696 | 0 |
| 73 | SLU 13 | 0.1 | 0.03 | 43.88 | -0.0083 | 0.0508 | -0.0001 |
| 73 | SLU 14 | 0.93 | 0.06 | 42.13 | -0.0162 | 0.0857 | 0.0001 |
| 73 | SLU 15 | 0.34 | 0.04 | 43.56 | -0.0116 | 0.0613 | 0 |
| 73 | SLU 16 | 0.88 | 0.05 | 41.86 | -0.0159 | 0.0831 | 0.0001 |
| 73 | SLU 17 | 0.28 | 0.04 | 43.28 | -0.0114 | 0.0587 | 0 |
| 73 | SLU 18 | 1.37 | 0.06 | 43.45 | -0.0166 | 0.1049 | 0.0001 |
| 73 | SLU 19 | 0.77 | 0.04 | 44.87 | -0.0121 | 0.0805 | 0 |
| 73 | SLU 20 | 1.15 | 0.06 | 43.8 | -0.0167 | 0.0965 | 0.0001 |
| 73 | SLU 21 | 0.55 | 0.04 | 45.23 | -0.0121 | 0.0722 | 0 |
| 73 | SLU 22 | 1.29 | 0.05 | 39.96 | -0.0155 | 0.0964 | 0.0001 |
| 73 | SLU 23 | 0.29 | 0.03 | 42.34 | -0.008 | 0.0559 | -0.0001 |
| 73 | SLU 24 | 1.13 | 0.05 | 40.59 | -0.0158 | 0.0907 | 0.0001 |
| 73 | SLU 25 | 0.53 | 0.04 | 42.02 | -0.0113 | 0.0663 | 0 |
| 73 | SLU 26 | 0.07 | 0.03 | 42.69 | -0.008 | 0.0475 | -0.0001 |
| 73 | SLU 27 | 0.9 | 0.05 | 40.94 | -0.0159 | 0.0824 | 0.0001 |
| 73 | SLU 28 | 0.3 | 0.04 | 42.37 | -0.0113 | 0.058 | 0 |
| 73 | SLU 29 | 0.85 | 0.05 | 40.67 | -0.0156 | 0.0798 | 0.0001 |
| 73 | SLU 30 | 0.25 | 0.04 | 42.09 | -0.0111 | 0.0555 | 0 |
| 73 | SLU 31 | 0.4 | 0.03 | 47.7 | -0.0098 | 0.0679 | -0.0001 |
| 73 | SLU 32 | 1.24 | 0.06 | 45.95 | -0.0176 | 0.1027 | 0.0001 |
| 73 | SLU 33 | 0.64 | 0.04 | 47.38 | -0.0131 | 0.0783 | 0 |
| 73 | SLU 34 | 0.18 | 0.03 | 48.05 | -0.0098 | 0.0595 | -0.0001 |
| 73 | SLU 35 | 1.01 | 0.06 | 46.3 | -0.0177 | 0.0944 | 0.0001 |

| Nodo | Cont. | Reazione a traslazione | | | Reazione a rotazione | | |
|---|---|---|---|---|---|---|---|
| Ind. | N.br. | x | y | z | x | y | z |
| 73 | SLU 36 | 0.41 | 0.05 | 47.73 | -0.0131 | 0.07 | 0 |
| 73 | SLU 37 | 0.96 | 0.06 | 46.03 | -0.0174 | 0.0918 | 0.0001 |
| 73 | SLU 38 | 0.36 | 0.04 | 47.45 | -0.0129 | 0.0674 | 0 |
| 73 | SLU 39 | 1.45 | 0.06 | 47.62 | -0.0181 | 0.1136 | 0.0001 |
| 73 | SLU 40 | 0.85 | 0.05 | 49.04 | -0.0136 | 0.0892 | 0 |
| 73 | SLU 41 | 1.23 | 0.06 | 47.97 | -0.0182 | 0.1053 | 0.0001 |
| 73 | SLU 42 | 0.63 | 0.05 | 49.4 | -0.0136 | 0.0809 | 0 |
| 73 | SLU 43 | 1.55 | 0.06 | 45.1 | -0.0177 | 0.1111 | 0.0001 |
| 73 | SLU 44 | 0.55 | 0.03 | 47.47 | -0.0102 | 0.0705 | -0.0001 |
| 73 | SLU 45 | 1.38 | 0.06 | 45.73 | -0.018 | 0.1053 | 0.0001 |
| 73 | SLU 46 | 0.78 | 0.04 | 47.15 | -0.0135 | 0.081 | 0 |
| 73 | SLU 47 | 0.33 | 0.03 | 47.83 | -0.0102 | 0.0622 | -0.0001 |
| 73 | SLU 48 | 1.16 | 0.06 | 46.08 | -0.0181 | 0.097 | 0.0001 |
| 73 | SLU 49 | 0.56 | 0.05 | 47.51 | -0.0135 | 0.0727 | 0 |
| 73 | SLU 50 | 1.1 | 0.06 | 45.8 | -0.0178 | 0.0944 | 0.0001 |
| 73 | SLU 51 | 0.5 | 0.04 | 47.23 | -0.0133 | 0.0701 | 0 |
| 73 | SLU 52 | 0.66 | 0.04 | 52.83 | -0.012 | 0.0825 | 0 |
| 73 | SLU 53 | 1.49 | 0.07 | 51.09 | -0.0198 | 0.1173 | 0.0001 |
| 73 | SLU 54 | 0.89 | 0.05 | 52.51 | -0.0153 | 0.093 | 0 |
| 73 | SLU 55 | 0.44 | 0.04 | 53.19 | -0.012 | 0.0742 | 0 |
| 73 | SLU 56 | 1.27 | 0.07 | 51.44 | -0.0199 | 0.109 | 0.0001 |
| 73 | SLU 57 | 0.67 | 0.05 | 52.86 | -0.0153 | 0.0846 | 0 |
| 73 | SLU 58 | 1.21 | 0.07 | 51.16 | -0.0196 | 0.1064 | 0.0001 |
| 73 | SLU 59 | 0.61 | 0.05 | 52.59 | -0.0151 | 0.0821 | 0 |
| 73 | SLU 60 | 1.7 | 0.07 | 52.75 | -0.0203 | 0.1282 | 0.0001 |
| 73 | SLU 61 | 1.1 | 0.05 | 54.18 | -0.0158 | 0.1039 | 0 |
| 73 | SLU 62 | 1.48 | 0.07 | 53.11 | -0.0204 | 0.1199 | 0.0001 |
| 73 | SLU 63 | 0.88 | 0.05 | 54.53 | -0.0158 | 0.0955 | 0 |
| 73 | SLU 64 | 1.63 | 0.06 | 49.27 | -0.0192 | 0.1198 | 0.0001 |
| 73 | SLU 65 | 0.63 | 0.04 | 51.65 | -0.0117 | 0.0792 | 0 |
| 73 | SLU 66 | 1.46 | 0.06 | 49.9 | -0.0195 | 0.114 | 0.0001 |
| 73 | SLU 67 | 0.86 | 0.05 | 51.32 | -0.015 | 0.0897 | 0 |
| 73 | SLU 68 | 0.4 | 0.04 | 52 | -0.0117 | 0.0709 | 0 |
| 73 | SLU 69 | 1.24 | 0.07 | 50.25 | -0.0196 | 0.1057 | 0.0001 |
| 73 | SLU 70 | 0.64 | 0.05 | 51.68 | -0.015 | 0.0814 | 0 |
| 73 | SLU 71 | 1.18 | 0.07 | 49.98 | -0.0193 | 0.1031 | 0.0001 |
| 73 | SLU 72 | 0.58 | 0.05 | 51.4 | -0.0148 | 0.0788 | 0 |
| 73 | SLU 73 | 0.74 | 0.04 | 57 | -0.0135 | 0.0912 | 0 |
| 73 | SLU 74 | 1.57 | 0.07 | 55.26 | -0.0213 | 0.126 | 0.0001 |
| 73 | SLU 75 | 0.97 | 0.06 | 56.68 | -0.0168 | 0.1017 | 0 |
| 73 | SLU 76 | 0.51 | 0.05 | 57.36 | -0.0135 | 0.0829 | 0 |
| 73 | SLU 77 | 1.35 | 0.07 | 55.61 | -0.0214 | 0.1177 | 0.0001 |
| 73 | SLU 78 | 0.75 | 0.06 | 57.04 | -0.0168 | 0.0934 | 0 |
| 73 | SLU 79 | 1.29 | 0.07 | 55.33 | -0.0211 | 0.1151 | 0.0001 |
| 73 | SLU 80 | 0.69 | 0.06 | 56.76 | -0.0166 | 0.0908 | 0 |
| 73 | SLU 81 | 1.78 | 0.07 | 56.92 | -0.0218 | 0.1369 | 0.0001 |
| 73 | SLU 82 | 1.18 | 0.06 | 58.35 | -0.0173 | 0.1126 | 0 |
| 73 | SLU 83 | 1.56 | 0.07 | 57.28 | -0.0219 | 0.1286 | 0.0002 |
| 73 | SLU 84 | 0.96 | 0.06 | 58.7 | -0.0173 | 0.1042 | 0 |
| 73 | SLE RA 1 | 1.23 | 0.05 | 36.98 | -0.0145 | 0.0902 | 0.0001 |
| 73 | SLE RA 2 | 0.57 | 0.03 | 38.57 | -0.0094 | 0.0632 | 0 |
| 73 | SLE RA 3 | 1.12 | 0.05 | 37.4 | -0.0147 | 0.0864 | 0.0001 |
| 73 | SLE RA 4 | 0.72 | 0.04 | 38.35 | -0.0116 | 0.0702 | 0 |
| 73 | SLE RA 5 | 0.42 | 0.03 | 38.8 | -0.0095 | 0.0576 | 0 |
| 73 | SLE RA 6 | 0.98 | 0.05 | 37.64 | -0.0147 | 0.0808 | 0.0001 |
| 73 | SLE RA 7 | 0.58 | 0.04 | 38.59 | -0.0117 | 0.0646 | 0 |
| 73 | SLE RA 8 | 0.94 | 0.05 | 37.45 | -0.0145 | 0.0791 | 0.0001 |
| 73 | SLE RA 9 | 0.54 | 0.04 | 38.4 | -0.0115 | 0.0629 | 0 |
| 73 | SLE RA 10 | 0.64 | 0.03 | 42.14 | -0.0106 | 0.0712 | 0 |
| 73 | SLE RA 11 | 1.2 | 0.05 | 40.97 | -0.0159 | 0.0944 | 0.0001 |
| 73 | SLE RA 12 | 0.8 | 0.04 | 41.93 | -0.0128 | 0.0782 | 0 |
| 73 | SLE RA 13 | 0.49 | 0.04 | 42.37 | -0.0107 | 0.0656 | 0 |
| 73 | SLE RA 14 | 1.05 | 0.05 | 41.21 | -0.0159 | 0.0888 | 0.0001 |
| 73 | SLE RA 15 | 0.65 | 0.04 | 42.16 | -0.0129 | 0.0726 | 0 |
| 73 | SLE RA 16 | 1.01 | 0.05 | 41.03 | -0.0157 | 0.0871 | 0.0001 |
| 73 | SLE RA 17 | 0.61 | 0.04 | 41.98 | -0.0127 | 0.0709 | 0 |
| 73 | SLE RA 18 | 1.34 | 0.05 | 42.09 | -0.0162 | 0.1016 | 0.0001 |
| 73 | SLE RA 19 | 0.94 | 0.04 | 43.04 | -0.0132 | 0.0854 | 0 |
| 73 | SLE RA 20 | 1.19 | 0.05 | 42.32 | -0.0162 | 0.0961 | 0.0001 |
| 73 | SLE RA 21 | 0.79 | 0.04 | 43.27 | -0.0132 | 0.0799 | 0 |
| 73 | SLE FR 1 | 1.23 | 0.05 | 36.98 | -0.0145 | 0.0902 | 0.0001 |
| 73 | SLE FR 2 | 1.1 | 0.04 | 37.3 | -0.0135 | 0.0848 | 0.0001 |
| 73 | SLE FR 3 | 1.17 | 0.05 | 37.08 | -0.0145 | 0.088 | 0.0001 |
| 73 | SLE FR 4 | 1.13 | 0.05 | 38.83 | -0.014 | 0.0882 | 0.0001 |
| 73 | SLE FR 5 | 1.21 | 0.05 | 38.61 | -0.015 | 0.0914 | 0.0001 |
| 73 | SLE FR 6 | 1.29 | 0.05 | 39.53 | -0.0153 | 0.0959 | 0.0001 |
| 73 | SLE QP 1 | 1.23 | 0.05 | 36.98 | -0.0145 | 0.0902 | 0.0001 |
| 73 | SLE QP 2 | 1.26 | 0.05 | 38.51 | -0.015 | 0.0936 | 0.0001 |
| 73 | SLD 1 | 10.26 | -0.05 | 44.38 | -0.0034 | 0.4973 | -0.0002 |
| 73 | SLD 2 | 10.26 | -0.05 | 44.38 | -0.0034 | 0.4973 | -0.0002 |
| 73 | SLD 3 | 8.7 | 0.01 | 41.01 | 0.0157 | 0.4373 | 0 |
| 73 | SLD 4 | 8.7 | 0.01 | 41.01 | 0.0157 | 0.4373 | 0 |
| 73 | SLD 5 | 6.33 | -0.08 | 45.38 | -0.0405 | 0.3058 | -0.0004 |
| 73 | SLD 6 | 6.33 | -0.08 | 45.38 | -0.0405 | 0.3058 | -0.0004 |
| 73 | SLD 7 | 1.13 | 0.13 | 34.16 | 0.0232 | 0.1057 | 0.0004 |
| 73 | SLD 8 | 1.13 | 0.13 | 34.16 | 0.0232 | 0.1057 | 0.0004 |
| 73 | SLD 9 | 1.4 | -0.04 | 42.87 | -0.0531 | 0.0816 | -0.0002 |
| 73 | SLD 10 | 1.4 | -0.04 | 42.87 | -0.0531 | 0.0816 | -0.0002 |

| Nodo | Cont. | Reazione a traslazione | | | Reazione a rotazione | | |
|---|---|---|---|---|---|---|---|
| Ind. | N.br. | x | y | z | x | y | z |
| 73 | SLD 11 | -3.8 | 0.18 | 31.65 | 0.0105 | -0.1185 | 0.0006 |
| 73 | SLD 12 | -3.8 | 0.18 | 31.65 | 0.0105 | -0.1185 | 0.0006 |
| 73 | SLD 13 | -6.17 | 0.09 | 36.01 | -0.0457 | -0.25 | 0.0002 |
| 73 | SLD 14 | -6.17 | 0.09 | 36.01 | -0.0457 | -0.25 | 0.0002 |
| 73 | SLD 15 | -7.73 | 0.15 | 32.64 | -0.0266 | -0.31 | 0.0004 |
| 73 | SLD 16 | -7.73 | 0.15 | 32.64 | -0.0266 | -0.31 | 0.0004 |
| 73 | SLV 1 | 22.06 | -0.19 | 52.3 | 0.0109 | 1.0271 | -0.0007 |
| 73 | SLV 2 | 22.06 | -0.19 | 52.3 | 0.0109 | 1.0271 | -0.0007 |
| 73 | SLV 3 | 18.38 | -0.03 | 44.27 | 0.0587 | 0.8838 | -0.0001 |
| 73 | SLV 4 | 18.38 | -0.03 | 44.27 | 0.0587 | 0.8838 | -0.0001 |
| 73 | SLV 5 | 13.09 | -0.27 | 54.83 | -0.0798 | 0.5909 | -0.0011 |
| 73 | SLV 6 | 13.09 | -0.27 | 54.83 | -0.0798 | 0.5909 | -0.0011 |
| 73 | SLV 7 | 0.81 | 0.27 | 28.06 | 0.0798 | 0.1134 | 0.001 |
| 73 | SLV 8 | 0.81 | 0.27 | 28.06 | 0.0798 | 0.1134 | 0.001 |
| 73 | SLV 9 | 1.72 | -0.17 | 48.97 | -0.1097 | 0.0739 | -0.0008 |
| 73 | SLV 10 | 1.72 | -0.17 | 48.97 | -0.1097 | 0.0739 | -0.0008 |
| 73 | SLV 11 | -10.56 | 0.36 | 22.19 | 0.0499 | -0.4036 | 0.0013 |
| 73 | SLV 12 | -10.56 | 0.36 | 22.19 | 0.0499 | -0.4036 | 0.0013 |
| 73 | SLV 13 | -15.85 | 0.13 | 32.76 | -0.0887 | -0.6965 | 0.0003 |
| 73 | SLV 14 | -15.85 | 0.13 | 32.76 | -0.0887 | -0.6965 | 0.0003 |
| 73 | SLV 15 | -19.53 | 0.29 | 24.72 | -0.0408 | -0.8398 | 0.0009 |
| 73 | SLV 16 | -19.53 | 0.29 | 24.72 | -0.0408 | -0.8398 | 0.0009 |
| 74 | SLU 1 | 1.37 | 0.12 | 35.09 | -0.028 | 0.0399 | 0.0004 |
| 74 | SLU 2 | 0.45 | 0.11 | 37.72 | -0.0261 | -0.0084 | 0.0004 |
| 74 | SLU 3 | 1.2 | 0.12 | 35.6 | -0.0281 | 0.0316 | 0.0004 |
| 74 | SLU 4 | 0.65 | 0.12 | 37.18 | -0.027 | 0.0027 | 0.0004 |
| 74 | SLU 5 | 0.22 | 0.11 | 37.93 | -0.0258 | -0.019 | 0.0004 |
| 74 | SLU 6 | 0.96 | 0.12 | 35.81 | -0.0278 | 0.021 | 0.0004 |
| 74 | SLU 7 | 0.41 | 0.12 | 37.39 | -0.0267 | -0.0079 | 0.0004 |
| 74 | SLU 8 | 0.9 | 0.12 | 35.5 | -0.0273 | 0.0186 | 0.0004 |
| 74 | SLU 9 | 0.35 | 0.12 | 37.08 | -0.0262 | -0.0103 | 0.0004 |
| 74 | SLU 10 | 0.62 | 0.13 | 42.8 | -0.0299 | -0.004 | 0.0005 |
| 74 | SLU 11 | 1.37 | 0.14 | 40.68 | -0.0319 | 0.0361 | 0.0005 |
| 74 | SLU 12 | 0.82 | 0.13 | 42.26 | -0.0307 | 0.0071 | 0.0005 |
| 74 | SLU 13 | 0.39 | 0.13 | 43 | -0.0295 | -0.0146 | 0.0005 |
| 74 | SLU 14 | 1.13 | 0.14 | 40.88 | -0.0315 | 0.0255 | 0.0005 |
| 74 | SLU 15 | 0.58 | 0.13 | 42.46 | -0.0304 | -0.0035 | 0.0005 |
| 74 | SLU 16 | 1.07 | 0.14 | 40.58 | -0.0311 | 0.0231 | 0.0005 |
| 74 | SLU 17 | 0.52 | 0.13 | 42.16 | -0.0299 | -0.0059 | 0.0005 |
| 74 | SLU 18 | 1.62 | 0.15 | 42.34 | -0.0333 | 0.0462 | 0.0005 |
| 74 | SLU 19 | 1.07 | 0.14 | 43.92 | -0.0322 | 0.0173 | 0.0005 |
| 74 | SLU 20 | 1.38 | 0.15 | 42.55 | -0.033 | 0.0356 | 0.0005 |
| 74 | SLU 21 | 0.83 | 0.14 | 44.13 | -0.0319 | 0.0066 | 0.0005 |
| 74 | SLU 22 | 1.49 | 0.14 | 39.07 | -0.031 | 0.0426 | 0.0005 |
| 74 | SLU 23 | 0.57 | 0.13 | 41.7 | -0.0292 | -0.0057 | 0.0005 |
| 74 | SLU 24 | 1.32 | 0.14 | 39.58 | -0.0311 | 0.0344 | 0.0005 |
| 74 | SLU 25 | 0.76 | 0.13 | 41.16 | -0.03 | 0.0054 | 0.0005 |
| 74 | SLU 26 | 0.33 | 0.13 | 41.91 | -0.0288 | -0.0163 | 0.0005 |
| 74 | SLU 27 | 1.08 | 0.14 | 39.79 | -0.0308 | 0.0238 | 0.0005 |
| 74 | SLU 28 | 0.53 | 0.13 | 41.37 | -0.0297 | -0.0052 | 0.0005 |
| 74 | SLU 29 | 1.02 | 0.14 | 39.48 | -0.0304 | 0.0214 | 0.0005 |
| 74 | SLU 30 | 0.46 | 0.13 | 41.06 | -0.0292 | -0.0076 | 0.0005 |
| 74 | SLU 31 | 0.74 | 0.14 | 46.78 | -0.0329 | -0.0012 | 0.0005 |
| 74 | SLU 32 | 1.49 | 0.15 | 44.66 | -0.0349 | 0.0388 | 0.0005 |
| 74 | SLU 33 | 0.93 | 0.15 | 46.24 | -0.0338 | 0.0099 | 0.0005 |
| 74 | SLU 34 | 0.5 | 0.14 | 46.99 | -0.0325 | -0.0118 | 0.0005 |
| 74 | SLU 35 | 1.25 | 0.15 | 44.87 | -0.0345 | 0.0282 | 0.0005 |
| 74 | SLU 36 | 0.7 | 0.15 | 46.45 | -0.0334 | -0.0007 | 0.0005 |
| 74 | SLU 37 | 1.19 | 0.15 | 44.56 | -0.0341 | 0.0258 | 0.0005 |
| 74 | SLU 38 | 0.63 | 0.15 | 46.14 | -0.033 | -0.0031 | 0.0005 |
| 74 | SLU 39 | 1.74 | 0.16 | 46.32 | -0.0363 | 0.0489 | 0.0006 |
| 74 | SLU 40 | 1.18 | 0.15 | 47.9 | -0.0352 | 0.02 | 0.0006 |
| 74 | SLU 41 | 1.5 | 0.16 | 46.53 | -0.036 | 0.0383 | 0.0005 |
| 74 | SLU 42 | 0.95 | 0.15 | 48.11 | -0.0349 | 0.0094 | 0.0006 |
| 74 | SLU 43 | 1.75 | 0.15 | 44.25 | -0.0354 | 0.0509 | 0.0005 |
| 74 | SLU 44 | 0.83 | 0.14 | 46.88 | -0.0335 | 0.0026 | 0.0005 |
| 74 | SLU 45 | 1.57 | 0.16 | 44.76 | -0.0355 | 0.0427 | 0.0005 |
| 74 | SLU 46 | 1.02 | 0.15 | 46.34 | -0.0344 | 0.0137 | 0.0005 |
| 74 | SLU 47 | 0.59 | 0.14 | 47.09 | -0.0332 | -0.008 | 0.0005 |
| 74 | SLU 48 | 1.33 | 0.16 | 44.97 | -0.0352 | 0.0321 | 0.0005 |
| 74 | SLU 49 | 0.78 | 0.15 | 46.55 | -0.0341 | 0.0031 | 0.0005 |
| 74 | SLU 50 | 1.27 | 0.15 | 44.66 | -0.0347 | 0.0297 | 0.0005 |
| 74 | SLU 51 | 0.72 | 0.15 | 46.24 | -0.0336 | 0.0007 | 0.0005 |
| 74 | SLU 52 | 1 | 0.16 | 51.96 | -0.0372 | 0.0071 | 0.0006 |
| 74 | SLU 53 | 1.74 | 0.17 | 49.84 | -0.0392 | 0.0471 | 0.0006 |
| 74 | SLU 54 | 1.19 | 0.17 | 51.42 | -0.0381 | 0.0182 | 0.0006 |
| 74 | SLU 55 | 0.76 | 0.16 | 52.16 | -0.0369 | -0.0035 | 0.0006 |
| 74 | SLU 56 | 1.5 | 0.17 | 50.04 | -0.0389 | 0.0365 | 0.0006 |
| 74 | SLU 57 | 0.95 | 0.17 | 51.62 | -0.0378 | 0.0076 | 0.0006 |
| 74 | SLU 58 | 1.44 | 0.17 | 49.74 | -0.0384 | 0.0341 | 0.0006 |
| 74 | SLU 59 | 0.89 | 0.16 | 51.32 | -0.0373 | 0.0052 | 0.0006 |
| 74 | SLU 60 | 1.99 | 0.18 | 51.5 | -0.0407 | 0.0572 | 0.0006 |
| 74 | SLU 61 | 1.44 | 0.17 | 53.08 | -0.0396 | 0.0283 | 0.0006 |
| 74 | SLU 62 | 1.75 | 0.18 | 51.71 | -0.0403 | 0.0466 | 0.0006 |
| 74 | SLU 63 | 1.2 | 0.17 | 53.29 | -0.0392 | 0.0177 | 0.0006 |
| 74 | SLU 64 | 1.86 | 0.17 | 48.23 | -0.0384 | 0.0536 | 0.0006 |
| 74 | SLU 65 | 0.94 | 0.16 | 50.86 | -0.0365 | 0.0054 | 0.0006 |
| 74 | SLU 66 | 1.69 | 0.17 | 48.74 | -0.0385 | 0.0454 | 0.0006 |

| Nodo | Cont. | Reazione a traslazione | | | Reazione a rotazione | | |
|---|---|---|---|---|---|---|---|
| Ind. | N.br. | x | y | z | x | y | z |
| 74 | SLU 67 | 1.14 | 0.16 | 50.32 | -0.0374 | 0.0164 | 0.0006 |
| 74 | SLU 68 | 0.71 | 0.16 | 51.07 | -0.0362 | -0.0053 | 0.0006 |
| 74 | SLU 69 | 1.45 | 0.17 | 48.95 | -0.0382 | 0.0348 | 0.0006 |
| 74 | SLU 70 | 0.9 | 0.16 | 50.53 | -0.0371 | 0.0058 | 0.0006 |
| 74 | SLU 71 | 1.39 | 0.17 | 48.64 | -0.0377 | 0.0324 | 0.0006 |
| 74 | SLU 72 | 0.84 | 0.16 | 50.22 | -0.0366 | 0.0034 | 0.0006 |
| 74 | SLU 73 | 1.11 | 0.17 | 55.94 | -0.0402 | 0.0098 | 0.0007 |
| 74 | SLU 74 | 1.86 | 0.19 | 53.82 | -0.0422 | 0.0498 | 0.0006 |
| 74 | SLU 75 | 1.31 | 0.18 | 55.4 | -0.0411 | 0.0209 | 0.0007 |
| 74 | SLU 76 | 0.88 | 0.17 | 56.15 | -0.0399 | -0.0008 | 0.0007 |
| 74 | SLU 77 | 1.62 | 0.19 | 54.03 | -0.0419 | 0.0392 | 0.0006 |
| 74 | SLU 78 | 1.07 | 0.18 | 55.61 | -0.0408 | 0.0103 | 0.0006 |
| 74 | SLU 79 | 1.56 | 0.18 | 53.72 | -0.0414 | 0.0368 | 0.0006 |
| 74 | SLU 80 | 1.01 | 0.18 | 55.3 | -0.0403 | 0.0079 | 0.0006 |
| 74 | SLU 81 | 2.11 | 0.19 | 55.48 | -0.0437 | 0.0599 | 0.0007 |
| 74 | SLU 82 | 1.56 | 0.19 | 57.06 | -0.0426 | 0.031 | 0.0007 |
| 74 | SLU 83 | 1.87 | 0.19 | 55.69 | -0.0433 | 0.0493 | 0.0007 |
| 74 | SLU 84 | 1.32 | 0.19 | 57.27 | -0.0422 | 0.0204 | 0.0007 |
| 74 | SLE RA 1 | 1.41 | 0.13 | 36.22 | -0.0288 | 0.0406 | 0.0004 |
| 74 | SLE RA 2 | 0.79 | 0.12 | 37.98 | -0.0276 | 0.0085 | 0.0004 |
| 74 | SLE RA 3 | 1.29 | 0.13 | 36.57 | -0.0289 | 0.0352 | 0.0004 |
| 74 | SLE RA 4 | 0.92 | 0.12 | 37.62 | -0.0282 | 0.0159 | 0.0004 |
| 74 | SLE RA 5 | 0.64 | 0.12 | 38.12 | -0.0274 | 0.0014 | 0.0004 |
| 74 | SLE RA 6 | 1.13 | 0.13 | 36.7 | -0.0287 | 0.0281 | 0.0004 |
| 74 | SLE RA 7 | 0.76 | 0.12 | 37.76 | -0.028 | 0.0088 | 0.0004 |
| 74 | SLE RA 8 | 1.09 | 0.13 | 36.5 | -0.0284 | 0.0265 | 0.0004 |
| 74 | SLE RA 9 | 0.72 | 0.12 | 37.55 | -0.0277 | 0.0072 | 0.0004 |
| 74 | SLE RA 10 | 0.91 | 0.13 | 41.36 | -0.0301 | 0.0114 | 0.0005 |
| 74 | SLE RA 11 | 1.4 | 0.14 | 39.95 | -0.0314 | 0.0381 | 0.0005 |
| 74 | SLE RA 12 | 1.04 | 0.13 | 41 | -0.0307 | 0.0188 | 0.0005 |
| 74 | SLE RA 13 | 0.75 | 0.13 | 41.5 | -0.0299 | 0.0044 | 0.0005 |
| 74 | SLE RA 14 | 1.24 | 0.14 | 40.09 | -0.0312 | 0.0311 | 0.0005 |
| 74 | SLE RA 15 | 0.88 | 0.13 | 41.14 | -0.0305 | 0.0118 | 0.0005 |
| 74 | SLE RA 16 | 1.2 | 0.14 | 39.88 | -0.0309 | 0.0295 | 0.0005 |
| 74 | SLE RA 17 | 0.84 | 0.13 | 40.94 | -0.0302 | 0.0102 | 0.0005 |
| 74 | SLE RA 18 | 1.57 | 0.14 | 41.06 | -0.0324 | 0.0449 | 0.0005 |
| 74 | SLE RA 19 | 1.2 | 0.14 | 42.11 | -0.0316 | 0.0256 | 0.0005 |
| 74 | SLE RA 20 | 1.41 | 0.14 | 41.2 | -0.0322 | 0.0378 | 0.0005 |
| 74 | SLE RA 21 | 1.04 | 0.14 | 42.25 | -0.0314 | 0.0185 | 0.0005 |
| 74 | SLE FR 1 | 1.41 | 0.13 | 36.22 | -0.0288 | 0.0406 | 0.0004 |
| 74 | SLE FR 2 | 1.29 | 0.12 | 36.58 | -0.0286 | 0.0342 | 0.0004 |
| 74 | SLE FR 3 | 1.34 | 0.13 | 36.28 | -0.0288 | 0.0378 | 0.0004 |
| 74 | SLE FR 4 | 1.33 | 0.13 | 38.03 | -0.0297 | 0.0355 | 0.0005 |
| 74 | SLE FR 5 | 1.39 | 0.13 | 37.73 | -0.0298 | 0.0391 | 0.0004 |
| 74 | SLE FR 6 | 1.49 | 0.13 | 38.64 | -0.0306 | 0.0427 | 0.0005 |
| 74 | SLE QP 1 | 1.41 | 0.13 | 36.22 | -0.0288 | 0.0406 | 0.0004 |
| 74 | SLE QP 2 | 1.46 | 0.13 | 37.67 | -0.0299 | 0.0419 | 0.0005 |
| 74 | SLD 1 | 10.99 | 0.21 | 43.4 | -0.0529 | 0.4761 | 0.0006 |
| 74 | SLD 2 | 10.99 | 0.21 | 43.4 | -0.0529 | 0.4761 | 0.0006 |
| 74 | SLD 3 | 9.45 | 0.16 | 39.23 | -0.0369 | 0.4123 | 0.0005 |
| 74 | SLD 4 | 9.45 | 0.16 | 39.23 | -0.0369 | 0.4123 | 0.0005 |
| 74 | SLD 5 | 6.65 | 0.24 | 45.7 | -0.061 | 0.269 | 0.0008 |
| 74 | SLD 6 | 6.65 | 0.24 | 45.7 | -0.061 | 0.269 | 0.0008 |
| 74 | SLD 7 | 1.52 | 0.05 | 31.83 | -0.0078 | 0.0562 | 0.0002 |
| 74 | SLD 8 | 1.52 | 0.05 | 31.83 | -0.0078 | 0.0562 | 0.0002 |
| 74 | SLD 9 | 1.4 | 0.21 | 43.52 | -0.052 | 0.0276 | 0.0007 |
| 74 | SLD 10 | 1.4 | 0.21 | 43.52 | -0.052 | 0.0276 | 0.0007 |
| 74 | SLD 11 | -3.74 | 0.02 | 29.65 | 0.0012 | -0.1852 | 0.0001 |
| 74 | SLD 12 | -3.74 | 0.02 | 29.65 | 0.0012 | -0.1852 | 0.0001 |
| 74 | SLD 13 | -6.54 | 0.11 | 36.11 | -0.0229 | -0.3285 | 0.0004 |
| 74 | SLD 14 | -6.54 | 0.11 | 36.11 | -0.0229 | -0.3285 | 0.0004 |
| 74 | SLD 15 | -8.08 | 0.05 | 31.95 | -0.0069 | -0.3923 | 0.0003 |
| 74 | SLD 16 | -8.08 | 0.05 | 31.95 | -0.0069 | -0.3923 | 0.0003 |
| 74 | SLV 1 | 23.49 | 0.33 | 51.15 | -0.0854 | 1.0454 | 0.0009 |
| 74 | SLV 2 | 23.49 | 0.33 | 51.15 | -0.0854 | 1.0454 | 0.0009 |
| 74 | SLV 3 | 19.87 | 0.19 | 41.35 | -0.0459 | 0.8945 | 0.0005 |
| 74 | SLV 4 | 19.87 | 0.19 | 41.35 | -0.0459 | 0.8945 | 0.0005 |
| 74 | SLV 5 | 13.54 | 0.41 | 56.58 | -0.1065 | 0.5718 | 0.0012 |
| 74 | SLV 6 | 13.54 | 0.41 | 56.58 | -0.1065 | 0.5718 | 0.0012 |
| 74 | SLV 7 | 1.5 | -0.07 | 23.92 | 0.0253 | 0.0688 | -0.0002 |
| 74 | SLV 8 | 1.5 | -0.07 | 23.92 | 0.0253 | 0.0688 | -0.0002 |
| 74 | SLV 9 | 1.41 | 0.33 | 51.43 | -0.0851 | 0.015 | 0.0011 |
| 74 | SLV 10 | 1.41 | 0.33 | 51.43 | -0.0851 | 0.015 | 0.0011 |
| 74 | SLV 11 | -10.63 | -0.15 | 18.77 | 0.0467 | -0.488 | -0.0003 |
| 74 | SLV 12 | -10.63 | -0.15 | 18.77 | 0.0467 | -0.488 | -0.0003 |
| 74 | SLV 13 | -16.96 | 0.07 | 34 | -0.0139 | -0.8107 | 0.0004 |
| 74 | SLV 14 | -16.96 | 0.07 | 34 | -0.0139 | -0.8107 | 0.0004 |
| 74 | SLV 15 | -20.57 | -0.07 | 24.2 | 0.0256 | -0.9616 | 0 |
| 74 | SLV 16 | -20.57 | -0.07 | 24.2 | 0.0256 | -0.9616 | 0 |
| 75 | SLU 1 | 0.58 | 5.06 | 52.39 | -0.1077 | 0.0506 | 0.0001 |
| 75 | SLU 2 | -0.94 | 6.66 | 57.49 | -0.1734 | -0.0117 | 0.0003 |
| 75 | SLU 3 | 0.44 | 5.03 | 52.98 | -0.1033 | 0.0449 | 0.0001 |
| 75 | SLU 4 | -0.48 | 5.99 | 56.04 | -0.1427 | 0.0075 | 0.0002 |
| 75 | SLU 5 | -1.12 | 6.54 | 57.55 | -0.1661 | -0.0188 | 0.0003 |
| 75 | SLU 6 | 0.26 | 4.91 | 53.05 | -0.096 | 0.0377 | 0.0002 |
| 75 | SLU 7 | -0.66 | 5.87 | 56.11 | -0.1354 | 0.0004 | 0.0002 |
| 75 | SLU 8 | 0.23 | 4.82 | 52.51 | -0.0932 | 0.0363 | 0.0002 |
| 75 | SLU 9 | -0.69 | 5.78 | 55.57 | -0.1326 | -0.0011 | 0.0002 |

| Nodo | Cont. | Reazione a traslazione | | | Reazione a rotazione | | |
|---|---|---|---|---|---|---|---|
| Ind. | N.br. | x | y | z | x | y | z |
| 75 | SLU 10 | -0.78 | 7.34 | 64.87 | -0.1868 | -0.0002 | 0.0003 |
| 75 | SLU 11 | 0.6 | 5.72 | 60.37 | -0.1167 | 0.0564 | 0.0002 |
| 75 | SLU 12 | -0.32 | 6.67 | 63.43 | -0.1561 | 0.0191 | 0.0002 |
| 75 | SLU 13 | -0.96 | 7.22 | 64.93 | -0.1796 | -0.0073 | 0.0003 |
| 75 | SLU 14 | 0.42 | 5.59 | 60.43 | -0.1094 | 0.0492 | 0.0002 |
| 75 | SLU 15 | -0.5 | 6.55 | 63.49 | -0.1488 | 0.0119 | 0.0002 |
| 75 | SLU 16 | 0.39 | 5.51 | 59.9 | -0.1066 | 0.0478 | 0.0002 |
| 75 | SLU 17 | -0.53 | 6.46 | 62.96 | -0.146 | 0.0104 | 0.0002 |
| 75 | SLU 18 | 0.81 | 6.04 | 62.93 | -0.1269 | 0.067 | 0.0002 |
| 75 | SLU 19 | -0.11 | 7 | 65.99 | -0.1663 | 0.0297 | 0.0002 |
| 75 | SLU 20 | 0.63 | 5.92 | 63 | -0.1196 | 0.0599 | 0.0002 |
| 75 | SLU 21 | -0.28 | 6.88 | 66.06 | -0.159 | 0.0225 | 0.0002 |
| 75 | SLU 22 | 0.67 | 5.6 | 58.26 | -0.117 | 0.0576 | 0.0002 |
| 75 | SLU 23 | -0.86 | 7.2 | 63.36 | -0.1827 | -0.0046 | 0.0003 |
| 75 | SLU 24 | 0.52 | 5.57 | 58.85 | -0.1125 | 0.0519 | 0.0002 |
| 75 | SLU 25 | -0.39 | 6.53 | 61.91 | -0.1519 | 0.0146 | 0.0002 |
| 75 | SLU 26 | -1.03 | 7.08 | 63.42 | -0.1754 | -0.0118 | 0.0003 |
| 75 | SLU 27 | 0.35 | 5.45 | 58.92 | -0.1053 | 0.0448 | 0.0002 |
| 75 | SLU 28 | -0.57 | 6.41 | 61.98 | -0.1447 | 0.0074 | 0.0002 |
| 75 | SLU 29 | 0.32 | 5.36 | 58.38 | -0.1025 | 0.0433 | 0.0002 |
| 75 | SLU 30 | -0.6 | 6.32 | 61.44 | -0.1419 | 0.0059 | 0.0002 |
| 75 | SLU 31 | -0.7 | 7.88 | 70.74 | -0.1961 | 0.0069 | 0.0003 |
| 75 | SLU 32 | 0.68 | 6.25 | 66.24 | -0.126 | 0.0635 | 0.0002 |
| 75 | SLU 33 | -0.23 | 7.21 | 69.3 | -0.1654 | 0.0261 | 0.0002 |
| 75 | SLU 34 | -0.88 | 7.76 | 70.8 | -0.1888 | -0.0003 | 0.0003 |
| 75 | SLU 35 | 0.51 | 6.13 | 66.3 | -0.1187 | 0.0563 | 0.0002 |
| 75 | SLU 36 | -0.41 | 7.09 | 69.36 | -0.1581 | 0.0189 | 0.0003 |
| 75 | SLU 37 | 0.47 | 6.04 | 65.77 | -0.1159 | 0.0548 | 0.0002 |
| 75 | SLU 38 | -0.44 | 7 | 68.83 | -0.1553 | 0.0174 | 0.0003 |
| 75 | SLU 39 | 0.9 | 6.58 | 68.81 | -0.1362 | 0.0741 | 0.0002 |
| 75 | SLU 40 | -0.02 | 7.53 | 71.87 | -0.1756 | 0.0367 | 0.0002 |
| 75 | SLU 41 | 0.72 | 6.46 | 68.87 | -0.1289 | 0.0669 | 0.0002 |
| 75 | SLU 42 | -0.2 | 7.41 | 71.93 | -0.1683 | 0.0295 | 0.0003 |
| 75 | SLU 43 | 0.73 | 6.4 | 66.09 | -0.1368 | 0.0634 | 0.0002 |
| 75 | SLU 44 | -0.8 | 7.99 | 71.19 | -0.2025 | 0.0011 | 0.0003 |
| 75 | SLU 45 | 0.58 | 6.37 | 66.69 | -0.1324 | 0.0577 | 0.0002 |
| 75 | SLU 46 | -0.33 | 7.32 | 69.75 | -0.1718 | 0.0203 | 0.0003 |
| 75 | SLU 47 | -0.97 | 7.87 | 71.25 | -0.1953 | -0.0061 | 0.0003 |
| 75 | SLU 48 | 0.41 | 6.25 | 66.75 | -0.1251 | 0.0505 | 0.0002 |
| 75 | SLU 49 | -0.51 | 7.2 | 69.81 | -0.1645 | 0.0131 | 0.0003 |
| 75 | SLU 50 | 0.38 | 6.16 | 66.22 | -0.1223 | 0.049 | 0.0002 |
| 75 | SLU 51 | -0.54 | 7.12 | 69.28 | -0.1617 | 0.0117 | 0.0003 |
| 75 | SLU 52 | -0.64 | 8.68 | 78.57 | -0.216 | 0.0126 | 0.0003 |
| 75 | SLU 53 | 0.74 | 7.05 | 74.07 | -0.1458 | 0.0692 | 0.0002 |
| 75 | SLU 54 | -0.17 | 8.01 | 77.13 | -0.1852 | 0.0318 | 0.0003 |
| 75 | SLU 55 | -0.82 | 8.56 | 78.64 | -0.2087 | 0.0054 | 0.0003 |
| 75 | SLU 56 | 0.56 | 6.93 | 74.13 | -0.1386 | 0.062 | 0.0002 |
| 75 | SLU 57 | -0.35 | 7.89 | 77.19 | -0.178 | 0.0246 | 0.0003 |
| 75 | SLU 58 | 0.53 | 6.84 | 73.6 | -0.1358 | 0.0605 | 0.0002 |
| 75 | SLU 59 | -0.38 | 7.8 | 76.66 | -0.1752 | 0.0232 | 0.0003 |
| 75 | SLU 60 | 0.96 | 7.38 | 76.64 | -0.156 | 0.0798 | 0.0002 |
| 75 | SLU 61 | 0.04 | 8.33 | 79.7 | -0.1954 | 0.0424 | 0.0003 |
| 75 | SLU 62 | 0.78 | 7.25 | 76.7 | -0.1488 | 0.0726 | 0.0002 |
| 75 | SLU 63 | -0.14 | 8.21 | 79.76 | -0.1882 | 0.0353 | 0.0003 |
| 75 | SLU 64 | 0.82 | 6.94 | 71.96 | -0.1461 | 0.0704 | 0.0002 |
| 75 | SLU 65 | -0.71 | 8.53 | 77.06 | -0.2118 | 0.0081 | 0.0003 |
| 75 | SLU 66 | 0.67 | 6.9 | 72.56 | -0.1417 | 0.0647 | 0.0002 |
| 75 | SLU 67 | -0.25 | 7.86 | 75.62 | -0.1811 | 0.0274 | 0.0003 |
| 75 | SLU 68 | -0.89 | 8.41 | 77.12 | -0.2045 | 0.001 | 0.0003 |
| 75 | SLU 69 | 0.49 | 6.78 | 72.62 | -0.1344 | 0.0575 | 0.0002 |
| 75 | SLU 70 | -0.42 | 7.74 | 75.68 | -0.1738 | 0.0202 | 0.0003 |
| 75 | SLU 71 | 0.46 | 6.69 | 72.09 | -0.1316 | 0.0561 | 0.0002 |
| 75 | SLU 72 | -0.45 | 7.65 | 75.15 | -0.171 | 0.0187 | 0.0003 |
| 75 | SLU 73 | -0.55 | 9.21 | 84.44 | -0.2252 | 0.0196 | 0.0003 |
| 75 | SLU 74 | 0.83 | 7.59 | 79.94 | -0.1551 | 0.0762 | 0.0002 |
| 75 | SLU 75 | -0.09 | 8.54 | 83 | -0.1945 | 0.0389 | 0.0003 |
| 75 | SLU 76 | -0.73 | 9.09 | 84.51 | -0.218 | 0.0125 | 0.0003 |
| 75 | SLU 77 | 0.65 | 7.47 | 80 | -0.1478 | 0.069 | 0.0002 |
| 75 | SLU 78 | -0.27 | 8.42 | 83.06 | -0.1873 | 0.0317 | 0.0003 |
| 75 | SLU 79 | 0.62 | 7.38 | 79.47 | -0.145 | 0.0676 | 0.0002 |
| 75 | SLU 80 | -0.3 | 8.33 | 82.53 | -0.1844 | 0.0302 | 0.0003 |
| 75 | SLU 81 | 1.04 | 7.91 | 82.51 | -0.1653 | 0.0868 | 0.0002 |
| 75 | SLU 82 | 0.13 | 8.87 | 85.57 | -0.2047 | 0.0495 | 0.0003 |
| 75 | SLU 83 | 0.87 | 7.79 | 82.57 | -0.158 | 0.0797 | 0.0002 |
| 75 | SLU 84 | -0.05 | 8.75 | 85.63 | -0.1975 | 0.0423 | 0.0003 |
| 75 | SLE RA 1 | 0.61 | 5.22 | 54.06 | -0.1104 | 0.0526 | 0.0001 |
| 75 | SLE RA 2 | -0.41 | 6.28 | 57.46 | -0.1541 | 0.0111 | 0.0002 |
| 75 | SLE RA 3 | 0.51 | 5.2 | 54.46 | -0.1074 | 0.0488 | 0.0001 |
| 75 | SLE RA 4 | -0.1 | 5.83 | 56.5 | -0.1337 | 0.0239 | 0.0002 |
| 75 | SLE RA 5 | -0.53 | 6.2 | 57.51 | -0.1493 | 0.0063 | 0.0002 |
| 75 | SLE RA 6 | 0.39 | 5.12 | 54.5 | -0.1026 | 0.044 | 0.0002 |
| 75 | SLE RA 7 | -0.22 | 5.75 | 56.54 | -0.1288 | 0.0191 | 0.0002 |
| 75 | SLE RA 8 | 0.37 | 5.06 | 54.15 | -0.1007 | 0.043 | 0.0002 |
| 75 | SLE RA 9 | -0.24 | 5.69 | 56.19 | -0.127 | 0.0181 | 0.0002 |
| 75 | SLE RA 10 | -0.3 | 6.74 | 62.39 | -0.1631 | 0.0188 | 0.0002 |
| 75 | SLE RA 11 | 0.62 | 5.65 | 59.38 | -0.1163 | 0.0565 | 0.0002 |
| 75 | SLE RA 12 | 0.01 | 6.29 | 61.42 | -0.1426 | 0.0316 | 0.0002 |
| 75 | SLE RA 13 | -0.42 | 6.66 | 62.43 | -0.1583 | 0.014 | 0.0002 |

| Nodo | Cont. | Reazione a traslazione | | | Reazione a rotazione | | |
|---|---|---|---|---|---|---|---|
| Ind. | N.br. | x | y | z | x | y | z |
| 75 | SLE RA 14 | 0.5 | 5.57 | 59.43 | -0.1115 | 0.0517 | 0.0002 |
| 75 | SLE RA 15 | -0.11 | 6.21 | 61.47 | -0.1378 | 0.0268 | 0.0002 |
| 75 | SLE RA 16 | 0.48 | 5.51 | 59.07 | -0.1096 | 0.0507 | 0.0002 |
| 75 | SLE RA 17 | -0.13 | 6.15 | 61.11 | -0.1359 | 0.0258 | 0.0002 |
| 75 | SLE RA 18 | 0.76 | 5.87 | 61.1 | -0.1231 | 0.0636 | 0.0002 |
| 75 | SLE RA 19 | 0.15 | 6.51 | 63.14 | -0.1494 | 0.0386 | 0.0002 |
| 75 | SLE RA 20 | 0.64 | 5.79 | 61.14 | -0.1183 | 0.0588 | 0.0002 |
| 75 | SLE RA 21 | 0.03 | 6.43 | 63.18 | -0.1446 | 0.0339 | 0.0002 |
| 75 | SLE FR 1 | 0.61 | 5.22 | 54.06 | -0.1104 | 0.0526 | 0.0001 |
| 75 | SLE FR 2 | 0.41 | 5.43 | 54.74 | -0.1191 | 0.0443 | 0.0002 |
| 75 | SLE FR 3 | 0.56 | 5.19 | 54.08 | -0.1084 | 0.0507 | 0.0001 |
| 75 | SLE FR 4 | 0.45 | 5.63 | 56.85 | -0.1229 | 0.0476 | 0.0002 |
| 75 | SLE FR 5 | 0.61 | 5.38 | 56.19 | -0.1123 | 0.054 | 0.0001 |
| 75 | SLE FR 6 | 0.68 | 5.54 | 57.58 | -0.1168 | 0.0581 | 0.0001 |
| 75 | SLE QP 1 | 0.61 | 5.22 | 54.06 | -0.1104 | 0.0526 | 0.0001 |
| 75 | SLE QP 2 | 0.65 | 5.41 | 56.17 | -0.1142 | 0.0559 | 0.0001 |
| 75 | SLD 1 | 9.39 | 7.77 | 66.16 | -0.2156 | 0.4482 | -0.0004 |
| 75 | SLD 2 | 9.39 | 7.77 | 66.16 | -0.2156 | 0.4482 | -0.0004 |
| 75 | SLD 3 | 10.56 | 5.44 | 57.55 | -0.1118 | 0.4998 | -0.0006 |
| 75 | SLD 4 | 10.56 | 5.44 | 57.55 | -0.1118 | 0.4998 | -0.0006 |
| 75 | SLD 5 | 1.49 | 9.66 | 72.24 | -0.302 | 0.0953 | 0.0002 |
| 75 | SLD 6 | 1.49 | 9.66 | 72.24 | -0.302 | 0.0953 | 0.0002 |
| 75 | SLD 7 | 5.41 | 1.88 | 43.52 | 0.0439 | 0.2674 | -0.0003 |
| 75 | SLD 8 | 5.41 | 1.88 | 43.52 | 0.0439 | 0.2674 | -0.0003 |
| 75 | SLD 9 | -4.1 | 8.94 | 68.83 | -0.2723 | -0.1556 | 0.0006 |
| 75 | SLD 10 | -4.1 | 8.94 | 68.83 | -0.2723 | -0.1556 | 0.0006 |
| 75 | SLD 11 | -0.18 | 1.17 | 40.11 | 0.0736 | 0.0165 | 0.0001 |
| 75 | SLD 12 | -0.18 | 1.17 | 40.11 | 0.0736 | 0.0165 | 0.0001 |
| 75 | SLD 13 | -9.26 | 5.39 | 54.8 | -0.1166 | -0.388 | 0.0009 |
| 75 | SLD 14 | -9.26 | 5.39 | 54.8 | -0.1166 | -0.388 | 0.0009 |
| 75 | SLD 15 | -8.08 | 3.06 | 46.18 | -0.0128 | -0.3364 | 0.0007 |
| 75 | SLD 16 | -8.08 | 3.06 | 46.18 | -0.0128 | -0.3364 | 0.0007 |
| 75 | SLV 1 | 20.72 | 11.01 | 79.73 | -0.3553 | 0.9567 | -0.0012 |
| 75 | SLV 2 | 20.72 | 11.01 | 79.73 | -0.3553 | 0.9567 | -0.0012 |
| 75 | SLV 3 | 23.58 | 5.54 | 59.59 | -0.112 | 1.083 | -0.0015 |
| 75 | SLV 4 | 23.58 | 5.54 | 59.59 | -0.112 | 1.083 | -0.0015 |
| 75 | SLV 5 | 2.33 | 15.39 | 93.79 | -0.5555 | 0.1347 | 0.0002 |
| 75 | SLV 6 | 2.33 | 15.39 | 93.79 | -0.5555 | 0.1347 | 0.0002 |
| 75 | SLV 7 | 11.88 | -2.84 | 26.65 | 0.2554 | 0.5555 | -0.0008 |
| 75 | SLV 8 | 11.88 | -2.84 | 26.65 | 0.2554 | 0.5555 | -0.0008 |
| 75 | SLV 9 | -10.57 | 13.67 | 85.7 | -0.4838 | -0.4437 | 0.0011 |
| 75 | SLV 10 | -10.57 | 13.67 | 85.7 | -0.4838 | -0.4437 | 0.0011 |
| 75 | SLV 11 | -1.02 | -4.56 | 18.56 | 0.3271 | -0.0229 | 0.0001 |
| 75 | SLV 12 | -1.02 | -4.56 | 18.56 | 0.3271 | -0.0229 | 0.0001 |
| 75 | SLV 13 | -22.27 | 5.28 | 52.76 | -0.1164 | -0.9712 | 0.0018 |
| 75 | SLV 14 | -22.27 | 5.28 | 52.76 | -0.1164 | -0.9712 | 0.0018 |
| 75 | SLV 15 | -19.41 | -0.18 | 32.62 | 0.1269 | -0.845 | 0.0015 |
| 75 | SLV 16 | -19.41 | -0.18 | 32.62 | 0.1269 | -0.845 | 0.0015 |
| 76 | SLU 1 | -1.32 | 0.04 | 37.03 | 0.0195 | -0.0487 | -0.0003 |
| 76 | SLU 2 | -3.57 | 0.02 | 38.97 | -0.0062 | -0.1386 | -0.0004 |
| 76 | SLU 3 | -1.47 | 0.03 | 37.5 | 0.021 | -0.0556 | -0.0003 |
| 76 | SLU 4 | -2.82 | 0.03 | 38.67 | 0.0056 | -0.1095 | -0.0004 |
| 76 | SLU 5 | -3.71 | 0.02 | 39.11 | -0.0047 | -0.1455 | -0.0004 |
| 76 | SLU 6 | -1.61 | 0.03 | 37.65 | 0.0224 | -0.0624 | -0.0003 |
| 76 | SLU 7 | -2.95 | 0.02 | 38.81 | 0.007 | -0.1164 | -0.0004 |
| 76 | SLU 8 | -1.6 | 0.03 | 37.31 | 0.0223 | -0.0625 | -0.0003 |
| 76 | SLU 9 | -2.95 | 0.02 | 38.48 | 0.0069 | -0.1164 | -0.0004 |
| 76 | SLU 10 | -3.63 | 0.03 | 44.22 | -0.0034 | -0.1411 | -0.0005 |
| 76 | SLU 11 | -1.53 | 0.04 | 42.76 | 0.0237 | -0.0581 | -0.0004 |
| 76 | SLU 12 | -2.88 | 0.03 | 43.92 | 0.0083 | -0.112 | -0.0004 |
| 76 | SLU 13 | -3.77 | 0.03 | 44.36 | -0.002 | -0.148 | -0.0005 |
| 76 | SLU 14 | -1.67 | 0.04 | 42.9 | 0.0251 | -0.0649 | -0.0004 |
| 76 | SLU 15 | -3.02 | 0.03 | 44.07 | 0.0097 | -0.1189 | -0.0004 |
| 76 | SLU 16 | -1.66 | 0.04 | 42.57 | 0.025 | -0.0649 | -0.0004 |
| 76 | SLU 17 | -3.01 | 0.03 | 43.73 | 0.0097 | -0.1189 | -0.0004 |
| 76 | SLU 18 | -1.41 | 0.04 | 44.53 | 0.0234 | -0.0523 | -0.0004 |
| 76 | SLU 19 | -2.76 | 0.03 | 45.7 | 0.008 | -0.1062 | -0.0005 |
| 76 | SLU 20 | -1.55 | 0.04 | 44.68 | 0.0248 | -0.0592 | -0.0004 |
| 76 | SLU 21 | -2.9 | 0.03 | 45.84 | 0.0094 | -0.1131 | -0.0005 |
| 76 | SLU 22 | -1.43 | 0.04 | 41.22 | 0.0224 | -0.0532 | -0.0004 |
| 76 | SLU 23 | -3.68 | 0.03 | 43.16 | -0.0032 | -0.1431 | -0.0005 |
| 76 | SLU 24 | -1.58 | 0.04 | 41.7 | 0.0239 | -0.06 | -0.0004 |
| 76 | SLU 25 | -2.92 | 0.03 | 42.86 | 0.0085 | -0.114 | -0.0004 |
| 76 | SLU 26 | -3.81 | 0.02 | 43.31 | -0.0018 | -0.15 | -0.0005 |
| 76 | SLU 27 | -1.72 | 0.04 | 41.84 | 0.0253 | -0.0669 | -0.0004 |
| 76 | SLU 28 | -3.06 | 0.03 | 43.01 | 0.0099 | -0.1208 | -0.0004 |
| 76 | SLU 29 | -1.71 | 0.03 | 41.51 | 0.0253 | -0.0669 | -0.0004 |
| 76 | SLU 30 | -3.05 | 0.03 | 42.67 | 0.0099 | -0.1209 | -0.0004 |
| 76 | SLU 31 | -3.74 | 0.03 | 48.42 | -0.0005 | -0.1456 | -0.0005 |
| 76 | SLU 32 | -1.64 | 0.04 | 46.96 | 0.0266 | -0.0625 | -0.0004 |
| 76 | SLU 33 | -2.99 | 0.03 | 48.12 | 0.0113 | -0.1165 | -0.0005 |
| 76 | SLU 34 | -3.88 | 0.03 | 48.56 | 0.0009 | -0.1525 | -0.0005 |
| 76 | SLU 35 | -1.78 | 0.04 | 47.1 | 0.0281 | -0.0694 | -0.0004 |
| 76 | SLU 36 | -3.12 | 0.03 | 48.26 | 0.0127 | -0.1233 | -0.0005 |
| 76 | SLU 37 | -1.77 | 0.04 | 46.76 | 0.028 | -0.0694 | -0.0004 |
| 76 | SLU 38 | -3.12 | 0.03 | 47.93 | 0.0126 | -0.1234 | -0.0005 |
| 76 | SLU 39 | -1.52 | 0.05 | 48.73 | 0.0263 | -0.0568 | -0.0005 |
| 76 | SLU 40 | -2.87 | 0.04 | 49.89 | 0.0109 | -0.1107 | -0.0005 |

| Nodo | Cont. | Reazione a traslazione | | | Reazione a rotazione | | |
|---|---|---|---|---|---|---|---|
| Ind. | N.br. | x | y | z | x | y | z |
| 76 | SLU 41 | -1.66 | 0.04 | 48.87 | 0.0277 | -0.0636 | -0.0004 |
| 76 | SLU 42 | -3 | 0.04 | 50.04 | 0.0124 | -0.1176 | -0.0005 |
| 76 | SLU 43 | -1.68 | 0.05 | 46.69 | 0.0243 | -0.0618 | -0.0004 |
| 76 | SLU 44 | -3.93 | 0.03 | 48.63 | -0.0013 | -0.1517 | -0.0005 |
| 76 | SLU 45 | -1.83 | 0.04 | 47.17 | 0.0258 | -0.0687 | -0.0004 |
| 76 | SLU 46 | -3.18 | 0.04 | 48.34 | 0.0104 | -0.1226 | -0.0005 |
| 76 | SLU 47 | -4.07 | 0.03 | 48.78 | 0.0001 | -0.1586 | -0.0005 |
| 76 | SLU 48 | -1.97 | 0.04 | 47.32 | 0.0272 | -0.0755 | -0.0004 |
| 76 | SLU 49 | -3.31 | 0.03 | 48.48 | 0.0118 | -0.1295 | -0.0005 |
| 76 | SLU 50 | -1.96 | 0.04 | 46.98 | 0.0272 | -0.0755 | -0.0004 |
| 76 | SLU 51 | -3.31 | 0.03 | 48.14 | 0.0118 | -0.1295 | -0.0005 |
| 76 | SLU 52 | -3.99 | 0.04 | 53.89 | 0.0014 | -0.1542 | -0.0006 |
| 76 | SLU 53 | -1.89 | 0.05 | 52.43 | 0.0285 | -0.0712 | -0.0005 |
| 76 | SLU 54 | -3.24 | 0.04 | 53.59 | 0.0132 | -0.1251 | -0.0005 |
| 76 | SLU 55 | -4.13 | 0.03 | 54.03 | 0.0028 | -0.1611 | -0.0006 |
| 76 | SLU 56 | -2.03 | 0.05 | 52.57 | 0.03 | -0.078 | -0.0005 |
| 76 | SLU 57 | -3.38 | 0.04 | 53.74 | 0.0146 | -0.132 | -0.0005 |
| 76 | SLU 58 | -2.02 | 0.05 | 52.24 | 0.0299 | -0.078 | -0.0005 |
| 76 | SLU 59 | -3.37 | 0.04 | 53.4 | 0.0145 | -0.132 | -0.0005 |
| 76 | SLU 60 | -1.77 | 0.05 | 54.2 | 0.0282 | -0.0654 | -0.0005 |
| 76 | SLU 61 | -3.12 | 0.04 | 55.37 | 0.0128 | -0.1193 | -0.0006 |
| 76 | SLU 62 | -1.91 | 0.05 | 54.35 | 0.0296 | -0.0722 | -0.0005 |
| 76 | SLU 63 | -3.26 | 0.04 | 55.51 | 0.0143 | -0.1262 | -0.0006 |
| 76 | SLU 64 | -1.79 | 0.05 | 50.89 | 0.0273 | -0.0663 | -0.0005 |
| 76 | SLU 65 | -4.04 | 0.04 | 52.83 | 0.0016 | -0.1562 | -0.0006 |
| 76 | SLU 66 | -1.94 | 0.05 | 51.37 | 0.0287 | -0.0731 | -0.0005 |
| 76 | SLU 67 | -3.28 | 0.04 | 52.53 | 0.0134 | -0.1271 | -0.0005 |
| 76 | SLU 68 | -4.17 | 0.03 | 52.97 | 0.003 | -0.1631 | -0.0006 |
| 76 | SLU 69 | -2.08 | 0.05 | 51.51 | 0.0302 | -0.08 | -0.0005 |
| 76 | SLU 70 | -3.42 | 0.04 | 52.68 | 0.0148 | -0.1339 | -0.0005 |
| 76 | SLU 71 | -2.07 | 0.04 | 51.18 | 0.0301 | -0.08 | -0.0005 |
| 76 | SLU 72 | -3.41 | 0.04 | 52.34 | 0.0147 | -0.134 | -0.0005 |
| 76 | SLU 73 | -4.1 | 0.04 | 58.09 | 0.0044 | -0.1587 | -0.0006 |
| 76 | SLU 74 | -2 | 0.05 | 56.63 | 0.0315 | -0.0756 | -0.0005 |
| 76 | SLU 75 | -3.35 | 0.04 | 57.79 | 0.0161 | -0.1296 | -0.0006 |
| 76 | SLU 76 | -4.24 | 0.04 | 58.23 | 0.0058 | -0.1655 | -0.0006 |
| 76 | SLU 77 | -2.14 | 0.05 | 56.77 | 0.0329 | -0.0825 | -0.0005 |
| 76 | SLU 78 | -3.48 | 0.04 | 57.93 | 0.0175 | -0.1364 | -0.0006 |
| 76 | SLU 79 | -2.13 | 0.05 | 56.43 | 0.0328 | -0.0825 | -0.0005 |
| 76 | SLU 80 | -3.48 | 0.04 | 57.6 | 0.0174 | -0.1364 | -0.0006 |
| 76 | SLU 81 | -1.88 | 0.06 | 58.4 | 0.0312 | -0.0699 | -0.0005 |
| 76 | SLU 82 | -3.23 | 0.05 | 59.56 | 0.0158 | -0.1238 | -0.0006 |
| 76 | SLU 83 | -2.02 | 0.05 | 58.54 | 0.0326 | -0.0767 | -0.0005 |
| 76 | SLU 84 | -3.36 | 0.05 | 59.71 | 0.0172 | -0.1307 | -0.0006 |
| 76 | SLE RA 1 | -1.35 | 0.04 | 38.22 | 0.0203 | -0.05 | -0.0004 |
| 76 | SLE RA 2 | -2.85 | 0.03 | 39.52 | 0.0032 | -0.11 | -0.0004 |
| 76 | SLE RA 3 | -1.45 | 0.04 | 38.54 | 0.0213 | -0.0546 | -0.0004 |
| 76 | SLE RA 4 | -2.35 | 0.03 | 39.32 | 0.0111 | -0.0905 | -0.0004 |
| 76 | SLE RA 5 | -2.94 | 0.03 | 39.61 | 0.0042 | -0.1145 | -0.0004 |
| 76 | SLE RA 6 | -1.54 | 0.03 | 38.64 | 0.0223 | -0.0591 | -0.0004 |
| 76 | SLE RA 7 | -2.44 | 0.03 | 39.42 | 0.012 | -0.0951 | -0.0004 |
| 76 | SLE RA 8 | -1.54 | 0.03 | 38.42 | 0.0222 | -0.0592 | -0.0004 |
| 76 | SLE RA 9 | -2.44 | 0.03 | 39.19 | 0.012 | -0.0951 | -0.0004 |
| 76 | SLE RA 10 | -2.89 | 0.03 | 43.02 | 0.0051 | -0.1116 | -0.0004 |
| 76 | SLE RA 11 | -1.49 | 0.04 | 42.05 | 0.0231 | -0.0562 | -0.0004 |
| 76 | SLE RA 12 | -2.39 | 0.03 | 42.82 | 0.0129 | -0.0922 | -0.0004 |
| 76 | SLE RA 13 | -2.98 | 0.03 | 43.12 | 0.006 | -0.1162 | -0.0004 |
| 76 | SLE RA 14 | -1.58 | 0.04 | 42.14 | 0.0241 | -0.0608 | -0.0004 |
| 76 | SLE RA 15 | -2.48 | 0.03 | 42.92 | 0.0138 | -0.0968 | -0.0004 |
| 76 | SLE RA 16 | -1.58 | 0.04 | 41.92 | 0.024 | -0.0608 | -0.0004 |
| 76 | SLE RA 17 | -2.48 | 0.03 | 42.7 | 0.0138 | -0.0968 | -0.0004 |
| 76 | SLE RA 18 | -1.41 | 0.04 | 43.23 | 0.0229 | -0.0524 | -0.0004 |
| 76 | SLE RA 19 | -2.31 | 0.04 | 44.01 | 0.0127 | -0.0883 | -0.0004 |
| 76 | SLE RA 20 | -1.51 | 0.04 | 43.33 | 0.0239 | -0.057 | -0.0004 |
| 76 | SLE RA 21 | -2.4 | 0.03 | 44.1 | 0.0136 | -0.0929 | -0.0004 |
| 76 | SLE FR 1 | -1.35 | 0.04 | 38.22 | 0.0203 | -0.05 | -0.0004 |
| 76 | SLE FR 2 | -1.65 | 0.04 | 38.48 | 0.0169 | -0.062 | -0.0004 |
| 76 | SLE FR 3 | -1.39 | 0.04 | 38.26 | 0.0207 | -0.0518 | -0.0004 |
| 76 | SLE FR 4 | -1.67 | 0.04 | 39.98 | 0.0177 | -0.0627 | -0.0004 |
| 76 | SLE FR 5 | -1.41 | 0.04 | 39.76 | 0.0215 | -0.0526 | -0.0004 |
| 76 | SLE FR 6 | -1.38 | 0.04 | 40.73 | 0.0216 | -0.0512 | -0.0004 |
| 76 | SLE QP 1 | -1.35 | 0.04 | 38.22 | 0.0203 | -0.05 | -0.0004 |
| 76 | SLE QP 2 | -1.37 | 0.04 | 39.73 | 0.0211 | -0.0507 | -0.0004 |
| 76 | SLD 1 | 7.57 | 0.11 | 45.29 | -0.03 | 0.346 | -0.0005 |
| 76 | SLD 2 | 7.57 | 0.11 | 45.29 | -0.03 | 0.346 | -0.0005 |
| 76 | SLD 3 | 9.03 | 0.07 | 40.16 | 0.016 | 0.4046 | -0.0005 |
| 76 | SLD 4 | 9.03 | 0.07 | 40.16 | 0.016 | 0.4046 | -0.0005 |
| 76 | SLD 5 | -0.9 | 0.12 | 49.18 | -0.064 | -0.0207 | -0.0006 |
| 76 | SLD 6 | -0.9 | 0.12 | 49.18 | -0.064 | -0.0207 | -0.0006 |
| 76 | SLD 7 | 3.96 | -0.02 | 32.07 | 0.0894 | 0.1748 | -0.0003 |
| 76 | SLD 8 | 3.96 | -0.02 | 32.07 | 0.0894 | 0.1748 | -0.0003 |
| 76 | SLD 9 | -6.7 | 0.09 | 47.38 | -0.0472 | -0.2763 | -0.0005 |
| 76 | SLD 10 | -6.7 | 0.09 | 47.38 | -0.0472 | -0.2763 | -0.0005 |
| 76 | SLD 11 | -1.85 | -0.05 | 30.27 | 0.1062 | -0.0808 | -0.0002 |
| 76 | SLD 12 | -1.85 | -0.05 | 30.27 | 0.1062 | -0.0808 | -0.0002 |
| 76 | SLD 13 | -11.77 | 0.01 | 39.29 | 0.0262 | -0.5061 | -0.0003 |
| 76 | SLD 14 | -11.77 | 0.01 | 39.29 | 0.0262 | -0.5061 | -0.0003 |
| 76 | SLD 15 | -10.32 | -0.03 | 34.16 | 0.0722 | -0.4474 | -0.0002 |

| Nodo | Cont. | Reazione a traslazione | | | Reazione a rotazione | | |
|---|---|---|---|---|---|---|---|
| Ind. | N.br. | x | y | z | x | y | z |
| 76 | SLD 16 | -10.32 | -0.03 | 34.16 | 0.0722 | -0.4474 | -0.0002 |
| 76 | SLV 1 | 19.13 | 0.2 | 52.84 | -0.1026 | 0.8589 | -0.0008 |
| 76 | SLV 2 | 19.13 | 0.2 | 52.84 | -0.1026 | 0.8589 | -0.0008 |
| 76 | SLV 3 | 22.71 | 0.1 | 40.84 | 0.0116 | 1.0035 | -0.0006 |
| 76 | SLV 4 | 22.71 | 0.1 | 40.84 | 0.0116 | 1.0035 | -0.0006 |
| 76 | SLV 5 | -0.66 | 0.24 | 61.86 | -0.1893 | 0.0027 | -0.0008 |
| 76 | SLV 6 | -0.66 | 0.24 | 61.86 | -0.1893 | 0.0027 | -0.0008 |
| 76 | SLV 7 | 11.29 | -0.1 | 21.86 | 0.1915 | 0.485 | -0.0001 |
| 76 | SLV 8 | 11.29 | -0.1 | 21.86 | 0.1915 | 0.485 | -0.0001 |
| 76 | SLV 9 | -14.03 | 0.17 | 57.6 | -0.1493 | -0.5864 | -0.0006 |
| 76 | SLV 10 | -14.03 | 0.17 | 57.6 | -0.1493 | -0.5864 | -0.0006 |
| 76 | SLV 11 | -2.09 | -0.16 | 17.59 | 0.2315 | -0.1042 | 0.0001 |
| 76 | SLV 12 | -2.09 | -0.16 | 17.59 | 0.2315 | -0.1042 | 0.0001 |
| 76 | SLV 13 | -25.46 | -0.02 | 38.62 | 0.0306 | -1.105 | -0.0002 |
| 76 | SLV 14 | -25.46 | -0.02 | 38.62 | 0.0306 | -1.105 | -0.0002 |
| 76 | SLV 15 | -21.87 | -0.13 | 26.61 | 0.1449 | -0.9603 | 0.0001 |
| 76 | SLV 16 | -21.87 | -0.13 | 26.61 | 0.1449 | -0.9603 | 0.0001 |
| 77 | SLU 1 | -1.97 | -0.14 | 34.05 | 0.0795 | -0.0613 | -0.0003 |
| 77 | SLU 2 | -4.04 | -0.16 | 34.63 | 0.0282 | -0.1439 | -0.0002 |
| 77 | SLU 3 | -2.12 | -0.15 | 34.53 | 0.0823 | -0.0674 | -0.0003 |
| 77 | SLU 4 | -3.37 | -0.16 | 34.88 | 0.0515 | -0.117 | -0.0003 |
| 77 | SLU 5 | -4.18 | -0.16 | 34.83 | 0.0301 | -0.1494 | -0.0002 |
| 77 | SLU 6 | -2.25 | -0.15 | 34.73 | 0.0842 | -0.0729 | -0.0004 |
| 77 | SLU 7 | -3.5 | -0.16 | 35.08 | 0.0534 | -0.1225 | -0.0003 |
| 77 | SLU 8 | -2.23 | -0.15 | 34.45 | 0.0833 | -0.0723 | -0.0004 |
| 77 | SLU 9 | -3.48 | -0.16 | 34.8 | 0.0525 | -0.1219 | -0.0003 |
| 77 | SLU 10 | -4.17 | -0.18 | 39.51 | 0.039 | -0.1455 | -0.0002 |
| 77 | SLU 11 | -2.25 | -0.17 | 39.41 | 0.0931 | -0.0691 | -0.0004 |
| 77 | SLU 12 | -3.49 | -0.18 | 39.76 | 0.0623 | -0.1186 | -0.0003 |
| 77 | SLU 13 | -4.3 | -0.18 | 39.71 | 0.0409 | -0.151 | -0.0002 |
| 77 | SLU 14 | -2.38 | -0.17 | 39.61 | 0.095 | -0.0746 | -0.0004 |
| 77 | SLU 15 | -3.63 | -0.18 | 39.96 | 0.0642 | -0.1241 | -0.0003 |
| 77 | SLU 16 | -2.36 | -0.17 | 39.33 | 0.0941 | -0.0739 | -0.0004 |
| 77 | SLU 17 | -3.61 | -0.18 | 39.68 | 0.0634 | -0.1235 | -0.0003 |
| 77 | SLU 18 | -2.15 | -0.17 | 41.02 | 0.0949 | -0.0636 | -0.0004 |
| 77 | SLU 19 | -3.4 | -0.18 | 41.37 | 0.0641 | -0.1132 | -0.0003 |
| 77 | SLU 20 | -2.29 | -0.17 | 41.22 | 0.0969 | -0.0691 | -0.0004 |
| 77 | SLU 21 | -3.53 | -0.18 | 41.57 | 0.0661 | -0.1187 | -0.0003 |
| 77 | SLU 22 | -2.16 | -0.16 | 37.98 | 0.0897 | -0.0666 | -0.0004 |
| 77 | SLU 23 | -4.23 | -0.18 | 38.56 | 0.0383 | -0.1491 | -0.0002 |
| 77 | SLU 24 | -2.31 | -0.16 | 38.46 | 0.0924 | -0.0727 | -0.0004 |
| 77 | SLU 25 | -3.55 | -0.18 | 38.81 | 0.0617 | -0.1222 | -0.0003 |
| 77 | SLU 26 | -4.36 | -0.18 | 38.76 | 0.0403 | -0.1546 | -0.0002 |
| 77 | SLU 27 | -2.44 | -0.17 | 38.66 | 0.0944 | -0.0782 | -0.0004 |
| 77 | SLU 28 | -3.69 | -0.18 | 39.01 | 0.0636 | -0.1277 | -0.0003 |
| 77 | SLU 29 | -2.42 | -0.17 | 38.38 | 0.0935 | -0.0776 | -0.0004 |
| 77 | SLU 30 | -3.67 | -0.18 | 38.73 | 0.0627 | -0.1271 | -0.0003 |
| 77 | SLU 31 | -4.36 | -0.2 | 43.44 | 0.0492 | -0.1507 | -0.0003 |
| 77 | SLU 32 | -2.44 | -0.18 | 43.34 | 0.1033 | -0.0743 | -0.0004 |
| 77 | SLU 33 | -3.68 | -0.2 | 43.69 | 0.0725 | -0.1238 | -0.0003 |
| 77 | SLU 34 | -4.49 | -0.2 | 43.64 | 0.0511 | -0.1562 | -0.0003 |
| 77 | SLU 35 | -2.57 | -0.19 | 43.54 | 0.1052 | -0.0798 | -0.0004 |
| 77 | SLU 36 | -3.81 | -0.2 | 43.89 | 0.0744 | -0.1293 | -0.0004 |
| 77 | SLU 37 | -2.55 | -0.19 | 43.26 | 0.1043 | -0.0792 | -0.0004 |
| 77 | SLU 38 | -3.79 | -0.2 | 43.61 | 0.0735 | -0.1287 | -0.0004 |
| 77 | SLU 39 | -2.34 | -0.19 | 44.95 | 0.1051 | -0.0689 | -0.0004 |
| 77 | SLU 40 | -3.58 | -0.2 | 45.3 | 0.0743 | -0.1184 | -0.0004 |
| 77 | SLU 41 | -2.47 | -0.19 | 45.15 | 0.107 | -0.0744 | -0.0005 |
| 77 | SLU 42 | -3.72 | -0.2 | 45.5 | 0.0763 | -0.1239 | -0.0004 |
| 77 | SLU 43 | -2.5 | -0.18 | 42.92 | 0.0998 | -0.0779 | -0.0004 |
| 77 | SLU 44 | -4.57 | -0.2 | 43.5 | 0.0485 | -0.1605 | -0.0003 |
| 77 | SLU 45 | -2.65 | -0.18 | 43.4 | 0.1026 | -0.084 | -0.0004 |
| 77 | SLU 46 | -3.89 | -0.19 | 43.75 | 0.0718 | -0.1336 | -0.0003 |
| 77 | SLU 47 | -4.7 | -0.2 | 43.7 | 0.0504 | -0.166 | -0.0003 |
| 77 | SLU 48 | -2.78 | -0.19 | 43.6 | 0.1045 | -0.0895 | -0.0004 |
| 77 | SLU 49 | -4.02 | -0.2 | 43.95 | 0.0738 | -0.1391 | -0.0004 |
| 77 | SLU 50 | -2.76 | -0.18 | 43.32 | 0.1037 | -0.0889 | -0.0004 |
| 77 | SLU 51 | -4 | -0.19 | 43.67 | 0.0729 | -0.1385 | -0.0003 |
| 77 | SLU 52 | -4.7 | -0.22 | 48.38 | 0.0593 | -0.1621 | -0.0003 |
| 77 | SLU 53 | -2.78 | -0.2 | 48.28 | 0.1134 | -0.0856 | -0.0005 |
| 77 | SLU 54 | -4.02 | -0.21 | 48.63 | 0.0827 | -0.1352 | -0.0004 |
| 77 | SLU 55 | -4.83 | -0.22 | 48.58 | 0.0613 | -0.1676 | -0.0003 |
| 77 | SLU 56 | -2.91 | -0.2 | 48.48 | 0.1154 | -0.0912 | -0.0005 |
| 77 | SLU 57 | -4.15 | -0.22 | 48.83 | 0.0846 | -0.1407 | -0.0004 |
| 77 | SLU 58 | -2.89 | -0.2 | 48.2 | 0.1145 | -0.0905 | -0.0005 |
| 77 | SLU 59 | -4.13 | -0.21 | 48.55 | 0.0837 | -0.1401 | -0.0004 |
| 77 | SLU 60 | -2.68 | -0.21 | 49.89 | 0.1153 | -0.0802 | -0.0005 |
| 77 | SLU 61 | -3.92 | -0.22 | 50.24 | 0.0845 | -0.1298 | -0.0004 |
| 77 | SLU 62 | -2.81 | -0.21 | 50.09 | 0.1172 | -0.0857 | -0.0005 |
| 77 | SLU 63 | -4.06 | -0.22 | 50.44 | 0.0864 | -0.1353 | -0.0004 |
| 77 | SLU 64 | -2.68 | -0.2 | 46.85 | 0.11 | -0.0831 | -0.0005 |
| 77 | SLU 65 | -4.76 | -0.21 | 47.43 | 0.0587 | -0.1657 | -0.0003 |
| 77 | SLU 66 | -2.83 | -0.2 | 47.33 | 0.1128 | -0.0893 | -0.0005 |
| 77 | SLU 67 | -4.08 | -0.21 | 47.68 | 0.082 | -0.1388 | -0.0004 |
| 77 | SLU 68 | -4.89 | -0.22 | 47.63 | 0.0606 | -0.1712 | -0.0003 |
| 77 | SLU 69 | -2.97 | -0.2 | 47.53 | 0.1147 | -0.0948 | -0.0005 |
| 77 | SLU 70 | -4.21 | -0.21 | 47.88 | 0.0839 | -0.1443 | -0.0004 |
| 77 | SLU 71 | -2.95 | -0.2 | 47.25 | 0.1139 | -0.0942 | -0.0005 |

| Nodo | Cont. | Reazione a traslazione | | | Reazione a rotazione | | |
|---|---|---|---|---|---|---|---|
| Ind. | N.br. | x | y | z | x | y | z |
| 77 | SLU 72 | -4.19 | -0.21 | 47.6 | 0.0831 | -0.1437 | -0.0004 |
| 77 | SLU 73 | -4.89 | -0.23 | 52.31 | 0.0695 | -0.1673 | -0.0004 |
| 77 | SLU 74 | -2.96 | -0.22 | 52.21 | 0.1236 | -0.0909 | -0.0005 |
| 77 | SLU 75 | -4.21 | -0.23 | 52.56 | 0.0928 | -0.1404 | -0.0004 |
| 77 | SLU 76 | -5.02 | -0.24 | 52.51 | 0.0714 | -0.1728 | -0.0004 |
| 77 | SLU 77 | -3.1 | -0.22 | 52.41 | 0.1255 | -0.0964 | -0.0005 |
| 77 | SLU 78 | -4.34 | -0.23 | 52.76 | 0.0948 | -0.1459 | -0.0004 |
| 77 | SLU 79 | -3.08 | -0.22 | 52.13 | 0.1247 | -0.0958 | -0.0005 |
| 77 | SLU 80 | -4.32 | -0.23 | 52.48 | 0.0939 | -0.1453 | -0.0004 |
| 77 | SLU 81 | -2.87 | -0.22 | 53.82 | 0.1255 | -0.0855 | -0.0005 |
| 77 | SLU 82 | -4.11 | -0.24 | 54.17 | 0.0947 | -0.135 | -0.0004 |
| 77 | SLU 83 | -3 | -0.23 | 54.02 | 0.1274 | -0.091 | -0.0005 |
| 77 | SLU 84 | -4.24 | -0.24 | 54.37 | 0.0966 | -0.1405 | -0.0005 |
| 77 | SLE RA 1 | -2.02 | -0.15 | 35.17 | 0.0824 | -0.0628 | -0.0003 |
| 77 | SLE RA 2 | -3.41 | -0.16 | 35.56 | 0.0482 | -0.1179 | -0.0002 |
| 77 | SLE RA 3 | -2.12 | -0.15 | 35.49 | 0.0842 | -0.0669 | -0.0004 |
| 77 | SLE RA 4 | -2.95 | -0.16 | 35.73 | 0.0637 | -0.0999 | -0.0003 |
| 77 | SLE RA 5 | -3.49 | -0.16 | 35.69 | 0.0495 | -0.1215 | -0.0003 |
| 77 | SLE RA 6 | -2.21 | -0.15 | 35.63 | 0.0855 | -0.0706 | -0.0004 |
| 77 | SLE RA 7 | -3.04 | -0.16 | 35.86 | 0.065 | -0.1036 | -0.0003 |
| 77 | SLE RA 8 | -2.2 | -0.15 | 35.44 | 0.085 | -0.0701 | -0.0004 |
| 77 | SLE RA 9 | -3.03 | -0.16 | 35.67 | 0.0644 | -0.1032 | -0.0003 |
| 77 | SLE RA 10 | -3.49 | -0.17 | 38.81 | 0.0554 | -0.1189 | -0.0003 |
| 77 | SLE RA 11 | -2.21 | -0.16 | 38.75 | 0.0915 | -0.068 | -0.0004 |
| 77 | SLE RA 12 | -3.04 | -0.17 | 38.98 | 0.0709 | -0.101 | -0.0003 |
| 77 | SLE RA 13 | -3.58 | -0.17 | 38.95 | 0.0567 | -0.1226 | -0.0003 |
| 77 | SLE RA 14 | -2.3 | -0.17 | 38.88 | 0.0927 | -0.0716 | -0.0004 |
| 77 | SLE RA 15 | -3.13 | -0.17 | 39.11 | 0.0722 | -0.1047 | -0.0003 |
| 77 | SLE RA 16 | -2.28 | -0.16 | 38.7 | 0.0922 | -0.0712 | -0.0004 |
| 77 | SLE RA 17 | -3.11 | -0.17 | 38.93 | 0.0716 | -0.1043 | -0.0003 |
| 77 | SLE RA 18 | -2.14 | -0.17 | 39.82 | 0.0927 | -0.0643 | -0.0004 |
| 77 | SLE RA 19 | -2.97 | -0.17 | 40.05 | 0.0722 | -0.0974 | -0.0003 |
| 77 | SLE RA 20 | -2.23 | -0.17 | 39.96 | 0.094 | -0.068 | -0.0004 |
| 77 | SLE RA 21 | -3.06 | -0.18 | 40.19 | 0.0735 | -0.101 | -0.0003 |
| 77 | SLE FR 1 | -2.02 | -0.15 | 35.17 | 0.0824 | -0.0628 | -0.0003 |
| 77 | SLE FR 2 | -2.3 | -0.15 | 35.25 | 0.0755 | -0.0738 | -0.0003 |
| 77 | SLE FR 3 | -2.06 | -0.15 | 35.23 | 0.0829 | -0.0643 | -0.0003 |
| 77 | SLE FR 4 | -2.34 | -0.15 | 36.64 | 0.0786 | -0.0743 | -0.0003 |
| 77 | SLE FR 5 | -2.09 | -0.15 | 36.62 | 0.086 | -0.0647 | -0.0004 |
| 77 | SLE FR 6 | -2.08 | -0.16 | 37.5 | 0.0875 | -0.0636 | -0.0004 |
| 77 | SLE QP 1 | -2.02 | -0.15 | 35.17 | 0.0824 | -0.0628 | -0.0003 |
| 77 | SLE QP 2 | -2.06 | -0.15 | 36.57 | 0.0855 | -0.0633 | -0.0004 |
| 77 | SLD 1 | 6.61 | -0.25 | 40.53 | -0.0153 | 0.3149 | -0.0003 |
| 77 | SLD 2 | 6.61 | -0.25 | 40.53 | -0.0153 | 0.3149 | -0.0003 |
| 77 | SLD 3 | 8.02 | -0.18 | 36.42 | 0.0865 | 0.3733 | -0.0008 |
| 77 | SLD 4 | 8.02 | -0.18 | 36.42 | 0.0865 | 0.3733 | -0.0008 |
| 77 | SLD 5 | -1.59 | -0.29 | 43.99 | -0.0991 | -0.0383 | 0.0003 |
| 77 | SLD 6 | -1.59 | -0.29 | 43.99 | -0.0991 | -0.0383 | 0.0003 |
| 77 | SLD 7 | 3.1 | -0.05 | 30.29 | 0.2402 | 0.1562 | -0.0011 |
| 77 | SLD 8 | 3.1 | -0.05 | 30.29 | 0.2402 | 0.1562 | -0.0011 |
| 77 | SLD 9 | -7.21 | -0.26 | 42.85 | -0.0692 | -0.2827 | 0.0004 |
| 77 | SLD 10 | -7.21 | -0.26 | 42.85 | -0.0692 | -0.2827 | 0.0004 |
| 77 | SLD 11 | -2.53 | -0.01 | 29.14 | 0.2701 | -0.0882 | -0.001 |
| 77 | SLD 12 | -2.53 | -0.01 | 29.14 | 0.2701 | -0.0882 | -0.001 |
| 77 | SLD 13 | -12.14 | -0.13 | 36.72 | 0.0844 | -0.4998 | 0 |
| 77 | SLD 14 | -12.14 | -0.13 | 36.72 | 0.0844 | -0.4998 | 0 |
| 77 | SLD 15 | -10.73 | -0.05 | 32.6 | 0.1862 | -0.4415 | -0.0004 |
| 77 | SLD 16 | -10.73 | -0.05 | 32.6 | 0.1862 | -0.4415 | -0.0004 |
| 77 | SLV 1 | 17.84 | -0.39 | 45.9 | -0.1605 | 0.8048 | -0.0003 |
| 77 | SLV 2 | 17.84 | -0.39 | 45.9 | -0.1605 | 0.8048 | -0.0003 |
| 77 | SLV 3 | 21.25 | -0.22 | 36.29 | 0.0945 | 0.9464 | -0.0013 |
| 77 | SLV 4 | 21.25 | -0.22 | 36.29 | 0.0945 | 0.9464 | -0.0013 |
| 77 | SLV 5 | -1.26 | -0.48 | 53.95 | -0.3751 | -0.0175 | 0.0012 |
| 77 | SLV 6 | -1.26 | -0.48 | 53.95 | -0.3751 | -0.0175 | 0.0012 |
| 77 | SLV 7 | 10.1 | 0.09 | 21.9 | 0.475 | 0.4543 | -0.0022 |
| 77 | SLV 8 | 10.1 | 0.09 | 21.9 | 0.475 | 0.4543 | -0.0022 |
| 77 | SLV 9 | -14.22 | -0.39 | 51.24 | -0.304 | -0.5808 | 0.0015 |
| 77 | SLV 10 | -14.22 | -0.39 | 51.24 | -0.304 | -0.5808 | 0.0015 |
| 77 | SLV 11 | -2.86 | 0.18 | 19.18 | 0.546 | -0.109 | -0.002 |
| 77 | SLV 12 | -2.86 | 0.18 | 19.18 | 0.546 | -0.109 | -0.002 |
| 77 | SLV 13 | -25.37 | -0.09 | 36.85 | 0.0765 | -1.0729 | 0.0006 |
| 77 | SLV 14 | -25.37 | -0.09 | 36.85 | 0.0765 | -1.0729 | 0.0006 |
| 77 | SLV 15 | -21.96 | 0.08 | 27.23 | 0.3315 | -0.9314 | -0.0005 |
| 77 | SLV 16 | -21.96 | 0.08 | 27.23 | 0.3315 | -0.9314 | -0.0005 |
| 78 | SLU 1 | -2.95 | -0.25 | 31.67 | 0.1253 | -0.1227 | -0.0008 |
| 78 | SLU 2 | -4.82 | -0.22 | 31.52 | 0.0357 | -0.2007 | -0.0006 |
| 78 | SLU 3 | -3.13 | -0.25 | 32.13 | 0.1293 | -0.1305 | -0.0008 |
| 78 | SLU 4 | -4.25 | -0.24 | 32.05 | 0.0755 | -0.1773 | -0.0007 |
| 78 | SLU 5 | -4.96 | -0.23 | 31.75 | 0.0381 | -0.2074 | -0.0006 |
| 78 | SLU 6 | -3.27 | -0.26 | 32.36 | 0.1317 | -0.1372 | -0.0008 |
| 78 | SLU 7 | -4.39 | -0.24 | 32.27 | 0.0779 | -0.184 | -0.0007 |
| 78 | SLU 8 | -3.24 | -0.26 | 32.12 | 0.1302 | -0.1361 | -0.0008 |
| 78 | SLU 9 | -4.36 | -0.24 | 32.03 | 0.0764 | -0.1829 | -0.0007 |
| 78 | SLU 10 | -5.12 | -0.26 | 36.1 | 0.0525 | -0.214 | -0.0007 |
| 78 | SLU 11 | -3.43 | -0.29 | 36.71 | 0.1461 | -0.1437 | -0.0009 |
| 78 | SLU 12 | -4.55 | -0.27 | 36.62 | 0.0923 | -0.1905 | -0.0008 |
| 78 | SLU 13 | -5.26 | -0.26 | 36.33 | 0.055 | -0.2207 | -0.0007 |
| 78 | SLU 14 | -3.57 | -0.29 | 36.94 | 0.1485 | -0.1504 | -0.001 |

| Nodo | Cont. | Reazione a traslazione | | | Reazione a rotazione | | |
|---|---|---|---|---|---|---|---|
| Ind. | N.br. | x | y | z | x | y | z |
| 78 | SLU 15 | -4.69 | -0.28 | 36.85 | 0.0948 | -0.1972 | -0.0008 |
| 78 | SLU 16 | -3.54 | -0.29 | 36.7 | 0.1471 | -0.1494 | -0.0009 |
| 78 | SLU 17 | -4.66 | -0.28 | 36.61 | 0.0933 | -0.1962 | -0.0008 |
| 78 | SLU 18 | -3.38 | -0.3 | 38.21 | 0.1494 | -0.1417 | -0.001 |
| 78 | SLU 19 | -4.5 | -0.28 | 38.12 | 0.0956 | -0.1885 | -0.0008 |
| 78 | SLU 20 | -3.53 | -0.3 | 38.43 | 0.1518 | -0.1484 | -0.001 |
| 78 | SLU 21 | -4.64 | -0.29 | 38.35 | 0.098 | -0.1952 | -0.0008 |
| 78 | SLU 22 | -3.29 | -0.28 | 35.38 | 0.141 | -0.1374 | -0.0009 |
| 78 | SLU 23 | -5.15 | -0.26 | 35.23 | 0.0513 | -0.2154 | -0.0007 |
| 78 | SLU 24 | -3.46 | -0.29 | 35.85 | 0.1449 | -0.1452 | -0.0009 |
| 78 | SLU 25 | -4.58 | -0.27 | 35.76 | 0.0911 | -0.192 | -0.0008 |
| 78 | SLU 26 | -5.3 | -0.26 | 35.46 | 0.0538 | -0.2221 | -0.0007 |
| 78 | SLU 27 | -3.61 | -0.29 | 36.07 | 0.1474 | -0.1519 | -0.0009 |
| 78 | SLU 28 | -4.73 | -0.28 | 35.99 | 0.0936 | -0.1986 | -0.0008 |
| 78 | SLU 29 | -3.58 | -0.29 | 35.83 | 0.1459 | -0.1508 | -0.0009 |
| 78 | SLU 30 | -4.7 | -0.27 | 35.75 | 0.0921 | -0.1976 | -0.0008 |
| 78 | SLU 31 | -5.45 | -0.29 | 39.81 | 0.0682 | -0.2287 | -0.0008 |
| 78 | SLU 32 | -3.76 | -0.32 | 40.42 | 0.1618 | -0.1584 | -0.001 |
| 78 | SLU 33 | -4.88 | -0.31 | 40.34 | 0.108 | -0.2052 | -0.0009 |
| 78 | SLU 34 | -5.6 | -0.29 | 40.04 | 0.0706 | -0.2353 | -0.0008 |
| 78 | SLU 35 | -3.91 | -0.32 | 40.65 | 0.1642 | -0.1651 | -0.0011 |
| 78 | SLU 36 | -5.03 | -0.31 | 40.56 | 0.1104 | -0.2119 | -0.0009 |
| 78 | SLU 37 | -3.88 | -0.32 | 40.41 | 0.1628 | -0.1641 | -0.0011 |
| 78 | SLU 38 | -5 | -0.31 | 40.32 | 0.109 | -0.2108 | -0.0009 |
| 78 | SLU 39 | -3.72 | -0.33 | 41.92 | 0.1651 | -0.1564 | -0.0011 |
| 78 | SLU 40 | -4.84 | -0.31 | 41.83 | 0.1113 | -0.2031 | -0.0009 |
| 78 | SLU 41 | -3.86 | -0.33 | 42.15 | 0.1675 | -0.1631 | -0.0011 |
| 78 | SLU 42 | -4.98 | -0.32 | 42.06 | 0.1137 | -0.2098 | -0.0009 |
| 78 | SLU 43 | -3.72 | -0.31 | 39.89 | 0.1575 | -0.1545 | -0.001 |
| 78 | SLU 44 | -5.59 | -0.29 | 39.75 | 0.0679 | -0.2325 | -0.0008 |
| 78 | SLU 45 | -3.9 | -0.32 | 40.36 | 0.1615 | -0.1623 | -0.001 |
| 78 | SLU 46 | -5.02 | -0.3 | 40.27 | 0.1077 | -0.2091 | -0.0009 |
| 78 | SLU 47 | -5.73 | -0.29 | 39.98 | 0.0703 | -0.2392 | -0.0008 |
| 78 | SLU 48 | -4.04 | -0.32 | 40.59 | 0.1639 | -0.169 | -0.0011 |
| 78 | SLU 49 | -5.16 | -0.31 | 40.5 | 0.1101 | -0.2158 | -0.0009 |
| 78 | SLU 50 | -4.01 | -0.32 | 40.35 | 0.1625 | -0.1679 | -0.001 |
| 78 | SLU 51 | -5.13 | -0.3 | 40.26 | 0.1087 | -0.2147 | -0.0009 |
| 78 | SLU 52 | -5.89 | -0.32 | 44.33 | 0.0847 | -0.2458 | -0.0009 |
| 78 | SLU 53 | -4.2 | -0.35 | 44.94 | 0.1783 | -0.1755 | -0.0011 |
| 78 | SLU 54 | -5.32 | -0.34 | 44.85 | 0.1245 | -0.2223 | -0.001 |
| 78 | SLU 55 | -6.03 | -0.33 | 44.55 | 0.0872 | -0.2525 | -0.0009 |
| 78 | SLU 56 | -4.34 | -0.36 | 45.17 | 0.1808 | -0.1822 | -0.0012 |
| 78 | SLU 57 | -5.46 | -0.34 | 45.08 | 0.127 | -0.229 | -0.001 |
| 78 | SLU 58 | -4.31 | -0.35 | 44.93 | 0.1793 | -0.1812 | -0.0012 |
| 78 | SLU 59 | -5.43 | -0.34 | 44.84 | 0.1255 | -0.228 | -0.001 |
| 78 | SLU 60 | -4.15 | -0.36 | 46.43 | 0.1816 | -0.1735 | -0.0012 |
| 78 | SLU 61 | -5.27 | -0.34 | 46.35 | 0.1278 | -0.2203 | -0.001 |
| 78 | SLU 62 | -4.3 | -0.36 | 46.66 | 0.1841 | -0.1802 | -0.0012 |
| 78 | SLU 63 | -5.41 | -0.35 | 46.57 | 0.1303 | -0.2269 | -0.0011 |
| 78 | SLU 64 | -4.06 | -0.34 | 43.61 | 0.1732 | -0.1692 | -0.0011 |
| 78 | SLU 65 | -5.92 | -0.32 | 43.46 | 0.0836 | -0.2472 | -0.0009 |
| 78 | SLU 66 | -4.23 | -0.35 | 44.07 | 0.1771 | -0.177 | -0.0011 |
| 78 | SLU 67 | -5.35 | -0.34 | 43.99 | 0.1234 | -0.2237 | -0.001 |
| 78 | SLU 68 | -6.07 | -0.32 | 43.69 | 0.086 | -0.2539 | -0.0009 |
| 78 | SLU 69 | -4.38 | -0.35 | 44.3 | 0.1796 | -0.1837 | -0.0012 |
| 78 | SLU 70 | -5.5 | -0.34 | 44.21 | 0.1258 | -0.2304 | -0.001 |
| 78 | SLU 71 | -4.35 | -0.35 | 44.06 | 0.1781 | -0.1826 | -0.0011 |
| 78 | SLU 72 | -5.47 | -0.34 | 43.97 | 0.1243 | -0.2294 | -0.001 |
| 78 | SLU 73 | -6.22 | -0.35 | 48.04 | 0.1004 | -0.2604 | -0.001 |
| 78 | SLU 74 | -4.53 | -0.38 | 48.65 | 0.194 | -0.1902 | -0.0013 |
| 78 | SLU 75 | -5.65 | -0.37 | 48.56 | 0.1402 | -0.237 | -0.0011 |
| 78 | SLU 76 | -6.37 | -0.36 | 48.27 | 0.1029 | -0.2671 | -0.001 |
| 78 | SLU 77 | -4.68 | -0.39 | 48.88 | 0.1964 | -0.1969 | -0.0013 |
| 78 | SLU 78 | -5.8 | -0.37 | 48.79 | 0.1427 | -0.2437 | -0.0011 |
| 78 | SLU 79 | -4.65 | -0.38 | 48.64 | 0.195 | -0.1959 | -0.0013 |
| 78 | SLU 80 | -5.77 | -0.37 | 48.55 | 0.1412 | -0.2426 | -0.0011 |
| 78 | SLU 81 | -4.49 | -0.39 | 50.14 | 0.1973 | -0.1882 | -0.0013 |
| 78 | SLU 82 | -5.61 | -0.38 | 50.06 | 0.1435 | -0.2349 | -0.0011 |
| 78 | SLU 83 | -4.63 | -0.4 | 50.37 | 0.1997 | -0.1948 | -0.0013 |
| 78 | SLU 84 | -5.75 | -0.38 | 50.29 | 0.1459 | -0.2416 | -0.0012 |
| 78 | SLE RA 1 | -3.05 | -0.26 | 32.73 | 0.1298 | -0.1269 | -0.0008 |
| 78 | SLE RA 2 | -4.29 | -0.24 | 32.63 | 0.07 | -0.1789 | -0.0007 |
| 78 | SLE RA 3 | -3.16 | -0.26 | 33.04 | 0.1324 | -0.1321 | -0.0009 |
| 78 | SLE RA 4 | -3.91 | -0.25 | 32.98 | 0.0966 | -0.1633 | -0.0008 |
| 78 | SLE RA 5 | -4.39 | -0.24 | 32.78 | 0.0717 | -0.1834 | -0.0007 |
| 78 | SLE RA 6 | -3.26 | -0.26 | 33.19 | 0.1341 | -0.1366 | -0.0009 |
| 78 | SLE RA 7 | -4.01 | -0.25 | 33.13 | 0.0982 | -0.1678 | -0.0008 |
| 78 | SLE RA 8 | -3.24 | -0.26 | 33.03 | 0.1331 | -0.1359 | -0.0009 |
| 78 | SLE RA 9 | -3.99 | -0.25 | 32.97 | 0.0972 | -0.167 | -0.0008 |
| 78 | SLE RA 10 | -4.49 | -0.26 | 35.68 | 0.0813 | -0.1878 | -0.0008 |
| 78 | SLE RA 11 | -3.36 | -0.28 | 36.09 | 0.1436 | -0.1409 | -0.0009 |
| 78 | SLE RA 12 | -4.11 | -0.27 | 36.03 | 0.1078 | -0.1721 | -0.0008 |
| 78 | SLE RA 13 | -4.59 | -0.27 | 35.83 | 0.0829 | -0.1922 | -0.0008 |
| 78 | SLE RA 14 | -3.46 | -0.29 | 36.24 | 0.1453 | -0.1454 | -0.0009 |
| 78 | SLE RA 15 | -4.21 | -0.28 | 36.18 | 0.1094 | -0.1766 | -0.0008 |
| 78 | SLE RA 16 | -3.44 | -0.28 | 36.08 | 0.1443 | -0.1447 | -0.0009 |
| 78 | SLE RA 17 | -4.19 | -0.28 | 36.02 | 0.1084 | -0.1759 | -0.0008 |
| 78 | SLE RA 18 | -3.33 | -0.29 | 37.09 | 0.1458 | -0.1396 | -0.0009 |

| Nodo | Cont. | Reazione a traslazione | | | Reazione a rotazione | | |
|---|---|---|---|---|---|---|---|
| Ind. | N.br. | x | y | z | x | y | z |
| 78 | SLE RA 19 | -4.08 | -0.28 | 37.03 | 0.11 | -0.1708 | -0.0009 |
| 78 | SLE RA 20 | -3.43 | -0.29 | 37.24 | 0.1475 | -0.144 | -0.001 |
| 78 | SLE RA 21 | -4.18 | -0.28 | 37.18 | 0.1116 | -0.1752 | -0.0009 |
| 78 | SLE FR 1 | -3.05 | -0.26 | 32.73 | 0.1298 | -0.1269 | -0.0008 |
| 78 | SLE FR 2 | -3.3 | -0.25 | 32.71 | 0.1178 | -0.1373 | -0.0008 |
| 78 | SLE FR 3 | -3.09 | -0.26 | 32.79 | 0.1305 | -0.1287 | -0.0008 |
| 78 | SLE FR 4 | -3.38 | -0.26 | 34.02 | 0.1227 | -0.1411 | -0.0008 |
| 78 | SLE FR 5 | -3.17 | -0.27 | 34.1 | 0.1353 | -0.1325 | -0.0009 |
| 78 | SLE FR 6 | -3.19 | -0.27 | 34.91 | 0.1378 | -0.1333 | -0.0009 |
| 78 | SLE QP 1 | -3.05 | -0.26 | 32.73 | 0.1298 | -0.1269 | -0.0008 |
| 78 | SLE QP 2 | -3.13 | -0.27 | 34.03 | 0.1346 | -0.1307 | -0.0009 |
| 78 | SLD 1 | 5.37 | -0.26 | 34.34 | -0.0221 | 0.2405 | -0.0015 |
| 78 | SLD 2 | 5.37 | -0.26 | 34.34 | -0.0221 | 0.2405 | -0.0015 |
| 78 | SLD 3 | 6.74 | -0.1 | 30.83 | 0.1484 | 0.2976 | -0.0008 |
| 78 | SLD 4 | 6.74 | -0.1 | 30.83 | 0.1484 | 0.2976 | -0.0008 |
| 78 | SLD 5 | -2.66 | -0.51 | 39.46 | -0.1711 | -0.106 | -0.0021 |
| 78 | SLD 6 | -2.66 | -0.51 | 39.46 | -0.1711 | -0.106 | -0.0021 |
| 78 | SLD 7 | 1.9 | 0.02 | 27.74 | 0.3974 | 0.0844 | 0.0002 |
| 78 | SLD 8 | 1.9 | 0.02 | 27.74 | 0.3974 | 0.0844 | 0.0002 |
| 78 | SLD 9 | -8.17 | -0.56 | 40.33 | -0.1282 | -0.3459 | -0.0019 |
| 78 | SLD 10 | -8.17 | -0.56 | 40.33 | -0.1282 | -0.3459 | -0.0019 |
| 78 | SLD 11 | -3.61 | -0.03 | 28.61 | 0.4403 | -0.1554 | 0.0003 |
| 78 | SLD 12 | -3.61 | -0.03 | 28.61 | 0.4403 | -0.1554 | 0.0003 |
| 78 | SLD 13 | -13.01 | -0.43 | 37.24 | 0.1208 | -0.5591 | -0.0009 |
| 78 | SLD 14 | -13.01 | -0.43 | 37.24 | 0.1208 | -0.5591 | -0.0009 |
| 78 | SLD 15 | -11.64 | -0.27 | 33.73 | 0.2914 | -0.5019 | -0.0002 |
| 78 | SLD 16 | -11.64 | -0.27 | 33.73 | 0.2914 | -0.5019 | -0.0002 |
| 78 | SLV 1 | 16.41 | -0.26 | 34.71 | -0.2506 | 0.7223 | -0.0024 |
| 78 | SLV 2 | 16.41 | -0.26 | 34.71 | -0.2506 | 0.7223 | -0.0024 |
| 78 | SLV 3 | 19.69 | 0.13 | 26.5 | 0.1788 | 0.8595 | -0.0008 |
| 78 | SLV 4 | 19.69 | 0.13 | 26.5 | 0.1788 | 0.8595 | -0.0008 |
| 78 | SLV 5 | -2.24 | -0.85 | 46.69 | -0.6323 | -0.0829 | -0.0038 |
| 78 | SLV 6 | -2.24 | -0.85 | 46.69 | -0.6323 | -0.0829 | -0.0038 |
| 78 | SLV 7 | 8.68 | 0.44 | 19.32 | 0.7992 | 0.3744 | 0.0017 |
| 78 | SLV 8 | 8.68 | 0.44 | 19.32 | 0.7992 | 0.3744 | 0.0017 |
| 78 | SLV 9 | -14.95 | -0.97 | 48.75 | -0.53 | -0.6359 | -0.0034 |
| 78 | SLV 10 | -14.95 | -0.97 | 48.75 | -0.53 | -0.6359 | -0.0034 |
| 78 | SLV 11 | -4.03 | 0.32 | 21.38 | 0.9015 | -0.1785 | 0.0021 |
| 78 | SLV 12 | -4.03 | 0.32 | 21.38 | 0.9015 | -0.1785 | 0.0021 |
| 78 | SLV 13 | -25.95 | -0.66 | 41.57 | 0.0904 | -1.1209 | -0.001 |
| 78 | SLV 14 | -25.95 | -0.66 | 41.57 | 0.0904 | -1.1209 | -0.001 |
| 78 | SLV 15 | -22.68 | -0.27 | 33.36 | 0.5199 | -0.9837 | 0.0007 |
| 78 | SLV 16 | -22.68 | -0.27 | 33.36 | 0.5199 | -0.9837 | 0.0007 |
| 79 | SLU 1 | -3.34 | -0.29 | 29.31 | 0.1481 | -0.1233 | -0.0012 |
| 79 | SLU 2 | -4.86 | -0.22 | 28.74 | 0.0167 | -0.1861 | -0.0008 |
| 79 | SLU 3 | -3.52 | -0.3 | 29.75 | 0.1527 | -0.1306 | -0.0013 |
| 79 | SLU 4 | -4.43 | -0.26 | 29.41 | 0.0738 | -0.1683 | -0.001 |
| 79 | SLU 5 | -5 | -0.23 | 28.98 | 0.0194 | -0.1922 | -0.0008 |
| 79 | SLU 6 | -3.67 | -0.31 | 29.99 | 0.1554 | -0.1366 | -0.0013 |
| 79 | SLU 7 | -4.58 | -0.26 | 29.65 | 0.0765 | -0.1743 | -0.001 |
| 79 | SLU 8 | -3.64 | -0.3 | 29.79 | 0.1536 | -0.1353 | -0.0013 |
| 79 | SLU 9 | -4.54 | -0.26 | 29.45 | 0.0748 | -0.173 | -0.001 |
| 79 | SLU 10 | -5.23 | -0.26 | 33 | 0.0362 | -0.1983 | -0.001 |
| 79 | SLU 11 | -3.89 | -0.34 | 34.01 | 0.1722 | -0.1427 | -0.0014 |
| 79 | SLU 12 | -4.8 | -0.3 | 33.67 | 0.0933 | -0.1804 | -0.0012 |
| 79 | SLU 13 | -5.37 | -0.27 | 33.24 | 0.0389 | -0.2043 | -0.001 |
| 79 | SLU 14 | -4.04 | -0.35 | 34.25 | 0.1749 | -0.1487 | -0.0015 |
| 79 | SLU 15 | -4.95 | -0.3 | 33.91 | 0.096 | -0.1864 | -0.0012 |
| 79 | SLU 16 | -4 | -0.34 | 34.04 | 0.1731 | -0.1474 | -0.0014 |
| 79 | SLU 17 | -4.91 | -0.3 | 33.71 | 0.0942 | -0.1851 | -0.0012 |
| 79 | SLU 18 | -3.87 | -0.35 | 35.39 | 0.176 | -0.1406 | -0.0015 |
| 79 | SLU 19 | -4.78 | -0.31 | 35.05 | 0.0971 | -0.1783 | -0.0012 |
| 79 | SLU 20 | -4.02 | -0.35 | 35.63 | 0.1787 | -0.1466 | -0.0015 |
| 79 | SLU 21 | -4.92 | -0.31 | 35.29 | 0.0998 | -0.1843 | -0.0012 |
| 79 | SLU 22 | -3.75 | -0.33 | 32.79 | 0.1664 | -0.1382 | -0.0014 |
| 79 | SLU 23 | -5.27 | -0.26 | 32.22 | 0.0349 | -0.201 | -0.001 |
| 79 | SLU 24 | -3.93 | -0.34 | 33.23 | 0.1709 | -0.1455 | -0.0014 |
| 79 | SLU 25 | -4.84 | -0.3 | 32.89 | 0.092 | -0.1832 | -0.0012 |
| 79 | SLU 26 | -5.41 | -0.26 | 32.46 | 0.0376 | -0.207 | -0.001 |
| 79 | SLU 27 | -4.08 | -0.34 | 33.47 | 0.1736 | -0.1515 | -0.0015 |
| 79 | SLU 28 | -4.99 | -0.3 | 33.13 | 0.0948 | -0.1892 | -0.0012 |
| 79 | SLU 29 | -4.05 | -0.34 | 33.26 | 0.1719 | -0.1502 | -0.0014 |
| 79 | SLU 30 | -4.95 | -0.3 | 32.93 | 0.093 | -0.1879 | -0.0012 |
| 79 | SLU 31 | -5.64 | -0.3 | 36.48 | 0.0544 | -0.2131 | -0.0011 |
| 79 | SLU 32 | -4.3 | -0.38 | 37.49 | 0.1904 | -0.1576 | -0.0016 |
| 79 | SLU 33 | -5.21 | -0.34 | 37.15 | 0.1115 | -0.1953 | -0.0013 |
| 79 | SLU 34 | -5.78 | -0.3 | 36.72 | 0.0571 | -0.2192 | -0.0012 |
| 79 | SLU 35 | -4.45 | -0.38 | 37.73 | 0.1931 | -0.1636 | -0.0016 |
| 79 | SLU 36 | -5.36 | -0.34 | 37.39 | 0.1142 | -0.2013 | -0.0014 |
| 79 | SLU 37 | -4.41 | -0.38 | 37.52 | 0.1913 | -0.1623 | -0.0016 |
| 79 | SLU 38 | -5.32 | -0.34 | 37.18 | 0.1125 | -0.2 | -0.0014 |
| 79 | SLU 39 | -4.28 | -0.39 | 38.87 | 0.1942 | -0.1555 | -0.0016 |
| 79 | SLU 40 | -5.19 | -0.34 | 38.53 | 0.1153 | -0.1932 | -0.0014 |
| 79 | SLU 41 | -4.43 | -0.39 | 39.11 | 0.1969 | -0.1615 | -0.0017 |
| 79 | SLU 42 | -5.33 | -0.35 | 38.77 | 0.1181 | -0.1992 | -0.0014 |
| 79 | SLU 43 | -4.21 | -0.37 | 36.91 | 0.1863 | -0.1551 | -0.0016 |
| 79 | SLU 44 | -5.72 | -0.3 | 36.34 | 0.0549 | -0.218 | -0.0011 |
| 79 | SLU 45 | -4.39 | -0.38 | 37.35 | 0.1909 | -0.1625 | -0.0016 |

| Nodo | Cont. | Reazione a traslazione | | | Reazione a rotazione | | |
|---|---|---|---|---|---|---|---|
| Ind. | N.br. | x | y | z | x | y | z |
| 79 | SLU 46 | -5.3 | -0.33 | 37.01 | 0.112 | -0.2002 | -0.0013 |
| 79 | SLU 47 | -5.87 | -0.3 | 36.58 | 0.0576 | -0.224 | -0.0012 |
| 79 | SLU 48 | -4.53 | -0.38 | 37.59 | 0.1936 | -0.1685 | -0.0016 |
| 79 | SLU 49 | -5.44 | -0.34 | 37.25 | 0.1147 | -0.2062 | -0.0014 |
| 79 | SLU 50 | -4.5 | -0.38 | 37.39 | 0.1918 | -0.1672 | -0.0016 |
| 79 | SLU 51 | -5.41 | -0.34 | 37.05 | 0.113 | -0.2049 | -0.0013 |
| 79 | SLU 52 | -6.09 | -0.34 | 40.6 | 0.0744 | -0.2301 | -0.0013 |
| 79 | SLU 53 | -4.76 | -0.42 | 41.61 | 0.2104 | -0.1746 | -0.0018 |
| 79 | SLU 54 | -5.66 | -0.37 | 41.27 | 0.1315 | -0.2123 | -0.0015 |
| 79 | SLU 55 | -6.24 | -0.34 | 40.84 | 0.0771 | -0.2361 | -0.0013 |
| 79 | SLU 56 | -4.9 | -0.42 | 41.85 | 0.2131 | -0.1806 | -0.0018 |
| 79 | SLU 57 | -5.81 | -0.38 | 41.51 | 0.1342 | -0.2183 | -0.0015 |
| 79 | SLU 58 | -4.87 | -0.42 | 41.64 | 0.2113 | -0.1793 | -0.0018 |
| 79 | SLU 59 | -5.78 | -0.38 | 41.3 | 0.1324 | -0.217 | -0.0015 |
| 79 | SLU 60 | -4.73 | -0.42 | 42.99 | 0.2142 | -0.1724 | -0.0018 |
| 79 | SLU 61 | -5.64 | -0.38 | 42.65 | 0.1353 | -0.2102 | -0.0015 |
| 79 | SLU 62 | -4.88 | -0.43 | 43.23 | 0.2169 | -0.1785 | -0.0018 |
| 79 | SLU 63 | -5.79 | -0.39 | 42.89 | 0.138 | -0.2162 | -0.0016 |
| 79 | SLU 64 | -4.62 | -0.4 | 40.39 | 0.2046 | -0.17 | -0.0017 |
| 79 | SLU 65 | -6.13 | -0.33 | 39.82 | 0.0731 | -0.2329 | -0.0013 |
| 79 | SLU 66 | -4.8 | -0.41 | 40.83 | 0.2091 | -0.1773 | -0.0017 |
| 79 | SLU 67 | -5.7 | -0.37 | 40.49 | 0.1302 | -0.2151 | -0.0015 |
| 79 | SLU 68 | -6.28 | -0.34 | 40.06 | 0.0758 | -0.2389 | -0.0013 |
| 79 | SLU 69 | -4.94 | -0.42 | 41.07 | 0.2118 | -0.1834 | -0.0018 |
| 79 | SLU 70 | -5.85 | -0.38 | 40.73 | 0.1329 | -0.2211 | -0.0015 |
| 79 | SLU 71 | -4.91 | -0.41 | 40.86 | 0.2101 | -0.1821 | -0.0018 |
| 79 | SLU 72 | -5.82 | -0.37 | 40.53 | 0.1312 | -0.2198 | -0.0015 |
| 79 | SLU 73 | -6.5 | -0.37 | 44.08 | 0.0926 | -0.245 | -0.0015 |
| 79 | SLU 74 | -5.16 | -0.45 | 45.09 | 0.2286 | -0.1895 | -0.0019 |
| 79 | SLU 75 | -6.07 | -0.41 | 44.75 | 0.1497 | -0.2272 | -0.0017 |
| 79 | SLU 76 | -6.64 | -0.38 | 44.32 | 0.0953 | -0.251 | -0.0015 |
| 79 | SLU 77 | -5.31 | -0.46 | 45.33 | 0.2313 | -0.1955 | -0.0019 |
| 79 | SLU 78 | -6.22 | -0.42 | 44.99 | 0.1524 | -0.2332 | -0.0017 |
| 79 | SLU 79 | -5.28 | -0.45 | 45.12 | 0.2295 | -0.1942 | -0.0019 |
| 79 | SLU 80 | -6.19 | -0.41 | 44.78 | 0.1507 | -0.2319 | -0.0017 |
| 79 | SLU 81 | -5.14 | -0.46 | 46.47 | 0.2324 | -0.1873 | -0.002 |
| 79 | SLU 82 | -6.05 | -0.42 | 46.13 | 0.1535 | -0.2251 | -0.0017 |
| 79 | SLU 83 | -5.29 | -0.47 | 46.71 | 0.2351 | -0.1933 | -0.002 |
| 79 | SLU 84 | -6.2 | -0.42 | 46.37 | 0.1563 | -0.2311 | -0.0017 |
| 79 | SLE RA 1 | -3.46 | -0.3 | 30.3 | 0.1533 | -0.1275 | -0.0013 |
| 79 | SLE RA 2 | -4.47 | -0.26 | 29.93 | 0.0657 | -0.1694 | -0.001 |
| 79 | SLE RA 3 | -3.58 | -0.31 | 30.6 | 0.1564 | -0.1324 | -0.0013 |
| 79 | SLE RA 4 | -4.19 | -0.28 | 30.37 | 0.1038 | -0.1575 | -0.0011 |
| 79 | SLE RA 5 | -4.57 | -0.26 | 30.09 | 0.0675 | -0.1734 | -0.001 |
| 79 | SLE RA 6 | -3.68 | -0.31 | 30.76 | 0.1582 | -0.1364 | -0.0013 |
| 79 | SLE RA 7 | -4.28 | -0.28 | 30.53 | 0.1056 | -0.1616 | -0.0012 |
| 79 | SLE RA 8 | -3.66 | -0.31 | 30.62 | 0.157 | -0.1355 | -0.0013 |
| 79 | SLE RA 9 | -4.26 | -0.28 | 30.39 | 0.1044 | -0.1607 | -0.0011 |
| 79 | SLE RA 10 | -4.72 | -0.28 | 32.76 | 0.0787 | -0.1775 | -0.0011 |
| 79 | SLE RA 11 | -3.83 | -0.34 | 33.44 | 0.1694 | -0.1405 | -0.0014 |
| 79 | SLE RA 12 | -4.43 | -0.31 | 33.21 | 0.1168 | -0.1656 | -0.0013 |
| 79 | SLE RA 13 | -4.81 | -0.29 | 32.92 | 0.0805 | -0.1815 | -0.0011 |
| 79 | SLE RA 14 | -3.92 | -0.34 | 33.6 | 0.1712 | -0.1445 | -0.0014 |
| 79 | SLE RA 15 | -4.53 | -0.31 | 33.37 | 0.1186 | -0.1696 | -0.0013 |
| 79 | SLE RA 16 | -3.9 | -0.34 | 33.46 | 0.17 | -0.1436 | -0.0014 |
| 79 | SLE RA 17 | -4.51 | -0.31 | 33.23 | 0.1174 | -0.1688 | -0.0013 |
| 79 | SLE RA 18 | -3.81 | -0.34 | 34.36 | 0.1719 | -0.1391 | -0.0014 |
| 79 | SLE RA 19 | -4.42 | -0.31 | 34.13 | 0.1193 | -0.1642 | -0.0013 |
| 79 | SLE RA 20 | -3.91 | -0.34 | 34.52 | 0.1737 | -0.1431 | -0.0015 |
| 79 | SLE RA 21 | -4.51 | -0.32 | 34.29 | 0.1211 | -0.1682 | -0.0013 |
| 79 | SLE FR 1 | -3.46 | -0.3 | 30.3 | 0.1533 | -0.1275 | -0.0013 |
| 79 | SLE FR 2 | -3.66 | -0.29 | 30.23 | 0.1358 | -0.1359 | -0.0012 |
| 79 | SLE FR 3 | -3.5 | -0.3 | 30.37 | 0.1541 | -0.1291 | -0.0013 |
| 79 | SLE FR 4 | -3.77 | -0.31 | 31.44 | 0.1414 | -0.1394 | -0.0013 |
| 79 | SLE FR 5 | -3.61 | -0.32 | 31.58 | 0.1596 | -0.1326 | -0.0013 |
| 79 | SLE FR 6 | -3.64 | -0.32 | 32.33 | 0.1626 | -0.1333 | -0.0014 |
| 79 | SLE QP 1 | -3.46 | -0.3 | 30.3 | 0.1533 | -0.1275 | -0.0013 |
| 79 | SLE QP 2 | -3.57 | -0.31 | 31.52 | 0.1589 | -0.131 | -0.0013 |
| 79 | SLD 1 | 4.86 | -0.32 | 31.28 | -0.0506 | 0.2363 | -0.0014 |
| 79 | SLD 2 | 4.86 | -0.32 | 31.28 | -0.0506 | 0.2363 | -0.0014 |
| 79 | SLD 3 | 6.21 | -0.09 | 28.21 | 0.186 | 0.2932 | -0.0003 |
| 79 | SLD 4 | 6.21 | -0.09 | 28.21 | 0.186 | 0.2932 | -0.0003 |
| 79 | SLD 5 | -3.09 | -0.67 | 36.11 | -0.2629 | -0.1071 | -0.0031 |
| 79 | SLD 6 | -3.09 | -0.67 | 36.11 | -0.2629 | -0.1071 | -0.0031 |
| 79 | SLD 7 | 1.42 | 0.1 | 25.86 | 0.526 | 0.0826 | 0.0007 |
| 79 | SLD 8 | 1.42 | 0.1 | 25.86 | 0.526 | 0.0826 | 0.0007 |
| 79 | SLD 9 | -8.55 | -0.73 | 37.17 | -0.2082 | -0.3445 | -0.0034 |
| 79 | SLD 10 | -8.55 | -0.73 | 37.17 | -0.2082 | -0.3445 | -0.0034 |
| 79 | SLD 11 | -4.05 | 0.04 | 26.93 | 0.5807 | -0.1549 | 0.0004 |
| 79 | SLD 12 | -4.05 | 0.04 | 26.93 | 0.5807 | -0.1549 | 0.0004 |
| 79 | SLD 13 | -13.34 | -0.54 | 34.83 | 0.1318 | -0.5552 | -0.0024 |
| 79 | SLD 14 | -13.34 | -0.54 | 34.83 | 0.1318 | -0.5552 | -0.0024 |
| 79 | SLD 15 | -11.99 | -0.31 | 31.76 | 0.3685 | -0.4983 | -0.0013 |
| 79 | SLD 16 | -11.99 | -0.31 | 31.76 | 0.3685 | -0.4983 | -0.0013 |
| 79 | SLV 1 | 15.82 | -0.34 | 30.98 | -0.3587 | 0.7141 | -0.0016 |
| 79 | SLV 2 | 15.82 | -0.34 | 30.98 | -0.3587 | 0.7141 | -0.0016 |
| 79 | SLV 3 | 19.02 | 0.23 | 23.78 | 0.2397 | 0.8488 | 0.0013 |
| 79 | SLV 4 | 19.02 | 0.23 | 23.78 | 0.2397 | 0.8488 | 0.0013 |

| Nodo | Cont. | Reazione a traslazione | | | Reazione a rotazione | | |
|---|---|---|---|---|---|---|---|
| Ind. | N.br. | x | y | z | x | y | z |
| 79 | SLV 5 | -2.6 | -1.19 | 42.28 | -0.9038 | -0.0818 | -0.0057 |
| 79 | SLV 6 | -2.6 | -1.19 | 42.28 | -0.9038 | -0.0818 | -0.0057 |
| 79 | SLV 7 | 8.06 | 0.72 | 18.27 | 1.0906 | 0.3673 | 0.0037 |
| 79 | SLV 8 | 8.06 | 0.72 | 18.27 | 1.0906 | 0.3673 | 0.0037 |
| 79 | SLV 9 | -15.19 | -1.35 | 44.76 | -0.7728 | -0.6292 | -0.0064 |
| 79 | SLV 10 | -15.19 | -1.35 | 44.76 | -0.7728 | -0.6292 | -0.0064 |
| 79 | SLV 11 | -4.53 | 0.56 | 20.76 | 1.2216 | -0.1802 | 0.003 |
| 79 | SLV 12 | -4.53 | 0.56 | 20.76 | 1.2216 | -0.1802 | 0.003 |
| 79 | SLV 13 | -26.15 | -0.86 | 39.26 | 0.0782 | -1.1107 | -0.0039 |
| 79 | SLV 14 | -26.15 | -0.86 | 39.26 | 0.0782 | -1.1107 | -0.0039 |
| 79 | SLV 15 | -22.95 | -0.28 | 32.06 | 0.6765 | -0.976 | -0.0011 |
| 79 | SLV 16 | -22.95 | -0.28 | 32.06 | 0.6765 | -0.976 | -0.0011 |
| 80 | SLU 1 | -3.79 | -0.29 | 27.12 | 0.1495 | -0.16 | -0.0016 |
| 80 | SLU 2 | -4.88 | -0.18 | 26.43 | -0.02 | -0.207 | -0.0009 |
| 80 | SLU 3 | -3.98 | -0.3 | 27.54 | 0.1541 | -0.1684 | -0.0016 |
| 80 | SLU 4 | -4.64 | -0.23 | 27.13 | 0.0524 | -0.1966 | -0.0012 |
| 80 | SLU 5 | -5.04 | -0.18 | 26.68 | -0.0172 | -0.214 | -0.0009 |
| 80 | SLU 6 | -4.14 | -0.3 | 27.79 | 0.1568 | -0.1754 | -0.0016 |
| 80 | SLU 7 | -4.79 | -0.24 | 27.38 | 0.0552 | -0.2036 | -0.0012 |
| 80 | SLU 8 | -4.1 | -0.3 | 27.61 | 0.155 | -0.174 | -0.0016 |
| 80 | SLU 9 | -4.76 | -0.23 | 27.2 | 0.0533 | -0.2022 | -0.0012 |
| 80 | SLU 10 | -5.37 | -0.22 | 30.37 | -0.001 | -0.2283 | -0.0011 |
| 80 | SLU 11 | -4.47 | -0.34 | 31.48 | 0.1731 | -0.1897 | -0.0018 |
| 80 | SLU 12 | -5.12 | -0.27 | 31.07 | 0.0714 | -0.2179 | -0.0014 |
| 80 | SLU 13 | -5.52 | -0.22 | 30.62 | 0.0018 | -0.2353 | -0.0011 |
| 80 | SLU 14 | -4.63 | -0.34 | 31.73 | 0.1758 | -0.1967 | -0.0019 |
| 80 | SLU 15 | -5.28 | -0.28 | 31.31 | 0.0742 | -0.2249 | -0.0014 |
| 80 | SLU 16 | -4.59 | -0.34 | 31.55 | 0.174 | -0.1954 | -0.0018 |
| 80 | SLU 17 | -5.25 | -0.27 | 31.14 | 0.0723 | -0.2236 | -0.0014 |
| 80 | SLU 18 | -4.49 | -0.35 | 32.75 | 0.1766 | -0.1905 | -0.0019 |
| 80 | SLU 19 | -5.14 | -0.28 | 32.33 | 0.0749 | -0.2187 | -0.0014 |
| 80 | SLU 20 | -4.64 | -0.35 | 32.99 | 0.1794 | -0.1975 | -0.0019 |
| 80 | SLU 21 | -5.3 | -0.28 | 32.58 | 0.0777 | -0.2257 | -0.0015 |
| 80 | SLU 22 | -4.3 | -0.33 | 30.37 | 0.1675 | -0.1822 | -0.0018 |
| 80 | SLU 23 | -5.39 | -0.21 | 29.68 | -0.002 | -0.2291 | -0.0011 |
| 80 | SLU 24 | -4.49 | -0.34 | 30.79 | 0.1721 | -0.1905 | -0.0018 |
| 80 | SLU 25 | -5.15 | -0.27 | 30.38 | 0.0704 | -0.2187 | -0.0014 |
| 80 | SLU 26 | -5.55 | -0.22 | 29.92 | 0.0008 | -0.2361 | -0.0011 |
| 80 | SLU 27 | -4.65 | -0.34 | 31.03 | 0.1748 | -0.1975 | -0.0018 |
| 80 | SLU 28 | -5.3 | -0.27 | 30.62 | 0.0732 | -0.2257 | -0.0014 |
| 80 | SLU 29 | -4.61 | -0.34 | 30.86 | 0.173 | -0.1962 | -0.0018 |
| 80 | SLU 30 | -5.27 | -0.27 | 30.44 | 0.0713 | -0.2243 | -0.0014 |
| 80 | SLU 31 | -5.88 | -0.25 | 33.62 | 0.017 | -0.2505 | -0.0013 |
| 80 | SLU 32 | -4.98 | -0.37 | 34.73 | 0.1911 | -0.2119 | -0.002 |
| 80 | SLU 33 | -5.63 | -0.31 | 34.31 | 0.0894 | -0.2401 | -0.0016 |
| 80 | SLU 34 | -6.03 | -0.26 | 33.86 | 0.0198 | -0.2575 | -0.0013 |
| 80 | SLU 35 | -5.14 | -0.38 | 34.97 | 0.1938 | -0.2189 | -0.0021 |
| 80 | SLU 36 | -5.79 | -0.31 | 34.56 | 0.0922 | -0.2471 | -0.0016 |
| 80 | SLU 37 | -5.1 | -0.38 | 34.79 | 0.192 | -0.2175 | -0.002 |
| 80 | SLU 38 | -5.76 | -0.31 | 34.38 | 0.0903 | -0.2457 | -0.0016 |
| 80 | SLU 39 | -5 | -0.38 | 35.99 | 0.1946 | -0.2127 | -0.0021 |
| 80 | SLU 40 | -5.65 | -0.32 | 35.58 | 0.0929 | -0.2408 | -0.0016 |
| 80 | SLU 41 | -5.16 | -0.39 | 36.24 | 0.1974 | -0.2197 | -0.0021 |
| 80 | SLU 42 | -5.81 | -0.32 | 35.82 | 0.0957 | -0.2479 | -0.0017 |
| 80 | SLU 43 | -4.75 | -0.37 | 34.15 | 0.1881 | -0.2004 | -0.002 |
| 80 | SLU 44 | -5.84 | -0.25 | 33.46 | 0.0187 | -0.2474 | -0.0013 |
| 80 | SLU 45 | -4.94 | -0.37 | 34.57 | 0.1927 | -0.2088 | -0.002 |
| 80 | SLU 46 | -5.6 | -0.31 | 34.16 | 0.0911 | -0.237 | -0.0016 |
| 80 | SLU 47 | -6 | -0.26 | 33.7 | 0.0214 | -0.2544 | -0.0013 |
| 80 | SLU 48 | -5.1 | -0.38 | 34.81 | 0.1955 | -0.2158 | -0.002 |
| 80 | SLU 49 | -5.75 | -0.31 | 34.4 | 0.0938 | -0.244 | -0.0016 |
| 80 | SLU 50 | -5.07 | -0.38 | 34.64 | 0.1937 | -0.2144 | -0.002 |
| 80 | SLU 51 | -5.72 | -0.31 | 34.22 | 0.092 | -0.2426 | -0.0016 |
| 80 | SLU 52 | -6.33 | -0.29 | 37.4 | 0.0377 | -0.2687 | -0.0015 |
| 80 | SLU 53 | -5.43 | -0.41 | 38.51 | 0.2117 | -0.2301 | -0.0022 |
| 80 | SLU 54 | -6.08 | -0.35 | 38.09 | 0.1101 | -0.2583 | -0.0018 |
| 80 | SLU 55 | -6.49 | -0.3 | 37.64 | 0.0404 | -0.2757 | -0.0015 |
| 80 | SLU 56 | -5.59 | -0.42 | 38.75 | 0.2145 | -0.2371 | -0.0023 |
| 80 | SLU 57 | -6.24 | -0.35 | 38.34 | 0.1128 | -0.2653 | -0.0018 |
| 80 | SLU 58 | -5.55 | -0.41 | 38.57 | 0.2127 | -0.2358 | -0.0022 |
| 80 | SLU 59 | -6.21 | -0.35 | 38.16 | 0.111 | -0.264 | -0.0018 |
| 80 | SLU 60 | -5.45 | -0.42 | 39.77 | 0.2153 | -0.2309 | -0.0023 |
| 80 | SLU 61 | -6.1 | -0.35 | 39.36 | 0.1136 | -0.2591 | -0.0018 |
| 80 | SLU 62 | -5.61 | -0.43 | 40.02 | 0.2181 | -0.2379 | -0.0023 |
| 80 | SLU 63 | -6.26 | -0.36 | 39.6 | 0.1164 | -0.2661 | -0.0019 |
| 80 | SLU 64 | -5.26 | -0.4 | 37.39 | 0.2061 | -0.2226 | -0.0022 |
| 80 | SLU 65 | -6.35 | -0.29 | 36.7 | 0.0367 | -0.2695 | -0.0015 |
| 80 | SLU 66 | -5.45 | -0.41 | 37.81 | 0.2107 | -0.2309 | -0.0022 |
| 80 | SLU 67 | -6.11 | -0.34 | 37.4 | 0.1091 | -0.2591 | -0.0018 |
| 80 | SLU 68 | -6.51 | -0.29 | 36.95 | 0.0394 | -0.2765 | -0.0015 |
| 80 | SLU 69 | -5.61 | -0.42 | 38.06 | 0.2135 | -0.2379 | -0.0022 |
| 80 | SLU 70 | -6.26 | -0.35 | 37.64 | 0.1118 | -0.2661 | -0.0018 |
| 80 | SLU 71 | -5.58 | -0.41 | 37.88 | 0.2117 | -0.2366 | -0.0022 |
| 80 | SLU 72 | -6.23 | -0.34 | 37.47 | 0.11 | -0.2648 | -0.0018 |
| 80 | SLU 73 | -6.84 | -0.33 | 40.64 | 0.0557 | -0.2909 | -0.0017 |
| 80 | SLU 74 | -5.94 | -0.45 | 41.75 | 0.2297 | -0.2523 | -0.0024 |
| 80 | SLU 75 | -6.6 | -0.38 | 41.34 | 0.1281 | -0.2805 | -0.002 |
| 80 | SLU 76 | -7 | -0.33 | 40.88 | 0.0584 | -0.2979 | -0.0017 |

| Nodo | Cont. | Reazione a traslazione | | | Reazione a rotazione | | |
|---|---|---|---|---|---|---|---|
| Ind. | N.br. | x | y | z | x | y | z |
| 80 | SLU 77 | -6.1 | -0.45 | 41.99 | 0.2325 | -0.2593 | -0.0025 |
| 80 | SLU 78 | -6.75 | -0.39 | 41.58 | 0.1308 | -0.2875 | -0.002 |
| 80 | SLU 79 | -6.06 | -0.45 | 41.82 | 0.2307 | -0.2579 | -0.0024 |
| 80 | SLU 80 | -6.72 | -0.38 | 41.4 | 0.129 | -0.2861 | -0.002 |
| 80 | SLU 81 | -5.96 | -0.46 | 43.01 | 0.2333 | -0.2531 | -0.0025 |
| 80 | SLU 82 | -6.61 | -0.39 | 42.6 | 0.1316 | -0.2813 | -0.002 |
| 80 | SLU 83 | -6.12 | -0.46 | 43.26 | 0.236 | -0.2601 | -0.0025 |
| 80 | SLU 84 | -6.77 | -0.4 | 42.85 | 0.1344 | -0.2883 | -0.0021 |
| 80 | SLE RA 1 | -3.94 | -0.3 | 28.05 | 0.1546 | -0.1663 | -0.0016 |
| 80 | SLE RA 2 | -4.66 | -0.23 | 27.59 | 0.0416 | -0.1976 | -0.0012 |
| 80 | SLE RA 3 | -4.06 | -0.31 | 28.33 | 0.1577 | -0.1719 | -0.0017 |
| 80 | SLE RA 4 | -4.5 | -0.26 | 28.05 | 0.0899 | -0.1907 | -0.0014 |
| 80 | SLE RA 5 | -4.77 | -0.23 | 27.75 | 0.0435 | -0.2023 | -0.0012 |
| 80 | SLE RA 6 | -4.17 | -0.31 | 28.49 | 0.1595 | -0.1766 | -0.0017 |
| 80 | SLE RA 7 | -4.6 | -0.27 | 28.22 | 0.0917 | -0.1954 | -0.0014 |
| 80 | SLE RA 8 | -4.14 | -0.31 | 28.37 | 0.1583 | -0.1757 | -0.0017 |
| 80 | SLE RA 9 | -4.58 | -0.26 | 28.1 | 0.0905 | -0.1945 | -0.0014 |
| 80 | SLE RA 10 | -4.99 | -0.25 | 30.21 | 0.0543 | -0.2119 | -0.0013 |
| 80 | SLE RA 11 | -4.39 | -0.33 | 30.95 | 0.1703 | -0.1862 | -0.0018 |
| 80 | SLE RA 12 | -4.82 | -0.29 | 30.68 | 0.1026 | -0.2049 | -0.0015 |
| 80 | SLE RA 13 | -5.09 | -0.26 | 30.38 | 0.0561 | -0.2166 | -0.0013 |
| 80 | SLE RA 14 | -4.49 | -0.34 | 31.12 | 0.1722 | -0.1908 | -0.0018 |
| 80 | SLE RA 15 | -4.93 | -0.29 | 30.84 | 0.1044 | -0.2096 | -0.0015 |
| 80 | SLE RA 16 | -4.47 | -0.33 | 31 | 0.171 | -0.1899 | -0.0018 |
| 80 | SLE RA 17 | -4.91 | -0.29 | 30.72 | 0.1032 | -0.2087 | -0.0015 |
| 80 | SLE RA 18 | -4.4 | -0.34 | 31.8 | 0.1727 | -0.1867 | -0.0018 |
| 80 | SLE RA 19 | -4.84 | -0.29 | 31.52 | 0.1049 | -0.2055 | -0.0015 |
| 80 | SLE RA 20 | -4.51 | -0.34 | 31.96 | 0.1746 | -0.1913 | -0.0018 |
| 80 | SLE RA 21 | -4.94 | -0.3 | 31.69 | 0.1068 | -0.2101 | -0.0016 |
| 80 | SLE FR 1 | -3.94 | -0.3 | 28.05 | 0.1546 | -0.1663 | -0.0016 |
| 80 | SLE FR 2 | -4.08 | -0.29 | 27.96 | 0.132 | -0.1726 | -0.0015 |
| 80 | SLE FR 3 | -3.98 | -0.3 | 28.11 | 0.1553 | -0.1682 | -0.0016 |
| 80 | SLE FR 4 | -4.22 | -0.3 | 29.08 | 0.1374 | -0.1787 | -0.0016 |
| 80 | SLE FR 5 | -4.12 | -0.31 | 29.24 | 0.1608 | -0.1743 | -0.0017 |
| 80 | SLE FR 6 | -4.17 | -0.32 | 29.92 | 0.1637 | -0.1765 | -0.0017 |
| 80 | SLE QP 1 | -3.94 | -0.3 | 28.05 | 0.1546 | -0.1663 | -0.0016 |
| 80 | SLE QP 2 | -4.08 | -0.31 | 29.17 | 0.16 | -0.1724 | -0.0017 |
| 80 | SLD 1 | 4.4 | -0.33 | 28.17 | -0.0927 | 0.1941 | -0.0018 |
| 80 | SLD 2 | 4.4 | -0.33 | 28.17 | -0.0927 | 0.1941 | -0.0018 |
| 80 | SLD 3 | 5.7 | -0.04 | 25.32 | 0.1995 | 0.2479 | -0.0001 |
| 80 | SLD 4 | 5.7 | -0.04 | 25.32 | 0.1995 | 0.2479 | -0.0001 |
| 80 | SLD 5 | -3.52 | -0.76 | 33.2 | -0.3591 | -0.144 | -0.0044 |
| 80 | SLD 6 | -3.52 | -0.76 | 33.2 | -0.3591 | -0.144 | -0.0044 |
| 80 | SLD 7 | 0.84 | 0.21 | 23.69 | 0.6152 | 0.0352 | 0.0014 |
| 80 | SLD 8 | 0.84 | 0.21 | 23.69 | 0.6152 | 0.0352 | 0.0014 |
| 80 | SLD 9 | -8.99 | -0.83 | 34.66 | -0.2951 | -0.38 | -0.0048 |
| 80 | SLD 10 | -8.99 | -0.83 | 34.66 | -0.2951 | -0.38 | -0.0048 |
| 80 | SLD 11 | -4.63 | 0.13 | 25.14 | 0.6792 | -0.2009 | 0.001 |
| 80 | SLD 12 | -4.63 | 0.13 | 25.14 | 0.6792 | -0.2009 | 0.001 |
| 80 | SLD 13 | -13.85 | -0.58 | 33.03 | 0.1205 | -0.5927 | -0.0033 |
| 80 | SLD 14 | -13.85 | -0.58 | 33.03 | 0.1205 | -0.5927 | -0.0033 |
| 80 | SLD 15 | -12.55 | -0.29 | 30.17 | 0.4128 | -0.539 | -0.0015 |
| 80 | SLD 16 | -12.55 | -0.29 | 30.17 | 0.4128 | -0.539 | -0.0015 |
| 80 | SLV 1 | 15.42 | -0.37 | 26.93 | -0.4665 | 0.6715 | -0.0021 |
| 80 | SLV 2 | 15.42 | -0.37 | 26.93 | -0.4665 | 0.6715 | -0.0021 |
| 80 | SLV 3 | 18.51 | 0.35 | 20.15 | 0.2742 | 0.7981 | 0.0022 |
| 80 | SLV 4 | 18.51 | 0.35 | 20.15 | 0.2742 | 0.7981 | 0.0022 |
| 80 | SLV 5 | -2.9 | -1.43 | 38.77 | -1.1514 | -0.1113 | -0.0084 |
| 80 | SLV 6 | -2.9 | -1.43 | 38.77 | -1.1514 | -0.1113 | -0.0084 |
| 80 | SLV 7 | 7.37 | 0.98 | 16.19 | 1.3177 | 0.3108 | 0.006 |
| 80 | SLV 8 | 7.37 | 0.98 | 16.19 | 1.3177 | 0.3108 | 0.006 |
| 80 | SLV 9 | -15.52 | -1.61 | 42.15 | -0.9976 | -0.6557 | -0.0094 |
| 80 | SLV 10 | -15.52 | -1.61 | 42.15 | -0.9976 | -0.6557 | -0.0094 |
| 80 | SLV 11 | -5.25 | 0.8 | 19.57 | 1.4714 | -0.2335 | 0.005 |
| 80 | SLV 12 | -5.25 | 0.8 | 19.57 | 1.4714 | -0.2335 | 0.005 |
| 80 | SLV 13 | -26.66 | -0.98 | 38.19 | 0.0458 | -1.143 | -0.0056 |
| 80 | SLV 14 | -26.66 | -0.98 | 38.19 | 0.0458 | -1.143 | -0.0056 |
| 80 | SLV 15 | -23.57 | -0.25 | 31.42 | 0.7866 | -1.0163 | -0.0012 |
| 80 | SLV 16 | -23.57 | -0.25 | 31.42 | 0.7866 | -1.0163 | -0.0012 |
| 81 | SLU 1 | -3.67 | -0.26 | 25.14 | 0.1359 | -0.1413 | -0.0017 |
| 81 | SLU 2 | -4.3 | -0.11 | 24.57 | -0.0632 | -0.1694 | -0.0007 |
| 81 | SLU 3 | -3.86 | -0.26 | 25.54 | 0.1402 | -0.1491 | -0.0018 |
| 81 | SLU 4 | -4.24 | -0.18 | 25.2 | 0.0207 | -0.166 | -0.0012 |
| 81 | SLU 5 | -4.46 | -0.12 | 24.82 | -0.0606 | -0.1759 | -0.0007 |
| 81 | SLU 6 | -4.02 | -0.27 | 25.78 | 0.1428 | -0.1556 | -0.0018 |
| 81 | SLU 7 | -4.39 | -0.18 | 25.44 | 0.0233 | -0.1725 | -0.0012 |
| 81 | SLU 8 | -3.98 | -0.27 | 25.63 | 0.1411 | -0.1543 | -0.0018 |
| 81 | SLU 9 | -4.36 | -0.18 | 25.29 | 0.0216 | -0.1712 | -0.0012 |
| 81 | SLU 10 | -4.79 | -0.15 | 28.19 | -0.0469 | -0.187 | -0.0009 |
| 81 | SLU 11 | -4.36 | -0.3 | 29.16 | 0.1566 | -0.1667 | -0.002 |
| 81 | SLU 12 | -4.73 | -0.21 | 28.81 | 0.0371 | -0.1836 | -0.0014 |
| 81 | SLU 13 | -4.95 | -0.15 | 28.43 | -0.0443 | -0.1935 | -0.0009 |
| 81 | SLU 14 | -4.51 | -0.3 | 29.4 | 0.1592 | -0.1732 | -0.002 |
| 81 | SLU 15 | -4.89 | -0.22 | 29.06 | 0.0397 | -0.1901 | -0.0014 |
| 81 | SLU 16 | -4.48 | -0.3 | 29.24 | 0.1575 | -0.1719 | -0.002 |
| 81 | SLU 17 | -4.85 | -0.21 | 28.9 | 0.038 | -0.1888 | -0.0014 |
| 81 | SLU 18 | -4.38 | -0.3 | 30.31 | 0.1593 | -0.1664 | -0.002 |
| 81 | SLU 19 | -4.75 | -0.22 | 29.97 | 0.0398 | -0.1833 | -0.0014 |

| Nodo | Cont. | Reazione a traslazione | | | Reazione a rotazione | | |
|---|---|---|---|---|---|---|---|
| Ind. | N.br. | x | y | z | x | y | z |
| 81 | SLU 20 | -4.53 | -0.31 | 30.55 | 0.1619 | -0.1729 | -0.0021 |
| 81 | SLU 21 | -4.91 | -0.22 | 30.21 | 0.0424 | -0.1898 | -0.0014 |
| 81 | SLU 22 | -4.2 | -0.29 | 28.15 | 0.1518 | -0.1614 | -0.0019 |
| 81 | SLU 23 | -4.83 | -0.15 | 27.58 | -0.0473 | -0.1895 | -0.0009 |
| 81 | SLU 24 | -4.39 | -0.3 | 28.55 | 0.1561 | -0.1692 | -0.002 |
| 81 | SLU 25 | -4.76 | -0.21 | 28.2 | 0.0366 | -0.1861 | -0.0014 |
| 81 | SLU 26 | -4.98 | -0.15 | 27.82 | -0.0447 | -0.196 | -0.0009 |
| 81 | SLU 27 | -4.54 | -0.3 | 28.79 | 0.1587 | -0.1757 | -0.002 |
| 81 | SLU 28 | -4.92 | -0.22 | 28.45 | 0.0392 | -0.1926 | -0.0014 |
| 81 | SLU 29 | -4.51 | -0.3 | 28.63 | 0.157 | -0.1744 | -0.002 |
| 81 | SLU 30 | -4.89 | -0.21 | 28.29 | 0.0375 | -0.1913 | -0.0014 |
| 81 | SLU 31 | -5.32 | -0.18 | 31.2 | -0.031 | -0.2072 | -0.0011 |
| 81 | SLU 32 | -4.88 | -0.33 | 32.16 | 0.1725 | -0.1868 | -0.0022 |
| 81 | SLU 33 | -5.26 | -0.24 | 31.82 | 0.053 | -0.2037 | -0.0016 |
| 81 | SLU 34 | -5.48 | -0.18 | 31.44 | -0.0284 | -0.2137 | -0.0012 |
| 81 | SLU 35 | -5.04 | -0.33 | 32.41 | 0.1751 | -0.1933 | -0.0022 |
| 81 | SLU 36 | -5.41 | -0.25 | 32.06 | 0.0556 | -0.2102 | -0.0016 |
| 81 | SLU 37 | -5 | -0.33 | 32.25 | 0.1734 | -0.192 | -0.0022 |
| 81 | SLU 38 | -5.38 | -0.25 | 31.91 | 0.0539 | -0.2089 | -0.0016 |
| 81 | SLU 39 | -4.9 | -0.34 | 33.32 | 0.1752 | -0.1866 | -0.0022 |
| 81 | SLU 40 | -5.28 | -0.25 | 32.97 | 0.0557 | -0.2035 | -0.0016 |
| 81 | SLU 41 | -5.06 | -0.34 | 33.56 | 0.1778 | -0.1931 | -0.0023 |
| 81 | SLU 42 | -5.44 | -0.25 | 33.22 | 0.0583 | -0.21 | -0.0017 |
| 81 | SLU 43 | -4.6 | -0.32 | 31.65 | 0.1712 | -0.1767 | -0.0022 |
| 81 | SLU 44 | -5.22 | -0.18 | 31.08 | -0.0279 | -0.2049 | -0.0011 |
| 81 | SLU 45 | -4.78 | -0.33 | 32.05 | 0.1756 | -0.1846 | -0.0022 |
| 81 | SLU 46 | -5.16 | -0.24 | 31.71 | 0.0561 | -0.2015 | -0.0016 |
| 81 | SLU 47 | -5.38 | -0.18 | 31.33 | -0.0253 | -0.2114 | -0.0012 |
| 81 | SLU 48 | -4.94 | -0.34 | 32.29 | 0.1782 | -0.1911 | -0.0022 |
| 81 | SLU 49 | -5.32 | -0.25 | 31.95 | 0.0587 | -0.208 | -0.0016 |
| 81 | SLU 50 | -4.91 | -0.33 | 32.14 | 0.1765 | -0.1897 | -0.0022 |
| 81 | SLU 51 | -5.28 | -0.25 | 31.8 | 0.057 | -0.2066 | -0.0016 |
| 81 | SLU 52 | -5.72 | -0.21 | 34.7 | -0.0115 | -0.2225 | -0.0014 |
| 81 | SLU 53 | -5.28 | -0.36 | 35.67 | 0.1919 | -0.2022 | -0.0024 |
| 81 | SLU 54 | -5.65 | -0.28 | 35.33 | 0.0724 | -0.2191 | -0.0018 |
| 81 | SLU 55 | -5.87 | -0.22 | 34.94 | -0.0089 | -0.229 | -0.0014 |
| 81 | SLU 56 | -5.43 | -0.37 | 35.91 | 0.1945 | -0.2087 | -0.0025 |
| 81 | SLU 57 | -5.81 | -0.28 | 35.57 | 0.075 | -0.2256 | -0.0018 |
| 81 | SLU 58 | -5.4 | -0.37 | 35.75 | 0.1928 | -0.2074 | -0.0024 |
| 81 | SLU 59 | -5.78 | -0.28 | 35.41 | 0.0733 | -0.2243 | -0.0018 |
| 81 | SLU 60 | -5.3 | -0.37 | 36.82 | 0.1946 | -0.2019 | -0.0025 |
| 81 | SLU 61 | -5.68 | -0.28 | 36.48 | 0.0751 | -0.2188 | -0.0019 |
| 81 | SLU 62 | -5.46 | -0.38 | 37.06 | 0.1972 | -0.2084 | -0.0025 |
| 81 | SLU 63 | -5.83 | -0.29 | 36.72 | 0.0778 | -0.2253 | -0.0019 |
| 81 | SLU 64 | -5.12 | -0.35 | 34.66 | 0.1871 | -0.1969 | -0.0024 |
| 81 | SLU 65 | -5.75 | -0.21 | 34.09 | -0.012 | -0.225 | -0.0013 |
| 81 | SLU 66 | -5.31 | -0.36 | 35.06 | 0.1914 | -0.2047 | -0.0024 |
| 81 | SLU 67 | -5.69 | -0.28 | 34.72 | 0.072 | -0.2216 | -0.0018 |
| 81 | SLU 68 | -5.9 | -0.22 | 34.33 | -0.0094 | -0.2315 | -0.0014 |
| 81 | SLU 69 | -5.47 | -0.37 | 35.3 | 0.1941 | -0.2112 | -0.0025 |
| 81 | SLU 70 | -5.84 | -0.28 | 34.96 | 0.0746 | -0.2281 | -0.0018 |
| 81 | SLU 71 | -5.43 | -0.36 | 35.15 | 0.1924 | -0.2099 | -0.0024 |
| 81 | SLU 72 | -5.81 | -0.28 | 34.8 | 0.0729 | -0.2268 | -0.0018 |
| 81 | SLU 73 | -6.24 | -0.24 | 37.71 | 0.0044 | -0.2426 | -0.0016 |
| 81 | SLU 74 | -5.8 | -0.4 | 38.67 | 0.2078 | -0.2223 | -0.0026 |
| 81 | SLU 75 | -6.18 | -0.31 | 38.33 | 0.0883 | -0.2392 | -0.002 |
| 81 | SLU 76 | -6.4 | -0.25 | 37.95 | 0.007 | -0.2491 | -0.0016 |
| 81 | SLU 77 | -5.96 | -0.4 | 38.92 | 0.2104 | -0.2288 | -0.0027 |
| 81 | SLU 78 | -6.34 | -0.31 | 38.58 | 0.0909 | -0.2457 | -0.0021 |
| 81 | SLU 79 | -5.93 | -0.4 | 38.76 | 0.2087 | -0.2275 | -0.0027 |
| 81 | SLU 80 | -6.3 | -0.31 | 38.42 | 0.0892 | -0.2444 | -0.002 |
| 81 | SLU 81 | -5.83 | -0.4 | 39.83 | 0.2105 | -0.222 | -0.0027 |
| 81 | SLU 82 | -6.2 | -0.32 | 39.49 | 0.091 | -0.2389 | -0.0021 |
| 81 | SLU 83 | -5.98 | -0.41 | 40.07 | 0.2131 | -0.2285 | -0.0027 |
| 81 | SLU 84 | -6.36 | -0.32 | 39.73 | 0.0936 | -0.2454 | -0.0021 |
| 81 | SLE RA 1 | -3.82 | -0.27 | 26 | 0.1405 | -0.147 | -0.0018 |
| 81 | SLE RA 2 | -4.24 | -0.17 | 25.62 | 0.0077 | -0.1658 | -0.0011 |
| 81 | SLE RA 3 | -3.95 | -0.27 | 26.27 | 0.1433 | -0.1522 | -0.0018 |
| 81 | SLE RA 4 | -4.2 | -0.21 | 26.04 | 0.0637 | -0.1635 | -0.0014 |
| 81 | SLE RA 5 | -4.35 | -0.17 | 25.78 | 0.0094 | -0.1701 | -0.0011 |
| 81 | SLE RA 6 | -4.05 | -0.27 | 26.43 | 0.1451 | -0.1566 | -0.0018 |
| 81 | SLE RA 7 | -4.3 | -0.22 | 26.2 | 0.0654 | -0.1678 | -0.0014 |
| 81 | SLE RA 8 | -4.03 | -0.27 | 26.32 | 0.1439 | -0.1557 | -0.0018 |
| 81 | SLE RA 9 | -4.28 | -0.21 | 26.1 | 0.0643 | -0.1669 | -0.0014 |
| 81 | SLE RA 10 | -4.57 | -0.19 | 28.03 | 0.0186 | -0.1775 | -0.0012 |
| 81 | SLE RA 11 | -4.28 | -0.29 | 28.68 | 0.1542 | -0.164 | -0.002 |
| 81 | SLE RA 12 | -4.53 | -0.24 | 28.45 | 0.0746 | -0.1752 | -0.0016 |
| 81 | SLE RA 13 | -4.67 | -0.2 | 28.19 | 0.0203 | -0.1819 | -0.0013 |
| 81 | SLE RA 14 | -4.38 | -0.3 | 28.84 | 0.156 | -0.1683 | -0.002 |
| 81 | SLE RA 15 | -4.63 | -0.24 | 28.61 | 0.0763 | -0.1796 | -0.0016 |
| 81 | SLE RA 16 | -4.36 | -0.29 | 28.74 | 0.1549 | -0.1674 | -0.002 |
| 81 | SLE RA 17 | -4.61 | -0.24 | 28.51 | 0.0752 | -0.1787 | -0.0016 |
| 81 | SLE RA 18 | -4.29 | -0.3 | 29.45 | 0.1561 | -0.1638 | -0.002 |
| 81 | SLE RA 19 | -4.54 | -0.24 | 29.22 | 0.0764 | -0.1751 | -0.0016 |
| 81 | SLE RA 20 | -4.4 | -0.3 | 29.61 | 0.1578 | -0.1681 | -0.002 |
| 81 | SLE RA 21 | -4.65 | -0.24 | 29.38 | 0.0781 | -0.1794 | -0.0016 |
| 81 | SLE FR 1 | -3.82 | -0.27 | 26 | 0.1405 | -0.147 | -0.0018 |
| 81 | SLE FR 2 | -3.91 | -0.25 | 25.92 | 0.1139 | -0.1508 | -0.0016 |

| Nodo | Cont. | Reazione a traslazione | | | Reazione a rotazione | | |
|---|---|---|---|---|---|---|---|
| Ind. | N.br. | x | y | z | x | y | z |
| 81 | SLE FR 3 | -3.87 | -0.27 | 26.07 | 0.1412 | -0.1487 | -0.0018 |
| 81 | SLE FR 4 | -4.05 | -0.26 | 26.96 | 0.1186 | -0.1558 | -0.0017 |
| 81 | SLE FR 5 | -4.01 | -0.28 | 27.1 | 0.1458 | -0.1538 | -0.0019 |
| 81 | SLE FR 6 | -4.06 | -0.28 | 27.72 | 0.1483 | -0.1554 | -0.0019 |
| 81 | SLE QP 1 | -3.82 | -0.27 | 26 | 0.1405 | -0.147 | -0.0018 |
| 81 | SLE QP 2 | -3.96 | -0.28 | 27.03 | 0.1451 | -0.152 | -0.0018 |
| 81 | SLD 1 | 4.78 | 0.02 | 25.62 | -0.138 | 0.2309 | 0.0003 |
| 81 | SLD 2 | 4.78 | 0.02 | 25.62 | -0.138 | 0.2309 | 0.0003 |
| 81 | SLD 3 | 6.09 | -0.3 | 22.73 | 0.1949 | 0.2868 | -0.0021 |
| 81 | SLD 4 | 6.09 | -0.3 | 22.73 | 0.1949 | 0.2868 | -0.0021 |
| 81 | SLD 5 | -3.33 | 0.31 | 30.99 | -0.4447 | -0.1219 | 0.0023 |
| 81 | SLD 6 | -3.33 | 0.31 | 30.99 | -0.4447 | -0.1219 | 0.0023 |
| 81 | SLD 7 | 1.04 | -0.78 | 21.36 | 0.665 | 0.0644 | -0.0054 |
| 81 | SLD 8 | 1.04 | -0.78 | 21.36 | 0.665 | 0.0644 | -0.0054 |
| 81 | SLD 9 | -8.97 | 0.23 | 32.71 | -0.3747 | -0.3684 | 0.0018 |
| 81 | SLD 10 | -8.97 | 0.23 | 32.71 | -0.3747 | -0.3684 | 0.0018 |
| 81 | SLD 11 | -4.6 | -0.86 | 23.08 | 0.735 | -0.1822 | -0.006 |
| 81 | SLD 12 | -4.6 | -0.86 | 23.08 | 0.735 | -0.1822 | -0.006 |
| 81 | SLD 13 | -14.02 | -0.25 | 31.34 | 0.0954 | -0.5909 | -0.0016 |
| 81 | SLD 14 | -14.02 | -0.25 | 31.34 | 0.0954 | -0.5909 | -0.0016 |
| 81 | SLD 15 | -12.71 | -0.58 | 28.45 | 0.4283 | -0.535 | -0.0039 |
| 81 | SLD 16 | -12.71 | -0.58 | 28.45 | 0.4283 | -0.535 | -0.0039 |
| 81 | SLV 1 | 16.16 | 0.46 | 23.9 | -0.5583 | 0.7297 | 0.0033 |
| 81 | SLV 2 | 16.16 | 0.46 | 23.9 | -0.5583 | 0.7297 | 0.0033 |
| 81 | SLV 3 | 19.25 | -0.36 | 16.9 | 0.2864 | 0.8614 | -0.0026 |
| 81 | SLV 4 | 19.25 | -0.36 | 16.9 | 0.2864 | 0.8614 | -0.0026 |
| 81 | SLV 5 | -2.62 | 1.2 | 36.7 | -1.347 | -0.0872 | 0.0086 |
| 81 | SLV 6 | -2.62 | 1.2 | 36.7 | -1.347 | -0.0872 | 0.0086 |
| 81 | SLV 7 | 7.69 | -1.55 | 13.39 | 1.4686 | 0.3517 | -0.0109 |
| 81 | SLV 8 | 7.69 | -1.55 | 13.39 | 1.4686 | 0.3517 | -0.0109 |
| 81 | SLV 9 | -15.62 | 1 | 40.68 | -1.1784 | -0.6558 | 0.0072 |
| 81 | SLV 10 | -15.62 | 1 | 40.68 | -1.1784 | -0.6558 | 0.0072 |
| 81 | SLV 11 | -5.31 | -1.75 | 17.37 | 1.6373 | -0.2168 | -0.0122 |
| 81 | SLV 12 | -5.31 | -1.75 | 17.37 | 1.6373 | -0.2168 | -0.0122 |
| 81 | SLV 13 | -27.18 | -0.19 | 37.17 | 0.0038 | -1.1655 | -0.0011 |
| 81 | SLV 14 | -27.18 | -0.19 | 37.17 | 0.0038 | -1.1655 | -0.0011 |
| 81 | SLV 15 | -24.09 | -1.01 | 30.17 | 0.8485 | -1.0338 | -0.007 |
| 81 | SLV 16 | -24.09 | -1.01 | 30.17 | 0.8485 | -1.0338 | -0.007 |
| 82 | SLU 1 | -3.54 | -0.21 | 23.57 | 0.1168 | -0.1535 | -0.0017 |
| 82 | SLU 2 | -3.73 | -0.05 | 23.3 | -0.1011 | -0.1636 | -0.0004 |
| 82 | SLU 3 | -3.72 | -0.22 | 23.95 | 0.1207 | -0.1615 | -0.0017 |
| 82 | SLU 4 | -3.84 | -0.12 | 23.79 | -0.0101 | -0.1675 | -0.001 |
| 82 | SLU 5 | -3.88 | -0.05 | 23.54 | -0.0987 | -0.1704 | -0.0004 |
| 82 | SLU 6 | -3.88 | -0.22 | 24.19 | 0.1231 | -0.1683 | -0.0018 |
| 82 | SLU 7 | -3.99 | -0.12 | 24.03 | -0.0077 | -0.1744 | -0.001 |
| 82 | SLU 8 | -3.85 | -0.22 | 24.05 | 0.1216 | -0.1672 | -0.0018 |
| 82 | SLU 9 | -3.96 | -0.12 | 23.89 | -0.0092 | -0.1732 | -0.001 |
| 82 | SLU 10 | -4.26 | -0.07 | 26.63 | -0.0882 | -0.1873 | -0.0006 |
| 82 | SLU 11 | -4.25 | -0.24 | 27.29 | 0.1336 | -0.1852 | -0.0019 |
| 82 | SLU 12 | -4.37 | -0.15 | 27.12 | 0.0029 | -0.1912 | -0.0012 |
| 82 | SLU 13 | -4.41 | -0.08 | 26.87 | -0.0858 | -0.1941 | -0.0006 |
| 82 | SLU 14 | -4.41 | -0.25 | 27.53 | 0.136 | -0.192 | -0.002 |
| 82 | SLU 15 | -4.52 | -0.15 | 27.36 | 0.0053 | -0.1981 | -0.0012 |
| 82 | SLU 16 | -4.38 | -0.25 | 27.39 | 0.1345 | -0.1909 | -0.002 |
| 82 | SLU 17 | -4.49 | -0.15 | 27.22 | 0.0038 | -0.1969 | -0.0012 |
| 82 | SLU 18 | -4.3 | -0.25 | 28.34 | 0.1353 | -0.1874 | -0.002 |
| 82 | SLU 19 | -4.41 | -0.15 | 28.17 | 0.0045 | -0.1934 | -0.0012 |
| 82 | SLU 20 | -4.45 | -0.25 | 28.58 | 0.1377 | -0.1942 | -0.002 |
| 82 | SLU 21 | -4.57 | -0.16 | 28.41 | 0.0069 | -0.2003 | -0.0012 |
| 82 | SLU 22 | -4.09 | -0.24 | 26.38 | 0.1299 | -0.1777 | -0.0019 |
| 82 | SLU 23 | -4.28 | -0.07 | 26.1 | -0.088 | -0.1878 | -0.0006 |
| 82 | SLU 24 | -4.27 | -0.24 | 26.75 | 0.1338 | -0.1857 | -0.0019 |
| 82 | SLU 25 | -4.39 | -0.15 | 26.59 | 0.0031 | -0.1917 | -0.0012 |
| 82 | SLU 26 | -4.43 | -0.08 | 26.34 | -0.0856 | -0.1946 | -0.0006 |
| 82 | SLU 27 | -4.43 | -0.25 | 26.99 | 0.1362 | -0.1925 | -0.002 |
| 82 | SLU 28 | -4.54 | -0.15 | 26.83 | 0.0055 | -0.1986 | -0.0012 |
| 82 | SLU 29 | -4.4 | -0.25 | 26.85 | 0.1347 | -0.1914 | -0.002 |
| 82 | SLU 30 | -4.51 | -0.15 | 26.69 | 0.004 | -0.1974 | -0.0012 |
| 82 | SLU 31 | -4.81 | -0.1 | 29.43 | -0.075 | -0.2115 | -0.0008 |
| 82 | SLU 32 | -4.8 | -0.27 | 30.09 | 0.1468 | -0.2094 | -0.0021 |
| 82 | SLU 33 | -4.92 | -0.17 | 29.92 | 0.0161 | -0.2154 | -0.0014 |
| 82 | SLU 34 | -4.96 | -0.1 | 29.67 | -0.0726 | -0.2183 | -0.0008 |
| 82 | SLU 35 | -4.96 | -0.27 | 30.33 | 0.1492 | -0.2162 | -0.0022 |
| 82 | SLU 36 | -5.07 | -0.18 | 30.16 | 0.0185 | -0.2223 | -0.0014 |
| 82 | SLU 37 | -4.93 | -0.27 | 30.19 | 0.1477 | -0.2151 | -0.0022 |
| 82 | SLU 38 | -5.04 | -0.17 | 30.02 | 0.0169 | -0.2211 | -0.0014 |
| 82 | SLU 39 | -4.85 | -0.27 | 31.14 | 0.1484 | -0.2116 | -0.0022 |
| 82 | SLU 40 | -4.96 | -0.18 | 30.97 | 0.0177 | -0.2176 | -0.0014 |
| 82 | SLU 41 | -5 | -0.28 | 31.38 | 0.1508 | -0.2184 | -0.0022 |
| 82 | SLU 42 | -5.12 | -0.18 | 31.21 | 0.0201 | -0.2245 | -0.0014 |
| 82 | SLU 43 | -4.41 | -0.27 | 29.69 | 0.1473 | -0.1912 | -0.0021 |
| 82 | SLU 44 | -4.6 | -0.1 | 29.41 | -0.0706 | -0.2014 | -0.0008 |
| 82 | SLU 45 | -4.6 | -0.27 | 30.06 | 0.1512 | -0.1992 | -0.0022 |
| 82 | SLU 46 | -4.71 | -0.18 | 29.9 | 0.0204 | -0.2053 | -0.0014 |
| 82 | SLU 47 | -4.76 | -0.11 | 29.65 | -0.0682 | -0.2082 | -0.0009 |
| 82 | SLU 48 | -4.75 | -0.28 | 30.3 | 0.1536 | -0.2061 | -0.0022 |
| 82 | SLU 49 | -4.86 | -0.18 | 30.14 | 0.0228 | -0.2121 | -0.0014 |
| 82 | SLU 50 | -4.72 | -0.27 | 30.17 | 0.1521 | -0.2049 | -0.0022 |

| Nodo | Cont. | Reazione a traslazione | | | Reazione a rotazione | | |
|---|---|---|---|---|---|---|---|
| Ind. | N.br. | x | y | z | x | y | z |
| 82 | SLU 51 | -4.84 | -0.18 | 30 | 0.0213 | -0.211 | -0.0014 |
| 82 | SLU 52 | -5.13 | -0.13 | 32.74 | -0.0577 | -0.2251 | -0.001 |
| 82 | SLU 53 | -5.13 | -0.3 | 33.4 | 0.1641 | -0.2229 | -0.0024 |
| 82 | SLU 54 | -5.24 | -0.2 | 33.23 | 0.0334 | -0.229 | -0.0016 |
| 82 | SLU 55 | -5.29 | -0.13 | 32.98 | -0.0553 | -0.2319 | -0.0011 |
| 82 | SLU 56 | -5.28 | -0.3 | 33.64 | 0.1665 | -0.2298 | -0.0024 |
| 82 | SLU 57 | -5.4 | -0.21 | 33.47 | 0.0358 | -0.2358 | -0.0016 |
| 82 | SLU 58 | -5.25 | -0.3 | 33.5 | 0.165 | -0.2286 | -0.0024 |
| 82 | SLU 59 | -5.37 | -0.2 | 33.33 | 0.0343 | -0.2347 | -0.0016 |
| 82 | SLU 60 | -5.17 | -0.3 | 34.45 | 0.1658 | -0.2251 | -0.0024 |
| 82 | SLU 61 | -5.29 | -0.21 | 34.28 | 0.0351 | -0.2312 | -0.0016 |
| 82 | SLU 62 | -5.33 | -0.31 | 34.69 | 0.1682 | -0.2319 | -0.0024 |
| 82 | SLU 63 | -5.44 | -0.21 | 34.52 | 0.0375 | -0.238 | -0.0017 |
| 82 | SLU 64 | -4.96 | -0.29 | 32.49 | 0.1604 | -0.2154 | -0.0023 |
| 82 | SLU 65 | -5.15 | -0.13 | 32.21 | -0.0575 | -0.2256 | -0.001 |
| 82 | SLU 66 | -5.15 | -0.3 | 32.87 | 0.1643 | -0.2234 | -0.0024 |
| 82 | SLU 67 | -5.26 | -0.2 | 32.7 | 0.0336 | -0.2295 | -0.0016 |
| 82 | SLU 68 | -5.31 | -0.13 | 32.45 | -0.0551 | -0.2324 | -0.0011 |
| 82 | SLU 69 | -5.3 | -0.3 | 33.11 | 0.1667 | -0.2302 | -0.0024 |
| 82 | SLU 70 | -5.41 | -0.21 | 32.94 | 0.036 | -0.2363 | -0.0016 |
| 82 | SLU 71 | -5.27 | -0.3 | 32.97 | 0.1652 | -0.2291 | -0.0024 |
| 82 | SLU 72 | -5.39 | -0.2 | 32.8 | 0.0345 | -0.2352 | -0.0016 |
| 82 | SLU 73 | -5.68 | -0.16 | 35.54 | -0.0445 | -0.2493 | -0.0012 |
| 82 | SLU 74 | -5.68 | -0.33 | 36.2 | 0.1773 | -0.2471 | -0.0026 |
| 82 | SLU 75 | -5.79 | -0.23 | 36.03 | 0.0466 | -0.2532 | -0.0018 |
| 82 | SLU 76 | -5.84 | -0.16 | 35.78 | -0.0421 | -0.2561 | -0.0013 |
| 82 | SLU 77 | -5.83 | -0.33 | 36.44 | 0.1797 | -0.254 | -0.0026 |
| 82 | SLU 78 | -5.95 | -0.23 | 36.27 | 0.049 | -0.26 | -0.0018 |
| 82 | SLU 79 | -5.8 | -0.33 | 36.3 | 0.1782 | -0.2528 | -0.0026 |
| 82 | SLU 80 | -5.92 | -0.23 | 36.13 | 0.0475 | -0.2589 | -0.0018 |
| 82 | SLU 81 | -5.72 | -0.33 | 37.25 | 0.179 | -0.2493 | -0.0026 |
| 82 | SLU 82 | -5.84 | -0.23 | 37.08 | 0.0482 | -0.2554 | -0.0018 |
| 82 | SLU 83 | -5.88 | -0.33 | 37.49 | 0.1814 | -0.2561 | -0.0027 |
| 82 | SLU 84 | -5.99 | -0.24 | 37.32 | 0.0506 | -0.2622 | -0.0019 |
| 82 | SLE RA 1 | -3.7 | -0.22 | 24.37 | 0.1205 | -0.1604 | -0.0017 |
| 82 | SLE RA 2 | -3.82 | -0.11 | 24.19 | -0.0248 | -0.1671 | -0.0009 |
| 82 | SLE RA 3 | -3.82 | -0.22 | 24.63 | 0.1231 | -0.1657 | -0.0018 |
| 82 | SLE RA 4 | -3.89 | -0.16 | 24.51 | 0.036 | -0.1698 | -0.0013 |
| 82 | SLE RA 5 | -3.93 | -0.11 | 24.35 | -0.0232 | -0.1717 | -0.0009 |
| 82 | SLE RA 6 | -3.92 | -0.23 | 24.79 | 0.1247 | -0.1703 | -0.0018 |
| 82 | SLE RA 7 | -4 | -0.16 | 24.67 | 0.0376 | -0.1743 | -0.0013 |
| 82 | SLE RA 8 | -3.9 | -0.22 | 24.69 | 0.1237 | -0.1695 | -0.0018 |
| 82 | SLE RA 9 | -3.98 | -0.16 | 24.58 | 0.0366 | -0.1736 | -0.0013 |
| 82 | SLE RA 10 | -4.18 | -0.13 | 26.41 | -0.0161 | -0.183 | -0.001 |
| 82 | SLE RA 11 | -4.17 | -0.24 | 26.85 | 0.1318 | -0.1815 | -0.0019 |
| 82 | SLE RA 12 | -4.25 | -0.18 | 26.74 | 0.0446 | -0.1856 | -0.0014 |
| 82 | SLE RA 13 | -4.28 | -0.13 | 26.57 | -0.0145 | -0.1875 | -0.001 |
| 82 | SLE RA 14 | -4.28 | -0.24 | 27.01 | 0.1334 | -0.1861 | -0.0019 |
| 82 | SLE RA 15 | -4.35 | -0.18 | 26.9 | 0.0462 | -0.1901 | -0.0014 |
| 82 | SLE RA 16 | -4.26 | -0.24 | 26.92 | 0.1324 | -0.1853 | -0.0019 |
| 82 | SLE RA 17 | -4.33 | -0.18 | 26.81 | 0.0452 | -0.1894 | -0.0014 |
| 82 | SLE RA 18 | -4.2 | -0.24 | 27.55 | 0.1329 | -0.183 | -0.0019 |
| 82 | SLE RA 19 | -4.28 | -0.18 | 27.44 | 0.0457 | -0.187 | -0.0014 |
| 82 | SLE RA 20 | -4.31 | -0.25 | 27.71 | 0.1345 | -0.1875 | -0.002 |
| 82 | SLE RA 21 | -4.38 | -0.18 | 27.6 | 0.0473 | -0.1916 | -0.0014 |
| 82 | SLE FR 1 | -3.7 | -0.22 | 24.37 | 0.1205 | -0.1604 | -0.0017 |
| 82 | SLE FR 2 | -3.72 | -0.2 | 24.34 | 0.0915 | -0.1618 | -0.0016 |
| 82 | SLE FR 3 | -3.74 | -0.22 | 24.44 | 0.1212 | -0.1622 | -0.0018 |
| 82 | SLE FR 4 | -3.87 | -0.21 | 25.29 | 0.0952 | -0.1685 | -0.0016 |
| 82 | SLE FR 5 | -3.89 | -0.23 | 25.39 | 0.1249 | -0.169 | -0.0018 |
| 82 | SLE FR 6 | -3.95 | -0.23 | 25.96 | 0.1267 | -0.1717 | -0.0018 |
| 82 | SLE QP 1 | -3.7 | -0.22 | 24.37 | 0.1205 | -0.1604 | -0.0017 |
| 82 | SLE QP 2 | -3.85 | -0.23 | 25.33 | 0.1242 | -0.1672 | -0.0018 |
| 82 | SLD 1 | 5.05 | 0.09 | 23.92 | -0.176 | 0.2133 | 0.0007 |
| 82 | SLD 2 | 5.05 | 0.09 | 23.92 | -0.176 | 0.2133 | 0.0007 |
| 82 | SLD 3 | 6.3 | -0.26 | 20.84 | 0.18 | 0.2636 | -0.0021 |
| 82 | SLD 4 | 6.3 | -0.26 | 20.84 | 0.18 | 0.2636 | -0.0021 |
| 82 | SLD 5 | -3.07 | 0.4 | 29.58 | -0.5057 | -0.1293 | 0.0032 |
| 82 | SLD 6 | -3.07 | 0.4 | 29.58 | -0.5057 | -0.1293 | 0.0032 |
| 82 | SLD 7 | 1.09 | -0.77 | 19.3 | 0.6808 | 0.0383 | -0.0061 |
| 82 | SLD 8 | 1.09 | -0.77 | 19.3 | 0.6808 | 0.0383 | -0.0061 |
| 82 | SLD 9 | -8.78 | 0.31 | 31.35 | -0.4324 | -0.3727 | 0.0025 |
| 82 | SLD 10 | -8.78 | 0.31 | 31.35 | -0.4324 | -0.3727 | 0.0025 |
| 82 | SLD 11 | -4.63 | -0.85 | 21.07 | 0.7541 | -0.2051 | -0.0068 |
| 82 | SLD 12 | -4.63 | -0.85 | 21.07 | 0.7541 | -0.2051 | -0.0068 |
| 82 | SLD 13 | -14 | -0.19 | 29.81 | 0.0685 | -0.598 | -0.0015 |
| 82 | SLD 14 | -14 | -0.19 | 29.81 | 0.0685 | -0.598 | -0.0015 |
| 82 | SLD 15 | -12.75 | -0.54 | 26.73 | 0.4244 | -0.5477 | -0.0043 |
| 82 | SLD 16 | -12.75 | -0.54 | 26.73 | 0.4244 | -0.5477 | -0.0043 |
| 82 | SLV 1 | 16.64 | 0.54 | 22.28 | -0.6225 | 0.709 | 0.0044 |
| 82 | SLV 2 | 16.64 | 0.54 | 22.28 | -0.6225 | 0.709 | 0.0044 |
| 82 | SLV 3 | 19.6 | -0.34 | 14.7 | 0.2812 | 0.8276 | -0.0026 |
| 82 | SLV 4 | 19.6 | -0.34 | 14.7 | 0.2812 | 0.8276 | -0.0026 |
| 82 | SLV 5 | -2.18 | 1.33 | 35.91 | -1.4704 | -0.0842 | 0.0107 |
| 82 | SLV 6 | -2.18 | 1.33 | 35.91 | -1.4704 | -0.0842 | 0.0107 |
| 82 | SLV 7 | 7.66 | -1.59 | 10.64 | 1.5419 | 0.3111 | -0.0127 |
| 82 | SLV 8 | 7.66 | -1.59 | 10.64 | 1.5419 | 0.3111 | -0.0127 |
| 82 | SLV 9 | -15.36 | 1.14 | 40.02 | -1.2934 | -0.6454 | 0.0091 |

| Nodo | Cont. | Reazione a traslazione | | | Reazione a rotazione | | |
|---|---|---|---|---|---|---|---|
| Ind. | N.br. | x | y | z | x | y | z |
| 82 | SLV 10 | -15.36 | 1.14 | 40.02 | -1.2934 | -0.6454 | 0.0091 |
| 82 | SLV 11 | -5.52 | -1.79 | 14.74 | 1.7188 | -0.2502 | -0.0143 |
| 82 | SLV 12 | -5.52 | -1.79 | 14.74 | 1.7188 | -0.2502 | -0.0143 |
| 82 | SLV 13 | -27.29 | -0.12 | 35.95 | -0.0327 | -1.1619 | -0.001 |
| 82 | SLV 14 | -27.29 | -0.12 | 35.95 | -0.0327 | -1.1619 | -0.001 |
| 82 | SLV 15 | -24.34 | -1 | 28.37 | 0.8709 | -1.0434 | -0.008 |
| 82 | SLV 16 | -24.34 | -1 | 28.37 | 0.8709 | -1.0434 | -0.008 |
| 83 | SLU 1 | -2.66 | -0.18 | 22.72 | 0.1011 | -0.1039 | -0.0016 |
| 83 | SLU 2 | -2.48 | -0.01 | 22.78 | -0.1231 | -0.0984 | -0.0002 |
| 83 | SLU 3 | -2.82 | -0.18 | 23.09 | 0.1047 | -0.1105 | -0.0017 |
| 83 | SLU 4 | -2.71 | -0.08 | 23.13 | -0.0298 | -0.1072 | -0.0008 |
| 83 | SLU 5 | -2.62 | -0.01 | 23.02 | -0.1208 | -0.1043 | -0.0002 |
| 83 | SLU 6 | -2.95 | -0.19 | 23.33 | 0.107 | -0.1163 | -0.0017 |
| 83 | SLU 7 | -2.84 | -0.08 | 23.37 | -0.0275 | -0.113 | -0.0008 |
| 83 | SLU 8 | -2.94 | -0.18 | 23.2 | 0.1056 | -0.1156 | -0.0017 |
| 83 | SLU 9 | -2.83 | -0.08 | 23.24 | -0.0289 | -0.1123 | -0.0008 |
| 83 | SLU 10 | -2.89 | -0.03 | 25.91 | -0.113 | -0.1133 | -0.0004 |
| 83 | SLU 11 | -3.23 | -0.2 | 26.23 | 0.1149 | -0.1254 | -0.0019 |
| 83 | SLU 12 | -3.12 | -0.1 | 26.26 | -0.0197 | -0.1221 | -0.001 |
| 83 | SLU 13 | -3.03 | -0.03 | 26.15 | -0.1107 | -0.1192 | -0.0004 |
| 83 | SLU 14 | -3.37 | -0.21 | 26.47 | 0.1171 | -0.1313 | -0.0019 |
| 83 | SLU 15 | -3.26 | -0.1 | 26.5 | -0.0174 | -0.128 | -0.001 |
| 83 | SLU 16 | -3.35 | -0.2 | 26.34 | 0.1158 | -0.1305 | -0.0019 |
| 83 | SLU 17 | -3.24 | -0.1 | 26.37 | -0.0187 | -0.1273 | -0.001 |
| 83 | SLU 18 | -3.26 | -0.21 | 27.19 | 0.1156 | -0.1252 | -0.0019 |
| 83 | SLU 19 | -3.15 | -0.1 | 27.23 | -0.0189 | -0.1219 | -0.001 |
| 83 | SLU 20 | -3.39 | -0.21 | 27.44 | 0.1179 | -0.1311 | -0.0019 |
| 83 | SLU 21 | -3.28 | -0.11 | 27.47 | -0.0167 | -0.1278 | -0.0011 |
| 83 | SLU 22 | -3.11 | -0.2 | 25.39 | 0.1121 | -0.1212 | -0.0018 |
| 83 | SLU 23 | -2.92 | -0.03 | 25.45 | -0.1121 | -0.1157 | -0.0004 |
| 83 | SLU 24 | -3.26 | -0.2 | 25.77 | 0.1158 | -0.1278 | -0.0019 |
| 83 | SLU 25 | -3.15 | -0.1 | 25.8 | -0.0188 | -0.1245 | -0.001 |
| 83 | SLU 26 | -3.06 | -0.03 | 25.69 | -0.1098 | -0.1216 | -0.0004 |
| 83 | SLU 27 | -3.4 | -0.21 | 26.01 | 0.118 | -0.1336 | -0.0019 |
| 83 | SLU 28 | -3.29 | -0.1 | 26.04 | -0.0165 | -0.1303 | -0.001 |
| 83 | SLU 29 | -3.38 | -0.21 | 25.88 | 0.1167 | -0.1329 | -0.0019 |
| 83 | SLU 30 | -3.27 | -0.1 | 25.91 | -0.0178 | -0.1296 | -0.001 |
| 83 | SLU 31 | -3.34 | -0.05 | 28.58 | -0.1019 | -0.1306 | -0.0005 |
| 83 | SLU 32 | -3.68 | -0.22 | 28.9 | 0.1259 | -0.1427 | -0.0021 |
| 83 | SLU 33 | -3.57 | -0.12 | 28.94 | -0.0086 | -0.1394 | -0.0012 |
| 83 | SLU 34 | -3.48 | -0.05 | 28.83 | -0.0997 | -0.1365 | -0.0006 |
| 83 | SLU 35 | -3.82 | -0.23 | 29.14 | 0.1282 | -0.1485 | -0.0021 |
| 83 | SLU 36 | -3.71 | -0.12 | 29.18 | -0.0063 | -0.1453 | -0.0012 |
| 83 | SLU 37 | -3.8 | -0.23 | 29.01 | 0.1268 | -0.1478 | -0.0021 |
| 83 | SLU 38 | -3.69 | -0.12 | 29.04 | -0.0077 | -0.1445 | -0.0012 |
| 83 | SLU 39 | -3.7 | -0.23 | 29.87 | 0.1266 | -0.1425 | -0.0021 |
| 83 | SLU 40 | -3.59 | -0.12 | 29.9 | -0.0079 | -0.1392 | -0.0012 |
| 83 | SLU 41 | -3.84 | -0.23 | 30.11 | 0.1289 | -0.1484 | -0.0021 |
| 83 | SLU 42 | -3.73 | -0.13 | 30.15 | -0.0056 | -0.1451 | -0.0013 |
| 83 | SLU 43 | -3.31 | -0.22 | 28.62 | 0.1276 | -0.1291 | -0.0021 |
| 83 | SLU 44 | -3.12 | -0.05 | 28.68 | -0.0966 | -0.1236 | -0.0006 |
| 83 | SLU 45 | -3.46 | -0.23 | 28.99 | 0.1313 | -0.1357 | -0.0021 |
| 83 | SLU 46 | -3.35 | -0.13 | 29.03 | -0.0033 | -0.1324 | -0.0012 |
| 83 | SLU 47 | -3.26 | -0.06 | 28.92 | -0.0943 | -0.1295 | -0.0006 |
| 83 | SLU 48 | -3.6 | -0.23 | 29.23 | 0.1335 | -0.1416 | -0.0022 |
| 83 | SLU 49 | -3.49 | -0.13 | 29.27 | -0.001 | -0.1383 | -0.0013 |
| 83 | SLU 50 | -3.58 | -0.23 | 29.1 | 0.1322 | -0.1409 | -0.0021 |
| 83 | SLU 51 | -3.47 | -0.13 | 29.14 | -0.0023 | -0.1376 | -0.0012 |
| 83 | SLU 52 | -3.54 | -0.07 | 31.81 | -0.0864 | -0.1386 | -0.0008 |
| 83 | SLU 53 | -3.88 | -0.25 | 32.12 | 0.1414 | -0.1506 | -0.0023 |
| 83 | SLU 54 | -3.77 | -0.15 | 32.16 | 0.0069 | -0.1473 | -0.0014 |
| 83 | SLU 55 | -3.68 | -0.08 | 32.05 | -0.0841 | -0.1444 | -0.0008 |
| 83 | SLU 56 | -4.02 | -0.25 | 32.37 | 0.1437 | -0.1565 | -0.0023 |
| 83 | SLU 57 | -3.91 | -0.15 | 32.4 | 0.0092 | -0.1532 | -0.0015 |
| 83 | SLU 58 | -4 | -0.25 | 32.23 | 0.1423 | -0.1558 | -0.0023 |
| 83 | SLU 59 | -3.89 | -0.15 | 32.27 | 0.0078 | -0.1525 | -0.0014 |
| 83 | SLU 60 | -3.9 | -0.25 | 33.09 | 0.1421 | -0.1504 | -0.0023 |
| 83 | SLU 61 | -3.79 | -0.15 | 33.13 | 0.0076 | -0.1472 | -0.0014 |
| 83 | SLU 62 | -4.04 | -0.26 | 33.34 | 0.1444 | -0.1563 | -0.0024 |
| 83 | SLU 63 | -3.93 | -0.15 | 33.37 | 0.0099 | -0.153 | -0.0015 |
| 83 | SLU 64 | -3.75 | -0.24 | 31.29 | 0.1387 | -0.1464 | -0.0023 |
| 83 | SLU 65 | -3.57 | -0.07 | 31.35 | -0.0855 | -0.1409 | -0.0008 |
| 83 | SLU 66 | -3.91 | -0.25 | 31.66 | 0.1423 | -0.153 | -0.0023 |
| 83 | SLU 67 | -3.8 | -0.15 | 31.7 | 0.0078 | -0.1497 | -0.0014 |
| 83 | SLU 68 | -3.71 | -0.08 | 31.59 | -0.0833 | -0.1468 | -0.0008 |
| 83 | SLU 69 | -4.05 | -0.25 | 31.91 | 0.1446 | -0.1589 | -0.0024 |
| 83 | SLU 70 | -3.94 | -0.15 | 31.94 | 0.0101 | -0.1556 | -0.0015 |
| 83 | SLU 71 | -4.03 | -0.25 | 31.77 | 0.1432 | -0.1581 | -0.0023 |
| 83 | SLU 72 | -3.92 | -0.15 | 31.81 | 0.0087 | -0.1548 | -0.0014 |
| 83 | SLU 73 | -3.99 | -0.09 | 34.48 | -0.0754 | -0.1558 | -0.001 |
| 83 | SLU 74 | -4.32 | -0.27 | 34.8 | 0.1524 | -0.1679 | -0.0025 |
| 83 | SLU 75 | -4.22 | -0.17 | 34.83 | 0.0179 | -0.1646 | -0.0016 |
| 83 | SLU 76 | -4.12 | -0.1 | 34.73 | -0.0731 | -0.1617 | -0.001 |
| 83 | SLU 77 | -4.46 | -0.27 | 35.04 | 0.1547 | -0.1738 | -0.0025 |
| 83 | SLU 78 | -4.35 | -0.17 | 35.08 | 0.0202 | -0.1705 | -0.0017 |
| 83 | SLU 79 | -4.45 | -0.27 | 34.91 | 0.1534 | -0.1731 | -0.0025 |
| 83 | SLU 80 | -4.34 | -0.17 | 34.94 | 0.0189 | -0.1698 | -0.0016 |
| 83 | SLU 81 | -4.35 | -0.27 | 35.77 | 0.1531 | -0.1677 | -0.0025 |

| Nodo | Cont. | Reazione a traslazione | | | Reazione a rotazione | | |
|---|---|---|---|---|---|---|---|
| Ind. | N.br. | x | y | z | x | y | z |
| 83 | SLU 82 | -4.24 | -0.17 | 35.8 | 0.0186 | -0.1644 | -0.0016 |
| 83 | SLU 83 | -4.49 | -0.28 | 36.01 | 0.1554 | -0.1736 | -0.0026 |
| 83 | SLU 84 | -4.38 | -0.17 | 36.04 | 0.0209 | -0.1703 | -0.0017 |
| 83 | SLE RA 1 | -2.79 | -0.18 | 23.48 | 0.1042 | -0.1088 | -0.0017 |
| 83 | SLE RA 2 | -2.67 | -0.07 | 23.52 | -0.0452 | -0.1052 | -0.0007 |
| 83 | SLE RA 3 | -2.89 | -0.19 | 23.73 | 0.1067 | -0.1132 | -0.0017 |
| 83 | SLE RA 4 | -2.82 | -0.12 | 23.76 | 0.017 | -0.111 | -0.0011 |
| 83 | SLE RA 5 | -2.76 | -0.07 | 23.68 | -0.0437 | -0.1091 | -0.0007 |
| 83 | SLE RA 6 | -2.98 | -0.19 | 23.89 | 0.1082 | -0.1171 | -0.0018 |
| 83 | SLE RA 7 | -2.91 | -0.12 | 23.92 | 0.0185 | -0.1149 | -0.0012 |
| 83 | SLE RA 8 | -2.97 | -0.19 | 23.8 | 0.1073 | -0.1166 | -0.0017 |
| 83 | SLE RA 9 | -2.9 | -0.12 | 23.83 | 0.0176 | -0.1144 | -0.0012 |
| 83 | SLE RA 10 | -2.94 | -0.08 | 25.61 | -0.0385 | -0.1151 | -0.0008 |
| 83 | SLE RA 11 | -3.17 | -0.2 | 25.82 | 0.1134 | -0.1232 | -0.0019 |
| 83 | SLE RA 12 | -3.1 | -0.13 | 25.84 | 0.0237 | -0.121 | -0.0013 |
| 83 | SLE RA 13 | -3.04 | -0.08 | 25.77 | -0.0369 | -0.119 | -0.0009 |
| 83 | SLE RA 14 | -3.26 | -0.2 | 25.98 | 0.1149 | -0.1271 | -0.0019 |
| 83 | SLE RA 15 | -3.19 | -0.13 | 26.01 | 0.0253 | -0.1249 | -0.0013 |
| 83 | SLE RA 16 | -3.25 | -0.2 | 25.89 | 0.114 | -0.1266 | -0.0019 |
| 83 | SLE RA 17 | -3.18 | -0.13 | 25.92 | 0.0244 | -0.1244 | -0.0013 |
| 83 | SLE RA 18 | -3.19 | -0.2 | 26.47 | 0.1139 | -0.123 | -0.0019 |
| 83 | SLE RA 19 | -3.11 | -0.13 | 26.49 | 0.0242 | -0.1208 | -0.0013 |
| 83 | SLE RA 20 | -3.28 | -0.2 | 26.63 | 0.1154 | -0.1269 | -0.0019 |
| 83 | SLE RA 21 | -3.2 | -0.14 | 26.65 | 0.0257 | -0.1248 | -0.0013 |
| 83 | SLE FR 1 | -2.79 | -0.18 | 23.48 | 0.1042 | -0.1088 | -0.0017 |
| 83 | SLE FR 2 | -2.76 | -0.16 | 23.49 | 0.0743 | -0.1081 | -0.0015 |
| 83 | SLE FR 3 | -2.82 | -0.18 | 23.55 | 0.1048 | -0.1104 | -0.0017 |
| 83 | SLE FR 4 | -2.88 | -0.17 | 24.39 | 0.0772 | -0.1124 | -0.0016 |
| 83 | SLE FR 5 | -2.94 | -0.19 | 24.44 | 0.1077 | -0.1146 | -0.0018 |
| 83 | SLE FR 6 | -2.99 | -0.19 | 24.97 | 0.1091 | -0.1159 | -0.0018 |
| 83 | SLE QP 1 | -2.79 | -0.18 | 23.48 | 0.1042 | -0.1088 | -0.0017 |
| 83 | SLE QP 2 | -2.91 | -0.19 | 24.38 | 0.1071 | -0.1131 | -0.0018 |
| 83 | SLD 1 | 6.23 | 0.13 | 23.3 | -0.1984 | 0.2839 | 0.0011 |
| 83 | SLD 2 | 6.23 | 0.13 | 23.3 | -0.1984 | 0.2839 | 0.0011 |
| 83 | SLD 3 | 7.45 | -0.22 | 19.99 | 0.1623 | 0.3376 | -0.002 |
| 83 | SLD 4 | 7.45 | -0.22 | 19.99 | 0.1623 | 0.3376 | -0.002 |
| 83 | SLD 5 | -2.01 | 0.44 | 29.07 | -0.5315 | -0.0755 | 0.0038 |
| 83 | SLD 6 | -2.01 | 0.44 | 29.07 | -0.5315 | -0.0755 | 0.0038 |
| 83 | SLD 7 | 2.05 | -0.73 | 18.05 | 0.6707 | 0.1036 | -0.0065 |
| 83 | SLD 8 | 2.05 | -0.73 | 18.05 | 0.6707 | 0.1036 | -0.0065 |
| 83 | SLD 9 | -7.86 | 0.35 | 30.71 | -0.4564 | -0.3297 | 0.003 |
| 83 | SLD 10 | -7.86 | 0.35 | 30.71 | -0.4564 | -0.3297 | 0.003 |
| 83 | SLD 11 | -3.8 | -0.82 | 19.69 | 0.7458 | -0.1507 | -0.0073 |
| 83 | SLD 12 | -3.8 | -0.82 | 19.69 | 0.7458 | -0.1507 | -0.0073 |
| 83 | SLD 13 | -13.27 | -0.15 | 28.76 | 0.052 | -0.5637 | -0.0015 |
| 83 | SLD 14 | -13.27 | -0.15 | 28.76 | 0.052 | -0.5637 | -0.0015 |
| 83 | SLD 15 | -12.05 | -0.51 | 25.46 | 0.4127 | -0.51 | -0.0046 |
| 83 | SLD 16 | -12.05 | -0.51 | 25.46 | 0.4127 | -0.51 | -0.0046 |
| 83 | SLV 1 | 18.11 | 0.59 | 22.1 | -0.6528 | 0.7998 | 0.0052 |
| 83 | SLV 2 | 18.11 | 0.59 | 22.1 | -0.6528 | 0.7998 | 0.0052 |
| 83 | SLV 3 | 21.03 | -0.29 | 13.91 | 0.2629 | 0.9284 | -0.0026 |
| 83 | SLV 4 | 21.03 | -0.29 | 13.91 | 0.2629 | 0.9284 | -0.0026 |
| 83 | SLV 5 | -1.02 | 1.38 | 36.11 | -1.5096 | -0.0343 | 0.0121 |
| 83 | SLV 6 | -1.02 | 1.38 | 36.11 | -1.5096 | -0.0343 | 0.0121 |
| 83 | SLV 7 | 8.7 | -1.56 | 8.82 | 1.5426 | 0.3944 | -0.0138 |
| 83 | SLV 8 | 8.7 | -1.56 | 8.82 | 1.5426 | 0.3944 | -0.0138 |
| 83 | SLV 9 | -14.51 | 1.18 | 39.93 | -1.3284 | -0.6205 | 0.0103 |
| 83 | SLV 10 | -14.51 | 1.18 | 39.93 | -1.3284 | -0.6205 | 0.0103 |
| 83 | SLV 11 | -4.79 | -1.76 | 12.64 | 1.7239 | -0.1919 | -0.0156 |
| 83 | SLV 12 | -4.79 | -1.76 | 12.64 | 1.7239 | -0.1919 | -0.0156 |
| 83 | SLV 13 | -26.84 | -0.08 | 34.84 | -0.0487 | -1.1545 | -0.0009 |
| 83 | SLV 14 | -26.84 | -0.08 | 34.84 | -0.0487 | -1.1545 | -0.0009 |
| 83 | SLV 15 | -23.93 | -0.97 | 26.65 | 0.867 | -1.0259 | -0.0087 |
| 83 | SLV 16 | -23.93 | -0.97 | 26.65 | 0.867 | -1.0259 | -0.0087 |
| 84 | SLU 1 | -1.65 | -0.17 | 23.19 | 0.0945 | -0.0836 | -0.0016 |
| 84 | SLU 2 | -1.13 | 0 | 23.53 | -0.1227 | -0.0623 | -0.0002 |
| 84 | SLU 3 | -1.76 | -0.17 | 23.6 | 0.0981 | -0.0889 | -0.0017 |
| 84 | SLU 4 | -1.45 | -0.07 | 23.8 | -0.0322 | -0.0762 | -0.0008 |
| 84 | SLU 5 | -1.24 | 0 | 23.8 | -0.1204 | -0.0675 | -0.0002 |
| 84 | SLU 6 | -1.88 | -0.18 | 23.86 | 0.1005 | -0.094 | -0.0017 |
| 84 | SLU 7 | -1.56 | -0.08 | 24.07 | -0.0299 | -0.0813 | -0.0008 |
| 84 | SLU 8 | -1.87 | -0.17 | 23.72 | 0.0992 | -0.0938 | -0.0017 |
| 84 | SLU 9 | -1.56 | -0.07 | 23.93 | -0.0312 | -0.0811 | -0.0008 |
| 84 | SLU 10 | -1.45 | -0.02 | 26.65 | -0.114 | -0.0785 | -0.0003 |
| 84 | SLU 11 | -2.09 | -0.19 | 26.72 | 0.1069 | -0.1051 | -0.0018 |
| 84 | SLU 12 | -1.77 | -0.09 | 26.93 | -0.0234 | -0.0923 | -0.001 |
| 84 | SLU 13 | -1.56 | -0.02 | 26.92 | -0.1116 | -0.0836 | -0.0004 |
| 84 | SLU 14 | -2.2 | -0.19 | 26.99 | 0.1092 | -0.1102 | -0.0019 |
| 84 | SLU 15 | -1.89 | -0.09 | 27.19 | -0.0211 | -0.0974 | -0.001 |
| 84 | SLU 16 | -2.2 | -0.19 | 26.84 | 0.108 | -0.11 | -0.0019 |
| 84 | SLU 17 | -1.88 | -0.09 | 27.05 | -0.0224 | -0.0972 | -0.001 |
| 84 | SLU 18 | -2.11 | -0.19 | 27.65 | 0.107 | -0.1067 | -0.0019 |
| 84 | SLU 19 | -1.8 | -0.09 | 27.85 | -0.0233 | -0.0939 | -0.001 |
| 84 | SLU 20 | -2.22 | -0.2 | 27.92 | 0.1094 | -0.1118 | -0.0019 |
| 84 | SLU 21 | -1.91 | -0.1 | 28.12 | -0.021 | -0.099 | -0.001 |
| 84 | SLU 22 | -1.98 | -0.19 | 25.92 | 0.1048 | -0.0998 | -0.0018 |
| 84 | SLU 23 | -1.46 | -0.02 | 26.26 | -0.1125 | -0.0785 | -0.0004 |
| 84 | SLU 24 | -2.09 | -0.19 | 26.33 | 0.1084 | -0.1051 | -0.0019 |

| Nodo | Cont. | Reazione a traslazione | | | Reazione a rotazione | | |
|---|---|---|---|---|---|---|---|
| Ind. | N.br. | x | y | z | x | y | z |
| 84 | SLU 25 | -1.78 | -0.09 | 26.53 | -0.0219 | -0.0923 | -0.001 |
| 84 | SLU 26 | -1.57 | -0.02 | 26.52 | -0.1101 | -0.0836 | -0.0004 |
| 84 | SLU 27 | -2.21 | -0.2 | 26.59 | 0.1107 | -0.1102 | -0.0019 |
| 84 | SLU 28 | -1.89 | -0.1 | 26.8 | -0.0196 | -0.0974 | -0.001 |
| 84 | SLU 29 | -2.2 | -0.19 | 26.45 | 0.1095 | -0.11 | -0.0019 |
| 84 | SLU 30 | -1.89 | -0.09 | 26.65 | -0.0209 | -0.0972 | -0.001 |
| 84 | SLU 31 | -1.78 | -0.04 | 29.38 | -0.1037 | -0.0946 | -0.0005 |
| 84 | SLU 32 | -2.42 | -0.21 | 29.45 | 0.1172 | -0.1212 | -0.002 |
| 84 | SLU 33 | -2.1 | -0.11 | 29.65 | -0.0132 | -0.1084 | -0.0012 |
| 84 | SLU 34 | -1.89 | -0.04 | 29.65 | -0.1014 | -0.0997 | -0.0006 |
| 84 | SLU 35 | -2.53 | -0.21 | 29.71 | 0.1195 | -0.1263 | -0.0021 |
| 84 | SLU 36 | -2.22 | -0.11 | 29.92 | -0.0108 | -0.1135 | -0.0012 |
| 84 | SLU 37 | -2.53 | -0.21 | 29.57 | 0.1182 | -0.1261 | -0.002 |
| 84 | SLU 38 | -2.21 | -0.11 | 29.78 | -0.0121 | -0.1133 | -0.0012 |
| 84 | SLU 39 | -2.44 | -0.21 | 30.38 | 0.1173 | -0.1228 | -0.002 |
| 84 | SLU 40 | -2.13 | -0.11 | 30.58 | -0.013 | -0.1101 | -0.0012 |
| 84 | SLU 41 | -2.55 | -0.22 | 30.64 | 0.1196 | -0.1279 | -0.0021 |
| 84 | SLU 42 | -2.24 | -0.12 | 30.85 | -0.0107 | -0.1152 | -0.0012 |
| 84 | SLU 43 | -2.03 | -0.21 | 29.21 | 0.1193 | -0.1032 | -0.002 |
| 84 | SLU 44 | -1.51 | -0.04 | 29.55 | -0.0979 | -0.0819 | -0.0006 |
| 84 | SLU 45 | -2.15 | -0.22 | 29.62 | 0.123 | -0.1085 | -0.0021 |
| 84 | SLU 46 | -1.83 | -0.12 | 29.82 | -0.0074 | -0.0957 | -0.0012 |
| 84 | SLU 47 | -1.62 | -0.05 | 29.82 | -0.0956 | -0.087 | -0.0006 |
| 84 | SLU 48 | -2.26 | -0.22 | 29.89 | 0.1253 | -0.1136 | -0.0021 |
| 84 | SLU 49 | -1.95 | -0.12 | 30.09 | -0.005 | -0.1008 | -0.0012 |
| 84 | SLU 50 | -2.26 | -0.22 | 29.74 | 0.124 | -0.1134 | -0.0021 |
| 84 | SLU 51 | -1.94 | -0.12 | 29.95 | -0.0063 | -0.1006 | -0.0012 |
| 84 | SLU 52 | -1.83 | -0.06 | 32.67 | -0.0891 | -0.098 | -0.0007 |
| 84 | SLU 53 | -2.47 | -0.23 | 32.74 | 0.1317 | -0.1246 | -0.0023 |
| 84 | SLU 54 | -2.16 | -0.13 | 32.95 | 0.0014 | -0.1119 | -0.0014 |
| 84 | SLU 55 | -1.95 | -0.07 | 32.94 | -0.0868 | -0.1032 | -0.0008 |
| 84 | SLU 56 | -2.58 | -0.24 | 33.01 | 0.1341 | -0.1297 | -0.0023 |
| 84 | SLU 57 | -2.27 | -0.14 | 33.21 | 0.0037 | -0.117 | -0.0014 |
| 84 | SLU 58 | -2.58 | -0.24 | 32.87 | 0.1328 | -0.1295 | -0.0023 |
| 84 | SLU 59 | -2.27 | -0.14 | 33.07 | 0.0024 | -0.1168 | -0.0014 |
| 84 | SLU 60 | -2.49 | -0.24 | 33.67 | 0.1319 | -0.1263 | -0.0023 |
| 84 | SLU 61 | -2.18 | -0.14 | 33.88 | 0.0015 | -0.1135 | -0.0014 |
| 84 | SLU 62 | -2.61 | -0.24 | 33.94 | 0.1342 | -0.1314 | -0.0023 |
| 84 | SLU 63 | -2.29 | -0.14 | 34.14 | 0.0039 | -0.1186 | -0.0014 |
| 84 | SLU 64 | -2.36 | -0.23 | 31.94 | 0.1296 | -0.1193 | -0.0022 |
| 84 | SLU 65 | -1.84 | -0.06 | 32.28 | -0.0876 | -0.098 | -0.0008 |
| 84 | SLU 66 | -2.48 | -0.24 | 32.35 | 0.1332 | -0.1246 | -0.0023 |
| 84 | SLU 67 | -2.16 | -0.14 | 32.55 | 0.0029 | -0.1119 | -0.0014 |
| 84 | SLU 68 | -1.95 | -0.07 | 32.55 | -0.0853 | -0.1031 | -0.0008 |
| 84 | SLU 69 | -2.59 | -0.24 | 32.61 | 0.1356 | -0.1297 | -0.0023 |
| 84 | SLU 70 | -2.28 | -0.14 | 32.82 | 0.0052 | -0.117 | -0.0014 |
| 84 | SLU 71 | -2.59 | -0.24 | 32.47 | 0.1343 | -0.1295 | -0.0023 |
| 84 | SLU 72 | -2.27 | -0.14 | 32.68 | 0.0039 | -0.1168 | -0.0014 |
| 84 | SLU 73 | -2.16 | -0.08 | 35.4 | -0.0789 | -0.1142 | -0.0009 |
| 84 | SLU 74 | -2.8 | -0.25 | 35.47 | 0.142 | -0.1408 | -0.0024 |
| 84 | SLU 75 | -2.49 | -0.15 | 35.67 | 0.0117 | -0.128 | -0.0016 |
| 84 | SLU 76 | -2.28 | -0.09 | 35.67 | -0.0765 | -0.1193 | -0.001 |
| 84 | SLU 77 | -2.91 | -0.26 | 35.74 | 0.1444 | -0.1459 | -0.0025 |
| 84 | SLU 78 | -2.6 | -0.16 | 35.94 | 0.014 | -0.1331 | -0.0016 |
| 84 | SLU 79 | -2.91 | -0.26 | 35.59 | 0.1431 | -0.1457 | -0.0025 |
| 84 | SLU 80 | -2.6 | -0.16 | 35.8 | 0.0127 | -0.1329 | -0.0016 |
| 84 | SLU 81 | -2.82 | -0.26 | 36.4 | 0.1421 | -0.1424 | -0.0025 |
| 84 | SLU 82 | -2.51 | -0.16 | 36.6 | 0.0118 | -0.1296 | -0.0016 |
| 84 | SLU 83 | -2.93 | -0.26 | 36.67 | 0.1445 | -0.1475 | -0.0025 |
| 84 | SLU 84 | -2.62 | -0.16 | 36.87 | 0.0141 | -0.1347 | -0.0016 |
| 84 | SLE RA 1 | -1.74 | -0.17 | 23.97 | 0.0974 | -0.0882 | -0.0017 |
| 84 | SLE RA 2 | -1.4 | -0.06 | 24.2 | -0.0474 | -0.074 | -0.0007 |
| 84 | SLE RA 3 | -1.82 | -0.18 | 24.24 | 0.0999 | -0.0918 | -0.0017 |
| 84 | SLE RA 4 | -1.61 | -0.11 | 24.38 | 0.013 | -0.0833 | -0.0011 |
| 84 | SLE RA 5 | -1.47 | -0.06 | 24.37 | -0.0458 | -0.0775 | -0.0007 |
| 84 | SLE RA 6 | -1.9 | -0.18 | 24.42 | 0.1014 | -0.0952 | -0.0017 |
| 84 | SLE RA 7 | -1.69 | -0.11 | 24.56 | 0.0145 | -0.0867 | -0.0011 |
| 84 | SLE RA 8 | -1.89 | -0.18 | 24.32 | 0.1006 | -0.095 | -0.0017 |
| 84 | SLE RA 9 | -1.69 | -0.11 | 24.46 | 0.0137 | -0.0865 | -0.0011 |
| 84 | SLE RA 10 | -1.61 | -0.07 | 26.28 | -0.0415 | -0.0848 | -0.0008 |
| 84 | SLE RA 11 | -2.04 | -0.19 | 26.32 | 0.1057 | -0.1025 | -0.0018 |
| 84 | SLE RA 12 | -1.83 | -0.12 | 26.46 | 0.0188 | -0.094 | -0.0012 |
| 84 | SLE RA 13 | -1.69 | -0.08 | 26.46 | -0.04 | -0.0882 | -0.0008 |
| 84 | SLE RA 14 | -2.11 | -0.19 | 26.5 | 0.1073 | -0.1059 | -0.0018 |
| 84 | SLE RA 15 | -1.9 | -0.12 | 26.64 | 0.0204 | -0.0974 | -0.0013 |
| 84 | SLE RA 16 | -2.11 | -0.19 | 26.41 | 0.1064 | -0.1058 | -0.0018 |
| 84 | SLE RA 17 | -1.9 | -0.12 | 26.54 | 0.0195 | -0.0973 | -0.0012 |
| 84 | SLE RA 18 | -2.05 | -0.19 | 26.94 | 0.1058 | -0.1036 | -0.0018 |
| 84 | SLE RA 19 | -1.84 | -0.12 | 27.08 | 0.0189 | -0.0951 | -0.0012 |
| 84 | SLE RA 20 | -2.13 | -0.19 | 27.12 | 0.1074 | -0.107 | -0.0018 |
| 84 | SLE RA 21 | -1.92 | -0.13 | 27.26 | 0.0205 | -0.0985 | -0.0013 |
| 84 | SLE FR 1 | -1.74 | -0.17 | 23.97 | 0.0974 | -0.0882 | -0.0017 |
| 84 | SLE FR 2 | -1.68 | -0.15 | 24.01 | 0.0685 | -0.0854 | -0.0015 |
| 84 | SLE FR 3 | -1.77 | -0.17 | 24.04 | 0.0981 | -0.0896 | -0.0017 |
| 84 | SLE FR 4 | -1.77 | -0.16 | 24.91 | 0.071 | -0.09 | -0.0015 |
| 84 | SLE FR 5 | -1.87 | -0.18 | 24.93 | 0.1006 | -0.0942 | -0.0017 |
| 84 | SLE FR 6 | -1.9 | -0.18 | 25.46 | 0.1016 | -0.0959 | -0.0017 |
| 84 | SLE QP 1 | -1.74 | -0.17 | 23.97 | 0.0974 | -0.0882 | -0.0017 |

| Nodo | Cont. | Reazione a traslazione | | | Reazione a rotazione | | |
|---|---|---|---|---|---|---|---|
| Ind. | N.br. | x | y | z | x | y | z |
| 84 | SLE QP 2 | -1.84 | -0.18 | 24.86 | 0.0999 | -0.0929 | -0.0017 |
| 84 | SLD 1 | 7 | 0.14 | 23.94 | -0.2008 | 0.2807 | 0.0011 |
| 84 | SLD 2 | 7 | 0.14 | 23.94 | -0.2008 | 0.2807 | 0.0011 |
| 84 | SLD 3 | 8.06 | -0.2 | 20.47 | 0.1465 | 0.3243 | -0.0018 |
| 84 | SLD 4 | 8.06 | -0.2 | 20.47 | 0.1465 | 0.3243 | -0.0018 |
| 84 | SLD 5 | -0.79 | 0.43 | 29.83 | -0.5169 | -0.047 | 0.0036 |
| 84 | SLD 6 | -0.79 | 0.43 | 29.83 | -0.5169 | -0.047 | 0.0036 |
| 84 | SLD 7 | 2.74 | -0.7 | 18.29 | 0.6405 | 0.0985 | -0.0062 |
| 84 | SLD 8 | 2.74 | -0.7 | 18.29 | 0.6405 | 0.0985 | -0.0062 |
| 84 | SLD 9 | -6.41 | 0.34 | 31.43 | -0.4406 | -0.2842 | 0.0028 |
| 84 | SLD 10 | -6.41 | 0.34 | 31.43 | -0.4406 | -0.2842 | 0.0028 |
| 84 | SLD 11 | -2.88 | -0.79 | 19.89 | 0.7168 | -0.1387 | -0.0071 |
| 84 | SLD 12 | -2.88 | -0.79 | 19.89 | 0.7168 | -0.1387 | -0.0071 |
| 84 | SLD 13 | -11.73 | -0.16 | 29.25 | 0.0534 | -0.51 | -0.0016 |
| 84 | SLD 14 | -11.73 | -0.16 | 29.25 | 0.0534 | -0.51 | -0.0016 |
| 84 | SLD 15 | -10.67 | -0.5 | 25.78 | 0.4007 | -0.4664 | -0.0045 |
| 84 | SLD 16 | -10.67 | -0.5 | 25.78 | 0.4007 | -0.4664 | -0.0045 |
| 84 | SLV 1 | 18.48 | 0.6 | 22.93 | -0.6466 | 0.766 | 0.0052 |
| 84 | SLV 2 | 18.48 | 0.6 | 22.93 | -0.6466 | 0.766 | 0.0052 |
| 84 | SLV 3 | 21.03 | -0.25 | 14.37 | 0.2346 | 0.8707 | -0.0022 |
| 84 | SLV 4 | 21.03 | -0.25 | 14.37 | 0.2346 | 0.8707 | -0.0022 |
| 84 | SLV 5 | 0.39 | 1.34 | 37.25 | -1.4606 | 0.0059 | 0.0117 |
| 84 | SLV 6 | 0.39 | 1.34 | 37.25 | -1.4606 | 0.0059 | 0.0117 |
| 84 | SLV 7 | 8.89 | -1.49 | 8.74 | 1.4769 | 0.3551 | -0.0132 |
| 84 | SLV 8 | 8.89 | -1.49 | 8.74 | 1.4769 | 0.3551 | -0.0132 |
| 84 | SLV 9 | -12.57 | 1.13 | 40.98 | -1.277 | -0.5408 | 0.0098 |
| 84 | SLV 10 | -12.57 | 1.13 | 40.98 | -1.277 | -0.5408 | 0.0098 |
| 84 | SLV 11 | -4.06 | -1.7 | 12.47 | 1.6605 | -0.1916 | -0.0151 |
| 84 | SLV 12 | -4.06 | -1.7 | 12.47 | 1.6605 | -0.1916 | -0.0151 |
| 84 | SLV 13 | -24.7 | -0.11 | 35.35 | -0.0347 | -1.0564 | -0.0012 |
| 84 | SLV 14 | -24.7 | -0.11 | 35.35 | -0.0347 | -1.0564 | -0.0012 |
| 84 | SLV 15 | -22.15 | -0.96 | 26.8 | 0.8465 | -0.9517 | -0.0086 |
| 84 | SLV 16 | -22.15 | -0.96 | 26.8 | 0.8465 | -0.9517 | -0.0086 |
| 85 | SLU 1 | -0.34 | -0.18 | 25.25 | 0.0956 | -0.0272 | -0.0015 |
| 85 | SLU 2 | 0.53 | -0.03 | 25.81 | -0.1014 | 0.0094 | -0.0004 |
| 85 | SLU 3 | -0.4 | -0.19 | 25.75 | 0.0994 | -0.0305 | -0.0015 |
| 85 | SLU 4 | 0.13 | -0.1 | 26.09 | -0.0188 | -0.0085 | -0.0009 |
| 85 | SLU 5 | 0.46 | -0.04 | 26.14 | -0.0989 | 0.0057 | -0.0005 |
| 85 | SLU 6 | -0.47 | -0.19 | 26.08 | 0.1019 | -0.0341 | -0.0016 |
| 85 | SLU 7 | 0.05 | -0.1 | 26.41 | -0.0163 | -0.0122 | -0.0009 |
| 85 | SLU 8 | -0.49 | -0.19 | 25.9 | 0.1006 | -0.0345 | -0.0016 |
| 85 | SLU 9 | 0.04 | -0.1 | 26.24 | -0.0177 | -0.0126 | -0.0009 |
| 85 | SLU 10 | 0.37 | -0.05 | 29.13 | -0.0927 | 0.0018 | -0.0006 |
| 85 | SLU 11 | -0.56 | -0.21 | 29.07 | 0.1082 | -0.0381 | -0.0017 |
| 85 | SLU 12 | -0.04 | -0.12 | 29.4 | -0.01 | -0.0161 | -0.0011 |
| 85 | SLU 13 | 0.29 | -0.06 | 29.45 | -0.0902 | -0.0019 | -0.0006 |
| 85 | SLU 14 | -0.64 | -0.21 | 29.39 | 0.1107 | -0.0417 | -0.0017 |
| 85 | SLU 15 | -0.11 | -0.12 | 29.73 | -0.0075 | -0.0198 | -0.0011 |
| 85 | SLU 16 | -0.65 | -0.21 | 29.22 | 0.1093 | -0.0421 | -0.0017 |
| 85 | SLU 17 | -0.13 | -0.12 | 29.55 | -0.0089 | -0.0202 | -0.0011 |
| 85 | SLU 18 | -0.57 | -0.21 | 29.99 | 0.1081 | -0.0381 | -0.0017 |
| 85 | SLU 19 | -0.05 | -0.12 | 30.32 | -0.0101 | -0.0161 | -0.0011 |
| 85 | SLU 20 | -0.65 | -0.21 | 30.31 | 0.1106 | -0.0418 | -0.0018 |
| 85 | SLU 21 | -0.12 | -0.12 | 30.65 | -0.0076 | -0.0198 | -0.0011 |
| 85 | SLU 22 | -0.49 | -0.2 | 28.25 | 0.1063 | -0.0355 | -0.0017 |
| 85 | SLU 23 | 0.38 | -0.05 | 28.81 | -0.0907 | 0.0011 | -0.0006 |
| 85 | SLU 24 | -0.55 | -0.21 | 28.75 | 0.1101 | -0.0388 | -0.0017 |
| 85 | SLU 25 | -0.03 | -0.12 | 29.09 | -0.0081 | -0.0168 | -0.0011 |
| 85 | SLU 26 | 0.3 | -0.06 | 29.14 | -0.0883 | -0.0026 | -0.0007 |
| 85 | SLU 27 | -0.63 | -0.21 | 29.07 | 0.1126 | -0.0424 | -0.0018 |
| 85 | SLU 28 | -0.11 | -0.12 | 29.41 | -0.0056 | -0.0205 | -0.0011 |
| 85 | SLU 29 | -0.64 | -0.21 | 28.9 | 0.1112 | -0.0428 | -0.0017 |
| 85 | SLU 30 | -0.12 | -0.12 | 29.24 | -0.007 | -0.0209 | -0.0011 |
| 85 | SLU 31 | 0.21 | -0.07 | 32.13 | -0.082 | -0.0066 | -0.0008 |
| 85 | SLU 32 | -0.72 | -0.23 | 32.07 | 0.1189 | -0.0464 | -0.0019 |
| 85 | SLU 33 | -0.2 | -0.14 | 32.4 | 0.0006 | -0.0245 | -0.0013 |
| 85 | SLU 34 | 0.14 | -0.08 | 32.45 | -0.0795 | -0.0102 | -0.0008 |
| 85 | SLU 35 | -0.79 | -0.23 | 32.39 | 0.1213 | -0.0501 | -0.0019 |
| 85 | SLU 36 | -0.27 | -0.14 | 32.73 | 0.0031 | -0.0281 | -0.0013 |
| 85 | SLU 37 | -0.81 | -0.23 | 32.22 | 0.12 | -0.0505 | -0.0019 |
| 85 | SLU 38 | -0.29 | -0.14 | 32.55 | 0.0018 | -0.0285 | -0.0013 |
| 85 | SLU 39 | -0.73 | -0.23 | 32.99 | 0.1188 | -0.0464 | -0.0019 |
| 85 | SLU 40 | -0.21 | -0.14 | 33.32 | 0.0006 | -0.0245 | -0.0013 |
| 85 | SLU 41 | -0.8 | -0.23 | 33.31 | 0.1213 | -0.0501 | -0.0019 |
| 85 | SLU 42 | -0.28 | -0.15 | 33.65 | 0.0031 | -0.0281 | -0.0013 |
| 85 | SLU 43 | -0.38 | -0.23 | 31.8 | 0.1206 | -0.0325 | -0.0019 |
| 85 | SLU 44 | 0.49 | -0.08 | 32.36 | -0.0764 | 0.0041 | -0.0008 |
| 85 | SLU 45 | -0.44 | -0.23 | 32.3 | 0.1244 | -0.0358 | -0.0019 |
| 85 | SLU 46 | 0.08 | -0.15 | 32.63 | 0.0062 | -0.0138 | -0.0013 |
| 85 | SLU 47 | 0.41 | -0.08 | 32.68 | -0.0739 | 0.0004 | -0.0009 |
| 85 | SLU 48 | -0.52 | -0.24 | 32.62 | 0.1269 | -0.0394 | -0.002 |
| 85 | SLU 49 | 0 | -0.15 | 32.96 | 0.0087 | -0.0175 | -0.0013 |
| 85 | SLU 50 | -0.53 | -0.24 | 32.45 | 0.1256 | -0.0398 | -0.0019 |
| 85 | SLU 51 | -0.01 | -0.15 | 32.79 | 0.0074 | -0.0179 | -0.0013 |
| 85 | SLU 52 | 0.32 | -0.1 | 35.68 | -0.0676 | -0.0035 | -0.001 |
| 85 | SLU 53 | -0.61 | -0.25 | 35.61 | 0.1332 | -0.0434 | -0.0021 |
| 85 | SLU 54 | -0.09 | -0.16 | 35.95 | 0.015 | -0.0214 | -0.0015 |
| 85 | SLU 55 | 0.25 | -0.1 | 36 | -0.0652 | -0.0072 | -0.001 |

| Nodo | Cont. | Reazione a traslazione | | | Reazione a rotazione | | |
|---|---|---|---|---|---|---|---|
| Ind. | N.br. | x | y | z | x | y | z |
| 85 | SLU 56 | -0.68 | -0.26 | 35.94 | 0.1357 | -0.047 | -0.0021 |
| 85 | SLU 57 | -0.16 | -0.17 | 36.28 | 0.0175 | -0.0251 | -0.0015 |
| 85 | SLU 58 | -0.7 | -0.26 | 35.77 | 0.1344 | -0.0474 | -0.0021 |
| 85 | SLU 59 | -0.18 | -0.17 | 36.1 | 0.0161 | -0.0255 | -0.0015 |
| 85 | SLU 60 | -0.62 | -0.25 | 36.54 | 0.1331 | -0.0434 | -0.0021 |
| 85 | SLU 61 | -0.09 | -0.17 | 36.87 | 0.0149 | -0.0214 | -0.0015 |
| 85 | SLU 62 | -0.69 | -0.26 | 36.86 | 0.1356 | -0.0471 | -0.0021 |
| 85 | SLU 63 | -0.17 | -0.17 | 37.2 | 0.0174 | -0.0251 | -0.0015 |
| 85 | SLU 64 | -0.54 | -0.25 | 34.8 | 0.1313 | -0.0408 | -0.002 |
| 85 | SLU 65 | 0.33 | -0.1 | 35.36 | -0.0657 | -0.0042 | -0.001 |
| 85 | SLU 66 | -0.6 | -0.26 | 35.3 | 0.1351 | -0.0441 | -0.0021 |
| 85 | SLU 67 | -0.08 | -0.17 | 35.63 | 0.0169 | -0.0221 | -0.0015 |
| 85 | SLU 68 | 0.25 | -0.11 | 35.68 | -0.0632 | -0.0079 | -0.001 |
| 85 | SLU 69 | -0.68 | -0.26 | 35.62 | 0.1376 | -0.0477 | -0.0021 |
| 85 | SLU 70 | -0.15 | -0.17 | 35.96 | 0.0194 | -0.0258 | -0.0015 |
| 85 | SLU 71 | -0.69 | -0.26 | 35.45 | 0.1363 | -0.0481 | -0.0021 |
| 85 | SLU 72 | -0.17 | -0.17 | 35.78 | 0.018 | -0.0262 | -0.0015 |
| 85 | SLU 73 | 0.17 | -0.12 | 38.67 | -0.057 | -0.0119 | -0.0012 |
| 85 | SLU 74 | -0.77 | -0.28 | 38.61 | 0.1439 | -0.0517 | -0.0023 |
| 85 | SLU 75 | -0.24 | -0.19 | 38.95 | 0.0257 | -0.0298 | -0.0016 |
| 85 | SLU 76 | 0.09 | -0.12 | 39 | -0.0545 | -0.0155 | -0.0012 |
| 85 | SLU 77 | -0.84 | -0.28 | 38.94 | 0.1464 | -0.0554 | -0.0023 |
| 85 | SLU 78 | -0.32 | -0.19 | 39.27 | 0.0281 | -0.0334 | -0.0017 |
| 85 | SLU 79 | -0.86 | -0.28 | 38.76 | 0.145 | -0.0558 | -0.0023 |
| 85 | SLU 80 | -0.33 | -0.19 | 39.1 | 0.0268 | -0.0338 | -0.0017 |
| 85 | SLU 81 | -0.78 | -0.28 | 39.53 | 0.1438 | -0.0517 | -0.0023 |
| 85 | SLU 82 | -0.25 | -0.19 | 39.87 | 0.0256 | -0.0298 | -0.0017 |
| 85 | SLU 83 | -0.85 | -0.28 | 39.86 | 0.1463 | -0.0554 | -0.0023 |
| 85 | SLU 84 | -0.33 | -0.19 | 40.2 | 0.0281 | -0.0334 | -0.0017 |
| 85 | SLE RA 1 | -0.38 | -0.19 | 26.11 | 0.0986 | -0.0296 | -0.0015 |
| 85 | SLE RA 2 | 0.2 | -0.09 | 26.48 | -0.0327 | -0.0052 | -0.0008 |
| 85 | SLE RA 3 | -0.42 | -0.19 | 26.44 | 0.1012 | -0.0317 | -0.0016 |
| 85 | SLE RA 4 | -0.07 | -0.13 | 26.67 | 0.0224 | -0.0171 | -0.0012 |
| 85 | SLE RA 5 | 0.15 | -0.09 | 26.7 | -0.031 | -0.0076 | -0.0009 |
| 85 | SLE RA 6 | -0.47 | -0.19 | 26.66 | 0.1028 | -0.0342 | -0.0016 |
| 85 | SLE RA 7 | -0.12 | -0.14 | 26.88 | 0.024 | -0.0196 | -0.0012 |
| 85 | SLE RA 8 | -0.48 | -0.19 | 26.54 | 0.102 | -0.0345 | -0.0016 |
| 85 | SLE RA 9 | -0.13 | -0.13 | 26.77 | 0.0232 | -0.0198 | -0.0012 |
| 85 | SLE RA 10 | 0.09 | -0.1 | 28.69 | -0.0269 | -0.0103 | -0.0009 |
| 85 | SLE RA 11 | -0.53 | -0.2 | 28.65 | 0.107 | -0.0368 | -0.0017 |
| 85 | SLE RA 12 | -0.18 | -0.15 | 28.88 | 0.0282 | -0.0222 | -0.0013 |
| 85 | SLE RA 13 | 0.04 | -0.1 | 28.91 | -0.0252 | -0.0127 | -0.001 |
| 85 | SLE RA 14 | -0.58 | -0.21 | 28.87 | 0.1087 | -0.0393 | -0.0017 |
| 85 | SLE RA 15 | -0.23 | -0.15 | 29.09 | 0.0299 | -0.0246 | -0.0013 |
| 85 | SLE RA 16 | -0.59 | -0.21 | 28.75 | 0.1078 | -0.0395 | -0.0017 |
| 85 | SLE RA 17 | -0.24 | -0.15 | 28.98 | 0.029 | -0.0249 | -0.0013 |
| 85 | SLE RA 18 | -0.54 | -0.21 | 29.27 | 0.107 | -0.0368 | -0.0017 |
| 85 | SLE RA 19 | -0.19 | -0.15 | 29.49 | 0.0282 | -0.0222 | -0.0013 |
| 85 | SLE RA 20 | -0.59 | -0.21 | 29.48 | 0.1087 | -0.0393 | -0.0017 |
| 85 | SLE RA 21 | -0.24 | -0.15 | 29.71 | 0.0299 | -0.0246 | -0.0013 |
| 85 | SLE FR 1 | -0.38 | -0.19 | 26.11 | 0.0986 | -0.0296 | -0.0015 |
| 85 | SLE FR 2 | -0.27 | -0.17 | 26.18 | 0.0724 | -0.0247 | -0.0014 |
| 85 | SLE FR 3 | -0.4 | -0.19 | 26.19 | 0.0993 | -0.0306 | -0.0015 |
| 85 | SLE FR 4 | -0.31 | -0.17 | 27.13 | 0.0749 | -0.0269 | -0.0014 |
| 85 | SLE FR 5 | -0.45 | -0.19 | 27.14 | 0.1018 | -0.0327 | -0.0016 |
| 85 | SLE FR 6 | -0.46 | -0.2 | 27.69 | 0.1028 | -0.0332 | -0.0016 |
| 85 | SLE QP 1 | -0.38 | -0.19 | 26.11 | 0.0986 | -0.0296 | -0.0015 |
| 85 | SLE QP 2 | -0.43 | -0.19 | 27.06 | 0.1012 | -0.0318 | -0.0016 |
| 85 | SLD 1 | 9.05 | 0.12 | 25.64 | -0.1843 | 0.3864 | 0.0008 |
| 85 | SLD 2 | 9.05 | 0.12 | 25.64 | -0.1843 | 0.3864 | 0.0008 |
| 85 | SLD 3 | 8.02 | -0.19 | 22.05 | 0.1318 | 0.3374 | -0.0015 |
| 85 | SLD 4 | 8.02 | -0.19 | 22.05 | 0.1318 | 0.3374 | -0.0015 |
| 85 | SLD 5 | 3.99 | 0.37 | 32.07 | -0.4639 | 0.168 | 0.0026 |
| 85 | SLD 6 | 3.99 | 0.37 | 32.07 | -0.4639 | 0.168 | 0.0026 |
| 85 | SLD 7 | 0.54 | -0.66 | 20.11 | 0.5897 | 0.0047 | -0.005 |
| 85 | SLD 8 | 0.54 | -0.66 | 20.11 | 0.5897 | 0.0047 | -0.005 |
| 85 | SLD 9 | -1.39 | 0.27 | 34 | -0.3874 | -0.0682 | 0.0018 |
| 85 | SLD 10 | -1.39 | 0.27 | 34 | -0.3874 | -0.0682 | 0.0018 |
| 85 | SLD 11 | -4.84 | -0.76 | 22.04 | 0.6662 | -0.2315 | -0.0058 |
| 85 | SLD 12 | -4.84 | -0.76 | 22.04 | 0.6662 | -0.2315 | -0.0058 |
| 85 | SLD 13 | -8.88 | -0.2 | 32.06 | 0.0706 | -0.4009 | -0.0017 |
| 85 | SLD 14 | -8.88 | -0.2 | 32.06 | 0.0706 | -0.4009 | -0.0017 |
| 85 | SLD 15 | -9.91 | -0.51 | 28.47 | 0.3867 | -0.4499 | -0.004 |
| 85 | SLD 16 | -9.91 | -0.51 | 28.47 | 0.3867 | -0.4499 | -0.004 |
| 85 | SLV 1 | 21.48 | 0.58 | 23.91 | -0.6053 | 0.9351 | 0.0042 |
| 85 | SLV 2 | 21.48 | 0.58 | 23.91 | -0.6053 | 0.9351 | 0.0042 |
| 85 | SLV 3 | 18.96 | -0.2 | 15.17 | 0.1962 | 0.815 | -0.0015 |
| 85 | SLV 4 | 18.96 | -0.2 | 15.17 | 0.1962 | 0.815 | -0.0015 |
| 85 | SLV 5 | 9.97 | 1.22 | 39.37 | -1.3263 | 0.4404 | 0.0088 |
| 85 | SLV 6 | 9.97 | 1.22 | 39.37 | -1.3263 | 0.4404 | 0.0088 |
| 85 | SLV 7 | 1.56 | -1.37 | 10.23 | 1.3452 | 0.0402 | -0.0102 |
| 85 | SLV 8 | 1.56 | -1.37 | 10.23 | 1.3452 | 0.0402 | -0.0102 |
| 85 | SLV 9 | -2.42 | 0.99 | 43.88 | -1.1429 | -0.1037 | 0.0071 |
| 85 | SLV 10 | -2.42 | 0.99 | 43.88 | -1.1429 | -0.1037 | 0.0071 |
| 85 | SLV 11 | -10.82 | -1.6 | 14.74 | 1.5286 | -0.5039 | -0.012 |
| 85 | SLV 12 | -10.82 | -1.6 | 14.74 | 1.5286 | -0.5039 | -0.012 |
| 85 | SLV 13 | -19.82 | -0.19 | 38.94 | 0.0061 | -0.8785 | -0.0017 |
| 85 | SLV 14 | -19.82 | -0.19 | 38.94 | 0.0061 | -0.8785 | -0.0017 |

| Nodo | Cont. | Reazione a traslazione | | | Reazione a rotazione | | |
|---|---|---|---|---|---|---|---|
| Ind. | N.br. | x | y | z | x | y | z |
| 85 | SLV 15 | -22.34 | -0.96 | 30.2 | 0.8076 | -0.9986 | -0.0074 |
| 85 | SLV 16 | -22.34 | -0.96 | 30.2 | 0.8076 | -0.9986 | -0.0074 |
| 86 | SLU 1 | 0.67 | -0.19 | 29.18 | 0.0955 | 0.005 | -0.0012 |
| 86 | SLU 2 | 1.89 | -0.08 | 29.95 | -0.0693 | 0.0548 | -0.0006 |
| 86 | SLU 3 | 0.66 | -0.2 | 29.84 | 0.0993 | 0.0039 | -0.0012 |
| 86 | SLU 4 | 1.4 | -0.13 | 30.3 | 0.0004 | 0.0338 | -0.0009 |
| 86 | SLU 5 | 1.86 | -0.08 | 30.38 | -0.0668 | 0.0526 | -0.0006 |
| 86 | SLU 6 | 0.63 | -0.21 | 30.27 | 0.1019 | 0.0017 | -0.0012 |
| 86 | SLU 7 | 1.36 | -0.14 | 30.73 | 0.0029 | 0.0316 | -0.0009 |
| 86 | SLU 8 | 0.59 | -0.2 | 30.04 | 0.1005 | 0.0007 | -0.0012 |
| 86 | SLU 9 | 1.33 | -0.13 | 30.51 | 0.0016 | 0.0305 | -0.0009 |
| 86 | SLU 10 | 1.81 | -0.1 | 33.69 | -0.0603 | 0.0481 | -0.0007 |
| 86 | SLU 11 | 0.57 | -0.22 | 33.58 | 0.1084 | -0.0028 | -0.0013 |
| 86 | SLU 12 | 1.31 | -0.15 | 34.05 | 0.0095 | 0.027 | -0.001 |
| 86 | SLU 13 | 1.77 | -0.1 | 34.13 | -0.0578 | 0.0459 | -0.0007 |
| 86 | SLU 14 | 0.54 | -0.23 | 34.02 | 0.1109 | -0.005 | -0.0014 |
| 86 | SLU 15 | 1.27 | -0.16 | 34.48 | 0.012 | 0.0249 | -0.001 |
| 86 | SLU 16 | 0.51 | -0.23 | 33.79 | 0.1096 | -0.006 | -0.0013 |
| 86 | SLU 17 | 1.24 | -0.16 | 34.25 | 0.0107 | 0.0238 | -0.001 |
| 86 | SLU 18 | 0.54 | -0.23 | 34.53 | 0.1084 | -0.0046 | -0.0013 |
| 86 | SLU 19 | 1.28 | -0.16 | 34.99 | 0.0095 | 0.0253 | -0.001 |
| 86 | SLU 20 | 0.51 | -0.23 | 34.96 | 0.111 | -0.0067 | -0.0014 |
| 86 | SLU 21 | 1.24 | -0.16 | 35.42 | 0.0121 | 0.0231 | -0.001 |
| 86 | SLU 22 | 0.63 | -0.22 | 32.71 | 0.1066 | 0.0004 | -0.0013 |
| 86 | SLU 23 | 1.86 | -0.1 | 33.48 | -0.0583 | 0.0501 | -0.0007 |
| 86 | SLU 24 | 0.63 | -0.23 | 33.37 | 0.1104 | -0.0008 | -0.0013 |
| 86 | SLU 25 | 1.36 | -0.16 | 33.83 | 0.0115 | 0.0291 | -0.001 |
| 86 | SLU 26 | 1.82 | -0.11 | 33.91 | -0.0558 | 0.0479 | -0.0008 |
| 86 | SLU 27 | 0.59 | -0.23 | 33.8 | 0.1129 | -0.0029 | -0.0014 |
| 86 | SLU 28 | 1.33 | -0.16 | 34.26 | 0.014 | 0.0269 | -0.001 |
| 86 | SLU 29 | 0.56 | -0.23 | 33.57 | 0.1116 | -0.004 | -0.0014 |
| 86 | SLU 30 | 1.3 | -0.16 | 34.04 | 0.0127 | 0.0259 | -0.001 |
| 86 | SLU 31 | 1.77 | -0.12 | 37.22 | -0.0492 | 0.0434 | -0.0009 |
| 86 | SLU 32 | 0.54 | -0.25 | 37.11 | 0.1195 | -0.0075 | -0.0015 |
| 86 | SLU 33 | 1.28 | -0.18 | 37.58 | 0.0206 | 0.0224 | -0.0011 |
| 86 | SLU 34 | 1.73 | -0.13 | 37.66 | -0.0467 | 0.0412 | -0.0009 |
| 86 | SLU 35 | 0.5 | -0.25 | 37.55 | 0.122 | -0.0097 | -0.0015 |
| 86 | SLU 36 | 1.24 | -0.18 | 38.01 | 0.0231 | 0.0202 | -0.0012 |
| 86 | SLU 37 | 0.47 | -0.25 | 37.32 | 0.1207 | -0.0107 | -0.0015 |
| 86 | SLU 38 | 1.21 | -0.18 | 37.78 | 0.0218 | 0.0191 | -0.0011 |
| 86 | SLU 39 | 0.51 | -0.25 | 38.06 | 0.1195 | -0.0092 | -0.0015 |
| 86 | SLU 40 | 1.24 | -0.18 | 38.52 | 0.0206 | 0.0206 | -0.0011 |
| 86 | SLU 41 | 0.47 | -0.25 | 38.49 | 0.122 | -0.0114 | -0.0015 |
| 86 | SLU 42 | 1.21 | -0.18 | 38.95 | 0.0231 | 0.0184 | -0.0012 |
| 86 | SLU 43 | 0.88 | -0.24 | 36.72 | 0.1204 | 0.0082 | -0.0014 |
| 86 | SLU 44 | 2.11 | -0.13 | 37.49 | -0.0445 | 0.0579 | -0.0009 |
| 86 | SLU 45 | 0.87 | -0.25 | 37.38 | 0.1242 | 0.007 | -0.0015 |
| 86 | SLU 46 | 1.61 | -0.18 | 37.84 | 0.0253 | 0.0369 | -0.0011 |
| 86 | SLU 47 | 2.07 | -0.13 | 37.92 | -0.042 | 0.0557 | -0.0009 |
| 86 | SLU 48 | 0.84 | -0.26 | 37.81 | 0.1267 | 0.0048 | -0.0015 |
| 86 | SLU 49 | 1.57 | -0.19 | 38.28 | 0.0278 | 0.0347 | -0.0012 |
| 86 | SLU 50 | 0.81 | -0.25 | 37.59 | 0.1254 | 0.0038 | -0.0015 |
| 86 | SLU 51 | 1.54 | -0.18 | 38.05 | 0.0265 | 0.0336 | -0.0012 |
| 86 | SLU 52 | 2.02 | -0.15 | 41.23 | -0.0354 | 0.0512 | -0.001 |
| 86 | SLU 53 | 0.79 | -0.27 | 41.13 | 0.1333 | 0.0003 | -0.0016 |
| 86 | SLU 54 | 1.52 | -0.2 | 41.59 | 0.0343 | 0.0302 | -0.0013 |
| 86 | SLU 55 | 1.98 | -0.15 | 41.67 | -0.0329 | 0.049 | -0.001 |
| 86 | SLU 56 | 0.75 | -0.28 | 41.56 | 0.1358 | -0.0019 | -0.0016 |
| 86 | SLU 57 | 1.49 | -0.21 | 42.02 | 0.0369 | 0.028 | -0.0013 |
| 86 | SLU 58 | 0.72 | -0.28 | 41.33 | 0.1345 | -0.0029 | -0.0016 |
| 86 | SLU 59 | 1.45 | -0.21 | 41.79 | 0.0355 | 0.0269 | -0.0013 |
| 86 | SLU 60 | 0.75 | -0.28 | 42.07 | 0.1333 | -0.0014 | -0.0016 |
| 86 | SLU 61 | 1.49 | -0.21 | 42.53 | 0.0344 | 0.0284 | -0.0013 |
| 86 | SLU 62 | 0.72 | -0.28 | 42.5 | 0.1358 | -0.0036 | -0.0017 |
| 86 | SLU 63 | 1.45 | -0.21 | 42.97 | 0.0369 | 0.0262 | -0.0013 |
| 86 | SLU 64 | 0.85 | -0.27 | 40.25 | 0.1314 | 0.0035 | -0.0016 |
| 86 | SLU 65 | 2.07 | -0.15 | 41.02 | -0.0334 | 0.0532 | -0.001 |
| 86 | SLU 66 | 0.84 | -0.28 | 40.91 | 0.1353 | 0.0024 | -0.0016 |
| 86 | SLU 67 | 1.58 | -0.21 | 41.37 | 0.0364 | 0.0322 | -0.0013 |
| 86 | SLU 68 | 2.03 | -0.16 | 41.45 | -0.0309 | 0.0511 | -0.001 |
| 86 | SLU 69 | 0.8 | -0.28 | 41.34 | 0.1378 | 0.0002 | -0.0017 |
| 86 | SLU 70 | 1.54 | -0.21 | 41.81 | 0.0389 | 0.03 | -0.0013 |
| 86 | SLU 71 | 0.77 | -0.28 | 41.12 | 0.1365 | -0.0009 | -0.0016 |
| 86 | SLU 72 | 1.51 | -0.21 | 41.58 | 0.0376 | 0.029 | -0.0013 |
| 86 | SLU 73 | 1.98 | -0.17 | 44.77 | -0.0244 | 0.0465 | -0.0011 |
| 86 | SLU 74 | 0.75 | -0.3 | 44.66 | 0.1443 | -0.0044 | -0.0018 |
| 86 | SLU 75 | 1.49 | -0.23 | 45.12 | 0.0454 | 0.0255 | -0.0014 |
| 86 | SLU 76 | 1.95 | -0.18 | 45.2 | -0.0218 | 0.0443 | -0.0012 |
| 86 | SLU 77 | 0.72 | -0.3 | 45.09 | 0.1468 | -0.0065 | -0.0018 |
| 86 | SLU 78 | 1.45 | -0.23 | 45.55 | 0.0479 | 0.0233 | -0.0014 |
| 86 | SLU 79 | 0.68 | -0.3 | 44.86 | 0.1455 | -0.0076 | -0.0018 |
| 86 | SLU 80 | 1.42 | -0.23 | 45.33 | 0.0466 | 0.0223 | -0.0014 |
| 86 | SLU 81 | 0.72 | -0.3 | 45.6 | 0.1444 | -0.0061 | -0.0018 |
| 86 | SLU 82 | 1.46 | -0.23 | 46.06 | 0.0455 | 0.0237 | -0.0014 |
| 86 | SLU 83 | 0.68 | -0.3 | 46.03 | 0.1469 | -0.0083 | -0.0018 |
| 86 | SLU 84 | 1.42 | -0.23 | 46.5 | 0.048 | 0.0216 | -0.0015 |
| 86 | SLE RA 1 | 0.66 | -0.2 | 30.18 | 0.0987 | 0.0037 | -0.0012 |
| 86 | SLE RA 2 | 1.48 | -0.12 | 30.7 | -0.0112 | 0.0369 | -0.0008 |

| Nodo | Cont. | Reazione a traslazione | | | Reazione a rotazione | | |
|---|---|---|---|---|---|---|---|
| Ind. | N.br. | x | y | z | x | y | z |
| 86 | SLE RA 3 | 0.65 | -0.21 | 30.63 | 0.1012 | 0.003 | -0.0012 |
| 86 | SLE RA 4 | 1.14 | -0.16 | 30.93 | 0.0353 | 0.0229 | -0.001 |
| 86 | SLE RA 5 | 1.45 | -0.13 | 30.99 | -0.0096 | 0.0354 | -0.0008 |
| 86 | SLE RA 6 | 0.63 | -0.21 | 30.91 | 0.1029 | 0.0015 | -0.0012 |
| 86 | SLE RA 7 | 1.12 | -0.16 | 31.22 | 0.037 | 0.0214 | -0.001 |
| 86 | SLE RA 8 | 0.61 | -0.21 | 30.76 | 0.102 | 0.0008 | -0.0012 |
| 86 | SLE RA 9 | 1.1 | -0.16 | 31.07 | 0.0361 | 0.0207 | -0.001 |
| 86 | SLE RA 10 | 1.42 | -0.14 | 33.2 | -0.0052 | 0.0324 | -0.0009 |
| 86 | SLE RA 11 | 0.6 | -0.22 | 33.12 | 0.1073 | -0.0015 | -0.0013 |
| 86 | SLE RA 12 | 1.09 | -0.17 | 33.43 | 0.0413 | 0.0184 | -0.0011 |
| 86 | SLE RA 13 | 1.39 | -0.14 | 33.49 | -0.0035 | 0.0309 | -0.0009 |
| 86 | SLE RA 14 | 0.57 | -0.22 | 33.41 | 0.1089 | -0.003 | -0.0013 |
| 86 | SLE RA 15 | 1.06 | -0.18 | 33.72 | 0.043 | 0.0169 | -0.0011 |
| 86 | SLE RA 16 | 0.55 | -0.22 | 33.26 | 0.1081 | -0.0037 | -0.0013 |
| 86 | SLE RA 17 | 1.04 | -0.18 | 33.57 | 0.0421 | 0.0162 | -0.0011 |
| 86 | SLE RA 18 | 0.57 | -0.22 | 33.75 | 0.1073 | -0.0027 | -0.0013 |
| 86 | SLE RA 19 | 1.06 | -0.18 | 34.06 | 0.0414 | 0.0172 | -0.0011 |
| 86 | SLE RA 20 | 0.55 | -0.23 | 34.04 | 0.109 | -0.0041 | -0.0013 |
| 86 | SLE RA 21 | 1.04 | -0.18 | 34.35 | 0.043 | 0.0158 | -0.0011 |
| 86 | SLE FR 1 | 0.66 | -0.2 | 30.18 | 0.0987 | 0.0037 | -0.0012 |
| 86 | SLE FR 2 | 0.82 | -0.19 | 30.29 | 0.0767 | 0.0103 | -0.0011 |
| 86 | SLE FR 3 | 0.65 | -0.2 | 30.3 | 0.0993 | 0.0031 | -0.0012 |
| 86 | SLE FR 4 | 0.8 | -0.19 | 31.36 | 0.0793 | 0.0084 | -0.0012 |
| 86 | SLE FR 5 | 0.62 | -0.21 | 31.37 | 0.1019 | 0.0012 | -0.0012 |
| 86 | SLE FR 6 | 0.62 | -0.21 | 31.97 | 0.103 | 0.0005 | -0.0013 |
| 86 | SLE QP 1 | 0.66 | -0.2 | 30.18 | 0.0987 | 0.0037 | -0.0012 |
| 86 | SLE QP 2 | 0.63 | -0.21 | 31.25 | 0.1013 | 0.0018 | -0.0012 |
| 86 | SLD 1 | 9.2 | -0.17 | 28.53 | -0.156 | 0.365 | -0.001 |
| 86 | SLD 2 | 9.2 | -0.17 | 28.53 | -0.156 | 0.365 | -0.001 |
| 86 | SLD 3 | 8.21 | 0.1 | 24.58 | 0.1121 | 0.3235 | 0.0005 |
| 86 | SLD 4 | 8.21 | 0.1 | 24.58 | 0.1121 | 0.3235 | 0.0005 |
| 86 | SLD 5 | 4.72 | -0.6 | 36.44 | -0.3826 | 0.1737 | -0.0033 |
| 86 | SLD 6 | 4.72 | -0.6 | 36.44 | -0.3826 | 0.1737 | -0.0033 |
| 86 | SLD 7 | 1.39 | 0.29 | 23.25 | 0.5112 | 0.0353 | 0.0014 |
| 86 | SLD 8 | 1.39 | 0.29 | 23.25 | 0.5112 | 0.0353 | 0.0014 |
| 86 | SLD 9 | -0.12 | -0.7 | 39.26 | -0.3087 | -0.0317 | -0.0039 |
| 86 | SLD 10 | -0.12 | -0.7 | 39.26 | -0.3087 | -0.0317 | -0.0039 |
| 86 | SLD 11 | -3.45 | 0.18 | 26.07 | 0.5851 | -0.1702 | 0.0009 |
| 86 | SLD 12 | -3.45 | 0.18 | 26.07 | 0.5851 | -0.1702 | 0.0009 |
| 86 | SLD 13 | -6.94 | -0.51 | 37.93 | 0.0904 | -0.3199 | -0.0029 |
| 86 | SLD 14 | -6.94 | -0.51 | 37.93 | 0.0904 | -0.3199 | -0.0029 |
| 86 | SLD 15 | -7.94 | -0.25 | 33.98 | 0.3586 | -0.3614 | -0.0015 |
| 86 | SLD 16 | -7.94 | -0.25 | 33.98 | 0.3586 | -0.3614 | -0.0015 |
| 86 | SLV 1 | 20.43 | -0.13 | 24.97 | -0.5327 | 0.8411 | -0.0007 |
| 86 | SLV 2 | 20.43 | -0.13 | 24.97 | -0.5327 | 0.8411 | -0.0007 |
| 86 | SLV 3 | 17.98 | 0.53 | 15.55 | 0.146 | 0.739 | 0.0028 |
| 86 | SLV 4 | 17.98 | 0.53 | 15.55 | 0.146 | 0.739 | 0.0028 |
| 86 | SLV 5 | 10.28 | -1.19 | 43.65 | -1.1182 | 0.4084 | -0.0065 |
| 86 | SLV 6 | 10.28 | -1.19 | 43.65 | -1.1182 | 0.4084 | -0.0065 |
| 86 | SLV 7 | 2.13 | 1.02 | 12.26 | 1.1439 | 0.0682 | 0.0054 |
| 86 | SLV 8 | 2.13 | 1.02 | 12.26 | 1.1439 | 0.0682 | 0.0054 |
| 86 | SLV 9 | -0.86 | -1.43 | 50.25 | -0.9414 | -0.0646 | -0.0078 |
| 86 | SLV 10 | -0.86 | -1.43 | 50.25 | -0.9414 | -0.0646 | -0.0078 |
| 86 | SLV 11 | -9.02 | 0.77 | 18.86 | 1.3207 | -0.4048 | 0.004 |
| 86 | SLV 12 | -9.02 | 0.77 | 18.86 | 1.3207 | -0.4048 | 0.004 |
| 86 | SLV 13 | -16.72 | -0.94 | 46.96 | 0.0565 | -0.7354 | -0.0053 |
| 86 | SLV 14 | -16.72 | -0.94 | 46.96 | 0.0565 | -0.7354 | -0.0053 |
| 86 | SLV 15 | -19.17 | -0.28 | 37.54 | 0.7352 | -0.8375 | -0.0017 |
| 86 | SLV 16 | -19.17 | -0.28 | 37.54 | 0.7352 | -0.8375 | -0.0017 |
| 87 | SLU 1 | 0.96 | -0.18 | 34.64 | 0.083 | 0.0072 | -0.0007 |
| 87 | SLU 2 | 2.56 | -0.1 | 35.73 | -0.0411 | 0.0735 | -0.0005 |
| 87 | SLU 3 | 0.98 | -0.18 | 35.54 | 0.0864 | 0.0068 | -0.0007 |
| 87 | SLU 4 | 1.95 | -0.14 | 36.19 | 0.0119 | 0.0466 | -0.0006 |
| 87 | SLU 5 | 2.55 | -0.11 | 36.32 | -0.0389 | 0.072 | -0.0005 |
| 87 | SLU 6 | 0.97 | -0.19 | 36.13 | 0.0886 | 0.0053 | -0.0007 |
| 87 | SLU 7 | 1.94 | -0.14 | 36.78 | 0.0141 | 0.0451 | -0.0006 |
| 87 | SLU 8 | 0.93 | -0.19 | 35.82 | 0.0874 | 0.0041 | -0.0007 |
| 87 | SLU 9 | 1.9 | -0.14 | 36.48 | 0.013 | 0.0439 | -0.0006 |
| 87 | SLU 10 | 2.47 | -0.12 | 40.06 | -0.0329 | 0.0661 | -0.0005 |
| 87 | SLU 11 | 0.89 | -0.2 | 39.87 | 0.0945 | -0.0006 | -0.0008 |
| 87 | SLU 12 | 1.85 | -0.16 | 40.52 | 0.0201 | 0.0392 | -0.0006 |
| 87 | SLU 13 | 2.45 | -0.13 | 40.65 | -0.0307 | 0.0646 | -0.0006 |
| 87 | SLU 14 | 0.87 | -0.21 | 40.46 | 0.0967 | -0.0021 | -0.0008 |
| 87 | SLU 15 | 1.84 | -0.16 | 41.11 | 0.0222 | 0.0377 | -0.0007 |
| 87 | SLU 16 | 0.83 | -0.21 | 40.16 | 0.0955 | -0.0033 | -0.0008 |
| 87 | SLU 17 | 1.8 | -0.16 | 40.81 | 0.0211 | 0.0365 | -0.0006 |
| 87 | SLU 18 | 0.82 | -0.21 | 40.83 | 0.0946 | -0.0034 | -0.0008 |
| 87 | SLU 19 | 1.78 | -0.16 | 41.48 | 0.0202 | 0.0364 | -0.0006 |
| 87 | SLU 20 | 0.8 | -0.21 | 41.42 | 0.0968 | -0.0049 | -0.0008 |
| 87 | SLU 21 | 1.77 | -0.17 | 42.07 | 0.0224 | 0.0349 | -0.0007 |
| 87 | SLU 22 | 0.95 | -0.2 | 38.9 | 0.0929 | 0.0023 | -0.0007 |
| 87 | SLU 23 | 2.55 | -0.13 | 39.99 | -0.0312 | 0.0686 | -0.0005 |
| 87 | SLU 24 | 0.97 | -0.21 | 39.8 | 0.0963 | 0.0019 | -0.0008 |
| 87 | SLU 25 | 1.94 | -0.16 | 40.45 | 0.0218 | 0.0417 | -0.0006 |
| 87 | SLU 26 | 2.54 | -0.13 | 40.58 | -0.029 | 0.0671 | -0.0006 |
| 87 | SLU 27 | 0.96 | -0.21 | 40.39 | 0.0984 | 0.0004 | -0.0008 |
| 87 | SLU 28 | 1.92 | -0.17 | 41.05 | 0.024 | 0.0402 | -0.0007 |
| 87 | SLU 29 | 0.92 | -0.21 | 40.09 | 0.0973 | -0.0008 | -0.0008 |

| Nodo | Cont. | Reazione a traslazione | | | Reazione a rotazione | | |
|---|---|---|---|---|---|---|---|
| Ind. | N.br. | x | y | z | x | y | z |
| 87 | SLU 30 | 1.89 | -0.16 | 40.74 | 0.0228 | 0.039 | -0.0007 |
| 87 | SLU 31 | 2.46 | -0.15 | 44.32 | -0.023 | 0.0612 | -0.0006 |
| 87 | SLU 32 | 0.87 | -0.23 | 44.13 | 0.1044 | -0.0055 | -0.0008 |
| 87 | SLU 33 | 1.84 | -0.18 | 44.79 | 0.0299 | 0.0343 | -0.0007 |
| 87 | SLU 34 | 2.44 | -0.15 | 44.92 | -0.0208 | 0.0597 | -0.0006 |
| 87 | SLU 35 | 0.86 | -0.23 | 44.73 | 0.1066 | -0.007 | -0.0009 |
| 87 | SLU 36 | 1.83 | -0.19 | 45.38 | 0.0321 | 0.0328 | -0.0007 |
| 87 | SLU 37 | 0.82 | -0.23 | 44.42 | 0.1054 | -0.0082 | -0.0009 |
| 87 | SLU 38 | 1.79 | -0.18 | 45.07 | 0.031 | 0.0316 | -0.0007 |
| 87 | SLU 39 | 0.81 | -0.23 | 45.09 | 0.1045 | -0.0083 | -0.0009 |
| 87 | SLU 40 | 1.77 | -0.18 | 45.75 | 0.0301 | 0.0315 | -0.0007 |
| 87 | SLU 41 | 0.79 | -0.23 | 45.69 | 0.1067 | -0.0098 | -0.0009 |
| 87 | SLU 42 | 1.76 | -0.19 | 46.34 | 0.0323 | 0.03 | -0.0007 |
| 87 | SLU 43 | 1.25 | -0.22 | 43.57 | 0.1046 | 0.011 | -0.0008 |
| 87 | SLU 44 | 2.86 | -0.15 | 44.66 | -0.0195 | 0.0774 | -0.0006 |
| 87 | SLU 45 | 1.28 | -0.23 | 44.47 | 0.1079 | 0.0107 | -0.0009 |
| 87 | SLU 46 | 2.24 | -0.18 | 45.12 | 0.0334 | 0.0505 | -0.0007 |
| 87 | SLU 47 | 2.84 | -0.15 | 45.25 | -0.0173 | 0.0758 | -0.0006 |
| 87 | SLU 48 | 1.26 | -0.23 | 45.06 | 0.1101 | 0.0092 | -0.0009 |
| 87 | SLU 49 | 2.23 | -0.19 | 45.71 | 0.0356 | 0.049 | -0.0007 |
| 87 | SLU 50 | 1.22 | -0.23 | 44.75 | 0.1089 | 0.008 | -0.0009 |
| 87 | SLU 51 | 2.19 | -0.19 | 45.4 | 0.0345 | 0.0478 | -0.0007 |
| 87 | SLU 52 | 2.76 | -0.17 | 48.99 | -0.0114 | 0.0699 | -0.0007 |
| 87 | SLU 53 | 1.18 | -0.25 | 48.8 | 0.116 | 0.0033 | -0.0009 |
| 87 | SLU 54 | 2.14 | -0.2 | 49.45 | 0.0416 | 0.0431 | -0.0008 |
| 87 | SLU 55 | 2.74 | -0.17 | 49.58 | -0.0092 | 0.0684 | -0.0007 |
| 87 | SLU 56 | 1.16 | -0.25 | 49.39 | 0.1182 | 0.0017 | -0.0009 |
| 87 | SLU 57 | 2.13 | -0.21 | 50.04 | 0.0438 | 0.0415 | -0.0008 |
| 87 | SLU 58 | 1.12 | -0.25 | 49.08 | 0.1171 | 0.0006 | -0.0009 |
| 87 | SLU 59 | 2.09 | -0.21 | 49.74 | 0.0426 | 0.0404 | -0.0008 |
| 87 | SLU 60 | 1.11 | -0.25 | 49.76 | 0.1162 | 0.0004 | -0.0009 |
| 87 | SLU 61 | 2.07 | -0.21 | 50.41 | 0.0417 | 0.0402 | -0.0008 |
| 87 | SLU 62 | 1.1 | -0.26 | 50.35 | 0.1184 | -0.0011 | -0.001 |
| 87 | SLU 63 | 2.06 | -0.21 | 51 | 0.0439 | 0.0387 | -0.0008 |
| 87 | SLU 64 | 1.24 | -0.25 | 47.83 | 0.1144 | 0.0061 | -0.0009 |
| 87 | SLU 65 | 2.84 | -0.17 | 48.92 | -0.0096 | 0.0724 | -0.0007 |
| 87 | SLU 66 | 1.26 | -0.25 | 48.73 | 0.1178 | 0.0058 | -0.0009 |
| 87 | SLU 67 | 2.23 | -0.21 | 49.38 | 0.0433 | 0.0456 | -0.0008 |
| 87 | SLU 68 | 2.83 | -0.18 | 49.51 | -0.0075 | 0.0709 | -0.0007 |
| 87 | SLU 69 | 1.25 | -0.26 | 49.32 | 0.12 | 0.0043 | -0.001 |
| 87 | SLU 70 | 2.22 | -0.21 | 49.97 | 0.0455 | 0.044 | -0.0008 |
| 87 | SLU 71 | 1.21 | -0.25 | 49.02 | 0.1188 | 0.0031 | -0.0009 |
| 87 | SLU 72 | 2.18 | -0.21 | 49.67 | 0.0444 | 0.0429 | -0.0008 |
| 87 | SLU 73 | 2.75 | -0.19 | 53.25 | -0.0015 | 0.065 | -0.0008 |
| 87 | SLU 74 | 1.17 | -0.27 | 53.06 | 0.1259 | -0.0016 | -0.001 |
| 87 | SLU 75 | 2.13 | -0.23 | 53.72 | 0.0515 | 0.0382 | -0.0009 |
| 87 | SLU 76 | 2.73 | -0.2 | 53.85 | 0.0007 | 0.0635 | -0.0008 |
| 87 | SLU 77 | 1.15 | -0.28 | 53.65 | 0.1281 | -0.0032 | -0.001 |
| 87 | SLU 78 | 2.12 | -0.23 | 54.31 | 0.0536 | 0.0366 | -0.0009 |
| 87 | SLU 79 | 1.11 | -0.27 | 53.35 | 0.127 | -0.0044 | -0.001 |
| 87 | SLU 80 | 2.08 | -0.23 | 54 | 0.0525 | 0.0354 | -0.0009 |
| 87 | SLU 81 | 1.1 | -0.27 | 54.02 | 0.1261 | -0.0045 | -0.001 |
| 87 | SLU 82 | 2.06 | -0.23 | 54.68 | 0.0516 | 0.0353 | -0.0009 |
| 87 | SLU 83 | 1.08 | -0.28 | 54.61 | 0.1282 | -0.006 | -0.001 |
| 87 | SLU 84 | 2.05 | -0.23 | 55.27 | 0.0538 | 0.0338 | -0.0009 |
| 87 | SLE RA 1 | 0.95 | -0.18 | 35.86 | 0.0859 | 0.0058 | -0.0007 |
| 87 | SLE RA 2 | 2.03 | -0.13 | 36.58 | 0.0031 | 0.05 | -0.0006 |
| 87 | SLE RA 3 | 0.97 | -0.19 | 36.46 | 0.0881 | 0.0056 | -0.0007 |
| 87 | SLE RA 4 | 1.62 | -0.16 | 36.89 | 0.0385 | 0.0321 | -0.0006 |
| 87 | SLE RA 5 | 2.02 | -0.14 | 36.98 | 0.0046 | 0.049 | -0.0006 |
| 87 | SLE RA 6 | 0.96 | -0.19 | 36.85 | 0.0895 | 0.0045 | -0.0007 |
| 87 | SLE RA 7 | 1.61 | -0.16 | 37.28 | 0.0399 | 0.0311 | -0.0006 |
| 87 | SLE RA 8 | 0.94 | -0.19 | 36.65 | 0.0888 | 0.0038 | -0.0007 |
| 87 | SLE RA 9 | 1.58 | -0.16 | 37.08 | 0.0391 | 0.0303 | -0.0006 |
| 87 | SLE RA 10 | 1.96 | -0.15 | 39.47 | 0.0086 | 0.0451 | -0.0006 |
| 87 | SLE RA 11 | 0.91 | -0.2 | 39.34 | 0.0935 | 0.0006 | -0.0008 |
| 87 | SLE RA 12 | 1.55 | -0.17 | 39.78 | 0.0439 | 0.0271 | -0.0007 |
| 87 | SLE RA 13 | 1.95 | -0.15 | 39.87 | 0.01 | 0.044 | -0.0006 |
| 87 | SLE RA 14 | 0.9 | -0.2 | 39.74 | 0.095 | -0.0004 | -0.0008 |
| 87 | SLE RA 15 | 1.54 | -0.17 | 40.17 | 0.0453 | 0.0261 | -0.0007 |
| 87 | SLE RA 16 | 0.87 | -0.2 | 39.54 | 0.0942 | -0.0012 | -0.0008 |
| 87 | SLE RA 17 | 1.51 | -0.17 | 39.97 | 0.0446 | 0.0253 | -0.0007 |
| 87 | SLE RA 18 | 0.86 | -0.2 | 39.98 | 0.0936 | -0.0013 | -0.0008 |
| 87 | SLE RA 19 | 1.5 | -0.17 | 40.42 | 0.044 | 0.0252 | -0.0007 |
| 87 | SLE RA 20 | 0.85 | -0.21 | 40.38 | 0.0951 | -0.0023 | -0.0008 |
| 87 | SLE RA 21 | 1.49 | -0.18 | 40.81 | 0.0454 | 0.0242 | -0.0007 |
| 87 | SLE FR 1 | 0.95 | -0.18 | 35.86 | 0.0859 | 0.0058 | -0.0007 |
| 87 | SLE FR 2 | 1.17 | -0.17 | 36 | 0.0693 | 0.0146 | -0.0007 |
| 87 | SLE FR 3 | 0.95 | -0.19 | 36.02 | 0.0864 | 0.0054 | -0.0007 |
| 87 | SLE FR 4 | 1.14 | -0.18 | 37.24 | 0.0716 | 0.0125 | -0.0007 |
| 87 | SLE FR 5 | 0.92 | -0.19 | 37.25 | 0.0888 | 0.0033 | -0.0007 |
| 87 | SLE FR 6 | 0.91 | -0.19 | 37.92 | 0.0897 | 0.0022 | -0.0007 |
| 87 | SLE QP 1 | 0.95 | -0.18 | 35.86 | 0.0859 | 0.0058 | -0.0007 |
| 87 | SLE QP 2 | 0.93 | -0.19 | 37.1 | 0.0882 | 0.0037 | -0.0007 |
| 87 | SLD 1 | 9.06 | -0.12 | 32.15 | -0.1251 | 0.3646 | -0.0004 |
| 87 | SLD 2 | 9.06 | -0.12 | 32.15 | -0.1251 | 0.3646 | -0.0004 |
| 87 | SLD 3 | 7.89 | 0.08 | 27.27 | 0.0809 | 0.3114 | 0.0003 |
| 87 | SLD 4 | 7.89 | 0.08 | 27.27 | 0.0809 | 0.3114 | 0.0003 |

| Nodo | Cont. | Reazione a traslazione | | | Reazione a rotazione | | |
|---|---|---|---|---|---|---|---|
| Ind. | N.br. | x | y | z | x | y | z |
| 87 | SLD 5 | 5.13 | -0.48 | 43.01 | -0.2881 | 0.1926 | -0.0017 |
| 87 | SLD 6 | 5.13 | -0.48 | 43.01 | -0.2881 | 0.1926 | -0.0017 |
| 87 | SLD 7 | 1.25 | 0.2 | 26.75 | 0.3983 | 0.0153 | 0.0006 |
| 87 | SLD 8 | 1.25 | 0.2 | 26.75 | 0.3983 | 0.0153 | 0.0006 |
| 87 | SLD 9 | 0.6 | -0.58 | 47.44 | -0.2219 | -0.008 | -0.0021 |
| 87 | SLD 10 | 0.6 | -0.58 | 47.44 | -0.2219 | -0.008 | -0.0021 |
| 87 | SLD 11 | -3.28 | 0.1 | 31.18 | 0.4645 | -0.1853 | 0.0003 |
| 87 | SLD 12 | -3.28 | 0.1 | 31.18 | 0.4645 | -0.1853 | 0.0003 |
| 87 | SLD 13 | -6.04 | -0.46 | 46.92 | 0.0955 | -0.3041 | -0.0017 |
| 87 | SLD 14 | -6.04 | -0.46 | 46.92 | 0.0955 | -0.3041 | -0.0017 |
| 87 | SLD 15 | -7.21 | -0.26 | 42.04 | 0.3014 | -0.3573 | -0.001 |
| 87 | SLD 16 | -7.21 | -0.26 | 42.04 | 0.3014 | -0.3573 | -0.001 |
| 87 | SLV 1 | 19.72 | -0.04 | 25.54 | -0.4349 | 0.8389 | -0.0001 |
| 87 | SLV 2 | 19.72 | -0.04 | 25.54 | -0.4349 | 0.8389 | -0.0001 |
| 87 | SLV 3 | 16.85 | 0.46 | 14.12 | 0.0847 | 0.7064 | 0.0016 |
| 87 | SLV 4 | 16.85 | 0.46 | 14.12 | 0.0847 | 0.7064 | 0.0016 |
| 87 | SLV 5 | 10.93 | -0.9 | 50.94 | -0.8569 | 0.4553 | -0.0031 |
| 87 | SLV 6 | 10.93 | -0.9 | 50.94 | -0.8569 | 0.4553 | -0.0031 |
| 87 | SLV 7 | 1.34 | 0.76 | 12.89 | 0.8753 | 0.0134 | 0.0026 |
| 87 | SLV 8 | 1.34 | 0.76 | 12.89 | 0.8753 | 0.0134 | 0.0026 |
| 87 | SLV 9 | 0.51 | -1.14 | 61.3 | -0.6989 | -0.0061 | -0.004 |
| 87 | SLV 10 | 0.51 | -1.14 | 61.3 | -0.6989 | -0.0061 | -0.004 |
| 87 | SLV 11 | -9.08 | 0.53 | 23.25 | 1.0332 | -0.448 | 0.0017 |
| 87 | SLV 12 | -9.08 | 0.53 | 23.25 | 1.0332 | -0.448 | 0.0017 |
| 87 | SLV 13 | -14.99 | -0.84 | 60.07 | 0.0917 | -0.699 | -0.003 |
| 87 | SLV 14 | -14.99 | -0.84 | 60.07 | 0.0917 | -0.699 | -0.003 |
| 87 | SLV 15 | -17.87 | -0.34 | 48.65 | 0.6113 | -0.8316 | -0.0013 |
| 87 | SLV 16 | -17.87 | -0.34 | 48.65 | 0.6113 | -0.8316 | -0.0013 |
| 88 | SLU 1 | 0.33 | -0.11 | 41.33 | 0.0513 | -0.0184 | -0.0003 |
| 88 | SLU 2 | 2.15 | -0.08 | 42.87 | -0.0289 | 0.0549 | -0.0003 |
| 88 | SLU 3 | 0.36 | -0.11 | 42.52 | 0.0534 | -0.0187 | -0.0003 |
| 88 | SLU 4 | 1.45 | -0.09 | 43.45 | 0.0053 | 0.0253 | -0.0003 |
| 88 | SLU 5 | 2.14 | -0.08 | 43.66 | -0.0275 | 0.0535 | -0.0003 |
| 88 | SLU 6 | 0.35 | -0.12 | 43.32 | 0.0548 | -0.0201 | -0.0003 |
| 88 | SLU 7 | 1.44 | -0.1 | 44.24 | 0.0067 | 0.0238 | -0.0003 |
| 88 | SLU 8 | 0.31 | -0.11 | 42.92 | 0.0541 | -0.0213 | -0.0003 |
| 88 | SLU 9 | 1.4 | -0.1 | 43.84 | 0.006 | 0.0227 | -0.0003 |
| 88 | SLU 10 | 1.94 | -0.09 | 47.91 | -0.0239 | 0.0421 | -0.0003 |
| 88 | SLU 11 | 0.14 | -0.13 | 47.56 | 0.0584 | -0.0315 | -0.0003 |
| 88 | SLU 12 | 1.23 | -0.11 | 48.49 | 0.0103 | 0.0125 | -0.0003 |
| 88 | SLU 13 | 1.92 | -0.09 | 48.7 | -0.0225 | 0.0406 | -0.0003 |
| 88 | SLU 14 | 0.13 | -0.13 | 48.36 | 0.0598 | -0.033 | -0.0003 |
| 88 | SLU 15 | 1.22 | -0.11 | 49.28 | 0.0117 | 0.011 | -0.0003 |
| 88 | SLU 16 | 0.09 | -0.13 | 47.96 | 0.0591 | -0.0341 | -0.0003 |
| 88 | SLU 17 | 1.18 | -0.11 | 48.88 | 0.0109 | 0.0099 | -0.0003 |
| 88 | SLU 18 | 0.02 | -0.13 | 48.53 | 0.0584 | -0.0367 | -0.0003 |
| 88 | SLU 19 | 1.11 | -0.11 | 49.45 | 0.0103 | 0.0073 | -0.0003 |
| 88 | SLU 20 | 0.01 | -0.13 | 49.32 | 0.0598 | -0.0382 | -0.0003 |
| 88 | SLU 21 | 1.1 | -0.11 | 50.25 | 0.0117 | 0.0058 | -0.0003 |
| 88 | SLU 22 | 0.23 | -0.12 | 46.49 | 0.0575 | -0.027 | -0.0003 |
| 88 | SLU 23 | 2.05 | -0.09 | 48.03 | -0.0227 | 0.0463 | -0.0003 |
| 88 | SLU 24 | 0.26 | -0.13 | 47.69 | 0.0596 | -0.0273 | -0.0003 |
| 88 | SLU 25 | 1.35 | -0.11 | 48.61 | 0.0115 | 0.0167 | -0.0003 |
| 88 | SLU 26 | 2.04 | -0.09 | 48.83 | -0.0213 | 0.0449 | -0.0003 |
| 88 | SLU 27 | 0.25 | -0.13 | 48.48 | 0.061 | -0.0287 | -0.0003 |
| 88 | SLU 28 | 1.34 | -0.11 | 49.4 | 0.0128 | 0.0152 | -0.0003 |
| 88 | SLU 29 | 0.21 | -0.13 | 48.08 | 0.0602 | -0.0299 | -0.0003 |
| 88 | SLU 30 | 1.3 | -0.11 | 49 | 0.0121 | 0.0141 | -0.0003 |
| 88 | SLU 31 | 1.83 | -0.1 | 53.07 | -0.0177 | 0.0335 | -0.0004 |
| 88 | SLU 32 | 0.04 | -0.14 | 52.72 | 0.0646 | -0.0401 | -0.0003 |
| 88 | SLU 33 | 1.13 | -0.12 | 53.65 | 0.0164 | 0.0039 | -0.0004 |
| 88 | SLU 34 | 1.82 | -0.11 | 53.86 | -0.0164 | 0.032 | -0.0004 |
| 88 | SLU 35 | 0.03 | -0.14 | 53.52 | 0.0659 | -0.0416 | -0.0003 |
| 88 | SLU 36 | 1.12 | -0.12 | 54.44 | 0.0178 | 0.0024 | -0.0004 |
| 88 | SLU 37 | -0.01 | -0.14 | 53.12 | 0.0652 | -0.0427 | -0.0003 |
| 88 | SLU 38 | 1.08 | -0.12 | 54.04 | 0.0171 | 0.0013 | -0.0004 |
| 88 | SLU 39 | -0.08 | -0.14 | 53.69 | 0.0646 | -0.0453 | -0.0003 |
| 88 | SLU 40 | 1.01 | -0.12 | 54.62 | 0.0165 | -0.0013 | -0.0004 |
| 88 | SLU 41 | -0.09 | -0.14 | 54.48 | 0.066 | -0.0468 | -0.0004 |
| 88 | SLU 42 | 1 | -0.12 | 55.41 | 0.0179 | -0.0028 | -0.0004 |
| 88 | SLU 43 | 0.47 | -0.14 | 51.96 | 0.0646 | -0.0209 | -0.0003 |
| 88 | SLU 44 | 2.29 | -0.1 | 53.5 | -0.0156 | 0.0524 | -0.0004 |
| 88 | SLU 45 | 0.49 | -0.14 | 53.15 | 0.0667 | -0.0212 | -0.0003 |
| 88 | SLU 46 | 1.59 | -0.12 | 54.08 | 0.0186 | 0.0227 | -0.0004 |
| 88 | SLU 47 | 2.28 | -0.11 | 54.29 | -0.0142 | 0.0509 | -0.0004 |
| 88 | SLU 48 | 0.48 | -0.14 | 53.95 | 0.0681 | -0.0227 | -0.0004 |
| 88 | SLU 49 | 1.58 | -0.12 | 54.87 | 0.02 | 0.0213 | -0.0004 |
| 88 | SLU 50 | 0.45 | -0.14 | 53.55 | 0.0674 | -0.0238 | -0.0003 |
| 88 | SLU 51 | 1.54 | -0.12 | 54.47 | 0.0192 | 0.0201 | -0.0004 |
| 88 | SLU 52 | 2.07 | -0.12 | 58.54 | -0.0106 | 0.0395 | -0.0004 |
| 88 | SLU 53 | 0.27 | -0.15 | 58.19 | 0.0717 | -0.0341 | -0.0004 |
| 88 | SLU 54 | 1.37 | -0.13 | 59.12 | 0.0236 | 0.0099 | -0.0004 |
| 88 | SLU 55 | 2.06 | -0.12 | 59.33 | -0.0092 | 0.0381 | -0.0004 |
| 88 | SLU 56 | 0.26 | -0.16 | 58.99 | 0.0731 | -0.0355 | -0.0004 |
| 88 | SLU 57 | 1.36 | -0.14 | 59.91 | 0.0249 | 0.0085 | -0.0004 |
| 88 | SLU 58 | 0.23 | -0.15 | 58.59 | 0.0724 | -0.0367 | -0.0004 |
| 88 | SLU 59 | 1.32 | -0.14 | 59.51 | 0.0242 | 0.0073 | -0.0004 |
| 88 | SLU 60 | 0.15 | -0.15 | 59.16 | 0.0717 | -0.0393 | -0.0004 |

| Nodo | Cont. | Reazione a traslazione | | | Reazione a rotazione | | |
|---|---|---|---|---|---|---|---|
| Ind. | N.br. | x | y | z | x | y | z |
| 88 | SLU 61 | 1.25 | -0.14 | 60.08 | 0.0236 | 0.0047 | -0.0004 |
| 88 | SLU 62 | 0.14 | -0.16 | 59.95 | 0.0731 | -0.0407 | -0.0004 |
| 88 | SLU 63 | 1.24 | -0.14 | 60.88 | 0.025 | 0.0033 | -0.0004 |
| 88 | SLU 64 | 0.37 | -0.15 | 57.12 | 0.0708 | -0.0295 | -0.0004 |
| 88 | SLU 65 | 2.19 | -0.12 | 58.66 | -0.0094 | 0.0438 | -0.0004 |
| 88 | SLU 66 | 0.39 | -0.16 | 58.31 | 0.0729 | -0.0298 | -0.0004 |
| 88 | SLU 67 | 1.49 | -0.14 | 59.24 | 0.0247 | 0.0141 | -0.0004 |
| 88 | SLU 68 | 2.18 | -0.12 | 59.45 | -0.0081 | 0.0423 | -0.0004 |
| 88 | SLU 69 | 0.38 | -0.16 | 59.11 | 0.0742 | -0.0313 | -0.0004 |
| 88 | SLU 70 | 1.48 | -0.14 | 60.03 | 0.0261 | 0.0127 | -0.0004 |
| 88 | SLU 71 | 0.34 | -0.16 | 58.71 | 0.0735 | -0.0324 | -0.0004 |
| 88 | SLU 72 | 1.44 | -0.14 | 59.63 | 0.0254 | 0.0115 | -0.0004 |
| 88 | SLU 73 | 1.97 | -0.13 | 63.7 | -0.0045 | 0.0309 | -0.0004 |
| 88 | SLU 74 | 0.17 | -0.17 | 63.35 | 0.0778 | -0.0427 | -0.0004 |
| 88 | SLU 75 | 1.27 | -0.15 | 64.28 | 0.0297 | 0.0013 | -0.0004 |
| 88 | SLU 76 | 1.96 | -0.13 | 64.49 | -0.0031 | 0.0295 | -0.0004 |
| 88 | SLU 77 | 0.16 | -0.17 | 64.15 | 0.0792 | -0.0441 | -0.0004 |
| 88 | SLU 78 | 1.26 | -0.15 | 65.07 | 0.0311 | -0.0002 | -0.0004 |
| 88 | SLU 79 | 0.12 | -0.17 | 63.75 | 0.0785 | -0.0453 | -0.0004 |
| 88 | SLU 80 | 1.22 | -0.15 | 64.67 | 0.0304 | -0.0013 | -0.0004 |
| 88 | SLU 81 | 0.05 | -0.17 | 64.32 | 0.0779 | -0.0479 | -0.0004 |
| 88 | SLU 82 | 1.14 | -0.15 | 65.24 | 0.0298 | -0.0039 | -0.0004 |
| 88 | SLU 83 | 0.04 | -0.17 | 65.11 | 0.0793 | -0.0493 | -0.0004 |
| 88 | SLU 84 | 1.13 | -0.15 | 66.04 | 0.0311 | -0.0053 | -0.0004 |
| 88 | SLE RA 1 | 0.3 | -0.11 | 42.81 | 0.0531 | -0.0208 | -0.0003 |
| 88 | SLE RA 2 | 1.52 | -0.09 | 43.83 | -0.0004 | 0.028 | -0.0003 |
| 88 | SLE RA 3 | 0.32 | -0.12 | 43.6 | 0.0545 | -0.021 | -0.0003 |
| 88 | SLE RA 4 | 1.05 | -0.1 | 44.22 | 0.0224 | 0.0083 | -0.0003 |
| 88 | SLE RA 5 | 1.51 | -0.09 | 44.36 | 0.0005 | 0.0271 | -0.0003 |
| 88 | SLE RA 6 | 0.31 | -0.12 | 44.13 | 0.0554 | -0.022 | -0.0003 |
| 88 | SLE RA 7 | 1.04 | -0.1 | 44.75 | 0.0233 | 0.0073 | -0.0003 |
| 88 | SLE RA 8 | 0.29 | -0.12 | 43.86 | 0.0549 | -0.0228 | -0.0003 |
| 88 | SLE RA 9 | 1.02 | -0.1 | 44.48 | 0.0228 | 0.0066 | -0.0003 |
| 88 | SLE RA 10 | 1.37 | -0.1 | 47.19 | 0.0029 | 0.0195 | -0.0003 |
| 88 | SLE RA 11 | 0.17 | -0.12 | 46.96 | 0.0578 | -0.0296 | -0.0003 |
| 88 | SLE RA 12 | 0.9 | -0.11 | 47.58 | 0.0257 | -0.0003 | -0.0003 |
| 88 | SLE RA 13 | 1.36 | -0.1 | 47.72 | 0.0039 | 0.0185 | -0.0003 |
| 88 | SLE RA 14 | 0.17 | -0.13 | 47.49 | 0.0587 | -0.0305 | -0.0003 |
| 88 | SLE RA 15 | 0.9 | -0.11 | 48.11 | 0.0266 | -0.0012 | -0.0003 |
| 88 | SLE RA 16 | 0.14 | -0.13 | 47.22 | 0.0582 | -0.0313 | -0.0003 |
| 88 | SLE RA 17 | 0.87 | -0.11 | 47.84 | 0.0262 | -0.002 | -0.0003 |
| 88 | SLE RA 18 | 0.09 | -0.13 | 47.6 | 0.0578 | -0.033 | -0.0003 |
| 88 | SLE RA 19 | 0.82 | -0.11 | 48.22 | 0.0257 | -0.0037 | -0.0003 |
| 88 | SLE RA 20 | 0.09 | -0.13 | 48.13 | 0.0588 | -0.034 | -0.0003 |
| 88 | SLE RA 21 | 0.82 | -0.11 | 48.75 | 0.0267 | -0.0047 | -0.0003 |
| 88 | SLE FR 1 | 0.3 | -0.11 | 42.81 | 0.0531 | -0.0208 | -0.0003 |
| 88 | SLE FR 2 | 0.55 | -0.11 | 43.01 | 0.0424 | -0.011 | -0.0003 |
| 88 | SLE FR 3 | 0.3 | -0.11 | 43.02 | 0.0534 | -0.0212 | -0.0003 |
| 88 | SLE FR 4 | 0.48 | -0.11 | 44.45 | 0.0438 | -0.0147 | -0.0003 |
| 88 | SLE FR 5 | 0.24 | -0.12 | 44.46 | 0.0549 | -0.0249 | -0.0003 |
| 88 | SLE FR 6 | 0.2 | -0.12 | 45.21 | 0.0555 | -0.0269 | -0.0003 |
| 88 | SLE QP 1 | 0.3 | -0.11 | 42.81 | 0.0531 | -0.0208 | -0.0003 |
| 88 | SLE QP 2 | 0.24 | -0.12 | 44.25 | 0.0545 | -0.0245 | -0.0003 |
| 88 | SLD 1 | 7.86 | -0.03 | 36.28 | -0.0986 | 0.3048 | 0 |
| 88 | SLD 2 | 7.86 | -0.03 | 36.28 | -0.0986 | 0.3048 | 0 |
| 88 | SLD 3 | 6.58 | 0.09 | 29.84 | 0.0362 | 0.2524 | 0.0002 |
| 88 | SLD 4 | 6.58 | 0.09 | 29.84 | 0.0362 | 0.2524 | 0.0002 |
| 88 | SLD 5 | 4.47 | -0.28 | 51.63 | -0.1959 | 0.1537 | -0.0004 |
| 88 | SLD 6 | 4.47 | -0.28 | 51.63 | -0.1959 | 0.1537 | -0.0004 |
| 88 | SLD 7 | 0.2 | 0.13 | 30.15 | 0.2534 | -0.0208 | 0.0001 |
| 88 | SLD 8 | 0.2 | 0.13 | 30.15 | 0.2534 | -0.0208 | 0.0001 |
| 88 | SLD 9 | 0.28 | -0.37 | 58.34 | -0.1444 | -0.0282 | -0.0007 |
| 88 | SLD 10 | 0.28 | -0.37 | 58.34 | -0.1444 | -0.0282 | -0.0007 |
| 88 | SLD 11 | -3.99 | 0.04 | 36.86 | 0.3049 | -0.2026 | -0.0001 |
| 88 | SLD 12 | -3.99 | 0.04 | 36.86 | 0.3049 | -0.2026 | -0.0001 |
| 88 | SLD 13 | -6.1 | -0.33 | 58.65 | 0.0728 | -0.3014 | -0.0007 |
| 88 | SLD 14 | -6.1 | -0.33 | 58.65 | 0.0728 | -0.3014 | -0.0007 |
| 88 | SLD 15 | -7.38 | -0.2 | 52.21 | 0.2076 | -0.3537 | -0.0006 |
| 88 | SLD 16 | -7.38 | -0.2 | 52.21 | 0.2076 | -0.3537 | -0.0006 |
| 88 | SLV 1 | 17.86 | 0.09 | 25.63 | -0.3198 | 0.7377 | 0.0004 |
| 88 | SLV 2 | 17.86 | 0.09 | 25.63 | -0.3198 | 0.7377 | 0.0004 |
| 88 | SLV 3 | 14.69 | 0.38 | 10.6 | 0.0192 | 0.6073 | 0.0008 |
| 88 | SLV 4 | 14.69 | 0.38 | 10.6 | 0.0192 | 0.6073 | 0.0008 |
| 88 | SLV 5 | 10.32 | -0.5 | 61.45 | -0.5719 | 0.4019 | -0.0006 |
| 88 | SLV 6 | 10.32 | -0.5 | 61.45 | -0.5719 | 0.4019 | -0.0006 |
| 88 | SLV 7 | -0.22 | 0.48 | 11.37 | 0.558 | -0.0326 | 0.0006 |
| 88 | SLV 8 | -0.22 | 0.48 | 11.37 | 0.558 | -0.0326 | 0.0006 |
| 88 | SLV 9 | 0.7 | -0.72 | 77.13 | -0.449 | -0.0163 | -0.0012 |
| 88 | SLV 10 | 0.7 | -0.72 | 77.13 | -0.449 | -0.0163 | -0.0012 |
| 88 | SLV 11 | -9.84 | 0.27 | 27.04 | 0.6809 | -0.4508 | 0.0001 |
| 88 | SLV 12 | -9.84 | 0.27 | 27.04 | 0.6809 | -0.4508 | 0.0001 |
| 88 | SLV 13 | -14.21 | -0.62 | 77.89 | 0.0898 | -0.6563 | -0.0014 |
| 88 | SLV 14 | -14.21 | -0.62 | 77.89 | 0.0898 | -0.6563 | -0.0014 |
| 88 | SLV 15 | -17.38 | -0.32 | 62.86 | 0.4288 | -0.7866 | -0.001 |
| 88 | SLV 16 | -17.38 | -0.32 | 62.86 | 0.4288 | -0.7866 | -0.001 |
| 89 | SLU 1 | -1.4 | 0.05 | 51.27 | 0.0007 | -0.1406 | 0.0004 |
| 89 | SLU 2 | 0.45 | 0.06 | 53.36 | -0.0394 | -0.0671 | 0.0004 |
| 89 | SLU 3 | -1.42 | 0.05 | 52.89 | 0.0009 | -0.1446 | 0.0004 |

| Nodo | Cont. | Reazione a traslazione | | | Reazione a rotazione | | |
|---|---|---|---|---|---|---|---|
| Ind. | N.br. | x | y | z | x | y | z |
| 89 | SLU 4 | -0.31 | 0.06 | 54.14 | -0.0232 | -0.1005 | 0.0005 |
| 89 | SLU 5 | 0.41 | 0.06 | 54.44 | -0.0392 | -0.071 | 0.0005 |
| 89 | SLU 6 | -1.45 | 0.05 | 53.97 | 0.0011 | -0.1485 | 0.0004 |
| 89 | SLU 7 | -0.35 | 0.06 | 55.22 | -0.023 | -0.1044 | 0.0005 |
| 89 | SLU 8 | -1.48 | 0.05 | 53.44 | 0.001 | -0.1483 | 0.0004 |
| 89 | SLU 9 | -0.37 | 0.06 | 54.69 | -0.0231 | -0.1042 | 0.0005 |
| 89 | SLU 10 | 0.02 | 0.07 | 59.52 | -0.0398 | -0.0946 | 0.0005 |
| 89 | SLU 11 | -1.84 | 0.06 | 59.05 | 0.0005 | -0.1721 | 0.0005 |
| 89 | SLU 12 | -0.74 | 0.07 | 60.3 | -0.0236 | -0.1281 | 0.0005 |
| 89 | SLU 13 | -0.02 | 0.07 | 60.6 | -0.0397 | -0.0985 | 0.0005 |
| 89 | SLU 14 | -1.88 | 0.06 | 60.13 | 0.0007 | -0.176 | 0.0005 |
| 89 | SLU 15 | -0.78 | 0.07 | 61.38 | -0.0234 | -0.1319 | 0.0005 |
| 89 | SLU 16 | -1.9 | 0.06 | 59.59 | 0.0006 | -0.1758 | 0.0005 |
| 89 | SLU 17 | -0.8 | 0.07 | 60.85 | -0.0235 | -0.1317 | 0.0005 |
| 89 | SLU 18 | -2.01 | 0.06 | 60.07 | 0.0002 | -0.1799 | 0.0005 |
| 89 | SLU 19 | -0.9 | 0.07 | 61.32 | -0.0239 | -0.1358 | 0.0005 |
| 89 | SLU 20 | -2.05 | 0.06 | 61.15 | 0.0003 | -0.1838 | 0.0005 |
| 89 | SLU 21 | -0.94 | 0.07 | 62.4 | -0.0238 | -0.1397 | 0.0005 |
| 89 | SLU 22 | -1.72 | 0.06 | 57.78 | 0.0007 | -0.1652 | 0.0005 |
| 89 | SLU 23 | 0.12 | 0.07 | 59.86 | -0.0394 | -0.0917 | 0.0005 |
| 89 | SLU 24 | -1.74 | 0.06 | 59.39 | 0.0009 | -0.1692 | 0.0005 |
| 89 | SLU 25 | -0.63 | 0.07 | 60.65 | -0.0232 | -0.1252 | 0.0005 |
| 89 | SLU 26 | 0.08 | 0.07 | 60.95 | -0.0393 | -0.0956 | 0.0005 |
| 89 | SLU 27 | -1.78 | 0.06 | 60.48 | 0.001 | -0.1731 | 0.0005 |
| 89 | SLU 28 | -0.67 | 0.07 | 61.73 | -0.0231 | -0.129 | 0.0005 |
| 89 | SLU 29 | -1.8 | 0.06 | 59.94 | 0.0009 | -0.1729 | 0.0005 |
| 89 | SLU 30 | -0.69 | 0.07 | 61.19 | -0.0231 | -0.1288 | 0.0005 |
| 89 | SLU 31 | -0.31 | 0.07 | 66.02 | -0.0398 | -0.1193 | 0.0006 |
| 89 | SLU 32 | -2.17 | 0.07 | 65.55 | 0.0005 | -0.1968 | 0.0005 |
| 89 | SLU 33 | -1.06 | 0.07 | 66.8 | -0.0236 | -0.1527 | 0.0006 |
| 89 | SLU 34 | -0.35 | 0.08 | 67.1 | -0.0397 | -0.1231 | 0.0006 |
| 89 | SLU 35 | -2.21 | 0.07 | 66.63 | 0.0006 | -0.2006 | 0.0006 |
| 89 | SLU 36 | -1.1 | 0.07 | 67.89 | -0.0235 | -0.1565 | 0.0006 |
| 89 | SLU 37 | -2.23 | 0.07 | 66.1 | 0.0005 | -0.2004 | 0.0006 |
| 89 | SLU 38 | -1.12 | 0.07 | 67.35 | -0.0235 | -0.1563 | 0.0006 |
| 89 | SLU 39 | -2.33 | 0.07 | 66.57 | 0.0001 | -0.2045 | 0.0006 |
| 89 | SLU 40 | -1.23 | 0.07 | 67.83 | -0.024 | -0.1604 | 0.0006 |
| 89 | SLU 41 | -2.37 | 0.07 | 67.66 | 0.0002 | -0.2084 | 0.0006 |
| 89 | SLU 42 | -1.27 | 0.07 | 68.91 | -0.0238 | -0.1643 | 0.0006 |
| 89 | SLU 43 | -1.71 | 0.06 | 64.42 | 0.001 | -0.1744 | 0.0005 |
| 89 | SLU 44 | 0.14 | 0.07 | 66.51 | -0.0391 | -0.1009 | 0.0006 |
| 89 | SLU 45 | -1.72 | 0.07 | 66.04 | 0.0012 | -0.1784 | 0.0005 |
| 89 | SLU 46 | -0.62 | 0.07 | 67.29 | -0.0229 | -0.1343 | 0.0006 |
| 89 | SLU 47 | 0.1 | 0.08 | 67.59 | -0.039 | -0.1047 | 0.0006 |
| 89 | SLU 48 | -1.76 | 0.07 | 67.12 | 0.0013 | -0.1822 | 0.0006 |
| 89 | SLU 49 | -0.66 | 0.07 | 68.37 | -0.0228 | -0.1381 | 0.0006 |
| 89 | SLU 50 | -1.78 | 0.07 | 66.59 | 0.0013 | -0.182 | 0.0005 |
| 89 | SLU 51 | -0.68 | 0.07 | 67.84 | -0.0228 | -0.138 | 0.0006 |
| 89 | SLU 52 | -0.29 | 0.08 | 72.67 | -0.0395 | -0.1284 | 0.0006 |
| 89 | SLU 53 | -2.15 | 0.07 | 72.2 | 0.0008 | -0.2059 | 0.0006 |
| 89 | SLU 54 | -1.05 | 0.08 | 73.45 | -0.0233 | -0.1618 | 0.0006 |
| 89 | SLU 55 | -0.33 | 0.08 | 73.75 | -0.0394 | -0.1322 | 0.0006 |
| 89 | SLU 56 | -2.19 | 0.07 | 73.28 | 0.0009 | -0.2097 | 0.0006 |
| 89 | SLU 57 | -1.09 | 0.08 | 74.53 | -0.0232 | -0.1656 | 0.0006 |
| 89 | SLU 58 | -2.21 | 0.07 | 72.74 | 0.0008 | -0.2095 | 0.0006 |
| 89 | SLU 59 | -1.11 | 0.08 | 74 | -0.0232 | -0.1655 | 0.0006 |
| 89 | SLU 60 | -2.32 | 0.07 | 73.22 | 0.0004 | -0.2137 | 0.0006 |
| 89 | SLU 61 | -1.21 | 0.08 | 74.47 | -0.0237 | -0.1696 | 0.0006 |
| 89 | SLU 62 | -2.36 | 0.07 | 74.3 | 0.0005 | -0.2175 | 0.0006 |
| 89 | SLU 63 | -1.25 | 0.08 | 75.55 | -0.0235 | -0.1734 | 0.0006 |
| 89 | SLU 64 | -2.03 | 0.07 | 70.93 | 0.0009 | -0.199 | 0.0006 |
| 89 | SLU 65 | -0.19 | 0.08 | 73.01 | -0.0392 | -0.1255 | 0.0006 |
| 89 | SLU 66 | -2.05 | 0.07 | 72.54 | 0.0011 | -0.203 | 0.0006 |
| 89 | SLU 67 | -0.94 | 0.08 | 73.8 | -0.023 | -0.1589 | 0.0006 |
| 89 | SLU 68 | -0.23 | 0.08 | 74.1 | -0.0391 | -0.1293 | 0.0006 |
| 89 | SLU 69 | -2.09 | 0.07 | 73.63 | 0.0012 | -0.2068 | 0.0006 |
| 89 | SLU 70 | -0.98 | 0.08 | 74.88 | -0.0228 | -0.1627 | 0.0006 |
| 89 | SLU 71 | -2.11 | 0.07 | 73.09 | 0.0012 | -0.2066 | 0.0006 |
| 89 | SLU 72 | -1 | 0.08 | 74.34 | -0.0229 | -0.1626 | 0.0006 |
| 89 | SLU 73 | -0.61 | 0.09 | 79.17 | -0.0396 | -0.153 | 0.0007 |
| 89 | SLU 74 | -2.48 | 0.08 | 78.7 | 0.0007 | -0.2305 | 0.0007 |
| 89 | SLU 75 | -1.37 | 0.08 | 79.95 | -0.0234 | -0.1864 | 0.0007 |
| 89 | SLU 76 | -0.65 | 0.09 | 80.25 | -0.0395 | -0.1568 | 0.0007 |
| 89 | SLU 77 | -2.51 | 0.08 | 79.78 | 0.0008 | -0.2343 | 0.0007 |
| 89 | SLU 78 | -1.41 | 0.09 | 81.04 | -0.0232 | -0.1903 | 0.0007 |
| 89 | SLU 79 | -2.54 | 0.08 | 79.25 | 0.0008 | -0.2342 | 0.0007 |
| 89 | SLU 80 | -1.43 | 0.09 | 80.5 | -0.0233 | -0.1901 | 0.0007 |
| 89 | SLU 81 | -2.64 | 0.08 | 79.72 | 0.0003 | -0.2383 | 0.0007 |
| 89 | SLU 82 | -1.54 | 0.09 | 80.98 | -0.0237 | -0.1942 | 0.0007 |
| 89 | SLU 83 | -2.68 | 0.08 | 80.81 | 0.0005 | -0.2421 | 0.0007 |
| 89 | SLU 84 | -1.57 | 0.09 | 82.06 | -0.0236 | -0.198 | 0.0007 |
| 89 | SLE RA 1 | -1.49 | 0.05 | 53.13 | 0.0007 | -0.1476 | 0.0004 |
| 89 | SLE RA 2 | -0.26 | 0.06 | 54.52 | -0.026 | -0.0987 | 0.0005 |
| 89 | SLE RA 3 | -1.5 | 0.05 | 54.21 | 0.0008 | -0.1503 | 0.0004 |
| 89 | SLE RA 4 | -0.76 | 0.06 | 55.04 | -0.0152 | -0.1209 | 0.0005 |
| 89 | SLE RA 5 | -0.29 | 0.06 | 55.24 | -0.0259 | -0.1012 | 0.0005 |
| 89 | SLE RA 6 | -1.53 | 0.05 | 54.93 | 0.0009 | -0.1529 | 0.0005 |
| 89 | SLE RA 7 | -0.79 | 0.06 | 55.76 | -0.0151 | -0.1235 | 0.0005 |

| Nodo | Cont. | Reazione a traslazione | | | Reazione a rotazione | | |
|---|---|---|---|---|---|---|---|
| Ind. | N.br. | x | y | z | x | y | z |
| 89 | SLE RA 8 | -1.54 | 0.05 | 54.57 | 0.0009 | -0.1528 | 0.0005 |
| 89 | SLE RA 9 | -0.8 | 0.06 | 55.41 | -0.0151 | -0.1234 | 0.0005 |
| 89 | SLE RA 10 | -0.55 | 0.06 | 58.63 | -0.0263 | -0.117 | 0.0005 |
| 89 | SLE RA 11 | -1.79 | 0.06 | 58.31 | 0.0006 | -0.1687 | 0.0005 |
| 89 | SLE RA 12 | -1.05 | 0.06 | 59.15 | -0.0155 | -0.1393 | 0.0005 |
| 89 | SLE RA 13 | -0.57 | 0.06 | 59.35 | -0.0262 | -0.1196 | 0.0005 |
| 89 | SLE RA 14 | -1.81 | 0.06 | 59.03 | 0.0007 | -0.1712 | 0.0005 |
| 89 | SLE RA 15 | -1.08 | 0.06 | 59.87 | -0.0154 | -0.1418 | 0.0005 |
| 89 | SLE RA 16 | -1.83 | 0.06 | 58.68 | 0.0006 | -0.1711 | 0.0005 |
| 89 | SLE RA 17 | -1.09 | 0.06 | 59.51 | -0.0154 | -0.1417 | 0.0005 |
| 89 | SLE RA 18 | -1.9 | 0.06 | 58.99 | 0.0003 | -0.1738 | 0.0005 |
| 89 | SLE RA 19 | -1.16 | 0.06 | 59.83 | -0.0157 | -0.1445 | 0.0005 |
| 89 | SLE RA 20 | -1.92 | 0.06 | 59.72 | 0.0004 | -0.1764 | 0.0005 |
| 89 | SLE RA 21 | -1.19 | 0.06 | 60.55 | -0.0156 | -0.147 | 0.0005 |
| 89 | SLE FR 1 | -1.49 | 0.05 | 53.13 | 0.0007 | -0.1476 | 0.0004 |
| 89 | SLE FR 2 | -1.24 | 0.05 | 53.41 | -0.0046 | -0.1378 | 0.0004 |
| 89 | SLE FR 3 | -1.5 | 0.05 | 53.42 | 0.0008 | -0.1487 | 0.0004 |
| 89 | SLE FR 4 | -1.37 | 0.06 | 55.17 | -0.0047 | -0.1457 | 0.0005 |
| 89 | SLE FR 5 | -1.62 | 0.05 | 55.18 | 0.0006 | -0.1565 | 0.0005 |
| 89 | SLE FR 6 | -1.69 | 0.06 | 56.06 | 0.0005 | -0.1607 | 0.0005 |
| 89 | SLE QP 1 | -1.49 | 0.05 | 53.13 | 0.0007 | -0.1476 | 0.0004 |
| 89 | SLE QP 2 | -1.61 | 0.05 | 54.89 | 0.0006 | -0.1555 | 0.0005 |
| 89 | SLD 1 | 5.76 | -0.04 | 42.32 | -0.08 | 0.1952 | 0.0003 |
| 89 | SLD 2 | 5.76 | -0.04 | 42.32 | -0.08 | 0.1952 | 0.0003 |
| 89 | SLD 3 | 4.22 | -0.08 | 33.17 | -0.0145 | 0.1278 | 0.0002 |
| 89 | SLD 4 | 4.22 | -0.08 | 33.17 | -0.0145 | 0.1278 | 0.0002 |
| 89 | SLD 5 | 2.95 | 0.1 | 64.98 | -0.1228 | 0.0519 | 0.0005 |
| 89 | SLD 6 | 2.95 | 0.1 | 64.98 | -0.1228 | 0.0519 | 0.0005 |
| 89 | SLD 7 | -2.21 | -0.06 | 34.51 | 0.0953 | -0.1727 | 0.0003 |
| 89 | SLD 8 | -2.21 | -0.06 | 34.51 | 0.0953 | -0.1727 | 0.0003 |
| 89 | SLD 9 | -1.01 | 0.17 | 75.27 | -0.0941 | -0.1383 | 0.0006 |
| 89 | SLD 10 | -1.01 | 0.17 | 75.27 | -0.0941 | -0.1383 | 0.0006 |
| 89 | SLD 11 | -6.17 | 0.01 | 44.79 | 0.124 | -0.3629 | 0.0004 |
| 89 | SLD 12 | -6.17 | 0.01 | 44.79 | 0.124 | -0.3629 | 0.0004 |
| 89 | SLD 13 | -7.44 | 0.19 | 76.6 | 0.0158 | -0.4388 | 0.0007 |
| 89 | SLD 14 | -7.44 | 0.19 | 76.6 | 0.0158 | -0.4388 | 0.0007 |
| 89 | SLD 15 | -8.98 | 0.15 | 67.46 | 0.0812 | -0.5062 | 0.0006 |
| 89 | SLD 16 | -8.98 | 0.15 | 67.46 | 0.0812 | -0.5062 | 0.0006 |
| 89 | SLV 1 | 15.47 | -0.16 | 25.56 | -0.1957 | 0.6579 | 0.0001 |
| 89 | SLV 2 | 15.47 | -0.16 | 25.56 | -0.1957 | 0.6579 | 0.0001 |
| 89 | SLV 3 | 11.66 | -0.28 | 4.2 | -0.032 | 0.4899 | -0.0001 |
| 89 | SLV 4 | 11.66 | -0.28 | 4.2 | -0.032 | 0.4899 | -0.0001 |
| 89 | SLV 5 | 9.29 | 0.17 | 78.47 | -0.3065 | 0.3434 | 0.0006 |
| 89 | SLV 6 | 9.29 | 0.17 | 78.47 | -0.3065 | 0.3434 | 0.0006 |
| 89 | SLV 7 | -3.41 | -0.22 | 7.3 | 0.239 | -0.2168 | 0 |
| 89 | SLV 8 | -3.41 | -0.22 | 7.3 | 0.239 | -0.2168 | 0 |
| 89 | SLV 9 | 0.19 | 0.33 | 102.48 | -0.2378 | -0.0942 | 0.0009 |
| 89 | SLV 10 | 0.19 | 0.33 | 102.48 | -0.2378 | -0.0942 | 0.0009 |
| 89 | SLV 11 | -12.52 | -0.06 | 31.3 | 0.3077 | -0.6544 | 0.0003 |
| 89 | SLV 12 | -12.52 | -0.06 | 31.3 | 0.3077 | -0.6544 | 0.0003 |
| 89 | SLV 13 | -14.88 | 0.38 | 105.57 | 0.0332 | -0.8009 | 0.001 |
| 89 | SLV 14 | -14.88 | 0.38 | 105.57 | 0.0332 | -0.8009 | 0.001 |
| 89 | SLV 15 | -18.69 | 0.27 | 84.22 | 0.1969 | -0.969 | 0.0008 |
| 89 | SLV 16 | -18.69 | 0.27 | 84.22 | 0.1969 | -0.969 | 0.0008 |
| 90 | SLU 1 | -6.35 | 11.13 | 68.24 | -0.2975 | -0.1483 | -0.0018 |
| 90 | SLU 2 | -5.7 | 12.31 | 71.12 | -0.3424 | -0.1093 | -0.0026 |
| 90 | SLU 3 | -6.55 | 11.51 | 70.5 | -0.3075 | -0.1529 | -0.0019 |
| 90 | SLU 4 | -6.16 | 12.22 | 72.23 | -0.3345 | -0.1295 | -0.0023 |
| 90 | SLU 5 | -5.85 | 12.55 | 72.64 | -0.3486 | -0.113 | -0.0026 |
| 90 | SLU 6 | -6.7 | 11.75 | 72.02 | -0.3137 | -0.1565 | -0.0019 |
| 90 | SLU 7 | -6.3 | 12.46 | 73.75 | -0.3407 | -0.1331 | -0.0024 |
| 90 | SLU 8 | -6.65 | 11.61 | 71.27 | -0.3099 | -0.1556 | -0.0019 |
| 90 | SLU 9 | -6.25 | 12.32 | 73 | -0.3369 | -0.1322 | -0.0023 |
| 90 | SLU 10 | -6.6 | 13.59 | 79.31 | -0.3763 | -0.1328 | -0.0027 |
| 90 | SLU 11 | -7.45 | 12.78 | 78.69 | -0.3414 | -0.1764 | -0.002 |
| 90 | SLU 12 | -7.06 | 13.5 | 80.42 | -0.3684 | -0.153 | -0.0025 |
| 90 | SLU 13 | -6.74 | 13.83 | 80.82 | -0.3825 | -0.1365 | -0.0028 |
| 90 | SLU 14 | -7.59 | 13.02 | 80.2 | -0.3477 | -0.1801 | -0.0021 |
| 90 | SLU 15 | -7.2 | 13.74 | 81.93 | -0.3746 | -0.1566 | -0.0025 |
| 90 | SLU 16 | -7.54 | 12.89 | 79.46 | -0.3438 | -0.1792 | -0.002 |
| 90 | SLU 17 | -7.15 | 13.6 | 81.19 | -0.3708 | -0.1557 | -0.0025 |
| 90 | SLU 18 | -7.63 | 12.95 | 79.94 | -0.3459 | -0.1819 | -0.002 |
| 90 | SLU 19 | -7.24 | 13.66 | 81.66 | -0.3729 | -0.1585 | -0.0025 |
| 90 | SLU 20 | -7.78 | 13.19 | 81.45 | -0.3521 | -0.1856 | -0.0021 |
| 90 | SLU 21 | -7.39 | 13.9 | 83.18 | -0.3791 | -0.1622 | -0.0025 |
| 90 | SLU 22 | -7.25 | 12.52 | 77.01 | -0.3341 | -0.1708 | -0.002 |
| 90 | SLU 23 | -6.59 | 13.7 | 79.89 | -0.379 | -0.1318 | -0.0028 |
| 90 | SLU 24 | -7.44 | 12.9 | 79.27 | -0.3441 | -0.1753 | -0.0021 |
| 90 | SLU 25 | -7.05 | 13.61 | 81 | -0.3711 | -0.1519 | -0.0025 |
| 90 | SLU 26 | -6.74 | 13.94 | 81.41 | -0.3852 | -0.1354 | -0.0028 |
| 90 | SLU 27 | -7.59 | 13.14 | 80.79 | -0.3503 | -0.179 | -0.0021 |
| 90 | SLU 28 | -7.2 | 13.85 | 82.51 | -0.3773 | -0.1556 | -0.0026 |
| 90 | SLU 29 | -7.54 | 13 | 80.04 | -0.3465 | -0.1781 | -0.0021 |
| 90 | SLU 30 | -7.15 | 13.71 | 81.77 | -0.3735 | -0.1547 | -0.0025 |
| 90 | SLU 31 | -7.49 | 14.98 | 88.08 | -0.4129 | -0.1553 | -0.0029 |
| 90 | SLU 32 | -8.34 | 14.17 | 87.46 | -0.378 | -0.1989 | -0.0022 |
| 90 | SLU 33 | -7.95 | 14.88 | 89.19 | -0.405 | -0.1755 | -0.0027 |
| 90 | SLU 34 | -7.64 | 15.22 | 89.59 | -0.4191 | -0.1589 | -0.003 |

| Nodo | Cont. | Reazione a traslazione | | | Reazione a rotazione | | |
|---|---|---|---|---|---|---|---|
| Ind. | N.br. | x | y | z | x | y | z |
| 90 | SLU 35 | -8.49 | 14.41 | 88.97 | -0.3842 | -0.2025 | -0.0023 |
| 90 | SLU 36 | -8.1 | 15.12 | 90.7 | -0.4112 | -0.1791 | -0.0027 |
| 90 | SLU 37 | -8.44 | 14.27 | 88.23 | -0.3804 | -0.2016 | -0.0022 |
| 90 | SLU 38 | -8.04 | 14.99 | 89.96 | -0.4074 | -0.1782 | -0.0027 |
| 90 | SLU 39 | -8.53 | 14.34 | 88.7 | -0.3825 | -0.2044 | -0.0022 |
| 90 | SLU 40 | -8.14 | 15.05 | 90.43 | -0.4095 | -0.181 | -0.0027 |
| 90 | SLU 41 | -8.67 | 14.58 | 90.22 | -0.3887 | -0.208 | -0.0023 |
| 90 | SLU 42 | -8.28 | 15.29 | 91.95 | -0.4157 | -0.1846 | -0.0027 |
| 90 | SLU 43 | -7.95 | 13.99 | 85.7 | -0.3742 | -0.1851 | -0.0023 |
| 90 | SLU 44 | -7.3 | 15.18 | 88.59 | -0.4191 | -0.1461 | -0.0031 |
| 90 | SLU 45 | -8.15 | 14.37 | 87.97 | -0.3842 | -0.1897 | -0.0024 |
| 90 | SLU 46 | -7.76 | 15.08 | 89.69 | -0.4112 | -0.1662 | -0.0028 |
| 90 | SLU 47 | -7.45 | 15.42 | 90.1 | -0.4253 | -0.1497 | -0.0031 |
| 90 | SLU 48 | -8.3 | 14.61 | 89.48 | -0.3904 | -0.1933 | -0.0024 |
| 90 | SLU 49 | -7.9 | 15.32 | 91.21 | -0.4174 | -0.1699 | -0.0029 |
| 90 | SLU 50 | -8.24 | 14.47 | 88.74 | -0.3866 | -0.1924 | -0.0024 |
| 90 | SLU 51 | -7.85 | 15.18 | 90.47 | -0.4136 | -0.169 | -0.0028 |
| 90 | SLU 52 | -8.2 | 16.45 | 96.77 | -0.453 | -0.1696 | -0.0032 |
| 90 | SLU 53 | -9.05 | 15.65 | 96.15 | -0.4181 | -0.2132 | -0.0025 |
| 90 | SLU 54 | -8.66 | 16.36 | 97.88 | -0.4451 | -0.1898 | -0.003 |
| 90 | SLU 55 | -8.34 | 16.69 | 98.29 | -0.4592 | -0.1733 | -0.0032 |
| 90 | SLU 56 | -9.19 | 15.89 | 97.67 | -0.4243 | -0.2168 | -0.0025 |
| 90 | SLU 57 | -8.8 | 16.6 | 99.4 | -0.4513 | -0.1934 | -0.003 |
| 90 | SLU 58 | -9.14 | 15.75 | 96.92 | -0.4205 | -0.2159 | -0.0025 |
| 90 | SLU 59 | -8.75 | 16.46 | 98.65 | -0.4475 | -0.1925 | -0.003 |
| 90 | SLU 60 | -9.23 | 15.82 | 97.4 | -0.4226 | -0.2187 | -0.0025 |
| 90 | SLU 61 | -8.84 | 16.53 | 99.13 | -0.4496 | -0.1953 | -0.003 |
| 90 | SLU 62 | -9.38 | 16.06 | 98.92 | -0.4288 | -0.2224 | -0.0025 |
| 90 | SLU 63 | -8.99 | 16.77 | 100.65 | -0.4558 | -0.1989 | -0.003 |
| 90 | SLU 64 | -8.85 | 15.38 | 94.47 | -0.4108 | -0.2076 | -0.0025 |
| 90 | SLU 65 | -8.19 | 16.57 | 97.36 | -0.4557 | -0.1685 | -0.0033 |
| 90 | SLU 66 | -9.04 | 15.76 | 96.74 | -0.4208 | -0.2121 | -0.0025 |
| 90 | SLU 67 | -8.65 | 16.47 | 98.46 | -0.4478 | -0.1887 | -0.003 |
| 90 | SLU 68 | -8.34 | 16.81 | 98.87 | -0.4619 | -0.1722 | -0.0033 |
| 90 | SLU 69 | -9.19 | 16 | 98.25 | -0.427 | -0.2158 | -0.0026 |
| 90 | SLU 70 | -8.8 | 16.71 | 99.98 | -0.454 | -0.1924 | -0.003 |
| 90 | SLU 71 | -9.14 | 15.86 | 97.51 | -0.4232 | -0.2149 | -0.0025 |
| 90 | SLU 72 | -8.75 | 16.57 | 99.23 | -0.4501 | -0.1915 | -0.003 |
| 90 | SLU 73 | -9.09 | 17.84 | 105.54 | -0.4896 | -0.1921 | -0.0034 |
| 90 | SLU 74 | -9.94 | 17.04 | 104.92 | -0.4547 | -0.2356 | -0.0027 |
| 90 | SLU 75 | -9.55 | 17.75 | 106.65 | -0.4817 | -0.2122 | -0.0032 |
| 90 | SLU 76 | -9.24 | 18.08 | 107.06 | -0.4958 | -0.1957 | -0.0034 |
| 90 | SLU 77 | -10.09 | 17.28 | 106.44 | -0.4609 | -0.2393 | -0.0027 |
| 90 | SLU 78 | -9.7 | 17.99 | 108.17 | -0.4879 | -0.2159 | -0.0032 |
| 90 | SLU 79 | -10.04 | 17.14 | 105.69 | -0.4571 | -0.2384 | -0.0027 |
| 90 | SLU 80 | -9.64 | 17.85 | 107.42 | -0.4841 | -0.215 | -0.0032 |
| 90 | SLU 81 | -10.13 | 17.2 | 106.17 | -0.4592 | -0.2412 | -0.0027 |
| 90 | SLU 82 | -9.74 | 17.92 | 107.9 | -0.4862 | -0.2178 | -0.0032 |
| 90 | SLU 83 | -10.27 | 17.44 | 107.69 | -0.4654 | -0.2448 | -0.0027 |
| 90 | SLU 84 | -9.88 | 18.16 | 109.41 | -0.4924 | -0.2214 | -0.0032 |
| 90 | SLE RA 1 | -6.61 | 11.53 | 70.74 | -0.3079 | -0.1547 | -0.0019 |
| 90 | SLE RA 2 | -6.17 | 12.32 | 72.67 | -0.3379 | -0.1287 | -0.0024 |
| 90 | SLE RA 3 | -6.74 | 11.78 | 72.25 | -0.3146 | -0.1578 | -0.0019 |
| 90 | SLE RA 4 | -6.48 | 12.25 | 73.41 | -0.3326 | -0.1422 | -0.0022 |
| 90 | SLE RA 5 | -6.27 | 12.48 | 73.68 | -0.342 | -0.1312 | -0.0024 |
| 90 | SLE RA 6 | -6.84 | 11.94 | 73.26 | -0.3188 | -0.1602 | -0.0019 |
| 90 | SLE RA 7 | -6.58 | 12.41 | 74.42 | -0.3367 | -0.1446 | -0.0022 |
| 90 | SLE RA 8 | -6.8 | 11.85 | 72.77 | -0.3162 | -0.1596 | -0.0019 |
| 90 | SLE RA 9 | -6.54 | 12.32 | 73.92 | -0.3342 | -0.144 | -0.0022 |
| 90 | SLE RA 10 | -6.77 | 13.17 | 78.12 | -0.3605 | -0.1444 | -0.0025 |
| 90 | SLE RA 11 | -7.34 | 12.63 | 77.71 | -0.3372 | -0.1734 | -0.002 |
| 90 | SLE RA 12 | -7.08 | 13.1 | 78.86 | -0.3552 | -0.1578 | -0.0023 |
| 90 | SLE RA 13 | -6.87 | 13.33 | 79.13 | -0.3646 | -0.1468 | -0.0025 |
| 90 | SLE RA 14 | -7.44 | 12.79 | 78.72 | -0.3414 | -0.1759 | -0.002 |
| 90 | SLE RA 15 | -7.17 | 13.26 | 79.87 | -0.3593 | -0.1603 | -0.0023 |
| 90 | SLE RA 16 | -7.4 | 12.7 | 78.22 | -0.3388 | -0.1753 | -0.002 |
| 90 | SLE RA 17 | -7.14 | 13.17 | 79.38 | -0.3568 | -0.1597 | -0.0023 |
| 90 | SLE RA 18 | -7.46 | 12.74 | 78.54 | -0.3402 | -0.1771 | -0.002 |
| 90 | SLE RA 19 | -7.2 | 13.22 | 79.69 | -0.3582 | -0.1615 | -0.0023 |
| 90 | SLE RA 20 | -7.56 | 12.9 | 79.55 | -0.3444 | -0.1796 | -0.002 |
| 90 | SLE RA 21 | -7.3 | 13.38 | 80.71 | -0.3623 | -0.164 | -0.0023 |
| 90 | SLE FR 1 | -6.61 | 11.53 | 70.74 | -0.3079 | -0.1547 | -0.0019 |
| 90 | SLE FR 2 | -6.52 | 11.68 | 71.13 | -0.3139 | -0.1495 | -0.002 |
| 90 | SLE FR 3 | -6.65 | 11.59 | 71.15 | -0.3096 | -0.1557 | -0.0019 |
| 90 | SLE FR 4 | -6.78 | 12.05 | 73.47 | -0.3236 | -0.1562 | -0.002 |
| 90 | SLE FR 5 | -6.9 | 11.95 | 73.49 | -0.3193 | -0.1624 | -0.0019 |
| 90 | SLE FR 6 | -7.04 | 12.13 | 74.64 | -0.3241 | -0.1659 | -0.0019 |
| 90 | SLE QP 1 | -6.61 | 11.53 | 70.74 | -0.3079 | -0.1547 | -0.0019 |
| 90 | SLE QP 2 | -6.86 | 11.89 | 73.08 | -0.3176 | -0.1614 | -0.0019 |
| 90 | SLD 1 | -2.66 | 10.01 | 53.68 | -0.289 | -0.0044 | -0.0042 |
| 90 | SLD 2 | -2.66 | 10.01 | 53.68 | -0.289 | -0.0044 | -0.0042 |
| 90 | SLD 3 | -1.43 | 7.08 | 40.4 | -0.1798 | 0.0398 | -0.003 |
| 90 | SLD 4 | -1.43 | 7.08 | 40.4 | -0.1798 | 0.0398 | -0.003 |
| 90 | SLD 5 | -7.47 | 15.77 | 87.41 | -0.4747 | -0.1813 | -0.0043 |
| 90 | SLD 6 | -7.47 | 15.77 | 87.41 | -0.4747 | -0.1813 | -0.0043 |
| 90 | SLD 7 | -3.37 | 6 | 43.13 | -0.1107 | -0.0341 | -0.0005 |
| 90 | SLD 8 | -3.37 | 6 | 43.13 | -0.1107 | -0.0341 | -0.0005 |
| 90 | SLD 9 | -10.36 | 17.78 | 103.03 | -0.5246 | -0.2888 | -0.0033 |

| Nodo | Cont. | Reazione a traslazione | | | Reazione a rotazione | | |
|---|---|---|---|---|---|---|---|
| Ind. | N.br. | x | y | z | x | y | z |
| 90 | SLD 10 | -10.36 | 17.78 | 103.03 | -0.5246 | -0.2888 | -0.0033 |
| 90 | SLD 11 | -6.26 | 8.01 | 58.76 | -0.1606 | -0.1416 | 0.0005 |
| 90 | SLD 12 | -6.26 | 8.01 | 58.76 | -0.1606 | -0.1416 | 0.0005 |
| 90 | SLD 13 | -12.3 | 16.7 | 105.77 | -0.4554 | -0.3627 | -0.0008 |
| 90 | SLD 14 | -12.3 | 16.7 | 105.77 | -0.4554 | -0.3627 | -0.0008 |
| 90 | SLD 15 | -11.07 | 13.77 | 92.49 | -0.3462 | -0.3185 | 0.0003 |
| 90 | SLD 16 | -11.07 | 13.77 | 92.49 | -0.3462 | -0.3185 | 0.0003 |
| 90 | SLV 1 | 2.79 | 7.47 | 27.89 | -0.2502 | 0.1968 | -0.0071 |
| 90 | SLV 2 | 2.79 | 7.47 | 27.89 | -0.2502 | 0.1968 | -0.0071 |
| 90 | SLV 3 | 5.76 | 0.65 | -3.14 | 0.0045 | 0.3066 | -0.0044 |
| 90 | SLV 4 | 5.76 | 0.65 | -3.14 | 0.0045 | 0.3066 | -0.0044 |
| 90 | SLV 5 | -8.47 | 20.91 | 106.59 | -0.6836 | -0.2205 | -0.0075 |
| 90 | SLV 6 | -8.47 | 20.91 | 106.59 | -0.6836 | -0.2205 | -0.0075 |
| 90 | SLV 7 | 1.42 | -1.82 | 3.16 | 0.1652 | 0.1455 | 0.0014 |
| 90 | SLV 8 | 1.42 | -1.82 | 3.16 | 0.1652 | 0.1455 | 0.0014 |
| 90 | SLV 9 | -15.15 | 25.6 | 143.01 | -0.8005 | -0.4683 | -0.0052 |
| 90 | SLV 10 | -15.15 | 25.6 | 143.01 | -0.8005 | -0.4683 | -0.0052 |
| 90 | SLV 11 | -5.26 | 2.87 | 39.58 | 0.0484 | -0.1024 | 0.0037 |
| 90 | SLV 12 | -5.26 | 2.87 | 39.58 | 0.0484 | -0.1024 | 0.0037 |
| 90 | SLV 13 | -19.49 | 23.13 | 149.31 | -0.6397 | -0.6295 | 0.0006 |
| 90 | SLV 14 | -19.49 | 23.13 | 149.31 | -0.6397 | -0.6295 | 0.0006 |
| 90 | SLV 15 | -16.52 | 16.31 | 118.28 | -0.3851 | -0.5197 | 0.0033 |
| 90 | SLV 16 | -16.52 | 16.31 | 118.28 | -0.3851 | -0.5197 | 0.0033 |
| 91 | SLU 1 | -0.03 | -0.51 | 2.31 | 0.0308 | -0.0155 | 0.0002 |
| 91 | SLU 2 | -0.03 | -0.52 | 2.3 | 0.0309 | -0.0161 | 0.0002 |
| 91 | SLU 3 | -0.03 | -0.57 | 2.1 | 0.0339 | -0.0154 | 0.0002 |
| 91 | SLU 4 | -0.03 | -0.57 | 2.09 | 0.034 | -0.0157 | 0.0002 |
| 91 | SLU 5 | -0.03 | -0.55 | 2.18 | 0.0327 | -0.0158 | 0.0002 |
| 91 | SLU 6 | -0.03 | -0.6 | 1.98 | 0.0357 | -0.0151 | 0.0002 |
| 91 | SLU 7 | -0.03 | -0.6 | 1.97 | 0.0358 | -0.0155 | 0.0002 |
| 91 | SLU 8 | -0.03 | -0.58 | 2.06 | 0.0344 | -0.015 | 0.0002 |
| 91 | SLU 9 | -0.03 | -0.58 | 2.06 | 0.0345 | -0.0153 | 0.0002 |
| 91 | SLU 10 | -0.06 | -0.41 | 6.06 | 0.0208 | -0.0337 | 0.0003 |
| 91 | SLU 11 | -0.06 | -0.47 | 5.86 | 0.0238 | -0.033 | 0.0003 |
| 91 | SLU 12 | -0.06 | -0.47 | 5.86 | 0.0238 | -0.0333 | 0.0003 |
| 91 | SLU 13 | -0.06 | -0.45 | 5.94 | 0.0226 | -0.0334 | 0.0003 |
| 91 | SLU 14 | -0.06 | -0.5 | 5.74 | 0.0255 | -0.0327 | 0.0003 |
| 91 | SLU 15 | -0.06 | -0.5 | 5.74 | 0.0256 | -0.0331 | 0.0003 |
| 91 | SLU 16 | -0.06 | -0.48 | 5.83 | 0.0242 | -0.0326 | 0.0003 |
| 91 | SLU 17 | -0.06 | -0.48 | 5.82 | 0.0243 | -0.0329 | 0.0003 |
| 91 | SLU 18 | -0.07 | -0.37 | 7.69 | 0.0163 | -0.0406 | 0.0004 |
| 91 | SLU 19 | -0.07 | -0.37 | 7.68 | 0.0164 | -0.041 | 0.0004 |
| 91 | SLU 20 | -0.07 | -0.4 | 7.56 | 0.0181 | -0.0404 | 0.0004 |
| 91 | SLU 21 | -0.07 | -0.4 | 7.56 | 0.0182 | -0.0407 | 0.0004 |
| 91 | SLU 22 | -0.04 | -0.71 | 2.05 | 0.0407 | -0.019 | 0.0002 |
| 91 | SLU 23 | -0.04 | -0.71 | 2.04 | 0.0409 | -0.0196 | 0.0002 |
| 91 | SLU 24 | -0.04 | -0.76 | 1.84 | 0.0438 | -0.0189 | 0.0002 |
| 91 | SLU 25 | -0.04 | -0.77 | 1.83 | 0.0439 | -0.0192 | 0.0002 |
| 91 | SLU 26 | -0.04 | -0.74 | 1.92 | 0.0427 | -0.0193 | 0.0002 |
| 91 | SLU 27 | -0.03 | -0.8 | 1.72 | 0.0456 | -0.0186 | 0.0002 |
| 91 | SLU 28 | -0.04 | -0.8 | 1.71 | 0.0457 | -0.019 | 0.0002 |
| 91 | SLU 29 | -0.03 | -0.77 | 1.8 | 0.0443 | -0.0185 | 0.0002 |
| 91 | SLU 30 | -0.04 | -0.77 | 1.8 | 0.0444 | -0.0188 | 0.0002 |
| 91 | SLU 31 | -0.07 | -0.61 | 5.81 | 0.0307 | -0.0371 | 0.0004 |
| 91 | SLU 32 | -0.07 | -0.66 | 5.6 | 0.0337 | -0.0365 | 0.0004 |
| 91 | SLU 33 | -0.07 | -0.66 | 5.6 | 0.0338 | -0.0368 | 0.0004 |
| 91 | SLU 34 | -0.07 | -0.64 | 5.68 | 0.0325 | -0.0369 | 0.0004 |
| 91 | SLU 35 | -0.07 | -0.7 | 5.48 | 0.0355 | -0.0362 | 0.0004 |
| 91 | SLU 36 | -0.07 | -0.7 | 5.48 | 0.0355 | -0.0366 | 0.0004 |
| 91 | SLU 37 | -0.07 | -0.67 | 5.57 | 0.0342 | -0.0361 | 0.0004 |
| 91 | SLU 38 | -0.07 | -0.67 | 5.56 | 0.0342 | -0.0364 | 0.0004 |
| 91 | SLU 39 | -0.08 | -0.56 | 7.43 | 0.0262 | -0.0441 | 0.0004 |
| 91 | SLU 40 | -0.08 | -0.56 | 7.42 | 0.0263 | -0.0445 | 0.0004 |
| 91 | SLU 41 | -0.08 | -0.6 | 7.31 | 0.028 | -0.0439 | 0.0004 |
| 91 | SLU 42 | -0.08 | -0.6 | 7.3 | 0.0281 | -0.0442 | 0.0004 |
| 91 | SLU 43 | -0.04 | -0.6 | 3.09 | 0.0366 | -0.0189 | 0.0002 |
| 91 | SLU 44 | -0.04 | -0.6 | 3.08 | 0.0368 | -0.0195 | 0.0002 |
| 91 | SLU 45 | -0.04 | -0.66 | 2.88 | 0.0397 | -0.0188 | 0.0002 |
| 91 | SLU 46 | -0.04 | -0.66 | 2.87 | 0.0398 | -0.0192 | 0.0002 |
| 91 | SLU 47 | -0.04 | -0.64 | 2.96 | 0.0386 | -0.0193 | 0.0002 |
| 91 | SLU 48 | -0.04 | -0.69 | 2.76 | 0.0415 | -0.0186 | 0.0002 |
| 91 | SLU 49 | -0.04 | -0.69 | 2.75 | 0.0416 | -0.0189 | 0.0002 |
| 91 | SLU 50 | -0.03 | -0.67 | 2.85 | 0.0402 | -0.0184 | 0.0002 |
| 91 | SLU 51 | -0.04 | -0.67 | 2.84 | 0.0403 | -0.0188 | 0.0002 |
| 91 | SLU 52 | -0.07 | -0.5 | 6.85 | 0.0266 | -0.0371 | 0.0004 |
| 91 | SLU 53 | -0.07 | -0.56 | 6.64 | 0.0296 | -0.0364 | 0.0004 |
| 91 | SLU 54 | -0.07 | -0.56 | 6.64 | 0.0297 | -0.0368 | 0.0004 |
| 91 | SLU 55 | -0.07 | -0.53 | 6.72 | 0.0284 | -0.0368 | 0.0004 |
| 91 | SLU 56 | -0.07 | -0.59 | 6.52 | 0.0314 | -0.0362 | 0.0004 |
| 91 | SLU 57 | -0.07 | -0.59 | 6.52 | 0.0315 | -0.0365 | 0.0004 |
| 91 | SLU 58 | -0.07 | -0.56 | 6.61 | 0.0301 | -0.036 | 0.0004 |
| 91 | SLU 59 | -0.07 | -0.57 | 6.6 | 0.0302 | -0.0364 | 0.0004 |
| 91 | SLU 60 | -0.08 | -0.46 | 8.47 | 0.0221 | -0.044 | 0.0004 |
| 91 | SLU 61 | -0.08 | -0.46 | 8.46 | 0.0222 | -0.0444 | 0.0004 |
| 91 | SLU 62 | -0.08 | -0.49 | 8.35 | 0.0239 | -0.0438 | 0.0004 |
| 91 | SLU 63 | -0.08 | -0.49 | 8.34 | 0.024 | -0.0442 | 0.0004 |
| 91 | SLU 64 | -0.04 | -0.79 | 2.83 | 0.0466 | -0.0224 | 0.0002 |
| 91 | SLU 65 | -0.04 | -0.8 | 2.82 | 0.0467 | -0.023 | 0.0002 |

| Nodo | Cont. | Reazione a traslazione | | | Reazione a rotazione | | |
|---|---|---|---|---|---|---|---|
| Ind. | N.br. | x | y | z | x | y | z |
| 91 | SLU 66 | -0.04 | -0.85 | 2.62 | 0.0497 | -0.0223 | 0.0002 |
| 91 | SLU 67 | -0.04 | -0.85 | 2.62 | 0.0498 | -0.0227 | 0.0002 |
| 91 | SLU 68 | -0.04 | -0.83 | 2.7 | 0.0485 | -0.0227 | 0.0002 |
| 91 | SLU 69 | -0.04 | -0.88 | 2.5 | 0.0515 | -0.0221 | 0.0002 |
| 91 | SLU 70 | -0.04 | -0.89 | 2.49 | 0.0515 | -0.0224 | 0.0002 |
| 91 | SLU 71 | -0.04 | -0.86 | 2.59 | 0.0502 | -0.0219 | 0.0002 |
| 91 | SLU 72 | -0.04 | -0.86 | 2.58 | 0.0502 | -0.0223 | 0.0002 |
| 91 | SLU 73 | -0.07 | -0.7 | 6.59 | 0.0366 | -0.0406 | 0.0004 |
| 91 | SLU 74 | -0.07 | -0.75 | 6.39 | 0.0395 | -0.0399 | 0.0004 |
| 91 | SLU 75 | -0.07 | -0.75 | 6.38 | 0.0396 | -0.0403 | 0.0004 |
| 91 | SLU 76 | -0.07 | -0.73 | 6.46 | 0.0383 | -0.0403 | 0.0004 |
| 91 | SLU 77 | -0.07 | -0.78 | 6.26 | 0.0413 | -0.0397 | 0.0004 |
| 91 | SLU 78 | -0.07 | -0.78 | 6.26 | 0.0414 | -0.04 | 0.0004 |
| 91 | SLU 79 | -0.07 | -0.76 | 6.35 | 0.04 | -0.0395 | 0.0004 |
| 91 | SLU 80 | -0.07 | -0.76 | 6.35 | 0.0401 | -0.0399 | 0.0004 |
| 91 | SLU 81 | -0.09 | -0.65 | 8.21 | 0.0321 | -0.0475 | 0.0005 |
| 91 | SLU 82 | -0.09 | -0.65 | 8.2 | 0.0322 | -0.0479 | 0.0005 |
| 91 | SLU 83 | -0.09 | -0.68 | 8.09 | 0.0339 | -0.0473 | 0.0005 |
| 91 | SLU 84 | -0.09 | -0.68 | 8.08 | 0.0339 | -0.0476 | 0.0005 |
| 91 | SLE RA 1 | -0.03 | -0.57 | 2.23 | 0.0336 | -0.0165 | 0.0002 |
| 91 | SLE RA 2 | -0.03 | -0.57 | 2.23 | 0.0337 | -0.0169 | 0.0002 |
| 91 | SLE RA 3 | -0.03 | -0.61 | 2.09 | 0.0357 | -0.0164 | 0.0002 |
| 91 | SLE RA 4 | -0.03 | -0.61 | 2.09 | 0.0358 | -0.0166 | 0.0002 |
| 91 | SLE RA 5 | -0.03 | -0.59 | 2.15 | 0.0349 | -0.0167 | 0.0002 |
| 91 | SLE RA 6 | -0.03 | -0.63 | 2.01 | 0.0369 | -0.0162 | 0.0002 |
| 91 | SLE RA 7 | -0.03 | -0.63 | 2.01 | 0.037 | -0.0165 | 0.0002 |
| 91 | SLE RA 8 | -0.03 | -0.61 | 2.07 | 0.036 | -0.0161 | 0.0002 |
| 91 | SLE RA 9 | -0.03 | -0.61 | 2.07 | 0.0361 | -0.0164 | 0.0002 |
| 91 | SLE RA 10 | -0.05 | -0.5 | 4.74 | 0.027 | -0.0286 | 0.0003 |
| 91 | SLE RA 11 | -0.05 | -0.54 | 4.6 | 0.0289 | -0.0281 | 0.0003 |
| 91 | SLE RA 12 | -0.05 | -0.54 | 4.6 | 0.029 | -0.0284 | 0.0003 |
| 91 | SLE RA 13 | -0.05 | -0.52 | 4.66 | 0.0282 | -0.0284 | 0.0003 |
| 91 | SLE RA 14 | -0.05 | -0.56 | 4.52 | 0.0301 | -0.028 | 0.0003 |
| 91 | SLE RA 15 | -0.05 | -0.56 | 4.52 | 0.0302 | -0.0282 | 0.0003 |
| 91 | SLE RA 16 | -0.05 | -0.54 | 4.58 | 0.0293 | -0.0279 | 0.0003 |
| 91 | SLE RA 17 | -0.05 | -0.55 | 4.58 | 0.0293 | -0.0281 | 0.0003 |
| 91 | SLE RA 18 | -0.06 | -0.47 | 5.82 | 0.024 | -0.0332 | 0.0003 |
| 91 | SLE RA 19 | -0.06 | -0.47 | 5.82 | 0.024 | -0.0335 | 0.0003 |
| 91 | SLE RA 20 | -0.06 | -0.49 | 5.74 | 0.0252 | -0.0331 | 0.0003 |
| 91 | SLE RA 21 | -0.06 | -0.49 | 5.74 | 0.0252 | -0.0333 | 0.0003 |
| 91 | SLE FR 1 | -0.03 | -0.57 | 2.23 | 0.0336 | -0.0165 | 0.0002 |
| 91 | SLE FR 2 | -0.03 | -0.57 | 2.23 | 0.0337 | -0.0165 | 0.0002 |
| 91 | SLE FR 3 | -0.03 | -0.58 | 2.2 | 0.0341 | -0.0164 | 0.0002 |
| 91 | SLE FR 4 | -0.04 | -0.54 | 3.31 | 0.0308 | -0.0216 | 0.0002 |
| 91 | SLE FR 5 | -0.04 | -0.55 | 3.28 | 0.0312 | -0.0214 | 0.0002 |
| 91 | SLE FR 6 | -0.05 | -0.52 | 4.03 | 0.0288 | -0.0248 | 0.0002 |
| 91 | SLE QP 1 | -0.03 | -0.57 | 2.23 | 0.0336 | -0.0165 | 0.0002 |
| 91 | SLE QP 2 | -0.04 | -0.54 | 3.31 | 0.0307 | -0.0215 | 0.0002 |
| 91 | SLD 1 | -0.14 | 0.4 | 6.28 | -0.0203 | 0.0212 | 0.0007 |
| 91 | SLD 2 | -0.14 | 0.4 | 6.28 | -0.0203 | 0.0212 | 0.0007 |
| 91 | SLD 3 | -0.13 | -0.76 | 2.94 | 0.0427 | 0.0241 | 0.0007 |
| 91 | SLD 4 | -0.13 | -0.76 | 2.94 | 0.0427 | 0.0241 | 0.0007 |
| 91 | SLD 5 | -0.08 | 1.5 | 9.26 | -0.08 | -0.0131 | 0.0004 |
| 91 | SLD 6 | -0.08 | 1.5 | 9.26 | -0.08 | -0.0131 | 0.0004 |
| 91 | SLD 7 | -0.06 | -2.37 | -1.86 | 0.1298 | -0.0034 | 0.0003 |
| 91 | SLD 8 | -0.06 | -2.37 | -1.86 | 0.1298 | -0.0034 | 0.0003 |
| 91 | SLD 9 | -0.02 | 1.29 | 8.48 | -0.0683 | -0.0396 | 0.0001 |
| 91 | SLD 10 | -0.02 | 1.29 | 8.48 | -0.0683 | -0.0396 | 0.0001 |
| 91 | SLD 11 | 0 | -2.58 | -2.64 | 0.1415 | -0.0299 | 0 |
| 91 | SLD 12 | 0 | -2.58 | -2.64 | 0.1415 | -0.0299 | 0 |
| 91 | SLD 13 | 0.05 | -0.32 | 3.68 | 0.0188 | -0.0671 | -0.0003 |
| 91 | SLD 14 | 0.05 | -0.32 | 3.68 | 0.0188 | -0.0671 | -0.0003 |
| 91 | SLD 15 | 0.06 | -1.48 | 0.34 | 0.0818 | -0.0642 | -0.0003 |
| 91 | SLD 16 | 0.06 | -1.48 | 0.34 | 0.0818 | -0.0642 | -0.0003 |
| 91 | SLV 1 | -0.27 | 1.68 | 10.27 | -0.089 | 0.0765 | 0.0015 |
| 91 | SLV 2 | -0.27 | 1.68 | 10.27 | -0.089 | 0.0765 | 0.0015 |
| 91 | SLV 3 | -0.25 | -1.05 | 2.45 | 0.0585 | 0.0834 | 0.0014 |
| 91 | SLV 4 | -0.25 | -1.05 | 2.45 | 0.0585 | 0.0834 | 0.0014 |
| 91 | SLV 5 | -0.13 | 4.25 | 17.25 | -0.2289 | -0.0025 | 0.0007 |
| 91 | SLV 6 | -0.13 | 4.25 | 17.25 | -0.2289 | -0.0025 | 0.0007 |
| 91 | SLV 7 | -0.08 | -4.82 | -8.8 | 0.2628 | 0.0203 | 0.0004 |
| 91 | SLV 8 | -0.08 | -4.82 | -8.8 | 0.2628 | 0.0203 | 0.0004 |
| 91 | SLV 9 | 0 | 3.74 | 15.42 | -0.2013 | -0.0633 | 0 |
| 91 | SLV 10 | 0 | 3.74 | 15.42 | -0.2013 | -0.0633 | 0 |
| 91 | SLV 11 | 0.05 | -5.33 | -10.63 | 0.2904 | -0.0405 | -0.0003 |
| 91 | SLV 12 | 0.05 | -5.33 | -10.63 | 0.2904 | -0.0405 | -0.0003 |
| 91 | SLV 13 | 0.17 | -0.03 | 4.17 | 0.0029 | -0.1264 | -0.001 |
| 91 | SLV 14 | 0.17 | -0.03 | 4.17 | 0.0029 | -0.1264 | -0.001 |
| 91 | SLV 15 | 0.19 | -2.75 | -3.65 | 0.1505 | -0.1195 | -0.0011 |
| 91 | SLV 16 | 0.19 | -2.75 | -3.65 | 0.1505 | -0.1195 | -0.0011 |
| 92 | SLU 1 | 0.03 | 1.61 | 45.27 | -0.1103 | 0.0183 | 0.0002 |
| 92 | SLU 2 | 0.04 | 1.09 | 45.39 | -0.0883 | 0.0198 | 0.0002 |
| 92 | SLU 3 | 0.03 | 2.15 | 46.85 | -0.1359 | 0.0188 | 0.0002 |
| 92 | SLU 4 | 0.04 | 1.84 | 46.92 | -0.1227 | 0.0197 | 0.0002 |
| 92 | SLU 5 | 0.04 | 1.67 | 46.79 | -0.1159 | 0.0201 | 0.0002 |
| 92 | SLU 6 | 0.03 | 2.73 | 48.25 | -0.1635 | 0.0192 | 0.0002 |
| 92 | SLU 7 | 0.04 | 2.42 | 48.32 | -0.1503 | 0.0201 | 0.0002 |
| 92 | SLU 8 | 0.03 | 2.77 | 48.07 | -0.1654 | 0.0191 | 0.0002 |

| Nodo | Cont. | Reazione a traslazione | | | Reazione a rotazione | | |
|---|---|---|---|---|---|---|---|
| Ind. | N.br. | x | y | z | x | y | z |
| 92 | SLU 9 | 0.04 | 2.46 | 48.14 | -0.1522 | 0.0199 | 0.0002 |
| 92 | SLU 10 | 0.05 | 1.51 | 53.29 | -0.1128 | 0.0216 | 0.0003 |
| 92 | SLU 11 | 0.04 | 2.57 | 54.74 | -0.1604 | 0.0206 | 0.0002 |
| 92 | SLU 12 | 0.04 | 2.26 | 54.81 | -0.1472 | 0.0215 | 0.0003 |
| 92 | SLU 13 | 0.05 | 2.09 | 54.69 | -0.1404 | 0.022 | 0.0003 |
| 92 | SLU 14 | 0.04 | 3.15 | 56.14 | -0.188 | 0.021 | 0.0002 |
| 92 | SLU 15 | 0.04 | 2.84 | 56.21 | -0.1748 | 0.0219 | 0.0003 |
| 92 | SLU 16 | 0.04 | 3.19 | 55.96 | -0.1899 | 0.0209 | 0.0002 |
| 92 | SLU 17 | 0.04 | 2.87 | 56.03 | -0.1767 | 0.0217 | 0.0003 |
| 92 | SLU 18 | 0.04 | 2.2 | 56.55 | -0.1453 | 0.0209 | 0.0003 |
| 92 | SLU 19 | 0.05 | 1.89 | 56.62 | -0.1321 | 0.0218 | 0.0003 |
| 92 | SLU 20 | 0.04 | 2.78 | 57.94 | -0.1729 | 0.0213 | 0.0002 |
| 92 | SLU 21 | 0.05 | 2.47 | 58.02 | -0.1597 | 0.0222 | 0.0003 |
| 92 | SLU 22 | 0.04 | 2.07 | 50.34 | -0.1352 | 0.0209 | 0.0002 |
| 92 | SLU 23 | 0.04 | 1.56 | 50.47 | -0.1132 | 0.0223 | 0.0003 |
| 92 | SLU 24 | 0.04 | 2.61 | 51.92 | -0.1609 | 0.0214 | 0.0002 |
| 92 | SLU 25 | 0.04 | 2.3 | 51.99 | -0.1476 | 0.0223 | 0.0003 |
| 92 | SLU 26 | 0.04 | 2.14 | 51.87 | -0.1408 | 0.0227 | 0.0003 |
| 92 | SLU 27 | 0.04 | 3.19 | 53.32 | -0.1884 | 0.0218 | 0.0002 |
| 92 | SLU 28 | 0.04 | 2.88 | 53.39 | -0.1752 | 0.0226 | 0.0003 |
| 92 | SLU 29 | 0.04 | 3.23 | 53.14 | -0.1903 | 0.0216 | 0.0002 |
| 92 | SLU 30 | 0.04 | 2.92 | 53.22 | -0.1771 | 0.0225 | 0.0003 |
| 92 | SLU 31 | 0.05 | 1.97 | 58.36 | -0.1377 | 0.0242 | 0.0003 |
| 92 | SLU 32 | 0.05 | 3.03 | 59.81 | -0.1854 | 0.0232 | 0.0003 |
| 92 | SLU 33 | 0.05 | 2.72 | 59.89 | -0.1721 | 0.0241 | 0.0003 |
| 92 | SLU 34 | 0.05 | 2.55 | 59.76 | -0.1653 | 0.0245 | 0.0003 |
| 92 | SLU 35 | 0.05 | 3.61 | 61.21 | -0.2129 | 0.0236 | 0.0003 |
| 92 | SLU 36 | 0.05 | 3.3 | 61.28 | -0.1997 | 0.0244 | 0.0003 |
| 92 | SLU 37 | 0.05 | 3.65 | 61.03 | -0.2148 | 0.0234 | 0.0003 |
| 92 | SLU 38 | 0.05 | 3.34 | 61.11 | -0.2016 | 0.0243 | 0.0003 |
| 92 | SLU 39 | 0.05 | 2.66 | 61.62 | -0.1702 | 0.0235 | 0.0003 |
| 92 | SLU 40 | 0.05 | 2.35 | 61.69 | -0.157 | 0.0243 | 0.0003 |
| 92 | SLU 41 | 0.05 | 3.24 | 63.02 | -0.1978 | 0.0238 | 0.0003 |
| 92 | SLU 42 | 0.05 | 2.93 | 63.09 | -0.1846 | 0.0247 | 0.0003 |
| 92 | SLU 43 | 0.04 | 1.94 | 57.11 | -0.1349 | 0.0229 | 0.0002 |
| 92 | SLU 44 | 0.05 | 1.42 | 57.24 | -0.1128 | 0.0244 | 0.0003 |
| 92 | SLU 45 | 0.04 | 2.48 | 58.69 | -0.1605 | 0.0234 | 0.0002 |
| 92 | SLU 46 | 0.04 | 2.17 | 58.76 | -0.1473 | 0.0243 | 0.0002 |
| 92 | SLU 47 | 0.05 | 2 | 58.64 | -0.1404 | 0.0248 | 0.0003 |
| 92 | SLU 48 | 0.04 | 3.06 | 60.09 | -0.1881 | 0.0238 | 0.0002 |
| 92 | SLU 49 | 0.04 | 2.75 | 60.16 | -0.1748 | 0.0247 | 0.0002 |
| 92 | SLU 50 | 0.04 | 3.1 | 59.91 | -0.19 | 0.0237 | 0.0002 |
| 92 | SLU 51 | 0.04 | 2.79 | 59.98 | -0.1768 | 0.0245 | 0.0002 |
| 92 | SLU 52 | 0.05 | 1.83 | 65.13 | -0.1373 | 0.0262 | 0.0003 |
| 92 | SLU 53 | 0.05 | 2.89 | 66.58 | -0.185 | 0.0253 | 0.0003 |
| 92 | SLU 54 | 0.05 | 2.58 | 66.66 | -0.1718 | 0.0261 | 0.0003 |
| 92 | SLU 55 | 0.05 | 2.41 | 66.53 | -0.1649 | 0.0266 | 0.0003 |
| 92 | SLU 56 | 0.05 | 3.47 | 67.98 | -0.2126 | 0.0256 | 0.0003 |
| 92 | SLU 57 | 0.05 | 3.16 | 68.05 | -0.1993 | 0.0265 | 0.0003 |
| 92 | SLU 58 | 0.05 | 3.51 | 67.8 | -0.2145 | 0.0255 | 0.0003 |
| 92 | SLU 59 | 0.05 | 3.2 | 67.88 | -0.2013 | 0.0264 | 0.0003 |
| 92 | SLU 60 | 0.05 | 2.53 | 68.39 | -0.1699 | 0.0255 | 0.0003 |
| 92 | SLU 61 | 0.05 | 2.22 | 68.46 | -0.1566 | 0.0264 | 0.0003 |
| 92 | SLU 62 | 0.05 | 3.11 | 69.79 | -0.1974 | 0.0259 | 0.0003 |
| 92 | SLU 63 | 0.05 | 2.8 | 69.86 | -0.1842 | 0.0268 | 0.0003 |
| 92 | SLU 64 | 0.05 | 2.4 | 62.19 | -0.1598 | 0.0255 | 0.0003 |
| 92 | SLU 65 | 0.05 | 1.88 | 62.31 | -0.1378 | 0.027 | 0.0003 |
| 92 | SLU 66 | 0.05 | 2.94 | 63.76 | -0.1854 | 0.026 | 0.0003 |
| 92 | SLU 67 | 0.05 | 2.63 | 63.84 | -0.1722 | 0.0269 | 0.0003 |
| 92 | SLU 68 | 0.05 | 2.46 | 63.71 | -0.1653 | 0.0273 | 0.0003 |
| 92 | SLU 69 | 0.05 | 3.52 | 65.16 | -0.213 | 0.0264 | 0.0003 |
| 92 | SLU 70 | 0.05 | 3.21 | 65.23 | -0.1998 | 0.0272 | 0.0003 |
| 92 | SLU 71 | 0.05 | 3.56 | 64.98 | -0.2149 | 0.0262 | 0.0003 |
| 92 | SLU 72 | 0.05 | 3.25 | 65.06 | -0.2017 | 0.0271 | 0.0003 |
| 92 | SLU 73 | 0.06 | 2.29 | 70.2 | -0.1623 | 0.0288 | 0.0004 |
| 92 | SLU 74 | 0.05 | 3.35 | 71.65 | -0.2099 | 0.0278 | 0.0003 |
| 92 | SLU 75 | 0.06 | 3.04 | 71.73 | -0.1967 | 0.0287 | 0.0003 |
| 92 | SLU 76 | 0.06 | 2.87 | 71.6 | -0.1898 | 0.0291 | 0.0004 |
| 92 | SLU 77 | 0.05 | 3.93 | 73.05 | -0.2375 | 0.0282 | 0.0003 |
| 92 | SLU 78 | 0.06 | 3.62 | 73.13 | -0.2243 | 0.0291 | 0.0003 |
| 92 | SLU 79 | 0.05 | 3.97 | 72.88 | -0.2394 | 0.028 | 0.0003 |
| 92 | SLU 80 | 0.06 | 3.66 | 72.95 | -0.2262 | 0.0289 | 0.0003 |
| 92 | SLU 81 | 0.06 | 2.99 | 73.46 | -0.1948 | 0.0281 | 0.0003 |
| 92 | SLU 82 | 0.06 | 2.68 | 73.54 | -0.1816 | 0.029 | 0.0004 |
| 92 | SLU 83 | 0.06 | 3.57 | 74.86 | -0.2223 | 0.0285 | 0.0003 |
| 92 | SLU 84 | 0.06 | 3.26 | 74.93 | -0.2091 | 0.0293 | 0.0004 |
| 92 | SLE RA 1 | 0.03 | 1.74 | 46.72 | -0.1174 | 0.0191 | 0.0002 |
| 92 | SLE RA 2 | 0.04 | 1.4 | 46.8 | -0.1027 | 0.02 | 0.0002 |
| 92 | SLE RA 3 | 0.03 | 2.1 | 47.77 | -0.1345 | 0.0194 | 0.0002 |
| 92 | SLE RA 4 | 0.04 | 1.9 | 47.82 | -0.1257 | 0.02 | 0.0002 |
| 92 | SLE RA 5 | 0.04 | 1.79 | 47.74 | -0.1211 | 0.0203 | 0.0002 |
| 92 | SLE RA 6 | 0.03 | 2.49 | 48.7 | -0.1529 | 0.0196 | 0.0002 |
| 92 | SLE RA 7 | 0.04 | 2.28 | 48.75 | -0.1441 | 0.0202 | 0.0002 |
| 92 | SLE RA 8 | 0.03 | 2.52 | 48.59 | -0.1542 | 0.0195 | 0.0002 |
| 92 | SLE RA 9 | 0.04 | 2.31 | 48.63 | -0.1454 | 0.0201 | 0.0002 |
| 92 | SLE RA 10 | 0.04 | 1.67 | 52.06 | -0.1191 | 0.0212 | 0.0003 |
| 92 | SLE RA 11 | 0.04 | 2.38 | 53.03 | -0.1509 | 0.0206 | 0.0002 |
| 92 | SLE RA 12 | 0.04 | 2.17 | 53.08 | -0.142 | 0.0212 | 0.0002 |

| Nodo | Cont. | Reazione a traslazione | | | Reazione a rotazione | | |
|---|---|---|---|---|---|---|---|
| Ind. | N.br. | x | y | z | x | y | z |
| 92 | SLE RA 13 | 0.04 | 2.06 | 53 | -0.1375 | 0.0215 | 0.0003 |
| 92 | SLE RA 14 | 0.04 | 2.77 | 53.97 | -0.1692 | 0.0208 | 0.0002 |
| 92 | SLE RA 15 | 0.04 | 2.56 | 54.01 | -0.1604 | 0.0214 | 0.0002 |
| 92 | SLE RA 16 | 0.04 | 2.79 | 53.85 | -0.1705 | 0.0207 | 0.0002 |
| 92 | SLE RA 17 | 0.04 | 2.59 | 53.9 | -0.1617 | 0.0213 | 0.0002 |
| 92 | SLE RA 18 | 0.04 | 2.14 | 54.24 | -0.1408 | 0.0208 | 0.0002 |
| 92 | SLE RA 19 | 0.04 | 1.93 | 54.29 | -0.132 | 0.0214 | 0.0003 |
| 92 | SLE RA 20 | 0.04 | 2.52 | 55.17 | -0.1591 | 0.021 | 0.0002 |
| 92 | SLE RA 21 | 0.04 | 2.32 | 55.22 | -0.1503 | 0.0216 | 0.0003 |
| 92 | SLE FR 1 | 0.03 | 1.74 | 46.72 | -0.1174 | 0.0191 | 0.0002 |
| 92 | SLE FR 2 | 0.03 | 1.67 | 46.74 | -0.1145 | 0.0192 | 0.0002 |
| 92 | SLE FR 3 | 0.03 | 1.9 | 47.09 | -0.1248 | 0.0191 | 0.0002 |
| 92 | SLE FR 4 | 0.04 | 1.79 | 48.99 | -0.1215 | 0.0198 | 0.0002 |
| 92 | SLE FR 5 | 0.04 | 2.02 | 49.35 | -0.1318 | 0.0197 | 0.0002 |
| 92 | SLE FR 6 | 0.04 | 1.94 | 50.48 | -0.1291 | 0.0199 | 0.0002 |
| 92 | SLE QP 1 | 0.03 | 1.74 | 46.72 | -0.1174 | 0.0191 | 0.0002 |
| 92 | SLE QP 2 | 0.04 | 1.86 | 48.98 | -0.1244 | 0.0196 | 0.0002 |
| 92 | SLD 1 | 0.08 | 2.39 | 56.12 | -0.1603 | 0.0601 | 0.0003 |
| 92 | SLD 2 | 0.08 | 2.39 | 56.12 | -0.1603 | 0.0601 | 0.0003 |
| 92 | SLD 3 | 0.05 | -1.35 | 53.24 | 0.0136 | 0.0512 | 0.0006 |
| 92 | SLD 4 | 0.05 | -1.35 | 53.24 | 0.0136 | 0.0512 | 0.0006 |
| 92 | SLD 5 | 0.1 | 7.69 | 55.49 | -0.3989 | 0.0453 | -0.0001 |
| 92 | SLD 6 | 0.1 | 7.69 | 55.49 | -0.3989 | 0.0453 | -0.0001 |
| 92 | SLD 7 | -0.01 | -4.77 | 45.88 | 0.1807 | 0.0155 | 0.0007 |
| 92 | SLD 8 | -0.01 | -4.77 | 45.88 | 0.1807 | 0.0155 | 0.0007 |
| 92 | SLD 9 | 0.08 | 8.49 | 52.07 | -0.4296 | 0.0237 | -0.0003 |
| 92 | SLD 10 | 0.08 | 8.49 | 52.07 | -0.4296 | 0.0237 | -0.0003 |
| 92 | SLD 11 | -0.03 | -3.97 | 42.46 | 0.15 | -0.0062 | 0.0005 |
| 92 | SLD 12 | -0.03 | -3.97 | 42.46 | 0.15 | -0.0062 | 0.0005 |
| 92 | SLD 13 | 0.02 | 5.07 | 44.71 | -0.2625 | -0.012 | -0.0002 |
| 92 | SLD 14 | 0.02 | 5.07 | 44.71 | -0.2625 | -0.012 | -0.0002 |
| 92 | SLD 15 | -0.01 | 1.33 | 41.83 | -0.0886 | -0.021 | 0.0001 |
| 92 | SLD 16 | -0.01 | 1.33 | 41.83 | -0.0886 | -0.021 | 0.0001 |
| 92 | SLV 1 | 0.15 | 3.12 | 65.7 | -0.2079 | 0.1196 | 0.0005 |
| 92 | SLV 2 | 0.15 | 3.12 | 65.7 | -0.2079 | 0.1196 | 0.0005 |
| 92 | SLV 3 | 0.07 | -5.61 | 58.81 | 0.1982 | 0.0983 | 0.0011 |
| 92 | SLV 4 | 0.07 | -5.61 | 58.81 | 0.1982 | 0.0983 | 0.0011 |
| 92 | SLV 5 | 0.18 | 15.48 | 64.44 | -0.7654 | 0.0819 | -0.0006 |
| 92 | SLV 6 | 0.18 | 15.48 | 64.44 | -0.7654 | 0.0819 | -0.0006 |
| 92 | SLV 7 | -0.06 | -13.62 | 41.48 | 0.5883 | 0.0108 | 0.0013 |
| 92 | SLV 8 | -0.06 | -13.62 | 41.48 | 0.5883 | 0.0108 | 0.0013 |
| 92 | SLV 9 | 0.14 | 17.34 | 56.47 | -0.8371 | 0.0283 | -0.0009 |
| 92 | SLV 10 | 0.14 | 17.34 | 56.47 | -0.8371 | 0.0283 | -0.0009 |
| 92 | SLV 11 | -0.11 | -11.75 | 33.52 | 0.5166 | -0.0428 | 0.001 |
| 92 | SLV 12 | -0.11 | -11.75 | 33.52 | 0.5166 | -0.0428 | 0.001 |
| 92 | SLV 13 | 0 | 9.33 | 39.14 | -0.447 | -0.0592 | -0.0007 |
| 92 | SLV 14 | 0 | 9.33 | 39.14 | -0.447 | -0.0592 | -0.0007 |
| 92 | SLV 15 | -0.08 | 0.6 | 32.26 | -0.0409 | -0.0805 | -0.0001 |
| 92 | SLV 16 | -0.08 | 0.6 | 32.26 | -0.0409 | -0.0805 | -0.0001 |
| 93 | SLU 1 | 0 | -0.94 | 3.69 | 0.0463 | -0.0012 | 0.0001 |
| 93 | SLU 2 | 0 | -0.94 | 3.68 | 0.0464 | -0.0014 | 0.0001 |
| 93 | SLU 3 | 0 | -1 | 3.56 | 0.0492 | -0.0008 | 0.0001 |
| 93 | SLU 4 | 0 | -1 | 3.55 | 0.0492 | -0.0009 | 0.0001 |
| 93 | SLU 5 | 0 | -0.98 | 3.6 | 0.0481 | -0.001 | 0.0001 |
| 93 | SLU 6 | 0 | -1.04 | 3.48 | 0.0508 | -0.0003 | 0 |
| 93 | SLU 7 | 0 | -1.04 | 3.48 | 0.0509 | -0.0005 | 0 |
| 93 | SLU 8 | 0 | -1.01 | 3.53 | 0.0496 | -0.0003 | 0 |
| 93 | SLU 9 | 0 | -1.01 | 3.53 | 0.0497 | -0.0004 | 0 |
| 93 | SLU 10 | -0.01 | -1.19 | 7.18 | 0.0593 | -0.0104 | 0.0002 |
| 93 | SLU 11 | -0.01 | -1.25 | 7.05 | 0.0621 | -0.0097 | 0.0002 |
| 93 | SLU 12 | -0.01 | -1.25 | 7.05 | 0.0622 | -0.0099 | 0.0002 |
| 93 | SLU 13 | -0.01 | -1.22 | 7.1 | 0.061 | -0.0099 | 0.0002 |
| 93 | SLU 14 | -0.01 | -1.28 | 6.98 | 0.0637 | -0.0093 | 0.0002 |
| 93 | SLU 15 | -0.01 | -1.28 | 6.97 | 0.0638 | -0.0094 | 0.0002 |
| 93 | SLU 16 | -0.01 | -1.25 | 7.03 | 0.0625 | -0.0093 | 0.0002 |
| 93 | SLU 17 | -0.01 | -1.26 | 7.03 | 0.0626 | -0.0094 | 0.0002 |
| 93 | SLU 18 | -0.01 | -1.29 | 8.68 | 0.0647 | -0.014 | 0.0003 |
| 93 | SLU 19 | -0.01 | -1.29 | 8.68 | 0.0648 | -0.0141 | 0.0003 |
| 93 | SLU 20 | -0.01 | -1.32 | 8.61 | 0.0664 | -0.0136 | 0.0003 |
| 93 | SLU 21 | -0.01 | -1.32 | 8.6 | 0.0665 | -0.0137 | 0.0003 |
| 93 | SLU 22 | 0 | -1.2 | 3.68 | 0.0585 | -0.0022 | 0.0001 |
| 93 | SLU 23 | 0 | -1.2 | 3.67 | 0.0586 | -0.0025 | 0.0001 |
| 93 | SLU 24 | 0 | -1.26 | 3.55 | 0.0614 | -0.0018 | 0.0001 |
| 93 | SLU 25 | 0 | -1.27 | 3.55 | 0.0615 | -0.002 | 0.0001 |
| 93 | SLU 26 | 0 | -1.24 | 3.6 | 0.0603 | -0.002 | 0.0001 |
| 93 | SLU 27 | 0 | -1.3 | 3.47 | 0.063 | -0.0014 | 0.0001 |
| 93 | SLU 28 | 0 | -1.3 | 3.47 | 0.0631 | -0.0015 | 0.0001 |
| 93 | SLU 29 | 0 | -1.27 | 3.53 | 0.0618 | -0.0014 | 0.0001 |
| 93 | SLU 30 | 0 | -1.28 | 3.52 | 0.0619 | -0.0015 | 0.0001 |
| 93 | SLU 31 | -0.01 | -1.45 | 7.17 | 0.0715 | -0.0114 | 0.0002 |
| 93 | SLU 32 | -0.01 | -1.51 | 7.05 | 0.0743 | -0.0108 | 0.0002 |
| 93 | SLU 33 | -0.01 | -1.51 | 7.04 | 0.0744 | -0.0109 | 0.0002 |
| 93 | SLU 34 | -0.01 | -1.48 | 7.1 | 0.0732 | -0.011 | 0.0002 |
| 93 | SLU 35 | -0.01 | -1.54 | 6.97 | 0.0759 | -0.0104 | 0.0002 |
| 93 | SLU 36 | -0.01 | -1.54 | 6.97 | 0.076 | -0.0105 | 0.0002 |
| 93 | SLU 37 | -0.01 | -1.52 | 7.02 | 0.0747 | -0.0103 | 0.0002 |
| 93 | SLU 38 | -0.01 | -1.52 | 7.02 | 0.0748 | -0.0105 | 0.0002 |
| 93 | SLU 39 | -0.01 | -1.55 | 8.68 | 0.0769 | -0.0151 | 0.0003 |

| Nodo | Cont. | Reazione a traslazione | | | Reazione a rotazione | | |
|---|---|---|---|---|---|---|---|
| Ind. | N.br. | x | y | z | x | y | z |
| 93 | SLU 40 | -0.01 | -1.55 | 8.67 | 0.077 | -0.0152 | 0.0003 |
| 93 | SLU 41 | -0.01 | -1.58 | 8.6 | 0.0786 | -0.0146 | 0.0003 |
| 93 | SLU 42 | -0.01 | -1.59 | 8.6 | 0.0787 | -0.0148 | 0.0003 |
| 93 | SLU 43 | 0 | -1.13 | 4.79 | 0.056 | -0.0012 | 0.0001 |
| 93 | SLU 44 | 0 | -1.14 | 4.79 | 0.0561 | -0.0014 | 0.0001 |
| 93 | SLU 45 | 0 | -1.2 | 4.66 | 0.0589 | -0.0008 | 0.0001 |
| 93 | SLU 46 | 0 | -1.2 | 4.66 | 0.059 | -0.0009 | 0.0001 |
| 93 | SLU 47 | 0 | -1.17 | 4.71 | 0.0578 | -0.001 | 0.0001 |
| 93 | SLU 48 | 0 | -1.23 | 4.59 | 0.0605 | -0.0003 | 0.0001 |
| 93 | SLU 49 | 0 | -1.23 | 4.58 | 0.0606 | -0.0005 | 0.0001 |
| 93 | SLU 50 | 0 | -1.2 | 4.64 | 0.0593 | -0.0003 | 0.0001 |
| 93 | SLU 51 | 0 | -1.21 | 4.64 | 0.0594 | -0.0004 | 0.0001 |
| 93 | SLU 52 | -0.01 | -1.38 | 8.29 | 0.069 | -0.0104 | 0.0002 |
| 93 | SLU 53 | -0.01 | -1.44 | 8.16 | 0.0718 | -0.0097 | 0.0002 |
| 93 | SLU 54 | -0.01 | -1.44 | 8.16 | 0.0719 | -0.0099 | 0.0002 |
| 93 | SLU 55 | -0.01 | -1.41 | 8.21 | 0.0707 | -0.0099 | 0.0002 |
| 93 | SLU 56 | -0.01 | -1.47 | 8.09 | 0.0734 | -0.0093 | 0.0002 |
| 93 | SLU 57 | -0.01 | -1.48 | 8.08 | 0.0735 | -0.0094 | 0.0002 |
| 93 | SLU 58 | -0.01 | -1.45 | 8.14 | 0.0722 | -0.0093 | 0.0002 |
| 93 | SLU 59 | -0.01 | -1.45 | 8.14 | 0.0723 | -0.0094 | 0.0002 |
| 93 | SLU 60 | -0.01 | -1.48 | 9.79 | 0.0744 | -0.014 | 0.0003 |
| 93 | SLU 61 | -0.01 | -1.48 | 9.79 | 0.0745 | -0.0141 | 0.0003 |
| 93 | SLU 62 | -0.01 | -1.52 | 9.72 | 0.0761 | -0.0135 | 0.0003 |
| 93 | SLU 63 | -0.01 | -1.52 | 9.71 | 0.0762 | -0.0137 | 0.0003 |
| 93 | SLU 64 | 0 | -1.39 | 4.79 | 0.0682 | -0.0022 | 0.0001 |
| 93 | SLU 65 | 0 | -1.4 | 4.78 | 0.0683 | -0.0025 | 0.0001 |
| 93 | SLU 66 | 0 | -1.46 | 4.66 | 0.0711 | -0.0018 | 0.0001 |
| 93 | SLU 67 | 0 | -1.46 | 4.65 | 0.0712 | -0.002 | 0.0001 |
| 93 | SLU 68 | 0 | -1.43 | 4.71 | 0.07 | -0.002 | 0.0001 |
| 93 | SLU 69 | 0 | -1.49 | 4.58 | 0.0727 | -0.0014 | 0.0001 |
| 93 | SLU 70 | 0 | -1.49 | 4.58 | 0.0728 | -0.0015 | 0.0001 |
| 93 | SLU 71 | 0 | -1.47 | 4.64 | 0.0715 | -0.0014 | 0.0001 |
| 93 | SLU 72 | 0 | -1.47 | 4.63 | 0.0716 | -0.0015 | 0.0001 |
| 93 | SLU 73 | -0.01 | -1.64 | 8.28 | 0.0812 | -0.0114 | 0.0003 |
| 93 | SLU 74 | -0.01 | -1.7 | 8.15 | 0.084 | -0.0108 | 0.0002 |
| 93 | SLU 75 | -0.01 | -1.7 | 8.15 | 0.0841 | -0.0109 | 0.0003 |
| 93 | SLU 76 | -0.01 | -1.68 | 8.2 | 0.0829 | -0.011 | 0.0003 |
| 93 | SLU 77 | -0.01 | -1.74 | 8.08 | 0.0856 | -0.0104 | 0.0002 |
| 93 | SLU 78 | -0.01 | -1.74 | 8.07 | 0.0857 | -0.0105 | 0.0002 |
| 93 | SLU 79 | -0.01 | -1.71 | 8.13 | 0.0844 | -0.0103 | 0.0002 |
| 93 | SLU 80 | -0.01 | -1.71 | 8.13 | 0.0845 | -0.0105 | 0.0002 |
| 93 | SLU 81 | -0.01 | -1.74 | 9.78 | 0.0866 | -0.015 | 0.0003 |
| 93 | SLU 82 | -0.01 | -1.74 | 9.78 | 0.0867 | -0.0152 | 0.0003 |
| 93 | SLU 83 | -0.01 | -1.78 | 9.71 | 0.0883 | -0.0146 | 0.0003 |
| 93 | SLU 84 | -0.01 | -1.78 | 9.7 | 0.0884 | -0.0147 | 0.0003 |
| 93 | SLE RA 1 | 0 | -1.01 | 3.68 | 0.0498 | -0.0015 | 0.0001 |
| 93 | SLE RA 2 | 0 | -1.02 | 3.68 | 0.0499 | -0.0016 | 0.0001 |
| 93 | SLE RA 3 | 0 | -1.06 | 3.6 | 0.0517 | -0.0012 | 0.0001 |
| 93 | SLE RA 4 | 0 | -1.06 | 3.59 | 0.0518 | -0.0013 | 0.0001 |
| 93 | SLE RA 5 | 0 | -1.04 | 3.63 | 0.051 | -0.0013 | 0.0001 |
| 93 | SLE RA 6 | 0 | -1.08 | 3.55 | 0.0528 | -0.0009 | 0.0001 |
| 93 | SLE RA 7 | 0 | -1.08 | 3.54 | 0.0529 | -0.001 | 0.0001 |
| 93 | SLE RA 8 | 0 | -1.06 | 3.58 | 0.052 | -0.0009 | 0.0001 |
| 93 | SLE RA 9 | 0 | -1.06 | 3.58 | 0.052 | -0.001 | 0.0001 |
| 93 | SLE RA 10 | 0 | -1.18 | 6.01 | 0.0585 | -0.0076 | 0.0002 |
| 93 | SLE RA 11 | 0 | -1.22 | 5.93 | 0.0603 | -0.0072 | 0.0002 |
| 93 | SLE RA 12 | 0 | -1.22 | 5.93 | 0.0604 | -0.0073 | 0.0002 |
| 93 | SLE RA 13 | 0 | -1.2 | 5.96 | 0.0596 | -0.0073 | 0.0002 |
| 93 | SLE RA 14 | 0 | -1.24 | 5.88 | 0.0614 | -0.0069 | 0.0002 |
| 93 | SLE RA 15 | 0 | -1.24 | 5.88 | 0.0615 | -0.007 | 0.0002 |
| 93 | SLE RA 16 | 0 | -1.22 | 5.91 | 0.0606 | -0.0069 | 0.0002 |
| 93 | SLE RA 17 | 0 | -1.23 | 5.91 | 0.0607 | -0.007 | 0.0002 |
| 93 | SLE RA 18 | -0.01 | -1.25 | 7.02 | 0.0621 | -0.01 | 0.0002 |
| 93 | SLE RA 19 | -0.01 | -1.25 | 7.01 | 0.0621 | -0.0101 | 0.0002 |
| 93 | SLE RA 20 | -0.01 | -1.27 | 6.96 | 0.0632 | -0.0097 | 0.0002 |
| 93 | SLE RA 21 | -0.01 | -1.27 | 6.96 | 0.0632 | -0.0098 | 0.0002 |
| 93 | SLE FR 1 | 0 | -1.01 | 3.68 | 0.0498 | -0.0015 | 0.0001 |
| 93 | SLE FR 2 | 0 | -1.02 | 3.68 | 0.0498 | -0.0015 | 0.0001 |
| 93 | SLE FR 3 | 0 | -1.02 | 3.66 | 0.0502 | -0.0014 | 0.0001 |
| 93 | SLE FR 4 | 0 | -1.08 | 4.68 | 0.0535 | -0.0041 | 0.0001 |
| 93 | SLE FR 5 | 0 | -1.09 | 4.66 | 0.0539 | -0.0039 | 0.0001 |
| 93 | SLE FR 6 | 0 | -1.13 | 5.35 | 0.0559 | -0.0058 | 0.0001 |
| 93 | SLE QP 1 | 0 | -1.01 | 3.68 | 0.0498 | -0.0015 | 0.0001 |
| 93 | SLE QP 2 | 0 | -1.08 | 4.68 | 0.0535 | -0.004 | 0.0001 |
| 93 | SLD 1 | 0.08 | 0.01 | 6.43 | 0.0042 | 0.0555 | -0.0007 |
| 93 | SLD 2 | 0.08 | 0.01 | 6.43 | 0.0042 | 0.0555 | -0.0007 |
| 93 | SLD 3 | 0.09 | -1.37 | 4.57 | 0.0656 | 0.0628 | -0.0008 |
| 93 | SLD 4 | 0.09 | -1.37 | 4.57 | 0.0656 | 0.0628 | -0.0008 |
| 93 | SLD 5 | 0.01 | 1.34 | 8.04 | -0.0545 | 0.0026 | 0 |
| 93 | SLD 6 | 0.01 | 1.34 | 8.04 | -0.0545 | 0.0026 | 0 |
| 93 | SLD 7 | 0.04 | -3.27 | 1.82 | 0.1503 | 0.0272 | -0.0003 |
| 93 | SLD 8 | 0.04 | -3.27 | 1.82 | 0.1503 | 0.0272 | -0.0003 |
| 93 | SLD 9 | -0.04 | 1.1 | 7.55 | -0.0434 | -0.0353 | 0.0005 |
| 93 | SLD 10 | -0.04 | 1.1 | 7.55 | -0.0434 | -0.0353 | 0.0005 |
| 93 | SLD 11 | -0.01 | -3.51 | 1.33 | 0.1614 | -0.0107 | 0.0002 |
| 93 | SLD 12 | -0.01 | -3.51 | 1.33 | 0.1614 | -0.0107 | 0.0002 |
| 93 | SLD 13 | -0.09 | -0.8 | 4.8 | 0.0413 | -0.0709 | 0.001 |
| 93 | SLD 14 | -0.09 | -0.8 | 4.8 | 0.0413 | -0.0709 | 0.001 |

| Nodo | Cont. | Reazione a traslazione | | | Reazione a rotazione | | |
|---|---|---|---|---|---|---|---|
| Ind. | N.br. | x | y | z | x | y | z |
| 93 | SLD 15 | -0.08 | -2.18 | 2.94 | 0.1028 | -0.0635 | 0.0009 |
| 93 | SLD 16 | -0.08 | -2.18 | 2.94 | 0.1028 | -0.0635 | 0.0009 |
| 93 | SLV 1 | 0.19 | 1.49 | 8.78 | -0.0622 | 0.1403 | -0.0017 |
| 93 | SLV 2 | 0.19 | 1.49 | 8.78 | -0.0622 | 0.1403 | -0.0017 |
| 93 | SLV 3 | 0.22 | -1.75 | 4.41 | 0.0818 | 0.1587 | -0.0019 |
| 93 | SLV 4 | 0.22 | -1.75 | 4.41 | 0.0818 | 0.1587 | -0.0019 |
| 93 | SLV 5 | 0.02 | 4.61 | 12.54 | -0.1996 | 0.0113 | -0.0001 |
| 93 | SLV 6 | 0.02 | 4.61 | 12.54 | -0.1996 | 0.0113 | -0.0001 |
| 93 | SLV 7 | 0.11 | -6.2 | -2.03 | 0.2803 | 0.0728 | -0.0009 |
| 93 | SLV 8 | 0.11 | -6.2 | -2.03 | 0.2803 | 0.0728 | -0.0009 |
| 93 | SLV 9 | -0.11 | 4.03 | 11.39 | -0.1734 | -0.0809 | 0.0011 |
| 93 | SLV 10 | -0.11 | 4.03 | 11.39 | -0.1734 | -0.0809 | 0.0011 |
| 93 | SLV 11 | -0.02 | -6.77 | -3.18 | 0.3066 | -0.0194 | 0.0003 |
| 93 | SLV 12 | -0.02 | -6.77 | -3.18 | 0.3066 | -0.0194 | 0.0003 |
| 93 | SLV 13 | -0.22 | -0.42 | 4.96 | 0.0252 | -0.1668 | 0.0022 |
| 93 | SLV 14 | -0.22 | -0.42 | 4.96 | 0.0252 | -0.1668 | 0.0022 |
| 93 | SLV 15 | -0.19 | -3.66 | 0.59 | 0.1692 | -0.1484 | 0.0019 |
| 93 | SLV 16 | -0.19 | -3.66 | 0.59 | 0.1692 | -0.1484 | 0.0019 |
| 94 | SLU 1 | -0.05 | 2.44 | 23.22 | -0.3275 | 0.0094 | 0 |
| 94 | SLU 2 | -0.04 | 5 | 24.73 | -0.4685 | 0.015 | -0.0001 |
| 94 | SLU 3 | -0.05 | 2.22 | 23.36 | -0.3213 | 0.0098 | 0 |
| 94 | SLU 4 | -0.04 | 3.76 | 24.26 | -0.406 | 0.0132 | -0.0001 |
| 94 | SLU 5 | -0.04 | 4.71 | 24.59 | -0.4555 | 0.0153 | -0.0001 |
| 94 | SLU 6 | -0.05 | 1.93 | 23.22 | -0.3082 | 0.0102 | 0 |
| 94 | SLU 7 | -0.04 | 3.47 | 24.12 | -0.3929 | 0.0135 | -0.0001 |
| 94 | SLU 8 | -0.05 | 1.84 | 22.95 | -0.3013 | 0.01 | 0 |
| 94 | SLU 9 | -0.04 | 3.38 | 23.85 | -0.386 | 0.0134 | -0.0001 |
| 94 | SLU 10 | -0.05 | 5.18 | 27.81 | -0.5097 | 0.0166 | -0.0001 |
| 94 | SLU 11 | -0.05 | 2.4 | 26.44 | -0.3625 | 0.0115 | -0.0001 |
| 94 | SLU 12 | -0.05 | 3.94 | 27.35 | -0.4471 | 0.0148 | -0.0001 |
| 94 | SLU 13 | -0.05 | 4.88 | 27.67 | -0.4966 | 0.0169 | -0.0001 |
| 94 | SLU 14 | -0.05 | 2.1 | 26.3 | -0.3494 | 0.0118 | 0 |
| 94 | SLU 15 | -0.05 | 3.64 | 27.21 | -0.434 | 0.0152 | -0.0001 |
| 94 | SLU 16 | -0.05 | 2.02 | 26.03 | -0.3425 | 0.0117 | 0 |
| 94 | SLU 17 | -0.05 | 3.56 | 26.93 | -0.4271 | 0.015 | -0.0001 |
| 94 | SLU 18 | -0.06 | 2.69 | 27.63 | -0.3863 | 0.0118 | -0.0001 |
| 94 | SLU 19 | -0.05 | 4.23 | 28.54 | -0.4709 | 0.0151 | -0.0001 |
| 94 | SLU 20 | -0.06 | 2.39 | 27.49 | -0.3732 | 0.0121 | -0.0001 |
| 94 | SLU 21 | -0.05 | 3.93 | 28.4 | -0.4579 | 0.0154 | -0.0001 |
| 94 | SLU 22 | -0.05 | 2.49 | 25.74 | -0.359 | 0.011 | 0 |
| 94 | SLU 23 | -0.05 | 5.06 | 27.24 | -0.5001 | 0.0166 | -0.0001 |
| 94 | SLU 24 | -0.05 | 2.28 | 25.87 | -0.3528 | 0.0115 | 0 |
| 94 | SLU 25 | -0.05 | 3.82 | 26.78 | -0.4375 | 0.0148 | -0.0001 |
| 94 | SLU 26 | -0.05 | 4.76 | 27.1 | -0.487 | 0.0169 | -0.0001 |
| 94 | SLU 27 | -0.05 | 1.98 | 25.73 | -0.3398 | 0.0118 | 0 |
| 94 | SLU 28 | -0.05 | 3.52 | 26.64 | -0.4244 | 0.0151 | -0.0001 |
| 94 | SLU 29 | -0.05 | 1.9 | 25.46 | -0.3328 | 0.0117 | 0 |
| 94 | SLU 30 | -0.05 | 3.44 | 26.36 | -0.4175 | 0.015 | -0.0001 |
| 94 | SLU 31 | -0.05 | 5.24 | 30.33 | -0.5413 | 0.0182 | -0.0001 |
| 94 | SLU 32 | -0.06 | 2.46 | 28.96 | -0.394 | 0.0131 | -0.0001 |
| 94 | SLU 33 | -0.06 | 4 | 29.86 | -0.4787 | 0.0165 | -0.0001 |
| 94 | SLU 34 | -0.05 | 4.94 | 30.19 | -0.5282 | 0.0186 | -0.0001 |
| 94 | SLU 35 | -0.06 | 2.16 | 28.82 | -0.3809 | 0.0134 | -0.0001 |
| 94 | SLU 36 | -0.06 | 3.7 | 29.72 | -0.4656 | 0.0168 | -0.0001 |
| 94 | SLU 37 | -0.06 | 2.07 | 28.55 | -0.374 | 0.0133 | -0.0001 |
| 94 | SLU 38 | -0.06 | 3.61 | 29.45 | -0.4587 | 0.0167 | -0.0001 |
| 94 | SLU 39 | -0.06 | 2.74 | 30.15 | -0.4178 | 0.0134 | -0.0001 |
| 94 | SLU 40 | -0.06 | 4.28 | 31.05 | -0.5025 | 0.0167 | -0.0001 |
| 94 | SLU 41 | -0.06 | 2.45 | 30.01 | -0.4047 | 0.0137 | -0.0001 |
| 94 | SLU 42 | -0.06 | 3.99 | 30.91 | -0.4894 | 0.0171 | -0.0001 |
| 94 | SLU 43 | -0.06 | 3.15 | 29.33 | -0.4149 | 0.0117 | -0.0001 |
| 94 | SLU 44 | -0.05 | 5.71 | 30.83 | -0.556 | 0.0172 | -0.0001 |
| 94 | SLU 45 | -0.06 | 2.93 | 29.46 | -0.4087 | 0.0121 | -0.0001 |
| 94 | SLU 46 | -0.05 | 4.47 | 30.36 | -0.4934 | 0.0154 | -0.0001 |
| 94 | SLU 47 | -0.05 | 5.42 | 30.69 | -0.5429 | 0.0176 | -0.0001 |
| 94 | SLU 48 | -0.06 | 2.64 | 29.32 | -0.3957 | 0.0124 | -0.0001 |
| 94 | SLU 49 | -0.05 | 4.18 | 30.22 | -0.4803 | 0.0158 | -0.0001 |
| 94 | SLU 50 | -0.06 | 2.55 | 29.05 | -0.3887 | 0.0123 | -0.0001 |
| 94 | SLU 51 | -0.05 | 4.09 | 29.95 | -0.4734 | 0.0157 | -0.0001 |
| 94 | SLU 52 | -0.06 | 5.89 | 33.92 | -0.5972 | 0.0189 | -0.0001 |
| 94 | SLU 53 | -0.07 | 3.11 | 32.55 | -0.4499 | 0.0138 | -0.0001 |
| 94 | SLU 54 | -0.06 | 4.65 | 33.45 | -0.5346 | 0.0171 | -0.0001 |
| 94 | SLU 55 | -0.06 | 5.59 | 33.78 | -0.5841 | 0.0192 | -0.0001 |
| 94 | SLU 56 | -0.07 | 2.81 | 32.41 | -0.4368 | 0.0141 | -0.0001 |
| 94 | SLU 57 | -0.06 | 4.35 | 33.31 | -0.5215 | 0.0174 | -0.0001 |
| 94 | SLU 58 | -0.06 | 2.73 | 32.14 | -0.4299 | 0.014 | -0.0001 |
| 94 | SLU 59 | -0.06 | 4.27 | 33.04 | -0.5146 | 0.0173 | -0.0001 |
| 94 | SLU 60 | -0.07 | 3.4 | 33.74 | -0.4737 | 0.0141 | -0.0001 |
| 94 | SLU 61 | -0.06 | 4.94 | 34.64 | -0.5584 | 0.0174 | -0.0001 |
| 94 | SLU 62 | -0.07 | 3.1 | 33.6 | -0.4606 | 0.0144 | -0.0001 |
| 94 | SLU 63 | -0.06 | 4.64 | 34.5 | -0.5453 | 0.0177 | -0.0001 |
| 94 | SLU 64 | -0.06 | 3.2 | 31.84 | -0.4464 | 0.0133 | -0.0001 |
| 94 | SLU 65 | -0.06 | 5.77 | 33.35 | -0.5875 | 0.0188 | -0.0001 |
| 94 | SLU 66 | -0.06 | 2.99 | 31.98 | -0.4403 | 0.0137 | -0.0001 |
| 94 | SLU 67 | -0.06 | 4.53 | 32.88 | -0.5249 | 0.0171 | -0.0001 |
| 94 | SLU 68 | -0.06 | 5.47 | 33.21 | -0.5744 | 0.0192 | -0.0001 |
| 94 | SLU 69 | -0.06 | 2.69 | 31.84 | -0.4272 | 0.014 | -0.0001 |
| 94 | SLU 70 | -0.06 | 4.23 | 32.74 | -0.5118 | 0.0174 | -0.0001 |

| Nodo | Cont. | Reazione a traslazione | | | Reazione a rotazione | | |
|---|---|---|---|---|---|---|---|
| Ind. | N.br. | x | y | z | x | y | z |
| 94 | SLU 71 | -0.06 | 2.61 | 31.57 | -0.4203 | 0.0139 | -0.0001 |
| 94 | SLU 72 | -0.06 | 4.15 | 32.47 | -0.5049 | 0.0173 | -0.0001 |
| 94 | SLU 73 | -0.06 | 5.95 | 36.43 | -0.6287 | 0.0205 | -0.0001 |
| 94 | SLU 74 | -0.07 | 3.17 | 35.06 | -0.4814 | 0.0154 | -0.0001 |
| 94 | SLU 75 | -0.07 | 4.71 | 35.97 | -0.5661 | 0.0187 | -0.0001 |
| 94 | SLU 76 | -0.06 | 5.65 | 36.3 | -0.6156 | 0.0208 | -0.0001 |
| 94 | SLU 77 | -0.07 | 2.87 | 34.93 | -0.4684 | 0.0157 | -0.0001 |
| 94 | SLU 78 | -0.07 | 4.41 | 35.83 | -0.553 | 0.019 | -0.0001 |
| 94 | SLU 79 | -0.07 | 2.79 | 34.65 | -0.4614 | 0.0156 | -0.0001 |
| 94 | SLU 80 | -0.07 | 4.33 | 35.55 | -0.5461 | 0.0189 | -0.0001 |
| 94 | SLU 81 | -0.07 | 3.45 | 36.25 | -0.5053 | 0.0157 | -0.0001 |
| 94 | SLU 82 | -0.07 | 4.99 | 37.16 | -0.5899 | 0.019 | -0.0001 |
| 94 | SLU 83 | -0.07 | 3.16 | 36.11 | -0.4922 | 0.016 | -0.0001 |
| 94 | SLU 84 | -0.07 | 4.7 | 37.02 | -0.5768 | 0.0193 | -0.0001 |
| 94 | SLE RA 1 | -0.05 | 2.45 | 23.94 | -0.3365 | 0.0099 | 0 |
| 94 | SLE RA 2 | -0.04 | 4.16 | 24.94 | -0.4305 | 0.0136 | -0.0001 |
| 94 | SLE RA 3 | -0.05 | 2.31 | 24.03 | -0.3324 | 0.0102 | 0 |
| 94 | SLE RA 4 | -0.05 | 3.34 | 24.63 | -0.3888 | 0.0124 | -0.0001 |
| 94 | SLE RA 5 | -0.04 | 3.97 | 24.85 | -0.4218 | 0.0138 | -0.0001 |
| 94 | SLE RA 6 | -0.05 | 2.11 | 23.94 | -0.3237 | 0.0104 | 0 |
| 94 | SLE RA 7 | -0.05 | 3.14 | 24.54 | -0.3801 | 0.0126 | -0.0001 |
| 94 | SLE RA 8 | -0.05 | 2.06 | 23.76 | -0.319 | 0.0103 | 0 |
| 94 | SLE RA 9 | -0.05 | 3.08 | 24.36 | -0.3755 | 0.0125 | -0.0001 |
| 94 | SLE RA 10 | -0.05 | 4.28 | 27 | -0.458 | 0.0147 | -0.0001 |
| 94 | SLE RA 11 | -0.05 | 2.43 | 26.09 | -0.3598 | 0.0113 | 0 |
| 94 | SLE RA 12 | -0.05 | 3.45 | 26.69 | -0.4162 | 0.0135 | -0.0001 |
| 94 | SLE RA 13 | -0.05 | 4.08 | 26.91 | -0.4493 | 0.0149 | -0.0001 |
| 94 | SLE RA 14 | -0.05 | 2.23 | 26 | -0.3511 | 0.0115 | 0 |
| 94 | SLE RA 15 | -0.05 | 3.26 | 26.6 | -0.4075 | 0.0137 | -0.0001 |
| 94 | SLE RA 16 | -0.05 | 2.17 | 25.81 | -0.3465 | 0.0114 | 0 |
| 94 | SLE RA 17 | -0.05 | 3.2 | 26.42 | -0.4029 | 0.0136 | -0.0001 |
| 94 | SLE RA 18 | -0.05 | 2.62 | 26.88 | -0.3757 | 0.0115 | -0.0001 |
| 94 | SLE RA 19 | -0.05 | 3.65 | 27.48 | -0.4321 | 0.0137 | -0.0001 |
| 94 | SLE RA 20 | -0.05 | 2.42 | 26.79 | -0.367 | 0.0117 | -0.0001 |
| 94 | SLE RA 21 | -0.05 | 3.45 | 27.39 | -0.4234 | 0.0139 | -0.0001 |
| 94 | SLE FR 1 | -0.05 | 2.45 | 23.94 | -0.3365 | 0.0099 | 0 |
| 94 | SLE FR 2 | -0.05 | 2.79 | 24.14 | -0.3553 | 0.0106 | 0 |
| 94 | SLE FR 3 | -0.05 | 2.37 | 23.91 | -0.333 | 0.01 | 0 |
| 94 | SLE FR 4 | -0.05 | 2.84 | 25.02 | -0.3671 | 0.0111 | -0.0001 |
| 94 | SLE FR 5 | -0.05 | 2.42 | 24.79 | -0.3448 | 0.0104 | 0 |
| 94 | SLE FR 6 | -0.05 | 2.54 | 25.41 | -0.3561 | 0.0107 | 0 |
| 94 | SLE QP 1 | -0.05 | 2.45 | 23.94 | -0.3365 | 0.0099 | 0 |
| 94 | SLE QP 2 | -0.05 | 2.5 | 24.82 | -0.3482 | 0.0103 | 0 |
| 94 | SLD 1 | -0.02 | 2.92 | 23.84 | -0.3619 | 0.0364 | 0 |
| 94 | SLD 2 | -0.02 | 2.92 | 23.84 | -0.3619 | 0.0364 | 0 |
| 94 | SLD 3 | -0.01 | -1.02 | 20.91 | -0.1614 | 0.0268 | 0 |
| 94 | SLD 4 | -0.01 | -1.02 | 20.91 | -0.1614 | 0.0268 | 0 |
| 94 | SLD 5 | -0.06 | 8.61 | 28.97 | -0.6563 | 0.0326 | -0.0001 |
| 94 | SLD 6 | -0.06 | 8.61 | 28.97 | -0.6563 | 0.0326 | -0.0001 |
| 94 | SLD 7 | -0.02 | -4.54 | 19.21 | 0.0118 | 0.0008 | 0 |
| 94 | SLD 8 | -0.02 | -4.54 | 19.21 | 0.0118 | 0.0008 | 0 |
| 94 | SLD 9 | -0.08 | 9.54 | 30.44 | -0.7083 | 0.0199 | -0.0001 |
| 94 | SLD 10 | -0.08 | 9.54 | 30.44 | -0.7083 | 0.0199 | -0.0001 |
| 94 | SLD 11 | -0.04 | -3.61 | 20.68 | -0.0402 | -0.0119 | 0 |
| 94 | SLD 12 | -0.04 | -3.61 | 20.68 | -0.0402 | -0.0119 | 0 |
| 94 | SLD 13 | -0.09 | 6.03 | 28.74 | -0.535 | -0.0061 | -0.0001 |
| 94 | SLD 14 | -0.09 | 6.03 | 28.74 | -0.535 | -0.0061 | -0.0001 |
| 94 | SLD 15 | -0.08 | 2.08 | 25.81 | -0.3346 | -0.0157 | -0.0001 |
| 94 | SLD 16 | -0.08 | 2.08 | 25.81 | -0.3346 | -0.0157 | -0.0001 |
| 94 | SLV 1 | 0.02 | 3.52 | 22.55 | -0.3829 | 0.0717 | 0.0001 |
| 94 | SLV 2 | 0.02 | 3.52 | 22.55 | -0.3829 | 0.0717 | 0.0001 |
| 94 | SLV 3 | 0.05 | -5.93 | 15.58 | 0.0985 | 0.0476 | 0.0001 |
| 94 | SLV 4 | 0.05 | -5.93 | 15.58 | 0.0985 | 0.0476 | 0.0001 |
| 94 | SLV 5 | -0.08 | 17.13 | 34.71 | -1.0887 | 0.0652 | -0.0001 |
| 94 | SLV 6 | -0.08 | 17.13 | 34.71 | -1.0887 | 0.0652 | -0.0001 |
| 94 | SLV 7 | 0.03 | -14.35 | 11.49 | 0.5159 | -0.015 | 0.0001 |
| 94 | SLV 8 | 0.03 | -14.35 | 11.49 | 0.5159 | -0.015 | 0.0001 |
| 94 | SLV 9 | -0.13 | 19.36 | 38.16 | -1.2124 | 0.0356 | -0.0002 |
| 94 | SLV 10 | -0.13 | 19.36 | 38.16 | -1.2124 | 0.0356 | -0.0002 |
| 94 | SLV 11 | -0.02 | -12.13 | 14.94 | 0.3922 | -0.0445 | 0 |
| 94 | SLV 12 | -0.02 | -12.13 | 14.94 | 0.3922 | -0.0445 | 0 |
| 94 | SLV 13 | -0.15 | 10.93 | 34.06 | -0.795 | -0.0269 | -0.0002 |
| 94 | SLV 14 | -0.15 | 10.93 | 34.06 | -0.795 | -0.0269 | -0.0002 |
| 94 | SLV 15 | -0.12 | 1.49 | 27.1 | -0.3136 | -0.051 | -0.0002 |
| 94 | SLV 16 | -0.12 | 1.49 | 27.1 | -0.3136 | -0.051 | -0.0002 |
| 95 | SLU 1 | -0.06 | -1.86 | 47.93 | 0.2057 | -0.0123 | 0.0023 |
| 95 | SLU 2 | -0.07 | -2.31 | 48.51 | 0.2365 | -0.0141 | 0.0022 |
| 95 | SLU 3 | -0.06 | -1.84 | 48.52 | 0.2069 | -0.0121 | 0.0023 |
| 95 | SLU 4 | -0.06 | -2.11 | 48.87 | 0.2253 | -0.0132 | 0.0023 |
| 95 | SLU 5 | -0.06 | -2.27 | 48.77 | 0.2352 | -0.0138 | 0.0022 |
| 95 | SLU 6 | -0.06 | -1.8 | 48.78 | 0.2055 | -0.0118 | 0.0023 |
| 95 | SLU 7 | -0.06 | -2.07 | 49.13 | 0.224 | -0.0129 | 0.0023 |
| 95 | SLU 8 | -0.06 | -1.79 | 48.45 | 0.203 | -0.0116 | 0.0023 |
| 95 | SLU 9 | -0.06 | -2.06 | 48.8 | 0.2215 | -0.0127 | 0.0023 |
| 95 | SLU 10 | -0.08 | -2.47 | 56.96 | 0.2696 | -0.0161 | 0.0026 |
| 95 | SLU 11 | -0.07 | -2 | 56.97 | 0.2399 | -0.0141 | 0.0027 |
| 95 | SLU 12 | -0.07 | -2.27 | 57.32 | 0.2584 | -0.0152 | 0.0027 |
| 95 | SLU 13 | -0.08 | -2.43 | 57.22 | 0.2682 | -0.0158 | 0.0027 |

| Nodo | Cont. | Reazione a traslazione | | | Reazione a rotazione | | |
|---|---|---|---|---|---|---|---|
| Ind. | N.br. | x | y | z | x | y | z |
| 95 | SLU 14 | -0.07 | -1.97 | 57.23 | 0.2385 | -0.0138 | 0.0027 |
| 95 | SLU 15 | -0.07 | -2.23 | 57.58 | 0.257 | -0.0149 | 0.0027 |
| 95 | SLU 16 | -0.07 | -1.95 | 56.9 | 0.236 | -0.0136 | 0.0027 |
| 95 | SLU 17 | -0.07 | -2.22 | 57.25 | 0.2545 | -0.0147 | 0.0027 |
| 95 | SLU 18 | -0.08 | -2.08 | 60 | 0.2529 | -0.0152 | 0.0028 |
| 95 | SLU 19 | -0.08 | -2.35 | 60.35 | 0.2714 | -0.0162 | 0.0028 |
| 95 | SLU 20 | -0.07 | -2.05 | 60.27 | 0.2516 | -0.0148 | 0.0029 |
| 95 | SLU 21 | -0.08 | -2.32 | 60.61 | 0.27 | -0.0159 | 0.0028 |
| 95 | SLU 22 | -0.07 | -2.16 | 52.67 | 0.2409 | -0.0143 | 0.0025 |
| 95 | SLU 23 | -0.08 | -2.61 | 53.25 | 0.2717 | -0.0161 | 0.0025 |
| 95 | SLU 24 | -0.07 | -2.14 | 53.26 | 0.242 | -0.0141 | 0.0026 |
| 95 | SLU 25 | -0.07 | -2.41 | 53.61 | 0.2605 | -0.0152 | 0.0025 |
| 95 | SLU 26 | -0.07 | -2.58 | 53.52 | 0.2703 | -0.0157 | 0.0025 |
| 95 | SLU 27 | -0.07 | -2.11 | 53.52 | 0.2407 | -0.0137 | 0.0026 |
| 95 | SLU 28 | -0.07 | -2.38 | 53.87 | 0.2591 | -0.0148 | 0.0026 |
| 95 | SLU 29 | -0.07 | -2.09 | 53.2 | 0.2382 | -0.0136 | 0.0026 |
| 95 | SLU 30 | -0.07 | -2.36 | 53.54 | 0.2566 | -0.0146 | 0.0025 |
| 95 | SLU 31 | -0.09 | -2.77 | 61.71 | 0.3047 | -0.0181 | 0.0029 |
| 95 | SLU 32 | -0.08 | -2.3 | 61.71 | 0.2751 | -0.0161 | 0.003 |
| 95 | SLU 33 | -0.08 | -2.57 | 62.06 | 0.2935 | -0.0172 | 0.003 |
| 95 | SLU 34 | -0.09 | -2.74 | 61.97 | 0.3034 | -0.0177 | 0.0029 |
| 95 | SLU 35 | -0.08 | -2.27 | 61.97 | 0.2737 | -0.0157 | 0.003 |
| 95 | SLU 36 | -0.08 | -2.54 | 62.32 | 0.2922 | -0.0168 | 0.003 |
| 95 | SLU 37 | -0.08 | -2.25 | 61.65 | 0.2712 | -0.0155 | 0.003 |
| 95 | SLU 38 | -0.08 | -2.52 | 62 | 0.2897 | -0.0166 | 0.003 |
| 95 | SLU 39 | -0.09 | -2.39 | 64.75 | 0.2881 | -0.0171 | 0.0031 |
| 95 | SLU 40 | -0.09 | -2.66 | 65.1 | 0.3066 | -0.0182 | 0.0031 |
| 95 | SLU 41 | -0.08 | -2.36 | 65.01 | 0.2867 | -0.0167 | 0.0031 |
| 95 | SLU 42 | -0.09 | -2.62 | 65.36 | 0.3052 | -0.0178 | 0.0031 |
| 95 | SLU 43 | -0.07 | -2.31 | 60.68 | 0.2554 | -0.0153 | 0.0028 |
| 95 | SLU 44 | -0.08 | -2.76 | 61.26 | 0.2862 | -0.0172 | 0.0028 |
| 95 | SLU 45 | -0.07 | -2.29 | 61.27 | 0.2565 | -0.0152 | 0.0029 |
| 95 | SLU 46 | -0.08 | -2.56 | 61.62 | 0.275 | -0.0163 | 0.0029 |
| 95 | SLU 47 | -0.08 | -2.72 | 61.53 | 0.2848 | -0.0168 | 0.0028 |
| 95 | SLU 48 | -0.07 | -2.26 | 61.53 | 0.2551 | -0.0148 | 0.0029 |
| 95 | SLU 49 | -0.08 | -2.53 | 61.88 | 0.2736 | -0.0159 | 0.0029 |
| 95 | SLU 50 | -0.07 | -2.24 | 61.21 | 0.2527 | -0.0146 | 0.0029 |
| 95 | SLU 51 | -0.08 | -2.51 | 61.55 | 0.2711 | -0.0157 | 0.0028 |
| 95 | SLU 52 | -0.09 | -2.92 | 69.72 | 0.3192 | -0.0191 | 0.0032 |
| 95 | SLU 53 | -0.09 | -2.45 | 69.72 | 0.2895 | -0.0172 | 0.0033 |
| 95 | SLU 54 | -0.09 | -2.72 | 70.07 | 0.308 | -0.0182 | 0.0033 |
| 95 | SLU 55 | -0.09 | -2.88 | 69.98 | 0.3179 | -0.0188 | 0.0032 |
| 95 | SLU 56 | -0.08 | -2.42 | 69.98 | 0.2882 | -0.0168 | 0.0033 |
| 95 | SLU 57 | -0.09 | -2.69 | 70.33 | 0.3066 | -0.0179 | 0.0033 |
| 95 | SLU 58 | -0.08 | -2.4 | 69.66 | 0.2857 | -0.0166 | 0.0033 |
| 95 | SLU 59 | -0.09 | -2.67 | 70.01 | 0.3042 | -0.0177 | 0.0033 |
| 95 | SLU 60 | -0.09 | -2.54 | 72.76 | 0.3026 | -0.0182 | 0.0034 |
| 95 | SLU 61 | -0.09 | -2.81 | 73.11 | 0.3211 | -0.0193 | 0.0034 |
| 95 | SLU 62 | -0.09 | -2.5 | 73.02 | 0.3012 | -0.0178 | 0.0034 |
| 95 | SLU 63 | -0.09 | -2.77 | 73.37 | 0.3197 | -0.0189 | 0.0034 |
| 95 | SLU 64 | -0.08 | -2.61 | 65.43 | 0.2906 | -0.0173 | 0.0031 |
| 95 | SLU 65 | -0.09 | -3.06 | 66.01 | 0.3214 | -0.0191 | 0.0031 |
| 95 | SLU 66 | -0.08 | -2.6 | 66.01 | 0.2917 | -0.0171 | 0.0031 |
| 95 | SLU 67 | -0.09 | -2.87 | 66.36 | 0.3102 | -0.0182 | 0.0031 |
| 95 | SLU 68 | -0.09 | -3.03 | 66.27 | 0.32 | -0.0187 | 0.0031 |
| 95 | SLU 69 | -0.08 | -2.56 | 66.27 | 0.2903 | -0.0168 | 0.0032 |
| 95 | SLU 70 | -0.09 | -2.83 | 66.62 | 0.3088 | -0.0179 | 0.0031 |
| 95 | SLU 71 | -0.08 | -2.55 | 65.95 | 0.2878 | -0.0166 | 0.0031 |
| 95 | SLU 72 | -0.09 | -2.82 | 66.3 | 0.3063 | -0.0177 | 0.0031 |
| 95 | SLU 73 | -0.1 | -3.22 | 74.46 | 0.3544 | -0.0211 | 0.0035 |
| 95 | SLU 74 | -0.1 | -2.76 | 74.46 | 0.3247 | -0.0191 | 0.0036 |
| 95 | SLU 75 | -0.1 | -3.03 | 74.81 | 0.3432 | -0.0202 | 0.0035 |
| 95 | SLU 76 | -0.1 | -3.19 | 74.72 | 0.353 | -0.0207 | 0.0035 |
| 95 | SLU 77 | -0.09 | -2.72 | 74.73 | 0.3233 | -0.0188 | 0.0036 |
| 95 | SLU 78 | -0.1 | -2.99 | 75.07 | 0.3418 | -0.0198 | 0.0036 |
| 95 | SLU 79 | -0.09 | -2.71 | 74.4 | 0.3209 | -0.0186 | 0.0035 |
| 95 | SLU 80 | -0.1 | -2.98 | 74.75 | 0.3393 | -0.0197 | 0.0035 |
| 95 | SLU 81 | -0.1 | -2.84 | 77.5 | 0.3378 | -0.0201 | 0.0037 |
| 95 | SLU 82 | -0.1 | -3.11 | 77.85 | 0.3562 | -0.0212 | 0.0037 |
| 95 | SLU 83 | -0.1 | -2.81 | 77.76 | 0.3364 | -0.0198 | 0.0037 |
| 95 | SLU 84 | -0.1 | -3.08 | 78.11 | 0.3549 | -0.0209 | 0.0037 |
| 95 | SLE RA 1 | -0.06 | -1.94 | 49.29 | 0.2158 | -0.0129 | 0.0023 |
| 95 | SLE RA 2 | -0.07 | -2.24 | 49.67 | 0.2363 | -0.0141 | 0.0023 |
| 95 | SLE RA 3 | -0.06 | -1.93 | 49.68 | 0.2165 | -0.0128 | 0.0024 |
| 95 | SLE RA 4 | -0.06 | -2.11 | 49.91 | 0.2288 | -0.0135 | 0.0023 |
| 95 | SLE RA 5 | -0.07 | -2.22 | 49.85 | 0.2354 | -0.0138 | 0.0023 |
| 95 | SLE RA 6 | -0.06 | -1.91 | 49.85 | 0.2156 | -0.0125 | 0.0024 |
| 95 | SLE RA 7 | -0.06 | -2.09 | 50.08 | 0.2279 | -0.0132 | 0.0024 |
| 95 | SLE RA 8 | -0.06 | -1.9 | 49.63 | 0.214 | -0.0124 | 0.0023 |
| 95 | SLE RA 9 | -0.06 | -2.08 | 49.87 | 0.2263 | -0.0131 | 0.0023 |
| 95 | SLE RA 10 | -0.07 | -2.35 | 55.31 | 0.2583 | -0.0154 | 0.0026 |
| 95 | SLE RA 11 | -0.07 | -2.04 | 55.31 | 0.2386 | -0.0141 | 0.0026 |
| 95 | SLE RA 12 | -0.07 | -2.22 | 55.54 | 0.2509 | -0.0148 | 0.0026 |
| 95 | SLE RA 13 | -0.07 | -2.33 | 55.48 | 0.2574 | -0.0152 | 0.0026 |
| 95 | SLE RA 14 | -0.07 | -2.02 | 55.48 | 0.2376 | -0.0138 | 0.0026 |
| 95 | SLE RA 15 | -0.07 | -2.2 | 55.72 | 0.25 | -0.0146 | 0.0026 |
| 95 | SLE RA 16 | -0.07 | -2 | 55.27 | 0.236 | -0.0137 | 0.0026 |
| 95 | SLE RA 17 | -0.07 | -2.18 | 55.5 | 0.2483 | -0.0145 | 0.0026 |

| Nodo | Cont. | Reazione a traslazione | | | Reazione a rotazione | | |
|---|---|---|---|---|---|---|---|
| Ind. | N.br. | x | y | z | x | y | z |
| 95 | SLE RA 18 | -0.07 | -2.1 | 57.33 | 0.2472 | -0.0148 | 0.0027 |
| 95 | SLE RA 19 | -0.08 | -2.28 | 57.57 | 0.2596 | -0.0155 | 0.0027 |
| 95 | SLE RA 20 | -0.07 | -2.07 | 57.51 | 0.2463 | -0.0145 | 0.0027 |
| 95 | SLE RA 21 | -0.07 | -2.25 | 57.74 | 0.2586 | -0.0153 | 0.0027 |
| 95 | SLE FR 1 | -0.06 | -1.94 | 49.29 | 0.2158 | -0.0129 | 0.0023 |
| 95 | SLE FR 2 | -0.06 | -2 | 49.36 | 0.2199 | -0.0131 | 0.0023 |
| 95 | SLE FR 3 | -0.06 | -1.93 | 49.36 | 0.2154 | -0.0128 | 0.0023 |
| 95 | SLE FR 4 | -0.07 | -2.05 | 51.78 | 0.2293 | -0.0137 | 0.0024 |
| 95 | SLE FR 5 | -0.07 | -1.98 | 51.77 | 0.2249 | -0.0133 | 0.0025 |
| 95 | SLE FR 6 | -0.07 | -2.02 | 53.31 | 0.2315 | -0.0138 | 0.0025 |
| 95 | SLE QP 1 | -0.06 | -1.94 | 49.29 | 0.2158 | -0.0129 | 0.0023 |
| 95 | SLE QP 2 | -0.07 | -1.99 | 51.7 | 0.2252 | -0.0134 | 0.0024 |
| 95 | SLD 1 | -0.01 | 1 | 47.67 | 0.0187 | 0.0217 | 0.0072 |
| 95 | SLD 2 | -0.01 | 1 | 47.67 | 0.0187 | 0.0217 | 0.0072 |
| 95 | SLD 3 | -0.04 | -2.6 | 45.56 | 0.2551 | 0.0112 | 0.0061 |
| 95 | SLD 4 | -0.04 | -2.6 | 45.56 | 0.2551 | 0.0112 | 0.0061 |
| 95 | SLD 5 | 0 | 4.37 | 53.69 | -0.1954 | 0.0129 | 0.0054 |
| 95 | SLD 6 | 0 | 4.37 | 53.69 | -0.1954 | 0.0129 | 0.0054 |
| 95 | SLD 7 | -0.1 | -7.64 | 46.66 | 0.5928 | -0.0219 | 0.002 |
| 95 | SLD 8 | -0.1 | -7.64 | 46.66 | 0.5928 | -0.0219 | 0.002 |
| 95 | SLD 9 | -0.03 | 3.66 | 56.74 | -0.1424 | -0.005 | 0.0029 |
| 95 | SLD 10 | -0.03 | 3.66 | 56.74 | -0.1424 | -0.005 | 0.0029 |
| 95 | SLD 11 | -0.13 | -8.35 | 49.71 | 0.6458 | -0.0398 | -0.0005 |
| 95 | SLD 12 | -0.13 | -8.35 | 49.71 | 0.6458 | -0.0398 | -0.0005 |
| 95 | SLD 13 | -0.09 | -1.37 | 57.84 | 0.1953 | -0.0381 | -0.0012 |
| 95 | SLD 14 | -0.09 | -1.37 | 57.84 | 0.1953 | -0.0381 | -0.0012 |
| 95 | SLD 15 | -0.12 | -4.98 | 55.73 | 0.4318 | -0.0486 | -0.0023 |
| 95 | SLD 16 | -0.12 | -4.98 | 55.73 | 0.4318 | -0.0486 | -0.0023 |
| 95 | SLV 1 | 0.06 | 4.94 | 42.47 | -0.2543 | 0.0717 | 0.0141 |
| 95 | SLV 2 | 0.06 | 4.94 | 42.47 | -0.2543 | 0.0717 | 0.0141 |
| 95 | SLV 3 | -0.01 | -3.41 | 37.44 | 0.2935 | 0.0473 | 0.0116 |
| 95 | SLV 4 | -0.01 | -3.41 | 37.44 | 0.2935 | 0.0473 | 0.0116 |
| 95 | SLV 5 | 0.08 | 12.76 | 56.55 | -0.7495 | 0.0492 | 0.0096 |
| 95 | SLV 6 | 0.08 | 12.76 | 56.55 | -0.7495 | 0.0492 | 0.0096 |
| 95 | SLV 7 | -0.16 | -15.08 | 39.8 | 1.0766 | -0.0323 | 0.0015 |
| 95 | SLV 8 | -0.16 | -15.08 | 39.8 | 1.0766 | -0.0323 | 0.0015 |
| 95 | SLV 9 | 0.02 | 11.11 | 63.6 | -0.6261 | 0.0054 | 0.0034 |
| 95 | SLV 10 | 0.02 | 11.11 | 63.6 | -0.6261 | 0.0054 | 0.0034 |
| 95 | SLV 11 | -0.21 | -16.73 | 46.85 | 1.1999 | -0.076 | -0.0047 |
| 95 | SLV 12 | -0.21 | -16.73 | 46.85 | 1.1999 | -0.076 | -0.0047 |
| 95 | SLV 13 | -0.12 | -0.57 | 65.96 | 0.1569 | -0.0742 | -0.0067 |
| 95 | SLV 14 | -0.12 | -0.57 | 65.96 | 0.1569 | -0.0742 | -0.0067 |
| 95 | SLV 15 | -0.19 | -8.92 | 60.93 | 0.7047 | -0.0986 | -0.0092 |
| 95 | SLV 16 | -0.19 | -8.92 | 60.93 | 0.7047 | -0.0986 | -0.0092 |
| 96 | SLU 1 | 0.02 | 7.12 | 27.53 | -0.4306 | 0.0043 | 0 |
| 96 | SLU 2 | 0.01 | 10.11 | 29.63 | -0.5838 | -0.0008 | 0 |
| 96 | SLU 3 | 0.02 | 7.06 | 27.98 | -0.4302 | 0.0043 | 0 |
| 96 | SLU 4 | 0.02 | 8.85 | 29.25 | -0.5221 | 0.0013 | 0 |
| 96 | SLU 5 | 0.01 | 9.9 | 29.8 | -0.5755 | -0.0008 | 0 |
| 96 | SLU 6 | 0.02 | 6.85 | 28.16 | -0.4218 | 0.0043 | 0 |
| 96 | SLU 7 | 0.02 | 8.64 | 29.42 | -0.5138 | 0.0013 | 0 |
| 96 | SLU 8 | 0.02 | 6.7 | 27.87 | -0.4139 | 0.0043 | 0 |
| 96 | SLU 9 | 0.02 | 8.49 | 29.14 | -0.5059 | 0.0012 | 0 |
| 96 | SLU 10 | 0.02 | 11.06 | 33.52 | -0.6424 | -0.0001 | 0 |
| 96 | SLU 11 | 0.02 | 8.01 | 31.87 | -0.4887 | 0.0049 | 0 |
| 96 | SLU 12 | 0.02 | 9.81 | 33.13 | -0.5807 | 0.0019 | 0 |
| 96 | SLU 13 | 0.02 | 10.85 | 33.69 | -0.6341 | -0.0002 | 0 |
| 96 | SLU 14 | 0.02 | 7.8 | 32.05 | -0.4804 | 0.0049 | 0 |
| 96 | SLU 15 | 0.02 | 9.6 | 33.31 | -0.5724 | 0.0019 | 0 |
| 96 | SLU 16 | 0.02 | 7.66 | 31.76 | -0.4725 | 0.0049 | 0 |
| 96 | SLU 17 | 0.02 | 9.45 | 33.02 | -0.5644 | 0.0019 | 0 |
| 96 | SLU 18 | 0.02 | 8.49 | 33.08 | -0.5143 | 0.0051 | 0 |
| 96 | SLU 19 | 0.02 | 10.28 | 34.34 | -0.6062 | 0.0021 | 0 |
| 96 | SLU 20 | 0.02 | 8.28 | 33.25 | -0.5059 | 0.0051 | 0 |
| 96 | SLU 21 | 0.02 | 10.07 | 34.52 | -0.5979 | 0.0021 | 0 |
| 96 | SLU 22 | 0.02 | 7.89 | 30.77 | -0.478 | 0.0048 | 0 |
| 96 | SLU 23 | 0.02 | 10.87 | 32.87 | -0.6313 | -0.0002 | 0 |
| 96 | SLU 24 | 0.02 | 7.83 | 31.22 | -0.4776 | 0.0048 | 0 |
| 96 | SLU 25 | 0.02 | 9.62 | 32.48 | -0.5696 | 0.0018 | 0 |
| 96 | SLU 26 | 0.02 | 10.66 | 33.04 | -0.6229 | -0.0003 | 0 |
| 96 | SLU 27 | 0.02 | 7.62 | 31.4 | -0.4693 | 0.0048 | 0 |
| 96 | SLU 28 | 0.02 | 9.41 | 32.66 | -0.5612 | 0.0018 | 0 |
| 96 | SLU 29 | 0.02 | 7.47 | 31.11 | -0.4613 | 0.0048 | 0 |
| 96 | SLU 30 | 0.02 | 9.26 | 32.37 | -0.5533 | 0.0018 | 0 |
| 96 | SLU 31 | 0.02 | 11.83 | 36.76 | -0.6899 | 0.0004 | 0 |
| 96 | SLU 32 | 0.03 | 8.78 | 35.11 | -0.5362 | 0.0054 | 0 |
| 96 | SLU 33 | 0.02 | 10.57 | 36.37 | -0.6281 | 0.0024 | 0 |
| 96 | SLU 34 | 0.02 | 11.62 | 36.93 | -0.6815 | 0.0004 | 0 |
| 96 | SLU 35 | 0.03 | 8.57 | 35.28 | -0.5278 | 0.0054 | 0 |
| 96 | SLU 36 | 0.02 | 10.36 | 36.55 | -0.6198 | 0.0024 | 0 |
| 96 | SLU 37 | 0.03 | 8.42 | 35 | -0.5199 | 0.0054 | 0 |
| 96 | SLU 38 | 0.02 | 10.21 | 36.26 | -0.6119 | 0.0024 | 0 |
| 96 | SLU 39 | 0.03 | 9.25 | 36.32 | -0.5617 | 0.0057 | 0 |
| 96 | SLU 40 | 0.02 | 11.04 | 37.58 | -0.6537 | 0.0026 | 0 |
| 96 | SLU 41 | 0.03 | 9.04 | 36.49 | -0.5534 | 0.0056 | 0 |
| 96 | SLU 42 | 0.02 | 10.83 | 37.75 | -0.6453 | 0.0026 | 0 |
| 96 | SLU 43 | 0.03 | 9 | 34.67 | -0.5435 | 0.0054 | 0 |
| 96 | SLU 44 | 0.02 | 11.98 | 36.78 | -0.6968 | 0.0003 | 0 |

| Nodo | Cont. | Reazione a traslazione | | | Reazione a rotazione | | |
|---|---|---|---|---|---|---|---|
| Ind. | N.br. | x | y | z | x | y | z |
| 96 | SLU 45 | 0.03 | 8.93 | 35.13 | -0.5431 | 0.0054 | 0 |
| 96 | SLU 46 | 0.02 | 10.72 | 36.39 | -0.635 | 0.0024 | 0 |
| 96 | SLU 47 | 0.02 | 11.77 | 36.95 | -0.6884 | 0.0003 | 0 |
| 96 | SLU 48 | 0.03 | 8.72 | 35.31 | -0.5347 | 0.0054 | 0 |
| 96 | SLU 49 | 0.02 | 10.51 | 36.57 | -0.6267 | 0.0024 | 0 |
| 96 | SLU 50 | 0.03 | 8.58 | 35.02 | -0.5268 | 0.0054 | 0 |
| 96 | SLU 51 | 0.02 | 10.37 | 36.28 | -0.6188 | 0.0023 | 0 |
| 96 | SLU 52 | 0.02 | 12.94 | 40.66 | -0.7553 | 0.001 | 0 |
| 96 | SLU 53 | 0.03 | 9.89 | 39.02 | -0.6017 | 0.006 | 0 |
| 96 | SLU 54 | 0.02 | 11.68 | 40.28 | -0.6936 | 0.003 | 0 |
| 96 | SLU 55 | 0.02 | 12.73 | 40.84 | -0.747 | 0.0009 | 0 |
| 96 | SLU 56 | 0.03 | 9.68 | 39.19 | -0.5933 | 0.006 | 0 |
| 96 | SLU 57 | 0.02 | 11.47 | 40.45 | -0.6853 | 0.003 | 0 |
| 96 | SLU 58 | 0.03 | 9.53 | 38.91 | -0.5854 | 0.006 | 0 |
| 96 | SLU 59 | 0.02 | 11.32 | 40.17 | -0.6773 | 0.003 | 0 |
| 96 | SLU 60 | 0.03 | 10.36 | 40.23 | -0.6272 | 0.0062 | 0 |
| 96 | SLU 61 | 0.02 | 12.15 | 41.49 | -0.7191 | 0.0032 | 0 |
| 96 | SLU 62 | 0.03 | 10.15 | 40.4 | -0.6188 | 0.0062 | 0 |
| 96 | SLU 63 | 0.02 | 11.94 | 41.66 | -0.7108 | 0.0032 | 0 |
| 96 | SLU 64 | 0.03 | 9.76 | 37.91 | -0.5909 | 0.0059 | 0 |
| 96 | SLU 65 | 0.02 | 12.75 | 40.02 | -0.7442 | 0.0009 | 0 |
| 96 | SLU 66 | 0.03 | 9.7 | 38.37 | -0.5905 | 0.0059 | 0 |
| 96 | SLU 67 | 0.02 | 11.49 | 39.63 | -0.6825 | 0.0029 | 0 |
| 96 | SLU 68 | 0.02 | 12.54 | 40.19 | -0.7359 | 0.0009 | 0 |
| 96 | SLU 69 | 0.03 | 9.49 | 38.54 | -0.5822 | 0.0059 | 0 |
| 96 | SLU 70 | 0.02 | 11.28 | 39.81 | -0.6741 | 0.0029 | 0 |
| 96 | SLU 71 | 0.03 | 9.34 | 38.26 | -0.5743 | 0.0059 | 0 |
| 96 | SLU 72 | 0.02 | 11.13 | 39.52 | -0.6662 | 0.0029 | 0 |
| 96 | SLU 73 | 0.02 | 13.7 | 43.9 | -0.8028 | 0.0015 | 0 |
| 96 | SLU 74 | 0.03 | 10.65 | 42.26 | -0.6491 | 0.0066 | 0 |
| 96 | SLU 75 | 0.03 | 12.45 | 43.52 | -0.7411 | 0.0035 | 0 |
| 96 | SLU 76 | 0.02 | 13.49 | 44.08 | -0.7944 | 0.0015 | 0 |
| 96 | SLU 77 | 0.03 | 10.44 | 42.43 | -0.6408 | 0.0065 | 0 |
| 96 | SLU 78 | 0.03 | 12.24 | 43.69 | -0.7327 | 0.0035 | 0 |
| 96 | SLU 79 | 0.03 | 10.3 | 42.15 | -0.6328 | 0.0065 | 0 |
| 96 | SLU 80 | 0.03 | 12.09 | 43.41 | -0.7248 | 0.0035 | 0 |
| 96 | SLU 81 | 0.03 | 11.13 | 43.47 | -0.6746 | 0.0068 | 0 |
| 96 | SLU 82 | 0.03 | 12.92 | 44.73 | -0.7666 | 0.0037 | 0 |
| 96 | SLU 83 | 0.03 | 10.92 | 43.64 | -0.6663 | 0.0068 | 0 |
| 96 | SLU 84 | 0.03 | 12.71 | 44.9 | -0.7582 | 0.0037 | 0 |
| 96 | SLE RA 1 | 0.02 | 7.34 | 28.45 | -0.4441 | 0.0044 | 0 |
| 96 | SLE RA 2 | 0.02 | 9.33 | 29.85 | -0.5463 | 0.0011 | 0 |
| 96 | SLE RA 3 | 0.02 | 7.3 | 28.76 | -0.4439 | 0.0045 | 0 |
| 96 | SLE RA 4 | 0.02 | 8.49 | 29.6 | -0.5052 | 0.0024 | 0 |
| 96 | SLE RA 5 | 0.02 | 9.19 | 29.97 | -0.5408 | 0.0011 | 0 |
| 96 | SLE RA 6 | 0.02 | 7.16 | 28.87 | -0.4383 | 0.0044 | 0 |
| 96 | SLE RA 7 | 0.02 | 8.35 | 29.71 | -0.4996 | 0.0024 | 0 |
| 96 | SLE RA 8 | 0.02 | 7.06 | 28.68 | -0.433 | 0.0044 | 0 |
| 96 | SLE RA 9 | 0.02 | 8.25 | 29.52 | -0.4943 | 0.0024 | 0 |
| 96 | SLE RA 10 | 0.02 | 9.97 | 32.45 | -0.5854 | 0.0015 | 0 |
| 96 | SLE RA 11 | 0.02 | 7.94 | 31.35 | -0.4829 | 0.0049 | 0 |
| 96 | SLE RA 12 | 0.02 | 9.13 | 32.19 | -0.5442 | 0.0028 | 0 |
| 96 | SLE RA 13 | 0.02 | 9.83 | 32.56 | -0.5798 | 0.0015 | 0 |
| 96 | SLE RA 14 | 0.02 | 7.8 | 31.46 | -0.4774 | 0.0049 | 0 |
| 96 | SLE RA 15 | 0.02 | 8.99 | 32.31 | -0.5387 | 0.0028 | 0 |
| 96 | SLE RA 16 | 0.02 | 7.7 | 31.28 | -0.4721 | 0.0048 | 0 |
| 96 | SLE RA 17 | 0.02 | 8.89 | 32.12 | -0.5334 | 0.0028 | 0 |
| 96 | SLE RA 18 | 0.02 | 8.25 | 32.15 | -0.4999 | 0.005 | 0 |
| 96 | SLE RA 19 | 0.02 | 9.44 | 33 | -0.5612 | 0.003 | 0 |
| 96 | SLE RA 20 | 0.02 | 8.11 | 32.27 | -0.4944 | 0.005 | 0 |
| 96 | SLE RA 21 | 0.02 | 9.3 | 33.11 | -0.5557 | 0.003 | 0 |
| 96 | SLE FR 1 | 0.02 | 7.34 | 28.45 | -0.4441 | 0.0044 | 0 |
| 96 | SLE FR 2 | 0.02 | 7.74 | 28.73 | -0.4646 | 0.0037 | 0 |
| 96 | SLE FR 3 | 0.02 | 7.28 | 28.5 | -0.4419 | 0.0044 | 0 |
| 96 | SLE FR 4 | 0.02 | 8.01 | 29.84 | -0.4813 | 0.0039 | 0 |
| 96 | SLE FR 5 | 0.02 | 7.56 | 29.61 | -0.4587 | 0.0046 | 0 |
| 96 | SLE FR 6 | 0.02 | 7.8 | 30.3 | -0.472 | 0.0047 | 0 |
| 96 | SLE QP 1 | 0.02 | 7.34 | 28.45 | -0.4441 | 0.0044 | 0 |
| 96 | SLE QP 2 | 0.02 | 7.61 | 29.56 | -0.4609 | 0.0046 | 0 |
| 96 | SLD 1 | -0.01 | 11.63 | 33.77 | -0.658 | 0.0183 | 0.0001 |
| 96 | SLD 2 | -0.01 | 11.63 | 33.77 | -0.658 | 0.0183 | 0.0001 |
| 96 | SLD 3 | -0.03 | 7.52 | 30.45 | -0.457 | 0.0263 | 0.0001 |
| 96 | SLD 4 | -0.03 | 7.52 | 30.45 | -0.457 | 0.0263 | 0.0001 |
| 96 | SLD 5 | 0.04 | 15.04 | 35.86 | -0.8249 | -0.0034 | 0.0001 |
| 96 | SLD 6 | 0.04 | 15.04 | 35.86 | -0.8249 | -0.0034 | 0.0001 |
| 96 | SLD 7 | -0.02 | 1.36 | 24.8 | -0.1549 | 0.0232 | 0 |
| 96 | SLD 8 | -0.02 | 1.36 | 24.8 | -0.1549 | 0.0232 | 0 |
| 96 | SLD 9 | 0.06 | 13.87 | 34.33 | -0.7669 | -0.014 | 0 |
| 96 | SLD 10 | 0.06 | 13.87 | 34.33 | -0.7669 | -0.014 | 0 |
| 96 | SLD 11 | 0.01 | 0.19 | 23.26 | -0.0969 | 0.0126 | 0 |
| 96 | SLD 12 | 0.01 | 0.19 | 23.26 | -0.0969 | 0.0126 | 0 |
| 96 | SLD 13 | 0.07 | 7.7 | 28.67 | -0.4647 | -0.0171 | 0 |
| 96 | SLD 14 | 0.07 | 7.7 | 28.67 | -0.4647 | -0.0171 | 0 |
| 96 | SLD 15 | 0.05 | 3.6 | 25.35 | -0.2637 | -0.0091 | 0 |
| 96 | SLD 16 | 0.05 | 3.6 | 25.35 | -0.2637 | -0.0091 | 0 |
| 96 | SLV 1 | -0.05 | 17.18 | 39.47 | -0.931 | 0.036 | 0.0002 |
| 96 | SLV 2 | -0.05 | 17.18 | 39.47 | -0.931 | 0.036 | 0.0002 |
| 96 | SLV 3 | -0.09 | 7.51 | 31.68 | -0.4568 | 0.0565 | 0.0001 |

| Nodo | Cont. | Reazione a traslazione | | | Reazione a rotazione | | |
|---|---|---|---|---|---|---|---|
| Ind. | N.br. | x | y | z | x | y | z |
| 96 | SLV 4 | -0.09 | 7.51 | 31.68 | -0.4568 | 0.0565 | 0.0001 |
| 96 | SLV 5 | 0.06 | 25.15 | 44.36 | -1.3211 | -0.017 | 0.0001 |
| 96 | SLV 6 | 0.06 | 25.15 | 44.36 | -1.3211 | -0.017 | 0.0001 |
| 96 | SLV 7 | -0.07 | -7.08 | 18.38 | 0.2595 | 0.0511 | 0 |
| 96 | SLV 8 | -0.07 | -7.08 | 18.38 | 0.2595 | 0.0511 | 0 |
| 96 | SLV 9 | 0.12 | 22.31 | 40.75 | -1.1813 | -0.042 | 0.0001 |
| 96 | SLV 10 | 0.12 | 22.31 | 40.75 | -1.1813 | -0.042 | 0.0001 |
| 96 | SLV 11 | -0.02 | -9.92 | 14.77 | 0.3993 | 0.0262 | -0.0001 |
| 96 | SLV 12 | -0.02 | -9.92 | 14.77 | 0.3993 | 0.0262 | -0.0001 |
| 96 | SLV 13 | 0.14 | 7.72 | 27.45 | -0.4649 | -0.0473 | -0.0001 |
| 96 | SLV 14 | 0.14 | 7.72 | 27.45 | -0.4649 | -0.0473 | -0.0001 |
| 96 | SLV 15 | 0.1 | -1.95 | 19.65 | 0.0092 | -0.0268 | -0.0001 |
| 96 | SLV 16 | 0.1 | -1.95 | 19.65 | 0.0092 | -0.0268 | -0.0001 |
| 97 | SLU 1 | -0.12 | 11.79 | 57.25 | -0.5959 | -0.026 | -0.0003 |
| 97 | SLU 2 | -0.07 | 13.86 | 60.4 | -0.6913 | 0.008 | -0.0004 |
| 97 | SLU 3 | -0.12 | 12.2 | 59.13 | -0.617 | -0.027 | -0.0003 |
| 97 | SLU 4 | -0.09 | 13.44 | 61.02 | -0.6743 | -0.0066 | -0.0004 |
| 97 | SLU 5 | -0.07 | 14.11 | 61.65 | -0.7045 | 0.0073 | -0.0004 |
| 97 | SLU 6 | -0.12 | 12.45 | 60.38 | -0.6301 | -0.0277 | -0.0004 |
| 97 | SLU 7 | -0.09 | 13.69 | 62.27 | -0.6874 | -0.0073 | -0.0004 |
| 97 | SLU 8 | -0.12 | 12.29 | 59.74 | -0.6222 | -0.0274 | -0.0003 |
| 97 | SLU 9 | -0.09 | 13.53 | 61.63 | -0.6794 | -0.0071 | -0.0004 |
| 97 | SLU 10 | -0.08 | 15.18 | 67.03 | -0.7598 | 0.0049 | -0.0005 |
| 97 | SLU 11 | -0.14 | 13.52 | 65.76 | -0.6855 | -0.0301 | -0.0004 |
| 97 | SLU 12 | -0.1 | 14.76 | 67.65 | -0.7427 | -0.0097 | -0.0004 |
| 97 | SLU 13 | -0.08 | 15.43 | 68.27 | -0.7729 | 0.0042 | -0.0005 |
| 97 | SLU 14 | -0.14 | 13.77 | 67 | -0.6986 | -0.0308 | -0.0004 |
| 97 | SLU 15 | -0.11 | 15.01 | 68.9 | -0.7559 | -0.0104 | -0.0004 |
| 97 | SLU 16 | -0.14 | 13.61 | 66.37 | -0.6906 | -0.0305 | -0.0004 |
| 97 | SLU 17 | -0.11 | 14.85 | 68.26 | -0.7479 | -0.0101 | -0.0004 |
| 97 | SLU 18 | -0.14 | 13.68 | 66.72 | -0.6937 | -0.0304 | -0.0004 |
| 97 | SLU 19 | -0.11 | 14.92 | 68.61 | -0.751 | -0.01 | -0.0004 |
| 97 | SLU 20 | -0.14 | 13.93 | 67.96 | -0.7069 | -0.0311 | -0.0004 |
| 97 | SLU 21 | -0.11 | 15.17 | 69.85 | -0.7641 | -0.0107 | -0.0004 |
| 97 | SLU 22 | -0.13 | 13.24 | 64.45 | -0.6709 | -0.0294 | -0.0004 |
| 97 | SLU 23 | -0.08 | 15.31 | 67.6 | -0.7664 | 0.0045 | -0.0005 |
| 97 | SLU 24 | -0.14 | 13.65 | 66.33 | -0.6921 | -0.0305 | -0.0004 |
| 97 | SLU 25 | -0.11 | 14.89 | 68.22 | -0.7493 | -0.0101 | -0.0004 |
| 97 | SLU 26 | -0.08 | 15.56 | 68.84 | -0.7795 | 0.0038 | -0.0005 |
| 97 | SLU 27 | -0.14 | 13.9 | 67.57 | -0.7052 | -0.0312 | -0.0004 |
| 97 | SLU 28 | -0.11 | 15.14 | 69.46 | -0.7624 | -0.0108 | -0.0004 |
| 97 | SLU 29 | -0.14 | 13.73 | 66.93 | -0.6972 | -0.0309 | -0.0004 |
| 97 | SLU 30 | -0.11 | 14.98 | 68.82 | -0.7545 | -0.0105 | -0.0004 |
| 97 | SLU 31 | -0.09 | 16.63 | 74.23 | -0.8348 | 0.0014 | -0.0005 |
| 97 | SLU 32 | -0.15 | 14.97 | 72.96 | -0.7605 | -0.0335 | -0.0004 |
| 97 | SLU 33 | -0.12 | 16.21 | 74.85 | -0.8178 | -0.0132 | -0.0005 |
| 97 | SLU 34 | -0.1 | 16.88 | 75.47 | -0.848 | 0.0007 | -0.0005 |
| 97 | SLU 35 | -0.15 | 15.22 | 74.2 | -0.7737 | -0.0343 | -0.0004 |
| 97 | SLU 36 | -0.12 | 16.46 | 76.09 | -0.8309 | -0.0139 | -0.0005 |
| 97 | SLU 37 | -0.15 | 15.06 | 73.56 | -0.7657 | -0.034 | -0.0004 |
| 97 | SLU 38 | -0.12 | 16.3 | 75.45 | -0.8229 | -0.0136 | -0.0005 |
| 97 | SLU 39 | -0.15 | 15.13 | 73.92 | -0.7688 | -0.0338 | -0.0004 |
| 97 | SLU 40 | -0.12 | 16.37 | 75.81 | -0.826 | -0.0135 | -0.0005 |
| 97 | SLU 41 | -0.16 | 15.37 | 75.16 | -0.7819 | -0.0346 | -0.0004 |
| 97 | SLU 42 | -0.12 | 16.62 | 77.05 | -0.8392 | -0.0142 | -0.0005 |
| 97 | SLU 43 | -0.15 | 14.84 | 71.96 | -0.7489 | -0.0326 | -0.0004 |
| 97 | SLU 44 | -0.1 | 16.9 | 75.11 | -0.8444 | 0.0014 | -0.0005 |
| 97 | SLU 45 | -0.15 | 15.24 | 73.84 | -0.77 | -0.0336 | -0.0004 |
| 97 | SLU 46 | -0.12 | 16.49 | 75.73 | -0.8273 | -0.0132 | -0.0005 |
| 97 | SLU 47 | -0.1 | 17.15 | 76.35 | -0.8575 | 0.0007 | -0.0005 |
| 97 | SLU 48 | -0.15 | 15.49 | 75.08 | -0.7832 | -0.0343 | -0.0004 |
| 97 | SLU 49 | -0.12 | 16.73 | 76.98 | -0.8404 | -0.0139 | -0.0005 |
| 97 | SLU 50 | -0.15 | 15.33 | 74.44 | -0.7752 | -0.034 | -0.0004 |
| 97 | SLU 51 | -0.12 | 16.57 | 76.34 | -0.8325 | -0.0137 | -0.0005 |
| 97 | SLU 52 | -0.11 | 18.23 | 81.74 | -0.9128 | -0.0017 | -0.0005 |
| 97 | SLU 53 | -0.17 | 16.57 | 80.47 | -0.8385 | -0.0367 | -0.0005 |
| 97 | SLU 54 | -0.13 | 17.81 | 82.36 | -0.8958 | -0.0163 | -0.0005 |
| 97 | SLU 55 | -0.11 | 18.47 | 82.98 | -0.926 | -0.0024 | -0.0005 |
| 97 | SLU 56 | -0.17 | 16.81 | 81.71 | -0.8517 | -0.0374 | -0.0005 |
| 97 | SLU 57 | -0.14 | 18.05 | 83.6 | -0.9089 | -0.017 | -0.0005 |
| 97 | SLU 58 | -0.17 | 16.65 | 81.07 | -0.8437 | -0.0371 | -0.0005 |
| 97 | SLU 59 | -0.14 | 17.89 | 82.96 | -0.9009 | -0.0167 | -0.0005 |
| 97 | SLU 60 | -0.17 | 16.72 | 81.43 | -0.8468 | -0.037 | -0.0005 |
| 97 | SLU 61 | -0.14 | 17.96 | 83.32 | -0.904 | -0.0166 | -0.0005 |
| 97 | SLU 62 | -0.17 | 16.97 | 82.67 | -0.8599 | -0.0377 | -0.0005 |
| 97 | SLU 63 | -0.14 | 18.21 | 84.56 | -0.9172 | -0.0173 | -0.0005 |
| 97 | SLU 64 | -0.16 | 16.28 | 79.15 | -0.824 | -0.036 | -0.0005 |
| 97 | SLU 65 | -0.11 | 18.35 | 82.31 | -0.9194 | -0.0021 | -0.0005 |
| 97 | SLU 66 | -0.17 | 16.69 | 81.04 | -0.8451 | -0.0371 | -0.0005 |
| 97 | SLU 67 | -0.14 | 17.93 | 82.93 | -0.9023 | -0.0167 | -0.0005 |
| 97 | SLU 68 | -0.11 | 18.6 | 83.55 | -0.9325 | -0.0028 | -0.0005 |
| 97 | SLU 69 | -0.17 | 16.94 | 82.28 | -0.8582 | -0.0378 | -0.0005 |
| 97 | SLU 70 | -0.14 | 18.18 | 84.17 | -0.9155 | -0.0174 | -0.0005 |
| 97 | SLU 71 | -0.17 | 16.78 | 81.64 | -0.8502 | -0.0375 | -0.0005 |
| 97 | SLU 72 | -0.14 | 18.02 | 83.53 | -0.9075 | -0.0171 | -0.0005 |
| 97 | SLU 73 | -0.12 | 19.67 | 88.94 | -0.9879 | -0.0052 | -0.0006 |
| 97 | SLU 74 | -0.18 | 18.01 | 87.67 | -0.9136 | -0.0401 | -0.0005 |
| 97 | SLU 75 | -0.15 | 19.25 | 89.56 | -0.9708 | -0.0198 | -0.0006 |

| Nodo | Cont. | Reazione a traslazione | | | Reazione a rotazione | | |
|---|---|---|---|---|---|---|---|
| Ind. | N.br. | x | y | z | x | y | z |
| 97 | SLU 76 | -0.13 | 19.92 | 90.18 | -1.001 | -0.0059 | -0.0006 |
| 97 | SLU 77 | -0.18 | 18.26 | 88.91 | -0.9267 | -0.0409 | -0.0005 |
| 97 | SLU 78 | -0.15 | 19.5 | 90.8 | -0.984 | -0.0205 | -0.0006 |
| 97 | SLU 79 | -0.18 | 18.1 | 88.27 | -0.9187 | -0.0406 | -0.0005 |
| 97 | SLU 80 | -0.15 | 19.34 | 90.16 | -0.976 | -0.0202 | -0.0006 |
| 97 | SLU 81 | -0.18 | 18.17 | 88.62 | -0.9218 | -0.0404 | -0.0005 |
| 97 | SLU 82 | -0.15 | 19.41 | 90.52 | -0.9791 | -0.0201 | -0.0006 |
| 97 | SLU 83 | -0.19 | 18.42 | 89.87 | -0.9349 | -0.0412 | -0.0005 |
| 97 | SLU 84 | -0.15 | 19.66 | 91.76 | -0.9922 | -0.0208 | -0.0006 |
| 97 | SLE RA 1 | -0.12 | 12.21 | 59.31 | -0.6173 | -0.027 | -0.0003 |
| 97 | SLE RA 2 | -0.09 | 13.59 | 61.41 | -0.6809 | -0.0043 | -0.0004 |
| 97 | SLE RA 3 | -0.12 | 12.48 | 60.56 | -0.6314 | -0.0276 | -0.0004 |
| 97 | SLE RA 4 | -0.1 | 13.31 | 61.82 | -0.6696 | -0.0141 | -0.0004 |
| 97 | SLE RA 5 | -0.09 | 13.75 | 62.24 | -0.6897 | -0.0048 | -0.0004 |
| 97 | SLE RA 6 | -0.13 | 12.64 | 61.39 | -0.6402 | -0.0281 | -0.0004 |
| 97 | SLE RA 7 | -0.11 | 13.47 | 62.65 | -0.6783 | -0.0145 | -0.0004 |
| 97 | SLE RA 8 | -0.13 | 12.54 | 60.96 | -0.6348 | -0.0279 | -0.0004 |
| 97 | SLE RA 9 | -0.1 | 13.36 | 62.22 | -0.673 | -0.0144 | -0.0004 |
| 97 | SLE RA 10 | -0.1 | 14.47 | 65.83 | -0.7266 | -0.0064 | -0.0004 |
| 97 | SLE RA 11 | -0.13 | 13.36 | 64.98 | -0.6771 | -0.0297 | -0.0004 |
| 97 | SLE RA 12 | -0.11 | 14.19 | 66.24 | -0.7152 | -0.0161 | -0.0004 |
| 97 | SLE RA 13 | -0.1 | 14.63 | 66.66 | -0.7354 | -0.0069 | -0.0004 |
| 97 | SLE RA 14 | -0.14 | 13.53 | 65.81 | -0.6858 | -0.0302 | -0.0004 |
| 97 | SLE RA 15 | -0.11 | 14.35 | 67.07 | -0.724 | -0.0166 | -0.0004 |
| 97 | SLE RA 16 | -0.13 | 13.42 | 65.38 | -0.6805 | -0.03 | -0.0004 |
| 97 | SLE RA 17 | -0.11 | 14.24 | 66.64 | -0.7187 | -0.0164 | -0.0004 |
| 97 | SLE RA 18 | -0.13 | 13.46 | 65.62 | -0.6826 | -0.0299 | -0.0004 |
| 97 | SLE RA 19 | -0.11 | 14.29 | 66.88 | -0.7207 | -0.0163 | -0.0004 |
| 97 | SLE RA 20 | -0.14 | 13.63 | 66.45 | -0.6913 | -0.0304 | -0.0004 |
| 97 | SLE RA 21 | -0.12 | 14.46 | 67.71 | -0.7295 | -0.0168 | -0.0004 |
| 97 | SLE FR 1 | -0.12 | 12.21 | 59.31 | -0.6173 | -0.027 | -0.0003 |
| 97 | SLE FR 2 | -0.11 | 12.48 | 59.73 | -0.6301 | -0.0224 | -0.0004 |
| 97 | SLE FR 3 | -0.12 | 12.27 | 59.64 | -0.6208 | -0.0272 | -0.0003 |
| 97 | SLE FR 4 | -0.12 | 12.86 | 61.62 | -0.6496 | -0.0233 | -0.0004 |
| 97 | SLE FR 5 | -0.13 | 12.65 | 61.53 | -0.6404 | -0.028 | -0.0004 |
| 97 | SLE FR 6 | -0.13 | 12.84 | 62.46 | -0.6499 | -0.0284 | -0.0004 |
| 97 | SLE QP 1 | -0.12 | 12.21 | 59.31 | -0.6173 | -0.027 | -0.0003 |
| 97 | SLE QP 2 | -0.13 | 12.58 | 61.2 | -0.6369 | -0.0278 | -0.0004 |
| 97 | SLD 1 | -0.11 | 11.17 | 45.99 | -0.5591 | 0.0657 | -0.0002 |
| 97 | SLD 2 | -0.11 | 11.17 | 45.99 | -0.5591 | 0.0657 | -0.0002 |
| 97 | SLD 3 | 0 | 6.99 | 36.37 | -0.3625 | 0.0168 | -0.0001 |
| 97 | SLD 4 | 0 | 6.99 | 36.37 | -0.3625 | 0.0168 | -0.0001 |
| 97 | SLD 5 | -0.28 | 18.5 | 71.23 | -0.9118 | 0.0744 | -0.0005 |
| 97 | SLD 6 | -0.28 | 18.5 | 71.23 | -0.9118 | 0.0744 | -0.0005 |
| 97 | SLD 7 | 0.07 | 4.57 | 39.16 | -0.2563 | -0.0886 | -0.0001 |
| 97 | SLD 8 | 0.07 | 4.57 | 39.16 | -0.2563 | -0.0886 | -0.0001 |
| 97 | SLD 9 | -0.32 | 20.6 | 83.24 | -1.0175 | 0.0329 | -0.0006 |
| 97 | SLD 10 | -0.32 | 20.6 | 83.24 | -1.0175 | 0.0329 | -0.0006 |
| 97 | SLD 11 | 0.02 | 6.67 | 51.17 | -0.362 | -0.13 | -0.0002 |
| 97 | SLD 12 | 0.02 | 6.67 | 51.17 | -0.362 | -0.13 | -0.0002 |
| 97 | SLD 13 | -0.25 | 18.17 | 86.03 | -0.9113 | -0.0724 | -0.0006 |
| 97 | SLD 14 | -0.25 | 18.17 | 86.03 | -0.9113 | -0.0724 | -0.0006 |
| 97 | SLD 15 | -0.15 | 13.99 | 76.41 | -0.7147 | -0.1213 | -0.0005 |
| 97 | SLD 16 | -0.15 | 13.99 | 76.41 | -0.7147 | -0.1213 | -0.0005 |
| 97 | SLV 1 | -0.09 | 9.3 | 25.71 | -0.4544 | 0.1972 | -0.0001 |
| 97 | SLV 2 | -0.09 | 9.3 | 25.71 | -0.4544 | 0.1972 | -0.0001 |
| 97 | SLV 3 | 0.17 | -0.48 | 3.18 | 0.0049 | 0.0727 | 0.0002 |
| 97 | SLV 4 | 0.17 | -0.48 | 3.18 | 0.0049 | 0.0727 | 0.0002 |
| 97 | SLV 5 | -0.5 | 26.43 | 84.72 | -1.2788 | 0.2285 | -0.0007 |
| 97 | SLV 6 | -0.5 | 26.43 | 84.72 | -1.2788 | 0.2285 | -0.0007 |
| 97 | SLV 7 | 0.35 | -6.17 | 9.63 | 0.2523 | -0.1865 | 0.0002 |
| 97 | SLV 8 | 0.35 | -6.17 | 9.63 | 0.2523 | -0.1865 | 0.0002 |
| 97 | SLV 9 | -0.61 | 31.34 | 112.78 | -1.5261 | 0.1308 | -0.0009 |
| 97 | SLV 10 | -0.61 | 31.34 | 112.78 | -1.5261 | 0.1308 | -0.0009 |
| 97 | SLV 11 | 0.25 | -1.27 | 37.68 | 0.005 | -0.2842 | -0.0001 |
| 97 | SLV 12 | 0.25 | -1.27 | 37.68 | 0.005 | -0.2842 | -0.0001 |
| 97 | SLV 13 | -0.42 | 25.65 | 119.22 | -1.2787 | -0.1284 | -0.0009 |
| 97 | SLV 14 | -0.42 | 25.65 | 119.22 | -1.2787 | -0.1284 | -0.0009 |
| 97 | SLV 15 | -0.16 | 15.87 | 96.7 | -0.8194 | -0.2529 | -0.0006 |
| 97 | SLV 16 | -0.16 | 15.87 | 96.7 | -0.8194 | -0.2529 | -0.0006 |
| 98 | SLU 1 | 0.12 | 11.43 | 61.13 | -0.7254 | -0.0103 | 0.0006 |
| 98 | SLU 2 | 0.07 | 13.84 | 64.63 | -0.8535 | -0.0488 | 0.0006 |
| 98 | SLU 3 | 0.13 | 12.03 | 64.18 | -0.765 | -0.0103 | 0.0006 |
| 98 | SLU 4 | 0.09 | 13.47 | 66.27 | -0.8418 | -0.0334 | 0.0006 |
| 98 | SLU 5 | 0.07 | 14.34 | 67.25 | -0.8869 | -0.0486 | 0.0006 |
| 98 | SLU 6 | 0.13 | 12.52 | 66.8 | -0.7985 | -0.0102 | 0.0006 |
| 98 | SLU 7 | 0.1 | 13.97 | 68.89 | -0.8753 | -0.0333 | 0.0006 |
| 98 | SLU 8 | 0.13 | 12.42 | 66.37 | -0.7923 | -0.01 | 0.0006 |
| 98 | SLU 9 | 0.1 | 13.87 | 68.47 | -0.8691 | -0.0331 | 0.0006 |
| 98 | SLU 10 | 0.08 | 15.03 | 71.73 | -0.9348 | -0.0504 | 0.0007 |
| 98 | SLU 11 | 0.14 | 13.22 | 71.28 | -0.8463 | -0.0119 | 0.0007 |
| 98 | SLU 12 | 0.11 | 14.67 | 73.38 | -0.9232 | -0.035 | 0.0007 |
| 98 | SLU 13 | 0.09 | 15.53 | 74.35 | -0.9682 | -0.0502 | 0.0007 |
| 98 | SLU 14 | 0.15 | 13.72 | 73.9 | -0.8798 | -0.0118 | 0.0007 |
| 98 | SLU 15 | 0.11 | 15.16 | 75.99 | -0.9566 | -0.0349 | 0.0007 |
| 98 | SLU 16 | 0.15 | 13.62 | 73.47 | -0.8736 | -0.0116 | 0.0007 |
| 98 | SLU 17 | 0.11 | 15.06 | 75.57 | -0.9504 | -0.0347 | 0.0007 |
| 98 | SLU 18 | 0.14 | 13.14 | 71.28 | -0.8416 | -0.0126 | 0.0007 |

| Nodo | Cont. | Reazione a traslazione | | | Reazione a rotazione | | |
|---|---|---|---|---|---|---|---|
| Ind. | N.br. | x | y | z | x | y | z |
| 98 | SLU 19 | 0.11 | 14.58 | 73.38 | -0.9184 | -0.0357 | 0.0007 |
| 98 | SLU 20 | 0.15 | 13.63 | 73.9 | -0.8751 | -0.0124 | 0.0007 |
| 98 | SLU 21 | 0.11 | 15.08 | 76 | -0.9519 | -0.0355 | 0.0007 |
| 98 | SLU 22 | 0.14 | 12.81 | 69.11 | -0.8194 | -0.0116 | 0.0006 |
| 98 | SLU 23 | 0.08 | 15.22 | 72.6 | -0.9474 | -0.0501 | 0.0007 |
| 98 | SLU 24 | 0.14 | 13.41 | 72.15 | -0.859 | -0.0117 | 0.0007 |
| 98 | SLU 25 | 0.11 | 14.85 | 74.25 | -0.9358 | -0.0348 | 0.0007 |
| 98 | SLU 26 | 0.09 | 15.72 | 75.22 | -0.9809 | -0.05 | 0.0007 |
| 98 | SLU 27 | 0.15 | 13.9 | 74.77 | -0.8924 | -0.0115 | 0.0007 |
| 98 | SLU 28 | 0.12 | 15.35 | 76.87 | -0.9692 | -0.0346 | 0.0007 |
| 98 | SLU 29 | 0.15 | 13.8 | 74.35 | -0.8863 | -0.0113 | 0.0007 |
| 98 | SLU 30 | 0.11 | 15.25 | 76.44 | -0.9631 | -0.0344 | 0.0007 |
| 98 | SLU 31 | 0.1 | 16.42 | 79.7 | -1.0288 | -0.0517 | 0.0007 |
| 98 | SLU 32 | 0.16 | 14.6 | 79.25 | -0.9403 | -0.0133 | 0.0007 |
| 98 | SLU 33 | 0.12 | 16.05 | 81.35 | -1.0171 | -0.0364 | 0.0008 |
| 98 | SLU 34 | 0.1 | 16.91 | 82.32 | -1.0622 | -0.0516 | 0.0008 |
| 98 | SLU 35 | 0.16 | 15.1 | 81.87 | -0.9738 | -0.0131 | 0.0008 |
| 98 | SLU 36 | 0.13 | 16.55 | 83.97 | -1.0506 | -0.0362 | 0.0008 |
| 98 | SLU 37 | 0.16 | 15 | 81.45 | -0.9676 | -0.0129 | 0.0008 |
| 98 | SLU 38 | 0.13 | 16.45 | 83.55 | -1.0444 | -0.036 | 0.0008 |
| 98 | SLU 39 | 0.16 | 14.52 | 79.26 | -0.9356 | -0.0139 | 0.0007 |
| 98 | SLU 40 | 0.12 | 15.96 | 81.35 | -1.0124 | -0.037 | 0.0008 |
| 98 | SLU 41 | 0.16 | 15.01 | 81.87 | -0.969 | -0.0138 | 0.0008 |
| 98 | SLU 42 | 0.13 | 16.46 | 83.97 | -1.0458 | -0.0369 | 0.0008 |
| 98 | SLU 43 | 0.15 | 14.38 | 76.74 | -0.9109 | -0.0129 | 0.0007 |
| 98 | SLU 44 | 0.1 | 16.79 | 80.23 | -1.0389 | -0.0514 | 0.0007 |
| 98 | SLU 45 | 0.16 | 14.98 | 79.78 | -0.9504 | -0.013 | 0.0007 |
| 98 | SLU 46 | 0.12 | 16.43 | 81.88 | -1.0273 | -0.0361 | 0.0008 |
| 98 | SLU 47 | 0.1 | 17.29 | 82.85 | -1.0723 | -0.0513 | 0.0008 |
| 98 | SLU 48 | 0.16 | 15.48 | 82.4 | -0.9839 | -0.0128 | 0.0008 |
| 98 | SLU 49 | 0.13 | 16.92 | 84.5 | -1.0607 | -0.0359 | 0.0008 |
| 98 | SLU 50 | 0.16 | 15.38 | 81.98 | -0.9777 | -0.0126 | 0.0008 |
| 98 | SLU 51 | 0.13 | 16.82 | 84.07 | -1.0545 | -0.0357 | 0.0008 |
| 98 | SLU 52 | 0.11 | 17.99 | 87.34 | -1.1202 | -0.053 | 0.0008 |
| 98 | SLU 53 | 0.17 | 16.17 | 86.88 | -1.0318 | -0.0146 | 0.0008 |
| 98 | SLU 54 | 0.14 | 17.62 | 88.98 | -1.1086 | -0.0377 | 0.0008 |
| 98 | SLU 55 | 0.12 | 18.49 | 89.95 | -1.1536 | -0.0529 | 0.0008 |
| 98 | SLU 56 | 0.18 | 16.67 | 89.5 | -1.0652 | -0.0144 | 0.0008 |
| 98 | SLU 57 | 0.14 | 18.12 | 91.6 | -1.142 | -0.0375 | 0.0008 |
| 98 | SLU 58 | 0.18 | 16.57 | 89.08 | -1.059 | -0.0142 | 0.0008 |
| 98 | SLU 59 | 0.14 | 18.02 | 91.18 | -1.1359 | -0.0373 | 0.0008 |
| 98 | SLU 60 | 0.17 | 16.09 | 86.89 | -1.027 | -0.0152 | 0.0008 |
| 98 | SLU 61 | 0.14 | 17.54 | 88.98 | -1.1039 | -0.0383 | 0.0008 |
| 98 | SLU 62 | 0.18 | 16.59 | 89.51 | -1.0605 | -0.0151 | 0.0008 |
| 98 | SLU 63 | 0.14 | 18.03 | 91.6 | -1.1373 | -0.0382 | 0.0008 |
| 98 | SLU 64 | 0.17 | 15.77 | 84.71 | -1.0048 | -0.0142 | 0.0008 |
| 98 | SLU 65 | 0.11 | 18.18 | 88.21 | -1.1329 | -0.0527 | 0.0008 |
| 98 | SLU 66 | 0.17 | 16.36 | 87.76 | -1.0444 | -0.0143 | 0.0008 |
| 98 | SLU 67 | 0.14 | 17.81 | 89.85 | -1.1212 | -0.0374 | 0.0008 |
| 98 | SLU 68 | 0.12 | 18.67 | 90.83 | -1.1663 | -0.0526 | 0.0008 |
| 98 | SLU 69 | 0.18 | 16.86 | 90.38 | -1.0778 | -0.0141 | 0.0008 |
| 98 | SLU 70 | 0.15 | 18.31 | 92.47 | -1.1547 | -0.0372 | 0.0009 |
| 98 | SLU 71 | 0.18 | 16.76 | 89.95 | -1.0717 | -0.0139 | 0.0008 |
| 98 | SLU 72 | 0.14 | 18.21 | 92.05 | -1.1485 | -0.037 | 0.0008 |
| 98 | SLU 73 | 0.13 | 19.37 | 95.31 | -1.2142 | -0.0543 | 0.0009 |
| 98 | SLU 74 | 0.19 | 17.56 | 94.86 | -1.1257 | -0.0159 | 0.0009 |
| 98 | SLU 75 | 0.15 | 19 | 96.96 | -1.2026 | -0.039 | 0.0009 |
| 98 | SLU 76 | 0.13 | 19.87 | 97.93 | -1.2476 | -0.0542 | 0.0009 |
| 98 | SLU 77 | 0.19 | 18.05 | 97.48 | -1.1592 | -0.0157 | 0.0009 |
| 98 | SLU 78 | 0.16 | 19.5 | 99.58 | -1.236 | -0.0389 | 0.0009 |
| 98 | SLU 79 | 0.19 | 17.95 | 97.06 | -1.153 | -0.0155 | 0.0009 |
| 98 | SLU 80 | 0.16 | 19.4 | 99.15 | -1.2298 | -0.0387 | 0.0009 |
| 98 | SLU 81 | 0.19 | 17.47 | 94.86 | -1.121 | -0.0165 | 0.0009 |
| 98 | SLU 82 | 0.15 | 18.92 | 96.96 | -1.1978 | -0.0396 | 0.0009 |
| 98 | SLU 83 | 0.19 | 17.97 | 97.48 | -1.1544 | -0.0164 | 0.0009 |
| 98 | SLU 84 | 0.16 | 19.42 | 99.58 | -1.2313 | -0.0395 | 0.0009 |
| 98 | SLE RA 1 | 0.12 | 11.82 | 63.41 | -0.7523 | -0.0106 | 0.0006 |
| 98 | SLE RA 2 | 0.09 | 13.43 | 65.74 | -0.8376 | -0.0363 | 0.0006 |
| 98 | SLE RA 3 | 0.13 | 12.22 | 65.44 | -0.7787 | -0.0107 | 0.0006 |
| 98 | SLE RA 4 | 0.11 | 13.19 | 66.84 | -0.8299 | -0.0261 | 0.0006 |
| 98 | SLE RA 5 | 0.09 | 13.76 | 67.49 | -0.8599 | -0.0362 | 0.0006 |
| 98 | SLE RA 6 | 0.13 | 12.55 | 67.19 | -0.801 | -0.0106 | 0.0006 |
| 98 | SLE RA 7 | 0.11 | 13.52 | 68.58 | -0.8522 | -0.026 | 0.0006 |
| 98 | SLE RA 8 | 0.13 | 12.49 | 66.9 | -0.7969 | -0.0105 | 0.0006 |
| 98 | SLE RA 9 | 0.11 | 13.45 | 68.3 | -0.8481 | -0.0259 | 0.0006 |
| 98 | SLE RA 10 | 0.1 | 14.23 | 70.48 | -0.8919 | -0.0374 | 0.0007 |
| 98 | SLE RA 11 | 0.14 | 13.02 | 70.18 | -0.8329 | -0.0118 | 0.0006 |
| 98 | SLE RA 12 | 0.12 | 13.98 | 71.57 | -0.8841 | -0.0272 | 0.0007 |
| 98 | SLE RA 13 | 0.1 | 14.56 | 72.22 | -0.9142 | -0.0373 | 0.0007 |
| 98 | SLE RA 14 | 0.14 | 13.35 | 71.92 | -0.8552 | -0.0117 | 0.0007 |
| 98 | SLE RA 15 | 0.12 | 14.31 | 73.32 | -0.9064 | -0.0271 | 0.0007 |
| 98 | SLE RA 16 | 0.14 | 13.28 | 71.64 | -0.8511 | -0.0115 | 0.0007 |
| 98 | SLE RA 17 | 0.12 | 14.25 | 73.04 | -0.9023 | -0.0269 | 0.0007 |
| 98 | SLE RA 18 | 0.14 | 12.96 | 70.18 | -0.8298 | -0.0122 | 0.0006 |
| 98 | SLE RA 19 | 0.12 | 13.93 | 71.57 | -0.881 | -0.0276 | 0.0007 |
| 98 | SLE RA 20 | 0.14 | 13.29 | 71.92 | -0.852 | -0.0121 | 0.0007 |
| 98 | SLE RA 21 | 0.12 | 14.26 | 73.32 | -0.9032 | -0.0275 | 0.0007 |
| 98 | SLE FR 1 | 0.12 | 11.82 | 63.41 | -0.7523 | -0.0106 | 0.0006 |

| Nodo | Cont. | Reazione a traslazione | | | Reazione a rotazione | | |
|---|---|---|---|---|---|---|---|
| Ind. | N.br. | x | y | z | x | y | z |
| 98 | SLE FR 2 | 0.12 | 12.15 | 63.88 | -0.7694 | -0.0158 | 0.0006 |
| 98 | SLE FR 3 | 0.13 | 11.96 | 64.11 | -0.7612 | -0.0106 | 0.0006 |
| 98 | SLE FR 4 | 0.12 | 12.49 | 65.91 | -0.7926 | -0.0162 | 0.0006 |
| 98 | SLE FR 5 | 0.13 | 12.3 | 66.14 | -0.7844 | -0.0111 | 0.0006 |
| 98 | SLE FR 6 | 0.13 | 12.39 | 66.79 | -0.791 | -0.0114 | 0.0006 |
| 98 | SLE QP 1 | 0.12 | 11.82 | 63.41 | -0.7523 | -0.0106 | 0.0006 |
| 98 | SLE QP 2 | 0.13 | 12.16 | 65.44 | -0.7755 | -0.0111 | 0.0006 |
| 98 | SLD 1 | 0.25 | 18.13 | 89.38 | -1.1074 | 0.0387 | 0.0009 |
| 98 | SLD 2 | 0.25 | 18.13 | 89.38 | -1.1074 | 0.0387 | 0.0009 |
| 98 | SLD 3 | 0.15 | 13.15 | 79.91 | -0.8645 | 0.0862 | 0.0008 |
| 98 | SLD 4 | 0.15 | 13.15 | 79.91 | -0.8645 | 0.0862 | 0.0008 |
| 98 | SLD 5 | 0.32 | 21.51 | 86.98 | -1.2435 | -0.0682 | 0.0008 |
| 98 | SLD 6 | 0.32 | 21.51 | 86.98 | -1.2435 | -0.0682 | 0.0008 |
| 98 | SLD 7 | -0.02 | 4.91 | 55.42 | -0.4338 | 0.0901 | 0.0005 |
| 98 | SLD 8 | -0.02 | 4.91 | 55.42 | -0.4338 | 0.0901 | 0.0005 |
| 98 | SLD 9 | 0.27 | 19.42 | 75.46 | -1.1173 | -0.1124 | 0.0007 |
| 98 | SLD 10 | 0.27 | 19.42 | 75.46 | -1.1173 | -0.1124 | 0.0007 |
| 98 | SLD 11 | -0.06 | 2.82 | 43.9 | -0.3075 | 0.046 | 0.0004 |
| 98 | SLD 12 | -0.06 | 2.82 | 43.9 | -0.3075 | 0.046 | 0.0004 |
| 98 | SLD 13 | 0.11 | 11.18 | 50.97 | -0.6866 | -0.1085 | 0.0004 |
| 98 | SLD 14 | 0.11 | 11.18 | 50.97 | -0.6866 | -0.1085 | 0.0004 |
| 98 | SLD 15 | 0.01 | 6.2 | 41.51 | -0.4436 | -0.061 | 0.0003 |
| 98 | SLD 16 | 0.01 | 6.2 | 41.51 | -0.4436 | -0.061 | 0.0003 |
| 98 | SLV 1 | 0.42 | 26.1 | 121.42 | -1.5524 | 0.0996 | 0.0013 |
| 98 | SLV 2 | 0.42 | 26.1 | 121.42 | -1.5524 | 0.0996 | 0.0013 |
| 98 | SLV 3 | 0.17 | 14.43 | 99.25 | -0.982 | 0.2212 | 0.001 |
| 98 | SLV 4 | 0.17 | 14.43 | 99.25 | -0.982 | 0.2212 | 0.001 |
| 98 | SLV 5 | 0.6 | 34.04 | 115.86 | -1.8737 | -0.1623 | 0.0012 |
| 98 | SLV 6 | 0.6 | 34.04 | 115.86 | -1.8737 | -0.1623 | 0.0012 |
| 98 | SLV 7 | -0.24 | -4.85 | 41.96 | 0.0276 | 0.243 | 0.0004 |
| 98 | SLV 8 | -0.24 | -4.85 | 41.96 | 0.0276 | 0.243 | 0.0004 |
| 98 | SLV 9 | 0.5 | 29.18 | 88.92 | -1.5787 | -0.2653 | 0.0009 |
| 98 | SLV 10 | 0.5 | 29.18 | 88.92 | -1.5787 | -0.2653 | 0.0009 |
| 98 | SLV 11 | -0.34 | -9.71 | 15.02 | 0.3226 | 0.1401 | 0 |
| 98 | SLV 12 | -0.34 | -9.71 | 15.02 | 0.3226 | 0.1401 | 0 |
| 98 | SLV 13 | 0.08 | 9.9 | 31.63 | -0.569 | -0.2435 | 0.0002 |
| 98 | SLV 14 | 0.08 | 9.9 | 31.63 | -0.569 | -0.2435 | 0.0002 |
| 98 | SLV 15 | -0.17 | -1.77 | 9.46 | 0.0014 | -0.1218 | -0.0001 |
| 98 | SLV 16 | -0.17 | -1.77 | 9.46 | 0.0014 | -0.1218 | -0.0001 |
| 99 | SLU 1 | 0.03 | 0.39 | 43.39 | -0.0103 | 0.0209 | 0.0002 |
| 99 | SLU 2 | 0.03 | -0.09 | 43.4 | 0.0113 | 0.0221 | 0.0003 |
| 99 | SLU 3 | 0.03 | 0.88 | 44.9 | -0.0323 | 0.0216 | 0.0002 |
| 99 | SLU 4 | 0.03 | 0.59 | 44.91 | -0.0193 | 0.0224 | 0.0003 |
| 99 | SLU 5 | 0.03 | 0.44 | 44.69 | -0.0128 | 0.0227 | 0.0003 |
| 99 | SLU 6 | 0.03 | 1.41 | 46.19 | -0.0564 | 0.0222 | 0.0002 |
| 99 | SLU 7 | 0.03 | 1.12 | 46.2 | -0.0434 | 0.023 | 0.0003 |
| 99 | SLU 8 | 0.03 | 1.45 | 45.97 | -0.0585 | 0.022 | 0.0002 |
| 99 | SLU 9 | 0.03 | 1.16 | 45.97 | -0.0455 | 0.0228 | 0.0003 |
| 99 | SLU 10 | 0.03 | 0.13 | 51.13 | 0.004 | 0.0219 | 0.0003 |
| 99 | SLU 11 | 0.03 | 1.1 | 52.64 | -0.0397 | 0.0214 | 0.0003 |
| 99 | SLU 12 | 0.03 | 0.81 | 52.64 | -0.0267 | 0.0221 | 0.0003 |
| 99 | SLU 13 | 0.03 | 0.66 | 52.42 | -0.0201 | 0.0225 | 0.0003 |
| 99 | SLU 14 | 0.03 | 1.62 | 53.93 | -0.0638 | 0.022 | 0.0003 |
| 99 | SLU 15 | 0.03 | 1.34 | 53.93 | -0.0508 | 0.0227 | 0.0003 |
| 99 | SLU 16 | 0.03 | 1.66 | 53.7 | -0.0659 | 0.0218 | 0.0003 |
| 99 | SLU 17 | 0.03 | 1.37 | 53.71 | -0.0529 | 0.0226 | 0.0003 |
| 99 | SLU 18 | 0.03 | 0.7 | 54.44 | -0.0209 | 0.0205 | 0.0003 |
| 99 | SLU 19 | 0.03 | 0.41 | 54.45 | -0.0079 | 0.0213 | 0.0003 |
| 99 | SLU 20 | 0.03 | 1.23 | 55.73 | -0.045 | 0.0211 | 0.0003 |
| 99 | SLU 21 | 0.03 | 0.94 | 55.73 | -0.032 | 0.0219 | 0.0003 |
| 99 | SLU 22 | 0.03 | 0.76 | 48.34 | -0.0255 | 0.0234 | 0.0003 |
| 99 | SLU 23 | 0.03 | 0.28 | 48.35 | -0.0038 | 0.0246 | 0.0003 |
| 99 | SLU 24 | 0.03 | 1.25 | 49.85 | -0.0475 | 0.0241 | 0.0003 |
| 99 | SLU 25 | 0.03 | 0.96 | 49.85 | -0.0344 | 0.0249 | 0.0003 |
| 99 | SLU 26 | 0.03 | 0.81 | 49.63 | -0.0279 | 0.0252 | 0.0003 |
| 99 | SLU 27 | 0.03 | 1.78 | 51.14 | -0.0715 | 0.0247 | 0.0003 |
| 99 | SLU 28 | 0.03 | 1.49 | 51.14 | -0.0585 | 0.0255 | 0.0003 |
| 99 | SLU 29 | 0.03 | 1.82 | 50.92 | -0.0737 | 0.0246 | 0.0003 |
| 99 | SLU 30 | 0.03 | 1.53 | 50.92 | -0.0607 | 0.0253 | 0.0003 |
| 99 | SLU 31 | 0.03 | 0.5 | 56.08 | -0.0112 | 0.0244 | 0.0003 |
| 99 | SLU 32 | 0.03 | 1.47 | 57.58 | -0.0548 | 0.0239 | 0.0003 |
| 99 | SLU 33 | 0.03 | 1.18 | 57.59 | -0.0418 | 0.0247 | 0.0003 |
| 99 | SLU 34 | 0.03 | 1.03 | 57.37 | -0.0353 | 0.025 | 0.0003 |
| 99 | SLU 35 | 0.03 | 2 | 58.87 | -0.0789 | 0.0245 | 0.0003 |
| 99 | SLU 36 | 0.03 | 1.71 | 58.88 | -0.0659 | 0.0253 | 0.0003 |
| 99 | SLU 37 | 0.03 | 2.03 | 58.65 | -0.081 | 0.0243 | 0.0003 |
| 99 | SLU 38 | 0.03 | 1.75 | 58.65 | -0.068 | 0.0251 | 0.0003 |
| 99 | SLU 39 | 0.03 | 1.07 | 59.39 | -0.036 | 0.023 | 0.0003 |
| 99 | SLU 40 | 0.03 | 0.79 | 59.39 | -0.023 | 0.0238 | 0.0003 |
| 99 | SLU 41 | 0.03 | 1.6 | 60.68 | -0.0601 | 0.0236 | 0.0003 |
| 99 | SLU 42 | 0.03 | 1.31 | 60.68 | -0.0471 | 0.0244 | 0.0003 |
| 99 | SLU 43 | 0.03 | 0.38 | 54.72 | -0.0083 | 0.0263 | 0.0003 |
| 99 | SLU 44 | 0.04 | -0.1 | 54.72 | 0.0134 | 0.0275 | 0.0003 |
| 99 | SLU 45 | 0.04 | 0.87 | 56.23 | -0.0302 | 0.027 | 0.0003 |
| 99 | SLU 46 | 0.04 | 0.58 | 56.23 | -0.0172 | 0.0278 | 0.0003 |
| 99 | SLU 47 | 0.04 | 0.43 | 56.01 | -0.0107 | 0.0281 | 0.0003 |
| 99 | SLU 48 | 0.04 | 1.4 | 57.51 | -0.0543 | 0.0276 | 0.0003 |
| 99 | SLU 49 | 0.04 | 1.11 | 57.52 | -0.0413 | 0.0284 | 0.0003 |

| Nodo | Cont. | Reazione a traslazione | | | Reazione a rotazione | | |
|---|---|---|---|---|---|---|---|
| Ind. | N.br. | x | y | z | x | y | z |
| 99 | SLU 50 | 0.04 | 1.44 | 57.29 | -0.0564 | 0.0274 | 0.0003 |
| 99 | SLU 51 | 0.04 | 1.15 | 57.29 | -0.0434 | 0.0282 | 0.0003 |
| 99 | SLU 52 | 0.04 | 0.12 | 62.46 | 0.0061 | 0.0273 | 0.0003 |
| 99 | SLU 53 | 0.03 | 1.09 | 63.96 | -0.0376 | 0.0268 | 0.0003 |
| 99 | SLU 54 | 0.04 | 0.8 | 63.96 | -0.0246 | 0.0275 | 0.0003 |
| 99 | SLU 55 | 0.04 | 0.65 | 63.74 | -0.018 | 0.0279 | 0.0003 |
| 99 | SLU 56 | 0.04 | 1.61 | 65.25 | -0.0617 | 0.0274 | 0.0003 |
| 99 | SLU 57 | 0.04 | 1.33 | 65.25 | -0.0487 | 0.0281 | 0.0003 |
| 99 | SLU 58 | 0.04 | 1.65 | 65.03 | -0.0638 | 0.0272 | 0.0003 |
| 99 | SLU 59 | 0.04 | 1.37 | 65.03 | -0.0508 | 0.028 | 0.0003 |
| 99 | SLU 60 | 0.03 | 0.69 | 65.76 | -0.0188 | 0.0259 | 0.0003 |
| 99 | SLU 61 | 0.03 | 0.41 | 65.77 | -0.0058 | 0.0267 | 0.0003 |
| 99 | SLU 62 | 0.03 | 1.22 | 67.05 | -0.0429 | 0.0265 | 0.0003 |
| 99 | SLU 63 | 0.04 | 0.93 | 67.06 | -0.0299 | 0.0273 | 0.0003 |
| 99 | SLU 64 | 0.04 | 0.75 | 59.66 | -0.0234 | 0.0288 | 0.0003 |
| 99 | SLU 65 | 0.04 | 0.27 | 59.67 | -0.0017 | 0.03 | 0.0003 |
| 99 | SLU 66 | 0.04 | 1.24 | 61.17 | -0.0454 | 0.0295 | 0.0003 |
| 99 | SLU 67 | 0.04 | 0.95 | 61.18 | -0.0324 | 0.0303 | 0.0003 |
| 99 | SLU 68 | 0.04 | 0.8 | 60.96 | -0.0258 | 0.0306 | 0.0003 |
| 99 | SLU 69 | 0.04 | 1.77 | 62.46 | -0.0695 | 0.0301 | 0.0003 |
| 99 | SLU 70 | 0.04 | 1.48 | 62.46 | -0.0564 | 0.0309 | 0.0003 |
| 99 | SLU 71 | 0.04 | 1.81 | 62.24 | -0.0716 | 0.03 | 0.0003 |
| 99 | SLU 72 | 0.04 | 1.52 | 62.24 | -0.0586 | 0.0307 | 0.0003 |
| 99 | SLU 73 | 0.04 | 0.49 | 67.4 | -0.0091 | 0.0298 | 0.0004 |
| 99 | SLU 74 | 0.04 | 1.46 | 68.91 | -0.0527 | 0.0293 | 0.0003 |
| 99 | SLU 75 | 0.04 | 1.17 | 68.91 | -0.0397 | 0.0301 | 0.0004 |
| 99 | SLU 76 | 0.04 | 1.02 | 68.69 | -0.0332 | 0.0304 | 0.0004 |
| 99 | SLU 77 | 0.04 | 1.99 | 70.19 | -0.0768 | 0.0299 | 0.0003 |
| 99 | SLU 78 | 0.04 | 1.7 | 70.2 | -0.0638 | 0.0306 | 0.0004 |
| 99 | SLU 79 | 0.04 | 2.03 | 69.97 | -0.079 | 0.0297 | 0.0003 |
| 99 | SLU 80 | 0.04 | 1.74 | 69.98 | -0.0659 | 0.0305 | 0.0004 |
| 99 | SLU 81 | 0.04 | 1.06 | 70.71 | -0.0339 | 0.0284 | 0.0003 |
| 99 | SLU 82 | 0.04 | 0.78 | 70.71 | -0.0209 | 0.0292 | 0.0004 |
| 99 | SLU 83 | 0.04 | 1.59 | 72 | -0.058 | 0.029 | 0.0003 |
| 99 | SLU 84 | 0.04 | 1.3 | 72 | -0.045 | 0.0298 | 0.0004 |
| 99 | SLE RA 1 | 0.03 | 0.5 | 44.81 | -0.0147 | 0.0216 | 0.0002 |
| 99 | SLE RA 2 | 0.03 | 0.18 | 44.81 | -0.0002 | 0.0224 | 0.0003 |
| 99 | SLE RA 3 | 0.03 | 0.82 | 45.81 | -0.0293 | 0.0221 | 0.0002 |
| 99 | SLE RA 4 | 0.03 | 0.63 | 45.82 | -0.0206 | 0.0226 | 0.0003 |
| 99 | SLE RA 5 | 0.03 | 0.53 | 45.67 | -0.0163 | 0.0228 | 0.0003 |
| 99 | SLE RA 6 | 0.03 | 1.17 | 46.67 | -0.0454 | 0.0225 | 0.0002 |
| 99 | SLE RA 7 | 0.03 | 0.98 | 46.67 | -0.0367 | 0.023 | 0.0003 |
| 99 | SLE RA 8 | 0.03 | 1.2 | 46.52 | -0.0468 | 0.0224 | 0.0002 |
| 99 | SLE RA 9 | 0.03 | 1.01 | 46.53 | -0.0381 | 0.0229 | 0.0003 |
| 99 | SLE RA 10 | 0.03 | 0.32 | 49.97 | -0.0051 | 0.0223 | 0.0003 |
| 99 | SLE RA 11 | 0.03 | 0.97 | 50.97 | -0.0342 | 0.0219 | 0.0003 |
| 99 | SLE RA 12 | 0.03 | 0.78 | 50.97 | -0.0256 | 0.0224 | 0.0003 |
| 99 | SLE RA 13 | 0.03 | 0.67 | 50.83 | -0.0212 | 0.0226 | 0.0003 |
| 99 | SLE RA 14 | 0.03 | 1.32 | 51.83 | -0.0503 | 0.0223 | 0.0003 |
| 99 | SLE RA 15 | 0.03 | 1.13 | 51.83 | -0.0416 | 0.0228 | 0.0003 |
| 99 | SLE RA 16 | 0.03 | 1.35 | 51.68 | -0.0517 | 0.0222 | 0.0003 |
| 99 | SLE RA 17 | 0.03 | 1.15 | 51.68 | -0.043 | 0.0227 | 0.0003 |
| 99 | SLE RA 18 | 0.03 | 0.71 | 52.17 | -0.0217 | 0.0214 | 0.0003 |
| 99 | SLE RA 19 | 0.03 | 0.51 | 52.18 | -0.013 | 0.0219 | 0.0003 |
| 99 | SLE RA 20 | 0.03 | 1.06 | 53.03 | -0.0378 | 0.0218 | 0.0003 |
| 99 | SLE RA 21 | 0.03 | 0.86 | 53.03 | -0.0291 | 0.0223 | 0.0003 |
| 99 | SLE FR 1 | 0.03 | 0.5 | 44.81 | -0.0147 | 0.0216 | 0.0002 |
| 99 | SLE FR 2 | 0.03 | 0.43 | 44.81 | -0.0118 | 0.0217 | 0.0002 |
| 99 | SLE FR 3 | 0.03 | 0.64 | 45.15 | -0.0211 | 0.0217 | 0.0002 |
| 99 | SLE FR 4 | 0.03 | 0.5 | 47.02 | -0.0139 | 0.0217 | 0.0002 |
| 99 | SLE FR 5 | 0.03 | 0.7 | 47.36 | -0.0232 | 0.0217 | 0.0002 |
| 99 | SLE FR 6 | 0.03 | 0.6 | 48.49 | -0.0182 | 0.0215 | 0.0002 |
| 99 | SLE QP 1 | 0.03 | 0.5 | 44.81 | -0.0147 | 0.0216 | 0.0002 |
| 99 | SLE QP 2 | 0.03 | 0.56 | 47.02 | -0.0168 | 0.0215 | 0.0002 |
| 99 | SLD 1 | 0.1 | 1.37 | 52.88 | -0.0566 | 0.1117 | 0.0006 |
| 99 | SLD 2 | 0.1 | 1.37 | 52.88 | -0.0566 | 0.1117 | 0.0006 |
| 99 | SLD 3 | 0.08 | -2.33 | 50.77 | 0.1138 | 0.0978 | 0.0004 |
| 99 | SLD 4 | 0.08 | -2.33 | 50.77 | 0.1138 | 0.0978 | 0.0004 |
| 99 | SLD 5 | 0.09 | 6.41 | 51.98 | -0.287 | 0.0696 | 0.0007 |
| 99 | SLD 6 | 0.09 | 6.41 | 51.98 | -0.287 | 0.0696 | 0.0007 |
| 99 | SLD 7 | 0 | -5.91 | 44.94 | 0.2807 | 0.0234 | 0 |
| 99 | SLD 8 | 0 | -5.91 | 44.94 | 0.2807 | 0.0234 | 0 |
| 99 | SLD 9 | 0.05 | 7.04 | 49.1 | -0.3142 | 0.0197 | 0.0005 |
| 99 | SLD 10 | 0.05 | 7.04 | 49.1 | -0.3142 | 0.0197 | 0.0005 |
| 99 | SLD 11 | -0.04 | -5.29 | 42.05 | 0.2535 | -0.0266 | -0.0002 |
| 99 | SLD 12 | -0.04 | -5.29 | 42.05 | 0.2535 | -0.0266 | -0.0002 |
| 99 | SLD 13 | -0.02 | 3.45 | 43.26 | -0.1473 | -0.0548 | 0 |
| 99 | SLD 14 | -0.02 | 3.45 | 43.26 | -0.1473 | -0.0548 | 0 |
| 99 | SLD 15 | -0.05 | -0.25 | 41.15 | 0.023 | -0.0687 | -0.0002 |
| 99 | SLD 16 | -0.05 | -0.25 | 41.15 | 0.023 | -0.0687 | -0.0002 |
| 99 | SLV 1 | 0.21 | 2.44 | 60.8 | -0.1094 | 0.2451 | 0.0012 |
| 99 | SLV 2 | 0.21 | 2.44 | 60.8 | -0.1094 | 0.2451 | 0.0012 |
| 99 | SLV 3 | 0.15 | -6.19 | 55.74 | 0.2881 | 0.2113 | 0.0008 |
| 99 | SLV 4 | 0.15 | -6.19 | 55.74 | 0.2881 | 0.2113 | 0.0008 |
| 99 | SLV 5 | 0.18 | 14.21 | 58.83 | -0.6474 | 0.14 | 0.0012 |
| 99 | SLV 6 | 0.18 | 14.21 | 58.83 | -0.6474 | 0.14 | 0.0012 |
| 99 | SLV 7 | -0.03 | -14.55 | 41.96 | 0.6775 | 0.027 | -0.0003 |
| 99 | SLV 8 | -0.03 | -14.55 | 41.96 | 0.6775 | 0.027 | -0.0003 |

| Nodo | Cont. | Reazione a traslazione | | | Reazione a rotazione | | |
|---|---|---|---|---|---|---|---|
| Ind. | N.br. | x | y | z | x | y | z |
| 99 | SLV 9 | 0.09 | 15.67 | 52.08 | -0.7111 | 0.016 | 0.0008 |
| 99 | SLV 10 | 0.09 | 15.67 | 52.08 | -0.7111 | 0.016 | 0.0008 |
| 99 | SLV 11 | -0.12 | -13.09 | 35.2 | 0.6138 | -0.097 | -0.0007 |
| 99 | SLV 12 | -0.12 | -13.09 | 35.2 | 0.6138 | -0.097 | -0.0007 |
| 99 | SLV 13 | -0.09 | 7.31 | 38.29 | -0.3216 | -0.1682 | -0.0003 |
| 99 | SLV 14 | -0.09 | 7.31 | 38.29 | -0.3216 | -0.1682 | -0.0003 |
| 99 | SLV 15 | -0.15 | -1.32 | 33.23 | 0.0758 | -0.2021 | -0.0007 |
| 99 | SLV 16 | -0.15 | -1.32 | 33.23 | 0.0758 | -0.2021 | -0.0007 |
| 100 | SLU 1 | 0.02 | -1.09 | 4.46 | 0.0451 | 0.0108 | -0.0003 |
| 100 | SLU 2 | 0.02 | -1.09 | 4.46 | 0.0452 | 0.0108 | -0.0003 |
| 100 | SLU 3 | 0.02 | -1.15 | 4.37 | 0.0477 | 0.0114 | -0.0003 |
| 100 | SLU 4 | 0.02 | -1.15 | 4.37 | 0.0477 | 0.0115 | -0.0003 |
| 100 | SLU 5 | 0.02 | -1.12 | 4.4 | 0.0467 | 0.0114 | -0.0003 |
| 100 | SLU 6 | 0.02 | -1.18 | 4.32 | 0.0491 | 0.012 | -0.0003 |
| 100 | SLU 7 | 0.02 | -1.18 | 4.32 | 0.0492 | 0.012 | -0.0003 |
| 100 | SLU 8 | 0.02 | -1.16 | 4.36 | 0.048 | 0.0119 | -0.0003 |
| 100 | SLU 9 | 0.02 | -1.16 | 4.35 | 0.0481 | 0.0119 | -0.0003 |
| 100 | SLU 10 | 0.03 | -1.39 | 7.61 | 0.0537 | 0.0094 | -0.0003 |
| 100 | SLU 11 | 0.03 | -1.45 | 7.52 | 0.0561 | 0.01 | -0.0003 |
| 100 | SLU 12 | 0.03 | -1.45 | 7.52 | 0.0562 | 0.01 | -0.0003 |
| 100 | SLU 13 | 0.03 | -1.42 | 7.56 | 0.0551 | 0.01 | -0.0003 |
| 100 | SLU 14 | 0.03 | -1.48 | 7.47 | 0.0576 | 0.0105 | -0.0003 |
| 100 | SLU 15 | 0.03 | -1.48 | 7.47 | 0.0577 | 0.0106 | -0.0003 |
| 100 | SLU 16 | 0.03 | -1.46 | 7.51 | 0.0565 | 0.0105 | -0.0003 |
| 100 | SLU 17 | 0.03 | -1.46 | 7.51 | 0.0566 | 0.0105 | -0.0003 |
| 100 | SLU 18 | 0.03 | -1.51 | 8.96 | 0.0572 | 0.0087 | -0.0003 |
| 100 | SLU 19 | 0.03 | -1.51 | 8.96 | 0.0572 | 0.0087 | -0.0003 |
| 100 | SLU 20 | 0.03 | -1.55 | 8.91 | 0.0586 | 0.0093 | -0.0003 |
| 100 | SLU 21 | 0.03 | -1.55 | 8.91 | 0.0587 | 0.0093 | -0.0003 |
| 100 | SLU 22 | 0.02 | -1.35 | 4.56 | 0.0556 | 0.0118 | -0.0003 |
| 100 | SLU 23 | 0.03 | -1.35 | 4.56 | 0.0557 | 0.0118 | -0.0003 |
| 100 | SLU 24 | 0.03 | -1.41 | 4.47 | 0.0582 | 0.0124 | -0.0003 |
| 100 | SLU 25 | 0.03 | -1.41 | 4.47 | 0.0583 | 0.0124 | -0.0003 |
| 100 | SLU 26 | 0.03 | -1.39 | 4.51 | 0.0572 | 0.0124 | -0.0003 |
| 100 | SLU 27 | 0.03 | -1.45 | 4.42 | 0.0597 | 0.013 | -0.0003 |
| 100 | SLU 28 | 0.03 | -1.45 | 4.42 | 0.0598 | 0.013 | -0.0004 |
| 100 | SLU 29 | 0.03 | -1.42 | 4.46 | 0.0586 | 0.0129 | -0.0003 |
| 100 | SLU 30 | 0.03 | -1.42 | 4.45 | 0.0587 | 0.0129 | -0.0003 |
| 100 | SLU 31 | 0.03 | -1.65 | 7.71 | 0.0642 | 0.0104 | -0.0004 |
| 100 | SLU 32 | 0.03 | -1.71 | 7.62 | 0.0667 | 0.011 | -0.0004 |
| 100 | SLU 33 | 0.03 | -1.71 | 7.62 | 0.0667 | 0.011 | -0.0004 |
| 100 | SLU 34 | 0.03 | -1.69 | 7.66 | 0.0657 | 0.011 | -0.0004 |
| 100 | SLU 35 | 0.03 | -1.75 | 7.57 | 0.0681 | 0.0115 | -0.0004 |
| 100 | SLU 36 | 0.03 | -1.75 | 7.57 | 0.0682 | 0.0116 | -0.0004 |
| 100 | SLU 37 | 0.03 | -1.72 | 7.61 | 0.067 | 0.0115 | -0.0004 |
| 100 | SLU 38 | 0.03 | -1.72 | 7.61 | 0.0671 | 0.0115 | -0.0004 |
| 100 | SLU 39 | 0.03 | -1.78 | 9.06 | 0.0677 | 0.0097 | -0.0004 |
| 100 | SLU 40 | 0.03 | -1.78 | 9.06 | 0.0678 | 0.0097 | -0.0004 |
| 100 | SLU 41 | 0.03 | -1.81 | 9.01 | 0.0692 | 0.0103 | -0.0004 |
| 100 | SLU 42 | 0.03 | -1.81 | 9.01 | 0.0693 | 0.0103 | -0.0004 |
| 100 | SLU 43 | 0.03 | -1.32 | 5.76 | 0.055 | 0.0136 | -0.0004 |
| 100 | SLU 44 | 0.03 | -1.33 | 5.76 | 0.0551 | 0.0137 | -0.0004 |
| 100 | SLU 45 | 0.03 | -1.38 | 5.67 | 0.0576 | 0.0143 | -0.0004 |
| 100 | SLU 46 | 0.03 | -1.39 | 5.67 | 0.0576 | 0.0143 | -0.0004 |
| 100 | SLU 47 | 0.03 | -1.36 | 5.71 | 0.0566 | 0.0143 | -0.0004 |
| 100 | SLU 48 | 0.03 | -1.42 | 5.62 | 0.0591 | 0.0149 | -0.0004 |
| 100 | SLU 49 | 0.03 | -1.42 | 5.62 | 0.0591 | 0.0149 | -0.0004 |
| 100 | SLU 50 | 0.03 | -1.39 | 5.66 | 0.058 | 0.0148 | -0.0004 |
| 100 | SLU 51 | 0.03 | -1.39 | 5.66 | 0.058 | 0.0148 | -0.0004 |
| 100 | SLU 52 | 0.03 | -1.62 | 8.91 | 0.0636 | 0.0123 | -0.0004 |
| 100 | SLU 53 | 0.03 | -1.68 | 8.83 | 0.066 | 0.0128 | -0.0004 |
| 100 | SLU 54 | 0.03 | -1.68 | 8.82 | 0.0661 | 0.0129 | -0.0004 |
| 100 | SLU 55 | 0.03 | -1.66 | 8.86 | 0.0651 | 0.0128 | -0.0004 |
| 100 | SLU 56 | 0.03 | -1.72 | 8.77 | 0.0675 | 0.0134 | -0.0004 |
| 100 | SLU 57 | 0.03 | -1.72 | 8.77 | 0.0676 | 0.0135 | -0.0004 |
| 100 | SLU 58 | 0.03 | -1.69 | 8.81 | 0.0664 | 0.0133 | -0.0004 |
| 100 | SLU 59 | 0.03 | -1.69 | 8.81 | 0.0665 | 0.0134 | -0.0004 |
| 100 | SLU 60 | 0.03 | -1.75 | 10.26 | 0.0671 | 0.0116 | -0.0004 |
| 100 | SLU 61 | 0.03 | -1.75 | 10.26 | 0.0671 | 0.0116 | -0.0004 |
| 100 | SLU 62 | 0.03 | -1.78 | 10.21 | 0.0686 | 0.0122 | -0.0004 |
| 100 | SLU 63 | 0.03 | -1.79 | 10.21 | 0.0686 | 0.0122 | -0.0004 |
| 100 | SLU 64 | 0.03 | -1.59 | 5.86 | 0.0655 | 0.0146 | -0.0004 |
| 100 | SLU 65 | 0.03 | -1.59 | 5.86 | 0.0657 | 0.0147 | -0.0004 |
| 100 | SLU 66 | 0.03 | -1.65 | 5.78 | 0.0681 | 0.0153 | -0.0004 |
| 100 | SLU 67 | 0.03 | -1.65 | 5.77 | 0.0682 | 0.0153 | -0.0004 |
| 100 | SLU 68 | 0.03 | -1.62 | 5.81 | 0.0671 | 0.0153 | -0.0004 |
| 100 | SLU 69 | 0.03 | -1.68 | 5.72 | 0.0696 | 0.0159 | -0.0004 |
| 100 | SLU 70 | 0.03 | -1.68 | 5.72 | 0.0697 | 0.0159 | -0.0004 |
| 100 | SLU 71 | 0.03 | -1.66 | 5.76 | 0.0685 | 0.0158 | -0.0004 |
| 100 | SLU 72 | 0.03 | -1.66 | 5.76 | 0.0686 | 0.0158 | -0.0004 |
| 100 | SLU 73 | 0.03 | -1.89 | 9.01 | 0.0741 | 0.0133 | -0.0004 |
| 100 | SLU 74 | 0.03 | -1.95 | 8.93 | 0.0766 | 0.0138 | -0.0004 |
| 100 | SLU 75 | 0.03 | -1.95 | 8.92 | 0.0766 | 0.0139 | -0.0004 |
| 100 | SLU 76 | 0.03 | -1.92 | 8.96 | 0.0756 | 0.0138 | -0.0004 |
| 100 | SLU 77 | 0.04 | -1.98 | 8.87 | 0.078 | 0.0144 | -0.0004 |
| 100 | SLU 78 | 0.04 | -1.98 | 8.87 | 0.0781 | 0.0145 | -0.0005 |
| 100 | SLU 79 | 0.04 | -1.95 | 8.91 | 0.077 | 0.0143 | -0.0004 |
| 100 | SLU 80 | 0.04 | -1.96 | 8.91 | 0.077 | 0.0144 | -0.0004 |

| Nodo | Cont. | Reazione a traslazione | | | Reazione a rotazione | | |
|---|---|---|---|---|---|---|---|
| Ind. | N.br. | x | y | z | x | y | z |
| 100 | SLU 81 | 0.03 | -2.01 | 10.36 | 0.0776 | 0.0126 | -0.0004 |
| 100 | SLU 82 | 0.03 | -2.01 | 10.36 | 0.0777 | 0.0126 | -0.0004 |
| 100 | SLU 83 | 0.04 | -2.05 | 10.31 | 0.0791 | 0.0132 | -0.0004 |
| 100 | SLU 84 | 0.04 | -2.05 | 10.31 | 0.0792 | 0.0132 | -0.0004 |
| 100 | SLE RA 1 | 0.02 | -1.16 | 4.49 | 0.0481 | 0.011 | -0.0003 |
| 100 | SLE RA 2 | 0.02 | -1.16 | 4.49 | 0.0482 | 0.0111 | -0.0003 |
| 100 | SLE RA 3 | 0.02 | -1.2 | 4.43 | 0.0498 | 0.0115 | -0.0003 |
| 100 | SLE RA 4 | 0.02 | -1.2 | 4.43 | 0.0499 | 0.0115 | -0.0003 |
| 100 | SLE RA 5 | 0.02 | -1.19 | 4.45 | 0.0492 | 0.0115 | -0.0003 |
| 100 | SLE RA 6 | 0.02 | -1.23 | 4.4 | 0.0508 | 0.0119 | -0.0003 |
| 100 | SLE RA 7 | 0.02 | -1.23 | 4.39 | 0.0508 | 0.0119 | -0.0003 |
| 100 | SLE RA 8 | 0.02 | -1.21 | 4.42 | 0.0501 | 0.0118 | -0.0003 |
| 100 | SLE RA 9 | 0.02 | -1.21 | 4.42 | 0.0501 | 0.0118 | -0.0003 |
| 100 | SLE RA 10 | 0.02 | -1.36 | 6.59 | 0.0538 | 0.0101 | -0.0003 |
| 100 | SLE RA 11 | 0.03 | -1.4 | 6.53 | 0.0554 | 0.0105 | -0.0003 |
| 100 | SLE RA 12 | 0.03 | -1.4 | 6.53 | 0.0555 | 0.0105 | -0.0003 |
| 100 | SLE RA 13 | 0.03 | -1.39 | 6.55 | 0.0548 | 0.0105 | -0.0003 |
| 100 | SLE RA 14 | 0.03 | -1.43 | 6.5 | 0.0564 | 0.0109 | -0.0003 |
| 100 | SLE RA 15 | 0.03 | -1.43 | 6.49 | 0.0565 | 0.0109 | -0.0003 |
| 100 | SLE RA 16 | 0.03 | -1.41 | 6.52 | 0.0557 | 0.0108 | -0.0003 |
| 100 | SLE RA 17 | 0.03 | -1.41 | 6.52 | 0.0558 | 0.0109 | -0.0003 |
| 100 | SLE RA 18 | 0.03 | -1.45 | 7.49 | 0.0562 | 0.0097 | -0.0003 |
| 100 | SLE RA 19 | 0.03 | -1.45 | 7.49 | 0.0562 | 0.0097 | -0.0003 |
| 100 | SLE RA 20 | 0.03 | -1.47 | 7.45 | 0.0571 | 0.01 | -0.0003 |
| 100 | SLE RA 21 | 0.03 | -1.47 | 7.45 | 0.0572 | 0.0101 | -0.0003 |
| 100 | SLE FR 1 | 0.02 | -1.16 | 4.49 | 0.0481 | 0.011 | -0.0003 |
| 100 | SLE FR 2 | 0.02 | -1.16 | 4.49 | 0.0481 | 0.0111 | -0.0003 |
| 100 | SLE FR 3 | 0.02 | -1.17 | 4.47 | 0.0485 | 0.0112 | -0.0003 |
| 100 | SLE FR 4 | 0.02 | -1.25 | 5.39 | 0.0505 | 0.0106 | -0.0003 |
| 100 | SLE FR 5 | 0.02 | -1.26 | 5.37 | 0.0509 | 0.0108 | -0.0003 |
| 100 | SLE FR 6 | 0.02 | -1.3 | 5.99 | 0.0521 | 0.0104 | -0.0003 |
| 100 | SLE QP 1 | 0.02 | -1.16 | 4.49 | 0.0481 | 0.011 | -0.0003 |
| 100 | SLE QP 2 | 0.02 | -1.25 | 5.39 | 0.0505 | 0.0106 | -0.0003 |
| 100 | SLD 1 | 0.18 | -0.08 | 6.54 | 0.0023 | 0.1285 | -0.0026 |
| 100 | SLD 2 | 0.18 | -0.08 | 6.54 | 0.0023 | 0.1285 | -0.0026 |
| 100 | SLD 3 | 0.16 | -1.61 | 5.36 | 0.0652 | 0.115 | -0.0023 |
| 100 | SLD 4 | 0.16 | -1.61 | 5.36 | 0.0652 | 0.115 | -0.0023 |
| 100 | SLD 5 | 0.1 | 1.42 | 7.52 | -0.0595 | 0.0665 | -0.0014 |
| 100 | SLD 6 | 0.1 | 1.42 | 7.52 | -0.0595 | 0.0665 | -0.0014 |
| 100 | SLD 7 | 0.04 | -3.68 | 3.6 | 0.1504 | 0.0214 | -0.0005 |
| 100 | SLD 8 | 0.04 | -3.68 | 3.6 | 0.1504 | 0.0214 | -0.0005 |
| 100 | SLD 9 | 0.01 | 1.18 | 7.18 | -0.0494 | -0.0002 | -0.0001 |
| 100 | SLD 10 | 0.01 | 1.18 | 7.18 | -0.0494 | -0.0002 | -0.0001 |
| 100 | SLD 11 | -0.05 | -3.92 | 3.26 | 0.1605 | -0.0452 | 0.0008 |
| 100 | SLD 12 | -0.05 | -3.92 | 3.26 | 0.1605 | -0.0452 | 0.0008 |
| 100 | SLD 13 | -0.12 | -0.89 | 5.41 | 0.0358 | -0.0937 | 0.0017 |
| 100 | SLD 14 | -0.12 | -0.89 | 5.41 | 0.0358 | -0.0937 | 0.0017 |
| 100 | SLD 15 | -0.14 | -2.42 | 4.23 | 0.0988 | -0.1072 | 0.002 |
| 100 | SLD 16 | -0.14 | -2.42 | 4.23 | 0.0988 | -0.1072 | 0.002 |
| 100 | SLV 1 | 0.42 | 1.49 | 8.1 | -0.0628 | 0.3025 | -0.0059 |
| 100 | SLV 2 | 0.42 | 1.49 | 8.1 | -0.0628 | 0.3025 | -0.0059 |
| 100 | SLV 3 | 0.37 | -2.09 | 5.34 | 0.0849 | 0.2685 | -0.0052 |
| 100 | SLV 4 | 0.37 | -2.09 | 5.34 | 0.0849 | 0.2685 | -0.0052 |
| 100 | SLV 5 | 0.22 | 5.01 | 10.38 | -0.2074 | 0.1498 | -0.003 |
| 100 | SLV 6 | 0.22 | 5.01 | 10.38 | -0.2074 | 0.1498 | -0.003 |
| 100 | SLV 7 | 0.05 | -6.94 | 1.19 | 0.2847 | 0.0364 | -0.0007 |
| 100 | SLV 8 | 0.05 | -6.94 | 1.19 | 0.2847 | 0.0364 | -0.0007 |
| 100 | SLV 9 | 0 | 4.44 | 9.59 | -0.1837 | -0.0152 | 0.0001 |
| 100 | SLV 10 | 0 | 4.44 | 9.59 | -0.1837 | -0.0152 | 0.0001 |
| 100 | SLV 11 | -0.17 | -7.51 | 0.39 | 0.3084 | -0.1285 | 0.0024 |
| 100 | SLV 12 | -0.17 | -7.51 | 0.39 | 0.3084 | -0.1285 | 0.0024 |
| 100 | SLV 13 | -0.32 | -0.4 | 5.44 | 0.0162 | -0.2473 | 0.0046 |
| 100 | SLV 14 | -0.32 | -0.4 | 5.44 | 0.0162 | -0.2473 | 0.0046 |
| 100 | SLV 15 | -0.37 | -3.99 | 2.68 | 0.1638 | -0.2813 | 0.0053 |
| 100 | SLV 16 | -0.37 | -3.99 | 2.68 | 0.1638 | -0.2813 | 0.0053 |
| 101 | SLU 1 | 0.03 | -3.54 | 22.3 | 0.3645 | 0.0381 | -0.0001 |
| 101 | SLU 2 | 0.04 | -1.42 | 23.28 | 0.2903 | 0.048 | -0.0002 |
| 101 | SLU 3 | 0.03 | -3.85 | 22.51 | 0.3825 | 0.0393 | -0.0001 |
| 101 | SLU 4 | 0.04 | -2.57 | 23.1 | 0.3381 | 0.0452 | -0.0002 |
| 101 | SLU 5 | 0.04 | -1.73 | 23.24 | 0.3056 | 0.0486 | -0.0002 |
| 101 | SLU 6 | 0.03 | -4.16 | 22.47 | 0.3978 | 0.0399 | -0.0001 |
| 101 | SLU 7 | 0.04 | -2.89 | 23.06 | 0.3534 | 0.0458 | -0.0002 |
| 101 | SLU 8 | 0.03 | -4.16 | 22.22 | 0.395 | 0.0393 | -0.0001 |
| 101 | SLU 9 | 0.04 | -2.89 | 22.81 | 0.3506 | 0.0452 | -0.0002 |
| 101 | SLU 10 | 0.05 | -2.1 | 26.17 | 0.3519 | 0.0545 | -0.0002 |
| 101 | SLU 11 | 0.03 | -4.53 | 25.4 | 0.4441 | 0.0458 | -0.0002 |
| 101 | SLU 12 | 0.04 | -3.26 | 25.99 | 0.3996 | 0.0517 | -0.0002 |
| 101 | SLU 13 | 0.05 | -2.42 | 26.13 | 0.3672 | 0.0551 | -0.0002 |
| 101 | SLU 14 | 0.03 | -4.85 | 25.36 | 0.4594 | 0.0463 | -0.0002 |
| 101 | SLU 15 | 0.04 | -3.57 | 25.95 | 0.4149 | 0.0523 | -0.0002 |
| 101 | SLU 16 | 0.03 | -4.85 | 25.1 | 0.4566 | 0.0458 | -0.0002 |
| 101 | SLU 17 | 0.04 | -3.58 | 25.7 | 0.4121 | 0.0517 | -0.0002 |
| 101 | SLU 18 | 0.03 | -4.52 | 26.42 | 0.4524 | 0.0474 | -0.0002 |
| 101 | SLU 19 | 0.04 | -3.25 | 27.01 | 0.4079 | 0.0533 | -0.0002 |
| 101 | SLU 20 | 0.04 | -4.83 | 26.38 | 0.4677 | 0.048 | -0.0002 |
| 101 | SLU 21 | 0.04 | -3.56 | 26.97 | 0.4232 | 0.0539 | -0.0002 |
| 101 | SLU 22 | 0.03 | -4.24 | 24.72 | 0.4234 | 0.0441 | -0.0002 |
| 101 | SLU 23 | 0.05 | -2.12 | 25.7 | 0.3493 | 0.054 | -0.0002 |

| Nodo | Cont. | Reazione a traslazione | | | Reazione a rotazione | | |
|---|---|---|---|---|---|---|---|
| Ind. | N.br. | x | y | z | x | y | z |
| 101 | SLU 24 | 0.03 | -4.55 | 24.93 | 0.4415 | 0.0452 | -0.0002 |
| 101 | SLU 25 | 0.04 | -3.27 | 25.52 | 0.397 | 0.0512 | -0.0002 |
| 101 | SLU 26 | 0.05 | -2.43 | 25.66 | 0.3646 | 0.0546 | -0.0002 |
| 101 | SLU 27 | 0.03 | -4.86 | 24.89 | 0.4568 | 0.0458 | -0.0002 |
| 101 | SLU 28 | 0.04 | -3.59 | 25.48 | 0.4123 | 0.0518 | -0.0002 |
| 101 | SLU 29 | 0.03 | -4.86 | 24.64 | 0.454 | 0.0453 | -0.0002 |
| 101 | SLU 30 | 0.04 | -3.59 | 25.23 | 0.4095 | 0.0512 | -0.0002 |
| 101 | SLU 31 | 0.05 | -2.8 | 28.59 | 0.4108 | 0.0605 | -0.0002 |
| 101 | SLU 32 | 0.04 | -5.23 | 27.81 | 0.503 | 0.0517 | -0.0002 |
| 101 | SLU 33 | 0.05 | -3.96 | 28.41 | 0.4586 | 0.0577 | -0.0002 |
| 101 | SLU 34 | 0.05 | -3.12 | 28.55 | 0.4261 | 0.061 | -0.0002 |
| 101 | SLU 35 | 0.04 | -5.55 | 27.78 | 0.5183 | 0.0523 | -0.0002 |
| 101 | SLU 36 | 0.05 | -4.27 | 28.37 | 0.4739 | 0.0582 | -0.0002 |
| 101 | SLU 37 | 0.04 | -5.55 | 27.52 | 0.5155 | 0.0517 | -0.0002 |
| 101 | SLU 38 | 0.05 | -4.28 | 28.12 | 0.4711 | 0.0577 | -0.0002 |
| 101 | SLU 39 | 0.04 | -5.22 | 28.84 | 0.5113 | 0.0534 | -0.0002 |
| 101 | SLU 40 | 0.05 | -3.94 | 29.43 | 0.4668 | 0.0593 | -0.0002 |
| 101 | SLU 41 | 0.04 | -5.53 | 28.8 | 0.5266 | 0.0539 | -0.0002 |
| 101 | SLU 42 | 0.05 | -4.26 | 29.39 | 0.4821 | 0.0599 | -0.0002 |
| 101 | SLU 43 | 0.03 | -4.36 | 28.16 | 0.4536 | 0.0475 | -0.0002 |
| 101 | SLU 44 | 0.05 | -2.24 | 29.14 | 0.3795 | 0.0574 | -0.0002 |
| 101 | SLU 45 | 0.04 | -4.67 | 28.37 | 0.4717 | 0.0487 | -0.0002 |
| 101 | SLU 46 | 0.04 | -3.4 | 28.96 | 0.4272 | 0.0546 | -0.0002 |
| 101 | SLU 47 | 0.05 | -2.55 | 29.1 | 0.3948 | 0.058 | -0.0002 |
| 101 | SLU 48 | 0.04 | -4.98 | 28.33 | 0.487 | 0.0492 | -0.0002 |
| 101 | SLU 49 | 0.04 | -3.71 | 28.92 | 0.4425 | 0.0552 | -0.0002 |
| 101 | SLU 50 | 0.04 | -4.98 | 28.08 | 0.4842 | 0.0487 | -0.0002 |
| 101 | SLU 51 | 0.04 | -3.71 | 28.67 | 0.4397 | 0.0546 | -0.0002 |
| 101 | SLU 52 | 0.05 | -2.92 | 32.03 | 0.441 | 0.0639 | -0.0002 |
| 101 | SLU 53 | 0.04 | -5.35 | 31.25 | 0.5332 | 0.0551 | -0.0002 |
| 101 | SLU 54 | 0.05 | -4.08 | 31.85 | 0.4888 | 0.0611 | -0.0002 |
| 101 | SLU 55 | 0.05 | -3.24 | 31.99 | 0.4563 | 0.0645 | -0.0002 |
| 101 | SLU 56 | 0.04 | -5.67 | 31.22 | 0.5485 | 0.0557 | -0.0002 |
| 101 | SLU 57 | 0.05 | -4.39 | 31.81 | 0.5041 | 0.0617 | -0.0002 |
| 101 | SLU 58 | 0.04 | -5.67 | 30.96 | 0.5457 | 0.0552 | -0.0002 |
| 101 | SLU 59 | 0.05 | -4.4 | 31.55 | 0.5013 | 0.0611 | -0.0002 |
| 101 | SLU 60 | 0.04 | -5.34 | 32.28 | 0.5415 | 0.0568 | -0.0002 |
| 101 | SLU 61 | 0.05 | -4.07 | 32.87 | 0.497 | 0.0627 | -0.0002 |
| 101 | SLU 62 | 0.04 | -5.65 | 32.24 | 0.5568 | 0.0573 | -0.0002 |
| 101 | SLU 63 | 0.05 | -4.38 | 32.83 | 0.5123 | 0.0633 | -0.0002 |
| 101 | SLU 64 | 0.04 | -5.06 | 30.58 | 0.5125 | 0.0535 | -0.0002 |
| 101 | SLU 65 | 0.05 | -2.94 | 31.56 | 0.4384 | 0.0634 | -0.0002 |
| 101 | SLU 66 | 0.04 | -5.37 | 30.79 | 0.5306 | 0.0546 | -0.0002 |
| 101 | SLU 67 | 0.05 | -4.09 | 31.38 | 0.4861 | 0.0606 | -0.0002 |
| 101 | SLU 68 | 0.05 | -3.25 | 31.52 | 0.4537 | 0.064 | -0.0002 |
| 101 | SLU 69 | 0.04 | -5.68 | 30.75 | 0.5459 | 0.0552 | -0.0002 |
| 101 | SLU 70 | 0.05 | -4.41 | 31.34 | 0.5014 | 0.0612 | -0.0002 |
| 101 | SLU 71 | 0.04 | -5.68 | 30.5 | 0.5431 | 0.0547 | -0.0002 |
| 101 | SLU 72 | 0.05 | -4.41 | 31.09 | 0.4986 | 0.0606 | -0.0002 |
| 101 | SLU 73 | 0.06 | -3.62 | 34.45 | 0.5 | 0.0699 | -0.0002 |
| 101 | SLU 74 | 0.04 | -6.05 | 33.67 | 0.5921 | 0.0611 | -0.0002 |
| 101 | SLU 75 | 0.05 | -4.78 | 34.27 | 0.5477 | 0.067 | -0.0002 |
| 101 | SLU 76 | 0.06 | -3.94 | 34.41 | 0.5153 | 0.0704 | -0.0002 |
| 101 | SLU 77 | 0.05 | -6.37 | 33.64 | 0.6074 | 0.0617 | -0.0002 |
| 101 | SLU 78 | 0.05 | -5.09 | 34.23 | 0.563 | 0.0676 | -0.0002 |
| 101 | SLU 79 | 0.04 | -6.37 | 33.38 | 0.6047 | 0.0611 | -0.0002 |
| 101 | SLU 80 | 0.05 | -5.1 | 33.97 | 0.5602 | 0.0671 | -0.0002 |
| 101 | SLU 81 | 0.05 | -6.04 | 34.7 | 0.6004 | 0.0627 | -0.0002 |
| 101 | SLU 82 | 0.05 | -4.77 | 35.29 | 0.556 | 0.0687 | -0.0002 |
| 101 | SLU 83 | 0.05 | -6.35 | 34.66 | 0.6157 | 0.0633 | -0.0002 |
| 101 | SLU 84 | 0.05 | -5.08 | 35.25 | 0.5713 | 0.0693 | -0.0002 |
| 101 | SLE RA 1 | 0.03 | -3.74 | 22.99 | 0.3813 | 0.0398 | -0.0001 |
| 101 | SLE RA 2 | 0.04 | -2.32 | 23.64 | 0.3319 | 0.0464 | -0.0002 |
| 101 | SLE RA 3 | 0.03 | -3.94 | 23.13 | 0.3933 | 0.0406 | -0.0001 |
| 101 | SLE RA 4 | 0.04 | -3.09 | 23.52 | 0.3637 | 0.0446 | -0.0002 |
| 101 | SLE RA 5 | 0.04 | -2.53 | 23.62 | 0.3421 | 0.0468 | -0.0002 |
| 101 | SLE RA 6 | 0.03 | -4.15 | 23.1 | 0.4035 | 0.041 | -0.0001 |
| 101 | SLE RA 7 | 0.04 | -3.3 | 23.5 | 0.3739 | 0.0449 | -0.0002 |
| 101 | SLE RA 8 | 0.03 | -4.15 | 22.94 | 0.4017 | 0.0406 | -0.0001 |
| 101 | SLE RA 9 | 0.04 | -3.31 | 23.33 | 0.372 | 0.0446 | -0.0002 |
| 101 | SLE RA 10 | 0.04 | -2.78 | 25.57 | 0.3729 | 0.0507 | -0.0002 |
| 101 | SLE RA 11 | 0.03 | -4.4 | 25.05 | 0.4344 | 0.0449 | -0.0002 |
| 101 | SLE RA 12 | 0.04 | -3.55 | 25.45 | 0.4047 | 0.0489 | -0.0002 |
| 101 | SLE RA 13 | 0.04 | -2.99 | 25.54 | 0.3831 | 0.0511 | -0.0002 |
| 101 | SLE RA 14 | 0.03 | -4.61 | 25.03 | 0.4446 | 0.0453 | -0.0002 |
| 101 | SLE RA 15 | 0.04 | -3.76 | 25.42 | 0.4149 | 0.0493 | -0.0002 |
| 101 | SLE RA 16 | 0.03 | -4.61 | 24.86 | 0.4427 | 0.0449 | -0.0002 |
| 101 | SLE RA 17 | 0.04 | -3.76 | 25.25 | 0.4131 | 0.0489 | -0.0002 |
| 101 | SLE RA 18 | 0.03 | -4.39 | 25.74 | 0.4399 | 0.046 | -0.0002 |
| 101 | SLE RA 19 | 0.04 | -3.54 | 26.13 | 0.4103 | 0.05 | -0.0002 |
| 101 | SLE RA 20 | 0.03 | -4.6 | 25.71 | 0.4501 | 0.0464 | -0.0002 |
| 101 | SLE RA 21 | 0.04 | -3.75 | 26.1 | 0.4205 | 0.0503 | -0.0002 |
| 101 | SLE FR 1 | 0.03 | -3.74 | 22.99 | 0.3813 | 0.0398 | -0.0001 |
| 101 | SLE FR 2 | 0.03 | -3.45 | 23.12 | 0.3714 | 0.0411 | -0.0001 |
| 101 | SLE FR 3 | 0.03 | -3.82 | 22.98 | 0.3854 | 0.04 | -0.0001 |
| 101 | SLE FR 4 | 0.03 | -3.65 | 23.94 | 0.389 | 0.043 | -0.0002 |
| 101 | SLE FR 5 | 0.03 | -4.02 | 23.8 | 0.403 | 0.0418 | -0.0002 |
| 101 | SLE FR 6 | 0.03 | -4.06 | 24.36 | 0.4106 | 0.0429 | -0.0002 |

| Nodo | Cont. | Reazione a traslazione | | | Reazione a rotazione | | |
|---|---|---|---|---|---|---|---|
| Ind. | N.br. | x | y | z | x | y | z |
| 101 | SLE QP 1 | 0.03 | -3.74 | 22.99 | 0.3813 | 0.0398 | -0.0001 |
| 101 | SLE QP 2 | 0.03 | -3.93 | 23.81 | 0.3989 | 0.0417 | -0.0002 |
| 101 | SLD 1 | -0.01 | -0.82 | 22.74 | 0.2719 | 0.1049 | -0.0004 |
| 101 | SLD 2 | -0.01 | -0.82 | 22.74 | 0.2719 | 0.1049 | -0.0004 |
| 101 | SLD 3 | -0.03 | -4.55 | 20.61 | 0.429 | 0.0844 | -0.0003 |
| 101 | SLD 4 | -0.03 | -4.55 | 20.61 | 0.429 | 0.0844 | -0.0003 |
| 101 | SLD 5 | 0.05 | 2.66 | 26.72 | 0.1225 | 0.0917 | -0.0003 |
| 101 | SLD 6 | 0.05 | 2.66 | 26.72 | 0.1225 | 0.0917 | -0.0003 |
| 101 | SLD 7 | -0.02 | -9.78 | 19.62 | 0.6462 | 0.0234 | -0.0001 |
| 101 | SLD 8 | -0.02 | -9.78 | 19.62 | 0.6462 | 0.0234 | -0.0001 |
| 101 | SLD 9 | 0.08 | 1.91 | 28.01 | 0.1516 | 0.06 | -0.0002 |
| 101 | SLD 10 | 0.08 | 1.91 | 28.01 | 0.1516 | 0.06 | -0.0002 |
| 101 | SLD 11 | 0.01 | -10.53 | 20.9 | 0.6752 | -0.0084 | 0 |
| 101 | SLD 12 | 0.01 | -10.53 | 20.9 | 0.6752 | -0.0084 | 0 |
| 101 | SLD 13 | 0.09 | -3.31 | 27.02 | 0.3688 | -0.001 | 0 |
| 101 | SLD 14 | 0.09 | -3.31 | 27.02 | 0.3688 | -0.001 | 0 |
| 101 | SLD 15 | 0.07 | -7.04 | 24.89 | 0.5259 | -0.0215 | 0.0001 |
| 101 | SLD 16 | 0.07 | -7.04 | 24.89 | 0.5259 | -0.0215 | 0.0001 |
| 101 | SLV 1 | -0.05 | 3.51 | 21.33 | 0.095 | 0.1908 | -0.0006 |
| 101 | SLV 2 | -0.05 | 3.51 | 21.33 | 0.095 | 0.1908 | -0.0006 |
| 101 | SLV 3 | -0.11 | -5.39 | 16.26 | 0.4676 | 0.1397 | -0.0005 |
| 101 | SLV 4 | -0.11 | -5.39 | 16.26 | 0.4676 | 0.1397 | -0.0005 |
| 101 | SLV 5 | 0.09 | 11.8 | 30.77 | -0.2575 | 0.1638 | -0.0005 |
| 101 | SLV 6 | 0.09 | 11.8 | 30.77 | -0.2575 | 0.1638 | -0.0005 |
| 101 | SLV 7 | -0.1 | -17.87 | 13.85 | 0.9847 | -0.0063 | -0.0001 |
| 101 | SLV 8 | -0.1 | -17.87 | 13.85 | 0.9847 | -0.0063 | -0.0001 |
| 101 | SLV 9 | 0.16 | 10 | 33.78 | -0.187 | 0.0897 | -0.0002 |
| 101 | SLV 10 | 0.16 | 10 | 33.78 | -0.187 | 0.0897 | -0.0002 |
| 101 | SLV 11 | -0.03 | -19.66 | 16.86 | 1.0552 | -0.0804 | 0.0002 |
| 101 | SLV 12 | -0.03 | -19.66 | 16.86 | 1.0552 | -0.0804 | 0.0002 |
| 101 | SLV 13 | 0.17 | -2.48 | 31.37 | 0.3301 | -0.0564 | 0.0002 |
| 101 | SLV 14 | 0.17 | -2.48 | 31.37 | 0.3301 | -0.0564 | 0.0002 |
| 101 | SLV 15 | 0.11 | -11.38 | 26.29 | 0.7028 | -0.1074 | 0.0003 |
| 101 | SLV 16 | 0.11 | -11.38 | 26.29 | 0.7028 | -0.1074 | 0.0003 |
| 102 | SLU 1 | -0.01 | -1.82 | 43.8 | 0.0883 | 0.0057 | 0.0002 |
| 102 | SLU 2 | -0.02 | -2.2 | 44.15 | 0.107 | 0.0042 | 0.0003 |
| 102 | SLU 3 | -0.01 | -1.83 | 44.45 | 0.0889 | 0.0061 | 0.0002 |
| 102 | SLU 4 | -0.02 | -2.05 | 44.66 | 0.1001 | 0.0052 | 0.0002 |
| 102 | SLU 5 | -0.02 | -2.19 | 44.49 | 0.1069 | 0.0046 | 0.0002 |
| 102 | SLU 6 | -0.01 | -1.82 | 44.79 | 0.0888 | 0.0065 | 0.0002 |
| 102 | SLU 7 | -0.02 | -2.05 | 45 | 0.1 | 0.0056 | 0.0002 |
| 102 | SLU 8 | -0.01 | -1.81 | 44.49 | 0.0881 | 0.0064 | 0.0002 |
| 102 | SLU 9 | -0.02 | -2.04 | 44.69 | 0.0993 | 0.0056 | 0.0002 |
| 102 | SLU 10 | -0.02 | -2.44 | 52 | 0.1188 | 0.0058 | 0.0003 |
| 102 | SLU 11 | -0.02 | -2.07 | 52.31 | 0.1007 | 0.0076 | 0.0002 |
| 102 | SLU 12 | -0.02 | -2.29 | 52.51 | 0.1119 | 0.0068 | 0.0003 |
| 102 | SLU 13 | -0.02 | -2.43 | 52.35 | 0.1187 | 0.0062 | 0.0003 |
| 102 | SLU 14 | -0.02 | -2.06 | 52.65 | 0.1006 | 0.008 | 0.0002 |
| 102 | SLU 15 | -0.02 | -2.29 | 52.86 | 0.1118 | 0.0071 | 0.0002 |
| 102 | SLU 16 | -0.02 | -2.05 | 52.34 | 0.0999 | 0.008 | 0.0002 |
| 102 | SLU 17 | -0.02 | -2.28 | 52.55 | 0.1111 | 0.0071 | 0.0002 |
| 102 | SLU 18 | -0.02 | -2.17 | 55.03 | 0.1051 | 0.0079 | 0.0002 |
| 102 | SLU 19 | -0.02 | -2.39 | 55.23 | 0.1164 | 0.007 | 0.0003 |
| 102 | SLU 20 | -0.02 | -2.16 | 55.37 | 0.105 | 0.0083 | 0.0002 |
| 102 | SLU 21 | -0.02 | -2.38 | 55.58 | 0.1162 | 0.0074 | 0.0003 |
| 102 | SLU 22 | -0.02 | -2.06 | 48.11 | 0.1 | 0.0062 | 0.0002 |
| 102 | SLU 23 | -0.02 | -2.43 | 48.45 | 0.1187 | 0.0047 | 0.0003 |
| 102 | SLU 24 | -0.02 | -2.06 | 48.75 | 0.1006 | 0.0066 | 0.0002 |
| 102 | SLU 25 | -0.02 | -2.29 | 48.96 | 0.1118 | 0.0057 | 0.0002 |
| 102 | SLU 26 | -0.02 | -2.42 | 48.79 | 0.1186 | 0.0051 | 0.0003 |
| 102 | SLU 27 | -0.02 | -2.06 | 49.1 | 0.1005 | 0.007 | 0.0002 |
| 102 | SLU 28 | -0.02 | -2.28 | 49.3 | 0.1117 | 0.0061 | 0.0002 |
| 102 | SLU 29 | -0.01 | -2.04 | 48.79 | 0.0998 | 0.0069 | 0.0002 |
| 102 | SLU 30 | -0.02 | -2.27 | 49 | 0.111 | 0.0061 | 0.0002 |
| 102 | SLU 31 | -0.02 | -2.67 | 56.31 | 0.1305 | 0.0063 | 0.0003 |
| 102 | SLU 32 | -0.02 | -2.3 | 56.61 | 0.1124 | 0.0081 | 0.0002 |
| 102 | SLU 33 | -0.02 | -2.53 | 56.82 | 0.1236 | 0.0073 | 0.0003 |
| 102 | SLU 34 | -0.02 | -2.66 | 56.65 | 0.1304 | 0.0067 | 0.0003 |
| 102 | SLU 35 | -0.02 | -2.3 | 56.95 | 0.1123 | 0.0085 | 0.0002 |
| 102 | SLU 36 | -0.02 | -2.52 | 57.16 | 0.1235 | 0.0076 | 0.0003 |
| 102 | SLU 37 | -0.02 | -2.28 | 56.65 | 0.1116 | 0.0085 | 0.0002 |
| 102 | SLU 38 | -0.02 | -2.51 | 56.86 | 0.1228 | 0.0076 | 0.0003 |
| 102 | SLU 39 | -0.02 | -2.4 | 59.33 | 0.1168 | 0.0084 | 0.0003 |
| 102 | SLU 40 | -0.02 | -2.62 | 59.54 | 0.1281 | 0.0075 | 0.0003 |
| 102 | SLU 41 | -0.02 | -2.39 | 59.68 | 0.1167 | 0.0088 | 0.0003 |
| 102 | SLU 42 | -0.02 | -2.62 | 59.88 | 0.128 | 0.0079 | 0.0003 |
| 102 | SLU 43 | -0.02 | -2.29 | 55.47 | 0.1108 | 0.0072 | 0.0002 |
| 102 | SLU 44 | -0.02 | -2.66 | 55.81 | 0.1295 | 0.0058 | 0.0003 |
| 102 | SLU 45 | -0.02 | -2.3 | 56.11 | 0.1114 | 0.0076 | 0.0002 |
| 102 | SLU 46 | -0.02 | -2.52 | 56.32 | 0.1226 | 0.0068 | 0.0003 |
| 102 | SLU 47 | -0.02 | -2.66 | 56.15 | 0.1294 | 0.0062 | 0.0003 |
| 102 | SLU 48 | -0.02 | -2.29 | 56.46 | 0.1113 | 0.008 | 0.0002 |
| 102 | SLU 49 | -0.02 | -2.51 | 56.66 | 0.1225 | 0.0071 | 0.0002 |
| 102 | SLU 50 | -0.02 | -2.28 | 56.15 | 0.1106 | 0.008 | 0.0002 |
| 102 | SLU 51 | -0.02 | -2.5 | 56.36 | 0.1218 | 0.0071 | 0.0002 |
| 102 | SLU 52 | -0.02 | -2.9 | 63.67 | 0.1413 | 0.0073 | 0.0003 |
| 102 | SLU 53 | -0.02 | -2.54 | 63.97 | 0.1232 | 0.0092 | 0.0003 |
| 102 | SLU 54 | -0.02 | -2.76 | 64.18 | 0.1344 | 0.0083 | 0.0003 |

| Nodo | Cont. | Reazione a traslazione | | | Reazione a rotazione | | |
|---|---|---|---|---|---|---|---|
| Ind. | N.br. | x | y | z | x | y | z |
| 102 | SLU 55 | -0.02 | -2.9 | 64.01 | 0.1412 | 0.0077 | 0.0003 |
| 102 | SLU 56 | -0.02 | -2.53 | 64.31 | 0.1231 | 0.0095 | 0.0002 |
| 102 | SLU 57 | -0.02 | -2.75 | 64.52 | 0.1343 | 0.0087 | 0.0003 |
| 102 | SLU 58 | -0.02 | -2.52 | 64.01 | 0.1224 | 0.0095 | 0.0002 |
| 102 | SLU 59 | -0.02 | -2.74 | 64.21 | 0.1336 | 0.0087 | 0.0003 |
| 102 | SLU 60 | -0.02 | -2.63 | 66.69 | 0.1276 | 0.0094 | 0.0003 |
| 102 | SLU 61 | -0.02 | -2.86 | 66.9 | 0.1388 | 0.0086 | 0.0003 |
| 102 | SLU 62 | -0.02 | -2.63 | 67.03 | 0.1275 | 0.0098 | 0.0003 |
| 102 | SLU 63 | -0.02 | -2.85 | 67.24 | 0.1387 | 0.0089 | 0.0003 |
| 102 | SLU 64 | -0.02 | -2.52 | 59.77 | 0.1225 | 0.0077 | 0.0003 |
| 102 | SLU 65 | -0.02 | -2.9 | 60.11 | 0.1412 | 0.0063 | 0.0003 |
| 102 | SLU 66 | -0.02 | -2.53 | 60.42 | 0.1231 | 0.0081 | 0.0003 |
| 102 | SLU 67 | -0.02 | -2.75 | 60.62 | 0.1343 | 0.0072 | 0.0003 |
| 102 | SLU 68 | -0.02 | -2.89 | 60.46 | 0.1411 | 0.0066 | 0.0003 |
| 102 | SLU 69 | -0.02 | -2.52 | 60.76 | 0.123 | 0.0085 | 0.0002 |
| 102 | SLU 70 | -0.02 | -2.75 | 60.97 | 0.1342 | 0.0076 | 0.0003 |
| 102 | SLU 71 | -0.02 | -2.51 | 60.46 | 0.1223 | 0.0085 | 0.0002 |
| 102 | SLU 72 | -0.02 | -2.74 | 60.66 | 0.1335 | 0.0076 | 0.0003 |
| 102 | SLU 73 | -0.02 | -3.14 | 67.97 | 0.153 | 0.0078 | 0.0004 |
| 102 | SLU 74 | -0.02 | -2.77 | 68.28 | 0.1349 | 0.0097 | 0.0003 |
| 102 | SLU 75 | -0.02 | -2.99 | 68.48 | 0.1461 | 0.0088 | 0.0003 |
| 102 | SLU 76 | -0.02 | -3.13 | 68.32 | 0.1529 | 0.0082 | 0.0004 |
| 102 | SLU 77 | -0.02 | -2.76 | 68.62 | 0.1348 | 0.01 | 0.0003 |
| 102 | SLU 78 | -0.02 | -2.99 | 68.83 | 0.146 | 0.0092 | 0.0003 |
| 102 | SLU 79 | -0.02 | -2.75 | 68.31 | 0.1341 | 0.01 | 0.0003 |
| 102 | SLU 80 | -0.02 | -2.98 | 68.52 | 0.1453 | 0.0091 | 0.0003 |
| 102 | SLU 81 | -0.02 | -2.87 | 71 | 0.1393 | 0.0099 | 0.0003 |
| 102 | SLU 82 | -0.02 | -3.09 | 71.2 | 0.1506 | 0.0091 | 0.0004 |
| 102 | SLU 83 | -0.02 | -2.86 | 71.34 | 0.1392 | 0.0103 | 0.0003 |
| 102 | SLU 84 | -0.02 | -3.08 | 71.55 | 0.1504 | 0.0094 | 0.0003 |
| 102 | SLE RA 1 | -0.01 | -1.89 | 45.03 | 0.0917 | 0.0058 | 0.0002 |
| 102 | SLE RA 2 | -0.02 | -2.14 | 45.26 | 0.1041 | 0.0049 | 0.0002 |
| 102 | SLE RA 3 | -0.01 | -1.89 | 45.46 | 0.0921 | 0.0061 | 0.0002 |
| 102 | SLE RA 4 | -0.02 | -2.04 | 45.6 | 0.0996 | 0.0055 | 0.0002 |
| 102 | SLE RA 5 | -0.02 | -2.14 | 45.49 | 0.1041 | 0.0051 | 0.0002 |
| 102 | SLE RA 6 | -0.01 | -1.89 | 45.69 | 0.092 | 0.0063 | 0.0002 |
| 102 | SLE RA 7 | -0.02 | -2.04 | 45.83 | 0.0995 | 0.0058 | 0.0002 |
| 102 | SLE RA 8 | -0.01 | -1.88 | 45.49 | 0.0915 | 0.0063 | 0.0002 |
| 102 | SLE RA 9 | -0.02 | -2.03 | 45.63 | 0.099 | 0.0058 | 0.0002 |
| 102 | SLE RA 10 | -0.02 | -2.3 | 50.5 | 0.112 | 0.0059 | 0.0003 |
| 102 | SLE RA 11 | -0.02 | -2.05 | 50.7 | 0.0999 | 0.0071 | 0.0002 |
| 102 | SLE RA 12 | -0.02 | -2.2 | 50.84 | 0.1074 | 0.0065 | 0.0002 |
| 102 | SLE RA 13 | -0.02 | -2.3 | 50.73 | 0.1119 | 0.0061 | 0.0003 |
| 102 | SLE RA 14 | -0.02 | -2.05 | 50.93 | 0.0998 | 0.0074 | 0.0002 |
| 102 | SLE RA 15 | -0.02 | -2.2 | 51.07 | 0.1073 | 0.0068 | 0.0002 |
| 102 | SLE RA 16 | -0.02 | -2.04 | 50.73 | 0.0994 | 0.0074 | 0.0002 |
| 102 | SLE RA 17 | -0.02 | -2.19 | 50.86 | 0.1069 | 0.0068 | 0.0002 |
| 102 | SLE RA 18 | -0.02 | -2.12 | 52.52 | 0.1029 | 0.0073 | 0.0002 |
| 102 | SLE RA 19 | -0.02 | -2.27 | 52.65 | 0.1104 | 0.0067 | 0.0003 |
| 102 | SLE RA 20 | -0.02 | -2.11 | 52.74 | 0.1028 | 0.0075 | 0.0002 |
| 102 | SLE RA 21 | -0.02 | -2.26 | 52.88 | 0.1103 | 0.007 | 0.0002 |
| 102 | SLE FR 1 | -0.01 | -1.89 | 45.03 | 0.0917 | 0.0058 | 0.0002 |
| 102 | SLE FR 2 | -0.01 | -1.94 | 45.08 | 0.0942 | 0.0056 | 0.0002 |
| 102 | SLE FR 3 | -0.01 | -1.89 | 45.12 | 0.0916 | 0.0059 | 0.0002 |
| 102 | SLE FR 4 | -0.02 | -2.01 | 47.32 | 0.0975 | 0.0061 | 0.0002 |
| 102 | SLE FR 5 | -0.01 | -1.96 | 47.37 | 0.095 | 0.0064 | 0.0002 |
| 102 | SLE FR 6 | -0.02 | -2 | 48.77 | 0.0973 | 0.0066 | 0.0002 |
| 102 | SLE QP 1 | -0.01 | -1.89 | 45.03 | 0.0917 | 0.0058 | 0.0002 |
| 102 | SLE QP 2 | -0.02 | -1.96 | 47.28 | 0.095 | 0.0063 | 0.0002 |
| 102 | SLD 1 | 0.05 | 0.72 | 44.27 | -0.047 | 0.0744 | -0.0017 |
| 102 | SLD 2 | 0.05 | 0.72 | 44.27 | -0.047 | 0.0744 | -0.0017 |
| 102 | SLD 3 | 0.02 | -3.22 | 42.64 | 0.159 | 0.0606 | -0.0011 |
| 102 | SLD 4 | 0.02 | -3.22 | 42.64 | 0.159 | 0.0606 | -0.0011 |
| 102 | SLD 5 | 0.05 | 4.81 | 48.85 | -0.26 | 0.0476 | -0.0013 |
| 102 | SLD 6 | 0.05 | 4.81 | 48.85 | -0.26 | 0.0476 | -0.0013 |
| 102 | SLD 7 | -0.05 | -8.3 | 43.41 | 0.4267 | 0.0017 | 0.0007 |
| 102 | SLD 8 | -0.05 | -8.3 | 43.41 | 0.4267 | 0.0017 | 0.0007 |
| 102 | SLD 9 | 0.02 | 4.39 | 51.14 | -0.2366 | 0.0108 | -0.0003 |
| 102 | SLD 10 | 0.02 | 4.39 | 51.14 | -0.2366 | 0.0108 | -0.0003 |
| 102 | SLD 11 | -0.08 | -8.73 | 45.7 | 0.4501 | -0.035 | 0.0017 |
| 102 | SLD 12 | -0.08 | -8.73 | 45.7 | 0.4501 | -0.035 | 0.0017 |
| 102 | SLD 13 | -0.05 | -0.7 | 51.92 | 0.031 | -0.0481 | 0.0015 |
| 102 | SLD 14 | -0.05 | -0.7 | 51.92 | 0.031 | -0.0481 | 0.0015 |
| 102 | SLD 15 | -0.08 | -4.63 | 50.28 | 0.237 | -0.0619 | 0.0021 |
| 102 | SLD 16 | -0.08 | -4.63 | 50.28 | 0.237 | -0.0619 | 0.0021 |
| 102 | SLV 1 | 0.15 | 4.27 | 40.32 | -0.2352 | 0.1734 | -0.0044 |
| 102 | SLV 2 | 0.15 | 4.27 | 40.32 | -0.2352 | 0.1734 | -0.0044 |
| 102 | SLV 3 | 0.07 | -4.85 | 36.41 | 0.2421 | 0.1411 | -0.0029 |
| 102 | SLV 4 | 0.07 | -4.85 | 36.41 | 0.2421 | 0.1411 | -0.0029 |
| 102 | SLV 5 | 0.14 | 13.74 | 51.11 | -0.7279 | 0.1054 | -0.0033 |
| 102 | SLV 6 | 0.14 | 13.74 | 51.11 | -0.7279 | 0.1054 | -0.0033 |
| 102 | SLV 7 | -0.1 | -16.65 | 38.1 | 0.863 | -0.0023 | 0.0015 |
| 102 | SLV 8 | -0.1 | -16.65 | 38.1 | 0.863 | -0.0023 | 0.0015 |
| 102 | SLV 9 | 0.07 | 12.74 | 56.46 | -0.6729 | 0.0148 | -0.001 |
| 102 | SLV 10 | 0.07 | 12.74 | 56.46 | -0.6729 | 0.0148 | -0.001 |
| 102 | SLV 11 | -0.17 | -17.65 | 43.44 | 0.918 | -0.0929 | 0.0038 |
| 102 | SLV 12 | -0.17 | -17.65 | 43.44 | 0.918 | -0.0929 | 0.0038 |
| 102 | SLV 13 | -0.11 | 0.94 | 58.14 | -0.052 | -0.1285 | 0.0033 |

| Nodo | Cont. | Reazione a traslazione | | | Reazione a rotazione | | |
|---|---|---|---|---|---|---|---|
| Ind. | N.br. | x | y | z | x | y | z |
| 102 | SLV 14 | -0.11 | 0.94 | 58.14 | -0.052 | -0.1285 | 0.0033 |
| 102 | SLV 15 | -0.18 | -8.18 | 54.24 | 0.4252 | -0.1608 | 0.0048 |
| 102 | SLV 16 | -0.18 | -8.18 | 54.24 | 0.4252 | -0.1608 | 0.0048 |
| 103 | SLU 1 | 0.01 | 2.4 | 30.23 | 0.0313 | 0.0035 | 0 |
| 103 | SLU 2 | 0 | 4.94 | 32.06 | -0.0659 | -0.0046 | 0 |
| 103 | SLU 3 | 0.01 | 2.22 | 30.85 | 0.0436 | 0.0036 | 0 |
| 103 | SLU 4 | 0.01 | 3.74 | 31.95 | -0.0147 | -0.0013 | 0 |
| 103 | SLU 5 | 0 | 4.66 | 32.37 | -0.0509 | -0.0045 | 0 |
| 103 | SLU 6 | 0.02 | 1.94 | 31.16 | 0.0586 | 0.0036 | 0 |
| 103 | SLU 7 | 0.01 | 3.46 | 32.26 | 0.0003 | -0.0012 | 0 |
| 103 | SLU 8 | 0.02 | 1.84 | 30.85 | 0.0613 | 0.0036 | 0 |
| 103 | SLU 9 | 0.01 | 3.36 | 31.94 | 0.003 | -0.0013 | 0 |
| 103 | SLU 10 | 0.01 | 5.23 | 36.39 | -0.0589 | -0.0041 | 0 |
| 103 | SLU 11 | 0.02 | 2.51 | 35.18 | 0.0506 | 0.0041 | 0 |
| 103 | SLU 12 | 0.01 | 4.04 | 36.28 | -0.0077 | -0.0008 | 0 |
| 103 | SLU 13 | 0.01 | 4.95 | 36.69 | -0.0439 | -0.0041 | 0 |
| 103 | SLU 14 | 0.02 | 2.23 | 35.49 | 0.0656 | 0.0041 | 0 |
| 103 | SLU 15 | 0.01 | 3.76 | 36.59 | 0.0073 | -0.0008 | 0 |
| 103 | SLU 16 | 0.02 | 2.14 | 35.18 | 0.0683 | 0.0041 | 0 |
| 103 | SLU 17 | 0.01 | 3.66 | 36.27 | 0.01 | -0.0008 | 0 |
| 103 | SLU 18 | 0.02 | 2.82 | 36.41 | 0.0413 | 0.0042 | 0 |
| 103 | SLU 19 | 0.01 | 4.35 | 37.51 | -0.017 | -0.0007 | 0 |
| 103 | SLU 20 | 0.02 | 2.54 | 36.72 | 0.0563 | 0.0042 | 0 |
| 103 | SLU 21 | 0.01 | 4.07 | 37.82 | -0.002 | -0.0006 | 0 |
| 103 | SLU 22 | 0.02 | 2.59 | 33.95 | 0.0408 | 0.0039 | 0 |
| 103 | SLU 23 | 0.01 | 5.13 | 35.78 | -0.0564 | -0.0042 | 0 |
| 103 | SLU 24 | 0.02 | 2.41 | 34.57 | 0.053 | 0.004 | 0 |
| 103 | SLU 25 | 0.01 | 3.93 | 35.67 | -0.0053 | -0.0009 | 0 |
| 103 | SLU 26 | 0.01 | 4.85 | 36.09 | -0.0414 | -0.0041 | 0 |
| 103 | SLU 27 | 0.02 | 2.13 | 34.88 | 0.0681 | 0.004 | 0 |
| 103 | SLU 28 | 0.01 | 3.65 | 35.98 | 0.0098 | -0.0008 | 0 |
| 103 | SLU 29 | 0.02 | 2.03 | 34.57 | 0.0708 | 0.004 | 0 |
| 103 | SLU 30 | 0.01 | 3.56 | 35.66 | 0.0125 | -0.0009 | 0 |
| 103 | SLU 31 | 0.01 | 5.43 | 40.11 | -0.0494 | -0.0037 | 0 |
| 103 | SLU 32 | 0.02 | 2.71 | 38.9 | 0.0601 | 0.0045 | 0 |
| 103 | SLU 33 | 0.01 | 4.23 | 40 | 0.0018 | -0.0004 | 0 |
| 103 | SLU 34 | 0.01 | 5.15 | 40.42 | -0.0344 | -0.0037 | 0 |
| 103 | SLU 35 | 0.02 | 2.43 | 39.21 | 0.0751 | 0.0045 | 0 |
| 103 | SLU 36 | 0.01 | 3.95 | 40.31 | 0.0168 | -0.0004 | 0 |
| 103 | SLU 37 | 0.02 | 2.33 | 38.9 | 0.0778 | 0.0044 | 0 |
| 103 | SLU 38 | 0.01 | 3.85 | 39.99 | 0.0195 | -0.0004 | 0 |
| 103 | SLU 39 | 0.02 | 3.02 | 40.14 | 0.0508 | 0.0046 | 0 |
| 103 | SLU 40 | 0.01 | 4.54 | 41.23 | -0.0075 | -0.0003 | 0 |
| 103 | SLU 41 | 0.02 | 2.74 | 40.45 | 0.0658 | 0.0046 | 0 |
| 103 | SLU 42 | 0.01 | 4.26 | 41.54 | 0.0075 | -0.0002 | 0 |
| 103 | SLU 43 | 0.02 | 3.05 | 38.02 | 0.0374 | 0.0045 | 0 |
| 103 | SLU 44 | 0.01 | 5.59 | 39.85 | -0.0598 | -0.0036 | 0 |
| 103 | SLU 45 | 0.02 | 2.87 | 38.65 | 0.0497 | 0.0045 | 0 |
| 103 | SLU 46 | 0.01 | 4.39 | 39.74 | -0.0086 | -0.0003 | 0 |
| 103 | SLU 47 | 0.01 | 5.31 | 40.16 | -0.0447 | -0.0036 | 0 |
| 103 | SLU 48 | 0.02 | 2.59 | 38.95 | 0.0647 | 0.0046 | 0 |
| 103 | SLU 49 | 0.01 | 4.12 | 40.05 | 0.0064 | -0.0003 | 0 |
| 103 | SLU 50 | 0.02 | 2.49 | 38.64 | 0.0674 | 0.0045 | 0 |
| 103 | SLU 51 | 0.01 | 4.02 | 39.74 | 0.0091 | -0.0003 | 0 |
| 103 | SLU 52 | 0.01 | 5.89 | 44.18 | -0.0527 | -0.0032 | 0 |
| 103 | SLU 53 | 0.02 | 3.17 | 42.97 | 0.0567 | 0.005 | 0 |
| 103 | SLU 54 | 0.01 | 4.69 | 44.07 | -0.0016 | 0.0001 | 0 |
| 103 | SLU 55 | 0.01 | 5.61 | 44.49 | -0.0377 | -0.0031 | 0 |
| 103 | SLU 56 | 0.02 | 2.89 | 43.28 | 0.0717 | 0.005 | 0 |
| 103 | SLU 57 | 0.01 | 4.41 | 44.38 | 0.0134 | 0.0002 | 0 |
| 103 | SLU 58 | 0.02 | 2.79 | 42.97 | 0.0745 | 0.005 | 0 |
| 103 | SLU 59 | 0.01 | 4.31 | 44.06 | 0.0162 | 0.0001 | 0 |
| 103 | SLU 60 | 0.02 | 3.48 | 44.21 | 0.0474 | 0.0051 | 0 |
| 103 | SLU 61 | 0.01 | 5 | 45.3 | -0.0109 | 0.0003 | 0 |
| 103 | SLU 62 | 0.02 | 3.2 | 44.52 | 0.0625 | 0.0052 | 0 |
| 103 | SLU 63 | 0.02 | 4.72 | 45.61 | 0.0042 | 0.0003 | 0 |
| 103 | SLU 64 | 0.02 | 3.25 | 41.74 | 0.0469 | 0.0048 | 0 |
| 103 | SLU 65 | 0.01 | 5.79 | 43.57 | -0.0503 | -0.0032 | 0 |
| 103 | SLU 66 | 0.02 | 3.06 | 42.37 | 0.0592 | 0.0049 | 0 |
| 103 | SLU 67 | 0.01 | 4.59 | 43.46 | 0.0009 | 0.0001 | 0 |
| 103 | SLU 68 | 0.01 | 5.51 | 43.88 | -0.0353 | -0.0032 | 0 |
| 103 | SLU 69 | 0.02 | 2.79 | 42.68 | 0.0742 | 0.0049 | 0 |
| 103 | SLU 70 | 0.01 | 4.31 | 43.77 | 0.0159 | 0.0001 | 0 |
| 103 | SLU 71 | 0.02 | 2.69 | 42.36 | 0.0769 | 0.0049 | 0 |
| 103 | SLU 72 | 0.01 | 4.21 | 43.46 | 0.0186 | 0 | 0 |
| 103 | SLU 73 | 0.01 | 6.08 | 47.9 | -0.0433 | -0.0028 | 0.0001 |
| 103 | SLU 74 | 0.02 | 3.36 | 46.7 | 0.0662 | 0.0054 | 0.0001 |
| 103 | SLU 75 | 0.02 | 4.88 | 47.79 | 0.0079 | 0.0005 | 0.0001 |
| 103 | SLU 76 | 0.01 | 5.8 | 48.21 | -0.0282 | -0.0027 | 0.0001 |
| 103 | SLU 77 | 0.02 | 3.08 | 47.01 | 0.0812 | 0.0054 | 0.0001 |
| 103 | SLU 78 | 0.02 | 4.6 | 48.1 | 0.0229 | 0.0006 | 0.0001 |
| 103 | SLU 79 | 0.02 | 2.98 | 46.69 | 0.0839 | 0.0054 | 0.0001 |
| 103 | SLU 80 | 0.02 | 4.51 | 47.79 | 0.0256 | 0.0005 | 0.0001 |
| 103 | SLU 81 | 0.02 | 3.67 | 47.93 | 0.0569 | 0.0055 | 0.0001 |
| 103 | SLU 82 | 0.02 | 5.19 | 49.03 | -0.0014 | 0.0007 | 0.0001 |
| 103 | SLU 83 | 0.02 | 3.39 | 48.24 | 0.0719 | 0.0055 | 0.0001 |
| 103 | SLU 84 | 0.02 | 4.91 | 49.33 | 0.0136 | 0.0007 | 0.0001 |
| 103 | SLE RA 1 | 0.02 | 2.46 | 31.29 | 0.034 | 0.0036 | 0 |

| Nodo | Cont. | Reazione a traslazione | | | Reazione a rotazione | | |
|---|---|---|---|---|---|---|---|
| Ind. | N.br. | x | y | z | x | y | z |
| 103 | SLE RA 2 | 0.01 | 4.15 | 32.51 | -0.0308 | -0.0018 | 0 |
| 103 | SLE RA 3 | 0.02 | 2.33 | 31.71 | 0.0422 | 0.0037 | 0 |
| 103 | SLE RA 4 | 0.01 | 3.35 | 32.44 | 0.0033 | 0.0005 | 0 |
| 103 | SLE RA 5 | 0.01 | 3.96 | 32.72 | -0.0208 | -0.0017 | 0 |
| 103 | SLE RA 6 | 0.02 | 2.15 | 31.91 | 0.0522 | 0.0037 | 0 |
| 103 | SLE RA 7 | 0.01 | 3.16 | 32.64 | 0.0133 | 0.0005 | 0 |
| 103 | SLE RA 8 | 0.02 | 2.08 | 31.7 | 0.054 | 0.0037 | 0 |
| 103 | SLE RA 9 | 0.01 | 3.1 | 32.44 | 0.0151 | 0.0004 | 0 |
| 103 | SLE RA 10 | 0.01 | 4.34 | 35.4 | -0.0261 | -0.0014 | 0 |
| 103 | SLE RA 11 | 0.02 | 2.53 | 34.59 | 0.0469 | 0.004 | 0 |
| 103 | SLE RA 12 | 0.01 | 3.55 | 35.33 | 0.008 | 0.0008 | 0 |
| 103 | SLE RA 13 | 0.01 | 4.16 | 35.6 | -0.0161 | -0.0014 | 0 |
| 103 | SLE RA 14 | 0.02 | 2.34 | 34.8 | 0.0569 | 0.004 | 0 |
| 103 | SLE RA 15 | 0.01 | 3.36 | 35.53 | 0.018 | 0.0008 | 0 |
| 103 | SLE RA 16 | 0.02 | 2.28 | 34.59 | 0.0587 | 0.004 | 0 |
| 103 | SLE RA 17 | 0.01 | 3.3 | 35.32 | 0.0198 | 0.0008 | 0 |
| 103 | SLE RA 18 | 0.02 | 2.74 | 35.42 | 0.0407 | 0.0041 | 0 |
| 103 | SLE RA 19 | 0.01 | 3.75 | 36.15 | 0.0018 | 0.0009 | 0 |
| 103 | SLE RA 20 | 0.02 | 2.55 | 35.62 | 0.0507 | 0.0041 | 0 |
| 103 | SLE RA 21 | 0.01 | 3.57 | 36.35 | 0.0118 | 0.0009 | 0 |
| 103 | SLE FR 1 | 0.02 | 2.46 | 31.29 | 0.034 | 0.0036 | 0 |
| 103 | SLE FR 2 | 0.01 | 2.79 | 31.54 | 0.021 | 0.0026 | 0 |
| 103 | SLE FR 3 | 0.02 | 2.38 | 31.38 | 0.038 | 0.0036 | 0 |
| 103 | SLE FR 4 | 0.01 | 2.88 | 32.77 | 0.023 | 0.0027 | 0 |
| 103 | SLE FR 5 | 0.02 | 2.46 | 32.61 | 0.04 | 0.0038 | 0 |
| 103 | SLE FR 6 | 0.02 | 2.6 | 33.35 | 0.0373 | 0.0039 | 0 |
| 103 | SLE QP 1 | 0.02 | 2.46 | 31.29 | 0.034 | 0.0036 | 0 |
| 103 | SLE QP 2 | 0.02 | 2.54 | 32.53 | 0.036 | 0.0038 | 0 |
| 103 | SLD 1 | -0.04 | 6.27 | 36.32 | -0.1232 | 0.0398 | -0.0001 |
| 103 | SLD 2 | -0.04 | 6.27 | 36.32 | -0.1232 | 0.0398 | -0.0001 |
| 103 | SLD 3 | -0.01 | 2.36 | 33.55 | 0.0449 | 0.0543 | -0.0001 |
| 103 | SLD 4 | -0.01 | 2.36 | 33.55 | 0.0449 | 0.0543 | -0.0001 |
| 103 | SLD 5 | -0.03 | 9.58 | 37.87 | -0.2667 | -0.0073 | 0 |
| 103 | SLD 6 | -0.03 | 9.58 | 37.87 | -0.2667 | -0.0073 | 0 |
| 103 | SLD 7 | 0.04 | -3.43 | 28.63 | 0.2936 | 0.0408 | 0 |
| 103 | SLD 8 | 0.04 | -3.43 | 28.63 | 0.2936 | 0.0408 | 0 |
| 103 | SLD 9 | -0.01 | 8.51 | 36.43 | -0.2216 | -0.0333 | 0.0001 |
| 103 | SLD 10 | -0.01 | 8.51 | 36.43 | -0.2216 | -0.0333 | 0.0001 |
| 103 | SLD 11 | 0.06 | -4.5 | 27.19 | 0.3387 | 0.0149 | 0 |
| 103 | SLD 12 | 0.06 | -4.5 | 27.19 | 0.3387 | 0.0149 | 0 |
| 103 | SLD 13 | 0.05 | 2.72 | 31.51 | 0.0271 | -0.0467 | 0.0002 |
| 103 | SLD 14 | 0.05 | 2.72 | 31.51 | 0.0271 | -0.0467 | 0.0002 |
| 103 | SLD 15 | 0.07 | -1.19 | 28.74 | 0.1952 | -0.0323 | 0.0001 |
| 103 | SLD 16 | 0.07 | -1.19 | 28.74 | 0.1952 | -0.0323 | 0.0001 |
| 103 | SLV 1 | -0.1 | 11.41 | 41.43 | -0.3426 | 0.0887 | -0.0002 |
| 103 | SLV 2 | -0.1 | 11.41 | 41.43 | -0.3426 | 0.0887 | -0.0002 |
| 103 | SLV 3 | -0.05 | 2.24 | 34.91 | 0.0514 | 0.1256 | -0.0003 |
| 103 | SLV 4 | -0.05 | 2.24 | 34.91 | 0.0514 | 0.1256 | -0.0003 |
| 103 | SLV 5 | -0.1 | 19.12 | 45.1 | -0.6752 | -0.0267 | 0.0001 |
| 103 | SLV 6 | -0.1 | 19.12 | 45.1 | -0.6752 | -0.0267 | 0.0001 |
| 103 | SLV 7 | 0.07 | -11.47 | 23.34 | 0.6382 | 0.0962 | -0.0002 |
| 103 | SLV 8 | 0.07 | -11.47 | 23.34 | 0.6382 | 0.0962 | -0.0002 |
| 103 | SLV 9 | -0.04 | 16.55 | 41.72 | -0.5662 | -0.0887 | 0.0002 |
| 103 | SLV 10 | -0.04 | 16.55 | 41.72 | -0.5662 | -0.0887 | 0.0002 |
| 103 | SLV 11 | 0.13 | -14.04 | 19.96 | 0.7472 | 0.0342 | 0 |
| 103 | SLV 12 | 0.13 | -14.04 | 19.96 | 0.7472 | 0.0342 | 0 |
| 103 | SLV 13 | 0.08 | 2.84 | 30.15 | 0.0206 | -0.118 | 0.0004 |
| 103 | SLV 14 | 0.08 | 2.84 | 30.15 | 0.0206 | -0.118 | 0.0004 |
| 103 | SLV 15 | 0.14 | -6.33 | 23.63 | 0.4146 | -0.0811 | 0.0003 |
| 103 | SLV 16 | 0.14 | -6.33 | 23.63 | 0.4146 | -0.0811 | 0.0003 |
| 104 | SLU 1 | -0.05 | 7.97 | 54.97 | -0.2782 | -0.0127 | 0 |
| 104 | SLU 2 | 0.03 | 9.49 | 58.5 | -0.3313 | 0.0437 | 0 |
| 104 | SLU 3 | -0.05 | 8.24 | 56.74 | -0.2875 | -0.0133 | 0 |
| 104 | SLU 4 | 0 | 9.15 | 58.86 | -0.3194 | 0.0205 | 0 |
| 104 | SLU 5 | 0.03 | 9.65 | 59.65 | -0.3366 | 0.0432 | 0 |
| 104 | SLU 6 | -0.05 | 8.4 | 57.88 | -0.2929 | -0.0138 | 0 |
| 104 | SLU 7 | 0 | 9.31 | 60.01 | -0.3247 | 0.02 | 0 |
| 104 | SLU 8 | -0.05 | 8.28 | 57.26 | -0.2889 | -0.0137 | 0 |
| 104 | SLU 9 | 0 | 9.2 | 59.38 | -0.3207 | 0.0201 | 0 |
| 104 | SLU 10 | 0.03 | 10.42 | 64.72 | -0.3642 | 0.0426 | 0 |
| 104 | SLU 11 | -0.05 | 9.17 | 62.95 | -0.3205 | -0.0144 | 0 |
| 104 | SLU 12 | -0.01 | 10.08 | 65.07 | -0.3523 | 0.0194 | 0 |
| 104 | SLU 13 | 0.02 | 10.58 | 65.86 | -0.3695 | 0.0421 | 0 |
| 104 | SLU 14 | -0.05 | 9.33 | 64.09 | -0.3258 | -0.0149 | 0 |
| 104 | SLU 15 | -0.01 | 10.24 | 66.22 | -0.3576 | 0.0189 | 0 |
| 104 | SLU 16 | -0.05 | 9.21 | 63.47 | -0.3218 | -0.0147 | 0 |
| 104 | SLU 17 | -0.01 | 10.13 | 65.59 | -0.3536 | 0.0191 | 0 |
| 104 | SLU 18 | -0.05 | 9.3 | 63.84 | -0.3253 | -0.0142 | 0 |
| 104 | SLU 19 | -0.01 | 10.21 | 65.96 | -0.3571 | 0.0196 | 0 |
| 104 | SLU 20 | -0.05 | 9.45 | 64.99 | -0.3306 | -0.0147 | 0 |
| 104 | SLU 21 | -0.01 | 10.37 | 67.11 | -0.3624 | 0.0192 | 0 |
| 104 | SLU 22 | -0.05 | 8.95 | 61.74 | -0.3121 | -0.0142 | 0 |
| 104 | SLU 23 | 0.02 | 10.47 | 65.27 | -0.3652 | 0.0421 | 0 |
| 104 | SLU 24 | -0.05 | 9.22 | 63.51 | -0.3214 | -0.0149 | 0 |
| 104 | SLU 25 | -0.01 | 10.13 | 65.63 | -0.3532 | 0.0189 | 0 |
| 104 | SLU 26 | 0.02 | 10.63 | 66.42 | -0.3705 | 0.0416 | 0 |
| 104 | SLU 27 | -0.05 | 9.37 | 64.65 | -0.3267 | -0.0154 | 0 |
| 104 | SLU 28 | -0.01 | 10.29 | 66.78 | -0.3586 | 0.0184 | 0 |

| Nodo | Cont. | Reazione a traslazione | | | Reazione a rotazione | | |
|---|---|---|---|---|---|---|---|
| Ind. | N.br. | x | y | z | x | y | z |
| 104 | SLU 29 | -0.05 | 9.26 | 64.03 | -0.3227 | -0.0152 | 0 |
| 104 | SLU 30 | -0.01 | 10.17 | 66.15 | -0.3546 | 0.0186 | 0 |
| 104 | SLU 31 | 0.02 | 11.4 | 71.48 | -0.3981 | 0.041 | 0 |
| 104 | SLU 32 | -0.06 | 10.15 | 69.72 | -0.3543 | -0.0159 | 0 |
| 104 | SLU 33 | -0.01 | 11.06 | 71.84 | -0.3862 | 0.0179 | 0 |
| 104 | SLU 34 | 0.02 | 11.56 | 72.63 | -0.4034 | 0.0406 | 0 |
| 104 | SLU 35 | -0.06 | 10.3 | 70.86 | -0.3597 | -0.0164 | 0 |
| 104 | SLU 36 | -0.01 | 11.22 | 72.99 | -0.3915 | 0.0174 | 0 |
| 104 | SLU 37 | -0.06 | 10.19 | 70.24 | -0.3557 | -0.0163 | 0 |
| 104 | SLU 38 | -0.01 | 11.11 | 72.36 | -0.3875 | 0.0175 | 0 |
| 104 | SLU 39 | -0.06 | 10.28 | 70.61 | -0.3591 | -0.0157 | 0 |
| 104 | SLU 40 | -0.01 | 11.19 | 72.73 | -0.391 | 0.0181 | 0 |
| 104 | SLU 41 | -0.06 | 10.43 | 71.75 | -0.3645 | -0.0162 | 0 |
| 104 | SLU 42 | -0.01 | 11.35 | 73.88 | -0.3963 | 0.0176 | 0 |
| 104 | SLU 43 | -0.06 | 10.02 | 69.14 | -0.3501 | -0.0159 | 0 |
| 104 | SLU 44 | 0.02 | 11.55 | 72.67 | -0.4031 | 0.0404 | 0 |
| 104 | SLU 45 | -0.06 | 10.29 | 70.91 | -0.3594 | -0.0166 | 0 |
| 104 | SLU 46 | -0.01 | 11.21 | 73.03 | -0.3912 | 0.0172 | 0 |
| 104 | SLU 47 | 0.02 | 11.7 | 73.82 | -0.4085 | 0.0399 | 0 |
| 104 | SLU 48 | -0.06 | 10.45 | 72.05 | -0.3647 | -0.0171 | 0 |
| 104 | SLU 49 | -0.01 | 11.37 | 74.18 | -0.3965 | 0.0167 | 0 |
| 104 | SLU 50 | -0.06 | 10.34 | 71.43 | -0.3607 | -0.0169 | 0 |
| 104 | SLU 51 | -0.01 | 11.25 | 73.55 | -0.3926 | 0.0169 | 0 |
| 104 | SLU 52 | 0.01 | 12.48 | 78.88 | -0.4361 | 0.0394 | 0 |
| 104 | SLU 53 | -0.06 | 11.22 | 77.12 | -0.3923 | -0.0176 | 0 |
| 104 | SLU 54 | -0.02 | 12.14 | 79.24 | -0.4241 | 0.0162 | 0 |
| 104 | SLU 55 | 0.01 | 12.64 | 80.03 | -0.4414 | 0.0389 | 0 |
| 104 | SLU 56 | -0.06 | 11.38 | 78.26 | -0.3976 | -0.0181 | 0 |
| 104 | SLU 57 | -0.02 | 12.3 | 80.39 | -0.4295 | 0.0157 | 0 |
| 104 | SLU 58 | -0.06 | 11.27 | 77.64 | -0.3936 | -0.018 | 0 |
| 104 | SLU 59 | -0.02 | 12.18 | 79.76 | -0.4255 | 0.0158 | 0 |
| 104 | SLU 60 | -0.06 | 11.35 | 78.01 | -0.3971 | -0.0174 | 0 |
| 104 | SLU 61 | -0.02 | 12.27 | 80.13 | -0.4289 | 0.0164 | 0 |
| 104 | SLU 62 | -0.06 | 11.51 | 79.15 | -0.4024 | -0.0179 | 0 |
| 104 | SLU 63 | -0.02 | 12.42 | 81.28 | -0.4343 | 0.0159 | 0 |
| 104 | SLU 64 | -0.06 | 11 | 75.91 | -0.384 | -0.0175 | 0 |
| 104 | SLU 65 | 0.01 | 12.53 | 79.44 | -0.437 | 0.0388 | 0 |
| 104 | SLU 66 | -0.06 | 11.27 | 77.68 | -0.3933 | -0.0182 | 0 |
| 104 | SLU 67 | -0.02 | 12.19 | 79.8 | -0.4251 | 0.0156 | 0 |
| 104 | SLU 68 | 0.01 | 12.68 | 80.59 | -0.4423 | 0.0383 | 0 |
| 104 | SLU 69 | -0.07 | 11.43 | 78.82 | -0.3986 | -0.0187 | 0 |
| 104 | SLU 70 | -0.02 | 12.34 | 80.94 | -0.4304 | 0.0151 | 0 |
| 104 | SLU 71 | -0.06 | 11.32 | 78.2 | -0.3946 | -0.0185 | 0 |
| 104 | SLU 72 | -0.02 | 12.23 | 80.32 | -0.4264 | 0.0153 | 0 |
| 104 | SLU 73 | 0.01 | 13.46 | 85.65 | -0.4699 | 0.0378 | 0 |
| 104 | SLU 74 | -0.07 | 12.2 | 83.89 | -0.4262 | -0.0192 | 0 |
| 104 | SLU 75 | -0.02 | 13.12 | 86.01 | -0.458 | 0.0146 | 0 |
| 104 | SLU 76 | 0.01 | 13.61 | 86.8 | -0.4753 | 0.0373 | 0 |
| 104 | SLU 77 | -0.07 | 12.36 | 85.03 | -0.4315 | -0.0197 | 0 |
| 104 | SLU 78 | -0.02 | 13.27 | 87.16 | -0.4633 | 0.0141 | 0 |
| 104 | SLU 79 | -0.07 | 12.25 | 84.41 | -0.4275 | -0.0195 | 0 |
| 104 | SLU 80 | -0.02 | 13.16 | 86.53 | -0.4594 | 0.0143 | 0 |
| 104 | SLU 81 | -0.07 | 12.33 | 84.78 | -0.431 | -0.019 | 0 |
| 104 | SLU 82 | -0.02 | 13.24 | 86.9 | -0.4628 | 0.0148 | 0 |
| 104 | SLU 83 | -0.07 | 12.49 | 85.92 | -0.4363 | -0.0195 | 0 |
| 104 | SLU 84 | -0.02 | 13.4 | 88.05 | -0.4681 | 0.0143 | 0 |
| 104 | SLE RA 1 | -0.05 | 8.25 | 56.9 | -0.2879 | -0.0131 | 0 |
| 104 | SLE RA 2 | 0 | 9.26 | 59.26 | -0.3233 | 0.0244 | 0 |
| 104 | SLE RA 3 | -0.05 | 8.43 | 58.08 | -0.2941 | -0.0136 | 0 |
| 104 | SLE RA 4 | -0.02 | 9.04 | 59.5 | -0.3153 | 0.009 | 0 |
| 104 | SLE RA 5 | 0 | 9.37 | 60.02 | -0.3268 | 0.0241 | 0 |
| 104 | SLE RA 6 | -0.05 | 8.53 | 58.85 | -0.2977 | -0.0139 | 0 |
| 104 | SLE RA 7 | -0.02 | 9.14 | 60.26 | -0.3189 | 0.0086 | 0 |
| 104 | SLE RA 8 | -0.05 | 8.46 | 58.43 | -0.295 | -0.0138 | 0 |
| 104 | SLE RA 9 | -0.02 | 9.07 | 59.84 | -0.3162 | 0.0088 | 0 |
| 104 | SLE RA 10 | 0 | 9.88 | 63.4 | -0.3452 | 0.0237 | 0 |
| 104 | SLE RA 11 | -0.05 | 9.05 | 62.22 | -0.3161 | -0.0143 | 0 |
| 104 | SLE RA 12 | -0.02 | 9.66 | 63.64 | -0.3373 | 0.0083 | 0 |
| 104 | SLE RA 13 | 0 | 9.99 | 64.16 | -0.3488 | 0.0234 | 0 |
| 104 | SLE RA 14 | -0.05 | 9.15 | 62.99 | -0.3196 | -0.0146 | 0 |
| 104 | SLE RA 15 | -0.02 | 9.76 | 64.4 | -0.3408 | 0.0079 | 0 |
| 104 | SLE RA 16 | -0.05 | 9.08 | 62.57 | -0.3169 | -0.0145 | 0 |
| 104 | SLE RA 17 | -0.02 | 9.69 | 63.98 | -0.3382 | 0.0081 | 0 |
| 104 | SLE RA 18 | -0.05 | 9.13 | 62.82 | -0.3193 | -0.0141 | 0 |
| 104 | SLE RA 19 | -0.02 | 9.74 | 64.23 | -0.3405 | 0.0084 | 0 |
| 104 | SLE RA 20 | -0.05 | 9.24 | 63.58 | -0.3228 | -0.0144 | 0 |
| 104 | SLE RA 21 | -0.02 | 9.85 | 64.99 | -0.344 | 0.0081 | 0 |
| 104 | SLE FR 1 | -0.05 | 8.25 | 56.9 | -0.2879 | -0.0131 | 0 |
| 104 | SLE FR 2 | -0.04 | 8.45 | 57.37 | -0.295 | -0.0056 | 0 |
| 104 | SLE FR 3 | -0.05 | 8.29 | 57.21 | -0.2893 | -0.0133 | 0 |
| 104 | SLE FR 4 | -0.04 | 8.72 | 59.15 | -0.3044 | -0.0059 | 0 |
| 104 | SLE FR 5 | -0.05 | 8.56 | 58.98 | -0.2987 | -0.0136 | 0 |
| 104 | SLE FR 6 | -0.05 | 8.69 | 59.86 | -0.3036 | -0.0136 | 0 |
| 104 | SLE QP 1 | -0.05 | 8.25 | 56.9 | -0.2879 | -0.0131 | 0 |
| 104 | SLE QP 2 | -0.05 | 8.51 | 58.68 | -0.2973 | -0.0134 | 0 |
| 104 | SLD 1 | 0.16 | 8.37 | 44.92 | -0.3113 | 0.1588 | -0.0002 |
| 104 | SLD 2 | 0.16 | 8.37 | 44.92 | -0.3113 | 0.1588 | -0.0002 |
| 104 | SLD 3 | 0.03 | 4.15 | 37.12 | -0.1298 | 0.0799 | -0.0003 |

| Nodo | Cont. | Reazione a traslazione | | | Reazione a rotazione | | |
|---|---|---|---|---|---|---|---|
| Ind. | N.br. | x | y | z | x | y | z |
| 104 | SLD 4 | 0.03 | 4.15 | 37.12 | -0.1298 | 0.0799 | -0.0003 |
| 104 | SLD 5 | 0.2 | 14.88 | 66.38 | -0.5768 | 0.1579 | 0.0001 |
| 104 | SLD 6 | 0.2 | 14.88 | 66.38 | -0.5768 | 0.1579 | 0.0001 |
| 104 | SLD 7 | -0.21 | 0.8 | 40.37 | 0.0282 | -0.105 | -0.0002 |
| 104 | SLD 8 | -0.21 | 0.8 | 40.37 | 0.0282 | -0.105 | -0.0002 |
| 104 | SLD 9 | 0.12 | 16.23 | 76.98 | -0.6228 | 0.0782 | 0.0002 |
| 104 | SLD 10 | 0.12 | 16.23 | 76.98 | -0.6228 | 0.0782 | 0.0002 |
| 104 | SLD 11 | -0.3 | 2.15 | 50.97 | -0.0178 | -0.1847 | -0.0001 |
| 104 | SLD 12 | -0.3 | 2.15 | 50.97 | -0.0178 | -0.1847 | -0.0001 |
| 104 | SLD 13 | -0.13 | 12.88 | 80.23 | -0.4648 | -0.1068 | 0.0002 |
| 104 | SLD 14 | -0.13 | 12.88 | 80.23 | -0.4648 | -0.1068 | 0.0002 |
| 104 | SLD 15 | -0.25 | 8.65 | 72.43 | -0.2833 | -0.1856 | 0.0001 |
| 104 | SLD 16 | -0.25 | 8.65 | 72.43 | -0.2833 | -0.1856 | 0.0001 |
| 104 | SLV 1 | 0.45 | 8.18 | 26.52 | -0.3291 | 0.4009 | -0.0004 |
| 104 | SLV 2 | 0.45 | 8.18 | 26.52 | -0.3291 | 0.4009 | -0.0004 |
| 104 | SLV 3 | 0.13 | -1.69 | 8.23 | 0.094 | 0.1997 | -0.0006 |
| 104 | SLV 4 | 0.13 | -1.69 | 8.23 | 0.094 | 0.1997 | -0.0006 |
| 104 | SLV 5 | 0.58 | 23.37 | 76.77 | -0.9486 | 0.4159 | 0.0002 |
| 104 | SLV 6 | 0.58 | 23.37 | 76.77 | -0.9486 | 0.4159 | 0.0002 |
| 104 | SLV 7 | -0.48 | -9.51 | 15.8 | 0.4619 | -0.2546 | -0.0005 |
| 104 | SLV 8 | -0.48 | -9.51 | 15.8 | 0.4619 | -0.2546 | -0.0005 |
| 104 | SLV 9 | 0.38 | 26.53 | 101.55 | -1.0565 | 0.2277 | 0.0005 |
| 104 | SLV 10 | 0.38 | 26.53 | 101.55 | -1.0565 | 0.2277 | 0.0005 |
| 104 | SLV 11 | -0.68 | -6.35 | 40.58 | 0.354 | -0.4428 | -0.0003 |
| 104 | SLV 12 | -0.68 | -6.35 | 40.58 | 0.354 | -0.4428 | -0.0003 |
| 104 | SLV 13 | -0.23 | 18.71 | 109.12 | -0.6886 | -0.2266 | 0.0005 |
| 104 | SLV 14 | -0.23 | 18.71 | 109.12 | -0.6886 | -0.2266 | 0.0005 |
| 104 | SLV 15 | -0.54 | 8.85 | 90.83 | -0.2655 | -0.4277 | 0.0003 |
| 104 | SLV 16 | -0.54 | 8.85 | 90.83 | -0.2655 | -0.4277 | 0.0003 |
| 105 | SLU 1 | -0.06 | 4.21 | 58.05 | 0.0099 | -0.0799 | 0 |
| 105 | SLU 2 | -0.15 | 5.67 | 61.74 | -0.0249 | -0.1451 | -0.0001 |
| 105 | SLU 3 | -0.06 | 4.42 | 60.81 | 0.0112 | -0.0831 | 0 |
| 105 | SLU 4 | -0.12 | 5.29 | 63.02 | -0.0096 | -0.1222 | -0.0001 |
| 105 | SLU 5 | -0.15 | 5.84 | 64.06 | -0.0237 | -0.1475 | -0.0001 |
| 105 | SLU 6 | -0.07 | 4.59 | 63.13 | 0.0123 | -0.0855 | 0 |
| 105 | SLU 7 | -0.12 | 5.46 | 65.35 | -0.0085 | -0.1246 | -0.0001 |
| 105 | SLU 8 | -0.07 | 4.55 | 62.7 | 0.0121 | -0.0847 | 0 |
| 105 | SLU 9 | -0.12 | 5.43 | 64.92 | -0.0087 | -0.1238 | -0.0001 |
| 105 | SLU 10 | -0.16 | 6.02 | 68.35 | -0.0168 | -0.1559 | -0.0002 |
| 105 | SLU 11 | -0.07 | 4.77 | 67.42 | 0.0193 | -0.094 | 0 |
| 105 | SLU 12 | -0.13 | 5.64 | 69.63 | -0.0016 | -0.1331 | -0.0001 |
| 105 | SLU 13 | -0.16 | 6.19 | 70.68 | -0.0157 | -0.1583 | -0.0002 |
| 105 | SLU 14 | -0.08 | 4.94 | 69.75 | 0.0204 | -0.0963 | 0 |
| 105 | SLU 15 | -0.13 | 5.82 | 71.96 | -0.0004 | -0.1354 | -0.0001 |
| 105 | SLU 16 | -0.07 | 4.9 | 69.32 | 0.0202 | -0.0955 | 0 |
| 105 | SLU 17 | -0.13 | 5.78 | 71.53 | -0.0006 | -0.1346 | -0.0001 |
| 105 | SLU 18 | -0.08 | 4.71 | 67.5 | 0.0214 | -0.0954 | 0 |
| 105 | SLU 19 | -0.13 | 5.59 | 69.71 | 0.0005 | -0.1345 | -0.0001 |
| 105 | SLU 20 | -0.08 | 4.88 | 69.83 | 0.0225 | -0.0978 | 0 |
| 105 | SLU 21 | -0.13 | 5.76 | 72.04 | 0.0017 | -0.1369 | -0.0001 |
| 105 | SLU 22 | -0.07 | 4.61 | 65.44 | 0.0189 | -0.091 | 0 |
| 105 | SLU 23 | -0.16 | 6.07 | 69.12 | -0.0158 | -0.1562 | -0.0001 |
| 105 | SLU 24 | -0.07 | 4.82 | 68.19 | 0.0203 | -0.0942 | 0 |
| 105 | SLU 25 | -0.13 | 5.7 | 70.4 | -0.0006 | -0.1333 | -0.0001 |
| 105 | SLU 26 | -0.16 | 6.25 | 71.45 | -0.0147 | -0.1586 | -0.0001 |
| 105 | SLU 27 | -0.08 | 5 | 70.52 | 0.0214 | -0.0966 | 0 |
| 105 | SLU 28 | -0.13 | 5.87 | 72.73 | 0.0006 | -0.1357 | -0.0001 |
| 105 | SLU 29 | -0.07 | 4.96 | 70.09 | 0.0212 | -0.0958 | 0 |
| 105 | SLU 30 | -0.13 | 5.83 | 72.3 | 0.0004 | -0.1349 | -0.0001 |
| 105 | SLU 31 | -0.17 | 6.43 | 75.74 | -0.0077 | -0.167 | -0.0002 |
| 105 | SLU 32 | -0.08 | 5.18 | 74.81 | 0.0283 | -0.1051 | 0 |
| 105 | SLU 33 | -0.14 | 6.05 | 77.02 | 0.0075 | -0.1442 | -0.0001 |
| 105 | SLU 34 | -0.17 | 6.6 | 78.07 | -0.0066 | -0.1694 | -0.0002 |
| 105 | SLU 35 | -0.08 | 5.35 | 77.14 | 0.0295 | -0.1074 | 0 |
| 105 | SLU 36 | -0.14 | 6.22 | 79.35 | 0.0086 | -0.1465 | -0.0001 |
| 105 | SLU 37 | -0.08 | 5.31 | 76.71 | 0.0293 | -0.1066 | 0 |
| 105 | SLU 38 | -0.14 | 6.19 | 78.92 | 0.0084 | -0.1457 | -0.0001 |
| 105 | SLU 39 | -0.08 | 5.12 | 74.89 | 0.0304 | -0.1065 | 0 |
| 105 | SLU 40 | -0.14 | 5.99 | 77.1 | 0.0096 | -0.1456 | -0.0001 |
| 105 | SLU 41 | -0.09 | 5.29 | 77.22 | 0.0316 | -0.1089 | 0 |
| 105 | SLU 42 | -0.14 | 6.17 | 79.43 | 0.0107 | -0.148 | -0.0001 |
| 105 | SLU 43 | -0.08 | 5.33 | 72.93 | 0.0097 | -0.1001 | 0 |
| 105 | SLU 44 | -0.16 | 6.79 | 76.62 | -0.025 | -0.1653 | -0.0001 |
| 105 | SLU 45 | -0.08 | 5.54 | 75.69 | 0.0111 | -0.1033 | 0 |
| 105 | SLU 46 | -0.13 | 6.41 | 77.9 | -0.0098 | -0.1424 | -0.0001 |
| 105 | SLU 47 | -0.17 | 6.96 | 78.95 | -0.0239 | -0.1676 | -0.0001 |
| 105 | SLU 48 | -0.08 | 5.71 | 78.02 | 0.0122 | -0.1057 | 0 |
| 105 | SLU 49 | -0.13 | 6.59 | 80.23 | -0.0086 | -0.1448 | -0.0001 |
| 105 | SLU 50 | -0.08 | 5.67 | 77.59 | 0.012 | -0.1048 | 0 |
| 105 | SLU 51 | -0.13 | 6.55 | 79.8 | -0.0088 | -0.144 | -0.0001 |
| 105 | SLU 52 | -0.17 | 7.14 | 83.23 | -0.0169 | -0.1761 | -0.0001 |
| 105 | SLU 53 | -0.09 | 5.89 | 82.31 | 0.0191 | -0.1141 | 0 |
| 105 | SLU 54 | -0.14 | 6.77 | 84.52 | -0.0017 | -0.1532 | -0.0001 |
| 105 | SLU 55 | -0.18 | 7.31 | 85.56 | -0.0158 | -0.1785 | -0.0001 |
| 105 | SLU 56 | -0.09 | 6.06 | 84.63 | 0.0203 | -0.1165 | 0 |
| 105 | SLU 57 | -0.14 | 6.94 | 86.84 | -0.0006 | -0.1556 | -0.0001 |
| 105 | SLU 58 | -0.09 | 6.02 | 84.2 | 0.02 | -0.1157 | 0 |
| 105 | SLU 59 | -0.14 | 6.9 | 86.42 | -0.0008 | -0.1548 | -0.0001 |

| Nodo | Cont. | Reazione a traslazione | | | Reazione a rotazione | | |
|---|---|---|---|---|---|---|---|
| Ind. | N.br. | x | y | z | x | y | z |
| 105 | SLU 60 | -0.09 | 5.83 | 82.38 | 0.0212 | -0.1156 | 0 |
| 105 | SLU 61 | -0.14 | 6.71 | 84.6 | 0.0004 | -0.1547 | -0.0001 |
| 105 | SLU 62 | -0.09 | 6 | 84.71 | 0.0224 | -0.118 | 0 |
| 105 | SLU 63 | -0.14 | 6.88 | 86.92 | 0.0015 | -0.1571 | -0.0001 |
| 105 | SLU 64 | -0.09 | 5.73 | 80.32 | 0.0188 | -0.1112 | 0 |
| 105 | SLU 65 | -0.17 | 7.2 | 84 | -0.0159 | -0.1764 | -0.0001 |
| 105 | SLU 66 | -0.09 | 5.94 | 83.07 | 0.0201 | -0.1144 | 0 |
| 105 | SLU 67 | -0.14 | 6.82 | 85.29 | -0.0007 | -0.1535 | -0.0001 |
| 105 | SLU 68 | -0.18 | 7.37 | 86.33 | -0.0148 | -0.1787 | -0.0001 |
| 105 | SLU 69 | -0.09 | 6.12 | 85.4 | 0.0213 | -0.1168 | 0 |
| 105 | SLU 70 | -0.14 | 6.99 | 87.61 | 0.0004 | -0.1559 | -0.0001 |
| 105 | SLU 71 | -0.09 | 6.08 | 84.97 | 0.021 | -0.116 | 0 |
| 105 | SLU 72 | -0.14 | 6.96 | 87.18 | 0.0002 | -0.1551 | -0.0001 |
| 105 | SLU 73 | -0.18 | 7.55 | 90.62 | -0.0079 | -0.1872 | -0.0001 |
| 105 | SLU 74 | -0.1 | 6.3 | 89.69 | 0.0282 | -0.1252 | 0 |
| 105 | SLU 75 | -0.15 | 7.17 | 91.9 | 0.0073 | -0.1643 | -0.0001 |
| 105 | SLU 76 | -0.18 | 7.72 | 92.95 | -0.0067 | -0.1896 | -0.0001 |
| 105 | SLU 77 | -0.1 | 6.47 | 92.02 | 0.0293 | -0.1276 | 0 |
| 105 | SLU 78 | -0.15 | 7.35 | 94.23 | 0.0085 | -0.1667 | -0.0001 |
| 105 | SLU 79 | -0.1 | 6.43 | 91.59 | 0.0291 | -0.1268 | 0 |
| 105 | SLU 80 | -0.15 | 7.31 | 93.8 | 0.0083 | -0.1659 | -0.0001 |
| 105 | SLU 81 | -0.1 | 6.24 | 89.77 | 0.0303 | -0.1267 | 0 |
| 105 | SLU 82 | -0.15 | 7.11 | 91.98 | 0.0095 | -0.1658 | -0.0001 |
| 105 | SLU 83 | -0.1 | 6.41 | 92.1 | 0.0314 | -0.1291 | 0 |
| 105 | SLU 84 | -0.15 | 7.29 | 94.31 | 0.0106 | -0.1682 | -0.0001 |
| 105 | SLE RA 1 | -0.06 | 4.32 | 60.16 | 0.0124 | -0.0831 | 0 |
| 105 | SLE RA 2 | -0.12 | 5.3 | 62.62 | -0.0107 | -0.1265 | -0.0001 |
| 105 | SLE RA 3 | -0.07 | 4.46 | 62 | 0.0133 | -0.0852 | 0 |
| 105 | SLE RA 4 | -0.1 | 5.05 | 63.47 | -0.0005 | -0.1113 | 0 |
| 105 | SLE RA 5 | -0.12 | 5.41 | 64.17 | -0.0099 | -0.1281 | -0.0001 |
| 105 | SLE RA 6 | -0.07 | 4.58 | 63.55 | 0.0141 | -0.0868 | 0 |
| 105 | SLE RA 7 | -0.1 | 5.16 | 65.02 | 0.0002 | -0.1129 | 0 |
| 105 | SLE RA 8 | -0.07 | 4.55 | 63.26 | 0.014 | -0.0863 | 0 |
| 105 | SLE RA 9 | -0.1 | 5.14 | 64.74 | 0.0001 | -0.1123 | 0 |
| 105 | SLE RA 10 | -0.13 | 5.53 | 67.03 | -0.0053 | -0.1338 | -0.0001 |
| 105 | SLE RA 11 | -0.07 | 4.7 | 66.41 | 0.0187 | -0.0925 | 0 |
| 105 | SLE RA 12 | -0.11 | 5.28 | 67.88 | 0.0048 | -0.1185 | 0 |
| 105 | SLE RA 13 | -0.13 | 5.65 | 68.58 | -0.0046 | -0.1354 | -0.0001 |
| 105 | SLE RA 14 | -0.07 | 4.81 | 67.96 | 0.0195 | -0.094 | 0 |
| 105 | SLE RA 15 | -0.11 | 5.4 | 69.44 | 0.0056 | -0.1201 | 0 |
| 105 | SLE RA 16 | -0.07 | 4.79 | 67.67 | 0.0193 | -0.0935 | 0 |
| 105 | SLE RA 17 | -0.11 | 5.37 | 69.15 | 0.0054 | -0.1196 | 0 |
| 105 | SLE RA 18 | -0.07 | 4.66 | 66.46 | 0.0201 | -0.0934 | 0 |
| 105 | SLE RA 19 | -0.11 | 5.24 | 67.94 | 0.0062 | -0.1195 | -0.0001 |
| 105 | SLE RA 20 | -0.07 | 4.77 | 68.01 | 0.0209 | -0.095 | 0 |
| 105 | SLE RA 21 | -0.11 | 5.36 | 69.49 | 0.007 | -0.1211 | -0.0001 |
| 105 | SLE FR 1 | -0.06 | 4.32 | 60.16 | 0.0124 | -0.0831 | 0 |
| 105 | SLE FR 2 | -0.08 | 4.52 | 60.65 | 0.0078 | -0.0918 | 0 |
| 105 | SLE FR 3 | -0.07 | 4.37 | 60.78 | 0.0128 | -0.0837 | 0 |
| 105 | SLE FR 4 | -0.08 | 4.62 | 62.54 | 0.0101 | -0.0949 | 0 |
| 105 | SLE FR 5 | -0.07 | 4.47 | 62.67 | 0.0151 | -0.0868 | 0 |
| 105 | SLE FR 6 | -0.07 | 4.49 | 63.31 | 0.0163 | -0.0883 | 0 |
| 105 | SLE QP 1 | -0.06 | 4.32 | 60.16 | 0.0124 | -0.0831 | 0 |
| 105 | SLE QP 2 | -0.07 | 4.42 | 62.05 | 0.0148 | -0.0862 | 0 |
| 105 | SLD 1 | -0.3 | 5.27 | 83.27 | -0.0155 | 0.0138 | -0.0003 |
| 105 | SLD 2 | -0.3 | 5.27 | 83.27 | -0.0155 | 0.0138 | -0.0003 |
| 105 | SLD 3 | -0.18 | 0.26 | 75.97 | 0.1995 | 0.091 | 0 |
| 105 | SLD 4 | -0.18 | 0.26 | 75.97 | 0.1995 | 0.091 | 0 |
| 105 | SLD 5 | -0.32 | 12.27 | 79.49 | -0.3204 | -0.1733 | -0.0005 |
| 105 | SLD 6 | -0.32 | 12.27 | 79.49 | -0.3204 | -0.1733 | -0.0005 |
| 105 | SLD 7 | 0.09 | -4.42 | 55.15 | 0.3963 | 0.0841 | 0.0005 |
| 105 | SLD 8 | 0.09 | -4.42 | 55.15 | 0.3963 | 0.0841 | 0.0005 |
| 105 | SLD 9 | -0.22 | 13.27 | 68.95 | -0.3668 | -0.2565 | -0.0004 |
| 105 | SLD 10 | -0.22 | 13.27 | 68.95 | -0.3668 | -0.2565 | -0.0004 |
| 105 | SLD 11 | 0.19 | -3.43 | 44.61 | 0.3499 | 0.0009 | 0.0006 |
| 105 | SLD 12 | 0.19 | -3.43 | 44.61 | 0.3499 | 0.0009 | 0.0006 |
| 105 | SLD 13 | 0.04 | 8.58 | 48.13 | -0.17 | -0.2634 | 0 |
| 105 | SLD 14 | 0.04 | 8.58 | 48.13 | -0.17 | -0.2634 | 0 |
| 105 | SLD 15 | 0.17 | 3.57 | 40.83 | 0.045 | -0.1861 | 0.0003 |
| 105 | SLD 16 | 0.17 | 3.57 | 40.83 | 0.045 | -0.1861 | 0.0003 |
| 105 | SLV 1 | -0.62 | 6.37 | 111.76 | -0.0506 | 0.1391 | -0.0007 |
| 105 | SLV 2 | -0.62 | 6.37 | 111.76 | -0.0506 | 0.1391 | -0.0007 |
| 105 | SLV 3 | -0.3 | -5.31 | 94.59 | 0.4495 | 0.3363 | 0 |
| 105 | SLV 4 | -0.3 | -5.31 | 94.59 | 0.4495 | 0.3363 | 0 |
| 105 | SLV 5 | -0.71 | 22.72 | 103 | -0.7633 | -0.3177 | -0.0013 |
| 105 | SLV 6 | -0.71 | 22.72 | 103 | -0.7633 | -0.3177 | -0.0013 |
| 105 | SLV 7 | 0.34 | -16.21 | 45.77 | 0.9036 | 0.3397 | 0.0012 |
| 105 | SLV 8 | 0.34 | -16.21 | 45.77 | 0.9036 | 0.3397 | 0.0012 |
| 105 | SLV 9 | -0.48 | 25.06 | 78.33 | -0.8741 | -0.512 | -0.0011 |
| 105 | SLV 10 | -0.48 | 25.06 | 78.33 | -0.8741 | -0.512 | -0.0011 |
| 105 | SLV 11 | 0.58 | -13.88 | 21.1 | 0.7928 | 0.1453 | 0.0014 |
| 105 | SLV 12 | 0.58 | -13.88 | 21.1 | 0.7928 | 0.1453 | 0.0014 |
| 105 | SLV 13 | 0.17 | 14.15 | 29.51 | -0.42 | -0.5086 | 0 |
| 105 | SLV 14 | 0.17 | 14.15 | 29.51 | -0.42 | -0.5086 | 0 |
| 105 | SLV 15 | 0.48 | 2.47 | 12.34 | 0.0801 | -0.3114 | 0.0007 |
| 105 | SLV 16 | 0.48 | 2.47 | 12.34 | 0.0801 | -0.3114 | 0.0007 |
| 106 | SLU 1 | 0.03 | -0.28 | 42.66 | 0.0035 | 0.0244 | 0.0001 |
| 106 | SLU 2 | 0.03 | -0.74 | 42.65 | 0.0242 | 0.0252 | 0.0002 |

| Nodo | Cont. | Reazione a traslazione | | | Reazione a rotazione | | |
|---|---|---|---|---|---|---|---|
| Ind. | N.br. | x | y | z | x | y | z |
| 106 | SLU 3 | 0.03 | 0.17 | 44.11 | -0.0177 | 0.0254 | 0.0002 |
| 106 | SLU 4 | 0.03 | -0.1 | 44.11 | -0.0053 | 0.0259 | 0.0002 |
| 106 | SLU 5 | 0.03 | -0.24 | 43.83 | 0.0008 | 0.026 | 0.0002 |
| 106 | SLU 6 | 0.03 | 0.67 | 45.29 | -0.0412 | 0.0262 | 0.0002 |
| 106 | SLU 7 | 0.03 | 0.4 | 45.28 | -0.0287 | 0.0267 | 0.0002 |
| 106 | SLU 8 | 0.03 | 0.71 | 45.01 | -0.0434 | 0.026 | 0.0002 |
| 106 | SLU 9 | 0.03 | 0.44 | 45 | -0.031 | 0.0265 | 0.0002 |
| 106 | SLU 10 | 0.02 | -0.66 | 50.47 | 0.0204 | 0.0235 | 0.0001 |
| 106 | SLU 11 | 0.02 | 0.25 | 51.93 | -0.0216 | 0.0236 | 0.0001 |
| 106 | SLU 12 | 0.02 | -0.02 | 51.92 | -0.0091 | 0.0241 | 0.0001 |
| 106 | SLU 13 | 0.02 | -0.16 | 51.64 | -0.0031 | 0.0242 | 0.0001 |
| 106 | SLU 14 | 0.02 | 0.75 | 53.1 | -0.045 | 0.0244 | 0.0001 |
| 106 | SLU 15 | 0.02 | 0.48 | 53.1 | -0.0326 | 0.0249 | 0.0001 |
| 106 | SLU 16 | 0.02 | 0.79 | 52.83 | -0.0473 | 0.0242 | 0.0001 |
| 106 | SLU 17 | 0.02 | 0.52 | 52.82 | -0.0348 | 0.0247 | 0.0001 |
| 106 | SLU 18 | 0.02 | -0.16 | 53.83 | -0.002 | 0.0219 | 0.0001 |
| 106 | SLU 19 | 0.02 | -0.44 | 53.82 | 0.0104 | 0.0224 | 0.0001 |
| 106 | SLU 20 | 0.02 | 0.33 | 55 | -0.0255 | 0.0226 | 0.0001 |
| 106 | SLU 21 | 0.02 | 0.06 | 55 | -0.013 | 0.0232 | 0.0001 |
| 106 | SLU 22 | 0.03 | 0.04 | 47.69 | -0.011 | 0.0271 | 0.0002 |
| 106 | SLU 23 | 0.03 | -0.42 | 47.68 | 0.0098 | 0.0279 | 0.0002 |
| 106 | SLU 24 | 0.03 | 0.49 | 49.15 | -0.0322 | 0.0281 | 0.0002 |
| 106 | SLU 25 | 0.03 | 0.22 | 49.14 | -0.0197 | 0.0286 | 0.0002 |
| 106 | SLU 26 | 0.03 | 0.08 | 48.86 | -0.0137 | 0.0287 | 0.0002 |
| 106 | SLU 27 | 0.03 | 0.99 | 50.32 | -0.0556 | 0.0289 | 0.0002 |
| 106 | SLU 28 | 0.03 | 0.72 | 50.32 | -0.0432 | 0.0294 | 0.0002 |
| 106 | SLU 29 | 0.03 | 1.03 | 50.04 | -0.0579 | 0.0287 | 0.0002 |
| 106 | SLU 30 | 0.03 | 0.76 | 50.04 | -0.0455 | 0.0292 | 0.0002 |
| 106 | SLU 31 | 0.02 | -0.34 | 55.5 | 0.0059 | 0.0262 | 0.0001 |
| 106 | SLU 32 | 0.02 | 0.57 | 56.96 | -0.036 | 0.0263 | 0.0001 |
| 106 | SLU 33 | 0.02 | 0.3 | 56.96 | -0.0236 | 0.0268 | 0.0001 |
| 106 | SLU 34 | 0.02 | 0.16 | 56.68 | -0.0175 | 0.0269 | 0.0001 |
| 106 | SLU 35 | 0.03 | 1.07 | 58.14 | -0.0595 | 0.0271 | 0.0001 |
| 106 | SLU 36 | 0.03 | 0.8 | 58.13 | -0.0471 | 0.0276 | 0.0002 |
| 106 | SLU 37 | 0.02 | 1.11 | 57.86 | -0.0618 | 0.0269 | 0.0001 |
| 106 | SLU 38 | 0.03 | 0.84 | 57.86 | -0.0493 | 0.0274 | 0.0001 |
| 106 | SLU 39 | 0.02 | 0.15 | 58.86 | -0.0165 | 0.0246 | 0.0001 |
| 106 | SLU 40 | 0.02 | -0.12 | 58.86 | -0.004 | 0.0251 | 0.0001 |
| 106 | SLU 41 | 0.02 | 0.65 | 60.04 | -0.0399 | 0.0253 | 0.0001 |
| 106 | SLU 42 | 0.02 | 0.38 | 60.03 | -0.0275 | 0.0259 | 0.0001 |
| 106 | SLU 43 | 0.03 | -0.47 | 53.73 | 0.0095 | 0.0308 | 0.0002 |
| 106 | SLU 44 | 0.04 | -0.93 | 53.72 | 0.0302 | 0.0316 | 0.0002 |
| 106 | SLU 45 | 0.04 | -0.02 | 55.18 | -0.0117 | 0.0318 | 0.0002 |
| 106 | SLU 46 | 0.04 | -0.29 | 55.18 | 0.0007 | 0.0323 | 0.0002 |
| 106 | SLU 47 | 0.04 | -0.43 | 54.9 | 0.0068 | 0.0324 | 0.0002 |
| 106 | SLU 48 | 0.04 | 0.48 | 56.36 | -0.0352 | 0.0326 | 0.0002 |
| 106 | SLU 49 | 0.04 | 0.2 | 56.35 | -0.0227 | 0.0331 | 0.0002 |
| 106 | SLU 50 | 0.04 | 0.52 | 56.08 | -0.0374 | 0.0323 | 0.0002 |
| 106 | SLU 51 | 0.04 | 0.24 | 56.08 | -0.025 | 0.0328 | 0.0002 |
| 106 | SLU 52 | 0.03 | -0.85 | 61.54 | 0.0264 | 0.0299 | 0.0002 |
| 106 | SLU 53 | 0.03 | 0.06 | 63 | -0.0156 | 0.03 | 0.0002 |
| 106 | SLU 54 | 0.03 | -0.21 | 62.99 | -0.0031 | 0.0305 | 0.0002 |
| 106 | SLU 55 | 0.03 | -0.35 | 62.71 | 0.0029 | 0.0306 | 0.0002 |
| 106 | SLU 56 | 0.03 | 0.56 | 64.18 | -0.039 | 0.0308 | 0.0002 |
| 106 | SLU 57 | 0.03 | 0.28 | 64.17 | -0.0266 | 0.0313 | 0.0002 |
| 106 | SLU 58 | 0.03 | 0.6 | 63.9 | -0.0413 | 0.0306 | 0.0002 |
| 106 | SLU 59 | 0.03 | 0.33 | 63.89 | -0.0288 | 0.0311 | 0.0002 |
| 106 | SLU 60 | 0.02 | -0.36 | 64.9 | 0.004 | 0.0283 | 0.0001 |
| 106 | SLU 61 | 0.03 | -0.63 | 64.89 | 0.0164 | 0.0288 | 0.0002 |
| 106 | SLU 62 | 0.03 | 0.14 | 66.07 | -0.0195 | 0.029 | 0.0002 |
| 106 | SLU 63 | 0.03 | -0.14 | 66.07 | -0.007 | 0.0295 | 0.0002 |
| 106 | SLU 64 | 0.04 | -0.16 | 58.76 | -0.005 | 0.0335 | 0.0002 |
| 106 | SLU 65 | 0.04 | -0.61 | 58.76 | 0.0158 | 0.0343 | 0.0002 |
| 106 | SLU 66 | 0.04 | 0.3 | 60.22 | -0.0262 | 0.0345 | 0.0002 |
| 106 | SLU 67 | 0.04 | 0.02 | 60.21 | -0.0137 | 0.035 | 0.0002 |
| 106 | SLU 68 | 0.04 | -0.12 | 59.93 | -0.0077 | 0.0351 | 0.0002 |
| 106 | SLU 69 | 0.04 | 0.8 | 61.39 | -0.0496 | 0.0353 | 0.0002 |
| 106 | SLU 70 | 0.04 | 0.52 | 61.39 | -0.0372 | 0.0358 | 0.0002 |
| 106 | SLU 71 | 0.04 | 0.84 | 61.11 | -0.0519 | 0.035 | 0.0002 |
| 106 | SLU 72 | 0.04 | 0.56 | 61.11 | -0.0394 | 0.0355 | 0.0002 |
| 106 | SLU 73 | 0.03 | -0.53 | 66.57 | 0.0119 | 0.0326 | 0.0002 |
| 106 | SLU 74 | 0.03 | 0.38 | 68.03 | -0.03 | 0.0327 | 0.0002 |
| 106 | SLU 75 | 0.03 | 0.11 | 68.03 | -0.0176 | 0.0332 | 0.0002 |
| 106 | SLU 76 | 0.03 | -0.03 | 67.75 | -0.0115 | 0.0333 | 0.0002 |
| 106 | SLU 77 | 0.03 | 0.88 | 69.21 | -0.0535 | 0.0335 | 0.0002 |
| 106 | SLU 78 | 0.03 | 0.6 | 69.2 | -0.041 | 0.034 | 0.0002 |
| 106 | SLU 79 | 0.03 | 0.92 | 68.93 | -0.0557 | 0.0333 | 0.0002 |
| 106 | SLU 80 | 0.03 | 0.65 | 68.93 | -0.0433 | 0.0338 | 0.0002 |
| 106 | SLU 81 | 0.03 | -0.04 | 69.93 | -0.0105 | 0.031 | 0.0002 |
| 106 | SLU 82 | 0.03 | -0.31 | 69.93 | 0.002 | 0.0315 | 0.0002 |
| 106 | SLU 83 | 0.03 | 0.46 | 71.11 | -0.0339 | 0.0317 | 0.0002 |
| 106 | SLU 84 | 0.03 | 0.18 | 71.1 | -0.0215 | 0.0322 | 0.0002 |
| 106 | SLE RA 1 | 0.03 | -0.19 | 44.1 | -0.0006 | 0.0252 | 0.0002 |
| 106 | SLE RA 2 | 0.03 | -0.49 | 44.09 | 0.0132 | 0.0257 | 0.0002 |
| 106 | SLE RA 3 | 0.03 | 0.11 | 45.07 | -0.0148 | 0.0258 | 0.0002 |
| 106 | SLE RA 4 | 0.03 | -0.07 | 45.06 | -0.0065 | 0.0262 | 0.0002 |
| 106 | SLE RA 5 | 0.03 | -0.16 | 44.87 | -0.0025 | 0.0262 | 0.0002 |
| 106 | SLE RA 6 | 0.03 | 0.44 | 45.85 | -0.0304 | 0.0264 | 0.0002 |

| Nodo | Cont. | Reazione a traslazione | | | Reazione a rotazione | | |
|---|---|---|---|---|---|---|---|
| Ind. | N.br. | x | y | z | x | y | z |
| 106 | SLE RA 7 | 0.03 | 0.26 | 45.85 | -0.0221 | 0.0267 | 0.0002 |
| 106 | SLE RA 8 | 0.03 | 0.47 | 45.66 | -0.0319 | 0.0262 | 0.0002 |
| 106 | SLE RA 9 | 0.03 | 0.29 | 45.66 | -0.0236 | 0.0265 | 0.0002 |
| 106 | SLE RA 10 | 0.02 | -0.44 | 49.3 | 0.0106 | 0.0245 | 0.0001 |
| 106 | SLE RA 11 | 0.02 | 0.17 | 50.28 | -0.0173 | 0.0247 | 0.0001 |
| 106 | SLE RA 12 | 0.02 | -0.02 | 50.27 | -0.0091 | 0.025 | 0.0001 |
| 106 | SLE RA 13 | 0.02 | -0.11 | 50.09 | -0.005 | 0.0251 | 0.0001 |
| 106 | SLE RA 14 | 0.02 | 0.5 | 51.06 | -0.033 | 0.0252 | 0.0001 |
| 106 | SLE RA 15 | 0.03 | 0.32 | 51.06 | -0.0247 | 0.0255 | 0.0001 |
| 106 | SLE RA 16 | 0.02 | 0.53 | 50.88 | -0.0345 | 0.025 | 0.0001 |
| 106 | SLE RA 17 | 0.03 | 0.34 | 50.87 | -0.0262 | 0.0254 | 0.0001 |
| 106 | SLE RA 18 | 0.02 | -0.11 | 51.54 | -0.0043 | 0.0235 | 0.0001 |
| 106 | SLE RA 19 | 0.02 | -0.29 | 51.54 | 0.004 | 0.0238 | 0.0001 |
| 106 | SLE RA 20 | 0.02 | 0.22 | 52.33 | -0.02 | 0.024 | 0.0001 |
| 106 | SLE RA 21 | 0.02 | 0.04 | 52.32 | -0.0117 | 0.0243 | 0.0001 |
| 106 | SLE FR 1 | 0.03 | -0.19 | 44.1 | -0.0006 | 0.0252 | 0.0002 |
| 106 | SLE FR 2 | 0.03 | -0.25 | 44.1 | 0.0021 | 0.0253 | 0.0002 |
| 106 | SLE FR 3 | 0.03 | -0.06 | 44.41 | -0.0069 | 0.0254 | 0.0002 |
| 106 | SLE FR 4 | 0.03 | -0.23 | 46.33 | 0.001 | 0.0248 | 0.0001 |
| 106 | SLE FR 5 | 0.03 | -0.03 | 46.64 | -0.008 | 0.0249 | 0.0001 |
| 106 | SLE FR 6 | 0.02 | -0.15 | 47.82 | -0.0025 | 0.0243 | 0.0001 |
| 106 | SLE QP 1 | 0.03 | -0.19 | 44.1 | -0.0006 | 0.0252 | 0.0002 |
| 106 | SLE QP 2 | 0.03 | -0.17 | 46.33 | -0.0017 | 0.0247 | 0.0001 |
| 106 | SLD 1 | 0.2 | 0.74 | 51.35 | -0.0462 | 0.1688 | 0.0009 |
| 106 | SLD 2 | 0.2 | 0.74 | 51.35 | -0.0462 | 0.1688 | 0.0009 |
| 106 | SLD 3 | 0.17 | -2.92 | 49.95 | 0.1235 | 0.151 | 0.0008 |
| 106 | SLD 4 | 0.17 | -2.92 | 49.95 | 0.1235 | 0.151 | 0.0008 |
| 106 | SLD 5 | 0.12 | 5.65 | 49.96 | -0.2724 | 0.095 | 0.0006 |
| 106 | SLD 6 | 0.12 | 5.65 | 49.96 | -0.2724 | 0.095 | 0.0006 |
| 106 | SLD 7 | 0.03 | -6.54 | 45.29 | 0.2932 | 0.0354 | 0.0001 |
| 106 | SLD 8 | 0.03 | -6.54 | 45.29 | 0.2932 | 0.0354 | 0.0001 |
| 106 | SLD 9 | 0.02 | 6.21 | 47.37 | -0.2967 | 0.0139 | 0.0002 |
| 106 | SLD 10 | 0.02 | 6.21 | 47.37 | -0.2967 | 0.0139 | 0.0002 |
| 106 | SLD 11 | -0.07 | -5.98 | 42.7 | 0.2689 | -0.0457 | -0.0003 |
| 106 | SLD 12 | -0.07 | -5.98 | 42.7 | 0.2689 | -0.0457 | -0.0003 |
| 106 | SLD 13 | -0.12 | 2.59 | 42.71 | -0.127 | -0.1016 | -0.0005 |
| 106 | SLD 14 | -0.12 | 2.59 | 42.71 | -0.127 | -0.1016 | -0.0005 |
| 106 | SLD 15 | -0.15 | -1.07 | 41.31 | 0.0427 | -0.1195 | -0.0006 |
| 106 | SLD 16 | -0.15 | -1.07 | 41.31 | 0.0427 | -0.1195 | -0.0006 |
| 106 | SLV 1 | 0.46 | 1.93 | 58.14 | -0.1047 | 0.3827 | 0.002 |
| 106 | SLV 2 | 0.46 | 1.93 | 58.14 | -0.1047 | 0.3827 | 0.002 |
| 106 | SLV 3 | 0.39 | -6.61 | 54.77 | 0.2914 | 0.3381 | 0.0017 |
| 106 | SLV 4 | 0.39 | -6.61 | 54.77 | 0.2914 | 0.3381 | 0.0017 |
| 106 | SLV 5 | 0.26 | 13.4 | 54.98 | -0.6333 | 0.1996 | 0.0012 |
| 106 | SLV 6 | 0.26 | 13.4 | 54.98 | -0.6333 | 0.1996 | 0.0012 |
| 106 | SLV 7 | 0.04 | -15.04 | 43.75 | 0.6869 | 0.0511 | 0.0001 |
| 106 | SLV 8 | 0.04 | -15.04 | 43.75 | 0.6869 | 0.0511 | 0.0001 |
| 106 | SLV 9 | 0.01 | 14.71 | 48.91 | -0.6904 | -0.0018 | 0.0002 |
| 106 | SLV 10 | 0.01 | 14.71 | 48.91 | -0.6904 | -0.0018 | 0.0002 |
| 106 | SLV 11 | -0.2 | -13.73 | 37.68 | 0.6298 | -0.1503 | -0.001 |
| 106 | SLV 12 | -0.2 | -13.73 | 37.68 | 0.6298 | -0.1503 | -0.001 |
| 106 | SLV 13 | -0.34 | 6.27 | 37.89 | -0.2949 | -0.2888 | -0.0014 |
| 106 | SLV 14 | -0.34 | 6.27 | 37.89 | -0.2949 | -0.2888 | -0.0014 |
| 106 | SLV 15 | -0.41 | -2.26 | 34.52 | 0.1012 | -0.3333 | -0.0018 |
| 106 | SLV 16 | -0.41 | -2.26 | 34.52 | 0.1012 | -0.3333 | -0.0018 |
| 107 | SLU 1 | 0.04 | -1.04 | 5.15 | 0.0418 | 0.0197 | -0.0007 |
| 107 | SLU 2 | 0.04 | -1.04 | 5.14 | 0.0419 | 0.0201 | -0.0007 |
| 107 | SLU 3 | 0.04 | -1.09 | 5.09 | 0.044 | 0.0205 | -0.0007 |
| 107 | SLU 4 | 0.04 | -1.09 | 5.09 | 0.0441 | 0.0207 | -0.0007 |
| 107 | SLU 5 | 0.04 | -1.07 | 5.11 | 0.0432 | 0.0207 | -0.0007 |
| 107 | SLU 6 | 0.04 | -1.12 | 5.06 | 0.0452 | 0.0212 | -0.0007 |
| 107 | SLU 7 | 0.04 | -1.12 | 5.06 | 0.0453 | 0.0214 | -0.0007 |
| 107 | SLU 8 | 0.04 | -1.1 | 5.09 | 0.0443 | 0.021 | -0.0007 |
| 107 | SLU 9 | 0.04 | -1.1 | 5.09 | 0.0444 | 0.0212 | -0.0007 |
| 107 | SLU 10 | 0.05 | -1.32 | 8.04 | 0.0515 | 0.0244 | -0.0009 |
| 107 | SLU 11 | 0.05 | -1.37 | 7.99 | 0.0536 | 0.0249 | -0.0009 |
| 107 | SLU 12 | 0.05 | -1.37 | 7.99 | 0.0537 | 0.0251 | -0.0009 |
| 107 | SLU 13 | 0.05 | -1.35 | 8.01 | 0.0528 | 0.0251 | -0.0009 |
| 107 | SLU 14 | 0.05 | -1.4 | 7.96 | 0.0549 | 0.0256 | -0.0009 |
| 107 | SLU 15 | 0.05 | -1.4 | 7.96 | 0.0549 | 0.0258 | -0.0009 |
| 107 | SLU 16 | 0.05 | -1.38 | 7.98 | 0.0539 | 0.0254 | -0.0009 |
| 107 | SLU 17 | 0.05 | -1.38 | 7.98 | 0.054 | 0.0256 | -0.0009 |
| 107 | SLU 18 | 0.06 | -1.44 | 9.28 | 0.0556 | 0.026 | -0.001 |
| 107 | SLU 19 | 0.06 | -1.44 | 9.28 | 0.0556 | 0.0262 | -0.001 |
| 107 | SLU 20 | 0.06 | -1.47 | 9.25 | 0.0568 | 0.0267 | -0.001 |
| 107 | SLU 21 | 0.06 | -1.47 | 9.25 | 0.0569 | 0.0268 | -0.001 |
| 107 | SLU 22 | 0.04 | -1.27 | 5.35 | 0.0511 | 0.0223 | -0.0008 |
| 107 | SLU 23 | 0.04 | -1.27 | 5.34 | 0.0512 | 0.0226 | -0.0008 |
| 107 | SLU 24 | 0.04 | -1.33 | 5.29 | 0.0533 | 0.0231 | -0.0008 |
| 107 | SLU 25 | 0.05 | -1.33 | 5.29 | 0.0533 | 0.0233 | -0.0008 |
| 107 | SLU 26 | 0.05 | -1.3 | 5.31 | 0.0524 | 0.0233 | -0.0008 |
| 107 | SLU 27 | 0.05 | -1.36 | 5.26 | 0.0545 | 0.0238 | -0.0008 |
| 107 | SLU 28 | 0.05 | -1.36 | 5.26 | 0.0546 | 0.0239 | -0.0008 |
| 107 | SLU 29 | 0.05 | -1.33 | 5.29 | 0.0536 | 0.0236 | -0.0008 |
| 107 | SLU 30 | 0.05 | -1.33 | 5.28 | 0.0536 | 0.0238 | -0.0008 |
| 107 | SLU 31 | 0.06 | -1.55 | 8.24 | 0.0608 | 0.027 | -0.001 |
| 107 | SLU 32 | 0.06 | -1.6 | 8.19 | 0.0629 | 0.0275 | -0.001 |
| 107 | SLU 33 | 0.06 | -1.61 | 8.19 | 0.0629 | 0.0277 | -0.001 |

| Nodo | Cont. | Reazione a traslazione | | | Reazione a rotazione | | |
|---|---|---|---|---|---|---|---|
| Ind. | N.br. | x | y | z | x | y | z |
| 107 | SLU 34 | 0.06 | -1.58 | 8.21 | 0.0621 | 0.0277 | -0.001 |
| 107 | SLU 35 | 0.06 | -1.64 | 8.16 | 0.0641 | 0.0281 | -0.001 |
| 107 | SLU 36 | 0.06 | -1.64 | 8.16 | 0.0642 | 0.0283 | -0.001 |
| 107 | SLU 37 | 0.06 | -1.61 | 8.18 | 0.0632 | 0.028 | -0.001 |
| 107 | SLU 38 | 0.06 | -1.61 | 8.18 | 0.0633 | 0.0282 | -0.001 |
| 107 | SLU 39 | 0.06 | -1.67 | 9.48 | 0.0648 | 0.0286 | -0.0011 |
| 107 | SLU 40 | 0.06 | -1.67 | 9.48 | 0.0649 | 0.0288 | -0.0011 |
| 107 | SLU 41 | 0.06 | -1.7 | 9.45 | 0.0661 | 0.0292 | -0.0011 |
| 107 | SLU 42 | 0.07 | -1.7 | 9.45 | 0.0661 | 0.0294 | -0.0011 |
| 107 | SLU 43 | 0.05 | -1.27 | 6.62 | 0.0512 | 0.0248 | -0.0008 |
| 107 | SLU 44 | 0.05 | -1.27 | 6.62 | 0.0513 | 0.0251 | -0.0008 |
| 107 | SLU 45 | 0.05 | -1.32 | 6.57 | 0.0534 | 0.0256 | -0.0008 |
| 107 | SLU 46 | 0.05 | -1.32 | 6.57 | 0.0534 | 0.0258 | -0.0008 |
| 107 | SLU 47 | 0.05 | -1.3 | 6.59 | 0.0525 | 0.0257 | -0.0008 |
| 107 | SLU 48 | 0.05 | -1.35 | 6.54 | 0.0546 | 0.0262 | -0.0009 |
| 107 | SLU 49 | 0.05 | -1.35 | 6.54 | 0.0547 | 0.0264 | -0.0009 |
| 107 | SLU 50 | 0.05 | -1.33 | 6.56 | 0.0537 | 0.0261 | -0.0009 |
| 107 | SLU 51 | 0.05 | -1.33 | 6.56 | 0.0537 | 0.0263 | -0.0009 |
| 107 | SLU 52 | 0.06 | -1.55 | 9.51 | 0.0609 | 0.0295 | -0.0011 |
| 107 | SLU 53 | 0.06 | -1.6 | 9.46 | 0.063 | 0.03 | -0.0011 |
| 107 | SLU 54 | 0.06 | -1.6 | 9.46 | 0.063 | 0.0302 | -0.0011 |
| 107 | SLU 55 | 0.06 | -1.58 | 9.48 | 0.0622 | 0.0301 | -0.0011 |
| 107 | SLU 56 | 0.06 | -1.63 | 9.43 | 0.0642 | 0.0306 | -0.0011 |
| 107 | SLU 57 | 0.06 | -1.63 | 9.43 | 0.0643 | 0.0308 | -0.0011 |
| 107 | SLU 58 | 0.06 | -1.61 | 9.46 | 0.0633 | 0.0305 | -0.0011 |
| 107 | SLU 59 | 0.06 | -1.61 | 9.46 | 0.0634 | 0.0307 | -0.0011 |
| 107 | SLU 60 | 0.07 | -1.67 | 10.76 | 0.0649 | 0.031 | -0.0012 |
| 107 | SLU 61 | 0.07 | -1.67 | 10.76 | 0.065 | 0.0312 | -0.0012 |
| 107 | SLU 62 | 0.07 | -1.7 | 10.73 | 0.0662 | 0.0317 | -0.0012 |
| 107 | SLU 63 | 0.07 | -1.7 | 10.73 | 0.0662 | 0.0319 | -0.0012 |
| 107 | SLU 64 | 0.05 | -1.5 | 6.82 | 0.0605 | 0.0273 | -0.0009 |
| 107 | SLU 65 | 0.05 | -1.5 | 6.82 | 0.0606 | 0.0277 | -0.0009 |
| 107 | SLU 66 | 0.05 | -1.56 | 6.77 | 0.0626 | 0.0281 | -0.0009 |
| 107 | SLU 67 | 0.05 | -1.56 | 6.77 | 0.0627 | 0.0283 | -0.0009 |
| 107 | SLU 68 | 0.05 | -1.54 | 6.79 | 0.0618 | 0.0283 | -0.0009 |
| 107 | SLU 69 | 0.06 | -1.59 | 6.74 | 0.0639 | 0.0288 | -0.001 |
| 107 | SLU 70 | 0.06 | -1.59 | 6.74 | 0.0639 | 0.029 | -0.001 |
| 107 | SLU 71 | 0.05 | -1.56 | 6.76 | 0.0629 | 0.0286 | -0.001 |
| 107 | SLU 72 | 0.06 | -1.57 | 6.76 | 0.063 | 0.0288 | -0.001 |
| 107 | SLU 73 | 0.07 | -1.78 | 9.71 | 0.0702 | 0.032 | -0.0012 |
| 107 | SLU 74 | 0.07 | -1.84 | 9.66 | 0.0722 | 0.0325 | -0.0012 |
| 107 | SLU 75 | 0.07 | -1.84 | 9.66 | 0.0723 | 0.0327 | -0.0012 |
| 107 | SLU 76 | 0.07 | -1.81 | 9.68 | 0.0714 | 0.0327 | -0.0012 |
| 107 | SLU 77 | 0.07 | -1.87 | 9.63 | 0.0735 | 0.0332 | -0.0012 |
| 107 | SLU 78 | 0.07 | -1.87 | 9.63 | 0.0736 | 0.0334 | -0.0012 |
| 107 | SLU 79 | 0.07 | -1.84 | 9.66 | 0.0726 | 0.033 | -0.0012 |
| 107 | SLU 80 | 0.07 | -1.84 | 9.65 | 0.0726 | 0.0332 | -0.0012 |
| 107 | SLU 81 | 0.07 | -1.9 | 10.96 | 0.0742 | 0.0336 | -0.0012 |
| 107 | SLU 82 | 0.07 | -1.9 | 10.95 | 0.0743 | 0.0338 | -0.0013 |
| 107 | SLU 83 | 0.07 | -1.93 | 10.93 | 0.0754 | 0.0343 | -0.0013 |
| 107 | SLU 84 | 0.07 | -1.93 | 10.92 | 0.0755 | 0.0345 | -0.0013 |
| 107 | SLE RA 1 | 0.04 | -1.1 | 5.2 | 0.0445 | 0.0205 | -0.0007 |
| 107 | SLE RA 2 | 0.04 | -1.11 | 5.2 | 0.0445 | 0.0207 | -0.0007 |
| 107 | SLE RA 3 | 0.04 | -1.14 | 5.17 | 0.0459 | 0.021 | -0.0007 |
| 107 | SLE RA 4 | 0.04 | -1.14 | 5.17 | 0.046 | 0.0211 | -0.0007 |
| 107 | SLE RA 5 | 0.04 | -1.13 | 5.18 | 0.0454 | 0.0211 | -0.0007 |
| 107 | SLE RA 6 | 0.04 | -1.16 | 5.15 | 0.0467 | 0.0214 | -0.0007 |
| 107 | SLE RA 7 | 0.04 | -1.16 | 5.15 | 0.0468 | 0.0216 | -0.0007 |
| 107 | SLE RA 8 | 0.04 | -1.14 | 5.16 | 0.0461 | 0.0213 | -0.0007 |
| 107 | SLE RA 9 | 0.04 | -1.15 | 5.16 | 0.0462 | 0.0215 | -0.0007 |
| 107 | SLE RA 10 | 0.05 | -1.29 | 7.13 | 0.051 | 0.0236 | -0.0008 |
| 107 | SLE RA 11 | 0.05 | -1.33 | 7.1 | 0.0523 | 0.0239 | -0.0009 |
| 107 | SLE RA 12 | 0.05 | -1.33 | 7.1 | 0.0524 | 0.0241 | -0.0009 |
| 107 | SLE RA 13 | 0.05 | -1.31 | 7.11 | 0.0518 | 0.024 | -0.0009 |
| 107 | SLE RA 14 | 0.05 | -1.35 | 7.08 | 0.0532 | 0.0244 | -0.0009 |
| 107 | SLE RA 15 | 0.05 | -1.35 | 7.08 | 0.0532 | 0.0245 | -0.0009 |
| 107 | SLE RA 16 | 0.05 | -1.33 | 7.09 | 0.0525 | 0.0243 | -0.0009 |
| 107 | SLE RA 17 | 0.05 | -1.33 | 7.09 | 0.0526 | 0.0244 | -0.0009 |
| 107 | SLE RA 18 | 0.05 | -1.37 | 7.96 | 0.0536 | 0.0246 | -0.0009 |
| 107 | SLE RA 19 | 0.05 | -1.37 | 7.96 | 0.0537 | 0.0248 | -0.0009 |
| 107 | SLE RA 20 | 0.05 | -1.39 | 7.94 | 0.0545 | 0.0251 | -0.0009 |
| 107 | SLE RA 21 | 0.05 | -1.39 | 7.94 | 0.0545 | 0.0252 | -0.0009 |
| 107 | SLE FR 1 | 0.04 | -1.1 | 5.2 | 0.0445 | 0.0205 | -0.0007 |
| 107 | SLE FR 2 | 0.04 | -1.1 | 5.2 | 0.0445 | 0.0205 | -0.0007 |
| 107 | SLE FR 3 | 0.04 | -1.11 | 5.2 | 0.0448 | 0.0206 | -0.0007 |
| 107 | SLE FR 4 | 0.04 | -1.18 | 6.03 | 0.0472 | 0.0218 | -0.0008 |
| 107 | SLE FR 5 | 0.04 | -1.19 | 6.02 | 0.0475 | 0.0219 | -0.0008 |
| 107 | SLE FR 6 | 0.05 | -1.24 | 6.58 | 0.049 | 0.0226 | -0.0008 |
| 107 | SLE QP 1 | 0.04 | -1.1 | 5.2 | 0.0445 | 0.0205 | -0.0007 |
| 107 | SLE QP 2 | 0.04 | -1.18 | 6.03 | 0.0472 | 0.0217 | -0.0007 |
| 107 | SLD 1 | 0.27 | 0 | 6.75 | 0.0013 | 0.1858 | -0.0049 |
| 107 | SLD 2 | 0.27 | 0 | 6.75 | 0.0013 | 0.1858 | -0.0049 |
| 107 | SLD 3 | 0.25 | -1.63 | 6.01 | 0.0637 | 0.1674 | -0.0044 |
| 107 | SLD 4 | 0.25 | -1.63 | 6.01 | 0.0637 | 0.1674 | -0.0044 |
| 107 | SLD 5 | 0.15 | 1.64 | 7.37 | -0.0613 | 0.0989 | -0.0027 |
| 107 | SLD 6 | 0.15 | 1.64 | 7.37 | -0.0613 | 0.0989 | -0.0027 |
| 107 | SLD 7 | 0.06 | -3.79 | 4.9 | 0.1469 | 0.0375 | -0.0011 |
| 107 | SLD 8 | 0.06 | -3.79 | 4.9 | 0.1469 | 0.0375 | -0.0011 |

| Nodo | Cont. | Reazione a traslazione | | | Reazione a rotazione | | |
|---|---|---|---|---|---|---|---|
| Ind. | N.br. | x | y | z | x | y | z |
| 107 | SLD 9 | 0.03 | 1.42 | 7.16 | -0.0524 | 0.006 | -0.0004 |
| 107 | SLD 10 | 0.03 | 1.42 | 7.16 | -0.0524 | 0.006 | -0.0004 |
| 107 | SLD 11 | -0.07 | -4.01 | 4.69 | 0.1557 | -0.0555 | 0.0012 |
| 107 | SLD 12 | -0.07 | -4.01 | 4.69 | 0.1557 | -0.0555 | 0.0012 |
| 107 | SLD 13 | -0.16 | -0.74 | 6.05 | 0.0307 | -0.1239 | 0.0029 |
| 107 | SLD 14 | -0.16 | -0.74 | 6.05 | 0.0307 | -0.1239 | 0.0029 |
| 107 | SLD 15 | -0.19 | -2.37 | 5.31 | 0.0931 | -0.1423 | 0.0034 |
| 107 | SLD 16 | -0.19 | -2.37 | 5.31 | 0.0931 | -0.1423 | 0.0034 |
| 107 | SLV 1 | 0.61 | 1.6 | 7.72 | -0.0606 | 0.4292 | -0.011 |
| 107 | SLV 2 | 0.61 | 1.6 | 7.72 | -0.0606 | 0.4292 | -0.011 |
| 107 | SLV 3 | 0.54 | -2.22 | 5.98 | 0.0858 | 0.3828 | -0.0098 |
| 107 | SLV 4 | 0.54 | -2.22 | 5.98 | 0.0858 | 0.3828 | -0.0098 |
| 107 | SLV 5 | 0.32 | 5.45 | 9.17 | -0.2071 | 0.2144 | -0.0057 |
| 107 | SLV 6 | 0.32 | 5.45 | 9.17 | -0.2071 | 0.2144 | -0.0057 |
| 107 | SLV 7 | 0.09 | -7.29 | 3.38 | 0.2808 | 0.0597 | -0.0016 |
| 107 | SLV 8 | 0.09 | -7.29 | 3.38 | 0.2808 | 0.0597 | -0.0016 |
| 107 | SLV 9 | 0 | 4.92 | 8.68 | -0.1864 | -0.0162 | 0.0001 |
| 107 | SLV 10 | 0 | 4.92 | 8.68 | -0.1864 | -0.0162 | 0.0001 |
| 107 | SLV 11 | -0.23 | -7.82 | 2.89 | 0.3015 | -0.1709 | 0.0042 |
| 107 | SLV 12 | -0.23 | -7.82 | 2.89 | 0.3015 | -0.1709 | 0.0042 |
| 107 | SLV 13 | -0.46 | -0.15 | 6.08 | 0.0086 | -0.3394 | 0.0083 |
| 107 | SLV 14 | -0.46 | -0.15 | 6.08 | 0.0086 | -0.3394 | 0.0083 |
| 107 | SLV 15 | -0.53 | -3.97 | 4.34 | 0.155 | -0.3858 | 0.0095 |
| 107 | SLV 16 | -0.53 | -3.97 | 4.34 | 0.155 | -0.3858 | 0.0095 |
| 108 | SLU 1 | 0.11 | -0.1 | 20.81 | -0.2021 | 0.0714 | 0 |
| 108 | SLU 2 | 0.13 | 2.45 | 21.43 | -0.3397 | 0.0841 | 0 |
| 108 | SLU 3 | 0.11 | -0.34 | 21.08 | -0.1951 | 0.0735 | 0 |
| 108 | SLU 4 | 0.12 | 1.19 | 21.45 | -0.2776 | 0.0811 | 0 |
| 108 | SLU 5 | 0.13 | 2.16 | 21.48 | -0.3272 | 0.0851 | 0 |
| 108 | SLU 6 | 0.11 | -0.63 | 21.13 | -0.1825 | 0.0745 | 0 |
| 108 | SLU 7 | 0.12 | 0.91 | 21.5 | -0.2651 | 0.0821 | 0 |
| 108 | SLU 8 | 0.11 | -0.68 | 20.9 | -0.1771 | 0.0734 | 0 |
| 108 | SLU 9 | 0.12 | 0.85 | 21.27 | -0.2597 | 0.0811 | 0 |
| 108 | SLU 10 | 0.15 | 2.33 | 24.06 | -0.3657 | 0.0962 | 0 |
| 108 | SLU 11 | 0.13 | -0.46 | 23.71 | -0.221 | 0.0855 | 0 |
| 108 | SLU 12 | 0.14 | 1.08 | 24.08 | -0.3036 | 0.0932 | 0 |
| 108 | SLU 13 | 0.15 | 2.04 | 24.11 | -0.3532 | 0.0972 | 0 |
| 108 | SLU 14 | 0.13 | -0.74 | 23.76 | -0.2085 | 0.0865 | 0 |
| 108 | SLU 15 | 0.14 | 0.79 | 24.13 | -0.2911 | 0.0942 | 0 |
| 108 | SLU 16 | 0.13 | -0.8 | 23.53 | -0.2031 | 0.0855 | 0 |
| 108 | SLU 17 | 0.14 | 0.73 | 23.9 | -0.2856 | 0.0931 | 0 |
| 108 | SLU 18 | 0.14 | -0.27 | 24.57 | -0.2393 | 0.0886 | 0 |
| 108 | SLU 19 | 0.15 | 1.26 | 24.94 | -0.3218 | 0.0963 | 0 |
| 108 | SLU 20 | 0.14 | -0.56 | 24.61 | -0.2268 | 0.0896 | 0 |
| 108 | SLU 21 | 0.15 | 0.97 | 24.98 | -0.3093 | 0.0973 | 0 |
| 108 | SLU 22 | 0.13 | -0.3 | 23.07 | -0.2207 | 0.0825 | 0 |
| 108 | SLU 23 | 0.14 | 2.25 | 23.69 | -0.3583 | 0.0952 | 0 |
| 108 | SLU 24 | 0.13 | -0.53 | 23.34 | -0.2137 | 0.0846 | 0 |
| 108 | SLU 25 | 0.14 | 1 | 23.71 | -0.2962 | 0.0922 | 0 |
| 108 | SLU 26 | 0.15 | 1.96 | 23.73 | -0.3458 | 0.0962 | 0 |
| 108 | SLU 27 | 0.13 | -0.82 | 23.38 | -0.2011 | 0.0856 | 0 |
| 108 | SLU 28 | 0.14 | 0.71 | 23.75 | -0.2837 | 0.0932 | 0 |
| 108 | SLU 29 | 0.13 | -0.88 | 23.16 | -0.1957 | 0.0845 | 0 |
| 108 | SLU 30 | 0.14 | 0.66 | 23.53 | -0.2783 | 0.0921 | 0 |
| 108 | SLU 31 | 0.16 | 2.13 | 26.32 | -0.3843 | 0.1073 | 0 |
| 108 | SLU 32 | 0.15 | -0.65 | 25.97 | -0.2396 | 0.0966 | 0 |
| 108 | SLU 33 | 0.16 | 0.88 | 26.34 | -0.3222 | 0.1042 | 0 |
| 108 | SLU 34 | 0.16 | 1.85 | 26.36 | -0.3718 | 0.1083 | 0 |
| 108 | SLU 35 | 0.15 | -0.94 | 26.01 | -0.2271 | 0.0976 | 0 |
| 108 | SLU 36 | 0.16 | 0.59 | 26.38 | -0.3097 | 0.1053 | 0 |
| 108 | SLU 37 | 0.15 | -0.99 | 25.79 | -0.2217 | 0.0966 | 0 |
| 108 | SLU 38 | 0.16 | 0.54 | 26.16 | -0.3043 | 0.1042 | 0 |
| 108 | SLU 39 | 0.15 | -0.47 | 26.83 | -0.2579 | 0.0997 | 0 |
| 108 | SLU 40 | 0.16 | 1.06 | 27.2 | -0.3404 | 0.1073 | 0 |
| 108 | SLU 41 | 0.15 | -0.76 | 26.87 | -0.2454 | 0.1007 | 0 |
| 108 | SLU 42 | 0.16 | 0.77 | 27.24 | -0.3279 | 0.1083 | 0 |
| 108 | SLU 43 | 0.14 | -0.07 | 26.28 | -0.2564 | 0.089 | 0 |
| 108 | SLU 44 | 0.15 | 2.48 | 26.9 | -0.394 | 0.1017 | 0 |
| 108 | SLU 45 | 0.14 | -0.3 | 26.55 | -0.2493 | 0.0911 | 0 |
| 108 | SLU 46 | 0.15 | 1.23 | 26.92 | -0.3319 | 0.0987 | 0 |
| 108 | SLU 47 | 0.16 | 2.2 | 26.95 | -0.3815 | 0.1028 | 0 |
| 108 | SLU 48 | 0.14 | -0.59 | 26.6 | -0.2368 | 0.0921 | 0 |
| 108 | SLU 49 | 0.15 | 0.94 | 26.97 | -0.3193 | 0.0997 | 0 |
| 108 | SLU 50 | 0.14 | -0.64 | 26.37 | -0.2314 | 0.091 | 0 |
| 108 | SLU 51 | 0.15 | 0.89 | 26.74 | -0.3139 | 0.0987 | 0 |
| 108 | SLU 52 | 0.17 | 2.36 | 29.53 | -0.42 | 0.1138 | 0 |
| 108 | SLU 53 | 0.16 | -0.42 | 29.18 | -0.2753 | 0.1032 | 0 |
| 108 | SLU 54 | 0.17 | 1.11 | 29.55 | -0.3579 | 0.1108 | 0 |
| 108 | SLU 55 | 0.17 | 2.08 | 29.58 | -0.4075 | 0.1148 | 0 |
| 108 | SLU 56 | 0.16 | -0.71 | 29.22 | -0.2628 | 0.1042 | 0 |
| 108 | SLU 57 | 0.17 | 0.82 | 29.6 | -0.3453 | 0.1118 | 0 |
| 108 | SLU 58 | 0.16 | -0.76 | 29 | -0.2574 | 0.1031 | 0 |
| 108 | SLU 59 | 0.17 | 0.77 | 29.37 | -0.3399 | 0.1107 | 0 |
| 108 | SLU 60 | 0.16 | -0.24 | 30.04 | -0.2935 | 0.1062 | 0 |
| 108 | SLU 61 | 0.17 | 1.29 | 30.41 | -0.3761 | 0.1139 | 0 |
| 108 | SLU 62 | 0.16 | -0.53 | 30.08 | -0.281 | 0.1073 | 0 |
| 108 | SLU 63 | 0.17 | 1.01 | 30.45 | -0.3636 | 0.1149 | 0 |
| 108 | SLU 64 | 0.15 | -0.26 | 28.54 | -0.275 | 0.1001 | 0 |

| Nodo | Cont. | Reazione a traslazione | | | Reazione a rotazione | | |
|---|---|---|---|---|---|---|---|
| Ind. | N.br. | x | y | z | x | y | z |
| 108 | SLU 65 | 0.17 | 2.29 | 29.16 | -0.4126 | 0.1128 | 0 |
| 108 | SLU 66 | 0.16 | -0.5 | 28.81 | -0.2679 | 0.1022 | 0 |
| 108 | SLU 67 | 0.17 | 1.03 | 29.18 | -0.3505 | 0.1098 | 0 |
| 108 | SLU 68 | 0.17 | 2 | 29.2 | -0.4001 | 0.1138 | 0 |
| 108 | SLU 69 | 0.16 | -0.79 | 28.85 | -0.2554 | 0.1032 | 0 |
| 108 | SLU 70 | 0.17 | 0.75 | 29.22 | -0.338 | 0.1108 | 0 |
| 108 | SLU 71 | 0.16 | -0.84 | 28.63 | -0.25 | 0.1021 | 0 |
| 108 | SLU 72 | 0.17 | 0.69 | 29 | -0.3325 | 0.1097 | 0 |
| 108 | SLU 73 | 0.19 | 2.17 | 31.79 | -0.4386 | 0.1249 | 0 |
| 108 | SLU 74 | 0.17 | -0.62 | 31.44 | -0.2939 | 0.1142 | 0 |
| 108 | SLU 75 | 0.19 | 0.92 | 31.81 | -0.3765 | 0.1219 | 0 |
| 108 | SLU 76 | 0.19 | 1.88 | 31.83 | -0.4261 | 0.1259 | 0 |
| 108 | SLU 77 | 0.18 | -0.9 | 31.48 | -0.2814 | 0.1152 | 0 |
| 108 | SLU 78 | 0.19 | 0.63 | 31.85 | -0.3639 | 0.1229 | 0 |
| 108 | SLU 79 | 0.17 | -0.96 | 31.26 | -0.276 | 0.1142 | 0 |
| 108 | SLU 80 | 0.19 | 0.57 | 31.63 | -0.3585 | 0.1218 | 0 |
| 108 | SLU 81 | 0.18 | -0.43 | 32.3 | -0.3121 | 0.1173 | 0 |
| 108 | SLU 82 | 0.19 | 1.1 | 32.67 | -0.3947 | 0.125 | 0 |
| 108 | SLU 83 | 0.18 | -0.72 | 32.34 | -0.2996 | 0.1183 | 0 |
| 108 | SLU 84 | 0.19 | 0.81 | 32.71 | -0.3822 | 0.126 | 0 |
| 108 | SLE RA 1 | 0.11 | -0.16 | 21.46 | -0.2075 | 0.0746 | 0 |
| 108 | SLE RA 2 | 0.13 | 1.54 | 21.87 | -0.2992 | 0.083 | 0 |
| 108 | SLE RA 3 | 0.12 | -0.32 | 21.64 | -0.2027 | 0.076 | 0 |
| 108 | SLE RA 4 | 0.12 | 0.7 | 21.88 | -0.2578 | 0.081 | 0 |
| 108 | SLE RA 5 | 0.13 | 1.35 | 21.9 | -0.2908 | 0.0837 | 0 |
| 108 | SLE RA 6 | 0.12 | -0.51 | 21.67 | -0.1944 | 0.0766 | 0 |
| 108 | SLE RA 7 | 0.12 | 0.51 | 21.91 | -0.2494 | 0.0817 | 0 |
| 108 | SLE RA 8 | 0.12 | -0.54 | 21.52 | -0.1908 | 0.0759 | 0 |
| 108 | SLE RA 9 | 0.12 | 0.48 | 21.76 | -0.2458 | 0.081 | 0 |
| 108 | SLE RA 10 | 0.14 | 1.46 | 23.62 | -0.3165 | 0.0911 | 0 |
| 108 | SLE RA 11 | 0.13 | -0.39 | 23.39 | -0.2201 | 0.084 | 0 |
| 108 | SLE RA 12 | 0.14 | 0.63 | 23.64 | -0.2751 | 0.0891 | 0 |
| 108 | SLE RA 13 | 0.14 | 1.27 | 23.65 | -0.3082 | 0.0918 | 0 |
| 108 | SLE RA 14 | 0.13 | -0.59 | 23.42 | -0.2117 | 0.0847 | 0 |
| 108 | SLE RA 15 | 0.14 | 0.43 | 23.67 | -0.2667 | 0.0898 | 0 |
| 108 | SLE RA 16 | 0.13 | -0.62 | 23.27 | -0.2081 | 0.0839 | 0 |
| 108 | SLE RA 17 | 0.14 | 0.4 | 23.52 | -0.2631 | 0.089 | 0 |
| 108 | SLE RA 18 | 0.13 | -0.27 | 23.96 | -0.2322 | 0.086 | 0 |
| 108 | SLE RA 19 | 0.14 | 0.75 | 24.21 | -0.2873 | 0.0911 | 0 |
| 108 | SLE RA 20 | 0.13 | -0.46 | 23.99 | -0.2239 | 0.0867 | 0 |
| 108 | SLE RA 21 | 0.14 | 0.56 | 24.24 | -0.2789 | 0.0918 | 0 |
| 108 | SLE FR 1 | 0.11 | -0.16 | 21.46 | -0.2075 | 0.0746 | 0 |
| 108 | SLE FR 2 | 0.12 | 0.18 | 21.54 | -0.2258 | 0.0763 | 0 |
| 108 | SLE FR 3 | 0.11 | -0.24 | 21.47 | -0.2041 | 0.0748 | 0 |
| 108 | SLE FR 4 | 0.12 | 0.15 | 22.29 | -0.2332 | 0.0797 | 0 |
| 108 | SLE FR 5 | 0.12 | -0.27 | 22.22 | -0.2116 | 0.0783 | 0 |
| 108 | SLE FR 6 | 0.12 | -0.22 | 22.71 | -0.2198 | 0.0803 | 0 |
| 108 | SLE QP 1 | 0.11 | -0.16 | 21.46 | -0.2075 | 0.0746 | 0 |
| 108 | SLE QP 2 | 0.12 | -0.19 | 22.21 | -0.2149 | 0.078 | 0 |
| 108 | SLD 1 | 0.25 | 0.42 | 21.12 | -0.2377 | 0.1849 | -0.0001 |
| 108 | SLD 2 | 0.25 | 0.42 | 21.12 | -0.2377 | 0.1849 | -0.0001 |
| 108 | SLD 3 | 0.21 | -3.63 | 19.53 | -0.0384 | 0.1535 | -0.0001 |
| 108 | SLD 4 | 0.21 | -3.63 | 19.53 | -0.0384 | 0.1535 | -0.0001 |
| 108 | SLD 5 | 0.22 | 6.13 | 24.3 | -0.5241 | 0.1577 | -0.0001 |
| 108 | SLD 6 | 0.22 | 6.13 | 24.3 | -0.5241 | 0.1577 | -0.0001 |
| 108 | SLD 7 | 0.09 | -7.36 | 18.99 | 0.1405 | 0.053 | 0 |
| 108 | SLD 8 | 0.09 | -7.36 | 18.99 | 0.1405 | 0.053 | 0 |
| 108 | SLD 9 | 0.15 | 6.98 | 25.43 | -0.5702 | 0.103 | 0 |
| 108 | SLD 10 | 0.15 | 6.98 | 25.43 | -0.5702 | 0.103 | 0 |
| 108 | SLD 11 | 0.02 | -6.52 | 20.12 | 0.0944 | -0.0017 | 0 |
| 108 | SLD 12 | 0.02 | -6.52 | 20.12 | 0.0944 | -0.0017 | 0 |
| 108 | SLD 13 | 0.02 | 3.24 | 24.89 | -0.3914 | 0.0025 | 0.0001 |
| 108 | SLD 14 | 0.02 | 3.24 | 24.89 | -0.3914 | 0.0025 | 0.0001 |
| 108 | SLD 15 | -0.02 | -0.81 | 23.3 | -0.192 | -0.0289 | 0.0001 |
| 108 | SLD 16 | -0.02 | -0.81 | 23.3 | -0.192 | -0.0289 | 0.0001 |
| 108 | SLV 1 | 0.44 | 1.27 | 19.69 | -0.2711 | 0.3303 | -0.0003 |
| 108 | SLV 2 | 0.44 | 1.27 | 19.69 | -0.2711 | 0.3303 | -0.0003 |
| 108 | SLV 3 | 0.34 | -8.42 | 15.9 | 0.2079 | 0.2528 | -0.0002 |
| 108 | SLV 4 | 0.34 | -8.42 | 15.9 | 0.2079 | 0.2528 | -0.0002 |
| 108 | SLV 5 | 0.36 | 14.94 | 27.2 | -0.9582 | 0.2712 | -0.0002 |
| 108 | SLV 6 | 0.36 | 14.94 | 27.2 | -0.9582 | 0.2712 | -0.0002 |
| 108 | SLV 7 | 0.04 | -17.36 | 14.57 | 0.6384 | 0.0129 | 0 |
| 108 | SLV 8 | 0.04 | -17.36 | 14.57 | 0.6384 | 0.0129 | 0 |
| 108 | SLV 9 | 0.2 | 16.97 | 29.85 | -1.0682 | 0.1431 | 0 |
| 108 | SLV 10 | 0.2 | 16.97 | 29.85 | -1.0682 | 0.1431 | 0 |
| 108 | SLV 11 | -0.12 | -15.33 | 17.22 | 0.5284 | -0.1152 | 0.0001 |
| 108 | SLV 12 | -0.12 | -15.33 | 17.22 | 0.5284 | -0.1152 | 0.0001 |
| 108 | SLV 13 | -0.1 | 8.03 | 28.52 | -0.6377 | -0.0968 | 0.0002 |
| 108 | SLV 14 | -0.1 | 8.03 | 28.52 | -0.6377 | -0.0968 | 0.0002 |
| 108 | SLV 15 | -0.2 | -1.66 | 24.73 | -0.1587 | -0.1743 | 0.0002 |
| 108 | SLV 16 | -0.2 | -1.66 | 24.73 | -0.1587 | -0.1743 | 0.0002 |
| 109 | SLU 1 | 0.04 | -2.64 | 41.75 | 0.1386 | 0.0265 | -0.0011 |
| 109 | SLU 2 | 0.04 | -2.98 | 42.02 | 0.1555 | 0.0256 | -0.001 |
| 109 | SLU 3 | 0.04 | -2.65 | 42.45 | 0.1395 | 0.0271 | -0.0011 |
| 109 | SLU 4 | 0.04 | -2.85 | 42.62 | 0.1496 | 0.0266 | -0.0011 |
| 109 | SLU 5 | 0.04 | -2.97 | 42.41 | 0.1554 | 0.026 | -0.0011 |
| 109 | SLU 6 | 0.05 | -2.65 | 42.84 | 0.1394 | 0.0276 | -0.0011 |
| 109 | SLU 7 | 0.04 | -2.85 | 43.01 | 0.1495 | 0.027 | -0.0011 |

| Nodo | Cont. | Reazione a traslazione | | | Reazione a rotazione | | |
|---|---|---|---|---|---|---|---|
| Ind. | N.br. | x | y | z | x | y | z |
| 109 | SLU 8 | 0.04 | -2.63 | 42.52 | 0.1384 | 0.0273 | -0.0011 |
| 109 | SLU 9 | 0.04 | -2.83 | 42.69 | 0.1485 | 0.0268 | -0.0011 |
| 109 | SLU 10 | 0.05 | -3.4 | 49.65 | 0.1792 | 0.0313 | -0.0013 |
| 109 | SLU 11 | 0.05 | -3.08 | 50.08 | 0.1632 | 0.0329 | -0.0013 |
| 109 | SLU 12 | 0.05 | -3.28 | 50.25 | 0.1733 | 0.0323 | -0.0013 |
| 109 | SLU 13 | 0.05 | -3.4 | 50.04 | 0.179 | 0.0317 | -0.0013 |
| 109 | SLU 14 | 0.05 | -3.07 | 50.47 | 0.163 | 0.0333 | -0.0013 |
| 109 | SLU 15 | 0.05 | -3.27 | 50.64 | 0.1731 | 0.0327 | -0.0013 |
| 109 | SLU 16 | 0.05 | -3.06 | 50.15 | 0.162 | 0.033 | -0.0013 |
| 109 | SLU 17 | 0.05 | -3.26 | 50.32 | 0.1722 | 0.0325 | -0.0013 |
| 109 | SLU 18 | 0.06 | -3.25 | 52.65 | 0.1724 | 0.0346 | -0.0014 |
| 109 | SLU 19 | 0.06 | -3.45 | 52.81 | 0.1826 | 0.0341 | -0.0014 |
| 109 | SLU 20 | 0.06 | -3.25 | 53.04 | 0.1723 | 0.0351 | -0.0014 |
| 109 | SLU 21 | 0.06 | -3.45 | 53.2 | 0.1824 | 0.0345 | -0.0014 |
| 109 | SLU 22 | 0.05 | -2.9 | 46.01 | 0.1542 | 0.0297 | -0.0012 |
| 109 | SLU 23 | 0.05 | -3.24 | 46.29 | 0.1711 | 0.0288 | -0.0012 |
| 109 | SLU 24 | 0.05 | -2.91 | 46.72 | 0.1551 | 0.0304 | -0.0012 |
| 109 | SLU 25 | 0.05 | -3.12 | 46.88 | 0.1652 | 0.0298 | -0.0012 |
| 109 | SLU 26 | 0.05 | -3.23 | 46.67 | 0.171 | 0.0292 | -0.0012 |
| 109 | SLU 27 | 0.05 | -2.91 | 47.1 | 0.155 | 0.0308 | -0.0013 |
| 109 | SLU 28 | 0.05 | -3.11 | 47.27 | 0.1651 | 0.0302 | -0.0012 |
| 109 | SLU 29 | 0.05 | -2.89 | 46.79 | 0.154 | 0.0305 | -0.0012 |
| 109 | SLU 30 | 0.05 | -3.1 | 46.95 | 0.1641 | 0.03 | -0.0012 |
| 109 | SLU 31 | 0.06 | -3.67 | 53.91 | 0.1948 | 0.0345 | -0.0014 |
| 109 | SLU 32 | 0.06 | -3.34 | 54.35 | 0.1788 | 0.0361 | -0.0015 |
| 109 | SLU 33 | 0.06 | -3.54 | 54.51 | 0.1889 | 0.0355 | -0.0014 |
| 109 | SLU 34 | 0.06 | -3.66 | 54.3 | 0.1947 | 0.0349 | -0.0014 |
| 109 | SLU 35 | 0.06 | -3.34 | 54.73 | 0.1787 | 0.0365 | -0.0015 |
| 109 | SLU 36 | 0.06 | -3.54 | 54.9 | 0.1888 | 0.036 | -0.0015 |
| 109 | SLU 37 | 0.06 | -3.32 | 54.42 | 0.1777 | 0.0363 | -0.0015 |
| 109 | SLU 38 | 0.06 | -3.52 | 54.58 | 0.1878 | 0.0357 | -0.0015 |
| 109 | SLU 39 | 0.06 | -3.51 | 56.91 | 0.1881 | 0.0378 | -0.0015 |
| 109 | SLU 40 | 0.06 | -3.72 | 57.07 | 0.1982 | 0.0373 | -0.0015 |
| 109 | SLU 41 | 0.06 | -3.51 | 57.3 | 0.1879 | 0.0383 | -0.0016 |
| 109 | SLU 42 | 0.06 | -3.71 | 57.46 | 0.1981 | 0.0377 | -0.0015 |
| 109 | SLU 43 | 0.05 | -3.34 | 52.81 | 0.1749 | 0.0333 | -0.0014 |
| 109 | SLU 44 | 0.05 | -3.68 | 53.09 | 0.1917 | 0.0324 | -0.0013 |
| 109 | SLU 45 | 0.06 | -3.35 | 53.52 | 0.1757 | 0.034 | -0.0014 |
| 109 | SLU 46 | 0.06 | -3.55 | 53.68 | 0.1858 | 0.0334 | -0.0014 |
| 109 | SLU 47 | 0.05 | -3.67 | 53.47 | 0.1916 | 0.0328 | -0.0013 |
| 109 | SLU 48 | 0.06 | -3.35 | 53.9 | 0.1756 | 0.0344 | -0.0014 |
| 109 | SLU 49 | 0.06 | -3.55 | 54.07 | 0.1857 | 0.0339 | -0.0014 |
| 109 | SLU 50 | 0.06 | -3.33 | 53.59 | 0.1746 | 0.0342 | -0.0014 |
| 109 | SLU 51 | 0.06 | -3.53 | 53.75 | 0.1847 | 0.0336 | -0.0014 |
| 109 | SLU 52 | 0.06 | -4.11 | 60.72 | 0.2154 | 0.0381 | -0.0015 |
| 109 | SLU 53 | 0.06 | -3.78 | 61.15 | 0.1994 | 0.0397 | -0.0016 |
| 109 | SLU 54 | 0.06 | -3.98 | 61.31 | 0.2095 | 0.0391 | -0.0016 |
| 109 | SLU 55 | 0.06 | -4.1 | 61.1 | 0.2153 | 0.0385 | -0.0016 |
| 109 | SLU 56 | 0.07 | -3.77 | 61.53 | 0.1993 | 0.0401 | -0.0016 |
| 109 | SLU 57 | 0.06 | -3.98 | 61.7 | 0.2094 | 0.0396 | -0.0016 |
| 109 | SLU 58 | 0.07 | -3.76 | 61.22 | 0.1983 | 0.0399 | -0.0016 |
| 109 | SLU 59 | 0.06 | -3.96 | 61.38 | 0.2084 | 0.0393 | -0.0016 |
| 109 | SLU 60 | 0.07 | -3.95 | 63.71 | 0.2087 | 0.0414 | -0.0017 |
| 109 | SLU 61 | 0.07 | -4.16 | 63.88 | 0.2188 | 0.0409 | -0.0017 |
| 109 | SLU 62 | 0.07 | -3.95 | 64.1 | 0.2086 | 0.0419 | -0.0017 |
| 109 | SLU 63 | 0.07 | -4.15 | 64.26 | 0.2187 | 0.0413 | -0.0017 |
| 109 | SLU 64 | 0.06 | -3.61 | 57.07 | 0.1905 | 0.0365 | -0.0015 |
| 109 | SLU 65 | 0.06 | -3.94 | 57.35 | 0.2073 | 0.0356 | -0.0014 |
| 109 | SLU 66 | 0.06 | -3.62 | 57.78 | 0.1913 | 0.0372 | -0.0015 |
| 109 | SLU 67 | 0.06 | -3.82 | 57.94 | 0.2015 | 0.0366 | -0.0015 |
| 109 | SLU 68 | 0.06 | -3.94 | 57.74 | 0.2072 | 0.036 | -0.0015 |
| 109 | SLU 69 | 0.06 | -3.61 | 58.17 | 0.1912 | 0.0376 | -0.0015 |
| 109 | SLU 70 | 0.06 | -3.81 | 58.33 | 0.2013 | 0.0371 | -0.0015 |
| 109 | SLU 71 | 0.06 | -3.6 | 57.85 | 0.1902 | 0.0374 | -0.0015 |
| 109 | SLU 72 | 0.06 | -3.8 | 58.01 | 0.2003 | 0.0368 | -0.0015 |
| 109 | SLU 73 | 0.07 | -4.37 | 64.98 | 0.231 | 0.0413 | -0.0017 |
| 109 | SLU 74 | 0.07 | -4.04 | 65.41 | 0.215 | 0.0429 | -0.0017 |
| 109 | SLU 75 | 0.07 | -4.24 | 65.57 | 0.2251 | 0.0424 | -0.0017 |
| 109 | SLU 76 | 0.07 | -4.36 | 65.37 | 0.2309 | 0.0417 | -0.0017 |
| 109 | SLU 77 | 0.07 | -4.04 | 65.8 | 0.2149 | 0.0433 | -0.0018 |
| 109 | SLU 78 | 0.07 | -4.24 | 65.96 | 0.225 | 0.0428 | -0.0017 |
| 109 | SLU 79 | 0.07 | -4.02 | 65.48 | 0.2139 | 0.0431 | -0.0017 |
| 109 | SLU 80 | 0.07 | -4.22 | 65.64 | 0.224 | 0.0425 | -0.0017 |
| 109 | SLU 81 | 0.07 | -4.22 | 67.97 | 0.2243 | 0.0447 | -0.0018 |
| 109 | SLU 82 | 0.07 | -4.42 | 68.14 | 0.2344 | 0.0441 | -0.0018 |
| 109 | SLU 83 | 0.07 | -4.21 | 68.36 | 0.2242 | 0.0451 | -0.0018 |
| 109 | SLU 84 | 0.07 | -4.41 | 68.53 | 0.2343 | 0.0446 | -0.0018 |
| 109 | SLE RA 1 | 0.05 | -2.72 | 42.97 | 0.1431 | 0.0274 | -0.0011 |
| 109 | SLE RA 2 | 0.04 | -2.94 | 43.15 | 0.1543 | 0.0268 | -0.0011 |
| 109 | SLE RA 3 | 0.05 | -2.72 | 43.44 | 0.1437 | 0.0278 | -0.0011 |
| 109 | SLE RA 4 | 0.05 | -2.86 | 43.55 | 0.1504 | 0.0275 | -0.0011 |
| 109 | SLE RA 5 | 0.04 | -2.94 | 43.41 | 0.1542 | 0.0271 | -0.0011 |
| 109 | SLE RA 6 | 0.05 | -2.72 | 43.69 | 0.1436 | 0.0281 | -0.0011 |
| 109 | SLE RA 7 | 0.05 | -2.85 | 43.8 | 0.1503 | 0.0278 | -0.0011 |
| 109 | SLE RA 8 | 0.05 | -2.71 | 43.48 | 0.1429 | 0.028 | -0.0011 |
| 109 | SLE RA 9 | 0.05 | -2.84 | 43.59 | 0.1497 | 0.0276 | -0.0011 |
| 109 | SLE RA 10 | 0.05 | -3.23 | 48.24 | 0.1701 | 0.0306 | -0.0012 |
| 109 | SLE RA 11 | 0.05 | -3.01 | 48.52 | 0.1594 | 0.0316 | -0.0013 |

| Nodo | Cont. | Reazione a traslazione | | | Reazione a rotazione | | |
|---|---|---|---|---|---|---|---|
| Ind. | N.br. | x | y | z | x | y | z |
| 109 | SLE RA 12 | 0.05 | -3.14 | 48.63 | 0.1662 | 0.0313 | -0.0013 |
| 109 | SLE RA 13 | 0.05 | -3.22 | 48.49 | 0.17 | 0.0309 | -0.0013 |
| 109 | SLE RA 14 | 0.05 | -3 | 48.78 | 0.1594 | 0.0319 | -0.0013 |
| 109 | SLE RA 15 | 0.05 | -3.14 | 48.89 | 0.1661 | 0.0316 | -0.0013 |
| 109 | SLE RA 16 | 0.05 | -2.99 | 48.57 | 0.1587 | 0.0318 | -0.0013 |
| 109 | SLE RA 17 | 0.05 | -3.13 | 48.68 | 0.1654 | 0.0314 | -0.0013 |
| 109 | SLE RA 18 | 0.05 | -3.12 | 50.23 | 0.1656 | 0.0328 | -0.0013 |
| 109 | SLE RA 19 | 0.05 | -3.26 | 50.34 | 0.1724 | 0.0324 | -0.0013 |
| 109 | SLE RA 20 | 0.05 | -3.12 | 50.49 | 0.1656 | 0.0331 | -0.0013 |
| 109 | SLE RA 21 | 0.05 | -3.25 | 50.6 | 0.1723 | 0.0327 | -0.0013 |
| 109 | SLE FR 1 | 0.05 | -2.72 | 42.97 | 0.1431 | 0.0274 | -0.0011 |
| 109 | SLE FR 2 | 0.05 | -2.76 | 43 | 0.1453 | 0.0273 | -0.0011 |
| 109 | SLE FR 3 | 0.05 | -2.72 | 43.07 | 0.1431 | 0.0275 | -0.0011 |
| 109 | SLE FR 4 | 0.05 | -2.88 | 45.18 | 0.1521 | 0.0289 | -0.0012 |
| 109 | SLE FR 5 | 0.05 | -2.84 | 45.25 | 0.1498 | 0.0291 | -0.0012 |
| 109 | SLE FR 6 | 0.05 | -2.92 | 46.6 | 0.1544 | 0.0301 | -0.0012 |
| 109 | SLE QP 1 | 0.05 | -2.72 | 42.97 | 0.1431 | 0.0274 | -0.0011 |
| 109 | SLE QP 2 | 0.05 | -2.84 | 45.15 | 0.1499 | 0.029 | -0.0012 |
| 109 | SLD 1 | 0.18 | -0.17 | 41.88 | 0.0168 | 0.1419 | -0.0052 |
| 109 | SLD 2 | 0.18 | -0.17 | 41.88 | 0.0168 | 0.1419 | -0.0052 |
| 109 | SLD 3 | 0.16 | -3.96 | 40.57 | 0.2025 | 0.1262 | -0.0045 |
| 109 | SLD 4 | 0.16 | -3.96 | 40.57 | 0.2025 | 0.1262 | -0.0045 |
| 109 | SLD 5 | 0.12 | 3.71 | 46.15 | -0.1717 | 0.0866 | -0.0034 |
| 109 | SLD 6 | 0.12 | 3.71 | 46.15 | -0.1717 | 0.0866 | -0.0034 |
| 109 | SLD 7 | 0.04 | -8.93 | 41.79 | 0.4473 | 0.0344 | -0.0011 |
| 109 | SLD 8 | 0.04 | -8.93 | 41.79 | 0.4473 | 0.0344 | -0.0011 |
| 109 | SLD 9 | 0.05 | 3.25 | 48.5 | -0.1476 | 0.0236 | -0.0012 |
| 109 | SLD 10 | 0.05 | 3.25 | 48.5 | -0.1476 | 0.0236 | -0.0012 |
| 109 | SLD 11 | -0.03 | -9.39 | 44.14 | 0.4714 | -0.0286 | 0.0011 |
| 109 | SLD 12 | -0.03 | -9.39 | 44.14 | 0.4714 | -0.0286 | 0.0011 |
| 109 | SLD 13 | -0.06 | -1.71 | 49.72 | 0.0972 | -0.0682 | 0.0022 |
| 109 | SLD 14 | -0.06 | -1.71 | 49.72 | 0.0972 | -0.0682 | 0.0022 |
| 109 | SLD 15 | -0.09 | -5.5 | 48.41 | 0.2829 | -0.0839 | 0.0028 |
| 109 | SLD 16 | -0.09 | -5.5 | 48.41 | 0.2829 | -0.0839 | 0.0028 |
| 109 | SLV 1 | 0.38 | 3.36 | 37.54 | -0.1596 | 0.3075 | -0.011 |
| 109 | SLV 2 | 0.38 | 3.36 | 37.54 | -0.1596 | 0.3075 | -0.011 |
| 109 | SLV 3 | 0.32 | -5.43 | 34.41 | 0.2708 | 0.2704 | -0.0094 |
| 109 | SLV 4 | 0.32 | -5.43 | 34.41 | 0.2708 | 0.2704 | -0.0094 |
| 109 | SLV 5 | 0.23 | 12.35 | 47.63 | -0.5958 | 0.1688 | -0.0066 |
| 109 | SLV 6 | 0.23 | 12.35 | 47.63 | -0.5958 | 0.1688 | -0.0066 |
| 109 | SLV 7 | 0.04 | -16.94 | 37.16 | 0.8389 | 0.0452 | -0.0012 |
| 109 | SLV 8 | 0.04 | -16.94 | 37.16 | 0.8389 | 0.0452 | -0.0012 |
| 109 | SLV 9 | 0.05 | 11.26 | 53.13 | -0.5392 | 0.0128 | -0.0012 |
| 109 | SLV 10 | 0.05 | 11.26 | 53.13 | -0.5392 | 0.0128 | -0.0012 |
| 109 | SLV 11 | -0.14 | -18.02 | 42.66 | 0.8955 | -0.1108 | 0.0042 |
| 109 | SLV 12 | -0.14 | -18.02 | 42.66 | 0.8955 | -0.1108 | 0.0042 |
| 109 | SLV 13 | -0.23 | -0.25 | 55.89 | 0.0289 | -0.2124 | 0.0071 |
| 109 | SLV 14 | -0.23 | -0.25 | 55.89 | 0.0289 | -0.2124 | 0.0071 |
| 109 | SLV 15 | -0.28 | -9.04 | 52.75 | 0.4594 | -0.2495 | 0.0087 |
| 109 | SLV 16 | -0.28 | -9.04 | 52.75 | 0.4594 | -0.2495 | 0.0087 |
| 110 | SLU 1 | 0.01 | 2.97 | 32.1 | -0.2415 | 0.0007 | 0 |
| 110 | SLU 2 | -0.01 | 5.67 | 33.71 | -0.3802 | -0.0091 | 0 |
| 110 | SLU 3 | 0.01 | 2.81 | 32.85 | -0.2368 | 0.0007 | 0 |
| 110 | SLU 4 | 0 | 4.43 | 33.82 | -0.32 | -0.0052 | 0 |
| 110 | SLU 5 | -0.01 | 5.41 | 34.12 | -0.3695 | -0.0091 | 0 |
| 110 | SLU 6 | 0.01 | 2.54 | 33.26 | -0.2261 | 0.0007 | 0 |
| 110 | SLU 7 | 0 | 4.16 | 34.23 | -0.3093 | -0.0052 | 0 |
| 110 | SLU 8 | 0.01 | 2.44 | 32.92 | -0.22 | 0.0007 | 0 |
| 110 | SLU 9 | 0 | 4.06 | 33.88 | -0.3033 | -0.0052 | 0 |
| 110 | SLU 10 | -0.01 | 6.08 | 38.38 | -0.4135 | -0.009 | 0 |
| 110 | SLU 11 | 0.01 | 3.22 | 37.53 | -0.2701 | 0.0008 | 0 |
| 110 | SLU 12 | 0 | 4.84 | 38.49 | -0.3533 | -0.0051 | 0 |
| 110 | SLU 13 | -0.01 | 5.81 | 38.79 | -0.4028 | -0.009 | 0 |
| 110 | SLU 14 | 0.01 | 2.95 | 37.93 | -0.2594 | 0.0007 | 0 |
| 110 | SLU 15 | 0 | 4.57 | 38.9 | -0.3426 | -0.0051 | 0 |
| 110 | SLU 16 | 0.01 | 2.84 | 37.59 | -0.2533 | 0.0007 | 0 |
| 110 | SLU 17 | 0 | 4.46 | 38.56 | -0.3366 | -0.0051 | 0 |
| 110 | SLU 18 | 0.01 | 3.55 | 38.78 | -0.2891 | 0.0008 | 0 |
| 110 | SLU 19 | 0 | 5.17 | 39.74 | -0.3723 | -0.0051 | 0 |
| 110 | SLU 20 | 0.01 | 3.29 | 39.19 | -0.2784 | 0.0008 | 0 |
| 110 | SLU 21 | 0 | 4.91 | 40.15 | -0.3616 | -0.0051 | 0 |
| 110 | SLU 22 | 0.01 | 3.26 | 36.21 | -0.2671 | 0.0007 | 0 |
| 110 | SLU 23 | -0.01 | 5.96 | 37.82 | -0.4058 | -0.009 | 0 |
| 110 | SLU 24 | 0.01 | 3.1 | 36.96 | -0.2624 | 0.0007 | 0 |
| 110 | SLU 25 | 0 | 4.72 | 37.92 | -0.3456 | -0.0051 | 0 |
| 110 | SLU 26 | -0.01 | 5.69 | 38.23 | -0.395 | -0.0091 | 0 |
| 110 | SLU 27 | 0.01 | 2.83 | 37.37 | -0.2516 | 0.0007 | 0 |
| 110 | SLU 28 | 0 | 4.45 | 38.33 | -0.3348 | -0.0052 | 0 |
| 110 | SLU 29 | 0.01 | 2.72 | 37.03 | -0.2456 | 0.0007 | 0 |
| 110 | SLU 30 | 0 | 4.34 | 37.99 | -0.3288 | -0.0052 | 0 |
| 110 | SLU 31 | -0.01 | 6.37 | 42.49 | -0.4391 | -0.009 | 0 |
| 110 | SLU 32 | 0.01 | 3.51 | 41.63 | -0.2957 | 0.0008 | 0 |
| 110 | SLU 33 | 0 | 5.13 | 42.6 | -0.3789 | -0.0051 | 0 |
| 110 | SLU 34 | -0.01 | 6.1 | 42.9 | -0.4283 | -0.009 | 0 |
| 110 | SLU 35 | 0.01 | 3.24 | 42.04 | -0.2849 | 0.0008 | 0 |
| 110 | SLU 36 | 0 | 4.86 | 43.01 | -0.3681 | -0.0051 | 0 |
| 110 | SLU 37 | 0.01 | 3.13 | 41.7 | -0.2789 | 0.0008 | 0 |
| 110 | SLU 38 | 0 | 4.75 | 42.67 | -0.3621 | -0.0051 | 0 |

| Nodo | Cont. | Reazione a traslazione | | | Reazione a rotazione | | |
|---|---|---|---|---|---|---|---|
| Ind. | N.br. | x | y | z | x | y | z |
| 110 | SLU 39 | 0.01 | 3.84 | 42.89 | -0.3147 | 0.0008 | 0 |
| 110 | SLU 40 | 0 | 5.46 | 43.85 | -0.3979 | -0.0051 | 0 |
| 110 | SLU 41 | 0.01 | 3.57 | 43.29 | -0.3039 | 0.0008 | 0 |
| 110 | SLU 42 | 0 | 5.19 | 44.26 | -0.3871 | -0.0051 | 0 |
| 110 | SLU 43 | 0.01 | 3.77 | 40.32 | -0.3052 | 0.0009 | 0 |
| 110 | SLU 44 | -0.01 | 6.47 | 41.93 | -0.444 | -0.0088 | 0 |
| 110 | SLU 45 | 0.01 | 3.61 | 41.07 | -0.3005 | 0.0009 | 0 |
| 110 | SLU 46 | 0 | 5.23 | 42.04 | -0.3837 | -0.0049 | 0 |
| 110 | SLU 47 | 0 | 6.2 | 42.34 | -0.4332 | -0.0089 | 0 |
| 110 | SLU 48 | 0.01 | 3.34 | 41.48 | -0.2898 | 0.0009 | 0 |
| 110 | SLU 49 | 0 | 4.96 | 42.45 | -0.373 | -0.005 | 0 |
| 110 | SLU 50 | 0.01 | 3.23 | 41.14 | -0.2837 | 0.0009 | 0 |
| 110 | SLU 51 | 0 | 4.85 | 42.11 | -0.367 | -0.005 | 0 |
| 110 | SLU 52 | 0 | 6.87 | 46.61 | -0.4773 | -0.0088 | 0 |
| 110 | SLU 53 | 0.01 | 4.01 | 45.75 | -0.3338 | 0.001 | 0 |
| 110 | SLU 54 | 0 | 5.63 | 46.71 | -0.417 | -0.0049 | 0 |
| 110 | SLU 55 | 0 | 6.61 | 47.02 | -0.4665 | -0.0088 | 0 |
| 110 | SLU 56 | 0.01 | 3.74 | 46.16 | -0.3231 | 0.001 | 0 |
| 110 | SLU 57 | 0 | 5.36 | 47.12 | -0.4063 | -0.0049 | 0 |
| 110 | SLU 58 | 0.01 | 3.64 | 45.82 | -0.317 | 0.001 | 0 |
| 110 | SLU 59 | 0 | 5.26 | 46.78 | -0.4003 | -0.0049 | 0 |
| 110 | SLU 60 | 0.01 | 4.35 | 47 | -0.3528 | 0.001 | 0 |
| 110 | SLU 61 | 0 | 5.97 | 47.97 | -0.436 | -0.0049 | 0 |
| 110 | SLU 62 | 0.01 | 4.08 | 47.41 | -0.3421 | 0.001 | 0 |
| 110 | SLU 63 | 0 | 5.7 | 48.38 | -0.4253 | -0.0049 | 0 |
| 110 | SLU 64 | 0.01 | 4.05 | 44.43 | -0.3308 | 0.0009 | 0 |
| 110 | SLU 65 | 0 | 6.75 | 46.04 | -0.4695 | -0.0088 | 0 |
| 110 | SLU 66 | 0.01 | 3.89 | 45.18 | -0.3261 | 0.0009 | 0 |
| 110 | SLU 67 | 0 | 5.51 | 46.15 | -0.4093 | -0.0049 | 0 |
| 110 | SLU 68 | 0 | 6.49 | 46.45 | -0.4587 | -0.0088 | 0 |
| 110 | SLU 69 | 0.01 | 3.62 | 45.59 | -0.3153 | 0.0009 | 0 |
| 110 | SLU 70 | 0 | 5.24 | 46.55 | -0.3985 | -0.005 | 0 |
| 110 | SLU 71 | 0.01 | 3.52 | 45.25 | -0.3093 | 0.0009 | 0 |
| 110 | SLU 72 | 0 | 5.14 | 46.21 | -0.3925 | -0.005 | 0 |
| 110 | SLU 73 | 0 | 7.16 | 50.71 | -0.5028 | -0.0088 | 0 |
| 110 | SLU 74 | 0.01 | 4.3 | 49.85 | -0.3594 | 0.001 | 0 |
| 110 | SLU 75 | 0 | 5.92 | 50.82 | -0.4426 | -0.0049 | 0 |
| 110 | SLU 76 | 0 | 6.89 | 51.12 | -0.492 | -0.0088 | 0 |
| 110 | SLU 77 | 0.01 | 4.03 | 50.26 | -0.3486 | 0.001 | 0 |
| 110 | SLU 78 | 0 | 5.65 | 51.23 | -0.4318 | -0.0049 | 0 |
| 110 | SLU 79 | 0.01 | 3.93 | 49.92 | -0.3426 | 0.001 | 0 |
| 110 | SLU 80 | 0 | 5.55 | 50.89 | -0.4258 | -0.0049 | 0 |
| 110 | SLU 81 | 0.01 | 4.63 | 51.11 | -0.3784 | 0.001 | 0 |
| 110 | SLU 82 | 0 | 6.25 | 52.07 | -0.4616 | -0.0048 | 0 |
| 110 | SLU 83 | 0.01 | 4.37 | 51.52 | -0.3676 | 0.001 | 0 |
| 110 | SLU 84 | 0 | 5.99 | 52.48 | -0.4508 | -0.0049 | 0 |
| 110 | SLE RA 1 | 0.01 | 3.05 | 33.27 | -0.2488 | 0.0007 | 0 |
| 110 | SLE RA 2 | 0 | 4.85 | 34.35 | -0.3413 | -0.0058 | 0 |
| 110 | SLE RA 3 | 0.01 | 2.95 | 33.77 | -0.2457 | 0.0007 | 0 |
| 110 | SLE RA 4 | 0 | 4.03 | 34.42 | -0.3012 | -0.0032 | 0 |
| 110 | SLE RA 5 | 0 | 4.68 | 34.62 | -0.3341 | -0.0058 | 0 |
| 110 | SLE RA 6 | 0.01 | 2.77 | 34.05 | -0.2385 | 0.0007 | 0 |
| 110 | SLE RA 7 | 0 | 3.85 | 34.69 | -0.294 | -0.0032 | 0 |
| 110 | SLE RA 8 | 0.01 | 2.7 | 33.82 | -0.2345 | 0.0007 | 0 |
| 110 | SLE RA 9 | 0 | 3.78 | 34.46 | -0.29 | -0.0032 | 0 |
| 110 | SLE RA 10 | 0 | 5.13 | 37.46 | -0.3635 | -0.0058 | 0 |
| 110 | SLE RA 11 | 0.01 | 3.22 | 36.89 | -0.2679 | 0.0007 | 0 |
| 110 | SLE RA 12 | 0 | 4.3 | 37.53 | -0.3234 | -0.0032 | 0 |
| 110 | SLE RA 13 | 0 | 4.95 | 37.74 | -0.3563 | -0.0058 | 0 |
| 110 | SLE RA 14 | 0.01 | 3.04 | 37.16 | -0.2607 | 0.0007 | 0 |
| 110 | SLE RA 15 | 0 | 4.12 | 37.81 | -0.3162 | -0.0032 | 0 |
| 110 | SLE RA 16 | 0.01 | 2.97 | 36.94 | -0.2567 | 0.0007 | 0 |
| 110 | SLE RA 17 | 0 | 4.05 | 37.58 | -0.3122 | -0.0032 | 0 |
| 110 | SLE RA 18 | 0.01 | 3.44 | 37.73 | -0.2806 | 0.0008 | 0 |
| 110 | SLE RA 19 | 0 | 4.52 | 38.37 | -0.336 | -0.0031 | 0 |
| 110 | SLE RA 20 | 0.01 | 3.26 | 38 | -0.2734 | 0.0008 | 0 |
| 110 | SLE RA 21 | 0 | 4.34 | 38.64 | -0.3289 | -0.0031 | 0 |
| 110 | SLE FR 1 | 0.01 | 3.05 | 33.27 | -0.2488 | 0.0007 | 0 |
| 110 | SLE FR 2 | 0 | 3.41 | 33.49 | -0.2673 | -0.0006 | 0 |
| 110 | SLE FR 3 | 0.01 | 2.98 | 33.38 | -0.246 | 0.0007 | 0 |
| 110 | SLE FR 4 | 0 | 3.53 | 34.82 | -0.2768 | -0.0006 | 0 |
| 110 | SLE FR 5 | 0.01 | 3.1 | 34.72 | -0.2555 | 0.0007 | 0 |
| 110 | SLE FR 6 | 0.01 | 3.25 | 35.5 | -0.2647 | 0.0007 | 0 |
| 110 | SLE QP 1 | 0.01 | 3.05 | 33.27 | -0.2488 | 0.0007 | 0 |
| 110 | SLE QP 2 | 0.01 | 3.17 | 34.61 | -0.2584 | 0.0007 | 0 |
| 110 | SLD 1 | 0.08 | 6.99 | 38 | -0.442 | 0.0676 | -0.0001 |
| 110 | SLD 2 | 0.08 | 6.99 | 38 | -0.442 | 0.0676 | -0.0001 |
| 110 | SLD 3 | 0.1 | 2.97 | 35.63 | -0.2497 | 0.0876 | -0.0001 |
| 110 | SLD 4 | 0.1 | 2.97 | 35.63 | -0.2497 | 0.0876 | -0.0001 |
| 110 | SLD 5 | -0.01 | 10.41 | 39.22 | -0.6052 | -0.0096 | 0 |
| 110 | SLD 6 | -0.01 | 10.41 | 39.22 | -0.6052 | -0.0096 | 0 |
| 110 | SLD 7 | 0.07 | -2.98 | 31.33 | 0.036 | 0.0572 | 0 |
| 110 | SLD 8 | 0.07 | -2.98 | 31.33 | 0.036 | 0.0572 | 0 |
| 110 | SLD 9 | -0.06 | 9.33 | 37.89 | -0.5527 | -0.0558 | 0.0001 |
| 110 | SLD 10 | -0.06 | 9.33 | 37.89 | -0.5527 | -0.0558 | 0.0001 |
| 110 | SLD 11 | 0.02 | -4.07 | 30 | 0.0885 | 0.0111 | 0 |
| 110 | SLD 12 | 0.02 | -4.07 | 30 | 0.0885 | 0.0111 | 0 |
| 110 | SLD 13 | -0.09 | 3.37 | 33.59 | -0.267 | -0.0862 | 0.0001 |

| Nodo | Cont. | Reazione a traslazione | | | Reazione a rotazione | | |
|---|---|---|---|---|---|---|---|
| Ind. | N.br. | x | y | z | x | y | z |
| 110 | SLD 14 | -0.09 | 3.37 | 33.59 | -0.267 | -0.0862 | 0.0001 |
| 110 | SLD 15 | -0.07 | -0.65 | 31.22 | -0.0747 | -0.0661 | 0.0001 |
| 110 | SLD 16 | -0.07 | -0.65 | 31.22 | -0.0747 | -0.0661 | 0.0001 |
| 110 | SLV 1 | 0.17 | 12.26 | 42.57 | -0.6963 | 0.1604 | -0.0002 |
| 110 | SLV 2 | 0.17 | 12.26 | 42.57 | -0.6963 | 0.1604 | -0.0002 |
| 110 | SLV 3 | 0.24 | 2.81 | 36.98 | -0.2429 | 0.2113 | -0.0002 |
| 110 | SLV 4 | 0.24 | 2.81 | 36.98 | -0.2429 | 0.2113 | -0.0002 |
| 110 | SLV 5 | -0.04 | 20.24 | 45.47 | -1.0774 | -0.0286 | 0 |
| 110 | SLV 6 | -0.04 | 20.24 | 45.47 | -1.0774 | -0.0286 | 0 |
| 110 | SLV 7 | 0.17 | -11.28 | 26.85 | 0.434 | 0.1411 | -0.0001 |
| 110 | SLV 8 | 0.17 | -11.28 | 26.85 | 0.434 | 0.1411 | -0.0001 |
| 110 | SLV 9 | -0.16 | 17.63 | 42.37 | -0.9507 | -0.1396 | 0.0002 |
| 110 | SLV 10 | -0.16 | 17.63 | 42.37 | -0.9507 | -0.1396 | 0.0002 |
| 110 | SLV 11 | 0.05 | -13.9 | 23.75 | 0.5607 | 0.03 | 0 |
| 110 | SLV 12 | 0.05 | -13.9 | 23.75 | 0.5607 | 0.03 | 0 |
| 110 | SLV 13 | -0.22 | 3.54 | 32.24 | -0.2738 | -0.2098 | 0.0002 |
| 110 | SLV 14 | -0.22 | 3.54 | 32.24 | -0.2738 | -0.2098 | 0.0002 |
| 110 | SLV 15 | -0.16 | -5.92 | 26.65 | 0.1796 | -0.1589 | 0.0002 |
| 110 | SLV 16 | -0.16 | -5.92 | 26.65 | 0.1796 | -0.1589 | 0.0002 |
| 111 | SLU 1 | -0.01 | 6.91 | 54.7 | -0.3421 | 0.0009 | 0 |
| 111 | SLU 2 | 0.07 | 8.28 | 58.4 | -0.4075 | 0.0694 | 0 |
| 111 | SLU 3 | -0.01 | 7.16 | 56.43 | -0.3545 | 0.0007 | 0 |
| 111 | SLU 4 | 0.04 | 7.97 | 58.65 | -0.3937 | 0.0418 | 0 |
| 111 | SLU 5 | 0.07 | 8.42 | 59.5 | -0.4149 | 0.0692 | 0 |
| 111 | SLU 6 | -0.01 | 7.3 | 57.53 | -0.3619 | 0.0005 | 0 |
| 111 | SLU 7 | 0.04 | 8.11 | 59.75 | -0.4011 | 0.0416 | 0 |
| 111 | SLU 8 | -0.01 | 7.19 | 56.9 | -0.357 | 0.0005 | 0 |
| 111 | SLU 9 | 0.04 | 8.01 | 59.12 | -0.3962 | 0.0416 | 0 |
| 111 | SLU 10 | 0.07 | 9.14 | 64.53 | -0.4498 | 0.0701 | 0 |
| 111 | SLU 11 | -0.01 | 8.02 | 62.56 | -0.3968 | 0.0014 | 0 |
| 111 | SLU 12 | 0.04 | 8.84 | 64.78 | -0.4361 | 0.0425 | 0 |
| 111 | SLU 13 | 0.07 | 9.28 | 65.63 | -0.4573 | 0.0699 | 0 |
| 111 | SLU 14 | -0.01 | 8.16 | 63.66 | -0.4043 | 0.0012 | 0 |
| 111 | SLU 15 | 0.04 | 8.97 | 65.88 | -0.4435 | 0.0423 | 0 |
| 111 | SLU 16 | -0.01 | 8.05 | 63.02 | -0.3993 | 0.0012 | 0 |
| 111 | SLU 17 | 0.04 | 8.87 | 65.24 | -0.4386 | 0.0423 | 0 |
| 111 | SLU 18 | -0.01 | 8.14 | 63.45 | -0.4026 | 0.002 | 0 |
| 111 | SLU 19 | 0.04 | 8.96 | 65.67 | -0.4418 | 0.043 | 0 |
| 111 | SLU 20 | -0.01 | 8.28 | 64.55 | -0.41 | 0.0018 | 0 |
| 111 | SLU 21 | 0.04 | 9.1 | 66.77 | -0.4493 | 0.0428 | 0 |
| 111 | SLU 22 | -0.01 | 7.8 | 61.36 | -0.3866 | 0.0012 | 0 |
| 111 | SLU 23 | 0.07 | 9.16 | 65.06 | -0.452 | 0.0696 | 0 |
| 111 | SLU 24 | -0.01 | 8.04 | 63.09 | -0.399 | 0.001 | 0 |
| 111 | SLU 25 | 0.04 | 8.86 | 65.31 | -0.4382 | 0.042 | 0 |
| 111 | SLU 26 | 0.07 | 9.3 | 66.16 | -0.4594 | 0.0694 | 0 |
| 111 | SLU 27 | -0.01 | 8.18 | 64.19 | -0.4064 | 0.0008 | 0 |
| 111 | SLU 28 | 0.04 | 9 | 66.41 | -0.4456 | 0.0418 | 0 |
| 111 | SLU 29 | -0.01 | 8.08 | 63.56 | -0.4015 | 0.0008 | 0 |
| 111 | SLU 30 | 0.04 | 8.9 | 65.78 | -0.4407 | 0.0418 | 0 |
| 111 | SLU 31 | 0.07 | 10.02 | 71.19 | -0.4943 | 0.0703 | 0 |
| 111 | SLU 32 | -0.01 | 8.9 | 69.22 | -0.4413 | 0.0017 | 0 |
| 111 | SLU 33 | 0.04 | 9.72 | 71.44 | -0.4806 | 0.0427 | 0 |
| 111 | SLU 34 | 0.07 | 10.16 | 72.28 | -0.5018 | 0.0701 | 0 |
| 111 | SLU 35 | -0.01 | 9.04 | 70.31 | -0.4488 | 0.0015 | 0 |
| 111 | SLU 36 | 0.04 | 9.86 | 72.53 | -0.488 | 0.0425 | 0 |
| 111 | SLU 37 | -0.01 | 8.94 | 69.68 | -0.4438 | 0.0015 | 0 |
| 111 | SLU 38 | 0.04 | 9.76 | 71.9 | -0.4831 | 0.0426 | 0 |
| 111 | SLU 39 | -0.01 | 9.03 | 70.11 | -0.4471 | 0.0022 | 0 |
| 111 | SLU 40 | 0.04 | 9.85 | 72.33 | -0.4863 | 0.0433 | 0 |
| 111 | SLU 41 | -0.01 | 9.17 | 71.21 | -0.4545 | 0.002 | 0 |
| 111 | SLU 42 | 0.04 | 9.99 | 73.43 | -0.4938 | 0.0431 | 0 |
| 111 | SLU 43 | -0.01 | 8.68 | 68.83 | -0.4294 | 0.0012 | 0 |
| 111 | SLU 44 | 0.07 | 10.05 | 72.53 | -0.4948 | 0.0696 | 0 |
| 111 | SLU 45 | -0.01 | 8.93 | 70.56 | -0.4418 | 0.0009 | 0 |
| 111 | SLU 46 | 0.03 | 9.74 | 72.78 | -0.4811 | 0.042 | 0 |
| 111 | SLU 47 | 0.07 | 10.19 | 73.63 | -0.5023 | 0.0694 | 0 |
| 111 | SLU 48 | -0.01 | 9.07 | 71.66 | -0.4493 | 0.0007 | 0 |
| 111 | SLU 49 | 0.03 | 9.88 | 73.88 | -0.4885 | 0.0418 | 0 |
| 111 | SLU 50 | -0.01 | 8.96 | 71.03 | -0.4443 | 0.0007 | 0 |
| 111 | SLU 51 | 0.03 | 9.78 | 73.25 | -0.4836 | 0.0418 | 0 |
| 111 | SLU 52 | 0.07 | 10.91 | 78.66 | -0.5372 | 0.0703 | 0 |
| 111 | SLU 53 | -0.01 | 9.79 | 76.69 | -0.4842 | 0.0016 | 0 |
| 111 | SLU 54 | 0.03 | 10.61 | 78.91 | -0.5234 | 0.0427 | 0 |
| 111 | SLU 55 | 0.07 | 11.05 | 79.75 | -0.5446 | 0.0701 | 0 |
| 111 | SLU 56 | -0.01 | 9.93 | 77.78 | -0.4916 | 0.0014 | 0 |
| 111 | SLU 57 | 0.03 | 10.75 | 80 | -0.5309 | 0.0425 | 0 |
| 111 | SLU 58 | -0.01 | 9.82 | 77.15 | -0.4867 | 0.0015 | 0 |
| 111 | SLU 59 | 0.03 | 10.64 | 79.37 | -0.5259 | 0.0425 | 0 |
| 111 | SLU 60 | -0.01 | 9.91 | 77.58 | -0.49 | 0.0022 | 0 |
| 111 | SLU 61 | 0.04 | 10.73 | 79.8 | -0.5292 | 0.0432 | 0 |
| 111 | SLU 62 | -0.01 | 10.05 | 78.68 | -0.4974 | 0.002 | 0 |
| 111 | SLU 63 | 0.03 | 10.87 | 80.9 | -0.5366 | 0.043 | 0 |
| 111 | SLU 64 | -0.01 | 9.57 | 75.49 | -0.4739 | 0.0014 | 0 |
| 111 | SLU 65 | 0.07 | 10.93 | 79.19 | -0.5393 | 0.0698 | 0 |
| 111 | SLU 66 | -0.01 | 9.81 | 77.22 | -0.4863 | 0.0012 | 0 |
| 111 | SLU 67 | 0.03 | 10.63 | 79.44 | -0.5256 | 0.0422 | 0 |
| 111 | SLU 68 | 0.07 | 11.07 | 80.29 | -0.5468 | 0.0696 | 0 |
| 111 | SLU 69 | -0.01 | 9.95 | 78.32 | -0.4938 | 0.001 | 0 |

| Nodo | Cont. | Reazione a traslazione | | | Reazione a rotazione | | |
|---|---|---|---|---|---|---|---|
| Ind. | N.br. | x | y | z | x | y | z |
| 111 | SLU 70 | 0.03 | 10.77 | 80.54 | -0.533 | 0.042 | 0 |
| 111 | SLU 71 | -0.01 | 9.85 | 77.68 | -0.4888 | 0.001 | 0 |
| 111 | SLU 72 | 0.03 | 10.67 | 79.9 | -0.5281 | 0.0421 | 0 |
| 111 | SLU 73 | 0.07 | 11.79 | 85.31 | -0.5817 | 0.0706 | 0 |
| 111 | SLU 74 | -0.01 | 10.67 | 83.34 | -0.5287 | 0.0019 | 0 |
| 111 | SLU 75 | 0.03 | 11.49 | 85.56 | -0.5679 | 0.0429 | 0 |
| 111 | SLU 76 | 0.07 | 11.93 | 86.41 | -0.5891 | 0.0703 | 0 |
| 111 | SLU 77 | -0.01 | 10.81 | 84.44 | -0.5361 | 0.0017 | 0 |
| 111 | SLU 78 | 0.03 | 11.63 | 86.66 | -0.5754 | 0.0427 | 0 |
| 111 | SLU 79 | -0.01 | 10.71 | 83.81 | -0.5312 | 0.0017 | 0 |
| 111 | SLU 80 | 0.03 | 11.53 | 86.03 | -0.5704 | 0.0428 | 0 |
| 111 | SLU 81 | -0.01 | 10.8 | 84.24 | -0.5344 | 0.0024 | 0 |
| 111 | SLU 82 | 0.03 | 11.62 | 86.46 | -0.5737 | 0.0435 | 0 |
| 111 | SLU 83 | -0.01 | 10.94 | 85.34 | -0.5419 | 0.0022 | 0 |
| 111 | SLU 84 | 0.03 | 11.76 | 87.56 | -0.5811 | 0.0433 | 0 |
| 111 | SLE RA 1 | -0.01 | 7.17 | 56.6 | -0.3548 | 0.001 | 0 |
| 111 | SLE RA 2 | 0.04 | 8.08 | 59.07 | -0.3984 | 0.0467 | 0 |
| 111 | SLE RA 3 | -0.01 | 7.33 | 57.76 | -0.363 | 0.0009 | 0 |
| 111 | SLE RA 4 | 0.02 | 7.87 | 59.24 | -0.3892 | 0.0282 | 0 |
| 111 | SLE RA 5 | 0.04 | 8.17 | 59.8 | -0.4033 | 0.0465 | 0 |
| 111 | SLE RA 6 | -0.01 | 7.42 | 58.49 | -0.368 | 0.0007 | 0 |
| 111 | SLE RA 7 | 0.02 | 7.97 | 59.97 | -0.3942 | 0.0281 | 0 |
| 111 | SLE RA 8 | -0.01 | 7.35 | 58.07 | -0.3647 | 0.0007 | 0 |
| 111 | SLE RA 9 | 0.02 | 7.9 | 59.55 | -0.3909 | 0.0281 | 0 |
| 111 | SLE RA 10 | 0.04 | 8.65 | 63.16 | -0.4266 | 0.0471 | 0 |
| 111 | SLE RA 11 | -0.01 | 7.9 | 61.84 | -0.3913 | 0.0013 | 0 |
| 111 | SLE RA 12 | 0.02 | 8.45 | 63.32 | -0.4174 | 0.0287 | 0 |
| 111 | SLE RA 13 | 0.04 | 8.74 | 63.89 | -0.4316 | 0.047 | 0 |
| 111 | SLE RA 14 | -0.01 | 8 | 62.57 | -0.3963 | 0.0012 | 0 |
| 111 | SLE RA 15 | 0.02 | 8.54 | 64.05 | -0.4224 | 0.0286 | 0 |
| 111 | SLE RA 16 | -0.01 | 7.93 | 62.15 | -0.393 | 0.0012 | 0 |
| 111 | SLE RA 17 | 0.02 | 8.47 | 63.63 | -0.4191 | 0.0286 | 0 |
| 111 | SLE RA 18 | -0.01 | 7.99 | 62.44 | -0.3951 | 0.0017 | 0 |
| 111 | SLE RA 19 | 0.02 | 8.53 | 63.92 | -0.4213 | 0.0291 | 0 |
| 111 | SLE RA 20 | -0.01 | 8.08 | 63.17 | -0.4001 | 0.0016 | 0 |
| 111 | SLE RA 21 | 0.02 | 8.63 | 64.65 | -0.4262 | 0.0289 | 0 |
| 111 | SLE FR 1 | -0.01 | 7.17 | 56.6 | -0.3548 | 0.001 | 0 |
| 111 | SLE FR 2 | 0 | 7.35 | 57.1 | -0.3635 | 0.0101 | 0 |
| 111 | SLE FR 3 | -0.01 | 7.2 | 56.9 | -0.3568 | 0.001 | 0 |
| 111 | SLE FR 4 | 0 | 7.59 | 58.85 | -0.3756 | 0.0103 | 0 |
| 111 | SLE FR 5 | -0.01 | 7.45 | 58.65 | -0.3689 | 0.0012 | 0 |
| 111 | SLE FR 6 | -0.01 | 7.58 | 59.52 | -0.375 | 0.0014 | 0 |
| 111 | SLE QP 1 | -0.01 | 7.17 | 56.6 | -0.3548 | 0.001 | 0 |
| 111 | SLE QP 2 | -0.01 | 7.41 | 58.35 | -0.3669 | 0.0012 | 0 |
| 111 | SLD 1 | 0.29 | 7.6 | 45.01 | -0.3601 | 0.2455 | -0.0001 |
| 111 | SLD 2 | 0.29 | 7.6 | 45.01 | -0.3601 | 0.2455 | -0.0001 |
| 111 | SLD 3 | 0.17 | 3.29 | 38.26 | -0.1732 | 0.1495 | -0.0002 |
| 111 | SLD 4 | 0.17 | 3.29 | 38.26 | -0.1732 | 0.1495 | -0.0002 |
| 111 | SLD 5 | 0.27 | 14.01 | 64.58 | -0.6482 | 0.22 | 0 |
| 111 | SLD 6 | 0.27 | 14.01 | 64.58 | -0.6482 | 0.22 | 0 |
| 111 | SLD 7 | -0.14 | -0.36 | 42.1 | -0.0255 | -0.0999 | -0.0001 |
| 111 | SLD 8 | -0.14 | -0.36 | 42.1 | -0.0255 | -0.0999 | -0.0001 |
| 111 | SLD 9 | 0.13 | 15.19 | 74.61 | -0.7083 | 0.1023 | 0.0001 |
| 111 | SLD 10 | 0.13 | 15.19 | 74.61 | -0.7083 | 0.1023 | 0.0001 |
| 111 | SLD 11 | -0.29 | 0.82 | 52.13 | -0.0856 | -0.2176 | -0.0001 |
| 111 | SLD 12 | -0.29 | 0.82 | 52.13 | -0.0856 | -0.2176 | -0.0001 |
| 111 | SLD 13 | -0.19 | 11.54 | 78.44 | -0.5605 | -0.1471 | 0.0001 |
| 111 | SLD 14 | -0.19 | 11.54 | 78.44 | -0.5605 | -0.1471 | 0.0001 |
| 111 | SLD 15 | -0.31 | 7.23 | 71.7 | -0.3737 | -0.243 | 0.0001 |
| 111 | SLD 16 | -0.31 | 7.23 | 71.7 | -0.3737 | -0.243 | 0.0001 |
| 111 | SLV 1 | 0.71 | 7.83 | 27.15 | -0.35 | 0.5877 | -0.0003 |
| 111 | SLV 2 | 0.71 | 7.83 | 27.15 | -0.35 | 0.5877 | -0.0003 |
| 111 | SLV 3 | 0.39 | -2.23 | 11.33 | 0.0858 | 0.3431 | -0.0004 |
| 111 | SLV 4 | 0.39 | -2.23 | 11.33 | 0.0858 | 0.3431 | -0.0004 |
| 111 | SLV 5 | 0.68 | 22.79 | 72.99 | -1.0228 | 0.5482 | 0.0001 |
| 111 | SLV 6 | 0.68 | 22.79 | 72.99 | -1.0228 | 0.5482 | 0.0001 |
| 111 | SLV 7 | -0.37 | -10.74 | 20.25 | 0.4299 | -0.2672 | -0.0003 |
| 111 | SLV 8 | -0.37 | -10.74 | 20.25 | 0.4299 | -0.2672 | -0.0003 |
| 111 | SLV 9 | 0.35 | 25.56 | 96.46 | -1.1636 | 0.2697 | 0.0003 |
| 111 | SLV 10 | 0.35 | 25.56 | 96.46 | -1.1636 | 0.2697 | 0.0003 |
| 111 | SLV 11 | -0.7 | -7.97 | 43.72 | 0.289 | -0.5457 | -0.0001 |
| 111 | SLV 12 | -0.7 | -7.97 | 43.72 | 0.289 | -0.5457 | -0.0001 |
| 111 | SLV 13 | -0.41 | 17.05 | 105.38 | -0.8195 | -0.3406 | 0.0004 |
| 111 | SLV 14 | -0.41 | 17.05 | 105.38 | -0.8195 | -0.3406 | 0.0004 |
| 111 | SLV 15 | -0.73 | 7 | 89.56 | -0.3838 | -0.5852 | 0.0002 |
| 111 | SLV 16 | -0.73 | 7 | 89.56 | -0.3838 | -0.5852 | 0.0002 |
| 112 | SLU 1 | -0.2 | 5.86 | 56.7 | -0.4222 | -0.1483 | -0.0005 |
| 112 | SLU 2 | -0.3 | 7.49 | 60.37 | -0.5148 | -0.2283 | -0.0008 |
| 112 | SLU 3 | -0.21 | 6.19 | 59.28 | -0.4466 | -0.1546 | -0.0005 |
| 112 | SLU 4 | -0.27 | 7.17 | 61.48 | -0.5022 | -0.2026 | -0.0007 |
| 112 | SLU 5 | -0.31 | 7.77 | 62.51 | -0.5355 | -0.2331 | -0.0008 |
| 112 | SLU 6 | -0.22 | 6.47 | 61.42 | -0.4673 | -0.1594 | -0.0005 |
| 112 | SLU 7 | -0.28 | 7.45 | 63.62 | -0.5229 | -0.2074 | -0.0007 |
| 112 | SLU 8 | -0.22 | 6.41 | 60.98 | -0.4636 | -0.158 | -0.0005 |
| 112 | SLU 9 | -0.27 | 7.39 | 63.18 | -0.5192 | -0.2059 | -0.0007 |
| 112 | SLU 10 | -0.33 | 8.12 | 66.77 | -0.5631 | -0.2478 | -0.0009 |
| 112 | SLU 11 | -0.24 | 6.82 | 65.68 | -0.4948 | -0.1742 | -0.0006 |
| 112 | SLU 12 | -0.3 | 7.79 | 67.88 | -0.5504 | -0.2222 | -0.0008 |

| Nodo | Cont. | Reazione a traslazione | | | Reazione a rotazione | | |
|---|---|---|---|---|---|---|---|
| Ind. | N.br. | x | y | z | x | y | z |
| 112 | SLU 13 | -0.33 | 8.39 | 68.91 | -0.5838 | -0.2527 | -0.0009 |
| 112 | SLU 14 | -0.25 | 7.09 | 67.82 | -0.5156 | -0.179 | -0.0006 |
| 112 | SLU 15 | -0.3 | 8.07 | 70.02 | -0.5711 | -0.227 | -0.0008 |
| 112 | SLU 16 | -0.24 | 7.04 | 67.38 | -0.5118 | -0.1776 | -0.0006 |
| 112 | SLU 17 | -0.3 | 8.02 | 69.58 | -0.5674 | -0.2255 | -0.0008 |
| 112 | SLU 18 | -0.24 | 6.75 | 65.85 | -0.4911 | -0.1763 | -0.0006 |
| 112 | SLU 19 | -0.3 | 7.73 | 68.05 | -0.5467 | -0.2243 | -0.0008 |
| 112 | SLU 20 | -0.25 | 7.03 | 67.99 | -0.5118 | -0.1811 | -0.0006 |
| 112 | SLU 21 | -0.31 | 8.01 | 70.19 | -0.5674 | -0.2291 | -0.0008 |
| 112 | SLU 22 | -0.23 | 6.58 | 63.79 | -0.4778 | -0.1688 | -0.0006 |
| 112 | SLU 23 | -0.33 | 8.21 | 67.45 | -0.5704 | -0.2488 | -0.0009 |
| 112 | SLU 24 | -0.24 | 6.9 | 66.37 | -0.5022 | -0.1751 | -0.0006 |
| 112 | SLU 25 | -0.3 | 7.88 | 68.57 | -0.5578 | -0.2231 | -0.0008 |
| 112 | SLU 26 | -0.33 | 8.48 | 69.6 | -0.5912 | -0.2536 | -0.0009 |
| 112 | SLU 27 | -0.25 | 7.18 | 68.51 | -0.5229 | -0.1799 | -0.0006 |
| 112 | SLU 28 | -0.31 | 8.16 | 70.71 | -0.5785 | -0.2279 | -0.0008 |
| 112 | SLU 29 | -0.24 | 7.13 | 68.07 | -0.5192 | -0.1785 | -0.0006 |
| 112 | SLU 30 | -0.3 | 8.1 | 70.27 | -0.5748 | -0.2264 | -0.0008 |
| 112 | SLU 31 | -0.35 | 8.83 | 73.86 | -0.6187 | -0.2683 | -0.0009 |
| 112 | SLU 32 | -0.27 | 7.53 | 72.77 | -0.5505 | -0.1947 | -0.0007 |
| 112 | SLU 33 | -0.32 | 8.51 | 74.97 | -0.6061 | -0.2427 | -0.0008 |
| 112 | SLU 34 | -0.36 | 9.11 | 76 | -0.6394 | -0.2732 | -0.0009 |
| 112 | SLU 35 | -0.27 | 7.8 | 74.91 | -0.5712 | -0.1995 | -0.0007 |
| 112 | SLU 36 | -0.33 | 8.78 | 77.11 | -0.6268 | -0.2475 | -0.0008 |
| 112 | SLU 37 | -0.27 | 7.75 | 74.47 | -0.5675 | -0.198 | -0.0007 |
| 112 | SLU 38 | -0.33 | 8.73 | 76.67 | -0.6231 | -0.246 | -0.0008 |
| 112 | SLU 39 | -0.27 | 7.47 | 72.93 | -0.5467 | -0.1968 | -0.0007 |
| 112 | SLU 40 | -0.33 | 8.44 | 75.13 | -0.6023 | -0.2447 | -0.0008 |
| 112 | SLU 41 | -0.28 | 7.74 | 75.07 | -0.5674 | -0.2016 | -0.0007 |
| 112 | SLU 42 | -0.33 | 8.72 | 77.27 | -0.623 | -0.2496 | -0.0009 |
| 112 | SLU 43 | -0.25 | 7.38 | 71.28 | -0.5298 | -0.1857 | -0.0006 |
| 112 | SLU 44 | -0.35 | 9.01 | 74.95 | -0.6224 | -0.2657 | -0.0009 |
| 112 | SLU 45 | -0.26 | 7.71 | 73.86 | -0.5542 | -0.1921 | -0.0006 |
| 112 | SLU 46 | -0.32 | 8.69 | 76.06 | -0.6098 | -0.24 | -0.0008 |
| 112 | SLU 47 | -0.36 | 9.29 | 77.09 | -0.6431 | -0.2706 | -0.0009 |
| 112 | SLU 48 | -0.27 | 7.98 | 76 | -0.5749 | -0.1969 | -0.0007 |
| 112 | SLU 49 | -0.33 | 8.96 | 78.2 | -0.6305 | -0.2449 | -0.0008 |
| 112 | SLU 50 | -0.27 | 7.93 | 75.56 | -0.5712 | -0.1954 | -0.0007 |
| 112 | SLU 51 | -0.33 | 8.91 | 77.76 | -0.6268 | -0.2434 | -0.0008 |
| 112 | SLU 52 | -0.38 | 9.63 | 81.35 | -0.6706 | -0.2853 | -0.001 |
| 112 | SLU 53 | -0.29 | 8.33 | 80.26 | -0.6024 | -0.2117 | -0.0007 |
| 112 | SLU 54 | -0.35 | 9.31 | 82.46 | -0.658 | -0.2596 | -0.0009 |
| 112 | SLU 55 | -0.38 | 9.91 | 83.49 | -0.6914 | -0.2901 | -0.001 |
| 112 | SLU 56 | -0.3 | 8.61 | 82.4 | -0.6231 | -0.2165 | -0.0007 |
| 112 | SLU 57 | -0.35 | 9.59 | 84.6 | -0.6787 | -0.2645 | -0.0009 |
| 112 | SLU 58 | -0.29 | 8.55 | 81.96 | -0.6194 | -0.215 | -0.0007 |
| 112 | SLU 59 | -0.35 | 9.53 | 84.17 | -0.675 | -0.263 | -0.0009 |
| 112 | SLU 60 | -0.29 | 8.27 | 80.43 | -0.5987 | -0.2137 | -0.0007 |
| 112 | SLU 61 | -0.35 | 9.25 | 82.63 | -0.6543 | -0.2617 | -0.0009 |
| 112 | SLU 62 | -0.3 | 8.55 | 82.57 | -0.6194 | -0.2186 | -0.0007 |
| 112 | SLU 63 | -0.36 | 9.52 | 84.77 | -0.675 | -0.2666 | -0.0009 |
| 112 | SLU 64 | -0.28 | 8.09 | 78.37 | -0.5854 | -0.2062 | -0.0007 |
| 112 | SLU 65 | -0.38 | 9.72 | 82.03 | -0.678 | -0.2862 | -0.001 |
| 112 | SLU 66 | -0.29 | 8.42 | 80.95 | -0.6098 | -0.2126 | -0.0007 |
| 112 | SLU 67 | -0.35 | 9.4 | 83.15 | -0.6654 | -0.2605 | -0.0009 |
| 112 | SLU 68 | -0.39 | 10 | 84.18 | -0.6987 | -0.2911 | -0.001 |
| 112 | SLU 69 | -0.3 | 8.69 | 83.09 | -0.6305 | -0.2174 | -0.0007 |
| 112 | SLU 70 | -0.36 | 9.67 | 85.29 | -0.6861 | -0.2654 | -0.0009 |
| 112 | SLU 71 | -0.3 | 8.64 | 82.65 | -0.6268 | -0.2159 | -0.0007 |
| 112 | SLU 72 | -0.35 | 9.62 | 84.85 | -0.6824 | -0.2639 | -0.0009 |
| 112 | SLU 73 | -0.41 | 10.35 | 88.44 | -0.7263 | -0.3058 | -0.0011 |
| 112 | SLU 74 | -0.32 | 9.04 | 87.35 | -0.658 | -0.2321 | -0.0008 |
| 112 | SLU 75 | -0.38 | 10.02 | 89.55 | -0.7136 | -0.2801 | -0.001 |
| 112 | SLU 76 | -0.41 | 10.62 | 90.58 | -0.747 | -0.3106 | -0.0011 |
| 112 | SLU 77 | -0.32 | 9.32 | 89.49 | -0.6788 | -0.237 | -0.0008 |
| 112 | SLU 78 | -0.38 | 10.3 | 91.69 | -0.7343 | -0.285 | -0.001 |
| 112 | SLU 79 | -0.32 | 9.26 | 89.05 | -0.6751 | -0.2355 | -0.0008 |
| 112 | SLU 80 | -0.38 | 10.24 | 91.25 | -0.7306 | -0.2835 | -0.001 |
| 112 | SLU 81 | -0.32 | 8.98 | 87.51 | -0.6543 | -0.2342 | -0.0008 |
| 112 | SLU 82 | -0.38 | 9.96 | 89.71 | -0.7099 | -0.2822 | -0.001 |
| 112 | SLU 83 | -0.33 | 9.26 | 89.65 | -0.675 | -0.2391 | -0.0008 |
| 112 | SLU 84 | -0.39 | 10.24 | 91.85 | -0.7306 | -0.287 | -0.001 |
| 112 | SLE RA 1 | -0.21 | 6.07 | 58.73 | -0.4381 | -0.1541 | -0.0005 |
| 112 | SLE RA 2 | -0.27 | 7.15 | 61.17 | -0.4998 | -0.2075 | -0.0007 |
| 112 | SLE RA 3 | -0.22 | 6.29 | 60.45 | -0.4543 | -0.1584 | -0.0005 |
| 112 | SLE RA 4 | -0.26 | 6.94 | 61.91 | -0.4914 | -0.1903 | -0.0006 |
| 112 | SLE RA 5 | -0.28 | 7.34 | 62.6 | -0.5136 | -0.2107 | -0.0007 |
| 112 | SLE RA 6 | -0.22 | 6.47 | 61.87 | -0.4682 | -0.1616 | -0.0005 |
| 112 | SLE RA 7 | -0.26 | 7.12 | 63.34 | -0.5052 | -0.1936 | -0.0007 |
| 112 | SLE RA 8 | -0.22 | 6.43 | 61.58 | -0.4657 | -0.1606 | -0.0005 |
| 112 | SLE RA 9 | -0.26 | 7.09 | 63.05 | -0.5027 | -0.1926 | -0.0007 |
| 112 | SLE RA 10 | -0.29 | 7.57 | 65.44 | -0.532 | -0.2205 | -0.0008 |
| 112 | SLE RA 11 | -0.23 | 6.7 | 64.71 | -0.4865 | -0.1714 | -0.0006 |
| 112 | SLE RA 12 | -0.27 | 7.35 | 66.18 | -0.5236 | -0.2034 | -0.0007 |
| 112 | SLE RA 13 | -0.3 | 7.75 | 66.86 | -0.5458 | -0.2237 | -0.0008 |
| 112 | SLE RA 14 | -0.24 | 6.89 | 66.14 | -0.5003 | -0.1746 | -0.0006 |
| 112 | SLE RA 15 | -0.28 | 7.54 | 67.61 | -0.5374 | -0.2066 | -0.0007 |
| 112 | SLE RA 16 | -0.24 | 6.85 | 65.85 | -0.4978 | -0.1737 | -0.0006 |

| Nodo | Cont. | Reazione a traslazione | | | Reazione a rotazione | | |
|---|---|---|---|---|---|---|---|
| Ind. | N.br. | x | y | z | x | y | z |
| 112 | SLE RA 17 | -0.28 | 7.5 | 67.31 | -0.5349 | -0.2056 | -0.0007 |
| 112 | SLE RA 18 | -0.24 | 6.66 | 64.82 | -0.484 | -0.1728 | -0.0006 |
| 112 | SLE RA 19 | -0.27 | 7.31 | 66.29 | -0.5211 | -0.2048 | -0.0007 |
| 112 | SLE RA 20 | -0.24 | 6.84 | 66.25 | -0.4978 | -0.176 | -0.0006 |
| 112 | SLE RA 21 | -0.28 | 7.5 | 67.72 | -0.5349 | -0.208 | -0.0007 |
| 112 | SLE FR 1 | -0.21 | 6.07 | 58.73 | -0.4381 | -0.1541 | -0.0005 |
| 112 | SLE FR 2 | -0.22 | 6.28 | 59.21 | -0.4504 | -0.1648 | -0.0006 |
| 112 | SLE FR 3 | -0.21 | 6.14 | 59.3 | -0.4436 | -0.1554 | -0.0005 |
| 112 | SLE FR 4 | -0.23 | 6.46 | 61.04 | -0.4642 | -0.1704 | -0.0006 |
| 112 | SLE FR 5 | -0.22 | 6.32 | 61.13 | -0.4574 | -0.161 | -0.0005 |
| 112 | SLE FR 6 | -0.22 | 6.36 | 61.77 | -0.461 | -0.1635 | -0.0006 |
| 112 | SLE QP 1 | -0.21 | 6.07 | 58.73 | -0.4381 | -0.1541 | -0.0005 |
| 112 | SLE QP 2 | -0.22 | 6.25 | 60.55 | -0.4519 | -0.1597 | -0.0005 |
| 112 | SLD 1 | -0.54 | 10.61 | 80.54 | -0.6882 | -0.4016 | -0.0015 |
| 112 | SLD 2 | -0.54 | 10.61 | 80.54 | -0.6882 | -0.4016 | -0.0015 |
| 112 | SLD 3 | -0.41 | 5.36 | 74.49 | -0.4525 | -0.308 | -0.0011 |
| 112 | SLD 4 | -0.41 | 5.36 | 74.49 | -0.4525 | -0.308 | -0.0011 |
| 112 | SLD 5 | -0.51 | 15.52 | 75.72 | -0.8801 | -0.3742 | -0.0014 |
| 112 | SLD 6 | -0.51 | 15.52 | 75.72 | -0.8801 | -0.3742 | -0.0014 |
| 112 | SLD 7 | -0.08 | -1.98 | 55.56 | -0.0947 | -0.0623 | -0.0001 |
| 112 | SLD 8 | -0.08 | -1.98 | 55.56 | -0.0947 | -0.0623 | -0.0001 |
| 112 | SLD 9 | -0.36 | 14.47 | 65.55 | -0.809 | -0.2571 | -0.001 |
| 112 | SLD 10 | -0.36 | 14.47 | 65.55 | -0.809 | -0.2571 | -0.001 |
| 112 | SLD 11 | 0.07 | -3.03 | 45.39 | -0.0236 | 0.0547 | 0.0003 |
| 112 | SLD 12 | 0.07 | -3.03 | 45.39 | -0.0236 | 0.0547 | 0.0003 |
| 112 | SLD 13 | -0.03 | 7.13 | 46.62 | -0.4512 | -0.0115 | 0 |
| 112 | SLD 14 | -0.03 | 7.13 | 46.62 | -0.4512 | -0.0115 | 0 |
| 112 | SLD 15 | 0.1 | 1.88 | 40.57 | -0.2155 | 0.0821 | 0.0004 |
| 112 | SLD 16 | 0.1 | 1.88 | 40.57 | -0.2155 | 0.0821 | 0.0004 |
| 112 | SLV 1 | -0.97 | 16.45 | 107.38 | -1.0042 | -0.7355 | -0.0028 |
| 112 | SLV 2 | -0.97 | 16.45 | 107.38 | -1.0042 | -0.7355 | -0.0028 |
| 112 | SLV 3 | -0.65 | 4.19 | 93.11 | -0.4527 | -0.4979 | -0.0018 |
| 112 | SLV 4 | -0.65 | 4.19 | 93.11 | -0.4527 | -0.4979 | -0.0018 |
| 112 | SLV 5 | -0.94 | 27.9 | 96.25 | -1.454 | -0.6927 | -0.0027 |
| 112 | SLV 6 | -0.94 | 27.9 | 96.25 | -1.454 | -0.6927 | -0.0027 |
| 112 | SLV 7 | 0.15 | -12.96 | 48.67 | 0.3843 | 0.099 | 0.0006 |
| 112 | SLV 8 | 0.15 | -12.96 | 48.67 | 0.3843 | 0.099 | 0.0006 |
| 112 | SLV 9 | -0.58 | 25.45 | 72.44 | -1.288 | -0.4185 | -0.0017 |
| 112 | SLV 10 | -0.58 | 25.45 | 72.44 | -1.288 | -0.4185 | -0.0017 |
| 112 | SLV 11 | 0.5 | -15.4 | 24.86 | 0.5503 | 0.3732 | 0.0016 |
| 112 | SLV 12 | 0.5 | -15.4 | 24.86 | 0.5503 | 0.3732 | 0.0016 |
| 112 | SLV 13 | 0.21 | 8.3 | 28 | -0.451 | 0.1785 | 0.0007 |
| 112 | SLV 14 | 0.21 | 8.3 | 28 | -0.451 | 0.1785 | 0.0007 |
| 112 | SLV 15 | 0.54 | -3.96 | 13.73 | 0.1005 | 0.416 | 0.0017 |
| 112 | SLV 16 | 0.54 | -3.96 | 13.73 | 0.1005 | 0.416 | 0.0017 |
| 113 | SLU 1 | 0.03 | -0.98 | 42.33 | 0.0479 | 0.0289 | 0.0001 |
| 113 | SLU 2 | 0.03 | -1.42 | 42.34 | 0.0684 | 0.0294 | 0.0001 |
| 113 | SLU 3 | 0.04 | -0.55 | 43.72 | 0.0283 | 0.0301 | 0.0001 |
| 113 | SLU 4 | 0.04 | -0.82 | 43.73 | 0.0406 | 0.0304 | 0.0001 |
| 113 | SLU 5 | 0.04 | -0.95 | 43.4 | 0.0463 | 0.0303 | 0.0001 |
| 113 | SLU 6 | 0.04 | -0.08 | 44.79 | 0.0062 | 0.031 | 0.0001 |
| 113 | SLU 7 | 0.04 | -0.35 | 44.79 | 0.0185 | 0.0313 | 0.0001 |
| 113 | SLU 8 | 0.04 | -0.04 | 44.45 | 0.0036 | 0.0307 | 0.0001 |
| 113 | SLU 9 | 0.04 | -0.3 | 44.46 | 0.016 | 0.031 | 0.0001 |
| 113 | SLU 10 | 0.03 | -1.5 | 50.3 | 0.0734 | 0.0275 | 0.0001 |
| 113 | SLU 11 | 0.03 | -0.63 | 51.69 | 0.0333 | 0.0282 | 0.0001 |
| 113 | SLU 12 | 0.03 | -0.9 | 51.7 | 0.0456 | 0.0285 | 0.0001 |
| 113 | SLU 13 | 0.03 | -1.03 | 51.36 | 0.0513 | 0.0284 | 0.0001 |
| 113 | SLU 14 | 0.03 | -0.16 | 52.75 | 0.0112 | 0.0291 | 0.0001 |
| 113 | SLU 15 | 0.03 | -0.43 | 52.76 | 0.0235 | 0.0294 | 0.0001 |
| 113 | SLU 16 | 0.03 | -0.11 | 52.42 | 0.0086 | 0.0288 | 0.0001 |
| 113 | SLU 17 | 0.03 | -0.38 | 52.42 | 0.021 | 0.0291 | 0.0001 |
| 113 | SLU 18 | 0.02 | -1.09 | 53.71 | 0.055 | 0.0262 | 0.0001 |
| 113 | SLU 19 | 0.02 | -1.36 | 53.71 | 0.0673 | 0.0265 | 0.0001 |
| 113 | SLU 20 | 0.02 | -0.62 | 54.77 | 0.0329 | 0.0271 | 0.0001 |
| 113 | SLU 21 | 0.02 | -0.89 | 54.77 | 0.0452 | 0.0274 | 0.0001 |
| 113 | SLU 22 | 0.04 | -0.73 | 47.52 | 0.0379 | 0.0322 | 0.0001 |
| 113 | SLU 23 | 0.04 | -1.17 | 47.53 | 0.0585 | 0.0327 | 0.0001 |
| 113 | SLU 24 | 0.04 | -0.3 | 48.92 | 0.0184 | 0.0334 | 0.0001 |
| 113 | SLU 25 | 0.04 | -0.57 | 48.93 | 0.0307 | 0.0337 | 0.0001 |
| 113 | SLU 26 | 0.04 | -0.7 | 48.6 | 0.0364 | 0.0336 | 0.0001 |
| 113 | SLU 27 | 0.04 | 0.17 | 49.98 | -0.0037 | 0.0343 | 0.0001 |
| 113 | SLU 28 | 0.04 | -0.1 | 49.99 | 0.0086 | 0.0346 | 0.0001 |
| 113 | SLU 29 | 0.04 | 0.22 | 49.65 | -0.0063 | 0.034 | 0.0001 |
| 113 | SLU 30 | 0.04 | -0.05 | 49.65 | 0.006 | 0.0343 | 0.0001 |
| 113 | SLU 31 | 0.03 | -1.25 | 55.5 | 0.0635 | 0.0308 | 0.0001 |
| 113 | SLU 32 | 0.03 | -0.38 | 56.89 | 0.0234 | 0.0315 | 0.0001 |
| 113 | SLU 33 | 0.03 | -0.65 | 56.89 | 0.0357 | 0.0318 | 0.0001 |
| 113 | SLU 34 | 0.03 | -0.78 | 56.56 | 0.0414 | 0.0317 | 0.0001 |
| 113 | SLU 35 | 0.03 | 0.09 | 57.95 | 0.0013 | 0.0324 | 0.0001 |
| 113 | SLU 36 | 0.03 | -0.18 | 57.96 | 0.0136 | 0.0327 | 0.0001 |
| 113 | SLU 37 | 0.03 | 0.14 | 57.61 | -0.0013 | 0.0321 | 0.0001 |
| 113 | SLU 38 | 0.03 | -0.13 | 57.62 | 0.011 | 0.0324 | 0.0001 |
| 113 | SLU 39 | 0.03 | -0.84 | 58.9 | 0.0451 | 0.0294 | 0.0001 |
| 113 | SLU 40 | 0.03 | -1.11 | 58.91 | 0.0574 | 0.0298 | 0.0001 |
| 113 | SLU 41 | 0.03 | -0.37 | 59.97 | 0.023 | 0.0303 | 0.0001 |
| 113 | SLU 42 | 0.03 | -0.64 | 59.97 | 0.0353 | 0.0307 | 0.0001 |
| 113 | SLU 43 | 0.04 | -1.36 | 53.24 | 0.0656 | 0.0365 | 0.0001 |

| Nodo | Cont. | Reazione a traslazione | | | Reazione a rotazione | | |
|---|---|---|---|---|---|---|---|
| Ind. | N.br. | x | y | z | x | y | z |
| 113 | SLU 44 | 0.04 | -1.8 | 53.25 | 0.0862 | 0.037 | 0.0001 |
| 113 | SLU 45 | 0.04 | -0.93 | 54.64 | 0.0461 | 0.0377 | 0.0001 |
| 113 | SLU 46 | 0.04 | -1.2 | 54.65 | 0.0584 | 0.038 | 0.0001 |
| 113 | SLU 47 | 0.04 | -1.33 | 54.31 | 0.0641 | 0.0379 | 0.0001 |
| 113 | SLU 48 | 0.05 | -0.46 | 55.7 | 0.0239 | 0.0386 | 0.0001 |
| 113 | SLU 49 | 0.05 | -0.73 | 55.71 | 0.0363 | 0.0389 | 0.0002 |
| 113 | SLU 50 | 0.04 | -0.42 | 55.37 | 0.0214 | 0.0383 | 0.0001 |
| 113 | SLU 51 | 0.05 | -0.68 | 55.37 | 0.0337 | 0.0386 | 0.0001 |
| 113 | SLU 52 | 0.04 | -1.88 | 61.22 | 0.0912 | 0.0351 | 0.0001 |
| 113 | SLU 53 | 0.04 | -1.01 | 62.61 | 0.051 | 0.0358 | 0.0001 |
| 113 | SLU 54 | 0.04 | -1.28 | 62.61 | 0.0634 | 0.0361 | 0.0001 |
| 113 | SLU 55 | 0.04 | -1.41 | 62.28 | 0.0691 | 0.036 | 0.0001 |
| 113 | SLU 56 | 0.04 | -0.54 | 63.67 | 0.0289 | 0.0367 | 0.0001 |
| 113 | SLU 57 | 0.04 | -0.81 | 63.67 | 0.0413 | 0.037 | 0.0001 |
| 113 | SLU 58 | 0.04 | -0.49 | 63.33 | 0.0264 | 0.0364 | 0.0001 |
| 113 | SLU 59 | 0.04 | -0.76 | 63.34 | 0.0387 | 0.0367 | 0.0001 |
| 113 | SLU 60 | 0.03 | -1.47 | 64.62 | 0.0727 | 0.0337 | 0.0001 |
| 113 | SLU 61 | 0.03 | -1.74 | 64.63 | 0.0851 | 0.0341 | 0.0001 |
| 113 | SLU 62 | 0.03 | -1 | 65.68 | 0.0506 | 0.0347 | 0.0001 |
| 113 | SLU 63 | 0.03 | -1.27 | 65.69 | 0.063 | 0.035 | 0.0001 |
| 113 | SLU 64 | 0.05 | -1.11 | 58.44 | 0.0557 | 0.0397 | 0.0001 |
| 113 | SLU 65 | 0.05 | -1.55 | 58.45 | 0.0763 | 0.0402 | 0.0002 |
| 113 | SLU 66 | 0.05 | -0.68 | 59.84 | 0.0361 | 0.0409 | 0.0002 |
| 113 | SLU 67 | 0.05 | -0.95 | 59.84 | 0.0485 | 0.0412 | 0.0002 |
| 113 | SLU 68 | 0.05 | -1.08 | 59.51 | 0.0541 | 0.0412 | 0.0002 |
| 113 | SLU 69 | 0.05 | -0.21 | 60.9 | 0.014 | 0.0418 | 0.0002 |
| 113 | SLU 70 | 0.05 | -0.48 | 60.91 | 0.0264 | 0.0422 | 0.0002 |
| 113 | SLU 71 | 0.05 | -0.16 | 60.56 | 0.0115 | 0.0415 | 0.0002 |
| 113 | SLU 72 | 0.05 | -0.43 | 60.57 | 0.0238 | 0.0418 | 0.0002 |
| 113 | SLU 73 | 0.04 | -1.63 | 66.42 | 0.0813 | 0.0383 | 0.0001 |
| 113 | SLU 74 | 0.04 | -0.76 | 67.8 | 0.0411 | 0.039 | 0.0001 |
| 113 | SLU 75 | 0.04 | -1.03 | 67.81 | 0.0535 | 0.0393 | 0.0001 |
| 113 | SLU 76 | 0.04 | -1.16 | 67.48 | 0.0591 | 0.0392 | 0.0001 |
| 113 | SLU 77 | 0.04 | -0.29 | 68.87 | 0.019 | 0.0399 | 0.0001 |
| 113 | SLU 78 | 0.04 | -0.56 | 68.87 | 0.0314 | 0.0402 | 0.0001 |
| 113 | SLU 79 | 0.04 | -0.24 | 68.53 | 0.0165 | 0.0396 | 0.0001 |
| 113 | SLU 80 | 0.04 | -0.51 | 68.54 | 0.0288 | 0.0399 | 0.0001 |
| 113 | SLU 81 | 0.04 | -1.22 | 69.82 | 0.0628 | 0.037 | 0.0001 |
| 113 | SLU 82 | 0.04 | -1.49 | 69.83 | 0.0752 | 0.0373 | 0.0001 |
| 113 | SLU 83 | 0.04 | -0.75 | 70.88 | 0.0407 | 0.0379 | 0.0001 |
| 113 | SLU 84 | 0.04 | -1.01 | 70.89 | 0.0531 | 0.0382 | 0.0001 |
| 113 | SLE RA 1 | 0.03 | -0.91 | 43.81 | 0.045 | 0.0298 | 0.0001 |
| 113 | SLE RA 2 | 0.03 | -1.2 | 43.82 | 0.0587 | 0.0302 | 0.0001 |
| 113 | SLE RA 3 | 0.04 | -0.62 | 44.74 | 0.032 | 0.0306 | 0.0001 |
| 113 | SLE RA 4 | 0.04 | -0.8 | 44.75 | 0.0402 | 0.0309 | 0.0001 |
| 113 | SLE RA 5 | 0.04 | -0.89 | 44.53 | 0.044 | 0.0308 | 0.0001 |
| 113 | SLE RA 6 | 0.04 | -0.31 | 45.45 | 0.0172 | 0.0312 | 0.0001 |
| 113 | SLE RA 7 | 0.04 | -0.49 | 45.46 | 0.0255 | 0.0315 | 0.0001 |
| 113 | SLE RA 8 | 0.04 | -0.28 | 45.23 | 0.0155 | 0.031 | 0.0001 |
| 113 | SLE RA 9 | 0.04 | -0.46 | 45.23 | 0.0238 | 0.0313 | 0.0001 |
| 113 | SLE RA 10 | 0.03 | -1.26 | 49.13 | 0.0621 | 0.0289 | 0.0001 |
| 113 | SLE RA 11 | 0.03 | -0.68 | 50.05 | 0.0353 | 0.0294 | 0.0001 |
| 113 | SLE RA 12 | 0.03 | -0.85 | 50.06 | 0.0435 | 0.0296 | 0.0001 |
| 113 | SLE RA 13 | 0.03 | -0.94 | 49.84 | 0.0473 | 0.0295 | 0.0001 |
| 113 | SLE RA 14 | 0.03 | -0.36 | 50.76 | 0.0206 | 0.03 | 0.0001 |
| 113 | SLE RA 15 | 0.03 | -0.54 | 50.77 | 0.0288 | 0.0302 | 0.0001 |
| 113 | SLE RA 16 | 0.03 | -0.33 | 50.54 | 0.0189 | 0.0298 | 0.0001 |
| 113 | SLE RA 17 | 0.03 | -0.51 | 50.54 | 0.0271 | 0.03 | 0.0001 |
| 113 | SLE RA 18 | 0.03 | -0.98 | 51.4 | 0.0498 | 0.028 | 0.0001 |
| 113 | SLE RA 19 | 0.03 | -1.16 | 51.4 | 0.058 | 0.0282 | 0.0001 |
| 113 | SLE RA 20 | 0.03 | -0.67 | 52.11 | 0.035 | 0.0286 | 0.0001 |
| 113 | SLE RA 21 | 0.03 | -0.85 | 52.11 | 0.0433 | 0.0288 | 0.0001 |
| 113 | SLE FR 1 | 0.03 | -0.91 | 43.81 | 0.045 | 0.0298 | 0.0001 |
| 113 | SLE FR 2 | 0.03 | -0.97 | 43.81 | 0.0478 | 0.0299 | 0.0001 |
| 113 | SLE FR 3 | 0.03 | -0.78 | 44.1 | 0.0391 | 0.0301 | 0.0001 |
| 113 | SLE FR 4 | 0.03 | -0.99 | 46.09 | 0.0492 | 0.0294 | 0.0001 |
| 113 | SLE FR 5 | 0.03 | -0.8 | 46.37 | 0.0406 | 0.0295 | 0.0001 |
| 113 | SLE FR 6 | 0.03 | -0.94 | 47.61 | 0.0474 | 0.0289 | 0.0001 |
| 113 | SLE QP 1 | 0.03 | -0.91 | 43.81 | 0.045 | 0.0298 | 0.0001 |
| 113 | SLE QP 2 | 0.03 | -0.93 | 46.09 | 0.0464 | 0.0293 | 0.0001 |
| 113 | SLD 1 | 0.28 | 0.01 | 50.39 | 0.0013 | 0.2163 | 0.0007 |
| 113 | SLD 2 | 0.28 | 0.01 | 50.39 | 0.0013 | 0.2163 | 0.0007 |
| 113 | SLD 3 | 0.25 | -3.62 | 49.66 | 0.1706 | 0.1954 | 0.0008 |
| 113 | SLD 4 | 0.25 | -3.62 | 49.66 | 0.1706 | 0.1954 | 0.0008 |
| 113 | SLD 5 | 0.15 | 4.85 | 48.48 | -0.2238 | 0.1171 | 0.0001 |
| 113 | SLD 6 | 0.15 | 4.85 | 48.48 | -0.2238 | 0.1171 | 0.0001 |
| 113 | SLD 7 | 0.05 | -7.24 | 46.06 | 0.3404 | 0.0474 | 0.0005 |
| 113 | SLD 8 | 0.05 | -7.24 | 46.06 | 0.3404 | 0.0474 | 0.0005 |
| 113 | SLD 9 | 0.01 | 5.38 | 46.12 | -0.2475 | 0.0111 | -0.0003 |
| 113 | SLD 10 | 0.01 | 5.38 | 46.12 | -0.2475 | 0.0111 | -0.0003 |
| 113 | SLD 11 | -0.09 | -6.71 | 43.7 | 0.3167 | -0.0585 | 0.0001 |
| 113 | SLD 12 | -0.09 | -6.71 | 43.7 | 0.3167 | -0.0585 | 0.0001 |
| 113 | SLD 13 | -0.18 | 1.76 | 42.52 | -0.0777 | -0.1368 | -0.0006 |
| 113 | SLD 14 | -0.18 | 1.76 | 42.52 | -0.0777 | -0.1368 | -0.0006 |
| 113 | SLD 15 | -0.21 | -1.87 | 41.79 | 0.0916 | -0.1577 | -0.0005 |
| 113 | SLD 16 | -0.21 | -1.87 | 41.79 | 0.0916 | -0.1577 | -0.0005 |
| 113 | SLV 1 | 0.65 | 1.23 | 56.22 | -0.058 | 0.4937 | 0.0015 |
| 113 | SLV 2 | 0.65 | 1.23 | 56.22 | -0.058 | 0.4937 | 0.0015 |

| Nodo | Cont. | Reazione a traslazione | | | Reazione a rotazione | | |
|---|---|---|---|---|---|---|---|
| Ind. | N.br. | x | y | z | x | y | z |
| 113 | SLV 3 | 0.57 | -7.23 | 54.45 | 0.3371 | 0.4412 | 0.0018 |
| 113 | SLV 4 | 0.57 | -7.23 | 54.45 | 0.3371 | 0.4412 | 0.0018 |
| 113 | SLV 5 | 0.33 | 12.55 | 51.8 | -0.584 | 0.2483 | 0.0001 |
| 113 | SLV 6 | 0.33 | 12.55 | 51.8 | -0.584 | 0.2483 | 0.0001 |
| 113 | SLV 7 | 0.08 | -15.65 | 45.92 | 0.7328 | 0.0732 | 0.001 |
| 113 | SLV 8 | 0.08 | -15.65 | 45.92 | 0.7328 | 0.0732 | 0.001 |
| 113 | SLV 9 | -0.01 | 13.8 | 46.26 | -0.6399 | -0.0146 | -0.0008 |
| 113 | SLV 10 | -0.01 | 13.8 | 46.26 | -0.6399 | -0.0146 | -0.0008 |
| 113 | SLV 11 | -0.27 | -14.41 | 40.37 | 0.6769 | -0.1897 | 0.0001 |
| 113 | SLV 12 | -0.27 | -14.41 | 40.37 | 0.6769 | -0.1897 | 0.0001 |
| 113 | SLV 13 | -0.51 | 5.37 | 37.72 | -0.2442 | -0.3826 | -0.0016 |
| 113 | SLV 14 | -0.51 | 5.37 | 37.72 | -0.2442 | -0.3826 | -0.0016 |
| 113 | SLV 15 | -0.58 | -3.09 | 35.96 | 0.1509 | -0.4351 | -0.0013 |
| 113 | SLV 16 | -0.58 | -3.09 | 35.96 | 0.1509 | -0.4351 | -0.0013 |
| 114 | SLU 1 | 0.05 | -0.79 | 5.93 | 0.0353 | 0.0244 | -0.0014 |
| 114 | SLU 2 | 0.05 | -0.79 | 5.93 | 0.0354 | 0.0248 | -0.0015 |
| 114 | SLU 3 | 0.05 | -0.82 | 5.91 | 0.037 | 0.0252 | -0.0015 |
| 114 | SLU 4 | 0.05 | -0.83 | 5.91 | 0.037 | 0.0255 | -0.0015 |
| 114 | SLU 5 | 0.05 | -0.81 | 5.92 | 0.0363 | 0.0255 | -0.0015 |
| 114 | SLU 6 | 0.05 | -0.85 | 5.91 | 0.038 | 0.0259 | -0.0015 |
| 114 | SLU 7 | 0.05 | -0.85 | 5.91 | 0.038 | 0.0262 | -0.0015 |
| 114 | SLU 8 | 0.05 | -0.83 | 5.91 | 0.0372 | 0.0257 | -0.0015 |
| 114 | SLU 9 | 0.05 | -0.83 | 5.91 | 0.0373 | 0.026 | -0.0015 |
| 114 | SLU 10 | 0.07 | -0.98 | 8.66 | 0.0429 | 0.0325 | -0.0021 |
| 114 | SLU 11 | 0.07 | -1.02 | 8.65 | 0.0445 | 0.0329 | -0.0021 |
| 114 | SLU 12 | 0.07 | -1.02 | 8.65 | 0.0445 | 0.0332 | -0.0021 |
| 114 | SLU 13 | 0.07 | -1 | 8.65 | 0.0438 | 0.0332 | -0.0021 |
| 114 | SLU 14 | 0.07 | -1.04 | 8.64 | 0.0455 | 0.0335 | -0.0021 |
| 114 | SLU 15 | 0.07 | -1.04 | 8.64 | 0.0455 | 0.0338 | -0.0021 |
| 114 | SLU 16 | 0.07 | -1.02 | 8.65 | 0.0447 | 0.0333 | -0.0021 |
| 114 | SLU 17 | 0.07 | -1.02 | 8.65 | 0.0448 | 0.0336 | -0.0021 |
| 114 | SLU 18 | 0.08 | -1.06 | 9.83 | 0.046 | 0.0353 | -0.0023 |
| 114 | SLU 19 | 0.08 | -1.06 | 9.83 | 0.046 | 0.0356 | -0.0023 |
| 114 | SLU 20 | 0.08 | -1.08 | 9.83 | 0.047 | 0.036 | -0.0023 |
| 114 | SLU 21 | 0.08 | -1.08 | 9.83 | 0.047 | 0.0363 | -0.0023 |
| 114 | SLU 22 | 0.06 | -0.96 | 6.24 | 0.0426 | 0.0277 | -0.0016 |
| 114 | SLU 23 | 0.06 | -0.96 | 6.24 | 0.0427 | 0.0282 | -0.0017 |
| 114 | SLU 24 | 0.06 | -1 | 6.23 | 0.0444 | 0.0286 | -0.0017 |
| 114 | SLU 25 | 0.06 | -1 | 6.23 | 0.0444 | 0.0289 | -0.0017 |
| 114 | SLU 26 | 0.06 | -0.98 | 6.24 | 0.0437 | 0.0289 | -0.0017 |
| 114 | SLU 27 | 0.06 | -1.02 | 6.22 | 0.0453 | 0.0293 | -0.0017 |
| 114 | SLU 28 | 0.06 | -1.02 | 6.22 | 0.0454 | 0.0295 | -0.0017 |
| 114 | SLU 29 | 0.06 | -1 | 6.23 | 0.0446 | 0.0291 | -0.0017 |
| 114 | SLU 30 | 0.06 | -1 | 6.23 | 0.0446 | 0.0293 | -0.0017 |
| 114 | SLU 31 | 0.08 | -1.15 | 8.98 | 0.0502 | 0.0359 | -0.0023 |
| 114 | SLU 32 | 0.08 | -1.19 | 8.97 | 0.0519 | 0.0363 | -0.0023 |
| 114 | SLU 33 | 0.08 | -1.19 | 8.97 | 0.0519 | 0.0366 | -0.0023 |
| 114 | SLU 34 | 0.08 | -1.17 | 8.97 | 0.0512 | 0.0365 | -0.0023 |
| 114 | SLU 35 | 0.08 | -1.21 | 8.96 | 0.0528 | 0.0369 | -0.0023 |
| 114 | SLU 36 | 0.08 | -1.21 | 8.96 | 0.0529 | 0.0372 | -0.0023 |
| 114 | SLU 37 | 0.08 | -1.19 | 8.97 | 0.0521 | 0.0367 | -0.0023 |
| 114 | SLU 38 | 0.08 | -1.2 | 8.97 | 0.0522 | 0.037 | -0.0023 |
| 114 | SLU 39 | 0.09 | -1.23 | 10.15 | 0.0534 | 0.0387 | -0.0025 |
| 114 | SLU 40 | 0.09 | -1.23 | 10.15 | 0.0534 | 0.039 | -0.0025 |
| 114 | SLU 41 | 0.09 | -1.25 | 10.14 | 0.0543 | 0.0394 | -0.0025 |
| 114 | SLU 42 | 0.09 | -1.26 | 10.14 | 0.0544 | 0.0396 | -0.0025 |
| 114 | SLU 43 | 0.06 | -0.96 | 7.59 | 0.0433 | 0.0305 | -0.0018 |
| 114 | SLU 44 | 0.06 | -0.96 | 7.59 | 0.0434 | 0.031 | -0.0018 |
| 114 | SLU 45 | 0.06 | -1 | 7.58 | 0.045 | 0.0314 | -0.0018 |
| 114 | SLU 46 | 0.06 | -1 | 7.58 | 0.0451 | 0.0316 | -0.0018 |
| 114 | SLU 47 | 0.06 | -0.99 | 7.59 | 0.0444 | 0.0316 | -0.0018 |
| 114 | SLU 48 | 0.06 | -1.02 | 7.57 | 0.046 | 0.032 | -0.0019 |
| 114 | SLU 49 | 0.06 | -1.03 | 7.57 | 0.0461 | 0.0323 | -0.0019 |
| 114 | SLU 50 | 0.06 | -1.01 | 7.58 | 0.0453 | 0.0318 | -0.0018 |
| 114 | SLU 51 | 0.06 | -1.01 | 7.58 | 0.0453 | 0.0321 | -0.0019 |
| 114 | SLU 52 | 0.08 | -1.16 | 10.33 | 0.0509 | 0.0387 | -0.0024 |
| 114 | SLU 53 | 0.08 | -1.19 | 10.32 | 0.0525 | 0.039 | -0.0024 |
| 114 | SLU 54 | 0.08 | -1.19 | 10.32 | 0.0526 | 0.0393 | -0.0024 |
| 114 | SLU 55 | 0.08 | -1.18 | 10.32 | 0.0519 | 0.0393 | -0.0024 |
| 114 | SLU 56 | 0.08 | -1.22 | 10.31 | 0.0535 | 0.0397 | -0.0025 |
| 114 | SLU 57 | 0.08 | -1.22 | 10.31 | 0.0536 | 0.04 | -0.0025 |
| 114 | SLU 58 | 0.08 | -1.2 | 10.31 | 0.0528 | 0.0395 | -0.0024 |
| 114 | SLU 59 | 0.08 | -1.2 | 10.31 | 0.0528 | 0.0398 | -0.0025 |
| 114 | SLU 60 | 0.09 | -1.24 | 11.5 | 0.054 | 0.0415 | -0.0026 |
| 114 | SLU 61 | 0.09 | -1.24 | 11.5 | 0.0541 | 0.0418 | -0.0027 |
| 114 | SLU 62 | 0.09 | -1.26 | 11.49 | 0.055 | 0.0421 | -0.0027 |
| 114 | SLU 63 | 0.09 | -1.26 | 11.49 | 0.0551 | 0.0424 | -0.0027 |
| 114 | SLU 64 | 0.07 | -1.13 | 7.91 | 0.0507 | 0.0339 | -0.002 |
| 114 | SLU 65 | 0.07 | -1.14 | 7.91 | 0.0508 | 0.0344 | -0.002 |
| 114 | SLU 66 | 0.07 | -1.17 | 7.9 | 0.0524 | 0.0347 | -0.002 |
| 114 | SLU 67 | 0.07 | -1.17 | 7.9 | 0.0525 | 0.035 | -0.0021 |
| 114 | SLU 68 | 0.07 | -1.16 | 7.91 | 0.0518 | 0.035 | -0.0021 |
| 114 | SLU 69 | 0.07 | -1.2 | 7.89 | 0.0534 | 0.0354 | -0.0021 |
| 114 | SLU 70 | 0.07 | -1.2 | 7.89 | 0.0534 | 0.0357 | -0.0021 |
| 114 | SLU 71 | 0.07 | -1.18 | 7.9 | 0.0526 | 0.0352 | -0.0021 |
| 114 | SLU 72 | 0.07 | -1.18 | 7.9 | 0.0527 | 0.0355 | -0.0021 |
| 114 | SLU 73 | 0.09 | -1.33 | 10.65 | 0.0583 | 0.042 | -0.0026 |
| 114 | SLU 74 | 0.09 | -1.37 | 10.64 | 0.0599 | 0.0424 | -0.0026 |

| Nodo | Cont. | Reazione a traslazione | | | Reazione a rotazione | | |
|---|---|---|---|---|---|---|---|
| Ind. | N.br. | x | y | z | x | y | z |
| 114 | SLU 75 | 0.09 | -1.37 | 10.63 | 0.06 | 0.0427 | -0.0027 |
| 114 | SLU 76 | 0.09 | -1.35 | 10.64 | 0.0593 | 0.0427 | -0.0027 |
| 114 | SLU 77 | 0.09 | -1.39 | 10.63 | 0.0609 | 0.0431 | -0.0027 |
| 114 | SLU 78 | 0.09 | -1.39 | 10.63 | 0.0609 | 0.0434 | -0.0027 |
| 114 | SLU 79 | 0.09 | -1.37 | 10.63 | 0.0601 | 0.0429 | -0.0027 |
| 114 | SLU 80 | 0.09 | -1.37 | 10.63 | 0.0602 | 0.0432 | -0.0027 |
| 114 | SLU 81 | 0.1 | -1.41 | 11.82 | 0.0614 | 0.0449 | -0.0029 |
| 114 | SLU 82 | 0.1 | -1.41 | 11.82 | 0.0615 | 0.0451 | -0.0029 |
| 114 | SLU 83 | 0.1 | -1.43 | 11.81 | 0.0624 | 0.0455 | -0.0029 |
| 114 | SLU 84 | 0.1 | -1.43 | 11.81 | 0.0624 | 0.0458 | -0.0029 |
| 114 | SLE RA 1 | 0.05 | -0.83 | 6.02 | 0.0374 | 0.0253 | -0.0015 |
| 114 | SLE RA 2 | 0.05 | -0.84 | 6.02 | 0.0374 | 0.0256 | -0.0015 |
| 114 | SLE RA 3 | 0.05 | -0.86 | 6.01 | 0.0385 | 0.0259 | -0.0015 |
| 114 | SLE RA 4 | 0.05 | -0.86 | 6.01 | 0.0386 | 0.0261 | -0.0015 |
| 114 | SLE RA 5 | 0.05 | -0.85 | 6.01 | 0.0381 | 0.0261 | -0.0015 |
| 114 | SLE RA 6 | 0.05 | -0.88 | 6 | 0.0392 | 0.0263 | -0.0015 |
| 114 | SLE RA 7 | 0.05 | -0.88 | 6 | 0.0392 | 0.0265 | -0.0015 |
| 114 | SLE RA 8 | 0.05 | -0.86 | 6.01 | 0.0387 | 0.0262 | -0.0015 |
| 114 | SLE RA 9 | 0.05 | -0.87 | 6.01 | 0.0387 | 0.0264 | -0.0015 |
| 114 | SLE RA 10 | 0.06 | -0.96 | 7.84 | 0.0424 | 0.0308 | -0.0019 |
| 114 | SLE RA 11 | 0.06 | -0.99 | 7.83 | 0.0435 | 0.031 | -0.0019 |
| 114 | SLE RA 12 | 0.07 | -0.99 | 7.83 | 0.0436 | 0.0312 | -0.0019 |
| 114 | SLE RA 13 | 0.07 | -0.98 | 7.84 | 0.0431 | 0.0312 | -0.0019 |
| 114 | SLE RA 14 | 0.07 | -1 | 7.83 | 0.0442 | 0.0314 | -0.0019 |
| 114 | SLE RA 15 | 0.07 | -1 | 7.83 | 0.0442 | 0.0316 | -0.002 |
| 114 | SLE RA 16 | 0.07 | -0.99 | 7.83 | 0.0437 | 0.0313 | -0.0019 |
| 114 | SLE RA 17 | 0.07 | -0.99 | 7.83 | 0.0437 | 0.0315 | -0.0019 |
| 114 | SLE RA 18 | 0.07 | -1.02 | 8.62 | 0.0445 | 0.0326 | -0.0021 |
| 114 | SLE RA 19 | 0.07 | -1.02 | 8.62 | 0.0446 | 0.0328 | -0.0021 |
| 114 | SLE RA 20 | 0.07 | -1.03 | 8.62 | 0.0452 | 0.0331 | -0.0021 |
| 114 | SLE RA 21 | 0.07 | -1.03 | 8.62 | 0.0452 | 0.0333 | -0.0021 |
| 114 | SLE FR 1 | 0.05 | -0.83 | 6.02 | 0.0374 | 0.0253 | -0.0015 |
| 114 | SLE FR 2 | 0.05 | -0.84 | 6.02 | 0.0374 | 0.0254 | -0.0015 |
| 114 | SLE FR 3 | 0.05 | -0.84 | 6.01 | 0.0376 | 0.0255 | -0.0015 |
| 114 | SLE FR 4 | 0.06 | -0.89 | 6.8 | 0.0395 | 0.0276 | -0.0017 |
| 114 | SLE FR 5 | 0.06 | -0.9 | 6.8 | 0.0398 | 0.0277 | -0.0017 |
| 114 | SLE FR 6 | 0.06 | -0.93 | 7.32 | 0.0409 | 0.029 | -0.0018 |
| 114 | SLE QP 1 | 0.05 | -0.83 | 6.02 | 0.0374 | 0.0253 | -0.0015 |
| 114 | SLE QP 2 | 0.06 | -0.89 | 6.8 | 0.0395 | 0.0275 | -0.0017 |
| 114 | SLD 1 | 0.35 | 0.29 | 7.18 | -0.0057 | 0.224 | -0.0107 |
| 114 | SLD 2 | 0.35 | 0.29 | 7.18 | -0.0057 | 0.224 | -0.0107 |
| 114 | SLD 3 | 0.32 | -1.42 | 6.7 | 0.0587 | 0.2026 | -0.0097 |
| 114 | SLD 4 | 0.32 | -1.42 | 6.7 | 0.0587 | 0.2026 | -0.0097 |
| 114 | SLD 5 | 0.2 | 2.06 | 7.64 | -0.0718 | 0.1189 | -0.006 |
| 114 | SLD 6 | 0.2 | 2.06 | 7.64 | -0.0718 | 0.1189 | -0.006 |
| 114 | SLD 7 | 0.08 | -3.65 | 6.04 | 0.143 | 0.0476 | -0.0025 |
| 114 | SLD 8 | 0.08 | -3.65 | 6.04 | 0.143 | 0.0476 | -0.0025 |
| 114 | SLD 9 | 0.03 | 1.87 | 7.55 | -0.0639 | 0.0075 | -0.0009 |
| 114 | SLD 10 | 0.03 | 1.87 | 7.55 | -0.0639 | 0.0075 | -0.0009 |
| 114 | SLD 11 | -0.09 | -3.84 | 5.96 | 0.1508 | -0.0639 | 0.0027 |
| 114 | SLD 12 | -0.09 | -3.84 | 5.96 | 0.1508 | -0.0639 | 0.0027 |
| 114 | SLD 13 | -0.21 | -0.36 | 6.9 | 0.0203 | -0.1475 | 0.0063 |
| 114 | SLD 14 | -0.21 | -0.36 | 6.9 | 0.0203 | -0.1475 | 0.0063 |
| 114 | SLD 15 | -0.24 | -2.07 | 6.42 | 0.0848 | -0.1689 | 0.0074 |
| 114 | SLD 16 | -0.24 | -2.07 | 6.42 | 0.0848 | -0.1689 | 0.0074 |
| 114 | SLV 1 | 0.79 | 1.88 | 7.7 | -0.0668 | 0.5158 | -0.0241 |
| 114 | SLV 2 | 0.79 | 1.88 | 7.7 | -0.0668 | 0.5158 | -0.0241 |
| 114 | SLV 3 | 0.7 | -2.13 | 6.58 | 0.0843 | 0.4619 | -0.0215 |
| 114 | SLV 4 | 0.7 | -2.13 | 6.58 | 0.0843 | 0.4619 | -0.0215 |
| 114 | SLV 5 | 0.41 | 6.04 | 8.77 | -0.2214 | 0.2558 | -0.0124 |
| 114 | SLV 6 | 0.41 | 6.04 | 8.77 | -0.2214 | 0.2558 | -0.0124 |
| 114 | SLV 7 | 0.12 | -7.36 | 5.03 | 0.282 | 0.0761 | -0.0036 |
| 114 | SLV 8 | 0.12 | -7.36 | 5.03 | 0.282 | 0.0761 | -0.0036 |
| 114 | SLV 9 | -0.01 | 5.58 | 8.57 | -0.203 | -0.021 | 0.0003 |
| 114 | SLV 10 | -0.01 | 5.58 | 8.57 | -0.203 | -0.021 | 0.0003 |
| 114 | SLV 11 | -0.3 | -7.81 | 4.82 | 0.3005 | -0.2007 | 0.0091 |
| 114 | SLV 12 | -0.3 | -7.81 | 4.82 | 0.3005 | -0.2007 | 0.0091 |
| 114 | SLV 13 | -0.59 | 0.35 | 7.02 | -0.0052 | -0.4069 | 0.0182 |
| 114 | SLV 14 | -0.59 | 0.35 | 7.02 | -0.0052 | -0.4069 | 0.0182 |
| 114 | SLV 15 | -0.68 | -3.66 | 5.89 | 0.1458 | -0.4608 | 0.0208 |
| 114 | SLV 16 | -0.68 | -3.66 | 5.89 | 0.1458 | -0.4608 | 0.0208 |
| 115 | SLU 1 | 0.16 | -3.64 | 19.91 | 0.3378 | 0.0952 | 0 |
| 115 | SLU 2 | 0.18 | -1.48 | 20.26 | 0.258 | 0.1086 | 0 |
| 115 | SLU 3 | 0.16 | -3.92 | 20.25 | 0.3543 | 0.0981 | 0.0001 |
| 115 | SLU 4 | 0.17 | -2.63 | 20.46 | 0.3065 | 0.1061 | 0.0001 |
| 115 | SLU 5 | 0.18 | -1.77 | 20.4 | 0.2724 | 0.11 | 0.0001 |
| 115 | SLU 6 | 0.16 | -4.21 | 20.38 | 0.3687 | 0.0995 | 0.0001 |
| 115 | SLU 7 | 0.17 | -2.91 | 20.59 | 0.3208 | 0.1075 | 0.0001 |
| 115 | SLU 8 | 0.16 | -4.22 | 20.17 | 0.3665 | 0.0981 | 0.0001 |
| 115 | SLU 9 | 0.17 | -2.92 | 20.39 | 0.3186 | 0.1061 | 0.0001 |
| 115 | SLU 10 | 0.2 | -2.07 | 22.76 | 0.311 | 0.1248 | 0.0001 |
| 115 | SLU 11 | 0.19 | -4.51 | 22.75 | 0.4073 | 0.1143 | 0.0001 |
| 115 | SLU 12 | 0.2 | -3.21 | 22.96 | 0.3594 | 0.1223 | 0.0001 |
| 115 | SLU 13 | 0.2 | -2.35 | 22.9 | 0.3253 | 0.1262 | 0.0001 |
| 115 | SLU 14 | 0.19 | -4.8 | 22.88 | 0.4216 | 0.1157 | 0.0001 |
| 115 | SLU 15 | 0.2 | -3.5 | 23.1 | 0.3738 | 0.1237 | 0.0001 |
| 115 | SLU 16 | 0.19 | -4.81 | 22.67 | 0.4194 | 0.1142 | 0.0001 |
| 115 | SLU 17 | 0.2 | -3.51 | 22.89 | 0.3715 | 0.1223 | 0.0001 |

| Nodo | Cont. | Reazione a traslazione | | | Reazione a rotazione | | |
|---|---|---|---|---|---|---|---|
| Ind. | N.br. | x | y | z | x | y | z |
| 115 | SLU 18 | 0.19 | -4.48 | 23.48 | 0.4134 | 0.1183 | 0.0001 |
| 115 | SLU 19 | 0.21 | -3.18 | 23.69 | 0.3656 | 0.1264 | 0.0001 |
| 115 | SLU 20 | 0.2 | -4.77 | 23.61 | 0.4278 | 0.1198 | 0.0001 |
| 115 | SLU 21 | 0.21 | -3.47 | 23.83 | 0.3799 | 0.1278 | 0.0001 |
| 115 | SLU 22 | 0.18 | -4.25 | 22.11 | 0.3892 | 0.1101 | 0.0001 |
| 115 | SLU 23 | 0.2 | -2.09 | 22.47 | 0.3094 | 0.1234 | 0.0001 |
| 115 | SLU 24 | 0.19 | -4.54 | 22.45 | 0.4057 | 0.1129 | 0.0001 |
| 115 | SLU 25 | 0.2 | -3.24 | 22.66 | 0.3579 | 0.121 | 0.0001 |
| 115 | SLU 26 | 0.2 | -2.38 | 22.6 | 0.3237 | 0.1249 | 0.0001 |
| 115 | SLU 27 | 0.19 | -4.83 | 22.58 | 0.4201 | 0.1144 | 0.0001 |
| 115 | SLU 28 | 0.2 | -3.53 | 22.8 | 0.3722 | 0.1224 | 0.0001 |
| 115 | SLU 29 | 0.19 | -4.83 | 22.37 | 0.4178 | 0.1129 | 0.0001 |
| 115 | SLU 30 | 0.2 | -3.53 | 22.59 | 0.37 | 0.1209 | 0.0001 |
| 115 | SLU 31 | 0.23 | -2.68 | 24.97 | 0.3623 | 0.1396 | 0.0001 |
| 115 | SLU 32 | 0.21 | -5.12 | 24.95 | 0.4587 | 0.1291 | 0.0001 |
| 115 | SLU 33 | 0.22 | -3.83 | 25.17 | 0.4108 | 0.1371 | 0.0001 |
| 115 | SLU 34 | 0.23 | -2.97 | 25.1 | 0.3767 | 0.1411 | 0.0001 |
| 115 | SLU 35 | 0.21 | -5.41 | 25.08 | 0.473 | 0.1306 | 0.0001 |
| 115 | SLU 36 | 0.22 | -4.12 | 25.3 | 0.4251 | 0.1386 | 0.0001 |
| 115 | SLU 37 | 0.21 | -5.42 | 24.88 | 0.4708 | 0.1291 | 0.0001 |
| 115 | SLU 38 | 0.22 | -4.12 | 25.09 | 0.4229 | 0.1371 | 0.0001 |
| 115 | SLU 39 | 0.22 | -5.09 | 25.68 | 0.4648 | 0.1332 | 0.0001 |
| 115 | SLU 40 | 0.23 | -3.8 | 25.9 | 0.4169 | 0.1412 | 0.0001 |
| 115 | SLU 41 | 0.22 | -5.38 | 25.82 | 0.4791 | 0.1346 | 0.0001 |
| 115 | SLU 42 | 0.23 | -4.08 | 26.03 | 0.4313 | 0.1427 | 0.0001 |
| 115 | SLU 43 | 0.2 | -4.52 | 25.12 | 0.4215 | 0.1187 | 0.0001 |
| 115 | SLU 44 | 0.21 | -2.36 | 25.48 | 0.3417 | 0.132 | 0.0001 |
| 115 | SLU 45 | 0.2 | -4.8 | 25.46 | 0.4381 | 0.1215 | 0.0001 |
| 115 | SLU 46 | 0.21 | -3.51 | 25.68 | 0.3902 | 0.1295 | 0.0001 |
| 115 | SLU 47 | 0.22 | -2.65 | 25.61 | 0.3561 | 0.1334 | 0.0001 |
| 115 | SLU 48 | 0.2 | -5.09 | 25.6 | 0.4524 | 0.1229 | 0.0001 |
| 115 | SLU 49 | 0.21 | -3.8 | 25.81 | 0.4045 | 0.131 | 0.0001 |
| 115 | SLU 50 | 0.2 | -5.1 | 25.39 | 0.4502 | 0.1215 | 0.0001 |
| 115 | SLU 51 | 0.21 | -3.8 | 25.6 | 0.4023 | 0.1295 | 0.0001 |
| 115 | SLU 52 | 0.24 | -2.95 | 27.98 | 0.3947 | 0.1482 | 0.0001 |
| 115 | SLU 53 | 0.23 | -5.39 | 27.96 | 0.491 | 0.1377 | 0.0001 |
| 115 | SLU 54 | 0.24 | -4.09 | 28.18 | 0.4431 | 0.1457 | 0.0001 |
| 115 | SLU 55 | 0.24 | -3.24 | 28.11 | 0.409 | 0.1496 | 0.0001 |
| 115 | SLU 56 | 0.23 | -5.68 | 28.1 | 0.5053 | 0.1391 | 0.0001 |
| 115 | SLU 57 | 0.24 | -4.38 | 28.31 | 0.4575 | 0.1471 | 0.0001 |
| 115 | SLU 58 | 0.23 | -5.69 | 27.89 | 0.5031 | 0.1377 | 0.0001 |
| 115 | SLU 59 | 0.24 | -4.39 | 28.1 | 0.4553 | 0.1457 | 0.0001 |
| 115 | SLU 60 | 0.23 | -5.36 | 28.69 | 0.4971 | 0.1418 | 0.0001 |
| 115 | SLU 61 | 0.24 | -4.06 | 28.91 | 0.4493 | 0.1498 | 0.0001 |
| 115 | SLU 62 | 0.24 | -5.65 | 28.83 | 0.5115 | 0.1432 | 0.0001 |
| 115 | SLU 63 | 0.25 | -4.35 | 29.04 | 0.4636 | 0.1512 | 0.0001 |
| 115 | SLU 64 | 0.22 | -5.13 | 27.32 | 0.4729 | 0.1336 | 0.0001 |
| 115 | SLU 65 | 0.24 | -2.97 | 27.68 | 0.3931 | 0.1469 | 0.0001 |
| 115 | SLU 66 | 0.22 | -5.42 | 27.67 | 0.4894 | 0.1364 | 0.0001 |
| 115 | SLU 67 | 0.24 | -4.12 | 27.88 | 0.4416 | 0.1444 | 0.0001 |
| 115 | SLU 68 | 0.24 | -3.26 | 27.82 | 0.4075 | 0.1483 | 0.0001 |
| 115 | SLU 69 | 0.23 | -5.71 | 27.8 | 0.5038 | 0.1378 | 0.0001 |
| 115 | SLU 70 | 0.24 | -4.41 | 28.01 | 0.4559 | 0.1458 | 0.0001 |
| 115 | SLU 71 | 0.22 | -5.71 | 27.59 | 0.5016 | 0.1364 | 0.0001 |
| 115 | SLU 72 | 0.24 | -4.42 | 27.81 | 0.4537 | 0.1444 | 0.0001 |
| 115 | SLU 73 | 0.26 | -3.56 | 30.18 | 0.4461 | 0.1631 | 0.0001 |
| 115 | SLU 74 | 0.25 | -6.01 | 30.17 | 0.5424 | 0.1526 | 0.0001 |
| 115 | SLU 75 | 0.26 | -4.71 | 30.38 | 0.4945 | 0.1606 | 0.0001 |
| 115 | SLU 76 | 0.27 | -3.85 | 30.32 | 0.4604 | 0.1645 | 0.0001 |
| 115 | SLU 77 | 0.25 | -6.29 | 30.3 | 0.5567 | 0.154 | 0.0001 |
| 115 | SLU 78 | 0.26 | -5 | 30.51 | 0.5089 | 0.162 | 0.0001 |
| 115 | SLU 79 | 0.25 | -6.3 | 30.09 | 0.5545 | 0.1526 | 0.0001 |
| 115 | SLU 80 | 0.26 | -5 | 30.31 | 0.5066 | 0.1606 | 0.0001 |
| 115 | SLU 81 | 0.26 | -5.97 | 30.9 | 0.5485 | 0.1567 | 0.0001 |
| 115 | SLU 82 | 0.27 | -4.68 | 31.11 | 0.5007 | 0.1647 | 0.0001 |
| 115 | SLU 83 | 0.26 | -6.26 | 31.03 | 0.5629 | 0.1581 | 0.0001 |
| 115 | SLU 84 | 0.27 | -4.97 | 31.25 | 0.515 | 0.1661 | 0.0001 |
| 115 | SLE RA 1 | 0.16 | -3.81 | 20.53 | 0.3525 | 0.0995 | 0.0001 |
| 115 | SLE RA 2 | 0.18 | -2.37 | 20.77 | 0.2993 | 0.1084 | 0.0001 |
| 115 | SLE RA 3 | 0.17 | -4 | 20.76 | 0.3635 | 0.1014 | 0.0001 |
| 115 | SLE RA 4 | 0.17 | -3.14 | 20.91 | 0.3316 | 0.1067 | 0.0001 |
| 115 | SLE RA 5 | 0.18 | -2.57 | 20.86 | 0.3089 | 0.1093 | 0.0001 |
| 115 | SLE RA 6 | 0.17 | -4.2 | 20.85 | 0.3731 | 0.1023 | 0.0001 |
| 115 | SLE RA 7 | 0.18 | -3.33 | 20.99 | 0.3412 | 0.1077 | 0.0001 |
| 115 | SLE RA 8 | 0.17 | -4.2 | 20.71 | 0.3716 | 0.1014 | 0.0001 |
| 115 | SLE RA 9 | 0.17 | -3.34 | 20.86 | 0.3397 | 0.1067 | 0.0001 |
| 115 | SLE RA 10 | 0.19 | -2.76 | 22.44 | 0.3346 | 0.1192 | 0.0001 |
| 115 | SLE RA 11 | 0.18 | -4.4 | 22.43 | 0.3988 | 0.1122 | 0.0001 |
| 115 | SLE RA 12 | 0.19 | -3.53 | 22.57 | 0.3669 | 0.1175 | 0.0001 |
| 115 | SLE RA 13 | 0.19 | -2.96 | 22.53 | 0.3441 | 0.1201 | 0.0001 |
| 115 | SLE RA 14 | 0.19 | -4.59 | 22.52 | 0.4084 | 0.1131 | 0.0001 |
| 115 | SLE RA 15 | 0.19 | -3.72 | 22.66 | 0.3764 | 0.1184 | 0.0001 |
| 115 | SLE RA 16 | 0.18 | -4.59 | 22.38 | 0.4069 | 0.1122 | 0.0001 |
| 115 | SLE RA 17 | 0.19 | -3.73 | 22.52 | 0.375 | 0.1175 | 0.0001 |
| 115 | SLE RA 18 | 0.19 | -4.37 | 22.92 | 0.4029 | 0.1149 | 0.0001 |
| 115 | SLE RA 19 | 0.2 | -3.51 | 23.06 | 0.371 | 0.1202 | 0.0001 |
| 115 | SLE RA 20 | 0.19 | -4.57 | 23.01 | 0.4124 | 0.1158 | 0.0001 |
| 115 | SLE RA 21 | 0.2 | -3.7 | 23.15 | 0.3805 | 0.1212 | 0.0001 |

| Nodo | Cont. | Reazione a traslazione | | | Reazione a rotazione | | |
|---|---|---|---|---|---|---|---|
| Ind. | N.br. | x | y | z | x | y | z |
| 115 | SLE FR 1 | 0.16 | -3.81 | 20.53 | 0.3525 | 0.0995 | 0.0001 |
| 115 | SLE FR 2 | 0.17 | -3.53 | 20.58 | 0.3418 | 0.1012 | 0.0001 |
| 115 | SLE FR 3 | 0.16 | -3.89 | 20.57 | 0.3563 | 0.0998 | 0.0001 |
| 115 | SLE FR 4 | 0.17 | -3.69 | 21.3 | 0.357 | 0.1059 | 0.0001 |
| 115 | SLE FR 5 | 0.17 | -4.06 | 21.29 | 0.3714 | 0.1045 | 0.0001 |
| 115 | SLE FR 6 | 0.18 | -4.09 | 21.73 | 0.3777 | 0.1072 | 0.0001 |
| 115 | SLE QP 1 | 0.16 | -3.81 | 20.53 | 0.3525 | 0.0995 | 0.0001 |
| 115 | SLE QP 2 | 0.17 | -3.98 | 21.25 | 0.3676 | 0.1041 | 0.0001 |
| 115 | SLD 1 | 0.37 | -0.88 | 20.16 | 0.2373 | 0.247 | 0 |
| 115 | SLD 2 | 0.37 | -0.88 | 20.16 | 0.2373 | 0.247 | 0 |
| 115 | SLD 3 | 0.31 | -4.69 | 18.96 | 0.3999 | 0.2073 | 0 |
| 115 | SLD 4 | 0.31 | -4.69 | 18.96 | 0.3999 | 0.2073 | 0 |
| 115 | SLD 5 | 0.31 | 2.74 | 22.73 | 0.082 | 0.2073 | 0 |
| 115 | SLD 6 | 0.31 | 2.74 | 22.73 | 0.082 | 0.2073 | 0 |
| 115 | SLD 7 | 0.14 | -9.98 | 18.76 | 0.6238 | 0.0747 | 0.0001 |
| 115 | SLD 8 | 0.14 | -9.98 | 18.76 | 0.6238 | 0.0747 | 0.0001 |
| 115 | SLD 9 | 0.21 | 2.02 | 23.74 | 0.1114 | 0.1335 | 0 |
| 115 | SLD 10 | 0.21 | 2.02 | 23.74 | 0.1114 | 0.1335 | 0 |
| 115 | SLD 11 | 0.04 | -10.7 | 19.77 | 0.6532 | 0.0009 | 0.0001 |
| 115 | SLD 12 | 0.04 | -10.7 | 19.77 | 0.6532 | 0.0009 | 0.0001 |
| 115 | SLD 13 | 0.03 | -3.27 | 23.53 | 0.3353 | 0.0009 | 0.0001 |
| 115 | SLD 14 | 0.03 | -3.27 | 23.53 | 0.3353 | 0.0009 | 0.0001 |
| 115 | SLD 15 | -0.02 | -7.09 | 22.34 | 0.4979 | -0.0389 | 0.0001 |
| 115 | SLD 16 | -0.02 | -7.09 | 22.34 | 0.4979 | -0.0389 | 0.0001 |
| 115 | SLV 1 | 0.63 | 3.46 | 18.71 | 0.0557 | 0.4414 | -0.0001 |
| 115 | SLV 2 | 0.63 | 3.46 | 18.71 | 0.0557 | 0.4414 | -0.0001 |
| 115 | SLV 3 | 0.5 | -5.64 | 15.88 | 0.4419 | 0.3437 | -0.0001 |
| 115 | SLV 4 | 0.5 | -5.64 | 15.88 | 0.4419 | 0.3437 | -0.0001 |
| 115 | SLV 5 | 0.5 | 12.06 | 24.78 | -0.3117 | 0.3534 | -0.0001 |
| 115 | SLV 6 | 0.5 | 12.06 | 24.78 | -0.3117 | 0.3534 | -0.0001 |
| 115 | SLV 7 | 0.08 | -18.29 | 15.34 | 0.9757 | 0.0279 | 0.0001 |
| 115 | SLV 8 | 0.08 | -18.29 | 15.34 | 0.9757 | 0.0279 | 0.0001 |
| 115 | SLV 9 | 0.26 | 10.32 | 27.16 | -0.2405 | 0.1803 | 0 |
| 115 | SLV 10 | 0.26 | 10.32 | 27.16 | -0.2405 | 0.1803 | 0 |
| 115 | SLV 11 | -0.16 | -20.02 | 17.71 | 1.0469 | -0.1452 | 0.0002 |
| 115 | SLV 12 | -0.16 | -20.02 | 17.71 | 1.0469 | -0.1452 | 0.0002 |
| 115 | SLV 13 | -0.16 | -2.32 | 26.62 | 0.2932 | -0.1355 | 0.0002 |
| 115 | SLV 14 | -0.16 | -2.32 | 26.62 | 0.2932 | -0.1355 | 0.0002 |
| 115 | SLV 15 | -0.29 | -11.42 | 23.79 | 0.6795 | -0.2332 | 0.0002 |
| 115 | SLV 16 | -0.29 | -11.42 | 23.79 | 0.6795 | -0.2332 | 0.0002 |
| 116 | SLU 1 | 0.06 | -3.21 | 40.33 | 0.1377 | 0.0388 | -0.0021 |
| 116 | SLU 2 | 0.06 | -3.54 | 40.59 | 0.1536 | 0.0384 | -0.0021 |
| 116 | SLU 3 | 0.06 | -3.21 | 41.1 | 0.1383 | 0.0397 | -0.0021 |
| 116 | SLU 4 | 0.06 | -3.41 | 41.25 | 0.1478 | 0.0394 | -0.0021 |
| 116 | SLU 5 | 0.06 | -3.52 | 41.01 | 0.1532 | 0.0389 | -0.0021 |
| 116 | SLU 6 | 0.06 | -3.2 | 41.53 | 0.1379 | 0.0402 | -0.0022 |
| 116 | SLU 7 | 0.06 | -3.39 | 41.68 | 0.1474 | 0.0399 | -0.0021 |
| 116 | SLU 8 | 0.06 | -3.18 | 41.19 | 0.137 | 0.0398 | -0.0021 |
| 116 | SLU 9 | 0.06 | -3.38 | 41.34 | 0.1465 | 0.0396 | -0.0021 |
| 116 | SLU 10 | 0.08 | -4.08 | 48.1 | 0.1777 | 0.0466 | -0.0025 |
| 116 | SLU 11 | 0.08 | -3.76 | 48.62 | 0.1624 | 0.0479 | -0.0026 |
| 116 | SLU 12 | 0.08 | -3.95 | 48.77 | 0.1719 | 0.0477 | -0.0026 |
| 116 | SLU 13 | 0.08 | -4.07 | 48.53 | 0.1773 | 0.0471 | -0.0025 |
| 116 | SLU 14 | 0.08 | -3.74 | 49.05 | 0.162 | 0.0484 | -0.0026 |
| 116 | SLU 15 | 0.08 | -3.94 | 49.2 | 0.1715 | 0.0482 | -0.0026 |
| 116 | SLU 16 | 0.08 | -3.73 | 48.71 | 0.1611 | 0.048 | -0.0026 |
| 116 | SLU 17 | 0.08 | -3.92 | 48.86 | 0.1706 | 0.0478 | -0.0026 |
| 116 | SLU 18 | 0.08 | -3.99 | 51.07 | 0.1721 | 0.0506 | -0.0027 |
| 116 | SLU 19 | 0.08 | -4.19 | 51.22 | 0.1817 | 0.0503 | -0.0027 |
| 116 | SLU 20 | 0.08 | -3.98 | 51.5 | 0.1718 | 0.0511 | -0.0027 |
| 116 | SLU 21 | 0.08 | -4.17 | 51.65 | 0.1813 | 0.0508 | -0.0027 |
| 116 | SLU 22 | 0.07 | -3.49 | 44.67 | 0.1512 | 0.0436 | -0.0023 |
| 116 | SLU 23 | 0.07 | -3.82 | 44.92 | 0.1671 | 0.0432 | -0.0023 |
| 116 | SLU 24 | 0.07 | -3.5 | 45.44 | 0.1518 | 0.0445 | -0.0024 |
| 116 | SLU 25 | 0.07 | -3.69 | 45.59 | 0.1613 | 0.0442 | -0.0024 |
| 116 | SLU 26 | 0.07 | -3.81 | 45.35 | 0.1668 | 0.0437 | -0.0024 |
| 116 | SLU 27 | 0.07 | -3.48 | 45.87 | 0.1514 | 0.045 | -0.0024 |
| 116 | SLU 28 | 0.07 | -3.68 | 46.02 | 0.161 | 0.0447 | -0.0024 |
| 116 | SLU 29 | 0.07 | -3.46 | 45.53 | 0.1505 | 0.0446 | -0.0024 |
| 116 | SLU 30 | 0.07 | -3.66 | 45.68 | 0.16 | 0.0444 | -0.0024 |
| 116 | SLU 31 | 0.08 | -4.37 | 52.44 | 0.1912 | 0.0514 | -0.0028 |
| 116 | SLU 32 | 0.09 | -4.04 | 52.96 | 0.1759 | 0.0527 | -0.0028 |
| 116 | SLU 33 | 0.08 | -4.24 | 53.11 | 0.1854 | 0.0525 | -0.0028 |
| 116 | SLU 34 | 0.08 | -4.35 | 52.87 | 0.1909 | 0.0519 | -0.0028 |
| 116 | SLU 35 | 0.09 | -4.03 | 53.39 | 0.1755 | 0.0532 | -0.0029 |
| 116 | SLU 36 | 0.09 | -4.22 | 53.54 | 0.1851 | 0.053 | -0.0028 |
| 116 | SLU 37 | 0.09 | -4.01 | 53.05 | 0.1746 | 0.0528 | -0.0028 |
| 116 | SLU 38 | 0.08 | -4.21 | 53.2 | 0.1841 | 0.0526 | -0.0028 |
| 116 | SLU 39 | 0.09 | -4.28 | 55.41 | 0.1857 | 0.0554 | -0.003 |
| 116 | SLU 40 | 0.09 | -4.47 | 55.56 | 0.1952 | 0.0551 | -0.003 |
| 116 | SLU 41 | 0.09 | -4.26 | 55.84 | 0.1853 | 0.0559 | -0.003 |
| 116 | SLU 42 | 0.09 | -4.46 | 55.99 | 0.1948 | 0.0556 | -0.003 |
| 116 | SLU 43 | 0.08 | -4.08 | 50.94 | 0.1744 | 0.0488 | -0.0026 |
| 116 | SLU 44 | 0.08 | -4.4 | 51.2 | 0.1903 | 0.0484 | -0.0026 |
| 116 | SLU 45 | 0.08 | -4.08 | 51.71 | 0.1749 | 0.0497 | -0.0027 |
| 116 | SLU 46 | 0.08 | -4.27 | 51.87 | 0.1845 | 0.0494 | -0.0027 |
| 116 | SLU 47 | 0.08 | -4.39 | 51.63 | 0.1899 | 0.0489 | -0.0026 |
| 116 | SLU 48 | 0.08 | -4.06 | 52.14 | 0.1746 | 0.0502 | -0.0027 |

| Nodo | Cont. | Reazione a traslazione | | | Reazione a rotazione | | |
|---|---|---|---|---|---|---|---|
| Ind. | N.br. | x | y | z | x | y | z |
| 116 | SLU 49 | 0.08 | -4.26 | 52.29 | 0.1841 | 0.0499 | -0.0027 |
| 116 | SLU 50 | 0.08 | -4.05 | 51.8 | 0.1736 | 0.0498 | -0.0027 |
| 116 | SLU 51 | 0.08 | -4.24 | 51.96 | 0.1832 | 0.0496 | -0.0027 |
| 116 | SLU 52 | 0.09 | -4.95 | 58.72 | 0.2144 | 0.0566 | -0.003 |
| 116 | SLU 53 | 0.09 | -4.62 | 59.23 | 0.199 | 0.0579 | -0.0031 |
| 116 | SLU 54 | 0.09 | -4.82 | 59.38 | 0.2086 | 0.0577 | -0.0031 |
| 116 | SLU 55 | 0.09 | -4.93 | 59.15 | 0.214 | 0.0571 | -0.0031 |
| 116 | SLU 56 | 0.09 | -4.61 | 59.66 | 0.1987 | 0.0584 | -0.0031 |
| 116 | SLU 57 | 0.09 | -4.81 | 59.81 | 0.2082 | 0.0582 | -0.0031 |
| 116 | SLU 58 | 0.09 | -4.59 | 59.32 | 0.1977 | 0.058 | -0.0031 |
| 116 | SLU 59 | 0.09 | -4.79 | 59.47 | 0.2073 | 0.0578 | -0.0031 |
| 116 | SLU 60 | 0.1 | -4.86 | 61.69 | 0.2088 | 0.0606 | -0.0032 |
| 116 | SLU 61 | 0.1 | -5.05 | 61.84 | 0.2184 | 0.0603 | -0.0032 |
| 116 | SLU 62 | 0.1 | -4.84 | 62.11 | 0.2084 | 0.0611 | -0.0033 |
| 116 | SLU 63 | 0.1 | -5.04 | 62.27 | 0.218 | 0.0608 | -0.0033 |
| 116 | SLU 64 | 0.09 | -4.36 | 55.28 | 0.1879 | 0.0537 | -0.0029 |
| 116 | SLU 65 | 0.09 | -4.69 | 55.53 | 0.2038 | 0.0532 | -0.0029 |
| 116 | SLU 66 | 0.09 | -4.36 | 56.05 | 0.1885 | 0.0545 | -0.0029 |
| 116 | SLU 67 | 0.09 | -4.56 | 56.2 | 0.198 | 0.0543 | -0.0029 |
| 116 | SLU 68 | 0.09 | -4.67 | 55.96 | 0.2034 | 0.0537 | -0.0029 |
| 116 | SLU 69 | 0.09 | -4.35 | 56.48 | 0.1881 | 0.055 | -0.003 |
| 116 | SLU 70 | 0.09 | -4.54 | 56.63 | 0.1976 | 0.0547 | -0.0029 |
| 116 | SLU 71 | 0.09 | -4.33 | 56.14 | 0.1872 | 0.0546 | -0.0029 |
| 116 | SLU 72 | 0.09 | -4.53 | 56.29 | 0.1967 | 0.0544 | -0.0029 |
| 116 | SLU 73 | 0.1 | -5.23 | 63.05 | 0.2279 | 0.0614 | -0.0033 |
| 116 | SLU 74 | 0.1 | -4.91 | 63.57 | 0.2126 | 0.0627 | -0.0034 |
| 116 | SLU 75 | 0.1 | -5.1 | 63.72 | 0.2221 | 0.0625 | -0.0034 |
| 116 | SLU 76 | 0.1 | -5.22 | 63.48 | 0.2275 | 0.0619 | -0.0033 |
| 116 | SLU 77 | 0.1 | -4.89 | 64 | 0.2122 | 0.0632 | -0.0034 |
| 116 | SLU 78 | 0.1 | -5.09 | 64.15 | 0.2217 | 0.063 | -0.0034 |
| 116 | SLU 79 | 0.1 | -4.88 | 63.66 | 0.2113 | 0.0629 | -0.0034 |
| 116 | SLU 80 | 0.1 | -5.07 | 63.81 | 0.2208 | 0.0626 | -0.0034 |
| 116 | SLU 81 | 0.11 | -5.14 | 66.02 | 0.2223 | 0.0654 | -0.0035 |
| 116 | SLU 82 | 0.11 | -5.34 | 66.17 | 0.2319 | 0.0651 | -0.0035 |
| 116 | SLU 83 | 0.11 | -5.13 | 66.45 | 0.222 | 0.0659 | -0.0035 |
| 116 | SLU 84 | 0.11 | -5.32 | 66.6 | 0.2315 | 0.0656 | -0.0035 |
| 116 | SLE RA 1 | 0.07 | -3.29 | 41.57 | 0.1416 | 0.0402 | -0.0022 |
| 116 | SLE RA 2 | 0.06 | -3.51 | 41.74 | 0.1522 | 0.0399 | -0.0022 |
| 116 | SLE RA 3 | 0.07 | -3.29 | 42.08 | 0.1419 | 0.0408 | -0.0022 |
| 116 | SLE RA 4 | 0.07 | -3.42 | 42.19 | 0.1483 | 0.0406 | -0.0022 |
| 116 | SLE RA 5 | 0.07 | -3.5 | 42.03 | 0.1519 | 0.0402 | -0.0022 |
| 116 | SLE RA 6 | 0.07 | -3.28 | 42.37 | 0.1417 | 0.0411 | -0.0022 |
| 116 | SLE RA 7 | 0.07 | -3.41 | 42.47 | 0.1481 | 0.0409 | -0.0022 |
| 116 | SLE RA 8 | 0.07 | -3.27 | 42.14 | 0.1411 | 0.0409 | -0.0022 |
| 116 | SLE RA 9 | 0.07 | -3.4 | 42.25 | 0.1474 | 0.0407 | -0.0022 |
| 116 | SLE RA 10 | 0.07 | -3.87 | 46.75 | 0.1682 | 0.0454 | -0.0024 |
| 116 | SLE RA 11 | 0.07 | -3.66 | 47.1 | 0.158 | 0.0463 | -0.0025 |
| 116 | SLE RA 12 | 0.07 | -3.79 | 47.2 | 0.1644 | 0.0461 | -0.0025 |
| 116 | SLE RA 13 | 0.07 | -3.86 | 47.04 | 0.168 | 0.0457 | -0.0025 |
| 116 | SLE RA 14 | 0.08 | -3.65 | 47.38 | 0.1578 | 0.0466 | -0.0025 |
| 116 | SLE RA 15 | 0.07 | -3.78 | 47.48 | 0.1641 | 0.0464 | -0.0025 |
| 116 | SLE RA 16 | 0.07 | -3.64 | 47.16 | 0.1571 | 0.0463 | -0.0025 |
| 116 | SLE RA 17 | 0.07 | -3.77 | 47.26 | 0.1635 | 0.0462 | -0.0025 |
| 116 | SLE RA 18 | 0.08 | -3.81 | 48.73 | 0.1645 | 0.048 | -0.0026 |
| 116 | SLE RA 19 | 0.08 | -3.94 | 48.83 | 0.1709 | 0.0479 | -0.0026 |
| 116 | SLE RA 20 | 0.08 | -3.8 | 49.02 | 0.1643 | 0.0484 | -0.0026 |
| 116 | SLE RA 21 | 0.08 | -3.93 | 49.12 | 0.1706 | 0.0482 | -0.0026 |
| 116 | SLE FR 1 | 0.07 | -3.29 | 41.57 | 0.1416 | 0.0402 | -0.0022 |
| 116 | SLE FR 2 | 0.07 | -3.33 | 41.61 | 0.1437 | 0.0402 | -0.0022 |
| 116 | SLE FR 3 | 0.07 | -3.29 | 41.69 | 0.1415 | 0.0403 | -0.0022 |
| 116 | SLE FR 4 | 0.07 | -3.49 | 43.75 | 0.1506 | 0.0425 | -0.0023 |
| 116 | SLE FR 5 | 0.07 | -3.44 | 43.83 | 0.1484 | 0.0427 | -0.0023 |
| 116 | SLE FR 6 | 0.07 | -3.55 | 45.15 | 0.153 | 0.0441 | -0.0024 |
| 116 | SLE QP 1 | 0.07 | -3.29 | 41.57 | 0.1416 | 0.0402 | -0.0022 |
| 116 | SLE QP 2 | 0.07 | -3.45 | 43.72 | 0.1485 | 0.0426 | -0.0023 |
| 116 | SLD 1 | 0.26 | -0.67 | 39.95 | -0.0004 | 0.1926 | -0.009 |
| 116 | SLD 2 | 0.26 | -0.67 | 39.95 | -0.0004 | 0.1926 | -0.009 |
| 116 | SLD 3 | 0.24 | -4.43 | 38.69 | 0.1935 | 0.176 | -0.0083 |
| 116 | SLD 4 | 0.24 | -4.43 | 38.69 | 0.1935 | 0.176 | -0.0083 |
| 116 | SLD 5 | 0.16 | 3.08 | 44.49 | -0.1904 | 0.1126 | -0.0055 |
| 116 | SLD 6 | 0.16 | 3.08 | 44.49 | -0.1904 | 0.1126 | -0.0055 |
| 116 | SLD 7 | 0.09 | -9.44 | 40.31 | 0.4561 | 0.0576 | -0.0029 |
| 116 | SLD 8 | 0.09 | -9.44 | 40.31 | 0.4561 | 0.0576 | -0.0029 |
| 116 | SLD 9 | 0.05 | 2.55 | 47.13 | -0.1592 | 0.0276 | -0.0017 |
| 116 | SLD 10 | 0.05 | 2.55 | 47.13 | -0.1592 | 0.0276 | -0.0017 |
| 116 | SLD 11 | -0.02 | -9.98 | 42.95 | 0.4873 | -0.0275 | 0.0009 |
| 116 | SLD 12 | -0.02 | -9.98 | 42.95 | 0.4873 | -0.0275 | 0.0009 |
| 116 | SLD 13 | -0.1 | -2.47 | 48.75 | 0.1034 | -0.0909 | 0.0037 |
| 116 | SLD 14 | -0.1 | -2.47 | 48.75 | 0.1034 | -0.0909 | 0.0037 |
| 116 | SLD 15 | -0.12 | -6.22 | 47.49 | 0.2974 | -0.1074 | 0.0045 |
| 116 | SLD 16 | -0.12 | -6.22 | 47.49 | 0.2974 | -0.1074 | 0.0045 |
| 116 | SLV 1 | 0.54 | 3.01 | 34.91 | -0.1976 | 0.4135 | -0.0189 |
| 116 | SLV 2 | 0.54 | 3.01 | 34.91 | -0.1976 | 0.4135 | -0.0189 |
| 116 | SLV 3 | 0.49 | -5.7 | 31.92 | 0.2519 | 0.374 | -0.017 |
| 116 | SLV 4 | 0.49 | -5.7 | 31.92 | 0.2519 | 0.374 | -0.017 |
| 116 | SLV 5 | 0.29 | 11.7 | 45.61 | -0.637 | 0.2138 | -0.0101 |
| 116 | SLV 6 | 0.29 | 11.7 | 45.61 | -0.637 | 0.2138 | -0.0101 |
| 116 | SLV 7 | 0.11 | -17.34 | 35.65 | 0.8611 | 0.082 | -0.0039 |

| Nodo | Cont. | Reazione a traslazione | | | Reazione a rotazione | | |
|---|---|---|---|---|---|---|---|
| Ind. | N.br. | x | y | z | x | y | z |
| 116 | SLV 8 | 0.11 | -17.34 | 35.65 | 0.8611 | 0.082 | -0.0039 |
| 116 | SLV 9 | 0.02 | 10.44 | 51.79 | -0.5642 | 0.0031 | -0.0007 |
| 116 | SLV 10 | 0.02 | 10.44 | 51.79 | -0.5642 | 0.0031 | -0.0007 |
| 116 | SLV 11 | -0.15 | -18.6 | 41.83 | 0.9339 | -0.1287 | 0.0056 |
| 116 | SLV 12 | -0.15 | -18.6 | 41.83 | 0.9339 | -0.1287 | 0.0056 |
| 116 | SLV 13 | -0.35 | -1.19 | 55.52 | 0.045 | -0.2889 | 0.0125 |
| 116 | SLV 14 | -0.35 | -1.19 | 55.52 | 0.045 | -0.2889 | 0.0125 |
| 116 | SLV 15 | -0.4 | -9.9 | 52.53 | 0.4945 | -0.3284 | 0.0144 |
| 116 | SLV 16 | -0.4 | -9.9 | 52.53 | 0.4945 | -0.3284 | 0.0144 |
| 117 | SLU 1 | 0 | -0.45 | 33.47 | 0.13 | -0.0017 | 0 |
| 117 | SLU 2 | -0.01 | 1.79 | 34.81 | 0.041 | -0.0117 | 0 |
| 117 | SLU 3 | 0 | -0.7 | 34.33 | 0.1447 | -0.0018 | 0 |
| 117 | SLU 4 | -0.01 | 0.64 | 35.13 | 0.0913 | -0.0078 | 0 |
| 117 | SLU 5 | -0.01 | 1.47 | 35.31 | 0.0575 | -0.0118 | 0 |
| 117 | SLU 6 | 0 | -1.02 | 34.83 | 0.1612 | -0.0019 | 0 |
| 117 | SLU 7 | -0.01 | 0.32 | 35.63 | 0.1078 | -0.0079 | 0 |
| 117 | SLU 8 | 0 | -1.09 | 34.46 | 0.163 | -0.0018 | 0 |
| 117 | SLU 9 | -0.01 | 0.26 | 35.27 | 0.1096 | -0.0078 | 0 |
| 117 | SLU 10 | -0.01 | 1.75 | 39.78 | 0.0593 | -0.012 | 0 |
| 117 | SLU 11 | 0 | -0.75 | 39.3 | 0.1631 | -0.0021 | 0 |
| 117 | SLU 12 | -0.01 | 0.6 | 40.11 | 0.1097 | -0.0081 | 0 |
| 117 | SLU 13 | -0.01 | 1.43 | 40.28 | 0.0758 | -0.0121 | 0 |
| 117 | SLU 14 | 0 | -1.07 | 39.8 | 0.1796 | -0.0022 | 0 |
| 117 | SLU 15 | -0.01 | 0.28 | 40.61 | 0.1262 | -0.0082 | 0 |
| 117 | SLU 16 | 0 | -1.13 | 39.44 | 0.1813 | -0.0021 | 0 |
| 117 | SLU 17 | -0.01 | 0.21 | 40.24 | 0.1279 | -0.0081 | 0 |
| 117 | SLU 18 | 0 | -0.51 | 40.58 | 0.1562 | -0.0022 | 0 |
| 117 | SLU 19 | -0.01 | 0.84 | 41.38 | 0.1028 | -0.0081 | 0 |
| 117 | SLU 20 | 0 | -0.83 | 41.07 | 0.1727 | -0.0022 | 0 |
| 117 | SLU 21 | -0.01 | 0.52 | 41.88 | 0.1193 | -0.0082 | 0 |
| 117 | SLU 22 | 0 | -0.57 | 37.92 | 0.1498 | -0.002 | 0 |
| 117 | SLU 23 | -0.01 | 1.68 | 39.26 | 0.0609 | -0.012 | 0 |
| 117 | SLU 24 | 0 | -0.82 | 38.78 | 0.1646 | -0.0021 | 0 |
| 117 | SLU 25 | -0.01 | 0.53 | 39.58 | 0.1112 | -0.0081 | 0 |
| 117 | SLU 26 | -0.01 | 1.36 | 39.76 | 0.0774 | -0.0121 | 0 |
| 117 | SLU 27 | 0 | -1.14 | 39.28 | 0.1811 | -0.0022 | 0 |
| 117 | SLU 28 | -0.01 | 0.21 | 40.08 | 0.1277 | -0.0082 | 0 |
| 117 | SLU 29 | 0 | -1.21 | 38.91 | 0.1828 | -0.0021 | 0 |
| 117 | SLU 30 | -0.01 | 0.14 | 39.72 | 0.1295 | -0.0081 | 0 |
| 117 | SLU 31 | -0.01 | 1.64 | 44.23 | 0.0792 | -0.0123 | 0 |
| 117 | SLU 32 | 0 | -0.86 | 43.75 | 0.1829 | -0.0024 | 0 |
| 117 | SLU 33 | -0.01 | 0.49 | 44.56 | 0.1296 | -0.0084 | 0 |
| 117 | SLU 34 | -0.01 | 1.32 | 44.73 | 0.0957 | -0.0124 | 0 |
| 117 | SLU 35 | 0 | -1.18 | 44.25 | 0.1995 | -0.0025 | 0 |
| 117 | SLU 36 | -0.01 | 0.17 | 45.06 | 0.1461 | -0.0085 | 0 |
| 117 | SLU 37 | 0 | -1.25 | 43.89 | 0.2012 | -0.0024 | 0 |
| 117 | SLU 38 | -0.01 | 0.1 | 44.69 | 0.1478 | -0.0084 | 0 |
| 117 | SLU 39 | 0 | -0.63 | 45.03 | 0.176 | -0.0025 | 0 |
| 117 | SLU 40 | -0.01 | 0.72 | 45.83 | 0.1227 | -0.0085 | 0 |
| 117 | SLU 41 | 0 | -0.95 | 45.52 | 0.1926 | -0.0025 | 0 |
| 117 | SLU 42 | -0.01 | 0.4 | 46.33 | 0.1392 | -0.0085 | 0 |
| 117 | SLU 43 | 0 | -0.55 | 41.98 | 0.1621 | -0.0021 | 0 |
| 117 | SLU 44 | -0.01 | 1.7 | 43.32 | 0.0732 | -0.0121 | 0 |
| 117 | SLU 45 | 0 | -0.8 | 42.84 | 0.1769 | -0.0022 | 0 |
| 117 | SLU 46 | -0.01 | 0.55 | 43.65 | 0.1235 | -0.0082 | 0 |
| 117 | SLU 47 | -0.01 | 1.38 | 43.82 | 0.0897 | -0.0122 | 0 |
| 117 | SLU 48 | 0 | -1.12 | 43.34 | 0.1934 | -0.0023 | 0 |
| 117 | SLU 49 | -0.01 | 0.23 | 44.14 | 0.14 | -0.0083 | 0 |
| 117 | SLU 50 | 0 | -1.19 | 42.98 | 0.1951 | -0.0023 | 0 |
| 117 | SLU 51 | -0.01 | 0.16 | 43.78 | 0.1418 | -0.0082 | 0 |
| 117 | SLU 52 | -0.01 | 1.66 | 48.3 | 0.0915 | -0.0124 | 0 |
| 117 | SLU 53 | 0 | -0.84 | 47.82 | 0.1952 | -0.0025 | 0 |
| 117 | SLU 54 | -0.01 | 0.5 | 48.62 | 0.1419 | -0.0085 | 0 |
| 117 | SLU 55 | -0.01 | 1.34 | 48.8 | 0.108 | -0.0125 | 0 |
| 117 | SLU 56 | 0 | -1.16 | 48.32 | 0.2117 | -0.0026 | 0 |
| 117 | SLU 57 | -0.01 | 0.19 | 49.12 | 0.1584 | -0.0086 | 0 |
| 117 | SLU 58 | 0 | -1.23 | 47.95 | 0.2135 | -0.0026 | 0 |
| 117 | SLU 59 | -0.01 | 0.12 | 48.76 | 0.1601 | -0.0085 | 0 |
| 117 | SLU 60 | 0 | -0.61 | 49.09 | 0.1883 | -0.0026 | 0 |
| 117 | SLU 61 | -0.01 | 0.74 | 49.89 | 0.1349 | -0.0086 | 0 |
| 117 | SLU 62 | 0 | -0.93 | 49.59 | 0.2048 | -0.0026 | 0 |
| 117 | SLU 63 | -0.01 | 0.42 | 50.39 | 0.1515 | -0.0086 | 0 |
| 117 | SLU 64 | 0 | -0.66 | 46.43 | 0.182 | -0.0025 | 0 |
| 117 | SLU 65 | -0.01 | 1.58 | 47.77 | 0.093 | -0.0124 | 0 |
| 117 | SLU 66 | 0 | -0.91 | 47.29 | 0.1968 | -0.0025 | 0 |
| 117 | SLU 67 | -0.01 | 0.43 | 48.1 | 0.1434 | -0.0085 | 0 |
| 117 | SLU 68 | -0.01 | 1.26 | 48.27 | 0.1095 | -0.0125 | 0 |
| 117 | SLU 69 | 0 | -1.23 | 47.79 | 0.2133 | -0.0026 | 0 |
| 117 | SLU 70 | -0.01 | 0.11 | 48.59 | 0.1599 | -0.0086 | 0 |
| 117 | SLU 71 | 0 | -1.3 | 47.43 | 0.215 | -0.0026 | 0 |
| 117 | SLU 72 | -0.01 | 0.05 | 48.23 | 0.1616 | -0.0086 | 0 |
| 117 | SLU 73 | -0.01 | 1.54 | 52.75 | 0.1114 | -0.0127 | 0 |
| 117 | SLU 74 | 0 | -0.96 | 52.27 | 0.2151 | -0.0028 | 0 |
| 117 | SLU 75 | -0.01 | 0.39 | 53.07 | 0.1617 | -0.0088 | 0 |
| 117 | SLU 76 | -0.01 | 1.22 | 53.25 | 0.1279 | -0.0128 | 0 |
| 117 | SLU 77 | 0 | -1.28 | 52.77 | 0.2316 | -0.0029 | 0 |
| 117 | SLU 78 | -0.01 | 0.07 | 53.57 | 0.1782 | -0.0089 | 0 |
| 117 | SLU 79 | 0 | -1.34 | 52.4 | 0.2334 | -0.0029 | 0 |

| Nodo | Cont. | Reazione a traslazione | | | Reazione a rotazione | | |
|---|---|---|---|---|---|---|---|
| Ind. | N.br. | x | y | z | x | y | z |
| 117 | SLU 80 | -0.01 | 0 | 53.21 | 0.18 | -0.0089 | 0 |
| 117 | SLU 81 | 0 | -0.72 | 53.54 | 0.2082 | -0.0029 | 0 |
| 117 | SLU 82 | -0.01 | 0.63 | 54.34 | 0.1548 | -0.0089 | 0 |
| 117 | SLU 83 | 0 | -1.04 | 54.04 | 0.2247 | -0.0029 | 0 |
| 117 | SLU 84 | -0.01 | 0.31 | 54.84 | 0.1713 | -0.0089 | 0 |
| 117 | SLE RA 1 | 0 | -0.48 | 34.74 | 0.1356 | -0.0018 | 0 |
| 117 | SLE RA 2 | -0.01 | 1.01 | 35.63 | 0.0763 | -0.0085 | 0 |
| 117 | SLE RA 3 | 0 | -0.65 | 35.31 | 0.1455 | -0.0019 | 0 |
| 117 | SLE RA 4 | 0 | 0.25 | 35.85 | 0.1099 | -0.0059 | 0 |
| 117 | SLE RA 5 | -0.01 | 0.8 | 35.96 | 0.0873 | -0.0085 | 0 |
| 117 | SLE RA 6 | 0 | -0.87 | 35.64 | 0.1565 | -0.0019 | 0 |
| 117 | SLE RA 7 | 0 | 0.03 | 36.18 | 0.1209 | -0.0059 | 0 |
| 117 | SLE RA 8 | 0 | -0.91 | 35.4 | 0.1576 | -0.0019 | 0 |
| 117 | SLE RA 9 | 0 | -0.01 | 35.94 | 0.1221 | -0.0059 | 0 |
| 117 | SLE RA 10 | -0.01 | 0.99 | 38.95 | 0.0885 | -0.0087 | 0 |
| 117 | SLE RA 11 | 0 | -0.68 | 38.63 | 0.1577 | -0.0021 | 0 |
| 117 | SLE RA 12 | 0 | 0.22 | 39.17 | 0.1221 | -0.0061 | 0 |
| 117 | SLE RA 13 | -0.01 | 0.77 | 39.28 | 0.0996 | -0.0087 | 0 |
| 117 | SLE RA 14 | 0 | -0.89 | 38.96 | 0.1687 | -0.0021 | 0 |
| 117 | SLE RA 15 | 0 | 0 | 39.5 | 0.1331 | -0.0061 | 0 |
| 117 | SLE RA 16 | 0 | -0.94 | 38.72 | 0.1699 | -0.0021 | 0 |
| 117 | SLE RA 17 | 0 | -0.04 | 39.26 | 0.1343 | -0.0061 | 0 |
| 117 | SLE RA 18 | 0 | -0.52 | 39.48 | 0.1531 | -0.0021 | 0 |
| 117 | SLE RA 19 | 0 | 0.37 | 40.01 | 0.1175 | -0.0061 | 0 |
| 117 | SLE RA 20 | 0 | -0.74 | 39.81 | 0.1641 | -0.0021 | 0 |
| 117 | SLE RA 21 | 0 | 0.16 | 40.35 | 0.1285 | -0.0061 | 0 |
| 117 | SLE FR 1 | 0 | -0.48 | 34.74 | 0.1356 | -0.0018 | 0 |
| 117 | SLE FR 2 | 0 | -0.18 | 34.92 | 0.1238 | -0.0032 | 0 |
| 117 | SLE FR 3 | 0 | -0.57 | 34.87 | 0.14 | -0.0018 | 0 |
| 117 | SLE FR 4 | 0 | -0.2 | 36.34 | 0.129 | -0.0032 | 0 |
| 117 | SLE FR 5 | 0 | -0.58 | 36.29 | 0.1453 | -0.0019 | 0 |
| 117 | SLE FR 6 | 0 | -0.5 | 37.11 | 0.1444 | -0.002 | 0 |
| 117 | SLE QP 1 | 0 | -0.48 | 34.74 | 0.1356 | -0.0018 | 0 |
| 117 | SLE QP 2 | 0 | -0.5 | 36.16 | 0.1409 | -0.0019 | 0 |
| 117 | SLD 1 | 0.12 | 3.06 | 39.09 | -0.0145 | 0.0931 | -0.0001 |
| 117 | SLD 2 | 0.12 | 3.06 | 39.09 | -0.0145 | 0.0931 | -0.0001 |
| 117 | SLD 3 | 0.15 | -0.73 | 37.14 | 0.1515 | 0.1174 | -0.0001 |
| 117 | SLD 4 | 0.15 | -0.73 | 37.14 | 0.1515 | 0.1174 | -0.0001 |
| 117 | SLD 5 | -0.01 | 6.31 | 40 | -0.1574 | -0.0101 | 0 |
| 117 | SLD 6 | -0.01 | 6.31 | 40 | -0.1574 | -0.0101 | 0 |
| 117 | SLD 7 | 0.09 | -6.3 | 33.49 | 0.3957 | 0.0706 | 0 |
| 117 | SLD 8 | 0.09 | -6.3 | 33.49 | 0.3957 | 0.0706 | 0 |
| 117 | SLD 9 | -0.09 | 5.31 | 38.82 | -0.114 | -0.0744 | 0 |
| 117 | SLD 10 | -0.09 | 5.31 | 38.82 | -0.114 | -0.0744 | 0 |
| 117 | SLD 11 | 0.01 | -7.3 | 32.32 | 0.4392 | 0.0063 | 0 |
| 117 | SLD 12 | 0.01 | -7.3 | 32.32 | 0.4392 | 0.0063 | 0 |
| 117 | SLD 13 | -0.15 | -0.27 | 35.18 | 0.1303 | -0.1212 | 0.0001 |
| 117 | SLD 14 | -0.15 | -0.27 | 35.18 | 0.1303 | -0.1212 | 0.0001 |
| 117 | SLD 15 | -0.12 | -4.05 | 33.23 | 0.2962 | -0.097 | 0.0001 |
| 117 | SLD 16 | -0.12 | -4.05 | 33.23 | 0.2962 | -0.097 | 0.0001 |
| 117 | SLV 1 | 0.28 | 7.95 | 43.04 | -0.228 | 0.2264 | -0.0002 |
| 117 | SLV 2 | 0.28 | 7.95 | 43.04 | -0.228 | 0.2264 | -0.0002 |
| 117 | SLV 3 | 0.36 | -0.92 | 38.43 | 0.1603 | 0.2876 | -0.0001 |
| 117 | SLV 4 | 0.36 | -0.92 | 38.43 | 0.1603 | 0.2876 | -0.0001 |
| 117 | SLV 5 | -0.03 | 15.5 | 45.22 | -0.5587 | -0.0261 | -0.0001 |
| 117 | SLV 6 | -0.03 | 15.5 | 45.22 | -0.5587 | -0.0261 | -0.0001 |
| 117 | SLV 7 | 0.22 | -14.08 | 29.85 | 0.7356 | 0.1777 | 0 |
| 117 | SLV 8 | 0.22 | -14.08 | 29.85 | 0.7356 | 0.1777 | 0 |
| 117 | SLV 9 | -0.22 | 13.09 | 42.47 | -0.4538 | -0.1815 | 0 |
| 117 | SLV 10 | -0.22 | 13.09 | 42.47 | -0.4538 | -0.1815 | 0 |
| 117 | SLV 11 | 0.02 | -16.49 | 27.1 | 0.8405 | 0.0223 | 0.0001 |
| 117 | SLV 12 | 0.02 | -16.49 | 27.1 | 0.8405 | 0.0223 | 0.0001 |
| 117 | SLV 13 | -0.36 | -0.07 | 33.89 | 0.1215 | -0.2914 | 0.0001 |
| 117 | SLV 14 | -0.36 | -0.07 | 33.89 | 0.1215 | -0.2914 | 0.0001 |
| 117 | SLV 15 | -0.28 | -8.95 | 29.28 | 0.5098 | -0.2303 | 0.0002 |
| 117 | SLV 16 | -0.28 | -8.95 | 29.28 | 0.5098 | -0.2303 | 0.0002 |
| 118 | SLU 1 | 0.01 | 4.43 | 54.5 | -0.1453 | 0.0101 | 0 |
| 118 | SLU 2 | 0.08 | 5.32 | 58.17 | -0.1765 | 0.0815 | 0 |
| 118 | SLU 3 | 0.01 | 4.58 | 56.19 | -0.1501 | 0.0102 | 0 |
| 118 | SLU 4 | 0.05 | 5.12 | 58.4 | -0.1689 | 0.0531 | 0 |
| 118 | SLU 5 | 0.08 | 5.4 | 59.23 | -0.1789 | 0.0816 | 0 |
| 118 | SLU 6 | 0.01 | 4.66 | 57.25 | -0.1526 | 0.0102 | 0 |
| 118 | SLU 7 | 0.05 | 5.2 | 59.45 | -0.1713 | 0.0531 | 0 |
| 118 | SLU 8 | 0.01 | 4.59 | 56.61 | -0.1502 | 0.0101 | 0 |
| 118 | SLU 9 | 0.05 | 5.13 | 58.81 | -0.1689 | 0.053 | 0 |
| 118 | SLU 10 | 0.08 | 5.95 | 64.28 | -0.1979 | 0.0833 | 0 |
| 118 | SLU 11 | 0.01 | 5.21 | 62.3 | -0.1716 | 0.0119 | 0 |
| 118 | SLU 12 | 0.06 | 5.74 | 64.5 | -0.1903 | 0.0548 | 0 |
| 118 | SLU 13 | 0.08 | 6.03 | 65.33 | -0.2004 | 0.0833 | 0 |
| 118 | SLU 14 | 0.01 | 5.29 | 63.35 | -0.1741 | 0.0119 | 0 |
| 118 | SLU 15 | 0.06 | 5.82 | 65.56 | -0.1928 | 0.0548 | 0 |
| 118 | SLU 16 | 0.01 | 5.22 | 62.71 | -0.1717 | 0.0118 | 0 |
| 118 | SLU 17 | 0.05 | 5.75 | 64.92 | -0.1904 | 0.0547 | 0 |
| 118 | SLU 18 | 0.01 | 5.32 | 63.22 | -0.176 | 0.0125 | 0 |
| 118 | SLU 19 | 0.06 | 5.86 | 65.42 | -0.1947 | 0.0554 | 0 |
| 118 | SLU 20 | 0.01 | 5.4 | 64.27 | -0.1784 | 0.0125 | 0 |
| 118 | SLU 21 | 0.06 | 5.94 | 66.48 | -0.1972 | 0.0554 | 0 |
| 118 | SLU 22 | 0.01 | 5.02 | 61.09 | -0.1648 | 0.0114 | 0 |

| Nodo | Cont. | Reazione a traslazione | | | Reazione a rotazione | | |
|---|---|---|---|---|---|---|---|
| Ind. | N.br. | x | y | z | x | y | z |
| 118 | SLU 23 | 0.08 | 5.92 | 64.76 | -0.196 | 0.0829 | 0 |
| 118 | SLU 24 | 0.01 | 5.17 | 62.78 | -0.1697 | 0.0115 | 0 |
| 118 | SLU 25 | 0.05 | 5.71 | 64.99 | -0.1884 | 0.0544 | 0 |
| 118 | SLU 26 | 0.08 | 6 | 65.82 | -0.1985 | 0.0829 | 0 |
| 118 | SLU 27 | 0.01 | 5.25 | 63.84 | -0.1722 | 0.0115 | 0 |
| 118 | SLU 28 | 0.05 | 5.79 | 66.04 | -0.1909 | 0.0544 | 0 |
| 118 | SLU 29 | 0.01 | 5.18 | 63.2 | -0.1698 | 0.0114 | 0 |
| 118 | SLU 30 | 0.05 | 5.72 | 65.4 | -0.1885 | 0.0543 | 0 |
| 118 | SLU 31 | 0.09 | 6.54 | 70.87 | -0.2175 | 0.0846 | 0 |
| 118 | SLU 32 | 0.01 | 5.8 | 68.89 | -0.1912 | 0.0132 | 0 |
| 118 | SLU 33 | 0.06 | 6.34 | 71.09 | -0.2099 | 0.0561 | 0 |
| 118 | SLU 34 | 0.09 | 6.63 | 71.92 | -0.22 | 0.0846 | 0 |
| 118 | SLU 35 | 0.01 | 5.88 | 69.94 | -0.1937 | 0.0132 | 0 |
| 118 | SLU 36 | 0.06 | 6.42 | 72.15 | -0.2124 | 0.0561 | 0 |
| 118 | SLU 37 | 0.01 | 5.81 | 69.31 | -0.1913 | 0.0131 | 0 |
| 118 | SLU 38 | 0.06 | 6.35 | 71.51 | -0.21 | 0.056 | 0 |
| 118 | SLU 39 | 0.01 | 5.92 | 69.81 | -0.1955 | 0.0139 | 0 |
| 118 | SLU 40 | 0.06 | 6.45 | 72.02 | -0.2142 | 0.0568 | 0 |
| 118 | SLU 41 | 0.01 | 6 | 70.87 | -0.198 | 0.0139 | 0 |
| 118 | SLU 42 | 0.06 | 6.54 | 73.07 | -0.2167 | 0.0568 | 0 |
| 118 | SLU 43 | 0.01 | 5.55 | 68.59 | -0.1821 | 0.0126 | 0 |
| 118 | SLU 44 | 0.08 | 6.45 | 72.26 | -0.2133 | 0.0841 | 0 |
| 118 | SLU 45 | 0.01 | 5.7 | 70.28 | -0.187 | 0.0127 | 0 |
| 118 | SLU 46 | 0.06 | 6.24 | 72.48 | -0.2057 | 0.0556 | 0 |
| 118 | SLU 47 | 0.08 | 6.53 | 73.32 | -0.2158 | 0.0841 | 0 |
| 118 | SLU 48 | 0.01 | 5.78 | 71.33 | -0.1895 | 0.0127 | 0 |
| 118 | SLU 49 | 0.06 | 6.32 | 73.54 | -0.2082 | 0.0556 | 0 |
| 118 | SLU 50 | 0.01 | 5.71 | 70.7 | -0.1871 | 0.0126 | 0 |
| 118 | SLU 51 | 0.06 | 6.25 | 72.9 | -0.2058 | 0.0555 | 0 |
| 118 | SLU 52 | 0.09 | 7.07 | 78.37 | -0.2348 | 0.0858 | 0 |
| 118 | SLU 53 | 0.01 | 6.33 | 76.38 | -0.2085 | 0.0144 | 0 |
| 118 | SLU 54 | 0.06 | 6.87 | 78.59 | -0.2272 | 0.0573 | 0 |
| 118 | SLU 55 | 0.09 | 7.15 | 79.42 | -0.2373 | 0.0858 | 0 |
| 118 | SLU 56 | 0.01 | 6.41 | 77.44 | -0.211 | 0.0144 | 0 |
| 118 | SLU 57 | 0.06 | 6.95 | 79.64 | -0.2297 | 0.0573 | 0 |
| 118 | SLU 58 | 0.01 | 6.34 | 76.8 | -0.2086 | 0.0143 | 0 |
| 118 | SLU 59 | 0.06 | 6.88 | 79.01 | -0.2273 | 0.0572 | 0 |
| 118 | SLU 60 | 0.02 | 6.45 | 77.31 | -0.2128 | 0.0151 | 0 |
| 118 | SLU 61 | 0.06 | 6.98 | 79.51 | -0.2315 | 0.058 | 0 |
| 118 | SLU 62 | 0.02 | 6.53 | 78.36 | -0.2153 | 0.0151 | 0 |
| 118 | SLU 63 | 0.06 | 7.06 | 80.57 | -0.234 | 0.058 | 0 |
| 118 | SLU 64 | 0.01 | 6.14 | 75.18 | -0.2017 | 0.014 | 0 |
| 118 | SLU 65 | 0.09 | 7.04 | 78.85 | -0.2329 | 0.0855 | 0 |
| 118 | SLU 66 | 0.01 | 6.3 | 76.87 | -0.2066 | 0.0141 | 0 |
| 118 | SLU 67 | 0.06 | 6.83 | 79.08 | -0.2253 | 0.057 | 0 |
| 118 | SLU 68 | 0.09 | 7.12 | 79.91 | -0.2354 | 0.0855 | 0 |
| 118 | SLU 69 | 0.01 | 6.38 | 77.93 | -0.2091 | 0.0141 | 0 |
| 118 | SLU 70 | 0.06 | 6.92 | 80.13 | -0.2278 | 0.057 | 0 |
| 118 | SLU 71 | 0.01 | 6.31 | 77.29 | -0.2067 | 0.014 | 0 |
| 118 | SLU 72 | 0.06 | 6.84 | 79.49 | -0.2254 | 0.0569 | 0 |
| 118 | SLU 73 | 0.09 | 7.67 | 84.96 | -0.2544 | 0.0872 | 0 |
| 118 | SLU 74 | 0.02 | 6.92 | 82.98 | -0.2281 | 0.0158 | 0 |
| 118 | SLU 75 | 0.06 | 7.46 | 85.18 | -0.2468 | 0.0587 | 0 |
| 118 | SLU 76 | 0.09 | 7.75 | 86.01 | -0.2569 | 0.0872 | 0 |
| 118 | SLU 77 | 0.02 | 7.01 | 84.03 | -0.2305 | 0.0158 | 0 |
| 118 | SLU 78 | 0.06 | 7.54 | 86.24 | -0.2493 | 0.0587 | 0 |
| 118 | SLU 79 | 0.02 | 6.93 | 83.39 | -0.2281 | 0.0157 | 0 |
| 118 | SLU 80 | 0.06 | 7.47 | 85.6 | -0.2469 | 0.0586 | 0 |
| 118 | SLU 81 | 0.02 | 7.04 | 83.9 | -0.2324 | 0.0164 | 0 |
| 118 | SLU 82 | 0.06 | 7.58 | 86.11 | -0.2511 | 0.0593 | 0 |
| 118 | SLU 83 | 0.02 | 7.12 | 84.96 | -0.2349 | 0.0164 | 0 |
| 118 | SLU 84 | 0.06 | 7.66 | 87.16 | -0.2536 | 0.0593 | 0 |
| 118 | SLE RA 1 | 0.01 | 4.6 | 56.38 | -0.1509 | 0.0105 | 0 |
| 118 | SLE RA 2 | 0.06 | 5.19 | 58.83 | -0.1716 | 0.0581 | 0 |
| 118 | SLE RA 3 | 0.01 | 4.7 | 57.51 | -0.1541 | 0.0105 | 0 |
| 118 | SLE RA 4 | 0.04 | 5.06 | 58.98 | -0.1666 | 0.0391 | 0 |
| 118 | SLE RA 5 | 0.06 | 5.25 | 59.53 | -0.1733 | 0.0581 | 0 |
| 118 | SLE RA 6 | 0.01 | 4.75 | 58.21 | -0.1558 | 0.0105 | 0 |
| 118 | SLE RA 7 | 0.04 | 5.11 | 59.68 | -0.1682 | 0.0391 | 0 |
| 118 | SLE RA 8 | 0.01 | 4.7 | 57.79 | -0.1542 | 0.0105 | 0 |
| 118 | SLE RA 9 | 0.04 | 5.06 | 59.26 | -0.1666 | 0.0391 | 0 |
| 118 | SLE RA 10 | 0.06 | 5.61 | 62.9 | -0.186 | 0.0593 | 0 |
| 118 | SLE RA 11 | 0.01 | 5.12 | 61.58 | -0.1684 | 0.0117 | 0 |
| 118 | SLE RA 12 | 0.04 | 5.47 | 63.05 | -0.1809 | 0.0403 | 0 |
| 118 | SLE RA 13 | 0.06 | 5.67 | 63.6 | -0.1876 | 0.0593 | 0 |
| 118 | SLE RA 14 | 0.01 | 5.17 | 62.28 | -0.1701 | 0.0117 | 0 |
| 118 | SLE RA 15 | 0.04 | 5.53 | 63.75 | -0.1826 | 0.0403 | 0 |
| 118 | SLE RA 16 | 0.01 | 5.12 | 61.86 | -0.1685 | 0.0116 | 0 |
| 118 | SLE RA 17 | 0.04 | 5.48 | 63.33 | -0.181 | 0.0402 | 0 |
| 118 | SLE RA 18 | 0.01 | 5.19 | 62.2 | -0.1713 | 0.0121 | 0 |
| 118 | SLE RA 19 | 0.04 | 5.55 | 63.67 | -0.1838 | 0.0407 | 0 |
| 118 | SLE RA 20 | 0.01 | 5.25 | 62.9 | -0.173 | 0.0121 | 0 |
| 118 | SLE RA 21 | 0.04 | 5.61 | 64.37 | -0.1854 | 0.0407 | 0 |
| 118 | SLE FR 1 | 0.01 | 4.6 | 56.38 | -0.1509 | 0.0105 | 0 |
| 118 | SLE FR 2 | 0.02 | 4.71 | 56.87 | -0.155 | 0.02 | 0 |
| 118 | SLE FR 3 | 0.01 | 4.62 | 56.66 | -0.1515 | 0.0105 | 0 |
| 118 | SLE FR 4 | 0.02 | 4.89 | 58.61 | -0.1612 | 0.0205 | 0 |
| 118 | SLE FR 5 | 0.01 | 4.8 | 58.41 | -0.1577 | 0.0109 | 0 |

| Nodo | Cont. | Reazione a traslazione | | | Reazione a rotazione | | |
|---|---|---|---|---|---|---|---|
| Ind. | N.br. | x | y | z | x | y | z |
| 118 | SLE FR 6 | 0.01 | 4.89 | 59.29 | -0.1611 | 0.0113 | 0 |
| 118 | SLE QP 1 | 0.01 | 4.6 | 56.38 | -0.1509 | 0.0105 | 0 |
| 118 | SLE QP 2 | 0.01 | 4.77 | 58.12 | -0.157 | 0.0109 | 0 |
| 118 | SLD 1 | 0.38 | 5.65 | 44.95 | -0.2046 | 0.3068 | -0.0001 |
| 118 | SLD 2 | 0.38 | 5.65 | 44.95 | -0.2046 | 0.3068 | -0.0001 |
| 118 | SLD 3 | 0.26 | 1.29 | 39.1 | -0.0196 | 0.2022 | -0.0001 |
| 118 | SLD 4 | 0.26 | 1.29 | 39.1 | -0.0196 | 0.2022 | -0.0001 |
| 118 | SLD 5 | 0.3 | 11.63 | 63.04 | -0.4519 | 0.2584 | 0 |
| 118 | SLD 6 | 0.3 | 11.63 | 63.04 | -0.4519 | 0.2584 | 0 |
| 118 | SLD 7 | -0.09 | -2.87 | 43.54 | 0.1649 | -0.0904 | -0.0001 |
| 118 | SLD 8 | -0.09 | -2.87 | 43.54 | 0.1649 | -0.0904 | -0.0001 |
| 118 | SLD 9 | 0.12 | 12.42 | 72.71 | -0.4789 | 0.1122 | 0.0001 |
| 118 | SLD 10 | 0.12 | 12.42 | 72.71 | -0.4789 | 0.1122 | 0.0001 |
| 118 | SLD 11 | -0.28 | -2.09 | 53.21 | 0.138 | -0.2365 | 0 |
| 118 | SLD 12 | -0.28 | -2.09 | 53.21 | 0.138 | -0.2365 | 0 |
| 118 | SLD 13 | -0.23 | 8.25 | 77.15 | -0.2944 | -0.1803 | 0.0001 |
| 118 | SLD 14 | -0.23 | 8.25 | 77.15 | -0.2944 | -0.1803 | 0.0001 |
| 118 | SLD 15 | -0.35 | 3.9 | 71.3 | -0.1094 | -0.2849 | 0.0001 |
| 118 | SLD 16 | -0.35 | 3.9 | 71.3 | -0.1094 | -0.2849 | 0.0001 |
| 118 | SLV 1 | 0.88 | 6.77 | 27.32 | -0.2663 | 0.7205 | -0.0002 |
| 118 | SLV 2 | 0.88 | 6.77 | 27.32 | -0.2663 | 0.7205 | -0.0002 |
| 118 | SLV 3 | 0.58 | -3.36 | 13.58 | 0.1643 | 0.4542 | -0.0003 |
| 118 | SLV 4 | 0.58 | -3.36 | 13.58 | 0.1643 | 0.4542 | -0.0003 |
| 118 | SLV 5 | 0.73 | 20.74 | 69.72 | -0.8428 | 0.6277 | 0.0001 |
| 118 | SLV 6 | 0.73 | 20.74 | 69.72 | -0.8428 | 0.6277 | 0.0001 |
| 118 | SLV 7 | -0.27 | -13.03 | 23.92 | 0.5924 | -0.26 | -0.0002 |
| 118 | SLV 8 | -0.27 | -13.03 | 23.92 | 0.5924 | -0.26 | -0.0002 |
| 118 | SLV 9 | 0.3 | 22.58 | 92.33 | -0.9064 | 0.2819 | 0.0002 |
| 118 | SLV 10 | 0.3 | 22.58 | 92.33 | -0.9064 | 0.2819 | 0.0002 |
| 118 | SLV 11 | -0.7 | -11.19 | 46.53 | 0.5288 | -0.6059 | -0.0001 |
| 118 | SLV 12 | -0.7 | -11.19 | 46.53 | 0.5288 | -0.6059 | -0.0001 |
| 118 | SLV 13 | -0.56 | 12.91 | 102.67 | -0.4783 | -0.4323 | 0.0003 |
| 118 | SLV 14 | -0.56 | 12.91 | 102.67 | -0.4783 | -0.4323 | 0.0003 |
| 118 | SLV 15 | -0.86 | 2.78 | 88.93 | -0.0477 | -0.6986 | 0.0002 |
| 118 | SLV 16 | -0.86 | 2.78 | 88.93 | -0.0477 | -0.6986 | 0.0002 |
| 119 | SLU 1 | -0.29 | 1.34 | 55.83 | 0.0779 | -0.1956 | -0.0011 |
| 119 | SLU 2 | -0.38 | 2.22 | 59.37 | 0.0585 | -0.279 | -0.0014 |
| 119 | SLU 3 | -0.3 | 1.43 | 58.27 | 0.0816 | -0.2041 | -0.0011 |
| 119 | SLU 4 | -0.35 | 1.96 | 60.39 | 0.07 | -0.2541 | -0.0013 |
| 119 | SLU 5 | -0.39 | 2.29 | 61.35 | 0.0615 | -0.2855 | -0.0015 |
| 119 | SLU 6 | -0.31 | 1.5 | 60.26 | 0.0847 | -0.2106 | -0.0011 |
| 119 | SLU 7 | -0.36 | 2.03 | 62.38 | 0.073 | -0.2606 | -0.0014 |
| 119 | SLU 8 | -0.31 | 1.48 | 59.81 | 0.084 | -0.2087 | -0.0011 |
| 119 | SLU 9 | -0.36 | 2.01 | 61.93 | 0.0723 | -0.2587 | -0.0013 |
| 119 | SLU 10 | -0.41 | 2.35 | 65.66 | 0.0702 | -0.3045 | -0.0016 |
| 119 | SLU 11 | -0.34 | 1.56 | 64.57 | 0.0933 | -0.2296 | -0.0012 |
| 119 | SLU 12 | -0.39 | 2.08 | 66.69 | 0.0817 | -0.2796 | -0.0015 |
| 119 | SLU 13 | -0.42 | 2.42 | 67.65 | 0.0732 | -0.311 | -0.0016 |
| 119 | SLU 14 | -0.35 | 1.63 | 66.56 | 0.0964 | -0.2361 | -0.0013 |
| 119 | SLU 15 | -0.4 | 2.16 | 68.68 | 0.0847 | -0.2861 | -0.0015 |
| 119 | SLU 16 | -0.34 | 1.61 | 66.11 | 0.0957 | -0.2342 | -0.0013 |
| 119 | SLU 17 | -0.4 | 2.14 | 68.23 | 0.084 | -0.2842 | -0.0015 |
| 119 | SLU 18 | -0.34 | 1.52 | 64.83 | 0.0946 | -0.2321 | -0.0013 |
| 119 | SLU 19 | -0.39 | 2.05 | 66.95 | 0.083 | -0.2821 | -0.0015 |
| 119 | SLU 20 | -0.35 | 1.6 | 66.82 | 0.0976 | -0.2386 | -0.0013 |
| 119 | SLU 21 | -0.4 | 2.12 | 68.94 | 0.086 | -0.2886 | -0.0015 |
| 119 | SLU 22 | -0.33 | 1.47 | 62.73 | 0.092 | -0.2225 | -0.0012 |
| 119 | SLU 23 | -0.42 | 2.35 | 66.27 | 0.0726 | -0.3059 | -0.0016 |
| 119 | SLU 24 | -0.34 | 1.55 | 65.17 | 0.0957 | -0.231 | -0.0013 |
| 119 | SLU 25 | -0.39 | 2.08 | 67.29 | 0.0841 | -0.281 | -0.0015 |
| 119 | SLU 26 | -0.43 | 2.42 | 68.25 | 0.0756 | -0.3124 | -0.0016 |
| 119 | SLU 27 | -0.35 | 1.62 | 67.16 | 0.0988 | -0.2375 | -0.0013 |
| 119 | SLU 28 | -0.4 | 2.15 | 69.28 | 0.0871 | -0.2875 | -0.0015 |
| 119 | SLU 29 | -0.35 | 1.61 | 66.71 | 0.0981 | -0.2355 | -0.0013 |
| 119 | SLU 30 | -0.4 | 2.14 | 68.83 | 0.0864 | -0.2856 | -0.0015 |
| 119 | SLU 31 | -0.45 | 2.48 | 72.56 | 0.0843 | -0.3314 | -0.0017 |
| 119 | SLU 32 | -0.38 | 1.68 | 71.47 | 0.1074 | -0.2565 | -0.0014 |
| 119 | SLU 33 | -0.43 | 2.21 | 73.59 | 0.0958 | -0.3065 | -0.0016 |
| 119 | SLU 34 | -0.46 | 2.55 | 74.55 | 0.0873 | -0.3379 | -0.0017 |
| 119 | SLU 35 | -0.39 | 1.75 | 73.46 | 0.1105 | -0.263 | -0.0014 |
| 119 | SLU 36 | -0.44 | 2.28 | 75.58 | 0.0988 | -0.313 | -0.0016 |
| 119 | SLU 37 | -0.38 | 1.74 | 73.01 | 0.1098 | -0.261 | -0.0014 |
| 119 | SLU 38 | -0.44 | 2.27 | 75.13 | 0.0981 | -0.3111 | -0.0016 |
| 119 | SLU 39 | -0.38 | 1.65 | 71.73 | 0.1087 | -0.2589 | -0.0014 |
| 119 | SLU 40 | -0.43 | 2.18 | 73.85 | 0.097 | -0.309 | -0.0016 |
| 119 | SLU 41 | -0.39 | 1.72 | 73.72 | 0.1117 | -0.2655 | -0.0014 |
| 119 | SLU 42 | -0.44 | 2.25 | 75.84 | 0.1001 | -0.3155 | -0.0017 |
| 119 | SLU 43 | -0.36 | 1.7 | 70.22 | 0.0964 | -0.2451 | -0.0013 |
| 119 | SLU 44 | -0.45 | 2.58 | 73.75 | 0.077 | -0.3285 | -0.0017 |
| 119 | SLU 45 | -0.37 | 1.79 | 72.66 | 0.1002 | -0.2536 | -0.0014 |
| 119 | SLU 46 | -0.43 | 2.31 | 74.78 | 0.0885 | -0.3036 | -0.0016 |
| 119 | SLU 47 | -0.46 | 2.65 | 75.74 | 0.0801 | -0.335 | -0.0017 |
| 119 | SLU 48 | -0.38 | 1.86 | 74.65 | 0.1032 | -0.2601 | -0.0014 |
| 119 | SLU 49 | -0.44 | 2.39 | 76.77 | 0.0916 | -0.3101 | -0.0016 |
| 119 | SLU 50 | -0.38 | 1.84 | 74.19 | 0.1025 | -0.2581 | -0.0014 |
| 119 | SLU 51 | -0.43 | 2.37 | 76.31 | 0.0909 | -0.3082 | -0.0016 |
| 119 | SLU 52 | -0.49 | 2.71 | 80.05 | 0.0887 | -0.354 | -0.0018 |
| 119 | SLU 53 | -0.41 | 1.91 | 78.95 | 0.1119 | -0.2791 | -0.0015 |

| Nodo | Cont. | Reazione a traslazione | | | Reazione a rotazione | | |
|---|---|---|---|---|---|---|---|
| Ind. | N.br. | x | y | z | x | y | z |
| 119 | SLU 54 | -0.46 | 2.44 | 81.07 | 0.1002 | -0.3291 | -0.0017 |
| 119 | SLU 55 | -0.5 | 2.78 | 82.04 | 0.0918 | -0.3605 | -0.0019 |
| 119 | SLU 56 | -0.42 | 1.99 | 80.94 | 0.1149 | -0.2856 | -0.0015 |
| 119 | SLU 57 | -0.47 | 2.52 | 83.06 | 0.1033 | -0.3356 | -0.0018 |
| 119 | SLU 58 | -0.42 | 1.97 | 80.49 | 0.1142 | -0.2836 | -0.0015 |
| 119 | SLU 59 | -0.47 | 2.5 | 82.61 | 0.1026 | -0.3337 | -0.0018 |
| 119 | SLU 60 | -0.41 | 1.88 | 79.21 | 0.1131 | -0.2815 | -0.0015 |
| 119 | SLU 61 | -0.47 | 2.41 | 81.33 | 0.1015 | -0.3316 | -0.0017 |
| 119 | SLU 62 | -0.42 | 1.96 | 81.2 | 0.1162 | -0.2881 | -0.0016 |
| 119 | SLU 63 | -0.48 | 2.48 | 83.32 | 0.1045 | -0.3381 | -0.0018 |
| 119 | SLU 64 | -0.4 | 1.83 | 77.12 | 0.1105 | -0.272 | -0.0015 |
| 119 | SLU 65 | -0.49 | 2.71 | 80.65 | 0.0911 | -0.3554 | -0.0018 |
| 119 | SLU 66 | -0.41 | 1.91 | 79.56 | 0.1142 | -0.2804 | -0.0015 |
| 119 | SLU 67 | -0.47 | 2.44 | 81.68 | 0.1026 | -0.3305 | -0.0017 |
| 119 | SLU 68 | -0.5 | 2.78 | 82.64 | 0.0941 | -0.3619 | -0.0019 |
| 119 | SLU 69 | -0.42 | 1.98 | 81.55 | 0.1173 | -0.287 | -0.0016 |
| 119 | SLU 70 | -0.48 | 2.51 | 83.67 | 0.1057 | -0.337 | -0.0018 |
| 119 | SLU 71 | -0.42 | 1.97 | 81.09 | 0.1166 | -0.285 | -0.0015 |
| 119 | SLU 72 | -0.47 | 2.5 | 83.21 | 0.105 | -0.335 | -0.0018 |
| 119 | SLU 73 | -0.53 | 2.83 | 86.95 | 0.1028 | -0.3809 | -0.002 |
| 119 | SLU 74 | -0.45 | 2.04 | 85.85 | 0.1259 | -0.3059 | -0.0017 |
| 119 | SLU 75 | -0.5 | 2.57 | 87.97 | 0.1143 | -0.356 | -0.0019 |
| 119 | SLU 76 | -0.54 | 2.91 | 88.94 | 0.1058 | -0.3874 | -0.002 |
| 119 | SLU 77 | -0.46 | 2.11 | 87.84 | 0.129 | -0.3125 | -0.0017 |
| 119 | SLU 78 | -0.51 | 2.64 | 89.96 | 0.1174 | -0.3625 | -0.0019 |
| 119 | SLU 79 | -0.46 | 2.1 | 87.39 | 0.1283 | -0.3105 | -0.0017 |
| 119 | SLU 80 | -0.51 | 2.63 | 89.51 | 0.1167 | -0.3605 | -0.0019 |
| 119 | SLU 81 | -0.45 | 2.01 | 86.11 | 0.1272 | -0.3084 | -0.0017 |
| 119 | SLU 82 | -0.51 | 2.54 | 88.23 | 0.1156 | -0.3584 | -0.0019 |
| 119 | SLU 83 | -0.46 | 2.08 | 88.1 | 0.1303 | -0.3149 | -0.0017 |
| 119 | SLU 84 | -0.52 | 2.61 | 90.22 | 0.1186 | -0.365 | -0.0019 |
| 119 | SLE RA 1 | -0.3 | 1.38 | 57.8 | 0.0819 | -0.2033 | -0.0011 |
| 119 | SLE RA 2 | -0.36 | 1.96 | 60.16 | 0.069 | -0.2589 | -0.0013 |
| 119 | SLE RA 3 | -0.31 | 1.43 | 59.43 | 0.0844 | -0.209 | -0.0011 |
| 119 | SLE RA 4 | -0.34 | 1.79 | 60.84 | 0.0766 | -0.2423 | -0.0013 |
| 119 | SLE RA 5 | -0.36 | 2.01 | 61.49 | 0.071 | -0.2632 | -0.0014 |
| 119 | SLE RA 6 | -0.31 | 1.48 | 60.76 | 0.0864 | -0.2133 | -0.0012 |
| 119 | SLE RA 7 | -0.35 | 1.83 | 62.17 | 0.0787 | -0.2466 | -0.0013 |
| 119 | SLE RA 8 | -0.31 | 1.47 | 60.45 | 0.086 | -0.212 | -0.0011 |
| 119 | SLE RA 9 | -0.35 | 1.82 | 61.87 | 0.0782 | -0.2454 | -0.0013 |
| 119 | SLE RA 10 | -0.38 | 2.05 | 64.36 | 0.0768 | -0.2759 | -0.0014 |
| 119 | SLE RA 11 | -0.33 | 1.52 | 63.63 | 0.0922 | -0.226 | -0.0012 |
| 119 | SLE RA 12 | -0.37 | 1.87 | 65.04 | 0.0844 | -0.2593 | -0.0014 |
| 119 | SLE RA 13 | -0.39 | 2.1 | 65.68 | 0.0788 | -0.2802 | -0.0015 |
| 119 | SLE RA 14 | -0.34 | 1.57 | 64.95 | 0.0942 | -0.2303 | -0.0012 |
| 119 | SLE RA 15 | -0.37 | 1.92 | 66.37 | 0.0865 | -0.2636 | -0.0014 |
| 119 | SLE RA 16 | -0.34 | 1.56 | 64.65 | 0.0938 | -0.229 | -0.0012 |
| 119 | SLE RA 17 | -0.37 | 1.91 | 66.07 | 0.086 | -0.2623 | -0.0014 |
| 119 | SLE RA 18 | -0.33 | 1.5 | 63.8 | 0.093 | -0.2276 | -0.0012 |
| 119 | SLE RA 19 | -0.37 | 1.85 | 65.21 | 0.0853 | -0.261 | -0.0014 |
| 119 | SLE RA 20 | -0.34 | 1.55 | 65.13 | 0.0951 | -0.2319 | -0.0013 |
| 119 | SLE RA 21 | -0.38 | 1.9 | 66.54 | 0.0873 | -0.2653 | -0.0014 |
| 119 | SLE FR 1 | -0.3 | 1.38 | 57.8 | 0.0819 | -0.2033 | -0.0011 |
| 119 | SLE FR 2 | -0.31 | 1.49 | 58.27 | 0.0793 | -0.2144 | -0.0011 |
| 119 | SLE FR 3 | -0.3 | 1.4 | 58.33 | 0.0827 | -0.2051 | -0.0011 |
| 119 | SLE FR 4 | -0.32 | 1.53 | 60.07 | 0.0827 | -0.2217 | -0.0012 |
| 119 | SLE FR 5 | -0.31 | 1.43 | 60.13 | 0.0861 | -0.2123 | -0.0011 |
| 119 | SLE FR 6 | -0.31 | 1.44 | 60.8 | 0.0875 | -0.2155 | -0.0012 |
| 119 | SLE QP 1 | -0.3 | 1.38 | 57.8 | 0.0819 | -0.2033 | -0.0011 |
| 119 | SLE QP 2 | -0.31 | 1.41 | 59.6 | 0.0852 | -0.2106 | -0.0011 |
| 119 | SLD 1 | -0.66 | 2.75 | 78.76 | 0.0554 | -0.4896 | -0.0025 |
| 119 | SLD 2 | -0.66 | 2.75 | 78.76 | 0.0554 | -0.4896 | -0.0025 |
| 119 | SLD 3 | -0.53 | -2.51 | 73.71 | 0.2829 | -0.3902 | -0.002 |
| 119 | SLD 4 | -0.53 | -2.51 | 73.71 | 0.2829 | -0.3902 | -0.002 |
| 119 | SLD 5 | -0.6 | 9.8 | 73.02 | -0.2688 | -0.4451 | -0.0023 |
| 119 | SLD 6 | -0.6 | 9.8 | 73.02 | -0.2688 | -0.4451 | -0.0023 |
| 119 | SLD 7 | -0.19 | -7.75 | 56.16 | 0.4896 | -0.1137 | -0.0007 |
| 119 | SLD 8 | -0.19 | -7.75 | 56.16 | 0.4896 | -0.1137 | -0.0007 |
| 119 | SLD 9 | -0.43 | 10.57 | 63.04 | -0.3191 | -0.3075 | -0.0016 |
| 119 | SLD 10 | -0.43 | 10.57 | 63.04 | -0.3191 | -0.3075 | -0.0016 |
| 119 | SLD 11 | -0.01 | -6.97 | 46.18 | 0.4392 | 0.0239 | 0 |
| 119 | SLD 12 | -0.01 | -6.97 | 46.18 | 0.4392 | 0.0239 | 0 |
| 119 | SLD 13 | -0.08 | 5.34 | 45.5 | -0.1124 | -0.031 | -0.0003 |
| 119 | SLD 14 | -0.08 | 5.34 | 45.5 | -0.1124 | -0.031 | -0.0003 |
| 119 | SLD 15 | 0.04 | 0.07 | 40.44 | 0.1151 | 0.0684 | 0.0002 |
| 119 | SLD 16 | 0.04 | 0.07 | 40.44 | 0.1151 | 0.0684 | 0.0002 |
| 119 | SLV 1 | -1.13 | 4.44 | 104.51 | 0.021 | -0.8747 | -0.0043 |
| 119 | SLV 2 | -1.13 | 4.44 | 104.51 | 0.021 | -0.8747 | -0.0043 |
| 119 | SLV 3 | -0.82 | -7.81 | 92.53 | 0.5498 | -0.6235 | -0.0031 |
| 119 | SLV 4 | -0.82 | -7.81 | 92.53 | 0.5498 | -0.6235 | -0.0031 |
| 119 | SLV 5 | -1.03 | 20.9 | 91.25 | -0.736 | -0.7909 | -0.004 |
| 119 | SLV 6 | -1.03 | 20.9 | 91.25 | -0.736 | -0.7909 | -0.004 |
| 119 | SLV 7 | 0.01 | -19.93 | 51.3 | 1.0266 | 0.0466 | 0.0001 |
| 119 | SLV 8 | 0.01 | -19.93 | 51.3 | 1.0266 | 0.0466 | 0.0001 |
| 119 | SLV 9 | -0.63 | 22.76 | 67.9 | -0.8561 | -0.4678 | -0.0024 |
| 119 | SLV 10 | -0.63 | 22.76 | 67.9 | -0.8561 | -0.4678 | -0.0024 |
| 119 | SLV 11 | 0.42 | -18.07 | 27.95 | 0.9065 | 0.3697 | 0.0017 |
| 119 | SLV 12 | 0.42 | -18.07 | 27.95 | 0.9065 | 0.3697 | 0.0017 |

| Nodo | Cont. | Reazione a traslazione | | | Reazione a rotazione | | |
|---|---|---|---|---|---|---|---|
| Ind. | N.br. | x | y | z | x | y | z |
| 119 | SLV 13 | 0.2 | 10.64 | 26.68 | -0.3793 | 0.2023 | 0.0008 |
| 119 | SLV 14 | 0.2 | 10.64 | 26.68 | -0.3793 | 0.2023 | 0.0008 |
| 119 | SLV 15 | 0.52 | -1.61 | 14.7 | 0.1495 | 0.4535 | 0.0021 |
| 119 | SLV 16 | 0.52 | -1.61 | 14.7 | 0.1495 | 0.4535 | 0.0021 |
| 120 | SLU 1 | 0.04 | -1.57 | 42.18 | 0.0697 | 0.0333 | 0.0001 |
| 120 | SLU 2 | 0.04 | -2.01 | 42.22 | 0.0899 | 0.0336 | 0.0001 |
| 120 | SLU 3 | 0.04 | -1.17 | 43.52 | 0.0511 | 0.0347 | 0.0001 |
| 120 | SLU 4 | 0.04 | -1.44 | 43.55 | 0.0632 | 0.0349 | 0.0001 |
| 120 | SLU 5 | 0.04 | -1.55 | 43.17 | 0.0683 | 0.0346 | 0.0001 |
| 120 | SLU 6 | 0.05 | -0.72 | 44.47 | 0.0295 | 0.0356 | 0.0001 |
| 120 | SLU 7 | 0.05 | -0.98 | 44.49 | 0.0416 | 0.0358 | 0.0001 |
| 120 | SLU 8 | 0.04 | -0.67 | 44.07 | 0.0267 | 0.0353 | 0.0001 |
| 120 | SLU 9 | 0.04 | -0.93 | 44.1 | 0.0388 | 0.0354 | 0.0001 |
| 120 | SLU 10 | 0.04 | -2.24 | 50.34 | 0.1017 | 0.0329 | 0.0001 |
| 120 | SLU 11 | 0.04 | -1.41 | 51.64 | 0.0629 | 0.034 | 0.0001 |
| 120 | SLU 12 | 0.04 | -1.67 | 51.67 | 0.075 | 0.0342 | 0.0001 |
| 120 | SLU 13 | 0.04 | -1.79 | 51.29 | 0.0802 | 0.0339 | 0.0001 |
| 120 | SLU 14 | 0.04 | -0.96 | 52.59 | 0.0414 | 0.0349 | 0.0001 |
| 120 | SLU 15 | 0.04 | -1.22 | 52.61 | 0.0535 | 0.0351 | 0.0001 |
| 120 | SLU 16 | 0.04 | -0.91 | 52.19 | 0.0385 | 0.0346 | 0.0001 |
| 120 | SLU 17 | 0.04 | -1.17 | 52.22 | 0.0506 | 0.0347 | 0.0001 |
| 120 | SLU 18 | 0.04 | -1.91 | 53.78 | 0.0866 | 0.0323 | 0.0001 |
| 120 | SLU 19 | 0.04 | -2.17 | 53.8 | 0.0987 | 0.0325 | 0.0001 |
| 120 | SLU 20 | 0.04 | -1.46 | 54.72 | 0.0651 | 0.0333 | 0.0001 |
| 120 | SLU 21 | 0.04 | -1.72 | 54.75 | 0.0772 | 0.0335 | 0.0001 |
| 120 | SLU 22 | 0.05 | -1.39 | 47.58 | 0.0622 | 0.0373 | 0.0001 |
| 120 | SLU 23 | 0.05 | -1.82 | 47.62 | 0.0824 | 0.0376 | 0.0001 |
| 120 | SLU 24 | 0.05 | -0.99 | 48.92 | 0.0436 | 0.0387 | 0.0001 |
| 120 | SLU 25 | 0.05 | -1.25 | 48.95 | 0.0557 | 0.0388 | 0.0001 |
| 120 | SLU 26 | 0.05 | -1.37 | 48.57 | 0.0609 | 0.0386 | 0.0001 |
| 120 | SLU 27 | 0.05 | -0.54 | 49.87 | 0.0221 | 0.0396 | 0.0001 |
| 120 | SLU 28 | 0.05 | -0.8 | 49.89 | 0.0342 | 0.0398 | 0.0001 |
| 120 | SLU 29 | 0.05 | -0.48 | 49.47 | 0.0192 | 0.0393 | 0.0001 |
| 120 | SLU 30 | 0.05 | -0.74 | 49.5 | 0.0313 | 0.0394 | 0.0001 |
| 120 | SLU 31 | 0.04 | -2.06 | 55.74 | 0.0943 | 0.0369 | 0.0001 |
| 120 | SLU 32 | 0.04 | -1.23 | 57.04 | 0.0555 | 0.038 | 0.0001 |
| 120 | SLU 33 | 0.04 | -1.49 | 57.06 | 0.0676 | 0.0382 | 0.0001 |
| 120 | SLU 34 | 0.04 | -1.61 | 56.69 | 0.0728 | 0.0379 | 0.0001 |
| 120 | SLU 35 | 0.05 | -0.78 | 57.99 | 0.034 | 0.0389 | 0.0001 |
| 120 | SLU 36 | 0.05 | -1.04 | 58.01 | 0.0461 | 0.0391 | 0.0001 |
| 120 | SLU 37 | 0.05 | -0.72 | 57.59 | 0.0311 | 0.0386 | 0.0001 |
| 120 | SLU 38 | 0.05 | -0.98 | 57.62 | 0.0432 | 0.0387 | 0.0001 |
| 120 | SLU 39 | 0.04 | -1.73 | 59.18 | 0.0792 | 0.0363 | 0.0001 |
| 120 | SLU 40 | 0.04 | -1.99 | 59.2 | 0.0913 | 0.0365 | 0.0001 |
| 120 | SLU 41 | 0.04 | -1.27 | 60.12 | 0.0577 | 0.0373 | 0.0001 |
| 120 | SLU 42 | 0.04 | -1.54 | 60.15 | 0.0698 | 0.0375 | 0.0001 |
| 120 | SLU 43 | 0.05 | -2.11 | 52.98 | 0.0932 | 0.0419 | 0.0001 |
| 120 | SLU 44 | 0.05 | -2.54 | 53.02 | 0.1133 | 0.0422 | 0.0001 |
| 120 | SLU 45 | 0.06 | -1.71 | 54.32 | 0.0745 | 0.0433 | 0.0001 |
| 120 | SLU 46 | 0.06 | -1.97 | 54.35 | 0.0866 | 0.0435 | 0.0001 |
| 120 | SLU 47 | 0.05 | -2.09 | 53.97 | 0.0918 | 0.0432 | 0.0001 |
| 120 | SLU 48 | 0.06 | -1.26 | 55.27 | 0.053 | 0.0443 | 0.0001 |
| 120 | SLU 49 | 0.06 | -1.52 | 55.3 | 0.0651 | 0.0444 | 0.0001 |
| 120 | SLU 50 | 0.06 | -1.2 | 54.87 | 0.0501 | 0.0439 | 0.0001 |
| 120 | SLU 51 | 0.06 | -1.46 | 54.9 | 0.0622 | 0.0441 | 0.0001 |
| 120 | SLU 52 | 0.05 | -2.78 | 61.14 | 0.1252 | 0.0416 | 0.0001 |
| 120 | SLU 53 | 0.05 | -1.95 | 62.44 | 0.0864 | 0.0426 | 0.0001 |
| 120 | SLU 54 | 0.05 | -2.21 | 62.47 | 0.0985 | 0.0428 | 0.0001 |
| 120 | SLU 55 | 0.05 | -2.33 | 62.09 | 0.1037 | 0.0425 | 0.0001 |
| 120 | SLU 56 | 0.05 | -1.5 | 63.39 | 0.0649 | 0.0436 | 0.0001 |
| 120 | SLU 57 | 0.05 | -1.76 | 63.41 | 0.077 | 0.0438 | 0.0001 |
| 120 | SLU 58 | 0.05 | -1.44 | 62.99 | 0.062 | 0.0432 | 0.0001 |
| 120 | SLU 59 | 0.05 | -1.7 | 63.02 | 0.0741 | 0.0434 | 0.0001 |
| 120 | SLU 60 | 0.05 | -2.45 | 64.58 | 0.1101 | 0.041 | 0.0001 |
| 120 | SLU 61 | 0.05 | -2.71 | 64.6 | 0.1222 | 0.0411 | 0.0001 |
| 120 | SLU 62 | 0.05 | -1.99 | 65.53 | 0.0886 | 0.0419 | 0.0001 |
| 120 | SLU 63 | 0.05 | -2.25 | 65.55 | 0.1007 | 0.0421 | 0.0001 |
| 120 | SLU 64 | 0.06 | -1.92 | 58.38 | 0.0857 | 0.0459 | 0.0001 |
| 120 | SLU 65 | 0.06 | -2.36 | 58.42 | 0.1059 | 0.0462 | 0.0001 |
| 120 | SLU 66 | 0.06 | -1.52 | 59.72 | 0.0671 | 0.0473 | 0.0001 |
| 120 | SLU 67 | 0.06 | -1.79 | 59.75 | 0.0792 | 0.0475 | 0.0001 |
| 120 | SLU 68 | 0.06 | -1.9 | 59.37 | 0.0844 | 0.0472 | 0.0001 |
| 120 | SLU 69 | 0.06 | -1.07 | 60.67 | 0.0456 | 0.0483 | 0.0001 |
| 120 | SLU 70 | 0.06 | -1.33 | 60.7 | 0.0577 | 0.0484 | 0.0001 |
| 120 | SLU 71 | 0.06 | -1.02 | 60.27 | 0.0427 | 0.0479 | 0.0001 |
| 120 | SLU 72 | 0.06 | -1.28 | 60.3 | 0.0548 | 0.0481 | 0.0001 |
| 120 | SLU 73 | 0.05 | -2.59 | 66.54 | 0.1177 | 0.0455 | 0.0001 |
| 120 | SLU 74 | 0.06 | -1.76 | 67.84 | 0.0789 | 0.0466 | 0.0001 |
| 120 | SLU 75 | 0.06 | -2.02 | 67.87 | 0.091 | 0.0468 | 0.0001 |
| 120 | SLU 76 | 0.06 | -2.14 | 67.49 | 0.0962 | 0.0465 | 0.0001 |
| 120 | SLU 77 | 0.06 | -1.31 | 68.79 | 0.0574 | 0.0476 | 0.0001 |
| 120 | SLU 78 | 0.06 | -1.57 | 68.81 | 0.0695 | 0.0477 | 0.0001 |
| 120 | SLU 79 | 0.06 | -1.26 | 68.39 | 0.0545 | 0.0472 | 0.0001 |
| 120 | SLU 80 | 0.06 | -1.52 | 68.42 | 0.0666 | 0.0474 | 0.0001 |
| 120 | SLU 81 | 0.05 | -2.26 | 69.98 | 0.1026 | 0.0449 | 0.0001 |
| 120 | SLU 82 | 0.05 | -2.52 | 70 | 0.1147 | 0.0451 | 0.0001 |
| 120 | SLU 83 | 0.05 | -1.81 | 70.93 | 0.0811 | 0.0459 | 0.0001 |
| 120 | SLU 84 | 0.05 | -2.07 | 70.95 | 0.0932 | 0.0461 | 0.0001 |

| Nodo | Cont. | Reazione a traslazione | | | Reazione a rotazione | | |
|---|---|---|---|---|---|---|---|
| Ind. | N.br. | x | y | z | x | y | z |
| 120 | SLE RA 1 | 0.04 | -1.52 | 43.72 | 0.0676 | 0.0345 | 0.0001 |
| 120 | SLE RA 2 | 0.04 | -1.81 | 43.75 | 0.081 | 0.0347 | 0.0001 |
| 120 | SLE RA 3 | 0.04 | -1.25 | 44.62 | 0.0551 | 0.0354 | 0.0001 |
| 120 | SLE RA 4 | 0.04 | -1.43 | 44.63 | 0.0632 | 0.0355 | 0.0001 |
| 120 | SLE RA 5 | 0.04 | -1.51 | 44.38 | 0.0667 | 0.0353 | 0.0001 |
| 120 | SLE RA 6 | 0.05 | -0.95 | 45.25 | 0.0408 | 0.036 | 0.0001 |
| 120 | SLE RA 7 | 0.05 | -1.13 | 45.26 | 0.0489 | 0.0361 | 0.0001 |
| 120 | SLE RA 8 | 0.05 | -0.92 | 44.98 | 0.0389 | 0.0358 | 0.0001 |
| 120 | SLE RA 9 | 0.05 | -1.09 | 45 | 0.0469 | 0.0359 | 0.0001 |
| 120 | SLE RA 10 | 0.04 | -1.97 | 49.16 | 0.0889 | 0.0342 | 0.0001 |
| 120 | SLE RA 11 | 0.04 | -1.41 | 50.03 | 0.063 | 0.0349 | 0.0001 |
| 120 | SLE RA 12 | 0.04 | -1.59 | 50.05 | 0.0711 | 0.035 | 0.0001 |
| 120 | SLE RA 13 | 0.04 | -1.67 | 49.79 | 0.0746 | 0.0348 | 0.0001 |
| 120 | SLE RA 14 | 0.04 | -1.11 | 50.66 | 0.0487 | 0.0355 | 0.0001 |
| 120 | SLE RA 15 | 0.04 | -1.29 | 50.68 | 0.0568 | 0.0357 | 0.0001 |
| 120 | SLE RA 16 | 0.04 | -1.07 | 50.4 | 0.0468 | 0.0353 | 0.0001 |
| 120 | SLE RA 17 | 0.04 | -1.25 | 50.41 | 0.0548 | 0.0354 | 0.0001 |
| 120 | SLE RA 18 | 0.04 | -1.74 | 51.45 | 0.0789 | 0.0338 | 0.0001 |
| 120 | SLE RA 19 | 0.04 | -1.92 | 51.47 | 0.0869 | 0.0339 | 0.0001 |
| 120 | SLE RA 20 | 0.04 | -1.44 | 52.08 | 0.0645 | 0.0344 | 0.0001 |
| 120 | SLE RA 21 | 0.04 | -1.62 | 52.1 | 0.0726 | 0.0346 | 0.0001 |
| 120 | SLE FR 1 | 0.04 | -1.52 | 43.72 | 0.0676 | 0.0345 | 0.0001 |
| 120 | SLE FR 2 | 0.04 | -1.58 | 43.73 | 0.0703 | 0.0345 | 0.0001 |
| 120 | SLE FR 3 | 0.04 | -1.4 | 43.97 | 0.0618 | 0.0347 | 0.0001 |
| 120 | SLE FR 4 | 0.04 | -1.64 | 46.05 | 0.0736 | 0.0343 | 0.0001 |
| 120 | SLE FR 5 | 0.04 | -1.47 | 46.29 | 0.0652 | 0.0345 | 0.0001 |
| 120 | SLE FR 6 | 0.04 | -1.63 | 47.59 | 0.0732 | 0.0341 | 0.0001 |
| 120 | SLE QP 1 | 0.04 | -1.52 | 43.72 | 0.0676 | 0.0345 | 0.0001 |
| 120 | SLE QP 2 | 0.04 | -1.59 | 46.04 | 0.071 | 0.0343 | 0.0001 |
| 120 | SLD 1 | 0.29 | -0.63 | 49.87 | 0.0246 | 0.2226 | 0.0007 |
| 120 | SLD 2 | 0.29 | -0.63 | 49.87 | 0.0246 | 0.2226 | 0.0007 |
| 120 | SLD 3 | 0.32 | -4.23 | 49.48 | 0.1931 | 0.2446 | 0.0008 |
| 120 | SLD 4 | 0.32 | -4.23 | 49.48 | 0.1931 | 0.2446 | 0.0008 |
| 120 | SLD 5 | 0.07 | 4.15 | 47.79 | -0.1985 | 0.0574 | 0.0002 |
| 120 | SLD 6 | 0.07 | 4.15 | 47.79 | -0.1985 | 0.0574 | 0.0002 |
| 120 | SLD 7 | 0.17 | -7.83 | 46.47 | 0.3631 | 0.1307 | 0.0004 |
| 120 | SLD 8 | 0.17 | -7.83 | 46.47 | 0.3631 | 0.1307 | 0.0004 |
| 120 | SLD 9 | -0.09 | 4.66 | 45.61 | -0.2212 | -0.0622 | -0.0002 |
| 120 | SLD 10 | -0.09 | 4.66 | 45.61 | -0.2212 | -0.0622 | -0.0002 |
| 120 | SLD 11 | 0.01 | -7.32 | 44.29 | 0.3404 | 0.0111 | 0 |
| 120 | SLD 12 | 0.01 | -7.32 | 44.29 | 0.3404 | 0.0111 | 0 |
| 120 | SLD 13 | -0.24 | 1.06 | 42.61 | -0.0512 | -0.1761 | -0.0006 |
| 120 | SLD 14 | -0.24 | 1.06 | 42.61 | -0.0512 | -0.1761 | -0.0006 |
| 120 | SLD 15 | -0.21 | -2.54 | 42.21 | 0.1173 | -0.1541 | -0.0005 |
| 120 | SLD 16 | -0.21 | -2.54 | 42.21 | 0.1173 | -0.1541 | -0.0005 |
| 120 | SLV 1 | 0.66 | 0.61 | 55.06 | -0.0362 | 0.5013 | 0.0016 |
| 120 | SLV 2 | 0.66 | 0.61 | 55.06 | -0.0362 | 0.5013 | 0.0016 |
| 120 | SLV 3 | 0.74 | -7.77 | 54.11 | 0.3571 | 0.5568 | 0.0019 |
| 120 | SLV 4 | 0.74 | -7.77 | 54.11 | 0.3571 | 0.5568 | 0.0019 |
| 120 | SLV 5 | 0.11 | 11.79 | 50.18 | -0.5578 | 0.0903 | 0.0002 |
| 120 | SLV 6 | 0.11 | 11.79 | 50.18 | -0.5578 | 0.0903 | 0.0002 |
| 120 | SLV 7 | 0.37 | -16.16 | 47.03 | 0.7534 | 0.2751 | 0.001 |
| 120 | SLV 8 | 0.37 | -16.16 | 47.03 | 0.7534 | 0.2751 | 0.001 |
| 120 | SLV 9 | -0.28 | 12.99 | 45.05 | -0.6115 | -0.2066 | -0.0008 |
| 120 | SLV 10 | -0.28 | 12.99 | 45.05 | -0.6115 | -0.2066 | -0.0008 |
| 120 | SLV 11 | -0.02 | -14.96 | 41.9 | 0.6997 | -0.0217 | 0 |
| 120 | SLV 12 | -0.02 | -14.96 | 41.9 | 0.6997 | -0.0217 | 0 |
| 120 | SLV 13 | -0.65 | 4.6 | 37.97 | -0.2152 | -0.4883 | -0.0017 |
| 120 | SLV 14 | -0.65 | 4.6 | 37.97 | -0.2152 | -0.4883 | -0.0017 |
| 120 | SLV 15 | -0.57 | -3.78 | 37.03 | 0.1781 | -0.4328 | -0.0014 |
| 120 | SLV 16 | -0.57 | -3.78 | 37.03 | 0.1781 | -0.4328 | -0.0014 |
| 121 | SLU 1 | 0.03 | -0.61 | 6.72 | 0.0205 | 0.023 | -0.002 |
| 121 | SLU 2 | 0.03 | -0.61 | 6.73 | 0.0206 | 0.0235 | -0.002 |
| 121 | SLU 3 | 0.03 | -0.64 | 6.75 | 0.0215 | 0.0237 | -0.002 |
| 121 | SLU 4 | 0.03 | -0.64 | 6.75 | 0.0215 | 0.024 | -0.0021 |
| 121 | SLU 5 | 0.03 | -0.63 | 6.74 | 0.0211 | 0.024 | -0.0021 |
| 121 | SLU 6 | 0.03 | -0.66 | 6.77 | 0.022 | 0.0243 | -0.0021 |
| 121 | SLU 7 | 0.03 | -0.66 | 6.77 | 0.022 | 0.0246 | -0.0021 |
| 121 | SLU 8 | 0.03 | -0.65 | 6.76 | 0.0216 | 0.0241 | -0.0021 |
| 121 | SLU 9 | 0.03 | -0.65 | 6.76 | 0.0216 | 0.0244 | -0.0021 |
| 121 | SLU 10 | 0.05 | -0.71 | 9.42 | 0.021 | 0.0312 | -0.0029 |
| 121 | SLU 11 | 0.05 | -0.74 | 9.44 | 0.0219 | 0.0314 | -0.0029 |
| 121 | SLU 12 | 0.05 | -0.74 | 9.44 | 0.0219 | 0.0317 | -0.0029 |
| 121 | SLU 13 | 0.05 | -0.72 | 9.43 | 0.0215 | 0.0317 | -0.0029 |
| 121 | SLU 14 | 0.05 | -0.75 | 9.46 | 0.0224 | 0.032 | -0.0029 |
| 121 | SLU 15 | 0.05 | -0.75 | 9.46 | 0.0225 | 0.0323 | -0.003 |
| 121 | SLU 16 | 0.05 | -0.74 | 9.45 | 0.022 | 0.0318 | -0.0029 |
| 121 | SLU 17 | 0.05 | -0.74 | 9.45 | 0.022 | 0.0321 | -0.0029 |
| 121 | SLU 18 | 0.05 | -0.75 | 10.57 | 0.0211 | 0.034 | -0.0032 |
| 121 | SLU 19 | 0.05 | -0.75 | 10.57 | 0.0212 | 0.0343 | -0.0032 |
| 121 | SLU 20 | 0.05 | -0.76 | 10.59 | 0.0217 | 0.0345 | -0.0032 |
| 121 | SLU 21 | 0.05 | -0.76 | 10.59 | 0.0217 | 0.0348 | -0.0033 |
| 121 | SLU 22 | 0.04 | -0.74 | 7.18 | 0.0243 | 0.0262 | -0.0023 |
| 121 | SLU 23 | 0.04 | -0.74 | 7.19 | 0.0243 | 0.0267 | -0.0023 |
| 121 | SLU 24 | 0.04 | -0.77 | 7.21 | 0.0252 | 0.0269 | -0.0023 |
| 121 | SLU 25 | 0.04 | -0.77 | 7.21 | 0.0253 | 0.0272 | -0.0024 |
| 121 | SLU 26 | 0.04 | -0.76 | 7.2 | 0.0249 | 0.0272 | -0.0024 |
| 121 | SLU 27 | 0.04 | -0.79 | 7.23 | 0.0258 | 0.0275 | -0.0024 |

| Nodo | Cont. | Reazione a traslazione | | | Reazione a rotazione | | |
|---|---|---|---|---|---|---|---|
| Ind. | N.br. | x | y | z | x | y | z |
| 121 | SLU 28 | 0.04 | -0.79 | 7.23 | 0.0258 | 0.0278 | -0.0024 |
| 121 | SLU 29 | 0.04 | -0.77 | 7.22 | 0.0253 | 0.0273 | -0.0024 |
| 121 | SLU 30 | 0.04 | -0.77 | 7.22 | 0.0254 | 0.0276 | -0.0024 |
| 121 | SLU 31 | 0.05 | -0.83 | 9.88 | 0.0248 | 0.0344 | -0.0032 |
| 121 | SLU 32 | 0.05 | -0.86 | 9.9 | 0.0257 | 0.0346 | -0.0032 |
| 121 | SLU 33 | 0.05 | -0.86 | 9.91 | 0.0257 | 0.0349 | -0.0032 |
| 121 | SLU 34 | 0.05 | -0.85 | 9.89 | 0.0253 | 0.0349 | -0.0032 |
| 121 | SLU 35 | 0.05 | -0.88 | 9.92 | 0.0262 | 0.0352 | -0.0032 |
| 121 | SLU 36 | 0.05 | -0.88 | 9.92 | 0.0263 | 0.0355 | -0.0033 |
| 121 | SLU 37 | 0.05 | -0.87 | 9.91 | 0.0258 | 0.035 | -0.0032 |
| 121 | SLU 38 | 0.05 | -0.87 | 9.91 | 0.0258 | 0.0353 | -0.0032 |
| 121 | SLU 39 | 0.06 | -0.87 | 11.03 | 0.0249 | 0.0372 | -0.0035 |
| 121 | SLU 40 | 0.06 | -0.87 | 11.03 | 0.0249 | 0.0375 | -0.0035 |
| 121 | SLU 41 | 0.06 | -0.89 | 11.05 | 0.0254 | 0.0377 | -0.0035 |
| 121 | SLU 42 | 0.06 | -0.89 | 11.05 | 0.0255 | 0.038 | -0.0036 |
| 121 | SLU 43 | 0.04 | -0.75 | 8.58 | 0.0254 | 0.0288 | -0.0025 |
| 121 | SLU 44 | 0.04 | -0.76 | 8.59 | 0.0254 | 0.0293 | -0.0025 |
| 121 | SLU 45 | 0.04 | -0.78 | 8.61 | 0.0263 | 0.0295 | -0.0025 |
| 121 | SLU 46 | 0.04 | -0.78 | 8.61 | 0.0264 | 0.0298 | -0.0026 |
| 121 | SLU 47 | 0.04 | -0.77 | 8.6 | 0.0259 | 0.0298 | -0.0026 |
| 121 | SLU 48 | 0.04 | -0.8 | 8.63 | 0.0269 | 0.03 | -0.0026 |
| 121 | SLU 49 | 0.04 | -0.8 | 8.63 | 0.0269 | 0.0303 | -0.0026 |
| 121 | SLU 50 | 0.04 | -0.79 | 8.62 | 0.0264 | 0.0299 | -0.0026 |
| 121 | SLU 51 | 0.04 | -0.79 | 8.62 | 0.0265 | 0.0302 | -0.0026 |
| 121 | SLU 52 | 0.06 | -0.85 | 11.28 | 0.0259 | 0.037 | -0.0034 |
| 121 | SLU 53 | 0.06 | -0.88 | 11.3 | 0.0268 | 0.0372 | -0.0034 |
| 121 | SLU 54 | 0.06 | -0.88 | 11.3 | 0.0268 | 0.0375 | -0.0034 |
| 121 | SLU 55 | 0.06 | -0.87 | 11.29 | 0.0264 | 0.0375 | -0.0034 |
| 121 | SLU 56 | 0.06 | -0.89 | 11.32 | 0.0273 | 0.0377 | -0.0034 |
| 121 | SLU 57 | 0.06 | -0.89 | 11.32 | 0.0273 | 0.038 | -0.0035 |
| 121 | SLU 58 | 0.06 | -0.88 | 11.31 | 0.0269 | 0.0376 | -0.0034 |
| 121 | SLU 59 | 0.06 | -0.88 | 11.31 | 0.0269 | 0.0379 | -0.0034 |
| 121 | SLU 60 | 0.06 | -0.89 | 12.43 | 0.026 | 0.0398 | -0.0037 |
| 121 | SLU 61 | 0.06 | -0.89 | 12.43 | 0.026 | 0.0401 | -0.0037 |
| 121 | SLU 62 | 0.06 | -0.9 | 12.45 | 0.0265 | 0.0403 | -0.0037 |
| 121 | SLU 63 | 0.06 | -0.9 | 12.45 | 0.0266 | 0.0406 | -0.0038 |
| 121 | SLU 64 | 0.05 | -0.88 | 9.04 | 0.0291 | 0.032 | -0.0028 |
| 121 | SLU 65 | 0.05 | -0.88 | 9.05 | 0.0292 | 0.0325 | -0.0028 |
| 121 | SLU 66 | 0.05 | -0.91 | 9.07 | 0.0301 | 0.0327 | -0.0028 |
| 121 | SLU 67 | 0.05 | -0.91 | 9.07 | 0.0301 | 0.033 | -0.0029 |
| 121 | SLU 68 | 0.05 | -0.9 | 9.06 | 0.0297 | 0.033 | -0.0029 |
| 121 | SLU 69 | 0.05 | -0.93 | 9.09 | 0.0306 | 0.0333 | -0.0029 |
| 121 | SLU 70 | 0.05 | -0.93 | 9.09 | 0.0307 | 0.0336 | -0.0029 |
| 121 | SLU 71 | 0.05 | -0.91 | 9.08 | 0.0302 | 0.0331 | -0.0029 |
| 121 | SLU 72 | 0.05 | -0.91 | 9.08 | 0.0302 | 0.0334 | -0.0029 |
| 121 | SLU 73 | 0.06 | -0.98 | 11.74 | 0.0296 | 0.0402 | -0.0037 |
| 121 | SLU 74 | 0.06 | -1 | 11.76 | 0.0305 | 0.0404 | -0.0037 |
| 121 | SLU 75 | 0.06 | -1 | 11.76 | 0.0306 | 0.0407 | -0.0037 |
| 121 | SLU 76 | 0.06 | -0.99 | 11.75 | 0.0302 | 0.0407 | -0.0037 |
| 121 | SLU 77 | 0.06 | -1.02 | 11.78 | 0.0311 | 0.041 | -0.0037 |
| 121 | SLU 78 | 0.06 | -1.02 | 11.78 | 0.0311 | 0.0413 | -0.0038 |
| 121 | SLU 79 | 0.06 | -1.01 | 11.77 | 0.0306 | 0.0408 | -0.0037 |
| 121 | SLU 80 | 0.06 | -1.01 | 11.77 | 0.0307 | 0.0411 | -0.0037 |
| 121 | SLU 81 | 0.07 | -1.01 | 12.89 | 0.0298 | 0.043 | -0.004 |
| 121 | SLU 82 | 0.07 | -1.01 | 12.89 | 0.0298 | 0.0433 | -0.004 |
| 121 | SLU 83 | 0.07 | -1.03 | 12.91 | 0.0303 | 0.0435 | -0.004 |
| 121 | SLU 84 | 0.07 | -1.03 | 12.91 | 0.0303 | 0.0438 | -0.0041 |
| 121 | SLE RA 1 | 0.03 | -0.65 | 6.86 | 0.0216 | 0.0239 | -0.0021 |
| 121 | SLE RA 2 | 0.03 | -0.65 | 6.86 | 0.0216 | 0.0242 | -0.0021 |
| 121 | SLE RA 3 | 0.03 | -0.67 | 6.88 | 0.0222 | 0.0244 | -0.0021 |
| 121 | SLE RA 4 | 0.03 | -0.67 | 6.88 | 0.0222 | 0.0246 | -0.0021 |
| 121 | SLE RA 5 | 0.03 | -0.66 | 6.87 | 0.022 | 0.0246 | -0.0021 |
| 121 | SLE RA 6 | 0.03 | -0.68 | 6.89 | 0.0226 | 0.0247 | -0.0021 |
| 121 | SLE RA 7 | 0.04 | -0.68 | 6.89 | 0.0226 | 0.0249 | -0.0022 |
| 121 | SLE RA 8 | 0.03 | -0.67 | 6.88 | 0.0223 | 0.0246 | -0.0021 |
| 121 | SLE RA 9 | 0.03 | -0.67 | 6.88 | 0.0223 | 0.0248 | -0.0021 |
| 121 | SLE RA 10 | 0.04 | -0.71 | 8.65 | 0.0219 | 0.0294 | -0.0027 |
| 121 | SLE RA 11 | 0.04 | -0.73 | 8.67 | 0.0225 | 0.0295 | -0.0027 |
| 121 | SLE RA 12 | 0.04 | -0.73 | 8.67 | 0.0225 | 0.0297 | -0.0027 |
| 121 | SLE RA 13 | 0.04 | -0.72 | 8.66 | 0.0223 | 0.0297 | -0.0027 |
| 121 | SLE RA 14 | 0.04 | -0.74 | 8.68 | 0.0229 | 0.0299 | -0.0027 |
| 121 | SLE RA 15 | 0.04 | -0.74 | 8.68 | 0.0229 | 0.0301 | -0.0027 |
| 121 | SLE RA 16 | 0.04 | -0.73 | 8.67 | 0.0226 | 0.0298 | -0.0027 |
| 121 | SLE RA 17 | 0.04 | -0.73 | 8.67 | 0.0226 | 0.03 | -0.0027 |
| 121 | SLE RA 18 | 0.05 | -0.74 | 9.42 | 0.022 | 0.0312 | -0.0029 |
| 121 | SLE RA 19 | 0.05 | -0.74 | 9.42 | 0.022 | 0.0314 | -0.0029 |
| 121 | SLE RA 20 | 0.05 | -0.75 | 9.43 | 0.0224 | 0.0316 | -0.0029 |
| 121 | SLE RA 21 | 0.05 | -0.75 | 9.43 | 0.0224 | 0.0318 | -0.0029 |
| 121 | SLE FR 1 | 0.03 | -0.65 | 6.86 | 0.0216 | 0.0239 | -0.0021 |
| 121 | SLE FR 2 | 0.03 | -0.65 | 6.86 | 0.0216 | 0.024 | -0.0021 |
| 121 | SLE FR 3 | 0.03 | -0.65 | 6.86 | 0.0217 | 0.024 | -0.0021 |
| 121 | SLE FR 4 | 0.04 | -0.68 | 7.63 | 0.0217 | 0.0262 | -0.0023 |
| 121 | SLE FR 5 | 0.04 | -0.68 | 7.63 | 0.0218 | 0.0262 | -0.0023 |
| 121 | SLE FR 6 | 0.04 | -0.69 | 8.14 | 0.0218 | 0.0276 | -0.0025 |
| 121 | SLE QP 1 | 0.03 | -0.65 | 6.86 | 0.0216 | 0.0239 | -0.0021 |
| 121 | SLE QP 2 | 0.04 | -0.68 | 7.62 | 0.0217 | 0.0261 | -0.0023 |
| 121 | SLD 1 | 0.26 | 0.5 | 7.56 | -0.0175 | 0.2274 | -0.0162 |
| 121 | SLD 2 | 0.26 | 0.5 | 7.56 | -0.0175 | 0.2274 | -0.0162 |

| Nodo | Cont. | Reazione a traslazione | | | Reazione a rotazione | | |
|---|---|---|---|---|---|---|---|
| Ind. | N.br. | x | y | z | x | y | z |
| 121 | SLD 3 | 0.24 | -1.24 | 7.27 | 0.0405 | 0.2063 | -0.0147 |
| 121 | SLD 4 | 0.24 | -1.24 | 7.27 | 0.0405 | 0.2063 | -0.0147 |
| 121 | SLD 5 | 0.14 | 2.32 | 8.04 | -0.0781 | 0.1184 | -0.0088 |
| 121 | SLD 6 | 0.14 | 2.32 | 8.04 | -0.0781 | 0.1184 | -0.0088 |
| 121 | SLD 7 | 0.06 | -3.49 | 7.08 | 0.1153 | 0.0482 | -0.0037 |
| 121 | SLD 8 | 0.06 | -3.49 | 7.08 | 0.1153 | 0.0482 | -0.0037 |
| 121 | SLD 9 | 0.02 | 2.14 | 8.16 | -0.0719 | 0.004 | -0.001 |
| 121 | SLD 10 | 0.02 | 2.14 | 8.16 | -0.0719 | 0.004 | -0.001 |
| 121 | SLD 11 | -0.07 | -3.67 | 7.21 | 0.1215 | -0.0662 | 0.0042 |
| 121 | SLD 12 | -0.07 | -3.67 | 7.21 | 0.1215 | -0.0662 | 0.0042 |
| 121 | SLD 13 | -0.16 | -0.11 | 7.98 | 0.0029 | -0.1541 | 0.01 |
| 121 | SLD 14 | -0.16 | -0.11 | 7.98 | 0.0029 | -0.1541 | 0.01 |
| 121 | SLD 15 | -0.19 | -1.85 | 7.69 | 0.0609 | -0.1752 | 0.0116 |
| 121 | SLD 16 | -0.19 | -1.85 | 7.69 | 0.0609 | -0.1752 | 0.0116 |
| 121 | SLV 1 | 0.6 | 2.09 | 7.47 | -0.0703 | 0.5265 | -0.0369 |
| 121 | SLV 2 | 0.6 | 2.09 | 7.47 | -0.0703 | 0.5265 | -0.0369 |
| 121 | SLV 3 | 0.53 | -2 | 6.79 | 0.0657 | 0.4734 | -0.0329 |
| 121 | SLV 4 | 0.53 | -2 | 6.79 | 0.0657 | 0.4734 | -0.0329 |
| 121 | SLV 5 | 0.3 | 6.36 | 8.6 | -0.2123 | 0.2567 | -0.0186 |
| 121 | SLV 6 | 0.3 | 6.36 | 8.6 | -0.2123 | 0.2567 | -0.0186 |
| 121 | SLV 7 | 0.09 | -7.27 | 6.35 | 0.2413 | 0.0798 | -0.0055 |
| 121 | SLV 8 | 0.09 | -7.27 | 6.35 | 0.2413 | 0.0798 | -0.0055 |
| 121 | SLV 9 | -0.01 | 5.92 | 8.9 | -0.1979 | -0.0276 | 0.0009 |
| 121 | SLV 10 | -0.01 | 5.92 | 8.9 | -0.1979 | -0.0276 | 0.0009 |
| 121 | SLV 11 | -0.22 | -7.71 | 6.65 | 0.2557 | -0.2046 | 0.014 |
| 121 | SLV 12 | -0.22 | -7.71 | 6.65 | 0.2557 | -0.2046 | 0.014 |
| 121 | SLV 13 | -0.46 | 0.65 | 8.46 | -0.0223 | -0.4212 | 0.0283 |
| 121 | SLV 14 | -0.46 | 0.65 | 8.46 | -0.0223 | -0.4212 | 0.0283 |
| 121 | SLV 15 | -0.52 | -3.44 | 7.78 | 0.1137 | -0.4743 | 0.0322 |
| 121 | SLV 16 | -0.52 | -3.44 | 7.78 | 0.1137 | -0.4743 | 0.0322 |
| 122 | SLU 1 | 0.17 | 0.18 | 19.13 | -0.1632 | 0.1057 | 0.0001 |
| 122 | SLU 2 | 0.19 | 2.67 | 19.21 | -0.2941 | 0.1179 | 0.0001 |
| 122 | SLU 3 | 0.18 | -0.02 | 19.56 | -0.1568 | 0.1091 | 0.0001 |
| 122 | SLU 4 | 0.19 | 1.48 | 19.61 | -0.2353 | 0.1163 | 0.0001 |
| 122 | SLU 5 | 0.19 | 2.42 | 19.45 | -0.2827 | 0.1196 | 0.0001 |
| 122 | SLU 6 | 0.18 | -0.27 | 19.79 | -0.1453 | 0.1108 | 0.0001 |
| 122 | SLU 7 | 0.19 | 1.23 | 19.84 | -0.2239 | 0.1181 | 0.0001 |
| 122 | SLU 8 | 0.18 | -0.33 | 19.6 | -0.1403 | 0.1092 | 0.0001 |
| 122 | SLU 9 | 0.19 | 1.16 | 19.65 | -0.2189 | 0.1165 | 0.0001 |
| 122 | SLU 10 | 0.22 | 2.73 | 21.66 | -0.3199 | 0.1361 | 0.0001 |
| 122 | SLU 11 | 0.21 | 0.05 | 22 | -0.1826 | 0.1273 | 0.0001 |
| 122 | SLU 12 | 0.22 | 1.54 | 22.05 | -0.2612 | 0.1346 | 0.0001 |
| 122 | SLU 13 | 0.22 | 2.48 | 21.89 | -0.3085 | 0.1378 | 0.0001 |
| 122 | SLU 14 | 0.21 | -0.21 | 22.24 | -0.1712 | 0.129 | 0.0001 |
| 122 | SLU 15 | 0.22 | 1.29 | 22.29 | -0.2497 | 0.1363 | 0.0001 |
| 122 | SLU 16 | 0.21 | -0.27 | 22.04 | -0.1662 | 0.1274 | 0.0001 |
| 122 | SLU 17 | 0.22 | 1.23 | 22.09 | -0.2447 | 0.1347 | 0.0001 |
| 122 | SLU 18 | 0.21 | 0.27 | 22.62 | -0.2001 | 0.1318 | 0.0001 |
| 122 | SLU 19 | 0.22 | 1.76 | 22.67 | -0.2787 | 0.139 | 0.0001 |
| 122 | SLU 20 | 0.22 | 0.01 | 22.86 | -0.1887 | 0.1335 | 0.0001 |
| 122 | SLU 21 | 0.23 | 1.51 | 22.91 | -0.2672 | 0.1408 | 0.0001 |
| 122 | SLU 22 | 0.2 | 0.14 | 21.34 | -0.1815 | 0.1225 | 0.0001 |
| 122 | SLU 23 | 0.21 | 2.63 | 21.42 | -0.3125 | 0.1347 | 0.0001 |
| 122 | SLU 24 | 0.2 | -0.05 | 21.77 | -0.1751 | 0.1259 | 0.0001 |
| 122 | SLU 25 | 0.21 | 1.44 | 21.82 | -0.2537 | 0.1331 | 0.0001 |
| 122 | SLU 26 | 0.22 | 2.38 | 21.66 | -0.301 | 0.1364 | 0.0001 |
| 122 | SLU 27 | 0.21 | -0.31 | 22 | -0.1637 | 0.1276 | 0.0001 |
| 122 | SLU 28 | 0.22 | 1.19 | 22.05 | -0.2422 | 0.1349 | 0.0001 |
| 122 | SLU 29 | 0.21 | -0.37 | 21.81 | -0.1587 | 0.126 | 0.0001 |
| 122 | SLU 30 | 0.21 | 1.13 | 21.86 | -0.2372 | 0.1333 | 0.0001 |
| 122 | SLU 31 | 0.24 | 2.7 | 23.87 | -0.3383 | 0.1529 | 0.0001 |
| 122 | SLU 32 | 0.23 | 0.01 | 24.21 | -0.201 | 0.1441 | 0.0001 |
| 122 | SLU 33 | 0.24 | 1.51 | 24.27 | -0.2795 | 0.1513 | 0.0001 |
| 122 | SLU 34 | 0.25 | 2.44 | 24.11 | -0.3269 | 0.1546 | 0.0001 |
| 122 | SLU 35 | 0.24 | -0.24 | 24.45 | -0.1895 | 0.1458 | 0.0001 |
| 122 | SLU 36 | 0.25 | 1.25 | 24.5 | -0.2681 | 0.1531 | 0.0001 |
| 122 | SLU 37 | 0.23 | -0.31 | 24.26 | -0.1845 | 0.1442 | 0.0001 |
| 122 | SLU 38 | 0.24 | 1.19 | 24.31 | -0.2631 | 0.1515 | 0.0001 |
| 122 | SLU 39 | 0.24 | 0.23 | 24.83 | -0.2185 | 0.1485 | 0.0001 |
| 122 | SLU 40 | 0.25 | 1.73 | 24.89 | -0.297 | 0.1558 | 0.0001 |
| 122 | SLU 41 | 0.24 | -0.02 | 25.07 | -0.207 | 0.1503 | 0.0001 |
| 122 | SLU 42 | 0.25 | 1.47 | 25.12 | -0.2856 | 0.1576 | 0.0001 |
| 122 | SLU 43 | 0.21 | 0.24 | 24.11 | -0.2058 | 0.1317 | 0.0001 |
| 122 | SLU 44 | 0.23 | 2.73 | 24.19 | -0.3368 | 0.1438 | 0.0001 |
| 122 | SLU 45 | 0.22 | 0.05 | 24.53 | -0.1994 | 0.135 | 0.0001 |
| 122 | SLU 46 | 0.23 | 1.54 | 24.59 | -0.278 | 0.1423 | 0.0001 |
| 122 | SLU 47 | 0.23 | 2.48 | 24.43 | -0.3253 | 0.1456 | 0.0001 |
| 122 | SLU 48 | 0.22 | -0.2 | 24.77 | -0.188 | 0.1368 | 0.0001 |
| 122 | SLU 49 | 0.23 | 1.29 | 24.82 | -0.2665 | 0.1441 | 0.0001 |
| 122 | SLU 50 | 0.22 | -0.27 | 24.58 | -0.183 | 0.1352 | 0.0001 |
| 122 | SLU 51 | 0.23 | 1.23 | 24.63 | -0.2615 | 0.1425 | 0.0001 |
| 122 | SLU 52 | 0.26 | 2.8 | 26.64 | -0.3626 | 0.1621 | 0.0001 |
| 122 | SLU 53 | 0.25 | 0.11 | 26.98 | -0.2253 | 0.1532 | 0.0001 |
| 122 | SLU 54 | 0.26 | 1.61 | 27.03 | -0.3038 | 0.1605 | 0.0001 |
| 122 | SLU 55 | 0.26 | 2.54 | 26.87 | -0.3512 | 0.1638 | 0.0001 |
| 122 | SLU 56 | 0.25 | -0.14 | 27.22 | -0.2138 | 0.155 | 0.0001 |
| 122 | SLU 57 | 0.26 | 1.35 | 27.27 | -0.2924 | 0.1623 | 0.0001 |
| 122 | SLU 58 | 0.25 | -0.2 | 27.02 | -0.2088 | 0.1534 | 0.0001 |

| Nodo | Cont. | Reazione a traslazione | | | Reazione a rotazione | | |
|---|---|---|---|---|---|---|---|
| Ind. | N.br. | x | y | z | x | y | z |
| 122 | SLU 59 | 0.26 | 1.29 | 27.07 | -0.2874 | 0.1607 | 0.0001 |
| 122 | SLU 60 | 0.26 | 0.33 | 27.6 | -0.2428 | 0.1577 | 0.0001 |
| 122 | SLU 61 | 0.27 | 1.83 | 27.65 | -0.3213 | 0.165 | 0.0001 |
| 122 | SLU 62 | 0.26 | 0.08 | 27.84 | -0.2313 | 0.1595 | 0.0001 |
| 122 | SLU 63 | 0.27 | 1.57 | 27.89 | -0.3099 | 0.1667 | 0.0001 |
| 122 | SLU 64 | 0.24 | 0.2 | 26.32 | -0.2242 | 0.1485 | 0.0001 |
| 122 | SLU 65 | 0.26 | 2.7 | 26.4 | -0.3551 | 0.1606 | 0.0001 |
| 122 | SLU 66 | 0.25 | 0.01 | 26.75 | -0.2178 | 0.1518 | 0.0001 |
| 122 | SLU 67 | 0.26 | 1.51 | 26.8 | -0.2963 | 0.1591 | 0.0001 |
| 122 | SLU 68 | 0.26 | 2.44 | 26.64 | -0.3437 | 0.1624 | 0.0001 |
| 122 | SLU 69 | 0.25 | -0.24 | 26.98 | -0.2064 | 0.1536 | 0.0001 |
| 122 | SLU 70 | 0.26 | 1.25 | 27.03 | -0.2849 | 0.1608 | 0.0001 |
| 122 | SLU 71 | 0.25 | -0.3 | 26.79 | -0.2013 | 0.152 | 0.0001 |
| 122 | SLU 72 | 0.26 | 1.19 | 26.84 | -0.2799 | 0.1593 | 0.0001 |
| 122 | SLU 73 | 0.29 | 2.76 | 28.85 | -0.381 | 0.1788 | 0.0001 |
| 122 | SLU 74 | 0.28 | 0.07 | 29.19 | -0.2436 | 0.17 | 0.0001 |
| 122 | SLU 75 | 0.29 | 1.57 | 29.24 | -0.3222 | 0.1773 | 0.0001 |
| 122 | SLU 76 | 0.29 | 2.51 | 29.09 | -0.3695 | 0.1806 | 0.0001 |
| 122 | SLU 77 | 0.28 | -0.18 | 29.43 | -0.2322 | 0.1718 | 0.0001 |
| 122 | SLU 78 | 0.29 | 1.32 | 29.48 | -0.3107 | 0.179 | 0.0001 |
| 122 | SLU 79 | 0.28 | -0.24 | 29.23 | -0.2272 | 0.1702 | 0.0001 |
| 122 | SLU 80 | 0.29 | 1.26 | 29.29 | -0.3057 | 0.1775 | 0.0001 |
| 122 | SLU 81 | 0.28 | 0.29 | 29.81 | -0.2611 | 0.1745 | 0.0001 |
| 122 | SLU 82 | 0.29 | 1.79 | 29.87 | -0.3397 | 0.1818 | 0.0001 |
| 122 | SLU 83 | 0.29 | 0.04 | 30.05 | -0.2497 | 0.1763 | 0.0001 |
| 122 | SLU 84 | 0.3 | 1.54 | 30.1 | -0.3282 | 0.1835 | 0.0001 |
| 122 | SLE RA 1 | 0.18 | 0.17 | 19.76 | -0.1684 | 0.1105 | 0.0001 |
| 122 | SLE RA 2 | 0.19 | 1.83 | 19.82 | -0.2557 | 0.1186 | 0.0001 |
| 122 | SLE RA 3 | 0.18 | 0.04 | 20.04 | -0.1642 | 0.1128 | 0.0001 |
| 122 | SLE RA 4 | 0.19 | 1.03 | 20.08 | -0.2165 | 0.1176 | 0.0001 |
| 122 | SLE RA 5 | 0.19 | 1.66 | 19.97 | -0.2481 | 0.1198 | 0.0001 |
| 122 | SLE RA 6 | 0.19 | -0.13 | 20.2 | -0.1565 | 0.1139 | 0.0001 |
| 122 | SLE RA 7 | 0.19 | 0.86 | 20.24 | -0.2089 | 0.1188 | 0.0001 |
| 122 | SLE RA 8 | 0.18 | -0.17 | 20.07 | -0.1532 | 0.1129 | 0.0001 |
| 122 | SLE RA 9 | 0.19 | 0.82 | 20.11 | -0.2056 | 0.1177 | 0.0001 |
| 122 | SLE RA 10 | 0.21 | 1.87 | 21.45 | -0.2729 | 0.1308 | 0.0001 |
| 122 | SLE RA 11 | 0.2 | 0.08 | 21.68 | -0.1814 | 0.1249 | 0.0001 |
| 122 | SLE RA 12 | 0.21 | 1.08 | 21.71 | -0.2337 | 0.1297 | 0.0001 |
| 122 | SLE RA 13 | 0.21 | 1.7 | 21.6 | -0.2653 | 0.1319 | 0.0001 |
| 122 | SLE RA 14 | 0.21 | -0.09 | 21.83 | -0.1738 | 0.1261 | 0.0001 |
| 122 | SLE RA 15 | 0.21 | 0.91 | 21.87 | -0.2261 | 0.1309 | 0.0001 |
| 122 | SLE RA 16 | 0.2 | -0.13 | 21.7 | -0.1704 | 0.125 | 0.0001 |
| 122 | SLE RA 17 | 0.21 | 0.87 | 21.74 | -0.2228 | 0.1299 | 0.0001 |
| 122 | SLE RA 18 | 0.21 | 0.23 | 22.09 | -0.193 | 0.1279 | 0.0001 |
| 122 | SLE RA 19 | 0.21 | 1.22 | 22.12 | -0.2454 | 0.1327 | 0.0001 |
| 122 | SLE RA 20 | 0.21 | 0.06 | 22.25 | -0.1854 | 0.129 | 0.0001 |
| 122 | SLE RA 21 | 0.22 | 1.05 | 22.28 | -0.2378 | 0.1339 | 0.0001 |
| 122 | SLE FR 1 | 0.18 | 0.17 | 19.76 | -0.1684 | 0.1105 | 0.0001 |
| 122 | SLE FR 2 | 0.18 | 0.5 | 19.77 | -0.1859 | 0.1122 | 0.0001 |
| 122 | SLE FR 3 | 0.18 | 0.1 | 19.82 | -0.1654 | 0.111 | 0.0001 |
| 122 | SLE FR 4 | 0.19 | 0.52 | 20.47 | -0.1933 | 0.1174 | 0.0001 |
| 122 | SLE FR 5 | 0.19 | 0.12 | 20.52 | -0.1728 | 0.1162 | 0.0001 |
| 122 | SLE FR 6 | 0.19 | 0.2 | 20.92 | -0.1807 | 0.1192 | 0.0001 |
| 122 | SLE QP 1 | 0.18 | 0.17 | 19.76 | -0.1684 | 0.1105 | 0.0001 |
| 122 | SLE QP 2 | 0.19 | 0.18 | 20.46 | -0.1758 | 0.1157 | 0.0001 |
| 122 | SLD 1 | 0.42 | 3.49 | 19.42 | -0.2058 | 0.2793 | 0 |
| 122 | SLD 2 | 0.42 | 3.49 | 19.42 | -0.2058 | 0.2793 | 0 |
| 122 | SLD 3 | 0.36 | -0.55 | 18.57 | -0.0093 | 0.2344 | 0 |
| 122 | SLD 4 | 0.36 | -0.55 | 18.57 | -0.0093 | 0.2344 | 0 |
| 122 | SLD 5 | 0.34 | 7.3 | 21.44 | -0.4829 | 0.2328 | 0 |
| 122 | SLD 6 | 0.34 | 7.3 | 21.44 | -0.4829 | 0.2328 | 0 |
| 122 | SLD 7 | 0.15 | -6.16 | 18.6 | 0.1722 | 0.0834 | 0.0001 |
| 122 | SLD 8 | 0.15 | -6.16 | 18.6 | 0.1722 | 0.0834 | 0.0001 |
| 122 | SLD 9 | 0.22 | 6.53 | 22.31 | -0.5239 | 0.1481 | 0.0001 |
| 122 | SLD 10 | 0.22 | 6.53 | 22.31 | -0.5239 | 0.1481 | 0.0001 |
| 122 | SLD 11 | 0.03 | -6.93 | 19.48 | 0.1313 | -0.0013 | 0.0001 |
| 122 | SLD 12 | 0.03 | -6.93 | 19.48 | 0.1313 | -0.0013 | 0.0001 |
| 122 | SLD 13 | 0.02 | 0.91 | 22.34 | -0.3423 | -0.003 | 0.0001 |
| 122 | SLD 14 | 0.02 | 0.91 | 22.34 | -0.3423 | -0.003 | 0.0001 |
| 122 | SLD 15 | -0.04 | -3.12 | 21.49 | -0.1458 | -0.0478 | 0.0001 |
| 122 | SLD 16 | -0.04 | -3.12 | 21.49 | -0.1458 | -0.0478 | 0.0001 |
| 122 | SLV 1 | 0.73 | 8.12 | 18.05 | -0.2481 | 0.5016 | 0 |
| 122 | SLV 2 | 0.73 | 8.12 | 18.05 | -0.2481 | 0.5016 | 0 |
| 122 | SLV 3 | 0.59 | -1.55 | 16.02 | 0.2236 | 0.3919 | 0 |
| 122 | SLV 4 | 0.59 | -1.55 | 16.02 | 0.2236 | 0.3919 | 0 |
| 122 | SLV 5 | 0.56 | 17.22 | 22.82 | -0.9129 | 0.398 | 0 |
| 122 | SLV 6 | 0.56 | 17.22 | 22.82 | -0.9129 | 0.398 | 0 |
| 122 | SLV 7 | 0.1 | -14.99 | 16.04 | 0.6594 | 0.0321 | 0.0001 |
| 122 | SLV 8 | 0.1 | -14.99 | 16.04 | 0.6594 | 0.0321 | 0.0001 |
| 122 | SLV 9 | 0.28 | 15.36 | 24.88 | -1.011 | 0.1994 | 0 |
| 122 | SLV 10 | 0.28 | 15.36 | 24.88 | -1.011 | 0.1994 | 0 |
| 122 | SLV 11 | -0.19 | -16.85 | 18.09 | 0.5612 | -0.1665 | 0.0002 |
| 122 | SLV 12 | -0.19 | -16.85 | 18.09 | 0.5612 | -0.1665 | 0.0002 |
| 122 | SLV 13 | -0.21 | 1.92 | 24.9 | -0.5752 | -0.1604 | 0.0001 |
| 122 | SLV 14 | -0.21 | 1.92 | 24.9 | -0.5752 | -0.1604 | 0.0001 |
| 122 | SLV 15 | -0.35 | -7.75 | 22.86 | -0.1035 | -0.2701 | 0.0002 |
| 122 | SLV 16 | -0.35 | -7.75 | 22.86 | -0.1035 | -0.2701 | 0.0002 |
| 123 | SLU 1 | 0.07 | -3.36 | 39.3 | 0.1709 | 0.0425 | -0.0028 |

| Nodo | Cont. | Reazione a traslazione | | | Reazione a rotazione | | |
|---|---|---|---|---|---|---|---|
| Ind. | N.br. | x | y | z | x | y | z |
| 123 | SLU 2 | 0.07 | -3.68 | 39.53 | 0.1871 | 0.0423 | -0.0028 |
| 123 | SLU 3 | 0.07 | -3.35 | 40.14 | 0.1712 | 0.0434 | -0.0028 |
| 123 | SLU 4 | 0.07 | -3.54 | 40.28 | 0.1809 | 0.0433 | -0.0028 |
| 123 | SLU 5 | 0.07 | -3.65 | 40.01 | 0.1863 | 0.0428 | -0.0028 |
| 123 | SLU 6 | 0.07 | -3.33 | 40.62 | 0.1704 | 0.0439 | -0.0029 |
| 123 | SLU 7 | 0.07 | -3.51 | 40.77 | 0.1801 | 0.0438 | -0.0029 |
| 123 | SLU 8 | 0.07 | -3.31 | 40.26 | 0.1694 | 0.0434 | -0.0028 |
| 123 | SLU 9 | 0.07 | -3.5 | 40.4 | 0.1791 | 0.0434 | -0.0028 |
| 123 | SLU 10 | 0.08 | -4.28 | 47.03 | 0.219 | 0.0514 | -0.0034 |
| 123 | SLU 11 | 0.08 | -3.95 | 47.64 | 0.2032 | 0.0524 | -0.0034 |
| 123 | SLU 12 | 0.08 | -4.14 | 47.78 | 0.2128 | 0.0523 | -0.0034 |
| 123 | SLU 13 | 0.08 | -4.25 | 47.51 | 0.2183 | 0.0519 | -0.0034 |
| 123 | SLU 14 | 0.08 | -3.93 | 48.12 | 0.2024 | 0.0529 | -0.0034 |
| 123 | SLU 15 | 0.08 | -4.12 | 48.26 | 0.2121 | 0.0528 | -0.0034 |
| 123 | SLU 16 | 0.08 | -3.91 | 47.75 | 0.2014 | 0.0525 | -0.0034 |
| 123 | SLU 17 | 0.08 | -4.1 | 47.89 | 0.211 | 0.0524 | -0.0034 |
| 123 | SLU 18 | 0.08 | -4.22 | 50 | 0.2166 | 0.0554 | -0.0036 |
| 123 | SLU 19 | 0.09 | -4.41 | 50.14 | 0.2263 | 0.0553 | -0.0036 |
| 123 | SLU 20 | 0.09 | -4.2 | 50.48 | 0.2158 | 0.0558 | -0.0036 |
| 123 | SLU 21 | 0.09 | -4.39 | 50.62 | 0.2255 | 0.0558 | -0.0036 |
| 123 | SLU 22 | 0.07 | -3.61 | 43.79 | 0.1861 | 0.0477 | -0.0031 |
| 123 | SLU 23 | 0.07 | -3.93 | 44.03 | 0.2023 | 0.0476 | -0.0031 |
| 123 | SLU 24 | 0.07 | -3.6 | 44.64 | 0.1864 | 0.0487 | -0.0032 |
| 123 | SLU 25 | 0.08 | -3.79 | 44.78 | 0.1961 | 0.0486 | -0.0032 |
| 123 | SLU 26 | 0.07 | -3.9 | 44.51 | 0.2015 | 0.0481 | -0.0031 |
| 123 | SLU 27 | 0.08 | -3.57 | 45.12 | 0.1856 | 0.0492 | -0.0032 |
| 123 | SLU 28 | 0.08 | -3.76 | 45.26 | 0.1953 | 0.0491 | -0.0032 |
| 123 | SLU 29 | 0.07 | -3.56 | 44.75 | 0.1846 | 0.0487 | -0.0032 |
| 123 | SLU 30 | 0.08 | -3.75 | 44.89 | 0.1943 | 0.0487 | -0.0032 |
| 123 | SLU 31 | 0.09 | -4.53 | 51.52 | 0.2342 | 0.0567 | -0.0037 |
| 123 | SLU 32 | 0.09 | -4.2 | 52.13 | 0.2184 | 0.0577 | -0.0038 |
| 123 | SLU 33 | 0.09 | -4.39 | 52.27 | 0.228 | 0.0576 | -0.0038 |
| 123 | SLU 34 | 0.09 | -4.5 | 52 | 0.2335 | 0.0571 | -0.0037 |
| 123 | SLU 35 | 0.09 | -4.17 | 52.61 | 0.2176 | 0.0582 | -0.0038 |
| 123 | SLU 36 | 0.09 | -4.36 | 52.75 | 0.2273 | 0.0581 | -0.0038 |
| 123 | SLU 37 | 0.09 | -4.16 | 52.24 | 0.2166 | 0.0578 | -0.0038 |
| 123 | SLU 38 | 0.09 | -4.35 | 52.39 | 0.2262 | 0.0577 | -0.0038 |
| 123 | SLU 39 | 0.09 | -4.47 | 54.5 | 0.2318 | 0.0606 | -0.004 |
| 123 | SLU 40 | 0.09 | -4.66 | 54.64 | 0.2415 | 0.0606 | -0.004 |
| 123 | SLU 41 | 0.09 | -4.44 | 54.98 | 0.231 | 0.0611 | -0.004 |
| 123 | SLU 42 | 0.09 | -4.63 | 55.12 | 0.2407 | 0.0611 | -0.004 |
| 123 | SLU 43 | 0.08 | -4.29 | 49.55 | 0.217 | 0.0534 | -0.0035 |
| 123 | SLU 44 | 0.08 | -4.6 | 49.78 | 0.2331 | 0.0532 | -0.0035 |
| 123 | SLU 45 | 0.08 | -4.28 | 50.39 | 0.2173 | 0.0543 | -0.0035 |
| 123 | SLU 46 | 0.08 | -4.47 | 50.53 | 0.227 | 0.0542 | -0.0035 |
| 123 | SLU 47 | 0.08 | -4.58 | 50.26 | 0.2324 | 0.0537 | -0.0035 |
| 123 | SLU 48 | 0.08 | -4.25 | 50.87 | 0.2165 | 0.0548 | -0.0036 |
| 123 | SLU 49 | 0.08 | -4.44 | 51.01 | 0.2262 | 0.0547 | -0.0036 |
| 123 | SLU 50 | 0.08 | -4.24 | 50.51 | 0.2155 | 0.0544 | -0.0035 |
| 123 | SLU 51 | 0.08 | -4.43 | 50.65 | 0.2252 | 0.0543 | -0.0035 |
| 123 | SLU 52 | 0.1 | -5.2 | 57.27 | 0.2651 | 0.0623 | -0.0041 |
| 123 | SLU 53 | 0.1 | -4.88 | 57.89 | 0.2492 | 0.0633 | -0.0041 |
| 123 | SLU 54 | 0.1 | -5.07 | 58.03 | 0.2589 | 0.0632 | -0.0041 |
| 123 | SLU 55 | 0.1 | -5.18 | 57.75 | 0.2643 | 0.0628 | -0.0041 |
| 123 | SLU 56 | 0.1 | -4.85 | 58.37 | 0.2485 | 0.0638 | -0.0041 |
| 123 | SLU 57 | 0.1 | -5.04 | 58.51 | 0.2582 | 0.0637 | -0.0042 |
| 123 | SLU 58 | 0.1 | -4.84 | 58 | 0.2474 | 0.0634 | -0.0041 |
| 123 | SLU 59 | 0.1 | -5.03 | 58.14 | 0.2571 | 0.0633 | -0.0041 |
| 123 | SLU 60 | 0.1 | -5.15 | 60.25 | 0.2627 | 0.0663 | -0.0043 |
| 123 | SLU 61 | 0.1 | -5.34 | 60.39 | 0.2724 | 0.0662 | -0.0043 |
| 123 | SLU 62 | 0.1 | -5.12 | 60.73 | 0.2619 | 0.0668 | -0.0043 |
| 123 | SLU 63 | 0.1 | -5.31 | 60.87 | 0.2716 | 0.0667 | -0.0043 |
| 123 | SLU 64 | 0.09 | -4.54 | 54.04 | 0.2322 | 0.0587 | -0.0038 |
| 123 | SLU 65 | 0.09 | -4.85 | 54.27 | 0.2483 | 0.0585 | -0.0038 |
| 123 | SLU 66 | 0.09 | -4.52 | 54.89 | 0.2325 | 0.0596 | -0.0039 |
| 123 | SLU 67 | 0.09 | -4.71 | 55.03 | 0.2422 | 0.0595 | -0.0039 |
| 123 | SLU 68 | 0.09 | -4.83 | 54.75 | 0.2476 | 0.059 | -0.0039 |
| 123 | SLU 69 | 0.09 | -4.5 | 55.37 | 0.2317 | 0.0601 | -0.0039 |
| 123 | SLU 70 | 0.09 | -4.69 | 55.51 | 0.2414 | 0.06 | -0.0039 |
| 123 | SLU 71 | 0.09 | -4.48 | 55 | 0.2307 | 0.0597 | -0.0039 |
| 123 | SLU 72 | 0.09 | -4.67 | 55.14 | 0.2404 | 0.0596 | -0.0039 |
| 123 | SLU 73 | 0.1 | -5.45 | 61.77 | 0.2803 | 0.0676 | -0.0044 |
| 123 | SLU 74 | 0.11 | -5.13 | 62.38 | 0.2644 | 0.0686 | -0.0045 |
| 123 | SLU 75 | 0.11 | -5.31 | 62.52 | 0.2741 | 0.0685 | -0.0045 |
| 123 | SLU 76 | 0.1 | -5.43 | 62.25 | 0.2795 | 0.0681 | -0.0044 |
| 123 | SLU 77 | 0.11 | -5.1 | 62.86 | 0.2637 | 0.0691 | -0.0045 |
| 123 | SLU 78 | 0.11 | -5.29 | 63 | 0.2734 | 0.069 | -0.0045 |
| 123 | SLU 79 | 0.11 | -5.09 | 62.49 | 0.2626 | 0.0687 | -0.0045 |
| 123 | SLU 80 | 0.11 | -5.27 | 62.63 | 0.2723 | 0.0686 | -0.0045 |
| 123 | SLU 81 | 0.11 | -5.4 | 64.74 | 0.2779 | 0.0716 | -0.0047 |
| 123 | SLU 82 | 0.11 | -5.58 | 64.89 | 0.2876 | 0.0715 | -0.0047 |
| 123 | SLU 83 | 0.11 | -5.37 | 65.23 | 0.2771 | 0.0721 | -0.0047 |
| 123 | SLU 84 | 0.11 | -5.56 | 65.37 | 0.2868 | 0.072 | -0.0047 |
| 123 | SLE RA 1 | 0.07 | -3.44 | 40.58 | 0.1753 | 0.044 | -0.0029 |
| 123 | SLE RA 2 | 0.07 | -3.65 | 40.74 | 0.186 | 0.0439 | -0.0029 |
| 123 | SLE RA 3 | 0.07 | -3.43 | 41.15 | 0.1755 | 0.0446 | -0.0029 |
| 123 | SLE RA 4 | 0.07 | -3.55 | 41.24 | 0.1819 | 0.0445 | -0.0029 |
| 123 | SLE RA 5 | 0.07 | -3.63 | 41.06 | 0.1855 | 0.0442 | -0.0029 |

| Nodo | Cont. | Reazione a traslazione | | | Reazione a rotazione | | |
|---|---|---|---|---|---|---|---|
| Ind. | N.br. | x | y | z | x | y | z |
| 123 | SLE RA 6 | 0.07 | -3.41 | 41.47 | 0.175 | 0.0449 | -0.0029 |
| 123 | SLE RA 7 | 0.07 | -3.54 | 41.56 | 0.1814 | 0.0449 | -0.0029 |
| 123 | SLE RA 8 | 0.07 | -3.4 | 41.22 | 0.1743 | 0.0446 | -0.0029 |
| 123 | SLE RA 9 | 0.07 | -3.53 | 41.32 | 0.1807 | 0.0446 | -0.0029 |
| 123 | SLE RA 10 | 0.08 | -4.05 | 45.73 | 0.2073 | 0.0499 | -0.0033 |
| 123 | SLE RA 11 | 0.08 | -3.83 | 46.14 | 0.1968 | 0.0506 | -0.0033 |
| 123 | SLE RA 12 | 0.08 | -3.95 | 46.24 | 0.2032 | 0.0505 | -0.0033 |
| 123 | SLE RA 13 | 0.08 | -4.03 | 46.05 | 0.2068 | 0.0502 | -0.0033 |
| 123 | SLE RA 14 | 0.08 | -3.81 | 46.46 | 0.1963 | 0.0509 | -0.0033 |
| 123 | SLE RA 15 | 0.08 | -3.94 | 46.56 | 0.2027 | 0.0509 | -0.0033 |
| 123 | SLE RA 16 | 0.08 | -3.8 | 46.22 | 0.1956 | 0.0506 | -0.0033 |
| 123 | SLE RA 17 | 0.08 | -3.93 | 46.31 | 0.202 | 0.0506 | -0.0033 |
| 123 | SLE RA 18 | 0.08 | -4.01 | 47.72 | 0.2057 | 0.0526 | -0.0034 |
| 123 | SLE RA 19 | 0.08 | -4.13 | 47.81 | 0.2122 | 0.0525 | -0.0034 |
| 123 | SLE RA 20 | 0.08 | -3.99 | 48.04 | 0.2052 | 0.0529 | -0.0034 |
| 123 | SLE RA 21 | 0.08 | -4.12 | 48.13 | 0.2117 | 0.0528 | -0.0034 |
| 123 | SLE FR 1 | 0.07 | -3.44 | 40.58 | 0.1753 | 0.044 | -0.0029 |
| 123 | SLE FR 2 | 0.07 | -3.48 | 40.61 | 0.1774 | 0.0439 | -0.0029 |
| 123 | SLE FR 3 | 0.07 | -3.43 | 40.71 | 0.1751 | 0.0441 | -0.0029 |
| 123 | SLE FR 4 | 0.07 | -3.65 | 42.75 | 0.1866 | 0.0465 | -0.003 |
| 123 | SLE FR 5 | 0.07 | -3.6 | 42.85 | 0.1842 | 0.0467 | -0.003 |
| 123 | SLE FR 6 | 0.07 | -3.72 | 44.15 | 0.1905 | 0.0483 | -0.0031 |
| 123 | SLE QP 1 | 0.07 | -3.44 | 40.58 | 0.1753 | 0.044 | -0.0029 |
| 123 | SLE QP 2 | 0.07 | -3.61 | 42.72 | 0.1844 | 0.0465 | -0.003 |
| 123 | SLD 1 | 0.29 | -0.71 | 38.4 | 0.0302 | 0.2181 | -0.0126 |
| 123 | SLD 2 | 0.29 | -0.71 | 38.4 | 0.0302 | 0.2181 | -0.0126 |
| 123 | SLD 3 | 0.27 | -4.48 | 37 | 0.2259 | 0.2013 | -0.0117 |
| 123 | SLD 4 | 0.27 | -4.48 | 37 | 0.2259 | 0.2013 | -0.0117 |
| 123 | SLD 5 | 0.17 | 2.98 | 43.55 | -0.1587 | 0.1235 | -0.0074 |
| 123 | SLD 6 | 0.17 | 2.98 | 43.55 | -0.1587 | 0.1235 | -0.0074 |
| 123 | SLD 7 | 0.1 | -9.58 | 38.88 | 0.4937 | 0.0674 | -0.0042 |
| 123 | SLD 8 | 0.1 | -9.58 | 38.88 | 0.4937 | 0.0674 | -0.0042 |
| 123 | SLD 9 | 0.04 | 2.37 | 46.56 | -0.1249 | 0.0256 | -0.0019 |
| 123 | SLD 10 | 0.04 | 2.37 | 46.56 | -0.1249 | 0.0256 | -0.0019 |
| 123 | SLD 11 | -0.03 | -10.19 | 41.89 | 0.5276 | -0.0304 | 0.0013 |
| 123 | SLD 12 | -0.03 | -10.19 | 41.89 | 0.5276 | -0.0304 | 0.0013 |
| 123 | SLD 13 | -0.13 | -2.74 | 48.44 | 0.1429 | -0.1082 | 0.0056 |
| 123 | SLD 14 | -0.13 | -2.74 | 48.44 | 0.1429 | -0.1082 | 0.0056 |
| 123 | SLD 15 | -0.15 | -6.51 | 47.04 | 0.3387 | -0.125 | 0.0066 |
| 123 | SLD 16 | -0.15 | -6.51 | 47.04 | 0.3387 | -0.125 | 0.0066 |
| 123 | SLV 1 | 0.62 | 3.13 | 32.61 | -0.174 | 0.4713 | -0.0267 |
| 123 | SLV 2 | 0.62 | 3.13 | 32.61 | -0.174 | 0.4713 | -0.0267 |
| 123 | SLV 3 | 0.57 | -5.61 | 29.33 | 0.2797 | 0.4306 | -0.0244 |
| 123 | SLV 4 | 0.57 | -5.61 | 29.33 | 0.2797 | 0.4306 | -0.0244 |
| 123 | SLV 5 | 0.32 | 11.67 | 44.67 | -0.6111 | 0.2357 | -0.0137 |
| 123 | SLV 6 | 0.32 | 11.67 | 44.67 | -0.6111 | 0.2357 | -0.0137 |
| 123 | SLV 7 | 0.14 | -17.46 | 33.72 | 0.901 | 0.1 | -0.0059 |
| 123 | SLV 8 | 0.14 | -17.46 | 33.72 | 0.901 | 0.1 | -0.0059 |
| 123 | SLV 9 | 0 | 10.25 | 51.72 | -0.5322 | -0.007 | -0.0001 |
| 123 | SLV 10 | 0 | 10.25 | 51.72 | -0.5322 | -0.007 | -0.0001 |
| 123 | SLV 11 | -0.17 | -18.88 | 40.77 | 0.9799 | -0.1426 | 0.0076 |
| 123 | SLV 12 | -0.17 | -18.88 | 40.77 | 0.9799 | -0.1426 | 0.0076 |
| 123 | SLV 13 | -0.42 | -1.6 | 56.12 | 0.0892 | -0.3375 | 0.0183 |
| 123 | SLV 14 | -0.42 | -1.6 | 56.12 | 0.0892 | -0.3375 | 0.0183 |
| 123 | SLV 15 | -0.48 | -10.34 | 52.83 | 0.5428 | -0.3782 | 0.0207 |
| 123 | SLV 16 | -0.48 | -10.34 | 52.83 | 0.5428 | -0.3782 | 0.0207 |
| 124 | SLU 1 | 0 | 0.54 | 34.18 | -0.1098 | -0.003 | 0 |
| 124 | SLU 2 | -0.01 | 2.9 | 35.13 | -0.2317 | -0.012 | 0 |
| 124 | SLU 3 | 0 | 0.31 | 35.14 | -0.1016 | -0.0031 | 0 |
| 124 | SLU 4 | -0.01 | 1.73 | 35.71 | -0.1747 | -0.0085 | 0 |
| 124 | SLU 5 | -0.01 | 2.59 | 35.71 | -0.2189 | -0.0121 | 0 |
| 124 | SLU 6 | 0 | 0.01 | 35.72 | -0.0887 | -0.0032 | 0 |
| 124 | SLU 7 | -0.01 | 1.43 | 36.28 | -0.1618 | -0.0086 | 0 |
| 124 | SLU 8 | 0 | -0.07 | 35.34 | -0.0841 | -0.0031 | 0 |
| 124 | SLU 9 | -0.01 | 1.35 | 35.9 | -0.1572 | -0.0086 | 0 |
| 124 | SLU 10 | -0.01 | 3.05 | 40.36 | -0.2499 | -0.0125 | 0 |
| 124 | SLU 11 | 0 | 0.47 | 40.37 | -0.1198 | -0.0036 | 0 |
| 124 | SLU 12 | -0.01 | 1.88 | 40.94 | -0.1929 | -0.009 | 0 |
| 124 | SLU 13 | -0.01 | 2.75 | 40.93 | -0.2371 | -0.0126 | 0 |
| 124 | SLU 14 | 0 | 0.16 | 40.95 | -0.1069 | -0.0037 | 0 |
| 124 | SLU 15 | -0.01 | 1.58 | 41.51 | -0.18 | -0.0091 | 0 |
| 124 | SLU 16 | 0 | 0.08 | 40.57 | -0.1023 | -0.0036 | 0 |
| 124 | SLU 17 | -0.01 | 1.5 | 41.13 | -0.1755 | -0.0091 | 0 |
| 124 | SLU 18 | 0 | 0.76 | 41.65 | -0.1359 | -0.0037 | 0 |
| 124 | SLU 19 | -0.01 | 2.17 | 42.22 | -0.209 | -0.0091 | 0 |
| 124 | SLU 20 | 0 | 0.45 | 42.23 | -0.123 | -0.0037 | 0 |
| 124 | SLU 21 | -0.01 | 1.87 | 42.8 | -0.1961 | -0.0092 | 0 |
| 124 | SLU 22 | 0 | 0.58 | 38.93 | -0.1214 | -0.0034 | 0 |
| 124 | SLU 23 | -0.01 | 2.94 | 39.87 | -0.2433 | -0.0125 | 0 |
| 124 | SLU 24 | 0 | 0.36 | 39.88 | -0.1131 | -0.0036 | 0 |
| 124 | SLU 25 | -0.01 | 1.78 | 40.45 | -0.1862 | -0.009 | 0 |
| 124 | SLU 26 | -0.01 | 2.64 | 40.45 | -0.2304 | -0.0126 | 0 |
| 124 | SLU 27 | 0 | 0.06 | 40.46 | -0.1002 | -0.0036 | 0 |
| 124 | SLU 28 | -0.01 | 1.47 | 41.03 | -0.1734 | -0.0091 | 0 |
| 124 | SLU 29 | 0 | -0.02 | 40.08 | -0.0957 | -0.0036 | 0 |
| 124 | SLU 30 | -0.01 | 1.39 | 40.65 | -0.1688 | -0.009 | 0 |
| 124 | SLU 31 | -0.01 | 3.1 | 45.1 | -0.2615 | -0.013 | 0 |
| 124 | SLU 32 | 0 | 0.51 | 45.11 | -0.1313 | -0.0041 | 0 |

| Nodo | Cont. | Reazione a traslazione | | | Reazione a rotazione | | |
|---|---|---|---|---|---|---|---|
| Ind. | N.br. | x | y | z | x | y | z |
| 124 | SLU 33 | -0.01 | 1.93 | 45.68 | -0.2044 | -0.0095 | 0 |
| 124 | SLU 34 | -0.01 | 2.79 | 45.68 | -0.2486 | -0.0131 | 0 |
| 124 | SLU 35 | 0 | 0.21 | 45.69 | -0.1184 | -0.0041 | 0 |
| 124 | SLU 36 | -0.01 | 1.62 | 46.26 | -0.1916 | -0.0096 | 0 |
| 124 | SLU 37 | 0 | 0.13 | 45.31 | -0.1139 | -0.0041 | 0 |
| 124 | SLU 38 | -0.01 | 1.54 | 45.88 | -0.187 | -0.0095 | 0 |
| 124 | SLU 39 | 0 | 0.8 | 46.4 | -0.1474 | -0.0041 | 0 |
| 124 | SLU 40 | -0.01 | 2.22 | 46.96 | -0.2205 | -0.0096 | 0 |
| 124 | SLU 41 | 0 | 0.5 | 46.97 | -0.1345 | -0.0042 | 0 |
| 124 | SLU 42 | -0.01 | 1.91 | 47.54 | -0.2077 | -0.0097 | 0 |
| 124 | SLU 43 | 0 | 0.68 | 42.81 | -0.1388 | -0.0037 | 0 |
| 124 | SLU 44 | -0.01 | 3.04 | 43.76 | -0.2607 | -0.0128 | 0 |
| 124 | SLU 45 | 0 | 0.46 | 43.77 | -0.1305 | -0.0038 | 0 |
| 124 | SLU 46 | -0.01 | 1.88 | 44.34 | -0.2037 | -0.0093 | 0 |
| 124 | SLU 47 | -0.01 | 2.74 | 44.33 | -0.2479 | -0.0128 | 0 |
| 124 | SLU 48 | 0 | 0.16 | 44.35 | -0.1177 | -0.0039 | 0 |
| 124 | SLU 49 | -0.01 | 1.57 | 44.91 | -0.1908 | -0.0093 | 0 |
| 124 | SLU 50 | 0 | 0.08 | 43.97 | -0.1131 | -0.0039 | 0 |
| 124 | SLU 51 | -0.01 | 1.49 | 44.53 | -0.1862 | -0.0093 | 0 |
| 124 | SLU 52 | -0.01 | 3.2 | 48.99 | -0.2789 | -0.0133 | 0 |
| 124 | SLU 53 | 0 | 0.61 | 49 | -0.1488 | -0.0043 | 0 |
| 124 | SLU 54 | -0.01 | 2.03 | 49.56 | -0.2219 | -0.0098 | 0 |
| 124 | SLU 55 | -0.01 | 2.89 | 49.56 | -0.2661 | -0.0133 | 0 |
| 124 | SLU 56 | 0 | 0.31 | 49.57 | -0.1359 | -0.0044 | 0 |
| 124 | SLU 57 | -0.01 | 1.72 | 50.14 | -0.209 | -0.0098 | 0 |
| 124 | SLU 58 | 0 | 0.23 | 49.2 | -0.1313 | -0.0043 | 0 |
| 124 | SLU 59 | -0.01 | 1.64 | 49.76 | -0.2045 | -0.0098 | 0 |
| 124 | SLU 60 | 0 | 0.9 | 50.28 | -0.1649 | -0.0044 | 0 |
| 124 | SLU 61 | -0.01 | 2.32 | 50.85 | -0.238 | -0.0098 | 0 |
| 124 | SLU 62 | 0 | 0.6 | 50.86 | -0.152 | -0.0045 | 0 |
| 124 | SLU 63 | -0.01 | 2.01 | 51.43 | -0.2251 | -0.0099 | 0 |
| 124 | SLU 64 | 0 | 0.73 | 47.56 | -0.1504 | -0.0042 | 0 |
| 124 | SLU 65 | -0.01 | 3.09 | 48.5 | -0.2723 | -0.0132 | 0 |
| 124 | SLU 66 | 0 | 0.51 | 48.51 | -0.1421 | -0.0043 | 0 |
| 124 | SLU 67 | -0.01 | 1.92 | 49.08 | -0.2152 | -0.0097 | 0 |
| 124 | SLU 68 | -0.01 | 2.79 | 49.08 | -0.2594 | -0.0133 | 0 |
| 124 | SLU 69 | 0 | 0.2 | 49.09 | -0.1292 | -0.0044 | 0 |
| 124 | SLU 70 | -0.01 | 1.62 | 49.66 | -0.2023 | -0.0098 | 0 |
| 124 | SLU 71 | 0 | 0.12 | 48.71 | -0.1246 | -0.0043 | 0 |
| 124 | SLU 72 | -0.01 | 1.54 | 49.28 | -0.1978 | -0.0098 | 0 |
| 124 | SLU 73 | -0.01 | 3.24 | 53.73 | -0.2905 | -0.0137 | 0 |
| 124 | SLU 74 | 0 | 0.66 | 53.74 | -0.1603 | -0.0048 | 0 |
| 124 | SLU 75 | -0.01 | 2.07 | 54.31 | -0.2334 | -0.0102 | 0 |
| 124 | SLU 76 | -0.01 | 2.94 | 54.31 | -0.2776 | -0.0138 | 0 |
| 124 | SLU 77 | 0 | 0.35 | 54.32 | -0.1474 | -0.0049 | 0 |
| 124 | SLU 78 | -0.01 | 1.77 | 54.89 | -0.2206 | -0.0103 | 0 |
| 124 | SLU 79 | 0 | 0.27 | 53.94 | -0.1429 | -0.0048 | 0 |
| 124 | SLU 80 | -0.01 | 1.69 | 54.51 | -0.216 | -0.0103 | 0 |
| 124 | SLU 81 | 0 | 0.95 | 55.03 | -0.1764 | -0.0049 | 0 |
| 124 | SLU 82 | -0.01 | 2.36 | 55.59 | -0.2495 | -0.0103 | 0 |
| 124 | SLU 83 | 0 | 0.64 | 55.6 | -0.1635 | -0.0049 | 0 |
| 124 | SLU 84 | -0.01 | 2.06 | 56.17 | -0.2367 | -0.0104 | 0 |
| 124 | SLE RA 1 | 0 | 0.55 | 35.54 | -0.1131 | -0.0031 | 0 |
| 124 | SLE RA 2 | -0.01 | 2.12 | 36.17 | -0.1944 | -0.0092 | 0 |
| 124 | SLE RA 3 | 0 | 0.4 | 36.18 | -0.1076 | -0.0032 | 0 |
| 124 | SLE RA 4 | -0.01 | 1.35 | 36.55 | -0.1564 | -0.0068 | 0 |
| 124 | SLE RA 5 | -0.01 | 1.92 | 36.55 | -0.1858 | -0.0092 | 0 |
| 124 | SLE RA 6 | 0 | 0.2 | 36.56 | -0.099 | -0.0032 | 0 |
| 124 | SLE RA 7 | -0.01 | 1.14 | 36.94 | -0.1478 | -0.0069 | 0 |
| 124 | SLE RA 8 | 0 | 0.15 | 36.31 | -0.096 | -0.0032 | 0 |
| 124 | SLE RA 9 | -0.01 | 1.09 | 36.69 | -0.1447 | -0.0068 | 0 |
| 124 | SLE RA 10 | -0.01 | 2.23 | 39.66 | -0.2065 | -0.0095 | 0 |
| 124 | SLE RA 11 | 0 | 0.5 | 39.66 | -0.1198 | -0.0035 | 0 |
| 124 | SLE RA 12 | -0.01 | 1.45 | 40.04 | -0.1685 | -0.0071 | 0 |
| 124 | SLE RA 13 | -0.01 | 2.02 | 40.04 | -0.198 | -0.0095 | 0 |
| 124 | SLE RA 14 | 0 | 0.3 | 40.05 | -0.1112 | -0.0036 | 0 |
| 124 | SLE RA 15 | -0.01 | 1.24 | 40.42 | -0.1599 | -0.0072 | 0 |
| 124 | SLE RA 16 | 0 | 0.25 | 39.79 | -0.1081 | -0.0035 | 0 |
| 124 | SLE RA 17 | -0.01 | 1.19 | 40.17 | -0.1569 | -0.0072 | 0 |
| 124 | SLE RA 18 | 0 | 0.7 | 40.52 | -0.1305 | -0.0036 | 0 |
| 124 | SLE RA 19 | -0.01 | 1.64 | 40.9 | -0.1792 | -0.0072 | 0 |
| 124 | SLE RA 20 | 0 | 0.49 | 40.9 | -0.1219 | -0.0036 | 0 |
| 124 | SLE RA 21 | -0.01 | 1.44 | 41.28 | -0.1707 | -0.0072 | 0 |
| 124 | SLE FR 1 | 0 | 0.55 | 35.54 | -0.1131 | -0.0031 | 0 |
| 124 | SLE FR 2 | 0 | 0.87 | 35.66 | -0.1294 | -0.0043 | 0 |
| 124 | SLE FR 3 | 0 | 0.47 | 35.69 | -0.1097 | -0.0031 | 0 |
| 124 | SLE FR 4 | 0 | 0.91 | 37.16 | -0.1346 | -0.0045 | 0 |
| 124 | SLE FR 5 | 0 | 0.51 | 37.19 | -0.1149 | -0.0033 | 0 |
| 124 | SLE FR 6 | 0 | 0.62 | 38.03 | -0.1218 | -0.0033 | 0 |
| 124 | SLE QP 1 | 0 | 0.55 | 35.54 | -0.1131 | -0.0031 | 0 |
| 124 | SLE QP 2 | 0 | 0.59 | 37.03 | -0.1183 | -0.0032 | 0 |
| 124 | SLD 1 | 0.15 | 0.84 | 39.43 | -0.2905 | 0.1094 | 0 |
| 124 | SLD 2 | 0.15 | 0.84 | 39.43 | -0.2905 | 0.1094 | 0 |
| 124 | SLD 3 | 0.18 | -2.99 | 37.98 | -0.1073 | 0.1355 | 0 |
| 124 | SLD 4 | 0.18 | -2.99 | 37.98 | -0.1073 | 0.1355 | 0 |
| 124 | SLD 5 | -0.01 | 6.48 | 39.94 | -0.4478 | -0.009 | 0 |
| 124 | SLD 6 | -0.01 | 6.48 | 39.94 | -0.4478 | -0.009 | 0 |
| 124 | SLD 7 | 0.1 | -6.29 | 35.12 | 0.1628 | 0.078 | 0 |

| Nodo | Cont. | Reazione a traslazione | | | Reazione a rotazione | | |
|---|---|---|---|---|---|---|---|
| Ind. | N.br. | x | y | z | x | y | z |
| 124 | SLD 8 | 0.1 | -6.29 | 35.12 | 0.1628 | 0.078 | 0 |
| 124 | SLD 9 | -0.1 | 7.48 | 38.94 | -0.3995 | -0.0845 | 0 |
| 124 | SLD 10 | -0.1 | 7.48 | 38.94 | -0.3995 | -0.0845 | 0 |
| 124 | SLD 11 | 0 | -5.29 | 34.12 | 0.2111 | 0.0026 | 0 |
| 124 | SLD 12 | 0 | -5.29 | 34.12 | 0.2111 | 0.0026 | 0 |
| 124 | SLD 13 | -0.18 | 4.18 | 36.09 | -0.1294 | -0.142 | 0 |
| 124 | SLD 14 | -0.18 | 4.18 | 36.09 | -0.1294 | -0.142 | 0 |
| 124 | SLD 15 | -0.15 | 0.35 | 34.64 | 0.0538 | -0.1159 | 0 |
| 124 | SLD 16 | -0.15 | 0.35 | 34.64 | 0.0538 | -0.1159 | 0 |
| 124 | SLV 1 | 0.36 | 1.05 | 42.64 | -0.5283 | 0.2681 | 0.0001 |
| 124 | SLV 2 | 0.36 | 1.05 | 42.64 | -0.5283 | 0.2681 | 0.0001 |
| 124 | SLV 3 | 0.43 | -7.93 | 39.22 | -0.0979 | 0.3338 | 0.0001 |
| 124 | SLV 4 | 0.43 | -7.93 | 39.22 | -0.0979 | 0.3338 | 0.0001 |
| 124 | SLV 5 | -0.01 | 14.36 | 43.9 | -0.8941 | -0.0216 | 0 |
| 124 | SLV 6 | -0.01 | 14.36 | 43.9 | -0.8941 | -0.0216 | 0 |
| 124 | SLV 7 | 0.25 | -15.59 | 32.5 | 0.5406 | 0.1976 | 0.0001 |
| 124 | SLV 8 | 0.25 | -15.59 | 32.5 | 0.5406 | 0.1976 | 0.0001 |
| 124 | SLV 9 | -0.25 | 16.78 | 41.56 | -0.7773 | -0.2041 | -0.0001 |
| 124 | SLV 10 | -0.25 | 16.78 | 41.56 | -0.7773 | -0.2041 | -0.0001 |
| 124 | SLV 11 | 0.01 | -13.17 | 30.16 | 0.6574 | 0.0151 | 0 |
| 124 | SLV 12 | 0.01 | -13.17 | 30.16 | 0.6574 | 0.0151 | 0 |
| 124 | SLV 13 | -0.44 | 9.12 | 34.84 | -0.1388 | -0.3403 | -0.0001 |
| 124 | SLV 14 | -0.44 | 9.12 | 34.84 | -0.1388 | -0.3403 | -0.0001 |
| 124 | SLV 15 | -0.36 | 0.14 | 31.42 | 0.2916 | -0.2745 | -0.0001 |
| 124 | SLV 16 | -0.36 | 0.14 | 31.42 | 0.2916 | -0.2745 | -0.0001 |
| 125 | SLU 1 | 0.02 | 4.13 | 54.07 | -0.2102 | 0.0135 | 0 |
| 125 | SLU 2 | 0.08 | 4.92 | 57.52 | -0.2505 | 0.0809 | 0 |
| 125 | SLU 3 | 0.02 | 4.28 | 55.72 | -0.2181 | 0.0137 | 0 |
| 125 | SLU 4 | 0.05 | 4.75 | 57.79 | -0.2423 | 0.0542 | 0 |
| 125 | SLU 5 | 0.08 | 5 | 58.53 | -0.2551 | 0.081 | 0 |
| 125 | SLU 6 | 0.02 | 4.36 | 56.73 | -0.2227 | 0.0138 | 0 |
| 125 | SLU 7 | 0.05 | 4.84 | 58.8 | -0.2469 | 0.0543 | 0 |
| 125 | SLU 8 | 0.02 | 4.3 | 56.09 | -0.2194 | 0.0137 | 0 |
| 125 | SLU 9 | 0.05 | 4.77 | 58.16 | -0.2436 | 0.0542 | 0 |
| 125 | SLU 10 | 0.08 | 5.57 | 63.63 | -0.2817 | 0.0828 | 0 |
| 125 | SLU 11 | 0.02 | 4.93 | 61.83 | -0.2492 | 0.0156 | 0 |
| 125 | SLU 12 | 0.05 | 5.41 | 63.9 | -0.2734 | 0.0561 | 0 |
| 125 | SLU 13 | 0.08 | 5.65 | 64.64 | -0.2863 | 0.0829 | 0 |
| 125 | SLU 14 | 0.02 | 5.01 | 62.84 | -0.2538 | 0.0157 | 0 |
| 125 | SLU 15 | 0.05 | 5.49 | 64.91 | -0.278 | 0.0562 | 0 |
| 125 | SLU 16 | 0.02 | 4.95 | 62.2 | -0.2505 | 0.0156 | 0 |
| 125 | SLU 17 | 0.05 | 5.42 | 64.27 | -0.2747 | 0.0561 | 0 |
| 125 | SLU 18 | 0.02 | 5.06 | 62.8 | -0.2547 | 0.0162 | 0 |
| 125 | SLU 19 | 0.05 | 5.53 | 64.87 | -0.2789 | 0.0567 | 0 |
| 125 | SLU 20 | 0.02 | 5.14 | 63.8 | -0.2593 | 0.0163 | 0 |
| 125 | SLU 21 | 0.06 | 5.62 | 65.88 | -0.2835 | 0.0568 | 0 |
| 125 | SLU 22 | 0.02 | 4.74 | 60.6 | -0.2404 | 0.0152 | 0 |
| 125 | SLU 23 | 0.08 | 5.52 | 64.05 | -0.2808 | 0.0826 | 0 |
| 125 | SLU 24 | 0.02 | 4.89 | 62.25 | -0.2483 | 0.0154 | 0 |
| 125 | SLU 25 | 0.05 | 5.36 | 64.32 | -0.2725 | 0.0559 | 0 |
| 125 | SLU 26 | 0.08 | 5.6 | 65.06 | -0.2854 | 0.0827 | 0 |
| 125 | SLU 27 | 0.02 | 4.97 | 63.26 | -0.2529 | 0.0155 | 0 |
| 125 | SLU 28 | 0.05 | 5.44 | 65.33 | -0.2771 | 0.056 | 0 |
| 125 | SLU 29 | 0.02 | 4.9 | 62.62 | -0.2496 | 0.0154 | 0 |
| 125 | SLU 30 | 0.05 | 5.37 | 64.69 | -0.2738 | 0.0558 | 0 |
| 125 | SLU 31 | 0.08 | 6.17 | 70.16 | -0.3119 | 0.0845 | 0 |
| 125 | SLU 32 | 0.02 | 5.54 | 68.36 | -0.2795 | 0.0173 | 0 |
| 125 | SLU 33 | 0.06 | 6.01 | 70.43 | -0.3037 | 0.0578 | 0 |
| 125 | SLU 34 | 0.08 | 6.25 | 71.17 | -0.3165 | 0.0846 | 0 |
| 125 | SLU 35 | 0.02 | 5.62 | 69.37 | -0.2841 | 0.0174 | 0 |
| 125 | SLU 36 | 0.06 | 6.09 | 71.44 | -0.3083 | 0.0579 | 0 |
| 125 | SLU 37 | 0.02 | 5.55 | 68.73 | -0.2808 | 0.0173 | 0 |
| 125 | SLU 38 | 0.06 | 6.02 | 70.8 | -0.305 | 0.0577 | 0 |
| 125 | SLU 39 | 0.02 | 5.67 | 69.33 | -0.2849 | 0.0179 | 0 |
| 125 | SLU 40 | 0.06 | 6.14 | 71.4 | -0.3091 | 0.0584 | 0 |
| 125 | SLU 41 | 0.02 | 5.75 | 70.34 | -0.2895 | 0.018 | 0 |
| 125 | SLU 42 | 0.06 | 6.22 | 72.41 | -0.3137 | 0.0585 | 0 |
| 125 | SLU 43 | 0.02 | 5.17 | 68.05 | -0.2629 | 0.0169 | 0 |
| 125 | SLU 44 | 0.08 | 5.95 | 71.5 | -0.3032 | 0.0844 | 0 |
| 125 | SLU 45 | 0.02 | 5.32 | 69.7 | -0.2708 | 0.0172 | 0 |
| 125 | SLU 46 | 0.06 | 5.79 | 71.77 | -0.295 | 0.0576 | 0 |
| 125 | SLU 47 | 0.08 | 6.03 | 72.51 | -0.3078 | 0.0845 | 0 |
| 125 | SLU 48 | 0.02 | 5.4 | 70.71 | -0.2754 | 0.0173 | 0 |
| 125 | SLU 49 | 0.06 | 5.87 | 72.78 | -0.2996 | 0.0577 | 0 |
| 125 | SLU 50 | 0.02 | 5.33 | 70.07 | -0.2721 | 0.0171 | 0 |
| 125 | SLU 51 | 0.06 | 5.8 | 72.14 | -0.2963 | 0.0576 | 0 |
| 125 | SLU 52 | 0.08 | 6.6 | 77.61 | -0.3344 | 0.0863 | 0 |
| 125 | SLU 53 | 0.02 | 5.97 | 75.81 | -0.3019 | 0.0191 | 0 |
| 125 | SLU 54 | 0.06 | 6.44 | 77.88 | -0.3261 | 0.0595 | 0 |
| 125 | SLU 55 | 0.08 | 6.68 | 78.62 | -0.339 | 0.0864 | 0 |
| 125 | SLU 56 | 0.02 | 6.05 | 76.82 | -0.3065 | 0.0192 | 0 |
| 125 | SLU 57 | 0.06 | 6.52 | 78.89 | -0.3307 | 0.0596 | 0 |
| 125 | SLU 58 | 0.02 | 5.98 | 76.18 | -0.3032 | 0.019 | 0 |
| 125 | SLU 59 | 0.06 | 6.45 | 78.25 | -0.3274 | 0.0595 | 0 |
| 125 | SLU 60 | 0.02 | 6.1 | 76.78 | -0.3074 | 0.0197 | 0 |
| 125 | SLU 61 | 0.06 | 6.57 | 78.85 | -0.3316 | 0.0601 | 0 |
| 125 | SLU 62 | 0.02 | 6.18 | 77.78 | -0.312 | 0.0198 | 0 |
| 125 | SLU 63 | 0.06 | 6.65 | 79.86 | -0.3362 | 0.0602 | 0 |

| Nodo | Cont. | Reazione a traslazione | | | Reazione a rotazione | | |
|---|---|---|---|---|---|---|---|
| Ind. | N.br. | x | y | z | x | y | z |
| 125 | SLU 64 | 0.02 | 5.77 | 74.58 | -0.2931 | 0.0186 | 0 |
| 125 | SLU 65 | 0.08 | 6.56 | 78.03 | -0.3335 | 0.0861 | 0 |
| 125 | SLU 66 | 0.02 | 5.92 | 76.23 | -0.301 | 0.0188 | 0 |
| 125 | SLU 67 | 0.06 | 6.39 | 78.3 | -0.3252 | 0.0593 | 0 |
| 125 | SLU 68 | 0.08 | 6.64 | 79.04 | -0.3381 | 0.0862 | 0 |
| 125 | SLU 69 | 0.02 | 6 | 77.24 | -0.3056 | 0.0189 | 0 |
| 125 | SLU 70 | 0.06 | 6.47 | 79.31 | -0.3298 | 0.0594 | 0 |
| 125 | SLU 71 | 0.02 | 5.93 | 76.6 | -0.3023 | 0.0188 | 0 |
| 125 | SLU 72 | 0.06 | 6.4 | 78.67 | -0.3265 | 0.0593 | 0 |
| 125 | SLU 73 | 0.08 | 7.21 | 84.14 | -0.3646 | 0.088 | 0 |
| 125 | SLU 74 | 0.02 | 6.57 | 82.34 | -0.3322 | 0.0207 | 0 |
| 125 | SLU 75 | 0.06 | 7.04 | 84.41 | -0.3564 | 0.0612 | 0 |
| 125 | SLU 76 | 0.08 | 7.29 | 85.15 | -0.3692 | 0.0881 | 0 |
| 125 | SLU 77 | 0.02 | 6.65 | 83.35 | -0.3368 | 0.0208 | 0 |
| 125 | SLU 78 | 0.06 | 7.12 | 85.42 | -0.361 | 0.0613 | 0 |
| 125 | SLU 79 | 0.02 | 6.58 | 82.71 | -0.3335 | 0.0207 | 0 |
| 125 | SLU 80 | 0.06 | 7.05 | 84.78 | -0.3577 | 0.0612 | 0 |
| 125 | SLU 81 | 0.03 | 6.7 | 83.31 | -0.3376 | 0.0213 | 0 |
| 125 | SLU 82 | 0.06 | 7.17 | 85.38 | -0.3618 | 0.0618 | 0 |
| 125 | SLU 83 | 0.03 | 6.78 | 84.32 | -0.3422 | 0.0214 | 0 |
| 125 | SLU 84 | 0.06 | 7.25 | 86.39 | -0.3664 | 0.0619 | 0 |
| 125 | SLE RA 1 | 0.02 | 4.31 | 55.93 | -0.2188 | 0.0139 | 0 |
| 125 | SLE RA 2 | 0.06 | 4.83 | 58.23 | -0.2457 | 0.0589 | 0 |
| 125 | SLE RA 3 | 0.02 | 4.41 | 57.03 | -0.2241 | 0.0141 | 0 |
| 125 | SLE RA 4 | 0.04 | 4.72 | 58.42 | -0.2402 | 0.0411 | 0 |
| 125 | SLE RA 5 | 0.06 | 4.88 | 58.91 | -0.2488 | 0.059 | 0 |
| 125 | SLE RA 6 | 0.02 | 4.46 | 57.71 | -0.2272 | 0.0142 | 0 |
| 125 | SLE RA 7 | 0.04 | 4.77 | 59.09 | -0.2433 | 0.0412 | 0 |
| 125 | SLE RA 8 | 0.02 | 4.41 | 57.28 | -0.225 | 0.0141 | 0 |
| 125 | SLE RA 9 | 0.04 | 4.73 | 58.66 | -0.2411 | 0.0411 | 0 |
| 125 | SLE RA 10 | 0.06 | 5.26 | 62.31 | -0.2665 | 0.0602 | 0 |
| 125 | SLE RA 11 | 0.02 | 4.84 | 61.11 | -0.2449 | 0.0154 | 0 |
| 125 | SLE RA 12 | 0.04 | 5.15 | 62.49 | -0.261 | 0.0424 | 0 |
| 125 | SLE RA 13 | 0.06 | 5.32 | 62.98 | -0.2696 | 0.0603 | 0 |
| 125 | SLE RA 14 | 0.02 | 4.89 | 61.78 | -0.2479 | 0.0154 | 0 |
| 125 | SLE RA 15 | 0.04 | 5.21 | 63.16 | -0.2641 | 0.0424 | 0 |
| 125 | SLE RA 16 | 0.02 | 4.85 | 61.35 | -0.2457 | 0.0154 | 0 |
| 125 | SLE RA 17 | 0.04 | 5.16 | 62.73 | -0.2619 | 0.0423 | 0 |
| 125 | SLE RA 18 | 0.02 | 4.93 | 61.75 | -0.2485 | 0.0158 | 0 |
| 125 | SLE RA 19 | 0.04 | 5.24 | 63.13 | -0.2646 | 0.0428 | 0 |
| 125 | SLE RA 20 | 0.02 | 4.98 | 62.43 | -0.2516 | 0.0158 | 0 |
| 125 | SLE RA 21 | 0.04 | 5.29 | 63.81 | -0.2677 | 0.0428 | 0 |
| 125 | SLE FR 1 | 0.02 | 4.31 | 55.93 | -0.2188 | 0.0139 | 0 |
| 125 | SLE FR 2 | 0.02 | 4.41 | 56.39 | -0.2242 | 0.0229 | 0 |
| 125 | SLE FR 3 | 0.02 | 4.33 | 56.2 | -0.2201 | 0.014 | 0 |
| 125 | SLE FR 4 | 0.02 | 4.6 | 58.14 | -0.2331 | 0.0235 | 0 |
| 125 | SLE FR 5 | 0.02 | 4.51 | 57.95 | -0.229 | 0.0145 | 0 |
| 125 | SLE FR 6 | 0.02 | 4.62 | 58.84 | -0.2337 | 0.0149 | 0 |
| 125 | SLE QP 1 | 0.02 | 4.31 | 55.93 | -0.2188 | 0.0139 | 0 |
| 125 | SLE QP 2 | 0.02 | 4.49 | 57.68 | -0.2277 | 0.0145 | 0 |
| 125 | SLD 1 | 0.41 | 5.34 | 44.57 | -0.2525 | 0.3327 | 0 |
| 125 | SLD 2 | 0.41 | 5.34 | 44.57 | -0.2525 | 0.3327 | 0 |
| 125 | SLD 3 | 0.3 | 0.93 | 39.57 | -0.0641 | 0.2251 | 0 |
| 125 | SLD 4 | 0.3 | 0.93 | 39.57 | -0.0641 | 0.2251 | 0 |
| 125 | SLD 5 | 0.31 | 11.45 | 61.32 | -0.5209 | 0.2731 | 0 |
| 125 | SLD 6 | 0.31 | 11.45 | 61.32 | -0.5209 | 0.2731 | 0 |
| 125 | SLD 7 | -0.07 | -3.28 | 44.67 | 0.107 | -0.0855 | 0 |
| 125 | SLD 8 | -0.07 | -3.28 | 44.67 | 0.107 | -0.0855 | 0 |
| 125 | SLD 9 | 0.1 | 12.26 | 70.69 | -0.5625 | 0.1145 | 0.0001 |
| 125 | SLD 10 | 0.1 | 12.26 | 70.69 | -0.5625 | 0.1145 | 0.0001 |
| 125 | SLD 11 | -0.27 | -2.46 | 54.03 | 0.0654 | -0.2441 | 0 |
| 125 | SLD 12 | -0.27 | -2.46 | 54.03 | 0.0654 | -0.2441 | 0 |
| 125 | SLD 13 | -0.26 | 8.06 | 75.79 | -0.3913 | -0.1961 | 0.0001 |
| 125 | SLD 14 | -0.26 | 8.06 | 75.79 | -0.3913 | -0.1961 | 0.0001 |
| 125 | SLD 15 | -0.38 | 3.64 | 70.79 | -0.203 | -0.3037 | 0 |
| 125 | SLD 16 | -0.38 | 3.64 | 70.79 | -0.203 | -0.3037 | 0 |
| 125 | SLV 1 | 0.95 | 6.44 | 27.03 | -0.2839 | 0.777 | 0 |
| 125 | SLV 2 | 0.95 | 6.44 | 27.03 | -0.2839 | 0.777 | 0 |
| 125 | SLV 3 | 0.67 | -3.84 | 15.28 | 0.1542 | 0.5034 | -0.0001 |
| 125 | SLV 4 | 0.67 | -3.84 | 15.28 | 0.1542 | 0.5034 | -0.0001 |
| 125 | SLV 5 | 0.73 | 20.66 | 66.3 | -0.9091 | 0.6583 | 0.0001 |
| 125 | SLV 6 | 0.73 | 20.66 | 66.3 | -0.9091 | 0.6583 | 0.0001 |
| 125 | SLV 7 | -0.22 | -13.59 | 27.14 | 0.5513 | -0.2538 | -0.0001 |
| 125 | SLV 8 | -0.22 | -13.59 | 27.14 | 0.5513 | -0.2538 | -0.0001 |
| 125 | SLV 9 | 0.26 | 22.57 | 88.22 | -1.0068 | 0.2828 | 0.0002 |
| 125 | SLV 10 | 0.26 | 22.57 | 88.22 | -1.0068 | 0.2828 | 0.0002 |
| 125 | SLV 11 | -0.7 | -11.67 | 49.05 | 0.4536 | -0.6293 | -0.0001 |
| 125 | SLV 12 | -0.7 | -11.67 | 49.05 | 0.4536 | -0.6293 | -0.0001 |
| 125 | SLV 13 | -0.63 | 12.82 | 100.08 | -0.6097 | -0.4744 | 0.0001 |
| 125 | SLV 14 | -0.63 | 12.82 | 100.08 | -0.6097 | -0.4744 | 0.0001 |
| 125 | SLV 15 | -0.92 | 2.55 | 88.33 | -0.1716 | -0.748 | 0.0001 |
| 125 | SLV 16 | -0.92 | 2.55 | 88.33 | -0.1716 | -0.748 | 0.0001 |
| 126 | SLU 1 | -0.32 | 3.29 | 54.84 | -0.2556 | -0.2161 | -0.0015 |
| 126 | SLU 2 | -0.4 | 4.29 | 58.07 | -0.316 | -0.294 | -0.0018 |
| 126 | SLU 3 | -0.33 | 3.51 | 57.15 | -0.2721 | -0.2255 | -0.0015 |
| 126 | SLU 4 | -0.38 | 4.11 | 59.08 | -0.3083 | -0.2722 | -0.0018 |
| 126 | SLU 5 | -0.41 | 4.47 | 59.9 | -0.3302 | -0.3012 | -0.0019 |
| 126 | SLU 6 | -0.34 | 3.69 | 58.98 | -0.2863 | -0.2327 | -0.0016 |

| Nodo | Cont. | Reazione a traslazione | | | Reazione a rotazione | | |
|---|---|---|---|---|---|---|---|
| Ind. | N.br. | x | y | z | x | y | z |
| 126 | SLU 7 | -0.39 | 4.29 | 60.92 | -0.3225 | -0.2794 | -0.0018 |
| 126 | SLU 8 | -0.34 | 3.66 | 58.52 | -0.284 | -0.2305 | -0.0016 |
| 126 | SLU 9 | -0.39 | 4.26 | 60.45 | -0.3202 | -0.2772 | -0.0018 |
| 126 | SLU 10 | -0.44 | 4.74 | 64.31 | -0.3495 | -0.3219 | -0.002 |
| 126 | SLU 11 | -0.37 | 3.96 | 63.39 | -0.3056 | -0.2533 | -0.0017 |
| 126 | SLU 12 | -0.42 | 4.56 | 65.32 | -0.3419 | -0.3001 | -0.002 |
| 126 | SLU 13 | -0.45 | 4.93 | 66.15 | -0.3637 | -0.3291 | -0.0021 |
| 126 | SLU 14 | -0.38 | 4.15 | 65.23 | -0.3198 | -0.2605 | -0.0018 |
| 126 | SLU 15 | -0.43 | 4.75 | 67.16 | -0.3561 | -0.3073 | -0.002 |
| 126 | SLU 16 | -0.38 | 4.11 | 64.76 | -0.3175 | -0.2584 | -0.0018 |
| 126 | SLU 17 | -0.43 | 4.71 | 66.7 | -0.3538 | -0.3051 | -0.002 |
| 126 | SLU 18 | -0.38 | 3.94 | 63.77 | -0.3035 | -0.256 | -0.0017 |
| 126 | SLU 19 | -0.42 | 4.54 | 65.7 | -0.3397 | -0.3027 | -0.002 |
| 126 | SLU 20 | -0.39 | 4.12 | 65.6 | -0.3177 | -0.2631 | -0.0018 |
| 126 | SLU 21 | -0.43 | 4.72 | 67.54 | -0.3539 | -0.3099 | -0.002 |
| 126 | SLU 22 | -0.36 | 3.77 | 61.59 | -0.2929 | -0.2456 | -0.0017 |
| 126 | SLU 23 | -0.44 | 4.77 | 64.82 | -0.3533 | -0.3235 | -0.0021 |
| 126 | SLU 24 | -0.38 | 3.99 | 63.89 | -0.3094 | -0.255 | -0.0017 |
| 126 | SLU 25 | -0.42 | 4.59 | 65.83 | -0.3457 | -0.3017 | -0.002 |
| 126 | SLU 26 | -0.45 | 4.95 | 66.65 | -0.3675 | -0.3307 | -0.0021 |
| 126 | SLU 27 | -0.39 | 4.17 | 65.73 | -0.3236 | -0.2621 | -0.0018 |
| 126 | SLU 28 | -0.43 | 4.77 | 67.66 | -0.3599 | -0.3089 | -0.002 |
| 126 | SLU 29 | -0.38 | 4.14 | 65.26 | -0.3213 | -0.26 | -0.0018 |
| 126 | SLU 30 | -0.43 | 4.74 | 67.2 | -0.3576 | -0.3067 | -0.002 |
| 126 | SLU 31 | -0.48 | 5.22 | 71.06 | -0.3868 | -0.3514 | -0.0022 |
| 126 | SLU 32 | -0.42 | 4.44 | 70.14 | -0.343 | -0.2828 | -0.0019 |
| 126 | SLU 33 | -0.46 | 5.04 | 72.07 | -0.3792 | -0.3296 | -0.0022 |
| 126 | SLU 34 | -0.49 | 5.41 | 72.9 | -0.4011 | -0.3586 | -0.0023 |
| 126 | SLU 35 | -0.43 | 4.63 | 71.97 | -0.3572 | -0.29 | -0.002 |
| 126 | SLU 36 | -0.47 | 5.23 | 73.91 | -0.3934 | -0.3367 | -0.0022 |
| 126 | SLU 37 | -0.42 | 4.59 | 71.51 | -0.3549 | -0.2879 | -0.002 |
| 126 | SLU 38 | -0.47 | 5.19 | 73.44 | -0.3911 | -0.3346 | -0.0022 |
| 126 | SLU 39 | -0.42 | 4.42 | 70.51 | -0.3408 | -0.2854 | -0.0019 |
| 126 | SLU 40 | -0.47 | 5.02 | 72.45 | -0.3771 | -0.3322 | -0.0022 |
| 126 | SLU 41 | -0.43 | 4.6 | 72.35 | -0.355 | -0.2926 | -0.002 |
| 126 | SLU 42 | -0.48 | 5.2 | 74.28 | -0.3913 | -0.3394 | -0.0022 |
| 126 | SLU 43 | -0.4 | 4.11 | 68.98 | -0.3195 | -0.2709 | -0.0018 |
| 126 | SLU 44 | -0.48 | 5.11 | 72.21 | -0.3798 | -0.3487 | -0.0022 |
| 126 | SLU 45 | -0.41 | 4.33 | 71.29 | -0.336 | -0.2802 | -0.0019 |
| 126 | SLU 46 | -0.46 | 4.93 | 73.22 | -0.3722 | -0.3269 | -0.0021 |
| 126 | SLU 47 | -0.49 | 5.29 | 74.04 | -0.3941 | -0.3559 | -0.0023 |
| 126 | SLU 48 | -0.42 | 4.51 | 73.12 | -0.3502 | -0.2874 | -0.002 |
| 126 | SLU 49 | -0.47 | 5.11 | 75.06 | -0.3864 | -0.3341 | -0.0022 |
| 126 | SLU 50 | -0.42 | 4.48 | 72.66 | -0.3479 | -0.2852 | -0.002 |
| 126 | SLU 51 | -0.47 | 5.08 | 74.59 | -0.3841 | -0.332 | -0.0022 |
| 126 | SLU 52 | -0.52 | 5.56 | 78.45 | -0.4134 | -0.3766 | -0.0024 |
| 126 | SLU 53 | -0.45 | 4.78 | 77.53 | -0.3695 | -0.3081 | -0.0021 |
| 126 | SLU 54 | -0.5 | 5.38 | 79.46 | -0.4057 | -0.3548 | -0.0023 |
| 126 | SLU 55 | -0.53 | 5.75 | 80.29 | -0.4276 | -0.3838 | -0.0025 |
| 126 | SLU 56 | -0.46 | 4.97 | 79.37 | -0.3837 | -0.3153 | -0.0022 |
| 126 | SLU 57 | -0.51 | 5.57 | 81.3 | -0.42 | -0.362 | -0.0024 |
| 126 | SLU 58 | -0.46 | 4.93 | 78.9 | -0.3814 | -0.3131 | -0.0021 |
| 126 | SLU 59 | -0.51 | 5.53 | 80.84 | -0.4177 | -0.3598 | -0.0024 |
| 126 | SLU 60 | -0.46 | 4.76 | 77.91 | -0.3674 | -0.3107 | -0.0021 |
| 126 | SLU 61 | -0.5 | 5.36 | 79.84 | -0.4036 | -0.3574 | -0.0023 |
| 126 | SLU 62 | -0.47 | 4.94 | 79.74 | -0.3816 | -0.3179 | -0.0022 |
| 126 | SLU 63 | -0.51 | 5.54 | 81.68 | -0.4178 | -0.3646 | -0.0024 |
| 126 | SLU 64 | -0.44 | 4.59 | 75.73 | -0.3568 | -0.3003 | -0.002 |
| 126 | SLU 65 | -0.52 | 5.59 | 78.96 | -0.4172 | -0.3782 | -0.0024 |
| 126 | SLU 66 | -0.46 | 4.81 | 78.03 | -0.3733 | -0.3097 | -0.0021 |
| 126 | SLU 67 | -0.5 | 5.41 | 79.97 | -0.4095 | -0.3564 | -0.0023 |
| 126 | SLU 68 | -0.53 | 5.78 | 80.79 | -0.4314 | -0.3854 | -0.0025 |
| 126 | SLU 69 | -0.47 | 4.99 | 79.87 | -0.3875 | -0.3169 | -0.0022 |
| 126 | SLU 70 | -0.51 | 5.59 | 81.8 | -0.4237 | -0.3636 | -0.0024 |
| 126 | SLU 71 | -0.46 | 4.96 | 79.4 | -0.3852 | -0.3147 | -0.0022 |
| 126 | SLU 72 | -0.51 | 5.56 | 81.34 | -0.4214 | -0.3614 | -0.0024 |
| 126 | SLU 73 | -0.56 | 6.05 | 85.2 | -0.4507 | -0.4061 | -0.0026 |
| 126 | SLU 74 | -0.5 | 5.26 | 84.28 | -0.4068 | -0.3376 | -0.0023 |
| 126 | SLU 75 | -0.54 | 5.86 | 86.21 | -0.4431 | -0.3843 | -0.0025 |
| 126 | SLU 76 | -0.57 | 6.23 | 87.04 | -0.4649 | -0.4133 | -0.0027 |
| 126 | SLU 77 | -0.51 | 5.45 | 86.11 | -0.421 | -0.3447 | -0.0024 |
| 126 | SLU 78 | -0.55 | 6.05 | 88.05 | -0.4573 | -0.3915 | -0.0026 |
| 126 | SLU 79 | -0.5 | 5.42 | 85.65 | -0.4187 | -0.3426 | -0.0023 |
| 126 | SLU 80 | -0.55 | 6.02 | 87.58 | -0.455 | -0.3893 | -0.0026 |
| 126 | SLU 81 | -0.5 | 5.24 | 84.65 | -0.4047 | -0.3402 | -0.0023 |
| 126 | SLU 82 | -0.55 | 5.84 | 86.59 | -0.4409 | -0.3869 | -0.0025 |
| 126 | SLU 83 | -0.51 | 5.43 | 86.49 | -0.4189 | -0.3474 | -0.0024 |
| 126 | SLU 84 | -0.56 | 6.03 | 88.42 | -0.4551 | -0.3941 | -0.0026 |
| 126 | SLE RA 1 | -0.33 | 3.43 | 56.77 | -0.2662 | -0.2246 | -0.0015 |
| 126 | SLE RA 2 | -0.38 | 4.09 | 58.92 | -0.3065 | -0.2765 | -0.0018 |
| 126 | SLE RA 3 | -0.34 | 3.57 | 58.31 | -0.2773 | -0.2308 | -0.0016 |
| 126 | SLE RA 4 | -0.37 | 3.97 | 59.6 | -0.3014 | -0.2619 | -0.0017 |
| 126 | SLE RA 5 | -0.39 | 4.22 | 60.15 | -0.316 | -0.2813 | -0.0018 |
| 126 | SLE RA 6 | -0.35 | 3.69 | 59.53 | -0.2867 | -0.2356 | -0.0016 |
| 126 | SLE RA 7 | -0.38 | 4.09 | 60.82 | -0.3109 | -0.2667 | -0.0018 |
| 126 | SLE RA 8 | -0.34 | 3.67 | 59.22 | -0.2852 | -0.2341 | -0.0016 |
| 126 | SLE RA 9 | -0.38 | 4.07 | 60.51 | -0.3094 | -0.2653 | -0.0018 |
| 126 | SLE RA 10 | -0.41 | 4.4 | 63.08 | -0.3289 | -0.2951 | -0.0019 |

| Nodo | Cont. | Reazione a traslazione | | | Reazione a rotazione | | |
|---|---|---|---|---|---|---|---|
| Ind. | N.br. | x | y | z | x | y | z |
| 126 | SLE RA 11 | -0.37 | 3.87 | 62.47 | -0.2996 | -0.2494 | -0.0017 |
| 126 | SLE RA 12 | -0.4 | 4.27 | 63.76 | -0.3238 | -0.2805 | -0.0019 |
| 126 | SLE RA 13 | -0.42 | 4.52 | 64.31 | -0.3383 | -0.2999 | -0.0019 |
| 126 | SLE RA 14 | -0.37 | 4 | 63.69 | -0.3091 | -0.2542 | -0.0017 |
| 126 | SLE RA 15 | -0.41 | 4.4 | 64.98 | -0.3332 | -0.2853 | -0.0019 |
| 126 | SLE RA 16 | -0.37 | 3.98 | 63.38 | -0.3076 | -0.2527 | -0.0017 |
| 126 | SLE RA 17 | -0.4 | 4.38 | 64.67 | -0.3317 | -0.2839 | -0.0019 |
| 126 | SLE RA 18 | -0.37 | 3.86 | 62.72 | -0.2982 | -0.2511 | -0.0017 |
| 126 | SLE RA 19 | -0.4 | 4.26 | 64.01 | -0.3223 | -0.2823 | -0.0019 |
| 126 | SLE RA 20 | -0.38 | 3.98 | 63.94 | -0.3077 | -0.2559 | -0.0017 |
| 126 | SLE RA 21 | -0.41 | 4.38 | 65.23 | -0.3318 | -0.287 | -0.0019 |
| 126 | SLE FR 1 | -0.33 | 3.43 | 56.77 | -0.2662 | -0.2246 | -0.0015 |
| 126 | SLE FR 2 | -0.34 | 3.56 | 57.2 | -0.2743 | -0.2349 | -0.0016 |
| 126 | SLE FR 3 | -0.33 | 3.47 | 57.26 | -0.27 | -0.2265 | -0.0015 |
| 126 | SLE FR 4 | -0.35 | 3.69 | 58.99 | -0.2839 | -0.2429 | -0.0016 |
| 126 | SLE FR 5 | -0.34 | 3.61 | 59.05 | -0.2796 | -0.2344 | -0.0016 |
| 126 | SLE FR 6 | -0.35 | 3.64 | 59.75 | -0.2822 | -0.2378 | -0.0016 |
| 126 | SLE QP 1 | -0.33 | 3.43 | 56.77 | -0.2662 | -0.2246 | -0.0015 |
| 126 | SLE QP 2 | -0.34 | 3.56 | 58.56 | -0.2758 | -0.2325 | -0.0016 |
| 126 | SLD 1 | -0.69 | 7.39 | 76.95 | -0.465 | -0.5219 | -0.0032 |
| 126 | SLD 2 | -0.69 | 7.39 | 76.95 | -0.465 | -0.5219 | -0.0032 |
| 126 | SLD 3 | -0.58 | 2.02 | 72.83 | -0.2264 | -0.4241 | -0.0027 |
| 126 | SLD 4 | -0.58 | 2.02 | 72.83 | -0.2264 | -0.4241 | -0.0027 |
| 126 | SLD 5 | -0.62 | 12.85 | 70.33 | -0.6944 | -0.4677 | -0.0029 |
| 126 | SLD 6 | -0.62 | 12.85 | 70.33 | -0.6944 | -0.4677 | -0.0029 |
| 126 | SLD 7 | -0.24 | -5.05 | 56.58 | 0.1008 | -0.1416 | -0.0011 |
| 126 | SLD 8 | -0.24 | -5.05 | 56.58 | 0.1008 | -0.1416 | -0.0011 |
| 126 | SLD 9 | -0.45 | 12.16 | 60.53 | -0.6525 | -0.3234 | -0.0021 |
| 126 | SLD 10 | -0.45 | 12.16 | 60.53 | -0.6525 | -0.3234 | -0.0021 |
| 126 | SLD 11 | -0.06 | -5.74 | 46.78 | 0.1427 | 0.0027 | -0.0003 |
| 126 | SLD 12 | -0.06 | -5.74 | 46.78 | 0.1427 | 0.0027 | -0.0003 |
| 126 | SLD 13 | -0.11 | 5.09 | 44.29 | -0.3253 | -0.041 | -0.0005 |
| 126 | SLD 14 | -0.11 | 5.09 | 44.29 | -0.3253 | -0.041 | -0.0005 |
| 126 | SLD 15 | 0.01 | -0.28 | 40.16 | -0.0867 | 0.0569 | 0.0001 |
| 126 | SLD 16 | 0.01 | -0.28 | 40.16 | -0.0867 | 0.0569 | 0.0001 |
| 126 | SLV 1 | -1.17 | 12.55 | 101.67 | -0.718 | -0.9211 | -0.0055 |
| 126 | SLV 2 | -1.17 | 12.55 | 101.67 | -0.718 | -0.9211 | -0.0055 |
| 126 | SLV 3 | -0.88 | 0.05 | 91.84 | -0.1618 | -0.6742 | -0.0041 |
| 126 | SLV 4 | -0.88 | 0.05 | 91.84 | -0.1618 | -0.6742 | -0.0041 |
| 126 | SLV 5 | -1.02 | 25.22 | 86.39 | -1.2521 | -0.8135 | -0.0048 |
| 126 | SLV 6 | -1.02 | 25.22 | 86.39 | -1.2521 | -0.8135 | -0.0048 |
| 126 | SLV 7 | -0.07 | -16.46 | 53.64 | 0.6019 | 0.0094 | -0.0003 |
| 126 | SLV 8 | -0.07 | -16.46 | 53.64 | 0.6019 | 0.0094 | -0.0003 |
| 126 | SLV 9 | -0.61 | 23.57 | 63.47 | -1.1536 | -0.4744 | -0.0029 |
| 126 | SLV 10 | -0.61 | 23.57 | 63.47 | -1.1536 | -0.4744 | -0.0029 |
| 126 | SLV 11 | 0.34 | -18.11 | 30.72 | 0.7004 | 0.3484 | 0.0017 |
| 126 | SLV 12 | 0.34 | -18.11 | 30.72 | 0.7004 | 0.3484 | 0.0017 |
| 126 | SLV 13 | 0.2 | 7.06 | 25.27 | -0.3898 | 0.2092 | 0.0009 |
| 126 | SLV 14 | 0.2 | 7.06 | 25.27 | -0.3898 | 0.2092 | 0.0009 |
| 126 | SLV 15 | 0.49 | -5.44 | 15.44 | 0.1664 | 0.456 | 0.0023 |
| 126 | SLV 16 | 0.49 | -5.44 | 15.44 | 0.1664 | 0.456 | 0.0023 |
| 127 | SLU 1 | 0.05 | -2.2 | 42.19 | 0.1043 | 0.0361 | 0.0001 |
| 127 | SLU 2 | 0.05 | -2.63 | 42.28 | 0.1245 | 0.0363 | 0.0001 |
| 127 | SLU 3 | 0.05 | -1.84 | 43.48 | 0.087 | 0.0375 | 0.0001 |
| 127 | SLU 4 | 0.05 | -2.09 | 43.53 | 0.0991 | 0.0376 | 0.0001 |
| 127 | SLU 5 | 0.05 | -2.2 | 43.1 | 0.1038 | 0.0372 | 0.0001 |
| 127 | SLU 6 | 0.05 | -1.4 | 44.31 | 0.0663 | 0.0385 | 0.0001 |
| 127 | SLU 7 | 0.05 | -1.66 | 44.36 | 0.0784 | 0.0386 | 0.0001 |
| 127 | SLU 8 | 0.05 | -1.34 | 43.85 | 0.0629 | 0.0381 | 0.0001 |
| 127 | SLU 9 | 0.05 | -1.6 | 43.9 | 0.075 | 0.0382 | 0.0001 |
| 127 | SLU 10 | 0.05 | -3.02 | 50.56 | 0.1432 | 0.0375 | 0.0001 |
| 127 | SLU 11 | 0.05 | -2.22 | 51.76 | 0.1057 | 0.0387 | 0.0001 |
| 127 | SLU 12 | 0.05 | -2.48 | 51.81 | 0.1178 | 0.0388 | 0.0001 |
| 127 | SLU 13 | 0.05 | -2.59 | 51.39 | 0.1225 | 0.0384 | 0.0001 |
| 127 | SLU 14 | 0.05 | -1.79 | 52.59 | 0.085 | 0.0397 | 0.0001 |
| 127 | SLU 15 | 0.05 | -2.05 | 52.64 | 0.0971 | 0.0398 | 0.0001 |
| 127 | SLU 16 | 0.05 | -1.72 | 52.13 | 0.0816 | 0.0393 | 0.0001 |
| 127 | SLU 17 | 0.05 | -1.98 | 52.18 | 0.0937 | 0.0393 | 0.0001 |
| 127 | SLU 18 | 0.05 | -2.75 | 54.02 | 0.131 | 0.0378 | 0.0001 |
| 127 | SLU 19 | 0.05 | -3.01 | 54.07 | 0.1431 | 0.0379 | 0.0001 |
| 127 | SLU 20 | 0.05 | -2.32 | 54.85 | 0.1103 | 0.0388 | 0.0001 |
| 127 | SLU 21 | 0.05 | -2.58 | 54.9 | 0.1224 | 0.0389 | 0.0001 |
| 127 | SLU 22 | 0.06 | -2.1 | 47.83 | 0.101 | 0.0408 | 0.0001 |
| 127 | SLU 23 | 0.06 | -2.53 | 47.91 | 0.1212 | 0.0409 | 0.0001 |
| 127 | SLU 24 | 0.06 | -1.73 | 49.11 | 0.0837 | 0.0422 | 0.0001 |
| 127 | SLU 25 | 0.06 | -1.99 | 49.16 | 0.0958 | 0.0423 | 0.0001 |
| 127 | SLU 26 | 0.06 | -2.1 | 48.74 | 0.1005 | 0.0419 | 0.0001 |
| 127 | SLU 27 | 0.06 | -1.3 | 49.94 | 0.063 | 0.0431 | 0.0001 |
| 127 | SLU 28 | 0.06 | -1.56 | 49.99 | 0.0751 | 0.0432 | 0.0001 |
| 127 | SLU 29 | 0.06 | -1.23 | 49.48 | 0.0596 | 0.0427 | 0.0001 |
| 127 | SLU 30 | 0.06 | -1.49 | 49.53 | 0.0717 | 0.0428 | 0.0001 |
| 127 | SLU 31 | 0.06 | -2.91 | 56.19 | 0.1399 | 0.0421 | 0.0001 |
| 127 | SLU 32 | 0.06 | -2.11 | 57.39 | 0.1024 | 0.0434 | 0.0001 |
| 127 | SLU 33 | 0.06 | -2.37 | 57.44 | 0.1145 | 0.0435 | 0.0001 |
| 127 | SLU 34 | 0.06 | -2.48 | 57.02 | 0.1192 | 0.0431 | 0.0001 |
| 127 | SLU 35 | 0.06 | -1.68 | 58.22 | 0.0817 | 0.0443 | 0.0001 |
| 127 | SLU 36 | 0.06 | -1.94 | 58.27 | 0.0938 | 0.0444 | 0.0001 |
| 127 | SLU 37 | 0.06 | -1.62 | 57.76 | 0.0783 | 0.0439 | 0.0001 |

| Nodo | Cont. | Reazione a traslazione | | | Reazione a rotazione | | |
|---|---|---|---|---|---|---|---|
| Ind. | N.br. | x | y | z | x | y | z |
| 127 | SLU 38 | 0.06 | -1.88 | 57.81 | 0.0904 | 0.044 | 0.0001 |
| 127 | SLU 39 | 0.06 | -2.65 | 59.66 | 0.1277 | 0.0425 | 0.0001 |
| 127 | SLU 40 | 0.06 | -2.91 | 59.71 | 0.1398 | 0.0426 | 0.0001 |
| 127 | SLU 41 | 0.06 | -2.22 | 60.49 | 0.107 | 0.0434 | 0.0001 |
| 127 | SLU 42 | 0.06 | -2.47 | 60.54 | 0.1191 | 0.0435 | 0.0001 |
| 127 | SLU 43 | 0.06 | -2.9 | 52.92 | 0.1367 | 0.0454 | 0.0001 |
| 127 | SLU 44 | 0.06 | -3.33 | 53 | 0.1569 | 0.0455 | 0.0001 |
| 127 | SLU 45 | 0.06 | -2.53 | 54.2 | 0.1194 | 0.0468 | 0.0001 |
| 127 | SLU 46 | 0.06 | -2.79 | 54.25 | 0.1315 | 0.0469 | 0.0001 |
| 127 | SLU 47 | 0.06 | -2.9 | 53.83 | 0.1362 | 0.0465 | 0.0001 |
| 127 | SLU 48 | 0.07 | -2.1 | 55.03 | 0.0987 | 0.0477 | 0.0001 |
| 127 | SLU 49 | 0.07 | -2.36 | 55.08 | 0.1108 | 0.0478 | 0.0001 |
| 127 | SLU 50 | 0.07 | -2.04 | 54.57 | 0.0953 | 0.0473 | 0.0001 |
| 127 | SLU 51 | 0.06 | -2.3 | 54.62 | 0.1075 | 0.0474 | 0.0001 |
| 127 | SLU 52 | 0.06 | -3.72 | 61.28 | 0.1756 | 0.0467 | 0.0001 |
| 127 | SLU 53 | 0.07 | -2.92 | 62.49 | 0.1381 | 0.048 | 0.0001 |
| 127 | SLU 54 | 0.07 | -3.18 | 62.54 | 0.1502 | 0.0481 | 0.0001 |
| 127 | SLU 55 | 0.06 | -3.28 | 62.11 | 0.1549 | 0.0477 | 0.0001 |
| 127 | SLU 56 | 0.07 | -2.49 | 63.31 | 0.1174 | 0.0489 | 0.0001 |
| 127 | SLU 57 | 0.07 | -2.74 | 63.36 | 0.1295 | 0.049 | 0.0001 |
| 127 | SLU 58 | 0.07 | -2.42 | 62.86 | 0.114 | 0.0485 | 0.0001 |
| 127 | SLU 59 | 0.07 | -2.68 | 62.91 | 0.1261 | 0.0486 | 0.0001 |
| 127 | SLU 60 | 0.06 | -3.45 | 64.75 | 0.1634 | 0.0471 | 0.0001 |
| 127 | SLU 61 | 0.06 | -3.71 | 64.8 | 0.1756 | 0.0472 | 0.0001 |
| 127 | SLU 62 | 0.06 | -3.02 | 65.58 | 0.1427 | 0.048 | 0.0001 |
| 127 | SLU 63 | 0.06 | -3.28 | 65.63 | 0.1549 | 0.0481 | 0.0001 |
| 127 | SLU 64 | 0.07 | -2.8 | 58.55 | 0.1334 | 0.05 | 0.0001 |
| 127 | SLU 65 | 0.07 | -3.23 | 58.63 | 0.1536 | 0.0502 | 0.0001 |
| 127 | SLU 66 | 0.07 | -2.43 | 59.84 | 0.1161 | 0.0514 | 0.0001 |
| 127 | SLU 67 | 0.07 | -2.69 | 59.89 | 0.1282 | 0.0515 | 0.0001 |
| 127 | SLU 68 | 0.07 | -2.79 | 59.46 | 0.1329 | 0.0511 | 0.0001 |
| 127 | SLU 69 | 0.07 | -2 | 60.67 | 0.0954 | 0.0524 | 0.0001 |
| 127 | SLU 70 | 0.07 | -2.25 | 60.72 | 0.1075 | 0.0525 | 0.0001 |
| 127 | SLU 71 | 0.07 | -1.93 | 60.21 | 0.092 | 0.052 | 0.0001 |
| 127 | SLU 72 | 0.07 | -2.19 | 60.26 | 0.1042 | 0.052 | 0.0001 |
| 127 | SLU 73 | 0.07 | -3.61 | 66.92 | 0.1723 | 0.0514 | 0.0001 |
| 127 | SLU 74 | 0.07 | -2.81 | 68.12 | 0.1348 | 0.0526 | 0.0001 |
| 127 | SLU 75 | 0.07 | -3.07 | 68.17 | 0.1469 | 0.0527 | 0.0001 |
| 127 | SLU 76 | 0.07 | -3.18 | 67.75 | 0.1516 | 0.0523 | 0.0001 |
| 127 | SLU 77 | 0.07 | -2.38 | 68.95 | 0.1141 | 0.0536 | 0.0001 |
| 127 | SLU 78 | 0.07 | -2.64 | 69 | 0.1262 | 0.0537 | 0.0001 |
| 127 | SLU 79 | 0.07 | -2.32 | 68.49 | 0.1107 | 0.0531 | 0.0001 |
| 127 | SLU 80 | 0.07 | -2.57 | 68.54 | 0.1229 | 0.0532 | 0.0001 |
| 127 | SLU 81 | 0.07 | -3.35 | 70.38 | 0.1601 | 0.0517 | 0.0001 |
| 127 | SLU 82 | 0.07 | -3.6 | 70.43 | 0.1723 | 0.0518 | 0.0001 |
| 127 | SLU 83 | 0.07 | -2.91 | 71.21 | 0.1394 | 0.0527 | 0.0001 |
| 127 | SLU 84 | 0.07 | -3.17 | 71.26 | 0.1516 | 0.0528 | 0.0001 |
| 127 | SLE RA 1 | 0.05 | -2.17 | 43.8 | 0.1034 | 0.0375 | 0.0001 |
| 127 | SLE RA 2 | 0.05 | -2.46 | 43.86 | 0.1168 | 0.0376 | 0.0001 |
| 127 | SLE RA 3 | 0.05 | -1.93 | 44.66 | 0.0918 | 0.0384 | 0.0001 |
| 127 | SLE RA 4 | 0.05 | -2.1 | 44.69 | 0.0999 | 0.0385 | 0.0001 |
| 127 | SLE RA 5 | 0.05 | -2.17 | 44.41 | 0.103 | 0.0382 | 0.0001 |
| 127 | SLE RA 6 | 0.05 | -1.64 | 45.21 | 0.078 | 0.039 | 0.0001 |
| 127 | SLE RA 7 | 0.05 | -1.81 | 45.24 | 0.0861 | 0.0391 | 0.0001 |
| 127 | SLE RA 8 | 0.05 | -1.6 | 44.91 | 0.0758 | 0.0387 | 0.0001 |
| 127 | SLE RA 9 | 0.05 | -1.77 | 44.94 | 0.0839 | 0.0388 | 0.0001 |
| 127 | SLE RA 10 | 0.05 | -2.72 | 49.38 | 0.1293 | 0.0383 | 0.0001 |
| 127 | SLE RA 11 | 0.05 | -2.19 | 50.18 | 0.1043 | 0.0392 | 0.0001 |
| 127 | SLE RA 12 | 0.05 | -2.36 | 50.21 | 0.1124 | 0.0392 | 0.0001 |
| 127 | SLE RA 13 | 0.05 | -2.43 | 49.93 | 0.1155 | 0.039 | 0.0001 |
| 127 | SLE RA 14 | 0.05 | -1.9 | 50.73 | 0.0905 | 0.0398 | 0.0001 |
| 127 | SLE RA 15 | 0.05 | -2.07 | 50.77 | 0.0986 | 0.0399 | 0.0001 |
| 127 | SLE RA 16 | 0.05 | -1.85 | 50.43 | 0.0882 | 0.0395 | 0.0001 |
| 127 | SLE RA 17 | 0.05 | -2.03 | 50.46 | 0.0963 | 0.0396 | 0.0001 |
| 127 | SLE RA 18 | 0.05 | -2.54 | 51.69 | 0.1212 | 0.0386 | 0.0001 |
| 127 | SLE RA 19 | 0.05 | -2.71 | 51.72 | 0.1292 | 0.0386 | 0.0001 |
| 127 | SLE RA 20 | 0.05 | -2.25 | 52.24 | 0.1074 | 0.0392 | 0.0001 |
| 127 | SLE RA 21 | 0.05 | -2.42 | 52.27 | 0.1154 | 0.0393 | 0.0001 |
| 127 | SLE FR 1 | 0.05 | -2.17 | 43.8 | 0.1034 | 0.0375 | 0.0001 |
| 127 | SLE FR 2 | 0.05 | -2.23 | 43.81 | 0.1061 | 0.0375 | 0.0001 |
| 127 | SLE FR 3 | 0.05 | -2.06 | 44.02 | 0.0978 | 0.0377 | 0.0001 |
| 127 | SLE FR 4 | 0.05 | -2.34 | 46.18 | 0.1114 | 0.0378 | 0.0001 |
| 127 | SLE FR 5 | 0.05 | -2.17 | 46.39 | 0.1032 | 0.0381 | 0.0001 |
| 127 | SLE FR 6 | 0.05 | -2.36 | 47.75 | 0.1123 | 0.038 | 0.0001 |
| 127 | SLE QP 1 | 0.05 | -2.17 | 43.8 | 0.1034 | 0.0375 | 0.0001 |
| 127 | SLE QP 2 | 0.05 | -2.28 | 46.17 | 0.1087 | 0.0378 | 0.0001 |
| 127 | SLD 1 | 0.3 | -1.33 | 49.09 | 0.0619 | 0.2294 | 0.0005 |
| 127 | SLD 2 | 0.3 | -1.33 | 49.09 | 0.0619 | 0.2294 | 0.0005 |
| 127 | SLD 3 | 0.33 | -4.9 | 50.06 | 0.2307 | 0.2505 | 0.0005 |
| 127 | SLD 4 | 0.33 | -4.9 | 50.06 | 0.2307 | 0.2505 | 0.0005 |
| 127 | SLD 5 | 0.08 | 3.41 | 45.58 | -0.1614 | 0.0633 | 0.0003 |
| 127 | SLD 6 | 0.08 | 3.41 | 45.58 | -0.1614 | 0.0633 | 0.0003 |
| 127 | SLD 7 | 0.18 | -8.48 | 48.8 | 0.4014 | 0.1335 | 0.0001 |
| 127 | SLD 8 | 0.18 | -8.48 | 48.8 | 0.4014 | 0.1335 | 0.0001 |
| 127 | SLD 9 | -0.07 | 3.91 | 43.54 | -0.184 | -0.0579 | 0 |
| 127 | SLD 10 | -0.07 | 3.91 | 43.54 | -0.184 | -0.0579 | 0 |
| 127 | SLD 11 | 0.02 | -7.98 | 46.75 | 0.3788 | 0.0122 | -0.0002 |
| 127 | SLD 12 | 0.02 | -7.98 | 46.75 | 0.3788 | 0.0122 | -0.0002 |

| Nodo | Cont. | Reazione a traslazione | | | Reazione a rotazione | | |
|---|---|---|---|---|---|---|---|
| Ind. | N.br. | x | y | z | x | y | z |
| 127 | SLD 13 | -0.23 | 0.33 | 42.28 | -0.0133 | -0.1749 | -0.0004 |
| 127 | SLD 14 | -0.23 | 0.33 | 42.28 | -0.0133 | -0.1749 | -0.0004 |
| 127 | SLD 15 | -0.2 | -3.24 | 43.24 | 0.1555 | -0.1538 | -0.0004 |
| 127 | SLD 16 | -0.2 | -3.24 | 43.24 | 0.1555 | -0.1538 | -0.0004 |
| 127 | SLV 1 | 0.67 | -0.08 | 53.05 | 0.0005 | 0.5128 | 0.0012 |
| 127 | SLV 2 | 0.67 | -0.08 | 53.05 | 0.0005 | 0.5128 | 0.0012 |
| 127 | SLV 3 | 0.74 | -8.41 | 55.3 | 0.3947 | 0.566 | 0.0011 |
| 127 | SLV 4 | 0.74 | -8.41 | 55.3 | 0.3947 | 0.566 | 0.0011 |
| 127 | SLV 5 | 0.13 | 11 | 44.81 | -0.5217 | 0.0997 | 0.0006 |
| 127 | SLV 6 | 0.13 | 11 | 44.81 | -0.5217 | 0.0997 | 0.0006 |
| 127 | SLV 7 | 0.36 | -16.75 | 52.33 | 0.7924 | 0.2769 | 0.0002 |
| 127 | SLV 8 | 0.36 | -16.75 | 52.33 | 0.7924 | 0.2769 | 0.0002 |
| 127 | SLV 9 | -0.26 | 12.18 | 40.01 | -0.575 | -0.2013 | 0 |
| 127 | SLV 10 | -0.26 | 12.18 | 40.01 | -0.575 | -0.2013 | 0 |
| 127 | SLV 11 | -0.03 | -15.57 | 47.52 | 0.7391 | -0.0241 | -0.0005 |
| 127 | SLV 12 | -0.03 | -15.57 | 47.52 | 0.7391 | -0.0241 | -0.0005 |
| 127 | SLV 13 | -0.63 | 3.84 | 37.03 | -0.1773 | -0.4904 | -0.001 |
| 127 | SLV 14 | -0.63 | 3.84 | 37.03 | -0.1773 | -0.4904 | -0.001 |
| 127 | SLV 15 | -0.56 | -4.48 | 39.28 | 0.217 | -0.4373 | -0.0011 |
| 127 | SLV 16 | -0.56 | -4.48 | 39.28 | 0.217 | -0.4373 | -0.0011 |
| 128 | SLU 1 | 0.02 | 0.41 | 8.72 | 0.0003 | 0.0171 | 0.0014 |
| 128 | SLU 2 | 0.02 | 0.41 | 8.72 | 0.0003 | 0.0175 | 0.0015 |
| 128 | SLU 3 | 0.02 | 0.44 | 8.84 | 0.0003 | 0.0175 | 0.0015 |
| 128 | SLU 4 | 0.02 | 0.44 | 8.84 | 0.0003 | 0.0178 | 0.0015 |
| 128 | SLU 5 | 0.02 | 0.43 | 8.8 | 0.0003 | 0.0178 | 0.0015 |
| 128 | SLU 6 | 0.02 | 0.45 | 8.91 | 0.0002 | 0.0179 | 0.0015 |
| 128 | SLU 7 | 0.02 | 0.45 | 8.91 | 0.0002 | 0.0181 | 0.0015 |
| 128 | SLU 8 | 0.02 | 0.44 | 8.86 | 0.0002 | 0.0177 | 0.0015 |
| 128 | SLU 9 | 0.02 | 0.44 | 8.87 | 0.0002 | 0.018 | 0.0015 |
| 128 | SLU 10 | 0.03 | 0.56 | 11.65 | -0.0024 | 0.0231 | 0.0021 |
| 128 | SLU 11 | 0.03 | 0.58 | 11.77 | -0.0025 | 0.0232 | 0.0021 |
| 128 | SLU 12 | 0.03 | 0.58 | 11.77 | -0.0025 | 0.0234 | 0.0021 |
| 128 | SLU 13 | 0.03 | 0.57 | 11.72 | -0.0025 | 0.0235 | 0.0021 |
| 128 | SLU 14 | 0.03 | 0.59 | 11.84 | -0.0026 | 0.0235 | 0.0021 |
| 128 | SLU 15 | 0.03 | 0.59 | 11.84 | -0.0025 | 0.0238 | 0.0021 |
| 128 | SLU 16 | 0.03 | 0.58 | 11.79 | -0.0026 | 0.0234 | 0.0021 |
| 128 | SLU 17 | 0.03 | 0.58 | 11.79 | -0.0026 | 0.0236 | 0.0021 |
| 128 | SLU 18 | 0.03 | 0.62 | 12.9 | -0.0037 | 0.0251 | 0.0023 |
| 128 | SLU 19 | 0.03 | 0.62 | 12.9 | -0.0036 | 0.0254 | 0.0023 |
| 128 | SLU 20 | 0.03 | 0.63 | 12.97 | -0.0037 | 0.0255 | 0.0023 |
| 128 | SLU 21 | 0.03 | 0.63 | 12.98 | -0.0037 | 0.0257 | 0.0024 |
| 128 | SLU 22 | 0.02 | 0.51 | 9.54 | 0.0001 | 0.0194 | 0.0016 |
| 128 | SLU 23 | 0.02 | 0.51 | 9.55 | 0.0001 | 0.0198 | 0.0017 |
| 128 | SLU 24 | 0.02 | 0.53 | 9.66 | 0.0001 | 0.0199 | 0.0017 |
| 128 | SLU 25 | 0.02 | 0.53 | 9.67 | 0.0001 | 0.0201 | 0.0017 |
| 128 | SLU 26 | 0.02 | 0.52 | 9.62 | 0.0001 | 0.0202 | 0.0017 |
| 128 | SLU 27 | 0.02 | 0.55 | 9.74 | 0 | 0.0202 | 0.0017 |
| 128 | SLU 28 | 0.02 | 0.55 | 9.74 | 0 | 0.0205 | 0.0017 |
| 128 | SLU 29 | 0.02 | 0.54 | 9.69 | 0 | 0.0201 | 0.0017 |
| 128 | SLU 30 | 0.02 | 0.54 | 9.69 | 0 | 0.0203 | 0.0017 |
| 128 | SLU 31 | 0.03 | 0.65 | 12.48 | -0.0026 | 0.0255 | 0.0023 |
| 128 | SLU 32 | 0.03 | 0.67 | 12.59 | -0.0027 | 0.0255 | 0.0023 |
| 128 | SLU 33 | 0.03 | 0.67 | 12.6 | -0.0027 | 0.0258 | 0.0023 |
| 128 | SLU 34 | 0.03 | 0.66 | 12.55 | -0.0027 | 0.0258 | 0.0023 |
| 128 | SLU 35 | 0.03 | 0.69 | 12.66 | -0.0028 | 0.0258 | 0.0023 |
| 128 | SLU 36 | 0.03 | 0.69 | 12.67 | -0.0027 | 0.0261 | 0.0023 |
| 128 | SLU 37 | 0.03 | 0.68 | 12.61 | -0.0028 | 0.0257 | 0.0023 |
| 128 | SLU 38 | 0.03 | 0.68 | 12.62 | -0.0028 | 0.026 | 0.0023 |
| 128 | SLU 39 | 0.04 | 0.71 | 13.73 | -0.0039 | 0.0275 | 0.0025 |
| 128 | SLU 40 | 0.04 | 0.71 | 13.73 | -0.0038 | 0.0277 | 0.0025 |
| 128 | SLU 41 | 0.04 | 0.72 | 13.8 | -0.0039 | 0.0278 | 0.0025 |
| 128 | SLU 42 | 0.04 | 0.72 | 13.8 | -0.0039 | 0.0281 | 0.0026 |
| 128 | SLU 43 | 0.03 | 0.51 | 11.05 | 0.0005 | 0.0214 | 0.0018 |
| 128 | SLU 44 | 0.03 | 0.51 | 11.06 | 0.0005 | 0.0218 | 0.0018 |
| 128 | SLU 45 | 0.03 | 0.53 | 11.17 | 0.0004 | 0.0218 | 0.0018 |
| 128 | SLU 46 | 0.03 | 0.53 | 11.18 | 0.0004 | 0.0221 | 0.0018 |
| 128 | SLU 47 | 0.03 | 0.52 | 11.13 | 0.0004 | 0.0222 | 0.0018 |
| 128 | SLU 48 | 0.03 | 0.54 | 11.24 | 0.0004 | 0.0222 | 0.0018 |
| 128 | SLU 49 | 0.03 | 0.54 | 11.25 | 0.0004 | 0.0224 | 0.0019 |
| 128 | SLU 50 | 0.03 | 0.54 | 11.2 | 0.0003 | 0.0221 | 0.0018 |
| 128 | SLU 51 | 0.03 | 0.54 | 11.2 | 0.0004 | 0.0223 | 0.0018 |
| 128 | SLU 52 | 0.03 | 0.65 | 13.98 | -0.0023 | 0.0275 | 0.0024 |
| 128 | SLU 53 | 0.03 | 0.67 | 14.1 | -0.0023 | 0.0275 | 0.0024 |
| 128 | SLU 54 | 0.04 | 0.67 | 14.1 | -0.0023 | 0.0278 | 0.0025 |
| 128 | SLU 55 | 0.04 | 0.66 | 14.06 | -0.0023 | 0.0278 | 0.0025 |
| 128 | SLU 56 | 0.04 | 0.69 | 14.17 | -0.0024 | 0.0278 | 0.0025 |
| 128 | SLU 57 | 0.04 | 0.69 | 14.18 | -0.0024 | 0.0281 | 0.0025 |
| 128 | SLU 58 | 0.04 | 0.68 | 14.12 | -0.0024 | 0.0277 | 0.0024 |
| 128 | SLU 59 | 0.04 | 0.68 | 14.13 | -0.0024 | 0.028 | 0.0025 |
| 128 | SLU 60 | 0.04 | 0.71 | 15.23 | -0.0035 | 0.0294 | 0.0027 |
| 128 | SLU 61 | 0.04 | 0.71 | 15.24 | -0.0035 | 0.0297 | 0.0027 |
| 128 | SLU 62 | 0.04 | 0.72 | 15.31 | -0.0036 | 0.0298 | 0.0027 |
| 128 | SLU 63 | 0.04 | 0.72 | 15.31 | -0.0035 | 0.03 | 0.0027 |
| 128 | SLU 64 | 0.03 | 0.6 | 11.88 | 0.0002 | 0.0237 | 0.002 |
| 128 | SLU 65 | 0.03 | 0.6 | 11.88 | 0.0003 | 0.0241 | 0.002 |
| 128 | SLU 66 | 0.03 | 0.62 | 12 | 0.0002 | 0.0242 | 0.002 |
| 128 | SLU 67 | 0.03 | 0.62 | 12 | 0.0002 | 0.0244 | 0.002 |
| 128 | SLU 68 | 0.03 | 0.61 | 11.95 | 0.0002 | 0.0245 | 0.002 |

| Nodo | Cont. | Reazione a traslazione | | | Reazione a rotazione | | |
|---|---|---|---|---|---|---|---|
| Ind. | N.br. | x | y | z | x | y | z |
| 128 | SLU 69 | 0.03 | 0.64 | 12.07 | 0.0002 | 0.0245 | 0.002 |
| 128 | SLU 70 | 0.03 | 0.64 | 12.07 | 0.0002 | 0.0248 | 0.0021 |
| 128 | SLU 71 | 0.03 | 0.63 | 12.02 | 0.0001 | 0.0244 | 0.002 |
| 128 | SLU 72 | 0.03 | 0.63 | 12.02 | 0.0001 | 0.0246 | 0.0021 |
| 128 | SLU 73 | 0.04 | 0.74 | 14.81 | -0.0025 | 0.0298 | 0.0026 |
| 128 | SLU 74 | 0.04 | 0.76 | 14.93 | -0.0026 | 0.0298 | 0.0026 |
| 128 | SLU 75 | 0.04 | 0.76 | 14.93 | -0.0025 | 0.0301 | 0.0027 |
| 128 | SLU 76 | 0.04 | 0.76 | 14.88 | -0.0025 | 0.0301 | 0.0027 |
| 128 | SLU 77 | 0.04 | 0.78 | 15 | -0.0026 | 0.0302 | 0.0027 |
| 128 | SLU 78 | 0.04 | 0.78 | 15 | -0.0026 | 0.0304 | 0.0027 |
| 128 | SLU 79 | 0.04 | 0.77 | 14.95 | -0.0026 | 0.03 | 0.0027 |
| 128 | SLU 80 | 0.04 | 0.77 | 14.95 | -0.0026 | 0.0303 | 0.0027 |
| 128 | SLU 81 | 0.04 | 0.8 | 16.06 | -0.0037 | 0.0318 | 0.0029 |
| 128 | SLU 82 | 0.04 | 0.8 | 16.06 | -0.0037 | 0.032 | 0.0029 |
| 128 | SLU 83 | 0.04 | 0.82 | 16.13 | -0.0038 | 0.0321 | 0.0029 |
| 128 | SLU 84 | 0.04 | 0.82 | 16.13 | -0.0037 | 0.0324 | 0.0029 |
| 128 | SLE RA 1 | 0.02 | 0.44 | 8.95 | 0.0002 | 0.0177 | 0.0015 |
| 128 | SLE RA 2 | 0.02 | 0.44 | 8.96 | 0.0003 | 0.018 | 0.0015 |
| 128 | SLE RA 3 | 0.02 | 0.46 | 9.03 | 0.0002 | 0.018 | 0.0015 |
| 128 | SLE RA 4 | 0.02 | 0.46 | 9.04 | 0.0002 | 0.0182 | 0.0015 |
| 128 | SLE RA 5 | 0.02 | 0.45 | 9.01 | 0.0002 | 0.0182 | 0.0015 |
| 128 | SLE RA 6 | 0.02 | 0.47 | 9.08 | 0.0002 | 0.0183 | 0.0015 |
| 128 | SLE RA 7 | 0.02 | 0.47 | 9.08 | 0.0002 | 0.0184 | 0.0015 |
| 128 | SLE RA 8 | 0.02 | 0.46 | 9.05 | 0.0002 | 0.0182 | 0.0015 |
| 128 | SLE RA 9 | 0.02 | 0.46 | 9.05 | 0.0002 | 0.0184 | 0.0015 |
| 128 | SLE RA 10 | 0.03 | 0.53 | 10.91 | -0.0016 | 0.0218 | 0.0019 |
| 128 | SLE RA 11 | 0.03 | 0.55 | 10.99 | -0.0016 | 0.0218 | 0.0019 |
| 128 | SLE RA 12 | 0.03 | 0.55 | 10.99 | -0.0016 | 0.022 | 0.0019 |
| 128 | SLE RA 13 | 0.03 | 0.54 | 10.96 | -0.0016 | 0.022 | 0.0019 |
| 128 | SLE RA 14 | 0.03 | 0.56 | 11.03 | -0.0017 | 0.022 | 0.0019 |
| 128 | SLE RA 15 | 0.03 | 0.56 | 11.04 | -0.0017 | 0.0222 | 0.002 |
| 128 | SLE RA 16 | 0.03 | 0.55 | 11 | -0.0017 | 0.0219 | 0.0019 |
| 128 | SLE RA 17 | 0.03 | 0.55 | 11 | -0.0017 | 0.0221 | 0.0019 |
| 128 | SLE RA 18 | 0.03 | 0.58 | 11.74 | -0.0024 | 0.0231 | 0.0021 |
| 128 | SLE RA 19 | 0.03 | 0.58 | 11.74 | -0.0024 | 0.0233 | 0.0021 |
| 128 | SLE RA 20 | 0.03 | 0.59 | 11.79 | -0.0024 | 0.0233 | 0.0021 |
| 128 | SLE RA 21 | 0.03 | 0.58 | 11.79 | -0.0024 | 0.0235 | 0.0021 |
| 128 | SLE FR 1 | 0.02 | 0.44 | 8.95 | 0.0002 | 0.0177 | 0.0015 |
| 128 | SLE FR 2 | 0.02 | 0.44 | 8.95 | 0.0002 | 0.0178 | 0.0015 |
| 128 | SLE FR 3 | 0.02 | 0.44 | 8.97 | 0.0002 | 0.0178 | 0.0015 |
| 128 | SLE FR 4 | 0.02 | 0.48 | 9.79 | -0.0006 | 0.0194 | 0.0017 |
| 128 | SLE FR 5 | 0.02 | 0.49 | 9.81 | -0.0006 | 0.0194 | 0.0017 |
| 128 | SLE FR 6 | 0.03 | 0.51 | 10.35 | -0.0011 | 0.0204 | 0.0018 |
| 128 | SLE QP 1 | 0.02 | 0.44 | 8.95 | 0.0002 | 0.0177 | 0.0015 |
| 128 | SLE QP 2 | 0.02 | 0.48 | 9.79 | -0.0006 | 0.0193 | 0.0017 |
| 128 | SLD 1 | 0.22 | 0.95 | 8.94 | -0.0192 | 0.2091 | 0.015 |
| 128 | SLD 2 | 0.22 | 0.95 | 8.94 | -0.0192 | 0.2091 | 0.015 |
| 128 | SLD 3 | 0.2 | -0.8 | 9.06 | 0.0407 | 0.1906 | 0.0136 |
| 128 | SLD 4 | 0.2 | -0.8 | 9.06 | 0.0407 | 0.1906 | 0.0136 |
| 128 | SLD 5 | 0.11 | 3.27 | 9.35 | -0.097 | 0.1044 | 0.0077 |
| 128 | SLD 6 | 0.11 | 3.27 | 9.35 | -0.097 | 0.1044 | 0.0077 |
| 128 | SLD 7 | 0.05 | -2.55 | 9.75 | 0.1027 | 0.0426 | 0.0032 |
| 128 | SLD 8 | 0.05 | -2.55 | 9.75 | 0.1027 | 0.0426 | 0.0032 |
| 128 | SLD 9 | 0 | 3.52 | 9.83 | -0.1038 | -0.0039 | 0.0001 |
| 128 | SLD 10 | 0 | 3.52 | 9.83 | -0.1038 | -0.0039 | 0.0001 |
| 128 | SLD 11 | -0.07 | -2.31 | 10.23 | 0.0959 | -0.0657 | -0.0044 |
| 128 | SLD 12 | -0.07 | -2.31 | 10.23 | 0.0959 | -0.0657 | -0.0044 |
| 128 | SLD 13 | -0.15 | 1.76 | 10.53 | -0.0419 | -0.1519 | -0.0103 |
| 128 | SLD 14 | -0.15 | 1.76 | 10.53 | -0.0419 | -0.1519 | -0.0103 |
| 128 | SLD 15 | -0.17 | 0.02 | 10.64 | 0.018 | -0.1705 | -0.0117 |
| 128 | SLD 16 | -0.17 | 0.02 | 10.64 | 0.018 | -0.1705 | -0.0117 |
| 128 | SLV 1 | 0.51 | 1.57 | 7.79 | -0.0441 | 0.4913 | 0.0348 |
| 128 | SLV 2 | 0.51 | 1.57 | 7.79 | -0.0441 | 0.4913 | 0.0348 |
| 128 | SLV 3 | 0.46 | -2.53 | 8.07 | 0.0964 | 0.4445 | 0.0313 |
| 128 | SLV 4 | 0.46 | -2.53 | 8.07 | 0.0964 | 0.4445 | 0.0313 |
| 128 | SLV 5 | 0.25 | 7.03 | 8.76 | -0.2268 | 0.2318 | 0.0168 |
| 128 | SLV 6 | 0.25 | 7.03 | 8.76 | -0.2268 | 0.2318 | 0.0168 |
| 128 | SLV 7 | 0.08 | -6.64 | 9.7 | 0.2417 | 0.076 | 0.0053 |
| 128 | SLV 8 | 0.08 | -6.64 | 9.7 | 0.2417 | 0.076 | 0.0053 |
| 128 | SLV 9 | -0.03 | 7.6 | 9.88 | -0.2428 | -0.0373 | -0.002 |
| 128 | SLV 10 | -0.03 | 7.6 | 9.88 | -0.2428 | -0.0373 | -0.002 |
| 128 | SLV 11 | -0.2 | -6.06 | 10.82 | 0.2257 | -0.1932 | -0.0135 |
| 128 | SLV 12 | -0.2 | -6.06 | 10.82 | 0.2257 | -0.1932 | -0.0135 |
| 128 | SLV 13 | -0.41 | 3.49 | 11.51 | -0.0976 | -0.4058 | -0.028 |
| 128 | SLV 14 | -0.41 | 3.49 | 11.51 | -0.0976 | -0.4058 | -0.028 |
| 128 | SLV 15 | -0.46 | -0.61 | 11.79 | 0.043 | -0.4526 | -0.0314 |
| 128 | SLV 16 | -0.46 | -0.61 | 11.79 | 0.043 | -0.4526 | -0.0314 |
| 129 | SLU 1 | 0.17 | -1.52 | 19.98 | 0.2083 | 0.1047 | 0.0001 |
| 129 | SLU 2 | 0.18 | 0.65 | 19.88 | 0.1222 | 0.1145 | 0.0001 |
| 129 | SLU 3 | 0.17 | -1.72 | 20.55 | 0.2208 | 0.1081 | 0.0001 |
| 129 | SLU 4 | 0.18 | -0.42 | 20.49 | 0.1691 | 0.1141 | 0.0001 |
| 129 | SLU 5 | 0.18 | 0.41 | 20.24 | 0.1344 | 0.1164 | 0.0001 |
| 129 | SLU 6 | 0.18 | -1.96 | 20.92 | 0.233 | 0.1101 | 0.0001 |
| 129 | SLU 7 | 0.18 | -0.65 | 20.86 | 0.1813 | 0.116 | 0.0001 |
| 129 | SLU 8 | 0.17 | -2 | 20.72 | 0.2327 | 0.1085 | 0.0001 |
| 129 | SLU 9 | 0.18 | -0.69 | 20.65 | 0.181 | 0.1144 | 0.0001 |
| 129 | SLU 10 | 0.21 | 0.54 | 22.58 | 0.1492 | 0.1328 | 0.0001 |
| 129 | SLU 11 | 0.2 | -1.83 | 23.26 | 0.2478 | 0.1265 | 0.0001 |

| Nodo | Cont. | Reazione a traslazione | | | Reazione a rotazione | | |
|---|---|---|---|---|---|---|---|
| Ind. | N.br. | x | y | z | x | y | z |
| 129 | SLU 12 | 0.21 | -0.53 | 23.19 | 0.1961 | 0.1324 | 0.0001 |
| 129 | SLU 13 | 0.21 | 0.3 | 22.95 | 0.1614 | 0.1348 | 0.0001 |
| 129 | SLU 14 | 0.21 | -2.07 | 23.62 | 0.26 | 0.1284 | 0.0001 |
| 129 | SLU 15 | 0.21 | -0.76 | 23.56 | 0.2083 | 0.1343 | 0.0001 |
| 129 | SLU 16 | 0.2 | -2.1 | 23.42 | 0.2597 | 0.1268 | 0.0001 |
| 129 | SLU 17 | 0.21 | -0.8 | 23.36 | 0.208 | 0.1327 | 0.0001 |
| 129 | SLU 18 | 0.21 | -1.68 | 23.85 | 0.2469 | 0.1308 | 0.0001 |
| 129 | SLU 19 | 0.22 | -0.38 | 23.78 | 0.1952 | 0.1368 | 0.0001 |
| 129 | SLU 20 | 0.21 | -1.92 | 24.21 | 0.2591 | 0.1328 | 0.0001 |
| 129 | SLU 21 | 0.22 | -0.61 | 24.15 | 0.2074 | 0.1387 | 0.0001 |
| 129 | SLU 22 | 0.19 | -1.71 | 22.48 | 0.2369 | 0.1216 | 0.0001 |
| 129 | SLU 23 | 0.21 | 0.46 | 22.38 | 0.1507 | 0.1315 | 0.0001 |
| 129 | SLU 24 | 0.2 | -1.91 | 23.05 | 0.2493 | 0.1251 | 0.0001 |
| 129 | SLU 25 | 0.21 | -0.61 | 22.99 | 0.1976 | 0.131 | 0.0001 |
| 129 | SLU 26 | 0.21 | 0.22 | 22.74 | 0.1629 | 0.1334 | 0.0001 |
| 129 | SLU 27 | 0.2 | -2.15 | 23.42 | 0.2615 | 0.127 | 0.0001 |
| 129 | SLU 28 | 0.21 | -0.84 | 23.35 | 0.2098 | 0.1329 | 0.0001 |
| 129 | SLU 29 | 0.2 | -2.19 | 23.21 | 0.2612 | 0.1254 | 0.0001 |
| 129 | SLU 30 | 0.21 | -0.88 | 23.15 | 0.2095 | 0.1314 | 0.0001 |
| 129 | SLU 31 | 0.23 | 0.35 | 25.08 | 0.1777 | 0.1498 | 0.0001 |
| 129 | SLU 32 | 0.23 | -2.02 | 25.76 | 0.2763 | 0.1434 | 0.0001 |
| 129 | SLU 33 | 0.24 | -0.72 | 25.69 | 0.2246 | 0.1493 | 0.0001 |
| 129 | SLU 34 | 0.24 | 0.11 | 25.45 | 0.1899 | 0.1517 | 0.0001 |
| 129 | SLU 35 | 0.23 | -2.26 | 26.12 | 0.2885 | 0.1453 | 0.0001 |
| 129 | SLU 36 | 0.24 | -0.95 | 26.06 | 0.2368 | 0.1513 | 0.0001 |
| 129 | SLU 37 | 0.23 | -2.3 | 25.92 | 0.2882 | 0.1438 | 0.0001 |
| 129 | SLU 38 | 0.24 | -0.99 | 25.86 | 0.2365 | 0.1497 | 0.0001 |
| 129 | SLU 39 | 0.24 | -1.87 | 26.35 | 0.2754 | 0.1478 | 0.0001 |
| 129 | SLU 40 | 0.24 | -0.57 | 26.28 | 0.2237 | 0.1537 | 0.0001 |
| 129 | SLU 41 | 0.24 | -2.11 | 26.71 | 0.2876 | 0.1497 | 0.0001 |
| 129 | SLU 42 | 0.25 | -0.8 | 26.65 | 0.2359 | 0.1556 | 0.0001 |
| 129 | SLU 43 | 0.21 | -1.92 | 25.12 | 0.2611 | 0.1302 | 0.0001 |
| 129 | SLU 44 | 0.22 | 0.26 | 25.02 | 0.1749 | 0.1401 | 0.0001 |
| 129 | SLU 45 | 0.21 | -2.11 | 25.69 | 0.2735 | 0.1337 | 0.0001 |
| 129 | SLU 46 | 0.22 | -0.81 | 25.63 | 0.2218 | 0.1396 | 0.0001 |
| 129 | SLU 47 | 0.22 | 0.02 | 25.38 | 0.1871 | 0.142 | 0.0001 |
| 129 | SLU 48 | 0.22 | -2.35 | 26.06 | 0.2857 | 0.1356 | 0.0001 |
| 129 | SLU 49 | 0.22 | -1.05 | 25.99 | 0.234 | 0.1416 | 0.0001 |
| 129 | SLU 50 | 0.21 | -2.39 | 25.85 | 0.2854 | 0.1341 | 0.0001 |
| 129 | SLU 51 | 0.22 | -1.08 | 25.79 | 0.2337 | 0.14 | 0.0001 |
| 129 | SLU 52 | 0.25 | 0.15 | 27.72 | 0.2019 | 0.1584 | 0.0001 |
| 129 | SLU 53 | 0.24 | -2.22 | 28.4 | 0.3005 | 0.1521 | 0.0001 |
| 129 | SLU 54 | 0.25 | -0.92 | 28.33 | 0.2488 | 0.158 | 0.0001 |
| 129 | SLU 55 | 0.25 | -0.09 | 28.09 | 0.2141 | 0.1603 | 0.0001 |
| 129 | SLU 56 | 0.25 | -2.46 | 28.76 | 0.3127 | 0.154 | 0.0001 |
| 129 | SLU 57 | 0.25 | -1.16 | 28.7 | 0.261 | 0.1599 | 0.0001 |
| 129 | SLU 58 | 0.24 | -2.5 | 28.56 | 0.3124 | 0.1524 | 0.0001 |
| 129 | SLU 59 | 0.25 | -1.19 | 28.5 | 0.2607 | 0.1583 | 0.0001 |
| 129 | SLU 60 | 0.25 | -2.07 | 28.99 | 0.2996 | 0.1564 | 0.0001 |
| 129 | SLU 61 | 0.26 | -0.77 | 28.92 | 0.2479 | 0.1623 | 0.0001 |
| 129 | SLU 62 | 0.25 | -2.31 | 29.35 | 0.3118 | 0.1583 | 0.0001 |
| 129 | SLU 63 | 0.26 | -1 | 29.29 | 0.2601 | 0.1643 | 0.0001 |
| 129 | SLU 64 | 0.24 | -2.11 | 27.62 | 0.2896 | 0.1472 | 0.0001 |
| 129 | SLU 65 | 0.25 | 0.07 | 27.52 | 0.2034 | 0.157 | 0.0001 |
| 129 | SLU 66 | 0.24 | -2.31 | 28.19 | 0.3021 | 0.1507 | 0.0001 |
| 129 | SLU 67 | 0.25 | -1 | 28.13 | 0.2504 | 0.1566 | 0.0001 |
| 129 | SLU 68 | 0.25 | -0.17 | 27.88 | 0.2156 | 0.159 | 0.0001 |
| 129 | SLU 69 | 0.24 | -2.54 | 28.56 | 0.3142 | 0.1526 | 0.0001 |
| 129 | SLU 70 | 0.25 | -1.24 | 28.49 | 0.2625 | 0.1585 | 0.0001 |
| 129 | SLU 71 | 0.24 | -2.58 | 28.35 | 0.314 | 0.151 | 0.0001 |
| 129 | SLU 72 | 0.25 | -1.27 | 28.29 | 0.2623 | 0.1569 | 0.0001 |
| 129 | SLU 73 | 0.28 | -0.04 | 30.22 | 0.2304 | 0.1754 | 0.0001 |
| 129 | SLU 74 | 0.27 | -2.41 | 30.9 | 0.329 | 0.169 | 0.0001 |
| 129 | SLU 75 | 0.28 | -1.11 | 30.83 | 0.2774 | 0.1749 | 0.0001 |
| 129 | SLU 76 | 0.28 | -0.28 | 30.59 | 0.2426 | 0.1773 | 0.0001 |
| 129 | SLU 77 | 0.27 | -2.65 | 31.26 | 0.3412 | 0.1709 | 0.0001 |
| 129 | SLU 78 | 0.28 | -1.35 | 31.2 | 0.2895 | 0.1768 | 0.0001 |
| 129 | SLU 79 | 0.27 | -2.69 | 31.06 | 0.341 | 0.1694 | 0.0001 |
| 129 | SLU 80 | 0.28 | -1.38 | 30.99 | 0.2893 | 0.1753 | 0.0001 |
| 129 | SLU 81 | 0.28 | -2.26 | 31.49 | 0.3282 | 0.1734 | 0.0001 |
| 129 | SLU 82 | 0.28 | -0.96 | 31.42 | 0.2765 | 0.1793 | 0.0001 |
| 129 | SLU 83 | 0.28 | -2.5 | 31.85 | 0.3403 | 0.1753 | 0.0001 |
| 129 | SLU 84 | 0.29 | -1.19 | 31.79 | 0.2886 | 0.1812 | 0.0001 |
| 129 | SLE RA 1 | 0.18 | -1.58 | 20.7 | 0.2165 | 0.1095 | 0.0001 |
| 129 | SLE RA 2 | 0.18 | -0.13 | 20.63 | 0.1591 | 0.1161 | 0.0001 |
| 129 | SLE RA 3 | 0.18 | -1.71 | 21.08 | 0.2248 | 0.1118 | 0.0001 |
| 129 | SLE RA 4 | 0.18 | -0.84 | 21.04 | 0.1903 | 0.1158 | 0.0001 |
| 129 | SLE RA 5 | 0.18 | -0.29 | 20.87 | 0.1672 | 0.1173 | 0.0001 |
| 129 | SLE RA 6 | 0.18 | -1.87 | 21.32 | 0.2329 | 0.1131 | 0.0001 |
| 129 | SLE RA 7 | 0.19 | -1 | 21.28 | 0.1985 | 0.117 | 0.0001 |
| 129 | SLE RA 8 | 0.18 | -1.89 | 21.19 | 0.2327 | 0.1121 | 0.0001 |
| 129 | SLE RA 9 | 0.18 | -1.02 | 21.14 | 0.1983 | 0.116 | 0.0001 |
| 129 | SLE RA 10 | 0.2 | -0.2 | 22.43 | 0.1771 | 0.1283 | 0.0001 |
| 129 | SLE RA 11 | 0.2 | -1.78 | 22.88 | 0.2428 | 0.124 | 0.0001 |
| 129 | SLE RA 12 | 0.2 | -0.91 | 22.84 | 0.2083 | 0.128 | 0.0001 |
| 129 | SLE RA 13 | 0.2 | -0.36 | 22.67 | 0.1852 | 0.1296 | 0.0001 |
| 129 | SLE RA 14 | 0.2 | -1.94 | 23.12 | 0.2509 | 0.1253 | 0.0001 |
| 129 | SLE RA 15 | 0.2 | -1.07 | 23.08 | 0.2165 | 0.1293 | 0.0001 |

| Nodo | Cont. | Reazione a traslazione | | | Reazione a rotazione | | |
|---|---|---|---|---|---|---|---|
| Ind. | N.br. | x | y | z | x | y | z |
| 129 | SLE RA 16 | 0.2 | -1.97 | 22.99 | 0.2507 | 0.1243 | 0.0001 |
| 129 | SLE RA 17 | 0.2 | -1.1 | 22.95 | 0.2163 | 0.1282 | 0.0001 |
| 129 | SLE RA 18 | 0.2 | -1.68 | 23.27 | 0.2422 | 0.127 | 0.0001 |
| 129 | SLE RA 19 | 0.21 | -0.81 | 23.23 | 0.2077 | 0.1309 | 0.0001 |
| 129 | SLE RA 20 | 0.2 | -1.84 | 23.52 | 0.2503 | 0.1282 | 0.0001 |
| 129 | SLE RA 21 | 0.21 | -0.97 | 23.48 | 0.2159 | 0.1322 | 0.0001 |
| 129 | SLE FR 1 | 0.18 | -1.58 | 20.7 | 0.2165 | 0.1095 | 0.0001 |
| 129 | SLE FR 2 | 0.18 | -1.29 | 20.68 | 0.205 | 0.1108 | 0.0001 |
| 129 | SLE FR 3 | 0.18 | -1.64 | 20.8 | 0.2197 | 0.11 | 0.0001 |
| 129 | SLE FR 4 | 0.18 | -1.32 | 21.46 | 0.2127 | 0.116 | 0.0001 |
| 129 | SLE FR 5 | 0.18 | -1.67 | 21.57 | 0.2275 | 0.1152 | 0.0001 |
| 129 | SLE FR 6 | 0.19 | -1.63 | 21.99 | 0.2294 | 0.1182 | 0.0001 |
| 129 | SLE QP 1 | 0.18 | -1.58 | 20.7 | 0.2165 | 0.1095 | 0.0001 |
| 129 | SLE QP 2 | 0.18 | -1.61 | 21.47 | 0.2242 | 0.1147 | 0.0001 |
| 129 | SLD 1 | 0.41 | 1.44 | 22.98 | 0.0925 | 0.2796 | 0.0001 |
| 129 | SLD 2 | 0.41 | 1.44 | 22.98 | 0.0925 | 0.2796 | 0.0001 |
| 129 | SLD 3 | 0.35 | -2.38 | 22.35 | 0.2588 | 0.233 | 0.0001 |
| 129 | SLD 4 | 0.35 | -2.38 | 22.35 | 0.2588 | 0.233 | 0.0001 |
| 129 | SLD 5 | 0.34 | 5.09 | 22.87 | -0.0676 | 0.2349 | 0.0001 |
| 129 | SLD 6 | 0.34 | 5.09 | 22.87 | -0.0676 | 0.2349 | 0.0001 |
| 129 | SLD 7 | 0.14 | -7.63 | 20.78 | 0.4868 | 0.0796 | 0.0001 |
| 129 | SLD 8 | 0.14 | -7.63 | 20.78 | 0.4868 | 0.0796 | 0.0001 |
| 129 | SLD 9 | 0.22 | 4.41 | 22.16 | -0.0384 | 0.1499 | 0 |
| 129 | SLD 10 | 0.22 | 4.41 | 22.16 | -0.0384 | 0.1499 | 0 |
| 129 | SLD 11 | 0.02 | -8.31 | 20.07 | 0.516 | -0.0054 | 0.0001 |
| 129 | SLD 12 | 0.02 | -8.31 | 20.07 | 0.516 | -0.0054 | 0.0001 |
| 129 | SLD 13 | 0.01 | -0.84 | 20.59 | 0.1896 | -0.0036 | 0 |
| 129 | SLD 14 | 0.01 | -0.84 | 20.59 | 0.1896 | -0.0036 | 0 |
| 129 | SLD 15 | -0.05 | -4.66 | 19.96 | 0.3559 | -0.0501 | 0 |
| 129 | SLD 16 | -0.05 | -4.66 | 19.96 | 0.3559 | -0.0501 | 0 |
| 129 | SLV 1 | 0.73 | 5.7 | 25.04 | -0.0915 | 0.5039 | 0.0002 |
| 129 | SLV 2 | 0.73 | 5.7 | 25.04 | -0.0915 | 0.5039 | 0.0002 |
| 129 | SLV 3 | 0.58 | -3.42 | 23.51 | 0.3043 | 0.3898 | 0.0002 |
| 129 | SLV 4 | 0.58 | -3.42 | 23.51 | 0.3043 | 0.3898 | 0.0002 |
| 129 | SLV 5 | 0.57 | 14.4 | 24.86 | -0.4708 | 0.4046 | 0 |
| 129 | SLV 6 | 0.57 | 14.4 | 24.86 | -0.4708 | 0.4046 | 0 |
| 129 | SLV 7 | 0.08 | -15.97 | 19.77 | 0.8486 | 0.0242 | 0.0002 |
| 129 | SLV 8 | 0.08 | -15.97 | 19.77 | 0.8486 | 0.0242 | 0.0002 |
| 129 | SLV 9 | 0.28 | 12.75 | 23.18 | -0.4002 | 0.2053 | -0.0001 |
| 129 | SLV 10 | 0.28 | 12.75 | 23.18 | -0.4002 | 0.2053 | -0.0001 |
| 129 | SLV 11 | -0.2 | -17.63 | 18.09 | 0.9193 | -0.1751 | 0.0001 |
| 129 | SLV 12 | -0.2 | -17.63 | 18.09 | 0.9193 | -0.1751 | 0.0001 |
| 129 | SLV 13 | -0.21 | 0.2 | 19.43 | 0.1441 | -0.1603 | -0.0001 |
| 129 | SLV 14 | -0.21 | 0.2 | 19.43 | 0.1441 | -0.1603 | -0.0001 |
| 129 | SLV 15 | -0.36 | -8.92 | 17.9 | 0.5399 | -0.2745 | -0.0001 |
| 129 | SLV 16 | -0.36 | -8.92 | 17.9 | 0.5399 | -0.2745 | -0.0001 |
| 130 | SLU 1 | 0.05 | -3.34 | 38.82 | 0.1583 | 0.039 | -0.003 |
| 130 | SLU 2 | 0.05 | -3.66 | 39.04 | 0.173 | 0.0391 | -0.003 |
| 130 | SLU 3 | 0.05 | -3.31 | 39.77 | 0.158 | 0.0399 | -0.003 |
| 130 | SLU 4 | 0.06 | -3.5 | 39.9 | 0.1668 | 0.0399 | -0.003 |
| 130 | SLU 5 | 0.05 | -3.61 | 39.59 | 0.1718 | 0.0396 | -0.003 |
| 130 | SLU 6 | 0.06 | -3.27 | 40.31 | 0.1567 | 0.0403 | -0.0031 |
| 130 | SLU 7 | 0.06 | -3.46 | 40.45 | 0.1656 | 0.0404 | -0.0031 |
| 130 | SLU 8 | 0.05 | -3.26 | 39.91 | 0.1558 | 0.0399 | -0.003 |
| 130 | SLU 9 | 0.06 | -3.45 | 40.04 | 0.1646 | 0.04 | -0.003 |
| 130 | SLU 10 | 0.07 | -4.29 | 46.62 | 0.2039 | 0.0476 | -0.0036 |
| 130 | SLU 11 | 0.07 | -3.95 | 47.35 | 0.1889 | 0.0483 | -0.0037 |
| 130 | SLU 12 | 0.07 | -4.14 | 47.48 | 0.1977 | 0.0484 | -0.0037 |
| 130 | SLU 13 | 0.07 | -4.25 | 47.16 | 0.2027 | 0.0481 | -0.0037 |
| 130 | SLU 14 | 0.07 | -3.91 | 47.89 | 0.1876 | 0.0488 | -0.0037 |
| 130 | SLU 15 | 0.07 | -4.1 | 48.02 | 0.1965 | 0.0488 | -0.0037 |
| 130 | SLU 16 | 0.07 | -3.9 | 47.49 | 0.1866 | 0.0484 | -0.0037 |
| 130 | SLU 17 | 0.07 | -4.09 | 47.62 | 0.1955 | 0.0485 | -0.0037 |
| 130 | SLU 18 | 0.07 | -4.25 | 49.65 | 0.2024 | 0.0511 | -0.0039 |
| 130 | SLU 19 | 0.07 | -4.44 | 49.78 | 0.2112 | 0.0512 | -0.0039 |
| 130 | SLU 20 | 0.07 | -4.21 | 50.19 | 0.2011 | 0.0516 | -0.0039 |
| 130 | SLU 21 | 0.07 | -4.4 | 50.32 | 0.21 | 0.0516 | -0.0039 |
| 130 | SLU 22 | 0.06 | -3.55 | 43.59 | 0.1713 | 0.0439 | -0.0033 |
| 130 | SLU 23 | 0.06 | -3.86 | 43.81 | 0.186 | 0.0441 | -0.0034 |
| 130 | SLU 24 | 0.06 | -3.52 | 44.53 | 0.171 | 0.0448 | -0.0034 |
| 130 | SLU 25 | 0.06 | -3.71 | 44.67 | 0.1799 | 0.0448 | -0.0034 |
| 130 | SLU 26 | 0.06 | -3.82 | 44.35 | 0.1848 | 0.0445 | -0.0034 |
| 130 | SLU 27 | 0.06 | -3.48 | 45.08 | 0.1698 | 0.0452 | -0.0034 |
| 130 | SLU 28 | 0.06 | -3.67 | 45.21 | 0.1786 | 0.0453 | -0.0034 |
| 130 | SLU 29 | 0.06 | -3.47 | 44.67 | 0.1688 | 0.0448 | -0.0034 |
| 130 | SLU 30 | 0.06 | -3.66 | 44.81 | 0.1776 | 0.0449 | -0.0034 |
| 130 | SLU 31 | 0.07 | -4.5 | 51.39 | 0.2169 | 0.0525 | -0.004 |
| 130 | SLU 32 | 0.07 | -4.16 | 52.11 | 0.2019 | 0.0533 | -0.004 |
| 130 | SLU 33 | 0.07 | -4.35 | 52.24 | 0.2107 | 0.0533 | -0.0041 |
| 130 | SLU 34 | 0.07 | -4.46 | 51.93 | 0.2157 | 0.053 | -0.004 |
| 130 | SLU 35 | 0.07 | -4.12 | 52.65 | 0.2006 | 0.0537 | -0.0041 |
| 130 | SLU 36 | 0.07 | -4.3 | 52.79 | 0.2095 | 0.0538 | -0.0041 |
| 130 | SLU 37 | 0.07 | -4.1 | 52.25 | 0.1997 | 0.0533 | -0.0041 |
| 130 | SLU 38 | 0.07 | -4.29 | 52.38 | 0.2085 | 0.0534 | -0.0041 |
| 130 | SLU 39 | 0.08 | -4.46 | 54.41 | 0.2154 | 0.056 | -0.0043 |
| 130 | SLU 40 | 0.08 | -4.65 | 54.54 | 0.2242 | 0.0561 | -0.0043 |
| 130 | SLU 41 | 0.08 | -4.42 | 54.95 | 0.2141 | 0.0565 | -0.0043 |
| 130 | SLU 42 | 0.08 | -4.61 | 55.09 | 0.223 | 0.0566 | -0.0043 |

| Nodo | Cont. | Reazione a traslazione | | | Reazione a rotazione | | |
|---|---|---|---|---|---|---|---|
| Ind. | N.br. | x | y | z | x | y | z |
| 130 | SLU 43 | 0.07 | -4.28 | 48.83 | 0.2013 | 0.0491 | -0.0037 |
| 130 | SLU 44 | 0.07 | -4.59 | 49.06 | 0.216 | 0.0492 | -0.0037 |
| 130 | SLU 45 | 0.07 | -4.25 | 49.78 | 0.201 | 0.0499 | -0.0038 |
| 130 | SLU 46 | 0.07 | -4.43 | 49.92 | 0.2099 | 0.05 | -0.0038 |
| 130 | SLU 47 | 0.07 | -4.55 | 49.6 | 0.2148 | 0.0496 | -0.0038 |
| 130 | SLU 48 | 0.07 | -4.21 | 50.33 | 0.1997 | 0.0503 | -0.0038 |
| 130 | SLU 49 | 0.07 | -4.39 | 50.46 | 0.2086 | 0.0504 | -0.0038 |
| 130 | SLU 50 | 0.07 | -4.19 | 49.92 | 0.1988 | 0.0499 | -0.0038 |
| 130 | SLU 51 | 0.07 | -4.38 | 50.06 | 0.2076 | 0.05 | -0.0038 |
| 130 | SLU 52 | 0.08 | -5.22 | 56.63 | 0.2469 | 0.0576 | -0.0044 |
| 130 | SLU 53 | 0.08 | -4.88 | 57.36 | 0.2319 | 0.0584 | -0.0044 |
| 130 | SLU 54 | 0.08 | -5.07 | 57.49 | 0.2407 | 0.0584 | -0.0044 |
| 130 | SLU 55 | 0.08 | -5.18 | 57.18 | 0.2457 | 0.0581 | -0.0044 |
| 130 | SLU 56 | 0.08 | -4.84 | 57.9 | 0.2306 | 0.0588 | -0.0045 |
| 130 | SLU 57 | 0.08 | -5.03 | 58.04 | 0.2395 | 0.0589 | -0.0045 |
| 130 | SLU 58 | 0.08 | -4.83 | 57.5 | 0.2296 | 0.0584 | -0.0044 |
| 130 | SLU 59 | 0.08 | -5.02 | 57.63 | 0.2385 | 0.0585 | -0.0044 |
| 130 | SLU 60 | 0.08 | -5.19 | 59.66 | 0.2454 | 0.0612 | -0.0046 |
| 130 | SLU 61 | 0.08 | -5.37 | 59.79 | 0.2542 | 0.0612 | -0.0046 |
| 130 | SLU 62 | 0.08 | -5.14 | 60.2 | 0.2441 | 0.0616 | -0.0047 |
| 130 | SLU 63 | 0.09 | -5.33 | 60.34 | 0.253 | 0.0617 | -0.0047 |
| 130 | SLU 64 | 0.07 | -4.48 | 53.6 | 0.2143 | 0.054 | -0.0041 |
| 130 | SLU 65 | 0.07 | -4.79 | 53.82 | 0.2291 | 0.0541 | -0.0041 |
| 130 | SLU 66 | 0.08 | -4.45 | 54.55 | 0.214 | 0.0548 | -0.0042 |
| 130 | SLU 67 | 0.08 | -4.64 | 54.68 | 0.2229 | 0.0549 | -0.0042 |
| 130 | SLU 68 | 0.08 | -4.75 | 54.37 | 0.2278 | 0.0545 | -0.0041 |
| 130 | SLU 69 | 0.08 | -4.41 | 55.09 | 0.2128 | 0.0552 | -0.0042 |
| 130 | SLU 70 | 0.08 | -4.6 | 55.22 | 0.2216 | 0.0553 | -0.0042 |
| 130 | SLU 71 | 0.08 | -4.4 | 54.69 | 0.2118 | 0.0549 | -0.0042 |
| 130 | SLU 72 | 0.08 | -4.59 | 54.82 | 0.2207 | 0.0549 | -0.0042 |
| 130 | SLU 73 | 0.09 | -5.43 | 61.4 | 0.2599 | 0.0626 | -0.0048 |
| 130 | SLU 74 | 0.09 | -5.09 | 62.12 | 0.2449 | 0.0633 | -0.0048 |
| 130 | SLU 75 | 0.09 | -5.28 | 62.26 | 0.2538 | 0.0633 | -0.0048 |
| 130 | SLU 76 | 0.09 | -5.39 | 61.94 | 0.2587 | 0.063 | -0.0048 |
| 130 | SLU 77 | 0.09 | -5.05 | 62.67 | 0.2436 | 0.0637 | -0.0048 |
| 130 | SLU 78 | 0.09 | -5.24 | 62.8 | 0.2525 | 0.0638 | -0.0049 |
| 130 | SLU 79 | 0.09 | -5.04 | 62.26 | 0.2427 | 0.0633 | -0.0048 |
| 130 | SLU 80 | 0.09 | -5.22 | 62.4 | 0.2515 | 0.0634 | -0.0048 |
| 130 | SLU 81 | 0.09 | -5.39 | 64.42 | 0.2584 | 0.0661 | -0.005 |
| 130 | SLU 82 | 0.09 | -5.58 | 64.56 | 0.2673 | 0.0661 | -0.005 |
| 130 | SLU 83 | 0.09 | -5.35 | 64.97 | 0.2571 | 0.0665 | -0.0051 |
| 130 | SLU 84 | 0.09 | -5.54 | 65.1 | 0.266 | 0.0666 | -0.0051 |
| 130 | SLE RA 1 | 0.06 | -3.4 | 40.18 | 0.162 | 0.0404 | -0.0031 |
| 130 | SLE RA 2 | 0.06 | -3.61 | 40.33 | 0.1718 | 0.0405 | -0.0031 |
| 130 | SLE RA 3 | 0.06 | -3.38 | 40.81 | 0.1618 | 0.041 | -0.0031 |
| 130 | SLE RA 4 | 0.06 | -3.51 | 40.9 | 0.1677 | 0.041 | -0.0031 |
| 130 | SLE RA 5 | 0.06 | -3.58 | 40.69 | 0.171 | 0.0408 | -0.0031 |
| 130 | SLE RA 6 | 0.06 | -3.36 | 41.18 | 0.161 | 0.0413 | -0.0031 |
| 130 | SLE RA 7 | 0.06 | -3.48 | 41.27 | 0.1669 | 0.0413 | -0.0031 |
| 130 | SLE RA 8 | 0.06 | -3.35 | 40.91 | 0.1603 | 0.041 | -0.0031 |
| 130 | SLE RA 9 | 0.06 | -3.47 | 41 | 0.1662 | 0.0411 | -0.0031 |
| 130 | SLE RA 10 | 0.06 | -4.04 | 45.38 | 0.1924 | 0.0462 | -0.0035 |
| 130 | SLE RA 11 | 0.06 | -3.81 | 45.87 | 0.1824 | 0.0466 | -0.0035 |
| 130 | SLE RA 12 | 0.06 | -3.93 | 45.95 | 0.1883 | 0.0467 | -0.0035 |
| 130 | SLE RA 13 | 0.06 | -4.01 | 45.74 | 0.1916 | 0.0465 | -0.0035 |
| 130 | SLE RA 14 | 0.06 | -3.78 | 46.23 | 0.1815 | 0.0469 | -0.0036 |
| 130 | SLE RA 15 | 0.06 | -3.91 | 46.32 | 0.1875 | 0.047 | -0.0036 |
| 130 | SLE RA 16 | 0.06 | -3.77 | 45.96 | 0.1809 | 0.0467 | -0.0035 |
| 130 | SLE RA 17 | 0.06 | -3.9 | 46.05 | 0.1868 | 0.0467 | -0.0036 |
| 130 | SLE RA 18 | 0.07 | -4.01 | 47.4 | 0.1914 | 0.0485 | -0.0037 |
| 130 | SLE RA 19 | 0.07 | -4.13 | 47.49 | 0.1973 | 0.0485 | -0.0037 |
| 130 | SLE RA 20 | 0.07 | -3.98 | 47.76 | 0.1905 | 0.0488 | -0.0037 |
| 130 | SLE RA 21 | 0.07 | -4.11 | 47.85 | 0.1965 | 0.0488 | -0.0037 |
| 130 | SLE FR 1 | 0.06 | -3.4 | 40.18 | 0.162 | 0.0404 | -0.0031 |
| 130 | SLE FR 2 | 0.06 | -3.44 | 40.21 | 0.1639 | 0.0405 | -0.0031 |
| 130 | SLE FR 3 | 0.06 | -3.39 | 40.33 | 0.1616 | 0.0406 | -0.0031 |
| 130 | SLE FR 4 | 0.06 | -3.63 | 42.38 | 0.1728 | 0.0429 | -0.0033 |
| 130 | SLE FR 5 | 0.06 | -3.57 | 42.49 | 0.1705 | 0.043 | -0.0033 |
| 130 | SLE FR 6 | 0.06 | -3.71 | 43.79 | 0.1767 | 0.0445 | -0.0034 |
| 130 | SLE QP 1 | 0.06 | -3.4 | 40.18 | 0.162 | 0.0404 | -0.0031 |
| 130 | SLE QP 2 | 0.06 | -3.58 | 42.35 | 0.1708 | 0.0429 | -0.0032 |
| 130 | SLD 1 | 0.25 | -0.54 | 35.76 | 0.0169 | 0.2003 | -0.0136 |
| 130 | SLD 2 | 0.25 | -0.54 | 35.76 | 0.0169 | 0.2003 | -0.0136 |
| 130 | SLD 3 | 0.28 | -4.31 | 37.41 | 0.1995 | 0.2169 | -0.0148 |
| 130 | SLD 4 | 0.28 | -4.31 | 37.41 | 0.1995 | 0.2169 | -0.0148 |
| 130 | SLD 5 | 0.09 | 3.04 | 37.87 | -0.1524 | 0.0649 | -0.0046 |
| 130 | SLD 6 | 0.09 | 3.04 | 37.87 | -0.1524 | 0.0649 | -0.0046 |
| 130 | SLD 7 | 0.16 | -9.51 | 43.37 | 0.4564 | 0.1203 | -0.0085 |
| 130 | SLD 8 | 0.16 | -9.51 | 43.37 | 0.4564 | 0.1203 | -0.0085 |
| 130 | SLD 9 | -0.04 | 2.34 | 41.33 | -0.1148 | -0.0346 | 0.002 |
| 130 | SLD 10 | -0.04 | 2.34 | 41.33 | -0.1148 | -0.0346 | 0.002 |
| 130 | SLD 11 | 0.03 | -10.21 | 46.82 | 0.4939 | 0.0209 | -0.0019 |
| 130 | SLD 12 | 0.03 | -10.21 | 46.82 | 0.4939 | 0.0209 | -0.0019 |
| 130 | SLD 13 | -0.16 | -2.86 | 47.29 | 0.1421 | -0.1312 | 0.0083 |
| 130 | SLD 14 | -0.16 | -2.86 | 47.29 | 0.1421 | -0.1312 | 0.0083 |
| 130 | SLD 15 | -0.14 | -6.63 | 48.94 | 0.3247 | -0.1145 | 0.0071 |
| 130 | SLD 16 | -0.14 | -6.63 | 48.94 | 0.3247 | -0.1145 | 0.0071 |
| 130 | SLV 1 | 0.54 | 3.49 | 26.94 | -0.1868 | 0.4336 | -0.0289 |

| Nodo | Cont. | Reazione a traslazione | | | Reazione a rotazione | | |
|---|---|---|---|---|---|---|---|
| Ind. | N.br. | x | y | z | x | y | z |
| 130 | SLV 2 | 0.54 | 3.49 | 26.94 | -0.1868 | 0.4336 | -0.0289 |
| 130 | SLV 3 | 0.59 | -5.24 | 30.77 | 0.2362 | 0.4741 | -0.0318 |
| 130 | SLV 4 | 0.59 | -5.24 | 30.77 | 0.2362 | 0.4741 | -0.0318 |
| 130 | SLV 5 | 0.13 | 11.78 | 31.91 | -0.5781 | 0.0985 | -0.0067 |
| 130 | SLV 6 | 0.13 | 11.78 | 31.91 | -0.5781 | 0.0985 | -0.0067 |
| 130 | SLV 7 | 0.3 | -17.32 | 44.68 | 0.8321 | 0.2338 | -0.0161 |
| 130 | SLV 8 | 0.3 | -17.32 | 44.68 | 0.8321 | 0.2338 | -0.0161 |
| 130 | SLV 9 | -0.18 | 10.15 | 40.01 | -0.4905 | -0.148 | 0.0096 |
| 130 | SLV 10 | -0.18 | 10.15 | 40.01 | -0.4905 | -0.148 | 0.0096 |
| 130 | SLV 11 | -0.01 | -18.95 | 52.78 | 0.9197 | -0.0128 | 0.0002 |
| 130 | SLV 12 | -0.01 | -18.95 | 52.78 | 0.9197 | -0.0128 | 0.0002 |
| 130 | SLV 13 | -0.47 | -1.93 | 53.93 | 0.1053 | -0.3884 | 0.0253 |
| 130 | SLV 14 | -0.47 | -1.93 | 53.93 | 0.1053 | -0.3884 | 0.0253 |
| 130 | SLV 15 | -0.42 | -10.66 | 57.76 | 0.5284 | -0.3478 | 0.0224 |
| 130 | SLV 16 | -0.42 | -10.66 | 57.76 | 0.5284 | -0.3478 | 0.0224 |
| 131 | SLU 1 | 0 | -1.49 | 35.32 | 0.1511 | -0.0032 | 0 |
| 131 | SLU 2 | -0.01 | 0.55 | 35.85 | 0.0661 | -0.0106 | 0 |
| 131 | SLU 3 | 0 | -1.76 | 36.39 | 0.1665 | -0.0033 | 0 |
| 131 | SLU 4 | -0.01 | -0.54 | 36.7 | 0.1155 | -0.0078 | 0 |
| 131 | SLU 5 | -0.01 | 0.21 | 36.51 | 0.083 | -0.0107 | 0 |
| 131 | SLU 6 | 0 | -2.1 | 37.05 | 0.1834 | -0.0034 | 0 |
| 131 | SLU 7 | -0.01 | -0.88 | 37.37 | 0.1324 | -0.0078 | 0 |
| 131 | SLU 8 | 0 | -2.15 | 36.65 | 0.1849 | -0.0033 | 0 |
| 131 | SLU 9 | -0.01 | -0.93 | 36.97 | 0.1339 | -0.0078 | 0 |
| 131 | SLU 10 | -0.01 | 0.46 | 41.44 | 0.0831 | -0.0111 | 0 |
| 131 | SLU 11 | 0 | -1.85 | 41.99 | 0.1835 | -0.0038 | 0 |
| 131 | SLU 12 | -0.01 | -0.63 | 42.3 | 0.1325 | -0.0083 | 0 |
| 131 | SLU 13 | -0.01 | 0.13 | 42.11 | 0.1 | -0.0112 | 0 |
| 131 | SLU 14 | 0 | -2.18 | 42.65 | 0.2005 | -0.0039 | 0 |
| 131 | SLU 15 | -0.01 | -0.96 | 42.96 | 0.1494 | -0.0084 | 0 |
| 131 | SLU 16 | 0 | -2.23 | 42.25 | 0.202 | -0.0039 | 0 |
| 131 | SLU 17 | -0.01 | -1.01 | 42.56 | 0.151 | -0.0083 | 0 |
| 131 | SLU 18 | 0 | -1.6 | 43.32 | 0.1755 | -0.0039 | 0 |
| 131 | SLU 19 | -0.01 | -0.38 | 43.63 | 0.1244 | -0.0084 | 0 |
| 131 | SLU 20 | 0 | -1.94 | 43.98 | 0.1924 | -0.004 | 0 |
| 131 | SLU 21 | -0.01 | -0.72 | 44.3 | 0.1414 | -0.0085 | 0 |
| 131 | SLU 22 | 0 | -1.66 | 40.46 | 0.1709 | -0.0037 | 0 |
| 131 | SLU 23 | -0.01 | 0.38 | 40.98 | 0.0859 | -0.0111 | 0 |
| 131 | SLU 24 | 0 | -1.93 | 41.52 | 0.1863 | -0.0038 | 0 |
| 131 | SLU 25 | -0.01 | -0.71 | 41.84 | 0.1353 | -0.0083 | 0 |
| 131 | SLU 26 | -0.01 | 0.04 | 41.64 | 0.1028 | -0.0112 | 0 |
| 131 | SLU 27 | 0 | -2.27 | 42.19 | 0.2032 | -0.0039 | 0 |
| 131 | SLU 28 | -0.01 | -1.05 | 42.5 | 0.1522 | -0.0083 | 0 |
| 131 | SLU 29 | 0 | -2.32 | 41.79 | 0.2047 | -0.0038 | 0 |
| 131 | SLU 30 | -0.01 | -1.1 | 42.1 | 0.1537 | -0.0083 | 0 |
| 131 | SLU 31 | -0.01 | 0.29 | 46.58 | 0.1029 | -0.0116 | 0 |
| 131 | SLU 32 | 0 | -2.02 | 47.12 | 0.2033 | -0.0043 | 0 |
| 131 | SLU 33 | -0.01 | -0.8 | 47.43 | 0.1523 | -0.0088 | 0 |
| 131 | SLU 34 | -0.01 | -0.04 | 47.24 | 0.1198 | -0.0117 | 0 |
| 131 | SLU 35 | 0 | -2.35 | 47.78 | 0.2203 | -0.0044 | 0 |
| 131 | SLU 36 | -0.01 | -1.13 | 48.1 | 0.1692 | -0.0089 | 0 |
| 131 | SLU 37 | 0 | -2.41 | 47.38 | 0.2218 | -0.0044 | 0 |
| 131 | SLU 38 | -0.01 | -1.19 | 47.7 | 0.1708 | -0.0088 | 0 |
| 131 | SLU 39 | 0 | -1.77 | 48.45 | 0.1953 | -0.0044 | 0 |
| 131 | SLU 40 | -0.01 | -0.55 | 48.76 | 0.1442 | -0.0089 | 0 |
| 131 | SLU 41 | 0 | -2.11 | 49.12 | 0.2122 | -0.0045 | 0 |
| 131 | SLU 42 | -0.01 | -0.89 | 49.43 | 0.1612 | -0.009 | 0 |
| 131 | SLU 43 | 0 | -1.87 | 44.16 | 0.1897 | -0.0039 | 0 |
| 131 | SLU 44 | -0.01 | 0.16 | 44.68 | 0.1046 | -0.0114 | 0 |
| 131 | SLU 45 | 0 | -2.15 | 45.23 | 0.205 | -0.0041 | 0 |
| 131 | SLU 46 | -0.01 | -0.93 | 45.54 | 0.154 | -0.0085 | 0 |
| 131 | SLU 47 | -0.01 | -0.17 | 45.35 | 0.1215 | -0.0114 | 0 |
| 131 | SLU 48 | 0 | -2.48 | 45.89 | 0.222 | -0.0042 | 0 |
| 131 | SLU 49 | -0.01 | -1.26 | 46.2 | 0.1709 | -0.0086 | 0 |
| 131 | SLU 50 | 0 | -2.54 | 45.49 | 0.2235 | -0.0041 | 0 |
| 131 | SLU 51 | -0.01 | -1.32 | 45.8 | 0.1725 | -0.0086 | 0 |
| 131 | SLU 52 | -0.01 | 0.08 | 50.28 | 0.1217 | -0.0119 | 0 |
| 131 | SLU 53 | 0 | -2.23 | 50.82 | 0.2221 | -0.0046 | 0 |
| 131 | SLU 54 | -0.01 | -1.01 | 51.13 | 0.1711 | -0.0091 | 0 |
| 131 | SLU 55 | -0.01 | -0.26 | 50.94 | 0.1386 | -0.012 | 0 |
| 131 | SLU 56 | 0 | -2.57 | 51.49 | 0.239 | -0.0047 | 0 |
| 131 | SLU 57 | -0.01 | -1.35 | 51.8 | 0.188 | -0.0091 | 0 |
| 131 | SLU 58 | 0 | -2.62 | 51.09 | 0.2405 | -0.0046 | 0 |
| 131 | SLU 59 | -0.01 | -1.4 | 51.4 | 0.1895 | -0.0091 | 0 |
| 131 | SLU 60 | 0 | -1.99 | 52.16 | 0.214 | -0.0047 | 0 |
| 131 | SLU 61 | -0.01 | -0.77 | 52.47 | 0.163 | -0.0091 | 0 |
| 131 | SLU 62 | 0 | -2.32 | 52.82 | 0.2309 | -0.0048 | 0 |
| 131 | SLU 63 | -0.01 | -1.1 | 53.13 | 0.1799 | -0.0092 | 0 |
| 131 | SLU 64 | 0 | -2.04 | 49.29 | 0.2094 | -0.0044 | 0 |
| 131 | SLU 65 | -0.01 | -0.01 | 49.82 | 0.1244 | -0.0119 | 0 |
| 131 | SLU 66 | 0 | -2.32 | 50.36 | 0.2248 | -0.0046 | 0 |
| 131 | SLU 67 | -0.01 | -1.1 | 50.67 | 0.1738 | -0.009 | 0 |
| 131 | SLU 68 | -0.01 | -0.34 | 50.48 | 0.1413 | -0.0119 | 0 |
| 131 | SLU 69 | 0 | -2.66 | 51.03 | 0.2418 | -0.0047 | 0 |
| 131 | SLU 70 | -0.01 | -1.44 | 51.34 | 0.1907 | -0.0091 | 0 |
| 131 | SLU 71 | 0 | -2.71 | 50.63 | 0.2433 | -0.0046 | 0 |
| 131 | SLU 72 | -0.01 | -1.49 | 50.94 | 0.1923 | -0.0091 | 0 |
| 131 | SLU 73 | -0.01 | -0.09 | 55.41 | 0.1415 | -0.0124 | 0 |

| Nodo | Cont. | Reazione a traslazione | | | Reazione a rotazione | | |
|---|---|---|---|---|---|---|---|
| Ind. | N.br. | x | y | z | x | y | z |
| 131 | SLU 74 | 0 | -2.4 | 55.96 | 0.2419 | -0.0051 | 0 |
| 131 | SLU 75 | -0.01 | -1.18 | 56.27 | 0.1909 | -0.0096 | 0 |
| 131 | SLU 76 | -0.01 | -0.43 | 56.08 | 0.1584 | -0.0125 | 0 |
| 131 | SLU 77 | 0 | -2.74 | 56.62 | 0.2588 | -0.0052 | 0 |
| 131 | SLU 78 | -0.01 | -1.52 | 56.93 | 0.2078 | -0.0097 | 0 |
| 131 | SLU 79 | 0 | -2.79 | 56.22 | 0.2603 | -0.0051 | 0 |
| 131 | SLU 80 | -0.01 | -1.57 | 56.53 | 0.2093 | -0.0096 | 0 |
| 131 | SLU 81 | 0 | -2.16 | 57.29 | 0.2338 | -0.0052 | 0 |
| 131 | SLU 82 | -0.01 | -0.94 | 57.6 | 0.1828 | -0.0097 | 0 |
| 131 | SLU 83 | 0 | -2.49 | 57.95 | 0.2507 | -0.0053 | 0 |
| 131 | SLU 84 | -0.01 | -1.27 | 58.27 | 0.1997 | -0.0097 | 0 |
| 131 | SLE RA 1 | 0 | -1.54 | 36.79 | 0.1568 | -0.0033 | 0 |
| 131 | SLE RA 2 | -0.01 | -0.18 | 37.14 | 0.1001 | -0.0082 | 0 |
| 131 | SLE RA 3 | 0 | -1.72 | 37.5 | 0.167 | -0.0034 | 0 |
| 131 | SLE RA 4 | 0 | -0.91 | 37.71 | 0.133 | -0.0064 | 0 |
| 131 | SLE RA 5 | -0.01 | -0.4 | 37.58 | 0.1114 | -0.0083 | 0 |
| 131 | SLE RA 6 | 0 | -1.94 | 37.94 | 0.1783 | -0.0035 | 0 |
| 131 | SLE RA 7 | 0 | -1.13 | 38.15 | 0.1443 | -0.0064 | 0 |
| 131 | SLE RA 8 | 0 | -1.98 | 37.68 | 0.1793 | -0.0034 | 0 |
| 131 | SLE RA 9 | 0 | -1.17 | 37.89 | 0.1453 | -0.0064 | 0 |
| 131 | SLE RA 10 | -0.01 | -0.23 | 40.87 | 0.1114 | -0.0086 | 0 |
| 131 | SLE RA 11 | 0 | -1.77 | 41.23 | 0.1784 | -0.0038 | 0 |
| 131 | SLE RA 12 | -0.01 | -0.96 | 41.44 | 0.1444 | -0.0067 | 0 |
| 131 | SLE RA 13 | -0.01 | -0.46 | 41.31 | 0.1227 | -0.0087 | 0 |
| 131 | SLE RA 14 | 0 | -2 | 41.68 | 0.1897 | -0.0038 | 0 |
| 131 | SLE RA 15 | -0.01 | -1.18 | 41.88 | 0.1557 | -0.0068 | 0 |
| 131 | SLE RA 16 | 0 | -2.03 | 41.41 | 0.1907 | -0.0038 | 0 |
| 131 | SLE RA 17 | -0.01 | -1.22 | 41.62 | 0.1567 | -0.0067 | 0 |
| 131 | SLE RA 18 | 0 | -1.61 | 42.12 | 0.173 | -0.0038 | 0 |
| 131 | SLE RA 19 | -0.01 | -0.8 | 42.33 | 0.139 | -0.0068 | 0 |
| 131 | SLE RA 20 | 0 | -1.84 | 42.56 | 0.1843 | -0.0039 | 0 |
| 131 | SLE RA 21 | -0.01 | -1.02 | 42.77 | 0.1503 | -0.0068 | 0 |
| 131 | SLE FR 1 | 0 | -1.54 | 36.79 | 0.1568 | -0.0033 | 0 |
| 131 | SLE FR 2 | 0 | -1.26 | 36.86 | 0.1454 | -0.0043 | 0 |
| 131 | SLE FR 3 | 0 | -1.62 | 36.97 | 0.1613 | -0.0033 | 0 |
| 131 | SLE FR 4 | 0 | -1.29 | 38.46 | 0.1503 | -0.0044 | 0 |
| 131 | SLE FR 5 | 0 | -1.65 | 38.57 | 0.1661 | -0.0035 | 0 |
| 131 | SLE FR 6 | 0 | -1.57 | 39.46 | 0.1649 | -0.0036 | 0 |
| 131 | SLE QP 1 | 0 | -1.54 | 36.79 | 0.1568 | -0.0033 | 0 |
| 131 | SLE QP 2 | 0 | -1.56 | 38.39 | 0.1616 | -0.0035 | 0 |
| 131 | SLD 1 | 0.15 | -1.3 | 40.28 | 0.15 | 0.1116 | 0 |
| 131 | SLD 2 | 0.15 | -1.3 | 40.28 | 0.15 | 0.1116 | 0 |
| 131 | SLD 3 | 0.18 | -4.93 | 39.32 | 0.3131 | 0.1369 | 0.0001 |
| 131 | SLD 4 | 0.18 | -4.93 | 39.32 | 0.3131 | 0.1369 | 0.0001 |
| 131 | SLD 5 | 0 | 4.03 | 40.41 | -0.0891 | -0.0073 | 0 |
| 131 | SLD 6 | 0 | 4.03 | 40.41 | -0.0891 | -0.0073 | 0 |
| 131 | SLD 7 | 0.1 | -8.08 | 37.21 | 0.4544 | 0.0771 | 0 |
| 131 | SLD 8 | 0.1 | -8.08 | 37.21 | 0.4544 | 0.0771 | 0 |
| 131 | SLD 9 | -0.1 | 4.97 | 39.57 | -0.1311 | -0.084 | 0 |
| 131 | SLD 10 | -0.1 | 4.97 | 39.57 | -0.1311 | -0.084 | 0 |
| 131 | SLD 11 | 0 | -7.15 | 36.37 | 0.4124 | 0.0004 | 0 |
| 131 | SLD 12 | 0 | -7.15 | 36.37 | 0.4124 | 0.0004 | 0 |
| 131 | SLD 13 | -0.19 | 1.82 | 37.46 | 0.0102 | -0.1438 | -0.0001 |
| 131 | SLD 14 | -0.19 | 1.82 | 37.46 | 0.0102 | -0.1438 | -0.0001 |
| 131 | SLD 15 | -0.16 | -1.82 | 36.5 | 0.1733 | -0.1185 | -0.0001 |
| 131 | SLD 16 | -0.16 | -1.82 | 36.5 | 0.1733 | -0.1185 | -0.0001 |
| 131 | SLV 1 | 0.37 | -1.07 | 42.83 | 0.1403 | 0.2739 | 0.0001 |
| 131 | SLV 2 | 0.37 | -1.07 | 42.83 | 0.1403 | 0.2739 | 0.0001 |
| 131 | SLV 3 | 0.44 | -9.57 | 40.55 | 0.5211 | 0.3378 | 0.0001 |
| 131 | SLV 4 | 0.44 | -9.57 | 40.55 | 0.5211 | 0.3378 | 0.0001 |
| 131 | SLV 5 | 0 | 11.48 | 43.18 | -0.4223 | -0.0173 | 0 |
| 131 | SLV 6 | 0 | 11.48 | 43.18 | -0.4223 | -0.0173 | 0 |
| 131 | SLV 7 | 0.24 | -16.86 | 35.58 | 0.847 | 0.1959 | 0.0001 |
| 131 | SLV 8 | 0.24 | -16.86 | 35.58 | 0.847 | 0.1959 | 0.0001 |
| 131 | SLV 9 | -0.25 | 13.74 | 41.2 | -0.5238 | -0.2028 | -0.0001 |
| 131 | SLV 10 | -0.25 | 13.74 | 41.2 | -0.5238 | -0.2028 | -0.0001 |
| 131 | SLV 11 | 0 | -14.6 | 33.6 | 0.7456 | 0.0103 | 0 |
| 131 | SLV 12 | 0 | -14.6 | 33.6 | 0.7456 | 0.0103 | 0 |
| 131 | SLV 13 | -0.45 | 6.46 | 36.23 | -0.1978 | -0.3447 | -0.0002 |
| 131 | SLV 14 | -0.45 | 6.46 | 36.23 | -0.1978 | -0.3447 | -0.0002 |
| 131 | SLV 15 | -0.37 | -2.05 | 33.95 | 0.183 | -0.2808 | -0.0001 |
| 131 | SLV 16 | -0.37 | -2.05 | 33.95 | 0.183 | -0.2808 | -0.0001 |
| 132 | SLU 1 | 0.01 | 2.75 | 53.91 | -0.0887 | 0.0118 | 0 |
| 132 | SLU 2 | 0.06 | 3.25 | 57.05 | -0.1064 | 0.0701 | 0 |
| 132 | SLU 3 | 0.01 | 2.85 | 55.53 | -0.0918 | 0.012 | 0 |
| 132 | SLU 4 | 0.04 | 3.15 | 57.41 | -0.1025 | 0.047 | 0 |
| 132 | SLU 5 | 0.06 | 3.3 | 58.02 | -0.1079 | 0.0702 | 0 |
| 132 | SLU 6 | 0.01 | 2.9 | 56.5 | -0.0932 | 0.0121 | 0 |
| 132 | SLU 7 | 0.04 | 3.2 | 58.39 | -0.1039 | 0.0471 | 0 |
| 132 | SLU 8 | 0.01 | 2.85 | 55.85 | -0.0915 | 0.012 | 0 |
| 132 | SLU 9 | 0.04 | 3.15 | 57.74 | -0.1021 | 0.047 | 0 |
| 132 | SLU 10 | 0.06 | 3.79 | 63.25 | -0.1256 | 0.0715 | 0 |
| 132 | SLU 11 | 0.01 | 3.4 | 61.72 | -0.1109 | 0.0134 | 0 |
| 132 | SLU 12 | 0.04 | 3.7 | 63.61 | -0.1216 | 0.0484 | 0 |
| 132 | SLU 13 | 0.06 | 3.84 | 64.22 | -0.127 | 0.0716 | 0 |
| 132 | SLU 14 | 0.01 | 3.45 | 62.7 | -0.1123 | 0.0135 | 0 |
| 132 | SLU 15 | 0.04 | 3.74 | 64.58 | -0.123 | 0.0485 | 0 |
| 132 | SLU 16 | 0.01 | 3.4 | 62.05 | -0.1106 | 0.0134 | 0 |

| Nodo | Cont. | Reazione a traslazione | | | Reazione a rotazione | | |
|---|---|---|---|---|---|---|---|
| Ind. | N.br. | x | y | z | x | y | z |
| 132 | SLU 17 | 0.04 | 3.69 | 63.93 | -0.1212 | 0.0484 | 0 |
| 132 | SLU 18 | 0.02 | 3.53 | 62.76 | -0.116 | 0.0138 | 0 |
| 132 | SLU 19 | 0.04 | 3.83 | 64.64 | -0.1266 | 0.0488 | 0 |
| 132 | SLU 20 | 0.02 | 3.58 | 63.73 | -0.1174 | 0.0139 | 0 |
| 132 | SLU 21 | 0.04 | 3.88 | 65.62 | -0.128 | 0.0489 | 0 |
| 132 | SLU 22 | 0.01 | 3.21 | 60.45 | -0.104 | 0.0131 | 0 |
| 132 | SLU 23 | 0.06 | 3.71 | 63.6 | -0.1218 | 0.0714 | 0 |
| 132 | SLU 24 | 0.01 | 3.31 | 62.07 | -0.1071 | 0.0133 | 0 |
| 132 | SLU 25 | 0.04 | 3.61 | 63.96 | -0.1178 | 0.0483 | 0 |
| 132 | SLU 26 | 0.06 | 3.76 | 64.57 | -0.1232 | 0.0715 | 0 |
| 132 | SLU 27 | 0.01 | 3.36 | 63.04 | -0.1085 | 0.0134 | 0 |
| 132 | SLU 28 | 0.04 | 3.66 | 64.93 | -0.1192 | 0.0484 | 0 |
| 132 | SLU 29 | 0.01 | 3.31 | 62.39 | -0.1068 | 0.0133 | 0 |
| 132 | SLU 30 | 0.04 | 3.61 | 64.28 | -0.1175 | 0.0483 | 0 |
| 132 | SLU 31 | 0.06 | 4.25 | 69.79 | -0.1409 | 0.0728 | 0 |
| 132 | SLU 32 | 0.02 | 3.86 | 68.27 | -0.1263 | 0.0147 | 0 |
| 132 | SLU 33 | 0.04 | 4.16 | 70.16 | -0.1369 | 0.0497 | 0 |
| 132 | SLU 34 | 0.06 | 4.3 | 70.76 | -0.1423 | 0.0729 | 0 |
| 132 | SLU 35 | 0.02 | 3.91 | 69.24 | -0.1277 | 0.0148 | 0 |
| 132 | SLU 36 | 0.04 | 4.2 | 71.13 | -0.1383 | 0.0498 | 0 |
| 132 | SLU 37 | 0.02 | 3.86 | 68.59 | -0.1259 | 0.0147 | 0 |
| 132 | SLU 38 | 0.04 | 4.15 | 70.48 | -0.1366 | 0.0497 | 0 |
| 132 | SLU 39 | 0.02 | 3.99 | 69.3 | -0.1313 | 0.0151 | 0 |
| 132 | SLU 40 | 0.04 | 4.29 | 71.19 | -0.142 | 0.0501 | 0 |
| 132 | SLU 41 | 0.02 | 4.04 | 70.28 | -0.1327 | 0.0152 | 0 |
| 132 | SLU 42 | 0.04 | 4.34 | 72.16 | -0.1434 | 0.0502 | 0 |
| 132 | SLU 43 | 0.02 | 3.42 | 67.83 | -0.11 | 0.0149 | 0 |
| 132 | SLU 44 | 0.06 | 3.92 | 70.98 | -0.1278 | 0.0732 | 0 |
| 132 | SLU 45 | 0.02 | 3.52 | 69.45 | -0.1131 | 0.0151 | 0 |
| 132 | SLU 46 | 0.04 | 3.82 | 71.34 | -0.1238 | 0.0501 | 0 |
| 132 | SLU 47 | 0.06 | 3.97 | 71.95 | -0.1292 | 0.0733 | 0 |
| 132 | SLU 48 | 0.02 | 3.57 | 70.43 | -0.1145 | 0.0152 | 0 |
| 132 | SLU 49 | 0.04 | 3.87 | 72.31 | -0.1252 | 0.0502 | 0 |
| 132 | SLU 50 | 0.02 | 3.52 | 69.78 | -0.1128 | 0.0151 | 0 |
| 132 | SLU 51 | 0.04 | 3.82 | 71.66 | -0.1235 | 0.05 | 0 |
| 132 | SLU 52 | 0.06 | 4.46 | 77.17 | -0.1469 | 0.0746 | 0 |
| 132 | SLU 53 | 0.02 | 4.07 | 75.65 | -0.1322 | 0.0165 | 0 |
| 132 | SLU 54 | 0.04 | 4.36 | 77.54 | -0.1429 | 0.0515 | 0 |
| 132 | SLU 55 | 0.06 | 4.51 | 78.15 | -0.1483 | 0.0747 | 0 |
| 132 | SLU 56 | 0.02 | 4.12 | 76.62 | -0.1336 | 0.0166 | 0 |
| 132 | SLU 57 | 0.04 | 4.41 | 78.51 | -0.1443 | 0.0516 | 0 |
| 132 | SLU 58 | 0.02 | 4.06 | 75.97 | -0.1319 | 0.0165 | 0 |
| 132 | SLU 59 | 0.04 | 4.36 | 77.86 | -0.1426 | 0.0515 | 0 |
| 132 | SLU 60 | 0.02 | 4.2 | 76.69 | -0.1373 | 0.0169 | 0 |
| 132 | SLU 61 | 0.05 | 4.5 | 78.57 | -0.148 | 0.0519 | 0 |
| 132 | SLU 62 | 0.02 | 4.25 | 77.66 | -0.1387 | 0.017 | 0 |
| 132 | SLU 63 | 0.05 | 4.55 | 79.54 | -0.1494 | 0.052 | 0 |
| 132 | SLU 64 | 0.02 | 3.88 | 74.38 | -0.1253 | 0.0162 | 0 |
| 132 | SLU 65 | 0.06 | 4.38 | 77.52 | -0.1431 | 0.0745 | 0 |
| 132 | SLU 66 | 0.02 | 3.98 | 76 | -0.1285 | 0.0164 | 0 |
| 132 | SLU 67 | 0.04 | 4.28 | 77.89 | -0.1391 | 0.0514 | 0 |
| 132 | SLU 68 | 0.06 | 4.43 | 78.5 | -0.1445 | 0.0746 | 0 |
| 132 | SLU 69 | 0.02 | 4.03 | 76.97 | -0.1299 | 0.0165 | 0 |
| 132 | SLU 70 | 0.04 | 4.33 | 78.86 | -0.1406 | 0.0515 | 0 |
| 132 | SLU 71 | 0.02 | 3.98 | 76.32 | -0.1282 | 0.0164 | 0 |
| 132 | SLU 72 | 0.04 | 4.28 | 78.21 | -0.1388 | 0.0514 | 0 |
| 132 | SLU 73 | 0.06 | 4.92 | 83.72 | -0.1623 | 0.0759 | 0 |
| 132 | SLU 74 | 0.02 | 4.53 | 82.2 | -0.1476 | 0.0178 | 0 |
| 132 | SLU 75 | 0.05 | 4.82 | 84.08 | -0.1583 | 0.0528 | 0 |
| 132 | SLU 76 | 0.06 | 4.97 | 84.69 | -0.1637 | 0.076 | 0 |
| 132 | SLU 77 | 0.02 | 4.57 | 83.17 | -0.149 | 0.0179 | 0 |
| 132 | SLU 78 | 0.05 | 4.87 | 85.06 | -0.1597 | 0.0529 | 0 |
| 132 | SLU 79 | 0.02 | 4.52 | 82.52 | -0.1473 | 0.0178 | 0 |
| 132 | SLU 80 | 0.05 | 4.82 | 84.41 | -0.1579 | 0.0528 | 0 |
| 132 | SLU 81 | 0.02 | 4.66 | 83.23 | -0.1527 | 0.0182 | 0 |
| 132 | SLU 82 | 0.05 | 4.96 | 85.12 | -0.1633 | 0.0532 | 0 |
| 132 | SLU 83 | 0.02 | 4.71 | 84.2 | -0.1541 | 0.0183 | 0 |
| 132 | SLU 84 | 0.05 | 5.01 | 86.09 | -0.1647 | 0.0533 | 0 |
| 132 | SLE RA 1 | 0.01 | 2.89 | 55.78 | -0.093 | 0.0122 | 0 |
| 132 | SLE RA 2 | 0.04 | 3.22 | 57.87 | -0.1049 | 0.051 | 0 |
| 132 | SLE RA 3 | 0.01 | 2.95 | 56.86 | -0.0951 | 0.0123 | 0 |
| 132 | SLE RA 4 | 0.03 | 3.15 | 58.11 | -0.1022 | 0.0356 | 0 |
| 132 | SLE RA 5 | 0.04 | 3.25 | 58.52 | -0.1058 | 0.0511 | 0 |
| 132 | SLE RA 6 | 0.01 | 2.98 | 57.5 | -0.0961 | 0.0124 | 0 |
| 132 | SLE RA 7 | 0.03 | 3.18 | 58.76 | -0.1032 | 0.0357 | 0 |
| 132 | SLE RA 8 | 0.01 | 2.95 | 57.07 | -0.0949 | 0.0123 | 0 |
| 132 | SLE RA 9 | 0.03 | 3.15 | 58.33 | -0.102 | 0.0356 | 0 |
| 132 | SLE RA 10 | 0.04 | 3.58 | 62 | -0.1177 | 0.052 | 0 |
| 132 | SLE RA 11 | 0.01 | 3.31 | 60.99 | -0.1079 | 0.0132 | 0 |
| 132 | SLE RA 12 | 0.03 | 3.51 | 62.25 | -0.115 | 0.0366 | 0 |
| 132 | SLE RA 13 | 0.04 | 3.61 | 62.65 | -0.1186 | 0.052 | 0 |
| 132 | SLE RA 14 | 0.01 | 3.35 | 61.64 | -0.1088 | 0.0133 | 0 |
| 132 | SLE RA 15 | 0.03 | 3.55 | 62.89 | -0.1159 | 0.0366 | 0 |
| 132 | SLE RA 16 | 0.01 | 3.31 | 61.2 | -0.1077 | 0.0132 | 0 |
| 132 | SLE RA 17 | 0.03 | 3.51 | 62.46 | -0.1148 | 0.0365 | 0 |
| 132 | SLE RA 18 | 0.01 | 3.4 | 61.68 | -0.1112 | 0.0135 | 0 |
| 132 | SLE RA 19 | 0.03 | 3.6 | 62.94 | -0.1184 | 0.0368 | 0 |
| 132 | SLE RA 20 | 0.01 | 3.44 | 62.33 | -0.1122 | 0.0136 | 0 |

| Nodo | Cont. | Reazione a traslazione | | | Reazione a rotazione | | |
|---|---|---|---|---|---|---|---|
| Ind. | N.br. | x | y | z | x | y | z |
| 132 | SLE RA 21 | 0.03 | 3.64 | 63.58 | -0.1193 | 0.0369 | 0 |
| 132 | SLE FR 1 | 0.01 | 2.89 | 55.78 | -0.093 | 0.0122 | 0 |
| 132 | SLE FR 2 | 0.02 | 2.95 | 56.19 | -0.0954 | 0.02 | 0 |
| 132 | SLE FR 3 | 0.01 | 2.9 | 56.03 | -0.0934 | 0.0122 | 0 |
| 132 | SLE FR 4 | 0.02 | 3.11 | 57.97 | -0.1009 | 0.0204 | 0 |
| 132 | SLE FR 5 | 0.01 | 3.05 | 57.81 | -0.0989 | 0.0126 | 0 |
| 132 | SLE FR 6 | 0.01 | 3.15 | 58.73 | -0.1021 | 0.0129 | 0 |
| 132 | SLE QP 1 | 0.01 | 2.89 | 55.78 | -0.093 | 0.0122 | 0 |
| 132 | SLE QP 2 | 0.01 | 3.04 | 57.55 | -0.0985 | 0.0126 | 0 |
| 132 | SLD 1 | 0.28 | 4.1 | 44.29 | -0.1496 | 0.3191 | 0.0001 |
| 132 | SLD 2 | 0.28 | 4.1 | 44.29 | -0.1496 | 0.3191 | 0.0001 |
| 132 | SLD 3 | 0.39 | -0.36 | 40.07 | 0.0395 | 0.213 | 0.0001 |
| 132 | SLD 4 | 0.39 | -0.36 | 40.07 | 0.0395 | 0.213 | 0.0001 |
| 132 | SLD 5 | -0.07 | 10.13 | 59.96 | -0.4006 | 0.2655 | 0.0001 |
| 132 | SLD 6 | -0.07 | 10.13 | 59.96 | -0.4006 | 0.2655 | 0.0001 |
| 132 | SLD 7 | 0.29 | -4.75 | 45.91 | 0.2297 | -0.0883 | 0 |
| 132 | SLD 8 | 0.29 | -4.75 | 45.91 | 0.2297 | -0.0883 | 0 |
| 132 | SLD 9 | -0.27 | 10.83 | 69.18 | -0.4267 | 0.1135 | 0 |
| 132 | SLD 10 | -0.27 | 10.83 | 69.18 | -0.4267 | 0.1135 | 0 |
| 132 | SLD 11 | 0.1 | -4.05 | 55.13 | 0.2036 | -0.2403 | -0.0001 |
| 132 | SLD 12 | 0.1 | -4.05 | 55.13 | 0.2036 | -0.2403 | -0.0001 |
| 132 | SLD 13 | -0.36 | 6.45 | 75.02 | -0.2365 | -0.1878 | 0 |
| 132 | SLD 14 | -0.36 | 6.45 | 75.02 | -0.2365 | -0.1878 | 0 |
| 132 | SLD 15 | -0.25 | 1.98 | 70.81 | -0.0475 | -0.2939 | -0.0001 |
| 132 | SLD 16 | -0.25 | 1.98 | 70.81 | -0.0475 | -0.2939 | -0.0001 |
| 132 | SLV 1 | 0.62 | 5.47 | 26.55 | -0.2158 | 0.7468 | 0.0002 |
| 132 | SLV 2 | 0.62 | 5.47 | 26.55 | -0.2158 | 0.7468 | 0.0002 |
| 132 | SLV 3 | 0.9 | -4.9 | 16.63 | 0.2235 | 0.4769 | 0.0001 |
| 132 | SLV 4 | 0.9 | -4.9 | 16.63 | 0.2235 | 0.4769 | 0.0001 |
| 132 | SLV 5 | -0.23 | 19.5 | 63.29 | -0.8 | 0.6422 | 0.0002 |
| 132 | SLV 6 | -0.23 | 19.5 | 63.29 | -0.8 | 0.6422 | 0.0002 |
| 132 | SLV 7 | 0.7 | -15.08 | 30.23 | 0.6644 | -0.2574 | -0.0001 |
| 132 | SLV 8 | 0.7 | -15.08 | 30.23 | 0.6644 | -0.2574 | -0.0001 |
| 132 | SLV 9 | -0.68 | 21.16 | 84.87 | -0.8614 | 0.2826 | 0.0001 |
| 132 | SLV 10 | -0.68 | 21.16 | 84.87 | -0.8614 | 0.2826 | 0.0001 |
| 132 | SLV 11 | 0.25 | -13.42 | 51.8 | 0.603 | -0.617 | -0.0002 |
| 132 | SLV 12 | 0.25 | -13.42 | 51.8 | 0.603 | -0.617 | -0.0002 |
| 132 | SLV 13 | -0.88 | 10.99 | 98.46 | -0.4205 | -0.4518 | -0.0001 |
| 132 | SLV 14 | -0.88 | 10.99 | 98.46 | -0.4205 | -0.4518 | -0.0001 |
| 132 | SLV 15 | -0.6 | 0.61 | 88.54 | 0.0188 | -0.7216 | -0.0002 |
| 132 | SLV 16 | -0.6 | 0.61 | 88.54 | 0.0188 | -0.7216 | -0.0002 |
| 133 | SLU 1 | -0.31 | 0.83 | 54.93 | 0.0499 | -0.2102 | -0.0017 |
| 133 | SLU 2 | -0.37 | 1.33 | 57.82 | 0.0382 | -0.2764 | -0.002 |
| 133 | SLU 3 | -0.32 | 0.92 | 57.15 | 0.0508 | -0.2192 | -0.0018 |
| 133 | SLU 4 | -0.36 | 1.22 | 58.89 | 0.0438 | -0.2589 | -0.002 |
| 133 | SLU 5 | -0.38 | 1.41 | 59.55 | 0.0388 | -0.2833 | -0.0021 |
| 133 | SLU 6 | -0.33 | 0.99 | 58.88 | 0.0514 | -0.2262 | -0.0018 |
| 133 | SLU 7 | -0.37 | 1.3 | 60.62 | 0.0444 | -0.2659 | -0.002 |
| 133 | SLU 8 | -0.33 | 0.98 | 58.39 | 0.0511 | -0.2241 | -0.0018 |
| 133 | SLU 9 | -0.37 | 1.28 | 60.13 | 0.044 | -0.2638 | -0.002 |
| 133 | SLU 10 | -0.41 | 1.56 | 64.22 | 0.0403 | -0.3032 | -0.0022 |
| 133 | SLU 11 | -0.36 | 1.15 | 63.54 | 0.0529 | -0.246 | -0.002 |
| 133 | SLU 12 | -0.4 | 1.45 | 65.28 | 0.0459 | -0.2857 | -0.0022 |
| 133 | SLU 13 | -0.42 | 1.64 | 65.95 | 0.0408 | -0.3101 | -0.0023 |
| 133 | SLU 14 | -0.37 | 1.22 | 65.28 | 0.0534 | -0.253 | -0.002 |
| 133 | SLU 15 | -0.41 | 1.52 | 67.01 | 0.0464 | -0.2927 | -0.0022 |
| 133 | SLU 16 | -0.37 | 1.21 | 64.79 | 0.0531 | -0.2509 | -0.002 |
| 133 | SLU 17 | -0.41 | 1.51 | 66.52 | 0.0461 | -0.2906 | -0.0022 |
| 133 | SLU 18 | -0.37 | 1.16 | 64.06 | 0.0528 | -0.2485 | -0.002 |
| 133 | SLU 19 | -0.4 | 1.46 | 65.8 | 0.0458 | -0.2882 | -0.0022 |
| 133 | SLU 20 | -0.38 | 1.23 | 65.79 | 0.0534 | -0.2554 | -0.002 |
| 133 | SLU 21 | -0.41 | 1.53 | 67.53 | 0.0464 | -0.2951 | -0.0023 |
| 133 | SLU 22 | -0.35 | 1.03 | 61.73 | 0.0545 | -0.2386 | -0.0019 |
| 133 | SLU 23 | -0.41 | 1.53 | 64.62 | 0.0428 | -0.3048 | -0.0023 |
| 133 | SLU 24 | -0.37 | 1.12 | 63.95 | 0.0554 | -0.2477 | -0.002 |
| 133 | SLU 25 | -0.4 | 1.42 | 65.68 | 0.0484 | -0.2874 | -0.0022 |
| 133 | SLU 26 | -0.42 | 1.6 | 66.35 | 0.0434 | -0.3117 | -0.0023 |
| 133 | SLU 27 | -0.38 | 1.19 | 65.68 | 0.056 | -0.2546 | -0.002 |
| 133 | SLU 28 | -0.41 | 1.49 | 67.42 | 0.049 | -0.2943 | -0.0023 |
| 133 | SLU 29 | -0.37 | 1.18 | 65.19 | 0.0557 | -0.2525 | -0.002 |
| 133 | SLU 30 | -0.41 | 1.48 | 66.93 | 0.0486 | -0.2922 | -0.0022 |
| 133 | SLU 31 | -0.45 | 1.76 | 71.02 | 0.0449 | -0.3316 | -0.0025 |
| 133 | SLU 32 | -0.4 | 1.34 | 70.34 | 0.0575 | -0.2745 | -0.0022 |
| 133 | SLU 33 | -0.44 | 1.65 | 72.08 | 0.0504 | -0.3142 | -0.0024 |
| 133 | SLU 34 | -0.46 | 1.83 | 72.75 | 0.0454 | -0.3385 | -0.0025 |
| 133 | SLU 35 | -0.42 | 1.42 | 72.07 | 0.058 | -0.2814 | -0.0023 |
| 133 | SLU 36 | -0.45 | 1.72 | 73.81 | 0.051 | -0.3211 | -0.0025 |
| 133 | SLU 37 | -0.41 | 1.41 | 71.59 | 0.0577 | -0.2793 | -0.0022 |
| 133 | SLU 38 | -0.45 | 1.71 | 73.32 | 0.0507 | -0.319 | -0.0024 |
| 133 | SLU 39 | -0.41 | 1.35 | 70.86 | 0.0574 | -0.2769 | -0.0022 |
| 133 | SLU 40 | -0.44 | 1.66 | 72.6 | 0.0504 | -0.3166 | -0.0024 |
| 133 | SLU 41 | -0.42 | 1.43 | 72.59 | 0.058 | -0.2839 | -0.0023 |
| 133 | SLU 42 | -0.45 | 1.73 | 74.33 | 0.051 | -0.3236 | -0.0025 |
| 133 | SLU 43 | -0.39 | 1.01 | 69.07 | 0.0633 | -0.2635 | -0.0021 |
| 133 | SLU 44 | -0.45 | 1.51 | 71.97 | 0.0516 | -0.3297 | -0.0024 |
| 133 | SLU 45 | -0.4 | 1.1 | 71.29 | 0.0642 | -0.2725 | -0.0022 |
| 133 | SLU 46 | -0.44 | 1.4 | 73.03 | 0.0572 | -0.3122 | -0.0024 |
| 133 | SLU 47 | -0.46 | 1.59 | 73.7 | 0.0522 | -0.3366 | -0.0025 |

| Nodo | Cont. | Reazione a traslazione | | | Reazione a rotazione | | |
|---|---|---|---|---|---|---|---|
| Ind. | N.br. | x | y | z | x | y | z |
| 133 | SLU 48 | -0.41 | 1.18 | 73.03 | 0.0648 | -0.2795 | -0.0022 |
| 133 | SLU 49 | -0.45 | 1.48 | 74.77 | 0.0578 | -0.3192 | -0.0024 |
| 133 | SLU 50 | -0.41 | 1.16 | 72.54 | 0.0645 | -0.2774 | -0.0022 |
| 133 | SLU 51 | -0.44 | 1.46 | 74.28 | 0.0574 | -0.3171 | -0.0024 |
| 133 | SLU 52 | -0.49 | 1.74 | 78.36 | 0.0537 | -0.3565 | -0.0027 |
| 133 | SLU 53 | -0.44 | 1.33 | 77.69 | 0.0663 | -0.2994 | -0.0024 |
| 133 | SLU 54 | -0.48 | 1.63 | 79.43 | 0.0593 | -0.3391 | -0.0026 |
| 133 | SLU 55 | -0.5 | 1.82 | 80.1 | 0.0542 | -0.3634 | -0.0027 |
| 133 | SLU 56 | -0.45 | 1.41 | 79.42 | 0.0668 | -0.3063 | -0.0025 |
| 133 | SLU 57 | -0.49 | 1.71 | 81.16 | 0.0598 | -0.346 | -0.0027 |
| 133 | SLU 58 | -0.45 | 1.39 | 78.93 | 0.0665 | -0.3042 | -0.0024 |
| 133 | SLU 59 | -0.48 | 1.69 | 80.67 | 0.0595 | -0.3439 | -0.0026 |
| 133 | SLU 60 | -0.44 | 1.34 | 78.21 | 0.0663 | -0.3018 | -0.0024 |
| 133 | SLU 61 | -0.48 | 1.64 | 79.94 | 0.0592 | -0.3415 | -0.0026 |
| 133 | SLU 62 | -0.45 | 1.41 | 79.94 | 0.0668 | -0.3088 | -0.0025 |
| 133 | SLU 63 | -0.49 | 1.72 | 81.68 | 0.0598 | -0.3484 | -0.0027 |
| 133 | SLU 64 | -0.43 | 1.21 | 75.87 | 0.0679 | -0.292 | -0.0023 |
| 133 | SLU 65 | -0.49 | 1.71 | 78.77 | 0.0562 | -0.3581 | -0.0027 |
| 133 | SLU 66 | -0.44 | 1.3 | 78.09 | 0.0688 | -0.301 | -0.0024 |
| 133 | SLU 67 | -0.48 | 1.6 | 79.83 | 0.0618 | -0.3407 | -0.0026 |
| 133 | SLU 68 | -0.5 | 1.79 | 80.5 | 0.0568 | -0.365 | -0.0027 |
| 133 | SLU 69 | -0.45 | 1.37 | 79.83 | 0.0694 | -0.3079 | -0.0025 |
| 133 | SLU 70 | -0.49 | 1.67 | 81.56 | 0.0624 | -0.3476 | -0.0027 |
| 133 | SLU 71 | -0.45 | 1.36 | 79.34 | 0.0691 | -0.3058 | -0.0025 |
| 133 | SLU 72 | -0.49 | 1.66 | 81.08 | 0.062 | -0.3455 | -0.0027 |
| 133 | SLU 73 | -0.53 | 1.94 | 85.16 | 0.0583 | -0.3849 | -0.0029 |
| 133 | SLU 74 | -0.48 | 1.53 | 84.49 | 0.0709 | -0.3278 | -0.0026 |
| 133 | SLU 75 | -0.52 | 1.83 | 86.23 | 0.0638 | -0.3675 | -0.0028 |
| 133 | SLU 76 | -0.54 | 2.02 | 86.9 | 0.0588 | -0.3919 | -0.003 |
| 133 | SLU 77 | -0.49 | 1.6 | 86.22 | 0.0714 | -0.3347 | -0.0027 |
| 133 | SLU 78 | -0.53 | 1.9 | 87.96 | 0.0644 | -0.3744 | -0.0029 |
| 133 | SLU 79 | -0.49 | 1.59 | 85.73 | 0.0711 | -0.3326 | -0.0027 |
| 133 | SLU 80 | -0.53 | 1.89 | 87.47 | 0.0641 | -0.3723 | -0.0029 |
| 133 | SLU 81 | -0.49 | 1.54 | 85.01 | 0.0708 | -0.3303 | -0.0026 |
| 133 | SLU 82 | -0.52 | 1.84 | 86.74 | 0.0638 | -0.3699 | -0.0028 |
| 133 | SLU 83 | -0.5 | 1.61 | 86.74 | 0.0714 | -0.3372 | -0.0027 |
| 133 | SLU 84 | -0.53 | 1.91 | 88.48 | 0.0644 | -0.3769 | -0.0029 |
| 133 | SLE RA 1 | -0.32 | 0.89 | 56.87 | 0.0512 | -0.2183 | -0.0017 |
| 133 | SLE RA 2 | -0.36 | 1.22 | 58.8 | 0.0434 | -0.2624 | -0.002 |
| 133 | SLE RA 3 | -0.33 | 0.95 | 58.35 | 0.0518 | -0.2244 | -0.0018 |
| 133 | SLE RA 4 | -0.35 | 1.15 | 59.51 | 0.0472 | -0.2508 | -0.0019 |
| 133 | SLE RA 5 | -0.37 | 1.27 | 59.95 | 0.0438 | -0.2671 | -0.002 |
| 133 | SLE RA 6 | -0.34 | 1 | 59.51 | 0.0522 | -0.229 | -0.0018 |
| 133 | SLE RA 7 | -0.36 | 1.2 | 60.66 | 0.0475 | -0.2554 | -0.002 |
| 133 | SLE RA 8 | -0.34 | 0.99 | 59.18 | 0.052 | -0.2276 | -0.0018 |
| 133 | SLE RA 9 | -0.36 | 1.19 | 60.34 | 0.0473 | -0.254 | -0.002 |
| 133 | SLE RA 10 | -0.39 | 1.37 | 63.06 | 0.0448 | -0.2803 | -0.0021 |
| 133 | SLE RA 11 | -0.36 | 1.1 | 62.61 | 0.0532 | -0.2422 | -0.0019 |
| 133 | SLE RA 12 | -0.38 | 1.3 | 63.77 | 0.0485 | -0.2687 | -0.0021 |
| 133 | SLE RA 13 | -0.39 | 1.42 | 64.22 | 0.0452 | -0.2849 | -0.0022 |
| 133 | SLE RA 14 | -0.36 | 1.15 | 63.77 | 0.0536 | -0.2468 | -0.002 |
| 133 | SLE RA 15 | -0.39 | 1.35 | 64.93 | 0.0489 | -0.2733 | -0.0021 |
| 133 | SLE RA 16 | -0.36 | 1.14 | 63.44 | 0.0534 | -0.2454 | -0.002 |
| 133 | SLE RA 17 | -0.39 | 1.34 | 64.6 | 0.0487 | -0.2719 | -0.0021 |
| 133 | SLE RA 18 | -0.36 | 1.1 | 62.96 | 0.0532 | -0.2439 | -0.002 |
| 133 | SLE RA 19 | -0.38 | 1.31 | 64.12 | 0.0485 | -0.2703 | -0.0021 |
| 133 | SLE RA 20 | -0.37 | 1.15 | 64.11 | 0.0536 | -0.2485 | -0.002 |
| 133 | SLE RA 21 | -0.39 | 1.36 | 65.27 | 0.0489 | -0.2749 | -0.0021 |
| 133 | SLE FR 1 | -0.32 | 0.89 | 56.87 | 0.0512 | -0.2183 | -0.0017 |
| 133 | SLE FR 2 | -0.33 | 0.95 | 57.25 | 0.0497 | -0.2272 | -0.0018 |
| 133 | SLE FR 3 | -0.32 | 0.91 | 57.33 | 0.0514 | -0.2202 | -0.0018 |
| 133 | SLE FR 4 | -0.34 | 1.02 | 59.08 | 0.0503 | -0.2348 | -0.0019 |
| 133 | SLE FR 5 | -0.34 | 0.97 | 59.16 | 0.052 | -0.2278 | -0.0018 |
| 133 | SLE FR 6 | -0.34 | 1 | 59.91 | 0.0522 | -0.2311 | -0.0018 |
| 133 | SLE QP 1 | -0.32 | 0.89 | 56.87 | 0.0512 | -0.2183 | -0.0017 |
| 133 | SLE QP 2 | -0.33 | 0.95 | 58.7 | 0.0518 | -0.226 | -0.0018 |
| 133 | SLD 1 | -0.66 | 2.37 | 76.81 | 0.0071 | -0.5017 | -0.0036 |
| 133 | SLD 2 | -0.66 | 2.37 | 76.81 | 0.0071 | -0.5017 | -0.0036 |
| 133 | SLD 3 | -0.56 | -2.97 | 73.48 | 0.2413 | -0.41 | -0.003 |
| 133 | SLD 4 | -0.56 | -2.97 | 73.48 | 0.2413 | -0.41 | -0.003 |
| 133 | SLD 5 | -0.59 | 9.48 | 69.18 | -0.3168 | -0.4479 | -0.0032 |
| 133 | SLD 6 | -0.59 | 9.48 | 69.18 | -0.3168 | -0.4479 | -0.0032 |
| 133 | SLD 7 | -0.24 | -8.32 | 58.08 | 0.4639 | -0.142 | -0.0013 |
| 133 | SLD 8 | -0.24 | -8.32 | 58.08 | 0.4639 | -0.142 | -0.0013 |
| 133 | SLD 9 | -0.42 | 10.23 | 59.32 | -0.3603 | -0.31 | -0.0023 |
| 133 | SLD 10 | -0.42 | 10.23 | 59.32 | -0.3603 | -0.31 | -0.0023 |
| 133 | SLD 11 | -0.08 | -7.57 | 48.21 | 0.4205 | -0.004 | -0.0004 |
| 133 | SLD 12 | -0.08 | -7.57 | 48.21 | 0.4205 | -0.004 | -0.0004 |
| 133 | SLD 13 | -0.11 | 4.87 | 43.92 | -0.1377 | -0.042 | -0.0006 |
| 133 | SLD 14 | -0.11 | 4.87 | 43.92 | -0.1377 | -0.042 | -0.0006 |
| 133 | SLD 15 | 0 | -0.47 | 40.58 | 0.0965 | 0.0498 | 0 |
| 133 | SLD 16 | 0 | -0.47 | 40.58 | 0.0965 | 0.0498 | 0 |
| 133 | SLV 1 | -1.11 | 4.13 | 101.14 | -0.0467 | -0.8813 | -0.0061 |
| 133 | SLV 2 | -1.11 | 4.13 | 101.14 | -0.0467 | -0.8813 | -0.0061 |
| 133 | SLV 3 | -0.85 | -8.28 | 93.15 | 0.4973 | -0.6492 | -0.0046 |
| 133 | SLV 4 | -0.85 | -8.28 | 93.15 | 0.4973 | -0.6492 | -0.0046 |
| 133 | SLV 5 | -0.96 | 20.73 | 83.55 | -0.8029 | -0.7746 | -0.0053 |
| 133 | SLV 6 | -0.96 | 20.73 | 83.55 | -0.8029 | -0.7746 | -0.0053 |

| Nodo | Cont. | Reazione a traslazione | | | Reazione a rotazione | | |
|---|---|---|---|---|---|---|---|
| Ind. | N.br. | x | y | z | x | y | z |
| 133 | SLV 7 | -0.09 | -20.64 | 56.91 | 1.0106 | -0.0009 | -0.0005 |
| 133 | SLV 8 | -0.09 | -20.64 | 56.91 | 1.0106 | -0.0009 | -0.0005 |
| 133 | SLV 9 | -0.57 | 22.54 | 60.48 | -0.9069 | -0.451 | -0.0032 |
| 133 | SLV 10 | -0.57 | 22.54 | 60.48 | -0.9069 | -0.451 | -0.0032 |
| 133 | SLV 11 | 0.3 | -18.82 | 33.84 | 0.9065 | 0.3226 | 0.0017 |
| 133 | SLV 12 | 0.3 | -18.82 | 33.84 | 0.9065 | 0.3226 | 0.0017 |
| 133 | SLV 13 | 0.19 | 10.18 | 24.24 | -0.3937 | 0.1972 | 0.001 |
| 133 | SLV 14 | 0.19 | 10.18 | 24.24 | -0.3937 | 0.1972 | 0.001 |
| 133 | SLV 15 | 0.45 | -2.23 | 16.25 | 0.1504 | 0.4293 | 0.0025 |
| 133 | SLV 16 | 0.45 | -2.23 | 16.25 | 0.1504 | 0.4293 | 0.0025 |
| 134 | SLU 1 | 0.05 | -2.84 | 42.36 | 0.1329 | 0.0357 | 0 |
| 134 | SLU 2 | 0.05 | -3.26 | 42.49 | 0.153 | 0.0357 | 0 |
| 134 | SLU 3 | 0.05 | -2.5 | 43.59 | 0.1167 | 0.0371 | 0 |
| 134 | SLU 4 | 0.05 | -2.76 | 43.67 | 0.1288 | 0.0371 | 0 |
| 134 | SLU 5 | 0.05 | -2.85 | 43.2 | 0.1329 | 0.0366 | 0 |
| 134 | SLU 6 | 0.05 | -2.09 | 44.29 | 0.0967 | 0.038 | 0 |
| 134 | SLU 7 | 0.05 | -2.34 | 44.37 | 0.1087 | 0.038 | 0 |
| 134 | SLU 8 | 0.05 | -2.01 | 43.77 | 0.0928 | 0.0375 | 0 |
| 134 | SLU 9 | 0.05 | -2.27 | 43.85 | 0.1048 | 0.0375 | 0 |
| 134 | SLU 10 | 0.06 | -3.81 | 50.96 | 0.1797 | 0.0385 | 0 |
| 134 | SLU 11 | 0.06 | -3.04 | 52.05 | 0.1435 | 0.0398 | 0 |
| 134 | SLU 12 | 0.06 | -3.3 | 52.13 | 0.1555 | 0.0399 | 0 |
| 134 | SLU 13 | 0.06 | -3.39 | 51.66 | 0.1596 | 0.0394 | 0 |
| 134 | SLU 14 | 0.06 | -2.63 | 52.76 | 0.1234 | 0.0408 | 0 |
| 134 | SLU 15 | 0.06 | -2.88 | 52.84 | 0.1355 | 0.0408 | 0 |
| 134 | SLU 16 | 0.06 | -2.55 | 52.24 | 0.1195 | 0.0403 | 0 |
| 134 | SLU 17 | 0.06 | -2.81 | 52.32 | 0.1316 | 0.0403 | 0 |
| 134 | SLU 18 | 0.06 | -3.61 | 54.45 | 0.1711 | 0.0397 | 0 |
| 134 | SLU 19 | 0.06 | -3.87 | 54.53 | 0.1832 | 0.0397 | 0 |
| 134 | SLU 20 | 0.06 | -3.2 | 55.16 | 0.151 | 0.0406 | 0 |
| 134 | SLU 21 | 0.06 | -3.45 | 55.24 | 0.1631 | 0.0406 | 0 |
| 134 | SLU 22 | 0.06 | -2.82 | 48.26 | 0.1337 | 0.0406 | 0 |
| 134 | SLU 23 | 0.06 | -3.25 | 48.39 | 0.1537 | 0.0406 | 0 |
| 134 | SLU 24 | 0.06 | -2.48 | 49.48 | 0.1175 | 0.042 | 0 |
| 134 | SLU 25 | 0.06 | -2.74 | 49.56 | 0.1295 | 0.042 | 0 |
| 134 | SLU 26 | 0.06 | -2.83 | 49.09 | 0.1337 | 0.0415 | 0 |
| 134 | SLU 27 | 0.06 | -2.07 | 50.19 | 0.0974 | 0.0429 | 0 |
| 134 | SLU 28 | 0.06 | -2.32 | 50.27 | 0.1095 | 0.0429 | 0 |
| 134 | SLU 29 | 0.06 | -1.99 | 49.67 | 0.0935 | 0.0424 | 0 |
| 134 | SLU 30 | 0.06 | -2.25 | 49.75 | 0.1056 | 0.0424 | 0 |
| 134 | SLU 31 | 0.06 | -3.79 | 56.85 | 0.1805 | 0.0434 | 0 |
| 134 | SLU 32 | 0.07 | -3.02 | 57.95 | 0.1442 | 0.0447 | 0 |
| 134 | SLU 33 | 0.07 | -3.28 | 58.03 | 0.1563 | 0.0448 | 0 |
| 134 | SLU 34 | 0.06 | -3.37 | 57.56 | 0.1604 | 0.0443 | 0 |
| 134 | SLU 35 | 0.07 | -2.61 | 58.66 | 0.1242 | 0.0457 | 0 |
| 134 | SLU 36 | 0.07 | -2.86 | 58.74 | 0.1362 | 0.0457 | 0 |
| 134 | SLU 37 | 0.07 | -2.53 | 58.13 | 0.1203 | 0.0452 | 0 |
| 134 | SLU 38 | 0.07 | -2.79 | 58.21 | 0.1323 | 0.0452 | 0 |
| 134 | SLU 39 | 0.07 | -3.59 | 60.35 | 0.1719 | 0.0446 | 0 |
| 134 | SLU 40 | 0.07 | -3.85 | 60.43 | 0.1839 | 0.0446 | 0 |
| 134 | SLU 41 | 0.07 | -3.18 | 61.06 | 0.1518 | 0.0455 | 0 |
| 134 | SLU 42 | 0.07 | -3.43 | 61.14 | 0.1638 | 0.0455 | 0 |
| 134 | SLU 43 | 0.06 | -3.7 | 53.04 | 0.1725 | 0.0447 | 0 |
| 134 | SLU 44 | 0.06 | -4.12 | 53.18 | 0.1926 | 0.0448 | 0 |
| 134 | SLU 45 | 0.07 | -3.36 | 54.27 | 0.1564 | 0.0461 | 0 |
| 134 | SLU 46 | 0.07 | -3.61 | 54.35 | 0.1684 | 0.0461 | 0 |
| 134 | SLU 47 | 0.07 | -3.71 | 53.88 | 0.1725 | 0.0457 | 0 |
| 134 | SLU 48 | 0.07 | -2.95 | 54.98 | 0.1363 | 0.047 | 0 |
| 134 | SLU 49 | 0.07 | -3.2 | 55.06 | 0.1483 | 0.047 | 0 |
| 134 | SLU 50 | 0.07 | -2.87 | 54.45 | 0.1324 | 0.0466 | 0 |
| 134 | SLU 51 | 0.07 | -3.12 | 54.53 | 0.1444 | 0.0466 | 0 |
| 134 | SLU 52 | 0.07 | -4.66 | 61.64 | 0.2193 | 0.0476 | 0 |
| 134 | SLU 53 | 0.07 | -3.9 | 62.74 | 0.1831 | 0.0489 | 0 |
| 134 | SLU 54 | 0.07 | -4.16 | 62.82 | 0.1951 | 0.0489 | 0 |
| 134 | SLU 55 | 0.07 | -4.25 | 62.35 | 0.1993 | 0.0485 | 0 |
| 134 | SLU 56 | 0.07 | -3.49 | 63.44 | 0.163 | 0.0498 | 0 |
| 134 | SLU 57 | 0.07 | -3.74 | 63.52 | 0.1751 | 0.0498 | 0 |
| 134 | SLU 58 | 0.07 | -3.41 | 62.92 | 0.1591 | 0.0493 | 0 |
| 134 | SLU 59 | 0.07 | -3.67 | 63 | 0.1712 | 0.0494 | 0 |
| 134 | SLU 60 | 0.07 | -4.47 | 65.14 | 0.2107 | 0.0487 | 0 |
| 134 | SLU 61 | 0.07 | -4.73 | 65.22 | 0.2228 | 0.0487 | 0 |
| 134 | SLU 62 | 0.07 | -4.06 | 65.84 | 0.1907 | 0.0496 | 0 |
| 134 | SLU 63 | 0.07 | -4.31 | 65.92 | 0.2027 | 0.0496 | 0 |
| 134 | SLU 64 | 0.07 | -3.68 | 58.94 | 0.1733 | 0.0496 | 0 |
| 134 | SLU 65 | 0.07 | -4.1 | 59.07 | 0.1933 | 0.0497 | 0 |
| 134 | SLU 66 | 0.07 | -3.34 | 60.17 | 0.1571 | 0.051 | 0 |
| 134 | SLU 67 | 0.07 | -3.6 | 60.25 | 0.1691 | 0.051 | 0 |
| 134 | SLU 68 | 0.07 | -3.69 | 59.78 | 0.1733 | 0.0506 | 0 |
| 134 | SLU 69 | 0.07 | -2.93 | 60.88 | 0.137 | 0.0519 | 0 |
| 134 | SLU 70 | 0.07 | -3.18 | 60.95 | 0.1491 | 0.0519 | 0 |
| 134 | SLU 71 | 0.07 | -2.85 | 60.35 | 0.1331 | 0.0514 | 0 |
| 134 | SLU 72 | 0.07 | -3.11 | 60.43 | 0.1452 | 0.0515 | 0 |
| 134 | SLU 73 | 0.08 | -4.64 | 67.54 | 0.2201 | 0.0524 | 0 |
| 134 | SLU 74 | 0.08 | -3.88 | 68.64 | 0.1838 | 0.0538 | 0 |
| 134 | SLU 75 | 0.08 | -4.14 | 68.72 | 0.1959 | 0.0538 | 0 |
| 134 | SLU 76 | 0.08 | -4.23 | 68.25 | 0.2 | 0.0534 | 0 |
| 134 | SLU 77 | 0.08 | -3.47 | 69.34 | 0.1638 | 0.0547 | 0 |
| 134 | SLU 78 | 0.08 | -3.72 | 69.42 | 0.1758 | 0.0547 | 0 |

| Nodo | Cont. | Reazione a traslazione | | | Reazione a rotazione | | |
|---|---|---|---|---|---|---|---|
| Ind. | N.br. | x | y | z | x | y | z |
| 134 | SLU 79 | 0.08 | -3.39 | 68.82 | 0.1599 | 0.0542 | 0 |
| 134 | SLU 80 | 0.08 | -3.65 | 68.9 | 0.1719 | 0.0543 | 0 |
| 134 | SLU 81 | 0.08 | -4.45 | 71.04 | 0.2115 | 0.0536 | 0 |
| 134 | SLU 82 | 0.08 | -4.71 | 71.12 | 0.2235 | 0.0536 | 0 |
| 134 | SLU 83 | 0.08 | -4.04 | 71.74 | 0.1914 | 0.0545 | 0 |
| 134 | SLU 84 | 0.08 | -4.29 | 71.82 | 0.2034 | 0.0545 | 0 |
| 134 | SLE RA 1 | 0.05 | -2.83 | 44.04 | 0.1331 | 0.0371 | 0 |
| 134 | SLE RA 2 | 0.05 | -3.12 | 44.13 | 0.1465 | 0.0371 | 0 |
| 134 | SLE RA 3 | 0.05 | -2.61 | 44.86 | 0.1223 | 0.038 | 0 |
| 134 | SLE RA 4 | 0.05 | -2.78 | 44.91 | 0.1304 | 0.038 | 0 |
| 134 | SLE RA 5 | 0.05 | -2.84 | 44.6 | 0.1331 | 0.0377 | 0 |
| 134 | SLE RA 6 | 0.06 | -2.33 | 45.33 | 0.109 | 0.0386 | 0 |
| 134 | SLE RA 7 | 0.06 | -2.5 | 45.39 | 0.117 | 0.0386 | 0 |
| 134 | SLE RA 8 | 0.05 | -2.28 | 44.98 | 0.1064 | 0.0383 | 0 |
| 134 | SLE RA 9 | 0.05 | -2.45 | 45.04 | 0.1144 | 0.0383 | 0 |
| 134 | SLE RA 10 | 0.06 | -3.48 | 49.78 | 0.1643 | 0.039 | 0 |
| 134 | SLE RA 11 | 0.06 | -2.97 | 50.51 | 0.1402 | 0.0399 | 0 |
| 134 | SLE RA 12 | 0.06 | -3.14 | 50.56 | 0.1482 | 0.0399 | 0 |
| 134 | SLE RA 13 | 0.06 | -3.2 | 50.25 | 0.1509 | 0.0396 | 0 |
| 134 | SLE RA 14 | 0.06 | -2.69 | 50.98 | 0.1268 | 0.0405 | 0 |
| 134 | SLE RA 15 | 0.06 | -2.86 | 51.03 | 0.1348 | 0.0405 | 0 |
| 134 | SLE RA 16 | 0.06 | -2.64 | 50.63 | 0.1242 | 0.0402 | 0 |
| 134 | SLE RA 17 | 0.06 | -2.81 | 50.68 | 0.1322 | 0.0402 | 0 |
| 134 | SLE RA 18 | 0.06 | -3.35 | 52.11 | 0.1586 | 0.0398 | 0 |
| 134 | SLE RA 19 | 0.06 | -3.52 | 52.16 | 0.1666 | 0.0398 | 0 |
| 134 | SLE RA 20 | 0.06 | -3.07 | 52.58 | 0.1452 | 0.0404 | 0 |
| 134 | SLE RA 21 | 0.06 | -3.24 | 52.63 | 0.1532 | 0.0404 | 0 |
| 134 | SLE FR 1 | 0.05 | -2.83 | 44.04 | 0.1331 | 0.0371 | 0 |
| 134 | SLE FR 2 | 0.05 | -2.89 | 44.06 | 0.1358 | 0.0371 | 0 |
| 134 | SLE FR 3 | 0.05 | -2.72 | 44.23 | 0.1278 | 0.0373 | 0 |
| 134 | SLE FR 4 | 0.05 | -3.05 | 46.48 | 0.1434 | 0.0379 | 0 |
| 134 | SLE FR 5 | 0.05 | -2.88 | 46.65 | 0.1354 | 0.0381 | 0 |
| 134 | SLE FR 6 | 0.06 | -3.09 | 48.08 | 0.1459 | 0.0384 | 0 |
| 134 | SLE QP 1 | 0.05 | -2.83 | 44.04 | 0.1331 | 0.0371 | 0 |
| 134 | SLE QP 2 | 0.05 | -2.99 | 46.46 | 0.1408 | 0.0379 | 0 |
| 134 | SLD 1 | 0.28 | -0.39 | 48.88 | 0.019 | 0.2151 | 0.0002 |
| 134 | SLD 2 | 0.28 | -0.39 | 48.88 | 0.019 | 0.2151 | 0.0002 |
| 134 | SLD 3 | 0.3 | -3.92 | 50.61 | 0.1872 | 0.2337 | 0.0002 |
| 134 | SLD 4 | 0.3 | -3.92 | 50.61 | 0.1872 | 0.2337 | 0.0002 |
| 134 | SLD 5 | 0.09 | 3.15 | 44.56 | -0.1509 | 0.0629 | 0.0001 |
| 134 | SLD 6 | 0.09 | 3.15 | 44.56 | -0.1509 | 0.0629 | 0.0001 |
| 134 | SLD 7 | 0.16 | -8.63 | 50.33 | 0.4098 | 0.1249 | 0 |
| 134 | SLD 8 | 0.16 | -8.63 | 50.33 | 0.4098 | 0.1249 | 0 |
| 134 | SLD 9 | -0.05 | 2.65 | 42.59 | -0.1283 | -0.0491 | 0 |
| 134 | SLD 10 | -0.05 | 2.65 | 42.59 | -0.1283 | -0.0491 | 0 |
| 134 | SLD 11 | 0.02 | -9.13 | 48.37 | 0.4325 | 0.0129 | -0.0001 |
| 134 | SLD 12 | 0.02 | -9.13 | 48.37 | 0.4325 | 0.0129 | -0.0001 |
| 134 | SLD 13 | -0.19 | -2.06 | 42.32 | 0.0943 | -0.1579 | -0.0001 |
| 134 | SLD 14 | -0.19 | -2.06 | 42.32 | 0.0943 | -0.1579 | -0.0001 |
| 134 | SLD 15 | -0.17 | -5.59 | 44.05 | 0.2626 | -0.1394 | -0.0002 |
| 134 | SLD 16 | -0.17 | -5.59 | 44.05 | 0.2626 | -0.1394 | -0.0002 |
| 134 | SLV 1 | 0.6 | 3.11 | 52.11 | -0.1451 | 0.4773 | 0.0005 |
| 134 | SLV 2 | 0.6 | 3.11 | 52.11 | -0.1451 | 0.4773 | 0.0005 |
| 134 | SLV 3 | 0.66 | -5.13 | 56.19 | 0.2478 | 0.5243 | 0.0004 |
| 134 | SLV 4 | 0.66 | -5.13 | 56.19 | 0.2478 | 0.5243 | 0.0004 |
| 134 | SLV 5 | 0.13 | 11.35 | 41.98 | -0.5408 | 0.0985 | 0.0002 |
| 134 | SLV 6 | 0.13 | 11.35 | 41.98 | -0.5408 | 0.0985 | 0.0002 |
| 134 | SLV 7 | 0.33 | -16.14 | 55.56 | 0.7688 | 0.2551 | 0.0001 |
| 134 | SLV 8 | 0.33 | -16.14 | 55.56 | 0.7688 | 0.2551 | 0.0001 |
| 134 | SLV 9 | -0.22 | 10.16 | 37.37 | -0.4872 | -0.1793 | 0 |
| 134 | SLV 10 | -0.22 | 10.16 | 37.37 | -0.4872 | -0.1793 | 0 |
| 134 | SLV 11 | -0.02 | -17.32 | 50.94 | 0.8224 | -0.0227 | -0.0002 |
| 134 | SLV 12 | -0.02 | -17.32 | 50.94 | 0.8224 | -0.0227 | -0.0002 |
| 134 | SLV 13 | -0.55 | -0.84 | 36.74 | 0.0337 | -0.4485 | -0.0004 |
| 134 | SLV 14 | -0.55 | -0.84 | 36.74 | 0.0337 | -0.4485 | -0.0004 |
| 134 | SLV 15 | -0.5 | -9.09 | 40.81 | 0.4266 | -0.4015 | -0.0004 |
| 134 | SLV 16 | -0.5 | -9.09 | 40.81 | 0.4266 | -0.4015 | -0.0004 |
| 135 | SLU 1 | 0.02 | 1.22 | 10.82 | -0.0284 | 0.0132 | -0.0002 |
| 135 | SLU 2 | 0.02 | 1.22 | 10.83 | -0.0284 | 0.0136 | -0.0002 |
| 135 | SLU 3 | 0.02 | 1.28 | 11.04 | -0.03 | 0.0136 | -0.0002 |
| 135 | SLU 4 | 0.02 | 1.28 | 11.05 | -0.03 | 0.0138 | -0.0002 |
| 135 | SLU 5 | 0.02 | 1.26 | 10.96 | -0.0294 | 0.0138 | -0.0002 |
| 135 | SLU 6 | 0.02 | 1.32 | 11.17 | -0.0309 | 0.0138 | -0.0002 |
| 135 | SLU 7 | 0.02 | 1.32 | 11.17 | -0.0309 | 0.014 | -0.0002 |
| 135 | SLU 8 | 0.02 | 1.3 | 11.08 | -0.0303 | 0.0137 | -0.0002 |
| 135 | SLU 9 | 0.02 | 1.3 | 11.08 | -0.0303 | 0.0139 | -0.0002 |
| 135 | SLU 10 | 0.03 | 1.47 | 14.06 | -0.0332 | 0.0179 | -0.0002 |
| 135 | SLU 11 | 0.03 | 1.53 | 14.27 | -0.0347 | 0.0178 | -0.0002 |
| 135 | SLU 12 | 0.03 | 1.53 | 14.27 | -0.0348 | 0.0181 | -0.0002 |
| 135 | SLU 13 | 0.03 | 1.51 | 14.19 | -0.0342 | 0.0181 | -0.0002 |
| 135 | SLU 14 | 0.03 | 1.57 | 14.39 | -0.0357 | 0.0181 | -0.0002 |
| 135 | SLU 15 | 0.03 | 1.57 | 14.4 | -0.0357 | 0.0183 | -0.0002 |
| 135 | SLU 16 | 0.03 | 1.54 | 14.31 | -0.0351 | 0.018 | -0.0002 |
| 135 | SLU 17 | 0.03 | 1.54 | 14.31 | -0.0351 | 0.0182 | -0.0002 |
| 135 | SLU 18 | 0.03 | 1.57 | 15.43 | -0.0353 | 0.0193 | -0.0002 |
| 135 | SLU 19 | 0.03 | 1.57 | 15.44 | -0.0353 | 0.0196 | -0.0002 |
| 135 | SLU 20 | 0.03 | 1.61 | 15.56 | -0.0362 | 0.0196 | -0.0002 |
| 135 | SLU 21 | 0.03 | 1.61 | 15.57 | -0.0362 | 0.0198 | -0.0002 |

| Nodo | Cont. | Reazione a traslazione | | | Reazione a rotazione | | |
|---|---|---|---|---|---|---|---|
| Ind. | N.br. | x | y | z | x | y | z |
| 135 | SLU 22 | 0.02 | 1.47 | 12.03 | -0.0343 | 0.015 | -0.0002 |
| 135 | SLU 23 | 0.02 | 1.47 | 12.03 | -0.0343 | 0.0154 | -0.0002 |
| 135 | SLU 24 | 0.02 | 1.53 | 12.24 | -0.0358 | 0.0153 | -0.0002 |
| 135 | SLU 25 | 0.02 | 1.53 | 12.25 | -0.0359 | 0.0155 | -0.0002 |
| 135 | SLU 26 | 0.02 | 1.51 | 12.16 | -0.0353 | 0.0156 | -0.0002 |
| 135 | SLU 27 | 0.02 | 1.57 | 12.37 | -0.0368 | 0.0155 | -0.0002 |
| 135 | SLU 28 | 0.02 | 1.57 | 12.37 | -0.0368 | 0.0158 | -0.0002 |
| 135 | SLU 29 | 0.02 | 1.54 | 12.28 | -0.0362 | 0.0154 | -0.0002 |
| 135 | SLU 30 | 0.02 | 1.54 | 12.29 | -0.0362 | 0.0157 | -0.0002 |
| 135 | SLU 31 | 0.03 | 1.72 | 15.26 | -0.0391 | 0.0196 | -0.0002 |
| 135 | SLU 32 | 0.03 | 1.78 | 15.47 | -0.0406 | 0.0196 | -0.0003 |
| 135 | SLU 33 | 0.03 | 1.78 | 15.47 | -0.0406 | 0.0198 | -0.0003 |
| 135 | SLU 34 | 0.03 | 1.75 | 15.39 | -0.0401 | 0.0199 | -0.0003 |
| 135 | SLU 35 | 0.03 | 1.81 | 15.59 | -0.0416 | 0.0198 | -0.0003 |
| 135 | SLU 36 | 0.03 | 1.81 | 15.6 | -0.0416 | 0.02 | -0.0003 |
| 135 | SLU 37 | 0.03 | 1.79 | 15.51 | -0.041 | 0.0197 | -0.0003 |
| 135 | SLU 38 | 0.03 | 1.79 | 15.51 | -0.041 | 0.0199 | -0.0003 |
| 135 | SLU 39 | 0.03 | 1.82 | 16.63 | -0.0411 | 0.0211 | -0.0003 |
| 135 | SLU 40 | 0.03 | 1.82 | 16.64 | -0.0412 | 0.0213 | -0.0003 |
| 135 | SLU 41 | 0.03 | 1.86 | 16.76 | -0.0421 | 0.0213 | -0.0003 |
| 135 | SLU 42 | 0.03 | 1.86 | 16.77 | -0.0421 | 0.0215 | -0.0003 |
| 135 | SLU 43 | 0.02 | 1.5 | 13.66 | -0.0349 | 0.0166 | -0.0002 |
| 135 | SLU 44 | 0.02 | 1.5 | 13.67 | -0.0349 | 0.017 | -0.0002 |
| 135 | SLU 45 | 0.02 | 1.56 | 13.88 | -0.0365 | 0.0169 | -0.0003 |
| 135 | SLU 46 | 0.02 | 1.57 | 13.88 | -0.0365 | 0.0172 | -0.0003 |
| 135 | SLU 47 | 0.02 | 1.54 | 13.8 | -0.0359 | 0.0172 | -0.0003 |
| 135 | SLU 48 | 0.02 | 1.6 | 14 | -0.0374 | 0.0171 | -0.0003 |
| 135 | SLU 49 | 0.02 | 1.6 | 14.01 | -0.0374 | 0.0174 | -0.0003 |
| 135 | SLU 50 | 0.02 | 1.58 | 13.91 | -0.0368 | 0.0171 | -0.0003 |
| 135 | SLU 51 | 0.02 | 1.58 | 13.92 | -0.0368 | 0.0173 | -0.0003 |
| 135 | SLU 52 | 0.03 | 1.75 | 16.9 | -0.0397 | 0.0213 | -0.0003 |
| 135 | SLU 53 | 0.03 | 1.81 | 17.1 | -0.0413 | 0.0212 | -0.0003 |
| 135 | SLU 54 | 0.03 | 1.81 | 17.11 | -0.0413 | 0.0214 | -0.0003 |
| 135 | SLU 55 | 0.03 | 1.79 | 17.02 | -0.0407 | 0.0215 | -0.0003 |
| 135 | SLU 56 | 0.03 | 1.85 | 17.23 | -0.0422 | 0.0214 | -0.0003 |
| 135 | SLU 57 | 0.03 | 1.85 | 17.23 | -0.0422 | 0.0217 | -0.0003 |
| 135 | SLU 58 | 0.03 | 1.82 | 17.14 | -0.0416 | 0.0213 | -0.0003 |
| 135 | SLU 59 | 0.03 | 1.83 | 17.15 | -0.0416 | 0.0216 | -0.0003 |
| 135 | SLU 60 | 0.03 | 1.86 | 18.27 | -0.0418 | 0.0227 | -0.0003 |
| 135 | SLU 61 | 0.03 | 1.86 | 18.27 | -0.0418 | 0.0229 | -0.0003 |
| 135 | SLU 62 | 0.03 | 1.89 | 18.4 | -0.0427 | 0.0229 | -0.0003 |
| 135 | SLU 63 | 0.03 | 1.89 | 18.4 | -0.0427 | 0.0232 | -0.0003 |
| 135 | SLU 64 | 0.02 | 1.75 | 14.86 | -0.0408 | 0.0184 | -0.0003 |
| 135 | SLU 65 | 0.02 | 1.75 | 14.87 | -0.0408 | 0.0187 | -0.0003 |
| 135 | SLU 66 | 0.02 | 1.81 | 15.08 | -0.0424 | 0.0187 | -0.0003 |
| 135 | SLU 67 | 0.02 | 1.81 | 15.08 | -0.0424 | 0.0189 | -0.0003 |
| 135 | SLU 68 | 0.03 | 1.79 | 15 | -0.0418 | 0.019 | -0.0003 |
| 135 | SLU 69 | 0.02 | 1.85 | 15.2 | -0.0433 | 0.0189 | -0.0003 |
| 135 | SLU 70 | 0.03 | 1.85 | 15.21 | -0.0433 | 0.0191 | -0.0003 |
| 135 | SLU 71 | 0.02 | 1.82 | 15.12 | -0.0427 | 0.0188 | -0.0003 |
| 135 | SLU 72 | 0.03 | 1.83 | 15.12 | -0.0427 | 0.019 | -0.0003 |
| 135 | SLU 73 | 0.03 | 2 | 18.1 | -0.0456 | 0.023 | -0.0003 |
| 135 | SLU 74 | 0.03 | 2.06 | 18.3 | -0.0471 | 0.0229 | -0.0003 |
| 135 | SLU 75 | 0.03 | 2.06 | 18.31 | -0.0472 | 0.0232 | -0.0003 |
| 135 | SLU 76 | 0.03 | 2.04 | 18.22 | -0.0466 | 0.0232 | -0.0003 |
| 135 | SLU 77 | 0.03 | 2.1 | 18.43 | -0.0481 | 0.0232 | -0.0003 |
| 135 | SLU 78 | 0.03 | 2.1 | 18.44 | -0.0481 | 0.0234 | -0.0003 |
| 135 | SLU 79 | 0.03 | 2.07 | 18.34 | -0.0475 | 0.0231 | -0.0003 |
| 135 | SLU 80 | 0.03 | 2.07 | 18.35 | -0.0475 | 0.0233 | -0.0003 |
| 135 | SLU 81 | 0.03 | 2.1 | 19.47 | -0.0477 | 0.0245 | -0.0003 |
| 135 | SLU 82 | 0.04 | 2.1 | 19.48 | -0.0477 | 0.0247 | -0.0003 |
| 135 | SLU 83 | 0.04 | 2.14 | 19.6 | -0.0486 | 0.0247 | -0.0003 |
| 135 | SLU 84 | 0.04 | 2.14 | 19.6 | -0.0486 | 0.0249 | -0.0003 |
| 135 | SLE RA 1 | 0.02 | 1.29 | 11.17 | -0.0301 | 0.0137 | -0.0002 |
| 135 | SLE RA 2 | 0.02 | 1.29 | 11.17 | -0.0301 | 0.014 | -0.0002 |
| 135 | SLE RA 3 | 0.02 | 1.33 | 11.31 | -0.0311 | 0.0139 | -0.0002 |
| 135 | SLE RA 4 | 0.02 | 1.33 | 11.31 | -0.0311 | 0.0141 | -0.0002 |
| 135 | SLE RA 5 | 0.02 | 1.32 | 11.26 | -0.0308 | 0.0141 | -0.0002 |
| 135 | SLE RA 6 | 0.02 | 1.36 | 11.4 | -0.0318 | 0.0141 | -0.0002 |
| 135 | SLE RA 7 | 0.02 | 1.36 | 11.4 | -0.0318 | 0.0142 | -0.0002 |
| 135 | SLE RA 8 | 0.02 | 1.34 | 11.34 | -0.0314 | 0.014 | -0.0002 |
| 135 | SLE RA 9 | 0.02 | 1.34 | 11.34 | -0.0314 | 0.0142 | -0.0002 |
| 135 | SLE RA 10 | 0.02 | 1.46 | 13.32 | -0.0333 | 0.0168 | -0.0002 |
| 135 | SLE RA 11 | 0.02 | 1.5 | 13.46 | -0.0343 | 0.0168 | -0.0002 |
| 135 | SLE RA 12 | 0.02 | 1.5 | 13.47 | -0.0343 | 0.0169 | -0.0002 |
| 135 | SLE RA 13 | 0.02 | 1.48 | 13.41 | -0.0339 | 0.017 | -0.0002 |
| 135 | SLE RA 14 | 0.02 | 1.52 | 13.55 | -0.035 | 0.0169 | -0.0002 |
| 135 | SLE RA 15 | 0.02 | 1.52 | 13.55 | -0.035 | 0.0171 | -0.0002 |
| 135 | SLE RA 16 | 0.02 | 1.51 | 13.49 | -0.0346 | 0.0169 | -0.0002 |
| 135 | SLE RA 17 | 0.02 | 1.51 | 13.49 | -0.0346 | 0.017 | -0.0002 |
| 135 | SLE RA 18 | 0.03 | 1.53 | 14.24 | -0.0347 | 0.0178 | -0.0002 |
| 135 | SLE RA 19 | 0.03 | 1.53 | 14.24 | -0.0347 | 0.018 | -0.0002 |
| 135 | SLE RA 20 | 0.03 | 1.55 | 14.33 | -0.0353 | 0.018 | -0.0002 |
| 135 | SLE RA 21 | 0.03 | 1.55 | 14.33 | -0.0353 | 0.0181 | -0.0002 |
| 135 | SLE FR 1 | 0.02 | 1.29 | 11.17 | -0.0301 | 0.0137 | -0.0002 |
| 135 | SLE FR 2 | 0.02 | 1.29 | 11.17 | -0.0301 | 0.0138 | -0.0002 |
| 135 | SLE FR 3 | 0.02 | 1.3 | 11.2 | -0.0304 | 0.0138 | -0.0002 |
| 135 | SLE FR 4 | 0.02 | 1.36 | 12.09 | -0.0315 | 0.015 | -0.0002 |

| Nodo | Cont. | Reazione a traslazione | | | Reazione a rotazione | | |
|---|---|---|---|---|---|---|---|
| Ind. | N.br. | x | y | z | x | y | z |
| 135 | SLE FR 5 | 0.02 | 1.37 | 12.12 | -0.0317 | 0.015 | -0.0002 |
| 135 | SLE FR 6 | 0.02 | 1.41 | 12.7 | -0.0324 | 0.0158 | -0.0002 |
| 135 | SLE QP 1 | 0.02 | 1.29 | 11.17 | -0.0301 | 0.0137 | -0.0002 |
| 135 | SLE QP 2 | 0.02 | 1.36 | 12.09 | -0.0315 | 0.015 | -0.0002 |
| 135 | SLD 1 | 0.26 | 1.6 | 10.58 | -0.0499 | 0.1981 | 0.003 |
| 135 | SLD 2 | 0.26 | 1.6 | 10.58 | -0.0499 | 0.1981 | 0.003 |
| 135 | SLD 3 | 0.24 | -0.07 | 10.79 | 0.0268 | 0.181 | 0.0028 |
| 135 | SLD 4 | 0.24 | -0.07 | 10.79 | 0.0268 | 0.181 | 0.0028 |
| 135 | SLD 5 | 0.13 | 3.97 | 11.31 | -0.1532 | 0.0959 | 0.0011 |
| 135 | SLD 6 | 0.13 | 3.97 | 11.31 | -0.1532 | 0.0959 | 0.0011 |
| 135 | SLD 7 | 0.05 | -1.6 | 12.03 | 0.1022 | 0.0388 | 0.0003 |
| 135 | SLD 8 | 0.05 | -1.6 | 12.03 | 0.1022 | 0.0388 | 0.0003 |
| 135 | SLD 9 | -0.01 | 4.33 | 12.15 | -0.1651 | -0.0089 | -0.0007 |
| 135 | SLD 10 | -0.01 | 4.33 | 12.15 | -0.1651 | -0.0089 | -0.0007 |
| 135 | SLD 11 | -0.09 | -1.24 | 12.87 | 0.0902 | -0.066 | -0.0016 |
| 135 | SLD 12 | -0.09 | -1.24 | 12.87 | 0.0902 | -0.066 | -0.0016 |
| 135 | SLD 13 | -0.2 | 2.8 | 13.39 | -0.0897 | -0.1511 | -0.0032 |
| 135 | SLD 14 | -0.2 | 2.8 | 13.39 | -0.0897 | -0.1511 | -0.0032 |
| 135 | SLD 15 | -0.22 | 1.13 | 13.6 | -0.0131 | -0.1682 | -0.0034 |
| 135 | SLD 16 | -0.22 | 1.13 | 13.6 | -0.0131 | -0.1682 | -0.0034 |
| 135 | SLV 1 | 0.61 | 1.92 | 8.55 | -0.0745 | 0.4702 | 0.0077 |
| 135 | SLV 2 | 0.61 | 1.92 | 8.55 | -0.0745 | 0.4702 | 0.0077 |
| 135 | SLV 3 | 0.56 | -2 | 9.05 | 0.1053 | 0.4271 | 0.0071 |
| 135 | SLV 4 | 0.56 | -2 | 9.05 | 0.1053 | 0.4271 | 0.0071 |
| 135 | SLV 5 | 0.29 | 7.48 | 10.27 | -0.3172 | 0.2169 | 0.0031 |
| 135 | SLV 6 | 0.29 | 7.48 | 10.27 | -0.3172 | 0.2169 | 0.0031 |
| 135 | SLV 7 | 0.09 | -5.6 | 11.94 | 0.2823 | 0.0732 | 0.001 |
| 135 | SLV 8 | 0.09 | -5.6 | 11.94 | 0.2823 | 0.0732 | 0.001 |
| 135 | SLV 9 | -0.05 | 8.32 | 12.24 | -0.3453 | -0.0433 | -0.0015 |
| 135 | SLV 10 | -0.05 | 8.32 | 12.24 | -0.3453 | -0.0433 | -0.0015 |
| 135 | SLV 11 | -0.24 | -4.75 | 13.91 | 0.2542 | -0.187 | -0.0035 |
| 135 | SLV 12 | -0.24 | -4.75 | 13.91 | 0.2542 | -0.187 | -0.0035 |
| 135 | SLV 13 | -0.52 | 4.73 | 15.13 | -0.1683 | -0.3972 | -0.0075 |
| 135 | SLV 14 | -0.52 | 4.73 | 15.13 | -0.1683 | -0.3972 | -0.0075 |
| 135 | SLV 15 | -0.57 | 0.81 | 15.63 | 0.0116 | -0.4403 | -0.0081 |
| 135 | SLV 16 | -0.57 | 0.81 | 15.63 | 0.0116 | -0.4403 | -0.0081 |
| 136 | SLU 1 | 0.15 | 1.69 | 21.6 | -0.1741 | 0.0946 | 0 |
| 136 | SLU 2 | 0.16 | 4.03 | 21.22 | -0.2948 | 0.1018 | 0 |
| 136 | SLU 3 | 0.15 | 1.58 | 22.36 | -0.1702 | 0.0979 | 0 |
| 136 | SLU 4 | 0.16 | 2.99 | 22.14 | -0.2426 | 0.1023 | 0 |
| 136 | SLU 5 | 0.16 | 3.84 | 21.76 | -0.2857 | 0.1037 | 0 |
| 136 | SLU 6 | 0.16 | 1.4 | 22.9 | -0.1611 | 0.0998 | 0.0001 |
| 136 | SLU 7 | 0.16 | 2.8 | 22.67 | -0.2335 | 0.1042 | 0 |
| 136 | SLU 8 | 0.16 | 1.31 | 22.68 | -0.1559 | 0.0984 | 0.0001 |
| 136 | SLU 9 | 0.16 | 2.72 | 22.45 | -0.2283 | 0.1027 | 0 |
| 136 | SLU 10 | 0.18 | 4.5 | 24.38 | -0.3295 | 0.1188 | 0.0001 |
| 136 | SLU 11 | 0.18 | 2.05 | 25.52 | -0.205 | 0.1148 | 0.0001 |
| 136 | SLU 12 | 0.19 | 3.46 | 25.29 | -0.2774 | 0.1192 | 0.0001 |
| 136 | SLU 13 | 0.19 | 4.31 | 24.92 | -0.3204 | 0.1207 | 0.0001 |
| 136 | SLU 14 | 0.18 | 1.86 | 26.06 | -0.1959 | 0.1167 | 0.0001 |
| 136 | SLU 15 | 0.19 | 3.27 | 25.83 | -0.2683 | 0.1211 | 0.0001 |
| 136 | SLU 16 | 0.18 | 1.78 | 25.83 | -0.1906 | 0.1153 | 0.0001 |
| 136 | SLU 17 | 0.19 | 3.19 | 25.61 | -0.263 | 0.1197 | 0.0001 |
| 136 | SLU 18 | 0.19 | 2.36 | 26.12 | -0.2238 | 0.1187 | 0.0001 |
| 136 | SLU 19 | 0.19 | 3.76 | 25.89 | -0.2962 | 0.1231 | 0.0001 |
| 136 | SLU 20 | 0.19 | 2.17 | 26.65 | -0.2146 | 0.1206 | 0.0001 |
| 136 | SLU 21 | 0.19 | 3.57 | 26.42 | -0.287 | 0.125 | 0.0001 |
| 136 | SLU 22 | 0.17 | 2.01 | 24.57 | -0.2005 | 0.1102 | 0.0001 |
| 136 | SLU 23 | 0.18 | 4.36 | 24.19 | -0.3211 | 0.1175 | 0.0001 |
| 136 | SLU 24 | 0.18 | 1.91 | 25.33 | -0.1966 | 0.1136 | 0.0001 |
| 136 | SLU 25 | 0.18 | 3.32 | 25.1 | -0.269 | 0.1179 | 0.0001 |
| 136 | SLU 26 | 0.18 | 4.17 | 24.73 | -0.312 | 0.1194 | 0.0001 |
| 136 | SLU 27 | 0.18 | 1.72 | 25.87 | -0.1875 | 0.1155 | 0.0001 |
| 136 | SLU 28 | 0.19 | 3.13 | 25.64 | -0.2599 | 0.1198 | 0.0001 |
| 136 | SLU 29 | 0.18 | 1.64 | 25.64 | -0.1822 | 0.114 | 0.0001 |
| 136 | SLU 30 | 0.18 | 3.04 | 25.41 | -0.2546 | 0.1184 | 0.0001 |
| 136 | SLU 31 | 0.21 | 4.82 | 27.35 | -0.3559 | 0.1344 | 0.0001 |
| 136 | SLU 32 | 0.21 | 2.38 | 28.49 | -0.2313 | 0.1305 | 0.0001 |
| 136 | SLU 33 | 0.21 | 3.78 | 28.26 | -0.3037 | 0.1348 | 0.0001 |
| 136 | SLU 34 | 0.21 | 4.64 | 27.88 | -0.3468 | 0.1363 | 0.0001 |
| 136 | SLU 35 | 0.21 | 2.19 | 29.02 | -0.2222 | 0.1324 | 0.0001 |
| 136 | SLU 36 | 0.21 | 3.59 | 28.8 | -0.2946 | 0.1368 | 0.0001 |
| 136 | SLU 37 | 0.21 | 2.1 | 28.8 | -0.217 | 0.131 | 0.0001 |
| 136 | SLU 38 | 0.21 | 3.51 | 28.57 | -0.2894 | 0.1353 | 0.0001 |
| 136 | SLU 39 | 0.21 | 2.68 | 29.08 | -0.2501 | 0.1344 | 0.0001 |
| 136 | SLU 40 | 0.22 | 4.09 | 28.85 | -0.3225 | 0.1388 | 0.0001 |
| 136 | SLU 41 | 0.22 | 2.49 | 29.62 | -0.241 | 0.1363 | 0.0001 |
| 136 | SLU 42 | 0.22 | 3.9 | 29.39 | -0.3134 | 0.1407 | 0.0001 |
| 136 | SLU 43 | 0.19 | 2.08 | 27.07 | -0.2173 | 0.1176 | 0.0001 |
| 136 | SLU 44 | 0.19 | 4.43 | 26.69 | -0.338 | 0.1248 | 0.0001 |
| 136 | SLU 45 | 0.19 | 1.98 | 27.83 | -0.2134 | 0.1209 | 0.0001 |
| 136 | SLU 46 | 0.2 | 3.39 | 27.6 | -0.2858 | 0.1252 | 0.0001 |
| 136 | SLU 47 | 0.2 | 4.24 | 27.23 | -0.3289 | 0.1267 | 0.0001 |
| 136 | SLU 48 | 0.19 | 1.79 | 28.36 | -0.2043 | 0.1228 | 0.0001 |
| 136 | SLU 49 | 0.2 | 3.2 | 28.14 | -0.2767 | 0.1272 | 0.0001 |
| 136 | SLU 50 | 0.19 | 1.71 | 28.14 | -0.1991 | 0.1214 | 0.0001 |
| 136 | SLU 51 | 0.2 | 3.11 | 27.91 | -0.2715 | 0.1257 | 0.0001 |
| 136 | SLU 52 | 0.22 | 4.89 | 29.85 | -0.3727 | 0.1417 | 0.0001 |

| Nodo | Cont. | Reazione a traslazione | | | Reazione a rotazione | | |
|---|---|---|---|---|---|---|---|
| Ind. | N.br. | x | y | z | x | y | z |
| 136 | SLU 53 | 0.22 | 2.45 | 30.99 | -0.2482 | 0.1378 | 0.0001 |
| 136 | SLU 54 | 0.22 | 3.85 | 30.76 | -0.3206 | 0.1422 | 0.0001 |
| 136 | SLU 55 | 0.22 | 4.71 | 30.38 | -0.3636 | 0.1437 | 0.0001 |
| 136 | SLU 56 | 0.22 | 2.26 | 31.52 | -0.2391 | 0.1397 | 0.0001 |
| 136 | SLU 57 | 0.22 | 3.67 | 31.29 | -0.3115 | 0.1441 | 0.0001 |
| 136 | SLU 58 | 0.22 | 2.17 | 31.3 | -0.2338 | 0.1383 | 0.0001 |
| 136 | SLU 59 | 0.22 | 3.58 | 31.07 | -0.3062 | 0.1426 | 0.0001 |
| 136 | SLU 60 | 0.22 | 2.75 | 31.58 | -0.267 | 0.1417 | 0.0001 |
| 136 | SLU 61 | 0.23 | 4.16 | 31.35 | -0.3394 | 0.1461 | 0.0001 |
| 136 | SLU 62 | 0.23 | 2.56 | 32.12 | -0.2578 | 0.1436 | 0.0001 |
| 136 | SLU 63 | 0.23 | 3.97 | 31.89 | -0.3302 | 0.148 | 0.0001 |
| 136 | SLU 64 | 0.21 | 2.41 | 30.04 | -0.2437 | 0.1332 | 0.0001 |
| 136 | SLU 65 | 0.22 | 4.75 | 29.66 | -0.3643 | 0.1405 | 0.0001 |
| 136 | SLU 66 | 0.22 | 2.3 | 30.79 | -0.2398 | 0.1366 | 0.0001 |
| 136 | SLU 67 | 0.22 | 3.71 | 30.57 | -0.3122 | 0.1409 | 0.0001 |
| 136 | SLU 68 | 0.22 | 4.56 | 30.19 | -0.3552 | 0.1424 | 0.0001 |
| 136 | SLU 69 | 0.22 | 2.12 | 31.33 | -0.2307 | 0.1385 | 0.0001 |
| 136 | SLU 70 | 0.22 | 3.52 | 31.1 | -0.3031 | 0.1428 | 0.0001 |
| 136 | SLU 71 | 0.22 | 2.03 | 31.11 | -0.2254 | 0.137 | 0.0001 |
| 136 | SLU 72 | 0.22 | 3.44 | 30.88 | -0.2978 | 0.1414 | 0.0001 |
| 136 | SLU 73 | 0.24 | 5.22 | 32.81 | -0.3991 | 0.1574 | 0.0001 |
| 136 | SLU 74 | 0.24 | 2.77 | 33.95 | -0.2745 | 0.1535 | 0.0001 |
| 136 | SLU 75 | 0.25 | 4.18 | 33.72 | -0.3469 | 0.1578 | 0.0001 |
| 136 | SLU 76 | 0.25 | 5.03 | 33.35 | -0.39 | 0.1593 | 0.0001 |
| 136 | SLU 77 | 0.25 | 2.58 | 34.49 | -0.2654 | 0.1554 | 0.0001 |
| 136 | SLU 78 | 0.25 | 3.99 | 34.26 | -0.3378 | 0.1597 | 0.0001 |
| 136 | SLU 79 | 0.24 | 2.5 | 34.27 | -0.2602 | 0.154 | 0.0001 |
| 136 | SLU 80 | 0.25 | 3.91 | 34.04 | -0.3326 | 0.1583 | 0.0001 |
| 136 | SLU 81 | 0.25 | 3.08 | 34.55 | -0.2933 | 0.1574 | 0.0001 |
| 136 | SLU 82 | 0.25 | 4.48 | 34.32 | -0.3657 | 0.1618 | 0.0001 |
| 136 | SLU 83 | 0.25 | 2.89 | 35.08 | -0.2842 | 0.1593 | 0.0001 |
| 136 | SLU 84 | 0.26 | 4.29 | 34.85 | -0.3566 | 0.1637 | 0.0001 |
| 136 | SLE RA 1 | 0.16 | 1.78 | 22.45 | -0.1816 | 0.099 | 0 |
| 136 | SLE RA 2 | 0.16 | 3.34 | 22.2 | -0.2621 | 0.1039 | 0 |
| 136 | SLE RA 3 | 0.16 | 1.71 | 22.96 | -0.1791 | 0.1013 | 0.0001 |
| 136 | SLE RA 4 | 0.16 | 2.65 | 22.81 | -0.2273 | 0.1042 | 0 |
| 136 | SLE RA 5 | 0.16 | 3.22 | 22.56 | -0.256 | 0.1052 | 0 |
| 136 | SLE RA 6 | 0.16 | 1.59 | 23.32 | -0.173 | 0.1025 | 0.0001 |
| 136 | SLE RA 7 | 0.16 | 2.52 | 23.16 | -0.2212 | 0.1054 | 0.0001 |
| 136 | SLE RA 8 | 0.16 | 1.53 | 23.17 | -0.1695 | 0.1016 | 0.0001 |
| 136 | SLE RA 9 | 0.16 | 2.47 | 23.01 | -0.2177 | 0.1045 | 0.0001 |
| 136 | SLE RA 10 | 0.18 | 3.66 | 24.3 | -0.2852 | 0.1152 | 0.0001 |
| 136 | SLE RA 11 | 0.18 | 2.02 | 25.06 | -0.2022 | 0.1125 | 0.0001 |
| 136 | SLE RA 12 | 0.18 | 2.96 | 24.91 | -0.2505 | 0.1154 | 0.0001 |
| 136 | SLE RA 13 | 0.18 | 3.53 | 24.66 | -0.2792 | 0.1164 | 0.0001 |
| 136 | SLE RA 14 | 0.18 | 1.9 | 25.42 | -0.1961 | 0.1138 | 0.0001 |
| 136 | SLE RA 15 | 0.18 | 2.84 | 25.27 | -0.2444 | 0.1167 | 0.0001 |
| 136 | SLE RA 16 | 0.18 | 1.84 | 25.27 | -0.1927 | 0.1129 | 0.0001 |
| 136 | SLE RA 17 | 0.18 | 2.78 | 25.12 | -0.2409 | 0.1158 | 0.0001 |
| 136 | SLE RA 18 | 0.18 | 2.23 | 25.46 | -0.2147 | 0.1151 | 0.0001 |
| 136 | SLE RA 19 | 0.18 | 3.16 | 25.31 | -0.263 | 0.1181 | 0.0001 |
| 136 | SLE RA 20 | 0.18 | 2.1 | 25.82 | -0.2087 | 0.1164 | 0.0001 |
| 136 | SLE RA 21 | 0.19 | 3.04 | 25.67 | -0.2569 | 0.1193 | 0.0001 |
| 136 | SLE FR 1 | 0.16 | 1.78 | 22.45 | -0.1816 | 0.099 | 0 |
| 136 | SLE FR 2 | 0.16 | 2.09 | 22.4 | -0.1977 | 0.1 | 0 |
| 136 | SLE FR 3 | 0.16 | 1.73 | 22.6 | -0.1792 | 0.0995 | 0 |
| 136 | SLE FR 4 | 0.16 | 2.23 | 23.3 | -0.2077 | 0.1048 | 0.0001 |
| 136 | SLE FR 5 | 0.16 | 1.86 | 23.5 | -0.1891 | 0.1044 | 0.0001 |
| 136 | SLE FR 6 | 0.17 | 2 | 23.96 | -0.1982 | 0.1071 | 0.0001 |
| 136 | SLE QP 1 | 0.16 | 1.78 | 22.45 | -0.1816 | 0.099 | 0 |
| 136 | SLE QP 2 | 0.16 | 1.91 | 23.35 | -0.1916 | 0.1039 | 0.0001 |
| 136 | SLD 1 | 0.36 | 5.11 | 24.71 | -0.348 | 0.2509 | 0.0001 |
| 136 | SLD 2 | 0.36 | 5.11 | 24.71 | -0.348 | 0.2509 | 0.0001 |
| 136 | SLD 3 | 0.3 | 1.19 | 24.18 | -0.1579 | 0.2055 | 0.0002 |
| 136 | SLD 4 | 0.3 | 1.19 | 24.18 | -0.1579 | 0.2055 | 0.0002 |
| 136 | SLD 5 | 0.31 | 8.83 | 24.57 | -0.5268 | 0.2168 | 0 |
| 136 | SLD 6 | 0.31 | 8.83 | 24.57 | -0.5268 | 0.2168 | 0 |
| 136 | SLD 7 | 0.12 | -4.26 | 22.79 | 0.1068 | 0.0655 | 0.0001 |
| 136 | SLD 8 | 0.12 | -4.26 | 22.79 | 0.1068 | 0.0655 | 0.0001 |
| 136 | SLD 9 | 0.21 | 8.09 | 23.92 | -0.4899 | 0.1422 | 0 |
| 136 | SLD 10 | 0.21 | 8.09 | 23.92 | -0.4899 | 0.1422 | 0 |
| 136 | SLD 11 | 0.01 | -5 | 22.14 | 0.1436 | -0.0091 | 0.0001 |
| 136 | SLD 12 | 0.01 | -5 | 22.14 | 0.1436 | -0.0091 | 0.0001 |
| 136 | SLD 13 | 0.02 | 2.64 | 22.53 | -0.2252 | 0.0022 | -0.0001 |
| 136 | SLD 14 | 0.02 | 2.64 | 22.53 | -0.2252 | 0.0022 | -0.0001 |
| 136 | SLD 15 | -0.04 | -1.28 | 22 | -0.0352 | -0.0432 | 0 |
| 136 | SLD 16 | -0.04 | -1.28 | 22 | -0.0352 | -0.0432 | 0 |
| 136 | SLV 1 | 0.64 | 9.57 | 26.59 | -0.5666 | 0.4513 | 0.0003 |
| 136 | SLV 2 | 0.64 | 9.57 | 26.59 | -0.5666 | 0.4513 | 0.0003 |
| 136 | SLV 3 | 0.49 | 0.18 | 25.25 | -0.111 | 0.3397 | 0.0003 |
| 136 | SLV 4 | 0.49 | 0.18 | 25.25 | -0.111 | 0.3397 | 0.0003 |
| 136 | SLV 5 | 0.53 | 18.46 | 26.36 | -0.9951 | 0.3772 | 0 |
| 136 | SLV 6 | 0.53 | 18.46 | 26.36 | -0.9951 | 0.3772 | 0 |
| 136 | SLV 7 | 0.04 | -12.86 | 21.89 | 0.5236 | 0.0055 | 0.0002 |
| 136 | SLV 8 | 0.04 | -12.86 | 21.89 | 0.5236 | 0.0055 | 0.0002 |
| 136 | SLV 9 | 0.29 | 16.68 | 24.82 | -0.9067 | 0.2022 | -0.0001 |
| 136 | SLV 10 | 0.29 | 16.68 | 24.82 | -0.9067 | 0.2022 | -0.0001 |
| 136 | SLV 11 | -0.2 | -14.63 | 20.35 | 0.612 | -0.1695 | 0.0001 |

| Nodo | Cont. | Reazione a traslazione | | | Reazione a rotazione | | |
|---|---|---|---|---|---|---|---|
| Ind. | N.br. | x | y | z | x | y | z |
| 136 | SLV 12 | -0.2 | -14.63 | 20.35 | 0.612 | -0.1695 | 0.0001 |
| 136 | SLV 13 | -0.16 | 3.65 | 21.46 | -0.2721 | -0.132 | -0.0002 |
| 136 | SLV 14 | -0.16 | 3.65 | 21.46 | -0.2721 | -0.132 | -0.0002 |
| 136 | SLV 15 | -0.31 | -5.74 | 20.12 | 0.1835 | -0.2435 | -0.0002 |
| 136 | SLV 16 | -0.31 | -5.74 | 20.12 | 0.1835 | -0.2435 | -0.0002 |
| 137 | SLU 1 | 0.04 | -3.12 | 39.1 | 0.1295 | 0.0315 | -0.003 |
| 137 | SLU 2 | 0.04 | -3.44 | 39.3 | 0.1415 | 0.0318 | -0.003 |
| 137 | SLU 3 | 0.04 | -3.07 | 40.19 | 0.1289 | 0.0322 | -0.003 |
| 137 | SLU 4 | 0.05 | -3.26 | 40.31 | 0.1362 | 0.0323 | -0.003 |
| 137 | SLU 5 | 0.04 | -3.38 | 39.94 | 0.1402 | 0.0321 | -0.003 |
| 137 | SLU 6 | 0.05 | -3.01 | 40.82 | 0.1276 | 0.0325 | -0.0031 |
| 137 | SLU 7 | 0.05 | -3.2 | 40.95 | 0.1349 | 0.0327 | -0.0031 |
| 137 | SLU 8 | 0.04 | -3 | 40.37 | 0.1268 | 0.0322 | -0.003 |
| 137 | SLU 9 | 0.05 | -3.19 | 40.49 | 0.1341 | 0.0324 | -0.0031 |
| 137 | SLU 10 | 0.05 | -4.09 | 47.11 | 0.1693 | 0.0388 | -0.0037 |
| 137 | SLU 11 | 0.05 | -3.72 | 47.99 | 0.1567 | 0.0393 | -0.0037 |
| 137 | SLU 12 | 0.06 | -3.91 | 48.12 | 0.1639 | 0.0394 | -0.0037 |
| 137 | SLU 13 | 0.06 | -4.03 | 47.74 | 0.168 | 0.0392 | -0.0037 |
| 137 | SLU 14 | 0.06 | -3.65 | 48.63 | 0.1554 | 0.0396 | -0.0038 |
| 137 | SLU 15 | 0.06 | -3.84 | 48.75 | 0.1626 | 0.0398 | -0.0038 |
| 137 | SLU 16 | 0.06 | -3.65 | 48.18 | 0.1546 | 0.0393 | -0.0037 |
| 137 | SLU 17 | 0.06 | -3.84 | 48.3 | 0.1618 | 0.0395 | -0.0037 |
| 137 | SLU 18 | 0.06 | -4.05 | 50.25 | 0.1691 | 0.0416 | -0.0039 |
| 137 | SLU 19 | 0.06 | -4.24 | 50.37 | 0.1763 | 0.0418 | -0.004 |
| 137 | SLU 20 | 0.06 | -3.99 | 50.89 | 0.1677 | 0.042 | -0.004 |
| 137 | SLU 21 | 0.06 | -4.18 | 51.01 | 0.175 | 0.0421 | -0.004 |
| 137 | SLU 22 | 0.05 | -3.26 | 44.3 | 0.1396 | 0.0355 | -0.0033 |
| 137 | SLU 23 | 0.05 | -3.57 | 44.5 | 0.1517 | 0.0358 | -0.0034 |
| 137 | SLU 24 | 0.05 | -3.2 | 45.39 | 0.1391 | 0.0362 | -0.0034 |
| 137 | SLU 25 | 0.05 | -3.39 | 45.51 | 0.1463 | 0.0363 | -0.0034 |
| 137 | SLU 26 | 0.05 | -3.51 | 45.14 | 0.1504 | 0.0361 | -0.0034 |
| 137 | SLU 27 | 0.05 | -3.14 | 46.03 | 0.1378 | 0.0365 | -0.0034 |
| 137 | SLU 28 | 0.05 | -3.33 | 46.15 | 0.145 | 0.0367 | -0.0035 |
| 137 | SLU 29 | 0.05 | -3.13 | 45.57 | 0.137 | 0.0362 | -0.0034 |
| 137 | SLU 30 | 0.05 | -3.32 | 45.69 | 0.1442 | 0.0364 | -0.0034 |
| 137 | SLU 31 | 0.06 | -4.22 | 52.31 | 0.1794 | 0.0428 | -0.0041 |
| 137 | SLU 32 | 0.06 | -3.85 | 53.19 | 0.1668 | 0.0433 | -0.0041 |
| 137 | SLU 33 | 0.06 | -4.04 | 53.32 | 0.174 | 0.0434 | -0.0041 |
| 137 | SLU 34 | 0.06 | -4.16 | 52.94 | 0.1781 | 0.0432 | -0.0041 |
| 137 | SLU 35 | 0.06 | -3.79 | 53.83 | 0.1655 | 0.0436 | -0.0041 |
| 137 | SLU 36 | 0.06 | -3.98 | 53.95 | 0.1727 | 0.0438 | -0.0042 |
| 137 | SLU 37 | 0.06 | -3.78 | 53.38 | 0.1647 | 0.0433 | -0.0041 |
| 137 | SLU 38 | 0.06 | -3.97 | 53.5 | 0.1719 | 0.0435 | -0.0041 |
| 137 | SLU 39 | 0.06 | -4.18 | 55.45 | 0.1792 | 0.0456 | -0.0043 |
| 137 | SLU 40 | 0.06 | -4.37 | 55.57 | 0.1864 | 0.0458 | -0.0044 |
| 137 | SLU 41 | 0.06 | -4.12 | 56.09 | 0.1779 | 0.046 | -0.0044 |
| 137 | SLU 42 | 0.07 | -4.31 | 56.21 | 0.1851 | 0.0461 | -0.0044 |
| 137 | SLU 43 | 0.05 | -4.01 | 49.04 | 0.1648 | 0.0396 | -0.0037 |
| 137 | SLU 44 | 0.06 | -4.33 | 49.25 | 0.1769 | 0.0398 | -0.0037 |
| 137 | SLU 45 | 0.06 | -3.96 | 50.13 | 0.1643 | 0.0403 | -0.0038 |
| 137 | SLU 46 | 0.06 | -4.15 | 50.26 | 0.1716 | 0.0404 | -0.0038 |
| 137 | SLU 47 | 0.06 | -4.27 | 49.88 | 0.1756 | 0.0402 | -0.0038 |
| 137 | SLU 48 | 0.06 | -3.9 | 50.77 | 0.163 | 0.0406 | -0.0038 |
| 137 | SLU 49 | 0.06 | -4.09 | 50.89 | 0.1703 | 0.0408 | -0.0038 |
| 137 | SLU 50 | 0.06 | -3.89 | 50.32 | 0.1622 | 0.0403 | -0.0038 |
| 137 | SLU 51 | 0.06 | -4.08 | 50.44 | 0.1695 | 0.0405 | -0.0038 |
| 137 | SLU 52 | 0.07 | -4.98 | 57.05 | 0.2046 | 0.0469 | -0.0044 |
| 137 | SLU 53 | 0.07 | -4.61 | 57.94 | 0.192 | 0.0473 | -0.0045 |
| 137 | SLU 54 | 0.07 | -4.8 | 58.06 | 0.1993 | 0.0475 | -0.0045 |
| 137 | SLU 55 | 0.07 | -4.92 | 57.69 | 0.2033 | 0.0473 | -0.0045 |
| 137 | SLU 56 | 0.07 | -4.54 | 58.58 | 0.1907 | 0.0477 | -0.0045 |
| 137 | SLU 57 | 0.07 | -4.74 | 58.7 | 0.198 | 0.0479 | -0.0045 |
| 137 | SLU 58 | 0.07 | -4.54 | 58.12 | 0.1899 | 0.0474 | -0.0045 |
| 137 | SLU 59 | 0.07 | -4.73 | 58.24 | 0.1972 | 0.0475 | -0.0045 |
| 137 | SLU 60 | 0.07 | -4.94 | 60.19 | 0.2044 | 0.0497 | -0.0047 |
| 137 | SLU 61 | 0.07 | -5.13 | 60.32 | 0.2117 | 0.0499 | -0.0047 |
| 137 | SLU 62 | 0.07 | -4.88 | 60.83 | 0.2031 | 0.0501 | -0.0047 |
| 137 | SLU 63 | 0.07 | -5.07 | 60.95 | 0.2104 | 0.0502 | -0.0048 |
| 137 | SLU 64 | 0.06 | -4.15 | 54.24 | 0.1749 | 0.0436 | -0.0041 |
| 137 | SLU 65 | 0.06 | -4.46 | 54.45 | 0.187 | 0.0438 | -0.0041 |
| 137 | SLU 66 | 0.06 | -4.09 | 55.33 | 0.1744 | 0.0443 | -0.0042 |
| 137 | SLU 67 | 0.06 | -4.28 | 55.46 | 0.1817 | 0.0444 | -0.0042 |
| 137 | SLU 68 | 0.06 | -4.4 | 55.08 | 0.1857 | 0.0442 | -0.0042 |
| 137 | SLU 69 | 0.06 | -4.03 | 55.97 | 0.1731 | 0.0446 | -0.0042 |
| 137 | SLU 70 | 0.06 | -4.22 | 56.09 | 0.1804 | 0.0448 | -0.0042 |
| 137 | SLU 71 | 0.06 | -4.02 | 55.52 | 0.1723 | 0.0443 | -0.0042 |
| 137 | SLU 72 | 0.06 | -4.22 | 55.64 | 0.1796 | 0.0445 | -0.0042 |
| 137 | SLU 73 | 0.07 | -5.11 | 62.25 | 0.2147 | 0.0509 | -0.0048 |
| 137 | SLU 74 | 0.07 | -4.74 | 63.14 | 0.2021 | 0.0513 | -0.0049 |
| 137 | SLU 75 | 0.07 | -4.93 | 63.26 | 0.2094 | 0.0515 | -0.0049 |
| 137 | SLU 76 | 0.07 | -5.05 | 62.89 | 0.2134 | 0.0513 | -0.0049 |
| 137 | SLU 77 | 0.07 | -4.68 | 63.78 | 0.2008 | 0.0517 | -0.0049 |
| 137 | SLU 78 | 0.07 | -4.87 | 63.9 | 0.2081 | 0.0518 | -0.0049 |
| 137 | SLU 79 | 0.07 | -4.67 | 63.32 | 0.2 | 0.0514 | -0.0049 |
| 137 | SLU 80 | 0.07 | -4.86 | 63.45 | 0.2073 | 0.0515 | -0.0049 |
| 137 | SLU 81 | 0.08 | -5.07 | 65.4 | 0.2145 | 0.0537 | -0.0051 |
| 137 | SLU 82 | 0.08 | -5.26 | 65.52 | 0.2218 | 0.0539 | -0.0051 |
| 137 | SLU 83 | 0.08 | -5.01 | 66.03 | 0.2132 | 0.0541 | -0.0051 |

| Nodo | Cont. | Reazione a traslazione | | | Reazione a rotazione | | |
|---|---|---|---|---|---|---|---|
| Ind. | N.br. | x | y | z | x | y | z |
| 137 | SLU 84 | 0.08 | -5.2 | 66.15 | 0.2205 | 0.0542 | -0.0051 |
| 137 | SLE RA 1 | 0.05 | -3.16 | 40.58 | 0.1323 | 0.0327 | -0.0031 |
| 137 | SLE RA 2 | 0.05 | -3.37 | 40.72 | 0.1404 | 0.0328 | -0.0031 |
| 137 | SLE RA 3 | 0.05 | -3.12 | 41.31 | 0.132 | 0.0331 | -0.0031 |
| 137 | SLE RA 4 | 0.05 | -3.25 | 41.39 | 0.1368 | 0.0332 | -0.0031 |
| 137 | SLE RA 5 | 0.05 | -3.33 | 41.14 | 0.1395 | 0.0331 | -0.0031 |
| 137 | SLE RA 6 | 0.05 | -3.08 | 41.74 | 0.1311 | 0.0333 | -0.0031 |
| 137 | SLE RA 7 | 0.05 | -3.21 | 41.82 | 0.136 | 0.0334 | -0.0031 |
| 137 | SLE RA 8 | 0.05 | -3.08 | 41.43 | 0.1306 | 0.0331 | -0.0031 |
| 137 | SLE RA 9 | 0.05 | -3.21 | 41.51 | 0.1354 | 0.0332 | -0.0031 |
| 137 | SLE RA 10 | 0.05 | -3.8 | 45.92 | 0.1589 | 0.0375 | -0.0036 |
| 137 | SLE RA 11 | 0.05 | -3.56 | 46.51 | 0.1505 | 0.0378 | -0.0036 |
| 137 | SLE RA 12 | 0.05 | -3.68 | 46.6 | 0.1553 | 0.0379 | -0.0036 |
| 137 | SLE RA 13 | 0.05 | -3.76 | 46.35 | 0.158 | 0.0378 | -0.0036 |
| 137 | SLE RA 14 | 0.05 | -3.51 | 46.94 | 0.1496 | 0.0381 | -0.0036 |
| 137 | SLE RA 15 | 0.05 | -3.64 | 47.02 | 0.1545 | 0.0382 | -0.0036 |
| 137 | SLE RA 16 | 0.05 | -3.51 | 46.64 | 0.1491 | 0.0378 | -0.0036 |
| 137 | SLE RA 17 | 0.05 | -3.64 | 46.72 | 0.1539 | 0.0379 | -0.0036 |
| 137 | SLE RA 18 | 0.06 | -3.78 | 48.02 | 0.1587 | 0.0394 | -0.0037 |
| 137 | SLE RA 19 | 0.06 | -3.9 | 48.1 | 0.1636 | 0.0395 | -0.0037 |
| 137 | SLE RA 20 | 0.06 | -3.74 | 48.44 | 0.1579 | 0.0396 | -0.0038 |
| 137 | SLE RA 21 | 0.06 | -3.86 | 48.52 | 0.1627 | 0.0397 | -0.0038 |
| 137 | SLE FR 1 | 0.05 | -3.16 | 40.58 | 0.1323 | 0.0327 | -0.0031 |
| 137 | SLE FR 2 | 0.05 | -3.2 | 40.61 | 0.134 | 0.0327 | -0.0031 |
| 137 | SLE FR 3 | 0.05 | -3.14 | 40.75 | 0.132 | 0.0327 | -0.0031 |
| 137 | SLE FR 4 | 0.05 | -3.39 | 42.84 | 0.1419 | 0.0347 | -0.0033 |
| 137 | SLE FR 5 | 0.05 | -3.33 | 42.98 | 0.1399 | 0.0348 | -0.0033 |
| 137 | SLE FR 6 | 0.05 | -3.47 | 44.3 | 0.1455 | 0.036 | -0.0034 |
| 137 | SLE QP 1 | 0.05 | -3.16 | 40.58 | 0.1323 | 0.0327 | -0.0031 |
| 137 | SLE QP 2 | 0.05 | -3.34 | 42.81 | 0.1403 | 0.0347 | -0.0033 |
| 137 | SLD 1 | 0.25 | -0.13 | 35.18 | 0.009 | 0.1792 | -0.0161 |
| 137 | SLD 2 | 0.25 | -0.13 | 35.18 | 0.009 | 0.1792 | -0.0161 |
| 137 | SLD 3 | 0.27 | -3.95 | 37.12 | 0.1596 | 0.1957 | -0.0179 |
| 137 | SLD 4 | 0.27 | -3.95 | 37.12 | 0.1596 | 0.1957 | -0.0179 |
| 137 | SLD 5 | 0.07 | 3.42 | 37.57 | -0.1275 | 0.0531 | -0.0044 |
| 137 | SLD 6 | 0.07 | 3.42 | 37.57 | -0.1275 | 0.0531 | -0.0044 |
| 137 | SLD 7 | 0.16 | -9.33 | 44.06 | 0.3745 | 0.1079 | -0.0104 |
| 137 | SLD 8 | 0.16 | -9.33 | 44.06 | 0.3745 | 0.1079 | -0.0104 |
| 137 | SLD 9 | -0.06 | 2.64 | 41.57 | -0.094 | -0.0386 | 0.0038 |
| 137 | SLD 10 | -0.06 | 2.64 | 41.57 | -0.094 | -0.0386 | 0.0038 |
| 137 | SLD 11 | 0.03 | -10.11 | 48.05 | 0.4081 | 0.0163 | -0.0021 |
| 137 | SLD 12 | 0.03 | -10.11 | 48.05 | 0.4081 | 0.0163 | -0.0021 |
| 137 | SLD 13 | -0.18 | -2.74 | 48.51 | 0.1209 | -0.1263 | 0.0114 |
| 137 | SLD 14 | -0.18 | -2.74 | 48.51 | 0.1209 | -0.1263 | 0.0114 |
| 137 | SLD 15 | -0.15 | -6.56 | 50.45 | 0.2715 | -0.1099 | 0.0096 |
| 137 | SLD 16 | -0.15 | -6.56 | 50.45 | 0.2715 | -0.1099 | 0.0096 |
| 137 | SLV 1 | 0.54 | 4.12 | 24.96 | -0.1645 | 0.3935 | -0.035 |
| 137 | SLV 2 | 0.54 | 4.12 | 24.96 | -0.1645 | 0.3935 | -0.035 |
| 137 | SLV 3 | 0.61 | -4.74 | 29.46 | 0.1844 | 0.4338 | -0.0394 |
| 137 | SLV 4 | 0.61 | -4.74 | 29.46 | 0.1844 | 0.4338 | -0.0394 |
| 137 | SLV 5 | 0.1 | 12.34 | 30.63 | -0.4802 | 0.0812 | -0.0062 |
| 137 | SLV 6 | 0.1 | 12.34 | 30.63 | -0.4802 | 0.0812 | -0.0062 |
| 137 | SLV 7 | 0.31 | -17.21 | 45.63 | 0.6825 | 0.2156 | -0.0207 |
| 137 | SLV 8 | 0.31 | -17.21 | 45.63 | 0.6825 | 0.2156 | -0.0207 |
| 137 | SLV 9 | -0.22 | 10.52 | 39.99 | -0.402 | -0.1462 | 0.0142 |
| 137 | SLV 10 | -0.22 | 10.52 | 39.99 | -0.402 | -0.1462 | 0.0142 |
| 137 | SLV 11 | 0 | -19.03 | 54.99 | 0.7607 | -0.0118 | -0.0003 |
| 137 | SLV 12 | 0 | -19.03 | 54.99 | 0.7607 | -0.0118 | -0.0003 |
| 137 | SLV 13 | -0.51 | -1.95 | 56.16 | 0.0962 | -0.3644 | 0.0329 |
| 137 | SLV 14 | -0.51 | -1.95 | 56.16 | 0.0962 | -0.3644 | 0.0329 |
| 137 | SLV 15 | -0.45 | -10.81 | 60.66 | 0.445 | -0.3241 | 0.0285 |
| 137 | SLV 16 | -0.45 | -10.81 | 60.66 | 0.445 | -0.3241 | 0.0285 |
| 138 | SLU 1 | 0 | -0.56 | 36.56 | -0.0298 | -0.0027 | 0 |
| 138 | SLU 2 | 0 | 1.54 | 36.53 | -0.1384 | -0.0081 | 0 |
| 138 | SLU 3 | 0 | -0.81 | 37.74 | -0.0193 | -0.0029 | 0 |
| 138 | SLU 4 | 0 | 0.45 | 37.73 | -0.0845 | -0.0061 | 0 |
| 138 | SLU 5 | 0 | 1.23 | 37.3 | -0.1243 | -0.0082 | 0 |
| 138 | SLU 6 | 0 | -1.13 | 38.51 | -0.0052 | -0.003 | 0 |
| 138 | SLU 7 | 0 | 0.14 | 38.49 | -0.0704 | -0.0062 | 0 |
| 138 | SLU 8 | 0 | -1.19 | 38.08 | -0.0016 | -0.0029 | 0 |
| 138 | SLU 9 | 0 | 0.07 | 38.07 | -0.0668 | -0.0061 | 0 |
| 138 | SLU 10 | 0 | 1.65 | 42.57 | -0.1496 | -0.0086 | 0 |
| 138 | SLU 11 | 0 | -0.71 | 43.78 | -0.0305 | -0.0034 | 0 |
| 138 | SLU 12 | 0 | 0.56 | 43.77 | -0.0956 | -0.0066 | 0 |
| 138 | SLU 13 | 0 | 1.33 | 43.34 | -0.1355 | -0.0087 | 0 |
| 138 | SLU 14 | 0 | -1.02 | 44.55 | -0.0163 | -0.0035 | 0 |
| 138 | SLU 15 | 0 | 0.24 | 44.53 | -0.0815 | -0.0067 | 0 |
| 138 | SLU 16 | 0 | -1.09 | 44.12 | -0.0127 | -0.0034 | 0 |
| 138 | SLU 17 | 0 | 0.18 | 44.11 | -0.0779 | -0.0066 | 0 |
| 138 | SLU 18 | 0 | -0.41 | 45.19 | -0.0457 | -0.0035 | 0 |
| 138 | SLU 19 | 0 | 0.85 | 45.17 | -0.1109 | -0.0067 | 0 |
| 138 | SLU 20 | 0 | -0.73 | 45.95 | -0.0316 | -0.0035 | 0 |
| 138 | SLU 21 | 0 | 0.54 | 45.94 | -0.0968 | -0.0068 | 0 |
| 138 | SLU 22 | 0 | -0.58 | 42.15 | -0.0341 | -0.0032 | 0 |
| 138 | SLU 23 | 0 | 1.52 | 42.13 | -0.1427 | -0.0086 | 0 |
| 138 | SLU 24 | 0 | -0.83 | 43.34 | -0.0236 | -0.0033 | 0 |
| 138 | SLU 25 | 0 | 0.43 | 43.32 | -0.0887 | -0.0066 | 0 |
| 138 | SLU 26 | 0 | 1.21 | 42.89 | -0.1286 | -0.0087 | 0 |

| Nodo | Cont. | Reazione a traslazione | | | Reazione a rotazione | | |
|---|---|---|---|---|---|---|---|
| Ind. | N.br. | x | y | z | x | y | z |
| 138 | SLU 27 | 0 | -1.15 | 44.1 | -0.0095 | -0.0034 | 0 |
| 138 | SLU 28 | 0 | 0.12 | 44.08 | -0.0746 | -0.0067 | 0 |
| 138 | SLU 29 | 0 | -1.21 | 43.68 | -0.0059 | -0.0034 | 0 |
| 138 | SLU 30 | 0 | 0.05 | 43.66 | -0.071 | -0.0066 | 0 |
| 138 | SLU 31 | 0 | 1.63 | 48.17 | -0.1538 | -0.0091 | 0 |
| 138 | SLU 32 | 0 | -0.73 | 49.38 | -0.0347 | -0.0038 | 0 |
| 138 | SLU 33 | 0 | 0.54 | 49.36 | -0.0999 | -0.0071 | 0 |
| 138 | SLU 34 | 0 | 1.31 | 48.93 | -0.1397 | -0.0092 | 0 |
| 138 | SLU 35 | 0 | -1.04 | 50.14 | -0.0206 | -0.0039 | 0 |
| 138 | SLU 36 | 0 | 0.22 | 50.12 | -0.0858 | -0.0072 | 0 |
| 138 | SLU 37 | 0 | -1.11 | 49.72 | -0.017 | -0.0039 | 0 |
| 138 | SLU 38 | 0 | 0.16 | 49.7 | -0.0822 | -0.0071 | 0 |
| 138 | SLU 39 | 0 | -0.43 | 50.78 | -0.05 | -0.0039 | 0 |
| 138 | SLU 40 | 0 | 0.83 | 50.76 | -0.1151 | -0.0072 | 0 |
| 138 | SLU 41 | 0 | -0.75 | 51.54 | -0.0359 | -0.004 | 0 |
| 138 | SLU 42 | 0 | 0.52 | 51.53 | -0.101 | -0.0072 | 0 |
| 138 | SLU 43 | 0 | -0.72 | 45.61 | -0.0373 | -0.0034 | 0 |
| 138 | SLU 44 | 0 | 1.38 | 45.58 | -0.1459 | -0.0088 | 0 |
| 138 | SLU 45 | 0 | -0.97 | 46.79 | -0.0268 | -0.0035 | 0 |
| 138 | SLU 46 | 0 | 0.29 | 46.78 | -0.092 | -0.0068 | 0 |
| 138 | SLU 47 | 0 | 1.07 | 46.35 | -0.1318 | -0.0089 | 0 |
| 138 | SLU 48 | 0 | -1.29 | 47.56 | -0.0127 | -0.0036 | 0 |
| 138 | SLU 49 | 0 | -0.03 | 47.54 | -0.0779 | -0.0069 | 0 |
| 138 | SLU 50 | 0 | -1.35 | 47.13 | -0.0091 | -0.0036 | 0 |
| 138 | SLU 51 | 0 | -0.09 | 47.12 | -0.0743 | -0.0068 | 0 |
| 138 | SLU 52 | 0 | 1.49 | 51.62 | -0.1571 | -0.0093 | 0 |
| 138 | SLU 53 | 0 | -0.87 | 52.83 | -0.0379 | -0.004 | 0 |
| 138 | SLU 54 | 0 | 0.39 | 52.82 | -0.1031 | -0.0073 | 0 |
| 138 | SLU 55 | 0 | 1.17 | 52.39 | -0.1429 | -0.0094 | 0 |
| 138 | SLU 56 | 0 | -1.18 | 53.6 | -0.0238 | -0.0041 | 0 |
| 138 | SLU 57 | 0 | 0.08 | 53.58 | -0.089 | -0.0074 | 0 |
| 138 | SLU 58 | 0 | -1.25 | 53.18 | -0.0202 | -0.0041 | 0 |
| 138 | SLU 59 | 0 | 0.01 | 53.16 | -0.0854 | -0.0073 | 0 |
| 138 | SLU 60 | 0 | -0.57 | 54.24 | -0.0532 | -0.0041 | 0 |
| 138 | SLU 61 | 0 | 0.69 | 54.22 | -0.1184 | -0.0074 | 0 |
| 138 | SLU 62 | 0 | -0.89 | 55 | -0.0391 | -0.0042 | 0 |
| 138 | SLU 63 | 0 | 0.37 | 54.99 | -0.1043 | -0.0074 | 0 |
| 138 | SLU 64 | 0 | -0.74 | 51.2 | -0.0416 | -0.0039 | 0 |
| 138 | SLU 65 | 0 | 1.36 | 51.18 | -0.1502 | -0.0092 | 0 |
| 138 | SLU 66 | 0 | -0.99 | 52.39 | -0.0311 | -0.004 | 0 |
| 138 | SLU 67 | 0 | 0.27 | 52.37 | -0.0962 | -0.0072 | 0 |
| 138 | SLU 68 | 0 | 1.05 | 51.94 | -0.1361 | -0.0093 | 0 |
| 138 | SLU 69 | 0 | -1.31 | 53.15 | -0.0169 | -0.0041 | 0 |
| 138 | SLU 70 | 0 | -0.05 | 53.13 | -0.0821 | -0.0073 | 0 |
| 138 | SLU 71 | 0 | -1.37 | 52.73 | -0.0133 | -0.004 | 0 |
| 138 | SLU 72 | 0 | -0.11 | 52.71 | -0.0785 | -0.0073 | 0 |
| 138 | SLU 73 | 0 | 1.47 | 57.22 | -0.1613 | -0.0098 | 0 |
| 138 | SLU 74 | 0 | -0.89 | 58.43 | -0.0422 | -0.0045 | 0 |
| 138 | SLU 75 | 0 | 0.37 | 58.41 | -0.1074 | -0.0077 | 0 |
| 138 | SLU 76 | 0 | 1.15 | 57.98 | -0.1472 | -0.0098 | 0 |
| 138 | SLU 77 | 0 | -1.2 | 59.19 | -0.0281 | -0.0046 | 0 |
| 138 | SLU 78 | 0 | 0.06 | 59.17 | -0.0932 | -0.0078 | 0 |
| 138 | SLU 79 | 0 | -1.27 | 58.77 | -0.0245 | -0.0045 | 0 |
| 138 | SLU 80 | 0 | -0.01 | 58.75 | -0.0896 | -0.0078 | 0 |
| 138 | SLU 81 | 0 | -0.59 | 59.83 | -0.0575 | -0.0046 | 0 |
| 138 | SLU 82 | 0 | 0.67 | 59.81 | -0.1226 | -0.0078 | 0 |
| 138 | SLU 83 | 0 | -0.91 | 60.59 | -0.0434 | -0.0047 | 0 |
| 138 | SLU 84 | 0 | 0.35 | 60.58 | -0.1085 | -0.0079 | 0 |
| 138 | SLE RA 1 | 0 | -0.57 | 38.16 | -0.031 | -0.0029 | 0 |
| 138 | SLE RA 2 | 0 | 0.84 | 38.14 | -0.1034 | -0.0065 | 0 |
| 138 | SLE RA 3 | 0 | -0.73 | 38.95 | -0.024 | -0.003 | 0 |
| 138 | SLE RA 4 | 0 | 0.11 | 38.94 | -0.0675 | -0.0051 | 0 |
| 138 | SLE RA 5 | 0 | 0.63 | 38.65 | -0.094 | -0.0065 | 0 |
| 138 | SLE RA 6 | 0 | -0.94 | 39.45 | -0.0146 | -0.003 | 0 |
| 138 | SLE RA 7 | 0 | -0.1 | 39.45 | -0.0581 | -0.0052 | 0 |
| 138 | SLE RA 8 | 0 | -0.99 | 39.17 | -0.0122 | -0.003 | 0 |
| 138 | SLE RA 9 | 0 | -0.15 | 39.16 | -0.0557 | -0.0051 | 0 |
| 138 | SLE RA 10 | 0 | 0.91 | 42.17 | -0.1109 | -0.0068 | 0 |
| 138 | SLE RA 11 | 0 | -0.66 | 42.97 | -0.0315 | -0.0033 | 0 |
| 138 | SLE RA 12 | 0 | 0.18 | 42.96 | -0.0749 | -0.0055 | 0 |
| 138 | SLE RA 13 | 0 | 0.7 | 42.68 | -0.1015 | -0.0069 | 0 |
| 138 | SLE RA 14 | 0 | -0.87 | 43.48 | -0.0221 | -0.0034 | 0 |
| 138 | SLE RA 15 | 0 | -0.03 | 43.47 | -0.0655 | -0.0055 | 0 |
| 138 | SLE RA 16 | 0 | -0.92 | 43.2 | -0.0196 | -0.0033 | 0 |
| 138 | SLE RA 17 | 0 | -0.08 | 43.19 | -0.0631 | -0.0055 | 0 |
| 138 | SLE RA 18 | 0 | -0.47 | 43.91 | -0.0416 | -0.0033 | 0 |
| 138 | SLE RA 19 | 0 | 0.37 | 43.9 | -0.0851 | -0.0055 | 0 |
| 138 | SLE RA 20 | 0 | -0.68 | 44.42 | -0.0322 | -0.0034 | 0 |
| 138 | SLE RA 21 | 0 | 0.16 | 44.41 | -0.0757 | -0.0056 | 0 |
| 138 | SLE FR 1 | 0 | -0.57 | 38.16 | -0.031 | -0.0029 | 0 |
| 138 | SLE FR 2 | 0 | -0.29 | 38.15 | -0.0455 | -0.0036 | 0 |
| 138 | SLE FR 3 | 0 | -0.65 | 38.36 | -0.0273 | -0.0029 | 0 |
| 138 | SLE FR 4 | 0 | -0.26 | 39.88 | -0.0487 | -0.0037 | 0 |
| 138 | SLE FR 5 | 0 | -0.62 | 40.08 | -0.0305 | -0.003 | 0 |
| 138 | SLE FR 6 | 0 | -0.52 | 41.03 | -0.0363 | -0.0031 | 0 |
| 138 | SLE QP 1 | 0 | -0.57 | 38.16 | -0.031 | -0.0029 | 0 |
| 138 | SLE QP 2 | 0 | -0.54 | 39.88 | -0.0342 | -0.003 | 0 |
| 138 | SLD 1 | 0.13 | -0.26 | 41.33 | -0.0472 | 0.0988 | 0.0001 |

| Nodo | Cont. | Reazione a traslazione | | | Reazione a rotazione | | |
|---|---|---|---|---|---|---|---|
| Ind. | N.br. | x | y | z | x | y | z |
| 138 | SLD 2 | 0.13 | -0.26 | 41.33 | -0.0472 | 0.0988 | 0.0001 |
| 138 | SLD 3 | 0.15 | -3.89 | 40.77 | 0.1273 | 0.1213 | 0.0001 |
| 138 | SLD 4 | 0.15 | -3.89 | 40.77 | 0.1273 | 0.1213 | 0.0001 |
| 138 | SLD 5 | 0 | 5.05 | 41.15 | -0.3028 | -0.0066 | 0 |
| 138 | SLD 6 | 0 | 5.05 | 41.15 | -0.3028 | -0.0066 | 0 |
| 138 | SLD 7 | 0.08 | -7.04 | 39.31 | 0.2789 | 0.0684 | 0.0001 |
| 138 | SLD 8 | 0.08 | -7.04 | 39.31 | 0.2789 | 0.0684 | 0.0001 |
| 138 | SLD 9 | -0.09 | 5.97 | 40.45 | -0.3473 | -0.0745 | -0.0001 |
| 138 | SLD 10 | -0.09 | 5.97 | 40.45 | -0.3473 | -0.0745 | -0.0001 |
| 138 | SLD 11 | 0 | -6.12 | 38.61 | 0.2343 | 0.0006 | 0 |
| 138 | SLD 12 | 0 | -6.12 | 38.61 | 0.2343 | 0.0006 | 0 |
| 138 | SLD 13 | -0.16 | 2.81 | 38.99 | -0.1958 | -0.1273 | -0.0001 |
| 138 | SLD 14 | -0.16 | 2.81 | 38.99 | -0.1958 | -0.1273 | -0.0001 |
| 138 | SLD 15 | -0.13 | -0.81 | 38.43 | -0.0213 | -0.1048 | -0.0001 |
| 138 | SLD 16 | -0.13 | -0.81 | 38.43 | -0.0213 | -0.1048 | -0.0001 |
| 138 | SLV 1 | 0.31 | -0.01 | 43.33 | -0.0587 | 0.2422 | 0.0002 |
| 138 | SLV 2 | 0.31 | -0.01 | 43.33 | -0.0587 | 0.2422 | 0.0002 |
| 138 | SLV 3 | 0.37 | -8.5 | 41.98 | 0.3502 | 0.2995 | 0.0002 |
| 138 | SLV 4 | 0.37 | -8.5 | 41.98 | 0.3502 | 0.2995 | 0.0002 |
| 138 | SLV 5 | -0.01 | 12.49 | 42.96 | -0.6616 | -0.0163 | 0 |
| 138 | SLV 6 | -0.01 | 12.49 | 42.96 | -0.6616 | -0.0163 | 0 |
| 138 | SLV 7 | 0.21 | -15.79 | 38.47 | 0.7012 | 0.1746 | 0.0001 |
| 138 | SLV 8 | 0.21 | -15.79 | 38.47 | 0.7012 | 0.1746 | 0.0001 |
| 138 | SLV 9 | -0.21 | 14.72 | 41.3 | -0.7696 | -0.1806 | -0.0001 |
| 138 | SLV 10 | -0.21 | 14.72 | 41.3 | -0.7696 | -0.1806 | -0.0001 |
| 138 | SLV 11 | 0 | -13.56 | 36.8 | 0.5932 | 0.0103 | 0 |
| 138 | SLV 12 | 0 | -13.56 | 36.8 | 0.5932 | 0.0103 | 0 |
| 138 | SLV 13 | -0.38 | 7.42 | 37.78 | -0.4186 | -0.3055 | -0.0002 |
| 138 | SLV 14 | -0.38 | 7.42 | 37.78 | -0.4186 | -0.3055 | -0.0002 |
| 138 | SLV 15 | -0.31 | -1.06 | 36.43 | -0.0098 | -0.2482 | -0.0002 |
| 138 | SLV 16 | -0.31 | -1.06 | 36.43 | -0.0098 | -0.2482 | -0.0002 |
| 139 | SLU 1 | 0.01 | 2.76 | 53.78 | -0.1372 | 0.0065 | 0 |
| 139 | SLU 2 | 0.03 | 3.22 | 56.52 | -0.1625 | 0.0522 | 0 |
| 139 | SLU 3 | 0.01 | 2.87 | 55.38 | -0.1427 | 0.0065 | 0 |
| 139 | SLU 4 | 0.02 | 3.14 | 57.03 | -0.1578 | 0.0339 | 0 |
| 139 | SLU 5 | 0.03 | 3.27 | 57.46 | -0.1656 | 0.0522 | 0 |
| 139 | SLU 6 | 0.01 | 2.92 | 56.32 | -0.1458 | 0.0065 | 0 |
| 139 | SLU 7 | 0.02 | 3.2 | 57.96 | -0.1609 | 0.0339 | 0 |
| 139 | SLU 8 | 0.01 | 2.87 | 55.66 | -0.1434 | 0.0065 | 0 |
| 139 | SLU 9 | 0.02 | 3.14 | 57.3 | -0.1586 | 0.0339 | 0 |
| 139 | SLU 10 | 0.03 | 3.81 | 62.87 | -0.1888 | 0.0526 | 0 |
| 139 | SLU 11 | 0.01 | 3.46 | 61.73 | -0.169 | 0.0069 | 0 |
| 139 | SLU 12 | 0.02 | 3.73 | 63.37 | -0.1842 | 0.0343 | 0 |
| 139 | SLU 13 | 0.03 | 3.87 | 63.81 | -0.1919 | 0.0526 | 0 |
| 139 | SLU 14 | 0.01 | 3.51 | 62.66 | -0.1721 | 0.0069 | 0 |
| 139 | SLU 15 | 0.02 | 3.79 | 64.31 | -0.1873 | 0.0343 | 0 |
| 139 | SLU 16 | 0.01 | 3.46 | 62 | -0.1698 | 0.0068 | 0 |
| 139 | SLU 17 | 0.02 | 3.74 | 63.65 | -0.185 | 0.0343 | 0 |
| 139 | SLU 18 | 0.01 | 3.61 | 62.85 | -0.1749 | 0.007 | 0 |
| 139 | SLU 19 | 0.02 | 3.88 | 64.49 | -0.19 | 0.0345 | 0 |
| 139 | SLU 20 | 0.01 | 3.66 | 63.79 | -0.178 | 0.007 | 0 |
| 139 | SLU 21 | 0.02 | 3.94 | 65.43 | -0.1931 | 0.0345 | 0 |
| 139 | SLU 22 | 0.01 | 3.26 | 60.39 | -0.1606 | 0.0069 | 0 |
| 139 | SLU 23 | 0.03 | 3.72 | 63.13 | -0.1859 | 0.0526 | 0 |
| 139 | SLU 24 | 0.01 | 3.37 | 61.99 | -0.1661 | 0.0069 | 0 |
| 139 | SLU 25 | 0.02 | 3.64 | 63.63 | -0.1812 | 0.0343 | 0 |
| 139 | SLU 26 | 0.03 | 3.77 | 64.07 | -0.189 | 0.0526 | 0 |
| 139 | SLU 27 | 0.01 | 3.42 | 62.92 | -0.1692 | 0.0069 | 0 |
| 139 | SLU 28 | 0.02 | 3.7 | 64.57 | -0.1844 | 0.0343 | 0 |
| 139 | SLU 29 | 0.01 | 3.37 | 62.26 | -0.1669 | 0.0069 | 0 |
| 139 | SLU 30 | 0.02 | 3.65 | 63.91 | -0.182 | 0.0343 | 0 |
| 139 | SLU 31 | 0.03 | 4.31 | 69.47 | -0.2123 | 0.053 | 0 |
| 139 | SLU 32 | 0.01 | 3.96 | 68.33 | -0.1925 | 0.0073 | 0 |
| 139 | SLU 33 | 0.02 | 4.24 | 69.97 | -0.2076 | 0.0347 | 0 |
| 139 | SLU 34 | 0.03 | 4.37 | 70.41 | -0.2154 | 0.053 | 0 |
| 139 | SLU 35 | 0.01 | 4.02 | 69.27 | -0.1956 | 0.0073 | 0 |
| 139 | SLU 36 | 0.02 | 4.29 | 70.91 | -0.2107 | 0.0347 | 0 |
| 139 | SLU 37 | 0.01 | 3.96 | 68.61 | -0.1932 | 0.0072 | 0 |
| 139 | SLU 38 | 0.02 | 4.24 | 70.25 | -0.2084 | 0.0347 | 0 |
| 139 | SLU 39 | 0.01 | 4.11 | 69.45 | -0.1983 | 0.0074 | 0 |
| 139 | SLU 40 | 0.02 | 4.38 | 71.09 | -0.2135 | 0.0349 | 0 |
| 139 | SLU 41 | 0.01 | 4.16 | 70.39 | -0.2014 | 0.0074 | 0 |
| 139 | SLU 42 | 0.02 | 4.44 | 72.03 | -0.2166 | 0.0348 | 0 |
| 139 | SLU 43 | 0.01 | 3.42 | 67.66 | -0.1703 | 0.0083 | 0 |
| 139 | SLU 44 | 0.03 | 3.87 | 70.4 | -0.1956 | 0.054 | 0 |
| 139 | SLU 45 | 0.01 | 3.52 | 69.25 | -0.1758 | 0.0083 | 0 |
| 139 | SLU 46 | 0.02 | 3.8 | 70.9 | -0.1909 | 0.0358 | 0 |
| 139 | SLU 47 | 0.03 | 3.93 | 71.33 | -0.1987 | 0.054 | 0 |
| 139 | SLU 48 | 0.01 | 3.58 | 70.19 | -0.1789 | 0.0083 | 0 |
| 139 | SLU 49 | 0.02 | 3.85 | 71.84 | -0.1941 | 0.0357 | 0 |
| 139 | SLU 50 | 0.01 | 3.53 | 69.53 | -0.1766 | 0.0083 | 0 |
| 139 | SLU 51 | 0.02 | 3.8 | 71.18 | -0.1917 | 0.0357 | 0 |
| 139 | SLU 52 | 0.03 | 4.47 | 76.74 | -0.222 | 0.0544 | 0 |
| 139 | SLU 53 | 0.01 | 4.12 | 75.6 | -0.2022 | 0.0087 | 0 |
| 139 | SLU 54 | 0.02 | 4.39 | 77.24 | -0.2173 | 0.0361 | 0 |
| 139 | SLU 55 | 0.03 | 4.52 | 77.68 | -0.2251 | 0.0544 | 0 |
| 139 | SLU 56 | 0.01 | 4.17 | 76.54 | -0.2053 | 0.0087 | 0 |
| 139 | SLU 57 | 0.02 | 4.45 | 78.18 | -0.2204 | 0.0361 | 0 |

| Nodo | Cont. | Reazione a traslazione | | | Reazione a rotazione | | |
|---|---|---|---|---|---|---|---|
| Ind. | N.br. | x | y | z | x | y | z |
| 139 | SLU 58 | 0.01 | 4.12 | 75.88 | -0.2029 | 0.0087 | 0 |
| 139 | SLU 59 | 0.02 | 4.39 | 77.52 | -0.2181 | 0.0361 | 0 |
| 139 | SLU 60 | 0.01 | 4.27 | 76.72 | -0.208 | 0.0089 | 0 |
| 139 | SLU 61 | 0.02 | 4.54 | 78.36 | -0.2232 | 0.0363 | 0 |
| 139 | SLU 62 | 0.01 | 4.32 | 77.66 | -0.2111 | 0.0088 | 0 |
| 139 | SLU 63 | 0.02 | 4.59 | 79.3 | -0.2263 | 0.0363 | 0 |
| 139 | SLU 64 | 0.01 | 3.92 | 74.26 | -0.1938 | 0.0087 | 0 |
| 139 | SLU 65 | 0.03 | 4.38 | 77 | -0.219 | 0.0544 | 0 |
| 139 | SLU 66 | 0.01 | 4.02 | 75.86 | -0.1992 | 0.0087 | 0 |
| 139 | SLU 67 | 0.02 | 4.3 | 77.5 | -0.2144 | 0.0361 | 0 |
| 139 | SLU 68 | 0.03 | 4.43 | 77.94 | -0.2221 | 0.0544 | 0 |
| 139 | SLU 69 | 0.01 | 4.08 | 76.79 | -0.2023 | 0.0087 | 0 |
| 139 | SLU 70 | 0.02 | 4.35 | 78.44 | -0.2175 | 0.0361 | 0 |
| 139 | SLU 71 | 0.01 | 4.03 | 76.14 | -0.2 | 0.0087 | 0 |
| 139 | SLU 72 | 0.02 | 4.3 | 77.78 | -0.2151 | 0.0361 | 0 |
| 139 | SLU 73 | 0.04 | 4.97 | 83.34 | -0.2454 | 0.0548 | 0 |
| 139 | SLU 74 | 0.01 | 4.62 | 82.2 | -0.2256 | 0.0091 | 0 |
| 139 | SLU 75 | 0.02 | 4.89 | 83.84 | -0.2407 | 0.0365 | 0 |
| 139 | SLU 76 | 0.04 | 5.02 | 84.28 | -0.2485 | 0.0548 | 0 |
| 139 | SLU 77 | 0.01 | 4.67 | 83.14 | -0.2287 | 0.0091 | 0 |
| 139 | SLU 78 | 0.02 | 4.95 | 84.78 | -0.2439 | 0.0365 | 0 |
| 139 | SLU 79 | 0.01 | 4.62 | 82.48 | -0.2264 | 0.0091 | 0 |
| 139 | SLU 80 | 0.02 | 4.9 | 84.12 | -0.2415 | 0.0365 | 0 |
| 139 | SLU 81 | 0.01 | 4.77 | 83.32 | -0.2314 | 0.0092 | 0 |
| 139 | SLU 82 | 0.02 | 5.04 | 84.97 | -0.2466 | 0.0367 | 0 |
| 139 | SLU 83 | 0.01 | 4.82 | 84.26 | -0.2346 | 0.0092 | 0 |
| 139 | SLU 84 | 0.02 | 5.1 | 85.9 | -0.2497 | 0.0367 | 0 |
| 139 | SLE RA 1 | 0.01 | 2.9 | 55.67 | -0.1439 | 0.0066 | 0 |
| 139 | SLE RA 2 | 0.02 | 3.21 | 57.5 | -0.1607 | 0.0371 | 0 |
| 139 | SLE RA 3 | 0.01 | 2.97 | 56.74 | -0.1475 | 0.0066 | 0 |
| 139 | SLE RA 4 | 0.02 | 3.16 | 57.83 | -0.1576 | 0.0249 | 0 |
| 139 | SLE RA 5 | 0.02 | 3.24 | 58.12 | -0.1628 | 0.0371 | 0 |
| 139 | SLE RA 6 | 0.01 | 3.01 | 57.36 | -0.1496 | 0.0066 | 0 |
| 139 | SLE RA 7 | 0.02 | 3.19 | 58.46 | -0.1597 | 0.0249 | 0 |
| 139 | SLE RA 8 | 0.01 | 2.98 | 56.92 | -0.1481 | 0.0066 | 0 |
| 139 | SLE RA 9 | 0.02 | 3.16 | 58.02 | -0.1582 | 0.0249 | 0 |
| 139 | SLE RA 10 | 0.02 | 3.6 | 61.73 | -0.1783 | 0.0373 | 0 |
| 139 | SLE RA 11 | 0.01 | 3.37 | 60.97 | -0.1651 | 0.0069 | 0 |
| 139 | SLE RA 12 | 0.02 | 3.55 | 62.06 | -0.1752 | 0.0252 | 0 |
| 139 | SLE RA 13 | 0.02 | 3.64 | 62.35 | -0.1804 | 0.0373 | 0 |
| 139 | SLE RA 14 | 0.01 | 3.41 | 61.59 | -0.1672 | 0.0069 | 0 |
| 139 | SLE RA 15 | 0.02 | 3.59 | 62.69 | -0.1773 | 0.0251 | 0 |
| 139 | SLE RA 16 | 0.01 | 3.37 | 61.15 | -0.1656 | 0.0068 | 0 |
| 139 | SLE RA 17 | 0.02 | 3.56 | 62.25 | -0.1757 | 0.0251 | 0 |
| 139 | SLE RA 18 | 0.01 | 3.47 | 61.71 | -0.169 | 0.007 | 0 |
| 139 | SLE RA 19 | 0.02 | 3.65 | 62.81 | -0.1791 | 0.0253 | 0 |
| 139 | SLE RA 20 | 0.01 | 3.51 | 62.34 | -0.1711 | 0.007 | 0 |
| 139 | SLE RA 21 | 0.02 | 3.69 | 63.43 | -0.1812 | 0.0252 | 0 |
| 139 | SLE FR 1 | 0.01 | 2.9 | 55.67 | -0.1439 | 0.0066 | 0 |
| 139 | SLE FR 2 | 0.01 | 2.96 | 56.04 | -0.1473 | 0.0127 | 0 |
| 139 | SLE FR 3 | 0.01 | 2.92 | 55.92 | -0.1447 | 0.0066 | 0 |
| 139 | SLE FR 4 | 0.01 | 3.13 | 57.85 | -0.1548 | 0.0128 | 0 |
| 139 | SLE FR 5 | 0.01 | 3.09 | 57.73 | -0.1523 | 0.0067 | 0 |
| 139 | SLE FR 6 | 0.01 | 3.19 | 58.69 | -0.1565 | 0.0068 | 0 |
| 139 | SLE QP 1 | 0.01 | 2.9 | 55.67 | -0.1439 | 0.0066 | 0 |
| 139 | SLE QP 2 | 0.01 | 3.07 | 57.48 | -0.1514 | 0.0067 | 0 |
| 139 | SLD 1 | 0.21 | 3.92 | 43.92 | -0.1832 | 0.1694 | 0.0002 |
| 139 | SLD 2 | 0.21 | 3.92 | 43.92 | -0.1832 | 0.1694 | 0.0002 |
| 139 | SLD 3 | 0.32 | -0.59 | 40.48 | 0.008 | 0.27 | 0.0001 |
| 139 | SLD 4 | 0.32 | -0.59 | 40.48 | 0.008 | 0.27 | 0.0001 |
| 139 | SLD 5 | -0.1 | 10.17 | 58.63 | -0.4509 | -0.097 | 0.0001 |
| 139 | SLD 6 | -0.1 | 10.17 | 58.63 | -0.4509 | -0.097 | 0.0001 |
| 139 | SLD 7 | 0.27 | -4.87 | 47.17 | 0.1863 | 0.2382 | 0 |
| 139 | SLD 8 | 0.27 | -4.87 | 47.17 | 0.1863 | 0.2382 | 0 |
| 139 | SLD 9 | -0.26 | 11.01 | 67.8 | -0.4892 | -0.2248 | 0 |
| 139 | SLD 10 | -0.26 | 11.01 | 67.8 | -0.4892 | -0.2248 | 0 |
| 139 | SLD 11 | 0.11 | -4.02 | 56.34 | 0.148 | 0.1104 | -0.0001 |
| 139 | SLD 12 | 0.11 | -4.02 | 56.34 | 0.148 | 0.1104 | -0.0001 |
| 139 | SLD 13 | -0.31 | 6.74 | 74.49 | -0.3109 | -0.2565 | -0.0001 |
| 139 | SLD 14 | -0.31 | 6.74 | 74.49 | -0.3109 | -0.2565 | -0.0001 |
| 139 | SLD 15 | -0.2 | 2.23 | 71.05 | -0.1197 | -0.156 | -0.0002 |
| 139 | SLD 16 | -0.2 | 2.23 | 71.05 | -0.1197 | -0.156 | -0.0002 |
| 139 | SLV 1 | 0.46 | 5.02 | 25.78 | -0.224 | 0.3814 | 0.0004 |
| 139 | SLV 2 | 0.46 | 5.02 | 25.78 | -0.224 | 0.3814 | 0.0004 |
| 139 | SLV 3 | 0.75 | -5.46 | 17.68 | 0.2201 | 0.6372 | 0.0003 |
| 139 | SLV 4 | 0.75 | -5.46 | 17.68 | 0.2201 | 0.6372 | 0.0003 |
| 139 | SLV 5 | -0.28 | 19.55 | 60.25 | -0.8467 | -0.2688 | 0.0003 |
| 139 | SLV 6 | -0.28 | 19.55 | 60.25 | -0.8467 | -0.2688 | 0.0003 |
| 139 | SLV 7 | 0.65 | -15.38 | 33.26 | 0.6336 | 0.5838 | 0 |
| 139 | SLV 8 | 0.65 | -15.38 | 33.26 | 0.6336 | 0.5838 | 0 |
| 139 | SLV 9 | -0.64 | 21.53 | 81.7 | -0.9364 | -0.5703 | 0 |
| 139 | SLV 10 | -0.64 | 21.53 | 81.7 | -0.9364 | -0.5703 | 0 |
| 139 | SLV 11 | 0.29 | -13.4 | 54.72 | 0.5438 | 0.2822 | -0.0003 |
| 139 | SLV 12 | 0.29 | -13.4 | 54.72 | 0.5438 | 0.2822 | -0.0003 |
| 139 | SLV 13 | -0.73 | 11.61 | 97.29 | -0.523 | -0.6237 | -0.0003 |
| 139 | SLV 14 | -0.73 | 11.61 | 97.29 | -0.523 | -0.6237 | -0.0003 |
| 139 | SLV 15 | -0.45 | 1.13 | 89.19 | -0.0789 | -0.368 | -0.0004 |
| 139 | SLV 16 | -0.45 | 1.13 | 89.19 | -0.0789 | -0.368 | -0.0004 |

| Nodo | Cont. | Reazione a traslazione | | | Reazione a rotazione | | |
|---|---|---|---|---|---|---|---|
| Ind. | N.br. | x | y | z | x | y | z |
| 140 | SLU 1 | 0.04 | -3.57 | 42.74 | 0.1718 | 0.0309 | 0 |
| 140 | SLU 2 | 0.04 | -3.99 | 42.93 | 0.1919 | 0.0308 | 0 |
| 140 | SLU 3 | 0.04 | -3.27 | 43.9 | 0.1571 | 0.0321 | 0 |
| 140 | SLU 4 | 0.04 | -3.52 | 44.02 | 0.1692 | 0.032 | 0 |
| 140 | SLU 5 | 0.04 | -3.6 | 43.5 | 0.1726 | 0.0316 | 0 |
| 140 | SLU 6 | 0.04 | -2.87 | 44.48 | 0.1377 | 0.0329 | 0 |
| 140 | SLU 7 | 0.04 | -3.12 | 44.59 | 0.1498 | 0.0329 | 0 |
| 140 | SLU 8 | 0.04 | -2.78 | 43.89 | 0.1331 | 0.0325 | 0 |
| 140 | SLU 9 | 0.04 | -3.03 | 44.01 | 0.1452 | 0.0325 | 0 |
| 140 | SLU 10 | 0.05 | -4.68 | 51.63 | 0.2257 | 0.0342 | 0 |
| 140 | SLU 11 | 0.05 | -3.96 | 52.6 | 0.1908 | 0.0355 | 0 |
| 140 | SLU 12 | 0.05 | -4.21 | 52.72 | 0.2029 | 0.0354 | 0 |
| 140 | SLU 13 | 0.05 | -4.29 | 52.2 | 0.2063 | 0.035 | 0 |
| 140 | SLU 14 | 0.05 | -3.56 | 53.18 | 0.1715 | 0.0363 | 0 |
| 140 | SLU 15 | 0.05 | -3.81 | 53.29 | 0.1836 | 0.0363 | 0 |
| 140 | SLU 16 | 0.05 | -3.47 | 52.59 | 0.1668 | 0.0359 | 0 |
| 140 | SLU 17 | 0.05 | -3.72 | 52.71 | 0.1789 | 0.0359 | 0 |
| 140 | SLU 18 | 0.05 | -4.56 | 55.17 | 0.22 | 0.0358 | 0 |
| 140 | SLU 19 | 0.05 | -4.81 | 55.28 | 0.2321 | 0.0357 | 0 |
| 140 | SLU 20 | 0.05 | -4.16 | 55.74 | 0.2007 | 0.0366 | 0 |
| 140 | SLU 21 | 0.05 | -4.41 | 55.86 | 0.2127 | 0.0365 | 0 |
| 140 | SLU 22 | 0.05 | -3.66 | 48.94 | 0.1781 | 0.0354 | 0 |
| 140 | SLU 23 | 0.05 | -4.08 | 49.13 | 0.1982 | 0.0353 | 0 |
| 140 | SLU 24 | 0.05 | -3.36 | 50.11 | 0.1634 | 0.0366 | 0 |
| 140 | SLU 25 | 0.05 | -3.61 | 50.22 | 0.1754 | 0.0365 | 0 |
| 140 | SLU 26 | 0.05 | -3.69 | 49.71 | 0.1789 | 0.0361 | 0 |
| 140 | SLU 27 | 0.05 | -2.96 | 50.68 | 0.144 | 0.0374 | 0 |
| 140 | SLU 28 | 0.05 | -3.21 | 50.8 | 0.1561 | 0.0374 | 0 |
| 140 | SLU 29 | 0.05 | -2.87 | 50.09 | 0.1394 | 0.037 | 0 |
| 140 | SLU 30 | 0.05 | -3.12 | 50.21 | 0.1515 | 0.037 | 0 |
| 140 | SLU 31 | 0.05 | -4.77 | 57.83 | 0.232 | 0.0387 | 0 |
| 140 | SLU 32 | 0.06 | -4.05 | 58.81 | 0.1971 | 0.04 | 0 |
| 140 | SLU 33 | 0.06 | -4.3 | 58.92 | 0.2092 | 0.0399 | 0 |
| 140 | SLU 34 | 0.05 | -4.38 | 58.41 | 0.2126 | 0.0395 | 0 |
| 140 | SLU 35 | 0.06 | -3.65 | 59.38 | 0.1778 | 0.0408 | 0 |
| 140 | SLU 36 | 0.06 | -3.9 | 59.5 | 0.1898 | 0.0408 | 0 |
| 140 | SLU 37 | 0.06 | -3.56 | 58.79 | 0.1731 | 0.0404 | 0 |
| 140 | SLU 38 | 0.06 | -3.81 | 58.91 | 0.1852 | 0.0404 | 0 |
| 140 | SLU 39 | 0.06 | -4.65 | 61.37 | 0.2263 | 0.0403 | 0 |
| 140 | SLU 40 | 0.06 | -4.9 | 61.48 | 0.2384 | 0.0402 | 0 |
| 140 | SLU 41 | 0.06 | -4.25 | 61.95 | 0.2069 | 0.0411 | 0 |
| 140 | SLU 42 | 0.06 | -4.5 | 62.06 | 0.219 | 0.041 | 0 |
| 140 | SLU 43 | 0.05 | -4.61 | 53.43 | 0.2212 | 0.0386 | 0 |
| 140 | SLU 44 | 0.05 | -5.03 | 53.62 | 0.2413 | 0.0385 | 0 |
| 140 | SLU 45 | 0.05 | -4.31 | 54.6 | 0.2065 | 0.0398 | 0 |
| 140 | SLU 46 | 0.05 | -4.56 | 54.71 | 0.2185 | 0.0398 | 0 |
| 140 | SLU 47 | 0.05 | -4.64 | 54.2 | 0.222 | 0.0393 | 0 |
| 140 | SLU 48 | 0.06 | -3.91 | 55.18 | 0.1871 | 0.0406 | 0 |
| 140 | SLU 49 | 0.05 | -4.16 | 55.29 | 0.1992 | 0.0406 | 0 |
| 140 | SLU 50 | 0.05 | -3.82 | 54.59 | 0.1825 | 0.0403 | 0 |
| 140 | SLU 51 | 0.05 | -4.08 | 54.7 | 0.1946 | 0.0402 | 0 |
| 140 | SLU 52 | 0.06 | -5.72 | 62.32 | 0.2751 | 0.0419 | 0 |
| 140 | SLU 53 | 0.06 | -5 | 63.3 | 0.2402 | 0.0432 | 0 |
| 140 | SLU 54 | 0.06 | -5.25 | 63.41 | 0.2523 | 0.0432 | 0 |
| 140 | SLU 55 | 0.06 | -5.33 | 62.9 | 0.2557 | 0.0427 | 0 |
| 140 | SLU 56 | 0.06 | -4.6 | 63.88 | 0.2209 | 0.044 | 0 |
| 140 | SLU 57 | 0.06 | -4.85 | 63.99 | 0.2329 | 0.044 | 0 |
| 140 | SLU 58 | 0.06 | -4.51 | 63.29 | 0.2162 | 0.0437 | 0 |
| 140 | SLU 59 | 0.06 | -4.76 | 63.4 | 0.2283 | 0.0436 | 0 |
| 140 | SLU 60 | 0.06 | -5.6 | 65.86 | 0.2694 | 0.0435 | 0 |
| 140 | SLU 61 | 0.06 | -5.85 | 65.98 | 0.2815 | 0.0434 | 0 |
| 140 | SLU 62 | 0.06 | -5.2 | 66.44 | 0.25 | 0.0443 | 0 |
| 140 | SLU 63 | 0.06 | -5.46 | 66.55 | 0.2621 | 0.0442 | 0 |
| 140 | SLU 64 | 0.06 | -4.7 | 59.64 | 0.2275 | 0.0431 | 0 |
| 140 | SLU 65 | 0.06 | -5.12 | 59.82 | 0.2476 | 0.043 | 0 |
| 140 | SLU 66 | 0.06 | -4.4 | 60.8 | 0.2127 | 0.0443 | 0 |
| 140 | SLU 67 | 0.06 | -4.65 | 60.91 | 0.2248 | 0.0443 | 0 |
| 140 | SLU 68 | 0.06 | -4.73 | 60.4 | 0.2283 | 0.0438 | 0 |
| 140 | SLU 69 | 0.06 | -4 | 61.38 | 0.1934 | 0.0452 | 0 |
| 140 | SLU 70 | 0.06 | -4.25 | 61.49 | 0.2055 | 0.0451 | 0 |
| 140 | SLU 71 | 0.06 | -3.91 | 60.79 | 0.1888 | 0.0448 | 0 |
| 140 | SLU 72 | 0.06 | -4.17 | 60.9 | 0.2009 | 0.0447 | 0 |
| 140 | SLU 73 | 0.06 | -5.81 | 68.52 | 0.2814 | 0.0464 | 0 |
| 140 | SLU 74 | 0.07 | -5.09 | 69.5 | 0.2465 | 0.0477 | 0 |
| 140 | SLU 75 | 0.07 | -5.34 | 69.61 | 0.2586 | 0.0477 | 0 |
| 140 | SLU 76 | 0.07 | -5.42 | 69.1 | 0.262 | 0.0472 | 0 |
| 140 | SLU 77 | 0.07 | -4.69 | 70.08 | 0.2271 | 0.0486 | 0 |
| 140 | SLU 78 | 0.07 | -4.94 | 70.19 | 0.2392 | 0.0485 | 0 |
| 140 | SLU 79 | 0.07 | -4.6 | 69.49 | 0.2225 | 0.0482 | 0 |
| 140 | SLU 80 | 0.07 | -4.85 | 69.6 | 0.2346 | 0.0481 | 0 |
| 140 | SLU 81 | 0.07 | -5.69 | 72.06 | 0.2757 | 0.048 | 0 |
| 140 | SLU 82 | 0.07 | -5.94 | 72.18 | 0.2878 | 0.0479 | 0 |
| 140 | SLU 83 | 0.07 | -5.29 | 72.64 | 0.2563 | 0.0488 | 0 |
| 140 | SLU 84 | 0.07 | -5.54 | 72.75 | 0.2684 | 0.0487 | 0 |
| 140 | SLE RA 1 | 0.04 | -3.6 | 44.51 | 0.1736 | 0.0322 | 0 |
| 140 | SLE RA 2 | 0.04 | -3.88 | 44.64 | 0.187 | 0.0321 | 0 |
| 140 | SLE RA 3 | 0.04 | -3.39 | 45.29 | 0.1638 | 0.033 | 0 |
| 140 | SLE RA 4 | 0.04 | -3.56 | 45.36 | 0.1718 | 0.0329 | 0 |

| Nodo | Cont. | Reazione a traslazione | | | Reazione a rotazione | | |
|---|---|---|---|---|---|---|---|
| Ind. | N.br. | x | y | z | x | y | z |
| 140 | SLE RA 5 | 0.04 | -3.61 | 45.02 | 0.1741 | 0.0327 | 0 |
| 140 | SLE RA 6 | 0.05 | -3.13 | 45.67 | 0.1509 | 0.0335 | 0 |
| 140 | SLE RA 7 | 0.05 | -3.3 | 45.75 | 0.1589 | 0.0335 | 0 |
| 140 | SLE RA 8 | 0.05 | -3.07 | 45.28 | 0.1478 | 0.0333 | 0 |
| 140 | SLE RA 9 | 0.05 | -3.24 | 45.35 | 0.1559 | 0.0332 | 0 |
| 140 | SLE RA 10 | 0.05 | -4.34 | 50.44 | 0.2095 | 0.0344 | 0 |
| 140 | SLE RA 11 | 0.05 | -3.85 | 51.09 | 0.1863 | 0.0353 | 0 |
| 140 | SLE RA 12 | 0.05 | -4.02 | 51.16 | 0.1943 | 0.0352 | 0 |
| 140 | SLE RA 13 | 0.05 | -4.07 | 50.82 | 0.1966 | 0.0349 | 0 |
| 140 | SLE RA 14 | 0.05 | -3.59 | 51.47 | 0.1734 | 0.0358 | 0 |
| 140 | SLE RA 15 | 0.05 | -3.76 | 51.55 | 0.1814 | 0.0358 | 0 |
| 140 | SLE RA 16 | 0.05 | -3.53 | 51.08 | 0.1703 | 0.0355 | 0 |
| 140 | SLE RA 17 | 0.05 | -3.7 | 51.15 | 0.1783 | 0.0355 | 0 |
| 140 | SLE RA 18 | 0.05 | -4.25 | 52.8 | 0.2057 | 0.0354 | 0 |
| 140 | SLE RA 19 | 0.05 | -4.42 | 52.87 | 0.2138 | 0.0354 | 0 |
| 140 | SLE RA 20 | 0.05 | -3.99 | 53.18 | 0.1928 | 0.036 | 0 |
| 140 | SLE RA 21 | 0.05 | -4.16 | 53.26 | 0.2009 | 0.0359 | 0 |
| 140 | SLE FR 1 | 0.04 | -3.6 | 44.51 | 0.1736 | 0.0322 | 0 |
| 140 | SLE FR 2 | 0.04 | -3.65 | 44.54 | 0.1763 | 0.0322 | 0 |
| 140 | SLE FR 3 | 0.04 | -3.49 | 44.66 | 0.1684 | 0.0324 | 0 |
| 140 | SLE FR 4 | 0.05 | -3.85 | 47.02 | 0.1859 | 0.0331 | 0 |
| 140 | SLE FR 5 | 0.05 | -3.69 | 47.15 | 0.1781 | 0.0334 | 0 |
| 140 | SLE FR 6 | 0.05 | -3.93 | 48.65 | 0.1897 | 0.0338 | 0 |
| 140 | SLE QP 1 | 0.04 | -3.6 | 44.51 | 0.1736 | 0.0322 | 0 |
| 140 | SLE QP 2 | 0.05 | -3.79 | 47 | 0.1832 | 0.0332 | 0 |
| 140 | SLD 1 | 0.22 | -1.19 | 49 | 0.06 | 0.1814 | 0.0001 |
| 140 | SLD 2 | 0.22 | -1.19 | 49 | 0.06 | 0.1814 | 0.0001 |
| 140 | SLD 3 | 0.24 | -4.69 | 51.59 | 0.229 | 0.1967 | 0.0001 |
| 140 | SLD 4 | 0.24 | -4.69 | 51.59 | 0.229 | 0.1967 | 0.0001 |
| 140 | SLD 5 | 0.07 | 2.29 | 43.67 | -0.11 | 0.0545 | 0 |
| 140 | SLD 6 | 0.07 | 2.29 | 43.67 | -0.11 | 0.0545 | 0 |
| 140 | SLD 7 | 0.13 | -9.37 | 52.3 | 0.4532 | 0.1054 | 0 |
| 140 | SLD 8 | 0.13 | -9.37 | 52.3 | 0.4532 | 0.1054 | 0 |
| 140 | SLD 9 | -0.04 | 1.78 | 41.7 | -0.0867 | -0.039 | 0 |
| 140 | SLD 10 | -0.04 | 1.78 | 41.7 | -0.0867 | -0.039 | 0 |
| 140 | SLD 11 | 0.02 | -9.88 | 50.32 | 0.4764 | 0.0118 | 0 |
| 140 | SLD 12 | 0.02 | -9.88 | 50.32 | 0.4764 | 0.0118 | 0 |
| 140 | SLD 13 | -0.15 | -2.9 | 42.41 | 0.1375 | -0.1304 | 0 |
| 140 | SLD 14 | -0.15 | -2.9 | 42.41 | 0.1375 | -0.1304 | 0 |
| 140 | SLD 15 | -0.13 | -6.4 | 44.99 | 0.3064 | -0.1151 | 0 |
| 140 | SLD 16 | -0.13 | -6.4 | 44.99 | 0.3064 | -0.1151 | 0 |
| 140 | SLV 1 | 0.48 | 2.33 | 51.64 | -0.1065 | 0.4006 | 0.0002 |
| 140 | SLV 2 | 0.48 | 2.33 | 51.64 | -0.1065 | 0.4006 | 0.0002 |
| 140 | SLV 3 | 0.52 | -5.84 | 57.74 | 0.2882 | 0.4392 | 0.0001 |
| 140 | SLV 4 | 0.52 | -5.84 | 57.74 | 0.2882 | 0.4392 | 0.0001 |
| 140 | SLV 5 | 0.11 | 10.43 | 39.14 | -0.5022 | 0.0849 | 0.0001 |
| 140 | SLV 6 | 0.11 | 10.43 | 39.14 | -0.5022 | 0.0849 | 0.0001 |
| 140 | SLV 7 | 0.26 | -16.79 | 59.47 | 0.8133 | 0.2135 | 0 |
| 140 | SLV 8 | 0.26 | -16.79 | 59.47 | 0.8133 | 0.2135 | 0 |
| 140 | SLV 9 | -0.16 | 9.2 | 34.53 | -0.4468 | -0.1472 | 0 |
| 140 | SLV 10 | -0.16 | 9.2 | 34.53 | -0.4468 | -0.1472 | 0 |
| 140 | SLV 11 | -0.02 | -18.02 | 54.85 | 0.8687 | -0.0186 | -0.0001 |
| 140 | SLV 12 | -0.02 | -18.02 | 54.85 | 0.8687 | -0.0186 | -0.0001 |
| 140 | SLV 13 | -0.43 | -1.75 | 36.25 | 0.0783 | -0.3729 | -0.0001 |
| 140 | SLV 14 | -0.43 | -1.75 | 36.25 | 0.0783 | -0.3729 | -0.0001 |
| 140 | SLV 15 | -0.39 | -9.92 | 42.35 | 0.4729 | -0.3343 | -0.0001 |
| 140 | SLV 16 | -0.39 | -9.92 | 42.35 | 0.4729 | -0.3343 | -0.0001 |
| 141 | SLU 1 | 0.01 | 1.67 | 13.93 | -0.0527 | 0.0071 | 0.0001 |
| 141 | SLU 2 | 0.01 | 1.68 | 13.95 | -0.0528 | 0.0073 | 0.0001 |
| 141 | SLU 3 | 0.01 | 1.76 | 14.29 | -0.0555 | 0.0072 | 0.0001 |
| 141 | SLU 4 | 0.01 | 1.76 | 14.3 | -0.0555 | 0.0073 | 0.0001 |
| 141 | SLU 5 | 0.01 | 1.73 | 14.16 | -0.0545 | 0.0074 | 0.0001 |
| 141 | SLU 6 | 0.01 | 1.81 | 14.51 | -0.0571 | 0.0073 | 0.0001 |
| 141 | SLU 7 | 0.01 | 1.81 | 14.52 | -0.0572 | 0.0074 | 0.0001 |
| 141 | SLU 8 | 0.01 | 1.78 | 14.36 | -0.056 | 0.0072 | 0.0001 |
| 141 | SLU 9 | 0.01 | 1.78 | 14.37 | -0.0561 | 0.0074 | 0.0001 |
| 141 | SLU 10 | 0.01 | 2.01 | 17.7 | -0.0636 | 0.0094 | 0.0002 |
| 141 | SLU 11 | 0.01 | 2.1 | 18.05 | -0.0662 | 0.0093 | 0.0002 |
| 141 | SLU 12 | 0.01 | 2.1 | 18.06 | -0.0663 | 0.0095 | 0.0002 |
| 141 | SLU 13 | 0.01 | 2.07 | 17.92 | -0.0652 | 0.0095 | 0.0002 |
| 141 | SLU 14 | 0.01 | 2.15 | 18.26 | -0.0679 | 0.0094 | 0.0002 |
| 141 | SLU 15 | 0.01 | 2.15 | 18.27 | -0.0679 | 0.0095 | 0.0002 |
| 141 | SLU 16 | 0.01 | 2.11 | 18.11 | -0.0668 | 0.0093 | 0.0002 |
| 141 | SLU 17 | 0.01 | 2.12 | 18.12 | -0.0668 | 0.0095 | 0.0002 |
| 141 | SLU 18 | 0.01 | 2.16 | 19.3 | -0.0681 | 0.0101 | 0.0002 |
| 141 | SLU 19 | 0.01 | 2.16 | 19.31 | -0.0682 | 0.0103 | 0.0002 |
| 141 | SLU 20 | 0.01 | 2.21 | 19.51 | -0.0698 | 0.0102 | 0.0002 |
| 141 | SLU 21 | 0.01 | 2.21 | 19.52 | -0.0698 | 0.0103 | 0.0002 |
| 141 | SLU 22 | 0.01 | 2.02 | 15.73 | -0.0638 | 0.0079 | 0.0001 |
| 141 | SLU 23 | 0.01 | 2.02 | 15.74 | -0.0638 | 0.0082 | 0.0001 |
| 141 | SLU 24 | 0.01 | 2.1 | 16.09 | -0.0665 | 0.008 | 0.0001 |
| 141 | SLU 25 | 0.01 | 2.11 | 16.1 | -0.0666 | 0.0082 | 0.0001 |
| 141 | SLU 26 | 0.01 | 2.07 | 15.95 | -0.0655 | 0.0082 | 0.0001 |
| 141 | SLU 27 | 0.01 | 2.16 | 16.3 | -0.0682 | 0.0081 | 0.0001 |
| 141 | SLU 28 | 0.01 | 2.16 | 16.31 | -0.0682 | 0.0082 | 0.0001 |
| 141 | SLU 29 | 0.01 | 2.12 | 16.15 | -0.0671 | 0.008 | 0.0001 |
| 141 | SLU 30 | 0.01 | 2.12 | 16.16 | -0.0671 | 0.0082 | 0.0001 |
| 141 | SLU 31 | 0.01 | 2.36 | 19.5 | -0.0746 | 0.0103 | 0.0002 |

| Nodo | Cont. | Reazione a traslazione | | | Reazione a rotazione | | |
|---|---|---|---|---|---|---|---|
| Ind. | N.br. | x | y | z | x | y | z |
| 141 | SLU 32 | 0.01 | 2.44 | 19.84 | -0.0773 | 0.0101 | 0.0002 |
| 141 | SLU 33 | 0.01 | 2.44 | 19.85 | -0.0773 | 0.0103 | 0.0002 |
| 141 | SLU 34 | 0.01 | 2.41 | 19.71 | -0.0763 | 0.0104 | 0.0002 |
| 141 | SLU 35 | 0.01 | 2.49 | 20.06 | -0.0789 | 0.0102 | 0.0002 |
| 141 | SLU 36 | 0.01 | 2.49 | 20.07 | -0.079 | 0.0104 | 0.0002 |
| 141 | SLU 37 | 0.01 | 2.46 | 19.91 | -0.0778 | 0.0102 | 0.0002 |
| 141 | SLU 38 | 0.01 | 2.46 | 19.92 | -0.0779 | 0.0103 | 0.0002 |
| 141 | SLU 39 | 0.01 | 2.5 | 21.09 | -0.0792 | 0.0109 | 0.0002 |
| 141 | SLU 40 | 0.01 | 2.5 | 21.1 | -0.0792 | 0.0111 | 0.0002 |
| 141 | SLU 41 | 0.01 | 2.55 | 21.3 | -0.0808 | 0.011 | 0.0002 |
| 141 | SLU 42 | 0.01 | 2.55 | 21.31 | -0.0808 | 0.0112 | 0.0002 |
| 141 | SLU 43 | 0.01 | 2.06 | 17.5 | -0.0648 | 0.0089 | 0.0002 |
| 141 | SLU 44 | 0.01 | 2.06 | 17.51 | -0.0648 | 0.0092 | 0.0002 |
| 141 | SLU 45 | 0.01 | 2.14 | 17.86 | -0.0675 | 0.009 | 0.0002 |
| 141 | SLU 46 | 0.01 | 2.14 | 17.87 | -0.0676 | 0.0092 | 0.0002 |
| 141 | SLU 47 | 0.01 | 2.11 | 17.72 | -0.0665 | 0.0092 | 0.0002 |
| 141 | SLU 48 | 0.01 | 2.2 | 18.07 | -0.0692 | 0.0091 | 0.0002 |
| 141 | SLU 49 | 0.01 | 2.2 | 18.08 | -0.0692 | 0.0092 | 0.0002 |
| 141 | SLU 50 | 0.01 | 2.16 | 17.92 | -0.0681 | 0.009 | 0.0002 |
| 141 | SLU 51 | 0.01 | 2.16 | 17.93 | -0.0681 | 0.0092 | 0.0002 |
| 141 | SLU 52 | 0.01 | 2.4 | 21.27 | -0.0756 | 0.0113 | 0.0002 |
| 141 | SLU 53 | 0.01 | 2.48 | 21.61 | -0.0783 | 0.0111 | 0.0002 |
| 141 | SLU 54 | 0.01 | 2.48 | 21.62 | -0.0783 | 0.0113 | 0.0002 |
| 141 | SLU 55 | 0.01 | 2.45 | 21.48 | -0.0773 | 0.0114 | 0.0002 |
| 141 | SLU 56 | 0.01 | 2.53 | 21.83 | -0.0799 | 0.0112 | 0.0002 |
| 141 | SLU 57 | 0.01 | 2.53 | 21.84 | -0.08 | 0.0114 | 0.0002 |
| 141 | SLU 58 | 0.01 | 2.5 | 21.68 | -0.0788 | 0.0112 | 0.0002 |
| 141 | SLU 59 | 0.01 | 2.5 | 21.69 | -0.0789 | 0.0113 | 0.0002 |
| 141 | SLU 60 | 0.01 | 2.54 | 22.86 | -0.0801 | 0.0119 | 0.0002 |
| 141 | SLU 61 | 0.01 | 2.54 | 22.87 | -0.0802 | 0.0121 | 0.0002 |
| 141 | SLU 62 | 0.01 | 2.59 | 23.07 | -0.0818 | 0.012 | 0.0002 |
| 141 | SLU 63 | 0.01 | 2.59 | 23.08 | -0.0818 | 0.0122 | 0.0002 |
| 141 | SLU 64 | 0.01 | 2.4 | 19.29 | -0.0758 | 0.0097 | 0.0002 |
| 141 | SLU 65 | 0.01 | 2.4 | 19.31 | -0.0759 | 0.01 | 0.0002 |
| 141 | SLU 66 | 0.01 | 2.49 | 19.65 | -0.0786 | 0.0099 | 0.0002 |
| 141 | SLU 67 | 0.01 | 2.49 | 19.66 | -0.0786 | 0.01 | 0.0002 |
| 141 | SLU 68 | 0.01 | 2.46 | 19.52 | -0.0775 | 0.0101 | 0.0002 |
| 141 | SLU 69 | 0.01 | 2.54 | 19.87 | -0.0802 | 0.0099 | 0.0002 |
| 141 | SLU 70 | 0.01 | 2.54 | 19.87 | -0.0802 | 0.0101 | 0.0002 |
| 141 | SLU 71 | 0.01 | 2.51 | 19.72 | -0.0791 | 0.0099 | 0.0002 |
| 141 | SLU 72 | 0.01 | 2.51 | 19.73 | -0.0792 | 0.01 | 0.0002 |
| 141 | SLU 73 | 0.01 | 2.74 | 23.06 | -0.0866 | 0.0121 | 0.0002 |
| 141 | SLU 74 | 0.01 | 2.83 | 23.41 | -0.0893 | 0.012 | 0.0002 |
| 141 | SLU 75 | 0.01 | 2.83 | 23.42 | -0.0894 | 0.0121 | 0.0002 |
| 141 | SLU 76 | 0.01 | 2.79 | 23.27 | -0.0883 | 0.0122 | 0.0002 |
| 141 | SLU 77 | 0.01 | 2.88 | 23.62 | -0.091 | 0.012 | 0.0002 |
| 141 | SLU 78 | 0.01 | 2.88 | 23.63 | -0.091 | 0.0122 | 0.0002 |
| 141 | SLU 79 | 0.01 | 2.84 | 23.47 | -0.0899 | 0.012 | 0.0002 |
| 141 | SLU 80 | 0.01 | 2.84 | 23.48 | -0.0899 | 0.0122 | 0.0002 |
| 141 | SLU 81 | 0.01 | 2.89 | 24.66 | -0.0912 | 0.0128 | 0.0002 |
| 141 | SLU 82 | 0.01 | 2.89 | 24.66 | -0.0912 | 0.0129 | 0.0002 |
| 141 | SLU 83 | 0.01 | 2.94 | 24.87 | -0.0928 | 0.0128 | 0.0002 |
| 141 | SLU 84 | 0.01 | 2.94 | 24.88 | -0.0929 | 0.013 | 0.0002 |
| 141 | SLE RA 1 | 0.01 | 1.77 | 14.44 | -0.0559 | 0.0073 | 0.0001 |
| 141 | SLE RA 2 | 0.01 | 1.77 | 14.45 | -0.0559 | 0.0075 | 0.0001 |
| 141 | SLE RA 3 | 0.01 | 1.83 | 14.69 | -0.0577 | 0.0074 | 0.0001 |
| 141 | SLE RA 4 | 0.01 | 1.83 | 14.69 | -0.0577 | 0.0075 | 0.0001 |
| 141 | SLE RA 5 | 0.01 | 1.81 | 14.6 | -0.057 | 0.0075 | 0.0001 |
| 141 | SLE RA 6 | 0.01 | 1.86 | 14.83 | -0.0588 | 0.0074 | 0.0001 |
| 141 | SLE RA 7 | 0.01 | 1.86 | 14.83 | -0.0588 | 0.0075 | 0.0001 |
| 141 | SLE RA 8 | 0.01 | 1.84 | 14.73 | -0.0581 | 0.0074 | 0.0001 |
| 141 | SLE RA 9 | 0.01 | 1.84 | 14.73 | -0.0581 | 0.0075 | 0.0001 |
| 141 | SLE RA 10 | 0.01 | 2 | 16.96 | -0.0631 | 0.0089 | 0.0002 |
| 141 | SLE RA 11 | 0.01 | 2.05 | 17.19 | -0.0649 | 0.0088 | 0.0002 |
| 141 | SLE RA 12 | 0.01 | 2.06 | 17.2 | -0.0649 | 0.0089 | 0.0002 |
| 141 | SLE RA 13 | 0.01 | 2.03 | 17.1 | -0.0642 | 0.0089 | 0.0002 |
| 141 | SLE RA 14 | 0.01 | 2.09 | 17.33 | -0.066 | 0.0088 | 0.0002 |
| 141 | SLE RA 15 | 0.01 | 2.09 | 17.34 | -0.066 | 0.0089 | 0.0002 |
| 141 | SLE RA 16 | 0.01 | 2.07 | 17.23 | -0.0653 | 0.0088 | 0.0002 |
| 141 | SLE RA 17 | 0.01 | 2.07 | 17.24 | -0.0653 | 0.0089 | 0.0002 |
| 141 | SLE RA 18 | 0.01 | 2.09 | 18.02 | -0.0661 | 0.0093 | 0.0002 |
| 141 | SLE RA 19 | 0.01 | 2.1 | 18.03 | -0.0662 | 0.0094 | 0.0002 |
| 141 | SLE RA 20 | 0.01 | 2.13 | 18.16 | -0.0672 | 0.0094 | 0.0002 |
| 141 | SLE RA 21 | 0.01 | 2.13 | 18.17 | -0.0673 | 0.0095 | 0.0002 |
| 141 | SLE FR 1 | 0.01 | 1.77 | 14.44 | -0.0559 | 0.0073 | 0.0001 |
| 141 | SLE FR 2 | 0.01 | 1.77 | 14.45 | -0.0559 | 0.0073 | 0.0001 |
| 141 | SLE FR 3 | 0.01 | 1.79 | 14.5 | -0.0563 | 0.0073 | 0.0001 |
| 141 | SLE FR 4 | 0.01 | 1.87 | 15.52 | -0.059 | 0.008 | 0.0001 |
| 141 | SLE FR 5 | 0.01 | 1.88 | 15.57 | -0.0594 | 0.0079 | 0.0001 |
| 141 | SLE FR 6 | 0.01 | 1.93 | 16.23 | -0.061 | 0.0083 | 0.0002 |
| 141 | SLE QP 1 | 0.01 | 1.77 | 14.44 | -0.0559 | 0.0073 | 0.0001 |
| 141 | SLE QP 2 | 0.01 | 1.87 | 15.52 | -0.059 | 0.0079 | 0.0001 |
| 141 | SLD 1 | 0.19 | 1.98 | 12.93 | -0.0631 | 0.1512 | 0.0041 |
| 141 | SLD 2 | 0.19 | 1.98 | 12.93 | -0.0631 | 0.1512 | 0.0041 |
| 141 | SLD 3 | 0.18 | 0.25 | 13.39 | -0.0059 | 0.1386 | 0.0038 |
| 141 | SLD 4 | 0.18 | 0.25 | 13.39 | -0.0059 | 0.1386 | 0.0038 |
| 141 | SLD 5 | 0.09 | 4.53 | 14.05 | -0.1469 | 0.07 | 0.0019 |
| 141 | SLD 6 | 0.09 | 4.53 | 14.05 | -0.1469 | 0.07 | 0.0019 |

| Nodo | Cont. | Reazione a traslazione | | | Reazione a rotazione | | |
|---|---|---|---|---|---|---|---|
| Ind. | N.br. | x | y | z | x | y | z |
| 141 | SLD 7 | 0.03 | -1.24 | 15.57 | 0.0437 | 0.028 | 0.0007 |
| 141 | SLD 8 | 0.03 | -1.24 | 15.57 | 0.0437 | 0.028 | 0.0007 |
| 141 | SLD 9 | -0.02 | 4.98 | 15.47 | -0.1616 | -0.0122 | -0.0004 |
| 141 | SLD 10 | -0.02 | 4.98 | 15.47 | -0.1616 | -0.0122 | -0.0004 |
| 141 | SLD 11 | -0.07 | -0.79 | 16.98 | 0.029 | -0.0542 | -0.0016 |
| 141 | SLD 12 | -0.07 | -0.79 | 16.98 | 0.029 | -0.0542 | -0.0016 |
| 141 | SLD 13 | -0.16 | 3.48 | 17.65 | -0.112 | -0.1228 | -0.0035 |
| 141 | SLD 14 | -0.16 | 3.48 | 17.65 | -0.112 | -0.1228 | -0.0035 |
| 141 | SLD 15 | -0.18 | 1.75 | 18.11 | -0.0548 | -0.1354 | -0.0038 |
| 141 | SLD 16 | -0.18 | 1.75 | 18.11 | -0.0548 | -0.1354 | -0.0038 |
| 141 | SLV 1 | 0.46 | 2.14 | 9.47 | -0.0689 | 0.3637 | 0.01 |
| 141 | SLV 2 | 0.46 | 2.14 | 9.47 | -0.0689 | 0.3637 | 0.01 |
| 141 | SLV 3 | 0.42 | -1.92 | 10.52 | 0.0654 | 0.332 | 0.0091 |
| 141 | SLV 4 | 0.42 | -1.92 | 10.52 | 0.0654 | 0.332 | 0.0091 |
| 141 | SLV 5 | 0.2 | 8.11 | 12.11 | -0.2657 | 0.1627 | 0.0044 |
| 141 | SLV 6 | 0.2 | 8.11 | 12.11 | -0.2657 | 0.1627 | 0.0044 |
| 141 | SLV 7 | 0.07 | -5.43 | 15.61 | 0.1821 | 0.0571 | 0.0015 |
| 141 | SLV 8 | 0.07 | -5.43 | 15.61 | 0.1821 | 0.0571 | 0.0015 |
| 141 | SLV 9 | -0.06 | 9.17 | 15.43 | -0.3 | -0.0413 | -0.0013 |
| 141 | SLV 10 | -0.06 | 9.17 | 15.43 | -0.3 | -0.0413 | -0.0013 |
| 141 | SLV 11 | -0.19 | -4.37 | 18.92 | 0.1477 | -0.1469 | -0.0041 |
| 141 | SLV 12 | -0.19 | -4.37 | 18.92 | 0.1477 | -0.1469 | -0.0041 |
| 141 | SLV 13 | -0.41 | 5.66 | 20.52 | -0.1833 | -0.3162 | -0.0088 |
| 141 | SLV 14 | -0.41 | 5.66 | 20.52 | -0.1833 | -0.3162 | -0.0088 |
| 141 | SLV 15 | -0.45 | 1.6 | 21.57 | -0.049 | -0.3479 | -0.0097 |
| 141 | SLV 16 | -0.45 | 1.6 | 21.57 | -0.049 | -0.3479 | -0.0097 |
| 142 | SLU 1 | -0.26 | 1.96 | 55.31 | -0.1386 | -0.1796 | -0.0016 |
| 142 | SLU 2 | -0.3 | 2.49 | 57.75 | -0.1735 | -0.2304 | -0.0019 |
| 142 | SLU 3 | -0.27 | 2.13 | 57.47 | -0.1501 | -0.1873 | -0.0017 |
| 142 | SLU 4 | -0.3 | 2.45 | 58.94 | -0.1711 | -0.2177 | -0.0018 |
| 142 | SLU 5 | -0.31 | 2.64 | 59.39 | -0.1836 | -0.2362 | -0.0019 |
| 142 | SLU 6 | -0.28 | 2.29 | 59.12 | -0.1603 | -0.1931 | -0.0017 |
| 142 | SLU 7 | -0.31 | 2.61 | 60.58 | -0.1812 | -0.2236 | -0.0019 |
| 142 | SLU 8 | -0.28 | 2.26 | 58.6 | -0.1589 | -0.1913 | -0.0017 |
| 142 | SLU 9 | -0.3 | 2.58 | 60.06 | -0.1798 | -0.2218 | -0.0019 |
| 142 | SLU 10 | -0.34 | 2.97 | 64.43 | -0.1995 | -0.2529 | -0.0021 |
| 142 | SLU 11 | -0.31 | 2.61 | 64.15 | -0.1762 | -0.2098 | -0.0019 |
| 142 | SLU 12 | -0.33 | 2.93 | 65.62 | -0.1971 | -0.2402 | -0.002 |
| 142 | SLU 13 | -0.34 | 3.12 | 66.07 | -0.2097 | -0.2587 | -0.0021 |
| 142 | SLU 14 | -0.32 | 2.76 | 65.8 | -0.1863 | -0.2156 | -0.0019 |
| 142 | SLU 15 | -0.34 | 3.08 | 67.26 | -0.2073 | -0.2461 | -0.0021 |
| 142 | SLU 16 | -0.31 | 2.74 | 65.28 | -0.1849 | -0.2138 | -0.0019 |
| 142 | SLU 17 | -0.34 | 3.06 | 66.74 | -0.2059 | -0.2443 | -0.0021 |
| 142 | SLU 18 | -0.31 | 2.63 | 64.86 | -0.1758 | -0.2118 | -0.0019 |
| 142 | SLU 19 | -0.33 | 2.95 | 66.32 | -0.1967 | -0.2422 | -0.0021 |
| 142 | SLU 20 | -0.32 | 2.79 | 66.5 | -0.1859 | -0.2176 | -0.002 |
| 142 | SLU 21 | -0.34 | 3.11 | 67.96 | -0.2069 | -0.2481 | -0.0021 |
| 142 | SLU 22 | -0.3 | 2.41 | 62.28 | -0.1656 | -0.2036 | -0.0018 |
| 142 | SLU 23 | -0.34 | 2.94 | 64.72 | -0.2005 | -0.2544 | -0.0021 |
| 142 | SLU 24 | -0.31 | 2.59 | 64.44 | -0.1771 | -0.2112 | -0.0019 |
| 142 | SLU 25 | -0.33 | 2.91 | 65.9 | -0.1981 | -0.2417 | -0.0021 |
| 142 | SLU 26 | -0.35 | 3.1 | 66.36 | -0.2106 | -0.2602 | -0.0021 |
| 142 | SLU 27 | -0.32 | 2.74 | 66.08 | -0.1873 | -0.2171 | -0.002 |
| 142 | SLU 28 | -0.34 | 3.06 | 67.54 | -0.2082 | -0.2476 | -0.0021 |
| 142 | SLU 29 | -0.32 | 2.71 | 65.56 | -0.1859 | -0.2153 | -0.0019 |
| 142 | SLU 30 | -0.34 | 3.03 | 67.02 | -0.2068 | -0.2458 | -0.0021 |
| 142 | SLU 31 | -0.37 | 3.42 | 71.4 | -0.2265 | -0.2769 | -0.0023 |
| 142 | SLU 32 | -0.34 | 3.06 | 71.12 | -0.2031 | -0.2338 | -0.0021 |
| 142 | SLU 33 | -0.37 | 3.38 | 72.58 | -0.2241 | -0.2642 | -0.0023 |
| 142 | SLU 34 | -0.38 | 3.57 | 73.04 | -0.2366 | -0.2827 | -0.0023 |
| 142 | SLU 35 | -0.35 | 3.21 | 72.76 | -0.2133 | -0.2396 | -0.0022 |
| 142 | SLU 36 | -0.38 | 3.53 | 74.22 | -0.2342 | -0.2701 | -0.0023 |
| 142 | SLU 37 | -0.35 | 3.19 | 72.24 | -0.2119 | -0.2378 | -0.0021 |
| 142 | SLU 38 | -0.37 | 3.51 | 73.7 | -0.2328 | -0.2683 | -0.0023 |
| 142 | SLU 39 | -0.35 | 3.09 | 71.82 | -0.2027 | -0.2357 | -0.0021 |
| 142 | SLU 40 | -0.37 | 3.41 | 73.28 | -0.2237 | -0.2662 | -0.0023 |
| 142 | SLU 41 | -0.36 | 3.24 | 73.46 | -0.2129 | -0.2416 | -0.0022 |
| 142 | SLU 42 | -0.38 | 3.56 | 74.93 | -0.2338 | -0.2721 | -0.0023 |
| 142 | SLU 43 | -0.33 | 2.39 | 69.52 | -0.1709 | -0.2252 | -0.002 |
| 142 | SLU 44 | -0.37 | 2.92 | 71.95 | -0.2058 | -0.276 | -0.0023 |
| 142 | SLU 45 | -0.34 | 2.57 | 71.68 | -0.1825 | -0.2329 | -0.0021 |
| 142 | SLU 46 | -0.36 | 2.89 | 73.14 | -0.2034 | -0.2634 | -0.0022 |
| 142 | SLU 47 | -0.38 | 3.07 | 73.6 | -0.216 | -0.2819 | -0.0023 |
| 142 | SLU 48 | -0.35 | 2.72 | 73.32 | -0.1926 | -0.2388 | -0.0021 |
| 142 | SLU 49 | -0.37 | 3.04 | 74.78 | -0.2136 | -0.2692 | -0.0023 |
| 142 | SLU 50 | -0.35 | 2.69 | 72.8 | -0.1912 | -0.237 | -0.0021 |
| 142 | SLU 51 | -0.37 | 3.01 | 74.26 | -0.2122 | -0.2674 | -0.0023 |
| 142 | SLU 52 | -0.4 | 3.4 | 78.63 | -0.2318 | -0.2985 | -0.0025 |
| 142 | SLU 53 | -0.37 | 3.04 | 78.36 | -0.2085 | -0.2554 | -0.0023 |
| 142 | SLU 54 | -0.4 | 3.36 | 79.82 | -0.2294 | -0.2859 | -0.0024 |
| 142 | SLU 55 | -0.41 | 3.55 | 80.28 | -0.242 | -0.3044 | -0.0025 |
| 142 | SLU 56 | -0.38 | 3.19 | 80 | -0.2186 | -0.2613 | -0.0023 |
| 142 | SLU 57 | -0.41 | 3.51 | 81.46 | -0.2396 | -0.2917 | -0.0025 |
| 142 | SLU 58 | -0.38 | 3.17 | 79.48 | -0.2172 | -0.2595 | -0.0023 |
| 142 | SLU 59 | -0.4 | 3.49 | 80.94 | -0.2382 | -0.2899 | -0.0025 |
| 142 | SLU 60 | -0.38 | 3.07 | 79.06 | -0.2081 | -0.2574 | -0.0023 |
| 142 | SLU 61 | -0.4 | 3.39 | 80.52 | -0.229 | -0.2879 | -0.0025 |
| 142 | SLU 62 | -0.39 | 3.22 | 80.7 | -0.2182 | -0.2633 | -0.0024 |

| Nodo | Cont. | Reazione a traslazione | | | Reazione a rotazione | | |
|---|---|---|---|---|---|---|---|
| Ind. | N.br. | x | y | z | x | y | z |
| 142 | SLU 63 | -0.41 | 3.54 | 82.16 | -0.2392 | -0.2937 | -0.0025 |
| 142 | SLU 64 | -0.37 | 2.84 | 76.48 | -0.1979 | -0.2492 | -0.0022 |
| 142 | SLU 65 | -0.4 | 3.38 | 78.92 | -0.2328 | -0.3 | -0.0025 |
| 142 | SLU 66 | -0.38 | 3.02 | 78.65 | -0.2094 | -0.2569 | -0.0023 |
| 142 | SLU 67 | -0.4 | 3.34 | 80.11 | -0.2304 | -0.2874 | -0.0025 |
| 142 | SLU 68 | -0.41 | 3.53 | 80.56 | -0.2429 | -0.3059 | -0.0026 |
| 142 | SLU 69 | -0.39 | 3.17 | 80.29 | -0.2196 | -0.2628 | -0.0024 |
| 142 | SLU 70 | -0.41 | 3.49 | 81.75 | -0.2405 | -0.2932 | -0.0025 |
| 142 | SLU 71 | -0.38 | 3.15 | 79.77 | -0.2182 | -0.261 | -0.0023 |
| 142 | SLU 72 | -0.41 | 3.47 | 81.23 | -0.2391 | -0.2914 | -0.0025 |
| 142 | SLU 73 | -0.44 | 3.85 | 85.6 | -0.2588 | -0.3225 | -0.0027 |
| 142 | SLU 74 | -0.41 | 3.49 | 85.33 | -0.2355 | -0.2794 | -0.0025 |
| 142 | SLU 75 | -0.43 | 3.81 | 86.79 | -0.2564 | -0.3099 | -0.0027 |
| 142 | SLU 76 | -0.45 | 4 | 87.24 | -0.269 | -0.3284 | -0.0028 |
| 142 | SLU 77 | -0.42 | 3.65 | 86.97 | -0.2456 | -0.2853 | -0.0026 |
| 142 | SLU 78 | -0.44 | 3.97 | 88.43 | -0.2666 | -0.3157 | -0.0027 |
| 142 | SLU 79 | -0.42 | 3.62 | 86.45 | -0.2442 | -0.2835 | -0.0025 |
| 142 | SLU 80 | -0.44 | 3.94 | 87.91 | -0.2652 | -0.3139 | -0.0027 |
| 142 | SLU 81 | -0.41 | 3.52 | 86.03 | -0.2351 | -0.2814 | -0.0025 |
| 142 | SLU 82 | -0.44 | 3.84 | 87.49 | -0.256 | -0.3119 | -0.0027 |
| 142 | SLU 83 | -0.42 | 3.67 | 87.67 | -0.2452 | -0.2873 | -0.0026 |
| 142 | SLU 84 | -0.45 | 3.99 | 89.13 | -0.2662 | -0.3177 | -0.0027 |
| 142 | SLE RA 1 | -0.27 | 2.09 | 57.3 | -0.1463 | -0.1864 | -0.0017 |
| 142 | SLE RA 2 | -0.3 | 2.44 | 58.93 | -0.1696 | -0.2203 | -0.0018 |
| 142 | SLE RA 3 | -0.28 | 2.2 | 58.74 | -0.154 | -0.1916 | -0.0017 |
| 142 | SLE RA 4 | -0.3 | 2.42 | 59.72 | -0.168 | -0.2119 | -0.0018 |
| 142 | SLE RA 5 | -0.31 | 2.54 | 60.02 | -0.1763 | -0.2242 | -0.0019 |
| 142 | SLE RA 6 | -0.29 | 2.31 | 59.84 | -0.1608 | -0.1955 | -0.0018 |
| 142 | SLE RA 7 | -0.3 | 2.52 | 60.81 | -0.1747 | -0.2158 | -0.0019 |
| 142 | SLE RA 8 | -0.29 | 2.29 | 59.49 | -0.1598 | -0.1943 | -0.0017 |
| 142 | SLE RA 9 | -0.3 | 2.5 | 60.47 | -0.1738 | -0.2146 | -0.0018 |
| 142 | SLE RA 10 | -0.32 | 2.76 | 63.38 | -0.1869 | -0.2353 | -0.002 |
| 142 | SLE RA 11 | -0.3 | 2.52 | 63.2 | -0.1713 | -0.2066 | -0.0019 |
| 142 | SLE RA 12 | -0.32 | 2.73 | 64.17 | -0.1853 | -0.2269 | -0.002 |
| 142 | SLE RA 13 | -0.33 | 2.86 | 64.48 | -0.1937 | -0.2392 | -0.002 |
| 142 | SLE RA 14 | -0.31 | 2.62 | 64.29 | -0.1781 | -0.2105 | -0.0019 |
| 142 | SLE RA 15 | -0.32 | 2.84 | 65.27 | -0.1921 | -0.2308 | -0.002 |
| 142 | SLE RA 16 | -0.31 | 2.61 | 63.95 | -0.1772 | -0.2093 | -0.0019 |
| 142 | SLE RA 17 | -0.32 | 2.82 | 64.92 | -0.1911 | -0.2296 | -0.002 |
| 142 | SLE RA 18 | -0.3 | 2.54 | 63.66 | -0.1711 | -0.2079 | -0.0019 |
| 142 | SLE RA 19 | -0.32 | 2.75 | 64.64 | -0.185 | -0.2282 | -0.002 |
| 142 | SLE RA 20 | -0.31 | 2.64 | 64.76 | -0.1778 | -0.2118 | -0.0019 |
| 142 | SLE RA 21 | -0.33 | 2.85 | 65.73 | -0.1918 | -0.2321 | -0.002 |
| 142 | SLE FR 1 | -0.27 | 2.09 | 57.3 | -0.1463 | -0.1864 | -0.0017 |
| 142 | SLE FR 2 | -0.28 | 2.16 | 57.63 | -0.1509 | -0.1932 | -0.0017 |
| 142 | SLE FR 3 | -0.28 | 2.13 | 57.74 | -0.149 | -0.188 | -0.0017 |
| 142 | SLE FR 4 | -0.29 | 2.29 | 59.54 | -0.1584 | -0.1997 | -0.0018 |
| 142 | SLE FR 5 | -0.29 | 2.26 | 59.65 | -0.1564 | -0.1944 | -0.0017 |
| 142 | SLE FR 6 | -0.29 | 2.31 | 60.48 | -0.1587 | -0.1972 | -0.0018 |
| 142 | SLE QP 1 | -0.27 | 2.09 | 57.3 | -0.1463 | -0.1864 | -0.0017 |
| 142 | SLE QP 2 | -0.28 | 2.22 | 59.21 | -0.1537 | -0.1929 | -0.0017 |
| 142 | SLD 1 | -0.58 | 6.03 | 77.26 | -0.3251 | -0.4349 | -0.0035 |
| 142 | SLD 2 | -0.58 | 6.03 | 77.26 | -0.3251 | -0.4349 | -0.0035 |
| 142 | SLD 3 | -0.48 | 0.75 | 74.76 | -0.0878 | -0.3511 | -0.0029 |
| 142 | SLD 4 | -0.48 | 0.75 | 74.76 | -0.0878 | -0.3511 | -0.0029 |
| 142 | SLD 5 | -0.53 | 11.37 | 68.42 | -0.565 | -0.3925 | -0.0032 |
| 142 | SLD 6 | -0.53 | 11.37 | 68.42 | -0.565 | -0.3925 | -0.0032 |
| 142 | SLD 7 | -0.19 | -6.22 | 60.09 | 0.226 | -0.1134 | -0.0012 |
| 142 | SLD 8 | -0.19 | -6.22 | 60.09 | 0.226 | -0.1134 | -0.0012 |
| 142 | SLD 9 | -0.38 | 10.66 | 58.33 | -0.5334 | -0.2724 | -0.0023 |
| 142 | SLD 10 | -0.38 | 10.66 | 58.33 | -0.5334 | -0.2724 | -0.0023 |
| 142 | SLD 11 | -0.04 | -6.92 | 50.01 | 0.2576 | 0.0067 | -0.0003 |
| 142 | SLD 12 | -0.04 | -6.92 | 50.01 | 0.2576 | 0.0067 | -0.0003 |
| 142 | SLD 13 | -0.08 | 3.69 | 43.66 | -0.2197 | -0.0346 | -0.0005 |
| 142 | SLD 14 | -0.08 | 3.69 | 43.66 | -0.2197 | -0.0346 | -0.0005 |
| 142 | SLD 15 | 0.02 | -1.58 | 41.16 | 0.0176 | 0.0491 | 0.0001 |
| 142 | SLD 16 | 0.02 | -1.58 | 41.16 | 0.0176 | 0.0491 | 0.0001 |
| 142 | SLV 1 | -0.99 | 11.18 | 101.51 | -0.5559 | -0.7668 | -0.006 |
| 142 | SLV 2 | -0.99 | 11.18 | 101.51 | -0.5559 | -0.7668 | -0.006 |
| 142 | SLV 3 | -0.73 | -1.08 | 95.46 | -0.0041 | -0.5542 | -0.0044 |
| 142 | SLV 4 | -0.73 | -1.08 | 95.46 | -0.0041 | -0.5542 | -0.0044 |
| 142 | SLV 5 | -0.88 | 23.5 | 81.08 | -1.1111 | -0.6874 | -0.0053 |
| 142 | SLV 6 | -0.88 | 23.5 | 81.08 | -1.1111 | -0.6874 | -0.0053 |
| 142 | SLV 7 | -0.03 | -17.36 | 60.91 | 0.7279 | 0.0211 | -0.0002 |
| 142 | SLV 8 | -0.03 | -17.36 | 60.91 | 0.7279 | 0.0211 | -0.0002 |
| 142 | SLV 9 | -0.54 | 21.81 | 57.52 | -1.0354 | -0.4069 | -0.0033 |
| 142 | SLV 10 | -0.54 | 21.81 | 57.52 | -1.0354 | -0.4069 | -0.0033 |
| 142 | SLV 11 | 0.32 | -19.06 | 37.34 | 0.8037 | 0.3017 | 0.0019 |
| 142 | SLV 12 | 0.32 | -19.06 | 37.34 | 0.8037 | 0.3017 | 0.0019 |
| 142 | SLV 13 | 0.17 | 5.53 | 22.97 | -0.3033 | 0.1685 | 0.001 |
| 142 | SLV 14 | 0.17 | 5.53 | 22.97 | -0.3033 | 0.1685 | 0.001 |
| 142 | SLV 15 | 0.42 | -6.73 | 16.91 | 0.2484 | 0.381 | 0.0025 |
| 142 | SLV 16 | 0.42 | -6.73 | 16.91 | 0.2484 | 0.381 | 0.0025 |
| 143 | SLU 1 | 0.12 | 0.77 | 25.17 | 0.0825 | 0.0779 | 0 |
| 143 | SLU 2 | 0.13 | 2.85 | 24.5 | -0.0052 | 0.083 | 0 |
| 143 | SLU 3 | 0.13 | 0.68 | 26.2 | 0.0905 | 0.0808 | 0 |
| 143 | SLU 4 | 0.13 | 1.92 | 25.8 | 0.0379 | 0.0838 | 0 |
| 143 | SLU 5 | 0.13 | 2.68 | 25.26 | 0.0044 | 0.0847 | 0 |

| Nodo | Cont. | Reazione a traslazione | | | Reazione a rotazione | | |
|---|---|---|---|---|---|---|---|
| Ind. | N.br. | x | y | z | x | y | z |
| 143 | SLU 6 | 0.13 | 0.51 | 26.97 | 0.1001 | 0.0825 | 0 |
| 143 | SLU 7 | 0.13 | 1.76 | 26.56 | 0.0475 | 0.0855 | 0 |
| 143 | SLU 8 | 0.13 | 0.44 | 26.7 | 0.1018 | 0.0813 | 0 |
| 143 | SLU 9 | 0.13 | 1.69 | 26.29 | 0.0491 | 0.0843 | 0 |
| 143 | SLU 10 | 0.15 | 3.26 | 28.5 | -0.004 | 0.0974 | 0 |
| 143 | SLU 11 | 0.15 | 1.09 | 30.2 | 0.0917 | 0.0951 | 0 |
| 143 | SLU 12 | 0.15 | 2.33 | 29.8 | 0.0391 | 0.0982 | 0 |
| 143 | SLU 13 | 0.15 | 3.09 | 29.26 | 0.0056 | 0.099 | 0 |
| 143 | SLU 14 | 0.15 | 0.92 | 30.96 | 0.1013 | 0.0968 | 0 |
| 143 | SLU 15 | 0.16 | 2.17 | 30.56 | 0.0487 | 0.0999 | 0 |
| 143 | SLU 16 | 0.15 | 0.85 | 30.69 | 0.103 | 0.0956 | 0 |
| 143 | SLU 17 | 0.15 | 2.09 | 30.29 | 0.0504 | 0.0987 | 0 |
| 143 | SLU 18 | 0.16 | 1.35 | 30.88 | 0.0843 | 0.0984 | 0 |
| 143 | SLU 19 | 0.16 | 2.6 | 30.48 | 0.0316 | 0.1015 | 0 |
| 143 | SLU 20 | 0.16 | 1.19 | 31.65 | 0.0939 | 0.1001 | 0 |
| 143 | SLU 21 | 0.16 | 2.44 | 31.24 | 0.0413 | 0.1031 | 0 |
| 143 | SLU 22 | 0.15 | 1.04 | 28.96 | 0.0882 | 0.0912 | 0 |
| 143 | SLU 23 | 0.15 | 3.12 | 28.29 | 0.0005 | 0.0963 | 0 |
| 143 | SLU 24 | 0.15 | 0.95 | 29.99 | 0.0962 | 0.0941 | 0 |
| 143 | SLU 25 | 0.15 | 2.2 | 29.59 | 0.0436 | 0.0971 | 0 |
| 143 | SLU 26 | 0.15 | 2.95 | 29.05 | 0.0101 | 0.0979 | 0 |
| 143 | SLU 27 | 0.15 | 0.79 | 30.75 | 0.1058 | 0.0957 | 0 |
| 143 | SLU 28 | 0.16 | 2.03 | 30.35 | 0.0532 | 0.0988 | 0 |
| 143 | SLU 29 | 0.15 | 0.71 | 30.48 | 0.1074 | 0.0945 | 0 |
| 143 | SLU 30 | 0.15 | 1.96 | 30.08 | 0.0548 | 0.0976 | 0 |
| 143 | SLU 31 | 0.17 | 3.53 | 32.28 | 0.0017 | 0.1106 | 0 |
| 143 | SLU 32 | 0.17 | 1.36 | 33.99 | 0.0974 | 0.1084 | 0 |
| 143 | SLU 33 | 0.18 | 2.61 | 33.59 | 0.0448 | 0.1114 | 0 |
| 143 | SLU 34 | 0.17 | 3.36 | 33.05 | 0.0113 | 0.1123 | 0 |
| 143 | SLU 35 | 0.18 | 1.19 | 34.75 | 0.107 | 0.1101 | 0 |
| 143 | SLU 36 | 0.18 | 2.44 | 34.35 | 0.0544 | 0.1131 | 0 |
| 143 | SLU 37 | 0.17 | 1.12 | 34.48 | 0.1087 | 0.1089 | 0 |
| 143 | SLU 38 | 0.18 | 2.37 | 34.08 | 0.056 | 0.1119 | 0 |
| 143 | SLU 39 | 0.18 | 1.63 | 34.67 | 0.0899 | 0.1117 | 0 |
| 143 | SLU 40 | 0.18 | 2.87 | 34.27 | 0.0373 | 0.1147 | 0 |
| 143 | SLU 41 | 0.18 | 1.46 | 35.43 | 0.0996 | 0.1133 | 0 |
| 143 | SLU 42 | 0.18 | 2.71 | 35.03 | 0.0469 | 0.1164 | 0 |
| 143 | SLU 43 | 0.15 | 0.91 | 31.42 | 0.1053 | 0.0968 | 0 |
| 143 | SLU 44 | 0.16 | 2.98 | 30.75 | 0.0176 | 0.1019 | 0 |
| 143 | SLU 45 | 0.16 | 0.81 | 32.46 | 0.1133 | 0.0996 | 0 |
| 143 | SLU 46 | 0.16 | 2.06 | 32.05 | 0.0607 | 0.1027 | 0 |
| 143 | SLU 47 | 0.16 | 2.82 | 31.51 | 0.0272 | 0.1035 | 0 |
| 143 | SLU 48 | 0.16 | 0.65 | 33.22 | 0.1229 | 0.1013 | 0 |
| 143 | SLU 49 | 0.16 | 1.89 | 32.82 | 0.0703 | 0.1043 | 0 |
| 143 | SLU 50 | 0.16 | 0.58 | 32.95 | 0.1246 | 0.1001 | 0 |
| 143 | SLU 51 | 0.16 | 1.82 | 32.55 | 0.0719 | 0.1031 | 0 |
| 143 | SLU 52 | 0.18 | 3.39 | 34.75 | 0.0188 | 0.1162 | 0 |
| 143 | SLU 53 | 0.18 | 1.22 | 36.46 | 0.1145 | 0.114 | 0 |
| 143 | SLU 54 | 0.18 | 2.47 | 36.05 | 0.0619 | 0.117 | 0 |
| 143 | SLU 55 | 0.18 | 3.23 | 35.51 | 0.0285 | 0.1179 | 0 |
| 143 | SLU 56 | 0.18 | 1.06 | 37.22 | 0.1241 | 0.1156 | 0 |
| 143 | SLU 57 | 0.19 | 2.3 | 36.81 | 0.0715 | 0.1187 | 0 |
| 143 | SLU 58 | 0.18 | 0.99 | 36.95 | 0.1258 | 0.1144 | 0 |
| 143 | SLU 59 | 0.18 | 2.23 | 36.54 | 0.0732 | 0.1175 | 0 |
| 143 | SLU 60 | 0.19 | 1.49 | 37.14 | 0.1071 | 0.1173 | 0 |
| 143 | SLU 61 | 0.19 | 2.74 | 36.73 | 0.0544 | 0.1203 | 0 |
| 143 | SLU 62 | 0.19 | 1.33 | 37.9 | 0.1167 | 0.1189 | 0 |
| 143 | SLU 63 | 0.19 | 2.57 | 37.5 | 0.0641 | 0.122 | 0 |
| 143 | SLU 64 | 0.18 | 1.18 | 35.21 | 0.111 | 0.11 | 0 |
| 143 | SLU 65 | 0.18 | 3.26 | 34.54 | 0.0233 | 0.1151 | 0 |
| 143 | SLU 66 | 0.18 | 1.09 | 36.24 | 0.119 | 0.1129 | 0 |
| 143 | SLU 67 | 0.18 | 2.33 | 35.84 | 0.0664 | 0.1159 | 0 |
| 143 | SLU 68 | 0.18 | 3.09 | 35.3 | 0.0329 | 0.1168 | 0 |
| 143 | SLU 69 | 0.18 | 0.92 | 37.01 | 0.1286 | 0.1146 | 0 |
| 143 | SLU 70 | 0.19 | 2.17 | 36.6 | 0.076 | 0.1176 | 0 |
| 143 | SLU 71 | 0.18 | 0.85 | 36.73 | 0.1302 | 0.1134 | 0 |
| 143 | SLU 72 | 0.18 | 2.1 | 36.33 | 0.0776 | 0.1164 | 0 |
| 143 | SLU 73 | 0.2 | 3.67 | 38.54 | 0.0245 | 0.1295 | 0 |
| 143 | SLU 74 | 0.2 | 1.5 | 40.24 | 0.1202 | 0.1272 | 0 |
| 143 | SLU 75 | 0.21 | 2.74 | 39.84 | 0.0676 | 0.1303 | 0 |
| 143 | SLU 76 | 0.2 | 3.5 | 39.3 | 0.0341 | 0.1311 | 0 |
| 143 | SLU 77 | 0.21 | 1.33 | 41 | 0.1298 | 0.1289 | 0 |
| 143 | SLU 78 | 0.21 | 2.58 | 40.6 | 0.0772 | 0.1319 | 0 |
| 143 | SLU 79 | 0.2 | 1.26 | 40.73 | 0.1315 | 0.1277 | 0 |
| 143 | SLU 80 | 0.21 | 2.51 | 40.33 | 0.0788 | 0.1307 | 0 |
| 143 | SLU 81 | 0.21 | 1.77 | 40.92 | 0.1128 | 0.1305 | 0 |
| 143 | SLU 82 | 0.21 | 3.01 | 40.52 | 0.0601 | 0.1336 | 0 |
| 143 | SLU 83 | 0.21 | 1.6 | 41.68 | 0.1224 | 0.1322 | 0 |
| 143 | SLU 84 | 0.21 | 2.85 | 41.28 | 0.0697 | 0.1352 | 0 |
| 143 | SLE RA 1 | 0.13 | 0.85 | 26.25 | 0.0841 | 0.0817 | 0 |
| 143 | SLE RA 2 | 0.13 | 2.23 | 25.8 | 0.0257 | 0.0851 | 0 |
| 143 | SLE RA 3 | 0.13 | 0.79 | 26.94 | 0.0895 | 0.0836 | 0 |
| 143 | SLE RA 4 | 0.13 | 1.62 | 26.67 | 0.0544 | 0.0857 | 0 |
| 143 | SLE RA 5 | 0.13 | 2.12 | 26.31 | 0.0321 | 0.0862 | 0 |
| 143 | SLE RA 6 | 0.14 | 0.68 | 27.45 | 0.0959 | 0.0847 | 0 |
| 143 | SLE RA 7 | 0.14 | 1.51 | 27.18 | 0.0608 | 0.0868 | 0 |
| 143 | SLE RA 8 | 0.13 | 0.63 | 27.27 | 0.097 | 0.0839 | 0 |
| 143 | SLE RA 9 | 0.14 | 1.46 | 27 | 0.0619 | 0.086 | 0 |

| Nodo | Cont. | Reazione a traslazione | | | Reazione a rotazione | | |
|---|---|---|---|---|---|---|---|
| Ind. | N.br. | x | y | z | x | y | z |
| 143 | SLE RA 10 | 0.15 | 2.51 | 28.47 | 0.0265 | 0.0947 | 0 |
| 143 | SLE RA 11 | 0.15 | 1.06 | 29.61 | 0.0903 | 0.0932 | 0 |
| 143 | SLE RA 12 | 0.15 | 1.89 | 29.34 | 0.0552 | 0.0952 | 0 |
| 143 | SLE RA 13 | 0.15 | 2.4 | 28.98 | 0.0329 | 0.0958 | 0 |
| 143 | SLE RA 14 | 0.15 | 0.95 | 30.12 | 0.0967 | 0.0943 | 0 |
| 143 | SLE RA 15 | 0.15 | 1.78 | 29.85 | 0.0616 | 0.0963 | 0 |
| 143 | SLE RA 16 | 0.15 | 0.9 | 29.93 | 0.0978 | 0.0935 | 0 |
| 143 | SLE RA 17 | 0.15 | 1.73 | 29.67 | 0.0627 | 0.0955 | 0 |
| 143 | SLE RA 18 | 0.15 | 1.24 | 30.06 | 0.0853 | 0.0954 | 0 |
| 143 | SLE RA 19 | 0.15 | 2.07 | 29.79 | 0.0502 | 0.0974 | 0 |
| 143 | SLE RA 20 | 0.15 | 1.13 | 30.57 | 0.0917 | 0.0965 | 0 |
| 143 | SLE RA 21 | 0.16 | 1.96 | 30.3 | 0.0566 | 0.0985 | 0 |
| 143 | SLE FR 1 | 0.13 | 0.85 | 26.25 | 0.0841 | 0.0817 | 0 |
| 143 | SLE FR 2 | 0.13 | 1.13 | 26.16 | 0.0724 | 0.0824 | 0 |
| 143 | SLE FR 3 | 0.13 | 0.8 | 26.46 | 0.0867 | 0.0822 | 0 |
| 143 | SLE FR 4 | 0.14 | 1.24 | 27.31 | 0.0728 | 0.0865 | 0 |
| 143 | SLE FR 5 | 0.14 | 0.92 | 27.6 | 0.0871 | 0.0863 | 0 |
| 143 | SLE FR 6 | 0.14 | 1.04 | 28.16 | 0.0847 | 0.0886 | 0 |
| 143 | SLE QP 1 | 0.13 | 0.85 | 26.25 | 0.0841 | 0.0817 | 0 |
| 143 | SLE QP 2 | 0.14 | 0.97 | 27.4 | 0.0845 | 0.0858 | 0 |
| 143 | SLD 1 | 0.28 | 4.17 | 29.63 | -0.0546 | 0.2002 | 0.0001 |
| 143 | SLD 2 | 0.28 | 4.17 | 29.63 | -0.0546 | 0.2002 | 0.0001 |
| 143 | SLD 3 | 0.22 | 0.45 | 28.9 | 0.1122 | 0.1585 | 0.0002 |
| 143 | SLD 4 | 0.22 | 0.45 | 28.9 | 0.1122 | 0.1585 | 0.0002 |
| 143 | SLD 5 | 0.27 | 7.57 | 29.18 | -0.2103 | 0.1833 | 0 |
| 143 | SLD 6 | 0.27 | 7.57 | 29.18 | -0.2103 | 0.1833 | 0 |
| 143 | SLD 7 | 0.07 | -4.84 | 26.74 | 0.3459 | 0.0445 | 0.0001 |
| 143 | SLD 8 | 0.07 | -4.84 | 26.74 | 0.3459 | 0.0445 | 0.0001 |
| 143 | SLD 9 | 0.2 | 6.77 | 28.05 | -0.1769 | 0.1271 | -0.0001 |
| 143 | SLD 10 | 0.2 | 6.77 | 28.05 | -0.1769 | 0.1271 | -0.0001 |
| 143 | SLD 11 | 0 | -5.64 | 25.61 | 0.3793 | -0.0116 | 0 |
| 143 | SLD 12 | 0 | -5.64 | 25.61 | 0.3793 | -0.0116 | 0 |
| 143 | SLD 13 | 0.05 | 1.49 | 25.89 | 0.0568 | 0.0131 | -0.0001 |
| 143 | SLD 14 | 0.05 | 1.49 | 25.89 | 0.0568 | 0.0131 | -0.0001 |
| 143 | SLD 15 | -0.01 | -2.24 | 25.16 | 0.2236 | -0.0285 | -0.0001 |
| 143 | SLD 16 | -0.01 | -2.24 | 25.16 | 0.2236 | -0.0285 | -0.0001 |
| 143 | SLV 1 | 0.48 | 8.6 | 32.7 | -0.2474 | 0.3564 | 0.0003 |
| 143 | SLV 2 | 0.48 | 8.6 | 32.7 | -0.2474 | 0.3564 | 0.0003 |
| 143 | SLV 3 | 0.33 | -0.3 | 30.89 | 0.1504 | 0.2536 | 0.0004 |
| 143 | SLV 4 | 0.33 | -0.3 | 30.89 | 0.1504 | 0.2536 | 0.0004 |
| 143 | SLV 5 | 0.46 | 16.75 | 31.74 | -0.6185 | 0.323 | 0 |
| 143 | SLV 6 | 0.46 | 16.75 | 31.74 | -0.6185 | 0.323 | 0 |
| 143 | SLV 7 | -0.03 | -12.91 | 25.69 | 0.7076 | -0.0198 | 0.0003 |
| 143 | SLV 8 | -0.03 | -12.91 | 25.69 | 0.7076 | -0.0198 | 0.0003 |
| 143 | SLV 9 | 0.3 | 14.84 | 29.1 | -0.5387 | 0.1914 | -0.0002 |
| 143 | SLV 10 | 0.3 | 14.84 | 29.1 | -0.5387 | 0.1914 | -0.0002 |
| 143 | SLV 11 | -0.19 | -14.82 | 23.05 | 0.7874 | -0.1513 | 0.0001 |
| 143 | SLV 12 | -0.19 | -14.82 | 23.05 | 0.7874 | -0.1513 | 0.0001 |
| 143 | SLV 13 | -0.06 | 2.23 | 23.9 | 0.0185 | -0.0819 | -0.0004 |
| 143 | SLV 14 | -0.06 | 2.23 | 23.9 | 0.0185 | -0.0819 | -0.0004 |
| 143 | SLV 15 | -0.21 | -6.67 | 22.09 | 0.4164 | -0.1848 | -0.0003 |
| 143 | SLV 16 | -0.21 | -6.67 | 22.09 | 0.4164 | -0.1848 | -0.0003 |
| 144 | SLU 1 | 0.02 | -2.73 | 40.78 | 0.1113 | 0.0202 | -0.0016 |
| 144 | SLU 2 | 0.02 | -3.05 | 40.97 | 0.1212 | 0.0205 | -0.0017 |
| 144 | SLU 3 | 0.02 | -2.65 | 42.08 | 0.1112 | 0.0207 | -0.0017 |
| 144 | SLU 4 | 0.02 | -2.84 | 42.19 | 0.1171 | 0.0208 | -0.0017 |
| 144 | SLU 5 | 0.02 | -2.97 | 41.74 | 0.1202 | 0.0207 | -0.0017 |
| 144 | SLU 6 | 0.02 | -2.57 | 42.85 | 0.1102 | 0.0209 | -0.0017 |
| 144 | SLU 7 | 0.02 | -2.76 | 42.96 | 0.1162 | 0.021 | -0.0017 |
| 144 | SLU 8 | 0.02 | -2.57 | 42.32 | 0.1093 | 0.0207 | -0.0017 |
| 144 | SLU 9 | 0.02 | -2.76 | 42.44 | 0.1153 | 0.0208 | -0.0017 |
| 144 | SLU 10 | 0.02 | -3.67 | 49.27 | 0.1462 | 0.0253 | -0.0021 |
| 144 | SLU 11 | 0.02 | -3.28 | 50.37 | 0.1363 | 0.0254 | -0.0021 |
| 144 | SLU 12 | 0.02 | -3.47 | 50.49 | 0.1422 | 0.0256 | -0.0021 |
| 144 | SLU 13 | 0.02 | -3.59 | 50.04 | 0.1453 | 0.0255 | -0.0021 |
| 144 | SLU 14 | 0.02 | -3.2 | 51.14 | 0.1353 | 0.0257 | -0.0021 |
| 144 | SLU 15 | 0.02 | -3.39 | 51.26 | 0.1412 | 0.0258 | -0.0022 |
| 144 | SLU 16 | 0.02 | -3.2 | 50.62 | 0.1344 | 0.0255 | -0.0021 |
| 144 | SLU 17 | 0.02 | -3.39 | 50.73 | 0.1404 | 0.0256 | -0.0021 |
| 144 | SLU 18 | 0.02 | -3.63 | 52.63 | 0.1471 | 0.0271 | -0.0022 |
| 144 | SLU 19 | 0.02 | -3.82 | 52.74 | 0.153 | 0.0272 | -0.0023 |
| 144 | SLU 20 | 0.02 | -3.55 | 53.4 | 0.1461 | 0.0273 | -0.0023 |
| 144 | SLU 21 | 0.02 | -3.74 | 53.51 | 0.1521 | 0.0274 | -0.0023 |
| 144 | SLU 22 | 0.02 | -2.78 | 46.68 | 0.1211 | 0.0228 | -0.0019 |
| 144 | SLU 23 | 0.02 | -3.1 | 46.87 | 0.131 | 0.0231 | -0.0019 |
| 144 | SLU 24 | 0.02 | -2.7 | 47.98 | 0.121 | 0.0232 | -0.0019 |
| 144 | SLU 25 | 0.02 | -2.89 | 48.09 | 0.127 | 0.0234 | -0.0019 |
| 144 | SLU 26 | 0.02 | -3.02 | 47.64 | 0.13 | 0.0233 | -0.0019 |
| 144 | SLU 27 | 0.02 | -2.62 | 48.75 | 0.1201 | 0.0235 | -0.0019 |
| 144 | SLU 28 | 0.02 | -2.81 | 48.86 | 0.126 | 0.0236 | -0.0019 |
| 144 | SLU 29 | 0.02 | -2.62 | 48.22 | 0.1192 | 0.0233 | -0.0019 |
| 144 | SLU 30 | 0.02 | -2.81 | 48.34 | 0.1251 | 0.0234 | -0.0019 |
| 144 | SLU 31 | 0.02 | -3.73 | 55.17 | 0.1561 | 0.0279 | -0.0023 |
| 144 | SLU 32 | 0.02 | -3.33 | 56.27 | 0.1461 | 0.028 | -0.0023 |
| 144 | SLU 33 | 0.02 | -3.52 | 56.39 | 0.152 | 0.0282 | -0.0023 |
| 144 | SLU 34 | 0.02 | -3.65 | 55.94 | 0.1551 | 0.0281 | -0.0023 |
| 144 | SLU 35 | 0.02 | -3.25 | 57.04 | 0.1451 | 0.0282 | -0.0023 |
| 144 | SLU 36 | 0.02 | -3.44 | 57.16 | 0.1511 | 0.0284 | -0.0024 |

| Nodo | Cont. | Reazione a traslazione | | | Reazione a rotazione | | |
|---|---|---|---|---|---|---|---|
| Ind. | N.br. | x | y | z | x | y | z |
| 144 | SLU 37 | 0.02 | -3.25 | 56.52 | 0.1443 | 0.028 | -0.0023 |
| 144 | SLU 38 | 0.02 | -3.44 | 56.63 | 0.1502 | 0.0282 | -0.0024 |
| 144 | SLU 39 | 0.02 | -3.68 | 58.53 | 0.1569 | 0.0296 | -0.0025 |
| 144 | SLU 40 | 0.02 | -3.87 | 58.64 | 0.1629 | 0.0298 | -0.0025 |
| 144 | SLU 41 | 0.02 | -3.6 | 59.3 | 0.156 | 0.0299 | -0.0025 |
| 144 | SLU 42 | 0.02 | -3.79 | 59.41 | 0.1619 | 0.03 | -0.0025 |
| 144 | SLU 43 | 0.02 | -3.53 | 51 | 0.1413 | 0.0254 | -0.0021 |
| 144 | SLU 44 | 0.02 | -3.85 | 51.19 | 0.1512 | 0.0257 | -0.0021 |
| 144 | SLU 45 | 0.02 | -3.45 | 52.29 | 0.1412 | 0.0259 | -0.0021 |
| 144 | SLU 46 | 0.02 | -3.64 | 52.41 | 0.1471 | 0.026 | -0.0021 |
| 144 | SLU 47 | 0.02 | -3.77 | 51.96 | 0.1502 | 0.0259 | -0.0021 |
| 144 | SLU 48 | 0.02 | -3.37 | 53.06 | 0.1402 | 0.0261 | -0.0021 |
| 144 | SLU 49 | 0.02 | -3.56 | 53.18 | 0.1462 | 0.0262 | -0.0021 |
| 144 | SLU 50 | 0.02 | -3.37 | 52.54 | 0.1394 | 0.0259 | -0.0021 |
| 144 | SLU 51 | 0.02 | -3.56 | 52.65 | 0.1453 | 0.026 | -0.0021 |
| 144 | SLU 52 | 0.02 | -4.47 | 59.48 | 0.1762 | 0.0305 | -0.0025 |
| 144 | SLU 53 | 0.02 | -4.08 | 60.59 | 0.1663 | 0.0306 | -0.0025 |
| 144 | SLU 54 | 0.02 | -4.27 | 60.7 | 0.1722 | 0.0308 | -0.0025 |
| 144 | SLU 55 | 0.02 | -4.4 | 60.25 | 0.1753 | 0.0307 | -0.0025 |
| 144 | SLU 56 | 0.02 | -4 | 61.36 | 0.1653 | 0.0309 | -0.0025 |
| 144 | SLU 57 | 0.02 | -4.19 | 61.47 | 0.1712 | 0.031 | -0.0026 |
| 144 | SLU 58 | 0.02 | -4 | 60.83 | 0.1644 | 0.0307 | -0.0025 |
| 144 | SLU 59 | 0.02 | -4.19 | 60.94 | 0.1704 | 0.0308 | -0.0026 |
| 144 | SLU 60 | 0.03 | -4.43 | 62.84 | 0.1771 | 0.0323 | -0.0027 |
| 144 | SLU 61 | 0.03 | -4.62 | 62.96 | 0.183 | 0.0324 | -0.0027 |
| 144 | SLU 62 | 0.03 | -4.35 | 63.61 | 0.1761 | 0.0325 | -0.0027 |
| 144 | SLU 63 | 0.03 | -4.54 | 63.73 | 0.1821 | 0.0326 | -0.0027 |
| 144 | SLU 64 | 0.02 | -3.58 | 56.9 | 0.1511 | 0.028 | -0.0023 |
| 144 | SLU 65 | 0.02 | -3.9 | 57.09 | 0.161 | 0.0283 | -0.0023 |
| 144 | SLU 66 | 0.02 | -3.5 | 58.19 | 0.151 | 0.0284 | -0.0023 |
| 144 | SLU 67 | 0.02 | -3.69 | 58.31 | 0.157 | 0.0286 | -0.0023 |
| 144 | SLU 68 | 0.02 | -3.82 | 57.86 | 0.16 | 0.0285 | -0.0023 |
| 144 | SLU 69 | 0.02 | -3.42 | 58.96 | 0.1501 | 0.0287 | -0.0023 |
| 144 | SLU 70 | 0.02 | -3.61 | 59.08 | 0.156 | 0.0288 | -0.0024 |
| 144 | SLU 71 | 0.02 | -3.42 | 58.44 | 0.1492 | 0.0285 | -0.0023 |
| 144 | SLU 72 | 0.02 | -3.61 | 58.55 | 0.1551 | 0.0286 | -0.0023 |
| 144 | SLU 73 | 0.03 | -4.53 | 65.38 | 0.1861 | 0.033 | -0.0027 |
| 144 | SLU 74 | 0.03 | -4.13 | 66.49 | 0.1761 | 0.0332 | -0.0027 |
| 144 | SLU 75 | 0.03 | -4.32 | 66.6 | 0.182 | 0.0334 | -0.0028 |
| 144 | SLU 76 | 0.03 | -4.45 | 66.15 | 0.1851 | 0.0333 | -0.0028 |
| 144 | SLU 77 | 0.03 | -4.05 | 67.26 | 0.1751 | 0.0334 | -0.0028 |
| 144 | SLU 78 | 0.03 | -4.24 | 67.37 | 0.1811 | 0.0336 | -0.0028 |
| 144 | SLU 79 | 0.03 | -4.05 | 66.73 | 0.1743 | 0.0332 | -0.0027 |
| 144 | SLU 80 | 0.03 | -4.24 | 66.84 | 0.1802 | 0.0334 | -0.0028 |
| 144 | SLU 81 | 0.03 | -4.48 | 68.74 | 0.1869 | 0.0348 | -0.0029 |
| 144 | SLU 82 | 0.03 | -4.67 | 68.86 | 0.1929 | 0.035 | -0.0029 |
| 144 | SLU 83 | 0.03 | -4.4 | 69.51 | 0.186 | 0.0351 | -0.0029 |
| 144 | SLU 84 | 0.03 | -4.59 | 69.63 | 0.1919 | 0.0352 | -0.0029 |
| 144 | SLE RA 1 | 0.02 | -2.74 | 42.47 | 0.1141 | 0.021 | -0.0017 |
| 144 | SLE RA 2 | 0.02 | -2.96 | 42.6 | 0.1207 | 0.0211 | -0.0017 |
| 144 | SLE RA 3 | 0.02 | -2.69 | 43.33 | 0.114 | 0.0213 | -0.0017 |
| 144 | SLE RA 4 | 0.02 | -2.82 | 43.41 | 0.118 | 0.0214 | -0.0017 |
| 144 | SLE RA 5 | 0.02 | -2.9 | 43.11 | 0.12 | 0.0213 | -0.0017 |
| 144 | SLE RA 6 | 0.02 | -2.64 | 43.85 | 0.1134 | 0.0214 | -0.0017 |
| 144 | SLE RA 7 | 0.02 | -2.76 | 43.92 | 0.1173 | 0.0215 | -0.0018 |
| 144 | SLE RA 8 | 0.02 | -2.64 | 43.5 | 0.1128 | 0.0213 | -0.0017 |
| 144 | SLE RA 9 | 0.02 | -2.76 | 43.57 | 0.1168 | 0.0214 | -0.0017 |
| 144 | SLE RA 10 | 0.02 | -3.37 | 48.12 | 0.1374 | 0.0243 | -0.002 |
| 144 | SLE RA 11 | 0.02 | -3.11 | 48.86 | 0.1307 | 0.0244 | -0.002 |
| 144 | SLE RA 12 | 0.02 | -3.24 | 48.94 | 0.1347 | 0.0245 | -0.002 |
| 144 | SLE RA 13 | 0.02 | -3.32 | 48.64 | 0.1368 | 0.0245 | -0.002 |
| 144 | SLE RA 14 | 0.02 | -3.06 | 49.38 | 0.1301 | 0.0246 | -0.002 |
| 144 | SLE RA 15 | 0.02 | -3.18 | 49.45 | 0.1341 | 0.0247 | -0.002 |
| 144 | SLE RA 16 | 0.02 | -3.06 | 49.02 | 0.1295 | 0.0245 | -0.002 |
| 144 | SLE RA 17 | 0.02 | -3.18 | 49.1 | 0.1335 | 0.0246 | -0.002 |
| 144 | SLE RA 18 | 0.02 | -3.34 | 50.37 | 0.138 | 0.0255 | -0.0021 |
| 144 | SLE RA 19 | 0.02 | -3.47 | 50.44 | 0.1419 | 0.0256 | -0.0021 |
| 144 | SLE RA 20 | 0.02 | -3.29 | 50.88 | 0.1373 | 0.0257 | -0.0021 |
| 144 | SLE RA 21 | 0.02 | -3.42 | 50.96 | 0.1413 | 0.0258 | -0.0021 |
| 144 | SLE FR 1 | 0.02 | -2.74 | 42.47 | 0.1141 | 0.021 | -0.0017 |
| 144 | SLE FR 2 | 0.02 | -2.79 | 42.49 | 0.1154 | 0.021 | -0.0017 |
| 144 | SLE FR 3 | 0.02 | -2.72 | 42.67 | 0.1138 | 0.021 | -0.0017 |
| 144 | SLE FR 4 | 0.02 | -2.97 | 44.86 | 0.1226 | 0.0224 | -0.0018 |
| 144 | SLE FR 5 | 0.02 | -2.9 | 45.04 | 0.121 | 0.0224 | -0.0018 |
| 144 | SLE FR 6 | 0.02 | -3.04 | 46.42 | 0.126 | 0.0233 | -0.0019 |
| 144 | SLE QP 1 | 0.02 | -2.74 | 42.47 | 0.1141 | 0.021 | -0.0017 |
| 144 | SLE QP 2 | 0.02 | -2.92 | 44.84 | 0.1212 | 0.0223 | -0.0018 |
| 144 | SLD 1 | 0.11 | -2.43 | 35.67 | 0.0062 | 0.1303 | -0.0108 |
| 144 | SLD 2 | 0.11 | -2.43 | 35.67 | 0.0062 | 0.1303 | -0.0108 |
| 144 | SLD 3 | 0.13 | -6.21 | 38.13 | 0.1312 | 0.1449 | -0.0127 |
| 144 | SLD 4 | 0.13 | -6.21 | 38.13 | 0.1312 | 0.1449 | -0.0127 |
| 144 | SLD 5 | 0.02 | 2.96 | 38.36 | -0.1028 | 0.0326 | -0.0016 |
| 144 | SLD 6 | 0.02 | 2.96 | 38.36 | -0.1028 | 0.0326 | -0.0016 |
| 144 | SLD 7 | 0.08 | -9.65 | 46.55 | 0.3138 | 0.0812 | -0.008 |
| 144 | SLD 8 | 0.08 | -9.65 | 46.55 | 0.3138 | 0.0812 | -0.008 |
| 144 | SLD 9 | -0.04 | 3.8 | 43.12 | -0.0713 | -0.0365 | 0.0043 |
| 144 | SLD 10 | -0.04 | 3.8 | 43.12 | -0.0713 | -0.0365 | 0.0043 |
| 144 | SLD 11 | 0.02 | -8.81 | 51.32 | 0.3453 | 0.0121 | -0.002 |

| Nodo | Cont. | Reazione a traslazione | | | Reazione a rotazione | | |
|---|---|---|---|---|---|---|---|
| Ind. | N.br. | x | y | z | x | y | z |
| 144 | SLD 12 | 0.02 | -8.81 | 51.32 | 0.3453 | 0.0121 | -0.002 |
| 144 | SLD 13 | -0.09 | 0.37 | 51.55 | 0.1113 | -0.1002 | 0.0091 |
| 144 | SLD 14 | -0.09 | 0.37 | 51.55 | 0.1113 | -0.1002 | 0.0091 |
| 144 | SLD 15 | -0.07 | -3.42 | 54.01 | 0.2363 | -0.0856 | 0.0072 |
| 144 | SLD 16 | -0.07 | -3.42 | 54.01 | 0.2363 | -0.0856 | 0.0072 |
| 144 | SLV 1 | 0.24 | -1.79 | 23.41 | -0.1458 | 0.2902 | -0.024 |
| 144 | SLV 2 | 0.24 | -1.79 | 23.41 | -0.1458 | 0.2902 | -0.024 |
| 144 | SLV 3 | 0.29 | -10.55 | 29.1 | 0.1436 | 0.326 | -0.0286 |
| 144 | SLV 4 | 0.29 | -10.55 | 29.1 | 0.1436 | 0.326 | -0.0286 |
| 144 | SLV 5 | 0.01 | 10.71 | 29.8 | -0.3977 | 0.0485 | -0.0015 |
| 144 | SLV 6 | 0.01 | 10.71 | 29.8 | -0.3977 | 0.0485 | -0.0015 |
| 144 | SLV 7 | 0.17 | -18.5 | 48.73 | 0.5668 | 0.1677 | -0.0168 |
| 144 | SLV 8 | 0.17 | -18.5 | 48.73 | 0.5668 | 0.1677 | -0.0168 |
| 144 | SLV 9 | -0.13 | 12.66 | 40.95 | -0.3244 | -0.123 | 0.0132 |
| 144 | SLV 10 | -0.13 | 12.66 | 40.95 | -0.3244 | -0.123 | 0.0132 |
| 144 | SLV 11 | 0.02 | -16.56 | 59.88 | 0.6402 | -0.0038 | -0.0022 |
| 144 | SLV 12 | 0.02 | -16.56 | 59.88 | 0.6402 | -0.0038 | -0.0022 |
| 144 | SLV 13 | -0.25 | 4.71 | 60.58 | 0.0989 | -0.2813 | 0.0249 |
| 144 | SLV 14 | -0.25 | 4.71 | 60.58 | 0.0989 | -0.2813 | 0.0249 |
| 144 | SLV 15 | -0.21 | -4.06 | 66.26 | 0.3882 | -0.2455 | 0.0203 |
| 144 | SLV 16 | -0.21 | -4.06 | 66.26 | 0.3882 | -0.2455 | 0.0203 |
| 145 | SLU 1 | 0 | -2.06 | 38.65 | 0.1632 | -0.0021 | 0 |
| 145 | SLU 2 | 0 | -0.19 | 38.01 | 0.0801 | -0.0055 | 0 |
| 145 | SLU 3 | 0 | -2.35 | 39.99 | 0.1791 | -0.0022 | 0 |
| 145 | SLU 4 | 0 | -1.23 | 39.61 | 0.1292 | -0.0043 | 0 |
| 145 | SLU 5 | 0 | -0.52 | 38.9 | 0.0972 | -0.0056 | 0 |
| 145 | SLU 6 | 0 | -2.69 | 40.88 | 0.1962 | -0.0023 | 0 |
| 145 | SLU 7 | 0 | -1.56 | 40.5 | 0.1463 | -0.0043 | 0 |
| 145 | SLU 8 | 0 | -2.73 | 40.42 | 0.1975 | -0.0022 | 0 |
| 145 | SLU 9 | 0 | -1.61 | 40.04 | 0.1476 | -0.0043 | 0 |
| 145 | SLU 10 | 0 | -0.27 | 44.69 | 0.0959 | -0.006 | 0 |
| 145 | SLU 11 | 0 | -2.44 | 46.66 | 0.1949 | -0.0027 | 0 |
| 145 | SLU 12 | 0 | -1.31 | 46.28 | 0.145 | -0.0047 | 0 |
| 145 | SLU 13 | 0 | -0.61 | 45.58 | 0.113 | -0.006 | 0 |
| 145 | SLU 14 | 0 | -2.77 | 47.55 | 0.212 | -0.0028 | 0 |
| 145 | SLU 15 | 0 | -1.65 | 47.17 | 0.1621 | -0.0048 | 0 |
| 145 | SLU 16 | 0 | -2.82 | 47.1 | 0.2133 | -0.0027 | 0 |
| 145 | SLU 17 | 0 | -1.69 | 46.72 | 0.1634 | -0.0048 | 0 |
| 145 | SLU 18 | 0 | -2.18 | 48.18 | 0.1858 | -0.0028 | 0 |
| 145 | SLU 19 | 0 | -1.06 | 47.8 | 0.1359 | -0.0048 | 0 |
| 145 | SLU 20 | 0 | -2.52 | 49.07 | 0.2029 | -0.0028 | 0 |
| 145 | SLU 21 | 0 | -1.39 | 48.69 | 0.153 | -0.0049 | 0 |
| 145 | SLU 22 | 0 | -2.26 | 44.86 | 0.1832 | -0.0025 | 0 |
| 145 | SLU 23 | 0 | -0.38 | 44.23 | 0.1 | -0.0059 | 0 |
| 145 | SLU 24 | 0 | -2.55 | 46.21 | 0.199 | -0.0026 | 0 |
| 145 | SLU 25 | 0 | -1.42 | 45.83 | 0.1491 | -0.0047 | 0 |
| 145 | SLU 26 | 0 | -0.72 | 45.12 | 0.1171 | -0.006 | 0 |
| 145 | SLU 27 | 0 | -2.88 | 47.1 | 0.2161 | -0.0027 | 0 |
| 145 | SLU 28 | 0 | -1.76 | 46.72 | 0.1662 | -0.0047 | 0 |
| 145 | SLU 29 | 0 | -2.93 | 46.64 | 0.2174 | -0.0026 | 0 |
| 145 | SLU 30 | 0 | -1.8 | 46.26 | 0.1675 | -0.0047 | 0 |
| 145 | SLU 31 | 0 | -0.47 | 50.91 | 0.1158 | -0.0064 | 0 |
| 145 | SLU 32 | 0 | -2.63 | 52.88 | 0.2148 | -0.0031 | 0 |
| 145 | SLU 33 | 0 | -1.51 | 52.5 | 0.1649 | -0.0051 | 0 |
| 145 | SLU 34 | 0 | -0.8 | 51.79 | 0.1329 | -0.0064 | 0 |
| 145 | SLU 35 | 0 | -2.97 | 53.77 | 0.2319 | -0.0032 | 0 |
| 145 | SLU 36 | 0 | -1.84 | 53.39 | 0.182 | -0.0052 | 0 |
| 145 | SLU 37 | 0 | -3.01 | 53.32 | 0.2332 | -0.0031 | 0 |
| 145 | SLU 38 | 0 | -1.89 | 52.94 | 0.1833 | -0.0052 | 0 |
| 145 | SLU 39 | 0 | -2.38 | 54.4 | 0.2058 | -0.0032 | 0 |
| 145 | SLU 40 | 0 | -1.25 | 54.02 | 0.1559 | -0.0052 | 0 |
| 145 | SLU 41 | 0 | -2.71 | 55.29 | 0.2229 | -0.0032 | 0 |
| 145 | SLU 42 | 0 | -1.59 | 54.91 | 0.173 | -0.0053 | 0 |
| 145 | SLU 43 | 0 | -2.62 | 48.11 | 0.2054 | -0.0026 | 0 |
| 145 | SLU 44 | 0 | -0.74 | 47.48 | 0.1222 | -0.006 | 0 |
| 145 | SLU 45 | 0 | -2.9 | 49.45 | 0.2212 | -0.0027 | 0 |
| 145 | SLU 46 | 0 | -1.78 | 49.07 | 0.1713 | -0.0048 | 0 |
| 145 | SLU 47 | 0 | -1.07 | 48.37 | 0.1393 | -0.0061 | 0 |
| 145 | SLU 48 | 0 | -3.24 | 50.34 | 0.2383 | -0.0028 | 0 |
| 145 | SLU 49 | 0 | -2.11 | 49.96 | 0.1884 | -0.0048 | 0 |
| 145 | SLU 50 | 0 | -3.29 | 49.89 | 0.2396 | -0.0027 | 0 |
| 145 | SLU 51 | 0 | -2.16 | 49.51 | 0.1897 | -0.0048 | 0 |
| 145 | SLU 52 | 0 | -0.82 | 54.15 | 0.138 | -0.0064 | 0 |
| 145 | SLU 53 | 0 | -2.99 | 56.13 | 0.237 | -0.0032 | 0 |
| 145 | SLU 54 | 0 | -1.86 | 55.75 | 0.1871 | -0.0052 | 0 |
| 145 | SLU 55 | 0 | -1.16 | 55.04 | 0.1551 | -0.0065 | 0 |
| 145 | SLU 56 | 0 | -3.32 | 57.01 | 0.2542 | -0.0033 | 0 |
| 145 | SLU 57 | 0 | -2.2 | 56.64 | 0.2042 | -0.0053 | 0 |
| 145 | SLU 58 | 0 | -3.37 | 56.56 | 0.2554 | -0.0032 | 0 |
| 145 | SLU 59 | 0 | -2.24 | 56.18 | 0.2055 | -0.0052 | 0 |
| 145 | SLU 60 | 0 | -2.73 | 57.64 | 0.228 | -0.0032 | 0 |
| 145 | SLU 61 | 0 | -1.61 | 57.26 | 0.1781 | -0.0053 | 0 |
| 145 | SLU 62 | 0 | -3.07 | 58.53 | 0.2451 | -0.0033 | 0 |
| 145 | SLU 63 | 0 | -1.94 | 58.15 | 0.1952 | -0.0054 | 0 |
| 145 | SLU 64 | 0 | -2.81 | 54.33 | 0.2253 | -0.003 | 0 |
| 145 | SLU 65 | 0 | -0.94 | 53.69 | 0.1421 | -0.0064 | 0 |
| 145 | SLU 66 | 0 | -3.1 | 55.67 | 0.2412 | -0.0031 | 0 |
| 145 | SLU 67 | 0 | -1.98 | 55.29 | 0.1913 | -0.0052 | 0 |

| Nodo | Cont. | Reazione a traslazione | | | Reazione a rotazione | | |
|---|---|---|---|---|---|---|---|
| Ind. | N.br. | x | y | z | x | y | z |
| 145 | SLU 68 | 0 | -1.27 | 54.58 | 0.1592 | -0.0065 | 0 |
| 145 | SLU 69 | 0 | -3.44 | 56.56 | 0.2583 | -0.0032 | 0 |
| 145 | SLU 70 | 0 | -2.31 | 56.18 | 0.2084 | -0.0052 | 0 |
| 145 | SLU 71 | 0 | -3.48 | 56.1 | 0.2595 | -0.0031 | 0 |
| 145 | SLU 72 | 0 | -2.36 | 55.72 | 0.2096 | -0.0052 | 0 |
| 145 | SLU 73 | 0 | -1.02 | 60.37 | 0.1579 | -0.0068 | 0 |
| 145 | SLU 74 | 0 | -3.18 | 62.34 | 0.257 | -0.0036 | 0 |
| 145 | SLU 75 | 0 | -2.06 | 61.96 | 0.2071 | -0.0056 | 0 |
| 145 | SLU 76 | 0 | -1.35 | 61.26 | 0.1751 | -0.0069 | 0 |
| 145 | SLU 77 | 0 | -3.52 | 63.23 | 0.2741 | -0.0037 | 0 |
| 145 | SLU 78 | 0 | -2.39 | 62.85 | 0.2242 | -0.0057 | 0 |
| 145 | SLU 79 | 0 | -3.56 | 62.78 | 0.2754 | -0.0036 | 0 |
| 145 | SLU 80 | 0 | -2.44 | 62.4 | 0.2254 | -0.0056 | 0 |
| 145 | SLU 81 | 0 | -2.93 | 63.86 | 0.2479 | -0.0036 | 0 |
| 145 | SLU 82 | 0 | -1.81 | 63.48 | 0.198 | -0.0057 | 0 |
| 145 | SLU 83 | 0 | -3.27 | 64.75 | 0.265 | -0.0037 | 0 |
| 145 | SLU 84 | 0 | -2.14 | 64.37 | 0.2151 | -0.0058 | 0 |
| 145 | SLE RA 1 | 0 | -2.12 | 40.42 | 0.1689 | -0.0022 | 0 |
| 145 | SLE RA 2 | 0 | -0.87 | 40 | 0.1135 | -0.0045 | 0 |
| 145 | SLE RA 3 | 0 | -2.31 | 41.32 | 0.1795 | -0.0023 | 0 |
| 145 | SLE RA 4 | 0 | -1.56 | 41.07 | 0.1462 | -0.0037 | 0 |
| 145 | SLE RA 5 | 0 | -1.09 | 40.59 | 0.1249 | -0.0045 | 0 |
| 145 | SLE RA 6 | 0 | -2.54 | 41.91 | 0.1909 | -0.0024 | 0 |
| 145 | SLE RA 7 | 0 | -1.79 | 41.66 | 0.1576 | -0.0037 | 0 |
| 145 | SLE RA 8 | 0 | -2.57 | 41.61 | 0.1918 | -0.0023 | 0 |
| 145 | SLE RA 9 | 0 | -1.82 | 41.36 | 0.1585 | -0.0037 | 0 |
| 145 | SLE RA 10 | 0 | -0.92 | 44.45 | 0.124 | -0.0048 | 0 |
| 145 | SLE RA 11 | 0 | -2.37 | 45.77 | 0.19 | -0.0026 | 0 |
| 145 | SLE RA 12 | 0 | -1.62 | 45.51 | 0.1568 | -0.004 | 0 |
| 145 | SLE RA 13 | 0 | -1.15 | 45.04 | 0.1354 | -0.0048 | 0 |
| 145 | SLE RA 14 | 0 | -2.59 | 46.36 | 0.2015 | -0.0027 | 0 |
| 145 | SLE RA 15 | 0 | -1.84 | 46.11 | 0.1682 | -0.004 | 0 |
| 145 | SLE RA 16 | 0 | -2.62 | 46.06 | 0.2023 | -0.0026 | 0 |
| 145 | SLE RA 17 | 0 | -1.87 | 45.8 | 0.169 | -0.004 | 0 |
| 145 | SLE RA 18 | 0 | -2.2 | 46.78 | 0.184 | -0.0026 | 0 |
| 145 | SLE RA 19 | 0 | -1.45 | 46.53 | 0.1507 | -0.004 | 0 |
| 145 | SLE RA 20 | 0 | -2.42 | 47.37 | 0.1954 | -0.0027 | 0 |
| 145 | SLE RA 21 | 0 | -1.67 | 47.12 | 0.1621 | -0.0041 | 0 |
| 145 | SLE FR 1 | 0 | -2.12 | 40.42 | 0.1689 | -0.0022 | 0 |
| 145 | SLE FR 2 | 0 | -1.87 | 40.34 | 0.1578 | -0.0027 | 0 |
| 145 | SLE FR 3 | 0 | -2.21 | 40.66 | 0.1735 | -0.0022 | 0 |
| 145 | SLE FR 4 | 0 | -1.89 | 42.25 | 0.1624 | -0.0028 | 0 |
| 145 | SLE FR 5 | 0 | -2.23 | 42.57 | 0.178 | -0.0024 | 0 |
| 145 | SLE FR 6 | 0 | -2.16 | 43.6 | 0.1765 | -0.0024 | 0 |
| 145 | SLE QP 1 | 0 | -2.12 | 40.42 | 0.1689 | -0.0022 | 0 |
| 145 | SLE QP 2 | 0 | -2.14 | 42.33 | 0.1735 | -0.0023 | 0 |
| 145 | SLD 1 | 0.08 | -1.87 | 42.97 | 0.1614 | 0.0742 | 0.0001 |
| 145 | SLD 2 | 0.08 | -1.87 | 42.97 | 0.1614 | 0.0742 | 0.0001 |
| 145 | SLD 3 | 0.11 | -5.29 | 43.8 | 0.3193 | 0.0934 | 0.0001 |
| 145 | SLD 4 | 0.11 | -5.29 | 43.8 | 0.3193 | 0.0934 | 0.0001 |
| 145 | SLD 5 | -0.01 | 3.14 | 41.27 | -0.0696 | -0.0084 | 0 |
| 145 | SLD 6 | -0.01 | 3.14 | 41.27 | -0.0696 | -0.0084 | 0 |
| 145 | SLD 7 | 0.07 | -8.28 | 44.02 | 0.4567 | 0.0554 | 0.0001 |
| 145 | SLD 8 | 0.07 | -8.28 | 44.02 | 0.4567 | 0.0554 | 0.0001 |
| 145 | SLD 9 | -0.07 | 4 | 40.64 | -0.1097 | -0.0601 | -0.0001 |
| 145 | SLD 10 | -0.07 | 4 | 40.64 | -0.1097 | -0.0601 | -0.0001 |
| 145 | SLD 11 | 0.01 | -7.42 | 43.39 | 0.4166 | 0.0037 | 0 |
| 145 | SLD 12 | 0.01 | -7.42 | 43.39 | 0.4166 | 0.0037 | 0 |
| 145 | SLD 13 | -0.11 | 1.01 | 40.87 | 0.0277 | -0.0981 | -0.0001 |
| 145 | SLD 14 | -0.11 | 1.01 | 40.87 | 0.0277 | -0.0981 | -0.0001 |
| 145 | SLD 15 | -0.09 | -2.42 | 41.69 | 0.1856 | -0.0789 | -0.0001 |
| 145 | SLD 16 | -0.09 | -2.42 | 41.69 | 0.1856 | -0.0789 | -0.0001 |
| 145 | SLV 1 | 0.2 | -1.63 | 43.9 | 0.1515 | 0.182 | 0.0002 |
| 145 | SLV 2 | 0.2 | -1.63 | 43.9 | 0.1515 | 0.182 | 0.0002 |
| 145 | SLV 3 | 0.26 | -9.63 | 45.91 | 0.5199 | 0.2309 | 0.0003 |
| 145 | SLV 4 | 0.26 | -9.63 | 45.91 | 0.5199 | 0.2309 | 0.0003 |
| 145 | SLV 5 | -0.03 | 10.14 | 39.75 | -0.3918 | -0.0213 | 0 |
| 145 | SLV 6 | -0.03 | 10.14 | 39.75 | -0.3918 | -0.0213 | 0 |
| 145 | SLV 7 | 0.17 | -16.52 | 46.46 | 0.8361 | 0.1418 | 0.0002 |
| 145 | SLV 8 | 0.17 | -16.52 | 46.46 | 0.8361 | 0.1418 | 0.0002 |
| 145 | SLV 9 | -0.17 | 12.24 | 38.2 | -0.4892 | -0.1465 | -0.0002 |
| 145 | SLV 10 | -0.17 | 12.24 | 38.2 | -0.4892 | -0.1465 | -0.0002 |
| 145 | SLV 11 | 0.03 | -14.43 | 44.91 | 0.7388 | 0.0166 | 0 |
| 145 | SLV 12 | 0.03 | -14.43 | 44.91 | 0.7388 | 0.0166 | 0 |
| 145 | SLV 13 | -0.26 | 5.34 | 38.75 | -0.1729 | -0.2356 | -0.0003 |
| 145 | SLV 14 | -0.26 | 5.34 | 38.75 | -0.1729 | -0.2356 | -0.0003 |
| 145 | SLV 15 | -0.2 | -2.66 | 40.76 | 0.1954 | -0.1866 | -0.0002 |
| 145 | SLV 16 | -0.2 | -2.66 | 40.76 | 0.1954 | -0.1866 | -0.0002 |
| 146 | SLU 1 | 0 | 2.05 | 54.17 | -0.0672 | -0.0015 | 0 |
| 146 | SLU 2 | 0.01 | 2.35 | 56.48 | -0.0793 | 0.0303 | 0 |
| 146 | SLU 3 | -0.01 | 2.12 | 55.76 | -0.0697 | -0.0017 | 0 |
| 146 | SLU 4 | 0 | 2.31 | 57.15 | -0.077 | 0.0173 | 0 |
| 146 | SLU 5 | 0.01 | 2.39 | 57.4 | -0.0804 | 0.0301 | 0 |
| 146 | SLU 6 | -0.01 | 2.16 | 56.68 | -0.0709 | -0.0019 | 0 |
| 146 | SLU 7 | 0 | 2.35 | 58.07 | -0.0781 | 0.0172 | 0 |
| 146 | SLU 8 | -0.01 | 2.12 | 56 | -0.0694 | -0.0018 | 0 |
| 146 | SLU 9 | 0 | 2.31 | 57.39 | -0.0767 | 0.0172 | 0 |
| 146 | SLU 10 | 0.01 | 2.91 | 63.1 | -0.0993 | 0.0292 | 0 |

| Nodo | Cont. | Reazione a traslazione | | | Reazione a rotazione | | |
|---|---|---|---|---|---|---|---|
| Ind. | N.br. | x | y | z | x | y | z |
| 146 | SLU 11 | -0.01 | 2.68 | 62.38 | -0.0897 | -0.0028 | 0 |
| 146 | SLU 12 | 0 | 2.86 | 63.77 | -0.097 | 0.0162 | 0 |
| 146 | SLU 13 | 0 | 2.95 | 64.02 | -0.1004 | 0.029 | 0 |
| 146 | SLU 14 | -0.01 | 2.72 | 63.3 | -0.0908 | -0.003 | 0 |
| 146 | SLU 15 | 0 | 2.9 | 64.69 | -0.0981 | 0.0161 | 0 |
| 146 | SLU 16 | -0.01 | 2.67 | 62.62 | -0.0894 | -0.0029 | 0 |
| 146 | SLU 17 | 0 | 2.86 | 64.01 | -0.0966 | 0.0162 | 0 |
| 146 | SLU 18 | -0.01 | 2.84 | 63.62 | -0.0957 | -0.003 | 0 |
| 146 | SLU 19 | 0 | 3.02 | 65.01 | -0.103 | 0.016 | 0 |
| 146 | SLU 20 | -0.01 | 2.87 | 64.54 | -0.0968 | -0.0032 | 0 |
| 146 | SLU 21 | 0 | 3.06 | 65.93 | -0.1041 | 0.0159 | 0 |
| 146 | SLU 22 | -0.01 | 2.48 | 60.94 | -0.0823 | -0.0024 | 0 |
| 146 | SLU 23 | 0.01 | 2.79 | 63.26 | -0.0945 | 0.0293 | 0 |
| 146 | SLU 24 | -0.01 | 2.56 | 62.54 | -0.0849 | -0.0027 | 0 |
| 146 | SLU 25 | 0 | 2.75 | 63.93 | -0.0922 | 0.0164 | 0 |
| 146 | SLU 26 | 0.01 | 2.83 | 64.17 | -0.0956 | 0.0292 | 0 |
| 146 | SLU 27 | -0.01 | 2.6 | 63.46 | -0.086 | -0.0029 | 0 |
| 146 | SLU 28 | 0 | 2.78 | 64.85 | -0.0933 | 0.0162 | 0 |
| 146 | SLU 29 | -0.01 | 2.56 | 62.78 | -0.0846 | -0.0028 | 0 |
| 146 | SLU 30 | 0 | 2.74 | 64.17 | -0.0918 | 0.0163 | 0 |
| 146 | SLU 31 | 0 | 3.34 | 69.87 | -0.1144 | 0.0282 | 0 |
| 146 | SLU 32 | -0.01 | 3.12 | 69.16 | -0.1049 | -0.0038 | 0 |
| 146 | SLU 33 | 0 | 3.3 | 70.55 | -0.1121 | 0.0153 | 0 |
| 146 | SLU 34 | 0 | 3.38 | 70.79 | -0.1155 | 0.0281 | 0 |
| 146 | SLU 35 | -0.01 | 3.15 | 70.08 | -0.106 | -0.004 | 0 |
| 146 | SLU 36 | 0 | 3.34 | 71.46 | -0.1133 | 0.0151 | 0 |
| 146 | SLU 37 | -0.01 | 3.11 | 69.4 | -0.1045 | -0.0039 | 0 |
| 146 | SLU 38 | 0 | 3.3 | 70.79 | -0.1118 | 0.0152 | 0 |
| 146 | SLU 39 | -0.01 | 3.27 | 70.4 | -0.1109 | -0.004 | 0 |
| 146 | SLU 40 | 0 | 3.46 | 71.79 | -0.1181 | 0.0151 | 0 |
| 146 | SLU 41 | -0.01 | 3.31 | 71.32 | -0.112 | -0.0042 | 0 |
| 146 | SLU 42 | 0 | 3.5 | 72.7 | -0.1192 | 0.0149 | 0 |
| 146 | SLU 43 | -0.01 | 2.51 | 68.09 | -0.0821 | -0.0016 | 0 |
| 146 | SLU 44 | 0.01 | 2.82 | 70.41 | -0.0943 | 0.0302 | 0 |
| 146 | SLU 45 | -0.01 | 2.59 | 69.69 | -0.0847 | -0.0019 | 0 |
| 146 | SLU 46 | 0 | 2.77 | 71.08 | -0.092 | 0.0172 | 0 |
| 146 | SLU 47 | 0.01 | 2.86 | 71.32 | -0.0954 | 0.03 | 0 |
| 146 | SLU 48 | -0.01 | 2.63 | 70.61 | -0.0858 | -0.002 | 0 |
| 146 | SLU 49 | 0 | 2.81 | 72 | -0.0931 | 0.017 | 0 |
| 146 | SLU 50 | -0.01 | 2.58 | 69.93 | -0.0844 | -0.0019 | 0 |
| 146 | SLU 51 | 0 | 2.77 | 71.32 | -0.0916 | 0.0171 | 0 |
| 146 | SLU 52 | 0 | 3.37 | 77.02 | -0.1142 | 0.0291 | 0 |
| 146 | SLU 53 | -0.01 | 3.14 | 76.31 | -0.1047 | -0.0029 | 0 |
| 146 | SLU 54 | 0 | 3.33 | 77.7 | -0.1119 | 0.0161 | 0 |
| 146 | SLU 55 | 0 | 3.41 | 77.94 | -0.1153 | 0.0289 | 0 |
| 146 | SLU 56 | -0.01 | 3.18 | 77.23 | -0.1058 | -0.0031 | 0 |
| 146 | SLU 57 | 0 | 3.36 | 78.61 | -0.113 | 0.016 | 0 |
| 146 | SLU 58 | -0.01 | 3.14 | 76.55 | -0.1043 | -0.003 | 0 |
| 146 | SLU 59 | 0 | 3.32 | 77.94 | -0.1116 | 0.016 | 0 |
| 146 | SLU 60 | -0.01 | 3.3 | 77.55 | -0.1107 | -0.0032 | 0 |
| 146 | SLU 61 | 0 | 3.49 | 78.94 | -0.1179 | 0.0159 | 0 |
| 146 | SLU 62 | -0.01 | 3.34 | 78.47 | -0.1118 | -0.0033 | 0 |
| 146 | SLU 63 | 0 | 3.52 | 79.85 | -0.119 | 0.0157 | 0 |
| 146 | SLU 64 | -0.01 | 2.95 | 74.87 | -0.0973 | -0.0026 | 0 |
| 146 | SLU 65 | 0 | 3.25 | 77.18 | -0.1094 | 0.0292 | 0 |
| 146 | SLU 66 | -0.01 | 3.02 | 76.47 | -0.0999 | -0.0028 | 0 |
| 146 | SLU 67 | 0 | 3.21 | 77.85 | -0.1071 | 0.0163 | 0 |
| 146 | SLU 68 | 0 | 3.29 | 78.1 | -0.1105 | 0.0291 | 0 |
| 146 | SLU 69 | -0.01 | 3.06 | 77.39 | -0.101 | -0.003 | 0 |
| 146 | SLU 70 | 0 | 3.25 | 78.77 | -0.1082 | 0.0161 | 0 |
| 146 | SLU 71 | -0.01 | 3.02 | 76.71 | -0.0995 | -0.0029 | 0 |
| 146 | SLU 72 | 0 | 3.21 | 78.09 | -0.1068 | 0.0162 | 0 |
| 146 | SLU 73 | 0 | 3.81 | 83.8 | -0.1294 | 0.0281 | 0 |
| 146 | SLU 74 | -0.01 | 3.58 | 83.09 | -0.1198 | -0.0039 | 0 |
| 146 | SLU 75 | 0 | 3.76 | 84.47 | -0.1271 | 0.0152 | 0 |
| 146 | SLU 76 | 0 | 3.85 | 84.72 | -0.1305 | 0.028 | 0 |
| 146 | SLU 77 | -0.01 | 3.62 | 84 | -0.1209 | -0.0041 | 0 |
| 146 | SLU 78 | 0 | 3.8 | 85.39 | -0.1282 | 0.015 | 0 |
| 146 | SLU 79 | -0.01 | 3.57 | 83.33 | -0.1195 | -0.004 | 0 |
| 146 | SLU 80 | 0 | 3.76 | 84.71 | -0.1268 | 0.0151 | 0 |
| 146 | SLU 81 | -0.01 | 3.74 | 84.33 | -0.1258 | -0.0041 | 0 |
| 146 | SLU 82 | 0 | 3.92 | 85.71 | -0.1331 | 0.015 | 0 |
| 146 | SLU 83 | -0.01 | 3.77 | 85.24 | -0.1269 | -0.0043 | 0 |
| 146 | SLU 84 | 0 | 3.96 | 86.63 | -0.1342 | 0.0148 | 0 |
| 146 | SLE RA 1 | -0.01 | 2.17 | 56.1 | -0.0715 | -0.0018 | 0 |
| 146 | SLE RA 2 | 0 | 2.38 | 57.64 | -0.0796 | 0.0194 | 0 |
| 146 | SLE RA 3 | -0.01 | 2.22 | 57.17 | -0.0732 | -0.0019 | 0 |
| 146 | SLE RA 4 | 0 | 2.35 | 58.09 | -0.0781 | 0.0108 | 0 |
| 146 | SLE RA 5 | 0 | 2.4 | 58.26 | -0.0803 | 0.0193 | 0 |
| 146 | SLE RA 6 | -0.01 | 2.25 | 57.78 | -0.074 | -0.002 | 0 |
| 146 | SLE RA 7 | 0 | 2.37 | 58.7 | -0.0788 | 0.0107 | 0 |
| 146 | SLE RA 8 | -0.01 | 2.22 | 57.33 | -0.073 | -0.002 | 0 |
| 146 | SLE RA 9 | 0 | 2.34 | 58.25 | -0.0778 | 0.0107 | 0 |
| 146 | SLE RA 10 | 0 | 2.74 | 62.06 | -0.0929 | 0.0187 | 0 |
| 146 | SLE RA 11 | -0.01 | 2.59 | 61.58 | -0.0865 | -0.0027 | 0 |
| 146 | SLE RA 12 | 0 | 2.72 | 62.5 | -0.0914 | 0.0101 | 0 |
| 146 | SLE RA 13 | 0 | 2.77 | 62.67 | -0.0936 | 0.0186 | 0 |
| 146 | SLE RA 14 | -0.01 | 2.62 | 62.19 | -0.0873 | -0.0028 | 0 |

| Nodo | Cont. | Reazione a traslazione | | | Reazione a rotazione | | |
|---|---|---|---|---|---|---|---|
| Ind. | N.br. | x | y | z | x | y | z |
| 146 | SLE RA 15 | 0 | 2.74 | 63.12 | -0.0921 | 0.0099 | 0 |
| 146 | SLE RA 16 | -0.01 | 2.59 | 61.74 | -0.0863 | -0.0027 | 0 |
| 146 | SLE RA 17 | 0 | 2.71 | 62.67 | -0.0912 | 0.01 | 0 |
| 146 | SLE RA 18 | -0.01 | 2.7 | 62.41 | -0.0905 | -0.0028 | 0 |
| 146 | SLE RA 19 | 0 | 2.82 | 63.33 | -0.0954 | 0.0099 | 0 |
| 146 | SLE RA 20 | -0.01 | 2.72 | 63.02 | -0.0913 | -0.0029 | 0 |
| 146 | SLE RA 21 | 0 | 2.85 | 63.94 | -0.0961 | 0.0098 | 0 |
| 146 | SLE FR 1 | -0.01 | 2.17 | 56.1 | -0.0715 | -0.0018 | 0 |
| 146 | SLE FR 2 | 0 | 2.21 | 56.41 | -0.0731 | 0.0025 | 0 |
| 146 | SLE FR 3 | -0.01 | 2.18 | 56.35 | -0.0718 | -0.0018 | 0 |
| 146 | SLE FR 4 | 0 | 2.37 | 58.3 | -0.0788 | 0.0022 | 0 |
| 146 | SLE FR 5 | -0.01 | 2.34 | 58.24 | -0.0775 | -0.0021 | 0 |
| 146 | SLE FR 6 | -0.01 | 2.43 | 59.26 | -0.081 | -0.0023 | 0 |
| 146 | SLE QP 1 | -0.01 | 2.17 | 56.1 | -0.0715 | -0.0018 | 0 |
| 146 | SLE QP 2 | -0.01 | 2.33 | 57.99 | -0.0772 | -0.0021 | 0 |
| 146 | SLD 1 | 0.11 | 3.09 | 43.82 | -0.1153 | 0.1059 | 0.0002 |
| 146 | SLD 2 | 0.11 | 3.09 | 43.82 | -0.1153 | 0.1059 | 0.0002 |
| 146 | SLD 3 | 0.23 | -1.46 | 41.11 | 0.0767 | 0.1959 | 0.0002 |
| 146 | SLD 4 | 0.23 | -1.46 | 41.11 | 0.0767 | 0.1959 | 0.0002 |
| 146 | SLD 5 | -0.14 | 9.45 | 57.85 | -0.3798 | -0.1062 | 0.0001 |
| 146 | SLD 6 | -0.14 | 9.45 | 57.85 | -0.3798 | -0.1062 | 0.0001 |
| 146 | SLD 7 | 0.24 | -5.7 | 48.82 | 0.2601 | 0.1938 | 0 |
| 146 | SLD 8 | 0.24 | -5.7 | 48.82 | 0.2601 | 0.1938 | 0 |
| 146 | SLD 9 | -0.25 | 10.35 | 67.17 | -0.4145 | -0.198 | 0 |
| 146 | SLD 10 | -0.25 | 10.35 | 67.17 | -0.4145 | -0.198 | 0 |
| 146 | SLD 11 | 0.13 | -4.79 | 58.14 | 0.2254 | 0.1021 | -0.0002 |
| 146 | SLD 12 | 0.13 | -4.79 | 58.14 | 0.2254 | 0.1021 | -0.0002 |
| 146 | SLD 13 | -0.24 | 6.11 | 74.88 | -0.2311 | -0.2 | -0.0002 |
| 146 | SLD 14 | -0.24 | 6.11 | 74.88 | -0.2311 | -0.2 | -0.0002 |
| 146 | SLD 15 | -0.12 | 1.57 | 72.17 | -0.0392 | -0.11 | -0.0002 |
| 146 | SLD 16 | -0.12 | 1.57 | 72.17 | -0.0392 | -0.11 | -0.0002 |
| 146 | SLV 1 | 0.25 | 4.08 | 24.87 | -0.1651 | 0.243 | 0.0005 |
| 146 | SLV 2 | 0.25 | 4.08 | 24.87 | -0.1651 | 0.243 | 0.0005 |
| 146 | SLV 3 | 0.54 | -6.47 | 18.48 | 0.2807 | 0.4721 | 0.0004 |
| 146 | SLV 4 | 0.54 | -6.47 | 18.48 | 0.2807 | 0.4721 | 0.0004 |
| 146 | SLV 5 | -0.37 | 18.86 | 57.74 | -0.7797 | -0.276 | 0.0003 |
| 146 | SLV 6 | -0.37 | 18.86 | 57.74 | -0.7797 | -0.276 | 0.0003 |
| 146 | SLV 7 | 0.6 | -16.31 | 36.46 | 0.7063 | 0.4876 | -0.0001 |
| 146 | SLV 8 | 0.6 | -16.31 | 36.46 | 0.7063 | 0.4876 | -0.0001 |
| 146 | SLV 9 | -0.61 | 20.97 | 79.53 | -0.8607 | -0.4918 | 0.0001 |
| 146 | SLV 10 | -0.61 | 20.97 | 79.53 | -0.8607 | -0.4918 | 0.0001 |
| 146 | SLV 11 | 0.35 | -14.2 | 58.25 | 0.6252 | 0.2719 | -0.0004 |
| 146 | SLV 12 | 0.35 | -14.2 | 58.25 | 0.6252 | 0.2719 | -0.0004 |
| 146 | SLV 13 | -0.55 | 11.13 | 97.51 | -0.4352 | -0.4762 | -0.0004 |
| 146 | SLV 14 | -0.55 | 11.13 | 97.51 | -0.4352 | -0.4762 | -0.0004 |
| 146 | SLV 15 | -0.27 | 0.58 | 91.12 | 0.0106 | -0.2471 | -0.0005 |
| 146 | SLV 16 | -0.27 | 0.58 | 91.12 | 0.0106 | -0.2471 | -0.0005 |
| 147 | SLU 1 | 0.01 | -4.44 | 43.44 | 0.2138 | 0.0232 | 0.0003 |
| 147 | SLU 2 | 0.01 | -4.86 | 43.7 | 0.2338 | 0.0229 | 0.0003 |
| 147 | SLU 3 | 0.01 | -4.18 | 44.54 | 0.2008 | 0.0242 | 0.0003 |
| 147 | SLU 4 | 0.01 | -4.42 | 44.7 | 0.2128 | 0.024 | 0.0003 |
| 147 | SLU 5 | 0.01 | -4.48 | 44.14 | 0.2153 | 0.0236 | 0.0003 |
| 147 | SLU 6 | 0.01 | -3.8 | 44.98 | 0.1823 | 0.025 | 0.0003 |
| 147 | SLU 7 | 0.01 | -4.05 | 45.13 | 0.1943 | 0.0248 | 0.0003 |
| 147 | SLU 8 | 0.01 | -3.7 | 44.32 | 0.1769 | 0.0247 | 0.0003 |
| 147 | SLU 9 | 0.01 | -3.95 | 44.47 | 0.1889 | 0.0245 | 0.0003 |
| 147 | SLU 10 | 0.01 | -5.74 | 52.72 | 0.2778 | 0.026 | 0.0004 |
| 147 | SLU 11 | 0.01 | -5.06 | 53.56 | 0.2447 | 0.0273 | 0.0004 |
| 147 | SLU 12 | 0.01 | -5.31 | 53.72 | 0.2567 | 0.0271 | 0.0004 |
| 147 | SLU 13 | 0.01 | -5.37 | 53.16 | 0.2593 | 0.0267 | 0.0004 |
| 147 | SLU 14 | 0.01 | -4.68 | 54 | 0.2262 | 0.0281 | 0.0004 |
| 147 | SLU 15 | 0.01 | -4.93 | 54.15 | 0.2382 | 0.0279 | 0.0004 |
| 147 | SLU 16 | 0.01 | -4.58 | 53.33 | 0.2208 | 0.0278 | 0.0004 |
| 147 | SLU 17 | 0.01 | -4.83 | 53.49 | 0.2328 | 0.0276 | 0.0004 |
| 147 | SLU 18 | 0.01 | -5.7 | 56.33 | 0.2766 | 0.0276 | 0.0004 |
| 147 | SLU 19 | 0.01 | -5.95 | 56.48 | 0.2886 | 0.0274 | 0.0004 |
| 147 | SLU 20 | 0.01 | -5.33 | 56.76 | 0.2581 | 0.0284 | 0.0004 |
| 147 | SLU 21 | 0.01 | -5.58 | 56.92 | 0.2701 | 0.0282 | 0.0004 |
| 147 | SLU 22 | 0.01 | -4.67 | 50.01 | 0.227 | 0.0269 | 0.0004 |
| 147 | SLU 23 | 0.01 | -5.09 | 50.27 | 0.247 | 0.0266 | 0.0004 |
| 147 | SLU 24 | 0.01 | -4.41 | 51.1 | 0.214 | 0.028 | 0.0004 |
| 147 | SLU 25 | 0.01 | -4.66 | 51.26 | 0.226 | 0.0278 | 0.0004 |
| 147 | SLU 26 | 0.01 | -4.72 | 50.7 | 0.2285 | 0.0274 | 0.0004 |
| 147 | SLU 27 | 0.01 | -4.03 | 51.54 | 0.1955 | 0.0288 | 0.0004 |
| 147 | SLU 28 | 0.01 | -4.28 | 51.69 | 0.2075 | 0.0286 | 0.0004 |
| 147 | SLU 29 | 0.01 | -3.93 | 50.88 | 0.19 | 0.0285 | 0.0003 |
| 147 | SLU 30 | 0.01 | -4.18 | 51.03 | 0.202 | 0.0283 | 0.0004 |
| 147 | SLU 31 | 0.01 | -5.97 | 59.28 | 0.2909 | 0.0297 | 0.0004 |
| 147 | SLU 32 | 0.01 | -5.29 | 60.12 | 0.2579 | 0.0311 | 0.0004 |
| 147 | SLU 33 | 0.01 | -5.54 | 60.28 | 0.2699 | 0.0309 | 0.0004 |
| 147 | SLU 34 | 0.01 | -5.6 | 59.72 | 0.2725 | 0.0305 | 0.0004 |
| 147 | SLU 35 | 0.02 | -4.92 | 60.56 | 0.2394 | 0.0319 | 0.0004 |
| 147 | SLU 36 | 0.02 | -5.17 | 60.71 | 0.2514 | 0.0317 | 0.0004 |
| 147 | SLU 37 | 0.02 | -4.81 | 59.9 | 0.234 | 0.0316 | 0.0004 |
| 147 | SLU 38 | 0.02 | -5.06 | 60.05 | 0.246 | 0.0314 | 0.0004 |
| 147 | SLU 39 | 0.01 | -5.94 | 62.89 | 0.2898 | 0.0314 | 0.0004 |
| 147 | SLU 40 | 0.01 | -6.18 | 63.05 | 0.3018 | 0.0312 | 0.0004 |
| 147 | SLU 41 | 0.02 | -5.56 | 63.33 | 0.2713 | 0.0322 | 0.0004 |

| Nodo | Cont. | Reazione a traslazione | | | Reazione a rotazione | | |
|---|---|---|---|---|---|---|---|
| Ind. | N.br. | x | y | z | x | y | z |
| 147 | SLU 42 | 0.01 | -5.81 | 63.48 | 0.2833 | 0.032 | 0.0004 |
| 147 | SLU 43 | 0.01 | -5.7 | 54.23 | 0.2735 | 0.0288 | 0.0004 |
| 147 | SLU 44 | 0.01 | -6.11 | 54.49 | 0.2934 | 0.0285 | 0.0004 |
| 147 | SLU 45 | 0.01 | -5.43 | 55.33 | 0.2604 | 0.0299 | 0.0004 |
| 147 | SLU 46 | 0.01 | -5.68 | 55.48 | 0.2724 | 0.0297 | 0.0004 |
| 147 | SLU 47 | 0.01 | -5.74 | 54.92 | 0.275 | 0.0293 | 0.0004 |
| 147 | SLU 48 | 0.01 | -5.06 | 55.76 | 0.2419 | 0.0307 | 0.0004 |
| 147 | SLU 49 | 0.01 | -5.3 | 55.92 | 0.2539 | 0.0305 | 0.0004 |
| 147 | SLU 50 | 0.01 | -4.95 | 55.1 | 0.2365 | 0.0304 | 0.0004 |
| 147 | SLU 51 | 0.01 | -5.2 | 55.26 | 0.2485 | 0.0302 | 0.0004 |
| 147 | SLU 52 | 0.01 | -6.99 | 63.51 | 0.3374 | 0.0316 | 0.0004 |
| 147 | SLU 53 | 0.01 | -6.31 | 64.34 | 0.3043 | 0.033 | 0.0004 |
| 147 | SLU 54 | 0.01 | -6.56 | 64.5 | 0.3163 | 0.0328 | 0.0005 |
| 147 | SLU 55 | 0.01 | -6.62 | 63.94 | 0.3189 | 0.0324 | 0.0004 |
| 147 | SLU 56 | 0.02 | -5.94 | 64.78 | 0.2859 | 0.0338 | 0.0004 |
| 147 | SLU 57 | 0.02 | -6.19 | 64.94 | 0.2979 | 0.0336 | 0.0004 |
| 147 | SLU 58 | 0.02 | -5.83 | 64.12 | 0.2804 | 0.0335 | 0.0004 |
| 147 | SLU 59 | 0.02 | -6.08 | 64.27 | 0.2924 | 0.0333 | 0.0004 |
| 147 | SLU 60 | 0.01 | -6.96 | 67.11 | 0.3362 | 0.0333 | 0.0005 |
| 147 | SLU 61 | 0.01 | -7.21 | 67.27 | 0.3482 | 0.0331 | 0.0005 |
| 147 | SLU 62 | 0.02 | -6.58 | 67.55 | 0.3177 | 0.0341 | 0.0005 |
| 147 | SLU 63 | 0.01 | -6.83 | 67.7 | 0.3297 | 0.0339 | 0.0005 |
| 147 | SLU 64 | 0.01 | -5.93 | 60.79 | 0.2866 | 0.0326 | 0.0004 |
| 147 | SLU 65 | 0.01 | -6.34 | 61.05 | 0.3066 | 0.0323 | 0.0004 |
| 147 | SLU 66 | 0.02 | -5.66 | 61.89 | 0.2736 | 0.0336 | 0.0004 |
| 147 | SLU 67 | 0.02 | -5.91 | 62.04 | 0.2856 | 0.0335 | 0.0004 |
| 147 | SLU 68 | 0.01 | -5.97 | 61.49 | 0.2881 | 0.0331 | 0.0004 |
| 147 | SLU 69 | 0.02 | -5.29 | 62.32 | 0.2551 | 0.0344 | 0.0004 |
| 147 | SLU 70 | 0.02 | -5.54 | 62.48 | 0.2671 | 0.0342 | 0.0004 |
| 147 | SLU 71 | 0.02 | -5.18 | 61.66 | 0.2497 | 0.0342 | 0.0004 |
| 147 | SLU 72 | 0.02 | -5.43 | 61.82 | 0.2617 | 0.034 | 0.0004 |
| 147 | SLU 73 | 0.01 | -7.22 | 70.07 | 0.3506 | 0.0354 | 0.0005 |
| 147 | SLU 74 | 0.02 | -6.54 | 70.91 | 0.3175 | 0.0368 | 0.0005 |
| 147 | SLU 75 | 0.02 | -6.79 | 71.06 | 0.3295 | 0.0366 | 0.0005 |
| 147 | SLU 76 | 0.02 | -6.85 | 70.5 | 0.3321 | 0.0362 | 0.0005 |
| 147 | SLU 77 | 0.02 | -6.17 | 71.34 | 0.299 | 0.0375 | 0.0005 |
| 147 | SLU 78 | 0.02 | -6.42 | 71.5 | 0.311 | 0.0373 | 0.0005 |
| 147 | SLU 79 | 0.02 | -6.06 | 70.68 | 0.2936 | 0.0373 | 0.0005 |
| 147 | SLU 80 | 0.02 | -6.31 | 70.84 | 0.3056 | 0.0371 | 0.0005 |
| 147 | SLU 81 | 0.02 | -7.19 | 73.67 | 0.3494 | 0.0371 | 0.0005 |
| 147 | SLU 82 | 0.02 | -7.44 | 73.83 | 0.3614 | 0.0369 | 0.0005 |
| 147 | SLU 83 | 0.02 | -6.82 | 74.11 | 0.3309 | 0.0378 | 0.0005 |
| 147 | SLU 84 | 0.02 | -7.06 | 74.27 | 0.3429 | 0.0376 | 0.0005 |
| 147 | SLE RA 1 | 0.01 | -4.51 | 45.32 | 0.2176 | 0.0243 | 0.0003 |
| 147 | SLE RA 2 | 0.01 | -4.79 | 45.49 | 0.2309 | 0.024 | 0.0003 |
| 147 | SLE RA 3 | 0.01 | -4.33 | 46.05 | 0.2089 | 0.0249 | 0.0003 |
| 147 | SLE RA 4 | 0.01 | -4.5 | 46.15 | 0.2169 | 0.0248 | 0.0003 |
| 147 | SLE RA 5 | 0.01 | -4.54 | 45.78 | 0.2186 | 0.0246 | 0.0003 |
| 147 | SLE RA 6 | 0.01 | -4.08 | 46.34 | 0.1966 | 0.0255 | 0.0003 |
| 147 | SLE RA 7 | 0.01 | -4.25 | 46.45 | 0.2046 | 0.0253 | 0.0003 |
| 147 | SLE RA 8 | 0.01 | -4.01 | 45.9 | 0.193 | 0.0253 | 0.0003 |
| 147 | SLE RA 9 | 0.01 | -4.18 | 46 | 0.2009 | 0.0252 | 0.0003 |
| 147 | SLE RA 10 | 0.01 | -5.37 | 51.51 | 0.2602 | 0.0261 | 0.0004 |
| 147 | SLE RA 11 | 0.01 | -4.92 | 52.06 | 0.2382 | 0.027 | 0.0004 |
| 147 | SLE RA 12 | 0.01 | -5.08 | 52.17 | 0.2462 | 0.0269 | 0.0004 |
| 147 | SLE RA 13 | 0.01 | -5.12 | 51.8 | 0.2479 | 0.0266 | 0.0004 |
| 147 | SLE RA 14 | 0.01 | -4.67 | 52.35 | 0.2259 | 0.0275 | 0.0004 |
| 147 | SLE RA 15 | 0.01 | -4.84 | 52.46 | 0.2339 | 0.0274 | 0.0004 |
| 147 | SLE RA 16 | 0.01 | -4.6 | 51.91 | 0.2222 | 0.0274 | 0.0004 |
| 147 | SLE RA 17 | 0.01 | -4.77 | 52.02 | 0.2302 | 0.0272 | 0.0004 |
| 147 | SLE RA 18 | 0.01 | -5.35 | 53.91 | 0.2594 | 0.0272 | 0.0004 |
| 147 | SLE RA 19 | 0.01 | -5.52 | 54.01 | 0.2674 | 0.0271 | 0.0004 |
| 147 | SLE RA 20 | 0.01 | -5.1 | 54.2 | 0.2471 | 0.0277 | 0.0004 |
| 147 | SLE RA 21 | 0.01 | -5.27 | 54.3 | 0.2551 | 0.0276 | 0.0004 |
| 147 | SLE FR 1 | 0.01 | -4.51 | 45.32 | 0.2176 | 0.0243 | 0.0003 |
| 147 | SLE FR 2 | 0.01 | -4.56 | 45.35 | 0.2203 | 0.0242 | 0.0003 |
| 147 | SLE FR 3 | 0.01 | -4.41 | 45.44 | 0.2127 | 0.0245 | 0.0003 |
| 147 | SLE FR 4 | 0.01 | -4.82 | 47.93 | 0.2328 | 0.0251 | 0.0003 |
| 147 | SLE FR 5 | 0.01 | -4.66 | 48.01 | 0.2252 | 0.0254 | 0.0003 |
| 147 | SLE FR 6 | 0.01 | -4.93 | 49.61 | 0.2385 | 0.0257 | 0.0003 |
| 147 | SLE QP 1 | 0.01 | -4.51 | 45.32 | 0.2176 | 0.0243 | 0.0003 |
| 147 | SLE QP 2 | 0.01 | -4.76 | 47.9 | 0.2302 | 0.0251 | 0.0003 |
| 147 | SLD 1 | 0.14 | -2.17 | 49.64 | 0.1075 | 0.1464 | 0.0004 |
| 147 | SLD 2 | 0.14 | -2.17 | 49.64 | 0.1075 | 0.1464 | 0.0004 |
| 147 | SLD 3 | 0.12 | -5.61 | 53.21 | 0.2752 | 0.1346 | 0.0004 |
| 147 | SLD 4 | 0.12 | -5.61 | 53.21 | 0.2752 | 0.1346 | 0.0004 |
| 147 | SLD 5 | 0.07 | 1.24 | 43.01 | -0.061 | 0.0794 | 0.0003 |
| 147 | SLD 6 | 0.07 | 1.24 | 43.01 | -0.061 | 0.0794 | 0.0003 |
| 147 | SLD 7 | 0.02 | -10.24 | 54.9 | 0.498 | 0.0401 | 0.0004 |
| 147 | SLD 8 | 0.02 | -10.24 | 54.9 | 0.498 | 0.0401 | 0.0004 |
| 147 | SLD 9 | 0 | 0.72 | 40.89 | -0.0377 | 0.0102 | 0.0002 |
| 147 | SLD 10 | 0 | 0.72 | 40.89 | -0.0377 | 0.0102 | 0.0002 |
| 147 | SLD 11 | -0.05 | -10.77 | 52.78 | 0.5213 | -0.0291 | 0.0004 |
| 147 | SLD 12 | -0.05 | -10.77 | 52.78 | 0.5213 | -0.0291 | 0.0004 |
| 147 | SLD 13 | -0.1 | -3.91 | 42.58 | 0.1851 | -0.0843 | 0.0002 |
| 147 | SLD 14 | -0.1 | -3.91 | 42.58 | 0.1851 | -0.0843 | 0.0002 |
| 147 | SLD 15 | -0.11 | -7.36 | 46.15 | 0.3528 | -0.0961 | 0.0003 |
| 147 | SLD 16 | -0.11 | -7.36 | 46.15 | 0.3528 | -0.0961 | 0.0003 |

| Nodo | Cont. | Reazione a traslazione | | | Reazione a rotazione | | |
|---|---|---|---|---|---|---|---|
| Ind. | N.br. | x | y | z | x | y | z |
| 147 | SLV 1 | 0.32 | 1.35 | 51.91 | -0.0586 | 0.326 | 0.0004 |
| 147 | SLV 2 | 0.32 | 1.35 | 51.91 | -0.0586 | 0.326 | 0.0004 |
| 147 | SLV 3 | 0.28 | -6.7 | 60.33 | 0.3332 | 0.2963 | 0.0005 |
| 147 | SLV 4 | 0.28 | -6.7 | 60.33 | 0.3332 | 0.2963 | 0.0005 |
| 147 | SLV 5 | 0.16 | 9.28 | 36.33 | -0.4508 | 0.1605 | 0.0002 |
| 147 | SLV 6 | 0.16 | 9.28 | 36.33 | -0.4508 | 0.1605 | 0.0002 |
| 147 | SLV 7 | 0.04 | -17.55 | 64.39 | 0.8554 | 0.0614 | 0.0006 |
| 147 | SLV 8 | 0.04 | -17.55 | 64.39 | 0.8554 | 0.0614 | 0.0006 |
| 147 | SLV 9 | -0.01 | 8.03 | 31.4 | -0.3951 | -0.0111 | 0.0001 |
| 147 | SLV 10 | -0.01 | 8.03 | 31.4 | -0.3951 | -0.0111 | 0.0001 |
| 147 | SLV 11 | -0.14 | -18.8 | 59.46 | 0.9111 | -0.1102 | 0.0005 |
| 147 | SLV 12 | -0.14 | -18.8 | 59.46 | 0.9111 | -0.1102 | 0.0005 |
| 147 | SLV 13 | -0.26 | -2.83 | 35.47 | 0.1271 | -0.246 | 0.0001 |
| 147 | SLV 14 | -0.26 | -2.83 | 35.47 | 0.1271 | -0.246 | 0.0001 |
| 147 | SLV 15 | -0.3 | -10.88 | 43.88 | 0.5189 | -0.2757 | 0.0002 |
| 147 | SLV 16 | -0.3 | -10.88 | 43.88 | 0.5189 | -0.2757 | 0.0002 |
| 148 | SLU 1 | 0 | 2.29 | 18.35 | -0.0821 | 0.0019 | -0.0001 |
| 148 | SLU 2 | 0 | 2.29 | 18.37 | -0.0822 | 0.0021 | -0.0001 |
| 148 | SLU 3 | 0 | 2.41 | 18.91 | -0.0865 | 0.0019 | -0.0001 |
| 148 | SLU 4 | 0 | 2.41 | 18.93 | -0.0865 | 0.002 | -0.0001 |
| 148 | SLU 5 | 0 | 2.36 | 18.7 | -0.0848 | 0.002 | -0.0001 |
| 148 | SLU 6 | 0 | 2.48 | 19.24 | -0.089 | 0.0018 | -0.0001 |
| 148 | SLU 7 | 0 | 2.48 | 19.26 | -0.0891 | 0.0019 | -0.0001 |
| 148 | SLU 8 | 0 | 2.43 | 19.01 | -0.0873 | 0.0018 | -0.0001 |
| 148 | SLU 9 | 0 | 2.43 | 19.03 | -0.0873 | 0.0019 | -0.0001 |
| 148 | SLU 10 | 0 | 2.67 | 22.87 | -0.0944 | 0.0027 | -0.0001 |
| 148 | SLU 11 | 0 | 2.79 | 23.41 | -0.0986 | 0.0025 | -0.0002 |
| 148 | SLU 12 | 0 | 2.79 | 23.42 | -0.0986 | 0.0026 | -0.0002 |
| 148 | SLU 13 | 0 | 2.74 | 23.2 | -0.0969 | 0.0026 | -0.0001 |
| 148 | SLU 14 | -0.01 | 2.86 | 23.74 | -0.1012 | 0.0024 | -0.0002 |
| 148 | SLU 15 | -0.01 | 2.86 | 23.75 | -0.1012 | 0.0025 | -0.0002 |
| 148 | SLU 16 | -0.01 | 2.81 | 23.51 | -0.0994 | 0.0024 | -0.0002 |
| 148 | SLU 17 | -0.01 | 2.81 | 23.52 | -0.0995 | 0.0025 | -0.0002 |
| 148 | SLU 18 | -0.01 | 2.83 | 24.77 | -0.0994 | 0.0028 | -0.0001 |
| 148 | SLU 19 | -0.01 | 2.83 | 24.79 | -0.0995 | 0.0029 | -0.0001 |
| 148 | SLU 20 | -0.01 | 2.9 | 25.1 | -0.102 | 0.0028 | -0.0002 |
| 148 | SLU 21 | -0.01 | 2.91 | 25.12 | -0.1021 | 0.0028 | -0.0002 |
| 148 | SLU 22 | 0 | 2.77 | 20.97 | -0.0992 | 0.0021 | -0.0002 |
| 148 | SLU 23 | 0 | 2.77 | 20.99 | -0.0993 | 0.0022 | -0.0002 |
| 148 | SLU 24 | 0 | 2.89 | 21.53 | -0.1035 | 0.002 | -0.0002 |
| 148 | SLU 25 | 0 | 2.89 | 21.54 | -0.1036 | 0.0021 | -0.0002 |
| 148 | SLU 26 | 0 | 2.84 | 21.32 | -0.1019 | 0.0021 | -0.0002 |
| 148 | SLU 27 | 0 | 2.96 | 21.86 | -0.1061 | 0.002 | -0.0002 |
| 148 | SLU 28 | 0 | 2.96 | 21.87 | -0.1062 | 0.002 | -0.0002 |
| 148 | SLU 29 | 0 | 2.91 | 21.63 | -0.1043 | 0.002 | -0.0002 |
| 148 | SLU 30 | 0 | 2.91 | 21.64 | -0.1044 | 0.002 | -0.0002 |
| 148 | SLU 31 | -0.01 | 3.15 | 25.48 | -0.1114 | 0.0028 | -0.0002 |
| 148 | SLU 32 | -0.01 | 3.27 | 26.02 | -0.1156 | 0.0026 | -0.0002 |
| 148 | SLU 33 | -0.01 | 3.27 | 26.04 | -0.1157 | 0.0027 | -0.0002 |
| 148 | SLU 34 | -0.01 | 3.22 | 25.81 | -0.114 | 0.0027 | -0.0002 |
| 148 | SLU 35 | -0.01 | 3.34 | 26.35 | -0.1182 | 0.0026 | -0.0002 |
| 148 | SLU 36 | -0.01 | 3.34 | 26.37 | -0.1183 | 0.0026 | -0.0002 |
| 148 | SLU 37 | -0.01 | 3.29 | 26.12 | -0.1164 | 0.0026 | -0.0002 |
| 148 | SLU 38 | -0.01 | 3.29 | 26.14 | -0.1165 | 0.0026 | -0.0002 |
| 148 | SLU 39 | -0.01 | 3.31 | 27.39 | -0.1165 | 0.0029 | -0.0002 |
| 148 | SLU 40 | -0.01 | 3.31 | 27.4 | -0.1166 | 0.003 | -0.0002 |
| 148 | SLU 41 | -0.01 | 3.38 | 27.72 | -0.1191 | 0.0029 | -0.0002 |
| 148 | SLU 42 | -0.01 | 3.38 | 27.73 | -0.1191 | 0.0029 | -0.0002 |
| 148 | SLU 43 | 0 | 2.81 | 22.96 | -0.1009 | 0.0025 | -0.0002 |
| 148 | SLU 44 | 0 | 2.81 | 22.98 | -0.101 | 0.0026 | -0.0002 |
| 148 | SLU 45 | -0.01 | 2.93 | 23.52 | -0.1052 | 0.0024 | -0.0002 |
| 148 | SLU 46 | -0.01 | 2.93 | 23.54 | -0.1053 | 0.0025 | -0.0002 |
| 148 | SLU 47 | -0.01 | 2.89 | 23.31 | -0.1036 | 0.0026 | -0.0002 |
| 148 | SLU 48 | -0.01 | 3 | 23.85 | -0.1078 | 0.0024 | -0.0002 |
| 148 | SLU 49 | -0.01 | 3 | 23.87 | -0.1079 | 0.0025 | -0.0002 |
| 148 | SLU 50 | -0.01 | 2.95 | 23.62 | -0.1061 | 0.0024 | -0.0002 |
| 148 | SLU 51 | -0.01 | 2.96 | 23.63 | -0.1061 | 0.0025 | -0.0002 |
| 148 | SLU 52 | -0.01 | 3.19 | 27.48 | -0.1131 | 0.0032 | -0.0002 |
| 148 | SLU 53 | -0.01 | 3.31 | 28.02 | -0.1174 | 0.003 | -0.0002 |
| 148 | SLU 54 | -0.01 | 3.31 | 28.03 | -0.1174 | 0.0031 | -0.0002 |
| 148 | SLU 55 | -0.01 | 3.27 | 27.81 | -0.1157 | 0.0032 | -0.0002 |
| 148 | SLU 56 | -0.01 | 3.38 | 28.35 | -0.1199 | 0.003 | -0.0002 |
| 148 | SLU 57 | -0.01 | 3.39 | 28.36 | -0.12 | 0.0031 | -0.0002 |
| 148 | SLU 58 | -0.01 | 3.33 | 28.12 | -0.1182 | 0.003 | -0.0002 |
| 148 | SLU 59 | -0.01 | 3.34 | 28.13 | -0.1183 | 0.0031 | -0.0002 |
| 148 | SLU 60 | -0.01 | 3.35 | 29.38 | -0.1182 | 0.0034 | -0.0002 |
| 148 | SLU 61 | -0.01 | 3.36 | 29.4 | -0.1183 | 0.0034 | -0.0002 |
| 148 | SLU 62 | -0.01 | 3.43 | 29.71 | -0.1208 | 0.0033 | -0.0002 |
| 148 | SLU 63 | -0.01 | 3.43 | 29.73 | -0.1209 | 0.0034 | -0.0002 |
| 148 | SLU 64 | -0.01 | 3.29 | 25.58 | -0.118 | 0.0026 | -0.0002 |
| 148 | SLU 65 | -0.01 | 3.29 | 25.6 | -0.1181 | 0.0027 | -0.0002 |
| 148 | SLU 66 | -0.01 | 3.41 | 26.14 | -0.1223 | 0.0025 | -0.0002 |
| 148 | SLU 67 | -0.01 | 3.41 | 26.15 | -0.1224 | 0.0026 | -0.0002 |
| 148 | SLU 68 | -0.01 | 3.36 | 25.93 | -0.1207 | 0.0027 | -0.0002 |
| 148 | SLU 69 | -0.01 | 3.48 | 26.47 | -0.1249 | 0.0025 | -0.0002 |
| 148 | SLU 70 | -0.01 | 3.48 | 26.48 | -0.125 | 0.0026 | -0.0002 |
| 148 | SLU 71 | -0.01 | 3.43 | 26.24 | -0.1231 | 0.0025 | -0.0002 |
| 148 | SLU 72 | -0.01 | 3.43 | 26.25 | -0.1232 | 0.0026 | -0.0002 |

| Nodo | Cont. | Reazione a traslazione | | | Reazione a rotazione | | |
|---|---|---|---|---|---|---|---|
| Ind. | N.br. | x | y | z | x | y | z |
| 148 | SLU 73 | -0.01 | 3.67 | 30.09 | -0.1302 | 0.0033 | -0.0002 |
| 148 | SLU 74 | -0.01 | 3.79 | 30.63 | -0.1344 | 0.0031 | -0.0002 |
| 148 | SLU 75 | -0.01 | 3.79 | 30.65 | -0.1345 | 0.0032 | -0.0002 |
| 148 | SLU 76 | -0.01 | 3.74 | 30.42 | -0.1328 | 0.0033 | -0.0002 |
| 148 | SLU 77 | -0.01 | 3.86 | 30.96 | -0.137 | 0.0031 | -0.0002 |
| 148 | SLU 78 | -0.01 | 3.86 | 30.98 | -0.1371 | 0.0032 | -0.0002 |
| 148 | SLU 79 | -0.01 | 3.81 | 30.73 | -0.1352 | 0.0031 | -0.0002 |
| 148 | SLU 80 | -0.01 | 3.81 | 30.74 | -0.1353 | 0.0032 | -0.0002 |
| 148 | SLU 81 | -0.01 | 3.83 | 32 | -0.1353 | 0.0035 | -0.0002 |
| 148 | SLU 82 | -0.01 | 3.83 | 32.01 | -0.1353 | 0.0035 | -0.0002 |
| 148 | SLU 83 | -0.01 | 3.9 | 32.33 | -0.1378 | 0.0034 | -0.0002 |
| 148 | SLU 84 | -0.01 | 3.91 | 32.34 | -0.1379 | 0.0035 | -0.0002 |
| 148 | SLE RA 1 | 0 | 2.42 | 19.1 | -0.087 | 0.002 | -0.0001 |
| 148 | SLE RA 2 | 0 | 2.43 | 19.11 | -0.0871 | 0.0021 | -0.0001 |
| 148 | SLE RA 3 | 0 | 2.5 | 19.47 | -0.0899 | 0.0019 | -0.0001 |
| 148 | SLE RA 4 | 0 | 2.51 | 19.48 | -0.0899 | 0.002 | -0.0001 |
| 148 | SLE RA 5 | 0 | 2.47 | 19.33 | -0.0888 | 0.002 | -0.0001 |
| 148 | SLE RA 6 | 0 | 2.55 | 19.69 | -0.0916 | 0.0019 | -0.0001 |
| 148 | SLE RA 7 | 0 | 2.55 | 19.7 | -0.0917 | 0.002 | -0.0001 |
| 148 | SLE RA 8 | 0 | 2.52 | 19.54 | -0.0904 | 0.0019 | -0.0001 |
| 148 | SLE RA 9 | 0 | 2.52 | 19.55 | -0.0905 | 0.002 | -0.0001 |
| 148 | SLE RA 10 | 0 | 2.68 | 22.11 | -0.0951 | 0.0025 | -0.0001 |
| 148 | SLE RA 11 | 0 | 2.76 | 22.47 | -0.098 | 0.0023 | -0.0002 |
| 148 | SLE RA 12 | 0 | 2.76 | 22.48 | -0.098 | 0.0024 | -0.0002 |
| 148 | SLE RA 13 | 0 | 2.73 | 22.33 | -0.0969 | 0.0024 | -0.0001 |
| 148 | SLE RA 14 | 0 | 2.81 | 22.69 | -0.0997 | 0.0023 | -0.0002 |
| 148 | SLE RA 15 | 0 | 2.81 | 22.7 | -0.0997 | 0.0024 | -0.0002 |
| 148 | SLE RA 16 | 0 | 2.77 | 22.54 | -0.0985 | 0.0023 | -0.0002 |
| 148 | SLE RA 17 | 0 | 2.78 | 22.55 | -0.0986 | 0.0024 | -0.0002 |
| 148 | SLE RA 18 | 0 | 2.79 | 23.38 | -0.0985 | 0.0026 | -0.0001 |
| 148 | SLE RA 19 | 0 | 2.79 | 23.39 | -0.0986 | 0.0026 | -0.0001 |
| 148 | SLE RA 20 | -0.01 | 2.83 | 23.6 | -0.1002 | 0.0025 | -0.0002 |
| 148 | SLE RA 21 | -0.01 | 2.84 | 23.61 | -0.1003 | 0.0026 | -0.0002 |
| 148 | SLE FR 1 | 0 | 2.42 | 19.1 | -0.087 | 0.002 | -0.0001 |
| 148 | SLE FR 2 | 0 | 2.43 | 19.1 | -0.087 | 0.002 | -0.0001 |
| 148 | SLE FR 3 | 0 | 2.44 | 19.19 | -0.0877 | 0.002 | -0.0001 |
| 148 | SLE FR 4 | 0 | 2.53 | 20.39 | -0.0905 | 0.0022 | -0.0001 |
| 148 | SLE FR 5 | 0 | 2.55 | 20.47 | -0.0911 | 0.0021 | -0.0001 |
| 148 | SLE FR 6 | 0 | 2.61 | 21.24 | -0.0928 | 0.0023 | -0.0001 |
| 148 | SLE QP 1 | 0 | 2.42 | 19.1 | -0.087 | 0.002 | -0.0001 |
| 148 | SLE QP 2 | 0 | 2.53 | 20.38 | -0.0904 | 0.0022 | -0.0001 |
| 148 | SLD 1 | 0.07 | 0.81 | 16.31 | -0.0235 | 0.0979 | 0.0025 |
| 148 | SLD 2 | 0.07 | 0.81 | 16.31 | -0.0235 | 0.0979 | 0.0025 |
| 148 | SLD 3 | 0.06 | 2.41 | 17.17 | -0.0893 | 0.09 | 0.0023 |
| 148 | SLD 4 | 0.06 | 2.41 | 17.17 | -0.0893 | 0.09 | 0.0023 |
| 148 | SLD 5 | 0.03 | -0.42 | 17.86 | 0.0294 | 0.0428 | 0.001 |
| 148 | SLD 6 | 0.03 | -0.42 | 17.86 | 0.0294 | 0.0428 | 0.001 |
| 148 | SLD 7 | 0.01 | 4.93 | 20.72 | -0.1899 | 0.0166 | 0.0003 |
| 148 | SLD 8 | 0.01 | 4.93 | 20.72 | -0.1899 | 0.0166 | 0.0003 |
| 148 | SLD 9 | -0.02 | 0.13 | 20.05 | 0.009 | -0.0123 | -0.0005 |
| 148 | SLD 10 | -0.02 | 0.13 | 20.05 | 0.009 | -0.0123 | -0.0005 |
| 148 | SLD 11 | -0.03 | 5.49 | 22.9 | -0.2103 | -0.0385 | -0.0013 |
| 148 | SLD 12 | -0.03 | 5.49 | 22.9 | -0.2103 | -0.0385 | -0.0013 |
| 148 | SLD 13 | -0.07 | 2.65 | 23.6 | -0.0916 | -0.0857 | -0.0026 |
| 148 | SLD 14 | -0.07 | 2.65 | 23.6 | -0.0916 | -0.0857 | -0.0026 |
| 148 | SLD 15 | -0.08 | 4.26 | 24.45 | -0.1574 | -0.0936 | -0.0028 |
| 148 | SLD 16 | -0.08 | 4.26 | 24.45 | -0.1574 | -0.0936 | -0.0028 |
| 148 | SLV 1 | 0.17 | -1.52 | 10.87 | 0.0666 | 0.2393 | 0.0063 |
| 148 | SLV 2 | 0.17 | -1.52 | 10.87 | 0.0666 | 0.2393 | 0.0063 |
| 148 | SLV 3 | 0.16 | 2.26 | 12.85 | -0.088 | 0.2197 | 0.0058 |
| 148 | SLV 4 | 0.16 | 2.26 | 12.85 | -0.088 | 0.2197 | 0.0058 |
| 148 | SLV 5 | 0.07 | -4.41 | 14.52 | 0.1912 | 0.1031 | 0.0026 |
| 148 | SLV 6 | 0.07 | -4.41 | 14.52 | 0.1912 | 0.1031 | 0.0026 |
| 148 | SLV 7 | 0.02 | 8.18 | 21.13 | -0.3242 | 0.0377 | 0.0008 |
| 148 | SLV 8 | 0.02 | 8.18 | 21.13 | -0.3242 | 0.0377 | 0.0008 |
| 148 | SLV 9 | -0.03 | -3.11 | 19.64 | 0.1433 | -0.0334 | -0.0011 |
| 148 | SLV 10 | -0.03 | -3.11 | 19.64 | 0.1433 | -0.0334 | -0.0011 |
| 148 | SLV 11 | -0.08 | 9.48 | 26.24 | -0.372 | -0.0988 | -0.0029 |
| 148 | SLV 12 | -0.08 | 9.48 | 26.24 | -0.372 | -0.0988 | -0.0029 |
| 148 | SLV 13 | -0.17 | 2.81 | 27.92 | -0.0929 | -0.2154 | -0.0061 |
| 148 | SLV 14 | -0.17 | 2.81 | 27.92 | -0.0929 | -0.2154 | -0.0061 |
| 148 | SLV 15 | -0.18 | 6.59 | 29.9 | -0.2475 | -0.235 | -0.0066 |
| 148 | SLV 16 | -0.18 | 6.59 | 29.9 | -0.2475 | -0.235 | -0.0066 |
| 149 | SLU 1 | -0.18 | 0.07 | 56.88 | 0.0378 | -0.1267 | -0.0011 |
| 149 | SLU 2 | -0.19 | 0.27 | 58.82 | 0.0321 | -0.1609 | -0.0013 |
| 149 | SLU 3 | -0.18 | 0.16 | 59.04 | 0.0361 | -0.1321 | -0.0012 |
| 149 | SLU 4 | -0.19 | 0.28 | 60.21 | 0.0327 | -0.1526 | -0.0013 |
| 149 | SLU 5 | -0.2 | 0.35 | 60.41 | 0.0304 | -0.165 | -0.0013 |
| 149 | SLU 6 | -0.19 | 0.24 | 60.64 | 0.0344 | -0.1362 | -0.0012 |
| 149 | SLU 7 | -0.2 | 0.36 | 61.8 | 0.031 | -0.1567 | -0.0013 |
| 149 | SLU 8 | -0.19 | 0.22 | 60.07 | 0.0344 | -0.1349 | -0.0012 |
| 149 | SLU 9 | -0.2 | 0.35 | 61.24 | 0.031 | -0.1554 | -0.0013 |
| 149 | SLU 10 | -0.22 | 0.59 | 66.05 | 0.0251 | -0.1762 | -0.0014 |
| 149 | SLU 11 | -0.2 | 0.48 | 66.27 | 0.0291 | -0.1473 | -0.0013 |
| 149 | SLU 12 | -0.22 | 0.6 | 67.44 | 0.0257 | -0.1678 | -0.0014 |
| 149 | SLU 13 | -0.22 | 0.67 | 67.64 | 0.0234 | -0.1802 | -0.0015 |
| 149 | SLU 14 | -0.21 | 0.55 | 67.87 | 0.0274 | -0.1514 | -0.0014 |
| 149 | SLU 15 | -0.22 | 0.68 | 69.03 | 0.024 | -0.1719 | -0.0015 |

| Nodo | Cont. | Reazione a traslazione | | | Reazione a rotazione | | |
|---|---|---|---|---|---|---|---|
| Ind. | N.br. | x | y | z | x | y | z |
| 149 | SLU 16 | -0.21 | 0.54 | 67.3 | 0.0274 | -0.1502 | -0.0014 |
| 149 | SLU 17 | -0.22 | 0.67 | 68.47 | 0.024 | -0.1707 | -0.0015 |
| 149 | SLU 18 | -0.21 | 0.52 | 67.21 | 0.0278 | -0.1485 | -0.0013 |
| 149 | SLU 19 | -0.22 | 0.65 | 68.37 | 0.0244 | -0.169 | -0.0014 |
| 149 | SLU 20 | -0.21 | 0.6 | 68.81 | 0.0261 | -0.1526 | -0.0014 |
| 149 | SLU 21 | -0.22 | 0.72 | 69.97 | 0.0227 | -0.1731 | -0.0015 |
| 149 | SLU 22 | -0.2 | 0.33 | 64.27 | 0.0337 | -0.1432 | -0.0013 |
| 149 | SLU 23 | -0.22 | 0.53 | 66.2 | 0.028 | -0.1774 | -0.0015 |
| 149 | SLU 24 | -0.21 | 0.41 | 66.43 | 0.032 | -0.1485 | -0.0014 |
| 149 | SLU 25 | -0.22 | 0.54 | 67.59 | 0.0286 | -0.169 | -0.0014 |
| 149 | SLU 26 | -0.22 | 0.61 | 67.8 | 0.0263 | -0.1814 | -0.0015 |
| 149 | SLU 27 | -0.21 | 0.49 | 68.03 | 0.0303 | -0.1526 | -0.0014 |
| 149 | SLU 28 | -0.22 | 0.62 | 69.19 | 0.0269 | -0.1731 | -0.0015 |
| 149 | SLU 29 | -0.21 | 0.48 | 67.46 | 0.0303 | -0.1514 | -0.0014 |
| 149 | SLU 30 | -0.22 | 0.6 | 68.62 | 0.0269 | -0.1719 | -0.0015 |
| 149 | SLU 31 | -0.24 | 0.85 | 73.43 | 0.021 | -0.1926 | -0.0016 |
| 149 | SLU 32 | -0.23 | 0.73 | 73.66 | 0.025 | -0.1638 | -0.0015 |
| 149 | SLU 33 | -0.24 | 0.86 | 74.82 | 0.0216 | -0.1843 | -0.0016 |
| 149 | SLU 34 | -0.25 | 0.93 | 75.03 | 0.0193 | -0.1967 | -0.0016 |
| 149 | SLU 35 | -0.23 | 0.81 | 75.26 | 0.0233 | -0.1679 | -0.0015 |
| 149 | SLU 36 | -0.25 | 0.93 | 76.42 | 0.0199 | -0.1884 | -0.0016 |
| 149 | SLU 37 | -0.23 | 0.8 | 74.69 | 0.0233 | -0.1666 | -0.0015 |
| 149 | SLU 38 | -0.24 | 0.92 | 75.85 | 0.0199 | -0.1871 | -0.0016 |
| 149 | SLU 39 | -0.23 | 0.78 | 74.59 | 0.0237 | -0.165 | -0.0015 |
| 149 | SLU 40 | -0.24 | 0.9 | 75.76 | 0.0203 | -0.1855 | -0.0016 |
| 149 | SLU 41 | -0.24 | 0.86 | 76.19 | 0.022 | -0.1691 | -0.0015 |
| 149 | SLU 42 | -0.25 | 0.98 | 77.35 | 0.0186 | -0.1896 | -0.0016 |
| 149 | SLU 43 | -0.22 | 0 | 71.41 | 0.0506 | -0.1591 | -0.0014 |
| 149 | SLU 44 | -0.24 | 0.2 | 73.35 | 0.0449 | -0.1933 | -0.0016 |
| 149 | SLU 45 | -0.23 | 0.09 | 73.58 | 0.0489 | -0.1644 | -0.0015 |
| 149 | SLU 46 | -0.24 | 0.21 | 74.74 | 0.0455 | -0.1849 | -0.0016 |
| 149 | SLU 47 | -0.25 | 0.28 | 74.95 | 0.0432 | -0.1974 | -0.0016 |
| 149 | SLU 48 | -0.23 | 0.17 | 75.17 | 0.0472 | -0.1685 | -0.0015 |
| 149 | SLU 49 | -0.25 | 0.29 | 76.34 | 0.0438 | -0.189 | -0.0016 |
| 149 | SLU 50 | -0.23 | 0.16 | 74.6 | 0.0472 | -0.1673 | -0.0015 |
| 149 | SLU 51 | -0.24 | 0.28 | 75.77 | 0.0437 | -0.1878 | -0.0016 |
| 149 | SLU 52 | -0.26 | 0.52 | 80.58 | 0.0379 | -0.2085 | -0.0017 |
| 149 | SLU 53 | -0.25 | 0.41 | 80.81 | 0.0419 | -0.1797 | -0.0016 |
| 149 | SLU 54 | -0.26 | 0.53 | 81.97 | 0.0385 | -0.2002 | -0.0017 |
| 149 | SLU 55 | -0.27 | 0.6 | 82.18 | 0.0362 | -0.2126 | -0.0018 |
| 149 | SLU 56 | -0.26 | 0.49 | 82.4 | 0.0402 | -0.1838 | -0.0017 |
| 149 | SLU 57 | -0.27 | 0.61 | 83.57 | 0.0367 | -0.2043 | -0.0018 |
| 149 | SLU 58 | -0.25 | 0.48 | 81.84 | 0.0402 | -0.1825 | -0.0017 |
| 149 | SLU 59 | -0.27 | 0.6 | 83 | 0.0367 | -0.203 | -0.0018 |
| 149 | SLU 60 | -0.25 | 0.46 | 81.74 | 0.0406 | -0.1809 | -0.0016 |
| 149 | SLU 61 | -0.26 | 0.58 | 82.9 | 0.0372 | -0.2014 | -0.0017 |
| 149 | SLU 62 | -0.26 | 0.53 | 83.34 | 0.0389 | -0.185 | -0.0017 |
| 149 | SLU 63 | -0.27 | 0.66 | 84.5 | 0.0354 | -0.2055 | -0.0018 |
| 149 | SLU 64 | -0.24 | 0.26 | 78.8 | 0.0465 | -0.1756 | -0.0016 |
| 149 | SLU 65 | -0.26 | 0.46 | 80.73 | 0.0408 | -0.2097 | -0.0017 |
| 149 | SLU 66 | -0.25 | 0.35 | 80.96 | 0.0448 | -0.1809 | -0.0016 |
| 149 | SLU 67 | -0.26 | 0.47 | 82.12 | 0.0414 | -0.2014 | -0.0017 |
| 149 | SLU 68 | -0.27 | 0.54 | 82.33 | 0.0391 | -0.2138 | -0.0018 |
| 149 | SLU 69 | -0.26 | 0.43 | 82.56 | 0.0431 | -0.185 | -0.0017 |
| 149 | SLU 70 | -0.27 | 0.55 | 83.72 | 0.0396 | -0.2055 | -0.0018 |
| 149 | SLU 71 | -0.26 | 0.41 | 81.99 | 0.0431 | -0.1837 | -0.0017 |
| 149 | SLU 72 | -0.27 | 0.54 | 83.15 | 0.0396 | -0.2042 | -0.0018 |
| 149 | SLU 73 | -0.28 | 0.78 | 87.96 | 0.0338 | -0.225 | -0.0019 |
| 149 | SLU 74 | -0.27 | 0.67 | 88.19 | 0.0378 | -0.1962 | -0.0018 |
| 149 | SLU 75 | -0.28 | 0.79 | 89.35 | 0.0343 | -0.2167 | -0.0019 |
| 149 | SLU 76 | -0.29 | 0.86 | 89.56 | 0.032 | -0.2291 | -0.0019 |
| 149 | SLU 77 | -0.28 | 0.74 | 89.79 | 0.0361 | -0.2003 | -0.0018 |
| 149 | SLU 78 | -0.29 | 0.87 | 90.95 | 0.0326 | -0.2207 | -0.0019 |
| 149 | SLU 79 | -0.28 | 0.73 | 89.22 | 0.0361 | -0.199 | -0.0018 |
| 149 | SLU 80 | -0.29 | 0.86 | 90.38 | 0.0326 | -0.2195 | -0.0019 |
| 149 | SLU 81 | -0.27 | 0.71 | 89.13 | 0.0365 | -0.1974 | -0.0018 |
| 149 | SLU 82 | -0.29 | 0.84 | 90.29 | 0.033 | -0.2179 | -0.0019 |
| 149 | SLU 83 | -0.28 | 0.79 | 90.72 | 0.0348 | -0.2015 | -0.0018 |
| 149 | SLU 84 | -0.29 | 0.91 | 91.89 | 0.0313 | -0.222 | -0.0019 |
| 149 | SLE RA 1 | -0.18 | 0.14 | 58.99 | 0.0367 | -0.1314 | -0.0012 |
| 149 | SLE RA 2 | -0.19 | 0.28 | 60.28 | 0.0328 | -0.1542 | -0.0013 |
| 149 | SLE RA 3 | -0.19 | 0.2 | 60.43 | 0.0355 | -0.135 | -0.0012 |
| 149 | SLE RA 4 | -0.19 | 0.28 | 61.21 | 0.0332 | -0.1487 | -0.0013 |
| 149 | SLE RA 5 | -0.2 | 0.33 | 61.35 | 0.0317 | -0.1569 | -0.0013 |
| 149 | SLE RA 6 | -0.19 | 0.25 | 61.5 | 0.0344 | -0.1377 | -0.0013 |
| 149 | SLE RA 7 | -0.2 | 0.33 | 62.27 | 0.0321 | -0.1514 | -0.0013 |
| 149 | SLE RA 8 | -0.19 | 0.25 | 61.12 | 0.0344 | -0.1369 | -0.0012 |
| 149 | SLE RA 9 | -0.2 | 0.33 | 61.89 | 0.0321 | -0.1506 | -0.0013 |
| 149 | SLE RA 10 | -0.21 | 0.49 | 65.1 | 0.0282 | -0.1644 | -0.0014 |
| 149 | SLE RA 11 | -0.2 | 0.41 | 65.25 | 0.0309 | -0.1452 | -0.0013 |
| 149 | SLE RA 12 | -0.21 | 0.5 | 66.03 | 0.0286 | -0.1588 | -0.0014 |
| 149 | SLE RA 13 | -0.21 | 0.54 | 66.17 | 0.027 | -0.1671 | -0.0014 |
| 149 | SLE RA 14 | -0.21 | 0.47 | 66.32 | 0.0297 | -0.1479 | -0.0013 |
| 149 | SLE RA 15 | -0.21 | 0.55 | 67.09 | 0.0274 | -0.1616 | -0.0014 |
| 149 | SLE RA 16 | -0.2 | 0.46 | 65.94 | 0.0297 | -0.1471 | -0.0013 |
| 149 | SLE RA 17 | -0.21 | 0.54 | 66.71 | 0.0274 | -0.1607 | -0.0014 |
| 149 | SLE RA 18 | -0.2 | 0.45 | 65.88 | 0.03 | -0.146 | -0.0013 |
| 149 | SLE RA 19 | -0.21 | 0.53 | 66.65 | 0.0277 | -0.1596 | -0.0014 |

| Nodo | Cont. | Reazione a traslazione | | | Reazione a rotazione | | |
|---|---|---|---|---|---|---|---|
| Ind. | N.br. | x | y | z | x | y | z |
| 149 | SLE RA 20 | -0.21 | 0.5 | 66.94 | 0.0289 | -0.1487 | -0.0014 |
| 149 | SLE RA 21 | -0.21 | 0.58 | 67.72 | 0.0266 | -0.1624 | -0.0014 |
| 149 | SLE FR 1 | -0.18 | 0.14 | 58.99 | 0.0367 | -0.1314 | -0.0012 |
| 149 | SLE FR 2 | -0.18 | 0.17 | 59.25 | 0.0359 | -0.136 | -0.0012 |
| 149 | SLE FR 3 | -0.18 | 0.16 | 59.42 | 0.0362 | -0.1325 | -0.0012 |
| 149 | SLE FR 4 | -0.19 | 0.26 | 61.31 | 0.0339 | -0.1403 | -0.0013 |
| 149 | SLE FR 5 | -0.19 | 0.25 | 61.48 | 0.0342 | -0.1369 | -0.0012 |
| 149 | SLE FR 6 | -0.19 | 0.29 | 62.43 | 0.0333 | -0.1387 | -0.0013 |
| 149 | SLE QP 1 | -0.18 | 0.14 | 58.99 | 0.0367 | -0.1314 | -0.0012 |
| 149 | SLE QP 2 | -0.19 | 0.23 | 61.06 | 0.0347 | -0.1358 | -0.0012 |
| 149 | SLD 1 | -0.33 | 4.06 | 79.76 | -0.0129 | -0.3265 | -0.0022 |
| 149 | SLD 2 | -0.33 | 4.06 | 79.76 | -0.0129 | -0.3265 | -0.0022 |
| 149 | SLD 3 | -0.45 | -0.95 | 77.92 | 0.2134 | -0.2529 | -0.0028 |
| 149 | SLD 4 | -0.45 | -0.95 | 77.92 | 0.2134 | -0.2529 | -0.0028 |
| 149 | SLD 5 | -0.06 | 8.98 | 69.46 | -0.3229 | -0.3047 | -0.0006 |
| 149 | SLD 6 | -0.06 | 8.98 | 69.46 | -0.3229 | -0.3047 | -0.0006 |
| 149 | SLD 7 | -0.43 | -7.73 | 63.32 | 0.4315 | -0.0592 | -0.0027 |
| 149 | SLD 8 | -0.43 | -7.73 | 63.32 | 0.4315 | -0.0592 | -0.0027 |
| 149 | SLD 9 | 0.06 | 8.19 | 58.79 | -0.3622 | -0.2123 | 0.0002 |
| 149 | SLD 10 | 0.06 | 8.19 | 58.79 | -0.3622 | -0.2123 | 0.0002 |
| 149 | SLD 11 | -0.31 | -8.52 | 52.65 | 0.3922 | 0.0331 | -0.0019 |
| 149 | SLD 12 | -0.31 | -8.52 | 52.65 | 0.3922 | 0.0331 | -0.0019 |
| 149 | SLD 13 | 0.07 | 1.42 | 44.2 | -0.144 | -0.0187 | 0.0003 |
| 149 | SLD 14 | 0.07 | 1.42 | 44.2 | -0.144 | -0.0187 | 0.0003 |
| 149 | SLD 15 | -0.04 | -3.59 | 42.35 | 0.0823 | 0.0549 | -0.0003 |
| 149 | SLD 16 | -0.04 | -3.59 | 42.35 | 0.0823 | 0.0549 | -0.0003 |
| 149 | SLV 1 | -0.51 | 9.22 | 104.86 | -0.0713 | -0.5875 | -0.0034 |
| 149 | SLV 2 | -0.51 | 9.22 | 104.86 | -0.0713 | -0.5875 | -0.0034 |
| 149 | SLV 3 | -0.8 | -2.42 | 100.35 | 0.454 | -0.3998 | -0.005 |
| 149 | SLV 4 | -0.8 | -2.42 | 100.35 | 0.454 | -0.3998 | -0.005 |
| 149 | SLV 5 | 0.15 | 20.58 | 81.02 | -0.7938 | -0.5559 | 0.0005 |
| 149 | SLV 6 | 0.15 | 20.58 | 81.02 | -0.7938 | -0.5559 | 0.0005 |
| 149 | SLV 7 | -0.8 | -18.21 | 66.02 | 0.9572 | 0.0696 | -0.0048 |
| 149 | SLV 8 | -0.8 | -18.21 | 66.02 | 0.9572 | 0.0696 | -0.0048 |
| 149 | SLV 9 | 0.43 | 18.68 | 56.09 | -0.8879 | -0.3412 | 0.0023 |
| 149 | SLV 10 | 0.43 | 18.68 | 56.09 | -0.8879 | -0.3412 | 0.0023 |
| 149 | SLV 11 | -0.52 | -20.12 | 41.09 | 0.8632 | 0.2843 | -0.003 |
| 149 | SLV 12 | -0.52 | -20.12 | 41.09 | 0.8632 | 0.2843 | -0.003 |
| 149 | SLV 13 | 0.42 | 2.88 | 21.76 | -0.3847 | 0.1282 | 0.0025 |
| 149 | SLV 14 | 0.42 | 2.88 | 21.76 | -0.3847 | 0.1282 | 0.0025 |
| 149 | SLV 15 | 0.14 | -8.76 | 17.26 | 0.1406 | 0.3159 | 0.0009 |
| 149 | SLV 16 | 0.14 | -8.76 | 17.26 | 0.1406 | 0.3159 | 0.0009 |
| 150 | SLU 1 | 0.09 | 2.52 | 30.01 | -0.1632 | 0.0545 | 0 |
| 150 | SLU 2 | 0.09 | 4.69 | 28.9 | -0.2744 | 0.0585 | 0 |
| 150 | SLU 3 | 0.09 | 2.47 | 31.39 | -0.1604 | 0.0565 | 0 |
| 150 | SLU 4 | 0.09 | 3.77 | 30.73 | -0.2271 | 0.0589 | 0 |
| 150 | SLU 5 | 0.09 | 4.54 | 29.95 | -0.2663 | 0.0595 | 0 |
| 150 | SLU 6 | 0.09 | 2.33 | 32.44 | -0.1523 | 0.0576 | 0 |
| 150 | SLU 7 | 0.1 | 3.63 | 31.78 | -0.219 | 0.0599 | 0 |
| 150 | SLU 8 | 0.09 | 2.22 | 32.1 | -0.1469 | 0.0567 | 0 |
| 150 | SLU 9 | 0.09 | 3.52 | 31.44 | -0.2137 | 0.059 | 0 |
| 150 | SLU 10 | 0.11 | 5.42 | 34.04 | -0.3131 | 0.069 | 0 |
| 150 | SLU 11 | 0.11 | 3.21 | 36.53 | -0.1991 | 0.067 | 0 |
| 150 | SLU 12 | 0.11 | 4.51 | 35.87 | -0.2658 | 0.0694 | 0 |
| 150 | SLU 13 | 0.11 | 5.27 | 35.09 | -0.305 | 0.0701 | 0 |
| 150 | SLU 14 | 0.11 | 3.06 | 37.58 | -0.1909 | 0.0681 | 0 |
| 150 | SLU 15 | 0.11 | 4.36 | 36.92 | -0.2577 | 0.0704 | 0 |
| 150 | SLU 16 | 0.11 | 2.96 | 37.24 | -0.1856 | 0.0672 | 0 |
| 150 | SLU 17 | 0.11 | 4.26 | 36.58 | -0.2523 | 0.0695 | 0 |
| 150 | SLU 18 | 0.11 | 3.57 | 37.35 | -0.2184 | 0.0695 | 0 |
| 150 | SLU 19 | 0.12 | 4.87 | 36.68 | -0.2852 | 0.0719 | 0 |
| 150 | SLU 20 | 0.11 | 3.42 | 38.4 | -0.2103 | 0.0706 | 0 |
| 150 | SLU 21 | 0.12 | 4.72 | 37.73 | -0.277 | 0.073 | 0 |
| 150 | SLU 22 | 0.1 | 3.08 | 34.89 | -0.1926 | 0.0641 | 0 |
| 150 | SLU 23 | 0.11 | 5.24 | 33.78 | -0.3039 | 0.068 | 0 |
| 150 | SLU 24 | 0.11 | 3.03 | 36.28 | -0.1898 | 0.066 | 0 |
| 150 | SLU 25 | 0.11 | 4.33 | 35.61 | -0.2566 | 0.0684 | 0 |
| 150 | SLU 26 | 0.11 | 5.1 | 34.83 | -0.2957 | 0.0691 | 0 |
| 150 | SLU 27 | 0.11 | 2.88 | 37.32 | -0.1817 | 0.0671 | 0 |
| 150 | SLU 28 | 0.11 | 4.18 | 36.66 | -0.2485 | 0.0695 | 0 |
| 150 | SLU 29 | 0.11 | 2.78 | 36.99 | -0.1764 | 0.0662 | 0 |
| 150 | SLU 30 | 0.11 | 4.08 | 36.32 | -0.2431 | 0.0686 | 0 |
| 150 | SLU 31 | 0.13 | 5.98 | 38.92 | -0.3425 | 0.0785 | 0 |
| 150 | SLU 32 | 0.12 | 3.76 | 41.41 | -0.2285 | 0.0766 | 0 |
| 150 | SLU 33 | 0.13 | 5.06 | 40.75 | -0.2952 | 0.0789 | 0 |
| 150 | SLU 34 | 0.13 | 5.83 | 39.97 | -0.3344 | 0.0796 | 0 |
| 150 | SLU 35 | 0.13 | 3.62 | 42.46 | -0.2204 | 0.0776 | 0 |
| 150 | SLU 36 | 0.13 | 4.92 | 41.8 | -0.2871 | 0.08 | 0 |
| 150 | SLU 37 | 0.12 | 3.51 | 42.12 | -0.215 | 0.0767 | 0 |
| 150 | SLU 38 | 0.13 | 4.81 | 41.46 | -0.2818 | 0.0791 | 0 |
| 150 | SLU 39 | 0.13 | 4.13 | 42.23 | -0.2479 | 0.0791 | 0 |
| 150 | SLU 40 | 0.13 | 5.43 | 41.57 | -0.3146 | 0.0815 | 0 |
| 150 | SLU 41 | 0.13 | 3.98 | 43.28 | -0.2397 | 0.0802 | 0 |
| 150 | SLU 42 | 0.13 | 5.28 | 42.61 | -0.3065 | 0.0825 | 0 |
| 150 | SLU 43 | 0.11 | 3.09 | 37.33 | -0.2021 | 0.0676 | 0 |
| 150 | SLU 44 | 0.11 | 5.25 | 36.23 | -0.3133 | 0.0716 | 0 |
| 150 | SLU 45 | 0.11 | 3.04 | 38.72 | -0.1993 | 0.0696 | 0 |
| 150 | SLU 46 | 0.11 | 4.34 | 38.06 | -0.266 | 0.0719 | 0 |

| Nodo | Cont. | Reazione a traslazione | | | Reazione a rotazione | | |
|---|---|---|---|---|---|---|---|
| Ind. | N.br. | x | y | z | x | y | z |
| 150 | SLU 47 | 0.11 | 5.11 | 37.27 | -0.3052 | 0.0726 | 0 |
| 150 | SLU 48 | 0.11 | 2.89 | 39.77 | -0.1911 | 0.0706 | 0 |
| 150 | SLU 49 | 0.12 | 4.19 | 39.1 | -0.2579 | 0.073 | 0 |
| 150 | SLU 50 | 0.11 | 2.79 | 39.43 | -0.1858 | 0.0697 | 0 |
| 150 | SLU 51 | 0.11 | 4.09 | 38.77 | -0.2525 | 0.0721 | 0 |
| 150 | SLU 52 | 0.13 | 5.99 | 41.37 | -0.3519 | 0.0821 | 0 |
| 150 | SLU 53 | 0.13 | 3.77 | 43.86 | -0.2379 | 0.0801 | 0 |
| 150 | SLU 54 | 0.13 | 5.07 | 43.2 | -0.3047 | 0.0825 | 0 |
| 150 | SLU 55 | 0.13 | 5.84 | 42.41 | -0.3438 | 0.0831 | 0 |
| 150 | SLU 56 | 0.13 | 3.63 | 44.91 | -0.2298 | 0.0811 | 0 |
| 150 | SLU 57 | 0.13 | 4.93 | 44.24 | -0.2965 | 0.0835 | 0 |
| 150 | SLU 58 | 0.13 | 3.52 | 44.57 | -0.2245 | 0.0802 | 0 |
| 150 | SLU 59 | 0.13 | 4.82 | 43.9 | -0.2912 | 0.0826 | 0 |
| 150 | SLU 60 | 0.13 | 4.14 | 44.68 | -0.2573 | 0.0826 | 0 |
| 150 | SLU 61 | 0.14 | 5.44 | 44.01 | -0.324 | 0.085 | 0 |
| 150 | SLU 62 | 0.13 | 3.99 | 45.72 | -0.2492 | 0.0837 | 0 |
| 150 | SLU 63 | 0.14 | 5.29 | 45.06 | -0.3159 | 0.0861 | 0 |
| 150 | SLU 64 | 0.12 | 3.64 | 42.22 | -0.2315 | 0.0771 | 0 |
| 150 | SLU 65 | 0.13 | 5.81 | 41.11 | -0.3427 | 0.0811 | 0 |
| 150 | SLU 66 | 0.13 | 3.6 | 43.6 | -0.2287 | 0.0791 | 0 |
| 150 | SLU 67 | 0.13 | 4.9 | 42.94 | -0.2954 | 0.0815 | 0 |
| 150 | SLU 68 | 0.13 | 5.66 | 42.16 | -0.3346 | 0.0822 | 0 |
| 150 | SLU 69 | 0.13 | 3.45 | 44.65 | -0.2206 | 0.0802 | 0 |
| 150 | SLU 70 | 0.13 | 4.75 | 43.99 | -0.2873 | 0.0826 | 0 |
| 150 | SLU 71 | 0.13 | 3.35 | 44.31 | -0.2153 | 0.0793 | 0 |
| 150 | SLU 72 | 0.13 | 4.65 | 43.65 | -0.282 | 0.0817 | 0 |
| 150 | SLU 73 | 0.15 | 6.54 | 46.25 | -0.3814 | 0.0916 | 0 |
| 150 | SLU 74 | 0.14 | 4.33 | 48.74 | -0.2674 | 0.0896 | 0 |
| 150 | SLU 75 | 0.15 | 5.63 | 48.08 | -0.3341 | 0.092 | 0 |
| 150 | SLU 76 | 0.15 | 6.4 | 47.3 | -0.3733 | 0.0927 | 0 |
| 150 | SLU 77 | 0.15 | 4.18 | 49.79 | -0.2592 | 0.0907 | 0 |
| 150 | SLU 78 | 0.15 | 5.48 | 49.13 | -0.326 | 0.0931 | 0 |
| 150 | SLU 79 | 0.14 | 4.08 | 49.45 | -0.2539 | 0.0898 | 0 |
| 150 | SLU 80 | 0.15 | 5.38 | 48.79 | -0.3206 | 0.0922 | 0 |
| 150 | SLU 81 | 0.15 | 4.69 | 49.56 | -0.2867 | 0.0922 | 0 |
| 150 | SLU 82 | 0.15 | 5.99 | 48.89 | -0.3535 | 0.0945 | 0 |
| 150 | SLU 83 | 0.15 | 4.54 | 50.61 | -0.2786 | 0.0932 | 0 |
| 150 | SLU 84 | 0.15 | 5.84 | 49.94 | -0.3453 | 0.0956 | 0 |
| 150 | SLE RA 1 | 0.09 | 2.68 | 31.4 | -0.1716 | 0.0572 | 0 |
| 150 | SLE RA 2 | 0.1 | 4.12 | 30.66 | -0.2458 | 0.0599 | 0 |
| 150 | SLE RA 3 | 0.09 | 2.65 | 32.33 | -0.1697 | 0.0586 | 0 |
| 150 | SLE RA 4 | 0.1 | 3.52 | 31.88 | -0.2142 | 0.0601 | 0 |
| 150 | SLE RA 5 | 0.1 | 4.03 | 31.36 | -0.2403 | 0.0606 | 0 |
| 150 | SLE RA 6 | 0.1 | 2.55 | 33.02 | -0.1643 | 0.0593 | 0 |
| 150 | SLE RA 7 | 0.1 | 3.42 | 32.58 | -0.2088 | 0.0609 | 0 |
| 150 | SLE RA 8 | 0.09 | 2.48 | 32.8 | -0.1608 | 0.0587 | 0 |
| 150 | SLE RA 9 | 0.1 | 3.35 | 32.36 | -0.2053 | 0.0603 | 0 |
| 150 | SLE RA 10 | 0.11 | 4.61 | 34.09 | -0.2715 | 0.0669 | 0 |
| 150 | SLE RA 11 | 0.11 | 3.14 | 35.75 | -0.1955 | 0.0656 | 0 |
| 150 | SLE RA 12 | 0.11 | 4.01 | 35.31 | -0.24 | 0.0672 | 0 |
| 150 | SLE RA 13 | 0.11 | 4.52 | 34.79 | -0.2661 | 0.0676 | 0 |
| 150 | SLE RA 14 | 0.11 | 3.04 | 36.45 | -0.1901 | 0.0663 | 0 |
| 150 | SLE RA 15 | 0.11 | 3.91 | 36.01 | -0.2346 | 0.0679 | 0 |
| 150 | SLE RA 16 | 0.11 | 2.97 | 36.22 | -0.1865 | 0.0657 | 0 |
| 150 | SLE RA 17 | 0.11 | 3.84 | 35.78 | -0.231 | 0.0673 | 0 |
| 150 | SLE RA 18 | 0.11 | 3.38 | 36.3 | -0.2084 | 0.0673 | 0 |
| 150 | SLE RA 19 | 0.11 | 4.25 | 35.85 | -0.2529 | 0.0688 | 0 |
| 150 | SLE RA 20 | 0.11 | 3.28 | 36.99 | -0.203 | 0.068 | 0 |
| 150 | SLE RA 21 | 0.11 | 4.15 | 36.55 | -0.2475 | 0.0696 | 0 |
| 150 | SLE FR 1 | 0.09 | 2.68 | 31.4 | -0.1716 | 0.0572 | 0 |
| 150 | SLE FR 2 | 0.09 | 2.97 | 31.25 | -0.1864 | 0.0578 | 0 |
| 150 | SLE FR 3 | 0.09 | 2.64 | 31.68 | -0.1694 | 0.0575 | 0 |
| 150 | SLE FR 4 | 0.1 | 3.18 | 32.72 | -0.1975 | 0.0608 | 0 |
| 150 | SLE FR 5 | 0.1 | 2.85 | 33.15 | -0.1805 | 0.0605 | 0 |
| 150 | SLE FR 6 | 0.1 | 3.03 | 33.85 | -0.19 | 0.0623 | 0 |
| 150 | SLE QP 1 | 0.09 | 2.68 | 31.4 | -0.1716 | 0.0572 | 0 |
| 150 | SLE QP 2 | 0.1 | 2.89 | 32.87 | -0.1827 | 0.0602 | 0 |
| 150 | SLD 1 | 0.18 | 6.44 | 35.97 | -0.3467 | 0.1349 | 0.0002 |
| 150 | SLD 2 | 0.18 | 6.44 | 35.97 | -0.3467 | 0.1349 | 0.0002 |
| 150 | SLD 3 | 0.12 | 2.69 | 37.29 | -0.1643 | 0.0996 | 0.0002 |
| 150 | SLD 4 | 0.12 | 2.69 | 37.29 | -0.1643 | 0.0996 | 0.0002 |
| 150 | SLD 5 | 0.22 | 9.63 | 31.79 | -0.5085 | 0.1363 | 0 |
| 150 | SLD 6 | 0.22 | 9.63 | 31.79 | -0.5085 | 0.1363 | 0 |
| 150 | SLD 7 | 0 | -2.85 | 36.2 | 0.0995 | 0.0184 | 0.0002 |
| 150 | SLD 8 | 0 | -2.85 | 36.2 | 0.0995 | 0.0184 | 0.0002 |
| 150 | SLD 9 | 0.19 | 8.63 | 29.53 | -0.4648 | 0.1021 | -0.0001 |
| 150 | SLD 10 | 0.19 | 8.63 | 29.53 | -0.4648 | 0.1021 | -0.0001 |
| 150 | SLD 11 | -0.03 | -3.85 | 33.95 | 0.1432 | -0.0158 | 0.0001 |
| 150 | SLD 12 | -0.03 | -3.85 | 33.95 | 0.1432 | -0.0158 | 0.0001 |
| 150 | SLD 13 | 0.07 | 3.09 | 28.45 | -0.201 | 0.0209 | -0.0002 |
| 150 | SLD 14 | 0.07 | 3.09 | 28.45 | -0.201 | 0.0209 | -0.0002 |
| 150 | SLD 15 | 0.01 | -0.66 | 29.77 | -0.0187 | -0.0144 | -0.0001 |
| 150 | SLD 16 | 0.01 | -0.66 | 29.77 | -0.0187 | -0.0144 | -0.0001 |
| 150 | SLV 1 | 0.31 | 11.3 | 40.06 | -0.573 | 0.2375 | 0.0003 |
| 150 | SLV 2 | 0.31 | 11.3 | 40.06 | -0.573 | 0.2375 | 0.0003 |
| 150 | SLV 3 | 0.14 | 2.33 | 43.26 | -0.1359 | 0.1498 | 0.0005 |
| 150 | SLV 4 | 0.14 | 2.33 | 43.26 | -0.1359 | 0.1498 | 0.0005 |
| 150 | SLV 5 | 0.4 | 19.02 | 30.17 | -0.9627 | 0.2465 | -0.0001 |

| Nodo | Cont. | Reazione a traslazione | | | Reazione a rotazione | | |
|---|---|---|---|---|---|---|---|
| Ind. | N.br. | x | y | z | x | y | z |
| 150 | SLV 6 | 0.4 | 19.02 | 30.17 | -0.9627 | 0.2465 | -0.0001 |
| 150 | SLV 7 | -0.13 | -10.88 | 40.84 | 0.4943 | -0.0459 | 0.0004 |
| 150 | SLV 8 | -0.13 | -10.88 | 40.84 | 0.4943 | -0.0459 | 0.0004 |
| 150 | SLV 9 | 0.33 | 16.66 | 24.89 | -0.8596 | 0.1664 | -0.0004 |
| 150 | SLV 10 | 0.33 | 16.66 | 24.89 | -0.8596 | 0.1664 | -0.0004 |
| 150 | SLV 11 | -0.21 | -13.24 | 35.57 | 0.5974 | -0.126 | 0.0002 |
| 150 | SLV 12 | -0.21 | -13.24 | 35.57 | 0.5974 | -0.126 | 0.0002 |
| 150 | SLV 13 | 0.05 | 3.45 | 22.48 | -0.2294 | -0.0293 | -0.0005 |
| 150 | SLV 14 | 0.05 | 3.45 | 22.48 | -0.2294 | -0.0293 | -0.0005 |
| 150 | SLV 15 | -0.11 | -5.52 | 25.68 | 0.2077 | -0.117 | -0.0003 |
| 150 | SLV 16 | -0.11 | -5.52 | 25.68 | 0.2077 | -0.117 | -0.0003 |
| 151 | SLU 1 | 0 | -3.32 | 43.31 | 0.1655 | 0.0108 | -0.0001 |
| 151 | SLU 2 | 0 | -3.65 | 43.48 | 0.1795 | 0.011 | -0.0001 |
| 151 | SLU 3 | 0 | -3.27 | 44.82 | 0.1647 | 0.011 | -0.0001 |
| 151 | SLU 4 | 0 | -3.46 | 44.92 | 0.1731 | 0.0111 | -0.0001 |
| 151 | SLU 5 | 0 | -3.58 | 44.39 | 0.1776 | 0.0111 | -0.0001 |
| 151 | SLU 6 | 0 | -3.2 | 45.72 | 0.1628 | 0.0111 | -0.0001 |
| 151 | SLU 7 | 0 | -3.39 | 45.82 | 0.1712 | 0.0112 | -0.0001 |
| 151 | SLU 8 | 0 | -3.19 | 45.12 | 0.1617 | 0.011 | -0.0001 |
| 151 | SLU 9 | 0 | -3.38 | 45.22 | 0.1701 | 0.0112 | -0.0001 |
| 151 | SLU 10 | 0 | -4.44 | 52.37 | 0.2191 | 0.0138 | 0 |
| 151 | SLU 11 | 0 | -4.06 | 53.71 | 0.2043 | 0.0138 | 0 |
| 151 | SLU 12 | 0 | -4.25 | 53.81 | 0.2127 | 0.0139 | 0 |
| 151 | SLU 13 | 0 | -4.37 | 53.28 | 0.2172 | 0.0139 | 0 |
| 151 | SLU 14 | 0 | -3.99 | 54.61 | 0.2024 | 0.0139 | 0 |
| 151 | SLU 15 | 0 | -4.19 | 54.71 | 0.2108 | 0.014 | 0 |
| 151 | SLU 16 | 0 | -3.98 | 54.01 | 0.2013 | 0.0138 | 0 |
| 151 | SLU 17 | 0 | -4.17 | 54.11 | 0.2097 | 0.0139 | 0 |
| 151 | SLU 18 | 0 | -4.45 | 56.01 | 0.2221 | 0.0148 | 0 |
| 151 | SLU 19 | 0 | -4.65 | 56.11 | 0.2305 | 0.0149 | 0 |
| 151 | SLU 20 | 0 | -4.39 | 56.92 | 0.2202 | 0.0149 | 0 |
| 151 | SLU 21 | 0 | -4.58 | 57.02 | 0.2286 | 0.015 | 0 |
| 151 | SLU 22 | 0 | -3.48 | 49.95 | 0.1782 | 0.0121 | -0.0001 |
| 151 | SLU 23 | 0 | -3.8 | 50.12 | 0.1922 | 0.0124 | -0.0001 |
| 151 | SLU 24 | 0 | -3.43 | 51.45 | 0.1774 | 0.0124 | -0.0001 |
| 151 | SLU 25 | 0 | -3.62 | 51.56 | 0.1858 | 0.0125 | -0.0001 |
| 151 | SLU 26 | 0 | -3.74 | 51.02 | 0.1903 | 0.0125 | -0.0001 |
| 151 | SLU 27 | 0 | -3.36 | 52.36 | 0.1755 | 0.0125 | -0.0001 |
| 151 | SLU 28 | 0 | -3.55 | 52.46 | 0.1839 | 0.0126 | -0.0001 |
| 151 | SLU 29 | 0 | -3.35 | 51.76 | 0.1744 | 0.0124 | -0.0001 |
| 151 | SLU 30 | 0 | -3.54 | 51.86 | 0.1828 | 0.0125 | -0.0001 |
| 151 | SLU 31 | 0 | -4.6 | 59.01 | 0.2318 | 0.0151 | 0 |
| 151 | SLU 32 | 0 | -4.22 | 60.34 | 0.217 | 0.0151 | 0 |
| 151 | SLU 33 | 0 | -4.41 | 60.45 | 0.2254 | 0.0153 | 0 |
| 151 | SLU 34 | 0 | -4.53 | 59.91 | 0.2299 | 0.0152 | 0 |
| 151 | SLU 35 | 0 | -4.15 | 61.25 | 0.2151 | 0.0153 | 0 |
| 151 | SLU 36 | 0 | -4.34 | 61.35 | 0.2235 | 0.0154 | 0 |
| 151 | SLU 37 | 0 | -4.14 | 60.65 | 0.214 | 0.0152 | 0 |
| 151 | SLU 38 | 0 | -4.33 | 60.75 | 0.2224 | 0.0153 | 0 |
| 151 | SLU 39 | 0 | -4.61 | 62.65 | 0.2348 | 0.0161 | 0 |
| 151 | SLU 40 | 0 | -4.81 | 62.75 | 0.2432 | 0.0162 | 0 |
| 151 | SLU 41 | 0 | -4.54 | 63.55 | 0.2329 | 0.0162 | 0 |
| 151 | SLU 42 | 0 | -4.74 | 63.66 | 0.2413 | 0.0163 | 0 |
| 151 | SLU 43 | 0 | -4.27 | 54.03 | 0.2108 | 0.0136 | -0.0001 |
| 151 | SLU 44 | 0 | -4.59 | 54.2 | 0.2248 | 0.0138 | -0.0001 |
| 151 | SLU 45 | 0 | -4.21 | 55.54 | 0.21 | 0.0138 | -0.0001 |
| 151 | SLU 46 | 0 | -4.41 | 55.64 | 0.2184 | 0.0139 | -0.0001 |
| 151 | SLU 47 | 0 | -4.52 | 55.11 | 0.2229 | 0.0139 | -0.0001 |
| 151 | SLU 48 | 0 | -4.14 | 56.44 | 0.2081 | 0.0139 | -0.0001 |
| 151 | SLU 49 | 0 | -4.34 | 56.54 | 0.2165 | 0.014 | -0.0001 |
| 151 | SLU 50 | 0 | -4.13 | 55.84 | 0.207 | 0.0138 | -0.0001 |
| 151 | SLU 51 | 0 | -4.33 | 55.94 | 0.2154 | 0.0139 | -0.0001 |
| 151 | SLU 52 | 0 | -5.38 | 63.09 | 0.2644 | 0.0165 | -0.0001 |
| 151 | SLU 53 | 0 | -5 | 64.43 | 0.2496 | 0.0166 | -0.0001 |
| 151 | SLU 54 | 0 | -5.2 | 64.53 | 0.258 | 0.0167 | -0.0001 |
| 151 | SLU 55 | 0 | -5.31 | 64 | 0.2625 | 0.0167 | -0.0001 |
| 151 | SLU 56 | 0 | -4.94 | 65.33 | 0.2477 | 0.0167 | -0.0001 |
| 151 | SLU 57 | 0 | -5.13 | 65.43 | 0.2561 | 0.0168 | -0.0001 |
| 151 | SLU 58 | 0 | -4.92 | 64.73 | 0.2466 | 0.0166 | -0.0001 |
| 151 | SLU 59 | 0 | -5.12 | 64.83 | 0.255 | 0.0167 | -0.0001 |
| 151 | SLU 60 | 0 | -5.4 | 66.73 | 0.2674 | 0.0175 | -0.0001 |
| 151 | SLU 61 | 0 | -5.59 | 66.83 | 0.2758 | 0.0176 | -0.0001 |
| 151 | SLU 62 | 0 | -5.33 | 67.64 | 0.2655 | 0.0176 | -0.0001 |
| 151 | SLU 63 | 0 | -5.52 | 67.74 | 0.2739 | 0.0178 | -0.0001 |
| 151 | SLU 64 | 0 | -4.42 | 60.67 | 0.2235 | 0.0149 | -0.0001 |
| 151 | SLU 65 | 0 | -4.75 | 60.84 | 0.2375 | 0.0151 | -0.0001 |
| 151 | SLU 66 | 0 | -4.37 | 62.17 | 0.2227 | 0.0151 | -0.0001 |
| 151 | SLU 67 | 0 | -4.56 | 62.27 | 0.2311 | 0.0153 | -0.0001 |
| 151 | SLU 68 | 0 | -4.68 | 61.74 | 0.2356 | 0.0152 | -0.0001 |
| 151 | SLU 69 | 0 | -4.3 | 63.08 | 0.2208 | 0.0153 | -0.0001 |
| 151 | SLU 70 | 0 | -4.5 | 63.18 | 0.2292 | 0.0154 | -0.0001 |
| 151 | SLU 71 | 0 | -4.29 | 62.48 | 0.2197 | 0.0152 | -0.0001 |
| 151 | SLU 72 | 0 | -4.48 | 62.58 | 0.2281 | 0.0153 | -0.0001 |
| 151 | SLU 73 | 0 | -5.54 | 69.73 | 0.2771 | 0.0179 | -0.0001 |
| 151 | SLU 74 | 0 | -5.16 | 71.06 | 0.2623 | 0.0179 | -0.0001 |
| 151 | SLU 75 | 0 | -5.35 | 71.16 | 0.2707 | 0.018 | -0.0001 |
| 151 | SLU 76 | 0 | -5.47 | 70.63 | 0.2752 | 0.018 | -0.0001 |
| 151 | SLU 77 | 0 | -5.09 | 71.97 | 0.2604 | 0.018 | -0.0001 |

| Nodo | Cont. | Reazione a traslazione | | | Reazione a rotazione | | |
|---|---|---|---|---|---|---|---|
| Ind. | N.br. | x | y | z | x | y | z |
| 151 | SLU 78 | 0 | -5.29 | 72.07 | 0.2688 | 0.0181 | -0.0001 |
| 151 | SLU 79 | 0 | -5.08 | 71.37 | 0.2593 | 0.0179 | -0.0001 |
| 151 | SLU 80 | 0 | -5.27 | 71.47 | 0.2677 | 0.0181 | -0.0001 |
| 151 | SLU 81 | 0 | -5.56 | 73.37 | 0.2801 | 0.0189 | -0.0001 |
| 151 | SLU 82 | 0 | -5.75 | 73.47 | 0.2885 | 0.019 | -0.0001 |
| 151 | SLU 83 | 0 | -5.49 | 74.27 | 0.2782 | 0.019 | -0.0001 |
| 151 | SLU 84 | 0 | -5.68 | 74.37 | 0.2866 | 0.0191 | -0.0001 |
| 151 | SLE RA 1 | 0 | -3.37 | 45.21 | 0.1691 | 0.0112 | -0.0001 |
| 151 | SLE RA 2 | 0 | -3.58 | 45.32 | 0.1785 | 0.0113 | -0.0001 |
| 151 | SLE RA 3 | 0 | -3.33 | 46.21 | 0.1686 | 0.0113 | -0.0001 |
| 151 | SLE RA 4 | 0 | -3.46 | 46.28 | 0.1742 | 0.0114 | -0.0001 |
| 151 | SLE RA 5 | 0 | -3.54 | 45.93 | 0.1772 | 0.0114 | -0.0001 |
| 151 | SLE RA 6 | 0 | -3.29 | 46.81 | 0.1673 | 0.0114 | -0.0001 |
| 151 | SLE RA 7 | 0 | -3.42 | 46.88 | 0.1729 | 0.0115 | -0.0001 |
| 151 | SLE RA 8 | 0 | -3.28 | 46.42 | 0.1666 | 0.0113 | -0.0001 |
| 151 | SLE RA 9 | 0 | -3.41 | 46.48 | 0.1722 | 0.0114 | -0.0001 |
| 151 | SLE RA 10 | 0 | -4.11 | 51.25 | 0.2049 | 0.0132 | 0 |
| 151 | SLE RA 11 | 0 | -3.86 | 52.14 | 0.195 | 0.0132 | -0.0001 |
| 151 | SLE RA 12 | 0 | -3.99 | 52.21 | 0.2006 | 0.0133 | -0.0001 |
| 151 | SLE RA 13 | 0 | -4.07 | 51.85 | 0.2036 | 0.0132 | 0 |
| 151 | SLE RA 14 | 0 | -3.81 | 52.74 | 0.1937 | 0.0132 | -0.0001 |
| 151 | SLE RA 15 | 0 | -3.94 | 52.81 | 0.1993 | 0.0133 | 0 |
| 151 | SLE RA 16 | 0 | -3.81 | 52.34 | 0.193 | 0.0132 | -0.0001 |
| 151 | SLE RA 17 | 0 | -3.94 | 52.41 | 0.1986 | 0.0133 | 0 |
| 151 | SLE RA 18 | 0 | -4.12 | 53.68 | 0.2068 | 0.0138 | -0.0001 |
| 151 | SLE RA 19 | 0 | -4.25 | 53.74 | 0.2124 | 0.0139 | 0 |
| 151 | SLE RA 20 | 0 | -4.08 | 54.28 | 0.2056 | 0.0139 | 0 |
| 151 | SLE RA 21 | 0 | -4.21 | 54.35 | 0.2112 | 0.014 | 0 |
| 151 | SLE FR 1 | 0 | -3.37 | 45.21 | 0.1691 | 0.0112 | -0.0001 |
| 151 | SLE FR 2 | 0 | -3.41 | 45.23 | 0.171 | 0.0112 | -0.0001 |
| 151 | SLE FR 3 | 0 | -3.35 | 45.45 | 0.1686 | 0.0112 | -0.0001 |
| 151 | SLE FR 4 | 0 | -3.64 | 47.77 | 0.1823 | 0.012 | -0.0001 |
| 151 | SLE FR 5 | 0 | -3.58 | 47.99 | 0.1799 | 0.012 | -0.0001 |
| 151 | SLE FR 6 | 0 | -3.75 | 49.44 | 0.188 | 0.0125 | -0.0001 |
| 151 | SLE QP 1 | 0 | -3.37 | 45.21 | 0.1691 | 0.0112 | -0.0001 |
| 151 | SLE QP 2 | 0 | -3.59 | 47.75 | 0.1804 | 0.012 | -0.0001 |
| 151 | SLD 1 | 0.02 | -3.25 | 37.18 | 0.0192 | 0.0837 | 0.001 |
| 151 | SLD 2 | 0.02 | -3.25 | 37.18 | 0.0192 | 0.0837 | 0.001 |
| 151 | SLD 3 | 0.03 | -7.13 | 40 | 0.1915 | 0.0963 | 0.0017 |
| 151 | SLD 4 | 0.03 | -7.13 | 40 | 0.1915 | 0.0963 | 0.0017 |
| 151 | SLD 5 | -0.01 | 2.39 | 40.31 | -0.1294 | 0.0143 | -0.0008 |
| 151 | SLD 6 | -0.01 | 2.39 | 40.31 | -0.1294 | 0.0143 | -0.0008 |
| 151 | SLD 7 | 0.03 | -10.54 | 49.69 | 0.4452 | 0.0564 | 0.0015 |
| 151 | SLD 8 | 0.03 | -10.54 | 49.69 | 0.4452 | 0.0564 | 0.0015 |
| 151 | SLD 9 | -0.03 | 3.35 | 45.81 | -0.0843 | -0.0325 | -0.0016 |
| 151 | SLD 10 | -0.03 | 3.35 | 45.81 | -0.0843 | -0.0325 | -0.0016 |
| 151 | SLD 11 | 0.01 | -9.58 | 55.18 | 0.4902 | 0.0096 | 0.0007 |
| 151 | SLD 12 | 0.01 | -9.58 | 55.18 | 0.4902 | 0.0096 | 0.0007 |
| 151 | SLD 13 | -0.03 | -0.06 | 55.5 | 0.1693 | -0.0724 | -0.0018 |
| 151 | SLD 14 | -0.03 | -0.06 | 55.5 | 0.1693 | -0.0724 | -0.0018 |
| 151 | SLD 15 | -0.02 | -3.94 | 58.31 | 0.3417 | -0.0597 | -0.0012 |
| 151 | SLD 16 | -0.02 | -3.94 | 58.31 | 0.3417 | -0.0597 | -0.0012 |
| 151 | SLV 1 | 0.04 | -2.82 | 23.08 | -0.1937 | 0.1896 | 0.0024 |
| 151 | SLV 2 | 0.04 | -2.82 | 23.08 | -0.1937 | 0.1896 | 0.0024 |
| 151 | SLV 3 | 0.07 | -11.8 | 29.57 | 0.2053 | 0.2204 | 0.0041 |
| 151 | SLV 4 | 0.07 | -11.8 | 29.57 | 0.2053 | 0.2204 | 0.0041 |
| 151 | SLV 5 | -0.03 | 10.26 | 30.5 | -0.537 | 0.0185 | -0.0018 |
| 151 | SLV 6 | -0.03 | 10.26 | 30.5 | -0.537 | 0.0185 | -0.0018 |
| 151 | SLV 7 | 0.06 | -19.68 | 52.14 | 0.7931 | 0.1213 | 0.0037 |
| 151 | SLV 8 | 0.06 | -19.68 | 52.14 | 0.7931 | 0.1213 | 0.0037 |
| 151 | SLV 9 | -0.06 | 12.49 | 43.35 | -0.4322 | -0.0974 | -0.0038 |
| 151 | SLV 10 | -0.06 | 12.49 | 43.35 | -0.4322 | -0.0974 | -0.0038 |
| 151 | SLV 11 | 0.03 | -17.45 | 65 | 0.8979 | 0.0055 | 0.0017 |
| 151 | SLV 12 | 0.03 | -17.45 | 65 | 0.8979 | 0.0055 | 0.0017 |
| 151 | SLV 13 | -0.07 | 4.61 | 65.92 | 0.1556 | -0.1965 | -0.0042 |
| 151 | SLV 14 | -0.07 | 4.61 | 65.92 | 0.1556 | -0.1965 | -0.0042 |
| 151 | SLV 15 | -0.04 | -4.37 | 72.42 | 0.5546 | -0.1656 | -0.0026 |
| 151 | SLV 16 | -0.04 | -4.37 | 72.42 | 0.5546 | -0.1656 | -0.0026 |
| 152 | SLU 1 | 0 | -2.22 | 41.19 | 0.0726 | -0.0016 | 0 |
| 152 | SLU 2 | 0 | -0.3 | 39.77 | -0.0277 | -0.0034 | 0 |
| 152 | SLU 3 | 0 | -2.52 | 42.72 | 0.0863 | -0.0017 | 0 |
| 152 | SLU 4 | 0 | -1.36 | 41.87 | 0.0261 | -0.0028 | 0 |
| 152 | SLU 5 | 0 | -0.63 | 40.81 | -0.0118 | -0.0034 | 0 |
| 152 | SLU 6 | 0 | -2.85 | 43.77 | 0.1022 | -0.0018 | 0 |
| 152 | SLU 7 | 0 | -1.7 | 42.91 | 0.042 | -0.0029 | 0 |
| 152 | SLU 8 | 0 | -2.89 | 43.28 | 0.1044 | -0.0017 | 0 |
| 152 | SLU 9 | 0 | -1.74 | 42.43 | 0.0442 | -0.0028 | 0 |
| 152 | SLU 10 | 0 | -0.42 | 47.2 | -0.0241 | -0.0038 | 0 |
| 152 | SLU 11 | 0 | -2.64 | 50.15 | 0.0899 | -0.0021 | 0 |
| 152 | SLU 12 | 0 | -1.49 | 49.3 | 0.0297 | -0.0032 | 0 |
| 152 | SLU 13 | 0 | -0.76 | 48.24 | -0.0082 | -0.0039 | 0 |
| 152 | SLU 14 | 0 | -2.98 | 51.2 | 0.1058 | -0.0022 | 0 |
| 152 | SLU 15 | 0 | -1.82 | 50.34 | 0.0456 | -0.0033 | 0 |
| 152 | SLU 16 | 0 | -3.02 | 50.71 | 0.108 | -0.0021 | 0 |
| 152 | SLU 17 | 0 | -1.86 | 49.86 | 0.0478 | -0.0032 | 0 |
| 152 | SLU 18 | 0 | -2.4 | 51.8 | 0.0778 | -0.0022 | 0 |
| 152 | SLU 19 | 0 | -1.24 | 50.95 | 0.0176 | -0.0033 | 0 |
| 152 | SLU 20 | 0 | -2.73 | 52.85 | 0.0937 | -0.0023 | 0 |

| Nodo | Cont. | Reazione a traslazione | | | Reazione a rotazione | | |
|---|---|---|---|---|---|---|---|
| Ind. | N.br. | x | y | z | x | y | z |
| 152 | SLU 21 | 0 | -1.58 | 52 | 0.0335 | -0.0033 | 0 |
| 152 | SLU 22 | 0 | -2.47 | 48.15 | 0.0826 | -0.0019 | 0 |
| 152 | SLU 23 | 0 | -0.54 | 46.73 | -0.0177 | -0.0037 | 0 |
| 152 | SLU 24 | 0 | -2.76 | 49.68 | 0.0964 | -0.002 | 0 |
| 152 | SLU 25 | 0 | -1.61 | 48.83 | 0.0362 | -0.0031 | 0 |
| 152 | SLU 26 | 0 | -0.88 | 47.77 | -0.0018 | -0.0038 | 0 |
| 152 | SLU 27 | 0 | -3.1 | 50.73 | 0.1123 | -0.0021 | 0 |
| 152 | SLU 28 | 0 | -1.95 | 49.88 | 0.0521 | -0.0032 | 0 |
| 152 | SLU 29 | 0 | -3.14 | 50.24 | 0.1145 | -0.0021 | 0 |
| 152 | SLU 30 | 0 | -1.99 | 49.39 | 0.0543 | -0.0031 | 0 |
| 152 | SLU 31 | 0 | -0.67 | 54.16 | -0.014 | -0.0042 | 0 |
| 152 | SLU 32 | 0 | -2.89 | 57.11 | 0.1 | -0.0025 | 0 |
| 152 | SLU 33 | 0 | -1.73 | 56.26 | 0.0398 | -0.0036 | 0 |
| 152 | SLU 34 | 0 | -1 | 55.2 | 0.0019 | -0.0042 | 0 |
| 152 | SLU 35 | 0 | -3.22 | 58.16 | 0.1159 | -0.0026 | 0 |
| 152 | SLU 36 | 0 | -2.07 | 57.31 | 0.0557 | -0.0037 | 0 |
| 152 | SLU 37 | 0 | -3.26 | 57.67 | 0.1181 | -0.0025 | 0 |
| 152 | SLU 38 | 0 | -2.11 | 56.82 | 0.0579 | -0.0036 | 0 |
| 152 | SLU 39 | 0 | -2.64 | 58.76 | 0.0878 | -0.0025 | 0 |
| 152 | SLU 40 | 0 | -1.49 | 57.91 | 0.0276 | -0.0036 | 0 |
| 152 | SLU 41 | 0 | -2.98 | 59.81 | 0.1037 | -0.0026 | 0 |
| 152 | SLU 42 | 0 | -1.83 | 58.96 | 0.0435 | -0.0037 | 0 |
| 152 | SLU 43 | 0 | -2.8 | 51.16 | 0.0909 | -0.0019 | 0 |
| 152 | SLU 44 | 0 | -0.88 | 49.74 | -0.0094 | -0.0037 | 0 |
| 152 | SLU 45 | 0 | -3.1 | 52.69 | 0.1046 | -0.002 | 0 |
| 152 | SLU 46 | 0 | -1.94 | 51.84 | 0.0444 | -0.0031 | 0 |
| 152 | SLU 47 | 0 | -1.21 | 50.78 | 0.0065 | -0.0038 | 0 |
| 152 | SLU 48 | 0 | -3.43 | 53.74 | 0.1205 | -0.0021 | 0 |
| 152 | SLU 49 | 0 | -2.28 | 52.88 | 0.0603 | -0.0032 | 0 |
| 152 | SLU 50 | 0 | -3.47 | 53.25 | 0.1227 | -0.002 | 0 |
| 152 | SLU 51 | 0 | -2.32 | 52.4 | 0.0625 | -0.0031 | 0 |
| 152 | SLU 52 | 0 | -1 | 57.17 | -0.0058 | -0.0042 | 0 |
| 152 | SLU 53 | 0 | -3.22 | 60.12 | 0.1082 | -0.0025 | 0 |
| 152 | SLU 54 | 0 | -2.07 | 59.27 | 0.0481 | -0.0036 | 0 |
| 152 | SLU 55 | 0 | -1.34 | 58.21 | 0.0101 | -0.0042 | 0 |
| 152 | SLU 56 | 0 | -3.56 | 61.17 | 0.1241 | -0.0026 | 0 |
| 152 | SLU 57 | 0 | -2.4 | 60.31 | 0.064 | -0.0036 | 0 |
| 152 | SLU 58 | 0 | -3.6 | 60.68 | 0.1263 | -0.0025 | 0 |
| 152 | SLU 59 | 0 | -2.44 | 59.83 | 0.0662 | -0.0036 | 0 |
| 152 | SLU 60 | 0 | -2.98 | 61.77 | 0.0961 | -0.0025 | 0 |
| 152 | SLU 61 | 0 | -1.82 | 60.92 | 0.0359 | -0.0036 | 0 |
| 152 | SLU 62 | 0 | -3.31 | 62.82 | 0.112 | -0.0026 | 0 |
| 152 | SLU 63 | 0 | -2.16 | 61.96 | 0.0518 | -0.0037 | 0 |
| 152 | SLU 64 | 0 | -3.05 | 58.12 | 0.101 | -0.0023 | 0 |
| 152 | SLU 65 | 0 | -1.12 | 56.7 | 0.0007 | -0.0041 | 0 |
| 152 | SLU 66 | 0 | -3.34 | 59.65 | 0.1147 | -0.0024 | 0 |
| 152 | SLU 67 | 0 | -2.19 | 58.8 | 0.0545 | -0.0035 | 0 |
| 152 | SLU 68 | 0 | -1.46 | 57.74 | 0.0166 | -0.0041 | 0 |
| 152 | SLU 69 | 0 | -3.68 | 60.7 | 0.1306 | -0.0025 | 0 |
| 152 | SLU 70 | 0 | -2.53 | 59.85 | 0.0704 | -0.0036 | 0 |
| 152 | SLU 71 | 0 | -3.72 | 60.21 | 0.1328 | -0.0024 | 0 |
| 152 | SLU 72 | 0 | -2.57 | 59.36 | 0.0726 | -0.0035 | 0 |
| 152 | SLU 73 | 0 | -1.25 | 64.13 | 0.0043 | -0.0045 | 0 |
| 152 | SLU 74 | 0 | -3.47 | 67.08 | 0.1183 | -0.0028 | 0 |
| 152 | SLU 75 | 0 | -2.31 | 66.23 | 0.0581 | -0.0039 | 0 |
| 152 | SLU 76 | 0 | -1.58 | 65.17 | 0.0202 | -0.0046 | 0 |
| 152 | SLU 77 | 0 | -3.8 | 68.13 | 0.1342 | -0.0029 | 0 |
| 152 | SLU 78 | 0 | -2.65 | 67.28 | 0.074 | -0.004 | 0 |
| 152 | SLU 79 | 0 | -3.84 | 67.64 | 0.1364 | -0.0028 | 0 |
| 152 | SLU 80 | 0 | -2.69 | 66.79 | 0.0762 | -0.0039 | 0 |
| 152 | SLU 81 | 0 | -3.22 | 68.73 | 0.1061 | -0.0029 | 0 |
| 152 | SLU 82 | 0 | -2.07 | 67.88 | 0.046 | -0.004 | 0 |
| 152 | SLU 83 | 0 | -3.56 | 69.78 | 0.122 | -0.003 | 0 |
| 152 | SLU 84 | 0 | -2.41 | 68.93 | 0.0619 | -0.004 | 0 |
| 152 | SLE RA 1 | 0 | -2.29 | 43.18 | 0.0755 | -0.0017 | 0 |
| 152 | SLE RA 2 | 0 | -1.01 | 42.23 | 0.0086 | -0.0029 | 0 |
| 152 | SLE RA 3 | 0 | -2.49 | 44.2 | 0.0846 | -0.0017 | 0 |
| 152 | SLE RA 4 | 0 | -1.72 | 43.63 | 0.0445 | -0.0025 | 0 |
| 152 | SLE RA 5 | 0 | -1.23 | 42.93 | 0.0192 | -0.0029 | 0 |
| 152 | SLE RA 6 | 0 | -2.71 | 44.9 | 0.0952 | -0.0018 | 0 |
| 152 | SLE RA 7 | 0 | -1.94 | 44.33 | 0.0551 | -0.0025 | 0 |
| 152 | SLE RA 8 | 0 | -2.74 | 44.57 | 0.0967 | -0.0018 | 0 |
| 152 | SLE RA 9 | 0 | -1.97 | 44 | 0.0565 | -0.0025 | 0 |
| 152 | SLE RA 10 | 0 | -1.09 | 47.18 | 0.011 | -0.0032 | 0 |
| 152 | SLE RA 11 | 0 | -2.57 | 49.15 | 0.087 | -0.002 | 0 |
| 152 | SLE RA 12 | 0 | -1.8 | 48.58 | 0.0469 | -0.0028 | 0 |
| 152 | SLE RA 13 | 0 | -1.31 | 47.88 | 0.0216 | -0.0032 | 0 |
| 152 | SLE RA 14 | 0 | -2.79 | 49.85 | 0.0976 | -0.0021 | 0 |
| 152 | SLE RA 15 | 0 | -2.03 | 49.28 | 0.0575 | -0.0028 | 0 |
| 152 | SLE RA 16 | 0 | -2.82 | 49.52 | 0.0991 | -0.002 | 0 |
| 152 | SLE RA 17 | 0 | -2.05 | 48.96 | 0.059 | -0.0028 | 0 |
| 152 | SLE RA 18 | 0 | -2.41 | 50.25 | 0.0789 | -0.0021 | 0 |
| 152 | SLE RA 19 | 0 | -1.64 | 49.68 | 0.0388 | -0.0028 | 0 |
| 152 | SLE RA 20 | 0 | -2.63 | 50.95 | 0.0895 | -0.0021 | 0 |
| 152 | SLE RA 21 | 0 | -1.86 | 50.38 | 0.0494 | -0.0029 | 0 |
| 152 | SLE FR 1 | 0 | -2.29 | 43.18 | 0.0755 | -0.0017 | 0 |
| 152 | SLE FR 2 | 0 | -2.03 | 42.99 | 0.0621 | -0.0019 | 0 |
| 152 | SLE FR 3 | 0 | -2.38 | 43.45 | 0.0797 | -0.0017 | 0 |

| Nodo | Cont. | Reazione a traslazione | | | Reazione a rotazione | | |
|---|---|---|---|---|---|---|---|
| Ind. | N.br. | x | y | z | x | y | z |
| 152 | SLE FR 4 | 0 | -2.07 | 45.11 | 0.0631 | -0.002 | 0 |
| 152 | SLE FR 5 | 0 | -2.41 | 45.58 | 0.0807 | -0.0018 | 0 |
| 152 | SLE FR 6 | 0 | -2.35 | 46.71 | 0.0772 | -0.0019 | 0 |
| 152 | SLE QP 1 | 0 | -2.29 | 43.18 | 0.0755 | -0.0017 | 0 |
| 152 | SLE QP 2 | 0 | -2.32 | 45.3 | 0.0765 | -0.0018 | 0 |
| 152 | SLD 1 | 0.03 | -2.04 | 45.62 | 0.0627 | 0.0453 | 0.0001 |
| 152 | SLD 2 | 0.03 | -2.04 | 45.62 | 0.0627 | 0.0453 | 0.0001 |
| 152 | SLD 3 | 0.07 | -5.4 | 47.31 | 0.2281 | 0.0614 | 0.0001 |
| 152 | SLD 4 | 0.07 | -5.4 | 47.31 | 0.2281 | 0.0614 | 0.0001 |
| 152 | SLD 5 | -0.04 | 2.85 | 42.84 | -0.1786 | -0.0121 | 0.0001 |
| 152 | SLD 6 | -0.04 | 2.85 | 42.84 | -0.1786 | -0.0121 | 0.0001 |
| 152 | SLD 7 | 0.07 | -8.33 | 48.45 | 0.3729 | 0.0416 | 0 |
| 152 | SLD 8 | 0.07 | -8.33 | 48.45 | 0.3729 | 0.0416 | 0 |
| 152 | SLD 9 | -0.07 | 3.68 | 42.15 | -0.2199 | -0.0452 | 0 |
| 152 | SLD 10 | -0.07 | 3.68 | 42.15 | -0.2199 | -0.0452 | 0 |
| 152 | SLD 11 | 0.04 | -7.5 | 47.75 | 0.3316 | 0.0085 | -0.0001 |
| 152 | SLD 12 | 0.04 | -7.5 | 47.75 | 0.3316 | 0.0085 | -0.0001 |
| 152 | SLD 13 | -0.07 | 0.75 | 43.29 | -0.0751 | -0.065 | -0.0001 |
| 152 | SLD 14 | -0.07 | 0.75 | 43.29 | -0.0751 | -0.065 | -0.0001 |
| 152 | SLD 15 | -0.03 | -2.61 | 44.97 | 0.0903 | -0.0489 | -0.0001 |
| 152 | SLD 16 | -0.03 | -2.61 | 44.97 | 0.0903 | -0.0489 | -0.0001 |
| 152 | SLV 1 | 0.08 | -1.8 | 46.22 | 0.0505 | 0.1114 | 0.0003 |
| 152 | SLV 2 | 0.08 | -1.8 | 46.22 | 0.0505 | 0.1114 | 0.0003 |
| 152 | SLV 3 | 0.16 | -9.63 | 50.26 | 0.4376 | 0.1524 | 0.0002 |
| 152 | SLV 4 | 0.16 | -9.63 | 50.26 | 0.4376 | 0.1524 | 0.0002 |
| 152 | SLV 5 | -0.09 | 9.72 | 39.46 | -0.5184 | -0.0301 | 0.0002 |
| 152 | SLV 6 | -0.09 | 9.72 | 39.46 | -0.5184 | -0.0301 | 0.0002 |
| 152 | SLV 7 | 0.16 | -16.4 | 52.9 | 0.772 | 0.1067 | 0 |
| 152 | SLV 8 | 0.16 | -16.4 | 52.9 | 0.772 | 0.1067 | 0 |
| 152 | SLV 9 | -0.16 | 11.75 | 37.7 | -0.619 | -0.1103 | 0 |
| 152 | SLV 10 | -0.16 | 11.75 | 37.7 | -0.619 | -0.1103 | 0 |
| 152 | SLV 11 | 0.09 | -14.37 | 51.13 | 0.6714 | 0.0265 | -0.0002 |
| 152 | SLV 12 | 0.09 | -14.37 | 51.13 | 0.6714 | 0.0265 | -0.0002 |
| 152 | SLV 13 | -0.16 | 4.98 | 40.34 | -0.2846 | -0.156 | -0.0002 |
| 152 | SLV 14 | -0.16 | 4.98 | 40.34 | -0.2846 | -0.156 | -0.0002 |
| 152 | SLV 15 | -0.08 | -2.85 | 44.37 | 0.1025 | -0.115 | -0.0003 |
| 152 | SLV 16 | -0.08 | -2.85 | 44.37 | 0.1025 | -0.115 | -0.0003 |
| 153 | SLU 1 | -0.02 | 2.13 | 54.99 | -0.0927 | -0.0132 | -0.0001 |
| 153 | SLU 2 | -0.02 | 2.45 | 56.82 | -0.111 | 0.0054 | -0.0001 |
| 153 | SLU 3 | -0.02 | 2.22 | 56.61 | -0.0966 | -0.0139 | -0.0001 |
| 153 | SLU 4 | -0.02 | 2.41 | 57.71 | -0.1076 | -0.0027 | -0.0001 |
| 153 | SLU 5 | -0.02 | 2.5 | 57.74 | -0.1132 | 0.005 | -0.0001 |
| 153 | SLU 6 | -0.02 | 2.27 | 57.52 | -0.0988 | -0.0143 | -0.0001 |
| 153 | SLU 7 | -0.02 | 2.46 | 58.62 | -0.1098 | -0.0031 | -0.0001 |
| 153 | SLU 8 | -0.02 | 2.22 | 56.82 | -0.0971 | -0.014 | -0.0001 |
| 153 | SLU 9 | -0.02 | 2.41 | 57.92 | -0.1081 | -0.0028 | -0.0001 |
| 153 | SLU 10 | -0.03 | 3.04 | 63.86 | -0.1337 | 0.0021 | -0.0002 |
| 153 | SLU 11 | -0.02 | 2.81 | 63.64 | -0.1193 | -0.0172 | -0.0002 |
| 153 | SLU 12 | -0.03 | 3 | 64.74 | -0.1303 | -0.006 | -0.0002 |
| 153 | SLU 13 | -0.03 | 3.09 | 64.77 | -0.1359 | 0.0017 | -0.0002 |
| 153 | SLU 14 | -0.03 | 2.86 | 64.56 | -0.1215 | -0.0176 | -0.0002 |
| 153 | SLU 15 | -0.03 | 3.05 | 65.66 | -0.1325 | -0.0065 | -0.0002 |
| 153 | SLU 16 | -0.02 | 2.81 | 63.85 | -0.1198 | -0.0174 | -0.0002 |
| 153 | SLU 17 | -0.03 | 3.01 | 64.95 | -0.1308 | -0.0062 | -0.0002 |
| 153 | SLU 18 | -0.03 | 2.98 | 65.04 | -0.1251 | -0.018 | -0.0002 |
| 153 | SLU 19 | -0.03 | 3.17 | 66.14 | -0.1361 | -0.0068 | -0.0002 |
| 153 | SLU 20 | -0.03 | 3.02 | 65.95 | -0.1273 | -0.0184 | -0.0002 |
| 153 | SLU 21 | -0.03 | 3.21 | 67.05 | -0.1383 | -0.0072 | -0.0002 |
| 153 | SLU 22 | -0.02 | 2.61 | 62.06 | -0.1115 | -0.0162 | -0.0002 |
| 153 | SLU 23 | -0.03 | 2.92 | 63.89 | -0.1298 | 0.0024 | -0.0002 |
| 153 | SLU 24 | -0.02 | 2.69 | 63.68 | -0.1154 | -0.0169 | -0.0002 |
| 153 | SLU 25 | -0.03 | 2.88 | 64.78 | -0.1264 | -0.0057 | -0.0002 |
| 153 | SLU 26 | -0.03 | 2.97 | 64.81 | -0.132 | 0.002 | -0.0002 |
| 153 | SLU 27 | -0.02 | 2.74 | 64.59 | -0.1177 | -0.0173 | -0.0002 |
| 153 | SLU 28 | -0.03 | 2.93 | 65.69 | -0.1286 | -0.0061 | -0.0002 |
| 153 | SLU 29 | -0.02 | 2.7 | 63.89 | -0.116 | -0.0171 | -0.0002 |
| 153 | SLU 30 | -0.03 | 2.89 | 64.99 | -0.1269 | -0.0059 | -0.0002 |
| 153 | SLU 31 | -0.03 | 3.51 | 70.93 | -0.1525 | -0.0009 | -0.0002 |
| 153 | SLU 32 | -0.03 | 3.28 | 70.71 | -0.1381 | -0.0203 | -0.0002 |
| 153 | SLU 33 | -0.03 | 3.48 | 71.81 | -0.1491 | -0.0091 | -0.0002 |
| 153 | SLU 34 | -0.03 | 3.56 | 71.84 | -0.1547 | -0.0014 | -0.0002 |
| 153 | SLU 35 | -0.03 | 3.33 | 71.63 | -0.1404 | -0.0207 | -0.0002 |
| 153 | SLU 36 | -0.03 | 3.52 | 72.73 | -0.1513 | -0.0095 | -0.0002 |
| 153 | SLU 37 | -0.03 | 3.29 | 70.92 | -0.1387 | -0.0204 | -0.0002 |
| 153 | SLU 38 | -0.03 | 3.48 | 72.02 | -0.1497 | -0.0092 | -0.0002 |
| 153 | SLU 39 | -0.03 | 3.45 | 72.11 | -0.1439 | -0.021 | -0.0002 |
| 153 | SLU 40 | -0.03 | 3.64 | 73.21 | -0.1549 | -0.0098 | -0.0002 |
| 153 | SLU 41 | -0.03 | 3.5 | 73.02 | -0.1462 | -0.0214 | -0.0002 |
| 153 | SLU 42 | -0.03 | 3.69 | 74.12 | -0.1572 | -0.0102 | -0.0002 |
| 153 | SLU 43 | -0.02 | 2.61 | 69.06 | -0.114 | -0.0161 | -0.0002 |
| 153 | SLU 44 | -0.03 | 2.93 | 70.9 | -0.1323 | 0.0025 | -0.0002 |
| 153 | SLU 45 | -0.02 | 2.7 | 70.68 | -0.1179 | -0.0168 | -0.0002 |
| 153 | SLU 46 | -0.03 | 2.89 | 71.78 | -0.1289 | -0.0056 | -0.0002 |
| 153 | SLU 47 | -0.03 | 2.97 | 71.81 | -0.1345 | 0.0021 | -0.0002 |
| 153 | SLU 48 | -0.03 | 2.74 | 71.59 | -0.1202 | -0.0172 | -0.0002 |
| 153 | SLU 49 | -0.03 | 2.94 | 72.69 | -0.1311 | -0.006 | -0.0002 |
| 153 | SLU 50 | -0.03 | 2.7 | 70.89 | -0.1185 | -0.017 | -0.0002 |
| 153 | SLU 51 | -0.03 | 2.89 | 71.99 | -0.1295 | -0.0058 | -0.0002 |

| Nodo | Cont. | Reazione a traslazione | | | Reazione a rotazione | | |
|---|---|---|---|---|---|---|---|
| Ind. | N.br. | x | y | z | x | y | z |
| 153 | SLU 52 | -0.03 | 3.52 | 77.93 | -0.155 | -0.0008 | -0.0002 |
| 153 | SLU 53 | -0.03 | 3.29 | 77.71 | -0.1406 | -0.0201 | -0.0002 |
| 153 | SLU 54 | -0.03 | 3.48 | 78.81 | -0.1516 | -0.009 | -0.0002 |
| 153 | SLU 55 | -0.03 | 3.57 | 78.84 | -0.1573 | -0.0012 | -0.0002 |
| 153 | SLU 56 | -0.03 | 3.34 | 78.63 | -0.1429 | -0.0206 | -0.0002 |
| 153 | SLU 57 | -0.03 | 3.53 | 79.73 | -0.1539 | -0.0094 | -0.0002 |
| 153 | SLU 58 | -0.03 | 3.29 | 77.92 | -0.1412 | -0.0203 | -0.0002 |
| 153 | SLU 59 | -0.03 | 3.48 | 79.02 | -0.1522 | -0.0091 | -0.0002 |
| 153 | SLU 60 | -0.03 | 3.46 | 79.11 | -0.1464 | -0.0209 | -0.0002 |
| 153 | SLU 61 | -0.03 | 3.65 | 80.21 | -0.1574 | -0.0097 | -0.0002 |
| 153 | SLU 62 | -0.03 | 3.5 | 80.02 | -0.1487 | -0.0213 | -0.0002 |
| 153 | SLU 63 | -0.03 | 3.69 | 81.12 | -0.1597 | -0.0101 | -0.0002 |
| 153 | SLU 64 | -0.03 | 3.08 | 76.13 | -0.1328 | -0.0191 | -0.0002 |
| 153 | SLU 65 | -0.03 | 3.4 | 77.97 | -0.1511 | -0.0005 | -0.0002 |
| 153 | SLU 66 | -0.03 | 3.17 | 77.75 | -0.1368 | -0.0198 | -0.0002 |
| 153 | SLU 67 | -0.03 | 3.36 | 78.85 | -0.1477 | -0.0087 | -0.0002 |
| 153 | SLU 68 | -0.03 | 3.45 | 78.88 | -0.1534 | -0.0009 | -0.0002 |
| 153 | SLU 69 | -0.03 | 3.22 | 78.66 | -0.139 | -0.0202 | -0.0002 |
| 153 | SLU 70 | -0.03 | 3.41 | 79.76 | -0.15 | -0.0091 | -0.0002 |
| 153 | SLU 71 | -0.03 | 3.17 | 77.96 | -0.1373 | -0.02 | -0.0002 |
| 153 | SLU 72 | -0.03 | 3.37 | 79.06 | -0.1483 | -0.0088 | -0.0002 |
| 153 | SLU 73 | -0.03 | 3.99 | 85 | -0.1738 | -0.0039 | -0.0002 |
| 153 | SLU 74 | -0.03 | 3.76 | 84.78 | -0.1595 | -0.0232 | -0.0002 |
| 153 | SLU 75 | -0.03 | 3.95 | 85.89 | -0.1705 | -0.012 | -0.0002 |
| 153 | SLU 76 | -0.03 | 4.04 | 85.91 | -0.1761 | -0.0043 | -0.0002 |
| 153 | SLU 77 | -0.03 | 3.81 | 85.7 | -0.1617 | -0.0236 | -0.0002 |
| 153 | SLU 78 | -0.03 | 4 | 86.8 | -0.1727 | -0.0124 | -0.0002 |
| 153 | SLU 79 | -0.03 | 3.77 | 84.99 | -0.16 | -0.0233 | -0.0002 |
| 153 | SLU 80 | -0.03 | 3.96 | 86.09 | -0.171 | -0.0121 | -0.0002 |
| 153 | SLU 81 | -0.03 | 3.93 | 86.18 | -0.1653 | -0.0239 | -0.0002 |
| 153 | SLU 82 | -0.03 | 4.12 | 87.28 | -0.1763 | -0.0127 | -0.0002 |
| 153 | SLU 83 | -0.03 | 3.97 | 87.09 | -0.1675 | -0.0243 | -0.0002 |
| 153 | SLU 84 | -0.04 | 4.16 | 88.2 | -0.1785 | -0.0132 | -0.0002 |
| 153 | SLE RA 1 | -0.02 | 2.27 | 57.01 | -0.098 | -0.0141 | -0.0001 |
| 153 | SLE RA 2 | -0.02 | 2.48 | 58.23 | -0.1102 | -0.0016 | -0.0001 |
| 153 | SLE RA 3 | -0.02 | 2.33 | 58.09 | -0.1007 | -0.0145 | -0.0002 |
| 153 | SLE RA 4 | -0.02 | 2.45 | 58.82 | -0.108 | -0.0071 | -0.0001 |
| 153 | SLE RA 5 | -0.02 | 2.51 | 58.84 | -0.1117 | -0.0019 | -0.0001 |
| 153 | SLE RA 6 | -0.02 | 2.36 | 58.7 | -0.1021 | -0.0148 | -0.0002 |
| 153 | SLE RA 7 | -0.02 | 2.48 | 59.43 | -0.1095 | -0.0073 | -0.0001 |
| 153 | SLE RA 8 | -0.02 | 2.33 | 58.23 | -0.101 | -0.0146 | -0.0002 |
| 153 | SLE RA 9 | -0.02 | 2.46 | 58.96 | -0.1083 | -0.0072 | -0.0001 |
| 153 | SLE RA 10 | -0.02 | 2.87 | 62.92 | -0.1254 | -0.0039 | -0.0002 |
| 153 | SLE RA 11 | -0.02 | 2.72 | 62.78 | -0.1158 | -0.0167 | -0.0002 |
| 153 | SLE RA 12 | -0.02 | 2.85 | 63.51 | -0.1231 | -0.0093 | -0.0002 |
| 153 | SLE RA 13 | -0.02 | 2.9 | 63.53 | -0.1269 | -0.0041 | -0.0002 |
| 153 | SLE RA 14 | -0.02 | 2.75 | 63.39 | -0.1173 | -0.017 | -0.0002 |
| 153 | SLE RA 15 | -0.03 | 2.88 | 64.12 | -0.1246 | -0.0096 | -0.0002 |
| 153 | SLE RA 16 | -0.02 | 2.72 | 62.92 | -0.1162 | -0.0168 | -0.0002 |
| 153 | SLE RA 17 | -0.02 | 2.85 | 63.65 | -0.1235 | -0.0094 | -0.0002 |
| 153 | SLE RA 18 | -0.02 | 2.83 | 63.71 | -0.1197 | -0.0172 | -0.0002 |
| 153 | SLE RA 19 | -0.03 | 2.96 | 64.44 | -0.127 | -0.0098 | -0.0002 |
| 153 | SLE RA 20 | -0.02 | 2.86 | 64.32 | -0.1212 | -0.0175 | -0.0002 |
| 153 | SLE RA 21 | -0.03 | 2.99 | 65.05 | -0.1285 | -0.0101 | -0.0002 |
| 153 | SLE FR 1 | -0.02 | 2.27 | 57.01 | -0.098 | -0.0141 | -0.0001 |
| 153 | SLE FR 2 | -0.02 | 2.31 | 57.25 | -0.1005 | -0.0116 | -0.0001 |
| 153 | SLE FR 3 | -0.02 | 2.28 | 57.25 | -0.0986 | -0.0142 | -0.0001 |
| 153 | SLE FR 4 | -0.02 | 2.48 | 59.26 | -0.107 | -0.0125 | -0.0002 |
| 153 | SLE FR 5 | -0.02 | 2.45 | 59.26 | -0.1051 | -0.0151 | -0.0002 |
| 153 | SLE FR 6 | -0.02 | 2.55 | 60.36 | -0.1089 | -0.0157 | -0.0002 |
| 153 | SLE QP 1 | -0.02 | 2.27 | 57.01 | -0.098 | -0.0141 | -0.0001 |
| 153 | SLE QP 2 | -0.02 | 2.44 | 59.02 | -0.1045 | -0.015 | -0.0002 |
| 153 | SLD 1 | -0.18 | 2.92 | 43.87 | -0.1324 | 0.038 | 0.0002 |
| 153 | SLD 2 | -0.18 | 2.92 | 43.87 | -0.1324 | 0.038 | 0.0002 |
| 153 | SLD 3 | -0.07 | -1.65 | 41.88 | 0.0606 | 0.1098 | 0.0001 |
| 153 | SLD 4 | -0.07 | -1.65 | 41.88 | 0.0606 | 0.1098 | 0.0001 |
| 153 | SLD 5 | -0.24 | 9.51 | 57.49 | -0.4056 | -0.108 | 0.0001 |
| 153 | SLD 6 | -0.24 | 9.51 | 57.49 | -0.4056 | -0.108 | 0.0001 |
| 153 | SLD 7 | 0.13 | -5.71 | 50.86 | 0.2378 | 0.1313 | -0.0002 |
| 153 | SLD 8 | 0.13 | -5.71 | 50.86 | 0.2378 | 0.1313 | -0.0002 |
| 153 | SLD 9 | -0.18 | 10.59 | 67.18 | -0.4468 | -0.1613 | -0.0001 |
| 153 | SLD 10 | -0.18 | 10.59 | 67.18 | -0.4468 | -0.1613 | -0.0001 |
| 153 | SLD 11 | 0.19 | -4.63 | 60.54 | 0.1966 | 0.078 | -0.0004 |
| 153 | SLD 12 | 0.19 | -4.63 | 60.54 | 0.1966 | 0.078 | -0.0004 |
| 153 | SLD 13 | 0.03 | 6.52 | 76.16 | -0.2697 | -0.1398 | -0.0004 |
| 153 | SLD 14 | 0.03 | 6.52 | 76.16 | -0.2697 | -0.1398 | -0.0004 |
| 153 | SLD 15 | 0.14 | 1.95 | 74.16 | -0.0767 | -0.068 | -0.0005 |
| 153 | SLD 16 | 0.14 | 1.95 | 74.16 | -0.0767 | -0.068 | -0.0005 |
| 153 | SLV 1 | -0.41 | 3.56 | 23.65 | -0.1687 | 0.1013 | 0.0007 |
| 153 | SLV 2 | -0.41 | 3.56 | 23.65 | -0.1687 | 0.1013 | 0.0007 |
| 153 | SLV 3 | -0.12 | -7.04 | 18.95 | 0.2794 | 0.2842 | 0.0005 |
| 153 | SLV 4 | -0.12 | -7.04 | 18.95 | 0.2794 | 0.2842 | 0.0005 |
| 153 | SLV 5 | -0.57 | 18.85 | 55.52 | -0.8035 | -0.2575 | 0.0004 |
| 153 | SLV 6 | -0.57 | 18.85 | 55.52 | -0.8035 | -0.2575 | 0.0004 |
| 153 | SLV 7 | 0.38 | -16.48 | 39.88 | 0.6904 | 0.3521 | -0.0002 |
| 153 | SLV 8 | 0.38 | -16.48 | 39.88 | 0.6904 | 0.3521 | -0.0002 |
| 153 | SLV 9 | -0.42 | 21.36 | 78.15 | -0.8994 | -0.3822 | -0.0001 |
| 153 | SLV 10 | -0.42 | 21.36 | 78.15 | -0.8994 | -0.3822 | -0.0001 |

| Nodo | Cont. | Reazione a traslazione | | | Reazione a rotazione | | |
|---|---|---|---|---|---|---|---|
| Ind. | N.br. | x | y | z | x | y | z |
| 153 | SLV 11 | 0.52 | -13.98 | 62.51 | 0.5945 | 0.2275 | -0.0007 |
| 153 | SLV 12 | 0.52 | -13.98 | 62.51 | 0.5945 | 0.2275 | -0.0007 |
| 153 | SLV 13 | 0.08 | 11.92 | 99.08 | -0.4885 | -0.3142 | -0.0008 |
| 153 | SLV 14 | 0.08 | 11.92 | 99.08 | -0.4885 | -0.3142 | -0.0008 |
| 153 | SLV 15 | 0.36 | 1.32 | 94.39 | -0.0403 | -0.1314 | -0.001 |
| 153 | SLV 16 | 0.36 | 1.32 | 94.39 | -0.0403 | -0.1314 | -0.001 |
| 154 | SLU 1 | 0.08 | -5.61 | 44.73 | 0.2798 | 0.029 | -0.0004 |
| 154 | SLU 2 | 0.08 | -6.02 | 45.1 | 0.3 | 0.0286 | -0.0004 |
| 154 | SLU 3 | 0.08 | -5.4 | 45.74 | 0.2689 | 0.0301 | -0.0004 |
| 154 | SLU 4 | 0.08 | -5.64 | 45.96 | 0.281 | 0.0299 | -0.0004 |
| 154 | SLU 5 | 0.08 | -5.68 | 45.36 | 0.2824 | 0.0293 | -0.0004 |
| 154 | SLU 6 | 0.08 | -5.06 | 46 | 0.2513 | 0.0308 | -0.0004 |
| 154 | SLU 7 | 0.08 | -5.3 | 46.22 | 0.2634 | 0.0306 | -0.0004 |
| 154 | SLU 8 | 0.08 | -4.93 | 45.25 | 0.2446 | 0.0304 | -0.0004 |
| 154 | SLU 9 | 0.08 | -5.17 | 45.47 | 0.2567 | 0.0302 | -0.0004 |
| 154 | SLU 10 | 0.1 | -7.15 | 54.57 | 0.3575 | 0.0341 | -0.0005 |
| 154 | SLU 11 | 0.1 | -6.53 | 55.22 | 0.3265 | 0.0356 | -0.0005 |
| 154 | SLU 12 | 0.1 | -6.77 | 55.44 | 0.3385 | 0.0354 | -0.0005 |
| 154 | SLU 13 | 0.1 | -6.81 | 54.83 | 0.3399 | 0.0348 | -0.0005 |
| 154 | SLU 14 | 0.1 | -6.19 | 55.48 | 0.3088 | 0.0363 | -0.0005 |
| 154 | SLU 15 | 0.1 | -6.43 | 55.7 | 0.3209 | 0.0361 | -0.0005 |
| 154 | SLU 16 | 0.1 | -6.06 | 54.73 | 0.3021 | 0.0359 | -0.0005 |
| 154 | SLU 17 | 0.1 | -6.3 | 54.95 | 0.3142 | 0.0357 | -0.0005 |
| 154 | SLU 18 | 0.1 | -7.23 | 58.27 | 0.362 | 0.0369 | -0.0006 |
| 154 | SLU 19 | 0.1 | -7.47 | 58.49 | 0.3741 | 0.0366 | -0.0006 |
| 154 | SLU 20 | 0.11 | -6.89 | 58.53 | 0.3444 | 0.0376 | -0.0006 |
| 154 | SLU 21 | 0.11 | -7.13 | 58.75 | 0.3565 | 0.0373 | -0.0006 |
| 154 | SLU 22 | 0.09 | -6.05 | 51.73 | 0.304 | 0.0342 | -0.0005 |
| 154 | SLU 23 | 0.09 | -6.46 | 52.1 | 0.3242 | 0.0339 | -0.0005 |
| 154 | SLU 24 | 0.1 | -5.84 | 52.74 | 0.2931 | 0.0353 | -0.0005 |
| 154 | SLU 25 | 0.1 | -6.08 | 52.96 | 0.3052 | 0.0351 | -0.0005 |
| 154 | SLU 26 | 0.09 | -6.12 | 52.36 | 0.3066 | 0.0346 | -0.0005 |
| 154 | SLU 27 | 0.1 | -5.5 | 53 | 0.2755 | 0.036 | -0.0005 |
| 154 | SLU 28 | 0.1 | -5.74 | 53.22 | 0.2876 | 0.0358 | -0.0005 |
| 154 | SLU 29 | 0.1 | -5.37 | 52.25 | 0.2688 | 0.0356 | -0.0005 |
| 154 | SLU 30 | 0.1 | -5.61 | 52.47 | 0.2809 | 0.0354 | -0.0005 |
| 154 | SLU 31 | 0.11 | -7.59 | 61.57 | 0.3817 | 0.0394 | -0.0006 |
| 154 | SLU 32 | 0.12 | -6.97 | 62.22 | 0.3507 | 0.0408 | -0.0006 |
| 154 | SLU 33 | 0.11 | -7.21 | 62.44 | 0.3627 | 0.0406 | -0.0006 |
| 154 | SLU 34 | 0.11 | -7.25 | 61.84 | 0.3641 | 0.0401 | -0.0006 |
| 154 | SLU 35 | 0.12 | -6.63 | 62.48 | 0.333 | 0.0415 | -0.0006 |
| 154 | SLU 36 | 0.12 | -6.87 | 62.7 | 0.3451 | 0.0413 | -0.0006 |
| 154 | SLU 37 | 0.12 | -6.5 | 61.73 | 0.3263 | 0.0411 | -0.0006 |
| 154 | SLU 38 | 0.12 | -6.74 | 61.95 | 0.3384 | 0.0409 | -0.0006 |
| 154 | SLU 39 | 0.12 | -7.67 | 65.27 | 0.3862 | 0.0421 | -0.0006 |
| 154 | SLU 40 | 0.12 | -7.91 | 65.49 | 0.3983 | 0.0419 | -0.0006 |
| 154 | SLU 41 | 0.12 | -7.33 | 65.53 | 0.3686 | 0.0428 | -0.0006 |
| 154 | SLU 42 | 0.12 | -7.57 | 65.75 | 0.3807 | 0.0426 | -0.0006 |
| 154 | SLU 43 | 0.1 | -7.15 | 55.75 | 0.3555 | 0.0359 | -0.0005 |
| 154 | SLU 44 | 0.1 | -7.55 | 56.11 | 0.3756 | 0.0355 | -0.0005 |
| 154 | SLU 45 | 0.1 | -6.93 | 56.76 | 0.3446 | 0.037 | -0.0005 |
| 154 | SLU 46 | 0.1 | -7.17 | 56.98 | 0.3567 | 0.0368 | -0.0005 |
| 154 | SLU 47 | 0.1 | -7.21 | 56.38 | 0.358 | 0.0362 | -0.0005 |
| 154 | SLU 48 | 0.1 | -6.59 | 57.02 | 0.327 | 0.0377 | -0.0005 |
| 154 | SLU 49 | 0.1 | -6.83 | 57.24 | 0.339 | 0.0375 | -0.0005 |
| 154 | SLU 50 | 0.1 | -6.46 | 56.27 | 0.3203 | 0.0373 | -0.0005 |
| 154 | SLU 51 | 0.1 | -6.7 | 56.49 | 0.3323 | 0.0371 | -0.0005 |
| 154 | SLU 52 | 0.11 | -8.68 | 65.59 | 0.4332 | 0.041 | -0.0006 |
| 154 | SLU 53 | 0.12 | -8.06 | 66.24 | 0.4021 | 0.0425 | -0.0006 |
| 154 | SLU 54 | 0.12 | -8.31 | 66.46 | 0.4142 | 0.0423 | -0.0006 |
| 154 | SLU 55 | 0.12 | -8.34 | 65.85 | 0.4155 | 0.0417 | -0.0006 |
| 154 | SLU 56 | 0.12 | -7.72 | 66.5 | 0.3845 | 0.0432 | -0.0006 |
| 154 | SLU 57 | 0.12 | -7.96 | 66.72 | 0.3966 | 0.043 | -0.0006 |
| 154 | SLU 58 | 0.12 | -7.59 | 65.75 | 0.3778 | 0.0428 | -0.0006 |
| 154 | SLU 59 | 0.12 | -7.84 | 65.97 | 0.3899 | 0.0426 | -0.0006 |
| 154 | SLU 60 | 0.12 | -8.76 | 69.29 | 0.4377 | 0.0438 | -0.0006 |
| 154 | SLU 61 | 0.12 | -9 | 69.51 | 0.4498 | 0.0435 | -0.0006 |
| 154 | SLU 62 | 0.12 | -8.42 | 69.55 | 0.4201 | 0.0445 | -0.0007 |
| 154 | SLU 63 | 0.12 | -8.66 | 69.77 | 0.4321 | 0.0442 | -0.0007 |
| 154 | SLU 64 | 0.11 | -7.59 | 62.75 | 0.3797 | 0.0411 | -0.0006 |
| 154 | SLU 65 | 0.11 | -7.99 | 63.11 | 0.3998 | 0.0408 | -0.0006 |
| 154 | SLU 66 | 0.12 | -7.37 | 63.76 | 0.3688 | 0.0422 | -0.0006 |
| 154 | SLU 67 | 0.11 | -7.61 | 63.98 | 0.3809 | 0.042 | -0.0006 |
| 154 | SLU 68 | 0.11 | -7.65 | 63.38 | 0.3822 | 0.0415 | -0.0006 |
| 154 | SLU 69 | 0.12 | -7.03 | 64.02 | 0.3512 | 0.0429 | -0.0006 |
| 154 | SLU 70 | 0.12 | -7.27 | 64.24 | 0.3632 | 0.0427 | -0.0006 |
| 154 | SLU 71 | 0.12 | -6.9 | 63.27 | 0.3445 | 0.0425 | -0.0006 |
| 154 | SLU 72 | 0.12 | -7.15 | 63.49 | 0.3565 | 0.0423 | -0.0006 |
| 154 | SLU 73 | 0.13 | -9.12 | 72.59 | 0.4574 | 0.0463 | -0.0007 |
| 154 | SLU 74 | 0.13 | -8.5 | 73.24 | 0.4263 | 0.0477 | -0.0007 |
| 154 | SLU 75 | 0.13 | -8.75 | 73.46 | 0.4384 | 0.0475 | -0.0007 |
| 154 | SLU 76 | 0.13 | -8.78 | 72.85 | 0.4397 | 0.047 | -0.0007 |
| 154 | SLU 77 | 0.14 | -8.16 | 73.5 | 0.4087 | 0.0484 | -0.0007 |
| 154 | SLU 78 | 0.13 | -8.4 | 73.72 | 0.4208 | 0.0482 | -0.0007 |
| 154 | SLU 79 | 0.13 | -8.03 | 72.75 | 0.402 | 0.048 | -0.0007 |
| 154 | SLU 80 | 0.13 | -8.28 | 72.97 | 0.4141 | 0.0478 | -0.0007 |
| 154 | SLU 81 | 0.14 | -9.2 | 76.29 | 0.4619 | 0.049 | -0.0007 |
| 154 | SLU 82 | 0.14 | -9.45 | 76.51 | 0.474 | 0.0488 | -0.0007 |

| Nodo | Cont. | Reazione a traslazione | | | Reazione a rotazione | | |
|---|---|---|---|---|---|---|---|
| Ind. | N.br. | x | y | z | x | y | z |
| 154 | SLU 83 | 0.14 | -8.86 | 76.55 | 0.4443 | 0.0497 | -0.0007 |
| 154 | SLU 84 | 0.14 | -9.1 | 76.77 | 0.4563 | 0.0495 | -0.0007 |
| 154 | SLE RA 1 | 0.08 | -5.74 | 46.73 | 0.2868 | 0.0305 | -0.0004 |
| 154 | SLE RA 2 | 0.08 | -6.01 | 46.97 | 0.3002 | 0.0302 | -0.0004 |
| 154 | SLE RA 3 | 0.08 | -5.6 | 47.4 | 0.2795 | 0.0312 | -0.0004 |
| 154 | SLE RA 4 | 0.08 | -5.76 | 47.55 | 0.2875 | 0.0311 | -0.0004 |
| 154 | SLE RA 5 | 0.08 | -5.78 | 47.15 | 0.2884 | 0.0307 | -0.0004 |
| 154 | SLE RA 6 | 0.09 | -5.37 | 47.58 | 0.2677 | 0.0317 | -0.0005 |
| 154 | SLE RA 7 | 0.09 | -5.53 | 47.72 | 0.2758 | 0.0316 | -0.0005 |
| 154 | SLE RA 8 | 0.09 | -5.28 | 47.08 | 0.2633 | 0.0314 | -0.0004 |
| 154 | SLE RA 9 | 0.08 | -5.44 | 47.23 | 0.2713 | 0.0313 | -0.0004 |
| 154 | SLE RA 10 | 0.09 | -6.76 | 53.29 | 0.3385 | 0.0339 | -0.0005 |
| 154 | SLE RA 11 | 0.1 | -6.35 | 53.72 | 0.3178 | 0.0349 | -0.0005 |
| 154 | SLE RA 12 | 0.1 | -6.51 | 53.87 | 0.3259 | 0.0348 | -0.0005 |
| 154 | SLE RA 13 | 0.1 | -6.53 | 53.47 | 0.3268 | 0.0344 | -0.0005 |
| 154 | SLE RA 14 | 0.1 | -6.12 | 53.9 | 0.3061 | 0.0354 | -0.0005 |
| 154 | SLE RA 15 | 0.1 | -6.28 | 54.04 | 0.3141 | 0.0352 | -0.0005 |
| 154 | SLE RA 16 | 0.1 | -6.04 | 53.4 | 0.3016 | 0.0351 | -0.0005 |
| 154 | SLE RA 17 | 0.1 | -6.2 | 53.54 | 0.3097 | 0.0349 | -0.0005 |
| 154 | SLE RA 18 | 0.1 | -6.82 | 55.76 | 0.3415 | 0.0357 | -0.0005 |
| 154 | SLE RA 19 | 0.1 | -6.98 | 55.9 | 0.3496 | 0.0356 | -0.0005 |
| 154 | SLE RA 20 | 0.1 | -6.59 | 55.93 | 0.3298 | 0.0362 | -0.0005 |
| 154 | SLE RA 21 | 0.1 | -6.75 | 56.08 | 0.3379 | 0.0361 | -0.0005 |
| 154 | SLE FR 1 | 0.08 | -5.74 | 46.73 | 0.2868 | 0.0305 | -0.0004 |
| 154 | SLE FR 2 | 0.08 | -5.79 | 46.78 | 0.2894 | 0.0304 | -0.0004 |
| 154 | SLE FR 3 | 0.08 | -5.65 | 46.8 | 0.2821 | 0.0307 | -0.0004 |
| 154 | SLE FR 4 | 0.09 | -6.12 | 49.49 | 0.3059 | 0.032 | -0.0005 |
| 154 | SLE FR 5 | 0.09 | -5.97 | 49.51 | 0.2985 | 0.0322 | -0.0005 |
| 154 | SLE FR 6 | 0.09 | -6.28 | 51.24 | 0.3142 | 0.0331 | -0.0005 |
| 154 | SLE QP 1 | 0.08 | -5.74 | 46.73 | 0.2868 | 0.0305 | -0.0004 |
| 154 | SLE QP 2 | 0.09 | -6.06 | 49.44 | 0.3032 | 0.0321 | -0.0005 |
| 154 | SLD 1 | 0.14 | -3.6 | 51.01 | 0.1794 | 0.1015 | -0.0005 |
| 154 | SLD 2 | 0.14 | -3.6 | 51.01 | 0.1794 | 0.1015 | -0.0005 |
| 154 | SLD 3 | 0.16 | -6.95 | 55.84 | 0.3494 | 0.11 | -0.0006 |
| 154 | SLD 4 | 0.16 | -6.95 | 55.84 | 0.3494 | 0.11 | -0.0006 |
| 154 | SLD 5 | 0.08 | -0.23 | 42.59 | 0.0082 | 0.04 | -0.0004 |
| 154 | SLD 6 | 0.08 | -0.23 | 42.59 | 0.0082 | 0.04 | -0.0004 |
| 154 | SLD 7 | 0.13 | -11.42 | 58.68 | 0.5749 | 0.0683 | -0.0006 |
| 154 | SLD 8 | 0.13 | -11.42 | 58.68 | 0.5749 | 0.0683 | -0.0006 |
| 154 | SLD 9 | 0.04 | -0.71 | 40.2 | 0.0315 | -0.0042 | -0.0003 |
| 154 | SLD 10 | 0.04 | -0.71 | 40.2 | 0.0315 | -0.0042 | -0.0003 |
| 154 | SLD 11 | 0.09 | -11.89 | 56.29 | 0.5982 | 0.0241 | -0.0005 |
| 154 | SLD 12 | 0.09 | -11.89 | 56.29 | 0.5982 | 0.0241 | -0.0005 |
| 154 | SLD 13 | 0.02 | -5.17 | 43.04 | 0.257 | -0.0459 | -0.0003 |
| 154 | SLD 14 | 0.02 | -5.17 | 43.04 | 0.257 | -0.0459 | -0.0003 |
| 154 | SLD 15 | 0.03 | -8.53 | 47.86 | 0.427 | -0.0374 | -0.0004 |
| 154 | SLD 16 | 0.03 | -8.53 | 47.86 | 0.427 | -0.0374 | -0.0004 |
| 154 | SLV 1 | 0.22 | -0.26 | 53.03 | 0.0112 | 0.2039 | -0.0006 |
| 154 | SLV 2 | 0.22 | -0.26 | 53.03 | 0.0112 | 0.2039 | -0.0006 |
| 154 | SLV 3 | 0.26 | -8.11 | 64.41 | 0.4087 | 0.2252 | -0.0008 |
| 154 | SLV 4 | 0.26 | -8.11 | 64.41 | 0.4087 | 0.2252 | -0.0008 |
| 154 | SLV 5 | 0.07 | 7.58 | 33.25 | -0.3873 | 0.0513 | -0.0003 |
| 154 | SLV 6 | 0.07 | 7.58 | 33.25 | -0.3873 | 0.0513 | -0.0003 |
| 154 | SLV 7 | 0.19 | -18.58 | 71.2 | 0.9377 | 0.1224 | -0.0007 |
| 154 | SLV 8 | 0.19 | -18.58 | 71.2 | 0.9377 | 0.1224 | -0.0007 |
| 154 | SLV 9 | -0.02 | 6.45 | 27.68 | -0.3313 | -0.0583 | -0.0002 |
| 154 | SLV 10 | -0.02 | 6.45 | 27.68 | -0.3313 | -0.0583 | -0.0002 |
| 154 | SLV 11 | 0.1 | -19.7 | 65.63 | 0.9937 | 0.0129 | -0.0006 |
| 154 | SLV 12 | 0.1 | -19.7 | 65.63 | 0.9937 | 0.0129 | -0.0006 |
| 154 | SLV 13 | -0.08 | -4.02 | 34.47 | 0.1977 | -0.1611 | -0.0002 |
| 154 | SLV 14 | -0.08 | -4.02 | 34.47 | 0.1977 | -0.1611 | -0.0002 |
| 154 | SLV 15 | -0.04 | -11.86 | 45.85 | 0.5952 | -0.1398 | -0.0003 |
| 154 | SLV 16 | -0.04 | -11.86 | 45.85 | 0.5952 | -0.1398 | -0.0003 |
| 155 | SLU 1 | -0.01 | 2.12 | 23.31 | -0.0746 | -0.0006 | -0.0002 |
| 155 | SLU 2 | -0.01 | 2.12 | 23.34 | -0.0747 | -0.0006 | -0.0002 |
| 155 | SLU 3 | -0.01 | 2.24 | 24.1 | -0.0792 | -0.0008 | -0.0002 |
| 155 | SLU 4 | -0.01 | 2.24 | 24.12 | -0.0792 | -0.0008 | -0.0002 |
| 155 | SLU 5 | -0.01 | 2.19 | 23.8 | -0.0774 | -0.0007 | -0.0002 |
| 155 | SLU 6 | -0.01 | 2.31 | 24.56 | -0.0818 | -0.0009 | -0.0002 |
| 155 | SLU 7 | -0.01 | 2.31 | 24.58 | -0.0819 | -0.0009 | -0.0002 |
| 155 | SLU 8 | -0.01 | 2.26 | 24.23 | -0.08 | -0.0009 | -0.0002 |
| 155 | SLU 9 | -0.01 | 2.26 | 24.25 | -0.0801 | -0.0008 | -0.0002 |
| 155 | SLU 10 | -0.01 | 2.42 | 28.69 | -0.0842 | -0.0006 | -0.0002 |
| 155 | SLU 11 | -0.01 | 2.53 | 29.44 | -0.0886 | -0.0008 | -0.0003 |
| 155 | SLU 12 | -0.01 | 2.54 | 29.46 | -0.0887 | -0.0008 | -0.0003 |
| 155 | SLU 13 | -0.01 | 2.49 | 29.15 | -0.0869 | -0.0007 | -0.0003 |
| 155 | SLU 14 | -0.01 | 2.6 | 29.9 | -0.0913 | -0.0009 | -0.0003 |
| 155 | SLU 15 | -0.01 | 2.61 | 29.92 | -0.0914 | -0.0009 | -0.0003 |
| 155 | SLU 16 | -0.01 | 2.56 | 29.58 | -0.0895 | -0.0009 | -0.0003 |
| 155 | SLU 17 | -0.01 | 2.56 | 29.6 | -0.0895 | -0.0009 | -0.0003 |
| 155 | SLU 18 | -0.01 | 2.54 | 30.95 | -0.0881 | -0.0007 | -0.0003 |
| 155 | SLU 19 | -0.01 | 2.54 | 30.97 | -0.0882 | -0.0007 | -0.0003 |
| 155 | SLU 20 | -0.01 | 2.61 | 31.41 | -0.0908 | -0.0008 | -0.0003 |
| 155 | SLU 21 | -0.01 | 2.62 | 31.43 | -0.0909 | -0.0008 | -0.0003 |
| 155 | SLU 22 | -0.01 | 2.59 | 26.85 | -0.0921 | -0.0009 | -0.0003 |
| 155 | SLU 23 | -0.01 | 2.59 | 26.88 | -0.0922 | -0.0008 | -0.0003 |
| 155 | SLU 24 | -0.01 | 2.71 | 27.64 | -0.0966 | -0.001 | -0.0003 |
| 155 | SLU 25 | -0.01 | 2.71 | 27.66 | -0.0967 | -0.001 | -0.0003 |

| Nodo | Cont. | Reazione a traslazione | | | Reazione a rotazione | | |
|---|---|---|---|---|---|---|---|
| Ind. | N.br. | x | y | z | x | y | z |
| 155 | SLU 26 | -0.01 | 2.66 | 27.34 | -0.0949 | -0.0009 | -0.0003 |
| 155 | SLU 27 | -0.01 | 2.78 | 28.1 | -0.0993 | -0.0011 | -0.0003 |
| 155 | SLU 28 | -0.01 | 2.78 | 28.12 | -0.0994 | -0.0011 | -0.0003 |
| 155 | SLU 29 | -0.01 | 2.73 | 27.77 | -0.0974 | -0.0011 | -0.0003 |
| 155 | SLU 30 | -0.01 | 2.73 | 27.79 | -0.0975 | -0.0011 | -0.0003 |
| 155 | SLU 31 | -0.01 | 2.89 | 32.23 | -0.1016 | -0.0009 | -0.0003 |
| 155 | SLU 32 | -0.01 | 3 | 32.98 | -0.1061 | -0.0011 | -0.0003 |
| 155 | SLU 33 | -0.01 | 3.01 | 33 | -0.1061 | -0.001 | -0.0003 |
| 155 | SLU 34 | -0.01 | 2.96 | 32.69 | -0.1043 | -0.001 | -0.0003 |
| 155 | SLU 35 | -0.01 | 3.07 | 33.44 | -0.1088 | -0.0012 | -0.0003 |
| 155 | SLU 36 | -0.01 | 3.08 | 33.46 | -0.1088 | -0.0011 | -0.0003 |
| 155 | SLU 37 | -0.01 | 3.03 | 33.12 | -0.1069 | -0.0011 | -0.0003 |
| 155 | SLU 38 | -0.01 | 3.03 | 33.14 | -0.107 | -0.0011 | -0.0003 |
| 155 | SLU 39 | -0.01 | 3.01 | 34.49 | -0.1056 | -0.0009 | -0.0003 |
| 155 | SLU 40 | -0.01 | 3.01 | 34.51 | -0.1057 | -0.0009 | -0.0003 |
| 155 | SLU 41 | -0.01 | 3.08 | 34.95 | -0.1083 | -0.001 | -0.0003 |
| 155 | SLU 42 | -0.01 | 3.09 | 34.97 | -0.1083 | -0.001 | -0.0003 |
| 155 | SLU 43 | -0.01 | 2.59 | 29.09 | -0.091 | -0.0008 | -0.0003 |
| 155 | SLU 44 | -0.01 | 2.59 | 29.12 | -0.0911 | -0.0007 | -0.0003 |
| 155 | SLU 45 | -0.01 | 2.71 | 29.88 | -0.0956 | -0.0009 | -0.0003 |
| 155 | SLU 46 | -0.01 | 2.71 | 29.9 | -0.0956 | -0.0009 | -0.0003 |
| 155 | SLU 47 | -0.01 | 2.66 | 29.58 | -0.0938 | -0.0008 | -0.0003 |
| 155 | SLU 48 | -0.01 | 2.78 | 30.34 | -0.0982 | -0.001 | -0.0003 |
| 155 | SLU 49 | -0.01 | 2.78 | 30.36 | -0.0983 | -0.001 | -0.0003 |
| 155 | SLU 50 | -0.01 | 2.73 | 30.01 | -0.0964 | -0.001 | -0.0003 |
| 155 | SLU 51 | -0.01 | 2.73 | 30.03 | -0.0965 | -0.001 | -0.0003 |
| 155 | SLU 52 | -0.01 | 2.89 | 34.47 | -0.1006 | -0.0007 | -0.0003 |
| 155 | SLU 53 | -0.01 | 3.01 | 35.22 | -0.105 | -0.0009 | -0.0003 |
| 155 | SLU 54 | -0.01 | 3.01 | 35.24 | -0.1051 | -0.0009 | -0.0003 |
| 155 | SLU 55 | -0.01 | 2.96 | 34.93 | -0.1033 | -0.0008 | -0.0003 |
| 155 | SLU 56 | -0.01 | 3.08 | 35.68 | -0.1077 | -0.001 | -0.0003 |
| 155 | SLU 57 | -0.01 | 3.08 | 35.7 | -0.1078 | -0.001 | -0.0003 |
| 155 | SLU 58 | -0.01 | 3.03 | 35.36 | -0.1059 | -0.001 | -0.0003 |
| 155 | SLU 59 | -0.01 | 3.03 | 35.38 | -0.1059 | -0.001 | -0.0003 |
| 155 | SLU 60 | -0.01 | 3.02 | 36.73 | -0.1045 | -0.0008 | -0.0003 |
| 155 | SLU 61 | -0.01 | 3.02 | 36.75 | -0.1046 | -0.0008 | -0.0003 |
| 155 | SLU 62 | -0.01 | 3.09 | 37.19 | -0.1072 | -0.0009 | -0.0003 |
| 155 | SLU 63 | -0.01 | 3.09 | 37.21 | -0.1073 | -0.0009 | -0.0003 |
| 155 | SLU 64 | -0.01 | 3.06 | 32.63 | -0.1085 | -0.001 | -0.0003 |
| 155 | SLU 65 | -0.01 | 3.06 | 32.66 | -0.1086 | -0.0009 | -0.0003 |
| 155 | SLU 66 | -0.01 | 3.18 | 33.42 | -0.113 | -0.0011 | -0.0003 |
| 155 | SLU 67 | -0.01 | 3.18 | 33.44 | -0.1131 | -0.0011 | -0.0003 |
| 155 | SLU 68 | -0.01 | 3.13 | 33.12 | -0.1113 | -0.0011 | -0.0003 |
| 155 | SLU 69 | -0.01 | 3.25 | 33.88 | -0.1157 | -0.0013 | -0.0003 |
| 155 | SLU 70 | -0.01 | 3.25 | 33.9 | -0.1158 | -0.0012 | -0.0003 |
| 155 | SLU 71 | -0.01 | 3.2 | 33.55 | -0.1138 | -0.0012 | -0.0003 |
| 155 | SLU 72 | -0.01 | 3.2 | 33.57 | -0.1139 | -0.0012 | -0.0003 |
| 155 | SLU 73 | -0.01 | 3.36 | 38.01 | -0.118 | -0.001 | -0.0003 |
| 155 | SLU 74 | -0.01 | 3.48 | 38.76 | -0.1225 | -0.0012 | -0.0003 |
| 155 | SLU 75 | -0.01 | 3.48 | 38.78 | -0.1225 | -0.0011 | -0.0003 |
| 155 | SLU 76 | -0.01 | 3.43 | 38.47 | -0.1207 | -0.0011 | -0.0003 |
| 155 | SLU 77 | -0.01 | 3.55 | 39.22 | -0.1252 | -0.0013 | -0.0004 |
| 155 | SLU 78 | -0.01 | 3.55 | 39.24 | -0.1252 | -0.0012 | -0.0004 |
| 155 | SLU 79 | -0.01 | 3.5 | 38.9 | -0.1233 | -0.0013 | -0.0003 |
| 155 | SLU 80 | -0.01 | 3.5 | 38.92 | -0.1234 | -0.0012 | -0.0004 |
| 155 | SLU 81 | -0.01 | 3.49 | 40.27 | -0.122 | -0.001 | -0.0003 |
| 155 | SLU 82 | -0.01 | 3.49 | 40.29 | -0.1221 | -0.001 | -0.0003 |
| 155 | SLU 83 | -0.01 | 3.56 | 40.73 | -0.1247 | -0.0011 | -0.0004 |
| 155 | SLU 84 | -0.01 | 3.56 | 40.75 | -0.1247 | -0.0011 | -0.0004 |
| 155 | SLE RA 1 | -0.01 | 2.25 | 24.32 | -0.0796 | -0.0007 | -0.0002 |
| 155 | SLE RA 2 | -0.01 | 2.25 | 24.34 | -0.0797 | -0.0007 | -0.0002 |
| 155 | SLE RA 3 | -0.01 | 2.33 | 24.85 | -0.0826 | -0.0008 | -0.0002 |
| 155 | SLE RA 4 | -0.01 | 2.33 | 24.86 | -0.0827 | -0.0008 | -0.0002 |
| 155 | SLE RA 5 | -0.01 | 2.3 | 24.65 | -0.0815 | -0.0008 | -0.0002 |
| 155 | SLE RA 6 | -0.01 | 2.38 | 25.15 | -0.0844 | -0.0009 | -0.0002 |
| 155 | SLE RA 7 | -0.01 | 2.38 | 25.17 | -0.0845 | -0.0009 | -0.0002 |
| 155 | SLE RA 8 | -0.01 | 2.34 | 24.94 | -0.0832 | -0.0009 | -0.0002 |
| 155 | SLE RA 9 | -0.01 | 2.35 | 24.95 | -0.0832 | -0.0008 | -0.0002 |
| 155 | SLE RA 10 | -0.01 | 2.45 | 27.91 | -0.086 | -0.0007 | -0.0002 |
| 155 | SLE RA 11 | -0.01 | 2.53 | 28.41 | -0.0889 | -0.0008 | -0.0003 |
| 155 | SLE RA 12 | -0.01 | 2.53 | 28.42 | -0.089 | -0.0008 | -0.0003 |
| 155 | SLE RA 13 | -0.01 | 2.5 | 28.21 | -0.0878 | -0.0008 | -0.0003 |
| 155 | SLE RA 14 | -0.01 | 2.58 | 28.72 | -0.0907 | -0.0009 | -0.0003 |
| 155 | SLE RA 15 | -0.01 | 2.58 | 28.73 | -0.0908 | -0.0009 | -0.0003 |
| 155 | SLE RA 16 | -0.01 | 2.54 | 28.5 | -0.0895 | -0.0009 | -0.0003 |
| 155 | SLE RA 17 | -0.01 | 2.54 | 28.51 | -0.0895 | -0.0009 | -0.0003 |
| 155 | SLE RA 18 | -0.01 | 2.53 | 29.41 | -0.0886 | -0.0007 | -0.0003 |
| 155 | SLE RA 19 | -0.01 | 2.54 | 29.43 | -0.0887 | -0.0007 | -0.0003 |
| 155 | SLE RA 20 | -0.01 | 2.58 | 29.72 | -0.0904 | -0.0008 | -0.0003 |
| 155 | SLE RA 21 | -0.01 | 2.58 | 29.73 | -0.0905 | -0.0008 | -0.0003 |
| 155 | SLE FR 1 | -0.01 | 2.25 | 24.32 | -0.0796 | -0.0007 | -0.0002 |
| 155 | SLE FR 2 | -0.01 | 2.25 | 24.33 | -0.0796 | -0.0007 | -0.0002 |
| 155 | SLE FR 3 | -0.01 | 2.27 | 24.45 | -0.0803 | -0.0007 | -0.0002 |
| 155 | SLE FR 4 | -0.01 | 2.34 | 25.85 | -0.0823 | -0.0007 | -0.0002 |
| 155 | SLE FR 5 | -0.01 | 2.35 | 25.97 | -0.083 | -0.0008 | -0.0002 |
| 155 | SLE FR 6 | -0.01 | 2.39 | 26.87 | -0.0841 | -0.0007 | -0.0002 |
| 155 | SLE QP 1 | -0.01 | 2.25 | 24.32 | -0.0796 | -0.0007 | -0.0002 |
| 155 | SLE QP 2 | -0.01 | 2.34 | 25.85 | -0.0823 | -0.0007 | -0.0002 |

| Nodo | Cont. | Reazione a traslazione | | | Reazione a rotazione | | |
|---|---|---|---|---|---|---|---|
| Ind. | N.br. | x | y | z | x | y | z |
| 155 | SLD 1 | 0.04 | 0.68 | 20.14 | -0.0867 | 0.0572 | 0.0023 |
| 155 | SLD 2 | 0.04 | 0.68 | 20.14 | -0.0867 | 0.0572 | 0.0023 |
| 155 | SLD 3 | 0.03 | 2.24 | 21.52 | -0.0056 | 0.0526 | 0.002 |
| 155 | SLD 4 | 0.03 | 2.24 | 21.52 | -0.0056 | 0.0526 | 0.002 |
| 155 | SLD 5 | 0.02 | -0.52 | 22.04 | -0.2067 | 0.0237 | 0.001 |
| 155 | SLD 6 | 0.02 | -0.52 | 22.04 | -0.2067 | 0.0237 | 0.001 |
| 155 | SLD 7 | 0 | 4.66 | 26.65 | 0.0638 | 0.0083 | 0 |
| 155 | SLD 8 | 0 | 4.66 | 26.65 | 0.0638 | 0.0083 | 0 |
| 155 | SLD 9 | -0.01 | 0.01 | 25.06 | -0.2284 | -0.0097 | -0.0005 |
| 155 | SLD 10 | -0.01 | 0.01 | 25.06 | -0.2284 | -0.0097 | -0.0005 |
| 155 | SLD 11 | -0.03 | 5.19 | 29.66 | 0.0421 | -0.0251 | -0.0014 |
| 155 | SLD 12 | -0.03 | 5.19 | 29.66 | 0.0421 | -0.0251 | -0.0014 |
| 155 | SLD 13 | -0.05 | 2.44 | 30.18 | -0.159 | -0.0541 | -0.0025 |
| 155 | SLD 14 | -0.05 | 2.44 | 30.18 | -0.159 | -0.0541 | -0.0025 |
| 155 | SLD 15 | -0.05 | 3.99 | 31.56 | -0.0779 | -0.0587 | -0.0028 |
| 155 | SLD 16 | -0.05 | 3.99 | 31.56 | -0.0779 | -0.0587 | -0.0028 |
| 155 | SLV 1 | 0.1 | -1.55 | 12.51 | -0.0929 | 0.1422 | 0.0058 |
| 155 | SLV 2 | 0.1 | -1.55 | 12.51 | -0.0929 | 0.1422 | 0.0058 |
| 155 | SLV 3 | 0.09 | 2.11 | 15.7 | 0.0977 | 0.1308 | 0.0051 |
| 155 | SLV 4 | 0.09 | 2.11 | 15.7 | 0.0977 | 0.1308 | 0.0051 |
| 155 | SLV 5 | 0.05 | -4.37 | 17 | -0.3746 | 0.0595 | 0.0026 |
| 155 | SLV 6 | 0.05 | -4.37 | 17 | -0.3746 | 0.0595 | 0.0026 |
| 155 | SLV 7 | 0 | 7.81 | 27.65 | 0.2608 | 0.0214 | 0.0003 |
| 155 | SLV 8 | 0 | 7.81 | 27.65 | 0.2608 | 0.0214 | 0.0003 |
| 155 | SLV 9 | -0.01 | -3.14 | 24.05 | -0.4254 | -0.0229 | -0.0008 |
| 155 | SLV 10 | -0.01 | -3.14 | 24.05 | -0.4254 | -0.0229 | -0.0008 |
| 155 | SLV 11 | -0.06 | 9.05 | 34.7 | 0.21 | -0.0609 | -0.0031 |
| 155 | SLV 12 | -0.06 | 9.05 | 34.7 | 0.21 | -0.0609 | -0.0031 |
| 155 | SLV 13 | -0.1 | 2.57 | 36 | -0.2623 | -0.1322 | -0.0055 |
| 155 | SLV 14 | -0.1 | 2.57 | 36 | -0.2623 | -0.1322 | -0.0055 |
| 155 | SLV 15 | -0.11 | 6.22 | 39.2 | -0.0717 | -0.1437 | -0.0062 |
| 155 | SLV 16 | -0.11 | 6.22 | 39.2 | -0.0717 | -0.1437 | -0.0062 |
| 156 | SLU 1 | -0.05 | -0.81 | 58.74 | 0.0546 | -0.0579 | -0.0003 |
| 156 | SLU 2 | -0.05 | -0.67 | 60 | 0.0398 | -0.0765 | -0.0004 |
| 156 | SLU 3 | -0.05 | -0.73 | 60.92 | 0.0509 | -0.0602 | -0.0003 |
| 156 | SLU 4 | -0.05 | -0.64 | 61.68 | 0.042 | -0.0714 | -0.0004 |
| 156 | SLU 5 | -0.05 | -0.59 | 61.56 | 0.0357 | -0.0783 | -0.0004 |
| 156 | SLU 6 | -0.05 | -0.65 | 62.48 | 0.0468 | -0.062 | -0.0003 |
| 156 | SLU 7 | -0.05 | -0.56 | 63.24 | 0.0379 | -0.0732 | -0.0004 |
| 156 | SLU 8 | -0.05 | -0.65 | 61.85 | 0.0464 | -0.0615 | -0.0003 |
| 156 | SLU 9 | -0.05 | -0.56 | 62.61 | 0.0375 | -0.0727 | -0.0004 |
| 156 | SLU 10 | -0.06 | -0.36 | 67.99 | 0.0342 | -0.0822 | -0.0004 |
| 156 | SLU 11 | -0.05 | -0.42 | 68.91 | 0.0453 | -0.0659 | -0.0003 |
| 156 | SLU 12 | -0.06 | -0.33 | 69.67 | 0.0364 | -0.077 | -0.0004 |
| 156 | SLU 13 | -0.06 | -0.28 | 69.54 | 0.0301 | -0.084 | -0.0004 |
| 156 | SLU 14 | -0.06 | -0.34 | 70.47 | 0.0412 | -0.0677 | -0.0004 |
| 156 | SLU 15 | -0.06 | -0.26 | 71.23 | 0.0323 | -0.0789 | -0.0004 |
| 156 | SLU 16 | -0.06 | -0.35 | 69.84 | 0.0408 | -0.0672 | -0.0004 |
| 156 | SLU 17 | -0.06 | -0.26 | 70.6 | 0.0319 | -0.0784 | -0.0004 |
| 156 | SLU 18 | -0.05 | -0.38 | 70.15 | 0.0466 | -0.066 | -0.0003 |
| 156 | SLU 19 | -0.06 | -0.29 | 70.91 | 0.0377 | -0.0771 | -0.0004 |
| 156 | SLU 20 | -0.06 | -0.3 | 71.7 | 0.0425 | -0.0678 | -0.0004 |
| 156 | SLU 21 | -0.06 | -0.21 | 72.46 | 0.0336 | -0.079 | -0.0004 |
| 156 | SLU 22 | -0.05 | -0.58 | 66.71 | 0.05 | -0.0644 | -0.0003 |
| 156 | SLU 23 | -0.06 | -0.43 | 67.97 | 0.0352 | -0.0831 | -0.0004 |
| 156 | SLU 24 | -0.05 | -0.49 | 68.9 | 0.0463 | -0.0668 | -0.0004 |
| 156 | SLU 25 | -0.06 | -0.4 | 69.65 | 0.0374 | -0.0779 | -0.0004 |
| 156 | SLU 26 | -0.06 | -0.35 | 69.53 | 0.0311 | -0.0849 | -0.0004 |
| 156 | SLU 27 | -0.06 | -0.41 | 70.45 | 0.0422 | -0.0686 | -0.0004 |
| 156 | SLU 28 | -0.06 | -0.32 | 71.21 | 0.0333 | -0.0798 | -0.0004 |
| 156 | SLU 29 | -0.06 | -0.42 | 69.82 | 0.0418 | -0.0681 | -0.0004 |
| 156 | SLU 30 | -0.06 | -0.33 | 70.58 | 0.033 | -0.0793 | -0.0004 |
| 156 | SLU 31 | -0.06 | -0.13 | 75.96 | 0.0296 | -0.0887 | -0.0004 |
| 156 | SLU 32 | -0.06 | -0.19 | 76.89 | 0.0407 | -0.0724 | -0.0004 |
| 156 | SLU 33 | -0.06 | -0.1 | 77.64 | 0.0318 | -0.0836 | -0.0004 |
| 156 | SLU 34 | -0.06 | -0.05 | 77.52 | 0.0255 | -0.0906 | -0.0004 |
| 156 | SLU 35 | -0.06 | -0.11 | 78.44 | 0.0366 | -0.0742 | -0.0004 |
| 156 | SLU 36 | -0.06 | -0.02 | 79.2 | 0.0277 | -0.0854 | -0.0004 |
| 156 | SLU 37 | -0.06 | -0.11 | 77.81 | 0.0362 | -0.0737 | -0.0004 |
| 156 | SLU 38 | -0.06 | -0.03 | 78.57 | 0.0273 | -0.0849 | -0.0004 |
| 156 | SLU 39 | -0.06 | -0.14 | 78.12 | 0.042 | -0.0725 | -0.0004 |
| 156 | SLU 40 | -0.06 | -0.05 | 78.88 | 0.0331 | -0.0837 | -0.0004 |
| 156 | SLU 41 | -0.06 | -0.06 | 79.68 | 0.0379 | -0.0743 | -0.0004 |
| 156 | SLU 42 | -0.06 | 0.03 | 80.44 | 0.029 | -0.0855 | -0.0004 |
| 156 | SLU 43 | -0.06 | -1.14 | 73.62 | 0.0726 | -0.073 | -0.0004 |
| 156 | SLU 44 | -0.07 | -0.99 | 74.89 | 0.0578 | -0.0916 | -0.0004 |
| 156 | SLU 45 | -0.06 | -1.05 | 75.81 | 0.0688 | -0.0753 | -0.0004 |
| 156 | SLU 46 | -0.07 | -0.96 | 76.57 | 0.06 | -0.0865 | -0.0004 |
| 156 | SLU 47 | -0.07 | -0.91 | 76.44 | 0.0537 | -0.0935 | -0.0005 |
| 156 | SLU 48 | -0.06 | -0.97 | 77.37 | 0.0647 | -0.0771 | -0.0004 |
| 156 | SLU 49 | -0.07 | -0.88 | 78.12 | 0.0559 | -0.0883 | -0.0005 |
| 156 | SLU 50 | -0.06 | -0.98 | 76.74 | 0.0644 | -0.0766 | -0.0004 |
| 156 | SLU 51 | -0.07 | -0.89 | 77.49 | 0.0555 | -0.0878 | -0.0004 |
| 156 | SLU 52 | -0.07 | -0.69 | 82.88 | 0.0522 | -0.0973 | -0.0005 |
| 156 | SLU 53 | -0.07 | -0.75 | 83.8 | 0.0632 | -0.081 | -0.0004 |
| 156 | SLU 54 | -0.07 | -0.66 | 84.56 | 0.0544 | -0.0922 | -0.0005 |
| 156 | SLU 55 | -0.07 | -0.61 | 84.43 | 0.0481 | -0.0991 | -0.0005 |
| 156 | SLU 56 | -0.07 | -0.67 | 85.36 | 0.0591 | -0.0828 | -0.0004 |

| Nodo | Cont. | Reazione a traslazione | | | Reazione a rotazione | | |
|---|---|---|---|---|---|---|---|
| Ind. | N.br. | x | y | z | x | y | z |
| 156 | SLU 57 | -0.07 | -0.58 | 86.11 | 0.0503 | -0.094 | -0.0005 |
| 156 | SLU 58 | -0.07 | -0.67 | 84.72 | 0.0587 | -0.0823 | -0.0004 |
| 156 | SLU 59 | -0.07 | -0.59 | 85.48 | 0.0499 | -0.0935 | -0.0005 |
| 156 | SLU 60 | -0.07 | -0.7 | 85.04 | 0.0645 | -0.0811 | -0.0004 |
| 156 | SLU 61 | -0.07 | -0.61 | 85.79 | 0.0557 | -0.0923 | -0.0005 |
| 156 | SLU 62 | -0.07 | -0.62 | 86.59 | 0.0604 | -0.0829 | -0.0004 |
| 156 | SLU 63 | -0.07 | -0.53 | 87.35 | 0.0516 | -0.0941 | -0.0005 |
| 156 | SLU 64 | -0.07 | -0.9 | 81.6 | 0.068 | -0.0796 | -0.0004 |
| 156 | SLU 65 | -0.07 | -0.75 | 82.86 | 0.0532 | -0.0982 | -0.0005 |
| 156 | SLU 66 | -0.07 | -0.81 | 83.78 | 0.0643 | -0.0819 | -0.0004 |
| 156 | SLU 67 | -0.07 | -0.73 | 84.54 | 0.0554 | -0.0931 | -0.0005 |
| 156 | SLU 68 | -0.07 | -0.67 | 84.42 | 0.0491 | -0.1 | -0.0005 |
| 156 | SLU 69 | -0.07 | -0.74 | 85.34 | 0.0602 | -0.0837 | -0.0005 |
| 156 | SLU 70 | -0.07 | -0.65 | 86.1 | 0.0513 | -0.0949 | -0.0005 |
| 156 | SLU 71 | -0.07 | -0.74 | 84.71 | 0.0598 | -0.0832 | -0.0005 |
| 156 | SLU 72 | -0.07 | -0.65 | 85.47 | 0.0509 | -0.0944 | -0.0005 |
| 156 | SLU 73 | -0.07 | -0.45 | 90.85 | 0.0476 | -0.1038 | -0.0005 |
| 156 | SLU 74 | -0.07 | -0.51 | 91.77 | 0.0586 | -0.0875 | -0.0005 |
| 156 | SLU 75 | -0.07 | -0.42 | 92.53 | 0.0498 | -0.0987 | -0.0005 |
| 156 | SLU 76 | -0.08 | -0.37 | 92.4 | 0.0435 | -0.1057 | -0.0005 |
| 156 | SLU 77 | -0.07 | -0.43 | 93.33 | 0.0545 | -0.0894 | -0.0005 |
| 156 | SLU 78 | -0.08 | -0.34 | 94.09 | 0.0457 | -0.1005 | -0.0005 |
| 156 | SLU 79 | -0.07 | -0.44 | 92.7 | 0.0542 | -0.0889 | -0.0005 |
| 156 | SLU 80 | -0.08 | -0.35 | 93.46 | 0.0453 | -0.1 | -0.0005 |
| 156 | SLU 81 | -0.07 | -0.47 | 93.01 | 0.06 | -0.0876 | -0.0005 |
| 156 | SLU 82 | -0.07 | -0.38 | 93.77 | 0.0511 | -0.0988 | -0.0005 |
| 156 | SLU 83 | -0.07 | -0.39 | 94.57 | 0.0559 | -0.0895 | -0.0005 |
| 156 | SLU 84 | -0.08 | -0.3 | 95.32 | 0.047 | -0.1006 | -0.0005 |
| 156 | SLE RA 1 | -0.05 | -0.74 | 61.02 | 0.0533 | -0.0598 | -0.0003 |
| 156 | SLE RA 2 | -0.05 | -0.65 | 61.86 | 0.0434 | -0.0722 | -0.0003 |
| 156 | SLE RA 3 | -0.05 | -0.69 | 62.47 | 0.0508 | -0.0613 | -0.0003 |
| 156 | SLE RA 4 | -0.05 | -0.63 | 62.98 | 0.0449 | -0.0688 | -0.0003 |
| 156 | SLE RA 5 | -0.05 | -0.59 | 62.89 | 0.0407 | -0.0734 | -0.0004 |
| 156 | SLE RA 6 | -0.05 | -0.63 | 63.51 | 0.0481 | -0.0625 | -0.0003 |
| 156 | SLE RA 7 | -0.05 | -0.58 | 64.02 | 0.0422 | -0.07 | -0.0004 |
| 156 | SLE RA 8 | -0.05 | -0.64 | 63.09 | 0.0478 | -0.0622 | -0.0003 |
| 156 | SLE RA 9 | -0.05 | -0.58 | 63.6 | 0.0419 | -0.0696 | -0.0004 |
| 156 | SLE RA 10 | -0.06 | -0.44 | 67.18 | 0.0397 | -0.076 | -0.0004 |
| 156 | SLE RA 11 | -0.05 | -0.48 | 67.8 | 0.0471 | -0.0651 | -0.0003 |
| 156 | SLE RA 12 | -0.06 | -0.43 | 68.3 | 0.0412 | -0.0725 | -0.0004 |
| 156 | SLE RA 13 | -0.06 | -0.39 | 68.22 | 0.037 | -0.0772 | -0.0004 |
| 156 | SLE RA 14 | -0.05 | -0.43 | 68.84 | 0.0443 | -0.0663 | -0.0004 |
| 156 | SLE RA 15 | -0.06 | -0.37 | 69.34 | 0.0384 | -0.0737 | -0.0004 |
| 156 | SLE RA 16 | -0.05 | -0.44 | 68.42 | 0.0441 | -0.066 | -0.0004 |
| 156 | SLE RA 17 | -0.06 | -0.38 | 68.92 | 0.0382 | -0.0734 | -0.0004 |
| 156 | SLE RA 18 | -0.05 | -0.45 | 68.62 | 0.0479 | -0.0651 | -0.0003 |
| 156 | SLE RA 19 | -0.06 | -0.4 | 69.13 | 0.042 | -0.0726 | -0.0004 |
| 156 | SLE RA 20 | -0.05 | -0.4 | 69.66 | 0.0452 | -0.0664 | -0.0004 |
| 156 | SLE RA 21 | -0.06 | -0.34 | 70.17 | 0.0393 | -0.0738 | -0.0004 |
| 156 | SLE FR 1 | -0.05 | -0.74 | 61.02 | 0.0533 | -0.0598 | -0.0003 |
| 156 | SLE FR 2 | -0.05 | -0.72 | 61.18 | 0.0513 | -0.0622 | -0.0003 |
| 156 | SLE FR 3 | -0.05 | -0.72 | 61.43 | 0.0522 | -0.0602 | -0.0003 |
| 156 | SLE FR 4 | -0.05 | -0.64 | 63.47 | 0.0497 | -0.0639 | -0.0003 |
| 156 | SLE FR 5 | -0.05 | -0.64 | 63.71 | 0.0506 | -0.0619 | -0.0003 |
| 156 | SLE FR 6 | -0.05 | -0.6 | 64.82 | 0.0506 | -0.0625 | -0.0003 |
| 156 | SLE QP 1 | -0.05 | -0.74 | 61.02 | 0.0533 | -0.0598 | -0.0003 |
| 156 | SLE QP 2 | -0.05 | -0.66 | 63.3 | 0.0517 | -0.0614 | -0.0003 |
| 156 | SLD 1 | -0.09 | 3.07 | 83.69 | 0.0027 | -0.1281 | -0.001 |
| 156 | SLD 2 | -0.09 | 3.07 | 83.69 | 0.0027 | -0.1281 | -0.001 |
| 156 | SLD 3 | -0.22 | -1.52 | 81.47 | 0.2205 | -0.185 | -0.0015 |
| 156 | SLD 4 | -0.22 | -1.52 | 81.47 | 0.2205 | -0.185 | -0.0015 |
| 156 | SLD 5 | 0.14 | 7.43 | 72.79 | -0.2934 | 0.0049 | 0.0002 |
| 156 | SLD 6 | 0.14 | 7.43 | 72.79 | -0.2934 | 0.0049 | 0.0002 |
| 156 | SLD 7 | -0.3 | -7.88 | 65.38 | 0.4327 | -0.1848 | -0.0014 |
| 156 | SLD 8 | -0.3 | -7.88 | 65.38 | 0.4327 | -0.1848 | -0.0014 |
| 156 | SLD 9 | 0.2 | 6.57 | 61.22 | -0.3293 | 0.062 | 0.0007 |
| 156 | SLD 10 | 0.2 | 6.57 | 61.22 | -0.3293 | 0.062 | 0.0007 |
| 156 | SLD 11 | -0.24 | -8.74 | 53.81 | 0.3968 | -0.1277 | -0.0009 |
| 156 | SLD 12 | -0.24 | -8.74 | 53.81 | 0.3968 | -0.1277 | -0.0009 |
| 156 | SLD 13 | 0.12 | 0.2 | 45.13 | -0.1171 | 0.0623 | 0.0008 |
| 156 | SLD 14 | 0.12 | 0.2 | 45.13 | -0.1171 | 0.0623 | 0.0008 |
| 156 | SLD 15 | -0.01 | -4.39 | 42.9 | 0.1007 | 0.0054 | 0.0003 |
| 156 | SLD 16 | -0.01 | -4.39 | 42.9 | 0.1007 | 0.0054 | 0.0003 |
| 156 | SLV 1 | -0.14 | 8.08 | 110.94 | -0.0578 | -0.209 | -0.0018 |
| 156 | SLV 2 | -0.14 | 8.08 | 110.94 | -0.0578 | -0.209 | -0.0018 |
| 156 | SLV 3 | -0.47 | -2.58 | 105.71 | 0.4477 | -0.3544 | -0.003 |
| 156 | SLV 4 | -0.47 | -2.58 | 105.71 | 0.4477 | -0.3544 | -0.003 |
| 156 | SLV 5 | 0.43 | 18.13 | 85.51 | -0.7478 | 0.1148 | 0.0011 |
| 156 | SLV 6 | 0.43 | 18.13 | 85.51 | -0.7478 | 0.1148 | 0.0011 |
| 156 | SLV 7 | -0.68 | -17.4 | 68.1 | 0.9372 | -0.3698 | -0.003 |
| 156 | SLV 8 | -0.68 | -17.4 | 68.1 | 0.9372 | -0.3698 | -0.003 |
| 156 | SLV 9 | 0.58 | 16.09 | 58.5 | -0.8338 | 0.2471 | 0.0023 |
| 156 | SLV 10 | 0.58 | 16.09 | 58.5 | -0.8338 | 0.2471 | 0.0023 |
| 156 | SLV 11 | -0.53 | -19.45 | 41.08 | 0.8512 | -0.2376 | -0.0018 |
| 156 | SLV 12 | -0.53 | -19.45 | 41.08 | 0.8512 | -0.2376 | -0.0018 |
| 156 | SLV 13 | 0.37 | 1.26 | 20.88 | -0.3443 | 0.2317 | 0.0023 |
| 156 | SLV 14 | 0.37 | 1.26 | 20.88 | -0.3443 | 0.2317 | 0.0023 |
| 156 | SLV 15 | 0.03 | -9.4 | 15.66 | 0.1612 | 0.0863 | 0.0011 |

| Nodo | Cont. | Reazione a traslazione | | | Reazione a rotazione | | |
|---|---|---|---|---|---|---|---|
| Ind. | N.br. | x | y | z | x | y | z |
| 156 | SLV 16 | 0.03 | -9.4 | 15.66 | 0.1612 | 0.0863 | 0.0011 |
| 157 | SLU 1 | 0.12 | -0.35 | 35.96 | 0.1172 | 0.0501 | -0.0069 |
| 157 | SLU 2 | 0.14 | 1.65 | 34.2 | 0.0255 | 0.0543 | -0.0072 |
| 157 | SLU 3 | 0.12 | -0.51 | 37.76 | 0.1284 | 0.0519 | -0.0072 |
| 157 | SLU 4 | 0.13 | 0.69 | 36.71 | 0.0733 | 0.0545 | -0.0074 |
| 157 | SLU 5 | 0.14 | 1.43 | 35.58 | 0.0383 | 0.0553 | -0.0074 |
| 157 | SLU 6 | 0.12 | -0.73 | 39.14 | 0.1412 | 0.0529 | -0.0074 |
| 157 | SLU 7 | 0.14 | 0.47 | 38.08 | 0.0862 | 0.0554 | -0.0076 |
| 157 | SLU 8 | 0.12 | -0.79 | 38.71 | 0.1429 | 0.052 | -0.0073 |
| 157 | SLU 9 | 0.13 | 0.41 | 37.66 | 0.0878 | 0.0545 | -0.0075 |
| 157 | SLU 10 | 0.17 | 1.91 | 40.72 | 0.0316 | 0.0646 | -0.0086 |
| 157 | SLU 11 | 0.15 | -0.24 | 44.28 | 0.1345 | 0.0622 | -0.0086 |
| 157 | SLU 12 | 0.16 | 0.95 | 43.23 | 0.0795 | 0.0648 | -0.0088 |
| 157 | SLU 13 | 0.17 | 1.69 | 42.1 | 0.0444 | 0.0655 | -0.0088 |
| 157 | SLU 14 | 0.15 | -0.47 | 45.66 | 0.1474 | 0.0632 | -0.0088 |
| 157 | SLU 15 | 0.16 | 0.73 | 44.6 | 0.0923 | 0.0657 | -0.009 |
| 157 | SLU 16 | 0.15 | -0.53 | 45.23 | 0.149 | 0.0623 | -0.0087 |
| 157 | SLU 17 | 0.16 | 0.67 | 44.18 | 0.094 | 0.0648 | -0.0089 |
| 157 | SLU 18 | 0.16 | 0.02 | 45.27 | 0.126 | 0.0648 | -0.0089 |
| 157 | SLU 19 | 0.17 | 1.22 | 44.22 | 0.0709 | 0.0673 | -0.0091 |
| 157 | SLU 20 | 0.16 | -0.2 | 46.65 | 0.1388 | 0.0657 | -0.0091 |
| 157 | SLU 21 | 0.17 | 1 | 45.6 | 0.0838 | 0.0683 | -0.0093 |
| 157 | SLU 22 | 0.14 | -0.24 | 42.15 | 0.1291 | 0.0592 | -0.0082 |
| 157 | SLU 23 | 0.16 | 1.75 | 40.39 | 0.0373 | 0.0634 | -0.0085 |
| 157 | SLU 24 | 0.14 | -0.4 | 43.95 | 0.1402 | 0.061 | -0.0085 |
| 157 | SLU 25 | 0.16 | 0.8 | 42.9 | 0.0852 | 0.0636 | -0.0087 |
| 157 | SLU 26 | 0.16 | 1.53 | 41.77 | 0.0501 | 0.0644 | -0.0087 |
| 157 | SLU 27 | 0.15 | -0.62 | 45.33 | 0.1531 | 0.062 | -0.0087 |
| 157 | SLU 28 | 0.16 | 0.58 | 44.27 | 0.098 | 0.0645 | -0.0089 |
| 157 | SLU 29 | 0.14 | -0.69 | 44.9 | 0.1547 | 0.0611 | -0.0086 |
| 157 | SLU 30 | 0.16 | 0.51 | 43.85 | 0.0997 | 0.0636 | -0.0088 |
| 157 | SLU 31 | 0.19 | 2.01 | 46.91 | 0.0435 | 0.0737 | -0.0099 |
| 157 | SLU 32 | 0.17 | -0.14 | 50.47 | 0.1464 | 0.0713 | -0.0099 |
| 157 | SLU 33 | 0.18 | 1.06 | 49.42 | 0.0913 | 0.0739 | -0.0101 |
| 157 | SLU 34 | 0.19 | 1.79 | 48.29 | 0.0563 | 0.0747 | -0.0101 |
| 157 | SLU 35 | 0.17 | -0.36 | 51.85 | 0.1592 | 0.0723 | -0.0101 |
| 157 | SLU 36 | 0.19 | 0.84 | 50.8 | 0.1042 | 0.0748 | -0.0103 |
| 157 | SLU 37 | 0.17 | -0.43 | 51.42 | 0.1609 | 0.0714 | -0.01 |
| 157 | SLU 38 | 0.18 | 0.77 | 50.37 | 0.1058 | 0.0739 | -0.0102 |
| 157 | SLU 39 | 0.18 | 0.13 | 51.46 | 0.1378 | 0.0739 | -0.0102 |
| 157 | SLU 40 | 0.19 | 1.33 | 50.41 | 0.0828 | 0.0764 | -0.0104 |
| 157 | SLU 41 | 0.18 | -0.09 | 52.84 | 0.1507 | 0.0748 | -0.0104 |
| 157 | SLU 42 | 0.19 | 1.11 | 51.79 | 0.0956 | 0.0774 | -0.0106 |
| 157 | SLU 43 | 0.15 | -0.49 | 44.62 | 0.1483 | 0.062 | -0.0085 |
| 157 | SLU 44 | 0.17 | 1.51 | 42.86 | 0.0566 | 0.0662 | -0.0088 |
| 157 | SLU 45 | 0.15 | -0.65 | 46.42 | 0.1595 | 0.0638 | -0.0088 |
| 157 | SLU 46 | 0.16 | 0.55 | 45.37 | 0.1044 | 0.0664 | -0.009 |
| 157 | SLU 47 | 0.17 | 1.28 | 44.24 | 0.0694 | 0.0672 | -0.009 |
| 157 | SLU 48 | 0.15 | -0.87 | 47.8 | 0.1723 | 0.0648 | -0.009 |
| 157 | SLU 49 | 0.16 | 0.33 | 46.75 | 0.1173 | 0.0673 | -0.0092 |
| 157 | SLU 50 | 0.15 | -0.93 | 47.38 | 0.174 | 0.0639 | -0.0089 |
| 157 | SLU 51 | 0.16 | 0.26 | 46.32 | 0.1189 | 0.0664 | -0.0091 |
| 157 | SLU 52 | 0.19 | 1.77 | 49.38 | 0.0627 | 0.0765 | -0.0102 |
| 157 | SLU 53 | 0.18 | -0.39 | 52.95 | 0.1656 | 0.0741 | -0.0102 |
| 157 | SLU 54 | 0.19 | 0.81 | 51.89 | 0.1106 | 0.0767 | -0.0104 |
| 157 | SLU 55 | 0.2 | 1.55 | 50.76 | 0.0755 | 0.0774 | -0.0104 |
| 157 | SLU 56 | 0.18 | -0.61 | 54.32 | 0.1785 | 0.0751 | -0.0104 |
| 157 | SLU 57 | 0.19 | 0.59 | 53.27 | 0.1234 | 0.0776 | -0.0106 |
| 157 | SLU 58 | 0.17 | -0.67 | 53.9 | 0.1801 | 0.0742 | -0.0103 |
| 157 | SLU 59 | 0.19 | 0.53 | 52.84 | 0.1251 | 0.0767 | -0.0105 |
| 157 | SLU 60 | 0.18 | -0.12 | 53.94 | 0.1571 | 0.0767 | -0.0105 |
| 157 | SLU 61 | 0.2 | 1.08 | 52.88 | 0.102 | 0.0792 | -0.0107 |
| 157 | SLU 62 | 0.19 | -0.34 | 55.31 | 0.1699 | 0.0776 | -0.0107 |
| 157 | SLU 63 | 0.2 | 0.86 | 54.26 | 0.1149 | 0.0802 | -0.0109 |
| 157 | SLU 64 | 0.17 | -0.39 | 50.81 | 0.1602 | 0.0711 | -0.0098 |
| 157 | SLU 65 | 0.19 | 1.61 | 49.05 | 0.0684 | 0.0753 | -0.0101 |
| 157 | SLU 66 | 0.17 | -0.54 | 52.61 | 0.1713 | 0.0729 | -0.0101 |
| 157 | SLU 67 | 0.19 | 0.66 | 51.56 | 0.1163 | 0.0755 | -0.0103 |
| 157 | SLU 68 | 0.19 | 1.39 | 50.43 | 0.0813 | 0.0763 | -0.0103 |
| 157 | SLU 69 | 0.17 | -0.76 | 53.99 | 0.1842 | 0.0739 | -0.0103 |
| 157 | SLU 70 | 0.19 | 0.44 | 52.94 | 0.1291 | 0.0764 | -0.0105 |
| 157 | SLU 71 | 0.17 | -0.83 | 53.57 | 0.1858 | 0.073 | -0.0102 |
| 157 | SLU 72 | 0.18 | 0.37 | 52.51 | 0.1308 | 0.0755 | -0.0104 |
| 157 | SLU 73 | 0.22 | 1.87 | 55.58 | 0.0746 | 0.0856 | -0.0115 |
| 157 | SLU 74 | 0.2 | -0.28 | 59.14 | 0.1775 | 0.0832 | -0.0115 |
| 157 | SLU 75 | 0.21 | 0.92 | 58.08 | 0.1224 | 0.0858 | -0.0117 |
| 157 | SLU 76 | 0.22 | 1.65 | 56.95 | 0.0874 | 0.0866 | -0.0117 |
| 157 | SLU 77 | 0.2 | -0.5 | 60.51 | 0.1903 | 0.0842 | -0.0117 |
| 157 | SLU 78 | 0.21 | 0.7 | 59.46 | 0.1353 | 0.0867 | -0.0119 |
| 157 | SLU 79 | 0.2 | -0.57 | 60.09 | 0.192 | 0.0833 | -0.0116 |
| 157 | SLU 80 | 0.21 | 0.63 | 59.03 | 0.1369 | 0.0858 | -0.0118 |
| 157 | SLU 81 | 0.21 | -0.01 | 60.13 | 0.169 | 0.0858 | -0.0118 |
| 157 | SLU 82 | 0.22 | 1.19 | 59.07 | 0.1139 | 0.0883 | -0.012 |
| 157 | SLU 83 | 0.21 | -0.23 | 61.51 | 0.1818 | 0.0867 | -0.012 |
| 157 | SLU 84 | 0.22 | 0.96 | 60.45 | 0.1267 | 0.0893 | -0.0122 |
| 157 | SLE RA 1 | 0.12 | -0.32 | 37.73 | 0.1206 | 0.0527 | -0.0073 |
| 157 | SLE RA 2 | 0.14 | 1.01 | 36.55 | 0.0594 | 0.0555 | -0.0075 |
| 157 | SLE RA 3 | 0.13 | -0.42 | 38.93 | 0.1281 | 0.0539 | -0.0075 |

| Nodo | Cont. | Reazione a traslazione | | | Reazione a rotazione | | |
|---|---|---|---|---|---|---|---|
| Ind. | N.br. | x | y | z | x | y | z |
| 157 | SLE RA 4 | 0.14 | 0.38 | 38.22 | 0.0914 | 0.0556 | -0.0076 |
| 157 | SLE RA 5 | 0.14 | 0.86 | 37.47 | 0.068 | 0.0561 | -0.0076 |
| 157 | SLE RA 6 | 0.13 | -0.57 | 39.85 | 0.1366 | 0.0546 | -0.0076 |
| 157 | SLE RA 7 | 0.14 | 0.23 | 39.14 | 0.0999 | 0.0563 | -0.0077 |
| 157 | SLE RA 8 | 0.13 | -0.61 | 39.56 | 0.1377 | 0.054 | -0.0075 |
| 157 | SLE RA 9 | 0.13 | 0.18 | 38.86 | 0.101 | 0.0557 | -0.0076 |
| 157 | SLE RA 10 | 0.16 | 1.19 | 40.9 | 0.0635 | 0.0624 | -0.0084 |
| 157 | SLE RA 11 | 0.14 | -0.25 | 43.27 | 0.1322 | 0.0608 | -0.0084 |
| 157 | SLE RA 12 | 0.15 | 0.55 | 42.57 | 0.0955 | 0.0625 | -0.0085 |
| 157 | SLE RA 13 | 0.16 | 1.04 | 41.82 | 0.0721 | 0.063 | -0.0085 |
| 157 | SLE RA 14 | 0.15 | -0.4 | 44.19 | 0.1407 | 0.0614 | -0.0085 |
| 157 | SLE RA 15 | 0.15 | 0.4 | 43.49 | 0.104 | 0.0631 | -0.0087 |
| 157 | SLE RA 16 | 0.14 | -0.44 | 43.91 | 0.1418 | 0.0608 | -0.0085 |
| 157 | SLE RA 17 | 0.15 | 0.36 | 43.21 | 0.1051 | 0.0625 | -0.0086 |
| 157 | SLE RA 18 | 0.15 | -0.07 | 43.94 | 0.1265 | 0.0625 | -0.0086 |
| 157 | SLE RA 19 | 0.16 | 0.73 | 43.23 | 0.0898 | 0.0642 | -0.0087 |
| 157 | SLE RA 20 | 0.15 | -0.22 | 44.85 | 0.135 | 0.0631 | -0.0087 |
| 157 | SLE RA 21 | 0.16 | 0.58 | 44.15 | 0.0983 | 0.0648 | -0.0089 |
| 157 | SLE FR 1 | 0.12 | -0.32 | 37.73 | 0.1206 | 0.0527 | -0.0073 |
| 157 | SLE FR 2 | 0.13 | -0.05 | 37.49 | 0.1084 | 0.0532 | -0.0073 |
| 157 | SLE FR 3 | 0.12 | -0.38 | 38.09 | 0.124 | 0.0529 | -0.0073 |
| 157 | SLE FR 4 | 0.14 | 0.02 | 39.35 | 0.1101 | 0.0562 | -0.0077 |
| 157 | SLE FR 5 | 0.13 | -0.3 | 39.96 | 0.1258 | 0.0559 | -0.0077 |
| 157 | SLE FR 6 | 0.14 | -0.2 | 40.83 | 0.1235 | 0.0576 | -0.0079 |
| 157 | SLE QP 1 | 0.12 | -0.32 | 37.73 | 0.1206 | 0.0527 | -0.0073 |
| 157 | SLE QP 2 | 0.13 | -0.25 | 39.59 | 0.1224 | 0.0556 | -0.0077 |
| 157 | SLD 1 | 0.24 | 3.19 | 44.82 | -0.03 | 0.0989 | -0.01 |
| 157 | SLD 2 | 0.24 | 3.19 | 44.82 | -0.03 | 0.0989 | -0.01 |
| 157 | SLD 3 | 0.15 | -0.31 | 47.14 | 0.1385 | 0.0738 | -0.0092 |
| 157 | SLD 4 | 0.15 | -0.31 | 47.14 | 0.1385 | 0.0738 | -0.0092 |
| 157 | SLD 5 | 0.29 | 6.09 | 37.64 | -0.1788 | 0.1067 | -0.0095 |
| 157 | SLD 6 | 0.29 | 6.09 | 37.64 | -0.1788 | 0.1067 | -0.0095 |
| 157 | SLD 7 | 0.01 | -5.57 | 45.37 | 0.3827 | 0.023 | -0.0069 |
| 157 | SLD 8 | 0.01 | -5.57 | 45.37 | 0.3827 | 0.023 | -0.0069 |
| 157 | SLD 9 | 0.26 | 5.08 | 33.81 | -0.138 | 0.0882 | -0.0084 |
| 157 | SLD 10 | 0.26 | 5.08 | 33.81 | -0.138 | 0.0882 | -0.0084 |
| 157 | SLD 11 | -0.03 | -6.58 | 41.53 | 0.4236 | 0.0045 | -0.0058 |
| 157 | SLD 12 | -0.03 | -6.58 | 41.53 | 0.4236 | 0.0045 | -0.0058 |
| 157 | SLD 13 | 0.12 | -0.18 | 32.04 | 0.1062 | 0.0374 | -0.0061 |
| 157 | SLD 14 | 0.12 | -0.18 | 32.04 | 0.1062 | 0.0374 | -0.0061 |
| 157 | SLD 15 | 0.03 | -3.68 | 34.35 | 0.2747 | 0.0123 | -0.0054 |
| 157 | SLD 16 | 0.03 | -3.68 | 34.35 | 0.2747 | 0.0123 | -0.0054 |
| 157 | SLV 1 | 0.38 | 7.86 | 51.72 | -0.2391 | 0.1582 | -0.013 |
| 157 | SLV 2 | 0.38 | 7.86 | 51.72 | -0.2391 | 0.1582 | -0.013 |
| 157 | SLV 3 | 0.16 | -0.5 | 57.27 | 0.1632 | 0.0961 | -0.0111 |
| 157 | SLV 4 | 0.16 | -0.5 | 57.27 | 0.1632 | 0.0961 | -0.0111 |
| 157 | SLV 5 | 0.53 | 14.87 | 34.82 | -0.5962 | 0.1807 | -0.0121 |
| 157 | SLV 6 | 0.53 | 14.87 | 34.82 | -0.5962 | 0.1807 | -0.0121 |
| 157 | SLV 7 | -0.18 | -13.01 | 53.3 | 0.7448 | -0.0266 | -0.0058 |
| 157 | SLV 8 | -0.18 | -13.01 | 53.3 | 0.7448 | -0.0266 | -0.0058 |
| 157 | SLV 9 | 0.44 | 12.52 | 25.88 | -0.5 | 0.1378 | -0.0095 |
| 157 | SLV 10 | 0.44 | 12.52 | 25.88 | -0.5 | 0.1378 | -0.0095 |
| 157 | SLV 11 | -0.26 | -15.36 | 44.36 | 0.8409 | -0.0695 | -0.0032 |
| 157 | SLV 12 | -0.26 | -15.36 | 44.36 | 0.8409 | -0.0695 | -0.0032 |
| 157 | SLV 13 | 0.1 | 0.01 | 21.91 | 0.0815 | 0.0152 | -0.0042 |
| 157 | SLV 14 | 0.1 | 0.01 | 21.91 | 0.0815 | 0.0152 | -0.0042 |
| 157 | SLV 15 | -0.11 | -8.35 | 27.45 | 0.4838 | -0.047 | -0.0023 |
| 157 | SLV 16 | -0.11 | -8.35 | 27.45 | 0.4838 | -0.047 | -0.0023 |
| 158 | SLU 1 | 0.01 | -5.4 | 48.99 | 0.3039 | 0.0044 | -0.0023 |
| 158 | SLU 2 | 0.01 | -5.69 | 49.19 | 0.3161 | 0.0044 | -0.0023 |
| 158 | SLU 3 | 0.01 | -5.43 | 50.87 | 0.3092 | 0.0046 | -0.0024 |
| 158 | SLU 4 | 0.01 | -5.6 | 50.99 | 0.3165 | 0.0046 | -0.0024 |
| 158 | SLU 5 | 0.01 | -5.67 | 50.34 | 0.318 | 0.0045 | -0.0023 |
| 158 | SLU 6 | 0.01 | -5.41 | 52.02 | 0.311 | 0.0047 | -0.0025 |
| 158 | SLU 7 | 0.01 | -5.58 | 52.14 | 0.3183 | 0.0047 | -0.0024 |
| 158 | SLU 8 | 0.01 | -5.36 | 51.28 | 0.3076 | 0.0046 | -0.0024 |
| 158 | SLU 9 | 0.01 | -5.54 | 51.41 | 0.3149 | 0.0046 | -0.0024 |
| 158 | SLU 10 | 0.01 | -6.93 | 59.37 | 0.3848 | 0.0056 | -0.0027 |
| 158 | SLU 11 | 0.02 | -6.66 | 61.05 | 0.3779 | 0.0057 | -0.0028 |
| 158 | SLU 12 | 0.02 | -6.84 | 61.18 | 0.3852 | 0.0057 | -0.0028 |
| 158 | SLU 13 | 0.01 | -6.91 | 60.52 | 0.3866 | 0.0057 | -0.0028 |
| 158 | SLU 14 | 0.02 | -6.64 | 62.2 | 0.3797 | 0.0058 | -0.0029 |
| 158 | SLU 15 | 0.02 | -6.82 | 62.32 | 0.387 | 0.0058 | -0.0029 |
| 158 | SLU 16 | 0.02 | -6.6 | 61.47 | 0.3762 | 0.0058 | -0.0029 |
| 158 | SLU 17 | 0.02 | -6.77 | 61.59 | 0.3835 | 0.0058 | -0.0028 |
| 158 | SLU 18 | 0.02 | -7.17 | 63.54 | 0.402 | 0.0061 | -0.0029 |
| 158 | SLU 19 | 0.02 | -7.34 | 63.66 | 0.4093 | 0.0061 | -0.0029 |
| 158 | SLU 20 | 0.02 | -7.15 | 64.68 | 0.4038 | 0.0062 | -0.003 |
| 158 | SLU 21 | 0.02 | -7.32 | 64.81 | 0.4111 | 0.0062 | -0.003 |
| 158 | SLU 22 | 0.01 | -5.89 | 57.05 | 0.3408 | 0.0051 | -0.0027 |
| 158 | SLU 23 | 0.01 | -6.19 | 57.25 | 0.353 | 0.0051 | -0.0027 |
| 158 | SLU 24 | 0.02 | -5.92 | 58.93 | 0.346 | 0.0053 | -0.0028 |
| 158 | SLU 25 | 0.02 | -6.1 | 59.05 | 0.3534 | 0.0053 | -0.0028 |
| 158 | SLU 26 | 0.01 | -6.17 | 58.4 | 0.3548 | 0.0052 | -0.0028 |
| 158 | SLU 27 | 0.02 | -5.9 | 60.08 | 0.3479 | 0.0054 | -0.0029 |
| 158 | SLU 28 | 0.02 | -6.08 | 60.2 | 0.3552 | 0.0054 | -0.0029 |
| 158 | SLU 29 | 0.02 | -5.85 | 59.35 | 0.3444 | 0.0053 | -0.0028 |
| 158 | SLU 30 | 0.02 | -6.03 | 59.47 | 0.3517 | 0.0053 | -0.0028 |

| Nodo | Cont. | Reazione a traslazione | | | Reazione a rotazione | | |
|---|---|---|---|---|---|---|---|
| Ind. | N.br. | x | y | z | x | y | z |
| 158 | SLU 31 | 0.02 | -7.42 | 67.44 | 0.4216 | 0.0063 | -0.0031 |
| 158 | SLU 32 | 0.02 | -7.16 | 69.12 | 0.4147 | 0.0064 | -0.0033 |
| 158 | SLU 33 | 0.02 | -7.33 | 69.24 | 0.422 | 0.0064 | -0.0032 |
| 158 | SLU 34 | 0.02 | -7.4 | 68.58 | 0.4234 | 0.0064 | -0.0032 |
| 158 | SLU 35 | 0.02 | -7.14 | 70.26 | 0.4165 | 0.0065 | -0.0033 |
| 158 | SLU 36 | 0.02 | -7.31 | 70.39 | 0.4238 | 0.0065 | -0.0033 |
| 158 | SLU 37 | 0.02 | -7.09 | 69.53 | 0.4131 | 0.0065 | -0.0033 |
| 158 | SLU 38 | 0.02 | -7.27 | 69.65 | 0.4204 | 0.0065 | -0.0033 |
| 158 | SLU 39 | 0.02 | -7.66 | 71.6 | 0.4388 | 0.0068 | -0.0033 |
| 158 | SLU 40 | 0.02 | -7.84 | 71.72 | 0.4462 | 0.0068 | -0.0033 |
| 158 | SLU 41 | 0.02 | -7.64 | 72.75 | 0.4407 | 0.0069 | -0.0034 |
| 158 | SLU 42 | 0.02 | -7.82 | 72.87 | 0.448 | 0.0069 | -0.0034 |
| 158 | SLU 43 | 0.01 | -6.85 | 60.92 | 0.3825 | 0.0055 | -0.0028 |
| 158 | SLU 44 | 0.01 | -7.14 | 61.12 | 0.3947 | 0.0055 | -0.0028 |
| 158 | SLU 45 | 0.02 | -6.88 | 62.8 | 0.3878 | 0.0057 | -0.0029 |
| 158 | SLU 46 | 0.01 | -7.05 | 62.92 | 0.3951 | 0.0057 | -0.0029 |
| 158 | SLU 47 | 0.01 | -7.12 | 62.27 | 0.3965 | 0.0056 | -0.0029 |
| 158 | SLU 48 | 0.02 | -6.86 | 63.95 | 0.3896 | 0.0058 | -0.003 |
| 158 | SLU 49 | 0.02 | -7.03 | 64.07 | 0.3969 | 0.0058 | -0.003 |
| 158 | SLU 50 | 0.02 | -6.81 | 63.22 | 0.3861 | 0.0057 | -0.0029 |
| 158 | SLU 51 | 0.02 | -6.99 | 63.34 | 0.3935 | 0.0057 | -0.0029 |
| 158 | SLU 52 | 0.02 | -8.38 | 71.31 | 0.4633 | 0.0066 | -0.0032 |
| 158 | SLU 53 | 0.02 | -8.11 | 72.99 | 0.4564 | 0.0068 | -0.0034 |
| 158 | SLU 54 | 0.02 | -8.29 | 73.11 | 0.4637 | 0.0068 | -0.0034 |
| 158 | SLU 55 | 0.02 | -8.36 | 72.45 | 0.4652 | 0.0067 | -0.0033 |
| 158 | SLU 56 | 0.02 | -8.09 | 74.13 | 0.4582 | 0.0069 | -0.0034 |
| 158 | SLU 57 | 0.02 | -8.27 | 74.26 | 0.4655 | 0.0069 | -0.0034 |
| 158 | SLU 58 | 0.02 | -8.05 | 73.4 | 0.4548 | 0.0069 | -0.0034 |
| 158 | SLU 59 | 0.02 | -8.22 | 73.52 | 0.4621 | 0.0068 | -0.0034 |
| 158 | SLU 60 | 0.02 | -8.62 | 75.47 | 0.4806 | 0.0071 | -0.0034 |
| 158 | SLU 61 | 0.02 | -8.79 | 75.59 | 0.4879 | 0.0071 | -0.0034 |
| 158 | SLU 62 | 0.02 | -8.6 | 76.62 | 0.4824 | 0.0072 | -0.0035 |
| 158 | SLU 63 | 0.02 | -8.77 | 76.74 | 0.4897 | 0.0072 | -0.0035 |
| 158 | SLU 64 | 0.02 | -7.34 | 68.98 | 0.4193 | 0.0062 | -0.0032 |
| 158 | SLU 65 | 0.02 | -7.64 | 69.18 | 0.4315 | 0.0062 | -0.0032 |
| 158 | SLU 66 | 0.02 | -7.37 | 70.86 | 0.4246 | 0.0064 | -0.0034 |
| 158 | SLU 67 | 0.02 | -7.55 | 70.98 | 0.4319 | 0.0064 | -0.0033 |
| 158 | SLU 68 | 0.02 | -7.62 | 70.33 | 0.4333 | 0.0063 | -0.0033 |
| 158 | SLU 69 | 0.02 | -7.35 | 72.01 | 0.4264 | 0.0065 | -0.0034 |
| 158 | SLU 70 | 0.02 | -7.53 | 72.13 | 0.4337 | 0.0065 | -0.0034 |
| 158 | SLU 71 | 0.02 | -7.3 | 71.28 | 0.423 | 0.0064 | -0.0034 |
| 158 | SLU 72 | 0.02 | -7.48 | 71.4 | 0.4303 | 0.0064 | -0.0034 |
| 158 | SLU 73 | 0.02 | -8.87 | 79.37 | 0.5002 | 0.0073 | -0.0037 |
| 158 | SLU 74 | 0.02 | -8.61 | 81.05 | 0.4932 | 0.0075 | -0.0038 |
| 158 | SLU 75 | 0.02 | -8.78 | 81.17 | 0.5006 | 0.0075 | -0.0038 |
| 158 | SLU 76 | 0.02 | -8.85 | 80.52 | 0.502 | 0.0074 | -0.0037 |
| 158 | SLU 77 | 0.02 | -8.59 | 82.2 | 0.4951 | 0.0076 | -0.0039 |
| 158 | SLU 78 | 0.02 | -8.76 | 82.32 | 0.5024 | 0.0076 | -0.0039 |
| 158 | SLU 79 | 0.02 | -8.54 | 81.46 | 0.4916 | 0.0076 | -0.0038 |
| 158 | SLU 80 | 0.02 | -8.72 | 81.58 | 0.4989 | 0.0075 | -0.0038 |
| 158 | SLU 81 | 0.02 | -9.11 | 83.53 | 0.5174 | 0.0079 | -0.0039 |
| 158 | SLU 82 | 0.02 | -9.29 | 83.65 | 0.5247 | 0.0078 | -0.0039 |
| 158 | SLU 83 | 0.02 | -9.09 | 84.68 | 0.5192 | 0.008 | -0.0039 |
| 158 | SLU 84 | 0.02 | -9.27 | 84.8 | 0.5265 | 0.0079 | -0.0039 |
| 158 | SLE RA 1 | 0.01 | -5.54 | 51.29 | 0.3145 | 0.0046 | -0.0024 |
| 158 | SLE RA 2 | 0.01 | -5.74 | 51.42 | 0.3226 | 0.0046 | -0.0024 |
| 158 | SLE RA 3 | 0.01 | -5.56 | 52.54 | 0.318 | 0.0047 | -0.0025 |
| 158 | SLE RA 4 | 0.01 | -5.68 | 52.63 | 0.3229 | 0.0047 | -0.0025 |
| 158 | SLE RA 5 | 0.01 | -5.72 | 52.19 | 0.3238 | 0.0047 | -0.0024 |
| 158 | SLE RA 6 | 0.01 | -5.54 | 53.31 | 0.3192 | 0.0048 | -0.0025 |
| 158 | SLE RA 7 | 0.01 | -5.66 | 53.39 | 0.3241 | 0.0048 | -0.0025 |
| 158 | SLE RA 8 | 0.01 | -5.51 | 52.82 | 0.3169 | 0.0048 | -0.0025 |
| 158 | SLE RA 9 | 0.01 | -5.63 | 52.9 | 0.3218 | 0.0047 | -0.0025 |
| 158 | SLE RA 10 | 0.01 | -6.56 | 58.21 | 0.3684 | 0.0054 | -0.0027 |
| 158 | SLE RA 11 | 0.01 | -6.38 | 59.33 | 0.3637 | 0.0055 | -0.0028 |
| 158 | SLE RA 12 | 0.01 | -6.5 | 59.42 | 0.3686 | 0.0055 | -0.0028 |
| 158 | SLE RA 13 | 0.01 | -6.55 | 58.98 | 0.3696 | 0.0054 | -0.0027 |
| 158 | SLE RA 14 | 0.02 | -6.37 | 60.1 | 0.3649 | 0.0056 | -0.0028 |
| 158 | SLE RA 15 | 0.02 | -6.49 | 60.18 | 0.3698 | 0.0056 | -0.0028 |
| 158 | SLE RA 16 | 0.02 | -6.34 | 59.61 | 0.3627 | 0.0055 | -0.0028 |
| 158 | SLE RA 17 | 0.02 | -6.46 | 59.69 | 0.3675 | 0.0055 | -0.0028 |
| 158 | SLE RA 18 | 0.02 | -6.72 | 60.99 | 0.3798 | 0.0057 | -0.0028 |
| 158 | SLE RA 19 | 0.01 | -6.84 | 61.07 | 0.3847 | 0.0057 | -0.0028 |
| 158 | SLE RA 20 | 0.02 | -6.7 | 61.76 | 0.3811 | 0.0058 | -0.0029 |
| 158 | SLE RA 21 | 0.02 | -6.82 | 61.84 | 0.3859 | 0.0058 | -0.0029 |
| 158 | SLE FR 1 | 0.01 | -5.54 | 51.29 | 0.3145 | 0.0046 | -0.0024 |
| 158 | SLE FR 2 | 0.01 | -5.58 | 51.32 | 0.3161 | 0.0046 | -0.0024 |
| 158 | SLE FR 3 | 0.01 | -5.53 | 51.6 | 0.3149 | 0.0046 | -0.0024 |
| 158 | SLE FR 4 | 0.01 | -5.93 | 54.23 | 0.3357 | 0.0049 | -0.0025 |
| 158 | SLE FR 5 | 0.01 | -5.89 | 54.51 | 0.3346 | 0.005 | -0.0025 |
| 158 | SLE FR 6 | 0.01 | -6.13 | 56.14 | 0.3471 | 0.0052 | -0.0026 |
| 158 | SLE QP 1 | 0.01 | -5.54 | 51.29 | 0.3145 | 0.0046 | -0.0024 |
| 158 | SLE QP 2 | 0.01 | -5.89 | 54.2 | 0.3341 | 0.0049 | -0.0025 |
| 158 | SLD 1 | 0.05 | -5.99 | 40.09 | 0.1624 | 0.0292 | 0.0014 |
| 158 | SLD 2 | 0.05 | -5.99 | 40.09 | 0.1624 | 0.0292 | 0.0014 |
| 158 | SLD 3 | 0.09 | -9.47 | 44.38 | 0.3145 | 0.0366 | 0.0024 |
| 158 | SLD 4 | 0.09 | -9.47 | 44.38 | 0.3145 | 0.0366 | 0.0024 |
| 158 | SLD 5 | -0.02 | -0.65 | 43.45 | 0.0518 | 0.0009 | -0.0029 |

| Nodo | Cont. | Reazione a traslazione | | | Reazione a rotazione | | |
|---|---|---|---|---|---|---|---|
| Ind. | N.br. | x | y | z | x | y | z |
| 158 | SLD 6 | -0.02 | -0.65 | 43.45 | 0.0518 | 0.0009 | -0.0029 |
| 158 | SLD 7 | 0.08 | -12.24 | 57.77 | 0.5589 | 0.0257 | 0.0005 |
| 158 | SLD 8 | 0.08 | -12.24 | 57.77 | 0.5589 | 0.0257 | 0.0005 |
| 158 | SLD 9 | -0.06 | 0.46 | 50.63 | 0.1092 | -0.0158 | -0.0055 |
| 158 | SLD 10 | -0.06 | 0.46 | 50.63 | 0.1092 | -0.0158 | -0.0055 |
| 158 | SLD 11 | 0.05 | -11.14 | 64.95 | 0.6163 | 0.009 | -0.0022 |
| 158 | SLD 12 | 0.05 | -11.14 | 64.95 | 0.6163 | 0.009 | -0.0022 |
| 158 | SLD 13 | -0.06 | -2.31 | 64.02 | 0.3537 | -0.0267 | -0.0074 |
| 158 | SLD 14 | -0.06 | -2.31 | 64.02 | 0.3537 | -0.0267 | -0.0074 |
| 158 | SLD 15 | -0.03 | -5.79 | 68.31 | 0.5058 | -0.0193 | -0.0064 |
| 158 | SLD 16 | -0.03 | -5.79 | 68.31 | 0.5058 | -0.0193 | -0.0064 |
| 158 | SLV 1 | 0.11 | -6.13 | 21.26 | -0.065 | 0.0644 | 0.007 |
| 158 | SLV 2 | 0.11 | -6.13 | 21.26 | -0.065 | 0.0644 | 0.007 |
| 158 | SLV 3 | 0.19 | -14.18 | 31.17 | 0.2869 | 0.0825 | 0.0095 |
| 158 | SLV 4 | 0.19 | -14.18 | 31.17 | 0.2869 | 0.0825 | 0.0095 |
| 158 | SLV 5 | -0.07 | 6.25 | 29.28 | -0.3195 | -0.0046 | -0.0034 |
| 158 | SLV 6 | -0.07 | 6.25 | 29.28 | -0.3195 | -0.0046 | -0.0034 |
| 158 | SLV 7 | 0.18 | -20.59 | 62.32 | 0.8537 | 0.0556 | 0.0048 |
| 158 | SLV 8 | 0.18 | -20.59 | 62.32 | 0.8537 | 0.0556 | 0.0048 |
| 158 | SLV 9 | -0.16 | 8.81 | 46.07 | -0.1856 | -0.0457 | -0.0098 |
| 158 | SLV 10 | -0.16 | 8.81 | 46.07 | -0.1856 | -0.0457 | -0.0098 |
| 158 | SLV 11 | 0.1 | -18.03 | 79.12 | 0.9876 | 0.0145 | -0.0017 |
| 158 | SLV 12 | 0.1 | -18.03 | 79.12 | 0.9876 | 0.0145 | -0.0017 |
| 158 | SLV 13 | -0.16 | 2.4 | 77.23 | 0.3812 | -0.0726 | -0.0145 |
| 158 | SLV 14 | -0.16 | 2.4 | 77.23 | 0.3812 | -0.0726 | -0.0145 |
| 158 | SLV 15 | -0.09 | -5.65 | 87.14 | 0.7332 | -0.0545 | -0.0121 |
| 158 | SLV 16 | -0.09 | -5.65 | 87.14 | 0.7332 | -0.0545 | -0.0121 |
| 159 | SLU 1 | 0 | -5.41 | 44.64 | 0.3184 | -0.0013 | 0 |
| 159 | SLU 2 | 0 | -3.6 | 42.12 | 0.2308 | -0.0021 | 0 |
| 159 | SLU 3 | 0 | -5.8 | 46.44 | 0.3402 | -0.0014 | 0 |
| 159 | SLU 4 | 0 | -4.72 | 44.93 | 0.2876 | -0.0019 | 0 |
| 159 | SLU 5 | 0 | -4 | 43.4 | 0.2516 | -0.0022 | 0 |
| 159 | SLU 6 | 0 | -6.2 | 47.71 | 0.3611 | -0.0015 | 0 |
| 159 | SLU 7 | 0 | -5.12 | 46.2 | 0.3085 | -0.002 | 0 |
| 159 | SLU 8 | 0 | -6.19 | 47.18 | 0.3601 | -0.0014 | 0 |
| 159 | SLU 9 | 0 | -5.11 | 45.67 | 0.3076 | -0.0019 | 0 |
| 159 | SLU 10 | 0 | -4.32 | 50.46 | 0.2761 | -0.0025 | 0 |
| 159 | SLU 11 | 0 | -6.52 | 54.78 | 0.3855 | -0.0019 | 0 |
| 159 | SLU 12 | 0 | -5.44 | 53.27 | 0.3329 | -0.0023 | 0 |
| 159 | SLU 13 | 0 | -4.71 | 51.74 | 0.297 | -0.0026 | 0 |
| 159 | SLU 14 | 0 | -6.91 | 56.05 | 0.4064 | -0.0019 | 0 |
| 159 | SLU 15 | 0 | -5.83 | 54.54 | 0.3538 | -0.0024 | 0 |
| 159 | SLU 16 | 0 | -6.91 | 55.52 | 0.4055 | -0.0018 | 0 |
| 159 | SLU 17 | 0 | -5.83 | 54.01 | 0.3529 | -0.0023 | 0 |
| 159 | SLU 18 | 0 | -6.42 | 56.56 | 0.3831 | -0.0019 | 0 |
| 159 | SLU 19 | 0 | -5.34 | 55.05 | 0.3306 | -0.0024 | 0 |
| 159 | SLU 20 | 0 | -6.82 | 57.83 | 0.404 | -0.002 | 0 |
| 159 | SLU 21 | 0 | -5.74 | 56.32 | 0.3514 | -0.0025 | 0 |
| 159 | SLU 22 | 0 | -6.19 | 52.51 | 0.3666 | -0.0016 | 0 |
| 159 | SLU 23 | 0 | -4.39 | 49.99 | 0.2789 | -0.0024 | 0 |
| 159 | SLU 24 | 0 | -6.59 | 54.3 | 0.3884 | -0.0017 | 0 |
| 159 | SLU 25 | 0 | -5.51 | 52.79 | 0.3358 | -0.0022 | 0 |
| 159 | SLU 26 | 0 | -4.79 | 51.26 | 0.2998 | -0.0025 | 0 |
| 159 | SLU 27 | 0 | -6.99 | 55.57 | 0.4092 | -0.0018 | 0 |
| 159 | SLU 28 | 0 | -5.91 | 54.06 | 0.3566 | -0.0023 | 0 |
| 159 | SLU 29 | 0 | -6.98 | 55.05 | 0.4083 | -0.0017 | 0 |
| 159 | SLU 30 | 0 | -5.9 | 53.54 | 0.3557 | -0.0022 | 0 |
| 159 | SLU 31 | 0 | -5.11 | 58.33 | 0.3243 | -0.0029 | 0 |
| 159 | SLU 32 | 0 | -7.31 | 62.64 | 0.4337 | -0.0022 | 0 |
| 159 | SLU 33 | 0 | -6.23 | 61.13 | 0.3811 | -0.0027 | 0 |
| 159 | SLU 34 | 0 | -5.5 | 59.6 | 0.3451 | -0.0029 | 0 |
| 159 | SLU 35 | 0 | -7.7 | 63.91 | 0.4545 | -0.0023 | 0 |
| 159 | SLU 36 | 0 | -6.62 | 62.4 | 0.402 | -0.0028 | 0 |
| 159 | SLU 37 | 0 | -7.7 | 63.39 | 0.4536 | -0.0022 | 0 |
| 159 | SLU 38 | 0 | -6.62 | 61.88 | 0.4011 | -0.0027 | 0 |
| 159 | SLU 39 | 0 | -7.21 | 64.42 | 0.4313 | -0.0022 | 0 |
| 159 | SLU 40 | 0 | -6.13 | 62.91 | 0.3787 | -0.0027 | 0 |
| 159 | SLU 41 | 0 | -7.61 | 65.69 | 0.4522 | -0.0023 | 0 |
| 159 | SLU 42 | 0 | -6.53 | 64.18 | 0.3996 | -0.0028 | 0 |
| 159 | SLU 43 | 0 | -6.76 | 55.34 | 0.3974 | -0.0015 | 0 |
| 159 | SLU 44 | 0 | -4.96 | 52.82 | 0.3098 | -0.0023 | 0 |
| 159 | SLU 45 | 0 | -7.16 | 57.13 | 0.4192 | -0.0017 | 0 |
| 159 | SLU 46 | 0 | -6.08 | 55.62 | 0.3666 | -0.0022 | 0 |
| 159 | SLU 47 | 0 | -5.35 | 54.09 | 0.3307 | -0.0024 | 0 |
| 159 | SLU 48 | 0 | -7.55 | 58.4 | 0.4401 | -0.0017 | 0 |
| 159 | SLU 49 | 0 | -6.47 | 56.89 | 0.3875 | -0.0022 | 0 |
| 159 | SLU 50 | 0 | -7.55 | 57.88 | 0.4392 | -0.0017 | 0 |
| 159 | SLU 51 | 0 | -6.47 | 56.37 | 0.3866 | -0.0022 | 0 |
| 159 | SLU 52 | 0 | -5.67 | 61.16 | 0.3551 | -0.0028 | 0 |
| 159 | SLU 53 | 0 | -7.87 | 65.47 | 0.4645 | -0.0021 | 0 |
| 159 | SLU 54 | 0 | -6.79 | 63.96 | 0.4119 | -0.0026 | 0 |
| 159 | SLU 55 | 0 | -6.06 | 62.43 | 0.376 | -0.0029 | 0 |
| 159 | SLU 56 | 0 | -8.26 | 66.74 | 0.4854 | -0.0022 | 0 |
| 159 | SLU 57 | 0 | -7.18 | 65.23 | 0.4328 | -0.0027 | 0 |
| 159 | SLU 58 | 0 | -8.26 | 66.22 | 0.4845 | -0.0021 | 0 |
| 159 | SLU 59 | 0 | -7.18 | 64.71 | 0.4319 | -0.0026 | 0 |
| 159 | SLU 60 | 0 | -7.78 | 67.25 | 0.4622 | -0.0022 | 0 |
| 159 | SLU 61 | 0 | -6.7 | 65.74 | 0.4096 | -0.0027 | 0 |

| Nodo | Cont. | Reazione a traslazione | | | Reazione a rotazione | | |
|---|---|---|---|---|---|---|---|
| Ind. | N.br. | x | y | z | x | y | z |
| 159 | SLU 62 | 0 | -8.17 | 68.52 | 0.483 | -0.0022 | 0 |
| 159 | SLU 63 | 0 | -7.09 | 67.01 | 0.4304 | -0.0027 | 0 |
| 159 | SLU 64 | 0 | -7.54 | 63.2 | 0.4456 | -0.0019 | 0 |
| 159 | SLU 65 | 0 | -5.74 | 60.69 | 0.358 | -0.0027 | 0 |
| 159 | SLU 66 | 0 | -7.94 | 65 | 0.4674 | -0.002 | 0 |
| 159 | SLU 67 | 0 | -6.86 | 63.49 | 0.4148 | -0.0025 | 0 |
| 159 | SLU 68 | 0 | -6.14 | 61.96 | 0.3788 | -0.0028 | 0 |
| 159 | SLU 69 | 0 | -8.34 | 66.27 | 0.4882 | -0.0021 | 0 |
| 159 | SLU 70 | 0 | -7.26 | 64.76 | 0.4357 | -0.0026 | 0 |
| 159 | SLU 71 | 0 | -8.33 | 65.74 | 0.4873 | -0.002 | 0 |
| 159 | SLU 72 | 0 | -7.25 | 64.23 | 0.4347 | -0.0025 | 0 |
| 159 | SLU 73 | 0 | -6.46 | 69.03 | 0.4033 | -0.0031 | 0 |
| 159 | SLU 74 | 0 | -8.66 | 73.34 | 0.5127 | -0.0025 | 0 |
| 159 | SLU 75 | 0 | -7.58 | 71.83 | 0.4601 | -0.0029 | 0 |
| 159 | SLU 76 | 0 | -6.85 | 70.3 | 0.4241 | -0.0032 | 0 |
| 159 | SLU 77 | 0 | -9.05 | 74.61 | 0.5335 | -0.0025 | 0 |
| 159 | SLU 78 | 0 | -7.97 | 73.1 | 0.481 | -0.003 | 0 |
| 159 | SLU 79 | 0 | -9.05 | 74.08 | 0.5326 | -0.0024 | 0 |
| 159 | SLU 80 | 0 | -7.97 | 72.57 | 0.4801 | -0.0029 | 0 |
| 159 | SLU 81 | 0 | -8.56 | 75.12 | 0.5103 | -0.0025 | 0 |
| 159 | SLU 82 | 0 | -7.48 | 73.61 | 0.4577 | -0.003 | 0 |
| 159 | SLU 83 | 0 | -8.96 | 76.39 | 0.5312 | -0.0026 | 0 |
| 159 | SLU 84 | 0 | -7.88 | 74.88 | 0.4786 | -0.0031 | 0 |
| 159 | SLE RA 1 | 0 | -5.63 | 46.89 | 0.3322 | -0.0014 | 0 |
| 159 | SLE RA 2 | 0 | -4.43 | 45.21 | 0.2738 | -0.0019 | 0 |
| 159 | SLE RA 3 | 0 | -5.9 | 48.09 | 0.3467 | -0.0015 | 0 |
| 159 | SLE RA 4 | 0 | -5.18 | 47.08 | 0.3116 | -0.0018 | 0 |
| 159 | SLE RA 5 | 0 | -4.69 | 46.06 | 0.2877 | -0.002 | 0 |
| 159 | SLE RA 6 | 0 | -6.16 | 48.93 | 0.3606 | -0.0015 | 0 |
| 159 | SLE RA 7 | 0 | -5.44 | 47.93 | 0.3255 | -0.0018 | 0 |
| 159 | SLE RA 8 | 0 | -6.16 | 48.58 | 0.36 | -0.0014 | 0 |
| 159 | SLE RA 9 | 0 | -5.44 | 47.58 | 0.3249 | -0.0018 | 0 |
| 159 | SLE RA 10 | 0 | -4.91 | 50.77 | 0.304 | -0.0022 | 0 |
| 159 | SLE RA 11 | 0 | -6.37 | 53.65 | 0.3769 | -0.0018 | 0 |
| 159 | SLE RA 12 | 0 | -5.65 | 52.64 | 0.3418 | -0.0021 | 0 |
| 159 | SLE RA 13 | 0 | -5.17 | 51.62 | 0.3179 | -0.0023 | 0 |
| 159 | SLE RA 14 | 0 | -6.64 | 54.49 | 0.3908 | -0.0018 | 0 |
| 159 | SLE RA 15 | 0 | -5.92 | 53.49 | 0.3558 | -0.0021 | 0 |
| 159 | SLE RA 16 | 0 | -6.63 | 54.14 | 0.3902 | -0.0017 | 0 |
| 159 | SLE RA 17 | 0 | -5.91 | 53.14 | 0.3552 | -0.0021 | 0 |
| 159 | SLE RA 18 | 0 | -6.31 | 54.83 | 0.3753 | -0.0018 | 0 |
| 159 | SLE RA 19 | 0 | -5.59 | 53.82 | 0.3403 | -0.0021 | 0 |
| 159 | SLE RA 20 | 0 | -6.57 | 55.68 | 0.3892 | -0.0018 | 0 |
| 159 | SLE RA 21 | 0 | -5.85 | 54.67 | 0.3542 | -0.0022 | 0 |
| 159 | SLE FR 1 | 0 | -5.63 | 46.89 | 0.3322 | -0.0014 | 0 |
| 159 | SLE FR 2 | 0 | -5.39 | 46.55 | 0.3205 | -0.0015 | 0 |
| 159 | SLE FR 3 | 0 | -5.74 | 47.23 | 0.3377 | -0.0014 | 0 |
| 159 | SLE FR 4 | 0 | -5.59 | 48.94 | 0.3334 | -0.0016 | 0 |
| 159 | SLE FR 5 | 0 | -5.94 | 49.61 | 0.3507 | -0.0015 | 0 |
| 159 | SLE FR 6 | 0 | -5.97 | 50.86 | 0.3537 | -0.0016 | 0 |
| 159 | SLE QP 1 | 0 | -5.63 | 46.89 | 0.3322 | -0.0014 | 0 |
| 159 | SLE QP 2 | 0 | -5.83 | 49.27 | 0.3451 | -0.0015 | 0 |
| 159 | SLD 1 | 0.01 | -5.58 | 49.39 | 0.3339 | 0.021 | -0.0001 |
| 159 | SLD 2 | 0.01 | -5.58 | 49.39 | 0.3339 | 0.021 | -0.0001 |
| 159 | SLD 3 | 0.05 | -8.72 | 52.5 | 0.4886 | 0.0322 | -0.0002 |
| 159 | SLD 4 | 0.05 | -8.72 | 52.5 | 0.4886 | 0.0322 | -0.0002 |
| 159 | SLD 5 | -0.05 | -1.01 | 44.59 | 0.107 | -0.0116 | 0.0001 |
| 159 | SLD 6 | -0.05 | -1.01 | 44.59 | 0.107 | -0.0116 | 0.0001 |
| 159 | SLD 7 | 0.07 | -11.45 | 54.95 | 0.6229 | 0.0255 | -0.0002 |
| 159 | SLD 8 | 0.07 | -11.45 | 54.95 | 0.6229 | 0.0255 | -0.0002 |
| 159 | SLD 9 | -0.07 | -0.22 | 43.59 | 0.0674 | -0.0285 | 0.0002 |
| 159 | SLD 10 | -0.07 | -0.22 | 43.59 | 0.0674 | -0.0285 | 0.0002 |
| 159 | SLD 11 | 0.05 | -10.66 | 53.95 | 0.5832 | 0.0087 | -0.0001 |
| 159 | SLD 12 | 0.05 | -10.66 | 53.95 | 0.5832 | 0.0087 | -0.0001 |
| 159 | SLD 13 | -0.05 | -2.95 | 46.05 | 0.2016 | -0.0351 | 0.0002 |
| 159 | SLD 14 | -0.05 | -2.95 | 46.05 | 0.2016 | -0.0351 | 0.0002 |
| 159 | SLD 15 | -0.01 | -6.08 | 49.15 | 0.3564 | -0.024 | 0.0001 |
| 159 | SLD 16 | -0.01 | -6.08 | 49.15 | 0.3564 | -0.024 | 0.0001 |
| 159 | SLV 1 | 0.03 | -5.39 | 49.81 | 0.3262 | 0.0524 | -0.0003 |
| 159 | SLV 2 | 0.03 | -5.39 | 49.81 | 0.3262 | 0.0524 | -0.0003 |
| 159 | SLV 3 | 0.13 | -12.71 | 57.19 | 0.6875 | 0.0806 | -0.0006 |
| 159 | SLV 4 | 0.13 | -12.71 | 57.19 | 0.6875 | 0.0806 | -0.0006 |
| 159 | SLV 5 | -0.13 | 5.4 | 38.24 | -0.2085 | -0.0281 | 0.0002 |
| 159 | SLV 6 | -0.13 | 5.4 | 38.24 | -0.2085 | -0.0281 | 0.0002 |
| 159 | SLV 7 | 0.18 | -19 | 62.84 | 0.9958 | 0.0659 | -0.0005 |
| 159 | SLV 8 | 0.18 | -19 | 62.84 | 0.9958 | 0.0659 | -0.0005 |
| 159 | SLV 9 | -0.18 | 7.33 | 35.71 | -0.3055 | -0.0689 | 0.0005 |
| 159 | SLV 10 | -0.18 | 7.33 | 35.71 | -0.3055 | -0.0689 | 0.0005 |
| 159 | SLV 11 | 0.13 | -17.07 | 60.3 | 0.8987 | 0.0251 | -0.0002 |
| 159 | SLV 12 | 0.13 | -17.07 | 60.3 | 0.8987 | 0.0251 | -0.0002 |
| 159 | SLV 13 | -0.13 | 1.04 | 41.35 | 0.0027 | -0.0836 | 0.0006 |
| 159 | SLV 14 | -0.13 | 1.04 | 41.35 | 0.0027 | -0.0836 | 0.0006 |
| 159 | SLV 15 | -0.03 | -6.28 | 48.73 | 0.364 | -0.0554 | 0.0003 |
| 159 | SLV 16 | -0.03 | -6.28 | 48.73 | 0.364 | -0.0554 | 0.0003 |
| 160 | SLU 1 | -0.11 | 2.14 | 58.03 | -0.0586 | -0.0353 | 0.0004 |
| 160 | SLU 2 | -0.12 | 2.4 | 59.36 | -0.0702 | -0.0271 | 0.0004 |
| 160 | SLU 3 | -0.12 | 2.23 | 59.77 | -0.0608 | -0.0368 | 0.0004 |
| 160 | SLU 4 | -0.12 | 2.38 | 60.57 | -0.0678 | -0.0319 | 0.0004 |

| Nodo | Cont. | Reazione a traslazione | | | Reazione a rotazione | | |
|---|---|---|---|---|---|---|---|
| Ind. | N.br. | x | y | z | x | y | z |
| 160 | SLU 5 | -0.12 | 2.44 | 60.33 | -0.0711 | -0.028 | 0.0004 |
| 160 | SLU 6 | -0.12 | 2.27 | 60.74 | -0.0618 | -0.0377 | 0.0004 |
| 160 | SLU 7 | -0.12 | 2.43 | 61.54 | -0.0687 | -0.0328 | 0.0004 |
| 160 | SLU 8 | -0.12 | 2.23 | 59.96 | -0.0605 | -0.037 | 0.0004 |
| 160 | SLU 9 | -0.12 | 2.38 | 60.76 | -0.0675 | -0.0321 | 0.0004 |
| 160 | SLU 10 | -0.14 | 3.03 | 67.35 | -0.0895 | -0.0349 | 0.0005 |
| 160 | SLU 11 | -0.14 | 2.86 | 67.76 | -0.0801 | -0.0446 | 0.0005 |
| 160 | SLU 12 | -0.15 | 3.02 | 68.56 | -0.0871 | -0.0397 | 0.0005 |
| 160 | SLU 13 | -0.15 | 3.08 | 68.32 | -0.0905 | -0.0358 | 0.0005 |
| 160 | SLU 14 | -0.15 | 2.9 | 68.72 | -0.0811 | -0.0455 | 0.0005 |
| 160 | SLU 15 | -0.15 | 3.06 | 69.52 | -0.0881 | -0.0405 | 0.0005 |
| 160 | SLU 16 | -0.14 | 2.86 | 67.95 | -0.0799 | -0.0448 | 0.0005 |
| 160 | SLU 17 | -0.15 | 3.01 | 68.75 | -0.0868 | -0.0399 | 0.0005 |
| 160 | SLU 18 | -0.15 | 3.04 | 69.44 | -0.0862 | -0.0464 | 0.0005 |
| 160 | SLU 19 | -0.15 | 3.2 | 70.24 | -0.0931 | -0.0415 | 0.0005 |
| 160 | SLU 20 | -0.15 | 3.09 | 70.41 | -0.0872 | -0.0473 | 0.0005 |
| 160 | SLU 21 | -0.15 | 3.24 | 71.21 | -0.0941 | -0.0424 | 0.0005 |
| 160 | SLU 22 | -0.14 | 2.64 | 65.88 | -0.073 | -0.0424 | 0.0005 |
| 160 | SLU 23 | -0.14 | 2.9 | 67.21 | -0.0845 | -0.0342 | 0.0005 |
| 160 | SLU 24 | -0.14 | 2.73 | 67.62 | -0.0752 | -0.0439 | 0.0005 |
| 160 | SLU 25 | -0.14 | 2.88 | 68.42 | -0.0821 | -0.039 | 0.0005 |
| 160 | SLU 26 | -0.14 | 2.94 | 68.18 | -0.0855 | -0.0351 | 0.0005 |
| 160 | SLU 27 | -0.14 | 2.77 | 68.59 | -0.0762 | -0.0448 | 0.0005 |
| 160 | SLU 28 | -0.15 | 2.92 | 69.39 | -0.0831 | -0.0398 | 0.0005 |
| 160 | SLU 29 | -0.14 | 2.72 | 67.81 | -0.0749 | -0.0441 | 0.0005 |
| 160 | SLU 30 | -0.14 | 2.88 | 68.61 | -0.0819 | -0.0392 | 0.0005 |
| 160 | SLU 31 | -0.16 | 3.53 | 75.2 | -0.1038 | -0.042 | 0.0006 |
| 160 | SLU 32 | -0.16 | 3.36 | 75.61 | -0.0945 | -0.0517 | 0.0006 |
| 160 | SLU 33 | -0.17 | 3.51 | 76.41 | -0.1015 | -0.0467 | 0.0006 |
| 160 | SLU 34 | -0.17 | 3.57 | 76.17 | -0.1048 | -0.0428 | 0.0006 |
| 160 | SLU 35 | -0.17 | 3.4 | 76.57 | -0.0955 | -0.0525 | 0.0006 |
| 160 | SLU 36 | -0.17 | 3.56 | 77.37 | -0.1024 | -0.0476 | 0.0006 |
| 160 | SLU 37 | -0.17 | 3.36 | 75.8 | -0.0942 | -0.0519 | 0.0006 |
| 160 | SLU 38 | -0.17 | 3.51 | 76.6 | -0.1012 | -0.047 | 0.0006 |
| 160 | SLU 39 | -0.17 | 3.54 | 77.29 | -0.1005 | -0.0535 | 0.0006 |
| 160 | SLU 40 | -0.17 | 3.7 | 78.09 | -0.1075 | -0.0486 | 0.0006 |
| 160 | SLU 41 | -0.17 | 3.59 | 78.26 | -0.1015 | -0.0544 | 0.0006 |
| 160 | SLU 42 | -0.18 | 3.74 | 79.06 | -0.1085 | -0.0495 | 0.0006 |
| 160 | SLU 43 | -0.14 | 2.61 | 72.75 | -0.0712 | -0.0434 | 0.0005 |
| 160 | SLU 44 | -0.15 | 2.87 | 74.08 | -0.0828 | -0.0352 | 0.0005 |
| 160 | SLU 45 | -0.15 | 2.7 | 74.49 | -0.0735 | -0.0449 | 0.0005 |
| 160 | SLU 46 | -0.15 | 2.85 | 75.29 | -0.0804 | -0.04 | 0.0005 |
| 160 | SLU 47 | -0.15 | 2.91 | 75.05 | -0.0838 | -0.0361 | 0.0005 |
| 160 | SLU 48 | -0.15 | 2.74 | 75.46 | -0.0744 | -0.0458 | 0.0005 |
| 160 | SLU 49 | -0.15 | 2.9 | 76.25 | -0.0814 | -0.0409 | 0.0005 |
| 160 | SLU 50 | -0.15 | 2.7 | 74.68 | -0.0732 | -0.0452 | 0.0005 |
| 160 | SLU 51 | -0.15 | 2.85 | 75.48 | -0.0801 | -0.0403 | 0.0005 |
| 160 | SLU 52 | -0.17 | 3.5 | 82.07 | -0.1021 | -0.043 | 0.0006 |
| 160 | SLU 53 | -0.17 | 3.33 | 82.48 | -0.0928 | -0.0527 | 0.0006 |
| 160 | SLU 54 | -0.17 | 3.49 | 83.27 | -0.0997 | -0.0478 | 0.0006 |
| 160 | SLU 55 | -0.17 | 3.55 | 83.03 | -0.1031 | -0.0439 | 0.0006 |
| 160 | SLU 56 | -0.17 | 3.37 | 83.44 | -0.0938 | -0.0536 | 0.0006 |
| 160 | SLU 57 | -0.18 | 3.53 | 84.24 | -0.1007 | -0.0487 | 0.0006 |
| 160 | SLU 58 | -0.17 | 3.33 | 82.67 | -0.0925 | -0.053 | 0.0006 |
| 160 | SLU 59 | -0.17 | 3.49 | 83.47 | -0.0994 | -0.0481 | 0.0006 |
| 160 | SLU 60 | -0.18 | 3.52 | 84.16 | -0.0988 | -0.0546 | 0.0006 |
| 160 | SLU 61 | -0.18 | 3.67 | 84.96 | -0.1058 | -0.0496 | 0.0006 |
| 160 | SLU 62 | -0.18 | 3.56 | 85.13 | -0.0998 | -0.0554 | 0.0006 |
| 160 | SLU 63 | -0.18 | 3.71 | 85.93 | -0.1067 | -0.0505 | 0.0006 |
| 160 | SLU 64 | -0.16 | 3.11 | 80.6 | -0.0856 | -0.0505 | 0.0006 |
| 160 | SLU 65 | -0.17 | 3.37 | 81.93 | -0.0972 | -0.0423 | 0.0006 |
| 160 | SLU 66 | -0.17 | 3.2 | 82.34 | -0.0878 | -0.052 | 0.0006 |
| 160 | SLU 67 | -0.17 | 3.35 | 83.14 | -0.0948 | -0.0471 | 0.0006 |
| 160 | SLU 68 | -0.17 | 3.41 | 82.9 | -0.0982 | -0.0432 | 0.0006 |
| 160 | SLU 69 | -0.17 | 3.24 | 83.3 | -0.0888 | -0.0529 | 0.0006 |
| 160 | SLU 70 | -0.17 | 3.4 | 84.1 | -0.0958 | -0.048 | 0.0006 |
| 160 | SLU 71 | -0.17 | 3.2 | 82.53 | -0.0876 | -0.0523 | 0.0006 |
| 160 | SLU 72 | -0.17 | 3.35 | 83.33 | -0.0945 | -0.0474 | 0.0006 |
| 160 | SLU 73 | -0.19 | 4 | 89.92 | -0.1165 | -0.0501 | 0.0007 |
| 160 | SLU 74 | -0.19 | 3.83 | 90.32 | -0.1071 | -0.0598 | 0.0007 |
| 160 | SLU 75 | -0.19 | 3.98 | 91.12 | -0.1141 | -0.0549 | 0.0007 |
| 160 | SLU 76 | -0.19 | 4.04 | 90.88 | -0.1175 | -0.051 | 0.0007 |
| 160 | SLU 77 | -0.19 | 3.87 | 91.29 | -0.1081 | -0.0607 | 0.0007 |
| 160 | SLU 78 | -0.2 | 4.03 | 92.09 | -0.1151 | -0.0558 | 0.0007 |
| 160 | SLU 79 | -0.19 | 3.83 | 90.52 | -0.1069 | -0.0601 | 0.0007 |
| 160 | SLU 80 | -0.2 | 3.98 | 91.32 | -0.1138 | -0.0552 | 0.0007 |
| 160 | SLU 81 | -0.2 | 4.01 | 92.01 | -0.1132 | -0.0616 | 0.0007 |
| 160 | SLU 82 | -0.2 | 4.17 | 92.81 | -0.1201 | -0.0567 | 0.0007 |
| 160 | SLU 83 | -0.2 | 4.06 | 92.97 | -0.1142 | -0.0625 | 0.0007 |
| 160 | SLU 84 | -0.2 | 4.21 | 93.77 | -0.1211 | -0.0576 | 0.0007 |
| 160 | SLE RA 1 | -0.12 | 2.28 | 60.27 | -0.0627 | -0.0373 | 0.0004 |
| 160 | SLE RA 2 | -0.12 | 2.46 | 61.16 | -0.0704 | -0.0318 | 0.0004 |
| 160 | SLE RA 3 | -0.12 | 2.34 | 61.43 | -0.0642 | -0.0383 | 0.0005 |
| 160 | SLE RA 4 | -0.13 | 2.44 | 61.97 | -0.0688 | -0.035 | 0.0004 |
| 160 | SLE RA 5 | -0.13 | 2.48 | 61.81 | -0.0711 | -0.0324 | 0.0004 |
| 160 | SLE RA 6 | -0.13 | 2.37 | 62.08 | -0.0648 | -0.0389 | 0.0005 |
| 160 | SLE RA 7 | -0.13 | 2.47 | 62.61 | -0.0695 | -0.0356 | 0.0004 |
| 160 | SLE RA 8 | -0.12 | 2.34 | 61.56 | -0.064 | -0.0385 | 0.0005 |

| Nodo | Cont. | Reazione a traslazione | | | Reazione a rotazione | | |
|---|---|---|---|---|---|---|---|
| Ind. | N.br. | x | y | z | x | y | z |
| 160 | SLE RA 9 | -0.13 | 2.44 | 62.1 | -0.0686 | -0.0352 | 0.0004 |
| 160 | SLE RA 10 | -0.14 | 2.88 | 66.49 | -0.0833 | -0.037 | 0.0005 |
| 160 | SLE RA 11 | -0.14 | 2.76 | 66.76 | -0.0771 | -0.0435 | 0.0005 |
| 160 | SLE RA 12 | -0.14 | 2.87 | 67.29 | -0.0817 | -0.0402 | 0.0005 |
| 160 | SLE RA 13 | -0.14 | 2.91 | 67.13 | -0.0839 | -0.0376 | 0.0005 |
| 160 | SLE RA 14 | -0.14 | 2.79 | 67.4 | -0.0777 | -0.0441 | 0.0005 |
| 160 | SLE RA 15 | -0.14 | 2.89 | 67.94 | -0.0823 | -0.0408 | 0.0005 |
| 160 | SLE RA 16 | -0.14 | 2.76 | 66.89 | -0.0769 | -0.0437 | 0.0005 |
| 160 | SLE RA 17 | -0.14 | 2.87 | 67.42 | -0.0815 | -0.0404 | 0.0005 |
| 160 | SLE RA 18 | -0.14 | 2.89 | 67.88 | -0.0811 | -0.0447 | 0.0005 |
| 160 | SLE RA 19 | -0.15 | 2.99 | 68.41 | -0.0857 | -0.0414 | 0.0005 |
| 160 | SLE RA 20 | -0.15 | 2.91 | 68.52 | -0.0817 | -0.0453 | 0.0005 |
| 160 | SLE RA 21 | -0.15 | 3.02 | 69.06 | -0.0864 | -0.042 | 0.0005 |
| 160 | SLE FR 1 | -0.12 | 2.28 | 60.27 | -0.0627 | -0.0373 | 0.0004 |
| 160 | SLE FR 2 | -0.12 | 2.32 | 60.45 | -0.0642 | -0.0362 | 0.0004 |
| 160 | SLE FR 3 | -0.12 | 2.29 | 60.53 | -0.0629 | -0.0375 | 0.0004 |
| 160 | SLE FR 4 | -0.13 | 2.5 | 62.73 | -0.0697 | -0.0384 | 0.0005 |
| 160 | SLE FR 5 | -0.13 | 2.48 | 62.81 | -0.0685 | -0.0398 | 0.0005 |
| 160 | SLE FR 6 | -0.13 | 2.58 | 64.08 | -0.0719 | -0.041 | 0.0005 |
| 160 | SLE QP 1 | -0.12 | 2.28 | 60.27 | -0.0627 | -0.0373 | 0.0004 |
| 160 | SLE QP 2 | -0.13 | 2.46 | 62.55 | -0.0682 | -0.0395 | 0.0005 |
| 160 | SLD 1 | -0.08 | 2.56 | 45.11 | -0.0919 | -0.015 | 0.0002 |
| 160 | SLD 2 | -0.08 | 2.56 | 45.11 | -0.0919 | -0.015 | 0.0002 |
| 160 | SLD 3 | 0 | -2 | 43.76 | 0.1009 | 0.0266 | 0.0003 |
| 160 | SLD 4 | 0 | -2 | 43.76 | 0.1009 | 0.0266 | 0.0003 |
| 160 | SLD 5 | -0.23 | 9.41 | 59.37 | -0.3677 | -0.0953 | 0.0002 |
| 160 | SLD 6 | -0.23 | 9.41 | 59.37 | -0.3677 | -0.0953 | 0.0002 |
| 160 | SLD 7 | 0.03 | -5.79 | 54.87 | 0.2749 | 0.0434 | 0.0005 |
| 160 | SLD 8 | 0.03 | -5.79 | 54.87 | 0.2749 | 0.0434 | 0.0005 |
| 160 | SLD 9 | -0.29 | 10.72 | 70.24 | -0.4113 | -0.1225 | 0.0004 |
| 160 | SLD 10 | -0.29 | 10.72 | 70.24 | -0.4113 | -0.1225 | 0.0004 |
| 160 | SLD 11 | -0.02 | -4.48 | 65.74 | 0.2313 | 0.0162 | 0.0007 |
| 160 | SLD 12 | -0.02 | -4.48 | 65.74 | 0.2313 | 0.0162 | 0.0007 |
| 160 | SLD 13 | -0.26 | 6.93 | 81.35 | -0.2373 | -0.1056 | 0.0007 |
| 160 | SLD 14 | -0.26 | 6.93 | 81.35 | -0.2373 | -0.1056 | 0.0007 |
| 160 | SLD 15 | -0.18 | 2.37 | 80 | -0.0445 | -0.064 | 0.0008 |
| 160 | SLD 16 | -0.18 | 2.37 | 80 | -0.0445 | -0.064 | 0.0008 |
| 160 | SLV 1 | -0.02 | 2.71 | 21.88 | -0.1234 | 0.0124 | -0.0003 |
| 160 | SLV 2 | -0.02 | 2.71 | 21.88 | -0.1234 | 0.0124 | -0.0003 |
| 160 | SLV 3 | 0.18 | -7.88 | 18.7 | 0.3242 | 0.1185 | 0 |
| 160 | SLV 4 | 0.18 | -7.88 | 18.7 | 0.3242 | 0.1185 | 0 |
| 160 | SLV 5 | -0.4 | 18.6 | 55.18 | -0.7635 | -0.1848 | -0.0001 |
| 160 | SLV 6 | -0.4 | 18.6 | 55.18 | -0.7635 | -0.1848 | -0.0001 |
| 160 | SLV 7 | 0.27 | -16.7 | 44.57 | 0.7283 | 0.1687 | 0.0007 |
| 160 | SLV 8 | 0.27 | -16.7 | 44.57 | 0.7283 | 0.1687 | 0.0007 |
| 160 | SLV 9 | -0.53 | 21.63 | 80.54 | -0.8647 | -0.2478 | 0.0003 |
| 160 | SLV 10 | -0.53 | 21.63 | 80.54 | -0.8647 | -0.2478 | 0.0003 |
| 160 | SLV 11 | 0.15 | -13.67 | 69.93 | 0.6271 | 0.1057 | 0.001 |
| 160 | SLV 12 | 0.15 | -13.67 | 69.93 | 0.6271 | 0.1057 | 0.001 |
| 160 | SLV 13 | -0.44 | 12.81 | 106.41 | -0.4606 | -0.1976 | 0.001 |
| 160 | SLV 14 | -0.44 | 12.81 | 106.41 | -0.4606 | -0.1976 | 0.001 |
| 160 | SLV 15 | -0.24 | 2.22 | 103.23 | -0.013 | -0.0915 | 0.0012 |
| 160 | SLV 16 | -0.24 | 2.22 | 103.23 | -0.013 | -0.0915 | 0.0012 |
| 161 | SLU 1 | -0.23 | -8.3 | 45.9 | 0.4345 | -0.0458 | 0.0184 |
| 161 | SLU 2 | -0.23 | -8.69 | 46.41 | 0.4548 | -0.0453 | 0.018 |
| 161 | SLU 3 | -0.25 | -8.17 | 46.77 | 0.4282 | -0.0476 | 0.0193 |
| 161 | SLU 4 | -0.24 | -8.41 | 47.08 | 0.4403 | -0.0473 | 0.019 |
| 161 | SLU 5 | -0.24 | -8.39 | 46.45 | 0.4389 | -0.0464 | 0.0186 |
| 161 | SLU 6 | -0.26 | -7.87 | 46.81 | 0.4123 | -0.0487 | 0.0199 |
| 161 | SLU 7 | -0.26 | -8.11 | 47.11 | 0.4245 | -0.0484 | 0.0196 |
| 161 | SLU 8 | -0.26 | -7.7 | 45.97 | 0.4028 | -0.0479 | 0.0196 |
| 161 | SLU 9 | -0.25 | -7.93 | 46.28 | 0.4149 | -0.0477 | 0.0194 |
| 161 | SLU 10 | -0.28 | -10.41 | 56.34 | 0.5469 | -0.0556 | 0.0222 |
| 161 | SLU 11 | -0.3 | -9.89 | 56.7 | 0.5203 | -0.0579 | 0.0234 |
| 161 | SLU 12 | -0.3 | -10.13 | 57.01 | 0.5324 | -0.0576 | 0.0232 |
| 161 | SLU 13 | -0.29 | -10.11 | 56.38 | 0.531 | -0.0567 | 0.0228 |
| 161 | SLU 14 | -0.31 | -9.59 | 56.74 | 0.5044 | -0.059 | 0.024 |
| 161 | SLU 15 | -0.31 | -9.83 | 57.05 | 0.5166 | -0.0587 | 0.0238 |
| 161 | SLU 16 | -0.31 | -9.42 | 55.91 | 0.4949 | -0.0582 | 0.0238 |
| 161 | SLU 17 | -0.3 | -9.66 | 56.21 | 0.507 | -0.058 | 0.0235 |
| 161 | SLU 18 | -0.31 | -10.75 | 60.09 | 0.566 | -0.0605 | 0.0243 |
| 161 | SLU 19 | -0.3 | -10.99 | 60.39 | 0.5782 | -0.0602 | 0.0241 |
| 161 | SLU 20 | -0.32 | -10.46 | 60.13 | 0.5502 | -0.0616 | 0.0249 |
| 161 | SLU 21 | -0.32 | -10.69 | 60.43 | 0.5624 | -0.0613 | 0.0247 |
| 161 | SLU 22 | -0.29 | -9.22 | 53.29 | 0.4861 | -0.0544 | 0.0221 |
| 161 | SLU 23 | -0.28 | -9.62 | 53.8 | 0.5064 | -0.054 | 0.0218 |
| 161 | SLU 24 | -0.3 | -9.1 | 54.16 | 0.4798 | -0.0563 | 0.023 |
| 161 | SLU 25 | -0.29 | -9.34 | 54.46 | 0.492 | -0.056 | 0.0228 |
| 161 | SLU 26 | -0.29 | -9.32 | 53.83 | 0.4906 | -0.0551 | 0.0224 |
| 161 | SLU 27 | -0.31 | -8.8 | 54.2 | 0.464 | -0.0574 | 0.0236 |
| 161 | SLU 28 | -0.31 | -9.04 | 54.5 | 0.4761 | -0.0571 | 0.0234 |
| 161 | SLU 29 | -0.31 | -8.62 | 53.36 | 0.4544 | -0.0566 | 0.0233 |
| 161 | SLU 30 | -0.3 | -8.86 | 53.67 | 0.4666 | -0.0563 | 0.0231 |
| 161 | SLU 31 | -0.33 | -11.34 | 63.73 | 0.5985 | -0.0643 | 0.0259 |
| 161 | SLU 32 | -0.35 | -10.82 | 64.09 | 0.5719 | -0.0666 | 0.0272 |
| 161 | SLU 33 | -0.35 | -11.06 | 64.4 | 0.5841 | -0.0663 | 0.027 |
| 161 | SLU 34 | -0.34 | -11.04 | 63.76 | 0.5827 | -0.0654 | 0.0265 |
| 161 | SLU 35 | -0.36 | -10.52 | 64.13 | 0.5561 | -0.0677 | 0.0278 |

| Nodo | Cont. | Reazione a traslazione | | | Reazione a rotazione | | |
|---|---|---|---|---|---|---|---|
| Ind. | N.br. | x | y | z | x | y | z |
| 161 | SLU 36 | -0.36 | -10.76 | 64.43 | 0.5682 | -0.0674 | 0.0276 |
| 161 | SLU 37 | -0.36 | -10.34 | 63.29 | 0.5465 | -0.0669 | 0.0275 |
| 161 | SLU 38 | -0.36 | -10.58 | 63.6 | 0.5587 | -0.0666 | 0.0273 |
| 161 | SLU 39 | -0.36 | -11.68 | 67.48 | 0.6177 | -0.0692 | 0.0281 |
| 161 | SLU 40 | -0.35 | -11.92 | 67.78 | 0.6299 | -0.0689 | 0.0279 |
| 161 | SLU 41 | -0.37 | -11.38 | 67.51 | 0.6018 | -0.0702 | 0.0287 |
| 161 | SLU 42 | -0.37 | -11.62 | 67.82 | 0.614 | -0.07 | 0.0285 |
| 161 | SLU 43 | -0.29 | -10.47 | 57.14 | 0.5471 | -0.0565 | 0.0226 |
| 161 | SLU 44 | -0.28 | -10.86 | 57.65 | 0.5674 | -0.0561 | 0.0222 |
| 161 | SLU 45 | -0.3 | -10.34 | 58.01 | 0.5408 | -0.0584 | 0.0235 |
| 161 | SLU 46 | -0.3 | -10.58 | 58.31 | 0.553 | -0.0581 | 0.0233 |
| 161 | SLU 47 | -0.29 | -10.56 | 57.68 | 0.5515 | -0.0571 | 0.0228 |
| 161 | SLU 48 | -0.31 | -10.04 | 58.05 | 0.5249 | -0.0595 | 0.0241 |
| 161 | SLU 49 | -0.31 | -10.28 | 58.35 | 0.5371 | -0.0592 | 0.0239 |
| 161 | SLU 50 | -0.31 | -9.87 | 57.21 | 0.5154 | -0.0587 | 0.0238 |
| 161 | SLU 51 | -0.3 | -10.11 | 57.52 | 0.5276 | -0.0584 | 0.0236 |
| 161 | SLU 52 | -0.33 | -12.58 | 67.58 | 0.6595 | -0.0664 | 0.0264 |
| 161 | SLU 53 | -0.35 | -12.07 | 67.94 | 0.6329 | -0.0687 | 0.0277 |
| 161 | SLU 54 | -0.35 | -12.3 | 68.25 | 0.6451 | -0.0684 | 0.0274 |
| 161 | SLU 55 | -0.34 | -12.29 | 67.62 | 0.6436 | -0.0674 | 0.027 |
| 161 | SLU 56 | -0.37 | -11.77 | 67.98 | 0.617 | -0.0698 | 0.0283 |
| 161 | SLU 57 | -0.36 | -12 | 68.28 | 0.6292 | -0.0695 | 0.028 |
| 161 | SLU 58 | -0.36 | -11.59 | 67.14 | 0.6075 | -0.069 | 0.028 |
| 161 | SLU 59 | -0.36 | -11.83 | 67.45 | 0.6197 | -0.0687 | 0.0277 |
| 161 | SLU 60 | -0.36 | -12.93 | 71.33 | 0.6787 | -0.0712 | 0.0286 |
| 161 | SLU 61 | -0.36 | -13.16 | 71.63 | 0.6908 | -0.071 | 0.0283 |
| 161 | SLU 62 | -0.37 | -12.63 | 71.36 | 0.6628 | -0.0723 | 0.0292 |
| 161 | SLU 63 | -0.37 | -12.86 | 71.67 | 0.675 | -0.0721 | 0.0289 |
| 161 | SLU 64 | -0.34 | -11.39 | 64.52 | 0.5988 | -0.0652 | 0.0264 |
| 161 | SLU 65 | -0.33 | -11.79 | 65.03 | 0.6191 | -0.0647 | 0.026 |
| 161 | SLU 66 | -0.35 | -11.27 | 65.4 | 0.5925 | -0.067 | 0.0272 |
| 161 | SLU 67 | -0.35 | -11.51 | 65.7 | 0.6046 | -0.0668 | 0.027 |
| 161 | SLU 68 | -0.34 | -11.49 | 65.07 | 0.6032 | -0.0658 | 0.0266 |
| 161 | SLU 69 | -0.36 | -10.97 | 65.43 | 0.5766 | -0.0681 | 0.0278 |
| 161 | SLU 70 | -0.36 | -11.21 | 65.74 | 0.5888 | -0.0678 | 0.0276 |
| 161 | SLU 71 | -0.36 | -10.79 | 64.6 | 0.567 | -0.0674 | 0.0276 |
| 161 | SLU 72 | -0.36 | -11.03 | 64.9 | 0.5792 | -0.0671 | 0.0273 |
| 161 | SLU 73 | -0.38 | -13.51 | 74.97 | 0.7112 | -0.075 | 0.0302 |
| 161 | SLU 74 | -0.4 | -12.99 | 75.33 | 0.6846 | -0.0773 | 0.0314 |
| 161 | SLU 75 | -0.4 | -13.23 | 75.63 | 0.6967 | -0.0771 | 0.0312 |
| 161 | SLU 76 | -0.39 | -13.21 | 75 | 0.6953 | -0.0761 | 0.0308 |
| 161 | SLU 77 | -0.42 | -12.69 | 75.37 | 0.6687 | -0.0784 | 0.032 |
| 161 | SLU 78 | -0.41 | -12.93 | 75.67 | 0.6809 | -0.0781 | 0.0318 |
| 161 | SLU 79 | -0.41 | -12.52 | 74.53 | 0.6591 | -0.0777 | 0.0317 |
| 161 | SLU 80 | -0.41 | -12.75 | 74.84 | 0.6713 | -0.0774 | 0.0315 |
| 161 | SLU 81 | -0.41 | -13.85 | 78.71 | 0.7303 | -0.0799 | 0.0323 |
| 161 | SLU 82 | -0.41 | -14.09 | 79.02 | 0.7425 | -0.0796 | 0.0321 |
| 161 | SLU 83 | -0.42 | -13.55 | 78.75 | 0.7145 | -0.081 | 0.0329 |
| 161 | SLU 84 | -0.42 | -13.79 | 79.06 | 0.7266 | -0.0807 | 0.0327 |
| 161 | SLE RA 1 | -0.25 | -8.56 | 48.01 | 0.4492 | -0.0482 | 0.0195 |
| 161 | SLE RA 2 | -0.24 | -8.82 | 48.35 | 0.4628 | -0.0479 | 0.0192 |
| 161 | SLE RA 3 | -0.26 | -8.48 | 48.59 | 0.445 | -0.0495 | 0.02 |
| 161 | SLE RA 4 | -0.26 | -8.64 | 48.8 | 0.4531 | -0.0493 | 0.0199 |
| 161 | SLE RA 5 | -0.25 | -8.62 | 48.37 | 0.4522 | -0.0487 | 0.0196 |
| 161 | SLE RA 6 | -0.27 | -8.28 | 48.62 | 0.4345 | -0.0502 | 0.0204 |
| 161 | SLE RA 7 | -0.26 | -8.44 | 48.82 | 0.4426 | -0.05 | 0.0203 |
| 161 | SLE RA 8 | -0.26 | -8.16 | 48.06 | 0.4281 | -0.0497 | 0.0203 |
| 161 | SLE RA 9 | -0.26 | -8.32 | 48.26 | 0.4362 | -0.0495 | 0.0201 |
| 161 | SLE RA 10 | -0.28 | -9.97 | 54.97 | 0.5242 | -0.0548 | 0.022 |
| 161 | SLE RA 11 | -0.29 | -9.63 | 55.21 | 0.5064 | -0.0563 | 0.0228 |
| 161 | SLE RA 12 | -0.29 | -9.78 | 55.42 | 0.5145 | -0.0562 | 0.0227 |
| 161 | SLE RA 13 | -0.29 | -9.77 | 55 | 0.5136 | -0.0555 | 0.0224 |
| 161 | SLE RA 14 | -0.3 | -9.43 | 55.24 | 0.4959 | -0.0571 | 0.0232 |
| 161 | SLE RA 15 | -0.3 | -9.58 | 55.44 | 0.504 | -0.0569 | 0.0231 |
| 161 | SLE RA 16 | -0.3 | -9.31 | 54.68 | 0.4895 | -0.0566 | 0.023 |
| 161 | SLE RA 17 | -0.3 | -9.47 | 54.88 | 0.4976 | -0.0564 | 0.0229 |
| 161 | SLE RA 18 | -0.3 | -10.2 | 57.47 | 0.5369 | -0.0581 | 0.0234 |
| 161 | SLE RA 19 | -0.3 | -10.36 | 57.67 | 0.5451 | -0.0579 | 0.0233 |
| 161 | SLE RA 20 | -0.31 | -10 | 57.49 | 0.5264 | -0.0588 | 0.0238 |
| 161 | SLE RA 21 | -0.3 | -10.16 | 57.7 | 0.5345 | -0.0586 | 0.0237 |
| 161 | SLE FR 1 | -0.25 | -8.56 | 48.01 | 0.4492 | -0.0482 | 0.0195 |
| 161 | SLE FR 2 | -0.25 | -8.61 | 48.08 | 0.4519 | -0.0482 | 0.0194 |
| 161 | SLE FR 3 | -0.25 | -8.48 | 48.02 | 0.445 | -0.0485 | 0.0196 |
| 161 | SLE FR 4 | -0.26 | -9.1 | 50.92 | 0.4783 | -0.0511 | 0.0206 |
| 161 | SLE FR 5 | -0.27 | -8.97 | 50.86 | 0.4713 | -0.0515 | 0.0208 |
| 161 | SLE FR 6 | -0.27 | -9.38 | 52.74 | 0.4931 | -0.0532 | 0.0214 |
| 161 | SLE QP 1 | -0.25 | -8.56 | 48.01 | 0.4492 | -0.0482 | 0.0195 |
| 161 | SLE QP 2 | -0.26 | -9.05 | 50.85 | 0.4755 | -0.0512 | 0.0207 |
| 161 | SLD 1 | -0.38 | -8.17 | 52.43 | 0.4337 | -0.0159 | 0.0265 |
| 161 | SLD 2 | -0.38 | -8.17 | 52.43 | 0.4337 | -0.0159 | 0.0265 |
| 161 | SLD 3 | -0.32 | -11.54 | 58.84 | 0.6097 | -0.0095 | 0.0238 |
| 161 | SLD 4 | -0.32 | -11.54 | 58.84 | 0.6097 | -0.0095 | 0.0238 |
| 161 | SLD 5 | -0.39 | -3.67 | 41.61 | 0.1961 | -0.0503 | 0.0264 |
| 161 | SLD 6 | -0.39 | -3.67 | 41.61 | 0.1961 | -0.0503 | 0.0264 |
| 161 | SLD 7 | -0.19 | -14.91 | 62.96 | 0.7827 | -0.029 | 0.0176 |
| 161 | SLD 8 | -0.19 | -14.91 | 62.96 | 0.7827 | -0.029 | 0.0176 |
| 161 | SLD 9 | -0.34 | -3.19 | 38.74 | 0.1684 | -0.0734 | 0.0237 |
| 161 | SLD 10 | -0.34 | -3.19 | 38.74 | 0.1684 | -0.0734 | 0.0237 |

| Nodo | Cont. | Reazione a traslazione | | | Reazione a rotazione | | |
|---|---|---|---|---|---|---|---|
| Ind. | N.br. | x | y | z | x | y | z |
| 161 | SLD 11 | -0.14 | -14.43 | 60.09 | 0.755 | -0.0521 | 0.0149 |
| 161 | SLD 12 | -0.14 | -14.43 | 60.09 | 0.755 | -0.0521 | 0.0149 |
| 161 | SLD 13 | -0.21 | -6.56 | 42.86 | 0.3414 | -0.0929 | 0.0175 |
| 161 | SLD 14 | -0.21 | -6.56 | 42.86 | 0.3414 | -0.0929 | 0.0175 |
| 161 | SLD 15 | -0.15 | -9.94 | 49.27 | 0.5174 | -0.0865 | 0.0148 |
| 161 | SLD 16 | -0.15 | -9.94 | 49.27 | 0.5174 | -0.0865 | 0.0148 |
| 161 | SLV 1 | -0.54 | -7.02 | 54.44 | 0.3799 | 0.0366 | 0.0343 |
| 161 | SLV 2 | -0.54 | -7.02 | 54.44 | 0.3799 | 0.0366 | 0.0343 |
| 161 | SLV 3 | -0.4 | -14.92 | 69.52 | 0.7922 | 0.0522 | 0.0282 |
| 161 | SLV 4 | -0.4 | -14.92 | 69.52 | 0.7922 | 0.0522 | 0.0282 |
| 161 | SLV 5 | -0.56 | 3.54 | 29.04 | -0.1783 | -0.0486 | 0.034 |
| 161 | SLV 6 | -0.56 | 3.54 | 29.04 | -0.1783 | -0.0486 | 0.034 |
| 161 | SLV 7 | -0.09 | -22.79 | 79.33 | 1.1957 | 0.0036 | 0.0136 |
| 161 | SLV 8 | -0.09 | -22.79 | 79.33 | 1.1957 | 0.0036 | 0.0136 |
| 161 | SLV 9 | -0.43 | 4.69 | 22.36 | -0.2446 | -0.1059 | 0.0277 |
| 161 | SLV 10 | -0.43 | 4.69 | 22.36 | -0.2446 | -0.1059 | 0.0277 |
| 161 | SLV 11 | 0.03 | -21.64 | 72.66 | 1.1294 | -0.0538 | 0.0073 |
| 161 | SLV 12 | 0.03 | -21.64 | 72.66 | 1.1294 | -0.0538 | 0.0073 |
| 161 | SLV 13 | -0.13 | -3.18 | 32.17 | 0.1589 | -0.1546 | 0.0131 |
| 161 | SLV 14 | -0.13 | -3.18 | 32.17 | 0.1589 | -0.1546 | 0.0131 |
| 161 | SLV 15 | 0.01 | -11.08 | 47.26 | 0.5712 | -0.139 | 0.007 |
| 161 | SLV 16 | 0.01 | -11.08 | 47.26 | 0.5712 | -0.139 | 0.007 |
| 162 | SLU 1 | 0 | 0.49 | 28.41 | 0.0202 | -0.0011 | -0.0003 |
| 162 | SLU 2 | 0 | 0.49 | 28.45 | 0.0202 | -0.0011 | -0.0003 |
| 162 | SLU 3 | 0 | 0.55 | 29.41 | 0.0191 | -0.0013 | -0.0003 |
| 162 | SLU 4 | 0 | 0.55 | 29.44 | 0.0191 | -0.0013 | -0.0003 |
| 162 | SLU 5 | 0 | 0.52 | 29.04 | 0.0196 | -0.0013 | -0.0003 |
| 162 | SLU 6 | 0 | 0.58 | 30 | 0.0185 | -0.0015 | -0.0003 |
| 162 | SLU 7 | 0 | 0.58 | 30.02 | 0.0185 | -0.0014 | -0.0004 |
| 162 | SLU 8 | 0 | 0.55 | 29.58 | 0.0189 | -0.0014 | -0.0003 |
| 162 | SLU 9 | 0 | 0.55 | 29.6 | 0.0189 | -0.0014 | -0.0003 |
| 162 | SLU 10 | -0.01 | 0.41 | 34.7 | 0.0337 | -0.0013 | -0.0004 |
| 162 | SLU 11 | -0.01 | 0.46 | 35.66 | 0.0326 | -0.0015 | -0.0004 |
| 162 | SLU 12 | -0.01 | 0.46 | 35.69 | 0.0326 | -0.0015 | -0.0004 |
| 162 | SLU 13 | -0.01 | 0.44 | 35.28 | 0.0331 | -0.0014 | -0.0004 |
| 162 | SLU 14 | -0.01 | 0.49 | 36.24 | 0.032 | -0.0016 | -0.0004 |
| 162 | SLU 15 | -0.01 | 0.49 | 36.27 | 0.032 | -0.0016 | -0.0004 |
| 162 | SLU 16 | -0.01 | 0.47 | 35.83 | 0.0324 | -0.0016 | -0.0004 |
| 162 | SLU 17 | -0.01 | 0.47 | 35.85 | 0.0325 | -0.0016 | -0.0004 |
| 162 | SLU 18 | -0.01 | 0.37 | 37.33 | 0.0395 | -0.0014 | -0.0004 |
| 162 | SLU 19 | -0.01 | 0.37 | 37.36 | 0.0395 | -0.0014 | -0.0004 |
| 162 | SLU 20 | -0.01 | 0.4 | 37.92 | 0.0389 | -0.0015 | -0.0004 |
| 162 | SLU 21 | -0.01 | 0.4 | 37.94 | 0.0389 | -0.0015 | -0.0004 |
| 162 | SLU 22 | -0.01 | 0.69 | 32.88 | 0.018 | -0.0014 | -0.0004 |
| 162 | SLU 23 | -0.01 | 0.69 | 32.92 | 0.0181 | -0.0014 | -0.0004 |
| 162 | SLU 24 | -0.01 | 0.75 | 33.88 | 0.017 | -0.0016 | -0.0004 |
| 162 | SLU 25 | -0.01 | 0.75 | 33.91 | 0.017 | -0.0016 | -0.0004 |
| 162 | SLU 26 | -0.01 | 0.72 | 33.51 | 0.0174 | -0.0016 | -0.0004 |
| 162 | SLU 27 | -0.01 | 0.78 | 34.47 | 0.0163 | -0.0017 | -0.0004 |
| 162 | SLU 28 | -0.01 | 0.78 | 34.49 | 0.0163 | -0.0017 | -0.0004 |
| 162 | SLU 29 | -0.01 | 0.75 | 34.05 | 0.0168 | -0.0017 | -0.0004 |
| 162 | SLU 30 | -0.01 | 0.75 | 34.07 | 0.0168 | -0.0017 | -0.0004 |
| 162 | SLU 31 | -0.01 | 0.61 | 39.17 | 0.0316 | -0.0016 | -0.0004 |
| 162 | SLU 32 | -0.01 | 0.66 | 40.13 | 0.0305 | -0.0018 | -0.0004 |
| 162 | SLU 33 | -0.01 | 0.66 | 40.15 | 0.0305 | -0.0018 | -0.0004 |
| 162 | SLU 34 | -0.01 | 0.64 | 39.75 | 0.0309 | -0.0017 | -0.0004 |
| 162 | SLU 35 | -0.01 | 0.69 | 40.71 | 0.0298 | -0.0019 | -0.0004 |
| 162 | SLU 36 | -0.01 | 0.7 | 40.74 | 0.0299 | -0.0019 | -0.0004 |
| 162 | SLU 37 | -0.01 | 0.67 | 40.3 | 0.0303 | -0.0019 | -0.0004 |
| 162 | SLU 38 | -0.01 | 0.67 | 40.32 | 0.0303 | -0.0019 | -0.0004 |
| 162 | SLU 39 | -0.01 | 0.57 | 41.8 | 0.0373 | -0.0017 | -0.0004 |
| 162 | SLU 40 | -0.01 | 0.57 | 41.83 | 0.0374 | -0.0017 | -0.0004 |
| 162 | SLU 41 | -0.01 | 0.6 | 42.39 | 0.0367 | -0.0018 | -0.0004 |
| 162 | SLU 42 | -0.01 | 0.6 | 42.41 | 0.0367 | -0.0018 | -0.0005 |
| 162 | SLU 43 | -0.01 | 0.57 | 35.4 | 0.027 | -0.0014 | -0.0004 |
| 162 | SLU 44 | -0.01 | 0.57 | 35.44 | 0.027 | -0.0014 | -0.0004 |
| 162 | SLU 45 | -0.01 | 0.62 | 36.41 | 0.0259 | -0.0016 | -0.0004 |
| 162 | SLU 46 | -0.01 | 0.62 | 36.43 | 0.0259 | -0.0016 | -0.0004 |
| 162 | SLU 47 | -0.01 | 0.6 | 36.03 | 0.0264 | -0.0015 | -0.0004 |
| 162 | SLU 48 | -0.01 | 0.65 | 36.99 | 0.0253 | -0.0017 | -0.0004 |
| 162 | SLU 49 | -0.01 | 0.66 | 37.01 | 0.0253 | -0.0017 | -0.0004 |
| 162 | SLU 50 | -0.01 | 0.63 | 36.57 | 0.0257 | -0.0017 | -0.0004 |
| 162 | SLU 51 | -0.01 | 0.63 | 36.59 | 0.0257 | -0.0017 | -0.0004 |
| 162 | SLU 52 | -0.01 | 0.48 | 41.69 | 0.0405 | -0.0015 | -0.0005 |
| 162 | SLU 53 | -0.01 | 0.54 | 42.65 | 0.0394 | -0.0017 | -0.0005 |
| 162 | SLU 54 | -0.01 | 0.54 | 42.68 | 0.0394 | -0.0017 | -0.0005 |
| 162 | SLU 55 | -0.01 | 0.52 | 42.27 | 0.0399 | -0.0017 | -0.0005 |
| 162 | SLU 56 | -0.01 | 0.57 | 43.24 | 0.0388 | -0.0019 | -0.0005 |
| 162 | SLU 57 | -0.01 | 0.57 | 43.26 | 0.0388 | -0.0018 | -0.0005 |
| 162 | SLU 58 | -0.01 | 0.55 | 42.82 | 0.0392 | -0.0018 | -0.0005 |
| 162 | SLU 59 | -0.01 | 0.55 | 42.84 | 0.0393 | -0.0018 | -0.0005 |
| 162 | SLU 60 | -0.01 | 0.45 | 44.33 | 0.0463 | -0.0016 | -0.0005 |
| 162 | SLU 61 | -0.01 | 0.45 | 44.35 | 0.0463 | -0.0016 | -0.0005 |
| 162 | SLU 62 | -0.01 | 0.48 | 44.91 | 0.0457 | -0.0018 | -0.0005 |
| 162 | SLU 63 | -0.01 | 0.48 | 44.93 | 0.0457 | -0.0017 | -0.0005 |
| 162 | SLU 64 | -0.01 | 0.77 | 39.87 | 0.0248 | -0.0017 | -0.0005 |
| 162 | SLU 65 | -0.01 | 0.77 | 39.91 | 0.0249 | -0.0017 | -0.0005 |
| 162 | SLU 66 | -0.01 | 0.82 | 40.87 | 0.0238 | -0.0019 | -0.0005 |

| Nodo | Cont. | Reazione a traslazione | | | Reazione a rotazione | | |
|---|---|---|---|---|---|---|---|
| Ind. | N.br. | x | y | z | x | y | z |
| 162 | SLU 67 | -0.01 | 0.83 | 40.9 | 0.0238 | -0.0018 | -0.0005 |
| 162 | SLU 68 | -0.01 | 0.8 | 40.5 | 0.0242 | -0.0018 | -0.0005 |
| 162 | SLU 69 | -0.01 | 0.86 | 41.46 | 0.0231 | -0.002 | -0.0005 |
| 162 | SLU 70 | -0.01 | 0.86 | 41.48 | 0.0231 | -0.002 | -0.0005 |
| 162 | SLU 71 | -0.01 | 0.83 | 41.04 | 0.0236 | -0.002 | -0.0005 |
| 162 | SLU 72 | -0.01 | 0.83 | 41.06 | 0.0236 | -0.002 | -0.0005 |
| 162 | SLU 73 | -0.01 | 0.69 | 46.16 | 0.0384 | -0.0018 | -0.0005 |
| 162 | SLU 74 | -0.01 | 0.74 | 47.12 | 0.0373 | -0.002 | -0.0005 |
| 162 | SLU 75 | -0.01 | 0.74 | 47.15 | 0.0373 | -0.002 | -0.0005 |
| 162 | SLU 76 | -0.01 | 0.72 | 46.74 | 0.0377 | -0.002 | -0.0005 |
| 162 | SLU 77 | -0.01 | 0.77 | 47.71 | 0.0366 | -0.0021 | -0.0005 |
| 162 | SLU 78 | -0.01 | 0.77 | 47.73 | 0.0367 | -0.0021 | -0.0005 |
| 162 | SLU 79 | -0.01 | 0.75 | 47.29 | 0.0371 | -0.0021 | -0.0005 |
| 162 | SLU 80 | -0.01 | 0.75 | 47.31 | 0.0371 | -0.0021 | -0.0005 |
| 162 | SLU 81 | -0.01 | 0.65 | 48.79 | 0.0441 | -0.0019 | -0.0005 |
| 162 | SLU 82 | -0.01 | 0.65 | 48.82 | 0.0442 | -0.0019 | -0.0005 |
| 162 | SLU 83 | -0.01 | 0.68 | 49.38 | 0.0435 | -0.002 | -0.0005 |
| 162 | SLU 84 | -0.01 | 0.68 | 49.4 | 0.0435 | -0.002 | -0.0005 |
| 162 | SLE RA 1 | 0 | 0.55 | 29.69 | 0.0196 | -0.0012 | -0.0003 |
| 162 | SLE RA 2 | 0 | 0.55 | 29.72 | 0.0196 | -0.0012 | -0.0003 |
| 162 | SLE RA 3 | 0 | 0.58 | 30.36 | 0.0189 | -0.0013 | -0.0003 |
| 162 | SLE RA 4 | 0 | 0.58 | 30.37 | 0.0189 | -0.0013 | -0.0004 |
| 162 | SLE RA 5 | 0 | 0.57 | 30.1 | 0.0192 | -0.0013 | -0.0004 |
| 162 | SLE RA 6 | -0.01 | 0.61 | 30.75 | 0.0184 | -0.0014 | -0.0004 |
| 162 | SLE RA 7 | -0.01 | 0.61 | 30.76 | 0.0185 | -0.0014 | -0.0004 |
| 162 | SLE RA 8 | 0 | 0.59 | 30.47 | 0.0187 | -0.0014 | -0.0004 |
| 162 | SLE RA 9 | -0.01 | 0.59 | 30.48 | 0.0187 | -0.0014 | -0.0004 |
| 162 | SLE RA 10 | -0.01 | 0.49 | 33.88 | 0.0286 | -0.0013 | -0.0004 |
| 162 | SLE RA 11 | -0.01 | 0.53 | 34.52 | 0.0279 | -0.0014 | -0.0004 |
| 162 | SLE RA 12 | -0.01 | 0.53 | 34.54 | 0.0279 | -0.0014 | -0.0004 |
| 162 | SLE RA 13 | -0.01 | 0.51 | 34.27 | 0.0282 | -0.0014 | -0.0004 |
| 162 | SLE RA 14 | -0.01 | 0.55 | 34.91 | 0.0275 | -0.0015 | -0.0004 |
| 162 | SLE RA 15 | -0.01 | 0.55 | 34.93 | 0.0275 | -0.0015 | -0.0004 |
| 162 | SLE RA 16 | -0.01 | 0.53 | 34.63 | 0.0278 | -0.0015 | -0.0004 |
| 162 | SLE RA 17 | -0.01 | 0.53 | 34.65 | 0.0278 | -0.0015 | -0.0004 |
| 162 | SLE RA 18 | -0.01 | 0.47 | 35.64 | 0.0325 | -0.0014 | -0.0004 |
| 162 | SLE RA 19 | -0.01 | 0.47 | 35.65 | 0.0325 | -0.0014 | -0.0004 |
| 162 | SLE RA 20 | -0.01 | 0.49 | 36.03 | 0.032 | -0.0015 | -0.0004 |
| 162 | SLE RA 21 | -0.01 | 0.49 | 36.04 | 0.032 | -0.0015 | -0.0004 |
| 162 | SLE FR 1 | 0 | 0.55 | 29.69 | 0.0196 | -0.0012 | -0.0003 |
| 162 | SLE FR 2 | 0 | 0.55 | 29.69 | 0.0196 | -0.0012 | -0.0003 |
| 162 | SLE FR 3 | 0 | 0.55 | 29.84 | 0.0194 | -0.0013 | -0.0003 |
| 162 | SLE FR 4 | -0.01 | 0.52 | 31.48 | 0.0234 | -0.0013 | -0.0004 |
| 162 | SLE FR 5 | -0.01 | 0.53 | 31.63 | 0.0233 | -0.0013 | -0.0004 |
| 162 | SLE FR 6 | -0.01 | 0.51 | 32.66 | 0.026 | -0.0013 | -0.0004 |
| 162 | SLE QP 1 | 0 | 0.55 | 29.69 | 0.0196 | -0.0012 | -0.0003 |
| 162 | SLE QP 2 | -0.01 | 0.52 | 31.47 | 0.0234 | -0.0013 | -0.0004 |
| 162 | SLD 1 | 0.03 | -0.51 | 24.09 | -0.0034 | 0.0287 | -0.0034 |
| 162 | SLD 2 | 0.03 | -0.51 | 24.09 | -0.0034 | 0.0287 | -0.0034 |
| 162 | SLD 3 | 0.02 | 0.76 | 26.53 | 0.0909 | 0.0263 | -0.0039 |
| 162 | SLD 4 | 0.02 | 0.76 | 26.53 | 0.0909 | 0.0263 | -0.0039 |
| 162 | SLD 5 | 0.02 | -1.71 | 25.56 | -0.1277 | 0.0114 | -0.0006 |
| 162 | SLD 6 | 0.02 | -1.71 | 25.56 | -0.1277 | 0.0114 | -0.0006 |
| 162 | SLD 7 | -0.01 | 2.52 | 33.69 | 0.1867 | 0.0033 | -0.0021 |
| 162 | SLD 8 | -0.01 | 2.52 | 33.69 | 0.1867 | 0.0033 | -0.0021 |
| 162 | SLD 9 | 0 | -1.47 | 29.26 | -0.1398 | -0.0059 | 0.0014 |
| 162 | SLD 10 | 0 | -1.47 | 29.26 | -0.1398 | -0.0059 | 0.0014 |
| 162 | SLD 11 | -0.03 | 2.76 | 37.39 | 0.1746 | -0.0139 | -0.0001 |
| 162 | SLD 12 | -0.03 | 2.76 | 37.39 | 0.1746 | -0.0139 | -0.0001 |
| 162 | SLD 13 | -0.03 | 0.28 | 36.42 | -0.044 | -0.0288 | 0.0032 |
| 162 | SLD 14 | -0.03 | 0.28 | 36.42 | -0.044 | -0.0288 | 0.0032 |
| 162 | SLD 15 | -0.04 | 1.55 | 38.86 | 0.0503 | -0.0313 | 0.0027 |
| 162 | SLD 16 | -0.04 | 1.55 | 38.86 | 0.0503 | -0.0313 | 0.0027 |
| 162 | SLV 1 | 0.07 | -1.9 | 14.21 | -0.0394 | 0.0719 | -0.008 |
| 162 | SLV 2 | 0.07 | -1.9 | 14.21 | -0.0394 | 0.0719 | -0.008 |
| 162 | SLV 3 | 0.05 | 1.08 | 19.87 | 0.1819 | 0.0661 | -0.0091 |
| 162 | SLV 4 | 0.05 | 1.08 | 19.87 | 0.1819 | 0.0661 | -0.0091 |
| 162 | SLV 5 | 0.06 | -4.73 | 17.71 | -0.3311 | 0.0296 | -0.001 |
| 162 | SLV 6 | 0.06 | -4.73 | 17.71 | -0.3311 | 0.0296 | -0.001 |
| 162 | SLV 7 | -0.02 | 5.21 | 36.58 | 0.4067 | 0.01 | -0.0046 |
| 162 | SLV 8 | -0.02 | 5.21 | 36.58 | 0.4067 | 0.01 | -0.0046 |
| 162 | SLV 9 | 0.01 | -4.17 | 26.37 | -0.3598 | -0.0126 | 0.0039 |
| 162 | SLV 10 | 0.01 | -4.17 | 26.37 | -0.3598 | -0.0126 | 0.0039 |
| 162 | SLV 11 | -0.07 | 5.77 | 45.24 | 0.378 | -0.0321 | 0.0003 |
| 162 | SLV 12 | -0.07 | 5.77 | 45.24 | 0.378 | -0.0321 | 0.0003 |
| 162 | SLV 13 | -0.06 | -0.03 | 43.08 | -0.135 | -0.0686 | 0.0084 |
| 162 | SLV 14 | -0.06 | -0.03 | 43.08 | -0.135 | -0.0686 | 0.0084 |
| 162 | SLV 15 | -0.09 | 2.95 | 48.74 | 0.0863 | -0.0745 | 0.0073 |
| 162 | SLV 16 | -0.09 | 2.95 | 48.74 | 0.0863 | -0.0745 | 0.0073 |
| 163 | SLU 1 | 0.14 | -3.73 | 64.81 | 0.1711 | 0.0167 | -0.0001 |
| 163 | SLU 2 | 0.15 | -3.75 | 65.27 | 0.17 | 0.0128 | 0 |
| 163 | SLU 3 | 0.15 | -3.78 | 67.19 | 0.1725 | 0.0176 | -0.0001 |
| 163 | SLU 4 | 0.15 | -3.79 | 67.46 | 0.1718 | 0.0153 | -0.0001 |
| 163 | SLU 5 | 0.15 | -3.78 | 66.89 | 0.1701 | 0.0134 | 0 |
| 163 | SLU 6 | 0.16 | -3.8 | 68.81 | 0.1726 | 0.0182 | -0.0001 |
| 163 | SLU 7 | 0.16 | -3.81 | 69.08 | 0.172 | 0.0159 | -0.0001 |
| 163 | SLU 8 | 0.15 | -3.78 | 68.05 | 0.1714 | 0.0179 | -0.0001 |
| 163 | SLU 9 | 0.16 | -3.79 | 68.33 | 0.1707 | 0.0156 | -0.0001 |

| Nodo | Cont. | Reazione a traslazione | | | Reazione a rotazione | | |
|---|---|---|---|---|---|---|---|
| Ind. | N.br. | x | y | z | x | y | z |
| 163 | SLU 10 | 0.17 | -3.88 | 74.82 | 0.1749 | 0.0182 | -0.0001 |
| 163 | SLU 11 | 0.18 | -3.91 | 76.74 | 0.1774 | 0.023 | -0.0002 |
| 163 | SLU 12 | 0.18 | -3.92 | 77.01 | 0.1768 | 0.0207 | -0.0001 |
| 163 | SLU 13 | 0.18 | -3.9 | 76.44 | 0.1751 | 0.0188 | -0.0001 |
| 163 | SLU 14 | 0.18 | -3.93 | 78.36 | 0.1776 | 0.0237 | -0.0002 |
| 163 | SLU 15 | 0.18 | -3.94 | 78.63 | 0.1769 | 0.0213 | -0.0001 |
| 163 | SLU 16 | 0.18 | -3.9 | 77.6 | 0.1763 | 0.0233 | -0.0002 |
| 163 | SLU 17 | 0.18 | -3.92 | 77.88 | 0.1757 | 0.021 | -0.0001 |
| 163 | SLU 18 | 0.18 | -3.92 | 78.46 | 0.1781 | 0.0244 | -0.0002 |
| 163 | SLU 19 | 0.19 | -3.93 | 78.73 | 0.1775 | 0.0221 | -0.0001 |
| 163 | SLU 20 | 0.19 | -3.94 | 80.08 | 0.1783 | 0.025 | -0.0002 |
| 163 | SLU 21 | 0.19 | -3.95 | 80.35 | 0.1776 | 0.0227 | -0.0001 |
| 163 | SLU 22 | 0.17 | -3.93 | 74.13 | 0.1792 | 0.0213 | -0.0002 |
| 163 | SLU 23 | 0.17 | -3.95 | 74.59 | 0.1781 | 0.0175 | -0.0001 |
| 163 | SLU 24 | 0.18 | -3.98 | 76.51 | 0.1806 | 0.0223 | -0.0002 |
| 163 | SLU 25 | 0.18 | -3.99 | 76.78 | 0.1799 | 0.02 | -0.0001 |
| 163 | SLU 26 | 0.18 | -3.97 | 76.2 | 0.1782 | 0.0181 | -0.0001 |
| 163 | SLU 27 | 0.18 | -4 | 78.13 | 0.1807 | 0.0229 | -0.0002 |
| 163 | SLU 28 | 0.18 | -4.01 | 78.4 | 0.1801 | 0.0206 | -0.0001 |
| 163 | SLU 29 | 0.18 | -3.97 | 77.37 | 0.1795 | 0.0225 | -0.0002 |
| 163 | SLU 30 | 0.18 | -3.98 | 77.64 | 0.1788 | 0.0202 | -0.0001 |
| 163 | SLU 31 | 0.2 | -4.08 | 84.14 | 0.183 | 0.0229 | -0.0001 |
| 163 | SLU 32 | 0.2 | -4.11 | 86.06 | 0.1855 | 0.0277 | -0.0002 |
| 163 | SLU 33 | 0.21 | -4.12 | 86.33 | 0.1848 | 0.0254 | -0.0001 |
| 163 | SLU 34 | 0.2 | -4.1 | 85.76 | 0.1832 | 0.0235 | -0.0001 |
| 163 | SLU 35 | 0.21 | -4.13 | 87.68 | 0.1856 | 0.0283 | -0.0002 |
| 163 | SLU 36 | 0.21 | -4.14 | 87.95 | 0.185 | 0.026 | -0.0001 |
| 163 | SLU 37 | 0.21 | -4.1 | 86.92 | 0.1844 | 0.028 | -0.0002 |
| 163 | SLU 38 | 0.21 | -4.11 | 87.19 | 0.1837 | 0.0257 | -0.0001 |
| 163 | SLU 39 | 0.21 | -4.11 | 87.78 | 0.1862 | 0.0291 | -0.0002 |
| 163 | SLU 40 | 0.21 | -4.12 | 88.05 | 0.1856 | 0.0267 | -0.0001 |
| 163 | SLU 41 | 0.21 | -4.13 | 89.4 | 0.1864 | 0.0297 | -0.0002 |
| 163 | SLU 42 | 0.22 | -4.15 | 89.67 | 0.1857 | 0.0274 | -0.0001 |
| 163 | SLU 43 | 0.18 | -4.79 | 81.06 | 0.2197 | 0.02 | -0.0002 |
| 163 | SLU 44 | 0.18 | -4.81 | 81.52 | 0.2186 | 0.0162 | -0.0001 |
| 163 | SLU 45 | 0.19 | -4.83 | 83.44 | 0.2211 | 0.021 | -0.0002 |
| 163 | SLU 46 | 0.19 | -4.85 | 83.71 | 0.2204 | 0.0187 | -0.0001 |
| 163 | SLU 47 | 0.19 | -4.83 | 83.14 | 0.2187 | 0.0168 | -0.0001 |
| 163 | SLU 48 | 0.19 | -4.86 | 85.06 | 0.2212 | 0.0216 | -0.0002 |
| 163 | SLU 49 | 0.19 | -4.87 | 85.33 | 0.2205 | 0.0193 | -0.0001 |
| 163 | SLU 50 | 0.19 | -4.83 | 84.3 | 0.22 | 0.0213 | -0.0002 |
| 163 | SLU 51 | 0.19 | -4.84 | 84.57 | 0.2193 | 0.019 | -0.0001 |
| 163 | SLU 52 | 0.21 | -4.93 | 91.07 | 0.2235 | 0.0216 | -0.0001 |
| 163 | SLU 53 | 0.21 | -4.96 | 92.99 | 0.226 | 0.0264 | -0.0002 |
| 163 | SLU 54 | 0.21 | -4.97 | 93.26 | 0.2253 | 0.0241 | -0.0001 |
| 163 | SLU 55 | 0.21 | -4.96 | 92.69 | 0.2236 | 0.0222 | -0.0001 |
| 163 | SLU 56 | 0.22 | -4.98 | 94.61 | 0.2261 | 0.0271 | -0.0002 |
| 163 | SLU 57 | 0.22 | -5 | 94.88 | 0.2255 | 0.0247 | -0.0001 |
| 163 | SLU 58 | 0.22 | -4.96 | 93.85 | 0.2249 | 0.0267 | -0.0002 |
| 163 | SLU 59 | 0.22 | -4.97 | 94.13 | 0.2242 | 0.0244 | -0.0001 |
| 163 | SLU 60 | 0.22 | -4.97 | 94.71 | 0.2267 | 0.0278 | -0.0002 |
| 163 | SLU 61 | 0.22 | -4.98 | 94.98 | 0.226 | 0.0255 | -0.0001 |
| 163 | SLU 62 | 0.22 | -4.99 | 96.33 | 0.2269 | 0.0284 | -0.0002 |
| 163 | SLU 63 | 0.22 | -5 | 96.6 | 0.2262 | 0.0261 | -0.0001 |
| 163 | SLU 64 | 0.21 | -4.98 | 90.38 | 0.2277 | 0.0247 | -0.0002 |
| 163 | SLU 65 | 0.21 | -5 | 90.83 | 0.2266 | 0.0209 | -0.0001 |
| 163 | SLU 66 | 0.21 | -5.03 | 92.76 | 0.2291 | 0.0257 | -0.0002 |
| 163 | SLU 67 | 0.21 | -5.04 | 93.03 | 0.2285 | 0.0234 | -0.0001 |
| 163 | SLU 68 | 0.21 | -5.02 | 92.45 | 0.2268 | 0.0215 | -0.0001 |
| 163 | SLU 69 | 0.22 | -5.05 | 94.38 | 0.2293 | 0.0263 | -0.0002 |
| 163 | SLU 70 | 0.22 | -5.06 | 94.65 | 0.2286 | 0.024 | -0.0001 |
| 163 | SLU 71 | 0.21 | -5.03 | 93.62 | 0.228 | 0.0259 | -0.0002 |
| 163 | SLU 72 | 0.22 | -5.04 | 93.89 | 0.2274 | 0.0236 | -0.0001 |
| 163 | SLU 73 | 0.23 | -5.13 | 100.39 | 0.2316 | 0.0263 | -0.0001 |
| 163 | SLU 74 | 0.24 | -5.16 | 102.31 | 0.2341 | 0.0311 | -0.0002 |
| 163 | SLU 75 | 0.24 | -5.17 | 102.58 | 0.2334 | 0.0288 | -0.0002 |
| 163 | SLU 76 | 0.24 | -5.15 | 102.01 | 0.2317 | 0.0269 | -0.0001 |
| 163 | SLU 77 | 0.24 | -5.18 | 103.93 | 0.2342 | 0.0317 | -0.0002 |
| 163 | SLU 78 | 0.25 | -5.19 | 104.2 | 0.2335 | 0.0294 | -0.0002 |
| 163 | SLU 79 | 0.24 | -5.15 | 103.17 | 0.233 | 0.0314 | -0.0002 |
| 163 | SLU 80 | 0.24 | -5.17 | 103.44 | 0.2323 | 0.0291 | -0.0002 |
| 163 | SLU 81 | 0.24 | -5.17 | 104.02 | 0.2348 | 0.0324 | -0.0002 |
| 163 | SLU 82 | 0.25 | -5.18 | 104.3 | 0.2341 | 0.0301 | -0.0002 |
| 163 | SLU 83 | 0.25 | -5.19 | 105.64 | 0.2349 | 0.0331 | -0.0002 |
| 163 | SLU 84 | 0.25 | -5.2 | 105.92 | 0.2343 | 0.0308 | -0.0002 |
| 163 | SLE RA 1 | 0.15 | -3.79 | 67.47 | 0.1734 | 0.018 | -0.0001 |
| 163 | SLE RA 2 | 0.15 | -3.8 | 67.78 | 0.1727 | 0.0154 | -0.0001 |
| 163 | SLE RA 3 | 0.16 | -3.82 | 69.06 | 0.1743 | 0.0186 | -0.0001 |
| 163 | SLE RA 4 | 0.16 | -3.83 | 69.24 | 0.1739 | 0.0171 | -0.0001 |
| 163 | SLE RA 5 | 0.16 | -3.82 | 68.86 | 0.1728 | 0.0158 | -0.0001 |
| 163 | SLE RA 6 | 0.16 | -3.84 | 70.14 | 0.1744 | 0.019 | -0.0001 |
| 163 | SLE RA 7 | 0.16 | -3.84 | 70.32 | 0.174 | 0.0175 | -0.0001 |
| 163 | SLE RA 8 | 0.16 | -3.82 | 69.63 | 0.1736 | 0.0188 | -0.0001 |
| 163 | SLE RA 9 | 0.16 | -3.83 | 69.82 | 0.1732 | 0.0173 | -0.0001 |
| 163 | SLE RA 10 | 0.17 | -3.89 | 74.15 | 0.176 | 0.019 | -0.0001 |
| 163 | SLE RA 11 | 0.17 | -3.91 | 75.43 | 0.1776 | 0.0222 | -0.0002 |
| 163 | SLE RA 12 | 0.18 | -3.91 | 75.61 | 0.1772 | 0.0207 | -0.0001 |
| 163 | SLE RA 13 | 0.17 | -3.9 | 75.23 | 0.1761 | 0.0194 | -0.0001 |

| Nodo | Cont. | Reazione a traslazione | | | Reazione a rotazione | | |
|---|---|---|---|---|---|---|---|
| Ind. | N.br. | x | y | z | x | y | z |
| 163 | SLE RA 14 | 0.18 | -3.92 | 76.51 | 0.1777 | 0.0227 | -0.0002 |
| 163 | SLE RA 15 | 0.18 | -3.93 | 76.69 | 0.1773 | 0.0211 | -0.0001 |
| 163 | SLE RA 16 | 0.18 | -3.9 | 76 | 0.1769 | 0.0224 | -0.0002 |
| 163 | SLE RA 17 | 0.18 | -3.91 | 76.18 | 0.1765 | 0.0209 | -0.0001 |
| 163 | SLE RA 18 | 0.18 | -3.91 | 76.57 | 0.1781 | 0.0231 | -0.0002 |
| 163 | SLE RA 19 | 0.18 | -3.92 | 76.75 | 0.1777 | 0.0216 | -0.0001 |
| 163 | SLE RA 20 | 0.18 | -3.93 | 77.65 | 0.1782 | 0.0236 | -0.0002 |
| 163 | SLE RA 21 | 0.18 | -3.93 | 77.83 | 0.1778 | 0.022 | -0.0001 |
| 163 | SLE FR 1 | 0.15 | -3.79 | 67.47 | 0.1734 | 0.018 | -0.0001 |
| 163 | SLE FR 2 | 0.15 | -3.79 | 67.54 | 0.1733 | 0.0175 | -0.0001 |
| 163 | SLE FR 3 | 0.15 | -3.8 | 67.91 | 0.1735 | 0.0181 | -0.0001 |
| 163 | SLE FR 4 | 0.16 | -3.83 | 70.26 | 0.1747 | 0.019 | -0.0001 |
| 163 | SLE FR 5 | 0.16 | -3.83 | 70.64 | 0.1749 | 0.0197 | -0.0001 |
| 163 | SLE FR 6 | 0.17 | -3.85 | 72.02 | 0.1758 | 0.0206 | -0.0001 |
| 163 | SLE QP 1 | 0.15 | -3.79 | 67.47 | 0.1734 | 0.018 | -0.0001 |
| 163 | SLE QP 2 | 0.16 | -3.83 | 70.2 | 0.1748 | 0.0195 | -0.0001 |
| 163 | SLD 1 | 0.27 | -3.82 | 90.41 | 0.1708 | 0.0663 | -0.0004 |
| 163 | SLD 2 | 0.27 | -3.82 | 90.41 | 0.1708 | 0.0663 | -0.0004 |
| 163 | SLD 3 | 0.18 | -7.39 | 96.12 | 0.3663 | 0.0517 | -0.0006 |
| 163 | SLD 4 | 0.18 | -7.39 | 96.12 | 0.3663 | 0.0517 | -0.0006 |
| 163 | SLD 5 | 0.34 | 1.6 | 67.6 | -0.1228 | 0.0557 | 0.0001 |
| 163 | SLD 6 | 0.34 | 1.6 | 67.6 | -0.1228 | 0.0557 | 0.0001 |
| 163 | SLD 7 | 0.02 | -10.32 | 86.64 | 0.5287 | 0.007 | -0.0005 |
| 163 | SLD 8 | 0.02 | -10.32 | 86.64 | 0.5287 | 0.007 | -0.0005 |
| 163 | SLD 9 | 0.3 | 2.67 | 53.76 | -0.1791 | 0.032 | 0.0003 |
| 163 | SLD 10 | 0.3 | 2.67 | 53.76 | -0.1791 | 0.032 | 0.0003 |
| 163 | SLD 11 | -0.02 | -9.25 | 72.81 | 0.4725 | -0.0167 | -0.0003 |
| 163 | SLD 12 | -0.02 | -9.25 | 72.81 | 0.4725 | -0.0167 | -0.0003 |
| 163 | SLD 13 | 0.14 | -0.26 | 44.29 | -0.0166 | -0.0126 | 0.0003 |
| 163 | SLD 14 | 0.14 | -0.26 | 44.29 | -0.0166 | -0.0126 | 0.0003 |
| 163 | SLD 15 | 0.05 | -3.84 | 50 | 0.1788 | -0.0272 | 0.0001 |
| 163 | SLD 16 | 0.05 | -3.84 | 50 | 0.1788 | -0.0272 | 0.0001 |
| 163 | SLV 1 | 0.44 | -3.87 | 117.37 | 0.1692 | 0.1288 | -0.0008 |
| 163 | SLV 2 | 0.44 | -3.87 | 117.37 | 0.1692 | 0.1288 | -0.0008 |
| 163 | SLV 3 | 0.19 | -12.17 | 130.59 | 0.6226 | 0.0915 | -0.0012 |
| 163 | SLV 4 | 0.19 | -12.17 | 130.59 | 0.6226 | 0.0915 | -0.0012 |
| 163 | SLV 5 | 0.61 | 8.74 | 64.3 | -0.5145 | 0.1089 | 0.0004 |
| 163 | SLV 6 | 0.61 | 8.74 | 64.3 | -0.5145 | 0.1089 | 0.0004 |
| 163 | SLV 7 | -0.2 | -18.91 | 108.37 | 0.9968 | -0.0155 | -0.0011 |
| 163 | SLV 8 | -0.2 | -18.91 | 108.37 | 0.9968 | -0.0155 | -0.0011 |
| 163 | SLV 9 | 0.52 | 11.26 | 32.04 | -0.6471 | 0.0546 | 0.0009 |
| 163 | SLV 10 | 0.52 | 11.26 | 32.04 | -0.6471 | 0.0546 | 0.0009 |
| 163 | SLV 11 | -0.29 | -16.4 | 76.11 | 0.8641 | -0.0699 | -0.0006 |
| 163 | SLV 12 | -0.29 | -16.4 | 76.11 | 0.8641 | -0.0699 | -0.0006 |
| 163 | SLV 13 | 0.13 | 4.51 | 9.82 | -0.273 | -0.0524 | 0.0009 |
| 163 | SLV 14 | 0.13 | 4.51 | 9.82 | -0.273 | -0.0524 | 0.0009 |
| 163 | SLV 15 | -0.12 | -3.78 | 23.04 | 0.1804 | -0.0898 | 0.0005 |
| 163 | SLV 16 | -0.12 | -3.78 | 23.04 | 0.1804 | -0.0898 | 0.0005 |
| 165 | SLU 1 | 14.68 | -0.11 | 65.39 | 0.0298 | 0.7607 | 0.0001 |
| 165 | SLU 2 | 14.4 | -0.14 | 65.33 | 0.0391 | 0.7473 | 0.0002 |
| 165 | SLU 3 | 15.43 | -0.11 | 67.94 | 0.0308 | 0.7997 | 0.0001 |
| 165 | SLU 4 | 15.27 | -0.13 | 67.9 | 0.0364 | 0.7916 | 0.0002 |
| 165 | SLU 5 | 14.93 | -0.15 | 67.08 | 0.0397 | 0.7744 | 0.0002 |
| 165 | SLU 6 | 15.96 | -0.12 | 69.69 | 0.0314 | 0.8268 | 0.0001 |
| 165 | SLU 7 | 15.79 | -0.14 | 69.65 | 0.037 | 0.8187 | 0.0002 |
| 165 | SLU 8 | 15.73 | -0.12 | 68.89 | 0.0311 | 0.8149 | 0.0001 |
| 165 | SLU 9 | 15.56 | -0.14 | 68.85 | 0.0366 | 0.8068 | 0.0002 |
| 165 | SLU 10 | 17.79 | -0.16 | 76.47 | 0.0431 | 0.9191 | 0.0002 |
| 165 | SLU 11 | 18.82 | -0.13 | 79.08 | 0.0348 | 0.9715 | 0.0001 |
| 165 | SLU 12 | 18.65 | -0.15 | 79.04 | 0.0404 | 0.9634 | 0.0002 |
| 165 | SLU 13 | 18.31 | -0.16 | 78.21 | 0.0437 | 0.9462 | 0.0002 |
| 165 | SLU 14 | 19.34 | -0.13 | 80.82 | 0.0354 | 0.9986 | 0.0001 |
| 165 | SLU 15 | 19.18 | -0.15 | 80.79 | 0.041 | 0.9905 | 0.0002 |
| 165 | SLU 16 | 19.12 | -0.13 | 80.02 | 0.0351 | 0.9867 | 0.0001 |
| 165 | SLU 17 | 18.95 | -0.15 | 79.99 | 0.0406 | 0.9786 | 0.0002 |
| 165 | SLU 18 | 19.52 | -0.13 | 81.3 | 0.0356 | 1.0061 | 0.0001 |
| 165 | SLU 19 | 19.36 | -0.15 | 81.26 | 0.0411 | 0.9981 | 0.0002 |
| 165 | SLU 20 | 20.05 | -0.13 | 83.05 | 0.0362 | 1.0332 | 0.0001 |
| 165 | SLU 21 | 19.88 | -0.15 | 83.01 | 0.0417 | 1.0252 | 0.0002 |
| 165 | SLU 22 | 17.78 | -0.12 | 75.95 | 0.0338 | 0.9188 | 0.0001 |
| 165 | SLU 23 | 17.51 | -0.16 | 75.89 | 0.0431 | 0.9053 | 0.0002 |
| 165 | SLU 24 | 18.53 | -0.13 | 78.5 | 0.0348 | 0.9578 | 0.0001 |
| 165 | SLU 25 | 18.37 | -0.15 | 78.46 | 0.0403 | 0.9497 | 0.0002 |
| 165 | SLU 26 | 18.03 | -0.16 | 77.64 | 0.0437 | 0.9324 | 0.0002 |
| 165 | SLU 27 | 19.06 | -0.13 | 80.25 | 0.0354 | 0.9849 | 0.0001 |
| 165 | SLU 28 | 18.89 | -0.15 | 80.21 | 0.0409 | 0.9768 | 0.0002 |
| 165 | SLU 29 | 18.83 | -0.13 | 79.45 | 0.035 | 0.973 | 0.0001 |
| 165 | SLU 30 | 18.66 | -0.15 | 79.41 | 0.0406 | 0.9649 | 0.0002 |
| 165 | SLU 31 | 20.89 | -0.17 | 87.03 | 0.0471 | 1.0772 | 0.0002 |
| 165 | SLU 32 | 21.92 | -0.14 | 89.64 | 0.0388 | 1.1296 | 0.0001 |
| 165 | SLU 33 | 21.75 | -0.16 | 89.6 | 0.0443 | 1.1215 | 0.0002 |
| 165 | SLU 34 | 21.41 | -0.17 | 88.77 | 0.0477 | 1.1043 | 0.0002 |
| 165 | SLU 35 | 22.44 | -0.14 | 91.38 | 0.0394 | 1.1567 | 0.0001 |
| 165 | SLU 36 | 22.28 | -0.16 | 91.35 | 0.0449 | 1.1486 | 0.0002 |
| 165 | SLU 37 | 22.22 | -0.14 | 90.58 | 0.039 | 1.1448 | 0.0001 |
| 165 | SLU 38 | 22.05 | -0.16 | 90.55 | 0.0446 | 1.1367 | 0.0002 |
| 165 | SLU 39 | 22.62 | -0.14 | 91.86 | 0.0395 | 1.1642 | 0.0001 |
| 165 | SLU 40 | 22.46 | -0.16 | 91.82 | 0.0451 | 1.1562 | 0.0002 |

| Nodo | Cont. | Reazione a traslazione | | | Reazione a rotazione | | |
|---|---|---|---|---|---|---|---|
| Ind. | N.br. | x | y | z | x | y | z |
| 165 | SLU 41 | 23.15 | -0.15 | 93.61 | 0.0401 | 1.1913 | 0.0001 |
| 165 | SLU 42 | 22.98 | -0.17 | 93.57 | 0.0457 | 1.1833 | 0.0002 |
| 165 | SLU 43 | 18.03 | -0.14 | 81.39 | 0.0374 | 0.9347 | 0.0002 |
| 165 | SLU 44 | 17.75 | -0.17 | 81.33 | 0.0467 | 0.9213 | 0.0002 |
| 165 | SLU 45 | 18.78 | -0.14 | 83.94 | 0.0384 | 0.9737 | 0.0002 |
| 165 | SLU 46 | 18.61 | -0.16 | 83.9 | 0.0439 | 0.9656 | 0.0002 |
| 165 | SLU 47 | 18.27 | -0.17 | 83.07 | 0.0473 | 0.9484 | 0.0002 |
| 165 | SLU 48 | 19.3 | -0.15 | 85.69 | 0.039 | 1.0008 | 0.0002 |
| 165 | SLU 49 | 19.13 | -0.16 | 85.65 | 0.0446 | 0.9927 | 0.0002 |
| 165 | SLU 50 | 19.07 | -0.14 | 84.89 | 0.0387 | 0.9889 | 0.0002 |
| 165 | SLU 51 | 18.9 | -0.16 | 84.85 | 0.0442 | 0.9808 | 0.0002 |
| 165 | SLU 52 | 21.13 | -0.18 | 92.46 | 0.0507 | 1.0931 | 0.0002 |
| 165 | SLU 53 | 22.16 | -0.16 | 95.08 | 0.0424 | 1.1455 | 0.0002 |
| 165 | SLU 54 | 22 | -0.18 | 95.04 | 0.0479 | 1.1374 | 0.0002 |
| 165 | SLU 55 | 21.66 | -0.19 | 94.21 | 0.0513 | 1.1202 | 0.0002 |
| 165 | SLU 56 | 22.69 | -0.16 | 96.82 | 0.043 | 1.1726 | 0.0002 |
| 165 | SLU 57 | 22.52 | -0.18 | 96.78 | 0.0486 | 1.1645 | 0.0002 |
| 165 | SLU 58 | 22.46 | -0.16 | 96.02 | 0.0427 | 1.1607 | 0.0002 |
| 165 | SLU 59 | 22.29 | -0.18 | 95.98 | 0.0482 | 1.1526 | 0.0002 |
| 165 | SLU 60 | 22.87 | -0.16 | 97.3 | 0.0431 | 1.1801 | 0.0002 |
| 165 | SLU 61 | 22.7 | -0.18 | 97.26 | 0.0487 | 1.1721 | 0.0002 |
| 165 | SLU 62 | 23.39 | -0.16 | 99.05 | 0.0438 | 1.2072 | 0.0002 |
| 165 | SLU 63 | 23.22 | -0.18 | 99.01 | 0.0493 | 1.1992 | 0.0002 |
| 165 | SLU 64 | 21.13 | -0.15 | 91.95 | 0.0414 | 1.0928 | 0.0002 |
| 165 | SLU 65 | 20.85 | -0.18 | 91.89 | 0.0507 | 1.0793 | 0.0002 |
| 165 | SLU 66 | 21.88 | -0.16 | 94.5 | 0.0424 | 1.1318 | 0.0002 |
| 165 | SLU 67 | 21.71 | -0.18 | 94.46 | 0.0479 | 1.1237 | 0.0002 |
| 165 | SLU 68 | 21.37 | -0.19 | 93.63 | 0.0513 | 1.1064 | 0.0002 |
| 165 | SLU 69 | 22.4 | -0.16 | 96.25 | 0.043 | 1.1589 | 0.0002 |
| 165 | SLU 70 | 22.23 | -0.18 | 96.21 | 0.0485 | 1.1508 | 0.0002 |
| 165 | SLU 71 | 22.17 | -0.16 | 95.45 | 0.0426 | 1.147 | 0.0002 |
| 165 | SLU 72 | 22 | -0.18 | 95.41 | 0.0482 | 1.1389 | 0.0002 |
| 165 | SLU 73 | 24.23 | -0.2 | 103.02 | 0.0547 | 1.2512 | 0.0002 |
| 165 | SLU 74 | 25.26 | -0.17 | 105.64 | 0.0464 | 1.3036 | 0.0002 |
| 165 | SLU 75 | 25.1 | -0.19 | 105.6 | 0.0519 | 1.2955 | 0.0002 |
| 165 | SLU 76 | 24.76 | -0.2 | 104.77 | 0.0553 | 1.2783 | 0.0003 |
| 165 | SLU 77 | 25.79 | -0.17 | 107.38 | 0.047 | 1.3307 | 0.0002 |
| 165 | SLU 78 | 25.62 | -0.19 | 107.34 | 0.0525 | 1.3226 | 0.0002 |
| 165 | SLU 79 | 25.56 | -0.17 | 106.58 | 0.0466 | 1.3188 | 0.0002 |
| 165 | SLU 80 | 25.39 | -0.19 | 106.54 | 0.0522 | 1.3107 | 0.0002 |
| 165 | SLU 81 | 25.97 | -0.17 | 107.86 | 0.0471 | 1.3382 | 0.0002 |
| 165 | SLU 82 | 25.8 | -0.19 | 107.82 | 0.0527 | 1.3302 | 0.0002 |
| 165 | SLU 83 | 26.49 | -0.17 | 109.61 | 0.0477 | 1.3653 | 0.0002 |
| 165 | SLU 84 | 26.32 | -0.19 | 109.57 | 0.0533 | 1.3573 | 0.0002 |
| 165 | SLE RA 1 | 15.57 | -0.11 | 68.41 | 0.031 | 0.8059 | 0.0001 |
| 165 | SLE RA 2 | 15.38 | -0.14 | 68.37 | 0.0371 | 0.7969 | 0.0002 |
| 165 | SLE RA 3 | 16.07 | -0.12 | 70.11 | 0.0316 | 0.8318 | 0.0001 |
| 165 | SLE RA 4 | 15.96 | -0.13 | 70.08 | 0.0353 | 0.8265 | 0.0002 |
| 165 | SLE RA 5 | 15.73 | -0.14 | 69.53 | 0.0376 | 0.815 | 0.0002 |
| 165 | SLE RA 6 | 16.42 | -0.12 | 71.27 | 0.032 | 0.8499 | 0.0001 |
| 165 | SLE RA 7 | 16.31 | -0.13 | 71.25 | 0.0357 | 0.8445 | 0.0002 |
| 165 | SLE RA 8 | 16.27 | -0.12 | 70.74 | 0.0318 | 0.842 | 0.0001 |
| 165 | SLE RA 9 | 16.15 | -0.13 | 70.71 | 0.0355 | 0.8366 | 0.0002 |
| 165 | SLE RA 10 | 17.64 | -0.14 | 75.79 | 0.0398 | 0.9114 | 0.0002 |
| 165 | SLE RA 11 | 18.33 | -0.13 | 77.53 | 0.0343 | 0.9464 | 0.0001 |
| 165 | SLE RA 12 | 18.22 | -0.14 | 77.51 | 0.038 | 0.941 | 0.0002 |
| 165 | SLE RA 13 | 17.99 | -0.15 | 76.96 | 0.0402 | 0.9295 | 0.0002 |
| 165 | SLE RA 14 | 18.68 | -0.13 | 78.7 | 0.0347 | 0.9645 | 0.0001 |
| 165 | SLE RA 15 | 18.56 | -0.14 | 78.67 | 0.0384 | 0.9591 | 0.0002 |
| 165 | SLE RA 16 | 18.52 | -0.13 | 78.16 | 0.0345 | 0.9565 | 0.0001 |
| 165 | SLE RA 17 | 18.41 | -0.14 | 78.14 | 0.0382 | 0.9512 | 0.0002 |
| 165 | SLE RA 18 | 18.8 | -0.13 | 79.02 | 0.0348 | 0.9695 | 0.0001 |
| 165 | SLE RA 19 | 18.68 | -0.14 | 78.99 | 0.0385 | 0.9641 | 0.0002 |
| 165 | SLE RA 20 | 19.14 | -0.13 | 80.18 | 0.0352 | 0.9876 | 0.0001 |
| 165 | SLE RA 21 | 19.03 | -0.14 | 80.16 | 0.0389 | 0.9822 | 0.0002 |
| 165 | SLE FR 1 | 15.57 | -0.11 | 68.41 | 0.031 | 0.8059 | 0.0001 |
| 165 | SLE FR 2 | 15.53 | -0.12 | 68.4 | 0.0322 | 0.8041 | 0.0001 |
| 165 | SLE FR 3 | 15.71 | -0.12 | 68.88 | 0.0311 | 0.8131 | 0.0001 |
| 165 | SLE FR 4 | 16.5 | -0.12 | 71.58 | 0.0333 | 0.8532 | 0.0001 |
| 165 | SLE FR 5 | 16.68 | -0.12 | 72.06 | 0.0323 | 0.8622 | 0.0001 |
| 165 | SLE FR 6 | 17.18 | -0.12 | 73.71 | 0.0329 | 0.8877 | 0.0001 |
| 165 | SLE QP 1 | 15.57 | -0.11 | 68.41 | 0.031 | 0.8059 | 0.0001 |
| 165 | SLE QP 2 | 16.54 | -0.12 | 71.59 | 0.0321 | 0.8549 | 0.0001 |
| 165 | SLD 1 | 26.02 | -0.17 | 93.39 | 0.0223 | 1.3515 | -0.0005 |
| 165 | SLD 2 | 26.02 | -0.17 | 93.39 | 0.0223 | 1.3515 | -0.0005 |
| 165 | SLD 3 | 25.34 | -0.26 | 95.49 | 0.0857 | 1.3204 | 0 |
| 165 | SLD 4 | 25.34 | -0.26 | 95.49 | 0.0857 | 1.3204 | 0 |
| 165 | SLD 5 | 20.41 | -0.01 | 74.94 | -0.0669 | 1.0511 | -0.0008 |
| 165 | SLD 6 | 20.41 | -0.01 | 74.94 | -0.0669 | 1.0511 | -0.0008 |
| 165 | SLD 7 | 18.15 | -0.29 | 81.96 | 0.1442 | 0.9474 | 0.0009 |
| 165 | SLD 8 | 18.15 | -0.29 | 81.96 | 0.1442 | 0.9474 | 0.0009 |
| 165 | SLD 9 | 14.92 | 0.05 | 61.23 | -0.08 | 0.7624 | -0.0006 |
| 165 | SLD 10 | 14.92 | 0.05 | 61.23 | -0.08 | 0.7624 | -0.0006 |
| 165 | SLD 11 | 12.67 | -0.23 | 68.25 | 0.1311 | 0.6588 | 0.0011 |
| 165 | SLD 12 | 12.67 | -0.23 | 68.25 | 0.1311 | 0.6588 | 0.0011 |
| 165 | SLD 13 | 7.73 | 0.02 | 47.7 | -0.0215 | 0.3895 | 0.0002 |
| 165 | SLD 14 | 7.73 | 0.02 | 47.7 | -0.0215 | 0.3895 | 0.0002 |
| 165 | SLD 15 | 7.06 | -0.06 | 49.8 | 0.0419 | 0.3584 | 0.0007 |

| Nodo | Cont. | Reazione a traslazione | | | Reazione a rotazione | | |
|---|---|---|---|---|---|---|---|
| Ind. | N.br. | x | y | z | x | y | z |
| 165 | SLD 16 | 7.06 | -0.06 | 49.8 | 0.0419 | 0.3584 | 0.0007 |
| 165 | SLV 1 | 38.48 | -0.25 | 122.32 | 0.0051 | 2.0049 | -0.0013 |
| 165 | SLV 2 | 38.48 | -0.25 | 122.32 | 0.0051 | 2.0049 | -0.0013 |
| 165 | SLV 3 | 36.89 | -0.45 | 127.2 | 0.1651 | 1.9316 | 0 |
| 165 | SLV 4 | 36.89 | -0.45 | 127.2 | 0.1651 | 1.9316 | 0 |
| 165 | SLV 5 | 25.55 | 0.16 | 79.4 | -0.2187 | 1.311 | -0.0022 |
| 165 | SLV 6 | 25.55 | 0.16 | 79.4 | -0.2187 | 1.311 | -0.0022 |
| 165 | SLV 7 | 20.22 | -0.54 | 95.69 | 0.3148 | 1.0669 | 0.002 |
| 165 | SLV 8 | 20.22 | -0.54 | 95.69 | 0.3148 | 1.0669 | 0.002 |
| 165 | SLV 9 | 12.86 | 0.3 | 47.5 | -0.2505 | 0.643 | -0.0018 |
| 165 | SLV 10 | 12.86 | 0.3 | 47.5 | -0.2505 | 0.643 | -0.0018 |
| 165 | SLV 11 | 7.53 | -0.4 | 63.79 | 0.283 | 0.3989 | 0.0025 |
| 165 | SLV 12 | 7.53 | -0.4 | 63.79 | 0.283 | 0.3989 | 0.0025 |
| 165 | SLV 13 | -3.81 | 0.22 | 15.98 | -0.1009 | -0.2218 | 0.0003 |
| 165 | SLV 14 | -3.81 | 0.22 | 15.98 | -0.1009 | -0.2218 | 0.0003 |
| 165 | SLV 15 | -5.41 | 0.01 | 20.87 | 0.0591 | -0.295 | 0.0016 |
| 165 | SLV 16 | -5.41 | 0.01 | 20.87 | 0.0591 | -0.295 | 0.0016 |
| 166 | SLU 1 | 12.41 | -0.04 | 60.02 | 0.0192 | 0.5495 | -0.0001 |
| 166 | SLU 2 | 12.06 | -0.06 | 60.08 | 0.0323 | 0.5335 | -0.0001 |
| 166 | SLU 3 | 13.1 | -0.04 | 62.24 | 0.0198 | 0.5807 | -0.0001 |
| 166 | SLU 4 | 12.9 | -0.06 | 62.27 | 0.0276 | 0.5711 | -0.0001 |
| 166 | SLU 5 | 12.54 | -0.06 | 61.6 | 0.0326 | 0.5551 | -0.0001 |
| 166 | SLU 6 | 13.59 | -0.04 | 63.76 | 0.0201 | 0.6023 | -0.0001 |
| 166 | SLU 7 | 13.38 | -0.06 | 63.8 | 0.0279 | 0.5927 | -0.0001 |
| 166 | SLU 8 | 13.37 | -0.04 | 63.07 | 0.0198 | 0.5927 | -0.0001 |
| 166 | SLU 9 | 13.17 | -0.06 | 63.11 | 0.0277 | 0.5831 | -0.0001 |
| 166 | SLU 10 | 15.24 | -0.07 | 70.16 | 0.0349 | 0.6756 | -0.0001 |
| 166 | SLU 11 | 16.28 | -0.05 | 72.32 | 0.0224 | 0.7229 | -0.0001 |
| 166 | SLU 12 | 16.07 | -0.06 | 72.35 | 0.0302 | 0.7133 | -0.0001 |
| 166 | SLU 13 | 15.72 | -0.07 | 71.68 | 0.0352 | 0.6972 | -0.0001 |
| 166 | SLU 14 | 16.76 | -0.05 | 73.84 | 0.0227 | 0.7445 | -0.0001 |
| 166 | SLU 15 | 16.55 | -0.06 | 73.87 | 0.0305 | 0.7348 | -0.0001 |
| 166 | SLU 16 | 16.55 | -0.05 | 73.15 | 0.0224 | 0.7348 | -0.0001 |
| 166 | SLU 17 | 16.34 | -0.06 | 73.18 | 0.0303 | 0.7252 | -0.0001 |
| 166 | SLU 18 | 16.95 | -0.05 | 74.42 | 0.0229 | 0.7526 | -0.0001 |
| 166 | SLU 19 | 16.74 | -0.06 | 74.45 | 0.0308 | 0.743 | -0.0001 |
| 166 | SLU 20 | 17.43 | -0.05 | 75.94 | 0.0232 | 0.7742 | -0.0001 |
| 166 | SLU 21 | 17.22 | -0.06 | 75.98 | 0.0311 | 0.7645 | -0.0001 |
| 166 | SLU 22 | 15.28 | -0.05 | 69.55 | 0.0217 | 0.6779 | -0.0001 |
| 166 | SLU 23 | 14.93 | -0.07 | 69.6 | 0.0348 | 0.6619 | -0.0001 |
| 166 | SLU 24 | 15.98 | -0.05 | 71.76 | 0.0223 | 0.7091 | -0.0001 |
| 166 | SLU 25 | 15.77 | -0.06 | 71.8 | 0.0301 | 0.6995 | -0.0001 |
| 166 | SLU 26 | 15.42 | -0.07 | 71.13 | 0.0351 | 0.6835 | -0.0001 |
| 166 | SLU 27 | 16.46 | -0.05 | 73.29 | 0.0226 | 0.7307 | -0.0001 |
| 166 | SLU 28 | 16.25 | -0.06 | 73.32 | 0.0305 | 0.7211 | -0.0001 |
| 166 | SLU 29 | 16.25 | -0.05 | 72.6 | 0.0224 | 0.7211 | -0.0001 |
| 166 | SLU 30 | 16.04 | -0.06 | 72.63 | 0.0302 | 0.7115 | -0.0001 |
| 166 | SLU 31 | 18.11 | -0.07 | 79.68 | 0.0374 | 0.804 | -0.0001 |
| 166 | SLU 32 | 19.15 | -0.05 | 81.84 | 0.0249 | 0.8513 | -0.0001 |
| 166 | SLU 33 | 18.94 | -0.07 | 81.87 | 0.0327 | 0.8417 | -0.0001 |
| 166 | SLU 34 | 18.59 | -0.08 | 81.21 | 0.0377 | 0.8256 | -0.0001 |
| 166 | SLU 35 | 19.63 | -0.05 | 83.36 | 0.0252 | 0.8729 | -0.0001 |
| 166 | SLU 36 | 19.43 | -0.07 | 83.4 | 0.0331 | 0.8633 | -0.0001 |
| 166 | SLU 37 | 19.42 | -0.05 | 82.68 | 0.025 | 0.8632 | -0.0001 |
| 166 | SLU 38 | 19.21 | -0.07 | 82.71 | 0.0328 | 0.8536 | -0.0001 |
| 166 | SLU 39 | 19.82 | -0.05 | 83.94 | 0.0254 | 0.881 | -0.0001 |
| 166 | SLU 40 | 19.61 | -0.07 | 83.98 | 0.0333 | 0.8714 | -0.0001 |
| 166 | SLU 41 | 20.3 | -0.05 | 85.47 | 0.0258 | 0.9026 | -0.0001 |
| 166 | SLU 42 | 20.09 | -0.07 | 85.5 | 0.0336 | 0.893 | -0.0001 |
| 166 | SLU 43 | 15.15 | -0.05 | 74.77 | 0.0241 | 0.6703 | -0.0001 |
| 166 | SLU 44 | 14.8 | -0.07 | 74.82 | 0.0372 | 0.6543 | -0.0001 |
| 166 | SLU 45 | 15.84 | -0.05 | 76.98 | 0.0246 | 0.7015 | -0.0001 |
| 166 | SLU 46 | 15.63 | -0.07 | 77.01 | 0.0325 | 0.6919 | -0.0001 |
| 166 | SLU 47 | 15.28 | -0.07 | 76.35 | 0.0375 | 0.6759 | -0.0001 |
| 166 | SLU 48 | 16.32 | -0.05 | 78.51 | 0.025 | 0.7231 | -0.0001 |
| 166 | SLU 49 | 16.12 | -0.07 | 78.54 | 0.0328 | 0.7135 | -0.0001 |
| 166 | SLU 50 | 16.11 | -0.05 | 77.82 | 0.0247 | 0.7135 | -0.0001 |
| 166 | SLU 51 | 15.9 | -0.07 | 77.85 | 0.0326 | 0.7039 | -0.0001 |
| 166 | SLU 52 | 17.98 | -0.08 | 84.9 | 0.0398 | 0.7964 | -0.0001 |
| 166 | SLU 53 | 19.02 | -0.06 | 87.06 | 0.0272 | 0.8437 | -0.0001 |
| 166 | SLU 54 | 18.81 | -0.07 | 87.09 | 0.0351 | 0.8341 | -0.0001 |
| 166 | SLU 55 | 18.46 | -0.08 | 86.42 | 0.0401 | 0.818 | -0.0001 |
| 166 | SLU 56 | 19.5 | -0.06 | 88.58 | 0.0276 | 0.8653 | -0.0001 |
| 166 | SLU 57 | 19.29 | -0.07 | 88.61 | 0.0354 | 0.8557 | -0.0001 |
| 166 | SLU 58 | 19.29 | -0.06 | 87.89 | 0.0273 | 0.8556 | -0.0001 |
| 166 | SLU 59 | 19.08 | -0.07 | 87.93 | 0.0352 | 0.846 | -0.0001 |
| 166 | SLU 60 | 19.69 | -0.06 | 89.16 | 0.0278 | 0.8734 | -0.0001 |
| 166 | SLU 61 | 19.48 | -0.07 | 89.19 | 0.0357 | 0.8638 | -0.0001 |
| 166 | SLU 62 | 20.17 | -0.06 | 90.69 | 0.0281 | 0.895 | -0.0001 |
| 166 | SLU 63 | 19.96 | -0.07 | 90.72 | 0.036 | 0.8854 | -0.0001 |
| 166 | SLU 64 | 18.02 | -0.06 | 84.29 | 0.0266 | 0.7987 | -0.0001 |
| 166 | SLU 65 | 17.67 | -0.08 | 84.35 | 0.0397 | 0.7827 | -0.0001 |
| 166 | SLU 66 | 18.71 | -0.06 | 86.51 | 0.0272 | 0.83 | -0.0001 |
| 166 | SLU 67 | 18.51 | -0.07 | 86.54 | 0.035 | 0.8203 | -0.0001 |
| 166 | SLU 68 | 18.15 | -0.08 | 85.87 | 0.04 | 0.8043 | -0.0001 |
| 166 | SLU 69 | 19.2 | -0.06 | 88.03 | 0.0275 | 0.8515 | -0.0001 |
| 166 | SLU 70 | 18.99 | -0.07 | 88.06 | 0.0354 | 0.8419 | -0.0001 |
| 166 | SLU 71 | 18.98 | -0.06 | 87.34 | 0.0273 | 0.8419 | -0.0001 |

| Nodo | Cont. | Reazione a traslazione | | | Reazione a rotazione | | |
|---|---|---|---|---|---|---|---|
| Ind. | N.br. | x | y | z | x | y | z |
| 166 | SLU 72 | 18.78 | -0.07 | 87.37 | 0.0351 | 0.8323 | -0.0001 |
| 166 | SLU 73 | 20.85 | -0.08 | 94.42 | 0.0423 | 0.9249 | -0.0001 |
| 166 | SLU 74 | 21.89 | -0.06 | 96.58 | 0.0298 | 0.9721 | -0.0001 |
| 166 | SLU 75 | 21.68 | -0.08 | 96.61 | 0.0376 | 0.9625 | -0.0001 |
| 166 | SLU 76 | 21.33 | -0.09 | 95.95 | 0.0426 | 0.9464 | -0.0001 |
| 166 | SLU 77 | 22.37 | -0.06 | 98.11 | 0.0301 | 0.9937 | -0.0001 |
| 166 | SLU 78 | 22.16 | -0.08 | 98.14 | 0.038 | 0.9841 | -0.0001 |
| 166 | SLU 79 | 22.16 | -0.06 | 97.42 | 0.0299 | 0.9841 | -0.0001 |
| 166 | SLU 80 | 21.95 | -0.08 | 97.45 | 0.0377 | 0.9744 | -0.0001 |
| 166 | SLU 81 | 22.56 | -0.06 | 98.69 | 0.0303 | 1.0018 | -0.0001 |
| 166 | SLU 82 | 22.35 | -0.08 | 98.72 | 0.0382 | 0.9922 | -0.0001 |
| 166 | SLU 83 | 23.04 | -0.06 | 100.21 | 0.0307 | 1.0234 | -0.0001 |
| 166 | SLU 84 | 22.83 | -0.08 | 100.24 | 0.0385 | 1.0138 | -0.0001 |
| 166 | SLE RA 1 | 13.23 | -0.04 | 62.75 | 0.0199 | 0.5862 | -0.0001 |
| 166 | SLE RA 2 | 13 | -0.06 | 62.78 | 0.0286 | 0.5755 | -0.0001 |
| 166 | SLE RA 3 | 13.69 | -0.04 | 64.22 | 0.0203 | 0.607 | -0.0001 |
| 166 | SLE RA 4 | 13.55 | -0.05 | 64.24 | 0.0255 | 0.6006 | -0.0001 |
| 166 | SLE RA 5 | 13.32 | -0.06 | 63.8 | 0.0289 | 0.5899 | -0.0001 |
| 166 | SLE RA 6 | 14.01 | -0.04 | 65.24 | 0.0205 | 0.6214 | -0.0001 |
| 166 | SLE RA 7 | 13.88 | -0.05 | 65.26 | 0.0257 | 0.615 | -0.0001 |
| 166 | SLE RA 8 | 13.87 | -0.04 | 64.78 | 0.0204 | 0.615 | -0.0001 |
| 166 | SLE RA 9 | 13.73 | -0.05 | 64.8 | 0.0256 | 0.6086 | -0.0001 |
| 166 | SLE RA 10 | 15.12 | -0.06 | 69.5 | 0.0304 | 0.6703 | -0.0001 |
| 166 | SLE RA 11 | 15.81 | -0.05 | 70.94 | 0.022 | 0.7018 | -0.0001 |
| 166 | SLE RA 12 | 15.67 | -0.06 | 70.96 | 0.0273 | 0.6954 | -0.0001 |
| 166 | SLE RA 13 | 15.44 | -0.06 | 70.52 | 0.0306 | 0.6847 | -0.0001 |
| 166 | SLE RA 14 | 16.13 | -0.05 | 71.96 | 0.0222 | 0.7162 | -0.0001 |
| 166 | SLE RA 15 | 15.99 | -0.06 | 71.98 | 0.0275 | 0.7098 | -0.0001 |
| 166 | SLE RA 16 | 15.99 | -0.05 | 71.5 | 0.0221 | 0.7097 | -0.0001 |
| 166 | SLE RA 17 | 15.85 | -0.06 | 71.52 | 0.0273 | 0.7033 | -0.0001 |
| 166 | SLE RA 18 | 16.26 | -0.05 | 72.34 | 0.0224 | 0.7216 | -0.0001 |
| 166 | SLE RA 19 | 16.12 | -0.06 | 72.36 | 0.0276 | 0.7152 | -0.0001 |
| 166 | SLE RA 20 | 16.58 | -0.05 | 73.36 | 0.0226 | 0.736 | -0.0001 |
| 166 | SLE RA 21 | 16.44 | -0.06 | 73.38 | 0.0279 | 0.7296 | -0.0001 |
| 166 | SLE FR 1 | 13.23 | -0.04 | 62.75 | 0.0199 | 0.5862 | -0.0001 |
| 166 | SLE FR 2 | 13.18 | -0.04 | 62.75 | 0.0217 | 0.5841 | -0.0001 |
| 166 | SLE FR 3 | 13.36 | -0.04 | 63.15 | 0.02 | 0.5919 | -0.0001 |
| 166 | SLE FR 4 | 14.09 | -0.05 | 65.63 | 0.0224 | 0.6247 | -0.0001 |
| 166 | SLE FR 5 | 14.27 | -0.04 | 66.03 | 0.0208 | 0.6326 | -0.0001 |
| 166 | SLE FR 6 | 14.74 | -0.04 | 67.54 | 0.0212 | 0.6539 | -0.0001 |
| 166 | SLE QP 1 | 13.23 | -0.04 | 62.75 | 0.0199 | 0.5862 | -0.0001 |
| 166 | SLE QP 2 | 14.14 | -0.04 | 65.63 | 0.0207 | 0.6268 | -0.0001 |
| 166 | SLD 1 | 24.32 | -0.14 | 81.98 | -0.0114 | 1.1056 | 0 |
| 166 | SLD 2 | 24.32 | -0.14 | 81.98 | -0.0114 | 1.1056 | 0 |
| 166 | SLD 3 | 23.62 | -0.06 | 83.38 | 0.1103 | 1.0737 | -0.0003 |
| 166 | SLD 4 | 23.62 | -0.06 | 83.38 | 0.1103 | 1.0737 | -0.0003 |
| 166 | SLD 5 | 18.26 | -0.2 | 68.41 | -0.1736 | 0.8187 | 0.0003 |
| 166 | SLD 6 | 18.26 | -0.2 | 68.41 | -0.1736 | 0.8187 | 0.0003 |
| 166 | SLD 7 | 15.91 | 0.08 | 73.08 | 0.2322 | 0.7126 | -0.0005 |
| 166 | SLD 8 | 15.91 | 0.08 | 73.08 | 0.2322 | 0.7126 | -0.0005 |
| 166 | SLD 9 | 12.37 | -0.17 | 58.18 | -0.1908 | 0.541 | 0.0004 |
| 166 | SLD 10 | 12.37 | -0.17 | 58.18 | -0.1908 | 0.541 | 0.0004 |
| 166 | SLD 11 | 10.01 | 0.11 | 62.84 | 0.2149 | 0.4349 | -0.0005 |
| 166 | SLD 12 | 10.01 | 0.11 | 62.84 | 0.2149 | 0.4349 | -0.0005 |
| 166 | SLD 13 | 4.66 | -0.03 | 47.87 | -0.069 | 0.1799 | 0.0001 |
| 166 | SLD 14 | 4.66 | -0.03 | 47.87 | -0.069 | 0.1799 | 0.0001 |
| 166 | SLD 15 | 3.96 | 0.05 | 49.27 | 0.0527 | 0.148 | -0.0001 |
| 166 | SLD 16 | 3.96 | 0.05 | 49.27 | 0.0527 | 0.148 | -0.0001 |
| 166 | SLV 1 | 37.66 | -0.28 | 103.78 | -0.0628 | 1.7315 | 0.0001 |
| 166 | SLV 2 | 37.66 | -0.28 | 103.78 | -0.0628 | 1.7315 | 0.0001 |
| 166 | SLV 3 | 36 | -0.07 | 107.04 | 0.2465 | 1.6566 | -0.0005 |
| 166 | SLV 4 | 36 | -0.07 | 107.04 | 0.2465 | 1.6566 | -0.0005 |
| 166 | SLV 5 | 23.72 | -0.42 | 72.12 | -0.4735 | 1.0719 | 0.0009 |
| 166 | SLV 6 | 23.72 | -0.42 | 72.12 | -0.4735 | 1.0719 | 0.0009 |
| 166 | SLV 7 | 18.18 | 0.26 | 83 | 0.5575 | 0.822 | -0.0011 |
| 166 | SLV 8 | 18.18 | 0.26 | 83 | 0.5575 | 0.822 | -0.0011 |
| 166 | SLV 9 | 10.1 | -0.34 | 48.25 | -0.5162 | 0.4316 | 0.001 |
| 166 | SLV 10 | 10.1 | -0.34 | 48.25 | -0.5162 | 0.4316 | 0.001 |
| 166 | SLV 11 | 4.56 | 0.34 | 59.13 | 0.5148 | 0.1817 | -0.0011 |
| 166 | SLV 12 | 4.56 | 0.34 | 59.13 | 0.5148 | 0.1817 | -0.0011 |
| 166 | SLV 13 | -7.72 | -0.01 | 24.21 | -0.2052 | -0.403 | 0.0004 |
| 166 | SLV 14 | -7.72 | -0.01 | 24.21 | -0.2052 | -0.403 | 0.0004 |
| 166 | SLV 15 | -9.38 | 0.19 | 27.47 | 0.1041 | -0.4779 | -0.0002 |
| 166 | SLV 16 | -9.38 | 0.19 | 27.47 | 0.1041 | -0.4779 | -0.0002 |
| 167 | SLU 1 | 10.81 | -0.02 | 58.74 | 0.012 | 0.5076 | 0 |
| 167 | SLU 2 | 10.43 | -0.03 | 58.79 | 0.026 | 0.4903 | -0.0001 |
| 167 | SLU 3 | 11.47 | -0.02 | 60.85 | 0.0123 | 0.538 | 0 |
| 167 | SLU 4 | 11.23 | -0.03 | 60.88 | 0.0207 | 0.5276 | -0.0001 |
| 167 | SLU 5 | 10.88 | -0.03 | 60.25 | 0.0261 | 0.5115 | -0.0001 |
| 167 | SLU 6 | 11.92 | -0.02 | 62.3 | 0.0123 | 0.5592 | 0 |
| 167 | SLU 7 | 11.69 | -0.03 | 62.33 | 0.0207 | 0.5488 | -0.0001 |
| 167 | SLU 8 | 11.72 | -0.02 | 61.65 | 0.0122 | 0.55 | 0 |
| 167 | SLU 9 | 11.49 | -0.03 | 61.68 | 0.0205 | 0.5396 | -0.0001 |
| 167 | SLU 10 | 13.32 | -0.04 | 68.8 | 0.0277 | 0.622 | -0.0001 |
| 167 | SLU 11 | 14.36 | -0.02 | 70.85 | 0.014 | 0.6697 | 0 |
| 167 | SLU 12 | 14.13 | -0.03 | 70.88 | 0.0224 | 0.6593 | -0.0001 |
| 167 | SLU 13 | 13.78 | -0.04 | 70.25 | 0.0278 | 0.6432 | -0.0001 |
| 167 | SLU 14 | 14.82 | -0.02 | 72.31 | 0.0141 | 0.6909 | 0 |

| Nodo | Cont. | Reazione a traslazione | | | Reazione a rotazione | | |
|---|---|---|---|---|---|---|---|
| Ind. | N.br. | x | y | z | x | y | z |
| 167 | SLU 15 | 14.58 | -0.03 | 72.34 | 0.0224 | 0.6805 | -0.0001 |
| 167 | SLU 16 | 14.62 | -0.02 | 71.66 | 0.0139 | 0.6817 | 0 |
| 167 | SLU 17 | 14.39 | -0.03 | 71.69 | 0.0223 | 0.6713 | -0.0001 |
| 167 | SLU 18 | 14.95 | -0.02 | 73.04 | 0.0145 | 0.6957 | 0 |
| 167 | SLU 19 | 14.72 | -0.03 | 73.07 | 0.0229 | 0.6853 | -0.0001 |
| 167 | SLU 20 | 15.41 | -0.02 | 74.49 | 0.0146 | 0.7169 | 0 |
| 167 | SLU 21 | 15.17 | -0.03 | 74.52 | 0.0229 | 0.7066 | -0.0001 |
| 167 | SLU 22 | 13.43 | -0.02 | 68.14 | 0.0136 | 0.6272 | 0 |
| 167 | SLU 23 | 13.04 | -0.04 | 68.19 | 0.0276 | 0.6099 | -0.0001 |
| 167 | SLU 24 | 14.08 | -0.02 | 70.24 | 0.0139 | 0.6576 | 0 |
| 167 | SLU 25 | 13.85 | -0.03 | 70.27 | 0.0222 | 0.6472 | -0.0001 |
| 167 | SLU 26 | 13.5 | -0.04 | 69.64 | 0.0277 | 0.6311 | -0.0001 |
| 167 | SLU 27 | 14.53 | -0.02 | 71.7 | 0.0139 | 0.6788 | 0 |
| 167 | SLU 28 | 14.3 | -0.03 | 71.73 | 0.0223 | 0.6685 | -0.0001 |
| 167 | SLU 29 | 14.34 | -0.02 | 71.05 | 0.0137 | 0.6696 | 0 |
| 167 | SLU 30 | 14.1 | -0.03 | 71.08 | 0.0221 | 0.6593 | -0.0001 |
| 167 | SLU 31 | 15.94 | -0.04 | 78.19 | 0.0293 | 0.7416 | -0.0001 |
| 167 | SLU 32 | 16.98 | -0.02 | 80.25 | 0.0156 | 0.7893 | -0.0001 |
| 167 | SLU 33 | 16.74 | -0.03 | 80.28 | 0.024 | 0.7789 | -0.0001 |
| 167 | SLU 34 | 16.39 | -0.04 | 79.65 | 0.0294 | 0.7628 | -0.0001 |
| 167 | SLU 35 | 17.43 | -0.02 | 81.7 | 0.0156 | 0.8105 | -0.0001 |
| 167 | SLU 36 | 17.2 | -0.03 | 81.73 | 0.024 | 0.8002 | -0.0001 |
| 167 | SLU 37 | 17.23 | -0.02 | 81.05 | 0.0155 | 0.8013 | -0.0001 |
| 167 | SLU 38 | 17 | -0.03 | 81.08 | 0.0239 | 0.791 | -0.0001 |
| 167 | SLU 39 | 17.57 | -0.02 | 82.43 | 0.0161 | 0.8153 | -0.0001 |
| 167 | SLU 40 | 17.33 | -0.03 | 82.46 | 0.0245 | 0.8049 | -0.0001 |
| 167 | SLU 41 | 18.02 | -0.02 | 83.89 | 0.0161 | 0.8365 | -0.0001 |
| 167 | SLU 42 | 17.79 | -0.03 | 83.92 | 0.0245 | 0.8262 | -0.0001 |
| 167 | SLU 43 | 13.16 | -0.02 | 73.14 | 0.0151 | 0.6188 | 0 |
| 167 | SLU 44 | 12.78 | -0.04 | 73.19 | 0.0291 | 0.6015 | -0.0001 |
| 167 | SLU 45 | 13.81 | -0.02 | 75.25 | 0.0153 | 0.6492 | -0.0001 |
| 167 | SLU 46 | 13.58 | -0.03 | 75.28 | 0.0237 | 0.6389 | -0.0001 |
| 167 | SLU 47 | 13.23 | -0.04 | 74.65 | 0.0291 | 0.6228 | -0.0001 |
| 167 | SLU 48 | 14.27 | -0.02 | 76.7 | 0.0154 | 0.6705 | -0.0001 |
| 167 | SLU 49 | 14.04 | -0.03 | 76.73 | 0.0238 | 0.6601 | -0.0001 |
| 167 | SLU 50 | 14.07 | -0.02 | 76.05 | 0.0152 | 0.6613 | -0.0001 |
| 167 | SLU 51 | 13.84 | -0.03 | 76.08 | 0.0236 | 0.6509 | -0.0001 |
| 167 | SLU 52 | 15.67 | -0.04 | 83.2 | 0.0308 | 0.7332 | -0.0001 |
| 167 | SLU 53 | 16.71 | -0.02 | 85.25 | 0.0171 | 0.7809 | -0.0001 |
| 167 | SLU 54 | 16.48 | -0.03 | 85.28 | 0.0254 | 0.7706 | -0.0001 |
| 167 | SLU 55 | 16.13 | -0.04 | 84.66 | 0.0309 | 0.7545 | -0.0001 |
| 167 | SLU 56 | 17.16 | -0.02 | 86.71 | 0.0171 | 0.8022 | -0.0001 |
| 167 | SLU 57 | 16.93 | -0.03 | 86.74 | 0.0255 | 0.7918 | -0.0001 |
| 167 | SLU 58 | 16.97 | -0.02 | 86.06 | 0.0169 | 0.793 | -0.0001 |
| 167 | SLU 59 | 16.74 | -0.03 | 86.09 | 0.0253 | 0.7826 | -0.0001 |
| 167 | SLU 60 | 17.3 | -0.02 | 87.44 | 0.0176 | 0.807 | -0.0001 |
| 167 | SLU 61 | 17.07 | -0.03 | 87.47 | 0.026 | 0.7966 | -0.0001 |
| 167 | SLU 62 | 17.75 | -0.02 | 88.89 | 0.0176 | 0.8282 | -0.0001 |
| 167 | SLU 63 | 17.52 | -0.03 | 88.92 | 0.026 | 0.8178 | -0.0001 |
| 167 | SLU 64 | 15.78 | -0.02 | 82.54 | 0.0167 | 0.7384 | -0.0001 |
| 167 | SLU 65 | 15.39 | -0.04 | 82.59 | 0.0307 | 0.7212 | -0.0001 |
| 167 | SLU 66 | 16.43 | -0.02 | 84.64 | 0.0169 | 0.7689 | -0.0001 |
| 167 | SLU 67 | 16.2 | -0.03 | 84.67 | 0.0253 | 0.7585 | -0.0001 |
| 167 | SLU 68 | 15.84 | -0.04 | 84.04 | 0.0307 | 0.7424 | -0.0001 |
| 167 | SLU 69 | 16.88 | -0.02 | 86.1 | 0.017 | 0.7901 | -0.0001 |
| 167 | SLU 70 | 16.65 | -0.03 | 86.13 | 0.0254 | 0.7797 | -0.0001 |
| 167 | SLU 71 | 16.68 | -0.02 | 85.45 | 0.0168 | 0.7809 | -0.0001 |
| 167 | SLU 72 | 16.45 | -0.03 | 85.48 | 0.0252 | 0.7705 | -0.0001 |
| 167 | SLU 73 | 18.29 | -0.04 | 92.6 | 0.0324 | 0.8528 | -0.0001 |
| 167 | SLU 74 | 19.32 | -0.02 | 94.65 | 0.0186 | 0.9006 | -0.0001 |
| 167 | SLU 75 | 19.09 | -0.04 | 94.68 | 0.027 | 0.8902 | -0.0001 |
| 167 | SLU 76 | 18.74 | -0.04 | 94.05 | 0.0324 | 0.8741 | -0.0001 |
| 167 | SLU 77 | 19.78 | -0.02 | 96.1 | 0.0187 | 0.9218 | -0.0001 |
| 167 | SLU 78 | 19.55 | -0.04 | 96.13 | 0.0271 | 0.9114 | -0.0001 |
| 167 | SLU 79 | 19.58 | -0.02 | 95.45 | 0.0185 | 0.9126 | -0.0001 |
| 167 | SLU 80 | 19.35 | -0.04 | 95.49 | 0.0269 | 0.9022 | -0.0001 |
| 167 | SLU 81 | 19.91 | -0.02 | 96.83 | 0.0192 | 0.9266 | -0.0001 |
| 167 | SLU 82 | 19.68 | -0.04 | 96.86 | 0.0275 | 0.9162 | -0.0001 |
| 167 | SLU 83 | 20.37 | -0.03 | 98.29 | 0.0192 | 0.9478 | -0.0001 |
| 167 | SLU 84 | 20.14 | -0.04 | 98.32 | 0.0276 | 0.9374 | -0.0001 |
| 167 | SLE RA 1 | 11.56 | -0.02 | 61.43 | 0.0125 | 0.5417 | 0 |
| 167 | SLE RA 2 | 11.3 | -0.03 | 61.46 | 0.0218 | 0.5302 | -0.0001 |
| 167 | SLE RA 3 | 12 | -0.02 | 62.83 | 0.0126 | 0.562 | 0 |
| 167 | SLE RA 4 | 11.84 | -0.02 | 62.85 | 0.0182 | 0.5551 | -0.0001 |
| 167 | SLE RA 5 | 11.61 | -0.03 | 62.43 | 0.0218 | 0.5444 | -0.0001 |
| 167 | SLE RA 6 | 12.3 | -0.02 | 63.8 | 0.0127 | 0.5762 | 0 |
| 167 | SLE RA 7 | 12.14 | -0.02 | 63.82 | 0.0183 | 0.5693 | -0.0001 |
| 167 | SLE RA 8 | 12.17 | -0.02 | 63.37 | 0.0126 | 0.57 | 0 |
| 167 | SLE RA 9 | 12.01 | -0.02 | 63.39 | 0.0182 | 0.5631 | -0.0001 |
| 167 | SLE RA 10 | 13.23 | -0.03 | 68.13 | 0.023 | 0.618 | -0.0001 |
| 167 | SLE RA 11 | 13.93 | -0.02 | 69.5 | 0.0138 | 0.6498 | 0 |
| 167 | SLE RA 12 | 13.77 | -0.03 | 69.52 | 0.0194 | 0.6429 | -0.0001 |
| 167 | SLE RA 13 | 13.54 | -0.03 | 69.1 | 0.023 | 0.6322 | -0.0001 |
| 167 | SLE RA 14 | 14.23 | -0.02 | 70.47 | 0.0138 | 0.664 | 0 |
| 167 | SLE RA 15 | 14.07 | -0.03 | 70.49 | 0.0194 | 0.6571 | -0.0001 |
| 167 | SLE RA 16 | 14.1 | -0.02 | 70.04 | 0.0137 | 0.6578 | 0 |
| 167 | SLE RA 17 | 13.94 | -0.03 | 70.06 | 0.0193 | 0.6509 | -0.0001 |
| 167 | SLE RA 18 | 14.32 | -0.02 | 70.96 | 0.0141 | 0.6672 | 0 |

| Nodo | Cont. | Reazione a traslazione | | | Reazione a rotazione | | |
|---|---|---|---|---|---|---|---|
| Ind. | N.br. | x | y | z | x | y | z |
| 167 | SLE RA 19 | 14.17 | -0.03 | 70.98 | 0.0197 | 0.6602 | -0.0001 |
| 167 | SLE RA 20 | 14.62 | -0.02 | 71.93 | 0.0142 | 0.6813 | 0 |
| 167 | SLE RA 21 | 14.47 | -0.03 | 71.95 | 0.0198 | 0.6744 | -0.0001 |
| 167 | SLE FR 1 | 11.56 | -0.02 | 61.43 | 0.0125 | 0.5417 | 0 |
| 167 | SLE FR 2 | 11.51 | -0.02 | 61.43 | 0.0144 | 0.5394 | 0 |
| 167 | SLE FR 3 | 11.68 | -0.02 | 61.81 | 0.0125 | 0.5474 | 0 |
| 167 | SLE FR 4 | 12.34 | -0.02 | 64.29 | 0.0148 | 0.5771 | 0 |
| 167 | SLE FR 5 | 12.51 | -0.02 | 64.67 | 0.013 | 0.585 | 0 |
| 167 | SLE FR 6 | 12.94 | -0.02 | 66.19 | 0.0133 | 0.6044 | 0 |
| 167 | SLE QP 1 | 11.56 | -0.02 | 61.43 | 0.0125 | 0.5417 | 0 |
| 167 | SLE QP 2 | 12.39 | -0.02 | 64.28 | 0.013 | 0.5794 | 0 |
| 167 | SLD 1 | 22.85 | 0.01 | 78.73 | -0.117 | 1.0627 | 0.0001 |
| 167 | SLD 2 | 22.85 | 0.01 | 78.73 | -0.117 | 1.0627 | 0.0001 |
| 167 | SLD 3 | 22.17 | -0.13 | 77.72 | 0.0712 | 1.0321 | -0.0003 |
| 167 | SLD 4 | 22.17 | -0.13 | 77.72 | 0.0712 | 1.0321 | -0.0003 |
| 167 | SLD 5 | 16.56 | 0.21 | 70.15 | -0.3115 | 0.7707 | 0.0006 |
| 167 | SLD 6 | 16.56 | 0.21 | 70.15 | -0.3115 | 0.7707 | 0.0006 |
| 167 | SLD 7 | 14.28 | -0.27 | 66.78 | 0.3159 | 0.6688 | -0.0007 |
| 167 | SLD 8 | 14.28 | -0.27 | 66.78 | 0.3159 | 0.6688 | -0.0007 |
| 167 | SLD 9 | 10.49 | 0.24 | 61.79 | -0.29 | 0.4899 | 0.0006 |
| 167 | SLD 10 | 10.49 | 0.24 | 61.79 | -0.29 | 0.4899 | 0.0006 |
| 167 | SLD 11 | 8.21 | -0.25 | 58.42 | 0.3375 | 0.388 | -0.0007 |
| 167 | SLD 12 | 8.21 | -0.25 | 58.42 | 0.3375 | 0.388 | -0.0007 |
| 167 | SLD 13 | 2.61 | 0.1 | 50.85 | -0.0452 | 0.1266 | 0.0002 |
| 167 | SLD 14 | 2.61 | 0.1 | 50.85 | -0.0452 | 0.1266 | 0.0002 |
| 167 | SLD 15 | 1.93 | -0.05 | 49.84 | 0.143 | 0.096 | -0.0002 |
| 167 | SLD 16 | 1.93 | -0.05 | 49.84 | 0.143 | 0.096 | -0.0002 |
| 167 | SLV 1 | 36.55 | 0.06 | 98.05 | -0.3173 | 1.6968 | 0.0002 |
| 167 | SLV 2 | 36.55 | 0.06 | 98.05 | -0.3173 | 1.6968 | 0.0002 |
| 167 | SLV 3 | 34.94 | -0.3 | 95.68 | 0.1625 | 1.6245 | -0.0007 |
| 167 | SLV 4 | 34.94 | -0.3 | 95.68 | 0.1625 | 1.6245 | -0.0007 |
| 167 | SLV 5 | 22.09 | 0.55 | 78.01 | -0.8138 | 1.0242 | 0.0015 |
| 167 | SLV 6 | 22.09 | 0.55 | 78.01 | -0.8138 | 1.0242 | 0.0015 |
| 167 | SLV 7 | 16.7 | -0.65 | 70.1 | 0.7855 | 0.7833 | -0.0017 |
| 167 | SLV 8 | 16.7 | -0.65 | 70.1 | 0.7855 | 0.7833 | -0.0017 |
| 167 | SLV 9 | 8.08 | 0.61 | 58.47 | -0.7596 | 0.3754 | 0.0017 |
| 167 | SLV 10 | 8.08 | 0.61 | 58.47 | -0.7596 | 0.3754 | 0.0017 |
| 167 | SLV 11 | 2.69 | -0.59 | 50.56 | 0.8398 | 0.1345 | -0.0016 |
| 167 | SLV 12 | 2.69 | -0.59 | 50.56 | 0.8398 | 0.1345 | -0.0016 |
| 167 | SLV 13 | -10.16 | 0.27 | 32.89 | -0.1365 | -0.4658 | 0.0006 |
| 167 | SLV 14 | -10.16 | 0.27 | 32.89 | -0.1365 | -0.4658 | 0.0006 |
| 167 | SLV 15 | -11.77 | -0.09 | 30.52 | 0.3433 | -0.5381 | -0.0003 |
| 167 | SLV 16 | -11.77 | -0.09 | 30.52 | 0.3433 | -0.5381 | -0.0003 |
| 168 | SLU 1 | 8.99 | -0.01 | 57.97 | 0.0078 | 0.386 | 0 |
| 168 | SLU 2 | 8.59 | -0.02 | 57.99 | 0.0214 | 0.3687 | -0.0001 |
| 168 | SLU 3 | 9.58 | -0.01 | 60 | 0.0078 | 0.4119 | 0 |
| 168 | SLU 4 | 9.34 | -0.01 | 60.01 | 0.016 | 0.4016 | 0 |
| 168 | SLU 5 | 9.01 | -0.02 | 59.4 | 0.0213 | 0.3868 | -0.0001 |
| 168 | SLU 6 | 10 | -0.01 | 61.41 | 0.0076 | 0.4299 | 0 |
| 168 | SLU 7 | 9.76 | -0.01 | 61.42 | 0.0158 | 0.4196 | 0 |
| 168 | SLU 8 | 9.82 | -0.01 | 60.79 | 0.0075 | 0.422 | 0 |
| 168 | SLU 9 | 9.58 | -0.01 | 60.8 | 0.0157 | 0.4117 | 0 |
| 168 | SLU 10 | 11.16 | -0.02 | 68.04 | 0.0226 | 0.4803 | -0.0001 |
| 168 | SLU 11 | 12.15 | -0.01 | 70.06 | 0.0089 | 0.5234 | 0 |
| 168 | SLU 12 | 11.91 | -0.02 | 70.07 | 0.0171 | 0.5131 | -0.0001 |
| 168 | SLU 13 | 11.57 | -0.02 | 69.45 | 0.0224 | 0.4983 | -0.0001 |
| 168 | SLU 14 | 12.56 | -0.01 | 71.47 | 0.0088 | 0.5415 | 0 |
| 168 | SLU 15 | 12.32 | -0.02 | 71.48 | 0.017 | 0.5311 | -0.0001 |
| 168 | SLU 16 | 12.38 | -0.01 | 70.85 | 0.0086 | 0.5335 | 0 |
| 168 | SLU 17 | 12.14 | -0.02 | 70.86 | 0.0168 | 0.5232 | -0.0001 |
| 168 | SLU 18 | 12.65 | -0.01 | 72.33 | 0.0094 | 0.5453 | 0 |
| 168 | SLU 19 | 12.41 | -0.02 | 72.34 | 0.0176 | 0.535 | -0.0001 |
| 168 | SLU 20 | 13.07 | -0.01 | 73.74 | 0.0093 | 0.5633 | 0 |
| 168 | SLU 21 | 12.83 | -0.02 | 73.75 | 0.0175 | 0.553 | -0.0001 |
| 168 | SLU 22 | 11.29 | -0.01 | 67.35 | 0.0088 | 0.4861 | 0 |
| 168 | SLU 23 | 10.89 | -0.02 | 67.36 | 0.0224 | 0.4688 | -0.0001 |
| 168 | SLU 24 | 11.89 | -0.01 | 69.38 | 0.0087 | 0.512 | 0 |
| 168 | SLU 25 | 11.65 | -0.02 | 69.39 | 0.0169 | 0.5016 | -0.0001 |
| 168 | SLU 26 | 11.31 | -0.02 | 68.77 | 0.0223 | 0.4868 | -0.0001 |
| 168 | SLU 27 | 12.3 | -0.01 | 70.79 | 0.0086 | 0.53 | 0 |
| 168 | SLU 28 | 12.06 | -0.02 | 70.8 | 0.0168 | 0.5197 | -0.0001 |
| 168 | SLU 29 | 12.12 | -0.01 | 70.17 | 0.0084 | 0.5221 | 0 |
| 168 | SLU 30 | 11.88 | -0.02 | 70.18 | 0.0166 | 0.5117 | -0.0001 |
| 168 | SLU 31 | 13.46 | -0.02 | 77.42 | 0.0236 | 0.5803 | -0.0001 |
| 168 | SLU 32 | 14.45 | -0.01 | 79.43 | 0.0099 | 0.6235 | 0 |
| 168 | SLU 33 | 14.21 | -0.02 | 79.44 | 0.0181 | 0.6132 | -0.0001 |
| 168 | SLU 34 | 13.87 | -0.02 | 78.83 | 0.0234 | 0.5984 | -0.0001 |
| 168 | SLU 35 | 14.87 | -0.01 | 80.84 | 0.0097 | 0.6415 | 0 |
| 168 | SLU 36 | 14.63 | -0.02 | 80.85 | 0.0179 | 0.6312 | -0.0001 |
| 168 | SLU 37 | 14.69 | -0.01 | 80.22 | 0.0096 | 0.6336 | 0 |
| 168 | SLU 38 | 14.45 | -0.02 | 80.23 | 0.0178 | 0.6233 | -0.0001 |
| 168 | SLU 39 | 14.96 | -0.01 | 81.71 | 0.0104 | 0.6454 | 0 |
| 168 | SLU 40 | 14.72 | -0.02 | 81.72 | 0.0186 | 0.635 | -0.0001 |
| 168 | SLU 41 | 15.37 | -0.01 | 83.12 | 0.0102 | 0.6634 | 0 |
| 168 | SLU 42 | 15.13 | -0.02 | 83.13 | 0.0184 | 0.653 | -0.0001 |
| 168 | SLU 43 | 10.9 | -0.01 | 72.15 | 0.0098 | 0.4675 | 0 |
| 168 | SLU 44 | 10.5 | -0.02 | 72.16 | 0.0235 | 0.4502 | -0.0001 |
| 168 | SLU 45 | 11.49 | -0.01 | 74.18 | 0.0098 | 0.4934 | 0 |

| Nodo | Cont. | Reazione a traslazione | | | Reazione a rotazione | | |
|---|---|---|---|---|---|---|---|
| Ind. | N.br. | x | y | z | x | y | z |
| 168 | SLU 46 | 11.25 | -0.02 | 74.19 | 0.018 | 0.4831 | -0.0001 |
| 168 | SLU 47 | 10.91 | -0.02 | 73.57 | 0.0233 | 0.4682 | -0.0001 |
| 168 | SLU 48 | 11.91 | -0.01 | 75.59 | 0.0096 | 0.5114 | 0 |
| 168 | SLU 49 | 11.67 | -0.02 | 75.6 | 0.0178 | 0.5011 | -0.0001 |
| 168 | SLU 50 | 11.73 | -0.01 | 74.97 | 0.0095 | 0.5035 | 0 |
| 168 | SLU 51 | 11.49 | -0.02 | 74.98 | 0.0177 | 0.4932 | -0.0001 |
| 168 | SLU 52 | 13.06 | -0.02 | 82.22 | 0.0246 | 0.5617 | -0.0001 |
| 168 | SLU 53 | 14.06 | -0.01 | 84.23 | 0.0109 | 0.6049 | 0 |
| 168 | SLU 54 | 13.82 | -0.02 | 84.24 | 0.0191 | 0.5946 | -0.0001 |
| 168 | SLU 55 | 13.48 | -0.02 | 83.63 | 0.0245 | 0.5798 | -0.0001 |
| 168 | SLU 56 | 14.47 | -0.01 | 85.64 | 0.0108 | 0.623 | 0 |
| 168 | SLU 57 | 14.23 | -0.02 | 85.65 | 0.019 | 0.6126 | -0.0001 |
| 168 | SLU 58 | 14.29 | -0.01 | 85.02 | 0.0107 | 0.615 | 0 |
| 168 | SLU 59 | 14.05 | -0.02 | 85.03 | 0.0188 | 0.6047 | -0.0001 |
| 168 | SLU 60 | 14.56 | -0.01 | 86.51 | 0.0115 | 0.6268 | 0 |
| 168 | SLU 61 | 14.32 | -0.02 | 86.52 | 0.0196 | 0.6164 | -0.0001 |
| 168 | SLU 62 | 14.98 | -0.01 | 87.92 | 0.0113 | 0.6448 | 0 |
| 168 | SLU 63 | 14.74 | -0.02 | 87.93 | 0.0195 | 0.6345 | -0.0001 |
| 168 | SLU 64 | 13.2 | -0.01 | 81.52 | 0.0108 | 0.5675 | 0 |
| 168 | SLU 65 | 12.8 | -0.02 | 81.54 | 0.0244 | 0.5503 | -0.0001 |
| 168 | SLU 66 | 13.79 | -0.01 | 83.56 | 0.0108 | 0.5935 | 0 |
| 168 | SLU 67 | 13.56 | -0.02 | 83.57 | 0.0189 | 0.5831 | -0.0001 |
| 168 | SLU 68 | 13.22 | -0.02 | 82.95 | 0.0243 | 0.5683 | -0.0001 |
| 168 | SLU 69 | 14.21 | -0.01 | 84.97 | 0.0106 | 0.6115 | 0 |
| 168 | SLU 70 | 13.97 | -0.02 | 84.98 | 0.0188 | 0.6011 | -0.0001 |
| 168 | SLU 71 | 14.03 | -0.01 | 84.35 | 0.0105 | 0.6036 | 0 |
| 168 | SLU 72 | 13.79 | -0.02 | 84.36 | 0.0186 | 0.5932 | -0.0001 |
| 168 | SLU 73 | 15.37 | -0.02 | 91.59 | 0.0256 | 0.6618 | -0.0001 |
| 168 | SLU 74 | 16.36 | -0.01 | 93.61 | 0.0119 | 0.705 | 0 |
| 168 | SLU 75 | 16.12 | -0.02 | 93.62 | 0.0201 | 0.6947 | -0.0001 |
| 168 | SLU 76 | 15.78 | -0.02 | 93 | 0.0254 | 0.6798 | -0.0001 |
| 168 | SLU 77 | 16.77 | -0.01 | 95.02 | 0.0118 | 0.723 | 0 |
| 168 | SLU 78 | 16.53 | -0.02 | 95.03 | 0.0199 | 0.7127 | -0.0001 |
| 168 | SLU 79 | 16.59 | -0.01 | 94.4 | 0.0116 | 0.7151 | 0 |
| 168 | SLU 80 | 16.36 | -0.02 | 94.41 | 0.0198 | 0.7048 | -0.0001 |
| 168 | SLU 81 | 16.86 | -0.01 | 95.88 | 0.0124 | 0.7269 | 0 |
| 168 | SLU 82 | 16.62 | -0.02 | 95.89 | 0.0206 | 0.7165 | -0.0001 |
| 168 | SLU 83 | 17.28 | -0.01 | 97.29 | 0.0123 | 0.7449 | 0 |
| 168 | SLU 84 | 17.04 | -0.02 | 97.3 | 0.0205 | 0.7345 | -0.0001 |
| 168 | SLE RA 1 | 9.65 | -0.01 | 60.65 | 0.0081 | 0.4146 | 0 |
| 168 | SLE RA 2 | 9.38 | -0.02 | 60.66 | 0.0172 | 0.4031 | 0 |
| 168 | SLE RA 3 | 10.04 | -0.01 | 62 | 0.0081 | 0.4319 | 0 |
| 168 | SLE RA 4 | 9.88 | -0.01 | 62.01 | 0.0135 | 0.425 | 0 |
| 168 | SLE RA 5 | 9.66 | -0.02 | 61.6 | 0.0171 | 0.4151 | 0 |
| 168 | SLE RA 6 | 10.32 | -0.01 | 62.95 | 0.008 | 0.4439 | 0 |
| 168 | SLE RA 7 | 10.16 | -0.01 | 62.95 | 0.0134 | 0.437 | 0 |
| 168 | SLE RA 8 | 10.2 | -0.01 | 62.53 | 0.0079 | 0.4386 | 0 |
| 168 | SLE RA 9 | 10.04 | -0.01 | 62.54 | 0.0133 | 0.4317 | 0 |
| 168 | SLE RA 10 | 11.09 | -0.02 | 67.36 | 0.0179 | 0.4774 | -0.0001 |
| 168 | SLE RA 11 | 11.75 | -0.01 | 68.71 | 0.0088 | 0.5062 | 0 |
| 168 | SLE RA 12 | 11.59 | -0.01 | 68.71 | 0.0143 | 0.4993 | 0 |
| 168 | SLE RA 13 | 11.37 | -0.02 | 68.3 | 0.0178 | 0.4894 | -0.0001 |
| 168 | SLE RA 14 | 12.03 | -0.01 | 69.65 | 0.0087 | 0.5182 | 0 |
| 168 | SLE RA 15 | 11.87 | -0.01 | 69.65 | 0.0142 | 0.5113 | 0 |
| 168 | SLE RA 16 | 11.91 | -0.01 | 69.23 | 0.0086 | 0.513 | 0 |
| 168 | SLE RA 17 | 11.75 | -0.01 | 69.24 | 0.0141 | 0.5061 | 0 |
| 168 | SLE RA 18 | 12.09 | -0.01 | 70.22 | 0.0092 | 0.5208 | 0 |
| 168 | SLE RA 19 | 11.93 | -0.01 | 70.23 | 0.0146 | 0.5139 | 0 |
| 168 | SLE RA 20 | 12.37 | -0.01 | 71.16 | 0.0091 | 0.5328 | 0 |
| 168 | SLE RA 21 | 12.21 | -0.01 | 71.17 | 0.0145 | 0.5259 | 0 |
| 168 | SLE FR 1 | 9.65 | -0.01 | 60.65 | 0.0081 | 0.4146 | 0 |
| 168 | SLE FR 2 | 9.6 | -0.01 | 60.65 | 0.0099 | 0.4123 | 0 |
| 168 | SLE FR 3 | 9.76 | -0.01 | 61.03 | 0.008 | 0.4194 | 0 |
| 168 | SLE FR 4 | 10.33 | -0.01 | 63.52 | 0.0102 | 0.4441 | 0 |
| 168 | SLE FR 5 | 10.49 | -0.01 | 63.9 | 0.0084 | 0.4512 | 0 |
| 168 | SLE FR 6 | 10.87 | -0.01 | 65.44 | 0.0086 | 0.4677 | 0 |
| 168 | SLE QP 1 | 9.65 | -0.01 | 60.65 | 0.0081 | 0.4146 | 0 |
| 168 | SLE QP 2 | 10.38 | -0.01 | 63.52 | 0.0084 | 0.4464 | 0 |
| 168 | SLD 1 | 21 | 0.06 | 75.28 | -0.1639 | 0.9272 | 0.0002 |
| 168 | SLD 2 | 21 | 0.06 | 75.28 | -0.1639 | 0.9272 | 0.0002 |
| 168 | SLD 3 | 20.33 | -0.16 | 74.49 | 0.09 | 0.8971 | -0.0004 |
| 168 | SLD 4 | 20.33 | -0.16 | 74.49 | 0.09 | 0.8971 | -0.0004 |
| 168 | SLD 5 | 14.59 | 0.35 | 68.24 | -0.4285 | 0.6363 | 0.0009 |
| 168 | SLD 6 | 14.59 | 0.35 | 68.24 | -0.4285 | 0.6363 | 0.0009 |
| 168 | SLD 7 | 12.35 | -0.39 | 65.62 | 0.4181 | 0.536 | -0.001 |
| 168 | SLD 8 | 12.35 | -0.39 | 65.62 | 0.4181 | 0.536 | -0.001 |
| 168 | SLD 9 | 8.42 | 0.37 | 61.42 | -0.4013 | 0.3569 | 0.001 |
| 168 | SLD 10 | 8.42 | 0.37 | 61.42 | -0.4013 | 0.3569 | 0.001 |
| 168 | SLD 11 | 6.18 | -0.36 | 58.8 | 0.4453 | 0.2566 | -0.001 |
| 168 | SLD 12 | 6.18 | -0.36 | 58.8 | 0.4453 | 0.2566 | -0.001 |
| 168 | SLD 13 | 0.43 | 0.14 | 52.55 | -0.0732 | -0.0042 | 0.0004 |
| 168 | SLD 14 | 0.43 | 0.14 | 52.55 | -0.0732 | -0.0042 | 0.0004 |
| 168 | SLD 15 | -0.24 | -0.08 | 51.76 | 0.1807 | -0.0343 | -0.0002 |
| 168 | SLD 16 | -0.24 | -0.08 | 51.76 | 0.1807 | -0.0343 | -0.0002 |
| 168 | SLV 1 | 34.88 | 0.17 | 91.03 | -0.4313 | 1.5544 | 0.0004 |
| 168 | SLV 2 | 34.88 | 0.17 | 91.03 | -0.4313 | 1.5544 | 0.0004 |
| 168 | SLV 3 | 33.29 | -0.39 | 89.16 | 0.2175 | 1.4835 | -0.001 |
| 168 | SLV 4 | 33.29 | -0.39 | 89.16 | 0.2175 | 1.4835 | -0.001 |

| Nodo | Cont. | Reazione a traslazione | | | Reazione a rotazione | | |
|---|---|---|---|---|---|---|---|
| Ind. | N.br. | x | y | z | x | y | z |
| 168 | SLV 5 | 20.13 | 0.89 | 74.62 | -1.1075 | 0.8863 | 0.0023 |
| 168 | SLV 6 | 20.13 | 0.89 | 74.62 | -1.1075 | 0.8863 | 0.0023 |
| 168 | SLV 7 | 14.85 | -0.97 | 68.37 | 1.0551 | 0.6501 | -0.0025 |
| 168 | SLV 8 | 14.85 | -0.97 | 68.37 | 1.0551 | 0.6501 | -0.0025 |
| 168 | SLV 9 | 5.91 | 0.95 | 58.67 | -1.0383 | 0.2428 | 0.0025 |
| 168 | SLV 10 | 5.91 | 0.95 | 58.67 | -1.0383 | 0.2428 | 0.0025 |
| 168 | SLV 11 | 0.63 | -0.9 | 52.43 | 1.1243 | 0.0066 | -0.0024 |
| 168 | SLV 12 | 0.63 | -0.9 | 52.43 | 1.1243 | 0.0066 | -0.0024 |
| 168 | SLV 13 | -12.53 | 0.38 | 37.88 | -0.2007 | -0.5906 | 0.0009 |
| 168 | SLV 14 | -12.53 | 0.38 | 37.88 | -0.2007 | -0.5906 | 0.0009 |
| 168 | SLV 15 | -14.11 | -0.18 | 36.01 | 0.4481 | -0.6615 | -0.0005 |
| 168 | SLV 16 | -14.11 | -0.18 | 36.01 | 0.4481 | -0.6615 | -0.0005 |
| 169 | SLU 1 | 8.06 | 0 | 57.41 | 0.0058 | 0.3773 | 0 |
| 169 | SLU 2 | 7.65 | -0.01 | 57.38 | 0.0185 | 0.3587 | 0 |
| 169 | SLU 3 | 8.64 | 0 | 59.39 | 0.0057 | 0.4039 | 0 |
| 169 | SLU 4 | 8.39 | -0.01 | 59.38 | 0.0132 | 0.3928 | 0 |
| 169 | SLU 5 | 8.05 | -0.01 | 58.77 | 0.0182 | 0.3775 | 0 |
| 169 | SLU 6 | 9.05 | 0 | 60.78 | 0.0054 | 0.4227 | 0 |
| 169 | SLU 7 | 8.8 | -0.01 | 60.76 | 0.0129 | 0.4116 | 0 |
| 169 | SLU 8 | 8.88 | 0 | 60.18 | 0.0052 | 0.4149 | 0 |
| 169 | SLU 9 | 8.63 | -0.01 | 60.16 | 0.0128 | 0.4037 | 0 |
| 169 | SLU 10 | 9.98 | -0.01 | 67.51 | 0.0193 | 0.4641 | 0 |
| 169 | SLU 11 | 10.97 | 0 | 69.52 | 0.0065 | 0.5093 | 0 |
| 169 | SLU 12 | 10.72 | -0.01 | 69.5 | 0.0141 | 0.4982 | 0 |
| 169 | SLU 13 | 10.39 | -0.01 | 68.89 | 0.019 | 0.4829 | 0 |
| 169 | SLU 14 | 11.38 | 0 | 70.9 | 0.0062 | 0.5281 | 0 |
| 169 | SLU 15 | 11.13 | -0.01 | 70.89 | 0.0138 | 0.517 | 0 |
| 169 | SLU 16 | 11.21 | 0 | 70.3 | 0.0061 | 0.5203 | 0 |
| 169 | SLU 17 | 10.96 | -0.01 | 70.29 | 0.0137 | 0.5091 | 0 |
| 169 | SLU 18 | 11.4 | 0 | 71.87 | 0.0071 | 0.5278 | 0 |
| 169 | SLU 19 | 11.14 | -0.01 | 71.86 | 0.0147 | 0.5167 | 0 |
| 169 | SLU 20 | 11.8 | 0 | 73.26 | 0.0068 | 0.5466 | 0 |
| 169 | SLU 21 | 11.55 | -0.01 | 73.24 | 0.0143 | 0.5355 | 0 |
| 169 | SLU 22 | 10.17 | 0 | 66.8 | 0.0065 | 0.4729 | 0 |
| 169 | SLU 23 | 9.75 | -0.01 | 66.77 | 0.0191 | 0.4544 | 0 |
| 169 | SLU 24 | 10.75 | 0 | 68.78 | 0.0063 | 0.4996 | 0 |
| 169 | SLU 25 | 10.5 | -0.01 | 68.77 | 0.0139 | 0.4885 | 0 |
| 169 | SLU 26 | 10.16 | -0.01 | 68.16 | 0.0188 | 0.4732 | 0 |
| 169 | SLU 27 | 11.15 | 0 | 70.17 | 0.006 | 0.5184 | 0 |
| 169 | SLU 28 | 10.9 | -0.01 | 70.15 | 0.0136 | 0.5073 | 0 |
| 169 | SLU 29 | 10.98 | 0 | 69.57 | 0.0059 | 0.5106 | 0 |
| 169 | SLU 30 | 10.73 | -0.01 | 69.55 | 0.0134 | 0.4994 | 0 |
| 169 | SLU 31 | 12.08 | -0.02 | 76.9 | 0.02 | 0.5597 | -0.0001 |
| 169 | SLU 32 | 13.08 | 0 | 78.91 | 0.0072 | 0.605 | 0 |
| 169 | SLU 33 | 12.83 | -0.01 | 78.89 | 0.0148 | 0.5938 | 0 |
| 169 | SLU 34 | 12.49 | -0.02 | 78.28 | 0.0197 | 0.5786 | -0.0001 |
| 169 | SLU 35 | 13.49 | 0 | 80.29 | 0.0069 | 0.6238 | 0 |
| 169 | SLU 36 | 13.24 | -0.01 | 80.28 | 0.0145 | 0.6126 | 0 |
| 169 | SLU 37 | 13.32 | 0 | 79.69 | 0.0067 | 0.6159 | 0 |
| 169 | SLU 38 | 13.07 | -0.01 | 79.68 | 0.0143 | 0.6048 | 0 |
| 169 | SLU 39 | 13.5 | 0 | 81.26 | 0.0077 | 0.6235 | 0 |
| 169 | SLU 40 | 13.25 | -0.01 | 81.25 | 0.0153 | 0.6123 | 0 |
| 169 | SLU 41 | 13.91 | 0 | 82.65 | 0.0074 | 0.6423 | 0 |
| 169 | SLU 42 | 13.66 | -0.01 | 82.63 | 0.015 | 0.6312 | 0 |
| 169 | SLU 43 | 9.76 | 0 | 71.41 | 0.0073 | 0.4576 | 0 |
| 169 | SLU 44 | 9.34 | -0.02 | 71.38 | 0.02 | 0.4391 | -0.0001 |
| 169 | SLU 45 | 10.34 | 0 | 73.4 | 0.0072 | 0.4843 | 0 |
| 169 | SLU 46 | 10.09 | -0.01 | 73.38 | 0.0148 | 0.4731 | 0 |
| 169 | SLU 47 | 9.75 | -0.02 | 72.77 | 0.0197 | 0.4579 | -0.0001 |
| 169 | SLU 48 | 10.75 | 0 | 74.78 | 0.0069 | 0.5031 | 0 |
| 169 | SLU 49 | 10.5 | -0.01 | 74.76 | 0.0145 | 0.4919 | 0 |
| 169 | SLU 50 | 10.58 | 0 | 74.18 | 0.0067 | 0.4952 | 0 |
| 169 | SLU 51 | 10.33 | -0.01 | 74.16 | 0.0143 | 0.4841 | 0 |
| 169 | SLU 52 | 11.68 | -0.02 | 81.51 | 0.0209 | 0.5444 | -0.0001 |
| 169 | SLU 53 | 12.67 | 0 | 83.52 | 0.0081 | 0.5897 | 0 |
| 169 | SLU 54 | 12.42 | -0.01 | 83.5 | 0.0156 | 0.5785 | 0 |
| 169 | SLU 55 | 12.08 | -0.02 | 82.89 | 0.0206 | 0.5632 | -0.0001 |
| 169 | SLU 56 | 13.08 | 0 | 84.91 | 0.0078 | 0.6085 | 0 |
| 169 | SLU 57 | 12.83 | -0.01 | 84.89 | 0.0153 | 0.5973 | 0 |
| 169 | SLU 58 | 12.91 | 0 | 84.31 | 0.0076 | 0.6006 | 0 |
| 169 | SLU 59 | 12.66 | -0.01 | 84.29 | 0.0152 | 0.5895 | 0 |
| 169 | SLU 60 | 13.09 | 0 | 85.88 | 0.0086 | 0.6082 | 0 |
| 169 | SLU 61 | 12.84 | -0.01 | 85.86 | 0.0162 | 0.597 | 0 |
| 169 | SLU 62 | 13.5 | 0 | 87.26 | 0.0083 | 0.627 | 0 |
| 169 | SLU 63 | 13.25 | -0.01 | 87.24 | 0.0159 | 0.6158 | 0 |
| 169 | SLU 64 | 11.86 | 0 | 80.8 | 0.008 | 0.5533 | 0 |
| 169 | SLU 65 | 11.45 | -0.02 | 80.77 | 0.0206 | 0.5347 | -0.0001 |
| 169 | SLU 66 | 12.44 | 0 | 82.79 | 0.0078 | 0.58 | 0 |
| 169 | SLU 67 | 12.19 | -0.01 | 82.77 | 0.0154 | 0.5688 | 0 |
| 169 | SLU 68 | 11.86 | -0.02 | 82.16 | 0.0203 | 0.5535 | -0.0001 |
| 169 | SLU 69 | 12.85 | 0 | 84.17 | 0.0075 | 0.5988 | 0 |
| 169 | SLU 70 | 12.6 | -0.01 | 84.15 | 0.0151 | 0.5876 | 0 |
| 169 | SLU 71 | 12.68 | 0 | 83.57 | 0.0074 | 0.5909 | 0 |
| 169 | SLU 72 | 12.43 | -0.01 | 83.55 | 0.015 | 0.5798 | 0 |
| 169 | SLU 73 | 13.78 | -0.02 | 90.9 | 0.0215 | 0.6401 | -0.0001 |
| 169 | SLU 74 | 14.78 | -0.01 | 92.91 | 0.0087 | 0.6854 | 0 |
| 169 | SLU 75 | 14.53 | -0.01 | 92.89 | 0.0163 | 0.6742 | 0 |
| 169 | SLU 76 | 14.19 | -0.02 | 92.28 | 0.0212 | 0.6589 | -0.0001 |

| Nodo | Cont. | Reazione a traslazione | | | Reazione a rotazione | | |
|---|---|---|---|---|---|---|---|
| Ind. | N.br. | x | y | z | x | y | z |
| 169 | SLU 77 | 15.18 | -0.01 | 94.3 | 0.0084 | 0.7042 | 0 |
| 169 | SLU 78 | 14.93 | -0.01 | 94.28 | 0.016 | 0.693 | 0 |
| 169 | SLU 79 | 15.01 | -0.01 | 93.7 | 0.0082 | 0.6963 | 0 |
| 169 | SLU 80 | 14.76 | -0.01 | 93.68 | 0.0158 | 0.6852 | 0 |
| 169 | SLU 81 | 15.2 | -0.01 | 95.27 | 0.0092 | 0.7039 | 0 |
| 169 | SLU 82 | 14.95 | -0.01 | 95.25 | 0.0168 | 0.6927 | 0 |
| 169 | SLU 83 | 15.6 | -0.01 | 96.65 | 0.0089 | 0.7227 | 0 |
| 169 | SLU 84 | 15.35 | -0.01 | 96.63 | 0.0165 | 0.7115 | 0 |
| 169 | SLE RA 1 | 8.66 | 0 | 60.09 | 0.006 | 0.4046 | 0 |
| 169 | SLE RA 2 | 8.39 | -0.01 | 60.07 | 0.0144 | 0.3922 | 0 |
| 169 | SLE RA 3 | 9.05 | 0 | 61.42 | 0.0059 | 0.4224 | 0 |
| 169 | SLE RA 4 | 8.88 | -0.01 | 61.4 | 0.011 | 0.4149 | 0 |
| 169 | SLE RA 5 | 8.66 | -0.01 | 61 | 0.0142 | 0.4047 | 0 |
| 169 | SLE RA 6 | 9.32 | 0 | 62.34 | 0.0057 | 0.4349 | 0 |
| 169 | SLE RA 7 | 9.15 | -0.01 | 62.33 | 0.0108 | 0.4275 | 0 |
| 169 | SLE RA 8 | 9.21 | 0 | 61.94 | 0.0056 | 0.4297 | 0 |
| 169 | SLE RA 9 | 9.04 | -0.01 | 61.93 | 0.0107 | 0.4222 | 0 |
| 169 | SLE RA 10 | 9.94 | -0.01 | 66.82 | 0.015 | 0.4625 | 0 |
| 169 | SLE RA 11 | 10.6 | 0 | 68.16 | 0.0065 | 0.4926 | 0 |
| 169 | SLE RA 12 | 10.44 | -0.01 | 68.15 | 0.0115 | 0.4852 | 0 |
| 169 | SLE RA 13 | 10.21 | -0.01 | 67.75 | 0.0148 | 0.475 | 0 |
| 169 | SLE RA 14 | 10.88 | 0 | 69.09 | 0.0063 | 0.5052 | 0 |
| 169 | SLE RA 15 | 10.71 | -0.01 | 69.08 | 0.0113 | 0.4977 | 0 |
| 169 | SLE RA 16 | 10.76 | 0 | 68.69 | 0.0062 | 0.4999 | 0 |
| 169 | SLE RA 17 | 10.6 | -0.01 | 68.68 | 0.0112 | 0.4925 | 0 |
| 169 | SLE RA 18 | 10.89 | 0 | 69.73 | 0.0068 | 0.505 | 0 |
| 169 | SLE RA 19 | 10.72 | -0.01 | 69.72 | 0.0119 | 0.4975 | 0 |
| 169 | SLE RA 20 | 11.16 | 0 | 70.66 | 0.0066 | 0.5175 | 0 |
| 169 | SLE RA 21 | 10.99 | -0.01 | 70.65 | 0.0117 | 0.5101 | 0 |
| 169 | SLE FR 1 | 8.66 | 0 | 60.09 | 0.006 | 0.4046 | 0 |
| 169 | SLE FR 2 | 8.61 | 0 | 60.09 | 0.0077 | 0.4021 | 0 |
| 169 | SLE FR 3 | 8.77 | 0 | 60.46 | 0.0059 | 0.4096 | 0 |
| 169 | SLE FR 4 | 9.27 | -0.01 | 62.98 | 0.0079 | 0.4322 | 0 |
| 169 | SLE FR 5 | 9.44 | 0 | 63.35 | 0.0062 | 0.4397 | 0 |
| 169 | SLE FR 6 | 9.77 | 0 | 64.91 | 0.0064 | 0.4548 | 0 |
| 169 | SLE QP 1 | 8.66 | 0 | 60.09 | 0.006 | 0.4046 | 0 |
| 169 | SLE QP 2 | 9.33 | 0 | 62.99 | 0.0063 | 0.4347 | 0 |
| 169 | SLD 1 | 20.17 | 0.19 | 72.43 | -0.2024 | 0.9263 | 0.0005 |
| 169 | SLD 2 | 20.17 | 0.19 | 72.43 | -0.2024 | 0.9263 | 0.0005 |
| 169 | SLD 3 | 19.49 | -0.1 | 71.77 | 0.1045 | 0.896 | -0.0003 |
| 169 | SLD 4 | 19.49 | -0.1 | 71.77 | 0.1045 | 0.896 | -0.0003 |
| 169 | SLD 5 | 13.61 | 0.48 | 66.82 | -0.5218 | 0.6282 | 0.0013 |
| 169 | SLD 6 | 13.61 | 0.48 | 66.82 | -0.5218 | 0.6282 | 0.0013 |
| 169 | SLD 7 | 11.35 | -0.46 | 64.62 | 0.5011 | 0.5271 | -0.0013 |
| 169 | SLD 8 | 11.35 | -0.46 | 64.62 | 0.5011 | 0.5271 | -0.0013 |
| 169 | SLD 9 | 7.31 | 0.46 | 61.35 | -0.4886 | 0.3423 | 0.0012 |
| 169 | SLD 10 | 7.31 | 0.46 | 61.35 | -0.4886 | 0.3423 | 0.0012 |
| 169 | SLD 11 | 5.05 | -0.49 | 59.15 | 0.5343 | 0.2412 | -0.0014 |
| 169 | SLD 12 | 5.05 | -0.49 | 59.15 | 0.5343 | 0.2412 | -0.0014 |
| 169 | SLD 13 | -0.83 | 0.09 | 54.2 | -0.092 | -0.0266 | 0.0002 |
| 169 | SLD 14 | -0.83 | 0.09 | 54.2 | -0.092 | -0.0266 | 0.0002 |
| 169 | SLD 15 | -1.51 | -0.19 | 53.55 | 0.2149 | -0.0569 | -0.0005 |
| 169 | SLD 16 | -1.51 | -0.19 | 53.55 | 0.2149 | -0.0569 | -0.0005 |
| 169 | SLV 1 | 34.34 | 0.48 | 85.1 | -0.5271 | 1.5697 | 0.0013 |
| 169 | SLV 2 | 34.34 | 0.48 | 85.1 | -0.5271 | 1.5697 | 0.0013 |
| 169 | SLV 3 | 32.74 | -0.24 | 83.51 | 0.2578 | 1.4979 | -0.0007 |
| 169 | SLV 4 | 32.74 | -0.24 | 83.51 | 0.2578 | 1.4979 | -0.0007 |
| 169 | SLV 5 | 19.26 | 1.24 | 72.04 | -1.3442 | 0.8841 | 0.0034 |
| 169 | SLV 6 | 19.26 | 1.24 | 72.04 | -1.3442 | 0.8841 | 0.0034 |
| 169 | SLV 7 | 13.92 | -1.17 | 66.73 | 1.2722 | 0.6448 | -0.0032 |
| 169 | SLV 8 | 13.92 | -1.17 | 66.73 | 1.2722 | 0.6448 | -0.0032 |
| 169 | SLV 9 | 4.74 | 1.17 | 59.25 | -1.2597 | 0.2247 | 0.0032 |
| 169 | SLV 10 | 4.74 | 1.17 | 59.25 | -1.2597 | 0.2247 | 0.0032 |
| 169 | SLV 11 | -0.6 | -1.25 | 53.93 | 1.3567 | -0.0147 | -0.0034 |
| 169 | SLV 12 | -0.6 | -1.25 | 53.93 | 1.3567 | -0.0147 | -0.0034 |
| 169 | SLV 13 | -14.08 | 0.24 | 42.46 | -0.2453 | -0.6285 | 0.0006 |
| 169 | SLV 14 | -14.08 | 0.24 | 42.46 | -0.2453 | -0.6285 | 0.0006 |
| 169 | SLV 15 | -15.68 | -0.49 | 40.87 | 0.5396 | -0.7003 | -0.0014 |
| 169 | SLV 16 | -15.68 | -0.49 | 40.87 | 0.5396 | -0.7003 | -0.0014 |
| 170 | SLU 1 | 6.69 | 0 | 56.99 | 0.005 | 0.2835 | 0 |
| 170 | SLU 2 | 6.26 | -0.01 | 56.9 | 0.0162 | 0.2653 | 0 |
| 170 | SLU 3 | 7.23 | 0 | 58.94 | 0.0047 | 0.307 | 0 |
| 170 | SLU 4 | 6.98 | -0.01 | 58.89 | 0.0114 | 0.2961 | 0 |
| 170 | SLU 5 | 6.65 | -0.01 | 58.28 | 0.0157 | 0.282 | 0 |
| 170 | SLU 6 | 7.62 | 0 | 60.31 | 0.0043 | 0.3237 | 0 |
| 170 | SLU 7 | 7.36 | -0.01 | 60.27 | 0.011 | 0.3128 | 0 |
| 170 | SLU 8 | 7.46 | 0 | 59.73 | 0.0041 | 0.3168 | 0 |
| 170 | SLU 9 | 7.21 | -0.01 | 59.68 | 0.0108 | 0.3059 | 0 |
| 170 | SLU 10 | 8.3 | -0.01 | 67.09 | 0.0169 | 0.3536 | 0 |
| 170 | SLU 11 | 9.28 | 0 | 69.13 | 0.0054 | 0.3953 | 0 |
| 170 | SLU 12 | 9.02 | -0.01 | 69.08 | 0.0122 | 0.3844 | 0 |
| 170 | SLU 13 | 8.69 | -0.01 | 68.47 | 0.0165 | 0.3702 | 0 |
| 170 | SLU 14 | 9.66 | 0 | 70.5 | 0.005 | 0.412 | 0 |
| 170 | SLU 15 | 9.41 | -0.01 | 70.45 | 0.0117 | 0.401 | 0 |
| 170 | SLU 16 | 9.51 | 0 | 69.92 | 0.0049 | 0.4051 | 0 |
| 170 | SLU 17 | 9.25 | -0.01 | 69.87 | 0.0116 | 0.3942 | 0 |
| 170 | SLU 18 | 9.61 | 0 | 71.54 | 0.006 | 0.4096 | 0 |
| 170 | SLU 19 | 9.35 | -0.01 | 71.49 | 0.0127 | 0.3987 | 0 |

| Nodo | Cont. | Reazione a traslazione | | | Reazione a rotazione | | |
|---|---|---|---|---|---|---|---|
| Ind. | N.br. | x | y | z | x | y | z |
| 170 | SLU 20 | 9.99 | 0 | 72.91 | 0.0056 | 0.4263 | 0 |
| 170 | SLU 21 | 9.74 | -0.01 | 72.86 | 0.0123 | 0.4153 | 0 |
| 170 | SLU 22 | 8.53 | 0 | 66.39 | 0.0054 | 0.363 | 0 |
| 170 | SLU 23 | 8.11 | -0.01 | 66.31 | 0.0166 | 0.3448 | 0 |
| 170 | SLU 24 | 9.08 | 0 | 68.35 | 0.0052 | 0.3866 | 0 |
| 170 | SLU 25 | 8.82 | -0.01 | 68.3 | 0.0119 | 0.3756 | 0 |
| 170 | SLU 26 | 8.49 | -0.01 | 67.69 | 0.0162 | 0.3615 | 0 |
| 170 | SLU 27 | 9.46 | 0 | 69.72 | 0.0047 | 0.4032 | 0 |
| 170 | SLU 28 | 9.21 | -0.01 | 69.67 | 0.0115 | 0.3923 | 0 |
| 170 | SLU 29 | 9.31 | 0 | 69.14 | 0.0046 | 0.3964 | 0 |
| 170 | SLU 30 | 9.05 | -0.01 | 69.09 | 0.0113 | 0.3854 | 0 |
| 170 | SLU 31 | 10.15 | -0.01 | 76.5 | 0.0174 | 0.4331 | 0 |
| 170 | SLU 32 | 11.12 | 0 | 78.54 | 0.0059 | 0.4748 | 0 |
| 170 | SLU 33 | 10.87 | -0.01 | 78.49 | 0.0126 | 0.4639 | 0 |
| 170 | SLU 34 | 10.54 | -0.01 | 77.87 | 0.017 | 0.4498 | 0 |
| 170 | SLU 35 | 11.51 | 0 | 79.91 | 0.0055 | 0.4915 | 0 |
| 170 | SLU 36 | 11.25 | -0.01 | 79.86 | 0.0122 | 0.4806 | 0 |
| 170 | SLU 37 | 11.35 | 0 | 79.33 | 0.0053 | 0.4846 | 0 |
| 170 | SLU 38 | 11.1 | -0.01 | 79.28 | 0.0121 | 0.4737 | 0 |
| 170 | SLU 39 | 11.45 | 0 | 80.95 | 0.0065 | 0.4891 | 0 |
| 170 | SLU 40 | 11.2 | -0.01 | 80.9 | 0.0132 | 0.4782 | 0 |
| 170 | SLU 41 | 11.84 | 0 | 82.32 | 0.0061 | 0.5058 | 0 |
| 170 | SLU 42 | 11.58 | -0.01 | 82.27 | 0.0128 | 0.4949 | 0 |
| 170 | SLU 43 | 8.06 | 0 | 70.86 | 0.0063 | 0.3413 | 0 |
| 170 | SLU 44 | 7.63 | -0.01 | 70.77 | 0.0175 | 0.3231 | 0 |
| 170 | SLU 45 | 8.6 | 0 | 72.81 | 0.006 | 0.3648 | 0 |
| 170 | SLU 46 | 8.35 | -0.01 | 72.76 | 0.0127 | 0.3539 | 0 |
| 170 | SLU 47 | 8.02 | -0.01 | 72.15 | 0.0171 | 0.3397 | 0 |
| 170 | SLU 48 | 8.99 | 0 | 74.18 | 0.0056 | 0.3815 | 0 |
| 170 | SLU 49 | 8.74 | -0.01 | 74.13 | 0.0123 | 0.3706 | 0 |
| 170 | SLU 50 | 8.84 | 0 | 73.6 | 0.0054 | 0.3746 | 0 |
| 170 | SLU 51 | 8.58 | -0.01 | 73.55 | 0.0121 | 0.3637 | 0 |
| 170 | SLU 52 | 9.68 | -0.01 | 80.96 | 0.0182 | 0.4113 | 0 |
| 170 | SLU 53 | 10.65 | 0 | 83 | 0.0068 | 0.4531 | 0 |
| 170 | SLU 54 | 10.39 | -0.01 | 82.95 | 0.0135 | 0.4422 | 0 |
| 170 | SLU 55 | 10.07 | -0.01 | 82.33 | 0.0178 | 0.428 | 0 |
| 170 | SLU 56 | 11.04 | 0 | 84.37 | 0.0063 | 0.4697 | 0 |
| 170 | SLU 57 | 10.78 | -0.01 | 84.32 | 0.0131 | 0.4588 | 0 |
| 170 | SLU 58 | 10.88 | 0 | 83.79 | 0.0062 | 0.4629 | 0 |
| 170 | SLU 59 | 10.63 | -0.01 | 83.74 | 0.0129 | 0.452 | 0 |
| 170 | SLU 60 | 10.98 | 0 | 85.41 | 0.0073 | 0.4674 | 0 |
| 170 | SLU 61 | 10.72 | -0.01 | 85.36 | 0.0141 | 0.4564 | 0 |
| 170 | SLU 62 | 11.37 | 0 | 86.78 | 0.0069 | 0.484 | 0 |
| 170 | SLU 63 | 11.11 | -0.01 | 86.73 | 0.0136 | 0.4731 | 0 |
| 170 | SLU 64 | 9.9 | 0 | 80.26 | 0.0068 | 0.4208 | 0 |
| 170 | SLU 65 | 9.48 | -0.01 | 80.18 | 0.018 | 0.4026 | 0 |
| 170 | SLU 66 | 10.45 | 0 | 82.22 | 0.0065 | 0.4443 | 0 |
| 170 | SLU 67 | 10.19 | -0.01 | 82.17 | 0.0132 | 0.4334 | 0 |
| 170 | SLU 68 | 9.87 | -0.01 | 81.56 | 0.0175 | 0.4193 | 0 |
| 170 | SLU 69 | 10.84 | 0 | 83.59 | 0.0061 | 0.461 | 0 |
| 170 | SLU 70 | 10.58 | -0.01 | 83.54 | 0.0128 | 0.4501 | 0 |
| 170 | SLU 71 | 10.68 | 0 | 83.01 | 0.0059 | 0.4541 | 0 |
| 170 | SLU 72 | 10.43 | -0.01 | 82.96 | 0.0126 | 0.4432 | 0 |
| 170 | SLU 73 | 11.52 | -0.01 | 90.37 | 0.0187 | 0.4909 | 0 |
| 170 | SLU 74 | 12.49 | 0 | 92.41 | 0.0072 | 0.5326 | 0 |
| 170 | SLU 75 | 12.24 | -0.01 | 92.36 | 0.014 | 0.5217 | 0 |
| 170 | SLU 76 | 11.91 | -0.01 | 91.74 | 0.0183 | 0.5075 | 0 |
| 170 | SLU 77 | 12.88 | 0 | 93.78 | 0.0068 | 0.5493 | 0 |
| 170 | SLU 78 | 12.63 | -0.01 | 93.73 | 0.0135 | 0.5384 | 0 |
| 170 | SLU 79 | 12.73 | 0 | 93.2 | 0.0067 | 0.5424 | 0 |
| 170 | SLU 80 | 12.47 | -0.01 | 93.15 | 0.0134 | 0.5315 | 0 |
| 170 | SLU 81 | 12.82 | 0 | 94.82 | 0.0078 | 0.5469 | 0 |
| 170 | SLU 82 | 12.57 | -0.01 | 94.77 | 0.0145 | 0.536 | 0 |
| 170 | SLU 83 | 13.21 | 0 | 96.19 | 0.0074 | 0.5636 | 0 |
| 170 | SLU 84 | 12.96 | -0.01 | 96.14 | 0.0141 | 0.5526 | 0 |
| 170 | SLE RA 1 | 7.21 | 0 | 59.67 | 0.0051 | 0.3062 | 0 |
| 170 | SLE RA 2 | 6.93 | -0.01 | 59.62 | 0.0126 | 0.2941 | 0 |
| 170 | SLE RA 3 | 7.58 | 0 | 60.98 | 0.0049 | 0.3219 | 0 |
| 170 | SLE RA 4 | 7.41 | -0.01 | 60.94 | 0.0094 | 0.3146 | 0 |
| 170 | SLE RA 5 | 7.19 | -0.01 | 60.54 | 0.0123 | 0.3052 | 0 |
| 170 | SLE RA 6 | 7.84 | 0 | 61.89 | 0.0046 | 0.333 | 0 |
| 170 | SLE RA 7 | 7.67 | -0.01 | 61.86 | 0.0091 | 0.3257 | 0 |
| 170 | SLE RA 8 | 7.73 | 0 | 61.51 | 0.0045 | 0.3284 | 0 |
| 170 | SLE RA 9 | 7.56 | -0.01 | 61.47 | 0.009 | 0.3212 | 0 |
| 170 | SLE RA 10 | 8.29 | -0.01 | 66.41 | 0.0131 | 0.3529 | 0 |
| 170 | SLE RA 11 | 8.94 | 0 | 67.77 | 0.0054 | 0.3807 | 0 |
| 170 | SLE RA 12 | 8.77 | -0.01 | 67.74 | 0.0099 | 0.3735 | 0 |
| 170 | SLE RA 13 | 8.55 | -0.01 | 67.33 | 0.0128 | 0.364 | 0 |
| 170 | SLE RA 14 | 9.2 | 0 | 68.68 | 0.0051 | 0.3919 | 0 |
| 170 | SLE RA 15 | 9.03 | -0.01 | 68.65 | 0.0096 | 0.3846 | 0 |
| 170 | SLE RA 16 | 9.09 | 0 | 68.3 | 0.005 | 0.3873 | 0 |
| 170 | SLE RA 17 | 8.92 | -0.01 | 68.26 | 0.0095 | 0.38 | 0 |
| 170 | SLE RA 18 | 9.16 | 0 | 69.38 | 0.0058 | 0.3903 | 0 |
| 170 | SLE RA 19 | 8.99 | -0.01 | 69.34 | 0.0103 | 0.383 | 0 |
| 170 | SLE RA 20 | 9.42 | 0 | 70.29 | 0.0055 | 0.4014 | 0 |
| 170 | SLE RA 21 | 9.25 | -0.01 | 70.26 | 0.01 | 0.3941 | 0 |
| 170 | SLE FR 1 | 7.21 | 0 | 59.67 | 0.0051 | 0.3062 | 0 |
| 170 | SLE FR 2 | 7.16 | 0 | 59.66 | 0.0066 | 0.3038 | 0 |

| Nodo | Cont. | Reazione a traslazione | | | Reazione a rotazione | | |
|---|---|---|---|---|---|---|---|
| Ind. | N.br. | x | y | z | x | y | z |
| 170 | SLE FR 3 | 7.32 | 0 | 60.04 | 0.005 | 0.3106 | 0 |
| 170 | SLE FR 4 | 7.74 | 0 | 62.57 | 0.0068 | 0.329 | 0 |
| 170 | SLE FR 5 | 7.9 | 0 | 62.95 | 0.0052 | 0.3359 | 0 |
| 170 | SLE FR 6 | 8.19 | 0 | 64.52 | 0.0054 | 0.3482 | 0 |
| 170 | SLE QP 1 | 7.21 | 0 | 59.67 | 0.0051 | 0.3062 | 0 |
| 170 | SLE QP 2 | 7.8 | 0 | 62.58 | 0.0053 | 0.3314 | 0 |
| 170 | SLD 1 | 18.79 | 0.22 | 70.02 | -0.2273 | 0.8249 | 0.0006 |
| 170 | SLD 2 | 18.79 | 0.22 | 70.02 | -0.2273 | 0.8249 | 0.0006 |
| 170 | SLD 3 | 18.1 | -0.11 | 69.43 | 0.1111 | 0.7941 | -0.0003 |
| 170 | SLD 4 | 18.1 | -0.11 | 69.43 | 0.1111 | 0.7941 | -0.0003 |
| 170 | SLD 5 | 12.14 | 0.55 | 65.72 | -0.5776 | 0.5261 | 0.0016 |
| 170 | SLD 6 | 12.14 | 0.55 | 65.72 | -0.5776 | 0.5261 | 0.0016 |
| 170 | SLD 7 | 9.85 | -0.52 | 63.74 | 0.5502 | 0.4236 | -0.0015 |
| 170 | SLD 8 | 9.85 | -0.52 | 63.74 | 0.5502 | 0.4236 | -0.0015 |
| 170 | SLD 9 | 5.75 | 0.52 | 61.43 | -0.5396 | 0.2392 | 0.0015 |
| 170 | SLD 10 | 5.75 | 0.52 | 61.43 | -0.5396 | 0.2392 | 0.0015 |
| 170 | SLD 11 | 3.46 | -0.56 | 59.45 | 0.5882 | 0.1368 | -0.0016 |
| 170 | SLD 12 | 3.46 | -0.56 | 59.45 | 0.5882 | 0.1368 | -0.0016 |
| 170 | SLD 13 | -2.51 | 0.1 | 55.74 | -0.1005 | -0.1313 | 0.0003 |
| 170 | SLD 14 | -2.51 | 0.1 | 55.74 | -0.1005 | -0.1313 | 0.0003 |
| 170 | SLD 15 | -3.19 | -0.22 | 55.15 | 0.2379 | -0.162 | -0.0007 |
| 170 | SLD 16 | -3.19 | -0.22 | 55.15 | 0.2379 | -0.162 | -0.0007 |
| 170 | SLV 1 | 33.13 | 0.56 | 80.04 | -0.5894 | 1.4682 | 0.0016 |
| 170 | SLV 2 | 33.13 | 0.56 | 80.04 | -0.5894 | 1.4682 | 0.0016 |
| 170 | SLV 3 | 31.51 | -0.27 | 78.58 | 0.2765 | 1.3958 | -0.0008 |
| 170 | SLV 4 | 31.51 | -0.27 | 78.58 | 0.2765 | 1.3958 | -0.0008 |
| 170 | SLV 5 | 17.86 | 1.42 | 70.05 | -1.4864 | 0.7822 | 0.0041 |
| 170 | SLV 6 | 17.86 | 1.42 | 70.05 | -1.4864 | 0.7822 | 0.0041 |
| 170 | SLV 7 | 12.45 | -1.34 | 65.16 | 1.4 | 0.541 | -0.0039 |
| 170 | SLV 8 | 12.45 | -1.34 | 65.16 | 1.4 | 0.541 | -0.0039 |
| 170 | SLV 9 | 3.15 | 1.33 | 60.01 | -1.3894 | 0.1219 | 0.0039 |
| 170 | SLV 10 | 3.15 | 1.33 | 60.01 | -1.3894 | 0.1219 | 0.0039 |
| 170 | SLV 11 | -2.26 | -1.42 | 55.12 | 1.497 | -0.1193 | -0.0042 |
| 170 | SLV 12 | -2.26 | -1.42 | 55.12 | 1.497 | -0.1193 | -0.0042 |
| 170 | SLV 13 | -15.91 | 0.26 | 46.59 | -0.2659 | -0.733 | 0.0008 |
| 170 | SLV 14 | -15.91 | 0.26 | 46.59 | -0.2659 | -0.733 | 0.0008 |
| 170 | SLV 15 | -17.53 | -0.56 | 45.13 | 0.6 | -0.8053 | -0.0017 |
| 170 | SLV 16 | -17.53 | -0.56 | 45.13 | 0.6 | -0.8053 | -0.0017 |
| 171 | SLU 1 | 6.05 | 0 | 56.61 | 0.0045 | 0.2853 | 0 |
| 171 | SLU 2 | 5.59 | -0.01 | 56.46 | 0.014 | 0.2651 | 0 |
| 171 | SLU 3 | 6.6 | 0 | 58.55 | 0.0042 | 0.3106 | 0 |
| 171 | SLU 4 | 6.33 | -0.01 | 58.47 | 0.0099 | 0.2984 | 0 |
| 171 | SLU 5 | 6 | -0.01 | 57.85 | 0.0135 | 0.2834 | 0 |
| 171 | SLU 6 | 7 | 0 | 59.93 | 0.0037 | 0.3288 | 0 |
| 171 | SLU 7 | 6.73 | -0.01 | 59.85 | 0.0094 | 0.3167 | 0 |
| 171 | SLU 8 | 6.85 | 0 | 59.37 | 0.0035 | 0.3219 | 0 |
| 171 | SLU 9 | 6.58 | -0.01 | 59.28 | 0.0092 | 0.3097 | 0 |
| 171 | SLU 10 | 7.47 | -0.01 | 66.7 | 0.0147 | 0.3501 | 0 |
| 171 | SLU 11 | 8.47 | 0 | 68.79 | 0.0049 | 0.3955 | 0 |
| 171 | SLU 12 | 8.2 | -0.01 | 68.7 | 0.0106 | 0.3834 | 0 |
| 171 | SLU 13 | 7.87 | -0.01 | 68.08 | 0.0142 | 0.3683 | 0 |
| 171 | SLU 14 | 8.87 | 0 | 70.17 | 0.0044 | 0.4138 | 0 |
| 171 | SLU 15 | 8.6 | -0.01 | 70.08 | 0.0101 | 0.4017 | 0 |
| 171 | SLU 16 | 8.72 | 0 | 69.61 | 0.0042 | 0.4068 | 0 |
| 171 | SLU 17 | 8.45 | -0.01 | 69.52 | 0.0099 | 0.3947 | 0 |
| 171 | SLU 18 | 8.72 | 0 | 71.23 | 0.0055 | 0.4067 | 0 |
| 171 | SLU 19 | 8.45 | -0.01 | 71.14 | 0.0112 | 0.3946 | 0 |
| 171 | SLU 20 | 9.12 | 0 | 72.61 | 0.005 | 0.425 | 0 |
| 171 | SLU 21 | 8.85 | -0.01 | 72.53 | 0.0107 | 0.4128 | 0 |
| 171 | SLU 22 | 7.76 | 0 | 66.04 | 0.0049 | 0.3632 | 0 |
| 171 | SLU 23 | 7.3 | -0.01 | 65.89 | 0.0144 | 0.343 | 0 |
| 171 | SLU 24 | 8.31 | 0 | 67.98 | 0.0046 | 0.3884 | 0 |
| 171 | SLU 25 | 8.04 | -0.01 | 67.89 | 0.0103 | 0.3763 | 0 |
| 171 | SLU 26 | 7.7 | -0.01 | 67.27 | 0.0139 | 0.3613 | 0 |
| 171 | SLU 27 | 8.71 | 0 | 69.36 | 0.0041 | 0.4067 | 0 |
| 171 | SLU 28 | 8.44 | -0.01 | 69.28 | 0.0098 | 0.3946 | 0 |
| 171 | SLU 29 | 8.56 | 0 | 68.8 | 0.0039 | 0.3997 | 0 |
| 171 | SLU 30 | 8.29 | -0.01 | 68.71 | 0.0096 | 0.3876 | 0 |
| 171 | SLU 31 | 9.17 | -0.01 | 76.13 | 0.0151 | 0.428 | 0 |
| 171 | SLU 32 | 10.18 | 0 | 78.22 | 0.0053 | 0.4734 | 0 |
| 171 | SLU 33 | 9.91 | -0.01 | 78.13 | 0.011 | 0.4613 | 0 |
| 171 | SLU 34 | 9.57 | -0.01 | 77.51 | 0.0146 | 0.4462 | 0 |
| 171 | SLU 35 | 10.58 | 0 | 79.6 | 0.0048 | 0.4917 | 0 |
| 171 | SLU 36 | 10.31 | -0.01 | 79.51 | 0.0105 | 0.4795 | 0 |
| 171 | SLU 37 | 10.43 | 0 | 79.04 | 0.0046 | 0.4847 | 0 |
| 171 | SLU 38 | 10.16 | -0.01 | 78.95 | 0.0103 | 0.4726 | 0 |
| 171 | SLU 39 | 10.43 | 0 | 80.66 | 0.0059 | 0.4846 | 0 |
| 171 | SLU 40 | 10.15 | -0.01 | 80.57 | 0.0116 | 0.4725 | 0 |
| 171 | SLU 41 | 10.83 | 0 | 82.04 | 0.0054 | 0.5029 | 0 |
| 171 | SLU 42 | 10.56 | -0.01 | 81.95 | 0.0111 | 0.4907 | 0 |
| 171 | SLU 43 | 7.28 | 0 | 70.36 | 0.0058 | 0.3442 | 0 |
| 171 | SLU 44 | 6.83 | -0.01 | 70.21 | 0.0153 | 0.324 | 0 |
| 171 | SLU 45 | 7.83 | 0 | 72.3 | 0.0054 | 0.3695 | 0 |
| 171 | SLU 46 | 7.56 | -0.01 | 72.22 | 0.0111 | 0.3573 | 0 |
| 171 | SLU 47 | 7.23 | -0.01 | 71.6 | 0.0147 | 0.3423 | 0 |
| 171 | SLU 48 | 8.23 | 0 | 73.68 | 0.0049 | 0.3877 | 0 |
| 171 | SLU 49 | 7.96 | -0.01 | 73.6 | 0.0106 | 0.3756 | 0 |
| 171 | SLU 50 | 8.08 | 0 | 73.12 | 0.0047 | 0.3808 | 0 |

| Nodo | Cont. | Reazione a traslazione | | | Reazione a rotazione | | |
|---|---|---|---|---|---|---|---|
| Ind. | N.br. | x | y | z | x | y | z |
| 171 | SLU 51 | 7.81 | -0.01 | 73.04 | 0.0104 | 0.3686 | 0 |
| 171 | SLU 52 | 8.7 | -0.01 | 80.45 | 0.0159 | 0.409 | 0 |
| 171 | SLU 53 | 9.7 | 0 | 82.54 | 0.0061 | 0.4544 | 0 |
| 171 | SLU 54 | 9.43 | -0.01 | 82.45 | 0.0118 | 0.4423 | 0 |
| 171 | SLU 55 | 9.1 | -0.01 | 81.83 | 0.0154 | 0.4272 | 0 |
| 171 | SLU 56 | 10.1 | 0 | 83.92 | 0.0056 | 0.4727 | 0 |
| 171 | SLU 57 | 9.83 | -0.01 | 83.83 | 0.0113 | 0.4606 | 0 |
| 171 | SLU 58 | 9.95 | 0 | 83.36 | 0.0054 | 0.4657 | 0 |
| 171 | SLU 59 | 9.68 | -0.01 | 83.27 | 0.0111 | 0.4536 | 0 |
| 171 | SLU 60 | 9.95 | -0.01 | 84.98 | 0.0067 | 0.4656 | 0 |
| 171 | SLU 61 | 9.68 | -0.01 | 84.89 | 0.0124 | 0.4535 | 0 |
| 171 | SLU 62 | 10.35 | -0.01 | 86.36 | 0.0062 | 0.4839 | 0 |
| 171 | SLU 63 | 10.08 | -0.01 | 86.28 | 0.0119 | 0.4717 | 0 |
| 171 | SLU 64 | 8.99 | 0 | 79.79 | 0.0061 | 0.4221 | 0 |
| 171 | SLU 65 | 8.53 | -0.01 | 79.64 | 0.0157 | 0.4019 | 0 |
| 171 | SLU 66 | 9.54 | 0 | 81.73 | 0.0058 | 0.4473 | 0 |
| 171 | SLU 67 | 9.27 | -0.01 | 81.64 | 0.0115 | 0.4352 | 0 |
| 171 | SLU 68 | 8.93 | -0.01 | 81.02 | 0.0151 | 0.4202 | 0 |
| 171 | SLU 69 | 9.94 | 0 | 83.11 | 0.0053 | 0.4656 | 0 |
| 171 | SLU 70 | 9.67 | -0.01 | 83.03 | 0.011 | 0.4535 | 0 |
| 171 | SLU 71 | 9.79 | 0 | 82.55 | 0.0051 | 0.4586 | 0 |
| 171 | SLU 72 | 9.52 | -0.01 | 82.46 | 0.0108 | 0.4465 | 0 |
| 171 | SLU 73 | 10.4 | -0.01 | 89.88 | 0.0163 | 0.4869 | 0 |
| 171 | SLU 74 | 11.41 | -0.01 | 91.97 | 0.0065 | 0.5323 | 0 |
| 171 | SLU 75 | 11.14 | -0.01 | 91.88 | 0.0122 | 0.5202 | 0 |
| 171 | SLU 76 | 10.8 | -0.01 | 91.26 | 0.0158 | 0.5051 | 0 |
| 171 | SLU 77 | 11.81 | -0.01 | 93.35 | 0.006 | 0.5506 | 0 |
| 171 | SLU 78 | 11.54 | -0.01 | 93.26 | 0.0117 | 0.5384 | 0 |
| 171 | SLU 79 | 11.66 | -0.01 | 92.79 | 0.0058 | 0.5436 | 0 |
| 171 | SLU 80 | 11.39 | -0.01 | 92.7 | 0.0115 | 0.5315 | 0 |
| 171 | SLU 81 | 11.66 | -0.01 | 94.41 | 0.0071 | 0.5435 | 0 |
| 171 | SLU 82 | 11.38 | -0.01 | 94.32 | 0.0128 | 0.5314 | 0 |
| 171 | SLU 83 | 12.06 | -0.01 | 95.79 | 0.0066 | 0.5618 | 0 |
| 171 | SLU 84 | 11.79 | -0.01 | 95.7 | 0.0123 | 0.5496 | 0 |
| 171 | SLE RA 1 | 6.54 | 0 | 59.3 | 0.0046 | 0.3076 | 0 |
| 171 | SLE RA 2 | 6.23 | -0.01 | 59.2 | 0.011 | 0.2941 | 0 |
| 171 | SLE RA 3 | 6.91 | 0 | 60.6 | 0.0044 | 0.3244 | 0 |
| 171 | SLE RA 4 | 6.72 | -0.01 | 60.54 | 0.0082 | 0.3163 | 0 |
| 171 | SLE RA 5 | 6.5 | -0.01 | 60.13 | 0.0106 | 0.3063 | 0 |
| 171 | SLE RA 6 | 7.17 | 0 | 61.52 | 0.0041 | 0.3366 | 0 |
| 171 | SLE RA 7 | 6.99 | -0.01 | 61.46 | 0.0079 | 0.3285 | 0 |
| 171 | SLE RA 8 | 7.07 | 0 | 61.14 | 0.0039 | 0.3319 | 0 |
| 171 | SLE RA 9 | 6.89 | -0.01 | 61.09 | 0.0077 | 0.3238 | 0 |
| 171 | SLE RA 10 | 7.48 | -0.01 | 66.03 | 0.0114 | 0.3507 | 0 |
| 171 | SLE RA 11 | 8.15 | 0 | 67.42 | 0.0049 | 0.381 | 0 |
| 171 | SLE RA 12 | 7.97 | -0.01 | 67.36 | 0.0087 | 0.373 | 0 |
| 171 | SLE RA 13 | 7.75 | -0.01 | 66.95 | 0.0111 | 0.3629 | 0 |
| 171 | SLE RA 14 | 8.42 | 0 | 68.34 | 0.0045 | 0.3932 | 0 |
| 171 | SLE RA 15 | 8.24 | -0.01 | 68.29 | 0.0083 | 0.3851 | 0 |
| 171 | SLE RA 16 | 8.32 | 0 | 67.97 | 0.0044 | 0.3886 | 0 |
| 171 | SLE RA 17 | 8.14 | -0.01 | 67.91 | 0.0082 | 0.3805 | 0 |
| 171 | SLE RA 18 | 8.32 | 0 | 69.05 | 0.0053 | 0.3885 | 0 |
| 171 | SLE RA 19 | 8.14 | -0.01 | 68.99 | 0.0091 | 0.3804 | 0 |
| 171 | SLE RA 20 | 8.59 | 0 | 69.97 | 0.005 | 0.4007 | 0 |
| 171 | SLE RA 21 | 8.4 | -0.01 | 69.91 | 0.0088 | 0.3926 | 0 |
| 171 | SLE FR 1 | 6.54 | 0 | 59.3 | 0.0046 | 0.3076 | 0 |
| 171 | SLE FR 2 | 6.48 | 0 | 59.28 | 0.0059 | 0.3049 | 0 |
| 171 | SLE FR 3 | 6.64 | 0 | 59.67 | 0.0045 | 0.3125 | 0 |
| 171 | SLE FR 4 | 7.01 | 0 | 62.21 | 0.0061 | 0.3292 | 0 |
| 171 | SLE FR 5 | 7.18 | 0 | 62.59 | 0.0047 | 0.3367 | 0 |
| 171 | SLE FR 6 | 7.43 | 0 | 64.18 | 0.005 | 0.348 | 0 |
| 171 | SLE QP 1 | 6.54 | 0 | 59.3 | 0.0046 | 0.3076 | 0 |
| 171 | SLE QP 2 | 7.07 | 0 | 62.23 | 0.0048 | 0.3319 | 0 |
| 171 | SLD 1 | 18.3 | 0.23 | 68.02 | -0.2355 | 0.8394 | 0.0007 |
| 171 | SLD 2 | 18.3 | 0.23 | 68.02 | -0.2355 | 0.8394 | 0.0007 |
| 171 | SLD 3 | 17.59 | -0.11 | 67.43 | 0.1083 | 0.8078 | -0.0003 |
| 171 | SLD 4 | 17.59 | -0.11 | 67.43 | 0.1083 | 0.8078 | -0.0003 |
| 171 | SLD 5 | 11.51 | 0.57 | 64.86 | -0.5887 | 0.5321 | 0.0017 |
| 171 | SLD 6 | 11.51 | 0.57 | 64.86 | -0.5887 | 0.5321 | 0.0017 |
| 171 | SLD 7 | 9.16 | -0.54 | 62.89 | 0.5573 | 0.4267 | -0.0016 |
| 171 | SLD 8 | 9.16 | -0.54 | 62.89 | 0.5573 | 0.4267 | -0.0016 |
| 171 | SLD 9 | 4.99 | 0.53 | 61.56 | -0.5476 | 0.237 | 0.0016 |
| 171 | SLD 10 | 4.99 | 0.53 | 61.56 | -0.5476 | 0.237 | 0.0016 |
| 171 | SLD 11 | 2.63 | -0.57 | 59.59 | 0.5984 | 0.1317 | -0.0018 |
| 171 | SLD 12 | 2.63 | -0.57 | 59.59 | 0.5984 | 0.1317 | -0.0018 |
| 171 | SLD 13 | -3.45 | 0.1 | 57.02 | -0.0986 | -0.144 | 0.0003 |
| 171 | SLD 14 | -3.45 | 0.1 | 57.02 | -0.0986 | -0.144 | 0.0003 |
| 171 | SLD 15 | -4.16 | -0.23 | 56.43 | 0.2452 | -0.1757 | -0.0007 |
| 171 | SLD 16 | -4.16 | -0.23 | 56.43 | 0.2452 | -0.1757 | -0.0007 |
| 171 | SLV 1 | 32.96 | 0.58 | 75.86 | -0.6096 | 1.5028 | 0.0018 |
| 171 | SLV 2 | 32.96 | 0.58 | 75.86 | -0.6096 | 1.5028 | 0.0018 |
| 171 | SLV 3 | 31.29 | -0.26 | 74.38 | 0.2703 | 1.4279 | -0.0008 |
| 171 | SLV 4 | 31.29 | -0.26 | 74.38 | 0.2703 | 1.4279 | -0.0008 |
| 171 | SLV 5 | 17.37 | 1.45 | 68.56 | -1.5141 | 0.7968 | 0.0044 |
| 171 | SLV 6 | 17.37 | 1.45 | 68.56 | -1.5141 | 0.7968 | 0.0044 |
| 171 | SLV 7 | 11.8 | -1.36 | 63.62 | 1.419 | 0.547 | -0.0042 |
| 171 | SLV 8 | 11.8 | -1.36 | 63.62 | 1.419 | 0.547 | -0.0042 |
| 171 | SLV 9 | 2.34 | 1.36 | 60.83 | -1.4094 | 0.1167 | 0.0041 |

| Nodo | Cont. | Reazione a traslazione | | | Reazione a rotazione | | |
|---|---|---|---|---|---|---|---|
| Ind. | N.br. | x | y | z | x | y | z |
| 171 | SLV 10 | 2.34 | 1.36 | 60.83 | -1.4094 | 0.1167 | 0.0041 |
| 171 | SLV 11 | -3.23 | -1.46 | 55.89 | 1.5237 | -0.1331 | -0.0045 |
| 171 | SLV 12 | -3.23 | -1.46 | 55.89 | 1.5237 | -0.1331 | -0.0045 |
| 171 | SLV 13 | -17.15 | 0.26 | 50.08 | -0.2606 | -0.7642 | 0.0008 |
| 171 | SLV 14 | -17.15 | 0.26 | 50.08 | -0.2606 | -0.7642 | 0.0008 |
| 171 | SLV 15 | -18.82 | -0.59 | 48.59 | 0.6193 | -0.8391 | -0.0018 |
| 171 | SLV 16 | -18.82 | -0.59 | 48.59 | 0.6193 | -0.8391 | -0.0018 |
| 172 | SLU 1 | 4.95 | 0 | 56.43 | 0.0042 | 0.2072 | 0 |
| 172 | SLU 2 | 4.47 | -0.01 | 56.2 | 0.0118 | 0.1869 | 0 |
| 172 | SLU 3 | 5.49 | 0 | 58.39 | 0.0038 | 0.2303 | 0 |
| 172 | SLU 4 | 5.2 | -0.01 | 58.26 | 0.0083 | 0.2182 | 0 |
| 172 | SLU 5 | 4.87 | -0.01 | 57.62 | 0.0112 | 0.2039 | 0 |
| 172 | SLU 6 | 5.89 | 0 | 59.81 | 0.0031 | 0.2473 | 0 |
| 172 | SLU 7 | 5.6 | -0.01 | 59.68 | 0.0077 | 0.2352 | 0 |
| 172 | SLU 8 | 5.75 | 0 | 59.26 | 0.0029 | 0.2411 | 0 |
| 172 | SLU 9 | 5.46 | -0.01 | 59.13 | 0.0075 | 0.229 | 0 |
| 172 | SLU 10 | 6.11 | -0.01 | 66.5 | 0.0125 | 0.2573 | 0 |
| 172 | SLU 11 | 7.12 | 0 | 68.69 | 0.0044 | 0.3007 | 0 |
| 172 | SLU 12 | 6.84 | -0.01 | 68.55 | 0.009 | 0.2886 | 0 |
| 172 | SLU 13 | 6.51 | -0.01 | 67.92 | 0.0118 | 0.2743 | 0 |
| 172 | SLU 14 | 7.52 | 0 | 70.11 | 0.0038 | 0.3177 | 0 |
| 172 | SLU 15 | 7.24 | -0.01 | 69.97 | 0.0084 | 0.3056 | 0 |
| 172 | SLU 16 | 7.38 | 0 | 69.56 | 0.0036 | 0.3115 | 0 |
| 172 | SLU 17 | 7.1 | -0.01 | 69.43 | 0.0082 | 0.2994 | 0 |
| 172 | SLU 18 | 7.28 | -0.01 | 71.14 | 0.0051 | 0.3077 | 0 |
| 172 | SLU 19 | 7 | -0.01 | 71 | 0.0097 | 0.2955 | 0 |
| 172 | SLU 20 | 7.68 | -0.01 | 72.56 | 0.0045 | 0.3247 | 0 |
| 172 | SLU 21 | 7.4 | -0.01 | 72.42 | 0.0091 | 0.3125 | 0 |
| 172 | SLU 22 | 6.45 | 0 | 65.9 | 0.0045 | 0.2717 | 0 |
| 172 | SLU 23 | 5.98 | -0.01 | 65.67 | 0.0121 | 0.2514 | 0 |
| 172 | SLU 24 | 6.99 | 0 | 67.87 | 0.0041 | 0.2949 | 0 |
| 172 | SLU 25 | 6.71 | -0.01 | 67.73 | 0.0087 | 0.2827 | 0 |
| 172 | SLU 26 | 6.38 | -0.01 | 67.09 | 0.0115 | 0.2684 | 0 |
| 172 | SLU 27 | 7.39 | 0 | 69.29 | 0.0035 | 0.3119 | 0 |
| 172 | SLU 28 | 7.11 | -0.01 | 69.15 | 0.0081 | 0.2997 | 0 |
| 172 | SLU 29 | 7.25 | 0 | 68.74 | 0.0033 | 0.3057 | 0 |
| 172 | SLU 30 | 6.97 | -0.01 | 68.6 | 0.0079 | 0.2935 | 0 |
| 172 | SLU 31 | 7.61 | -0.01 | 75.97 | 0.0128 | 0.3218 | 0 |
| 172 | SLU 32 | 8.63 | -0.01 | 78.17 | 0.0048 | 0.3652 | 0 |
| 172 | SLU 33 | 8.34 | -0.01 | 78.03 | 0.0093 | 0.3531 | 0 |
| 172 | SLU 34 | 8.01 | -0.01 | 77.39 | 0.0122 | 0.3388 | 0 |
| 172 | SLU 35 | 9.03 | -0.01 | 79.58 | 0.0041 | 0.3822 | 0 |
| 172 | SLU 36 | 8.74 | -0.01 | 79.45 | 0.0087 | 0.3701 | 0 |
| 172 | SLU 37 | 8.89 | -0.01 | 79.04 | 0.0039 | 0.376 | 0 |
| 172 | SLU 38 | 8.6 | -0.01 | 78.9 | 0.0085 | 0.3639 | 0 |
| 172 | SLU 39 | 8.79 | -0.01 | 80.61 | 0.0054 | 0.3722 | 0 |
| 172 | SLU 40 | 8.5 | -0.01 | 80.48 | 0.01 | 0.3601 | 0 |
| 172 | SLU 41 | 9.19 | -0.01 | 82.03 | 0.0048 | 0.3892 | 0 |
| 172 | SLU 42 | 8.9 | -0.01 | 81.9 | 0.0094 | 0.3771 | 0 |
| 172 | SLU 43 | 5.92 | -0.01 | 70.11 | 0.0053 | 0.2472 | 0 |
| 172 | SLU 44 | 5.44 | -0.01 | 69.88 | 0.0129 | 0.227 | 0 |
| 172 | SLU 45 | 6.46 | -0.01 | 72.07 | 0.0049 | 0.2704 | 0 |
| 172 | SLU 46 | 6.17 | -0.01 | 71.94 | 0.0095 | 0.2582 | 0 |
| 172 | SLU 47 | 5.84 | -0.01 | 71.3 | 0.0123 | 0.2439 | 0 |
| 172 | SLU 48 | 6.86 | -0.01 | 73.49 | 0.0043 | 0.2874 | 0 |
| 172 | SLU 49 | 6.57 | -0.01 | 73.35 | 0.0089 | 0.2752 | 0 |
| 172 | SLU 50 | 6.72 | 0 | 72.94 | 0.0041 | 0.2812 | 0 |
| 172 | SLU 51 | 6.43 | -0.01 | 72.81 | 0.0087 | 0.269 | 0 |
| 172 | SLU 52 | 7.08 | -0.01 | 80.18 | 0.0136 | 0.2973 | 0 |
| 172 | SLU 53 | 8.09 | -0.01 | 82.37 | 0.0056 | 0.3407 | 0 |
| 172 | SLU 54 | 7.81 | -0.01 | 82.23 | 0.0101 | 0.3286 | 0 |
| 172 | SLU 55 | 7.48 | -0.01 | 81.6 | 0.013 | 0.3143 | 0 |
| 172 | SLU 56 | 8.49 | -0.01 | 83.79 | 0.0049 | 0.3577 | 0 |
| 172 | SLU 57 | 8.21 | -0.01 | 83.65 | 0.0095 | 0.3456 | 0 |
| 172 | SLU 58 | 8.35 | -0.01 | 83.24 | 0.0047 | 0.3515 | 0 |
| 172 | SLU 59 | 8.07 | -0.01 | 83.11 | 0.0093 | 0.3394 | 0 |
| 172 | SLU 60 | 8.25 | -0.01 | 84.82 | 0.0062 | 0.3477 | 0 |
| 172 | SLU 61 | 7.97 | -0.01 | 84.68 | 0.0108 | 0.3356 | 0 |
| 172 | SLU 62 | 8.65 | -0.01 | 86.24 | 0.0056 | 0.3647 | 0 |
| 172 | SLU 63 | 8.37 | -0.01 | 86.1 | 0.0102 | 0.3526 | 0 |
| 172 | SLU 64 | 7.42 | -0.01 | 79.58 | 0.0056 | 0.3117 | 0 |
| 172 | SLU 65 | 6.95 | -0.01 | 79.35 | 0.0133 | 0.2915 | 0 |
| 172 | SLU 66 | 7.96 | -0.01 | 81.55 | 0.0052 | 0.3349 | 0 |
| 172 | SLU 67 | 7.68 | -0.01 | 81.41 | 0.0098 | 0.3227 | 0 |
| 172 | SLU 68 | 7.35 | -0.01 | 80.77 | 0.0127 | 0.3085 | 0 |
| 172 | SLU 69 | 8.36 | -0.01 | 82.97 | 0.0046 | 0.3519 | 0 |
| 172 | SLU 70 | 8.08 | -0.01 | 82.83 | 0.0092 | 0.3397 | 0 |
| 172 | SLU 71 | 8.22 | -0.01 | 82.42 | 0.0044 | 0.3457 | 0 |
| 172 | SLU 72 | 7.94 | -0.01 | 82.28 | 0.009 | 0.3336 | 0 |
| 172 | SLU 73 | 8.58 | -0.01 | 89.65 | 0.0139 | 0.3618 | 0 |
| 172 | SLU 74 | 9.6 | -0.01 | 91.85 | 0.0059 | 0.4053 | 0 |
| 172 | SLU 75 | 9.31 | -0.01 | 91.71 | 0.0105 | 0.3931 | 0 |
| 172 | SLU 76 | 8.98 | -0.01 | 91.07 | 0.0133 | 0.3788 | 0 |
| 172 | SLU 77 | 10 | -0.01 | 93.26 | 0.0053 | 0.4222 | 0 |
| 172 | SLU 78 | 9.71 | -0.01 | 93.13 | 0.0099 | 0.4101 | 0 |
| 172 | SLU 79 | 9.86 | -0.01 | 92.72 | 0.0051 | 0.4161 | 0 |
| 172 | SLU 80 | 9.57 | -0.01 | 92.58 | 0.0096 | 0.4039 | 0 |
| 172 | SLU 81 | 9.76 | -0.01 | 94.29 | 0.0066 | 0.4122 | 0 |

| Nodo | Cont. | Reazione a traslazione | | | Reazione a rotazione | | |
|---|---|---|---|---|---|---|---|
| Ind. | N.br. | x | y | z | x | y | z |
| 172 | SLU 82 | 9.47 | -0.01 | 94.16 | 0.0112 | 0.4001 | 0 |
| 172 | SLU 83 | 10.16 | -0.01 | 95.71 | 0.006 | 0.4292 | 0 |
| 172 | SLU 84 | 9.87 | -0.01 | 95.58 | 0.0105 | 0.4171 | 0 |
| 172 | SLE RA 1 | 5.38 | 0 | 59.13 | 0.0043 | 0.2256 | 0 |
| 172 | SLE RA 2 | 5.06 | -0.01 | 58.98 | 0.0094 | 0.2121 | 0 |
| 172 | SLE RA 3 | 5.74 | 0 | 60.44 | 0.004 | 0.241 | 0 |
| 172 | SLE RA 4 | 5.55 | -0.01 | 60.35 | 0.007 | 0.233 | 0 |
| 172 | SLE RA 5 | 5.33 | -0.01 | 59.93 | 0.0089 | 0.2234 | 0 |
| 172 | SLE RA 6 | 6 | 0 | 61.39 | 0.0036 | 0.2524 | 0 |
| 172 | SLE RA 7 | 5.81 | -0.01 | 61.3 | 0.0066 | 0.2443 | 0 |
| 172 | SLE RA 8 | 5.91 | 0 | 61.02 | 0.0034 | 0.2483 | 0 |
| 172 | SLE RA 9 | 5.72 | -0.01 | 60.93 | 0.0065 | 0.2402 | 0 |
| 172 | SLE RA 10 | 6.15 | -0.01 | 65.85 | 0.0098 | 0.259 | 0 |
| 172 | SLE RA 11 | 6.83 | 0 | 67.31 | 0.0044 | 0.288 | 0 |
| 172 | SLE RA 12 | 6.64 | -0.01 | 67.22 | 0.0075 | 0.2799 | 0 |
| 172 | SLE RA 13 | 6.42 | -0.01 | 66.79 | 0.0094 | 0.2703 | 0 |
| 172 | SLE RA 14 | 7.09 | 0 | 68.26 | 0.004 | 0.2993 | 0 |
| 172 | SLE RA 15 | 6.9 | -0.01 | 68.17 | 0.0071 | 0.2912 | 0 |
| 172 | SLE RA 16 | 7 | 0 | 67.89 | 0.0039 | 0.2952 | 0 |
| 172 | SLE RA 17 | 6.81 | -0.01 | 67.8 | 0.0069 | 0.2871 | 0 |
| 172 | SLE RA 18 | 6.93 | -0.01 | 68.94 | 0.0049 | 0.2926 | 0 |
| 172 | SLE RA 19 | 6.75 | -0.01 | 68.85 | 0.0079 | 0.2845 | 0 |
| 172 | SLE RA 20 | 7.2 | 0 | 69.89 | 0.0045 | 0.3039 | 0 |
| 172 | SLE RA 21 | 7.01 | -0.01 | 69.8 | 0.0075 | 0.2958 | 0 |
| 172 | SLE FR 1 | 5.38 | 0 | 59.13 | 0.0043 | 0.2256 | 0 |
| 172 | SLE FR 2 | 5.31 | -0.01 | 59.1 | 0.0053 | 0.2229 | 0 |
| 172 | SLE FR 3 | 5.48 | 0 | 59.51 | 0.0041 | 0.2301 | 0 |
| 172 | SLE FR 4 | 5.78 | -0.01 | 62.05 | 0.0055 | 0.243 | 0 |
| 172 | SLE FR 5 | 5.95 | 0 | 62.45 | 0.0043 | 0.2502 | 0 |
| 172 | SLE FR 6 | 6.16 | 0 | 64.04 | 0.0046 | 0.2591 | 0 |
| 172 | SLE QP 1 | 5.38 | 0 | 59.13 | 0.0043 | 0.2256 | 0 |
| 172 | SLE QP 2 | 5.84 | 0 | 62.08 | 0.0045 | 0.2457 | 0 |
| 172 | SLD 1 | 17.22 | 0.22 | 66.74 | -0.2267 | 0.7583 | 0.0007 |
| 172 | SLD 2 | 17.22 | 0.22 | 66.74 | -0.2267 | 0.7583 | 0.0007 |
| 172 | SLD 3 | 16.5 | -0.09 | 66.09 | 0.0959 | 0.7261 | -0.0003 |
| 172 | SLD 4 | 16.5 | -0.09 | 66.09 | 0.0959 | 0.7261 | -0.0003 |
| 172 | SLD 5 | 10.35 | 0.53 | 64.46 | -0.5541 | 0.4484 | 0.0016 |
| 172 | SLD 6 | 10.35 | 0.53 | 64.46 | -0.5541 | 0.4484 | 0.0016 |
| 172 | SLD 7 | 7.95 | -0.5 | 62.3 | 0.5211 | 0.3409 | -0.0015 |
| 172 | SLD 8 | 7.95 | -0.5 | 62.3 | 0.5211 | 0.3409 | -0.0015 |
| 172 | SLD 9 | 3.74 | 0.49 | 61.86 | -0.5122 | 0.1505 | 0.0015 |
| 172 | SLD 10 | 3.74 | 0.49 | 61.86 | -0.5122 | 0.1505 | 0.0015 |
| 172 | SLD 11 | 1.34 | -0.54 | 59.69 | 0.563 | 0.043 | -0.0016 |
| 172 | SLD 12 | 1.34 | -0.54 | 59.69 | 0.563 | 0.043 | -0.0016 |
| 172 | SLD 13 | -4.81 | 0.08 | 58.06 | -0.087 | -0.2347 | 0.0002 |
| 172 | SLD 14 | -4.81 | 0.08 | 58.06 | -0.087 | -0.2347 | 0.0002 |
| 172 | SLD 15 | -5.53 | -0.23 | 57.41 | 0.2356 | -0.2669 | -0.0007 |
| 172 | SLD 16 | -5.53 | -0.23 | 57.41 | 0.2356 | -0.2669 | -0.0007 |
| 172 | SLV 1 | 32.07 | 0.56 | 73.07 | -0.5862 | 1.427 | 0.0017 |
| 172 | SLV 2 | 32.07 | 0.56 | 73.07 | -0.5862 | 1.427 | 0.0017 |
| 172 | SLV 3 | 30.36 | -0.22 | 71.41 | 0.2391 | 1.3509 | -0.0006 |
| 172 | SLV 4 | 30.36 | -0.22 | 71.41 | 0.2391 | 1.3509 | -0.0006 |
| 172 | SLV 5 | 16.3 | 1.36 | 67.88 | -1.4244 | 0.7155 | 0.0041 |
| 172 | SLV 6 | 16.3 | 1.36 | 67.88 | -1.4244 | 0.7155 | 0.0041 |
| 172 | SLV 7 | 10.61 | -1.26 | 62.36 | 1.3265 | 0.4619 | -0.0038 |
| 172 | SLV 8 | 10.61 | -1.26 | 62.36 | 1.3265 | 0.4619 | -0.0038 |
| 172 | SLV 9 | 1.08 | 1.25 | 61.79 | -1.3176 | 0.0295 | 0.0038 |
| 172 | SLV 10 | 1.08 | 1.25 | 61.79 | -1.3176 | 0.0295 | 0.0038 |
| 172 | SLV 11 | -4.61 | -1.37 | 56.27 | 1.4333 | -0.2241 | -0.0041 |
| 172 | SLV 12 | -4.61 | -1.37 | 56.27 | 1.4333 | -0.2241 | -0.0041 |
| 172 | SLV 13 | -18.67 | 0.22 | 52.74 | -0.2302 | -0.8595 | 0.0006 |
| 172 | SLV 14 | -18.67 | 0.22 | 52.74 | -0.2302 | -0.8595 | 0.0006 |
| 172 | SLV 15 | -20.38 | -0.57 | 51.08 | 0.5951 | -0.9356 | -0.0018 |
| 172 | SLV 16 | -20.38 | -0.57 | 51.08 | 0.5951 | -0.9356 | -0.0018 |
| 173 | SLU 1 | 4.21 | -0.01 | 56.38 | 0.0035 | 0.2029 | 0 |
| 173 | SLU 2 | 3.71 | -0.01 | 56.06 | 0.0092 | 0.1807 | 0 |
| 173 | SLU 3 | 4.76 | 0 | 58.4 | 0.003 | 0.2277 | 0 |
| 173 | SLU 4 | 4.46 | -0.01 | 58.2 | 0.0065 | 0.2143 | 0 |
| 173 | SLU 5 | 4.12 | -0.01 | 57.54 | 0.0085 | 0.1993 | 0 |
| 173 | SLU 6 | 5.17 | 0 | 59.88 | 0.0023 | 0.2463 | 0 |
| 173 | SLU 7 | 4.87 | -0.01 | 59.69 | 0.0057 | 0.233 | 0 |
| 173 | SLU 8 | 5.04 | 0 | 59.35 | 0.0021 | 0.2401 | 0 |
| 173 | SLU 9 | 4.74 | -0.01 | 59.16 | 0.0055 | 0.2268 | 0 |
| 173 | SLU 10 | 5.16 | -0.01 | 66.43 | 0.0098 | 0.2474 | 0 |
| 173 | SLU 11 | 6.2 | -0.01 | 68.77 | 0.0036 | 0.2944 | 0 |
| 173 | SLU 12 | 5.9 | -0.01 | 68.57 | 0.007 | 0.2811 | 0 |
| 173 | SLU 13 | 5.57 | -0.01 | 67.91 | 0.0091 | 0.266 | 0 |
| 173 | SLU 14 | 6.62 | -0.01 | 70.25 | 0.0029 | 0.313 | 0 |
| 173 | SLU 15 | 6.32 | -0.01 | 70.06 | 0.0063 | 0.2997 | 0 |
| 173 | SLU 16 | 6.48 | -0.01 | 69.72 | 0.0027 | 0.3068 | 0 |
| 173 | SLU 17 | 6.18 | -0.01 | 69.53 | 0.0061 | 0.2935 | 0 |
| 173 | SLU 18 | 6.28 | -0.01 | 71.2 | 0.0043 | 0.2982 | 0 |
| 173 | SLU 19 | 5.98 | -0.01 | 71 | 0.0078 | 0.2849 | 0 |
| 173 | SLU 20 | 6.69 | -0.01 | 72.68 | 0.0036 | 0.3168 | 0 |
| 173 | SLU 21 | 6.39 | -0.01 | 72.49 | 0.0071 | 0.3035 | 0 |
| 173 | SLU 22 | 5.57 | -0.01 | 65.93 | 0.0038 | 0.2656 | 0 |
| 173 | SLU 23 | 5.07 | -0.01 | 65.61 | 0.0095 | 0.2433 | 0 |
| 173 | SLU 24 | 6.11 | -0.01 | 67.95 | 0.0033 | 0.2904 | 0 |

| Nodo | Cont. | Reazione a traslazione | | | Reazione a rotazione | | |
|---|---|---|---|---|---|---|---|
| Ind. | N.br. | x | y | z | x | y | z |
| 173 | SLU 25 | 5.81 | -0.01 | 67.75 | 0.0067 | 0.277 | 0 |
| 173 | SLU 26 | 5.48 | -0.01 | 67.09 | 0.0087 | 0.2619 | 0 |
| 173 | SLU 27 | 6.53 | -0.01 | 69.43 | 0.0026 | 0.309 | 0 |
| 173 | SLU 28 | 6.23 | -0.01 | 69.24 | 0.006 | 0.2956 | 0 |
| 173 | SLU 29 | 6.39 | -0.01 | 68.9 | 0.0023 | 0.3028 | 0 |
| 173 | SLU 30 | 6.09 | -0.01 | 68.71 | 0.0057 | 0.2894 | 0 |
| 173 | SLU 31 | 6.52 | -0.01 | 75.98 | 0.01 | 0.3101 | 0 |
| 173 | SLU 32 | 7.56 | -0.01 | 78.32 | 0.0038 | 0.3571 | 0 |
| 173 | SLU 33 | 7.26 | -0.01 | 78.12 | 0.0073 | 0.3437 | 0 |
| 173 | SLU 34 | 6.93 | -0.01 | 77.46 | 0.0093 | 0.3287 | 0 |
| 173 | SLU 35 | 7.97 | -0.01 | 79.8 | 0.0031 | 0.3757 | 0 |
| 173 | SLU 36 | 7.67 | -0.01 | 79.61 | 0.0065 | 0.3624 | 0 |
| 173 | SLU 37 | 7.84 | -0.01 | 79.27 | 0.0029 | 0.3695 | 0 |
| 173 | SLU 38 | 7.54 | -0.01 | 79.08 | 0.0063 | 0.3562 | 0 |
| 173 | SLU 39 | 7.64 | -0.01 | 80.75 | 0.0046 | 0.3609 | 0 |
| 173 | SLU 40 | 7.34 | -0.01 | 80.55 | 0.008 | 0.3475 | 0 |
| 173 | SLU 41 | 8.05 | -0.01 | 82.23 | 0.0039 | 0.3795 | 0 |
| 173 | SLU 42 | 7.75 | -0.01 | 82.04 | 0.0073 | 0.3662 | 0 |
| 173 | SLU 43 | 5.01 | -0.01 | 70.02 | 0.0045 | 0.2422 | 0 |
| 173 | SLU 44 | 4.51 | -0.01 | 69.7 | 0.0102 | 0.22 | 0 |
| 173 | SLU 45 | 5.55 | -0.01 | 72.04 | 0.004 | 0.2671 | 0 |
| 173 | SLU 46 | 5.26 | -0.01 | 71.84 | 0.0074 | 0.2537 | 0 |
| 173 | SLU 47 | 4.92 | -0.01 | 71.18 | 0.0095 | 0.2386 | 0 |
| 173 | SLU 48 | 5.97 | -0.01 | 73.52 | 0.0033 | 0.2857 | 0 |
| 173 | SLU 49 | 5.67 | -0.01 | 73.33 | 0.0067 | 0.2723 | 0 |
| 173 | SLU 50 | 5.83 | -0.01 | 72.99 | 0.0031 | 0.2795 | 0 |
| 173 | SLU 51 | 5.53 | -0.01 | 72.8 | 0.0065 | 0.2661 | 0 |
| 173 | SLU 52 | 5.96 | -0.01 | 80.07 | 0.0108 | 0.2868 | 0 |
| 173 | SLU 53 | 7 | -0.01 | 82.41 | 0.0046 | 0.3338 | 0 |
| 173 | SLU 54 | 6.7 | -0.01 | 82.21 | 0.008 | 0.3204 | 0 |
| 173 | SLU 55 | 6.37 | -0.01 | 81.55 | 0.0101 | 0.3054 | 0 |
| 173 | SLU 56 | 7.41 | -0.01 | 83.89 | 0.0039 | 0.3524 | 0 |
| 173 | SLU 57 | 7.11 | -0.01 | 83.7 | 0.0073 | 0.3391 | 0 |
| 173 | SLU 58 | 7.28 | -0.01 | 83.36 | 0.0037 | 0.3462 | 0 |
| 173 | SLU 59 | 6.98 | -0.01 | 83.17 | 0.0071 | 0.3329 | 0 |
| 173 | SLU 60 | 7.08 | -0.01 | 84.84 | 0.0053 | 0.3376 | 0 |
| 173 | SLU 61 | 6.78 | -0.01 | 84.64 | 0.0087 | 0.3242 | 0 |
| 173 | SLU 62 | 7.49 | -0.01 | 86.32 | 0.0046 | 0.3562 | 0 |
| 173 | SLU 63 | 7.19 | -0.01 | 86.13 | 0.008 | 0.3428 | 0 |
| 173 | SLU 64 | 6.37 | -0.01 | 79.57 | 0.0047 | 0.3049 | 0 |
| 173 | SLU 65 | 5.87 | -0.01 | 79.25 | 0.0104 | 0.2827 | 0 |
| 173 | SLU 66 | 6.91 | -0.01 | 81.59 | 0.0042 | 0.3297 | 0 |
| 173 | SLU 67 | 6.61 | -0.01 | 81.39 | 0.0077 | 0.3164 | 0 |
| 173 | SLU 68 | 6.28 | -0.01 | 80.73 | 0.0097 | 0.3013 | 0 |
| 173 | SLU 69 | 7.32 | -0.01 | 83.08 | 0.0035 | 0.3483 | 0 |
| 173 | SLU 70 | 7.03 | -0.01 | 82.88 | 0.007 | 0.335 | 0 |
| 173 | SLU 71 | 7.19 | -0.01 | 82.54 | 0.0033 | 0.3422 | 0 |
| 173 | SLU 72 | 6.89 | -0.01 | 82.35 | 0.0067 | 0.3288 | 0 |
| 173 | SLU 73 | 7.31 | -0.01 | 89.62 | 0.011 | 0.3494 | 0 |
| 173 | SLU 74 | 8.36 | -0.01 | 91.96 | 0.0048 | 0.3965 | 0 |
| 173 | SLU 75 | 8.06 | -0.01 | 91.76 | 0.0082 | 0.3831 | 0 |
| 173 | SLU 76 | 7.73 | -0.01 | 91.1 | 0.0103 | 0.368 | 0 |
| 173 | SLU 77 | 8.77 | -0.01 | 93.44 | 0.0041 | 0.4151 | 0 |
| 173 | SLU 78 | 8.47 | -0.01 | 93.25 | 0.0075 | 0.4017 | 0 |
| 173 | SLU 79 | 8.64 | -0.01 | 92.91 | 0.0039 | 0.4089 | 0 |
| 173 | SLU 80 | 8.34 | -0.01 | 92.72 | 0.0073 | 0.3955 | 0 |
| 173 | SLU 81 | 8.43 | -0.01 | 94.39 | 0.0056 | 0.4003 | 0 |
| 173 | SLU 82 | 8.13 | -0.01 | 94.19 | 0.009 | 0.3869 | 0 |
| 173 | SLU 83 | 8.85 | -0.01 | 95.87 | 0.0048 | 0.4189 | 0 |
| 173 | SLU 84 | 8.55 | -0.01 | 95.68 | 0.0083 | 0.4055 | 0 |
| 173 | SLE RA 1 | 4.6 | -0.01 | 59.11 | 0.0036 | 0.2208 | 0 |
| 173 | SLE RA 2 | 4.27 | -0.01 | 58.89 | 0.0074 | 0.206 | 0 |
| 173 | SLE RA 3 | 4.96 | -0.01 | 60.46 | 0.0033 | 0.2373 | 0 |
| 173 | SLE RA 4 | 4.76 | -0.01 | 60.33 | 0.0055 | 0.2284 | 0 |
| 173 | SLE RA 5 | 4.54 | -0.01 | 59.88 | 0.0069 | 0.2184 | 0 |
| 173 | SLE RA 6 | 5.24 | 0 | 61.45 | 0.0028 | 0.2497 | 0 |
| 173 | SLE RA 7 | 5.04 | -0.01 | 61.32 | 0.0051 | 0.2408 | 0 |
| 173 | SLE RA 8 | 5.15 | 0 | 61.09 | 0.0026 | 0.2456 | 0 |
| 173 | SLE RA 9 | 4.95 | -0.01 | 60.96 | 0.0049 | 0.2367 | 0 |
| 173 | SLE RA 10 | 5.23 | -0.01 | 65.81 | 0.0078 | 0.2505 | 0 |
| 173 | SLE RA 11 | 5.93 | -0.01 | 67.37 | 0.0037 | 0.2818 | 0 |
| 173 | SLE RA 12 | 5.73 | -0.01 | 67.24 | 0.0059 | 0.2729 | 0 |
| 173 | SLE RA 13 | 5.51 | -0.01 | 66.8 | 0.0073 | 0.2629 | 0 |
| 173 | SLE RA 14 | 6.2 | -0.01 | 68.36 | 0.0032 | 0.2942 | 0 |
| 173 | SLE RA 15 | 6 | -0.01 | 68.23 | 0.0055 | 0.2853 | 0 |
| 173 | SLE RA 16 | 6.11 | -0.01 | 68 | 0.003 | 0.2901 | 0 |
| 173 | SLE RA 17 | 5.91 | -0.01 | 67.87 | 0.0053 | 0.2812 | 0 |
| 173 | SLE RA 18 | 5.98 | -0.01 | 68.99 | 0.0041 | 0.2843 | 0 |
| 173 | SLE RA 19 | 5.78 | -0.01 | 68.86 | 0.0064 | 0.2754 | 0 |
| 173 | SLE RA 20 | 6.25 | -0.01 | 69.98 | 0.0037 | 0.2967 | 0 |
| 173 | SLE RA 21 | 6.05 | -0.01 | 69.85 | 0.0059 | 0.2879 | 0 |
| 173 | SLE FR 1 | 4.6 | -0.01 | 59.11 | 0.0036 | 0.2208 | 0 |
| 173 | SLE FR 2 | 4.53 | -0.01 | 59.07 | 0.0044 | 0.2178 | 0 |
| 173 | SLE FR 3 | 4.71 | -0.01 | 59.51 | 0.0034 | 0.2257 | 0 |
| 173 | SLE FR 4 | 4.95 | -0.01 | 62.03 | 0.0045 | 0.2369 | 0 |
| 173 | SLE FR 5 | 5.12 | -0.01 | 62.47 | 0.0036 | 0.2448 | 0 |
| 173 | SLE FR 6 | 5.29 | -0.01 | 64.05 | 0.0039 | 0.2526 | 0 |
| 173 | SLE QP 1 | 4.6 | -0.01 | 59.11 | 0.0036 | 0.2208 | 0 |

| Nodo | Cont. | Reazione a traslazione | | | Reazione a rotazione | | |
|---|---|---|---|---|---|---|---|
| Ind. | N.br. | x | y | z | x | y | z |
| 173 | SLE QP 2 | 5.01 | -0.01 | 62.07 | 0.0038 | 0.2399 | 0 |
| 173 | SLD 1 | 16.39 | 0.2 | 66.3 | -0.2024 | 0.76 | 0.0006 |
| 173 | SLD 2 | 16.39 | 0.2 | 66.3 | -0.2024 | 0.76 | 0.0006 |
| 173 | SLD 3 | 15.67 | -0.07 | 65.52 | 0.075 | 0.7272 | -0.0002 |
| 173 | SLD 4 | 15.67 | -0.07 | 65.52 | 0.075 | 0.7272 | -0.0002 |
| 173 | SLD 5 | 9.52 | 0.45 | 64.53 | -0.4789 | 0.4457 | 0.0013 |
| 173 | SLD 6 | 9.52 | 0.45 | 64.53 | -0.4789 | 0.4457 | 0.0013 |
| 173 | SLD 7 | 7.11 | -0.42 | 61.92 | 0.4459 | 0.3363 | -0.0012 |
| 173 | SLD 8 | 7.11 | -0.42 | 61.92 | 0.4459 | 0.3363 | -0.0012 |
| 173 | SLD 9 | 2.91 | 0.41 | 62.23 | -0.4384 | 0.1434 | 0.0011 |
| 173 | SLD 10 | 2.91 | 0.41 | 62.23 | -0.4384 | 0.1434 | 0.0011 |
| 173 | SLD 11 | 0.5 | -0.46 | 59.61 | 0.4864 | 0.034 | -0.0013 |
| 173 | SLD 12 | 0.5 | -0.46 | 59.61 | 0.4864 | 0.034 | -0.0013 |
| 173 | SLD 13 | -5.64 | 0.05 | 58.63 | -0.0675 | -0.2475 | 0.0001 |
| 173 | SLD 14 | -5.64 | 0.05 | 58.63 | -0.0675 | -0.2475 | 0.0001 |
| 173 | SLD 15 | -6.36 | -0.21 | 57.84 | 0.2099 | -0.2803 | -0.0006 |
| 173 | SLD 16 | -6.36 | -0.21 | 57.84 | 0.2099 | -0.2803 | -0.0006 |
| 173 | SLV 1 | 31.26 | 0.51 | 72.01 | -0.5226 | 1.4403 | 0.0015 |
| 173 | SLV 2 | 31.26 | 0.51 | 72.01 | -0.5226 | 1.4403 | 0.0015 |
| 173 | SLV 3 | 29.54 | -0.16 | 70 | 0.1863 | 1.3622 | -0.0004 |
| 173 | SLV 4 | 29.54 | -0.16 | 70 | 0.1863 | 1.3622 | -0.0004 |
| 173 | SLV 5 | 15.5 | 1.16 | 68.1 | -1.2293 | 0.7185 | 0.0032 |
| 173 | SLV 6 | 15.5 | 1.16 | 68.1 | -1.2293 | 0.7185 | 0.0032 |
| 173 | SLV 7 | 9.76 | -1.06 | 61.41 | 1.1336 | 0.458 | -0.0029 |
| 173 | SLV 8 | 9.76 | -1.06 | 61.41 | 1.1336 | 0.458 | -0.0029 |
| 173 | SLV 9 | 0.27 | 1.05 | 62.74 | -1.1261 | 0.0217 | 0.0029 |
| 173 | SLV 10 | 0.27 | 1.05 | 62.74 | -1.1261 | 0.0217 | 0.0029 |
| 173 | SLV 11 | -5.47 | -1.17 | 56.05 | 1.2368 | -0.2388 | -0.0033 |
| 173 | SLV 12 | -5.47 | -1.17 | 56.05 | 1.2368 | -0.2388 | -0.0033 |
| 173 | SLV 13 | -19.51 | 0.15 | 54.15 | -0.1788 | -0.8825 | 0.0004 |
| 173 | SLV 14 | -19.51 | 0.15 | 54.15 | -0.1788 | -0.8825 | 0.0004 |
| 173 | SLV 15 | -21.23 | -0.52 | 52.14 | 0.5301 | -0.9606 | -0.0015 |
| 173 | SLV 16 | -21.23 | -0.52 | 52.14 | 0.5301 | -0.9606 | -0.0015 |
| 174 | SLU 1 | 2.47 | 0 | 56.33 | 0.0021 | 0.0985 | 0 |
| 174 | SLU 2 | 1.99 | -0.01 | 55.91 | 0.0059 | 0.0777 | 0 |
| 174 | SLU 3 | 2.96 | 0 | 58.41 | 0.0015 | 0.1194 | 0 |
| 174 | SLU 4 | 2.67 | -0.01 | 58.16 | 0.0038 | 0.1069 | 0 |
| 174 | SLU 5 | 2.37 | -0.01 | 57.48 | 0.005 | 0.0935 | 0 |
| 174 | SLU 6 | 3.33 | 0 | 59.98 | 0.0007 | 0.1352 | 0 |
| 174 | SLU 7 | 3.04 | 0 | 59.73 | 0.0029 | 0.1227 | 0 |
| 174 | SLU 8 | 3.22 | 0 | 59.47 | 0.0005 | 0.1302 | 0 |
| 174 | SLU 9 | 2.93 | 0 | 59.22 | 0.0027 | 0.1177 | 0 |
| 174 | SLU 10 | 3.06 | -0.01 | 66.32 | 0.0062 | 0.1237 | 0 |
| 174 | SLU 11 | 4.03 | -0.01 | 68.81 | 0.0019 | 0.1654 | 0 |
| 174 | SLU 12 | 3.74 | -0.01 | 68.56 | 0.0041 | 0.1529 | 0 |
| 174 | SLU 13 | 3.44 | -0.01 | 67.88 | 0.0054 | 0.1395 | 0 |
| 174 | SLU 14 | 4.4 | -0.01 | 70.38 | 0.0011 | 0.1812 | 0 |
| 174 | SLU 15 | 4.11 | -0.01 | 70.13 | 0.0033 | 0.1687 | 0 |
| 174 | SLU 16 | 4.29 | 0 | 69.87 | 0.0008 | 0.1761 | 0 |
| 174 | SLU 17 | 4 | -0.01 | 69.62 | 0.0031 | 0.1637 | 0 |
| 174 | SLU 18 | 4 | -0.01 | 71.19 | 0.0026 | 0.1642 | 0 |
| 174 | SLU 19 | 3.71 | -0.01 | 70.94 | 0.0049 | 0.1517 | 0 |
| 174 | SLU 20 | 4.37 | -0.01 | 72.76 | 0.0018 | 0.18 | 0 |
| 174 | SLU 21 | 4.09 | -0.01 | 72.51 | 0.004 | 0.1675 | 0 |
| 174 | SLU 22 | 3.5 | -0.01 | 65.94 | 0.0021 | 0.1422 | 0 |
| 174 | SLU 23 | 3.02 | -0.01 | 65.52 | 0.0058 | 0.1214 | 0 |
| 174 | SLU 24 | 3.98 | -0.01 | 68.02 | 0.0015 | 0.1631 | 0 |
| 174 | SLU 25 | 3.69 | -0.01 | 67.77 | 0.0038 | 0.1506 | 0 |
| 174 | SLU 26 | 3.39 | -0.01 | 67.09 | 0.005 | 0.1372 | 0 |
| 174 | SLU 27 | 4.36 | 0 | 69.59 | 0.0007 | 0.1789 | 0 |
| 174 | SLU 28 | 4.07 | -0.01 | 69.34 | 0.0029 | 0.1664 | 0 |
| 174 | SLU 29 | 4.24 | 0 | 69.08 | 0.0004 | 0.1739 | 0 |
| 174 | SLU 30 | 3.96 | -0.01 | 68.83 | 0.0027 | 0.1614 | 0 |
| 174 | SLU 31 | 4.09 | -0.01 | 75.93 | 0.0062 | 0.1674 | 0 |
| 174 | SLU 32 | 5.05 | -0.01 | 78.42 | 0.0019 | 0.209 | 0 |
| 174 | SLU 33 | 4.76 | -0.01 | 78.17 | 0.0041 | 0.1966 | 0 |
| 174 | SLU 34 | 4.46 | -0.01 | 77.49 | 0.0054 | 0.1832 | 0 |
| 174 | SLU 35 | 5.43 | -0.01 | 79.99 | 0.001 | 0.2249 | 0 |
| 174 | SLU 36 | 5.14 | -0.01 | 79.74 | 0.0033 | 0.2124 | 0 |
| 174 | SLU 37 | 5.31 | -0.01 | 79.48 | 0.0008 | 0.2198 | 0 |
| 174 | SLU 38 | 5.03 | -0.01 | 79.23 | 0.003 | 0.2073 | 0 |
| 174 | SLU 39 | 5.03 | -0.01 | 80.8 | 0.0026 | 0.2079 | 0 |
| 174 | SLU 40 | 4.74 | -0.01 | 80.55 | 0.0049 | 0.1954 | 0 |
| 174 | SLU 41 | 5.4 | -0.01 | 82.37 | 0.0018 | 0.2237 | 0 |
| 174 | SLU 42 | 5.11 | -0.01 | 82.12 | 0.004 | 0.2112 | 0 |
| 174 | SLU 43 | 2.86 | -0.01 | 69.94 | 0.0028 | 0.1131 | 0 |
| 174 | SLU 44 | 2.38 | -0.01 | 69.52 | 0.0065 | 0.0923 | 0 |
| 174 | SLU 45 | 3.35 | -0.01 | 72.02 | 0.0022 | 0.134 | 0 |
| 174 | SLU 46 | 3.06 | -0.01 | 71.77 | 0.0044 | 0.1215 | 0 |
| 174 | SLU 47 | 2.76 | -0.01 | 71.09 | 0.0057 | 0.1081 | 0 |
| 174 | SLU 48 | 3.72 | -0.01 | 73.59 | 0.0013 | 0.1498 | 0 |
| 174 | SLU 49 | 3.43 | -0.01 | 73.33 | 0.0036 | 0.1373 | 0 |
| 174 | SLU 50 | 3.61 | -0.01 | 73.07 | 0.0011 | 0.1448 | 0 |
| 174 | SLU 51 | 3.32 | -0.01 | 72.82 | 0.0033 | 0.1323 | 0 |
| 174 | SLU 52 | 3.45 | -0.01 | 79.92 | 0.0069 | 0.1383 | 0 |
| 174 | SLU 53 | 4.42 | -0.01 | 82.42 | 0.0025 | 0.1799 | 0 |
| 174 | SLU 54 | 4.13 | -0.01 | 82.17 | 0.0048 | 0.1674 | 0 |
| 174 | SLU 55 | 3.83 | -0.01 | 81.49 | 0.006 | 0.1541 | 0 |

| Nodo | Cont. | Reazione a traslazione | | | Reazione a rotazione | | |
|---|---|---|---|---|---|---|---|
| Ind. | N.br. | x | y | z | x | y | z |
| 174 | SLU 56 | 4.79 | -0.01 | 83.99 | 0.0017 | 0.1958 | 0 |
| 174 | SLU 57 | 4.5 | -0.01 | 83.74 | 0.0039 | 0.1833 | 0 |
| 174 | SLU 58 | 4.68 | -0.01 | 83.47 | 0.0015 | 0.1907 | 0 |
| 174 | SLU 59 | 4.39 | -0.01 | 83.22 | 0.0037 | 0.1782 | 0 |
| 174 | SLU 60 | 4.39 | -0.01 | 84.8 | 0.0033 | 0.1788 | 0 |
| 174 | SLU 61 | 4.1 | -0.01 | 84.55 | 0.0055 | 0.1663 | 0 |
| 174 | SLU 62 | 4.77 | -0.01 | 86.37 | 0.0024 | 0.1946 | 0 |
| 174 | SLU 63 | 4.48 | -0.01 | 86.11 | 0.0047 | 0.1821 | 0 |
| 174 | SLU 64 | 3.89 | -0.01 | 79.55 | 0.0028 | 0.1568 | 0 |
| 174 | SLU 65 | 3.41 | -0.01 | 79.13 | 0.0065 | 0.136 | 0 |
| 174 | SLU 66 | 4.37 | -0.01 | 81.63 | 0.0022 | 0.1777 | 0 |
| 174 | SLU 67 | 4.09 | -0.01 | 81.38 | 0.0044 | 0.1652 | 0 |
| 174 | SLU 68 | 3.78 | -0.01 | 80.7 | 0.0057 | 0.1518 | 0 |
| 174 | SLU 69 | 4.75 | -0.01 | 83.19 | 0.0013 | 0.1935 | 0 |
| 174 | SLU 70 | 4.46 | -0.01 | 82.94 | 0.0036 | 0.181 | 0 |
| 174 | SLU 71 | 4.64 | -0.01 | 82.68 | 0.0011 | 0.1885 | 0 |
| 174 | SLU 72 | 4.35 | -0.01 | 82.43 | 0.0033 | 0.176 | 0 |
| 174 | SLU 73 | 4.48 | -0.01 | 89.53 | 0.0068 | 0.182 | 0 |
| 174 | SLU 74 | 5.44 | -0.01 | 92.03 | 0.0025 | 0.2236 | 0 |
| 174 | SLU 75 | 5.15 | -0.01 | 91.78 | 0.0048 | 0.2111 | 0 |
| 174 | SLU 76 | 4.85 | -0.01 | 91.1 | 0.006 | 0.1978 | 0 |
| 174 | SLU 77 | 5.82 | -0.01 | 93.6 | 0.0017 | 0.2394 | 0 |
| 174 | SLU 78 | 5.53 | -0.01 | 93.34 | 0.0039 | 0.227 | 0 |
| 174 | SLU 79 | 5.71 | -0.01 | 93.08 | 0.0014 | 0.2344 | 0 |
| 174 | SLU 80 | 5.42 | -0.01 | 92.83 | 0.0037 | 0.2219 | 0 |
| 174 | SLU 81 | 5.42 | -0.01 | 94.41 | 0.0032 | 0.2225 | 0 |
| 174 | SLU 82 | 5.13 | -0.01 | 94.16 | 0.0055 | 0.21 | 0 |
| 174 | SLU 83 | 5.79 | -0.01 | 95.97 | 0.0024 | 0.2383 | 0 |
| 174 | SLU 84 | 5.5 | -0.01 | 95.72 | 0.0047 | 0.2258 | 0 |
| 174 | SLE RA 1 | 2.77 | 0 | 59.08 | 0.0021 | 0.111 | 0 |
| 174 | SLE RA 2 | 2.45 | -0.01 | 58.8 | 0.0046 | 0.0971 | 0 |
| 174 | SLE RA 3 | 3.09 | 0 | 60.46 | 0.0017 | 0.1249 | 0 |
| 174 | SLE RA 4 | 2.9 | -0.01 | 60.3 | 0.0032 | 0.1166 | 0 |
| 174 | SLE RA 5 | 2.69 | -0.01 | 59.84 | 0.0041 | 0.1077 | 0 |
| 174 | SLE RA 6 | 3.34 | 0 | 61.51 | 0.0012 | 0.1355 | 0 |
| 174 | SLE RA 7 | 3.15 | 0 | 61.34 | 0.0027 | 0.1271 | 0 |
| 174 | SLE RA 8 | 3.26 | 0 | 61.17 | 0.001 | 0.1321 | 0 |
| 174 | SLE RA 9 | 3.07 | 0 | 61 | 0.0025 | 0.1238 | 0 |
| 174 | SLE RA 10 | 3.16 | -0.01 | 65.73 | 0.0048 | 0.1278 | 0 |
| 174 | SLE RA 11 | 3.8 | -0.01 | 67.4 | 0.002 | 0.1556 | 0 |
| 174 | SLE RA 12 | 3.61 | -0.01 | 67.23 | 0.0035 | 0.1472 | 0 |
| 174 | SLE RA 13 | 3.41 | -0.01 | 66.78 | 0.0043 | 0.1383 | 0 |
| 174 | SLE RA 14 | 4.05 | -0.01 | 68.44 | 0.0014 | 0.1661 | 0 |
| 174 | SLE RA 15 | 3.86 | -0.01 | 68.28 | 0.0029 | 0.1578 | 0 |
| 174 | SLE RA 16 | 3.98 | 0 | 68.1 | 0.0012 | 0.1628 | 0 |
| 174 | SLE RA 17 | 3.78 | -0.01 | 67.94 | 0.0027 | 0.1544 | 0 |
| 174 | SLE RA 18 | 3.78 | -0.01 | 68.99 | 0.0025 | 0.1548 | 0 |
| 174 | SLE RA 19 | 3.59 | -0.01 | 68.82 | 0.0039 | 0.1465 | 0 |
| 174 | SLE RA 20 | 4.03 | -0.01 | 70.03 | 0.0019 | 0.1653 | 0 |
| 174 | SLE RA 21 | 3.84 | -0.01 | 69.86 | 0.0034 | 0.157 | 0 |
| 174 | SLE FR 1 | 2.77 | 0 | 59.08 | 0.0021 | 0.111 | 0 |
| 174 | SLE FR 2 | 2.7 | -0.01 | 59.02 | 0.0026 | 0.1082 | 0 |
| 174 | SLE FR 3 | 2.87 | 0 | 59.5 | 0.0019 | 0.1152 | 0 |
| 174 | SLE FR 4 | 3.01 | -0.01 | 62 | 0.0027 | 0.1214 | 0 |
| 174 | SLE FR 5 | 3.17 | -0.01 | 62.47 | 0.002 | 0.1284 | 0 |
| 174 | SLE FR 6 | 3.28 | -0.01 | 64.03 | 0.0023 | 0.1329 | 0 |
| 174 | SLE QP 1 | 2.77 | 0 | 59.08 | 0.0021 | 0.111 | 0 |
| 174 | SLE QP 2 | 3.07 | -0.01 | 62.05 | 0.0022 | 0.1242 | 0 |
| 174 | SLD 1 | 13.98 | 0.17 | 58.06 | -0.165 | 0.6298 | 0.0004 |
| 174 | SLD 2 | 13.98 | 0.17 | 58.06 | -0.165 | 0.6298 | 0.0004 |
| 174 | SLD 3 | 13.3 | -0.03 | 57.06 | 0.0478 | 0.5982 | -0.0001 |
| 174 | SLD 4 | 13.3 | -0.03 | 57.06 | 0.0478 | 0.5982 | -0.0001 |
| 174 | SLD 5 | 7.39 | 0.35 | 62.37 | -0.3707 | 0.3238 | 0.0009 |
| 174 | SLD 6 | 7.39 | 0.35 | 62.37 | -0.3707 | 0.3238 | 0.0009 |
| 174 | SLD 7 | 5.09 | -0.32 | 59.04 | 0.3387 | 0.2184 | -0.0008 |
| 174 | SLD 8 | 5.09 | -0.32 | 59.04 | 0.3387 | 0.2184 | -0.0008 |
| 174 | SLD 9 | 1.05 | 0.31 | 65.06 | -0.3342 | 0.0299 | 0.0007 |
| 174 | SLD 10 | 1.05 | 0.31 | 65.06 | -0.3342 | 0.0299 | 0.0007 |
| 174 | SLD 11 | -1.25 | -0.36 | 61.73 | 0.3751 | -0.0755 | -0.0009 |
| 174 | SLD 12 | -1.25 | -0.36 | 61.73 | 0.3751 | -0.0755 | -0.0009 |
| 174 | SLD 13 | -7.15 | 0.02 | 67.04 | -0.0434 | -0.3499 | 0 |
| 174 | SLD 14 | -7.15 | 0.02 | 67.04 | -0.0434 | -0.3499 | 0 |
| 174 | SLD 15 | -7.84 | -0.18 | 66.04 | 0.1694 | -0.3815 | -0.0004 |
| 174 | SLD 16 | -7.84 | -0.18 | 66.04 | 0.1694 | -0.3815 | -0.0004 |
| 174 | SLV 1 | 28.24 | 0.43 | 52.99 | -0.4239 | 1.2901 | 0.0011 |
| 174 | SLV 2 | 28.24 | 0.43 | 52.99 | -0.4239 | 1.2901 | 0.0011 |
| 174 | SLV 3 | 26.61 | -0.08 | 50.45 | 0.1182 | 1.2154 | -0.0002 |
| 174 | SLV 4 | 26.61 | -0.08 | 50.45 | 0.1182 | 1.2154 | -0.0002 |
| 174 | SLV 5 | 13.11 | 0.9 | 63.17 | -0.9479 | 0.5873 | 0.0022 |
| 174 | SLV 6 | 13.11 | 0.9 | 63.17 | -0.9479 | 0.5873 | 0.0022 |
| 174 | SLV 7 | 7.65 | -0.8 | 54.73 | 0.8593 | 0.3381 | -0.0019 |
| 174 | SLV 8 | 7.65 | -0.8 | 54.73 | 0.8593 | 0.3381 | -0.0019 |
| 174 | SLV 9 | -1.5 | 0.79 | 69.37 | -0.8548 | -0.0898 | 0.0019 |
| 174 | SLV 10 | -1.5 | 0.79 | 69.37 | -0.8548 | -0.0898 | 0.0019 |
| 174 | SLV 11 | -6.97 | -0.91 | 60.93 | 0.9523 | -0.339 | -0.0022 |
| 174 | SLV 12 | -6.97 | -0.91 | 60.93 | 0.9523 | -0.339 | -0.0022 |
| 174 | SLV 13 | -20.46 | 0.07 | 73.65 | -0.1138 | -0.9671 | 0.0001 |
| 174 | SLV 14 | -20.46 | 0.07 | 73.65 | -0.1138 | -0.9671 | 0.0001 |

| Nodo | Cont. | Reazione a traslazione | | | Reazione a rotazione | | |
|---|---|---|---|---|---|---|---|
| Ind. | N.br. | x | y | z | x | y | z |
| 174 | SLV 15 | -22.1 | -0.44 | 71.12 | 0.4283 | -1.0418 | -0.0011 |
| 174 | SLV 16 | -22.1 | -0.44 | 71.12 | 0.4283 | -1.0418 | -0.0011 |
| 175 | SLU 1 | 0.19 | 0 | 55.65 | -0.0006 | 0.0329 | 0 |
| 175 | SLU 2 | -0.24 | 0 | 55.19 | 0.001 | 0.0127 | 0 |
| 175 | SLU 3 | 0.56 | 0 | 57.73 | -0.0014 | 0.0513 | 0 |
| 175 | SLU 4 | 0.31 | 0 | 57.46 | -0.0004 | 0.0392 | 0 |
| 175 | SLU 5 | 0.05 | 0 | 56.81 | 0 | 0.0268 | 0 |
| 175 | SLU 6 | 0.86 | 0 | 59.35 | -0.0024 | 0.0655 | 0 |
| 175 | SLU 7 | 0.6 | 0 | 59.07 | -0.0014 | 0.0533 | 0 |
| 175 | SLU 8 | 0.78 | 0 | 58.88 | -0.0026 | 0.0612 | 0 |
| 175 | SLU 9 | 0.52 | 0 | 58.6 | -0.0016 | 0.0491 | 0 |
| 175 | SLU 10 | 0.31 | 0 | 65.43 | 0.0009 | 0.0429 | 0 |
| 175 | SLU 11 | 1.12 | 0 | 67.98 | -0.0015 | 0.0815 | 0 |
| 175 | SLU 12 | 0.86 | 0 | 67.7 | -0.0005 | 0.0694 | 0 |
| 175 | SLU 13 | 0.61 | 0 | 67.05 | -0.0001 | 0.0571 | 0 |
| 175 | SLU 14 | 1.41 | 0 | 69.59 | -0.0025 | 0.0957 | 0 |
| 175 | SLU 15 | 1.15 | 0 | 69.32 | -0.0015 | 0.0836 | 0 |
| 175 | SLU 16 | 1.33 | 0 | 69.12 | -0.0027 | 0.0915 | 0 |
| 175 | SLU 17 | 1.07 | 0 | 68.84 | -0.0017 | 0.0793 | 0 |
| 175 | SLU 18 | 0.98 | 0 | 70.28 | -0.0008 | 0.0761 | 0 |
| 175 | SLU 19 | 0.72 | 0 | 70.01 | 0.0002 | 0.064 | 0 |
| 175 | SLU 20 | 1.27 | 0 | 71.9 | -0.0018 | 0.0903 | 0 |
| 175 | SLU 21 | 1.02 | 0 | 71.62 | -0.0008 | 0.0781 | 0 |
| 175 | SLU 22 | 0.75 | 0 | 65.15 | -0.0011 | 0.063 | 0 |
| 175 | SLU 23 | 0.32 | 0 | 64.69 | 0.0005 | 0.0428 | 0 |
| 175 | SLU 24 | 1.12 | 0 | 67.24 | -0.0019 | 0.0814 | 0 |
| 175 | SLU 25 | 0.87 | 0 | 66.96 | -0.0009 | 0.0693 | 0 |
| 175 | SLU 26 | 0.61 | 0 | 66.31 | -0.0005 | 0.057 | 0 |
| 175 | SLU 27 | 1.42 | 0 | 68.85 | -0.0029 | 0.0956 | 0 |
| 175 | SLU 28 | 1.16 | 0 | 68.58 | -0.0019 | 0.0834 | 0 |
| 175 | SLU 29 | 1.34 | 0 | 68.38 | -0.0031 | 0.0913 | 0 |
| 175 | SLU 30 | 1.08 | 0 | 68.1 | -0.0021 | 0.0792 | 0 |
| 175 | SLU 31 | 0.87 | 0 | 74.94 | 0.0004 | 0.073 | 0 |
| 175 | SLU 32 | 1.68 | 0 | 77.48 | -0.002 | 0.1117 | 0 |
| 175 | SLU 33 | 1.42 | 0 | 77.2 | -0.001 | 0.0995 | 0 |
| 175 | SLU 34 | 1.17 | 0 | 76.55 | -0.0006 | 0.0872 | 0 |
| 175 | SLU 35 | 1.97 | 0 | 79.09 | -0.003 | 0.1258 | 0 |
| 175 | SLU 36 | 1.71 | 0 | 78.82 | -0.002 | 0.1137 | 0 |
| 175 | SLU 37 | 1.89 | 0 | 78.62 | -0.0032 | 0.1216 | 0 |
| 175 | SLU 38 | 1.63 | 0 | 78.35 | -0.0023 | 0.1095 | 0 |
| 175 | SLU 39 | 1.54 | 0 | 79.78 | -0.0013 | 0.1062 | 0 |
| 175 | SLU 40 | 1.28 | 0 | 79.51 | -0.0003 | 0.0941 | 0 |
| 175 | SLU 41 | 1.83 | 0 | 81.4 | -0.0023 | 0.1204 | 0 |
| 175 | SLU 42 | 1.58 | 0 | 81.12 | -0.0013 | 0.1083 | 0 |
| 175 | SLU 43 | 0.05 | 0 | 69.09 | -0.0007 | 0.0325 | 0 |
| 175 | SLU 44 | -0.37 | 0 | 68.63 | 0.001 | 0.0122 | 0 |
| 175 | SLU 45 | 0.43 | 0 | 71.17 | -0.0014 | 0.0508 | 0 |
| 175 | SLU 46 | 0.17 | 0 | 70.9 | -0.0004 | 0.0387 | 0 |
| 175 | SLU 47 | -0.08 | 0 | 70.24 | 0 | 0.0264 | 0 |
| 175 | SLU 48 | 0.72 | 0 | 72.79 | -0.0024 | 0.065 | 0 |
| 175 | SLU 49 | 0.47 | 0 | 72.51 | -0.0014 | 0.0529 | 0 |
| 175 | SLU 50 | 0.64 | 0 | 72.32 | -0.0026 | 0.0608 | 0 |
| 175 | SLU 51 | 0.38 | 0 | 72.04 | -0.0016 | 0.0486 | 0 |
| 175 | SLU 52 | 0.18 | 0 | 78.87 | 0.0009 | 0.0425 | 0 |
| 175 | SLU 53 | 0.98 | 0 | 81.41 | -0.0015 | 0.0811 | 0 |
| 175 | SLU 54 | 0.73 | 0 | 81.14 | -0.0005 | 0.069 | 0 |
| 175 | SLU 55 | 0.47 | 0 | 80.49 | -0.0001 | 0.0566 | 0 |
| 175 | SLU 56 | 1.28 | 0 | 83.03 | -0.0025 | 0.0953 | 0 |
| 175 | SLU 57 | 1.02 | 0 | 82.75 | -0.0015 | 0.0831 | 0 |
| 175 | SLU 58 | 1.19 | 0 | 82.56 | -0.0028 | 0.091 | 0 |
| 175 | SLU 59 | 0.94 | 0 | 82.28 | -0.0018 | 0.0789 | 0 |
| 175 | SLU 60 | 0.84 | 0 | 83.72 | -0.0008 | 0.0757 | 0 |
| 175 | SLU 61 | 0.59 | 0 | 83.44 | 0.0001 | 0.0635 | 0 |
| 175 | SLU 62 | 1.14 | 0 | 85.33 | -0.0018 | 0.0898 | 0 |
| 175 | SLU 63 | 0.88 | 0 | 85.06 | -0.0008 | 0.0777 | 0 |
| 175 | SLU 64 | 0.61 | 0 | 78.59 | -0.0012 | 0.0626 | 0 |
| 175 | SLU 65 | 0.19 | 0 | 78.13 | 0.0005 | 0.0423 | 0 |
| 175 | SLU 66 | 0.99 | 0 | 80.67 | -0.0019 | 0.081 | 0 |
| 175 | SLU 67 | 0.73 | 0 | 80.4 | -0.0009 | 0.0688 | 0 |
| 175 | SLU 68 | 0.48 | 0 | 79.75 | -0.0005 | 0.0565 | 0 |
| 175 | SLU 69 | 1.28 | 0 | 82.29 | -0.0029 | 0.0951 | 0 |
| 175 | SLU 70 | 1.02 | 0 | 82.01 | -0.0019 | 0.083 | 0 |
| 175 | SLU 71 | 1.2 | 0 | 81.82 | -0.0031 | 0.0909 | 0 |
| 175 | SLU 72 | 0.94 | 0 | 81.54 | -0.0021 | 0.0788 | 0 |
| 175 | SLU 73 | 0.74 | 0 | 88.37 | 0.0004 | 0.0726 | 0 |
| 175 | SLU 74 | 1.54 | 0 | 90.92 | -0.002 | 0.1112 | 0 |
| 175 | SLU 75 | 1.28 | 0 | 90.64 | -0.001 | 0.0991 | 0 |
| 175 | SLU 76 | 1.03 | 0 | 89.99 | -0.0006 | 0.0868 | 0 |
| 175 | SLU 77 | 1.84 | 0 | 92.53 | -0.003 | 0.1254 | 0 |
| 175 | SLU 78 | 1.58 | 0 | 92.25 | -0.002 | 0.1132 | 0 |
| 175 | SLU 79 | 1.75 | 0 | 92.06 | -0.0033 | 0.1211 | 0 |
| 175 | SLU 80 | 1.5 | 0 | 91.78 | -0.0023 | 0.109 | 0 |
| 175 | SLU 81 | 1.4 | 0 | 93.22 | -0.0014 | 0.1058 | 0 |
| 175 | SLU 82 | 1.15 | 0 | 92.95 | -0.0004 | 0.0936 | 0 |
| 175 | SLU 83 | 1.7 | 0 | 94.83 | -0.0023 | 0.1199 | 0 |
| 175 | SLU 84 | 1.44 | 0 | 94.56 | -0.0013 | 0.1078 | 0 |
| 175 | SLE RA 1 | 0.35 | 0 | 58.37 | -0.0008 | 0.0415 | 0 |
| 175 | SLE RA 2 | 0.06 | 0 | 58.06 | 0.0003 | 0.028 | 0 |

| Nodo | Cont. | Reazione a traslazione | | | Reazione a rotazione | | |
|---|---|---|---|---|---|---|---|
| Ind. | N.br. | x | y | z | x | y | z |
| 175 | SLE RA 3 | 0.6 | 0 | 59.75 | -0.0013 | 0.0538 | 0 |
| 175 | SLE RA 4 | 0.43 | 0 | 59.57 | -0.0006 | 0.0457 | 0 |
| 175 | SLE RA 5 | 0.26 | 0 | 59.14 | -0.0003 | 0.0375 | 0 |
| 175 | SLE RA 6 | 0.79 | 0 | 60.83 | -0.0019 | 0.0632 | 0 |
| 175 | SLE RA 7 | 0.62 | 0 | 60.65 | -0.0013 | 0.0551 | 0 |
| 175 | SLE RA 8 | 0.74 | 0 | 60.52 | -0.0021 | 0.0604 | 0 |
| 175 | SLE RA 9 | 0.57 | 0 | 60.33 | -0.0014 | 0.0523 | 0 |
| 175 | SLE RA 10 | 0.43 | 0 | 64.89 | 0.0002 | 0.0482 | 0 |
| 175 | SLE RA 11 | 0.97 | 0 | 66.58 | -0.0014 | 0.0739 | 0 |
| 175 | SLE RA 12 | 0.8 | 0 | 66.4 | -0.0007 | 0.0659 | 0 |
| 175 | SLE RA 13 | 0.63 | 0 | 65.96 | -0.0004 | 0.0576 | 0 |
| 175 | SLE RA 14 | 1.16 | 0 | 67.66 | -0.002 | 0.0834 | 0 |
| 175 | SLE RA 15 | 0.99 | 0 | 67.48 | -0.0014 | 0.0753 | 0 |
| 175 | SLE RA 16 | 1.11 | 0 | 67.34 | -0.0022 | 0.0806 | 0 |
| 175 | SLE RA 17 | 0.94 | 0 | 67.16 | -0.0015 | 0.0725 | 0 |
| 175 | SLE RA 18 | 0.88 | 0 | 68.12 | -0.0009 | 0.0703 | 0 |
| 175 | SLE RA 19 | 0.7 | 0 | 67.94 | -0.0002 | 0.0622 | 0 |
| 175 | SLE RA 20 | 1.07 | 0 | 69.19 | -0.0016 | 0.0798 | 0 |
| 175 | SLE RA 21 | 0.9 | 0 | 69.01 | -0.0009 | 0.0717 | 0 |
| 175 | SLE FR 1 | 0.35 | 0 | 58.37 | -0.0008 | 0.0415 | 0 |
| 175 | SLE FR 2 | 0.29 | 0 | 58.3 | -0.0006 | 0.0388 | 0 |
| 175 | SLE FR 3 | 0.43 | 0 | 58.8 | -0.001 | 0.0453 | 0 |
| 175 | SLE FR 4 | 0.45 | 0 | 61.23 | -0.0006 | 0.0475 | 0 |
| 175 | SLE FR 5 | 0.59 | 0 | 61.72 | -0.0011 | 0.0539 | 0 |
| 175 | SLE FR 6 | 0.61 | 0 | 63.24 | -0.0008 | 0.0559 | 0 |
| 175 | SLE QP 1 | 0.35 | 0 | 58.37 | -0.0008 | 0.0415 | 0 |
| 175 | SLE QP 2 | 0.51 | 0 | 61.29 | -0.0008 | 0.0502 | 0 |
| 175 | SLD 1 | 10.42 | 0.13 | 54.65 | -0.1149 | 0.5356 | 0.0003 |
| 175 | SLD 2 | 10.42 | 0.13 | 54.65 | -0.1149 | 0.5356 | 0.0003 |
| 175 | SLD 3 | 9.81 | 0 | 53.36 | 0.0163 | 0.5054 | -0.0001 |
| 175 | SLD 4 | 9.81 | 0 | 53.36 | 0.0163 | 0.5054 | -0.0001 |
| 175 | SLD 5 | 4.42 | 0.24 | 61.26 | -0.2341 | 0.2415 | 0.0007 |
| 175 | SLD 6 | 4.42 | 0.24 | 61.26 | -0.2341 | 0.2415 | 0.0007 |
| 175 | SLD 7 | 2.36 | -0.21 | 56.95 | 0.2034 | 0.1411 | -0.0006 |
| 175 | SLD 8 | 2.36 | -0.21 | 56.95 | 0.2034 | 0.1411 | -0.0006 |
| 175 | SLD 9 | -1.35 | 0.2 | 65.63 | -0.205 | -0.0408 | 0.0006 |
| 175 | SLD 10 | -1.35 | 0.2 | 65.63 | -0.205 | -0.0408 | 0.0006 |
| 175 | SLD 11 | -3.4 | -0.25 | 61.33 | 0.2325 | -0.1411 | -0.0007 |
| 175 | SLD 12 | -3.4 | -0.25 | 61.33 | 0.2325 | -0.1411 | -0.0007 |
| 175 | SLD 13 | -8.79 | 0 | 69.23 | -0.018 | -0.4051 | 0.0001 |
| 175 | SLD 14 | -8.79 | 0 | 69.23 | -0.018 | -0.4051 | 0.0001 |
| 175 | SLD 15 | -9.41 | -0.14 | 67.93 | 0.1133 | -0.4353 | -0.0003 |
| 175 | SLD 16 | -9.41 | -0.14 | 67.93 | 0.1133 | -0.4353 | -0.0003 |
| 175 | SLV 1 | 23.38 | 0.33 | 46.2 | -0.2897 | 1.1703 | 0.0008 |
| 175 | SLV 2 | 23.38 | 0.33 | 46.2 | -0.2897 | 1.1703 | 0.0008 |
| 175 | SLV 3 | 21.92 | 0 | 42.97 | 0.0409 | 1.0987 | -0.0002 |
| 175 | SLV 4 | 21.92 | 0 | 42.97 | 0.0409 | 1.0987 | -0.0002 |
| 175 | SLV 5 | 9.59 | 0.6 | 61.66 | -0.589 | 0.4949 | 0.0018 |
| 175 | SLV 6 | 9.59 | 0.6 | 61.66 | -0.589 | 0.4949 | 0.0018 |
| 175 | SLV 7 | 4.7 | -0.5 | 50.9 | 0.5132 | 0.256 | -0.0016 |
| 175 | SLV 8 | 4.7 | -0.5 | 50.9 | 0.5132 | 0.256 | -0.0016 |
| 175 | SLV 9 | -3.69 | 0.5 | 71.68 | -0.5149 | -0.1557 | 0.0016 |
| 175 | SLV 10 | -3.69 | 0.5 | 71.68 | -0.5149 | -0.1557 | 0.0016 |
| 175 | SLV 11 | -8.58 | -0.6 | 60.92 | 0.5874 | -0.3946 | -0.0018 |
| 175 | SLV 12 | -8.58 | -0.6 | 60.92 | 0.5874 | -0.3946 | -0.0018 |
| 175 | SLV 13 | -20.9 | 0 | 79.61 | -0.0426 | -0.9983 | 0.0002 |
| 175 | SLV 14 | -20.9 | 0 | 79.61 | -0.0426 | -0.9983 | 0.0002 |
| 175 | SLV 15 | -22.37 | -0.34 | 76.38 | 0.2881 | -1.07 | -0.0009 |
| 175 | SLV 16 | -22.37 | -0.34 | 76.38 | 0.2881 | -1.07 | -0.0009 |
| 176 | SLU 1 | -3.66 | 0.01 | 54.79 | -0.0053 | -0.1984 | 0 |
| 176 | SLU 2 | -3.94 | 0.01 | 54.51 | -0.0063 | -0.2126 | 0.0001 |
| 176 | SLU 3 | -3.53 | 0.01 | 56.7 | -0.0063 | -0.192 | 0.0001 |
| 176 | SLU 4 | -3.7 | 0.01 | 56.53 | -0.0068 | -0.2005 | 0.0001 |
| 176 | SLU 5 | -3.83 | 0.01 | 56.03 | -0.0074 | -0.2079 | 0.0001 |
| 176 | SLU 6 | -3.43 | 0.01 | 58.23 | -0.0074 | -0.1872 | 0.0001 |
| 176 | SLU 7 | -3.59 | 0.01 | 58.06 | -0.008 | -0.1958 | 0.0001 |
| 176 | SLU 8 | -3.45 | 0.01 | 57.85 | -0.0076 | -0.1889 | 0.0001 |
| 176 | SLU 9 | -3.62 | 0.01 | 57.68 | -0.0082 | -0.1974 | 0.0001 |
| 176 | SLU 10 | -4.24 | 0.01 | 64.31 | -0.0072 | -0.2293 | 0.0001 |
| 176 | SLU 11 | -3.84 | 0.01 | 66.51 | -0.0072 | -0.2087 | 0.0001 |
| 176 | SLU 12 | -4 | 0.01 | 66.34 | -0.0078 | -0.2172 | 0.0001 |
| 176 | SLU 13 | -4.14 | 0.01 | 65.84 | -0.0084 | -0.2245 | 0.0001 |
| 176 | SLU 14 | -3.74 | 0.01 | 68.04 | -0.0084 | -0.2039 | 0.0001 |
| 176 | SLU 15 | -3.9 | 0.01 | 67.87 | -0.0089 | -0.2124 | 0.0001 |
| 176 | SLU 16 | -3.76 | 0.01 | 67.66 | -0.0086 | -0.2055 | 0.0001 |
| 176 | SLU 17 | -3.93 | 0.01 | 67.48 | -0.0091 | -0.2141 | 0.0001 |
| 176 | SLU 18 | -4.1 | 0.01 | 68.8 | -0.0067 | -0.2222 | 0.0001 |
| 176 | SLU 19 | -4.26 | 0.01 | 68.63 | -0.0073 | -0.2307 | 0.0001 |
| 176 | SLU 20 | -4 | 0.01 | 70.33 | -0.0078 | -0.2174 | 0.0001 |
| 176 | SLU 21 | -4.16 | 0.01 | 70.16 | -0.0084 | -0.226 | 0.0001 |
| 176 | SLU 22 | -3.91 | 0.01 | 63.92 | -0.0066 | -0.2125 | 0.0001 |
| 176 | SLU 23 | -4.19 | 0.01 | 63.63 | -0.0076 | -0.2268 | 0.0001 |
| 176 | SLU 24 | -3.78 | 0.01 | 65.83 | -0.0076 | -0.2061 | 0.0001 |
| 176 | SLU 25 | -3.95 | 0.01 | 65.66 | -0.0081 | -0.2147 | 0.0001 |
| 176 | SLU 26 | -4.08 | 0.02 | 65.16 | -0.0087 | -0.222 | 0.0001 |
| 176 | SLU 27 | -3.68 | 0.01 | 67.36 | -0.0087 | -0.2014 | 0.0001 |
| 176 | SLU 28 | -3.84 | 0.01 | 67.19 | -0.0093 | -0.2099 | 0.0001 |
| 176 | SLU 29 | -3.71 | 0.01 | 66.97 | -0.0089 | -0.203 | 0.0001 |

| Nodo | Cont. | Reazione a traslazione | | | Reazione a rotazione | | |
|---|---|---|---|---|---|---|---|
| Ind. | N.br. | x | y | z | x | y | z |
| 176 | SLU 30 | -3.87 | 0.01 | 66.8 | -0.0095 | -0.2116 | 0.0001 |
| 176 | SLU 31 | -4.49 | 0.02 | 73.44 | -0.0085 | -0.2434 | 0.0001 |
| 176 | SLU 32 | -4.09 | 0.01 | 75.64 | -0.0085 | -0.2228 | 0.0001 |
| 176 | SLU 33 | -4.25 | 0.01 | 75.47 | -0.0091 | -0.2313 | 0.0001 |
| 176 | SLU 34 | -4.39 | 0.02 | 74.97 | -0.0097 | -0.2387 | 0.0001 |
| 176 | SLU 35 | -3.99 | 0.01 | 77.17 | -0.0097 | -0.218 | 0.0001 |
| 176 | SLU 36 | -4.15 | 0.02 | 76.99 | -0.0103 | -0.2266 | 0.0001 |
| 176 | SLU 37 | -4.01 | 0.01 | 76.78 | -0.0099 | -0.2197 | 0.0001 |
| 176 | SLU 38 | -4.18 | 0.02 | 76.61 | -0.0105 | -0.2282 | 0.0001 |
| 176 | SLU 39 | -4.35 | 0.01 | 77.93 | -0.008 | -0.2363 | 0.0001 |
| 176 | SLU 40 | -4.52 | 0.01 | 77.76 | -0.0086 | -0.2449 | 0.0001 |
| 176 | SLU 41 | -4.25 | 0.01 | 79.46 | -0.0092 | -0.2316 | 0.0001 |
| 176 | SLU 42 | -4.41 | 0.02 | 79.29 | -0.0097 | -0.2401 | 0.0001 |
| 176 | SLU 43 | -4.67 | 0.01 | 68.1 | -0.0065 | -0.2531 | 0.0001 |
| 176 | SLU 44 | -4.95 | 0.01 | 67.81 | -0.0074 | -0.2673 | 0.0001 |
| 176 | SLU 45 | -4.54 | 0.01 | 70.01 | -0.0074 | -0.2467 | 0.0001 |
| 176 | SLU 46 | -4.71 | 0.01 | 69.84 | -0.008 | -0.2552 | 0.0001 |
| 176 | SLU 47 | -4.85 | 0.02 | 69.34 | -0.0085 | -0.2626 | 0.0001 |
| 176 | SLU 48 | -4.44 | 0.01 | 71.54 | -0.0085 | -0.2419 | 0.0001 |
| 176 | SLU 49 | -4.61 | 0.01 | 71.37 | -0.0091 | -0.2505 | 0.0001 |
| 176 | SLU 50 | -4.47 | 0.01 | 71.16 | -0.0087 | -0.2436 | 0.0001 |
| 176 | SLU 51 | -4.63 | 0.01 | 70.98 | -0.0093 | -0.2521 | 0.0001 |
| 176 | SLU 52 | -5.26 | 0.02 | 77.62 | -0.0084 | -0.284 | 0.0001 |
| 176 | SLU 53 | -4.85 | 0.01 | 79.82 | -0.0084 | -0.2633 | 0.0001 |
| 176 | SLU 54 | -5.02 | 0.01 | 79.65 | -0.0089 | -0.2719 | 0.0001 |
| 176 | SLU 55 | -5.15 | 0.02 | 79.15 | -0.0095 | -0.2792 | 0.0001 |
| 176 | SLU 56 | -4.75 | 0.01 | 81.35 | -0.0095 | -0.2586 | 0.0001 |
| 176 | SLU 57 | -4.91 | 0.02 | 81.18 | -0.0101 | -0.2671 | 0.0001 |
| 176 | SLU 58 | -4.77 | 0.01 | 80.96 | -0.0097 | -0.2602 | 0.0001 |
| 176 | SLU 59 | -4.94 | 0.02 | 80.79 | -0.0103 | -0.2688 | 0.0001 |
| 176 | SLU 60 | -5.11 | 0.01 | 82.11 | -0.0078 | -0.2769 | 0.0001 |
| 176 | SLU 61 | -5.28 | 0.01 | 81.94 | -0.0084 | -0.2854 | 0.0001 |
| 176 | SLU 62 | -5.01 | 0.01 | 83.64 | -0.009 | -0.2721 | 0.0001 |
| 176 | SLU 63 | -5.17 | 0.02 | 83.47 | -0.0096 | -0.2807 | 0.0001 |
| 176 | SLU 64 | -4.92 | 0.01 | 77.23 | -0.0078 | -0.2672 | 0.0001 |
| 176 | SLU 65 | -5.2 | 0.02 | 76.94 | -0.0087 | -0.2814 | 0.0001 |
| 176 | SLU 66 | -4.79 | 0.01 | 79.14 | -0.0087 | -0.2608 | 0.0001 |
| 176 | SLU 67 | -4.96 | 0.02 | 78.97 | -0.0093 | -0.2693 | 0.0001 |
| 176 | SLU 68 | -5.1 | 0.02 | 78.47 | -0.0099 | -0.2767 | 0.0001 |
| 176 | SLU 69 | -4.69 | 0.01 | 80.67 | -0.0099 | -0.256 | 0.0001 |
| 176 | SLU 70 | -4.86 | 0.02 | 80.49 | -0.0104 | -0.2646 | 0.0001 |
| 176 | SLU 71 | -4.72 | 0.01 | 80.28 | -0.0101 | -0.2577 | 0.0001 |
| 176 | SLU 72 | -4.88 | 0.02 | 80.11 | -0.0106 | -0.2662 | 0.0001 |
| 176 | SLU 73 | -5.51 | 0.02 | 86.75 | -0.0097 | -0.2981 | 0.0001 |
| 176 | SLU 74 | -5.1 | 0.01 | 88.95 | -0.0097 | -0.2775 | 0.0001 |
| 176 | SLU 75 | -5.27 | 0.02 | 88.77 | -0.0103 | -0.286 | 0.0001 |
| 176 | SLU 76 | -5.4 | 0.02 | 88.28 | -0.0108 | -0.2934 | 0.0001 |
| 176 | SLU 77 | -5 | 0.02 | 90.47 | -0.0108 | -0.2727 | 0.0001 |
| 176 | SLU 78 | -5.16 | 0.02 | 90.3 | -0.0114 | -0.2813 | 0.0001 |
| 176 | SLU 79 | -5.02 | 0.02 | 90.09 | -0.011 | -0.2744 | 0.0001 |
| 176 | SLU 80 | -5.19 | 0.02 | 89.92 | -0.0116 | -0.2829 | 0.0001 |
| 176 | SLU 81 | -5.36 | 0.01 | 91.24 | -0.0092 | -0.291 | 0.0001 |
| 176 | SLU 82 | -5.53 | 0.02 | 91.07 | -0.0097 | -0.2995 | 0.0001 |
| 176 | SLU 83 | -5.26 | 0.02 | 92.77 | -0.0103 | -0.2862 | 0.0001 |
| 176 | SLU 84 | -5.43 | 0.02 | 92.59 | -0.0109 | -0.2948 | 0.0001 |
| 176 | SLE RA 1 | -3.73 | 0.01 | 57.4 | -0.0057 | -0.2024 | 0.0001 |
| 176 | SLE RA 2 | -3.92 | 0.01 | 57.21 | -0.0063 | -0.2119 | 0.0001 |
| 176 | SLE RA 3 | -3.65 | 0.01 | 58.67 | -0.0063 | -0.1982 | 0.0001 |
| 176 | SLE RA 4 | -3.76 | 0.01 | 58.56 | -0.0067 | -0.2039 | 0.0001 |
| 176 | SLE RA 5 | -3.85 | 0.01 | 58.23 | -0.0071 | -0.2088 | 0.0001 |
| 176 | SLE RA 6 | -3.58 | 0.01 | 59.69 | -0.0071 | -0.195 | 0.0001 |
| 176 | SLE RA 7 | -3.69 | 0.01 | 59.58 | -0.0075 | -0.2007 | 0.0001 |
| 176 | SLE RA 8 | -3.59 | 0.01 | 59.44 | -0.0072 | -0.1961 | 0.0001 |
| 176 | SLE RA 9 | -3.71 | 0.01 | 59.32 | -0.0076 | -0.2018 | 0.0001 |
| 176 | SLE RA 10 | -4.12 | 0.01 | 63.75 | -0.007 | -0.223 | 0.0001 |
| 176 | SLE RA 11 | -3.85 | 0.01 | 65.21 | -0.007 | -0.2093 | 0.0001 |
| 176 | SLE RA 12 | -3.96 | 0.01 | 65.1 | -0.0073 | -0.215 | 0.0001 |
| 176 | SLE RA 13 | -4.05 | 0.01 | 64.77 | -0.0077 | -0.2199 | 0.0001 |
| 176 | SLE RA 14 | -3.78 | 0.01 | 66.23 | -0.0077 | -0.2061 | 0.0001 |
| 176 | SLE RA 15 | -3.89 | 0.01 | 66.12 | -0.0081 | -0.2118 | 0.0001 |
| 176 | SLE RA 16 | -3.8 | 0.01 | 65.98 | -0.0079 | -0.2072 | 0.0001 |
| 176 | SLE RA 17 | -3.91 | 0.01 | 65.86 | -0.0082 | -0.2129 | 0.0001 |
| 176 | SLE RA 18 | -4.02 | 0.01 | 66.74 | -0.0066 | -0.2183 | 0.0001 |
| 176 | SLE RA 19 | -4.13 | 0.01 | 66.63 | -0.007 | -0.224 | 0.0001 |
| 176 | SLE RA 20 | -3.96 | 0.01 | 67.76 | -0.0074 | -0.2151 | 0.0001 |
| 176 | SLE RA 21 | -4.07 | 0.01 | 67.64 | -0.0078 | -0.2208 | 0.0001 |
| 176 | SLE FR 1 | -3.73 | 0.01 | 57.4 | -0.0057 | -0.2024 | 0.0001 |
| 176 | SLE FR 2 | -3.77 | 0.01 | 57.36 | -0.0058 | -0.2043 | 0.0001 |
| 176 | SLE FR 3 | -3.7 | 0.01 | 57.81 | -0.006 | -0.2012 | 0.0001 |
| 176 | SLE FR 4 | -3.86 | 0.01 | 60.16 | -0.0061 | -0.2091 | 0.0001 |
| 176 | SLE FR 5 | -3.79 | 0.01 | 60.61 | -0.0063 | -0.2059 | 0.0001 |
| 176 | SLE FR 6 | -3.88 | 0.01 | 62.07 | -0.0061 | -0.2104 | 0.0001 |
| 176 | SLE QP 1 | -3.73 | 0.01 | 57.4 | -0.0057 | -0.2024 | 0.0001 |
| 176 | SLE QP 2 | -3.82 | 0.01 | 60.2 | -0.006 | -0.2072 | 0.0001 |
| 176 | SLD 1 | 3.46 | -0.01 | 45.24 | -0.0625 | 0.2097 | 0.0001 |
| 176 | SLD 2 | 3.46 | -0.01 | 45.24 | -0.0625 | 0.2097 | 0.0001 |
| 176 | SLD 3 | 3.92 | 0.12 | 43.47 | -0.008 | 0.2369 | 0.0004 |
| 176 | SLD 4 | 3.92 | 0.12 | 43.47 | -0.008 | 0.2369 | 0.0004 |

| Nodo | Cont. | Reazione a traslazione | | | Reazione a rotazione | | |
|---|---|---|---|---|---|---|---|
| Ind. | N.br. | x | y | z | x | y | z |
| 176 | SLD 5 | -2.34 | -0.18 | 58.39 | -0.1057 | -0.1233 | -0.0003 |
| 176 | SLD 6 | -2.34 | -0.18 | 58.39 | -0.1057 | -0.1233 | -0.0003 |
| 176 | SLD 7 | -0.79 | 0.23 | 52.5 | 0.0762 | -0.0328 | 0.0005 |
| 176 | SLD 8 | -0.79 | 0.23 | 52.5 | 0.0762 | -0.0328 | 0.0005 |
| 176 | SLD 9 | -6.85 | -0.21 | 67.9 | -0.0881 | -0.3816 | -0.0004 |
| 176 | SLD 10 | -6.85 | -0.21 | 67.9 | -0.0881 | -0.3816 | -0.0004 |
| 176 | SLD 11 | -5.3 | 0.2 | 62.01 | 0.0938 | -0.291 | 0.0004 |
| 176 | SLD 12 | -5.3 | 0.2 | 62.01 | 0.0938 | -0.291 | 0.0004 |
| 176 | SLD 13 | -11.56 | -0.1 | 76.94 | -0.0039 | -0.6512 | -0.0003 |
| 176 | SLD 14 | -11.56 | -0.1 | 76.94 | -0.0039 | -0.6512 | -0.0003 |
| 176 | SLD 15 | -11.09 | 0.02 | 75.17 | 0.0506 | -0.6241 | 0 |
| 176 | SLD 16 | -11.09 | 0.02 | 75.17 | 0.0506 | -0.6241 | 0 |
| 176 | SLV 1 | 12.93 | -0.03 | 25.95 | -0.1429 | 0.7525 | 0.0003 |
| 176 | SLV 2 | 12.93 | -0.03 | 25.95 | -0.1429 | 0.7525 | 0.0003 |
| 176 | SLV 3 | 14.02 | 0.27 | 21.65 | -0.0172 | 0.816 | 0.0009 |
| 176 | SLV 4 | 14.02 | 0.27 | 21.65 | -0.0172 | 0.816 | 0.0009 |
| 176 | SLV 5 | -0.45 | -0.45 | 56.45 | -0.2378 | -0.0156 | -0.0008 |
| 176 | SLV 6 | -0.45 | -0.45 | 56.45 | -0.2378 | -0.0156 | -0.0008 |
| 176 | SLV 7 | 3.18 | 0.54 | 42.11 | 0.1814 | 0.1961 | 0.0013 |
| 176 | SLV 8 | 3.18 | 0.54 | 42.11 | 0.1814 | 0.1961 | 0.0013 |
| 176 | SLV 9 | -10.82 | -0.52 | 78.29 | -0.1933 | -0.6105 | -0.0011 |
| 176 | SLV 10 | -10.82 | -0.52 | 78.29 | -0.1933 | -0.6105 | -0.0011 |
| 176 | SLV 11 | -7.19 | 0.47 | 63.95 | 0.2258 | -0.3988 | 0.0009 |
| 176 | SLV 12 | -7.19 | 0.47 | 63.95 | 0.2258 | -0.3988 | 0.0009 |
| 176 | SLV 13 | -21.65 | -0.25 | 98.75 | 0.0052 | -1.2304 | -0.0008 |
| 176 | SLV 14 | -21.65 | -0.25 | 98.75 | 0.0052 | -1.2304 | -0.0008 |
| 176 | SLV 15 | -20.56 | 0.04 | 94.45 | 0.131 | -1.1669 | -0.0002 |
| 176 | SLV 16 | -20.56 | 0.04 | 94.45 | 0.131 | -1.1669 | -0.0002 |
| 177 | SLU 1 | -7.31 | 0.02 | 30.11 | -0.0048 | -0.1372 | -0.0009 |
| 177 | SLU 2 | -7.43 | 0.03 | 30.17 | -0.0065 | -0.144 | -0.0012 |
| 177 | SLU 3 | -7.43 | 0.02 | 30.97 | -0.0053 | -0.1356 | -0.001 |
| 177 | SLU 4 | -7.5 | 0.03 | 31.01 | -0.0063 | -0.1396 | -0.0012 |
| 177 | SLU 5 | -7.53 | 0.03 | 30.88 | -0.0071 | -0.1429 | -0.0013 |
| 177 | SLU 6 | -7.54 | 0.02 | 31.68 | -0.0059 | -0.1345 | -0.0011 |
| 177 | SLU 7 | -7.61 | 0.03 | 31.72 | -0.0069 | -0.1386 | -0.0013 |
| 177 | SLU 8 | -7.52 | 0.02 | 31.53 | -0.006 | -0.135 | -0.0011 |
| 177 | SLU 9 | -7.59 | 0.03 | 31.57 | -0.007 | -0.1391 | -0.0013 |
| 177 | SLU 10 | -8.56 | 0.03 | 35.28 | -0.0074 | -0.1602 | -0.0014 |
| 177 | SLU 11 | -8.57 | 0.02 | 36.09 | -0.0062 | -0.1518 | -0.0011 |
| 177 | SLU 12 | -8.64 | 0.03 | 36.12 | -0.0072 | -0.1559 | -0.0013 |
| 177 | SLU 13 | -8.67 | 0.03 | 36 | -0.0079 | -0.1591 | -0.0015 |
| 177 | SLU 14 | -8.67 | 0.02 | 36.8 | -0.0068 | -0.1507 | -0.0012 |
| 177 | SLU 15 | -8.74 | 0.03 | 36.83 | -0.0078 | -0.1548 | -0.0014 |
| 177 | SLU 16 | -8.65 | 0.02 | 36.65 | -0.0069 | -0.1513 | -0.0013 |
| 177 | SLU 17 | -8.72 | 0.03 | 36.68 | -0.0079 | -0.1554 | -0.0015 |
| 177 | SLU 18 | -8.93 | 0.02 | 37.42 | -0.0061 | -0.1604 | -0.0011 |
| 177 | SLU 19 | -9 | 0.03 | 37.45 | -0.0071 | -0.1645 | -0.0013 |
| 177 | SLU 20 | -9.04 | 0.02 | 38.13 | -0.0067 | -0.1593 | -0.0012 |
| 177 | SLU 21 | -9.11 | 0.03 | 38.16 | -0.0077 | -0.1634 | -0.0014 |
| 177 | SLU 22 | -8.35 | 0.02 | 34.86 | -0.0058 | -0.1515 | -0.0011 |
| 177 | SLU 23 | -8.47 | 0.03 | 34.92 | -0.0075 | -0.1583 | -0.0014 |
| 177 | SLU 24 | -8.48 | 0.02 | 35.72 | -0.0063 | -0.1498 | -0.0012 |
| 177 | SLU 25 | -8.54 | 0.03 | 35.76 | -0.0073 | -0.1539 | -0.0014 |
| 177 | SLU 26 | -8.57 | 0.03 | 35.63 | -0.0081 | -0.1572 | -0.0015 |
| 177 | SLU 27 | -8.58 | 0.02 | 36.44 | -0.0069 | -0.1488 | -0.0013 |
| 177 | SLU 28 | -8.65 | 0.03 | 36.47 | -0.0079 | -0.1528 | -0.0015 |
| 177 | SLU 29 | -8.56 | 0.02 | 36.28 | -0.007 | -0.1493 | -0.0013 |
| 177 | SLU 30 | -8.63 | 0.03 | 36.32 | -0.008 | -0.1534 | -0.0015 |
| 177 | SLU 31 | -9.6 | 0.04 | 40.04 | -0.0084 | -0.1745 | -0.0016 |
| 177 | SLU 32 | -9.61 | 0.03 | 40.84 | -0.0072 | -0.1661 | -0.0013 |
| 177 | SLU 33 | -9.68 | 0.03 | 40.88 | -0.0082 | -0.1701 | -0.0015 |
| 177 | SLU 34 | -9.71 | 0.04 | 40.75 | -0.009 | -0.1734 | -0.0017 |
| 177 | SLU 35 | -9.71 | 0.03 | 41.55 | -0.0078 | -0.165 | -0.0014 |
| 177 | SLU 36 | -9.78 | 0.03 | 41.59 | -0.0088 | -0.1691 | -0.0016 |
| 177 | SLU 37 | -9.69 | 0.03 | 41.4 | -0.0079 | -0.1655 | -0.0014 |
| 177 | SLU 38 | -9.76 | 0.03 | 41.44 | -0.0089 | -0.1696 | -0.0016 |
| 177 | SLU 39 | -9.97 | 0.03 | 42.17 | -0.0071 | -0.1747 | -0.0013 |
| 177 | SLU 40 | -10.04 | 0.03 | 42.21 | -0.0081 | -0.1787 | -0.0015 |
| 177 | SLU 41 | -10.08 | 0.03 | 42.88 | -0.0077 | -0.1736 | -0.0014 |
| 177 | SLU 42 | -10.15 | 0.03 | 42.92 | -0.0087 | -0.1777 | -0.0016 |
| 177 | SLU 43 | -9.15 | 0.02 | 37.51 | -0.0059 | -0.1735 | -0.0011 |
| 177 | SLU 44 | -9.26 | 0.03 | 37.57 | -0.0076 | -0.1803 | -0.0014 |
| 177 | SLU 45 | -9.27 | 0.02 | 38.37 | -0.0064 | -0.1718 | -0.0012 |
| 177 | SLU 46 | -9.34 | 0.03 | 38.41 | -0.0074 | -0.1759 | -0.0014 |
| 177 | SLU 47 | -9.37 | 0.03 | 38.28 | -0.0082 | -0.1792 | -0.0015 |
| 177 | SLU 48 | -9.37 | 0.02 | 39.09 | -0.007 | -0.1708 | -0.0013 |
| 177 | SLU 49 | -9.44 | 0.03 | 39.12 | -0.008 | -0.1748 | -0.0015 |
| 177 | SLU 50 | -9.35 | 0.02 | 38.93 | -0.0071 | -0.1713 | -0.0013 |
| 177 | SLU 51 | -9.42 | 0.03 | 38.97 | -0.0081 | -0.1754 | -0.0015 |
| 177 | SLU 52 | -10.4 | 0.04 | 42.69 | -0.0085 | -0.1965 | -0.0016 |
| 177 | SLU 53 | -10.41 | 0.03 | 43.49 | -0.0073 | -0.1881 | -0.0014 |
| 177 | SLU 54 | -10.47 | 0.03 | 43.53 | -0.0083 | -0.1921 | -0.0016 |
| 177 | SLU 55 | -10.5 | 0.04 | 43.4 | -0.009 | -0.1954 | -0.0017 |
| 177 | SLU 56 | -10.51 | 0.03 | 44.2 | -0.0079 | -0.187 | -0.0014 |
| 177 | SLU 57 | -10.58 | 0.03 | 44.24 | -0.0089 | -0.1911 | -0.0017 |
| 177 | SLU 58 | -10.49 | 0.03 | 44.05 | -0.008 | -0.1875 | -0.0015 |
| 177 | SLU 59 | -10.56 | 0.03 | 44.09 | -0.009 | -0.1916 | -0.0017 |
| 177 | SLU 60 | -10.77 | 0.03 | 44.82 | -0.0072 | -0.1967 | -0.0013 |

| Nodo | Cont. | Reazione a traslazione | | | Reazione a rotazione | | |
|---|---|---|---|---|---|---|---|
| Ind. | N.br. | x | y | z | x | y | z |
| 177 | SLU 61 | -10.84 | 0.03 | 44.86 | -0.0082 | -0.2007 | -0.0015 |
| 177 | SLU 62 | -10.87 | 0.03 | 45.53 | -0.0078 | -0.1956 | -0.0014 |
| 177 | SLU 63 | -10.94 | 0.04 | 45.57 | -0.0088 | -0.1997 | -0.0016 |
| 177 | SLU 64 | -10.19 | 0.03 | 42.26 | -0.0069 | -0.1877 | -0.0013 |
| 177 | SLU 65 | -10.3 | 0.04 | 42.32 | -0.0086 | -0.1945 | -0.0016 |
| 177 | SLU 66 | -10.31 | 0.03 | 43.13 | -0.0074 | -0.1861 | -0.0014 |
| 177 | SLU 67 | -10.38 | 0.03 | 43.16 | -0.0084 | -0.1902 | -0.0016 |
| 177 | SLU 68 | -10.41 | 0.04 | 43.04 | -0.0092 | -0.1934 | -0.0017 |
| 177 | SLU 69 | -10.41 | 0.03 | 43.84 | -0.008 | -0.185 | -0.0015 |
| 177 | SLU 70 | -10.48 | 0.03 | 43.87 | -0.009 | -0.1891 | -0.0017 |
| 177 | SLU 71 | -10.39 | 0.03 | 43.69 | -0.0081 | -0.1856 | -0.0015 |
| 177 | SLU 72 | -10.46 | 0.03 | 43.72 | -0.0091 | -0.1897 | -0.0017 |
| 177 | SLU 73 | -11.44 | 0.04 | 47.44 | -0.0095 | -0.2108 | -0.0018 |
| 177 | SLU 74 | -11.45 | 0.03 | 48.24 | -0.0083 | -0.2023 | -0.0015 |
| 177 | SLU 75 | -11.52 | 0.04 | 48.28 | -0.0093 | -0.2064 | -0.0017 |
| 177 | SLU 76 | -11.54 | 0.04 | 48.15 | -0.0101 | -0.2097 | -0.0019 |
| 177 | SLU 77 | -11.55 | 0.03 | 48.95 | -0.0089 | -0.2013 | -0.0016 |
| 177 | SLU 78 | -11.62 | 0.04 | 48.99 | -0.0099 | -0.2053 | -0.0018 |
| 177 | SLU 79 | -11.53 | 0.03 | 48.8 | -0.009 | -0.2018 | -0.0016 |
| 177 | SLU 80 | -11.6 | 0.04 | 48.84 | -0.01 | -0.2059 | -0.0018 |
| 177 | SLU 81 | -11.81 | 0.03 | 49.57 | -0.0082 | -0.2109 | -0.0015 |
| 177 | SLU 82 | -11.88 | 0.04 | 49.61 | -0.0092 | -0.215 | -0.0017 |
| 177 | SLU 83 | -11.91 | 0.03 | 50.28 | -0.0088 | -0.2098 | -0.0016 |
| 177 | SLU 84 | -11.98 | 0.04 | 50.32 | -0.0098 | -0.2139 | -0.0018 |
| 177 | SLE RA 1 | -7.61 | 0.02 | 31.47 | -0.0051 | -0.1413 | -0.0009 |
| 177 | SLE RA 2 | -7.68 | 0.03 | 31.51 | -0.0062 | -0.1458 | -0.0012 |
| 177 | SLE RA 3 | -7.69 | 0.02 | 32.04 | -0.0055 | -0.1402 | -0.001 |
| 177 | SLE RA 4 | -7.74 | 0.02 | 32.07 | -0.0061 | -0.1429 | -0.0011 |
| 177 | SLE RA 5 | -7.75 | 0.03 | 31.98 | -0.0066 | -0.1451 | -0.0012 |
| 177 | SLE RA 6 | -7.76 | 0.02 | 32.52 | -0.0058 | -0.1395 | -0.0011 |
| 177 | SLE RA 7 | -7.81 | 0.02 | 32.54 | -0.0065 | -0.1422 | -0.0012 |
| 177 | SLE RA 8 | -7.75 | 0.02 | 32.42 | -0.0059 | -0.1398 | -0.0011 |
| 177 | SLE RA 9 | -7.79 | 0.02 | 32.44 | -0.0066 | -0.1426 | -0.0012 |
| 177 | SLE RA 10 | -8.44 | 0.03 | 34.92 | -0.0068 | -0.1566 | -0.0013 |
| 177 | SLE RA 11 | -8.45 | 0.02 | 35.45 | -0.006 | -0.151 | -0.0011 |
| 177 | SLE RA 12 | -8.49 | 0.03 | 35.48 | -0.0067 | -0.1537 | -0.0013 |
| 177 | SLE RA 13 | -8.51 | 0.03 | 35.39 | -0.0072 | -0.1559 | -0.0013 |
| 177 | SLE RA 14 | -8.52 | 0.02 | 35.93 | -0.0064 | -0.1503 | -0.0012 |
| 177 | SLE RA 15 | -8.56 | 0.03 | 35.95 | -0.0071 | -0.153 | -0.0013 |
| 177 | SLE RA 16 | -8.5 | 0.02 | 35.83 | -0.0065 | -0.1507 | -0.0012 |
| 177 | SLE RA 17 | -8.55 | 0.03 | 35.85 | -0.0071 | -0.1534 | -0.0013 |
| 177 | SLE RA 18 | -8.69 | 0.02 | 36.34 | -0.0059 | -0.1567 | -0.0011 |
| 177 | SLE RA 19 | -8.74 | 0.03 | 36.36 | -0.0066 | -0.1594 | -0.0012 |
| 177 | SLE RA 20 | -8.76 | 0.02 | 36.81 | -0.0063 | -0.156 | -0.0012 |
| 177 | SLE RA 21 | -8.8 | 0.03 | 36.84 | -0.007 | -0.1587 | -0.0013 |
| 177 | SLE FR 1 | -7.61 | 0.02 | 31.47 | -0.0051 | -0.1413 | -0.0009 |
| 177 | SLE FR 2 | -7.62 | 0.02 | 31.47 | -0.0053 | -0.1422 | -0.001 |
| 177 | SLE FR 3 | -7.64 | 0.02 | 31.66 | -0.0053 | -0.141 | -0.001 |
| 177 | SLE FR 4 | -7.95 | 0.02 | 32.94 | -0.0056 | -0.1468 | -0.001 |
| 177 | SLE FR 5 | -7.96 | 0.02 | 33.12 | -0.0055 | -0.1456 | -0.001 |
| 177 | SLE FR 6 | -8.15 | 0.02 | 33.9 | -0.0055 | -0.149 | -0.001 |
| 177 | SLE QP 1 | -7.61 | 0.02 | 31.47 | -0.0051 | -0.1413 | -0.0009 |
| 177 | SLE QP 2 | -7.93 | 0.02 | 32.93 | -0.0054 | -0.1459 | -0.001 |
| 177 | SLD 1 | -2.2 | -0.31 | 17.87 | 0.0374 | 0.0682 | 0.0079 |
| 177 | SLD 2 | -2.2 | -0.31 | 17.87 | 0.0374 | 0.0682 | 0.0079 |
| 177 | SLD 3 | -1.8 | 0.15 | 16.55 | -0.0237 | 0.0821 | -0.0051 |
| 177 | SLD 4 | -1.8 | 0.15 | 16.55 | -0.0237 | 0.0821 | -0.0051 |
| 177 | SLD 5 | -6.83 | -0.76 | 30.41 | 0.1 | -0.1028 | 0.0212 |
| 177 | SLD 6 | -6.83 | -0.76 | 30.41 | 0.1 | -0.1028 | 0.0212 |
| 177 | SLD 7 | -5.48 | 0.75 | 26.02 | -0.1034 | -0.0564 | -0.0218 |
| 177 | SLD 8 | -5.48 | 0.75 | 26.02 | -0.1034 | -0.0564 | -0.0218 |
| 177 | SLD 9 | -10.39 | -0.7 | 39.84 | 0.0927 | -0.2354 | 0.0198 |
| 177 | SLD 10 | -10.39 | -0.7 | 39.84 | 0.0927 | -0.2354 | 0.0198 |
| 177 | SLD 11 | -9.04 | 0.81 | 35.45 | -0.1107 | -0.189 | -0.0232 |
| 177 | SLD 12 | -9.04 | 0.81 | 35.45 | -0.1107 | -0.189 | -0.0232 |
| 177 | SLD 13 | -14.07 | -0.1 | 49.3 | 0.013 | -0.3739 | 0.0031 |
| 177 | SLD 14 | -14.07 | -0.1 | 49.3 | 0.013 | -0.3739 | 0.0031 |
| 177 | SLD 15 | -13.66 | 0.35 | 47.99 | -0.0481 | -0.36 | -0.0098 |
| 177 | SLD 16 | -13.66 | 0.35 | 47.99 | -0.0481 | -0.36 | -0.0098 |
| 177 | SLV 1 | 5.25 | -0.82 | -1.66 | 0.1018 | 0.3471 | 0.0213 |
| 177 | SLV 2 | 5.25 | -0.82 | -1.66 | 0.1018 | 0.3471 | 0.0213 |
| 177 | SLV 3 | 6.19 | 0.34 | -4.78 | -0.0518 | 0.3797 | -0.0114 |
| 177 | SLV 4 | 6.19 | 0.34 | -4.78 | -0.0518 | 0.3797 | -0.0114 |
| 177 | SLV 5 | -5.41 | -1.99 | 27.3 | 0.2597 | -0.0474 | 0.0553 |
| 177 | SLV 6 | -5.41 | -1.99 | 27.3 | 0.2597 | -0.0474 | 0.0553 |
| 177 | SLV 7 | -2.26 | 1.88 | 16.87 | -0.2522 | 0.0612 | -0.0537 |
| 177 | SLV 8 | -2.26 | 1.88 | 16.87 | -0.2522 | 0.0612 | -0.0537 |
| 177 | SLV 9 | -13.6 | -1.83 | 48.98 | 0.2415 | -0.353 | 0.0517 |
| 177 | SLV 10 | -13.6 | -1.83 | 48.98 | 0.2415 | -0.353 | 0.0517 |
| 177 | SLV 11 | -10.45 | 2.03 | 38.56 | -0.2704 | -0.2444 | -0.0573 |
| 177 | SLV 12 | -10.45 | 2.03 | 38.56 | -0.2704 | -0.2444 | -0.0573 |
| 177 | SLV 13 | -22.06 | -0.3 | 70.64 | 0.0411 | -0.6715 | 0.0094 |
| 177 | SLV 14 | -22.06 | -0.3 | 70.64 | 0.0411 | -0.6715 | 0.0094 |
| 177 | SLV 15 | -21.11 | 0.86 | 67.51 | -0.1125 | -0.6389 | -0.0233 |
| 177 | SLV 16 | -21.11 | 0.86 | 67.51 | -0.1125 | -0.6389 | -0.0233 |
| 178 | SLU 1 | 10.9 | -0.13 | 36.06 | 0.0207 | 0.2701 | -0.0046 |
| 178 | SLU 2 | 10.36 | -0.14 | 34.09 | 0.0191 | 0.2597 | -0.0045 |
| 178 | SLU 3 | 11.45 | -0.14 | 37.94 | 0.0217 | 0.2831 | -0.0048 |

| Nodo | Cont. | Reazione a traslazione | | | Reazione a rotazione | | |
|---|---|---|---|---|---|---|---|
| Ind. | N.br. | x | y | z | x | y | z |
| 178 | SLU 4 | 11.13 | -0.14 | 36.76 | 0.0208 | 0.2768 | -0.0047 |
| 178 | SLU 5 | 10.74 | -0.15 | 35.44 | 0.0199 | 0.2675 | -0.0047 |
| 178 | SLU 6 | 11.82 | -0.14 | 39.29 | 0.0225 | 0.2909 | -0.0049 |
| 178 | SLU 7 | 11.5 | -0.15 | 38.11 | 0.0216 | 0.2847 | -0.0049 |
| 178 | SLU 8 | 11.65 | -0.14 | 38.76 | 0.0222 | 0.2857 | -0.0049 |
| 178 | SLU 9 | 11.32 | -0.14 | 37.58 | 0.0213 | 0.2795 | -0.0048 |
| 178 | SLU 10 | 12.64 | -0.17 | 41.33 | 0.023 | 0.3193 | -0.0054 |
| 178 | SLU 11 | 13.72 | -0.16 | 45.18 | 0.0256 | 0.3426 | -0.0057 |
| 178 | SLU 12 | 13.4 | -0.17 | 44 | 0.0247 | 0.3364 | -0.0056 |
| 178 | SLU 13 | 13.01 | -0.17 | 42.68 | 0.0238 | 0.3271 | -0.0055 |
| 178 | SLU 14 | 14.1 | -0.17 | 46.53 | 0.0264 | 0.3505 | -0.0058 |
| 178 | SLU 15 | 13.78 | -0.17 | 45.35 | 0.0255 | 0.3442 | -0.0058 |
| 178 | SLU 16 | 13.92 | -0.16 | 46 | 0.0261 | 0.3453 | -0.0058 |
| 178 | SLU 17 | 13.6 | -0.17 | 44.82 | 0.0252 | 0.3391 | -0.0057 |
| 178 | SLU 18 | 14.15 | -0.17 | 46.4 | 0.0262 | 0.3552 | -0.0059 |
| 178 | SLU 19 | 13.82 | -0.18 | 45.22 | 0.0253 | 0.3489 | -0.0058 |
| 178 | SLU 20 | 14.52 | -0.17 | 47.75 | 0.027 | 0.363 | -0.006 |
| 178 | SLU 21 | 14.2 | -0.18 | 46.57 | 0.0261 | 0.3568 | -0.006 |
| 178 | SLU 22 | 12.92 | -0.16 | 42.68 | 0.0243 | 0.3211 | -0.0054 |
| 178 | SLU 23 | 12.39 | -0.17 | 40.71 | 0.0228 | 0.3107 | -0.0053 |
| 178 | SLU 24 | 13.48 | -0.16 | 44.56 | 0.0254 | 0.3341 | -0.0056 |
| 178 | SLU 25 | 13.15 | -0.17 | 43.38 | 0.0245 | 0.3278 | -0.0056 |
| 178 | SLU 26 | 12.76 | -0.17 | 42.06 | 0.0236 | 0.3185 | -0.0055 |
| 178 | SLU 27 | 13.85 | -0.16 | 45.91 | 0.0262 | 0.3419 | -0.0058 |
| 178 | SLU 28 | 13.53 | -0.17 | 44.73 | 0.0253 | 0.3356 | -0.0057 |
| 178 | SLU 29 | 13.67 | -0.16 | 45.38 | 0.0259 | 0.3367 | -0.0057 |
| 178 | SLU 30 | 13.35 | -0.17 | 44.2 | 0.025 | 0.3305 | -0.0057 |
| 178 | SLU 31 | 14.66 | -0.19 | 47.95 | 0.0267 | 0.3703 | -0.0062 |
| 178 | SLU 32 | 15.75 | -0.19 | 51.8 | 0.0293 | 0.3936 | -0.0065 |
| 178 | SLU 33 | 15.43 | -0.19 | 50.62 | 0.0284 | 0.3874 | -0.0065 |
| 178 | SLU 34 | 15.03 | -0.2 | 49.3 | 0.0275 | 0.3781 | -0.0064 |
| 178 | SLU 35 | 16.12 | -0.19 | 53.15 | 0.0301 | 0.4014 | -0.0067 |
| 178 | SLU 36 | 15.8 | -0.2 | 51.97 | 0.0292 | 0.3952 | -0.0066 |
| 178 | SLU 37 | 15.94 | -0.19 | 52.62 | 0.0298 | 0.3963 | -0.0066 |
| 178 | SLU 38 | 15.62 | -0.2 | 51.44 | 0.0289 | 0.3901 | -0.0065 |
| 178 | SLU 39 | 16.17 | -0.2 | 53.02 | 0.0299 | 0.4062 | -0.0067 |
| 178 | SLU 40 | 15.85 | -0.2 | 51.84 | 0.029 | 0.3999 | -0.0066 |
| 178 | SLU 41 | 16.55 | -0.2 | 54.37 | 0.0307 | 0.414 | -0.0068 |
| 178 | SLU 42 | 16.22 | -0.2 | 53.19 | 0.0298 | 0.4078 | -0.0068 |
| 178 | SLU 43 | 13.48 | -0.16 | 44.61 | 0.0256 | 0.3336 | -0.0057 |
| 178 | SLU 44 | 12.94 | -0.17 | 42.64 | 0.0241 | 0.3232 | -0.0056 |
| 178 | SLU 45 | 14.03 | -0.17 | 46.49 | 0.0266 | 0.3466 | -0.0059 |
| 178 | SLU 46 | 13.7 | -0.18 | 45.31 | 0.0257 | 0.3404 | -0.0058 |
| 178 | SLU 47 | 13.31 | -0.18 | 43.99 | 0.0249 | 0.3311 | -0.0057 |
| 178 | SLU 48 | 14.4 | -0.17 | 47.84 | 0.0274 | 0.3544 | -0.006 |
| 178 | SLU 49 | 14.08 | -0.18 | 46.66 | 0.0265 | 0.3482 | -0.006 |
| 178 | SLU 50 | 14.22 | -0.17 | 47.31 | 0.0272 | 0.3493 | -0.006 |
| 178 | SLU 51 | 13.9 | -0.18 | 46.13 | 0.0262 | 0.343 | -0.0059 |
| 178 | SLU 52 | 15.21 | -0.2 | 49.88 | 0.028 | 0.3828 | -0.0065 |
| 178 | SLU 53 | 16.3 | -0.2 | 53.73 | 0.0305 | 0.4062 | -0.0068 |
| 178 | SLU 54 | 15.98 | -0.2 | 52.55 | 0.0296 | 0.3999 | -0.0067 |
| 178 | SLU 55 | 15.58 | -0.2 | 51.23 | 0.0287 | 0.3906 | -0.0066 |
| 178 | SLU 56 | 16.67 | -0.2 | 55.08 | 0.0313 | 0.414 | -0.0069 |
| 178 | SLU 57 | 16.35 | -0.2 | 53.9 | 0.0304 | 0.4078 | -0.0069 |
| 178 | SLU 58 | 16.5 | -0.2 | 54.55 | 0.031 | 0.4088 | -0.0069 |
| 178 | SLU 59 | 16.17 | -0.2 | 53.37 | 0.0301 | 0.4026 | -0.0068 |
| 178 | SLU 60 | 16.72 | -0.2 | 54.95 | 0.0311 | 0.4187 | -0.007 |
| 178 | SLU 61 | 16.4 | -0.21 | 53.77 | 0.0302 | 0.4125 | -0.0069 |
| 178 | SLU 62 | 17.1 | -0.21 | 56.3 | 0.0319 | 0.4265 | -0.0071 |
| 178 | SLU 63 | 16.77 | -0.21 | 55.12 | 0.031 | 0.4203 | -0.007 |
| 178 | SLU 64 | 15.5 | -0.19 | 51.23 | 0.0293 | 0.3846 | -0.0065 |
| 178 | SLU 65 | 14.96 | -0.2 | 49.26 | 0.0278 | 0.3742 | -0.0064 |
| 178 | SLU 66 | 16.05 | -0.19 | 53.11 | 0.0303 | 0.3976 | -0.0067 |
| 178 | SLU 67 | 15.73 | -0.2 | 51.93 | 0.0294 | 0.3914 | -0.0067 |
| 178 | SLU 68 | 15.34 | -0.2 | 50.61 | 0.0285 | 0.3821 | -0.0066 |
| 178 | SLU 69 | 16.42 | -0.2 | 54.46 | 0.0311 | 0.4054 | -0.0069 |
| 178 | SLU 70 | 16.1 | -0.2 | 53.28 | 0.0302 | 0.3992 | -0.0068 |
| 178 | SLU 71 | 16.25 | -0.19 | 53.93 | 0.0308 | 0.4003 | -0.0068 |
| 178 | SLU 72 | 15.92 | -0.2 | 52.75 | 0.0299 | 0.394 | -0.0067 |
| 178 | SLU 73 | 17.24 | -0.23 | 56.49 | 0.0317 | 0.4338 | -0.0073 |
| 178 | SLU 74 | 18.32 | -0.22 | 60.35 | 0.0342 | 0.4572 | -0.0076 |
| 178 | SLU 75 | 18 | -0.23 | 59.17 | 0.0333 | 0.4509 | -0.0076 |
| 178 | SLU 76 | 17.61 | -0.23 | 57.85 | 0.0324 | 0.4416 | -0.0075 |
| 178 | SLU 77 | 18.7 | -0.22 | 61.7 | 0.035 | 0.465 | -0.0077 |
| 178 | SLU 78 | 18.38 | -0.23 | 60.52 | 0.0341 | 0.4588 | -0.0077 |
| 178 | SLU 79 | 18.52 | -0.22 | 61.17 | 0.0347 | 0.4598 | -0.0077 |
| 178 | SLU 80 | 18.2 | -0.23 | 59.99 | 0.0338 | 0.4536 | -0.0076 |
| 178 | SLU 81 | 18.75 | -0.23 | 61.57 | 0.0348 | 0.4697 | -0.0078 |
| 178 | SLU 82 | 18.42 | -0.23 | 60.38 | 0.0339 | 0.4635 | -0.0077 |
| 178 | SLU 83 | 19.12 | -0.23 | 62.92 | 0.0356 | 0.4775 | -0.0079 |
| 178 | SLU 84 | 18.8 | -0.24 | 61.74 | 0.0347 | 0.4713 | -0.0079 |
| 178 | SLE RA 1 | 11.48 | -0.14 | 37.95 | 0.0217 | 0.2847 | -0.0048 |
| 178 | SLE RA 2 | 11.12 | -0.15 | 36.64 | 0.0207 | 0.2777 | -0.0048 |
| 178 | SLE RA 3 | 11.85 | -0.14 | 39.21 | 0.0224 | 0.2933 | -0.005 |
| 178 | SLE RA 4 | 11.63 | -0.15 | 38.42 | 0.0218 | 0.2892 | -0.0049 |
| 178 | SLE RA 5 | 11.37 | -0.15 | 37.54 | 0.0212 | 0.2829 | -0.0049 |
| 178 | SLE RA 6 | 12.09 | -0.14 | 40.11 | 0.0229 | 0.2985 | -0.0051 |
| 178 | SLE RA 7 | 11.88 | -0.15 | 39.32 | 0.0223 | 0.2944 | -0.005 |

| Nodo | Cont. | Reazione a traslazione | | | Reazione a rotazione | | |
|---|---|---|---|---|---|---|---|
| Ind. | N.br. | x | y | z | x | y | z |
| 178 | SLE RA 8 | 11.98 | -0.14 | 39.75 | 0.0228 | 0.2951 | -0.005 |
| 178 | SLE RA 9 | 11.76 | -0.15 | 38.97 | 0.0222 | 0.2909 | -0.005 |
| 178 | SLE RA 10 | 12.64 | -0.16 | 41.46 | 0.0233 | 0.3174 | -0.0054 |
| 178 | SLE RA 11 | 13.36 | -0.16 | 44.03 | 0.025 | 0.333 | -0.0056 |
| 178 | SLE RA 12 | 13.15 | -0.16 | 43.24 | 0.0244 | 0.3289 | -0.0055 |
| 178 | SLE RA 13 | 12.88 | -0.17 | 42.36 | 0.0238 | 0.3227 | -0.0055 |
| 178 | SLE RA 14 | 13.61 | -0.16 | 44.93 | 0.0255 | 0.3382 | -0.0056 |
| 178 | SLE RA 15 | 13.4 | -0.17 | 44.14 | 0.0249 | 0.3341 | -0.0056 |
| 178 | SLE RA 16 | 13.49 | -0.16 | 44.58 | 0.0254 | 0.3348 | -0.0056 |
| 178 | SLE RA 17 | 13.28 | -0.17 | 43.79 | 0.0247 | 0.3306 | -0.0056 |
| 178 | SLE RA 18 | 13.64 | -0.17 | 44.84 | 0.0254 | 0.3414 | -0.0057 |
| 178 | SLE RA 19 | 13.43 | -0.17 | 44.06 | 0.0248 | 0.3372 | -0.0056 |
| 178 | SLE RA 20 | 13.89 | -0.17 | 45.75 | 0.0259 | 0.3466 | -0.0058 |
| 178 | SLE RA 21 | 13.68 | -0.17 | 44.96 | 0.0253 | 0.3424 | -0.0057 |
| 178 | SLE FR 1 | 11.48 | -0.14 | 37.95 | 0.0217 | 0.2847 | -0.0048 |
| 178 | SLE FR 2 | 11.41 | -0.14 | 37.69 | 0.0215 | 0.2833 | -0.0048 |
| 178 | SLE FR 3 | 11.58 | -0.14 | 38.31 | 0.0219 | 0.2867 | -0.0049 |
| 178 | SLE FR 4 | 12.06 | -0.15 | 39.76 | 0.0226 | 0.3003 | -0.0051 |
| 178 | SLE FR 5 | 12.23 | -0.15 | 40.38 | 0.023 | 0.3038 | -0.0051 |
| 178 | SLE FR 6 | 12.56 | -0.15 | 41.4 | 0.0236 | 0.313 | -0.0052 |
| 178 | SLE QP 1 | 11.48 | -0.14 | 37.95 | 0.0217 | 0.2847 | -0.0048 |
| 178 | SLE QP 2 | 12.13 | -0.15 | 40.02 | 0.0228 | 0.3017 | -0.0051 |
| 178 | SLD 1 | 17.6 | -0.42 | 54.12 | 0.0569 | 0.4955 | -0.0133 |
| 178 | SLD 2 | 17.6 | -0.42 | 54.12 | 0.0569 | 0.4955 | -0.0133 |
| 178 | SLD 3 | 18.66 | -0.15 | 57.47 | 0.0234 | 0.523 | -0.0052 |
| 178 | SLD 4 | 18.66 | -0.15 | 57.47 | 0.0234 | 0.523 | -0.0052 |
| 178 | SLD 5 | 12.17 | -0.64 | 39.17 | 0.0839 | 0.3181 | -0.0198 |
| 178 | SLD 6 | 12.17 | -0.64 | 39.17 | 0.0839 | 0.3181 | -0.0198 |
| 178 | SLD 7 | 15.69 | 0.26 | 50.33 | -0.0279 | 0.4098 | 0.0072 |
| 178 | SLD 8 | 15.69 | 0.26 | 50.33 | -0.0279 | 0.4098 | 0.0072 |
| 178 | SLD 9 | 8.57 | -0.56 | 29.71 | 0.0735 | 0.1935 | -0.0174 |
| 178 | SLD 10 | 8.57 | -0.56 | 29.71 | 0.0735 | 0.1935 | -0.0174 |
| 178 | SLD 11 | 12.09 | 0.34 | 40.87 | -0.0383 | 0.2853 | 0.0097 |
| 178 | SLD 12 | 12.09 | 0.34 | 40.87 | -0.0383 | 0.2853 | 0.0097 |
| 178 | SLD 13 | 5.6 | -0.15 | 22.57 | 0.0222 | 0.0803 | -0.005 |
| 178 | SLD 14 | 5.6 | -0.15 | 22.57 | 0.0222 | 0.0803 | -0.005 |
| 178 | SLD 15 | 6.66 | 0.12 | 25.92 | -0.0113 | 0.1079 | 0.0031 |
| 178 | SLD 16 | 6.66 | 0.12 | 25.92 | -0.0113 | 0.1079 | 0.0031 |
| 178 | SLV 1 | 24.76 | -0.8 | 72.57 | 0.1054 | 0.7488 | -0.0249 |
| 178 | SLV 2 | 24.76 | -0.8 | 72.57 | 0.1054 | 0.7488 | -0.0249 |
| 178 | SLV 3 | 27.25 | -0.13 | 80.53 | 0.0222 | 0.8134 | -0.0048 |
| 178 | SLV 4 | 27.25 | -0.13 | 80.53 | 0.0222 | 0.8134 | -0.0048 |
| 178 | SLV 5 | 12.13 | -1.36 | 37.72 | 0.1738 | 0.3378 | -0.0416 |
| 178 | SLV 6 | 12.13 | -1.36 | 37.72 | 0.1738 | 0.3378 | -0.0416 |
| 178 | SLV 7 | 20.45 | 0.87 | 64.24 | -0.1036 | 0.5532 | 0.0255 |
| 178 | SLV 8 | 20.45 | 0.87 | 64.24 | -0.1036 | 0.5532 | 0.0255 |
| 178 | SLV 9 | 3.81 | -1.16 | 15.8 | 0.1492 | 0.0501 | -0.0357 |
| 178 | SLV 10 | 3.81 | -1.16 | 15.8 | 0.1492 | 0.0501 | -0.0357 |
| 178 | SLV 11 | 12.12 | 1.06 | 42.32 | -0.1282 | 0.2656 | 0.0314 |
| 178 | SLV 12 | 12.12 | 1.06 | 42.32 | -0.1282 | 0.2656 | 0.0314 |
| 178 | SLV 13 | -3 | -0.16 | -0.49 | 0.0234 | -0.21 | -0.0054 |
| 178 | SLV 14 | -3 | -0.16 | -0.49 | 0.0234 | -0.21 | -0.0054 |
| 178 | SLV 15 | -0.5 | 0.51 | 7.46 | -0.0598 | -0.1454 | 0.0148 |
| 178 | SLV 16 | -0.5 | 0.51 | 7.46 | -0.0598 | -0.1454 | 0.0148 |
| 179 | SLU 1 | 9.84 | -3.84 | 87.04 | 0.0468 | 0.5271 | -0.008 |
| 179 | SLU 2 | 9.82 | -2.51 | 81.25 | -0.0173 | 0.5252 | -0.0055 |
| 179 | SLU 3 | 10.25 | -4.13 | 91.69 | 0.055 | 0.5499 | -0.0086 |
| 179 | SLU 4 | 10.24 | -3.34 | 88.21 | 0.0165 | 0.5487 | -0.0071 |
| 179 | SLU 5 | 10.02 | -2.8 | 84.8 | -0.0077 | 0.5363 | -0.006 |
| 179 | SLU 6 | 10.45 | -4.41 | 95.24 | 0.0645 | 0.5611 | -0.0091 |
| 179 | SLU 7 | 10.44 | -3.62 | 91.76 | 0.0261 | 0.5599 | -0.0076 |
| 179 | SLU 8 | 10.24 | -4.4 | 94.15 | 0.0658 | 0.5494 | -0.0091 |
| 179 | SLU 9 | 10.23 | -3.61 | 90.67 | 0.0274 | 0.5483 | -0.0076 |
| 179 | SLU 10 | 12.09 | -3.09 | 97.83 | -0.0143 | 0.6486 | -0.0067 |
| 179 | SLU 11 | 12.53 | -4.71 | 108.27 | 0.0579 | 0.6734 | -0.0098 |
| 179 | SLU 12 | 12.52 | -3.91 | 104.79 | 0.0195 | 0.6722 | -0.0083 |
| 179 | SLU 13 | 12.3 | -3.37 | 101.38 | -0.0048 | 0.6598 | -0.0073 |
| 179 | SLU 14 | 12.73 | -4.99 | 111.82 | 0.0675 | 0.6845 | -0.0104 |
| 179 | SLU 15 | 12.72 | -4.2 | 108.34 | 0.029 | 0.6834 | -0.0089 |
| 179 | SLU 16 | 12.52 | -4.98 | 110.73 | 0.0688 | 0.6729 | -0.0103 |
| 179 | SLU 17 | 12.51 | -4.19 | 107.25 | 0.0304 | 0.6717 | -0.0088 |
| 179 | SLU 18 | 13.09 | -4.66 | 110.73 | 0.051 | 0.7035 | -0.0097 |
| 179 | SLU 19 | 13.08 | -3.87 | 107.26 | 0.0126 | 0.7023 | -0.0082 |
| 179 | SLU 20 | 13.29 | -4.94 | 114.28 | 0.0606 | 0.7146 | -0.0103 |
| 179 | SLU 21 | 13.28 | -4.15 | 110.81 | 0.0221 | 0.7135 | -0.0088 |
| 179 | SLU 22 | 11.7 | -4.46 | 102.66 | 0.0539 | 0.6284 | -0.0093 |
| 179 | SLU 23 | 11.68 | -3.14 | 96.86 | -0.0102 | 0.6265 | -0.0068 |
| 179 | SLU 24 | 12.12 | -4.76 | 107.3 | 0.062 | 0.6512 | -0.0099 |
| 179 | SLU 25 | 12.11 | -3.96 | 103.82 | 0.0236 | 0.65 | -0.0084 |
| 179 | SLU 26 | 11.89 | -3.42 | 100.41 | -0.0006 | 0.6376 | -0.0074 |
| 179 | SLU 27 | 12.32 | -5.04 | 110.85 | 0.0716 | 0.6623 | -0.0105 |
| 179 | SLU 28 | 12.31 | -4.25 | 107.37 | 0.0331 | 0.6612 | -0.009 |
| 179 | SLU 29 | 12.11 | -5.03 | 109.76 | 0.0729 | 0.6507 | -0.0104 |
| 179 | SLU 30 | 12.1 | -4.24 | 106.28 | 0.0345 | 0.6496 | -0.0089 |
| 179 | SLU 31 | 13.96 | -3.72 | 113.44 | -0.0072 | 0.7499 | -0.008 |
| 179 | SLU 32 | 14.4 | -5.33 | 123.88 | 0.065 | 0.7746 | -0.0111 |
| 179 | SLU 33 | 14.38 | -4.54 | 120.41 | 0.0266 | 0.7735 | -0.0096 |
| 179 | SLU 34 | 14.16 | -4 | 116.99 | 0.0023 | 0.7611 | -0.0086 |

| Nodo | Cont. | Reazione a traslazione | | | Reazione a rotazione | | |
|---|---|---|---|---|---|---|---|
| Ind. | N.br. | x | y | z | x | y | z |
| 179 | SLU 35 | 14.6 | -5.62 | 127.43 | 0.0745 | 0.7858 | -0.0117 |
| 179 | SLU 36 | 14.59 | -4.82 | 123.96 | 0.0361 | 0.7847 | -0.0102 |
| 179 | SLU 37 | 14.39 | -5.61 | 126.34 | 0.0759 | 0.7742 | -0.0117 |
| 179 | SLU 38 | 14.37 | -4.81 | 122.86 | 0.0375 | 0.773 | -0.0102 |
| 179 | SLU 39 | 14.96 | -5.29 | 126.34 | 0.0581 | 0.8048 | -0.011 |
| 179 | SLU 40 | 14.95 | -4.49 | 122.87 | 0.0197 | 0.8036 | -0.0095 |
| 179 | SLU 41 | 15.16 | -5.57 | 129.9 | 0.0676 | 0.8159 | -0.0116 |
| 179 | SLU 42 | 15.15 | -4.78 | 126.42 | 0.0292 | 0.8148 | -0.0101 |
| 179 | SLU 43 | 12.15 | -4.77 | 107.8 | 0.0584 | 0.6505 | -0.0099 |
| 179 | SLU 44 | 12.13 | -3.45 | 102.01 | -0.0056 | 0.6486 | -0.0074 |
| 179 | SLU 45 | 12.56 | -5.07 | 112.45 | 0.0666 | 0.6733 | -0.0105 |
| 179 | SLU 46 | 12.55 | -4.27 | 108.97 | 0.0281 | 0.6722 | -0.009 |
| 179 | SLU 47 | 12.33 | -3.73 | 105.56 | 0.0039 | 0.6598 | -0.008 |
| 179 | SLU 48 | 12.76 | -5.35 | 116 | 0.0761 | 0.6845 | -0.0111 |
| 179 | SLU 49 | 12.75 | -4.56 | 112.52 | 0.0377 | 0.6833 | -0.0096 |
| 179 | SLU 50 | 12.55 | -5.34 | 114.91 | 0.0774 | 0.6728 | -0.0111 |
| 179 | SLU 51 | 12.54 | -4.55 | 111.43 | 0.039 | 0.6717 | -0.0096 |
| 179 | SLU 52 | 14.41 | -4.03 | 118.59 | -0.0027 | 0.772 | -0.0086 |
| 179 | SLU 53 | 14.84 | -5.64 | 129.03 | 0.0695 | 0.7968 | -0.0117 |
| 179 | SLU 54 | 14.83 | -4.85 | 125.55 | 0.0311 | 0.7956 | -0.0102 |
| 179 | SLU 55 | 14.61 | -4.31 | 122.14 | 0.0068 | 0.7832 | -0.0092 |
| 179 | SLU 56 | 15.04 | -5.93 | 132.58 | 0.0791 | 0.8079 | -0.0123 |
| 179 | SLU 57 | 15.03 | -5.13 | 129.1 | 0.0406 | 0.8068 | -0.0108 |
| 179 | SLU 58 | 14.83 | -5.92 | 131.49 | 0.0804 | 0.7963 | -0.0123 |
| 179 | SLU 59 | 14.82 | -5.12 | 128.01 | 0.042 | 0.7951 | -0.0108 |
| 179 | SLU 60 | 15.4 | -5.6 | 131.49 | 0.0626 | 0.8269 | -0.0117 |
| 179 | SLU 61 | 15.39 | -4.8 | 128.02 | 0.0242 | 0.8257 | -0.0102 |
| 179 | SLU 62 | 15.6 | -5.88 | 135.04 | 0.0722 | 0.838 | -0.0122 |
| 179 | SLU 63 | 15.59 | -5.09 | 131.57 | 0.0337 | 0.8369 | -0.0107 |
| 179 | SLU 64 | 14.01 | -5.4 | 123.42 | 0.0655 | 0.7518 | -0.0112 |
| 179 | SLU 65 | 14 | -4.08 | 117.62 | 0.0014 | 0.7499 | -0.0087 |
| 179 | SLU 66 | 14.43 | -5.69 | 128.06 | 0.0736 | 0.7746 | -0.0118 |
| 179 | SLU 67 | 14.42 | -4.9 | 124.58 | 0.0352 | 0.7734 | -0.0103 |
| 179 | SLU 68 | 14.2 | -4.36 | 121.17 | 0.011 | 0.761 | -0.0093 |
| 179 | SLU 69 | 14.63 | -5.98 | 131.61 | 0.0832 | 0.7857 | -0.0124 |
| 179 | SLU 70 | 14.62 | -5.18 | 128.13 | 0.0447 | 0.7846 | -0.0109 |
| 179 | SLU 71 | 14.42 | -5.97 | 130.52 | 0.0845 | 0.7741 | -0.0124 |
| 179 | SLU 72 | 14.41 | -5.17 | 127.04 | 0.0461 | 0.773 | -0.0109 |
| 179 | SLU 73 | 16.27 | -4.65 | 134.2 | 0.0044 | 0.8733 | -0.01 |
| 179 | SLU 74 | 16.71 | -6.27 | 144.64 | 0.0766 | 0.898 | -0.0131 |
| 179 | SLU 75 | 16.69 | -5.47 | 141.17 | 0.0382 | 0.8969 | -0.0116 |
| 179 | SLU 76 | 16.47 | -4.94 | 137.75 | 0.0139 | 0.8845 | -0.0105 |
| 179 | SLU 77 | 16.91 | -6.55 | 148.19 | 0.0861 | 0.9092 | -0.0136 |
| 179 | SLU 78 | 16.9 | -5.76 | 144.72 | 0.0477 | 0.9081 | -0.0121 |
| 179 | SLU 79 | 16.7 | -6.54 | 147.1 | 0.0875 | 0.8976 | -0.0136 |
| 179 | SLU 80 | 16.68 | -5.75 | 143.62 | 0.0491 | 0.8964 | -0.0121 |
| 179 | SLU 81 | 17.27 | -6.22 | 147.1 | 0.0697 | 0.9282 | -0.013 |
| 179 | SLU 82 | 17.26 | -5.43 | 143.63 | 0.0313 | 0.927 | -0.0115 |
| 179 | SLU 83 | 17.47 | -6.51 | 150.66 | 0.0793 | 0.9393 | -0.0136 |
| 179 | SLU 84 | 17.46 | -5.71 | 147.18 | 0.0408 | 0.9382 | -0.0121 |
| 179 | SLE RA 1 | 10.37 | -4.02 | 91.5 | 0.0488 | 0.556 | -0.0084 |
| 179 | SLE RA 2 | 10.36 | -3.13 | 87.64 | 0.0061 | 0.5548 | -0.0067 |
| 179 | SLE RA 3 | 10.65 | -4.21 | 94.6 | 0.0543 | 0.5712 | -0.0088 |
| 179 | SLE RA 4 | 10.64 | -3.68 | 92.28 | 0.0286 | 0.5705 | -0.0078 |
| 179 | SLE RA 5 | 10.49 | -3.32 | 90.01 | 0.0125 | 0.5622 | -0.0071 |
| 179 | SLE RA 6 | 10.78 | -4.4 | 96.97 | 0.0606 | 0.5787 | -0.0091 |
| 179 | SLE RA 7 | 10.77 | -3.87 | 94.65 | 0.035 | 0.5779 | -0.0081 |
| 179 | SLE RA 8 | 10.64 | -4.39 | 96.24 | 0.0615 | 0.5709 | -0.0091 |
| 179 | SLE RA 9 | 10.63 | -3.87 | 93.92 | 0.0359 | 0.5702 | -0.0081 |
| 179 | SLE RA 10 | 11.88 | -3.52 | 98.7 | 0.0081 | 0.6371 | -0.0075 |
| 179 | SLE RA 11 | 12.16 | -4.6 | 105.65 | 0.0562 | 0.6535 | -0.0096 |
| 179 | SLE RA 12 | 12.16 | -4.07 | 103.34 | 0.0306 | 0.6528 | -0.0086 |
| 179 | SLE RA 13 | 12.01 | -3.71 | 101.06 | 0.0144 | 0.6445 | -0.0079 |
| 179 | SLE RA 14 | 12.3 | -4.78 | 108.02 | 0.0626 | 0.661 | -0.01 |
| 179 | SLE RA 15 | 12.29 | -4.26 | 105.7 | 0.037 | 0.6602 | -0.0089 |
| 179 | SLE RA 16 | 12.16 | -4.78 | 107.29 | 0.0635 | 0.6532 | -0.0099 |
| 179 | SLE RA 17 | 12.15 | -4.25 | 104.98 | 0.0379 | 0.6525 | -0.0089 |
| 179 | SLE RA 18 | 12.54 | -4.56 | 107.3 | 0.0516 | 0.6736 | -0.0095 |
| 179 | SLE RA 19 | 12.53 | -4.04 | 104.98 | 0.026 | 0.6729 | -0.0085 |
| 179 | SLE RA 20 | 12.67 | -4.75 | 109.66 | 0.058 | 0.6811 | -0.0099 |
| 179 | SLE RA 21 | 12.67 | -4.22 | 107.35 | 0.0324 | 0.6803 | -0.0089 |
| 179 | SLE FR 1 | 10.37 | -4.02 | 91.5 | 0.0488 | 0.556 | -0.0084 |
| 179 | SLE FR 2 | 10.37 | -3.84 | 90.73 | 0.0403 | 0.5558 | -0.008 |
| 179 | SLE FR 3 | 10.42 | -4.09 | 92.45 | 0.0513 | 0.559 | -0.0085 |
| 179 | SLE FR 4 | 11.02 | -4 | 95.47 | 0.0411 | 0.5911 | -0.0084 |
| 179 | SLE FR 5 | 11.07 | -4.26 | 97.19 | 0.0522 | 0.5943 | -0.0089 |
| 179 | SLE FR 6 | 11.45 | -4.29 | 99.4 | 0.0502 | 0.6148 | -0.0089 |
| 179 | SLE QP 1 | 10.37 | -4.02 | 91.5 | 0.0488 | 0.556 | -0.0084 |
| 179 | SLE QP 2 | 11.02 | -4.18 | 96.24 | 0.0497 | 0.5913 | -0.0087 |
| 179 | SLD 1 | 19.42 | -3.9 | 113.92 | -0.0404 | 1.0879 | -0.0082 |
| 179 | SLD 2 | 19.42 | -3.9 | 113.92 | -0.0404 | 1.0879 | -0.0082 |
| 179 | SLD 3 | 20.18 | -6.05 | 122.67 | 0.0631 | 1.1311 | -0.0123 |
| 179 | SLD 4 | 20.18 | -6.05 | 122.67 | 0.0631 | 1.1311 | -0.0123 |
| 179 | SLD 5 | 12.39 | -0.84 | 88.27 | -0.1343 | 0.6747 | -0.0023 |
| 179 | SLD 6 | 12.39 | -0.84 | 88.27 | -0.1343 | 0.6747 | -0.0023 |
| 179 | SLD 7 | 14.92 | -7.99 | 117.44 | 0.2106 | 0.8188 | -0.016 |
| 179 | SLD 8 | 14.92 | -7.99 | 117.44 | 0.2106 | 0.8188 | -0.016 |
| 179 | SLD 9 | 7.12 | -0.37 | 75.04 | -0.1113 | 0.3638 | -0.0014 |

| Nodo | Cont. | Reazione a traslazione | | | Reazione a rotazione | | |
|---|---|---|---|---|---|---|---|
| Ind. | N.br. | x | y | z | x | y | z |
| 179 | SLD 10 | 7.12 | -0.37 | 75.04 | -0.1113 | 0.3638 | -0.0014 |
| 179 | SLD 11 | 9.65 | -7.52 | 104.21 | 0.2336 | 0.5079 | -0.0151 |
| 179 | SLD 12 | 9.65 | -7.52 | 104.21 | 0.2336 | 0.5079 | -0.0151 |
| 179 | SLD 13 | 1.86 | -2.32 | 69.82 | 0.0362 | 0.0516 | -0.0051 |
| 179 | SLD 14 | 1.86 | -2.32 | 69.82 | 0.0362 | 0.0516 | -0.0051 |
| 179 | SLD 15 | 2.62 | -4.46 | 78.57 | 0.1397 | 0.0948 | -0.0092 |
| 179 | SLD 16 | 2.62 | -4.46 | 78.57 | 0.1397 | 0.0948 | -0.0092 |
| 179 | SLV 1 | 30.38 | -3.53 | 137.05 | -0.1653 | 1.7365 | -0.0075 |
| 179 | SLV 2 | 30.38 | -3.53 | 137.05 | -0.1653 | 1.7365 | -0.0075 |
| 179 | SLV 3 | 32.16 | -8.66 | 157.97 | 0.082 | 1.8374 | -0.0174 |
| 179 | SLV 4 | 32.16 | -8.66 | 157.97 | 0.082 | 1.8374 | -0.0174 |
| 179 | SLV 5 | 14.14 | 3.79 | 76.75 | -0.3899 | 0.7818 | 0.0067 |
| 179 | SLV 6 | 14.14 | 3.79 | 76.75 | -0.3899 | 0.7818 | 0.0067 |
| 179 | SLV 7 | 20.05 | -13.3 | 146.49 | 0.4344 | 1.1183 | -0.0263 |
| 179 | SLV 8 | 20.05 | -13.3 | 146.49 | 0.4344 | 1.1183 | -0.0263 |
| 179 | SLV 9 | 1.99 | 4.94 | 45.99 | -0.3351 | 0.0644 | 0.0089 |
| 179 | SLV 10 | 1.99 | 4.94 | 45.99 | -0.3351 | 0.0644 | 0.0089 |
| 179 | SLV 11 | 7.9 | -12.15 | 115.73 | 0.4892 | 0.4009 | -0.0241 |
| 179 | SLV 12 | 7.9 | -12.15 | 115.73 | 0.4892 | 0.4009 | -0.0241 |
| 179 | SLV 13 | -10.11 | 0.3 | 34.52 | 0.0173 | -0.6548 | 0 |
| 179 | SLV 14 | -10.11 | 0.3 | 34.52 | 0.0173 | -0.6548 | 0 |
| 179 | SLV 15 | -8.34 | -4.83 | 55.44 | 0.2646 | -0.5539 | -0.0099 |
| 179 | SLV 16 | -8.34 | -4.83 | 55.44 | 0.2646 | -0.5539 | -0.0099 |
| 180 | SLU 1 | 8.91 | 0.07 | 71.08 | -0.0134 | 0.3511 | 0.0032 |
| 180 | SLU 2 | 9.43 | 0.1 | 67.73 | -0.023 | 0.365 | 0.004 |
| 180 | SLU 3 | 9.2 | 0.07 | 74.73 | -0.0131 | 0.3635 | 0.0033 |
| 180 | SLU 4 | 9.51 | 0.09 | 72.72 | -0.0188 | 0.3719 | 0.0038 |
| 180 | SLU 5 | 9.47 | 0.1 | 70.5 | -0.0222 | 0.3667 | 0.004 |
| 180 | SLU 6 | 9.24 | 0.07 | 77.51 | -0.0122 | 0.3652 | 0.0033 |
| 180 | SLU 7 | 9.56 | 0.09 | 75.49 | -0.018 | 0.3735 | 0.0038 |
| 180 | SLU 8 | 8.99 | 0.07 | 76.63 | -0.0117 | 0.3544 | 0.0033 |
| 180 | SLU 9 | 9.3 | 0.09 | 74.61 | -0.0175 | 0.3628 | 0.0037 |
| 180 | SLU 10 | 11.73 | 0.12 | 81.2 | -0.0267 | 0.4602 | 0.0047 |
| 180 | SLU 11 | 11.5 | 0.09 | 88.21 | -0.0167 | 0.4587 | 0.004 |
| 180 | SLU 12 | 11.82 | 0.11 | 86.19 | -0.0225 | 0.4671 | 0.0044 |
| 180 | SLU 13 | 11.77 | 0.12 | 83.97 | -0.0258 | 0.4619 | 0.0047 |
| 180 | SLU 14 | 11.55 | 0.09 | 90.98 | -0.0159 | 0.4604 | 0.004 |
| 180 | SLU 15 | 11.86 | 0.11 | 88.96 | -0.0216 | 0.4687 | 0.0045 |
| 180 | SLU 16 | 11.3 | 0.09 | 90.1 | -0.0153 | 0.4496 | 0.004 |
| 180 | SLU 17 | 11.61 | 0.1 | 88.09 | -0.0211 | 0.4579 | 0.0044 |
| 180 | SLU 18 | 12.2 | 0.1 | 90.33 | -0.0187 | 0.4871 | 0.0042 |
| 180 | SLU 19 | 12.51 | 0.11 | 88.32 | -0.0244 | 0.4954 | 0.0047 |
| 180 | SLU 20 | 12.24 | 0.09 | 93.1 | -0.0178 | 0.4887 | 0.0042 |
| 180 | SLU 21 | 12.55 | 0.11 | 91.09 | -0.0236 | 0.4971 | 0.0047 |
| 180 | SLU 22 | 10.65 | 0.09 | 83.78 | -0.0162 | 0.422 | 0.0038 |
| 180 | SLU 23 | 11.17 | 0.11 | 80.42 | -0.0258 | 0.4359 | 0.0046 |
| 180 | SLU 24 | 10.94 | 0.09 | 87.43 | -0.0158 | 0.4344 | 0.0039 |
| 180 | SLU 25 | 11.26 | 0.1 | 85.41 | -0.0216 | 0.4428 | 0.0044 |
| 180 | SLU 26 | 11.21 | 0.11 | 83.19 | -0.0249 | 0.4376 | 0.0046 |
| 180 | SLU 27 | 10.99 | 0.08 | 90.2 | -0.0149 | 0.4361 | 0.0039 |
| 180 | SLU 28 | 11.3 | 0.1 | 88.19 | -0.0207 | 0.4444 | 0.0044 |
| 180 | SLU 29 | 10.74 | 0.08 | 89.33 | -0.0144 | 0.4253 | 0.0039 |
| 180 | SLU 30 | 11.05 | 0.1 | 87.31 | -0.0202 | 0.4337 | 0.0043 |
| 180 | SLU 31 | 13.48 | 0.13 | 93.89 | -0.0294 | 0.5311 | 0.0053 |
| 180 | SLU 32 | 13.25 | 0.1 | 100.9 | -0.0195 | 0.5296 | 0.0046 |
| 180 | SLU 33 | 13.56 | 0.12 | 98.89 | -0.0252 | 0.538 | 0.0051 |
| 180 | SLU 34 | 13.52 | 0.13 | 96.67 | -0.0286 | 0.5328 | 0.0053 |
| 180 | SLU 35 | 13.29 | 0.1 | 103.67 | -0.0186 | 0.5313 | 0.0046 |
| 180 | SLU 36 | 13.6 | 0.12 | 101.66 | -0.0244 | 0.5396 | 0.0051 |
| 180 | SLU 37 | 13.04 | 0.1 | 102.8 | -0.0181 | 0.5205 | 0.0046 |
| 180 | SLU 38 | 13.35 | 0.12 | 100.78 | -0.0238 | 0.5288 | 0.005 |
| 180 | SLU 39 | 13.94 | 0.11 | 103.03 | -0.0214 | 0.558 | 0.0048 |
| 180 | SLU 40 | 14.25 | 0.13 | 101.01 | -0.0272 | 0.5663 | 0.0053 |
| 180 | SLU 41 | 13.98 | 0.11 | 105.8 | -0.0205 | 0.5596 | 0.0048 |
| 180 | SLU 42 | 14.3 | 0.13 | 103.78 | -0.0263 | 0.568 | 0.0053 |
| 180 | SLU 43 | 10.98 | 0.09 | 88.06 | -0.0165 | 0.4321 | 0.004 |
| 180 | SLU 44 | 11.5 | 0.12 | 84.7 | -0.0261 | 0.4461 | 0.0047 |
| 180 | SLU 45 | 11.27 | 0.09 | 91.71 | -0.0162 | 0.4446 | 0.0041 |
| 180 | SLU 46 | 11.59 | 0.11 | 89.69 | -0.0219 | 0.4529 | 0.0045 |
| 180 | SLU 47 | 11.54 | 0.12 | 87.47 | -0.0253 | 0.4477 | 0.0048 |
| 180 | SLU 48 | 11.32 | 0.09 | 94.48 | -0.0153 | 0.4462 | 0.0041 |
| 180 | SLU 49 | 11.63 | 0.1 | 92.46 | -0.0211 | 0.4546 | 0.0045 |
| 180 | SLU 50 | 11.06 | 0.08 | 93.6 | -0.0148 | 0.4354 | 0.004 |
| 180 | SLU 51 | 11.38 | 0.1 | 91.59 | -0.0205 | 0.4438 | 0.0045 |
| 180 | SLU 52 | 13.8 | 0.13 | 98.17 | -0.0298 | 0.5412 | 0.0054 |
| 180 | SLU 53 | 13.58 | 0.11 | 105.18 | -0.0198 | 0.5397 | 0.0048 |
| 180 | SLU 54 | 13.89 | 0.12 | 103.16 | -0.0256 | 0.5481 | 0.0052 |
| 180 | SLU 55 | 13.85 | 0.13 | 100.94 | -0.0289 | 0.5429 | 0.0054 |
| 180 | SLU 56 | 13.62 | 0.1 | 107.95 | -0.0189 | 0.5414 | 0.0048 |
| 180 | SLU 57 | 13.93 | 0.12 | 105.94 | -0.0247 | 0.5497 | 0.0052 |
| 180 | SLU 58 | 13.37 | 0.1 | 107.08 | -0.0184 | 0.5306 | 0.0047 |
| 180 | SLU 59 | 13.68 | 0.12 | 105.06 | -0.0242 | 0.539 | 0.0052 |
| 180 | SLU 60 | 14.27 | 0.11 | 107.3 | -0.0218 | 0.5681 | 0.005 |
| 180 | SLU 61 | 14.58 | 0.13 | 105.29 | -0.0275 | 0.5764 | 0.0054 |
| 180 | SLU 62 | 14.31 | 0.11 | 110.08 | -0.0209 | 0.5697 | 0.005 |
| 180 | SLU 63 | 14.63 | 0.13 | 108.06 | -0.0267 | 0.5781 | 0.0054 |
| 180 | SLU 64 | 12.72 | 0.1 | 100.75 | -0.0192 | 0.503 | 0.0046 |
| 180 | SLU 65 | 13.24 | 0.13 | 97.39 | -0.0289 | 0.517 | 0.0053 |

| Nodo | Cont. | Reazione a traslazione | | | Reazione a rotazione | | |
|---|---|---|---|---|---|---|---|
| Ind. | N.br. | x | y | z | x | y | z |
| 180 | SLU 66 | 13.02 | 0.1 | 104.4 | -0.0189 | 0.5155 | 0.0047 |
| 180 | SLU 67 | 13.33 | 0.12 | 102.39 | -0.0247 | 0.5238 | 0.0051 |
| 180 | SLU 68 | 13.29 | 0.13 | 100.17 | -0.028 | 0.5186 | 0.0054 |
| 180 | SLU 69 | 13.06 | 0.1 | 107.17 | -0.018 | 0.5171 | 0.0047 |
| 180 | SLU 70 | 13.37 | 0.12 | 105.16 | -0.0238 | 0.5255 | 0.0051 |
| 180 | SLU 71 | 12.81 | 0.1 | 106.3 | -0.0175 | 0.5063 | 0.0046 |
| 180 | SLU 72 | 13.12 | 0.12 | 104.28 | -0.0233 | 0.5147 | 0.0051 |
| 180 | SLU 73 | 15.55 | 0.15 | 110.87 | -0.0325 | 0.6121 | 0.006 |
| 180 | SLU 74 | 15.32 | 0.12 | 117.87 | -0.0225 | 0.6106 | 0.0054 |
| 180 | SLU 75 | 15.63 | 0.14 | 115.86 | -0.0283 | 0.619 | 0.0058 |
| 180 | SLU 76 | 15.59 | 0.15 | 113.64 | -0.0317 | 0.6138 | 0.006 |
| 180 | SLU 77 | 15.37 | 0.12 | 120.65 | -0.0217 | 0.6123 | 0.0054 |
| 180 | SLU 78 | 15.68 | 0.14 | 118.63 | -0.0274 | 0.6206 | 0.0058 |
| 180 | SLU 79 | 15.11 | 0.12 | 119.77 | -0.0212 | 0.6015 | 0.0053 |
| 180 | SLU 80 | 15.43 | 0.13 | 117.76 | -0.0269 | 0.6099 | 0.0058 |
| 180 | SLU 81 | 16.01 | 0.13 | 120 | -0.0245 | 0.639 | 0.0056 |
| 180 | SLU 82 | 16.33 | 0.14 | 117.98 | -0.0303 | 0.6473 | 0.006 |
| 180 | SLU 83 | 16.06 | 0.12 | 122.77 | -0.0236 | 0.6406 | 0.0056 |
| 180 | SLU 84 | 16.37 | 0.14 | 120.76 | -0.0294 | 0.649 | 0.0061 |
| 180 | SLE RA 1 | 9.4 | 0.08 | 74.71 | -0.0142 | 0.3714 | 0.0034 |
| 180 | SLE RA 2 | 9.75 | 0.09 | 72.47 | -0.0206 | 0.3807 | 0.0039 |
| 180 | SLE RA 3 | 9.6 | 0.08 | 77.14 | -0.014 | 0.3797 | 0.0035 |
| 180 | SLE RA 4 | 9.81 | 0.09 | 75.8 | -0.0178 | 0.3852 | 0.0038 |
| 180 | SLE RA 5 | 9.78 | 0.09 | 74.32 | -0.02 | 0.3818 | 0.0039 |
| 180 | SLE RA 6 | 9.63 | 0.07 | 78.99 | -0.0134 | 0.3808 | 0.0035 |
| 180 | SLE RA 7 | 9.84 | 0.09 | 77.65 | -0.0172 | 0.3863 | 0.0038 |
| 180 | SLE RA 8 | 9.46 | 0.07 | 78.41 | -0.013 | 0.3736 | 0.0034 |
| 180 | SLE RA 9 | 9.67 | 0.09 | 77.07 | -0.0169 | 0.3791 | 0.0037 |
| 180 | SLE RA 10 | 11.29 | 0.11 | 81.45 | -0.0231 | 0.4441 | 0.0044 |
| 180 | SLE RA 11 | 11.14 | 0.09 | 86.13 | -0.0164 | 0.4431 | 0.0039 |
| 180 | SLE RA 12 | 11.34 | 0.1 | 84.78 | -0.0203 | 0.4487 | 0.0042 |
| 180 | SLE RA 13 | 11.32 | 0.11 | 83.3 | -0.0225 | 0.4452 | 0.0044 |
| 180 | SLE RA 14 | 11.16 | 0.09 | 87.97 | -0.0158 | 0.4442 | 0.0039 |
| 180 | SLE RA 15 | 11.37 | 0.1 | 86.63 | -0.0197 | 0.4498 | 0.0042 |
| 180 | SLE RA 16 | 11 | 0.08 | 87.39 | -0.0155 | 0.437 | 0.0039 |
| 180 | SLE RA 17 | 11.21 | 0.1 | 86.05 | -0.0193 | 0.4426 | 0.0042 |
| 180 | SLE RA 18 | 11.6 | 0.09 | 87.54 | -0.0177 | 0.462 | 0.0041 |
| 180 | SLE RA 19 | 11.81 | 0.1 | 86.2 | -0.0215 | 0.4676 | 0.0044 |
| 180 | SLE RA 20 | 11.63 | 0.09 | 89.39 | -0.0171 | 0.4631 | 0.0041 |
| 180 | SLE RA 21 | 11.84 | 0.1 | 88.05 | -0.021 | 0.4687 | 0.0044 |
| 180 | SLE FR 1 | 9.4 | 0.08 | 74.71 | -0.0142 | 0.3714 | 0.0034 |
| 180 | SLE FR 2 | 9.47 | 0.08 | 74.26 | -0.0155 | 0.3732 | 0.0035 |
| 180 | SLE FR 3 | 9.42 | 0.07 | 75.45 | -0.014 | 0.3718 | 0.0034 |
| 180 | SLE FR 4 | 10.13 | 0.08 | 78.11 | -0.0165 | 0.4004 | 0.0037 |
| 180 | SLE FR 5 | 10.07 | 0.08 | 79.3 | -0.015 | 0.399 | 0.0036 |
| 180 | SLE FR 6 | 10.5 | 0.08 | 81.13 | -0.0159 | 0.4167 | 0.0037 |
| 180 | SLE QP 1 | 9.4 | 0.08 | 74.71 | -0.0142 | 0.3714 | 0.0034 |
| 180 | SLE QP 2 | 10.06 | 0.08 | 78.56 | -0.0153 | 0.3986 | 0.0036 |
| 180 | SLD 1 | 21.47 | 0.24 | 85.86 | -0.0944 | 0.9649 | 0.0088 |
| 180 | SLD 2 | 21.47 | 0.24 | 85.86 | -0.0944 | 0.9649 | 0.0088 |
| 180 | SLD 3 | 22.45 | 0.14 | 90.59 | -0.0051 | 1.01 | 0.0067 |
| 180 | SLD 4 | 22.45 | 0.14 | 90.59 | -0.0051 | 1.01 | 0.0067 |
| 180 | SLD 5 | 11.99 | 0.29 | 73.59 | -0.1744 | 0.5001 | 0.0082 |
| 180 | SLD 6 | 11.99 | 0.29 | 73.59 | -0.1744 | 0.5001 | 0.0082 |
| 180 | SLD 7 | 15.27 | -0.06 | 89.33 | 0.1232 | 0.6504 | 0.0015 |
| 180 | SLD 8 | 15.27 | -0.06 | 89.33 | 0.1232 | 0.6504 | 0.0015 |
| 180 | SLD 9 | 4.85 | 0.22 | 67.79 | -0.1537 | 0.1468 | 0.0057 |
| 180 | SLD 10 | 4.85 | 0.22 | 67.79 | -0.1537 | 0.1468 | 0.0057 |
| 180 | SLD 11 | 8.13 | -0.13 | 83.53 | 0.1439 | 0.297 | -0.001 |
| 180 | SLD 12 | 8.13 | -0.13 | 83.53 | 0.1439 | 0.297 | -0.001 |
| 180 | SLD 13 | -2.33 | 0.02 | 66.54 | -0.0254 | -0.2128 | 0.0005 |
| 180 | SLD 14 | -2.33 | 0.02 | 66.54 | -0.0254 | -0.2128 | 0.0005 |
| 180 | SLD 15 | -1.35 | -0.08 | 71.26 | 0.0639 | -0.1678 | -0.0016 |
| 180 | SLD 16 | -1.35 | -0.08 | 71.26 | 0.0639 | -0.1678 | -0.0016 |
| 180 | SLV 1 | 36.3 | 0.47 | 95.42 | -0.207 | 1.7028 | 0.0157 |
| 180 | SLV 2 | 36.3 | 0.47 | 95.42 | -0.207 | 1.7028 | 0.0157 |
| 180 | SLV 3 | 38.67 | 0.21 | 106.78 | 0.0135 | 1.8097 | 0.0108 |
| 180 | SLV 4 | 38.67 | 0.21 | 106.78 | 0.0135 | 1.8097 | 0.0108 |
| 180 | SLV 5 | 14.34 | 0.59 | 66.39 | -0.4073 | 0.6277 | 0.0147 |
| 180 | SLV 6 | 14.34 | 0.59 | 66.39 | -0.4073 | 0.6277 | 0.0147 |
| 180 | SLV 7 | 22.24 | -0.28 | 104.26 | 0.3279 | 0.9841 | -0.0017 |
| 180 | SLV 8 | 22.24 | -0.28 | 104.26 | 0.3279 | 0.9841 | -0.0017 |
| 180 | SLV 9 | -2.12 | 0.44 | 52.87 | -0.3584 | -0.1869 | 0.0089 |
| 180 | SLV 10 | -2.12 | 0.44 | 52.87 | -0.3584 | -0.1869 | 0.0089 |
| 180 | SLV 11 | 5.79 | -0.43 | 90.74 | 0.3767 | 0.1694 | -0.0075 |
| 180 | SLV 12 | 5.79 | -0.43 | 90.74 | 0.3767 | 0.1694 | -0.0075 |
| 180 | SLV 13 | -18.55 | -0.05 | 50.35 | -0.044 | -1.0126 | -0.0036 |
| 180 | SLV 14 | -18.55 | -0.05 | 50.35 | -0.044 | -1.0126 | -0.0036 |
| 180 | SLV 15 | -16.18 | -0.31 | 61.71 | 0.1765 | -0.9057 | -0.0085 |
| 180 | SLV 16 | -16.18 | -0.31 | 61.71 | 0.1765 | -0.9057 | -0.0085 |
| 181 | SLU 1 | 5.55 | 0.06 | 72.44 | -0.0228 | 0.1711 | 0 |
| 181 | SLU 2 | 5.94 | 0.07 | 70.18 | -0.0296 | 0.1841 | 0 |
| 181 | SLU 3 | 5.69 | 0.06 | 75.99 | -0.023 | 0.1752 | -0.0001 |
| 181 | SLU 4 | 5.92 | 0.06 | 74.64 | -0.0271 | 0.183 | 0 |
| 181 | SLU 5 | 5.85 | 0.07 | 72.83 | -0.0292 | 0.1812 | 0 |
| 181 | SLU 6 | 5.6 | 0.06 | 78.64 | -0.0226 | 0.1723 | -0.0001 |
| 181 | SLU 7 | 5.83 | 0.06 | 77.29 | -0.0267 | 0.1801 | 0 |
| 181 | SLU 8 | 5.38 | 0.06 | 77.74 | -0.022 | 0.1653 | -0.0001 |

| Nodo | Cont. | Reazione a traslazione | | | Reazione a rotazione | | |
|---|---|---|---|---|---|---|---|
| Ind. | N.br. | x | y | z | x | y | z |
| 181 | SLU 9 | 5.61 | 0.06 | 76.38 | -0.0261 | 0.1732 | 0 |
| 181 | SLU 10 | 7.67 | 0.08 | 83.96 | -0.0349 | 0.2377 | 0 |
| 181 | SLU 11 | 7.42 | 0.07 | 89.77 | -0.0283 | 0.2287 | -0.0001 |
| 181 | SLU 12 | 7.66 | 0.08 | 88.42 | -0.0324 | 0.2365 | 0 |
| 181 | SLU 13 | 7.58 | 0.08 | 86.61 | -0.0345 | 0.2348 | 0 |
| 181 | SLU 14 | 7.34 | 0.07 | 92.42 | -0.0279 | 0.2258 | -0.0001 |
| 181 | SLU 15 | 7.57 | 0.08 | 91.07 | -0.032 | 0.2337 | 0 |
| 181 | SLU 16 | 7.11 | 0.07 | 91.51 | -0.0273 | 0.2189 | -0.0001 |
| 181 | SLU 17 | 7.34 | 0.08 | 90.16 | -0.0314 | 0.2267 | 0 |
| 181 | SLU 18 | 8.03 | 0.07 | 92.12 | -0.0304 | 0.2476 | -0.0001 |
| 181 | SLU 19 | 8.26 | 0.08 | 90.77 | -0.0345 | 0.2554 | 0 |
| 181 | SLU 20 | 7.94 | 0.07 | 94.77 | -0.03 | 0.2447 | -0.0001 |
| 181 | SLU 21 | 8.17 | 0.08 | 93.42 | -0.034 | 0.2525 | 0 |
| 181 | SLU 22 | 6.71 | 0.07 | 85.33 | -0.0272 | 0.2066 | -0.0001 |
| 181 | SLU 23 | 7.09 | 0.08 | 83.08 | -0.034 | 0.2197 | 0 |
| 181 | SLU 24 | 6.84 | 0.07 | 88.89 | -0.0274 | 0.2107 | -0.0001 |
| 181 | SLU 25 | 7.08 | 0.07 | 87.53 | -0.0314 | 0.2185 | 0 |
| 181 | SLU 26 | 7.01 | 0.08 | 85.72 | -0.0335 | 0.2168 | 0 |
| 181 | SLU 27 | 6.76 | 0.07 | 91.54 | -0.0269 | 0.2079 | -0.0001 |
| 181 | SLU 28 | 6.99 | 0.08 | 90.18 | -0.031 | 0.2157 | 0 |
| 181 | SLU 29 | 6.53 | 0.07 | 90.63 | -0.0263 | 0.2009 | -0.0001 |
| 181 | SLU 30 | 6.76 | 0.07 | 89.28 | -0.0304 | 0.2087 | 0 |
| 181 | SLU 31 | 8.83 | 0.09 | 96.85 | -0.0392 | 0.2732 | 0 |
| 181 | SLU 32 | 8.58 | 0.08 | 102.66 | -0.0326 | 0.2643 | -0.0001 |
| 181 | SLU 33 | 8.81 | 0.09 | 101.31 | -0.0367 | 0.2721 | 0 |
| 181 | SLU 34 | 8.74 | 0.09 | 99.5 | -0.0388 | 0.2703 | 0 |
| 181 | SLU 35 | 8.49 | 0.08 | 105.31 | -0.0322 | 0.2614 | -0.0001 |
| 181 | SLU 36 | 8.72 | 0.09 | 103.96 | -0.0363 | 0.2692 | 0 |
| 181 | SLU 37 | 8.27 | 0.08 | 104.41 | -0.0316 | 0.2544 | -0.0001 |
| 181 | SLU 38 | 8.5 | 0.09 | 103.05 | -0.0357 | 0.2623 | 0 |
| 181 | SLU 39 | 9.18 | 0.08 | 105.01 | -0.0347 | 0.2831 | -0.0001 |
| 181 | SLU 40 | 9.42 | 0.09 | 103.66 | -0.0388 | 0.2909 | 0 |
| 181 | SLU 41 | 9.1 | 0.09 | 107.66 | -0.0343 | 0.2803 | -0.0001 |
| 181 | SLU 42 | 9.33 | 0.09 | 106.31 | -0.0384 | 0.2881 | 0 |
| 181 | SLU 43 | 6.82 | 0.07 | 89.75 | -0.0282 | 0.2102 | -0.0001 |
| 181 | SLU 44 | 7.21 | 0.08 | 87.49 | -0.035 | 0.2232 | 0 |
| 181 | SLU 45 | 6.96 | 0.07 | 93.3 | -0.0284 | 0.2143 | -0.0001 |
| 181 | SLU 46 | 7.19 | 0.08 | 91.95 | -0.0325 | 0.2221 | 0 |
| 181 | SLU 47 | 7.12 | 0.08 | 90.14 | -0.0346 | 0.2204 | 0 |
| 181 | SLU 48 | 6.87 | 0.07 | 95.95 | -0.028 | 0.2114 | -0.0001 |
| 181 | SLU 49 | 7.1 | 0.08 | 94.6 | -0.032 | 0.2192 | 0 |
| 181 | SLU 50 | 6.65 | 0.07 | 95.05 | -0.0274 | 0.2045 | -0.0001 |
| 181 | SLU 51 | 6.88 | 0.08 | 93.69 | -0.0314 | 0.2123 | 0 |
| 181 | SLU 52 | 8.94 | 0.09 | 101.27 | -0.0403 | 0.2768 | 0 |
| 181 | SLU 53 | 8.69 | 0.08 | 107.08 | -0.0337 | 0.2678 | -0.0001 |
| 181 | SLU 54 | 8.92 | 0.09 | 105.73 | -0.0377 | 0.2757 | 0 |
| 181 | SLU 55 | 8.85 | 0.09 | 103.92 | -0.0399 | 0.2739 | 0 |
| 181 | SLU 56 | 8.61 | 0.08 | 109.73 | -0.0333 | 0.265 | -0.0001 |
| 181 | SLU 57 | 8.84 | 0.09 | 108.38 | -0.0373 | 0.2728 | 0 |
| 181 | SLU 58 | 8.38 | 0.08 | 108.83 | -0.0327 | 0.258 | -0.0001 |
| 181 | SLU 59 | 8.61 | 0.09 | 107.47 | -0.0367 | 0.2658 | 0 |
| 181 | SLU 60 | 9.3 | 0.09 | 109.43 | -0.0357 | 0.2867 | -0.0001 |
| 181 | SLU 61 | 9.53 | 0.09 | 108.08 | -0.0398 | 0.2945 | 0 |
| 181 | SLU 62 | 9.21 | 0.09 | 112.08 | -0.0353 | 0.2838 | -0.0001 |
| 181 | SLU 63 | 9.44 | 0.09 | 110.73 | -0.0394 | 0.2916 | 0 |
| 181 | SLU 64 | 7.97 | 0.08 | 102.64 | -0.0325 | 0.2458 | -0.0001 |
| 181 | SLU 65 | 8.36 | 0.09 | 100.39 | -0.0393 | 0.2588 | 0 |
| 181 | SLU 66 | 8.11 | 0.08 | 106.2 | -0.0327 | 0.2498 | -0.0001 |
| 181 | SLU 67 | 8.35 | 0.09 | 104.84 | -0.0368 | 0.2577 | 0 |
| 181 | SLU 68 | 8.27 | 0.09 | 103.04 | -0.0389 | 0.2559 | 0 |
| 181 | SLU 69 | 8.03 | 0.08 | 108.85 | -0.0323 | 0.247 | -0.0001 |
| 181 | SLU 70 | 8.26 | 0.09 | 107.49 | -0.0364 | 0.2548 | 0 |
| 181 | SLU 71 | 7.8 | 0.08 | 107.94 | -0.0317 | 0.24 | -0.0001 |
| 181 | SLU 72 | 8.03 | 0.09 | 106.59 | -0.0358 | 0.2478 | 0 |
| 181 | SLU 73 | 10.1 | 0.1 | 114.16 | -0.0446 | 0.3123 | 0 |
| 181 | SLU 74 | 9.85 | 0.09 | 119.98 | -0.038 | 0.3034 | -0.0001 |
| 181 | SLU 75 | 10.08 | 0.1 | 118.62 | -0.0421 | 0.3112 | 0 |
| 181 | SLU 76 | 10.01 | 0.1 | 116.81 | -0.0442 | 0.3095 | 0 |
| 181 | SLU 77 | 9.76 | 0.1 | 122.62 | -0.0376 | 0.3005 | -0.0001 |
| 181 | SLU 78 | 9.99 | 0.1 | 121.27 | -0.0417 | 0.3084 | -0.0001 |
| 181 | SLU 79 | 9.54 | 0.09 | 121.72 | -0.037 | 0.2936 | -0.0001 |
| 181 | SLU 80 | 9.77 | 0.1 | 120.37 | -0.0411 | 0.3014 | -0.0001 |
| 181 | SLU 81 | 10.45 | 0.1 | 122.33 | -0.0401 | 0.3223 | -0.0001 |
| 181 | SLU 82 | 10.68 | 0.1 | 120.97 | -0.0442 | 0.3301 | 0 |
| 181 | SLU 83 | 10.37 | 0.1 | 124.97 | -0.0397 | 0.3194 | -0.0001 |
| 181 | SLU 84 | 10.6 | 0.1 | 123.62 | -0.0437 | 0.3272 | 0 |
| 181 | SLE RA 1 | 5.88 | 0.06 | 76.12 | -0.0241 | 0.1812 | 0 |
| 181 | SLE RA 2 | 6.14 | 0.07 | 74.62 | -0.0286 | 0.1899 | 0 |
| 181 | SLE RA 3 | 5.97 | 0.06 | 78.49 | -0.0242 | 0.184 | -0.0001 |
| 181 | SLE RA 4 | 6.13 | 0.06 | 77.59 | -0.0269 | 0.1892 | 0 |
| 181 | SLE RA 5 | 6.08 | 0.07 | 76.38 | -0.0283 | 0.188 | 0 |
| 181 | SLE RA 6 | 5.92 | 0.06 | 80.26 | -0.0239 | 0.182 | -0.0001 |
| 181 | SLE RA 7 | 6.07 | 0.06 | 79.36 | -0.0266 | 0.1873 | 0 |
| 181 | SLE RA 8 | 5.76 | 0.06 | 79.65 | -0.0235 | 0.1774 | -0.0001 |
| 181 | SLE RA 9 | 5.92 | 0.06 | 78.75 | -0.0262 | 0.1826 | 0 |
| 181 | SLE RA 10 | 7.29 | 0.07 | 83.8 | -0.0321 | 0.2256 | 0 |
| 181 | SLE RA 11 | 7.13 | 0.07 | 87.68 | -0.0277 | 0.2197 | -0.0001 |
| 181 | SLE RA 12 | 7.28 | 0.07 | 86.77 | -0.0304 | 0.2249 | 0 |

| Nodo | Cont. | Reazione a traslazione | | | Reazione a rotazione | | |
|---|---|---|---|---|---|---|---|
| Ind. | N.br. | x | y | z | x | y | z |
| 181 | SLE RA 13 | 7.24 | 0.07 | 85.57 | -0.0318 | 0.2237 | 0 |
| 181 | SLE RA 14 | 7.07 | 0.07 | 89.44 | -0.0274 | 0.2177 | -0.0001 |
| 181 | SLE RA 15 | 7.23 | 0.07 | 88.54 | -0.0302 | 0.223 | 0 |
| 181 | SLE RA 16 | 6.92 | 0.07 | 88.84 | -0.027 | 0.2131 | -0.0001 |
| 181 | SLE RA 17 | 7.08 | 0.07 | 87.94 | -0.0298 | 0.2183 | 0 |
| 181 | SLE RA 18 | 7.53 | 0.07 | 89.24 | -0.0291 | 0.2322 | -0.0001 |
| 181 | SLE RA 19 | 7.69 | 0.07 | 88.34 | -0.0318 | 0.2374 | 0 |
| 181 | SLE RA 20 | 7.47 | 0.07 | 91.01 | -0.0288 | 0.2303 | -0.0001 |
| 181 | SLE RA 21 | 7.63 | 0.08 | 90.11 | -0.0315 | 0.2355 | 0 |
| 181 | SLE FR 1 | 5.88 | 0.06 | 76.12 | -0.0241 | 0.1812 | 0 |
| 181 | SLE FR 2 | 5.93 | 0.06 | 75.82 | -0.025 | 0.183 | 0 |
| 181 | SLE FR 3 | 5.86 | 0.06 | 76.83 | -0.024 | 0.1805 | 0 |
| 181 | SLE FR 4 | 6.43 | 0.06 | 79.76 | -0.0265 | 0.1983 | 0 |
| 181 | SLE FR 5 | 6.35 | 0.06 | 80.77 | -0.0255 | 0.1958 | -0.0001 |
| 181 | SLE FR 6 | 6.71 | 0.07 | 82.68 | -0.0266 | 0.2067 | 0 |
| 181 | SLE QP 1 | 5.88 | 0.06 | 76.12 | -0.0241 | 0.1812 | 0 |
| 181 | SLE QP 2 | 6.38 | 0.06 | 80.06 | -0.0256 | 0.1965 | 0 |
| 181 | SLD 1 | 19.98 | 0.24 | 85.7 | -0.1692 | 0.61 | -0.0009 |
| 181 | SLD 2 | 19.98 | 0.24 | 85.7 | -0.1692 | 0.61 | -0.0009 |
| 181 | SLD 3 | 21.1 | 0.08 | 82.7 | 0.0126 | 0.6437 | 0.0002 |
| 181 | SLD 4 | 21.1 | 0.08 | 82.7 | 0.0126 | 0.6437 | 0.0002 |
| 181 | SLD 5 | 8.77 | 0.36 | 86.3 | -0.3444 | 0.2693 | -0.002 |
| 181 | SLD 6 | 8.77 | 0.36 | 86.3 | -0.3444 | 0.2693 | -0.002 |
| 181 | SLD 7 | 12.48 | -0.17 | 76.3 | 0.2616 | 0.3819 | 0.0017 |
| 181 | SLD 8 | 12.48 | -0.17 | 76.3 | 0.2616 | 0.3819 | 0.0017 |
| 181 | SLD 9 | 0.28 | 0.3 | 83.82 | -0.3128 | 0.0112 | -0.0018 |
| 181 | SLD 10 | 0.28 | 0.3 | 83.82 | -0.3128 | 0.0112 | -0.0018 |
| 181 | SLD 11 | 3.98 | -0.23 | 73.81 | 0.2932 | 0.1237 | 0.0019 |
| 181 | SLD 12 | 3.98 | -0.23 | 73.81 | 0.2932 | 0.1237 | 0.0019 |
| 181 | SLD 13 | -8.34 | 0.05 | 77.42 | -0.0638 | -0.2507 | -0.0003 |
| 181 | SLD 14 | -8.34 | 0.05 | 77.42 | -0.0638 | -0.2507 | -0.0003 |
| 181 | SLD 15 | -7.23 | -0.11 | 74.42 | 0.118 | -0.2169 | 0.0008 |
| 181 | SLD 16 | -7.23 | -0.11 | 74.42 | 0.118 | -0.2169 | 0.0008 |
| 181 | SLV 1 | 37.7 | 0.49 | 93.42 | -0.3755 | 1.1479 | -0.002 |
| 181 | SLV 2 | 37.7 | 0.49 | 93.42 | -0.3755 | 1.1479 | -0.002 |
| 181 | SLV 3 | 40.34 | 0.1 | 86.14 | 0.0741 | 1.2285 | 0.0007 |
| 181 | SLV 4 | 40.34 | 0.1 | 86.14 | 0.0741 | 1.2285 | 0.0007 |
| 181 | SLV 5 | 11.76 | 0.79 | 95.11 | -0.8124 | 0.3598 | -0.0048 |
| 181 | SLV 6 | 11.76 | 0.79 | 95.11 | -0.8124 | 0.3598 | -0.0048 |
| 181 | SLV 7 | 20.57 | -0.52 | 70.84 | 0.6862 | 0.6283 | 0.0043 |
| 181 | SLV 8 | 20.57 | -0.52 | 70.84 | 0.6862 | 0.6283 | 0.0043 |
| 181 | SLV 9 | -7.82 | 0.65 | 89.28 | -0.7374 | -0.2352 | -0.0044 |
| 181 | SLV 10 | -7.82 | 0.65 | 89.28 | -0.7374 | -0.2352 | -0.0044 |
| 181 | SLV 11 | 0.99 | -0.66 | 65.01 | 0.7613 | 0.0333 | 0.0047 |
| 181 | SLV 12 | 0.99 | -0.66 | 65.01 | 0.7613 | 0.0333 | 0.0047 |
| 181 | SLV 13 | -27.59 | 0.03 | 73.98 | -0.1253 | -0.8354 | -0.0008 |
| 181 | SLV 14 | -27.59 | 0.03 | 73.98 | -0.1253 | -0.8354 | -0.0008 |
| 181 | SLV 15 | -24.95 | -0.36 | 66.7 | 0.3243 | -0.7549 | 0.002 |
| 181 | SLV 16 | -24.95 | -0.36 | 66.7 | 0.3243 | -0.7549 | 0.002 |
| 182 | SLU 1 | 3.39 | 0.02 | 73.34 | -0.0198 | 0.1108 | -0.0015 |
| 182 | SLU 2 | 3.78 | 0.02 | 71.6 | -0.0246 | 0.1226 | -0.0018 |
| 182 | SLU 3 | 3.42 | 0.02 | 76.83 | -0.0199 | 0.1121 | -0.0015 |
| 182 | SLU 4 | 3.66 | 0.02 | 75.79 | -0.0228 | 0.1191 | -0.0017 |
| 182 | SLU 5 | 3.62 | 0.02 | 74.16 | -0.0241 | 0.1166 | -0.0018 |
| 182 | SLU 6 | 3.26 | 0.02 | 79.38 | -0.0193 | 0.1061 | -0.0015 |
| 182 | SLU 7 | 3.49 | 0.02 | 78.34 | -0.0222 | 0.1131 | -0.0017 |
| 182 | SLU 8 | 3.06 | 0.02 | 78.45 | -0.0187 | 0.0989 | -0.0015 |
| 182 | SLU 9 | 3.29 | 0.02 | 77.4 | -0.0216 | 0.1059 | -0.0017 |
| 182 | SLU 10 | 5.13 | 0.03 | 85.62 | -0.0292 | 0.1694 | -0.0021 |
| 182 | SLU 11 | 4.77 | 0.02 | 90.84 | -0.0244 | 0.1589 | -0.0019 |
| 182 | SLU 12 | 5.01 | 0.02 | 89.8 | -0.0273 | 0.1659 | -0.002 |
| 182 | SLU 13 | 4.96 | 0.02 | 88.17 | -0.0287 | 0.1634 | -0.0021 |
| 182 | SLU 14 | 4.61 | 0.02 | 93.39 | -0.0239 | 0.1529 | -0.0019 |
| 182 | SLU 15 | 4.84 | 0.02 | 92.35 | -0.0268 | 0.16 | -0.002 |
| 182 | SLU 16 | 4.4 | 0.02 | 92.46 | -0.0233 | 0.1457 | -0.0018 |
| 182 | SLU 17 | 4.64 | 0.02 | 91.42 | -0.0262 | 0.1527 | -0.002 |
| 182 | SLU 18 | 5.31 | 0.02 | 93.36 | -0.0264 | 0.1777 | -0.002 |
| 182 | SLU 19 | 5.55 | 0.03 | 92.32 | -0.0292 | 0.1848 | -0.0021 |
| 182 | SLU 20 | 5.15 | 0.02 | 95.91 | -0.0258 | 0.1718 | -0.002 |
| 182 | SLU 21 | 5.38 | 0.02 | 94.87 | -0.0287 | 0.1788 | -0.0021 |
| 182 | SLU 22 | 4.16 | 0.02 | 86.35 | -0.0235 | 0.137 | -0.0018 |
| 182 | SLU 23 | 4.55 | 0.02 | 84.61 | -0.0284 | 0.1487 | -0.0021 |
| 182 | SLU 24 | 4.2 | 0.02 | 89.84 | -0.0236 | 0.1382 | -0.0018 |
| 182 | SLU 25 | 4.43 | 0.02 | 88.79 | -0.0265 | 0.1452 | -0.002 |
| 182 | SLU 26 | 4.39 | 0.02 | 87.16 | -0.0278 | 0.1427 | -0.002 |
| 182 | SLU 27 | 4.03 | 0.02 | 92.39 | -0.0231 | 0.1322 | -0.0018 |
| 182 | SLU 28 | 4.27 | 0.02 | 91.35 | -0.0259 | 0.1392 | -0.002 |
| 182 | SLU 29 | 3.83 | 0.02 | 91.45 | -0.0225 | 0.125 | -0.0018 |
| 182 | SLU 30 | 4.06 | 0.02 | 90.41 | -0.0254 | 0.132 | -0.0019 |
| 182 | SLU 31 | 5.9 | 0.03 | 98.63 | -0.033 | 0.1955 | -0.0024 |
| 182 | SLU 32 | 5.54 | 0.02 | 103.85 | -0.0282 | 0.185 | -0.0022 |
| 182 | SLU 33 | 5.78 | 0.03 | 102.81 | -0.0311 | 0.192 | -0.0023 |
| 182 | SLU 34 | 5.73 | 0.03 | 101.18 | -0.0324 | 0.1895 | -0.0024 |
| 182 | SLU 35 | 5.38 | 0.02 | 106.4 | -0.0276 | 0.179 | -0.0022 |
| 182 | SLU 36 | 5.61 | 0.03 | 105.36 | -0.0305 | 0.1861 | -0.0023 |
| 182 | SLU 37 | 5.18 | 0.02 | 105.47 | -0.027 | 0.1718 | -0.0021 |
| 182 | SLU 38 | 5.41 | 0.03 | 104.43 | -0.0299 | 0.1789 | -0.0023 |
| 182 | SLU 39 | 6.08 | 0.03 | 106.37 | -0.0301 | 0.2038 | -0.0023 |

| Nodo | Cont. | Reazione a traslazione | | | Reazione a rotazione | | |
|---|---|---|---|---|---|---|---|
| Ind. | N.br. | x | y | z | x | y | z |
| 182 | SLU 40 | 6.32 | 0.03 | 105.33 | -0.033 | 0.2109 | -0.0024 |
| 182 | SLU 41 | 5.92 | 0.03 | 108.92 | -0.0295 | 0.1979 | -0.0023 |
| 182 | SLU 42 | 6.15 | 0.03 | 107.88 | -0.0324 | 0.2049 | -0.0024 |
| 182 | SLU 43 | 4.14 | 0.02 | 90.89 | -0.0245 | 0.1351 | -0.0019 |
| 182 | SLU 44 | 4.53 | 0.02 | 89.15 | -0.0293 | 0.1469 | -0.0021 |
| 182 | SLU 45 | 4.18 | 0.02 | 94.37 | -0.0245 | 0.1364 | -0.0019 |
| 182 | SLU 46 | 4.41 | 0.02 | 93.33 | -0.0274 | 0.1434 | -0.002 |
| 182 | SLU 47 | 4.37 | 0.02 | 91.7 | -0.0288 | 0.1409 | -0.0021 |
| 182 | SLU 48 | 4.01 | 0.02 | 96.92 | -0.024 | 0.1304 | -0.0019 |
| 182 | SLU 49 | 4.25 | 0.02 | 95.88 | -0.0269 | 0.1374 | -0.002 |
| 182 | SLU 50 | 3.81 | 0.02 | 95.99 | -0.0234 | 0.1232 | -0.0018 |
| 182 | SLU 51 | 4.04 | 0.02 | 94.95 | -0.0263 | 0.1302 | -0.002 |
| 182 | SLU 52 | 5.88 | 0.03 | 103.16 | -0.0339 | 0.1937 | -0.0025 |
| 182 | SLU 53 | 5.52 | 0.02 | 108.39 | -0.0291 | 0.1832 | -0.0022 |
| 182 | SLU 54 | 5.76 | 0.03 | 107.34 | -0.032 | 0.1902 | -0.0024 |
| 182 | SLU 55 | 5.71 | 0.03 | 105.71 | -0.0333 | 0.1877 | -0.0025 |
| 182 | SLU 56 | 5.36 | 0.02 | 110.94 | -0.0286 | 0.1772 | -0.0022 |
| 182 | SLU 57 | 5.59 | 0.03 | 109.89 | -0.0315 | 0.1843 | -0.0024 |
| 182 | SLU 58 | 5.16 | 0.02 | 110 | -0.028 | 0.17 | -0.0022 |
| 182 | SLU 59 | 5.39 | 0.03 | 108.96 | -0.0309 | 0.177 | -0.0023 |
| 182 | SLU 60 | 6.06 | 0.03 | 110.91 | -0.031 | 0.202 | -0.0023 |
| 182 | SLU 61 | 6.3 | 0.03 | 109.86 | -0.0339 | 0.2091 | -0.0025 |
| 182 | SLU 62 | 5.9 | 0.03 | 113.46 | -0.0305 | 0.1961 | -0.0023 |
| 182 | SLU 63 | 6.13 | 0.03 | 112.41 | -0.0334 | 0.2031 | -0.0025 |
| 182 | SLU 64 | 4.91 | 0.02 | 103.89 | -0.0282 | 0.1613 | -0.0021 |
| 182 | SLU 65 | 5.3 | 0.03 | 102.16 | -0.033 | 0.173 | -0.0024 |
| 182 | SLU 66 | 4.95 | 0.02 | 107.38 | -0.0283 | 0.1625 | -0.0022 |
| 182 | SLU 67 | 5.18 | 0.03 | 106.34 | -0.0312 | 0.1695 | -0.0023 |
| 182 | SLU 68 | 5.14 | 0.03 | 104.71 | -0.0325 | 0.167 | -0.0024 |
| 182 | SLU 69 | 4.78 | 0.02 | 109.93 | -0.0277 | 0.1565 | -0.0022 |
| 182 | SLU 70 | 5.02 | 0.03 | 108.89 | -0.0306 | 0.1635 | -0.0023 |
| 182 | SLU 71 | 4.58 | 0.02 | 109 | -0.0271 | 0.1493 | -0.0021 |
| 182 | SLU 72 | 4.82 | 0.03 | 107.95 | -0.03 | 0.1563 | -0.0023 |
| 182 | SLU 73 | 6.65 | 0.03 | 116.17 | -0.0376 | 0.2198 | -0.0027 |
| 182 | SLU 74 | 6.29 | 0.03 | 121.39 | -0.0328 | 0.2093 | -0.0025 |
| 182 | SLU 75 | 6.53 | 0.03 | 120.35 | -0.0357 | 0.2163 | -0.0027 |
| 182 | SLU 76 | 6.49 | 0.03 | 118.72 | -0.0371 | 0.2138 | -0.0027 |
| 182 | SLU 77 | 6.13 | 0.03 | 123.95 | -0.0323 | 0.2033 | -0.0025 |
| 182 | SLU 78 | 6.36 | 0.03 | 122.9 | -0.0352 | 0.2104 | -0.0027 |
| 182 | SLU 79 | 5.93 | 0.03 | 123.01 | -0.0317 | 0.1961 | -0.0025 |
| 182 | SLU 80 | 6.16 | 0.03 | 121.97 | -0.0346 | 0.2032 | -0.0026 |
| 182 | SLU 81 | 6.84 | 0.03 | 123.91 | -0.0348 | 0.2281 | -0.0026 |
| 182 | SLU 82 | 7.07 | 0.03 | 122.87 | -0.0376 | 0.2352 | -0.0028 |
| 182 | SLU 83 | 6.67 | 0.03 | 126.47 | -0.0342 | 0.2222 | -0.0026 |
| 182 | SLU 84 | 6.91 | 0.03 | 125.42 | -0.0371 | 0.2292 | -0.0028 |
| 182 | SLE RA 1 | 3.61 | 0.02 | 77.06 | -0.0209 | 0.1183 | -0.0016 |
| 182 | SLE RA 2 | 3.87 | 0.02 | 75.9 | -0.0241 | 0.1261 | -0.0018 |
| 182 | SLE RA 3 | 3.63 | 0.02 | 79.38 | -0.0209 | 0.1191 | -0.0016 |
| 182 | SLE RA 4 | 3.79 | 0.02 | 78.69 | -0.0228 | 0.1238 | -0.0017 |
| 182 | SLE RA 5 | 3.76 | 0.02 | 77.6 | -0.0237 | 0.1221 | -0.0018 |
| 182 | SLE RA 6 | 3.52 | 0.02 | 81.08 | -0.0205 | 0.1151 | -0.0016 |
| 182 | SLE RA 7 | 3.68 | 0.02 | 80.39 | -0.0225 | 0.1198 | -0.0017 |
| 182 | SLE RA 8 | 3.39 | 0.02 | 80.46 | -0.0201 | 0.1103 | -0.0016 |
| 182 | SLE RA 9 | 3.55 | 0.02 | 79.77 | -0.0221 | 0.115 | -0.0017 |
| 182 | SLE RA 10 | 4.77 | 0.02 | 85.24 | -0.0272 | 0.1573 | -0.002 |
| 182 | SLE RA 11 | 4.53 | 0.02 | 88.73 | -0.024 | 0.1503 | -0.0018 |
| 182 | SLE RA 12 | 4.69 | 0.02 | 88.03 | -0.0259 | 0.155 | -0.0019 |
| 182 | SLE RA 13 | 4.66 | 0.02 | 86.94 | -0.0268 | 0.1534 | -0.002 |
| 182 | SLE RA 14 | 4.42 | 0.02 | 90.43 | -0.0236 | 0.1464 | -0.0018 |
| 182 | SLE RA 15 | 4.58 | 0.02 | 89.73 | -0.0255 | 0.151 | -0.0019 |
| 182 | SLE RA 16 | 4.29 | 0.02 | 89.8 | -0.0232 | 0.1415 | -0.0018 |
| 182 | SLE RA 17 | 4.44 | 0.02 | 89.11 | -0.0251 | 0.1462 | -0.0019 |
| 182 | SLE RA 18 | 4.89 | 0.02 | 90.41 | -0.0252 | 0.1629 | -0.0019 |
| 182 | SLE RA 19 | 5.05 | 0.02 | 89.71 | -0.0272 | 0.1676 | -0.002 |
| 182 | SLE RA 20 | 4.78 | 0.02 | 92.11 | -0.0249 | 0.1589 | -0.0019 |
| 182 | SLE RA 21 | 4.94 | 0.02 | 91.41 | -0.0268 | 0.1636 | -0.002 |
| 182 | SLE FR 1 | 3.61 | 0.02 | 77.06 | -0.0209 | 0.1183 | -0.0016 |
| 182 | SLE FR 2 | 3.66 | 0.02 | 76.83 | -0.0215 | 0.1199 | -0.0016 |
| 182 | SLE FR 3 | 3.56 | 0.02 | 77.74 | -0.0207 | 0.1167 | -0.0016 |
| 182 | SLE FR 4 | 4.05 | 0.02 | 80.83 | -0.0228 | 0.1332 | -0.0017 |
| 182 | SLE FR 5 | 3.95 | 0.02 | 81.74 | -0.022 | 0.1301 | -0.0017 |
| 182 | SLE FR 6 | 4.25 | 0.02 | 83.73 | -0.0231 | 0.1406 | -0.0017 |
| 182 | SLE QP 1 | 3.61 | 0.02 | 77.06 | -0.0209 | 0.1183 | -0.0016 |
| 182 | SLE QP 2 | 3.99 | 0.02 | 81.06 | -0.0222 | 0.1317 | -0.0017 |
| 182 | SLD 1 | 17.63 | 0.24 | 83.57 | -0.2191 | 0.6679 | -0.0145 |
| 182 | SLD 2 | 17.63 | 0.24 | 83.57 | -0.2191 | 0.6679 | -0.0145 |
| 182 | SLD 3 | 18.77 | -0.05 | 81.15 | 0.0537 | 0.7124 | 0.0026 |
| 182 | SLD 4 | 18.77 | -0.05 | 81.15 | 0.0537 | 0.7124 | 0.0026 |
| 182 | SLD 5 | 6.35 | 0.52 | 85.48 | -0.4951 | 0.225 | -0.0316 |
| 182 | SLD 6 | 6.35 | 0.52 | 85.48 | -0.4951 | 0.225 | -0.0316 |
| 182 | SLD 7 | 10.16 | -0.43 | 77.42 | 0.4145 | 0.3734 | 0.0256 |
| 182 | SLD 8 | 10.16 | -0.43 | 77.42 | 0.4145 | 0.3734 | 0.0256 |
| 182 | SLD 9 | -2.17 | 0.47 | 84.71 | -0.4588 | -0.1101 | -0.029 |
| 182 | SLD 10 | -2.17 | 0.47 | 84.71 | -0.4588 | -0.1101 | -0.029 |
| 182 | SLD 11 | 1.63 | -0.48 | 76.64 | 0.4508 | 0.0383 | 0.0282 |
| 182 | SLD 12 | 1.63 | -0.48 | 76.64 | 0.4508 | 0.0383 | 0.0282 |
| 182 | SLD 13 | -10.79 | 0.08 | 80.98 | -0.0981 | -0.4491 | -0.006 |
| 182 | SLD 14 | -10.79 | 0.08 | 80.98 | -0.0981 | -0.4491 | -0.006 |

| Nodo | Cont. | Reazione a traslazione | | | Reazione a rotazione | | |
|---|---|---|---|---|---|---|---|
| Ind. | N.br. | x | y | z | x | y | z |
| 182 | SLD 15 | -9.65 | -0.2 | 78.56 | 0.1748 | -0.4045 | 0.0112 |
| 182 | SLD 16 | -9.65 | -0.2 | 78.56 | 0.1748 | -0.4045 | 0.0112 |
| 182 | SLV 1 | 35.38 | 0.55 | 87.16 | -0.5034 | 1.3665 | -0.033 |
| 182 | SLV 2 | 35.38 | 0.55 | 87.16 | -0.5034 | 1.3665 | -0.033 |
| 182 | SLV 3 | 38.1 | -0.15 | 81.28 | 0.1717 | 1.472 | 0.0093 |
| 182 | SLV 4 | 38.1 | -0.15 | 81.28 | 0.1717 | 1.472 | 0.0093 |
| 182 | SLV 5 | 9.29 | 1.25 | 91.81 | -1.1904 | 0.3422 | -0.0754 |
| 182 | SLV 6 | 9.29 | 1.25 | 91.81 | -1.1904 | 0.3422 | -0.0754 |
| 182 | SLV 7 | 18.34 | -1.1 | 72.21 | 1.0599 | 0.6937 | 0.0659 |
| 182 | SLV 8 | 18.34 | -1.1 | 72.21 | 1.0599 | 0.6937 | 0.0659 |
| 182 | SLV 9 | -10.36 | 1.14 | 89.92 | -1.1042 | -0.4303 | -0.0693 |
| 182 | SLV 10 | -10.36 | 1.14 | 89.92 | -1.1042 | -0.4303 | -0.0693 |
| 182 | SLV 11 | -1.3 | -1.21 | 70.31 | 1.146 | -0.0789 | 0.072 |
| 182 | SLV 12 | -1.3 | -1.21 | 70.31 | 1.146 | -0.0789 | 0.072 |
| 182 | SLV 13 | -30.11 | 0.19 | 80.84 | -0.2161 | -1.2086 | -0.0127 |
| 182 | SLV 14 | -30.11 | 0.19 | 80.84 | -0.2161 | -1.2086 | -0.0127 |
| 182 | SLV 15 | -27.4 | -0.52 | 74.96 | 0.459 | -1.1032 | 0.0297 |
| 182 | SLV 16 | -27.4 | -0.52 | 74.96 | 0.459 | -1.1032 | 0.0297 |
| 183 | SLU 1 | 1.89 | 0.01 | 74.71 | -0.023 | 0.0612 | -0.0017 |
| 183 | SLU 2 | 2.24 | 0.02 | 73.35 | -0.0265 | 0.0788 | -0.0019 |
| 183 | SLU 3 | 1.86 | 0.01 | 78.17 | -0.0231 | 0.0578 | -0.0017 |
| 183 | SLU 4 | 2.07 | 0.02 | 77.35 | -0.0252 | 0.0684 | -0.0018 |
| 183 | SLU 5 | 2.04 | 0.02 | 75.83 | -0.0259 | 0.0661 | -0.0019 |
| 183 | SLU 6 | 1.65 | 0.01 | 80.65 | -0.0226 | 0.0452 | -0.0017 |
| 183 | SLU 7 | 1.87 | 0.02 | 79.83 | -0.0247 | 0.0557 | -0.0018 |
| 183 | SLU 8 | 1.47 | 0.01 | 79.67 | -0.0219 | 0.0359 | -0.0016 |
| 183 | SLU 9 | 1.69 | 0.01 | 78.85 | -0.0239 | 0.0464 | -0.0018 |
| 183 | SLU 10 | 3.3 | 0.02 | 87.71 | -0.0315 | 0.1286 | -0.0022 |
| 183 | SLU 11 | 2.92 | 0.02 | 92.53 | -0.0282 | 0.1076 | -0.0021 |
| 183 | SLU 12 | 3.14 | 0.02 | 91.71 | -0.0303 | 0.1182 | -0.0022 |
| 183 | SLU 13 | 3.1 | 0.02 | 90.19 | -0.0309 | 0.1159 | -0.0022 |
| 183 | SLU 14 | 2.72 | 0.02 | 95.01 | -0.0276 | 0.095 | -0.0021 |
| 183 | SLU 15 | 2.93 | 0.02 | 94.19 | -0.0297 | 0.1055 | -0.0022 |
| 183 | SLU 16 | 2.54 | 0.02 | 94.04 | -0.0269 | 0.0857 | -0.002 |
| 183 | SLU 17 | 2.75 | 0.02 | 93.22 | -0.029 | 0.0962 | -0.0021 |
| 183 | SLU 18 | 3.4 | 0.02 | 95.23 | -0.0302 | 0.1324 | -0.0022 |
| 183 | SLU 19 | 3.62 | 0.02 | 94.41 | -0.0323 | 0.1429 | -0.0023 |
| 183 | SLU 20 | 3.2 | 0.02 | 97.71 | -0.0296 | 0.1197 | -0.0022 |
| 183 | SLU 21 | 3.41 | 0.02 | 96.89 | -0.0317 | 0.1302 | -0.0023 |
| 183 | SLU 22 | 2.39 | 0.02 | 87.93 | -0.0272 | 0.0805 | -0.002 |
| 183 | SLU 23 | 2.74 | 0.02 | 86.56 | -0.0307 | 0.0981 | -0.0022 |
| 183 | SLU 24 | 2.36 | 0.02 | 91.38 | -0.0274 | 0.0772 | -0.002 |
| 183 | SLU 25 | 2.57 | 0.02 | 90.56 | -0.0295 | 0.0877 | -0.0021 |
| 183 | SLU 26 | 2.54 | 0.02 | 89.04 | -0.0302 | 0.0854 | -0.0022 |
| 183 | SLU 27 | 2.15 | 0.02 | 93.86 | -0.0268 | 0.0645 | -0.002 |
| 183 | SLU 28 | 2.37 | 0.02 | 93.04 | -0.0289 | 0.075 | -0.0021 |
| 183 | SLU 29 | 1.97 | 0.02 | 92.89 | -0.0261 | 0.0552 | -0.002 |
| 183 | SLU 30 | 2.19 | 0.02 | 92.07 | -0.0282 | 0.0657 | -0.0021 |
| 183 | SLU 31 | 3.8 | 0.02 | 100.92 | -0.0358 | 0.1479 | -0.0026 |
| 183 | SLU 32 | 3.42 | 0.02 | 105.75 | -0.0325 | 0.127 | -0.0024 |
| 183 | SLU 33 | 3.63 | 0.02 | 104.93 | -0.0345 | 0.1375 | -0.0025 |
| 183 | SLU 34 | 3.6 | 0.02 | 103.4 | -0.0352 | 0.1352 | -0.0025 |
| 183 | SLU 35 | 3.21 | 0.02 | 108.23 | -0.0319 | 0.1143 | -0.0024 |
| 183 | SLU 36 | 3.43 | 0.02 | 107.41 | -0.034 | 0.1248 | -0.0025 |
| 183 | SLU 37 | 3.03 | 0.02 | 107.25 | -0.0312 | 0.105 | -0.0023 |
| 183 | SLU 38 | 3.25 | 0.02 | 106.43 | -0.0333 | 0.1155 | -0.0024 |
| 183 | SLU 39 | 3.9 | 0.02 | 108.44 | -0.0345 | 0.1517 | -0.0025 |
| 183 | SLU 40 | 4.12 | 0.02 | 107.62 | -0.0365 | 0.1622 | -0.0026 |
| 183 | SLU 41 | 3.7 | 0.02 | 110.92 | -0.0339 | 0.139 | -0.0025 |
| 183 | SLU 42 | 3.91 | 0.02 | 110.11 | -0.036 | 0.1496 | -0.0026 |
| 183 | SLU 43 | 2.29 | 0.02 | 92.6 | -0.0284 | 0.0729 | -0.0021 |
| 183 | SLU 44 | 2.64 | 0.02 | 91.23 | -0.0319 | 0.0905 | -0.0023 |
| 183 | SLU 45 | 2.26 | 0.02 | 96.05 | -0.0286 | 0.0696 | -0.0021 |
| 183 | SLU 46 | 2.47 | 0.02 | 95.23 | -0.0307 | 0.0801 | -0.0022 |
| 183 | SLU 47 | 2.43 | 0.02 | 93.71 | -0.0313 | 0.0778 | -0.0023 |
| 183 | SLU 48 | 2.05 | 0.02 | 98.53 | -0.028 | 0.0569 | -0.0021 |
| 183 | SLU 49 | 2.26 | 0.02 | 97.71 | -0.0301 | 0.0675 | -0.0022 |
| 183 | SLU 50 | 1.87 | 0.02 | 97.56 | -0.0273 | 0.0476 | -0.002 |
| 183 | SLU 51 | 2.08 | 0.02 | 96.74 | -0.0294 | 0.0582 | -0.0022 |
| 183 | SLU 52 | 3.7 | 0.02 | 105.59 | -0.0369 | 0.1403 | -0.0026 |
| 183 | SLU 53 | 3.32 | 0.02 | 110.42 | -0.0336 | 0.1194 | -0.0025 |
| 183 | SLU 54 | 3.53 | 0.02 | 109.6 | -0.0357 | 0.1299 | -0.0026 |
| 183 | SLU 55 | 3.49 | 0.02 | 108.07 | -0.0364 | 0.1277 | -0.0026 |
| 183 | SLU 56 | 3.11 | 0.02 | 112.9 | -0.0331 | 0.1067 | -0.0024 |
| 183 | SLU 57 | 3.32 | 0.02 | 112.08 | -0.0351 | 0.1173 | -0.0026 |
| 183 | SLU 58 | 2.93 | 0.02 | 111.92 | -0.0323 | 0.0974 | -0.0024 |
| 183 | SLU 59 | 3.14 | 0.02 | 111.1 | -0.0344 | 0.108 | -0.0025 |
| 183 | SLU 60 | 3.8 | 0.02 | 113.11 | -0.0356 | 0.1441 | -0.0026 |
| 183 | SLU 61 | 4.01 | 0.02 | 112.3 | -0.0377 | 0.1546 | -0.0027 |
| 183 | SLU 62 | 3.59 | 0.02 | 115.6 | -0.0351 | 0.1314 | -0.0026 |
| 183 | SLU 63 | 3.81 | 0.02 | 114.78 | -0.0371 | 0.142 | -0.0027 |
| 183 | SLU 64 | 2.78 | 0.02 | 105.81 | -0.0327 | 0.0923 | -0.0024 |
| 183 | SLU 65 | 3.14 | 0.02 | 104.44 | -0.0361 | 0.1098 | -0.0026 |
| 183 | SLU 66 | 2.76 | 0.02 | 109.27 | -0.0328 | 0.0889 | -0.0024 |
| 183 | SLU 67 | 2.97 | 0.02 | 108.45 | -0.0349 | 0.0994 | -0.0025 |
| 183 | SLU 68 | 2.93 | 0.02 | 106.92 | -0.0356 | 0.0972 | -0.0026 |
| 183 | SLU 69 | 2.55 | 0.02 | 111.75 | -0.0323 | 0.0762 | -0.0024 |
| 183 | SLU 70 | 2.76 | 0.02 | 110.93 | -0.0344 | 0.0868 | -0.0025 |

| Nodo | Cont. | Reazione a traslazione | | | Reazione a rotazione | | |
|---|---|---|---|---|---|---|---|
| Ind. | N.br. | x | y | z | x | y | z |
| 183 | SLU 71 | 2.37 | 0.02 | 110.77 | -0.0316 | 0.0669 | -0.0023 |
| 183 | SLU 72 | 2.58 | 0.02 | 109.95 | -0.0336 | 0.0775 | -0.0025 |
| 183 | SLU 73 | 4.2 | 0.03 | 118.81 | -0.0412 | 0.1596 | -0.003 |
| 183 | SLU 74 | 3.82 | 0.02 | 123.63 | -0.0379 | 0.1387 | -0.0028 |
| 183 | SLU 75 | 4.03 | 0.03 | 122.81 | -0.04 | 0.1492 | -0.0029 |
| 183 | SLU 76 | 3.99 | 0.03 | 121.29 | -0.0406 | 0.147 | -0.0029 |
| 183 | SLU 77 | 3.61 | 0.02 | 126.11 | -0.0373 | 0.126 | -0.0028 |
| 183 | SLU 78 | 3.82 | 0.02 | 125.29 | -0.0394 | 0.1366 | -0.0029 |
| 183 | SLU 79 | 3.43 | 0.02 | 125.13 | -0.0366 | 0.1167 | -0.0027 |
| 183 | SLU 80 | 3.64 | 0.02 | 124.31 | -0.0387 | 0.1273 | -0.0028 |
| 183 | SLU 81 | 4.3 | 0.02 | 126.33 | -0.0399 | 0.1634 | -0.0029 |
| 183 | SLU 82 | 4.51 | 0.03 | 125.51 | -0.042 | 0.174 | -0.003 |
| 183 | SLU 83 | 4.09 | 0.02 | 128.81 | -0.0393 | 0.1507 | -0.0029 |
| 183 | SLU 84 | 4.3 | 0.03 | 127.99 | -0.0414 | 0.1613 | -0.003 |
| 183 | SLE RA 1 | 2.03 | 0.01 | 78.49 | -0.0242 | 0.0667 | -0.0018 |
| 183 | SLE RA 2 | 2.27 | 0.02 | 77.58 | -0.0265 | 0.0784 | -0.0019 |
| 183 | SLE RA 3 | 2.01 | 0.01 | 80.79 | -0.0243 | 0.0645 | -0.0018 |
| 183 | SLE RA 4 | 2.16 | 0.02 | 80.25 | -0.0257 | 0.0715 | -0.0019 |
| 183 | SLE RA 5 | 2.13 | 0.02 | 79.23 | -0.0261 | 0.07 | -0.0019 |
| 183 | SLE RA 6 | 1.88 | 0.01 | 82.45 | -0.0239 | 0.056 | -0.0018 |
| 183 | SLE RA 7 | 2.02 | 0.02 | 81.9 | -0.0253 | 0.0631 | -0.0018 |
| 183 | SLE RA 8 | 1.76 | 0.01 | 81.8 | -0.0235 | 0.0498 | -0.0017 |
| 183 | SLE RA 9 | 1.9 | 0.02 | 81.25 | -0.0248 | 0.0569 | -0.0018 |
| 183 | SLE RA 10 | 2.98 | 0.02 | 87.15 | -0.0299 | 0.1116 | -0.0021 |
| 183 | SLE RA 11 | 2.72 | 0.02 | 90.37 | -0.0277 | 0.0977 | -0.002 |
| 183 | SLE RA 12 | 2.86 | 0.02 | 89.82 | -0.0291 | 0.1047 | -0.0021 |
| 183 | SLE RA 13 | 2.84 | 0.02 | 88.81 | -0.0295 | 0.1032 | -0.0021 |
| 183 | SLE RA 14 | 2.58 | 0.02 | 92.02 | -0.0273 | 0.0892 | -0.002 |
| 183 | SLE RA 15 | 2.72 | 0.02 | 91.48 | -0.0287 | 0.0963 | -0.0021 |
| 183 | SLE RA 16 | 2.46 | 0.02 | 91.37 | -0.0268 | 0.083 | -0.002 |
| 183 | SLE RA 17 | 2.6 | 0.02 | 90.82 | -0.0282 | 0.0901 | -0.0021 |
| 183 | SLE RA 18 | 3.04 | 0.02 | 92.17 | -0.029 | 0.1142 | -0.0021 |
| 183 | SLE RA 19 | 3.18 | 0.02 | 91.62 | -0.0304 | 0.1212 | -0.0022 |
| 183 | SLE RA 20 | 2.9 | 0.02 | 93.82 | -0.0286 | 0.1057 | -0.0021 |
| 183 | SLE RA 21 | 3.05 | 0.02 | 93.27 | -0.03 | 0.1127 | -0.0022 |
| 183 | SLE FR 1 | 2.03 | 0.01 | 78.49 | -0.0242 | 0.0667 | -0.0018 |
| 183 | SLE FR 2 | 2.08 | 0.02 | 78.31 | -0.0247 | 0.0691 | -0.0018 |
| 183 | SLE FR 3 | 1.98 | 0.01 | 79.15 | -0.024 | 0.0633 | -0.0017 |
| 183 | SLE FR 4 | 2.38 | 0.02 | 82.41 | -0.0261 | 0.0833 | -0.0019 |
| 183 | SLE FR 5 | 2.28 | 0.02 | 83.25 | -0.0255 | 0.0776 | -0.0019 |
| 183 | SLE FR 6 | 2.54 | 0.02 | 85.33 | -0.0266 | 0.0904 | -0.0019 |
| 183 | SLE QP 1 | 2.03 | 0.01 | 78.49 | -0.0242 | 0.0667 | -0.0018 |
| 183 | SLE QP 2 | 2.33 | 0.02 | 82.59 | -0.0256 | 0.081 | -0.0019 |
| 183 | SLD 1 | 15.86 | 0.26 | 79.74 | -0.2524 | 0.8934 | -0.019 |
| 183 | SLD 2 | 15.86 | 0.26 | 79.74 | -0.2524 | 0.8934 | -0.019 |
| 183 | SLD 3 | 17.03 | -0.08 | 77.59 | 0.073 | 0.9615 | 0.0052 |
| 183 | SLD 4 | 17.03 | -0.08 | 77.59 | 0.073 | 0.9615 | 0.0052 |
| 183 | SLD 5 | 4.62 | 0.61 | 85 | -0.5871 | 0.2213 | -0.0437 |
| 183 | SLD 6 | 4.62 | 0.61 | 85 | -0.5871 | 0.2213 | -0.0437 |
| 183 | SLD 7 | 8.52 | -0.54 | 77.82 | 0.4974 | 0.4485 | 0.037 |
| 183 | SLD 8 | 8.52 | -0.54 | 77.82 | 0.4974 | 0.4485 | 0.037 |
| 183 | SLD 9 | -3.85 | 0.57 | 87.36 | -0.5487 | -0.2866 | -0.0407 |
| 183 | SLD 10 | -3.85 | 0.57 | 87.36 | -0.5487 | -0.2866 | -0.0407 |
| 183 | SLD 11 | 0.05 | -0.58 | 80.18 | 0.5359 | -0.0594 | 0.04 |
| 183 | SLD 12 | 0.05 | -0.58 | 80.18 | 0.5359 | -0.0594 | 0.04 |
| 183 | SLD 13 | -12.36 | 0.11 | 87.59 | -0.1243 | -0.7996 | -0.009 |
| 183 | SLD 14 | -12.36 | 0.11 | 87.59 | -0.1243 | -0.7996 | -0.009 |
| 183 | SLD 15 | -11.19 | -0.23 | 85.44 | 0.2011 | -0.7315 | 0.0153 |
| 183 | SLD 16 | -11.19 | -0.23 | 85.44 | 0.2011 | -0.7315 | 0.0153 |
| 183 | SLV 1 | 33.45 | 0.62 | 76.02 | -0.5797 | 1.9518 | -0.0436 |
| 183 | SLV 2 | 33.45 | 0.62 | 76.02 | -0.5797 | 1.9518 | -0.0436 |
| 183 | SLV 3 | 36.23 | -0.23 | 70.79 | 0.2253 | 2.1131 | 0.0162 |
| 183 | SLV 4 | 36.23 | -0.23 | 70.79 | 0.2253 | 2.1131 | 0.0162 |
| 183 | SLV 5 | 7.46 | 1.49 | 88.55 | -1.4129 | 0.3976 | -0.1051 |
| 183 | SLV 6 | 7.46 | 1.49 | 88.55 | -1.4129 | 0.3976 | -0.1051 |
| 183 | SLV 7 | 16.71 | -1.35 | 71.12 | 1.2707 | 0.9352 | 0.0943 |
| 183 | SLV 8 | 16.71 | -1.35 | 71.12 | 1.2707 | 0.9352 | 0.0943 |
| 183 | SLV 9 | -12.04 | 1.38 | 94.06 | -1.3219 | -0.7733 | -0.098 |
| 183 | SLV 10 | -12.04 | 1.38 | 94.06 | -1.3219 | -0.7733 | -0.098 |
| 183 | SLV 11 | -2.79 | -1.45 | 76.63 | 1.3616 | -0.2357 | 0.1014 |
| 183 | SLV 12 | -2.79 | -1.45 | 76.63 | 1.3616 | -0.2357 | 0.1014 |
| 183 | SLV 13 | -31.56 | 0.27 | 94.39 | -0.2766 | -1.9512 | -0.0199 |
| 183 | SLV 14 | -31.56 | 0.27 | 94.39 | -0.2766 | -1.9512 | -0.0199 |
| 183 | SLV 15 | -28.78 | -0.58 | 89.16 | 0.5285 | -1.7899 | 0.0399 |
| 183 | SLV 16 | -28.78 | -0.58 | 89.16 | 0.5285 | -1.7899 | 0.0399 |
| 184 | SLU 1 | 0.12 | 0.03 | 76.6 | -0.0318 | 0.0049 | -0.0018 |
| 184 | SLU 2 | 0.45 | 0.03 | 75.5 | -0.0342 | 0.0217 | -0.002 |
| 184 | SLU 3 | 0.02 | 0.03 | 80.09 | -0.0324 | -0.0004 | -0.0019 |
| 184 | SLU 4 | 0.22 | 0.03 | 79.43 | -0.0338 | 0.0096 | -0.0019 |
| 184 | SLU 5 | 0.2 | 0.03 | 77.96 | -0.0338 | 0.0075 | -0.0019 |
| 184 | SLU 6 | -0.23 | 0.03 | 82.55 | -0.032 | -0.0147 | -0.0018 |
| 184 | SLU 7 | -0.03 | 0.03 | 81.89 | -0.0334 | -0.0046 | -0.0019 |
| 184 | SLU 8 | -0.38 | 0.02 | 81.52 | -0.031 | -0.0235 | -0.0018 |
| 184 | SLU 9 | -0.18 | 0.03 | 80.86 | -0.0324 | -0.0134 | -0.0019 |
| 184 | SLU 10 | 1.15 | 0.03 | 90.32 | -0.0408 | 0.0623 | -0.0023 |
| 184 | SLU 11 | 0.72 | 0.03 | 94.9 | -0.039 | 0.0401 | -0.0022 |
| 184 | SLU 12 | 0.92 | 0.03 | 94.24 | -0.0404 | 0.0502 | -0.0023 |
| 184 | SLU 13 | 0.9 | 0.03 | 92.78 | -0.0404 | 0.0481 | -0.0023 |

| Nodo | Cont. | Reazione a traslazione | | | Reazione a rotazione | | |
|---|---|---|---|---|---|---|---|
| Ind. | N.br. | x | y | z | x | y | z |
| 184 | SLU 14 | 0.48 | 0.03 | 97.36 | -0.0386 | 0.0259 | -0.0022 |
| 184 | SLU 15 | 0.67 | 0.03 | 96.7 | -0.04 | 0.036 | -0.0023 |
| 184 | SLU 16 | 0.32 | 0.03 | 96.34 | -0.0376 | 0.017 | -0.0022 |
| 184 | SLU 17 | 0.52 | 0.03 | 95.68 | -0.039 | 0.0271 | -0.0023 |
| 184 | SLU 18 | 1.12 | 0.03 | 97.77 | -0.0413 | 0.0628 | -0.0024 |
| 184 | SLU 19 | 1.32 | 0.03 | 97.11 | -0.0427 | 0.0729 | -0.0025 |
| 184 | SLU 20 | 0.87 | 0.03 | 100.23 | -0.0408 | 0.0486 | -0.0024 |
| 184 | SLU 21 | 1.07 | 0.03 | 99.57 | -0.0423 | 0.0587 | -0.0024 |
| 184 | SLU 22 | 0.3 | 0.03 | 90.14 | -0.0377 | 0.0152 | -0.0022 |
| 184 | SLU 23 | 0.63 | 0.03 | 89.05 | -0.0401 | 0.032 | -0.0023 |
| 184 | SLU 24 | 0.2 | 0.03 | 93.63 | -0.0382 | 0.0098 | -0.0022 |
| 184 | SLU 25 | 0.4 | 0.03 | 92.97 | -0.0396 | 0.0199 | -0.0023 |
| 184 | SLU 26 | 0.38 | 0.03 | 91.51 | -0.0396 | 0.0178 | -0.0023 |
| 184 | SLU 27 | -0.04 | 0.03 | 96.09 | -0.0378 | -0.0044 | -0.0022 |
| 184 | SLU 28 | 0.15 | 0.03 | 95.43 | -0.0392 | 0.0057 | -0.0023 |
| 184 | SLU 29 | -0.2 | 0.03 | 95.07 | -0.0368 | -0.0132 | -0.0021 |
| 184 | SLU 30 | 0 | 0.03 | 94.41 | -0.0383 | -0.0031 | -0.0022 |
| 184 | SLU 31 | 1.33 | 0.04 | 103.86 | -0.0467 | 0.0726 | -0.0027 |
| 184 | SLU 32 | 0.91 | 0.04 | 108.45 | -0.0448 | 0.0504 | -0.0026 |
| 184 | SLU 33 | 1.1 | 0.04 | 107.79 | -0.0462 | 0.0605 | -0.0027 |
| 184 | SLU 34 | 1.09 | 0.04 | 106.32 | -0.0462 | 0.0584 | -0.0027 |
| 184 | SLU 35 | 0.66 | 0.04 | 110.91 | -0.0444 | 0.0362 | -0.0026 |
| 184 | SLU 36 | 0.86 | 0.04 | 110.25 | -0.0458 | 0.0463 | -0.0026 |
| 184 | SLU 37 | 0.51 | 0.04 | 109.88 | -0.0434 | 0.0273 | -0.0025 |
| 184 | SLU 38 | 0.71 | 0.04 | 109.22 | -0.0449 | 0.0374 | -0.0026 |
| 184 | SLU 39 | 1.3 | 0.04 | 111.31 | -0.0471 | 0.0731 | -0.0027 |
| 184 | SLU 40 | 1.5 | 0.04 | 110.65 | -0.0485 | 0.0832 | -0.0028 |
| 184 | SLU 41 | 1.06 | 0.04 | 113.77 | -0.0467 | 0.0589 | -0.0027 |
| 184 | SLU 42 | 1.25 | 0.04 | 113.11 | -0.0481 | 0.069 | -0.0028 |
| 184 | SLU 43 | 0.09 | 0.03 | 94.94 | -0.0394 | 0.0028 | -0.0022 |
| 184 | SLU 44 | 0.42 | 0.03 | 93.84 | -0.0418 | 0.0197 | -0.0024 |
| 184 | SLU 45 | -0.01 | 0.03 | 98.42 | -0.0399 | -0.0025 | -0.0023 |
| 184 | SLU 46 | 0.19 | 0.03 | 97.76 | -0.0414 | 0.0076 | -0.0024 |
| 184 | SLU 47 | 0.17 | 0.03 | 96.3 | -0.0414 | 0.0054 | -0.0024 |
| 184 | SLU 48 | -0.25 | 0.03 | 100.88 | -0.0395 | -0.0167 | -0.0023 |
| 184 | SLU 49 | -0.06 | 0.03 | 100.22 | -0.0409 | -0.0066 | -0.0023 |
| 184 | SLU 50 | -0.41 | 0.03 | 99.86 | -0.0386 | -0.0256 | -0.0022 |
| 184 | SLU 51 | -0.21 | 0.03 | 99.2 | -0.04 | -0.0155 | -0.0023 |
| 184 | SLU 52 | 1.12 | 0.04 | 108.66 | -0.0484 | 0.0602 | -0.0028 |
| 184 | SLU 53 | 0.7 | 0.04 | 113.24 | -0.0465 | 0.0381 | -0.0027 |
| 184 | SLU 54 | 0.89 | 0.04 | 112.58 | -0.0479 | 0.0481 | -0.0028 |
| 184 | SLU 55 | 0.87 | 0.04 | 111.12 | -0.048 | 0.046 | -0.0028 |
| 184 | SLU 56 | 0.45 | 0.04 | 115.7 | -0.0461 | 0.0238 | -0.0027 |
| 184 | SLU 57 | 0.65 | 0.04 | 115.04 | -0.0475 | 0.0339 | -0.0027 |
| 184 | SLU 58 | 0.3 | 0.04 | 114.68 | -0.0452 | 0.015 | -0.0026 |
| 184 | SLU 59 | 0.49 | 0.04 | 114.02 | -0.0466 | 0.0251 | -0.0027 |
| 184 | SLU 60 | 1.09 | 0.04 | 116.11 | -0.0488 | 0.0608 | -0.0028 |
| 184 | SLU 61 | 1.29 | 0.04 | 115.45 | -0.0502 | 0.0709 | -0.0029 |
| 184 | SLU 62 | 0.85 | 0.04 | 118.57 | -0.0484 | 0.0466 | -0.0028 |
| 184 | SLU 63 | 1.04 | 0.04 | 117.91 | -0.0498 | 0.0567 | -0.0029 |
| 184 | SLU 64 | 0.27 | 0.04 | 108.48 | -0.0452 | 0.0131 | -0.0026 |
| 184 | SLU 65 | 0.6 | 0.04 | 107.38 | -0.0476 | 0.03 | -0.0027 |
| 184 | SLU 66 | 0.18 | 0.04 | 111.97 | -0.0458 | 0.0078 | -0.0026 |
| 184 | SLU 67 | 0.37 | 0.04 | 111.31 | -0.0472 | 0.0179 | -0.0027 |
| 184 | SLU 68 | 0.36 | 0.04 | 109.84 | -0.0472 | 0.0157 | -0.0027 |
| 184 | SLU 69 | -0.07 | 0.04 | 114.43 | -0.0453 | -0.0064 | -0.0026 |
| 184 | SLU 70 | 0.13 | 0.04 | 113.77 | -0.0468 | 0.0037 | -0.0027 |
| 184 | SLU 71 | -0.22 | 0.04 | 113.4 | -0.0444 | -0.0153 | -0.0026 |
| 184 | SLU 72 | -0.02 | 0.04 | 112.74 | -0.0458 | -0.0052 | -0.0026 |
| 184 | SLU 73 | 1.31 | 0.04 | 122.2 | -0.0542 | 0.0705 | -0.0031 |
| 184 | SLU 74 | 0.88 | 0.04 | 126.78 | -0.0524 | 0.0483 | -0.003 |
| 184 | SLU 75 | 1.08 | 0.04 | 126.12 | -0.0538 | 0.0584 | -0.0031 |
| 184 | SLU 76 | 1.06 | 0.04 | 124.66 | -0.0538 | 0.0563 | -0.0031 |
| 184 | SLU 77 | 0.63 | 0.04 | 129.24 | -0.0519 | 0.0341 | -0.003 |
| 184 | SLU 78 | 0.83 | 0.04 | 128.58 | -0.0534 | 0.0442 | -0.0031 |
| 184 | SLU 79 | 0.48 | 0.04 | 128.22 | -0.051 | 0.0253 | -0.0029 |
| 184 | SLU 80 | 0.68 | 0.04 | 127.56 | -0.0524 | 0.0354 | -0.003 |
| 184 | SLU 81 | 1.28 | 0.04 | 129.65 | -0.0546 | 0.0711 | -0.0031 |
| 184 | SLU 82 | 1.47 | 0.05 | 128.99 | -0.0561 | 0.0812 | -0.0032 |
| 184 | SLU 83 | 1.03 | 0.04 | 132.11 | -0.0542 | 0.0569 | -0.0031 |
| 184 | SLU 84 | 1.23 | 0.05 | 131.45 | -0.0557 | 0.067 | -0.0032 |
| 184 | SLE RA 1 | 0.17 | 0.03 | 80.47 | -0.0335 | 0.0078 | -0.0019 |
| 184 | SLE RA 2 | 0.39 | 0.03 | 79.74 | -0.0351 | 0.0191 | -0.002 |
| 184 | SLE RA 3 | 0.11 | 0.03 | 82.79 | -0.0339 | 0.0043 | -0.0019 |
| 184 | SLE RA 4 | 0.24 | 0.03 | 82.35 | -0.0348 | 0.011 | -0.002 |
| 184 | SLE RA 5 | 0.22 | 0.03 | 81.38 | -0.0348 | 0.0096 | -0.002 |
| 184 | SLE RA 6 | -0.06 | 0.03 | 84.43 | -0.0336 | -0.0052 | -0.0019 |
| 184 | SLE RA 7 | 0.07 | 0.03 | 83.99 | -0.0345 | 0.0015 | -0.002 |
| 184 | SLE RA 8 | -0.16 | 0.03 | 83.75 | -0.033 | -0.0111 | -0.0019 |
| 184 | SLE RA 9 | -0.03 | 0.03 | 83.31 | -0.0339 | -0.0044 | -0.0019 |
| 184 | SLE RA 10 | 0.86 | 0.03 | 89.62 | -0.0395 | 0.0461 | -0.0023 |
| 184 | SLE RA 11 | 0.57 | 0.03 | 92.67 | -0.0383 | 0.0313 | -0.0022 |
| 184 | SLE RA 12 | 0.71 | 0.03 | 92.23 | -0.0392 | 0.038 | -0.0023 |
| 184 | SLE RA 13 | 0.69 | 0.03 | 91.26 | -0.0392 | 0.0366 | -0.0023 |
| 184 | SLE RA 14 | 0.41 | 0.03 | 94.31 | -0.038 | 0.0218 | -0.0022 |
| 184 | SLE RA 15 | 0.54 | 0.03 | 93.87 | -0.0389 | 0.0286 | -0.0022 |
| 184 | SLE RA 16 | 0.31 | 0.03 | 93.63 | -0.0374 | 0.0159 | -0.0022 |
| 184 | SLE RA 17 | 0.44 | 0.03 | 93.19 | -0.0383 | 0.0227 | -0.0022 |

| Nodo | Cont. | Reazione a traslazione | | | Reazione a rotazione | | |
|---|---|---|---|---|---|---|---|
| Ind. | N.br. | x | y | z | x | y | z |
| 184 | SLE RA 18 | 0.84 | 0.03 | 94.58 | -0.0398 | 0.0465 | -0.0023 |
| 184 | SLE RA 19 | 0.97 | 0.03 | 94.14 | -0.0407 | 0.0532 | -0.0023 |
| 184 | SLE RA 20 | 0.67 | 0.03 | 96.22 | -0.0395 | 0.037 | -0.0023 |
| 184 | SLE RA 21 | 0.81 | 0.03 | 95.78 | -0.0405 | 0.0437 | -0.0023 |
| 184 | SLE FR 1 | 0.17 | 0.03 | 80.47 | -0.0335 | 0.0078 | -0.0019 |
| 184 | SLE FR 2 | 0.21 | 0.03 | 80.32 | -0.0338 | 0.0101 | -0.0019 |
| 184 | SLE FR 3 | 0.1 | 0.03 | 81.13 | -0.0334 | 0.0041 | -0.0019 |
| 184 | SLE FR 4 | 0.41 | 0.03 | 84.56 | -0.0357 | 0.0217 | -0.002 |
| 184 | SLE FR 5 | 0.3 | 0.03 | 85.36 | -0.0353 | 0.0156 | -0.002 |
| 184 | SLE FR 6 | 0.5 | 0.03 | 87.53 | -0.0366 | 0.0272 | -0.0021 |
| 184 | SLE QP 1 | 0.17 | 0.03 | 80.47 | -0.0335 | 0.0078 | -0.0019 |
| 184 | SLE QP 2 | 0.37 | 0.03 | 84.7 | -0.0354 | 0.0194 | -0.002 |
| 184 | SLD 1 | 13.5 | 0.32 | 77.77 | -0.2742 | 0.8544 | -0.0198 |
| 184 | SLD 2 | 13.5 | 0.32 | 77.77 | -0.2742 | 0.8544 | -0.0198 |
| 184 | SLD 3 | 14.65 | -0.1 | 75.69 | 0.0745 | 0.9257 | 0.0058 |
| 184 | SLD 4 | 14.65 | -0.1 | 75.69 | 0.0745 | 0.9257 | 0.0058 |
| 184 | SLD 5 | 2.56 | 0.76 | 85.78 | -0.6359 | 0.1618 | -0.0463 |
| 184 | SLD 6 | 2.56 | 0.76 | 85.78 | -0.6359 | 0.1618 | -0.0463 |
| 184 | SLD 7 | 6.4 | -0.65 | 78.85 | 0.5265 | 0.3994 | 0.0392 |
| 184 | SLD 8 | 6.4 | -0.65 | 78.85 | 0.5265 | 0.3994 | 0.0392 |
| 184 | SLD 9 | -5.66 | 0.71 | 90.56 | -0.5973 | -0.3606 | -0.0433 |
| 184 | SLD 10 | -5.66 | 0.71 | 90.56 | -0.5973 | -0.3606 | -0.0433 |
| 184 | SLD 11 | -1.82 | -0.7 | 83.63 | 0.5652 | -0.123 | 0.0422 |
| 184 | SLD 12 | -1.82 | -0.7 | 83.63 | 0.5652 | -0.123 | 0.0422 |
| 184 | SLD 13 | -13.91 | 0.16 | 93.72 | -0.1453 | -0.8868 | -0.0099 |
| 184 | SLD 14 | -13.91 | 0.16 | 93.72 | -0.1453 | -0.8868 | -0.0099 |
| 184 | SLD 15 | -12.76 | -0.27 | 91.64 | 0.2034 | -0.8156 | 0.0158 |
| 184 | SLD 16 | -12.76 | -0.27 | 91.64 | 0.2034 | -0.8156 | 0.0158 |
| 184 | SLV 1 | 30.59 | 0.75 | 68.63 | -0.6189 | 1.9423 | -0.0455 |
| 184 | SLV 2 | 30.59 | 0.75 | 68.63 | -0.6189 | 1.9423 | -0.0455 |
| 184 | SLV 3 | 33.32 | -0.3 | 63.59 | 0.2437 | 2.1108 | 0.0179 |
| 184 | SLV 4 | 33.32 | -0.3 | 63.59 | 0.2437 | 2.1108 | 0.0179 |
| 184 | SLV 5 | 5.29 | 1.83 | 87.53 | -1.5186 | 0.3406 | -0.1112 |
| 184 | SLV 6 | 5.29 | 1.83 | 87.53 | -1.5186 | 0.3406 | -0.1112 |
| 184 | SLV 7 | 14.4 | -1.66 | 70.72 | 1.3565 | 0.9025 | 0.1001 |
| 184 | SLV 8 | 14.4 | -1.66 | 70.72 | 1.3565 | 0.9025 | 0.1001 |
| 184 | SLV 9 | -13.66 | 1.71 | 98.68 | -1.4273 | -0.8637 | -0.1041 |
| 184 | SLV 10 | -13.66 | 1.71 | 98.68 | -1.4273 | -0.8637 | -0.1041 |
| 184 | SLV 11 | -4.55 | -1.77 | 81.88 | 1.4479 | -0.3017 | 0.1071 |
| 184 | SLV 12 | -4.55 | -1.77 | 81.88 | 1.4479 | -0.3017 | 0.1071 |
| 184 | SLV 13 | -32.58 | 0.35 | 105.82 | -0.3145 | -2.072 | -0.022 |
| 184 | SLV 14 | -32.58 | 0.35 | 105.82 | -0.3145 | -2.072 | -0.022 |
| 184 | SLV 15 | -29.84 | -0.69 | 100.78 | 0.5481 | -1.9034 | 0.0414 |
| 184 | SLV 16 | -29.84 | -0.69 | 100.78 | 0.5481 | -1.9034 | 0.0414 |
| 185 | SLU 1 | -3.54 | 0.04 | 78.02 | -0.0439 | -0.2265 | -0.002 |
| 185 | SLU 2 | -3.24 | 0.04 | 77.12 | -0.0451 | -0.2095 | -0.002 |
| 185 | SLU 3 | -3.79 | 0.04 | 81.54 | -0.045 | -0.2419 | -0.0021 |
| 185 | SLU 4 | -3.61 | 0.04 | 81 | -0.0457 | -0.2317 | -0.0021 |
| 185 | SLU 5 | -3.57 | 0.04 | 79.6 | -0.045 | -0.2301 | -0.002 |
| 185 | SLU 6 | -4.11 | 0.04 | 84.01 | -0.0449 | -0.2625 | -0.0021 |
| 185 | SLU 7 | -3.93 | 0.04 | 83.47 | -0.0456 | -0.2523 | -0.0021 |
| 185 | SLU 8 | -4.19 | 0.04 | 82.97 | -0.0437 | -0.2677 | -0.002 |
| 185 | SLU 9 | -4.01 | 0.04 | 82.43 | -0.0444 | -0.2575 | -0.002 |
| 185 | SLU 10 | -3.37 | 0.05 | 92.19 | -0.0538 | -0.217 | -0.0024 |
| 185 | SLU 11 | -3.91 | 0.05 | 96.6 | -0.0537 | -0.2494 | -0.0025 |
| 185 | SLU 12 | -3.73 | 0.05 | 96.06 | -0.0544 | -0.2392 | -0.0025 |
| 185 | SLU 13 | -3.69 | 0.05 | 94.66 | -0.0536 | -0.2376 | -0.0024 |
| 185 | SLU 14 | -4.24 | 0.05 | 99.08 | -0.0536 | -0.27 | -0.0025 |
| 185 | SLU 15 | -4.06 | 0.05 | 98.54 | -0.0543 | -0.2598 | -0.0025 |
| 185 | SLU 16 | -4.32 | 0.05 | 98.04 | -0.0523 | -0.2752 | -0.0024 |
| 185 | SLU 17 | -4.14 | 0.05 | 97.49 | -0.0531 | -0.265 | -0.0024 |
| 185 | SLU 18 | -3.72 | 0.05 | 99.54 | -0.0563 | -0.2372 | -0.0026 |
| 185 | SLU 19 | -3.54 | 0.05 | 99 | -0.057 | -0.227 | -0.0026 |
| 185 | SLU 20 | -4.05 | 0.05 | 102.02 | -0.0562 | -0.2578 | -0.0026 |
| 185 | SLU 21 | -3.86 | 0.05 | 101.48 | -0.0569 | -0.2476 | -0.0026 |
| 185 | SLU 22 | -4.05 | 0.05 | 91.79 | -0.0519 | -0.2586 | -0.0024 |
| 185 | SLU 23 | -3.74 | 0.05 | 90.89 | -0.0531 | -0.2416 | -0.0024 |
| 185 | SLU 24 | -4.29 | 0.05 | 95.31 | -0.053 | -0.274 | -0.0024 |
| 185 | SLU 25 | -4.11 | 0.05 | 94.77 | -0.0537 | -0.2638 | -0.0024 |
| 185 | SLU 26 | -4.07 | 0.05 | 93.37 | -0.053 | -0.2622 | -0.0024 |
| 185 | SLU 27 | -4.62 | 0.05 | 97.78 | -0.0529 | -0.2946 | -0.0024 |
| 185 | SLU 28 | -4.43 | 0.05 | 97.24 | -0.0536 | -0.2844 | -0.0024 |
| 185 | SLU 29 | -4.7 | 0.05 | 96.74 | -0.0516 | -0.2998 | -0.0024 |
| 185 | SLU 30 | -4.51 | 0.05 | 96.2 | -0.0524 | -0.2896 | -0.0024 |
| 185 | SLU 31 | -3.87 | 0.06 | 105.96 | -0.0617 | -0.2491 | -0.0028 |
| 185 | SLU 32 | -4.42 | 0.06 | 110.37 | -0.0617 | -0.2815 | -0.0028 |
| 185 | SLU 33 | -4.23 | 0.06 | 109.83 | -0.0624 | -0.2713 | -0.0028 |
| 185 | SLU 34 | -4.19 | 0.06 | 108.43 | -0.0616 | -0.2697 | -0.0028 |
| 185 | SLU 35 | -4.74 | 0.06 | 112.85 | -0.0615 | -0.3021 | -0.0028 |
| 185 | SLU 36 | -4.56 | 0.06 | 112.31 | -0.0623 | -0.2919 | -0.0028 |
| 185 | SLU 37 | -4.82 | 0.06 | 111.81 | -0.0603 | -0.3073 | -0.0028 |
| 185 | SLU 38 | -4.64 | 0.06 | 111.27 | -0.061 | -0.2971 | -0.0028 |
| 185 | SLU 39 | -4.22 | 0.06 | 113.31 | -0.0643 | -0.2693 | -0.0029 |
| 185 | SLU 40 | -4.04 | 0.06 | 112.77 | -0.065 | -0.2591 | -0.003 |
| 185 | SLU 41 | -4.55 | 0.06 | 115.79 | -0.0642 | -0.2899 | -0.0029 |
| 185 | SLU 42 | -4.37 | 0.06 | 115.25 | -0.0649 | -0.2797 | -0.003 |
| 185 | SLU 43 | -4.43 | 0.05 | 96.71 | -0.0543 | -0.2834 | -0.0025 |
| 185 | SLU 44 | -4.13 | 0.05 | 95.81 | -0.0555 | -0.2664 | -0.0025 |

| Nodo | Cont. | Reazione a traslazione | | | Reazione a rotazione | | |
|---|---|---|---|---|---|---|---|
| Ind. | N.br. | x | y | z | x | y | z |
| 185 | SLU 45 | -4.68 | 0.05 | 100.22 | -0.0554 | -0.2988 | -0.0025 |
| 185 | SLU 46 | -4.5 | 0.05 | 99.68 | -0.0561 | -0.2886 | -0.0025 |
| 185 | SLU 47 | -4.46 | 0.05 | 98.28 | -0.0554 | -0.287 | -0.0025 |
| 185 | SLU 48 | -5 | 0.05 | 102.7 | -0.0553 | -0.3194 | -0.0025 |
| 185 | SLU 49 | -4.82 | 0.05 | 102.16 | -0.056 | -0.3092 | -0.0026 |
| 185 | SLU 50 | -5.08 | 0.05 | 101.66 | -0.0541 | -0.3246 | -0.0025 |
| 185 | SLU 51 | -4.9 | 0.05 | 101.12 | -0.0548 | -0.3144 | -0.0025 |
| 185 | SLU 52 | -4.26 | 0.06 | 110.87 | -0.0642 | -0.2739 | -0.0029 |
| 185 | SLU 53 | -4.8 | 0.06 | 115.29 | -0.0641 | -0.3063 | -0.0029 |
| 185 | SLU 54 | -4.62 | 0.06 | 114.75 | -0.0648 | -0.2961 | -0.0029 |
| 185 | SLU 55 | -4.58 | 0.06 | 113.35 | -0.0641 | -0.2945 | -0.0029 |
| 185 | SLU 56 | -5.13 | 0.06 | 117.76 | -0.064 | -0.3269 | -0.0029 |
| 185 | SLU 57 | -4.95 | 0.06 | 117.22 | -0.0647 | -0.3167 | -0.003 |
| 185 | SLU 58 | -5.21 | 0.06 | 116.72 | -0.0628 | -0.3321 | -0.0029 |
| 185 | SLU 59 | -5.03 | 0.06 | 116.18 | -0.0635 | -0.3219 | -0.0029 |
| 185 | SLU 60 | -4.61 | 0.06 | 118.23 | -0.0667 | -0.2941 | -0.003 |
| 185 | SLU 61 | -4.43 | 0.06 | 117.69 | -0.0674 | -0.2839 | -0.0031 |
| 185 | SLU 62 | -4.94 | 0.06 | 120.7 | -0.0666 | -0.3147 | -0.003 |
| 185 | SLU 63 | -4.76 | 0.06 | 120.16 | -0.0673 | -0.3045 | -0.0031 |
| 185 | SLU 64 | -4.94 | 0.06 | 110.48 | -0.0623 | -0.3155 | -0.0028 |
| 185 | SLU 65 | -4.63 | 0.06 | 109.58 | -0.0635 | -0.2985 | -0.0029 |
| 185 | SLU 66 | -5.18 | 0.06 | 113.99 | -0.0634 | -0.3309 | -0.0029 |
| 185 | SLU 67 | -5 | 0.06 | 113.45 | -0.0641 | -0.3207 | -0.0029 |
| 185 | SLU 68 | -4.96 | 0.06 | 112.05 | -0.0634 | -0.3191 | -0.0029 |
| 185 | SLU 69 | -5.51 | 0.06 | 116.47 | -0.0633 | -0.3515 | -0.0029 |
| 185 | SLU 70 | -5.32 | 0.06 | 115.93 | -0.064 | -0.3413 | -0.0029 |
| 185 | SLU 71 | -5.59 | 0.06 | 115.43 | -0.0621 | -0.3567 | -0.0028 |
| 185 | SLU 72 | -5.41 | 0.06 | 114.89 | -0.0628 | -0.3465 | -0.0029 |
| 185 | SLU 73 | -4.76 | 0.07 | 124.64 | -0.0722 | -0.306 | -0.0033 |
| 185 | SLU 74 | -5.31 | 0.07 | 129.06 | -0.0721 | -0.3384 | -0.0033 |
| 185 | SLU 75 | -5.12 | 0.07 | 128.52 | -0.0728 | -0.3282 | -0.0033 |
| 185 | SLU 76 | -5.08 | 0.07 | 127.12 | -0.0721 | -0.3266 | -0.0033 |
| 185 | SLU 77 | -5.63 | 0.07 | 131.53 | -0.072 | -0.359 | -0.0033 |
| 185 | SLU 78 | -5.45 | 0.07 | 130.99 | -0.0727 | -0.3488 | -0.0033 |
| 185 | SLU 79 | -5.71 | 0.07 | 130.49 | -0.0708 | -0.3642 | -0.0032 |
| 185 | SLU 80 | -5.53 | 0.07 | 129.95 | -0.0715 | -0.354 | -0.0033 |
| 185 | SLU 81 | -5.12 | 0.07 | 132 | -0.0747 | -0.3262 | -0.0034 |
| 185 | SLU 82 | -4.93 | 0.07 | 131.46 | -0.0754 | -0.316 | -0.0034 |
| 185 | SLU 83 | -5.44 | 0.07 | 134.47 | -0.0746 | -0.3468 | -0.0034 |
| 185 | SLU 84 | -5.26 | 0.07 | 133.93 | -0.0753 | -0.3366 | -0.0034 |
| 185 | SLE RA 1 | -3.69 | 0.04 | 81.96 | -0.0462 | -0.2356 | -0.0021 |
| 185 | SLE RA 2 | -3.49 | 0.04 | 81.36 | -0.047 | -0.2243 | -0.0021 |
| 185 | SLE RA 3 | -3.85 | 0.04 | 84.3 | -0.0469 | -0.2459 | -0.0021 |
| 185 | SLE RA 4 | -3.73 | 0.05 | 83.94 | -0.0474 | -0.2391 | -0.0022 |
| 185 | SLE RA 5 | -3.7 | 0.04 | 83.01 | -0.0469 | -0.238 | -0.0021 |
| 185 | SLE RA 6 | -4.07 | 0.04 | 85.95 | -0.0468 | -0.2597 | -0.0021 |
| 185 | SLE RA 7 | -3.95 | 0.05 | 85.59 | -0.0473 | -0.2529 | -0.0022 |
| 185 | SLE RA 8 | -4.12 | 0.04 | 85.26 | -0.046 | -0.2631 | -0.0021 |
| 185 | SLE RA 9 | -4 | 0.04 | 84.9 | -0.0465 | -0.2563 | -0.0021 |
| 185 | SLE RA 10 | -3.57 | 0.05 | 91.4 | -0.0528 | -0.2293 | -0.0024 |
| 185 | SLE RA 11 | -3.93 | 0.05 | 94.34 | -0.0527 | -0.2509 | -0.0024 |
| 185 | SLE RA 12 | -3.81 | 0.05 | 93.98 | -0.0532 | -0.2441 | -0.0024 |
| 185 | SLE RA 13 | -3.79 | 0.05 | 93.05 | -0.0527 | -0.243 | -0.0024 |
| 185 | SLE RA 14 | -4.15 | 0.05 | 95.99 | -0.0526 | -0.2647 | -0.0024 |
| 185 | SLE RA 15 | -4.03 | 0.05 | 95.63 | -0.0531 | -0.2579 | -0.0024 |
| 185 | SLE RA 16 | -4.2 | 0.05 | 95.3 | -0.0518 | -0.2681 | -0.0024 |
| 185 | SLE RA 17 | -4.08 | 0.05 | 94.94 | -0.0523 | -0.2613 | -0.0024 |
| 185 | SLE RA 18 | -3.81 | 0.05 | 96.3 | -0.0544 | -0.2428 | -0.0025 |
| 185 | SLE RA 19 | -3.68 | 0.05 | 95.94 | -0.0549 | -0.236 | -0.0025 |
| 185 | SLE RA 20 | -4.02 | 0.05 | 97.95 | -0.0544 | -0.2565 | -0.0025 |
| 185 | SLE RA 21 | -3.9 | 0.05 | 97.59 | -0.0548 | -0.2497 | -0.0025 |
| 185 | SLE FR 1 | -3.69 | 0.04 | 81.96 | -0.0462 | -0.2356 | -0.0021 |
| 185 | SLE FR 2 | -3.65 | 0.04 | 81.84 | -0.0463 | -0.2334 | -0.0021 |
| 185 | SLE FR 3 | -3.77 | 0.04 | 82.62 | -0.0461 | -0.2411 | -0.0021 |
| 185 | SLE FR 4 | -3.68 | 0.05 | 86.14 | -0.0488 | -0.2355 | -0.0022 |
| 185 | SLE FR 5 | -3.81 | 0.05 | 86.92 | -0.0486 | -0.2433 | -0.0022 |
| 185 | SLE FR 6 | -3.75 | 0.05 | 89.13 | -0.0503 | -0.2392 | -0.0023 |
| 185 | SLE QP 1 | -3.69 | 0.04 | 81.96 | -0.0462 | -0.2356 | -0.0021 |
| 185 | SLE QP 2 | -3.72 | 0.05 | 86.26 | -0.0487 | -0.2378 | -0.0022 |
| 185 | SLD 1 | 7.81 | 0.33 | 72.4 | -0.2741 | 0.5814 | -0.0147 |
| 185 | SLD 2 | 7.81 | 0.33 | 72.4 | -0.2741 | 0.5814 | -0.0147 |
| 185 | SLD 3 | 8.8 | -0.09 | 70.3 | 0.0589 | 0.6495 | 0.0036 |
| 185 | SLD 4 | 8.8 | -0.09 | 70.3 | 0.0589 | 0.6495 | 0.0036 |
| 185 | SLD 5 | -1.77 | 0.77 | 85.28 | -0.6213 | -0.0952 | -0.0336 |
| 185 | SLD 6 | -1.77 | 0.77 | 85.28 | -0.6213 | -0.0952 | -0.0336 |
| 185 | SLD 7 | 1.54 | -0.63 | 78.29 | 0.4887 | 0.1316 | 0.0272 |
| 185 | SLD 8 | 1.54 | -0.63 | 78.29 | 0.4887 | 0.1316 | 0.0272 |
| 185 | SLD 9 | -8.99 | 0.72 | 94.23 | -0.586 | -0.6072 | -0.0317 |
| 185 | SLD 10 | -8.99 | 0.72 | 94.23 | -0.586 | -0.6072 | -0.0317 |
| 185 | SLD 11 | -5.68 | -0.68 | 87.23 | 0.524 | -0.3803 | 0.0292 |
| 185 | SLD 12 | -5.68 | -0.68 | 87.23 | 0.524 | -0.3803 | 0.0292 |
| 185 | SLD 13 | -16.25 | 0.18 | 102.22 | -0.1562 | -1.125 | -0.008 |
| 185 | SLD 14 | -16.25 | 0.18 | 102.22 | -0.1562 | -1.125 | -0.008 |
| 185 | SLD 15 | -15.25 | -0.24 | 100.12 | 0.1768 | -1.057 | 0.0102 |
| 185 | SLD 16 | -15.25 | -0.24 | 100.12 | 0.1768 | -1.057 | 0.0102 |
| 185 | SLV 1 | 22.81 | 0.75 | 54.11 | -0.5989 | 1.6491 | -0.0326 |
| 185 | SLV 2 | 22.81 | 0.75 | 54.11 | -0.5989 | 1.6491 | -0.0326 |
| 185 | SLV 3 | 25.17 | -0.29 | 49.02 | 0.224 | 1.8104 | 0.0125 |

| Nodo | Cont. | Reazione a traslazione | | | Reazione a rotazione | | |
|---|---|---|---|---|---|---|---|
| Ind. | N.br. | x | y | z | x | y | z |
| 185 | SLV 4 | 25.17 | -0.29 | 49.02 | 0.224 | 1.8104 | 0.0125 |
| 185 | SLV 5 | 0.66 | 1.83 | 84.33 | -1.4616 | 0.0838 | -0.0796 |
| 185 | SLV 6 | 0.66 | 1.83 | 84.33 | -1.4616 | 0.0838 | -0.0796 |
| 185 | SLV 7 | 8.53 | -1.63 | 67.37 | 1.2811 | 0.6212 | 0.0705 |
| 185 | SLV 8 | 8.53 | -1.63 | 67.37 | 1.2811 | 0.6212 | 0.0705 |
| 185 | SLV 9 | -15.97 | 1.72 | 105.15 | -1.3784 | -1.0968 | -0.0749 |
| 185 | SLV 10 | -15.97 | 1.72 | 105.15 | -1.3784 | -1.0968 | -0.0749 |
| 185 | SLV 11 | -8.1 | -1.74 | 88.19 | 1.3643 | -0.5593 | 0.0752 |
| 185 | SLV 12 | -8.1 | -1.74 | 88.19 | 1.3643 | -0.5593 | 0.0752 |
| 185 | SLV 13 | -32.62 | 0.38 | 123.5 | -0.3213 | -2.2859 | -0.0169 |
| 185 | SLV 14 | -32.62 | 0.38 | 123.5 | -0.3213 | -2.2859 | -0.0169 |
| 185 | SLV 15 | -30.26 | -0.66 | 118.41 | 0.5016 | -2.1247 | 0.0281 |
| 185 | SLV 16 | -30.26 | -0.66 | 118.41 | 0.5016 | -2.1247 | 0.0281 |
| 186 | SLU 1 | -8.06 | 0.08 | 81.24 | -0.0557 | -0.5594 | -0.0009 |
| 186 | SLU 2 | -7.79 | 0.08 | 80.38 | -0.0556 | -0.5421 | -0.0008 |
| 186 | SLU 3 | -8.48 | 0.08 | 84.91 | -0.0574 | -0.5891 | -0.0009 |
| 186 | SLU 4 | -8.32 | 0.08 | 84.4 | -0.0574 | -0.5787 | -0.0009 |
| 186 | SLU 5 | -8.19 | 0.08 | 83.05 | -0.0559 | -0.5713 | -0.0009 |
| 186 | SLU 6 | -8.88 | 0.08 | 87.58 | -0.0577 | -0.6183 | -0.0009 |
| 186 | SLU 7 | -8.72 | 0.08 | 87.07 | -0.0577 | -0.6079 | -0.0009 |
| 186 | SLU 8 | -8.85 | 0.08 | 86.56 | -0.0563 | -0.6178 | -0.0009 |
| 186 | SLU 9 | -8.69 | 0.08 | 86.05 | -0.0562 | -0.6074 | -0.0009 |
| 186 | SLU 10 | -9 | 0.09 | 95.74 | -0.0662 | -0.6203 | -0.001 |
| 186 | SLU 11 | -9.69 | 0.09 | 100.27 | -0.0681 | -0.6673 | -0.0011 |
| 186 | SLU 12 | -9.53 | 0.09 | 99.76 | -0.068 | -0.6569 | -0.001 |
| 186 | SLU 13 | -9.4 | 0.09 | 98.4 | -0.0665 | -0.6495 | -0.001 |
| 186 | SLU 14 | -10.08 | 0.09 | 102.93 | -0.0684 | -0.6964 | -0.0011 |
| 186 | SLU 15 | -9.92 | 0.09 | 102.42 | -0.0683 | -0.6861 | -0.0011 |
| 186 | SLU 16 | -10.06 | 0.09 | 101.92 | -0.067 | -0.696 | -0.0011 |
| 186 | SLU 17 | -9.9 | 0.09 | 101.41 | -0.0669 | -0.6856 | -0.001 |
| 186 | SLU 18 | -9.78 | 0.1 | 103.17 | -0.0709 | -0.6711 | -0.0011 |
| 186 | SLU 19 | -9.62 | 0.1 | 102.66 | -0.0708 | -0.6608 | -0.0011 |
| 186 | SLU 20 | -10.18 | 0.1 | 105.84 | -0.0712 | -0.7003 | -0.0011 |
| 186 | SLU 21 | -10.02 | 0.1 | 105.33 | -0.0711 | -0.6899 | -0.0011 |
| 186 | SLU 22 | -9.42 | 0.09 | 95.5 | -0.0658 | -0.6525 | -0.001 |
| 186 | SLU 23 | -9.15 | 0.09 | 94.64 | -0.0657 | -0.6352 | -0.001 |
| 186 | SLU 24 | -9.84 | 0.09 | 99.18 | -0.0675 | -0.6821 | -0.0011 |
| 186 | SLU 25 | -9.68 | 0.09 | 98.66 | -0.0675 | -0.6717 | -0.001 |
| 186 | SLU 26 | -9.55 | 0.09 | 97.31 | -0.066 | -0.6644 | -0.001 |
| 186 | SLU 27 | -10.23 | 0.09 | 101.84 | -0.0679 | -0.7113 | -0.0011 |
| 186 | SLU 28 | -10.07 | 0.09 | 101.33 | -0.0678 | -0.7009 | -0.0011 |
| 186 | SLU 29 | -10.21 | 0.09 | 100.82 | -0.0664 | -0.7109 | -0.001 |
| 186 | SLU 30 | -10.05 | 0.09 | 100.31 | -0.0663 | -0.7005 | -0.001 |
| 186 | SLU 31 | -10.35 | 0.1 | 110 | -0.0763 | -0.7134 | -0.0012 |
| 186 | SLU 32 | -11.04 | 0.11 | 114.53 | -0.0782 | -0.7603 | -0.0012 |
| 186 | SLU 33 | -10.88 | 0.11 | 114.02 | -0.0781 | -0.7499 | -0.0012 |
| 186 | SLU 34 | -10.75 | 0.1 | 112.66 | -0.0766 | -0.7426 | -0.0012 |
| 186 | SLU 35 | -11.44 | 0.11 | 117.19 | -0.0785 | -0.7895 | -0.0012 |
| 186 | SLU 36 | -11.28 | 0.11 | 116.68 | -0.0784 | -0.7791 | -0.0012 |
| 186 | SLU 37 | -11.41 | 0.11 | 116.18 | -0.0771 | -0.789 | -0.0012 |
| 186 | SLU 38 | -11.25 | 0.11 | 115.67 | -0.077 | -0.7787 | -0.0012 |
| 186 | SLU 39 | -11.14 | 0.11 | 117.43 | -0.081 | -0.7642 | -0.0012 |
| 186 | SLU 40 | -10.98 | 0.11 | 116.92 | -0.0809 | -0.7538 | -0.0012 |
| 186 | SLU 41 | -11.53 | 0.11 | 120.1 | -0.0813 | -0.7934 | -0.0013 |
| 186 | SLU 42 | -11.37 | 0.11 | 119.59 | -0.0813 | -0.783 | -0.0013 |
| 186 | SLU 43 | -10.01 | 0.09 | 100.72 | -0.0689 | -0.6954 | -0.0011 |
| 186 | SLU 44 | -9.75 | 0.09 | 99.87 | -0.0688 | -0.6781 | -0.001 |
| 186 | SLU 45 | -10.44 | 0.1 | 104.4 | -0.0707 | -0.725 | -0.0011 |
| 186 | SLU 46 | -10.28 | 0.1 | 103.89 | -0.0706 | -0.7146 | -0.0011 |
| 186 | SLU 47 | -10.14 | 0.09 | 102.53 | -0.0691 | -0.7072 | -0.0011 |
| 186 | SLU 48 | -10.83 | 0.1 | 107.06 | -0.071 | -0.7542 | -0.0011 |
| 186 | SLU 49 | -10.67 | 0.1 | 106.55 | -0.0709 | -0.7438 | -0.0011 |
| 186 | SLU 50 | -10.81 | 0.1 | 106.04 | -0.0696 | -0.7537 | -0.0011 |
| 186 | SLU 51 | -10.65 | 0.1 | 105.53 | -0.0695 | -0.7433 | -0.0011 |
| 186 | SLU 52 | -10.95 | 0.11 | 115.22 | -0.0794 | -0.7563 | -0.0012 |
| 186 | SLU 53 | -11.64 | 0.11 | 119.75 | -0.0813 | -0.8032 | -0.0013 |
| 186 | SLU 54 | -11.48 | 0.11 | 119.24 | -0.0812 | -0.7928 | -0.0012 |
| 186 | SLU 55 | -11.35 | 0.11 | 117.89 | -0.0798 | -0.7854 | -0.0012 |
| 186 | SLU 56 | -12.04 | 0.11 | 122.42 | -0.0816 | -0.8324 | -0.0013 |
| 186 | SLU 57 | -11.88 | 0.11 | 121.9 | -0.0816 | -0.822 | -0.0013 |
| 186 | SLU 58 | -12.01 | 0.11 | 121.4 | -0.0802 | -0.8319 | -0.0013 |
| 186 | SLU 59 | -11.85 | 0.11 | 120.89 | -0.0801 | -0.8215 | -0.0012 |
| 186 | SLU 60 | -11.74 | 0.12 | 122.65 | -0.0841 | -0.8071 | -0.0013 |
| 186 | SLU 61 | -11.58 | 0.11 | 122.14 | -0.0841 | -0.7967 | -0.0013 |
| 186 | SLU 62 | -12.13 | 0.12 | 125.32 | -0.0845 | -0.8363 | -0.0013 |
| 186 | SLU 63 | -11.97 | 0.12 | 124.81 | -0.0844 | -0.8259 | -0.0013 |
| 186 | SLU 64 | -11.37 | 0.11 | 114.98 | -0.079 | -0.7884 | -0.0012 |
| 186 | SLU 65 | -11.1 | 0.11 | 114.13 | -0.0789 | -0.7711 | -0.0012 |
| 186 | SLU 66 | -11.79 | 0.11 | 118.66 | -0.0808 | -0.8181 | -0.0013 |
| 186 | SLU 67 | -11.63 | 0.11 | 118.15 | -0.0807 | -0.8077 | -0.0012 |
| 186 | SLU 68 | -11.5 | 0.11 | 116.79 | -0.0792 | -0.8003 | -0.0012 |
| 186 | SLU 69 | -12.19 | 0.11 | 121.32 | -0.0811 | -0.8472 | -0.0013 |
| 186 | SLU 70 | -12.03 | 0.11 | 120.81 | -0.081 | -0.8369 | -0.0013 |
| 186 | SLU 71 | -12.16 | 0.11 | 120.3 | -0.0797 | -0.8468 | -0.0013 |
| 186 | SLU 72 | -12 | 0.11 | 119.79 | -0.0796 | -0.8364 | -0.0012 |
| 186 | SLU 73 | -12.31 | 0.12 | 129.48 | -0.0896 | -0.8493 | -0.0014 |
| 186 | SLU 74 | -13 | 0.13 | 134.01 | -0.0914 | -0.8963 | -0.0014 |
| 186 | SLU 75 | -12.84 | 0.12 | 133.5 | -0.0914 | -0.8859 | -0.0014 |

| Nodo | Cont. | Reazione a traslazione | | | Reazione a rotazione | | |
|---|---|---|---|---|---|---|---|
| Ind. | N.br. | x | y | z | x | y | z |
| 186 | SLU 76 | -12.7 | 0.12 | 132.15 | -0.0899 | -0.8785 | -0.0014 |
| 186 | SLU 77 | -13.39 | 0.13 | 136.68 | -0.0918 | -0.9254 | -0.0014 |
| 186 | SLU 78 | -13.23 | 0.13 | 136.17 | -0.0917 | -0.915 | -0.0014 |
| 186 | SLU 79 | -13.37 | 0.12 | 135.66 | -0.0903 | -0.925 | -0.0014 |
| 186 | SLU 80 | -13.21 | 0.12 | 135.15 | -0.0902 | -0.9146 | -0.0014 |
| 186 | SLU 81 | -13.09 | 0.13 | 136.92 | -0.0943 | -0.9001 | -0.0015 |
| 186 | SLU 82 | -12.93 | 0.13 | 136.4 | -0.0942 | -0.8897 | -0.0014 |
| 186 | SLU 83 | -13.49 | 0.13 | 139.58 | -0.0946 | -0.9293 | -0.0015 |
| 186 | SLU 84 | -13.33 | 0.13 | 139.07 | -0.0945 | -0.9189 | -0.0015 |
| 186 | SLE RA 1 | -8.45 | 0.08 | 85.31 | -0.0586 | -0.586 | -0.0009 |
| 186 | SLE RA 2 | -8.27 | 0.08 | 84.74 | -0.0585 | -0.5745 | -0.0009 |
| 186 | SLE RA 3 | -8.73 | 0.08 | 87.76 | -0.0597 | -0.6058 | -0.0009 |
| 186 | SLE RA 4 | -8.62 | 0.08 | 87.42 | -0.0597 | -0.5989 | -0.0009 |
| 186 | SLE RA 5 | -8.53 | 0.08 | 86.52 | -0.0587 | -0.5939 | -0.0009 |
| 186 | SLE RA 6 | -8.99 | 0.08 | 89.54 | -0.0599 | -0.6252 | -0.0009 |
| 186 | SLE RA 7 | -8.89 | 0.08 | 89.2 | -0.0599 | -0.6183 | -0.0009 |
| 186 | SLE RA 8 | -8.98 | 0.08 | 88.86 | -0.059 | -0.6249 | -0.0009 |
| 186 | SLE RA 9 | -8.87 | 0.08 | 88.52 | -0.0589 | -0.618 | -0.0009 |
| 186 | SLE RA 10 | -9.07 | 0.09 | 94.98 | -0.0656 | -0.6266 | -0.001 |
| 186 | SLE RA 11 | -9.53 | 0.09 | 98 | -0.0668 | -0.6579 | -0.001 |
| 186 | SLE RA 12 | -9.43 | 0.09 | 97.66 | -0.0668 | -0.651 | -0.001 |
| 186 | SLE RA 13 | -9.34 | 0.09 | 96.76 | -0.0658 | -0.6461 | -0.001 |
| 186 | SLE RA 14 | -9.8 | 0.09 | 99.78 | -0.0671 | -0.6774 | -0.001 |
| 186 | SLE RA 15 | -9.69 | 0.09 | 99.44 | -0.067 | -0.6704 | -0.001 |
| 186 | SLE RA 16 | -9.78 | 0.09 | 99.1 | -0.0661 | -0.6771 | -0.001 |
| 186 | SLE RA 17 | -9.67 | 0.09 | 98.76 | -0.066 | -0.6701 | -0.001 |
| 186 | SLE RA 18 | -9.6 | 0.09 | 99.94 | -0.0687 | -0.6605 | -0.0011 |
| 186 | SLE RA 19 | -9.49 | 0.09 | 99.59 | -0.0687 | -0.6536 | -0.0011 |
| 186 | SLE RA 20 | -9.86 | 0.09 | 101.71 | -0.0689 | -0.68 | -0.0011 |
| 186 | SLE RA 21 | -9.75 | 0.09 | 101.37 | -0.0689 | -0.673 | -0.0011 |
| 186 | SLE FR 1 | -8.45 | 0.08 | 85.31 | -0.0586 | -0.586 | -0.0009 |
| 186 | SLE FR 2 | -8.41 | 0.08 | 85.2 | -0.0586 | -0.5837 | -0.0009 |
| 186 | SLE FR 3 | -8.55 | 0.08 | 86.02 | -0.0587 | -0.5938 | -0.0009 |
| 186 | SLE FR 4 | -8.76 | 0.08 | 89.58 | -0.0616 | -0.6061 | -0.0009 |
| 186 | SLE FR 5 | -8.9 | 0.08 | 90.41 | -0.0617 | -0.6162 | -0.001 |
| 186 | SLE FR 6 | -9.02 | 0.09 | 92.62 | -0.0636 | -0.6233 | -0.001 |
| 186 | SLE QP 1 | -8.45 | 0.08 | 85.31 | -0.0586 | -0.586 | -0.0009 |
| 186 | SLE QP 2 | -8.79 | 0.08 | 89.7 | -0.0616 | -0.6084 | -0.001 |
| 186 | SLD 1 | -0.42 | 0.34 | 62.06 | -0.2497 | 0.1913 | -0.0015 |
| 186 | SLD 2 | -0.42 | 0.34 | 62.06 | -0.2497 | 0.1913 | -0.0015 |
| 186 | SLD 3 | 0.25 | -0.03 | 59.63 | 0.0254 | 0.2535 | 0.001 |
| 186 | SLD 4 | 0.25 | -0.03 | 59.63 | 0.0254 | 0.2535 | 0.001 |
| 186 | SLD 5 | -7.3 | 0.72 | 85.08 | -0.5352 | -0.4627 | -0.0049 |
| 186 | SLD 6 | -7.3 | 0.72 | 85.08 | -0.5352 | -0.4627 | -0.0049 |
| 186 | SLD 7 | -5.06 | -0.51 | 77.01 | 0.3817 | -0.2556 | 0.0034 |
| 186 | SLD 8 | -5.06 | -0.51 | 77.01 | 0.3817 | -0.2556 | 0.0034 |
| 186 | SLD 9 | -12.53 | 0.68 | 102.39 | -0.5049 | -0.9612 | -0.0053 |
| 186 | SLD 10 | -12.53 | 0.68 | 102.39 | -0.5049 | -0.9612 | -0.0053 |
| 186 | SLD 11 | -10.28 | -0.56 | 94.32 | 0.412 | -0.7541 | 0.003 |
| 186 | SLD 12 | -10.28 | -0.56 | 94.32 | 0.412 | -0.7541 | 0.003 |
| 186 | SLD 13 | -17.83 | 0.2 | 119.76 | -0.1486 | -1.4702 | -0.0029 |
| 186 | SLD 14 | -17.83 | 0.2 | 119.76 | -0.1486 | -1.4702 | -0.0029 |
| 186 | SLD 15 | -17.16 | -0.17 | 117.34 | 0.1265 | -1.4081 | -0.0004 |
| 186 | SLD 16 | -17.16 | -0.17 | 117.34 | 0.1265 | -1.4081 | -0.0004 |
| 186 | SLV 1 | 10.48 | 0.71 | 25.69 | -0.5198 | 1.2353 | -0.0023 |
| 186 | SLV 2 | 10.48 | 0.71 | 25.69 | -0.5198 | 1.2353 | -0.0023 |
| 186 | SLV 3 | 12.09 | -0.21 | 19.82 | 0.1579 | 1.3831 | 0.0038 |
| 186 | SLV 4 | 12.09 | -0.21 | 19.82 | 0.1579 | 1.3831 | 0.0038 |
| 186 | SLV 5 | -5.47 | 1.65 | 79.38 | -1.227 | -0.2794 | -0.0106 |
| 186 | SLV 6 | -5.47 | 1.65 | 79.38 | -1.227 | -0.2794 | -0.0106 |
| 186 | SLV 7 | -0.07 | -1.39 | 59.85 | 1.0321 | 0.2131 | 0.0097 |
| 186 | SLV 8 | -0.07 | -1.39 | 59.85 | 1.0321 | 0.2131 | 0.0097 |
| 186 | SLV 9 | -17.51 | 1.56 | 119.55 | -1.1554 | -1.4299 | -0.0116 |
| 186 | SLV 10 | -17.51 | 1.56 | 119.55 | -1.1554 | -1.4299 | -0.0116 |
| 186 | SLV 11 | -12.12 | -1.49 | 100.01 | 1.1037 | -0.9374 | 0.0087 |
| 186 | SLV 12 | -12.12 | -1.49 | 100.01 | 1.1037 | -0.9374 | 0.0087 |
| 186 | SLV 13 | -29.68 | 0.37 | 159.57 | -0.2811 | -2.5998 | -0.0057 |
| 186 | SLV 14 | -29.68 | 0.37 | 159.57 | -0.2811 | -2.5998 | -0.0057 |
| 186 | SLV 15 | -28.06 | -0.54 | 153.71 | 0.3966 | -2.4521 | 0.0004 |
| 186 | SLV 16 | -28.06 | -0.54 | 153.71 | 0.3966 | -2.4521 | 0.0004 |
| 187 | SLU 1 | -11.93 | 0.04 | 47.36 | -0.0301 | -0.3885 | -0.0039 |
| 187 | SLU 2 | -11.74 | 0.04 | 46.83 | -0.0294 | -0.3806 | -0.0038 |
| 187 | SLU 3 | -12.51 | 0.04 | 49.54 | -0.0311 | -0.4075 | -0.004 |
| 187 | SLU 4 | -12.39 | 0.04 | 49.22 | -0.0308 | -0.4028 | -0.004 |
| 187 | SLU 5 | -12.21 | 0.04 | 48.47 | -0.0298 | -0.3969 | -0.0038 |
| 187 | SLU 6 | -12.98 | 0.04 | 51.19 | -0.0315 | -0.4238 | -0.0041 |
| 187 | SLU 7 | -12.86 | 0.04 | 50.87 | -0.0311 | -0.4191 | -0.004 |
| 187 | SLU 8 | -12.87 | 0.04 | 50.65 | -0.0308 | -0.4212 | -0.004 |
| 187 | SLU 9 | -12.75 | 0.04 | 50.33 | -0.0304 | -0.4164 | -0.0039 |
| 187 | SLU 10 | -13.81 | 0.04 | 55.55 | -0.035 | -0.4447 | -0.0045 |
| 187 | SLU 11 | -14.58 | 0.05 | 58.26 | -0.0368 | -0.4716 | -0.0048 |
| 187 | SLU 12 | -14.46 | 0.05 | 57.94 | -0.0364 | -0.4669 | -0.0047 |
| 187 | SLU 13 | -14.28 | 0.04 | 57.19 | -0.0354 | -0.4611 | -0.0046 |
| 187 | SLU 14 | -15.05 | 0.05 | 59.9 | -0.0371 | -0.488 | -0.0048 |
| 187 | SLU 15 | -14.93 | 0.05 | 59.58 | -0.0367 | -0.4832 | -0.0047 |
| 187 | SLU 16 | -14.94 | 0.05 | 59.37 | -0.0364 | -0.4853 | -0.0047 |
| 187 | SLU 17 | -14.83 | 0.05 | 59.05 | -0.036 | -0.4806 | -0.0047 |
| 187 | SLU 18 | -14.89 | 0.05 | 59.82 | -0.0381 | -0.4801 | -0.0049 |

| Nodo | Cont. | Reazione a traslazione | | | Reazione a rotazione | | |
|---|---|---|---|---|---|---|---|
| Ind. | N.br. | x | y | z | x | y | z |
| 187 | SLU 19 | -14.77 | 0.05 | 59.5 | -0.0377 | -0.4753 | -0.0049 |
| 187 | SLU 20 | -15.36 | 0.05 | 61.46 | -0.0384 | -0.4964 | -0.005 |
| 187 | SLU 21 | -15.24 | 0.05 | 61.14 | -0.038 | -0.4917 | -0.0049 |
| 187 | SLU 22 | -14 | 0.05 | 55.64 | -0.0355 | -0.4549 | -0.0046 |
| 187 | SLU 23 | -13.81 | 0.04 | 55.11 | -0.0349 | -0.447 | -0.0045 |
| 187 | SLU 24 | -14.58 | 0.05 | 57.82 | -0.0366 | -0.4739 | -0.0047 |
| 187 | SLU 25 | -14.46 | 0.05 | 57.51 | -0.0362 | -0.4692 | -0.0047 |
| 187 | SLU 26 | -14.28 | 0.04 | 56.76 | -0.0352 | -0.4634 | -0.0045 |
| 187 | SLU 27 | -15.05 | 0.05 | 59.47 | -0.037 | -0.4903 | -0.0048 |
| 187 | SLU 28 | -14.93 | 0.05 | 59.15 | -0.0366 | -0.4855 | -0.0047 |
| 187 | SLU 29 | -14.94 | 0.05 | 58.93 | -0.0362 | -0.4876 | -0.0047 |
| 187 | SLU 30 | -14.82 | 0.05 | 58.61 | -0.0358 | -0.4829 | -0.0046 |
| 187 | SLU 31 | -15.88 | 0.05 | 63.83 | -0.0405 | -0.5111 | -0.0052 |
| 187 | SLU 32 | -16.65 | 0.06 | 66.54 | -0.0422 | -0.538 | -0.0055 |
| 187 | SLU 33 | -16.53 | 0.05 | 66.22 | -0.0418 | -0.5333 | -0.0054 |
| 187 | SLU 34 | -16.35 | 0.05 | 65.47 | -0.0408 | -0.5275 | -0.0053 |
| 187 | SLU 35 | -17.12 | 0.06 | 68.19 | -0.0426 | -0.5544 | -0.0055 |
| 187 | SLU 36 | -17 | 0.06 | 67.87 | -0.0422 | -0.5497 | -0.0055 |
| 187 | SLU 37 | -17.01 | 0.06 | 67.65 | -0.0418 | -0.5517 | -0.0054 |
| 187 | SLU 38 | -16.9 | 0.05 | 67.33 | -0.0415 | -0.547 | -0.0054 |
| 187 | SLU 39 | -16.96 | 0.06 | 68.1 | -0.0435 | -0.5465 | -0.0056 |
| 187 | SLU 40 | -16.84 | 0.05 | 67.78 | -0.0431 | -0.5418 | -0.0056 |
| 187 | SLU 41 | -17.43 | 0.06 | 69.74 | -0.0439 | -0.5628 | -0.0057 |
| 187 | SLU 42 | -17.31 | 0.06 | 69.42 | -0.0435 | -0.5581 | -0.0056 |
| 187 | SLU 43 | -14.8 | 0.05 | 58.73 | -0.0372 | -0.4822 | -0.0048 |
| 187 | SLU 44 | -14.61 | 0.04 | 58.2 | -0.0365 | -0.4743 | -0.0047 |
| 187 | SLU 45 | -15.38 | 0.05 | 60.91 | -0.0383 | -0.5013 | -0.005 |
| 187 | SLU 46 | -15.26 | 0.05 | 60.59 | -0.0379 | -0.4965 | -0.0049 |
| 187 | SLU 47 | -15.08 | 0.05 | 59.84 | -0.0369 | -0.4907 | -0.0048 |
| 187 | SLU 48 | -15.85 | 0.05 | 62.56 | -0.0387 | -0.5176 | -0.005 |
| 187 | SLU 49 | -15.73 | 0.05 | 62.24 | -0.0383 | -0.5129 | -0.005 |
| 187 | SLU 50 | -15.74 | 0.05 | 62.02 | -0.0379 | -0.5149 | -0.0049 |
| 187 | SLU 51 | -15.62 | 0.05 | 61.7 | -0.0375 | -0.5102 | -0.0049 |
| 187 | SLU 52 | -16.68 | 0.05 | 66.92 | -0.0422 | -0.5385 | -0.0054 |
| 187 | SLU 53 | -17.45 | 0.06 | 69.63 | -0.0439 | -0.5654 | -0.0057 |
| 187 | SLU 54 | -17.33 | 0.06 | 69.31 | -0.0435 | -0.5606 | -0.0056 |
| 187 | SLU 55 | -17.15 | 0.05 | 68.56 | -0.0425 | -0.5548 | -0.0055 |
| 187 | SLU 56 | -17.92 | 0.06 | 71.27 | -0.0443 | -0.5817 | -0.0057 |
| 187 | SLU 57 | -17.8 | 0.06 | 70.95 | -0.0439 | -0.577 | -0.0057 |
| 187 | SLU 58 | -17.81 | 0.06 | 70.74 | -0.0435 | -0.5791 | -0.0057 |
| 187 | SLU 59 | -17.7 | 0.06 | 70.42 | -0.0431 | -0.5743 | -0.0056 |
| 187 | SLU 60 | -17.76 | 0.06 | 71.18 | -0.0452 | -0.5738 | -0.0059 |
| 187 | SLU 61 | -17.64 | 0.06 | 70.87 | -0.0448 | -0.5691 | -0.0058 |
| 187 | SLU 62 | -18.23 | 0.06 | 72.83 | -0.0456 | -0.5902 | -0.0059 |
| 187 | SLU 63 | -18.11 | 0.06 | 72.51 | -0.0452 | -0.5855 | -0.0058 |
| 187 | SLU 64 | -16.87 | 0.06 | 67.01 | -0.0427 | -0.5487 | -0.0055 |
| 187 | SLU 65 | -16.68 | 0.05 | 66.48 | -0.042 | -0.5408 | -0.0054 |
| 187 | SLU 66 | -17.45 | 0.06 | 69.19 | -0.0437 | -0.5677 | -0.0057 |
| 187 | SLU 67 | -17.33 | 0.06 | 68.87 | -0.0434 | -0.5629 | -0.0056 |
| 187 | SLU 68 | -17.15 | 0.05 | 68.13 | -0.0424 | -0.5571 | -0.0055 |
| 187 | SLU 69 | -17.92 | 0.06 | 70.84 | -0.0441 | -0.584 | -0.0057 |
| 187 | SLU 70 | -17.8 | 0.06 | 70.52 | -0.0437 | -0.5793 | -0.0057 |
| 187 | SLU 71 | -17.81 | 0.06 | 70.3 | -0.0434 | -0.5814 | -0.0056 |
| 187 | SLU 72 | -17.7 | 0.06 | 69.98 | -0.043 | -0.5766 | -0.0056 |
| 187 | SLU 73 | -18.75 | 0.06 | 75.2 | -0.0476 | -0.6049 | -0.0061 |
| 187 | SLU 74 | -19.52 | 0.07 | 77.91 | -0.0494 | -0.6318 | -0.0064 |
| 187 | SLU 75 | -19.4 | 0.06 | 77.59 | -0.049 | -0.6271 | -0.0063 |
| 187 | SLU 76 | -19.22 | 0.06 | 76.84 | -0.048 | -0.6212 | -0.0062 |
| 187 | SLU 77 | -19.99 | 0.07 | 79.55 | -0.0497 | -0.6482 | -0.0064 |
| 187 | SLU 78 | -19.87 | 0.06 | 79.24 | -0.0493 | -0.6434 | -0.0064 |
| 187 | SLU 79 | -19.89 | 0.07 | 79.02 | -0.049 | -0.6455 | -0.0064 |
| 187 | SLU 80 | -19.77 | 0.06 | 78.7 | -0.0486 | -0.6408 | -0.0063 |
| 187 | SLU 81 | -19.83 | 0.07 | 79.47 | -0.0507 | -0.6403 | -0.0066 |
| 187 | SLU 82 | -19.71 | 0.06 | 79.15 | -0.0503 | -0.6355 | -0.0065 |
| 187 | SLU 83 | -20.3 | 0.07 | 81.11 | -0.051 | -0.6566 | -0.0066 |
| 187 | SLU 84 | -20.18 | 0.06 | 80.79 | -0.0506 | -0.6519 | -0.0065 |
| 187 | SLE RA 1 | -12.52 | 0.04 | 49.73 | -0.0316 | -0.4074 | -0.0041 |
| 187 | SLE RA 2 | -12.39 | 0.04 | 49.37 | -0.0312 | -0.4022 | -0.004 |
| 187 | SLE RA 3 | -12.91 | 0.04 | 51.18 | -0.0323 | -0.4201 | -0.0042 |
| 187 | SLE RA 4 | -12.83 | 0.04 | 50.97 | -0.0321 | -0.417 | -0.0041 |
| 187 | SLE RA 5 | -12.71 | 0.04 | 50.47 | -0.0314 | -0.4131 | -0.0041 |
| 187 | SLE RA 6 | -13.22 | 0.04 | 52.28 | -0.0326 | -0.431 | -0.0042 |
| 187 | SLE RA 7 | -13.14 | 0.04 | 52.07 | -0.0323 | -0.4279 | -0.0042 |
| 187 | SLE RA 8 | -13.15 | 0.04 | 51.92 | -0.0321 | -0.4293 | -0.0042 |
| 187 | SLE RA 9 | -13.07 | 0.04 | 51.71 | -0.0318 | -0.4261 | -0.0041 |
| 187 | SLE RA 10 | -13.77 | 0.04 | 55.19 | -0.0349 | -0.4449 | -0.0045 |
| 187 | SLE RA 11 | -14.29 | 0.05 | 56.99 | -0.0361 | -0.4629 | -0.0047 |
| 187 | SLE RA 12 | -14.21 | 0.05 | 56.78 | -0.0358 | -0.4597 | -0.0046 |
| 187 | SLE RA 13 | -14.09 | 0.04 | 56.28 | -0.0352 | -0.4558 | -0.0045 |
| 187 | SLE RA 14 | -14.6 | 0.05 | 58.09 | -0.0363 | -0.4738 | -0.0047 |
| 187 | SLE RA 15 | -14.52 | 0.05 | 57.88 | -0.0361 | -0.4706 | -0.0047 |
| 187 | SLE RA 16 | -14.53 | 0.05 | 57.73 | -0.0358 | -0.472 | -0.0046 |
| 187 | SLE RA 17 | -14.45 | 0.05 | 57.52 | -0.0356 | -0.4688 | -0.0046 |
| 187 | SLE RA 18 | -14.5 | 0.05 | 58.03 | -0.037 | -0.4685 | -0.0048 |
| 187 | SLE RA 19 | -14.42 | 0.05 | 57.82 | -0.0367 | -0.4654 | -0.0047 |
| 187 | SLE RA 20 | -14.81 | 0.05 | 59.13 | -0.0372 | -0.4794 | -0.0048 |
| 187 | SLE RA 21 | -14.73 | 0.05 | 58.91 | -0.0369 | -0.4763 | -0.0048 |
| 187 | SLE FR 1 | -12.52 | 0.04 | 49.73 | -0.0316 | -0.4074 | -0.0041 |

| Nodo | Cont. | Reazione a traslazione | | | Reazione a rotazione | | |
|---|---|---|---|---|---|---|---|
| Ind. | N.br. | x | y | z | x | y | z |
| 187 | SLE FR 2 | -12.5 | 0.04 | 49.66 | -0.0315 | -0.4064 | -0.0041 |
| 187 | SLE FR 3 | -12.65 | 0.04 | 50.17 | -0.0317 | -0.4118 | -0.0041 |
| 187 | SLE FR 4 | -13.09 | 0.04 | 52.15 | -0.0331 | -0.4247 | -0.0043 |
| 187 | SLE FR 5 | -13.24 | 0.04 | 52.66 | -0.0333 | -0.4301 | -0.0043 |
| 187 | SLE FR 6 | -13.51 | 0.04 | 53.88 | -0.0343 | -0.438 | -0.0044 |
| 187 | SLE QP 1 | -12.52 | 0.04 | 49.73 | -0.0316 | -0.4074 | -0.0041 |
| 187 | SLE QP 2 | -13.12 | 0.04 | 52.22 | -0.0332 | -0.4258 | -0.0043 |
| 187 | SLD 1 | -4.41 | -0.17 | 28.44 | -0.0571 | -0.0914 | -0.0061 |
| 187 | SLD 2 | -4.41 | -0.17 | 28.44 | -0.0571 | -0.0914 | -0.0061 |
| 187 | SLD 3 | -3.78 | 0.09 | 26.7 | 0.0367 | -0.0667 | 0.0036 |
| 187 | SLD 4 | -3.78 | 0.09 | 26.7 | 0.0367 | -0.0667 | 0.0036 |
| 187 | SLD 5 | -11.46 | -0.42 | 47.73 | -0.1827 | -0.3629 | -0.0196 |
| 187 | SLD 6 | -11.46 | -0.42 | 47.73 | -0.1827 | -0.3629 | -0.0196 |
| 187 | SLD 7 | -9.37 | 0.46 | 41.91 | 0.13 | -0.2806 | 0.0128 |
| 187 | SLD 8 | -9.37 | 0.46 | 41.91 | 0.13 | -0.2806 | 0.0128 |
| 187 | SLD 9 | -16.87 | -0.37 | 62.52 | -0.1965 | -0.5709 | -0.0214 |
| 187 | SLD 10 | -16.87 | -0.37 | 62.52 | -0.1965 | -0.5709 | -0.0214 |
| 187 | SLD 11 | -14.78 | 0.51 | 56.7 | 0.1162 | -0.4886 | 0.0109 |
| 187 | SLD 12 | -14.78 | 0.51 | 56.7 | 0.1162 | -0.4886 | 0.0109 |
| 187 | SLD 13 | -22.45 | 0 | 77.74 | -0.1031 | -0.7848 | -0.0122 |
| 187 | SLD 14 | -22.45 | 0 | 77.74 | -0.1031 | -0.7848 | -0.0122 |
| 187 | SLD 15 | -21.82 | 0.26 | 76 | -0.0093 | -0.7601 | -0.0025 |
| 187 | SLD 16 | -21.82 | 0.26 | 76 | -0.0093 | -0.7601 | -0.0025 |
| 187 | SLV 1 | 6.98 | -0.49 | -2.78 | -0.0928 | 0.3457 | -0.0087 |
| 187 | SLV 2 | 6.98 | -0.49 | -2.78 | -0.0928 | 0.3457 | -0.0087 |
| 187 | SLV 3 | 8.49 | 0.16 | -6.99 | 0.1363 | 0.4047 | 0.0147 |
| 187 | SLV 4 | 8.49 | 0.16 | -6.99 | 0.1363 | 0.4047 | 0.0147 |
| 187 | SLV 5 | -9.37 | -1.1 | 42.09 | -0.3985 | -0.2839 | -0.0413 |
| 187 | SLV 6 | -9.37 | -1.1 | 42.09 | -0.3985 | -0.2839 | -0.0413 |
| 187 | SLV 7 | -4.36 | 1.06 | 28.08 | 0.365 | -0.0871 | 0.037 |
| 187 | SLV 8 | -4.36 | 1.06 | 28.08 | 0.365 | -0.0871 | 0.037 |
| 187 | SLV 9 | -21.88 | -0.97 | 76.36 | -0.4315 | -0.7644 | -0.0456 |
| 187 | SLV 10 | -21.88 | -0.97 | 76.36 | -0.4315 | -0.7644 | -0.0456 |
| 187 | SLV 11 | -16.87 | 1.18 | 62.34 | 0.3321 | -0.5677 | 0.0326 |
| 187 | SLV 12 | -16.87 | 1.18 | 62.34 | 0.3321 | -0.5677 | 0.0326 |
| 187 | SLV 13 | -34.72 | -0.07 | 111.42 | -0.2027 | -1.2562 | -0.0234 |
| 187 | SLV 14 | -34.72 | -0.07 | 111.42 | -0.2027 | -1.2562 | -0.0234 |
| 187 | SLV 15 | -33.22 | 0.57 | 107.22 | 0.0263 | -1.1972 | 0.0001 |
| 187 | SLV 16 | -33.22 | 0.57 | 107.22 | 0.0263 | -1.1972 | 0.0001 |
| 188 | SLU 1 | 6.55 | -0.06 | 30.04 | 0.0175 | 0.0078 | -0.0035 |
| 188 | SLU 2 | 6.61 | -0.07 | 30.21 | 0.018 | 0.0094 | -0.0036 |
| 188 | SLU 3 | 6.79 | -0.07 | 31.19 | 0.018 | 0.007 | -0.0036 |
| 188 | SLU 4 | 6.82 | -0.07 | 31.3 | 0.0183 | 0.0079 | -0.0036 |
| 188 | SLU 5 | 6.73 | -0.07 | 30.85 | 0.0183 | 0.008 | -0.0036 |
| 188 | SLU 6 | 6.91 | -0.07 | 31.84 | 0.0183 | 0.0057 | -0.0036 |
| 188 | SLU 7 | 6.95 | -0.07 | 31.94 | 0.0186 | 0.0066 | -0.0037 |
| 188 | SLU 8 | 6.8 | -0.07 | 31.33 | 0.0181 | 0.0051 | -0.0036 |
| 188 | SLU 9 | 6.83 | -0.07 | 31.43 | 0.0184 | 0.0061 | -0.0036 |
| 188 | SLU 10 | 8.06 | -0.08 | 36.76 | 0.022 | 0.014 | -0.0044 |
| 188 | SLU 11 | 8.24 | -0.08 | 37.75 | 0.022 | 0.0116 | -0.0044 |
| 188 | SLU 12 | 8.28 | -0.08 | 37.85 | 0.0223 | 0.0126 | -0.0044 |
| 188 | SLU 13 | 8.19 | -0.08 | 37.41 | 0.0224 | 0.0126 | -0.0044 |
| 188 | SLU 14 | 8.37 | -0.08 | 38.4 | 0.0223 | 0.0103 | -0.0044 |
| 188 | SLU 15 | 8.41 | -0.09 | 38.5 | 0.0226 | 0.0112 | -0.0045 |
| 188 | SLU 16 | 8.26 | -0.08 | 37.88 | 0.0222 | 0.0097 | -0.0044 |
| 188 | SLU 17 | 8.29 | -0.08 | 37.99 | 0.0225 | 0.0107 | -0.0045 |
| 188 | SLU 18 | 8.63 | -0.09 | 39.4 | 0.0233 | 0.0144 | -0.0046 |
| 188 | SLU 19 | 8.66 | -0.09 | 39.51 | 0.0236 | 0.0153 | -0.0047 |
| 188 | SLU 20 | 8.75 | -0.09 | 40.05 | 0.0236 | 0.0131 | -0.0047 |
| 188 | SLU 21 | 8.79 | -0.09 | 40.15 | 0.0239 | 0.014 | -0.0047 |
| 188 | SLU 22 | 7.63 | -0.07 | 35.14 | 0.02 | 0.0074 | -0.0039 |
| 188 | SLU 23 | 7.69 | -0.08 | 35.31 | 0.0205 | 0.0089 | -0.004 |
| 188 | SLU 24 | 7.87 | -0.08 | 36.29 | 0.0204 | 0.0066 | -0.004 |
| 188 | SLU 25 | 7.91 | -0.08 | 36.4 | 0.0208 | 0.0075 | -0.0041 |
| 188 | SLU 26 | 7.82 | -0.08 | 35.95 | 0.0208 | 0.0076 | -0.0041 |
| 188 | SLU 27 | 8 | -0.08 | 36.94 | 0.0208 | 0.0052 | -0.0041 |
| 188 | SLU 28 | 8.04 | -0.08 | 37.04 | 0.0211 | 0.0061 | -0.0042 |
| 188 | SLU 29 | 7.89 | -0.08 | 36.43 | 0.0206 | 0.0047 | -0.0041 |
| 188 | SLU 30 | 7.92 | -0.08 | 36.53 | 0.0209 | 0.0056 | -0.0041 |
| 188 | SLU 31 | 9.15 | -0.09 | 41.86 | 0.0245 | 0.0135 | -0.0049 |
| 188 | SLU 32 | 9.33 | -0.09 | 42.85 | 0.0245 | 0.0112 | -0.0049 |
| 188 | SLU 33 | 9.37 | -0.09 | 42.95 | 0.0248 | 0.0121 | -0.0049 |
| 188 | SLU 34 | 9.28 | -0.09 | 42.51 | 0.0248 | 0.0122 | -0.0049 |
| 188 | SLU 35 | 9.46 | -0.09 | 43.5 | 0.0248 | 0.0098 | -0.0049 |
| 188 | SLU 36 | 9.49 | -0.09 | 43.6 | 0.0251 | 0.0107 | -0.005 |
| 188 | SLU 37 | 9.34 | -0.09 | 42.98 | 0.0246 | 0.0093 | -0.0049 |
| 188 | SLU 38 | 9.38 | -0.09 | 43.09 | 0.0249 | 0.0102 | -0.005 |
| 188 | SLU 39 | 9.72 | -0.1 | 44.5 | 0.0258 | 0.0139 | -0.0051 |
| 188 | SLU 40 | 9.75 | -0.1 | 44.61 | 0.0261 | 0.0149 | -0.0052 |
| 188 | SLU 41 | 9.84 | -0.1 | 45.15 | 0.0261 | 0.0126 | -0.0052 |
| 188 | SLU 42 | 9.88 | -0.1 | 45.25 | 0.0264 | 0.0135 | -0.0052 |
| 188 | SLU 43 | 8.14 | -0.08 | 37.3 | 0.0219 | 0.0104 | -0.0043 |
| 188 | SLU 44 | 8.2 | -0.08 | 37.47 | 0.0224 | 0.0119 | -0.0044 |
| 188 | SLU 45 | 8.38 | -0.08 | 38.46 | 0.0224 | 0.0095 | -0.0044 |
| 188 | SLU 46 | 8.41 | -0.08 | 38.56 | 0.0227 | 0.0105 | -0.0045 |
| 188 | SLU 47 | 8.32 | -0.08 | 38.11 | 0.0227 | 0.0105 | -0.0045 |
| 188 | SLU 48 | 8.5 | -0.08 | 39.1 | 0.0227 | 0.0082 | -0.0045 |
| 188 | SLU 49 | 8.54 | -0.09 | 39.2 | 0.023 | 0.0091 | -0.0045 |

| Nodo | Cont. | Reazione a traslazione | | | Reazione a rotazione | | |
|---|---|---|---|---|---|---|---|
| Ind. | N.br. | x | y | z | x | y | z |
| 188 | SLU 50 | 8.39 | -0.08 | 38.59 | 0.0225 | 0.0077 | -0.0045 |
| 188 | SLU 51 | 8.42 | -0.09 | 38.69 | 0.0228 | 0.0086 | -0.0045 |
| 188 | SLU 52 | 9.65 | -0.1 | 44.03 | 0.0264 | 0.0165 | -0.0052 |
| 188 | SLU 53 | 9.83 | -0.1 | 45.01 | 0.0264 | 0.0141 | -0.0052 |
| 188 | SLU 54 | 9.87 | -0.1 | 45.12 | 0.0267 | 0.0151 | -0.0053 |
| 188 | SLU 55 | 9.78 | -0.1 | 44.67 | 0.0268 | 0.0151 | -0.0053 |
| 188 | SLU 56 | 9.96 | -0.1 | 45.66 | 0.0267 | 0.0128 | -0.0053 |
| 188 | SLU 57 | 10 | -0.1 | 45.76 | 0.027 | 0.0137 | -0.0054 |
| 188 | SLU 58 | 9.85 | -0.1 | 45.14 | 0.0266 | 0.0123 | -0.0053 |
| 188 | SLU 59 | 9.88 | -0.1 | 45.25 | 0.0269 | 0.0132 | -0.0053 |
| 188 | SLU 60 | 10.22 | -0.1 | 46.67 | 0.0277 | 0.0169 | -0.0055 |
| 188 | SLU 61 | 10.25 | -0.1 | 46.77 | 0.028 | 0.0179 | -0.0055 |
| 188 | SLU 62 | 10.34 | -0.11 | 47.31 | 0.028 | 0.0156 | -0.0055 |
| 188 | SLU 63 | 10.38 | -0.11 | 47.41 | 0.0283 | 0.0165 | -0.0056 |
| 188 | SLU 64 | 9.22 | -0.09 | 42.4 | 0.0244 | 0.0099 | -0.0048 |
| 188 | SLU 65 | 9.28 | -0.09 | 42.57 | 0.0249 | 0.0114 | -0.0049 |
| 188 | SLU 66 | 9.46 | -0.09 | 43.56 | 0.0248 | 0.0091 | -0.0049 |
| 188 | SLU 67 | 9.5 | -0.09 | 43.66 | 0.0251 | 0.01 | -0.005 |
| 188 | SLU 68 | 9.41 | -0.09 | 43.21 | 0.0252 | 0.0101 | -0.005 |
| 188 | SLU 69 | 9.59 | -0.09 | 44.2 | 0.0252 | 0.0077 | -0.005 |
| 188 | SLU 70 | 9.63 | -0.09 | 44.3 | 0.0255 | 0.0086 | -0.005 |
| 188 | SLU 71 | 9.48 | -0.09 | 43.69 | 0.025 | 0.0072 | -0.0049 |
| 188 | SLU 72 | 9.51 | -0.09 | 43.79 | 0.0253 | 0.0081 | -0.005 |
| 188 | SLU 73 | 10.74 | -0.11 | 49.13 | 0.0289 | 0.016 | -0.0057 |
| 188 | SLU 74 | 10.92 | -0.11 | 50.11 | 0.0289 | 0.0137 | -0.0057 |
| 188 | SLU 75 | 10.96 | -0.11 | 50.22 | 0.0292 | 0.0146 | -0.0058 |
| 188 | SLU 76 | 10.87 | -0.11 | 49.77 | 0.0292 | 0.0147 | -0.0058 |
| 188 | SLU 77 | 11.05 | -0.11 | 50.76 | 0.0292 | 0.0123 | -0.0058 |
| 188 | SLU 78 | 11.08 | -0.11 | 50.86 | 0.0295 | 0.0132 | -0.0058 |
| 188 | SLU 79 | 10.93 | -0.11 | 50.24 | 0.029 | 0.0118 | -0.0058 |
| 188 | SLU 80 | 10.97 | -0.11 | 50.35 | 0.0293 | 0.0127 | -0.0058 |
| 188 | SLU 81 | 11.31 | -0.11 | 51.77 | 0.0301 | 0.0165 | -0.006 |
| 188 | SLU 82 | 11.34 | -0.11 | 51.87 | 0.0305 | 0.0174 | -0.006 |
| 188 | SLU 83 | 11.43 | -0.11 | 52.41 | 0.0305 | 0.0151 | -0.006 |
| 188 | SLU 84 | 11.47 | -0.12 | 52.51 | 0.0308 | 0.016 | -0.0061 |
| 188 | SLE RA 1 | 6.86 | -0.07 | 31.49 | 0.0182 | 0.0077 | -0.0036 |
| 188 | SLE RA 2 | 6.9 | -0.07 | 31.61 | 0.0185 | 0.0087 | -0.0037 |
| 188 | SLE RA 3 | 7.02 | -0.07 | 32.27 | 0.0185 | 0.0072 | -0.0037 |
| 188 | SLE RA 4 | 7.04 | -0.07 | 32.33 | 0.0187 | 0.0078 | -0.0037 |
| 188 | SLE RA 5 | 6.98 | -0.07 | 32.04 | 0.0187 | 0.0078 | -0.0037 |
| 188 | SLE RA 6 | 7.1 | -0.07 | 32.69 | 0.0187 | 0.0063 | -0.0037 |
| 188 | SLE RA 7 | 7.12 | -0.07 | 32.76 | 0.0189 | 0.0069 | -0.0037 |
| 188 | SLE RA 8 | 7.02 | -0.07 | 32.35 | 0.0186 | 0.0059 | -0.0037 |
| 188 | SLE RA 9 | 7.05 | -0.07 | 32.42 | 0.0188 | 0.0065 | -0.0037 |
| 188 | SLE RA 10 | 7.87 | -0.08 | 35.98 | 0.0212 | 0.0118 | -0.0042 |
| 188 | SLE RA 11 | 7.99 | -0.08 | 36.64 | 0.0212 | 0.0102 | -0.0042 |
| 188 | SLE RA 12 | 8.01 | -0.08 | 36.71 | 0.0214 | 0.0108 | -0.0042 |
| 188 | SLE RA 13 | 7.95 | -0.08 | 36.41 | 0.0214 | 0.0109 | -0.0042 |
| 188 | SLE RA 14 | 8.07 | -0.08 | 37.07 | 0.0214 | 0.0093 | -0.0042 |
| 188 | SLE RA 15 | 8.1 | -0.08 | 37.13 | 0.0216 | 0.0099 | -0.0043 |
| 188 | SLE RA 16 | 8 | -0.08 | 36.72 | 0.0213 | 0.009 | -0.0042 |
| 188 | SLE RA 17 | 8.02 | -0.08 | 36.79 | 0.0215 | 0.0096 | -0.0043 |
| 188 | SLE RA 18 | 8.24 | -0.08 | 37.74 | 0.0221 | 0.0121 | -0.0044 |
| 188 | SLE RA 19 | 8.27 | -0.08 | 37.81 | 0.0223 | 0.0127 | -0.0044 |
| 188 | SLE RA 20 | 8.33 | -0.08 | 38.17 | 0.0223 | 0.0112 | -0.0044 |
| 188 | SLE RA 21 | 8.35 | -0.08 | 38.24 | 0.0225 | 0.0118 | -0.0045 |
| 188 | SLE FR 1 | 6.86 | -0.07 | 31.49 | 0.0182 | 0.0077 | -0.0036 |
| 188 | SLE FR 2 | 6.86 | -0.07 | 31.52 | 0.0183 | 0.0079 | -0.0036 |
| 188 | SLE FR 3 | 6.89 | -0.07 | 31.67 | 0.0183 | 0.0073 | -0.0036 |
| 188 | SLE FR 4 | 7.28 | -0.07 | 33.39 | 0.0194 | 0.0092 | -0.0038 |
| 188 | SLE FR 5 | 7.31 | -0.07 | 33.54 | 0.0194 | 0.0087 | -0.0038 |
| 188 | SLE FR 6 | 7.55 | -0.07 | 34.62 | 0.0201 | 0.0099 | -0.004 |
| 188 | SLE QP 1 | 6.86 | -0.07 | 31.49 | 0.0182 | 0.0077 | -0.0036 |
| 188 | SLE QP 2 | 7.27 | -0.07 | 33.37 | 0.0193 | 0.009 | -0.0038 |
| 188 | SLD 1 | 8.86 | -0.37 | 39.04 | 0.0505 | 0.0965 | -0.0123 |
| 188 | SLD 2 | 8.86 | -0.37 | 39.04 | 0.0505 | 0.0965 | -0.0123 |
| 188 | SLD 3 | 9.88 | -0.47 | 42.57 | 0.0624 | 0.1139 | -0.0154 |
| 188 | SLD 4 | 9.88 | -0.47 | 42.57 | 0.0624 | 0.1139 | -0.0154 |
| 188 | SLD 5 | 6.21 | 0 | 29.72 | 0.0107 | 0.0089 | -0.0016 |
| 188 | SLD 6 | 6.21 | 0 | 29.72 | 0.0107 | 0.0089 | -0.0016 |
| 188 | SLD 7 | 9.59 | -0.35 | 41.48 | 0.0503 | 0.0668 | -0.0121 |
| 188 | SLD 8 | 9.59 | -0.35 | 41.48 | 0.0503 | 0.0668 | -0.0121 |
| 188 | SLD 9 | 4.95 | 0.21 | 25.26 | -0.0116 | -0.0488 | 0.0045 |
| 188 | SLD 10 | 4.95 | 0.21 | 25.26 | -0.0116 | -0.0488 | 0.0045 |
| 188 | SLD 11 | 8.34 | -0.14 | 37.01 | 0.028 | 0.0091 | -0.0061 |
| 188 | SLD 12 | 8.34 | -0.14 | 37.01 | 0.028 | 0.0091 | -0.0061 |
| 188 | SLD 13 | 4.67 | 0.33 | 24.17 | -0.0237 | -0.0958 | 0.0078 |
| 188 | SLD 14 | 4.67 | 0.33 | 24.17 | -0.0237 | -0.0958 | 0.0078 |
| 188 | SLD 15 | 5.69 | 0.23 | 27.7 | -0.0118 | -0.0784 | 0.0046 |
| 188 | SLD 16 | 5.69 | 0.23 | 27.7 | -0.0118 | -0.0784 | 0.0046 |
| 188 | SLV 1 | 10.91 | -0.81 | 46.39 | 0.0971 | 0.21 | -0.0249 |
| 188 | SLV 2 | 10.91 | -0.81 | 46.39 | 0.0971 | 0.21 | -0.0249 |
| 188 | SLV 3 | 13.25 | -1.07 | 54.54 | 0.1259 | 0.2506 | -0.0326 |
| 188 | SLV 4 | 13.25 | -1.07 | 54.54 | 0.1259 | 0.2506 | -0.0326 |
| 188 | SLV 5 | 4.81 | 0.1 | 24.92 | -0.0011 | 0.0078 | 0.0016 |
| 188 | SLV 6 | 4.81 | 0.1 | 24.92 | -0.0011 | 0.0078 | 0.0016 |
| 188 | SLV 7 | 12.62 | -0.76 | 52.07 | 0.0951 | 0.143 | -0.0242 |
| 188 | SLV 8 | 12.62 | -0.76 | 52.07 | 0.0951 | 0.143 | -0.0242 |

| Nodo | Cont. | Reazione a traslazione | | | Reazione a rotazione | | |
|---|---|---|---|---|---|---|---|
| Ind. | N.br. | x | y | z | x | y | z |
| 188 | SLV 9 | 1.92 | 0.62 | 14.66 | -0.0564 | -0.1249 | 0.0165 |
| 188 | SLV 10 | 1.92 | 0.62 | 14.66 | -0.0564 | -0.1249 | 0.0165 |
| 188 | SLV 11 | 9.74 | -0.24 | 41.81 | 0.0398 | 0.0102 | -0.0092 |
| 188 | SLV 12 | 9.74 | -0.24 | 41.81 | 0.0398 | 0.0102 | -0.0092 |
| 188 | SLV 13 | 1.29 | 0.92 | 12.2 | -0.0872 | -0.2325 | 0.025 |
| 188 | SLV 14 | 1.29 | 0.92 | 12.2 | -0.0872 | -0.2325 | 0.025 |
| 188 | SLV 15 | 3.64 | 0.67 | 20.34 | -0.0584 | -0.192 | 0.0172 |
| 188 | SLV 16 | 3.64 | 0.67 | 20.34 | -0.0584 | -0.192 | 0.0172 |
| 189 | SLU 1 | 0.24 | -8.19 | 79.07 | 0.2655 | -0.0655 | -0.0039 |
| 189 | SLU 2 | 0.26 | -8.38 | 79.49 | 0.2747 | -0.0647 | -0.004 |
| 189 | SLU 3 | 0.25 | -8.43 | 82.2 | 0.2715 | -0.0692 | -0.0041 |
| 189 | SLU 4 | 0.26 | -8.54 | 82.45 | 0.2769 | -0.0687 | -0.0041 |
| 189 | SLU 5 | 0.26 | -8.51 | 81.39 | 0.2773 | -0.0679 | -0.0041 |
| 189 | SLU 6 | 0.25 | -8.56 | 84.1 | 0.2741 | -0.0723 | -0.0041 |
| 189 | SLU 7 | 0.26 | -8.67 | 84.35 | 0.2796 | -0.0719 | -0.0042 |
| 189 | SLU 8 | 0.25 | -8.45 | 82.86 | 0.2708 | -0.0718 | -0.0041 |
| 189 | SLU 9 | 0.26 | -8.56 | 83.12 | 0.2763 | -0.0713 | -0.0041 |
| 189 | SLU 10 | 0.3 | -10.18 | 96.17 | 0.3345 | -0.0752 | -0.0048 |
| 189 | SLU 11 | 0.29 | -10.23 | 98.88 | 0.3312 | -0.0796 | -0.0049 |
| 189 | SLU 12 | 0.3 | -10.34 | 99.13 | 0.3367 | -0.0792 | -0.0049 |
| 189 | SLU 13 | 0.3 | -10.31 | 98.07 | 0.3371 | -0.0783 | -0.0049 |
| 189 | SLU 14 | 0.29 | -10.36 | 100.78 | 0.3339 | -0.0828 | -0.005 |
| 189 | SLU 15 | 0.3 | -10.47 | 101.03 | 0.3394 | -0.0823 | -0.005 |
| 189 | SLU 16 | 0.29 | -10.25 | 99.54 | 0.3306 | -0.0822 | -0.0049 |
| 189 | SLU 17 | 0.3 | -10.36 | 99.8 | 0.3361 | -0.0818 | -0.005 |
| 189 | SLU 18 | 0.3 | -10.77 | 102.9 | 0.3509 | -0.0804 | -0.0051 |
| 189 | SLU 19 | 0.31 | -10.88 | 103.15 | 0.3564 | -0.08 | -0.0052 |
| 189 | SLU 20 | 0.3 | -10.89 | 104.79 | 0.3536 | -0.0836 | -0.0052 |
| 189 | SLU 21 | 0.31 | -11 | 105.05 | 0.3591 | -0.0831 | -0.0052 |
| 189 | SLU 22 | 0.26 | -9.4 | 92.45 | 0.3008 | -0.0781 | -0.0045 |
| 189 | SLU 23 | 0.28 | -9.59 | 92.88 | 0.3099 | -0.0773 | -0.0046 |
| 189 | SLU 24 | 0.27 | -9.64 | 95.58 | 0.3067 | -0.0818 | -0.0047 |
| 189 | SLU 25 | 0.28 | -9.75 | 95.84 | 0.3122 | -0.0813 | -0.0047 |
| 189 | SLU 26 | 0.29 | -9.71 | 94.77 | 0.3126 | -0.0805 | -0.0047 |
| 189 | SLU 27 | 0.28 | -9.77 | 97.48 | 0.3093 | -0.0849 | -0.0048 |
| 189 | SLU 28 | 0.29 | -9.88 | 97.74 | 0.3148 | -0.0845 | -0.0048 |
| 189 | SLU 29 | 0.28 | -9.66 | 96.25 | 0.3061 | -0.0844 | -0.0047 |
| 189 | SLU 30 | 0.29 | -9.77 | 96.5 | 0.3116 | -0.0839 | -0.0047 |
| 189 | SLU 31 | 0.32 | -11.39 | 109.56 | 0.3697 | -0.0878 | -0.0054 |
| 189 | SLU 32 | 0.31 | -11.44 | 112.26 | 0.3665 | -0.0922 | -0.0055 |
| 189 | SLU 33 | 0.32 | -11.55 | 112.52 | 0.372 | -0.0918 | -0.0056 |
| 189 | SLU 34 | 0.33 | -11.51 | 111.46 | 0.3723 | -0.0909 | -0.0055 |
| 189 | SLU 35 | 0.32 | -11.57 | 114.16 | 0.3691 | -0.0954 | -0.0056 |
| 189 | SLU 36 | 0.33 | -11.68 | 114.42 | 0.3746 | -0.0949 | -0.0056 |
| 189 | SLU 37 | 0.32 | -11.46 | 112.93 | 0.3659 | -0.0948 | -0.0055 |
| 189 | SLU 38 | 0.33 | -11.57 | 113.18 | 0.3713 | -0.0944 | -0.0056 |
| 189 | SLU 39 | 0.32 | -11.97 | 116.28 | 0.3862 | -0.093 | -0.0057 |
| 189 | SLU 40 | 0.33 | -12.08 | 116.54 | 0.3917 | -0.0926 | -0.0058 |
| 189 | SLU 41 | 0.33 | -12.1 | 118.18 | 0.3888 | -0.0962 | -0.0058 |
| 189 | SLU 42 | 0.34 | -12.21 | 118.43 | 0.3943 | -0.0957 | -0.0059 |
| 189 | SLU 43 | 0.3 | -10.24 | 98.2 | 0.3331 | -0.0808 | -0.0049 |
| 189 | SLU 44 | 0.32 | -10.42 | 98.62 | 0.3423 | -0.08 | -0.005 |
| 189 | SLU 45 | 0.31 | -10.48 | 101.33 | 0.339 | -0.0845 | -0.005 |
| 189 | SLU 46 | 0.32 | -10.59 | 101.58 | 0.3445 | -0.084 | -0.0051 |
| 189 | SLU 47 | 0.33 | -10.55 | 100.52 | 0.3449 | -0.0832 | -0.005 |
| 189 | SLU 48 | 0.32 | -10.61 | 103.23 | 0.3417 | -0.0877 | -0.0051 |
| 189 | SLU 49 | 0.33 | -10.72 | 103.48 | 0.3472 | -0.0872 | -0.0052 |
| 189 | SLU 50 | 0.32 | -10.5 | 101.99 | 0.3384 | -0.0871 | -0.0051 |
| 189 | SLU 51 | 0.33 | -10.61 | 102.25 | 0.3439 | -0.0866 | -0.0051 |
| 189 | SLU 52 | 0.36 | -12.22 | 115.3 | 0.402 | -0.0905 | -0.0058 |
| 189 | SLU 53 | 0.35 | -12.28 | 118.01 | 0.3988 | -0.095 | -0.0059 |
| 189 | SLU 54 | 0.36 | -12.39 | 118.26 | 0.4043 | -0.0945 | -0.0059 |
| 189 | SLU 55 | 0.37 | -12.35 | 117.2 | 0.4047 | -0.0937 | -0.0059 |
| 189 | SLU 56 | 0.36 | -12.41 | 119.91 | 0.4015 | -0.0981 | -0.006 |
| 189 | SLU 57 | 0.37 | -12.52 | 120.16 | 0.407 | -0.0977 | -0.006 |
| 189 | SLU 58 | 0.36 | -12.3 | 118.67 | 0.3982 | -0.0976 | -0.0059 |
| 189 | SLU 59 | 0.37 | -12.41 | 118.93 | 0.4037 | -0.0971 | -0.0059 |
| 189 | SLU 60 | 0.36 | -12.81 | 122.03 | 0.4185 | -0.0958 | -0.0061 |
| 189 | SLU 61 | 0.37 | -12.92 | 122.28 | 0.424 | -0.0953 | -0.0061 |
| 189 | SLU 62 | 0.37 | -12.94 | 123.92 | 0.4212 | -0.0989 | -0.0062 |
| 189 | SLU 63 | 0.38 | -13.05 | 124.18 | 0.4267 | -0.0985 | -0.0062 |
| 189 | SLU 64 | 0.33 | -11.45 | 111.58 | 0.3684 | -0.0934 | -0.0055 |
| 189 | SLU 65 | 0.34 | -11.63 | 112.01 | 0.3775 | -0.0926 | -0.0056 |
| 189 | SLU 66 | 0.33 | -11.69 | 114.71 | 0.3743 | -0.0971 | -0.0056 |
| 189 | SLU 67 | 0.34 | -11.8 | 114.97 | 0.3798 | -0.0966 | -0.0057 |
| 189 | SLU 68 | 0.35 | -11.76 | 113.91 | 0.3801 | -0.0958 | -0.0057 |
| 189 | SLU 69 | 0.34 | -11.81 | 116.61 | 0.3769 | -0.1003 | -0.0057 |
| 189 | SLU 70 | 0.35 | -11.92 | 116.87 | 0.3824 | -0.0998 | -0.0058 |
| 189 | SLU 71 | 0.34 | -11.7 | 115.38 | 0.3737 | -0.0997 | -0.0057 |
| 189 | SLU 72 | 0.35 | -11.81 | 115.63 | 0.3791 | -0.0992 | -0.0057 |
| 189 | SLU 73 | 0.38 | -13.43 | 128.69 | 0.4373 | -0.1031 | -0.0064 |
| 189 | SLU 74 | 0.37 | -13.49 | 131.39 | 0.4341 | -0.1076 | -0.0065 |
| 189 | SLU 75 | 0.38 | -13.6 | 131.65 | 0.4395 | -0.1071 | -0.0065 |
| 189 | SLU 76 | 0.39 | -13.56 | 130.59 | 0.4399 | -0.1063 | -0.0065 |
| 189 | SLU 77 | 0.38 | -13.61 | 133.29 | 0.4367 | -0.1107 | -0.0066 |
| 189 | SLU 78 | 0.39 | -13.72 | 133.55 | 0.4422 | -0.1103 | -0.0066 |
| 189 | SLU 79 | 0.38 | -13.5 | 132.06 | 0.4334 | -0.1102 | -0.0065 |
| 189 | SLU 80 | 0.39 | -13.61 | 132.31 | 0.4389 | -0.1097 | -0.0065 |

| Nodo | Cont. | Reazione a traslazione | | | Reazione a rotazione | | |
|---|---|---|---|---|---|---|---|
| Ind. | N.br. | x | y | z | x | y | z |
| 189 | SLU 81 | 0.39 | -14.02 | 135.41 | 0.4538 | -0.1084 | -0.0067 |
| 189 | SLU 82 | 0.4 | -14.13 | 135.67 | 0.4592 | -0.1079 | -0.0067 |
| 189 | SLU 83 | 0.39 | -14.15 | 137.31 | 0.4564 | -0.1115 | -0.0068 |
| 189 | SLU 84 | 0.4 | -14.26 | 137.56 | 0.4619 | -0.111 | -0.0068 |
| 189 | SLE RA 1 | 0.25 | -8.54 | 82.89 | 0.2756 | -0.0691 | -0.0041 |
| 189 | SLE RA 2 | 0.26 | -8.66 | 83.17 | 0.2817 | -0.0686 | -0.0042 |
| 189 | SLE RA 3 | 0.25 | -8.7 | 84.98 | 0.2796 | -0.0716 | -0.0042 |
| 189 | SLE RA 4 | 0.26 | -8.77 | 85.15 | 0.2832 | -0.0712 | -0.0042 |
| 189 | SLE RA 5 | 0.26 | -8.75 | 84.44 | 0.2835 | -0.0707 | -0.0042 |
| 189 | SLE RA 6 | 0.26 | -8.78 | 86.24 | 0.2813 | -0.0736 | -0.0042 |
| 189 | SLE RA 7 | 0.26 | -8.86 | 86.41 | 0.285 | -0.0733 | -0.0043 |
| 189 | SLE RA 8 | 0.26 | -8.71 | 85.42 | 0.2791 | -0.0733 | -0.0042 |
| 189 | SLE RA 9 | 0.26 | -8.78 | 85.59 | 0.2828 | -0.073 | -0.0042 |
| 189 | SLE RA 10 | 0.28 | -9.86 | 94.29 | 0.3216 | -0.0756 | -0.0047 |
| 189 | SLE RA 11 | 0.28 | -9.9 | 96.1 | 0.3194 | -0.0785 | -0.0048 |
| 189 | SLE RA 12 | 0.28 | -9.97 | 96.27 | 0.3231 | -0.0782 | -0.0048 |
| 189 | SLE RA 13 | 0.29 | -9.95 | 95.56 | 0.3233 | -0.0776 | -0.0048 |
| 189 | SLE RA 14 | 0.28 | -9.98 | 97.36 | 0.3212 | -0.0806 | -0.0048 |
| 189 | SLE RA 15 | 0.29 | -10.06 | 97.53 | 0.3248 | -0.0803 | -0.0048 |
| 189 | SLE RA 16 | 0.28 | -9.91 | 96.54 | 0.319 | -0.0803 | -0.0048 |
| 189 | SLE RA 17 | 0.29 | -9.98 | 96.71 | 0.3227 | -0.08 | -0.0048 |
| 189 | SLE RA 18 | 0.29 | -10.25 | 98.78 | 0.3325 | -0.0791 | -0.0049 |
| 189 | SLE RA 19 | 0.29 | -10.33 | 98.95 | 0.3362 | -0.0788 | -0.0049 |
| 189 | SLE RA 20 | 0.29 | -10.34 | 100.04 | 0.3343 | -0.0812 | -0.005 |
| 189 | SLE RA 21 | 0.3 | -10.41 | 100.21 | 0.338 | -0.0808 | -0.005 |
| 189 | SLE FR 1 | 0.25 | -8.54 | 82.89 | 0.2756 | -0.0691 | -0.0041 |
| 189 | SLE FR 2 | 0.25 | -8.56 | 82.95 | 0.2768 | -0.069 | -0.0041 |
| 189 | SLE FR 3 | 0.25 | -8.57 | 83.4 | 0.2763 | -0.0699 | -0.0041 |
| 189 | SLE FR 4 | 0.26 | -9.08 | 87.71 | 0.2939 | -0.072 | -0.0044 |
| 189 | SLE FR 5 | 0.26 | -9.09 | 88.16 | 0.2934 | -0.0729 | -0.0044 |
| 189 | SLE FR 6 | 0.27 | -9.4 | 90.83 | 0.3041 | -0.0741 | -0.0045 |
| 189 | SLE QP 1 | 0.25 | -8.54 | 82.89 | 0.2756 | -0.0691 | -0.0041 |
| 189 | SLE QP 2 | 0.26 | -9.05 | 87.66 | 0.2927 | -0.0721 | -0.0043 |
| 189 | SLD 1 | -0.73 | -5.57 | 63.69 | 0.1543 | 0.0553 | -0.0025 |
| 189 | SLD 2 | -0.73 | -5.57 | 63.69 | 0.1543 | 0.0553 | -0.0025 |
| 189 | SLD 3 | -0.52 | -8.06 | 72.61 | 0.2717 | 0.0647 | -0.0034 |
| 189 | SLD 4 | -0.52 | -8.06 | 72.61 | 0.2717 | 0.0647 | -0.0034 |
| 189 | SLD 5 | -0.35 | -4.23 | 66.93 | 0.0731 | -0.0481 | -0.0024 |
| 189 | SLD 6 | -0.35 | -4.23 | 66.93 | 0.0731 | -0.0481 | -0.0024 |
| 189 | SLD 7 | 0.34 | -12.54 | 96.68 | 0.4644 | -0.0168 | -0.0055 |
| 189 | SLD 8 | 0.34 | -12.54 | 96.68 | 0.4644 | -0.0168 | -0.0055 |
| 189 | SLD 9 | 0.18 | -5.57 | 78.63 | 0.1209 | -0.1274 | -0.0032 |
| 189 | SLD 10 | 0.18 | -5.57 | 78.63 | 0.1209 | -0.1274 | -0.0032 |
| 189 | SLD 11 | 0.87 | -13.88 | 108.39 | 0.5123 | -0.096 | -0.0063 |
| 189 | SLD 12 | 0.87 | -13.88 | 108.39 | 0.5123 | -0.096 | -0.0063 |
| 189 | SLD 13 | 1.04 | -10.04 | 102.7 | 0.3137 | -0.2089 | -0.0053 |
| 189 | SLD 14 | 1.04 | -10.04 | 102.7 | 0.3137 | -0.2089 | -0.0053 |
| 189 | SLD 15 | 1.25 | -12.53 | 111.63 | 0.4311 | -0.1995 | -0.0062 |
| 189 | SLD 16 | 1.25 | -12.53 | 111.63 | 0.4311 | -0.1995 | -0.0062 |
| 189 | SLV 1 | -2.05 | -0.95 | 31.71 | -0.0291 | 0.2218 | -0.0001 |
| 189 | SLV 2 | -2.05 | -0.95 | 31.71 | -0.0291 | 0.2218 | -0.0001 |
| 189 | SLV 3 | -1.57 | -6.71 | 52.31 | 0.2425 | 0.2442 | -0.0022 |
| 189 | SLV 4 | -1.57 | -6.71 | 52.31 | 0.2425 | 0.2442 | -0.0022 |
| 189 | SLV 5 | -1.17 | 2.11 | 39.64 | -0.2157 | -0.0178 | 0.0001 |
| 189 | SLV 6 | -1.17 | 2.11 | 39.64 | -0.2157 | -0.0178 | 0.0001 |
| 189 | SLV 7 | 0.44 | -17.09 | 108.28 | 0.6895 | 0.0567 | -0.0069 |
| 189 | SLV 8 | 0.44 | -17.09 | 108.28 | 0.6895 | 0.0567 | -0.0069 |
| 189 | SLV 9 | 0.07 | -1.02 | 67.03 | -0.1041 | -0.2009 | -0.0018 |
| 189 | SLV 10 | 0.07 | -1.02 | 67.03 | -0.1041 | -0.2009 | -0.0018 |
| 189 | SLV 11 | 1.68 | -20.22 | 135.67 | 0.8011 | -0.1264 | -0.0088 |
| 189 | SLV 12 | 1.68 | -20.22 | 135.67 | 0.8011 | -0.1264 | -0.0088 |
| 189 | SLV 13 | 2.08 | -11.4 | 123.01 | 0.3429 | -0.3884 | -0.0065 |
| 189 | SLV 14 | 2.08 | -11.4 | 123.01 | 0.3429 | -0.3884 | -0.0065 |
| 189 | SLV 15 | 2.57 | -17.16 | 143.6 | 0.6145 | -0.366 | -0.0086 |
| 189 | SLV 16 | 2.57 | -17.16 | 143.6 | 0.6145 | -0.366 | -0.0086 |
| 190 | SLU 1 | -8.43 | -0.02 | 22.69 | 0.0096 | -0.0642 | 0.003 |
| 190 | SLU 2 | -8.47 | -0.02 | 22.77 | 0.0099 | -0.0645 | 0.0031 |
| 190 | SLU 3 | -8.79 | -0.02 | 23.64 | 0.0098 | -0.0669 | 0.0031 |
| 190 | SLU 4 | -8.81 | -0.02 | 23.69 | 0.01 | -0.0671 | 0.0032 |
| 190 | SLU 5 | -8.69 | -0.02 | 23.39 | 0.01 | -0.0664 | 0.0031 |
| 190 | SLU 6 | -9.01 | -0.02 | 24.25 | 0.0099 | -0.0688 | 0.0031 |
| 190 | SLU 7 | -9.03 | -0.02 | 24.3 | 0.0101 | -0.0689 | 0.0032 |
| 190 | SLU 8 | -8.89 | -0.02 | 23.91 | 0.0098 | -0.0679 | 0.0031 |
| 190 | SLU 9 | -8.91 | -0.02 | 23.96 | 0.01 | -0.0681 | 0.0031 |
| 190 | SLU 10 | -10.21 | -0.03 | 27.44 | 0.012 | -0.0773 | 0.0038 |
| 190 | SLU 11 | -10.53 | -0.03 | 28.3 | 0.0119 | -0.0797 | 0.0037 |
| 190 | SLU 12 | -10.55 | -0.03 | 28.35 | 0.0121 | -0.0799 | 0.0038 |
| 190 | SLU 13 | -10.44 | -0.03 | 28.05 | 0.0121 | -0.0792 | 0.0038 |
| 190 | SLU 14 | -10.76 | -0.03 | 28.92 | 0.012 | -0.0815 | 0.0038 |
| 190 | SLU 15 | -10.78 | -0.03 | 28.97 | 0.0122 | -0.0817 | 0.0038 |
| 190 | SLU 16 | -10.63 | -0.03 | 28.58 | 0.0119 | -0.0807 | 0.0037 |
| 190 | SLU 17 | -10.65 | -0.03 | 28.63 | 0.0121 | -0.0809 | 0.0038 |
| 190 | SLU 18 | -10.93 | -0.03 | 29.35 | 0.0126 | -0.0825 | 0.004 |
| 190 | SLU 19 | -10.95 | -0.03 | 29.4 | 0.0128 | -0.0827 | 0.004 |
| 190 | SLU 20 | -11.15 | -0.03 | 29.97 | 0.0127 | -0.0843 | 0.004 |
| 190 | SLU 21 | -11.17 | -0.03 | 30.02 | 0.0129 | -0.0845 | 0.004 |
| 190 | SLU 22 | -9.89 | -0.03 | 26.61 | 0.011 | -0.0752 | 0.0035 |
| 190 | SLU 23 | -9.93 | -0.03 | 26.69 | 0.0113 | -0.0755 | 0.0035 |

| Nodo | Cont. | Reazione a traslazione | | | Reazione a rotazione | | |
|---|---|---|---|---|---|---|---|
| Ind. | N.br. | x | y | z | x | y | z |
| 190 | SLU 24 | -10.24 | -0.03 | 27.56 | 0.0112 | -0.0779 | 0.0035 |
| 190 | SLU 25 | -10.26 | -0.03 | 27.61 | 0.0114 | -0.0781 | 0.0036 |
| 190 | SLU 26 | -10.15 | -0.03 | 27.3 | 0.0114 | -0.0774 | 0.0036 |
| 190 | SLU 27 | -10.47 | -0.03 | 28.17 | 0.0113 | -0.0797 | 0.0036 |
| 190 | SLU 28 | -10.49 | -0.03 | 28.22 | 0.0115 | -0.0799 | 0.0036 |
| 190 | SLU 29 | -10.34 | -0.03 | 27.83 | 0.0112 | -0.0789 | 0.0035 |
| 190 | SLU 30 | -10.36 | -0.03 | 27.88 | 0.0113 | -0.0791 | 0.0036 |
| 190 | SLU 31 | -11.67 | -0.03 | 31.36 | 0.0134 | -0.0883 | 0.0042 |
| 190 | SLU 32 | -11.99 | -0.03 | 32.22 | 0.0133 | -0.0907 | 0.0042 |
| 190 | SLU 33 | -12.01 | -0.03 | 32.27 | 0.0135 | -0.0908 | 0.0042 |
| 190 | SLU 34 | -11.9 | -0.03 | 31.97 | 0.0135 | -0.0901 | 0.0042 |
| 190 | SLU 35 | -12.21 | -0.03 | 32.83 | 0.0134 | -0.0925 | 0.0042 |
| 190 | SLU 36 | -12.23 | -0.03 | 32.88 | 0.0136 | -0.0927 | 0.0043 |
| 190 | SLU 37 | -12.09 | -0.03 | 32.5 | 0.0133 | -0.0917 | 0.0042 |
| 190 | SLU 38 | -12.11 | -0.03 | 32.55 | 0.0134 | -0.0919 | 0.0042 |
| 190 | SLU 39 | -12.38 | -0.03 | 33.27 | 0.014 | -0.0935 | 0.0044 |
| 190 | SLU 40 | -12.4 | -0.03 | 33.32 | 0.0142 | -0.0936 | 0.0044 |
| 190 | SLU 41 | -12.61 | -0.03 | 33.88 | 0.0141 | -0.0953 | 0.0044 |
| 190 | SLU 42 | -12.63 | -0.03 | 33.93 | 0.0142 | -0.0955 | 0.0045 |
| 190 | SLU 43 | -10.47 | -0.03 | 28.15 | 0.012 | -0.0797 | 0.0038 |
| 190 | SLU 44 | -10.5 | -0.03 | 28.24 | 0.0123 | -0.08 | 0.0039 |
| 190 | SLU 45 | -10.82 | -0.03 | 29.1 | 0.0123 | -0.0824 | 0.0039 |
| 190 | SLU 46 | -10.84 | -0.03 | 29.15 | 0.0124 | -0.0826 | 0.0039 |
| 190 | SLU 47 | -10.73 | -0.03 | 28.85 | 0.0124 | -0.0819 | 0.0039 |
| 190 | SLU 48 | -11.04 | -0.03 | 29.71 | 0.0123 | -0.0843 | 0.0039 |
| 190 | SLU 49 | -11.06 | -0.03 | 29.76 | 0.0125 | -0.0844 | 0.0039 |
| 190 | SLU 50 | -10.92 | -0.03 | 29.38 | 0.0122 | -0.0834 | 0.0038 |
| 190 | SLU 51 | -10.94 | -0.03 | 29.43 | 0.0124 | -0.0836 | 0.0039 |
| 190 | SLU 52 | -12.24 | -0.03 | 32.9 | 0.0144 | -0.0928 | 0.0045 |
| 190 | SLU 53 | -12.56 | -0.03 | 33.77 | 0.0144 | -0.0952 | 0.0045 |
| 190 | SLU 54 | -12.58 | -0.03 | 33.82 | 0.0145 | -0.0954 | 0.0046 |
| 190 | SLU 55 | -12.47 | -0.03 | 33.51 | 0.0145 | -0.0947 | 0.0045 |
| 190 | SLU 56 | -12.79 | -0.03 | 34.38 | 0.0144 | -0.097 | 0.0045 |
| 190 | SLU 57 | -12.81 | -0.03 | 34.43 | 0.0146 | -0.0972 | 0.0046 |
| 190 | SLU 58 | -12.66 | -0.03 | 34.04 | 0.0143 | -0.0962 | 0.0045 |
| 190 | SLU 59 | -12.68 | -0.03 | 34.09 | 0.0145 | -0.0964 | 0.0045 |
| 190 | SLU 60 | -12.96 | -0.04 | 34.82 | 0.015 | -0.098 | 0.0047 |
| 190 | SLU 61 | -12.98 | -0.04 | 34.87 | 0.0152 | -0.0982 | 0.0048 |
| 190 | SLU 62 | -13.18 | -0.04 | 35.43 | 0.0151 | -0.0998 | 0.0047 |
| 190 | SLU 63 | -13.2 | -0.04 | 35.48 | 0.0153 | -0.1 | 0.0048 |
| 190 | SLU 64 | -11.92 | -0.03 | 32.07 | 0.0134 | -0.0907 | 0.0042 |
| 190 | SLU 65 | -11.96 | -0.03 | 32.16 | 0.0137 | -0.091 | 0.0043 |
| 190 | SLU 66 | -12.27 | -0.03 | 33.02 | 0.0136 | -0.0934 | 0.0043 |
| 190 | SLU 67 | -12.29 | -0.03 | 33.07 | 0.0138 | -0.0936 | 0.0043 |
| 190 | SLU 68 | -12.18 | -0.03 | 32.77 | 0.0138 | -0.0929 | 0.0043 |
| 190 | SLU 69 | -12.5 | -0.03 | 33.63 | 0.0137 | -0.0952 | 0.0043 |
| 190 | SLU 70 | -12.52 | -0.03 | 33.68 | 0.0139 | -0.0954 | 0.0044 |
| 190 | SLU 71 | -12.37 | -0.03 | 33.3 | 0.0136 | -0.0944 | 0.0043 |
| 190 | SLU 72 | -12.39 | -0.03 | 33.35 | 0.0137 | -0.0946 | 0.0043 |
| 190 | SLU 73 | -13.7 | -0.04 | 36.82 | 0.0158 | -0.1038 | 0.005 |
| 190 | SLU 74 | -14.02 | -0.04 | 37.68 | 0.0157 | -0.1062 | 0.0049 |
| 190 | SLU 75 | -14.04 | -0.04 | 37.73 | 0.0159 | -0.1063 | 0.005 |
| 190 | SLU 76 | -13.93 | -0.04 | 37.43 | 0.0159 | -0.1056 | 0.005 |
| 190 | SLU 77 | -14.24 | -0.04 | 38.3 | 0.0158 | -0.108 | 0.005 |
| 190 | SLU 78 | -14.26 | -0.04 | 38.35 | 0.016 | -0.1082 | 0.005 |
| 190 | SLU 79 | -14.12 | -0.04 | 37.96 | 0.0157 | -0.1072 | 0.0049 |
| 190 | SLU 80 | -14.14 | -0.04 | 38.01 | 0.0158 | -0.1074 | 0.005 |
| 190 | SLU 81 | -14.41 | -0.04 | 38.73 | 0.0164 | -0.109 | 0.0051 |
| 190 | SLU 82 | -14.43 | -0.04 | 38.79 | 0.0166 | -0.1091 | 0.0052 |
| 190 | SLU 83 | -14.64 | -0.04 | 39.35 | 0.0165 | -0.1108 | 0.0052 |
| 190 | SLU 84 | -14.66 | -0.04 | 39.4 | 0.0167 | -0.111 | 0.0052 |
| 190 | SLE RA 1 | -8.85 | -0.02 | 23.81 | 0.01 | -0.0674 | 0.0031 |
| 190 | SLE RA 2 | -8.87 | -0.03 | 23.87 | 0.0102 | -0.0676 | 0.0032 |
| 190 | SLE RA 3 | -9.08 | -0.03 | 24.44 | 0.0102 | -0.0691 | 0.0032 |
| 190 | SLE RA 4 | -9.1 | -0.03 | 24.48 | 0.0103 | -0.0693 | 0.0032 |
| 190 | SLE RA 5 | -9.02 | -0.02 | 24.27 | 0.0103 | -0.0688 | 0.0032 |
| 190 | SLE RA 6 | -9.24 | -0.02 | 24.85 | 0.0102 | -0.0704 | 0.0032 |
| 190 | SLE RA 7 | -9.25 | -0.03 | 24.88 | 0.0103 | -0.0705 | 0.0033 |
| 190 | SLE RA 8 | -9.15 | -0.02 | 24.63 | 0.0101 | -0.0698 | 0.0032 |
| 190 | SLE RA 9 | -9.17 | -0.02 | 24.66 | 0.0102 | -0.07 | 0.0032 |
| 190 | SLE RA 10 | -10.04 | -0.03 | 26.97 | 0.0116 | -0.0761 | 0.0036 |
| 190 | SLE RA 11 | -10.25 | -0.03 | 27.55 | 0.0116 | -0.0777 | 0.0036 |
| 190 | SLE RA 12 | -10.26 | -0.03 | 27.58 | 0.0117 | -0.0778 | 0.0037 |
| 190 | SLE RA 13 | -10.19 | -0.03 | 27.38 | 0.0117 | -0.0773 | 0.0037 |
| 190 | SLE RA 14 | -10.4 | -0.03 | 27.96 | 0.0116 | -0.0789 | 0.0036 |
| 190 | SLE RA 15 | -10.41 | -0.03 | 27.99 | 0.0117 | -0.079 | 0.0037 |
| 190 | SLE RA 16 | -10.31 | -0.03 | 27.74 | 0.0115 | -0.0784 | 0.0036 |
| 190 | SLE RA 17 | -10.33 | -0.03 | 27.77 | 0.0116 | -0.0785 | 0.0037 |
| 190 | SLE RA 18 | -10.51 | -0.03 | 28.25 | 0.012 | -0.0795 | 0.0038 |
| 190 | SLE RA 19 | -10.53 | -0.03 | 28.29 | 0.0121 | -0.0796 | 0.0038 |
| 190 | SLE RA 20 | -10.66 | -0.03 | 28.66 | 0.0121 | -0.0808 | 0.0038 |
| 190 | SLE RA 21 | -10.68 | -0.03 | 28.69 | 0.0122 | -0.0809 | 0.0038 |
| 190 | SLE FR 1 | -8.85 | -0.02 | 23.81 | 0.01 | -0.0674 | 0.0031 |
| 190 | SLE FR 2 | -8.86 | -0.02 | 23.82 | 0.01 | -0.0674 | 0.0032 |
| 190 | SLE FR 3 | -8.91 | -0.02 | 23.97 | 0.01 | -0.0679 | 0.0032 |
| 190 | SLE FR 4 | -9.35 | -0.03 | 25.15 | 0.0106 | -0.071 | 0.0033 |
| 190 | SLE FR 5 | -9.41 | -0.03 | 25.31 | 0.0106 | -0.0715 | 0.0033 |
| 190 | SLE FR 6 | -9.68 | -0.03 | 26.03 | 0.011 | -0.0734 | 0.0035 |

| Nodo | Cont. | Reazione a traslazione | | | Reazione a rotazione | | |
|---|---|---|---|---|---|---|---|
| Ind. | N.br. | x | y | z | x | y | z |
| 190 | SLE QP 1 | -8.85 | -0.02 | 23.81 | 0.01 | -0.0674 | 0.0031 |
| 190 | SLE QP 2 | -9.35 | -0.03 | 25.14 | 0.0106 | -0.071 | 0.0033 |
| 190 | SLD 1 | -6.38 | 0.23 | 16.88 | -0.003 | -0.0315 | -0.0018 |
| 190 | SLD 2 | -6.38 | 0.23 | 16.88 | -0.003 | -0.0315 | -0.0018 |
| 190 | SLD 3 | -5.5 | 0.32 | 14.62 | -0.0101 | -0.0238 | -0.0043 |
| 190 | SLD 4 | -5.5 | 0.32 | 14.62 | -0.0101 | -0.0238 | -0.0043 |
| 190 | SLD 5 | -9.79 | -0.09 | 26.08 | 0.0173 | -0.0708 | 0.0056 |
| 190 | SLD 6 | -9.79 | -0.09 | 26.08 | 0.0173 | -0.0708 | 0.0056 |
| 190 | SLD 7 | -6.87 | 0.22 | 18.56 | -0.0064 | -0.0452 | -0.0027 |
| 190 | SLD 8 | -6.87 | 0.22 | 18.56 | -0.0064 | -0.0452 | -0.0027 |
| 190 | SLD 9 | -11.83 | -0.27 | 31.72 | 0.0276 | -0.0968 | 0.0094 |
| 190 | SLD 10 | -11.83 | -0.27 | 31.72 | 0.0276 | -0.0968 | 0.0094 |
| 190 | SLD 11 | -8.91 | 0.04 | 24.2 | 0.0039 | -0.0712 | 0.0011 |
| 190 | SLD 12 | -8.91 | 0.04 | 24.2 | 0.0039 | -0.0712 | 0.0011 |
| 190 | SLD 13 | -13.19 | -0.37 | 35.66 | 0.0313 | -0.1182 | 0.011 |
| 190 | SLD 14 | -13.19 | -0.37 | 35.66 | 0.0313 | -0.1182 | 0.011 |
| 190 | SLD 15 | -12.32 | -0.28 | 33.41 | 0.0242 | -0.1105 | 0.0085 |
| 190 | SLD 16 | -12.32 | -0.28 | 33.41 | 0.0242 | -0.1105 | 0.0085 |
| 190 | SLV 1 | -2.42 | 0.6 | 5.86 | -0.0234 | 0.0205 | -0.0095 |
| 190 | SLV 2 | -2.42 | 0.6 | 5.86 | -0.0234 | 0.0205 | -0.0095 |
| 190 | SLV 3 | -0.4 | 0.83 | 0.66 | -0.0404 | 0.0383 | -0.0155 |
| 190 | SLV 4 | -0.4 | 0.83 | 0.66 | -0.0404 | 0.0383 | -0.0155 |
| 190 | SLV 5 | -10.33 | -0.18 | 27.25 | 0.0262 | -0.0706 | 0.0085 |
| 190 | SLV 6 | -10.33 | -0.18 | 27.25 | 0.0262 | -0.0706 | 0.0085 |
| 190 | SLV 7 | -3.6 | 0.58 | 9.9 | -0.0305 | -0.0112 | -0.0114 |
| 190 | SLV 8 | -3.6 | 0.58 | 9.9 | -0.0305 | -0.0112 | -0.0114 |
| 190 | SLV 9 | -15.1 | -0.63 | 40.38 | 0.0517 | -0.1308 | 0.018 |
| 190 | SLV 10 | -15.1 | -0.63 | 40.38 | 0.0517 | -0.1308 | 0.018 |
| 190 | SLV 11 | -8.36 | 0.13 | 23.03 | -0.005 | -0.0714 | -0.0019 |
| 190 | SLV 12 | -8.36 | 0.13 | 23.03 | -0.005 | -0.0714 | -0.0019 |
| 190 | SLV 13 | -18.29 | -0.88 | 49.63 | 0.0616 | -0.1803 | 0.0221 |
| 190 | SLV 14 | -18.29 | -0.88 | 49.63 | 0.0616 | -0.1803 | 0.0221 |
| 190 | SLV 15 | -16.27 | -0.66 | 44.42 | 0.0446 | -0.1625 | 0.0162 |
| 190 | SLV 16 | -16.27 | -0.66 | 44.42 | 0.0446 | -0.1625 | 0.0162 |
| 191 | SLU 1 | 4.66 | -3.34 | 44.51 | 0.0784 | -2.5027 | -0.4971 |
| 191 | SLU 2 | 4.67 | -3.34 | 44.57 | 0.0785 | -2.5064 | -0.4978 |
| 191 | SLU 3 | 4.82 | -3.44 | 46.07 | 0.0803 | -2.5937 | -0.5127 |
| 191 | SLU 4 | 4.82 | -3.44 | 46.11 | 0.0804 | -2.5959 | -0.5131 |
| 191 | SLU 5 | 4.75 | -3.4 | 45.46 | 0.0796 | -2.5601 | -0.5069 |
| 191 | SLU 6 | 4.9 | -3.5 | 46.95 | 0.0815 | -2.6474 | -0.5218 |
| 191 | SLU 7 | 4.91 | -3.5 | 46.99 | 0.0816 | -2.6496 | -0.5222 |
| 191 | SLU 8 | 4.83 | -3.46 | 46.27 | 0.0807 | -2.6101 | -0.5153 |
| 191 | SLU 9 | 4.83 | -3.46 | 46.31 | 0.0808 | -2.6124 | -0.5157 |
| 191 | SLU 10 | 5.67 | -4.15 | 54.17 | 0.0998 | -3.0539 | -0.6188 |
| 191 | SLU 11 | 5.82 | -4.25 | 55.67 | 0.1016 | -3.1412 | -0.6337 |
| 191 | SLU 12 | 5.83 | -4.26 | 55.7 | 0.1017 | -3.1434 | -0.6342 |
| 191 | SLU 13 | 5.76 | -4.21 | 55.05 | 0.1009 | -3.1076 | -0.6279 |
| 191 | SLU 14 | 5.91 | -4.31 | 56.55 | 0.1028 | -3.1949 | -0.6428 |
| 191 | SLU 15 | 5.91 | -4.32 | 56.59 | 0.1029 | -3.1971 | -0.6433 |
| 191 | SLU 16 | 5.83 | -4.27 | 55.86 | 0.102 | -3.1576 | -0.6363 |
| 191 | SLU 17 | 5.84 | -4.27 | 55.9 | 0.1021 | -3.1599 | -0.6368 |
| 191 | SLU 18 | 6.09 | -4.5 | 58.21 | 0.1088 | -3.2848 | -0.67 |
| 191 | SLU 19 | 6.1 | -4.5 | 58.25 | 0.1089 | -3.2871 | -0.6704 |
| 191 | SLU 20 | 6.18 | -4.56 | 59.09 | 0.11 | -3.3386 | -0.6791 |
| 191 | SLU 21 | 6.18 | -4.56 | 59.13 | 0.11 | -3.3408 | -0.6795 |
| 191 | SLU 22 | 5.42 | -3.82 | 51.66 | 0.0882 | -2.8999 | -0.5696 |
| 191 | SLU 23 | 5.43 | -3.83 | 51.73 | 0.0883 | -2.9037 | -0.5703 |
| 191 | SLU 24 | 5.57 | -3.93 | 53.23 | 0.0902 | -2.9909 | -0.5852 |
| 191 | SLU 25 | 5.58 | -3.93 | 53.27 | 0.0903 | -2.9931 | -0.5856 |
| 191 | SLU 26 | 5.51 | -3.89 | 52.61 | 0.0895 | -2.9574 | -0.5794 |
| 191 | SLU 27 | 5.66 | -3.99 | 54.11 | 0.0914 | -3.0446 | -0.5943 |
| 191 | SLU 28 | 5.66 | -3.99 | 54.15 | 0.0914 | -3.0469 | -0.5947 |
| 191 | SLU 29 | 5.59 | -3.94 | 53.43 | 0.0905 | -3.0074 | -0.5878 |
| 191 | SLU 30 | 5.59 | -3.95 | 53.47 | 0.0906 | -3.0096 | -0.5882 |
| 191 | SLU 31 | 6.43 | -4.64 | 61.32 | 0.1096 | -3.4512 | -0.6913 |
| 191 | SLU 32 | 6.58 | -4.74 | 62.82 | 0.1115 | -3.5384 | -0.7062 |
| 191 | SLU 33 | 6.58 | -4.74 | 62.86 | 0.1116 | -3.5406 | -0.7066 |
| 191 | SLU 34 | 6.51 | -4.7 | 62.2 | 0.1108 | -3.5049 | -0.7004 |
| 191 | SLU 35 | 6.66 | -4.8 | 63.7 | 0.1127 | -3.5921 | -0.7153 |
| 191 | SLU 36 | 6.67 | -4.8 | 63.74 | 0.1127 | -3.5944 | -0.7157 |
| 191 | SLU 37 | 6.59 | -4.76 | 63.02 | 0.1118 | -3.5549 | -0.7088 |
| 191 | SLU 38 | 6.59 | -4.76 | 63.06 | 0.1119 | -3.5571 | -0.7092 |
| 191 | SLU 39 | 6.85 | -4.98 | 65.37 | 0.1187 | -3.6821 | -0.7425 |
| 191 | SLU 40 | 6.86 | -4.98 | 65.41 | 0.1187 | -3.6843 | -0.7429 |
| 191 | SLU 41 | 6.94 | -5.04 | 66.25 | 0.1198 | -3.7358 | -0.7516 |
| 191 | SLU 42 | 6.94 | -5.04 | 66.29 | 0.1199 | -3.738 | -0.752 |
| 191 | SLU 43 | 5.8 | -4.17 | 55.41 | 0.0985 | -3.1173 | -0.6214 |
| 191 | SLU 44 | 5.81 | -4.17 | 55.47 | 0.0986 | -3.121 | -0.6221 |
| 191 | SLU 45 | 5.96 | -4.27 | 56.97 | 0.1005 | -3.2083 | -0.637 |
| 191 | SLU 46 | 5.96 | -4.28 | 57.01 | 0.1005 | -3.2105 | -0.6374 |
| 191 | SLU 47 | 5.89 | -4.24 | 56.35 | 0.0998 | -3.1747 | -0.6312 |
| 191 | SLU 48 | 6.04 | -4.34 | 57.85 | 0.1016 | -3.262 | -0.6461 |
| 191 | SLU 49 | 6.04 | -4.34 | 57.89 | 0.1017 | -3.2642 | -0.6465 |
| 191 | SLU 50 | 5.97 | -4.29 | 57.17 | 0.1008 | -3.2248 | -0.6396 |
| 191 | SLU 51 | 5.97 | -4.3 | 57.21 | 0.1009 | -3.227 | -0.64 |
| 191 | SLU 52 | 6.81 | -4.99 | 65.07 | 0.1199 | -3.6685 | -0.7431 |
| 191 | SLU 53 | 6.96 | -5.09 | 66.56 | 0.1218 | -3.7558 | -0.758 |
| 191 | SLU 54 | 6.96 | -5.09 | 66.6 | 0.1218 | -3.758 | -0.7584 |

| Nodo | Cont. | Reazione a traslazione | | | Reazione a rotazione | | |
|---|---|---|---|---|---|---|---|
| Ind. | N.br. | x | y | z | x | y | z |
| 191 | SLU 55 | 6.89 | -5.05 | 65.95 | 0.1211 | -3.7223 | -0.7522 |
| 191 | SLU 56 | 7.04 | -5.15 | 67.45 | 0.1229 | -3.8095 | -0.7671 |
| 191 | SLU 57 | 7.05 | -5.15 | 67.48 | 0.123 | -3.8117 | -0.7676 |
| 191 | SLU 58 | 6.97 | -5.1 | 66.76 | 0.1221 | -3.7723 | -0.7606 |
| 191 | SLU 59 | 6.98 | -5.11 | 66.8 | 0.1222 | -3.7745 | -0.7611 |
| 191 | SLU 60 | 7.23 | -5.33 | 69.11 | 0.1289 | -3.8995 | -0.7943 |
| 191 | SLU 61 | 7.24 | -5.33 | 69.15 | 0.129 | -3.9017 | -0.7947 |
| 191 | SLU 62 | 7.32 | -5.39 | 69.99 | 0.1301 | -3.9532 | -0.8034 |
| 191 | SLU 63 | 7.32 | -5.39 | 70.03 | 0.1302 | -3.9554 | -0.8038 |
| 191 | SLU 64 | 6.56 | -4.66 | 62.56 | 0.1084 | -3.5146 | -0.6939 |
| 191 | SLU 65 | 6.56 | -4.66 | 62.63 | 0.1085 | -3.5183 | -0.6946 |
| 191 | SLU 66 | 6.71 | -4.76 | 64.13 | 0.1103 | -3.6055 | -0.7095 |
| 191 | SLU 67 | 6.72 | -4.76 | 64.17 | 0.1104 | -3.6077 | -0.7099 |
| 191 | SLU 68 | 6.65 | -4.72 | 63.51 | 0.1096 | -3.572 | -0.7037 |
| 191 | SLU 69 | 6.8 | -4.82 | 65.01 | 0.1115 | -3.6592 | -0.7186 |
| 191 | SLU 70 | 6.8 | -4.82 | 65.05 | 0.1116 | -3.6615 | -0.719 |
| 191 | SLU 71 | 6.72 | -4.78 | 64.33 | 0.1107 | -3.622 | -0.7121 |
| 191 | SLU 72 | 6.73 | -4.78 | 64.37 | 0.1107 | -3.6242 | -0.7125 |
| 191 | SLU 73 | 7.57 | -5.47 | 72.22 | 0.1298 | -4.0658 | -0.8156 |
| 191 | SLU 74 | 7.72 | -5.57 | 73.72 | 0.1316 | -4.153 | -0.8305 |
| 191 | SLU 75 | 7.72 | -5.57 | 73.76 | 0.1317 | -4.1553 | -0.8309 |
| 191 | SLU 76 | 7.65 | -5.53 | 73.1 | 0.1309 | -4.1195 | -0.8247 |
| 191 | SLU 77 | 7.8 | -5.63 | 74.6 | 0.1328 | -4.2067 | -0.8396 |
| 191 | SLU 78 | 7.81 | -5.64 | 74.64 | 0.1329 | -4.209 | -0.84 |
| 191 | SLU 79 | 7.73 | -5.59 | 73.92 | 0.132 | -4.1695 | -0.8331 |
| 191 | SLU 80 | 7.73 | -5.59 | 73.96 | 0.1321 | -4.1717 | -0.8335 |
| 191 | SLU 81 | 7.99 | -5.81 | 76.27 | 0.1388 | -4.2967 | -0.8668 |
| 191 | SLU 82 | 8 | -5.82 | 76.31 | 0.1389 | -4.2989 | -0.8672 |
| 191 | SLU 83 | 8.07 | -5.88 | 77.15 | 0.14 | -4.3504 | -0.8759 |
| 191 | SLU 84 | 8.08 | -5.88 | 77.19 | 0.14 | -4.3527 | -0.8763 |
| 191 | SLE RA 1 | 4.88 | -3.47 | 46.55 | 0.0812 | -2.6162 | -0.5178 |
| 191 | SLE RA 2 | 4.88 | -3.48 | 46.6 | 0.0813 | -2.6187 | -0.5183 |
| 191 | SLE RA 3 | 4.98 | -3.54 | 47.6 | 0.0825 | -2.6768 | -0.5282 |
| 191 | SLE RA 4 | 4.98 | -3.55 | 47.62 | 0.0825 | -2.6783 | -0.5285 |
| 191 | SLE RA 5 | 4.94 | -3.52 | 47.18 | 0.082 | -2.6545 | -0.5243 |
| 191 | SLE RA 6 | 5.04 | -3.59 | 48.18 | 0.0833 | -2.7127 | -0.5343 |
| 191 | SLE RA 7 | 5.04 | -3.59 | 48.21 | 0.0833 | -2.7141 | -0.5346 |
| 191 | SLE RA 8 | 4.99 | -3.56 | 47.73 | 0.0827 | -2.6878 | -0.5299 |
| 191 | SLE RA 9 | 4.99 | -3.56 | 47.75 | 0.0828 | -2.6893 | -0.5302 |
| 191 | SLE RA 10 | 5.55 | -4.02 | 52.99 | 0.0955 | -2.9837 | -0.599 |
| 191 | SLE RA 11 | 5.65 | -4.09 | 53.99 | 0.0967 | -3.0418 | -0.6089 |
| 191 | SLE RA 12 | 5.65 | -4.09 | 54.02 | 0.0967 | -3.0433 | -0.6092 |
| 191 | SLE RA 13 | 5.61 | -4.06 | 53.58 | 0.0962 | -3.0195 | -0.605 |
| 191 | SLE RA 14 | 5.71 | -4.13 | 54.58 | 0.0975 | -3.0777 | -0.615 |
| 191 | SLE RA 15 | 5.71 | -4.13 | 54.6 | 0.0975 | -3.0791 | -0.6153 |
| 191 | SLE RA 16 | 5.66 | -4.1 | 54.12 | 0.0969 | -3.0528 | -0.6106 |
| 191 | SLE RA 17 | 5.66 | -4.1 | 54.15 | 0.097 | -3.0543 | -0.6109 |
| 191 | SLE RA 18 | 5.83 | -4.25 | 55.69 | 0.1015 | -3.1376 | -0.6331 |
| 191 | SLE RA 19 | 5.84 | -4.25 | 55.72 | 0.1015 | -3.1391 | -0.6334 |
| 191 | SLE RA 20 | 5.89 | -4.29 | 56.28 | 0.1023 | -3.1734 | -0.6391 |
| 191 | SLE RA 21 | 5.89 | -4.29 | 56.3 | 0.1023 | -3.1749 | -0.6394 |
| 191 | SLE FR 1 | 4.88 | -3.47 | 46.55 | 0.0812 | -2.6162 | -0.5178 |
| 191 | SLE FR 2 | 4.88 | -3.48 | 46.56 | 0.0812 | -2.6167 | -0.5179 |
| 191 | SLE FR 3 | 4.9 | -3.49 | 46.79 | 0.0815 | -2.6305 | -0.5202 |
| 191 | SLE FR 4 | 5.16 | -3.71 | 49.3 | 0.0873 | -2.7731 | -0.5525 |
| 191 | SLE FR 5 | 5.19 | -3.72 | 49.53 | 0.0876 | -2.787 | -0.5548 |
| 191 | SLE FR 6 | 5.35 | -3.86 | 51.12 | 0.0913 | -2.8769 | -0.5754 |
| 191 | SLE QP 1 | 4.88 | -3.47 | 46.55 | 0.0812 | -2.6162 | -0.5178 |
| 191 | SLE QP 2 | 5.16 | -3.71 | 49.29 | 0.0873 | -2.7726 | -0.5524 |
| 191 | SLD 1 | 4.04 | -2.51 | 38.87 | 0.0473 | -2.0034 | -0.3762 |
| 191 | SLD 2 | 4.04 | -2.51 | 38.87 | 0.0473 | -2.0034 | -0.3762 |
| 191 | SLD 3 | 4.45 | -3.55 | 43.22 | 0.097 | -2.3079 | -0.5352 |
| 191 | SLD 4 | 4.45 | -3.55 | 43.22 | 0.097 | -2.3079 | -0.5352 |
| 191 | SLD 5 | 4.2 | -1.76 | 39.56 | -0.0002 | -2.0801 | -0.2584 |
| 191 | SLD 6 | 4.2 | -1.76 | 39.56 | -0.0002 | -2.0801 | -0.2584 |
| 191 | SLD 7 | 5.57 | -5.25 | 54.07 | 0.1656 | -3.095 | -0.7883 |
| 191 | SLD 8 | 5.57 | -5.25 | 54.07 | 0.1656 | -3.095 | -0.7883 |
| 191 | SLD 9 | 4.75 | -2.17 | 44.51 | 0.0089 | -2.4503 | -0.3165 |
| 191 | SLD 10 | 4.75 | -2.17 | 44.51 | 0.0089 | -2.4503 | -0.3165 |
| 191 | SLD 11 | 6.13 | -5.65 | 59.03 | 0.1747 | -3.4652 | -0.8463 |
| 191 | SLD 12 | 6.13 | -5.65 | 59.03 | 0.1747 | -3.4652 | -0.8463 |
| 191 | SLD 13 | 5.88 | -3.86 | 55.37 | 0.0775 | -3.2374 | -0.5696 |
| 191 | SLD 14 | 5.88 | -3.86 | 55.37 | 0.0775 | -3.2374 | -0.5696 |
| 191 | SLD 15 | 6.29 | -4.9 | 59.72 | 0.1273 | -3.5419 | -0.7286 |
| 191 | SLD 16 | 6.29 | -4.9 | 59.72 | 0.1273 | -3.5419 | -0.7286 |
| 191 | SLV 1 | 2.56 | -0.88 | 24.97 | -0.007 | -0.974 | -0.1398 |
| 191 | SLV 2 | 2.56 | -0.88 | 24.97 | -0.007 | -0.974 | -0.1398 |
| 191 | SLV 3 | 3.51 | -3.33 | 35.09 | 0.1096 | -1.683 | -0.5119 |
| 191 | SLV 4 | 3.51 | -3.33 | 35.09 | 0.1096 | -1.683 | -0.5119 |
| 191 | SLV 5 | 2.93 | 0.85 | 26.65 | -0.1178 | -1.1577 | 0.1357 |
| 191 | SLV 6 | 2.93 | 0.85 | 26.65 | -0.1178 | -1.1577 | 0.1357 |
| 191 | SLV 7 | 6.12 | -7.31 | 60.38 | 0.2708 | -3.5211 | -1.1045 |
| 191 | SLV 8 | 6.12 | -7.31 | 60.38 | 0.2708 | -3.5211 | -1.1045 |
| 191 | SLV 9 | 4.21 | -0.11 | 38.21 | -0.0963 | -2.0242 | -0.0003 |
| 191 | SLV 10 | 4.21 | -0.11 | 38.21 | -0.0963 | -2.0242 | -0.0003 |
| 191 | SLV 11 | 7.4 | -8.27 | 71.94 | 0.2924 | -4.3876 | -1.2405 |
| 191 | SLV 12 | 7.4 | -8.27 | 71.94 | 0.2924 | -4.3876 | -1.2405 |
| 191 | SLV 13 | 6.82 | -4.08 | 63.5 | 0.0649 | -3.8623 | -0.5929 |

| Nodo | Cont. | Reazione a traslazione | | | Reazione a rotazione | | |
|---|---|---|---|---|---|---|---|
| Ind. | N.br. | x | y | z | x | y | z |
| 191 | SLV 14 | 6.82 | -4.08 | 63.5 | 0.0649 | -3.8623 | -0.5929 |
| 191 | SLV 15 | 7.77 | -6.53 | 73.62 | 0.1815 | -4.5713 | -0.965 |
| 191 | SLV 16 | 7.77 | -6.53 | 73.62 | 0.1815 | -4.5713 | -0.965 |
| 193 | SLU 1 | -5.35 | -0.02 | 31.86 | 0.0052 | -0.0749 | 0.001 |
| 193 | SLU 2 | -5.36 | -0.02 | 31.92 | 0.0052 | -0.075 | 0.001 |
| 193 | SLU 3 | -5.58 | -0.02 | 33.17 | 0.0053 | -0.0799 | 0.001 |
| 193 | SLU 4 | -5.58 | -0.02 | 33.2 | 0.0053 | -0.08 | 0.001 |
| 193 | SLU 5 | -5.5 | -0.02 | 32.73 | 0.0052 | -0.079 | 0.001 |
| 193 | SLU 6 | -5.72 | -0.02 | 33.98 | 0.0054 | -0.0839 | 0.001 |
| 193 | SLU 7 | -5.73 | -0.02 | 34.01 | 0.0053 | -0.084 | 0.001 |
| 193 | SLU 8 | -5.64 | -0.02 | 33.48 | 0.0053 | -0.0827 | 0.001 |
| 193 | SLU 9 | -5.64 | -0.02 | 33.51 | 0.0053 | -0.0828 | 0.001 |
| 193 | SLU 10 | -6.49 | -0.02 | 38.56 | 0.0066 | -0.0901 | 0.0013 |
| 193 | SLU 11 | -6.71 | -0.03 | 39.81 | 0.0068 | -0.095 | 0.0013 |
| 193 | SLU 12 | -6.71 | -0.03 | 39.85 | 0.0068 | -0.0951 | 0.0013 |
| 193 | SLU 13 | -6.63 | -0.02 | 39.37 | 0.0067 | -0.0941 | 0.0013 |
| 193 | SLU 14 | -6.85 | -0.03 | 40.62 | 0.0068 | -0.099 | 0.0013 |
| 193 | SLU 15 | -6.85 | -0.03 | 40.65 | 0.0068 | -0.0991 | 0.0013 |
| 193 | SLU 16 | -6.77 | -0.02 | 40.12 | 0.0067 | -0.0978 | 0.0013 |
| 193 | SLU 17 | -6.77 | -0.02 | 40.15 | 0.0067 | -0.0979 | 0.0013 |
| 193 | SLU 18 | -6.96 | -0.03 | 41.35 | 0.0073 | -0.0964 | 0.0014 |
| 193 | SLU 19 | -6.97 | -0.03 | 41.39 | 0.0073 | -0.0965 | 0.0014 |
| 193 | SLU 20 | -7.11 | -0.03 | 42.16 | 0.0073 | -0.1004 | 0.0014 |
| 193 | SLU 21 | -7.11 | -0.03 | 42.19 | 0.0073 | -0.1005 | 0.0014 |
| 193 | SLU 22 | -6.25 | -0.02 | 37.16 | 0.0059 | -0.0881 | 0.0011 |
| 193 | SLU 23 | -6.26 | -0.02 | 37.22 | 0.0059 | -0.0883 | 0.0011 |
| 193 | SLU 24 | -6.47 | -0.02 | 38.47 | 0.006 | -0.0932 | 0.0011 |
| 193 | SLU 25 | -6.48 | -0.02 | 38.51 | 0.006 | -0.0933 | 0.0011 |
| 193 | SLU 26 | -6.4 | -0.02 | 38.03 | 0.006 | -0.0922 | 0.0011 |
| 193 | SLU 27 | -6.62 | -0.02 | 39.28 | 0.0061 | -0.0971 | 0.0011 |
| 193 | SLU 28 | -6.62 | -0.02 | 39.31 | 0.0061 | -0.0972 | 0.0011 |
| 193 | SLU 29 | -6.53 | -0.02 | 38.78 | 0.006 | -0.096 | 0.0011 |
| 193 | SLU 30 | -6.54 | -0.02 | 38.81 | 0.006 | -0.0961 | 0.0011 |
| 193 | SLU 31 | -7.38 | -0.03 | 43.86 | 0.0074 | -0.1034 | 0.0014 |
| 193 | SLU 32 | -7.6 | -0.03 | 45.11 | 0.0075 | -0.1083 | 0.0014 |
| 193 | SLU 33 | -7.61 | -0.03 | 45.15 | 0.0075 | -0.1084 | 0.0014 |
| 193 | SLU 34 | -7.53 | -0.03 | 44.67 | 0.0074 | -0.1073 | 0.0014 |
| 193 | SLU 35 | -7.74 | -0.03 | 45.92 | 0.0075 | -0.1122 | 0.0014 |
| 193 | SLU 36 | -7.75 | -0.03 | 45.95 | 0.0075 | -0.1123 | 0.0014 |
| 193 | SLU 37 | -7.66 | -0.03 | 45.42 | 0.0075 | -0.1111 | 0.0014 |
| 193 | SLU 38 | -7.67 | -0.03 | 45.45 | 0.0075 | -0.1112 | 0.0014 |
| 193 | SLU 39 | -7.86 | -0.03 | 46.65 | 0.008 | -0.1097 | 0.0015 |
| 193 | SLU 40 | -7.86 | -0.03 | 46.69 | 0.008 | -0.1098 | 0.0015 |
| 193 | SLU 41 | -8 | -0.03 | 47.46 | 0.008 | -0.1136 | 0.0015 |
| 193 | SLU 42 | -8.01 | -0.03 | 47.49 | 0.008 | -0.1137 | 0.0015 |
| 193 | SLU 43 | -6.65 | -0.02 | 39.6 | 0.0065 | -0.0928 | 0.0012 |
| 193 | SLU 44 | -6.66 | -0.02 | 39.66 | 0.0065 | -0.093 | 0.0012 |
| 193 | SLU 45 | -6.88 | -0.02 | 40.91 | 0.0066 | -0.0979 | 0.0012 |
| 193 | SLU 46 | -6.88 | -0.02 | 40.95 | 0.0066 | -0.098 | 0.0012 |
| 193 | SLU 47 | -6.8 | -0.02 | 40.47 | 0.0065 | -0.0969 | 0.0012 |
| 193 | SLU 48 | -7.02 | -0.02 | 41.72 | 0.0067 | -0.1018 | 0.0012 |
| 193 | SLU 49 | -7.02 | -0.02 | 41.75 | 0.0067 | -0.1019 | 0.0012 |
| 193 | SLU 50 | -6.94 | -0.02 | 41.22 | 0.0066 | -0.1007 | 0.0012 |
| 193 | SLU 51 | -6.94 | -0.02 | 41.25 | 0.0066 | -0.1008 | 0.0012 |
| 193 | SLU 52 | -7.79 | -0.03 | 46.3 | 0.0079 | -0.1081 | 0.0015 |
| 193 | SLU 53 | -8.01 | -0.03 | 47.55 | 0.0081 | -0.113 | 0.0015 |
| 193 | SLU 54 | -8.01 | -0.03 | 47.59 | 0.0081 | -0.1131 | 0.0015 |
| 193 | SLU 55 | -7.93 | -0.03 | 47.11 | 0.008 | -0.112 | 0.0015 |
| 193 | SLU 56 | -8.15 | -0.03 | 48.36 | 0.0081 | -0.1169 | 0.0015 |
| 193 | SLU 57 | -8.15 | -0.03 | 48.39 | 0.0081 | -0.117 | 0.0015 |
| 193 | SLU 58 | -8.06 | -0.03 | 47.86 | 0.008 | -0.1158 | 0.0015 |
| 193 | SLU 59 | -8.07 | -0.03 | 47.89 | 0.008 | -0.1159 | 0.0015 |
| 193 | SLU 60 | -8.26 | -0.03 | 49.09 | 0.0086 | -0.1144 | 0.0016 |
| 193 | SLU 61 | -8.27 | -0.03 | 49.13 | 0.0086 | -0.1145 | 0.0016 |
| 193 | SLU 62 | -8.4 | -0.03 | 49.9 | 0.0086 | -0.1183 | 0.0016 |
| 193 | SLU 63 | -8.41 | -0.03 | 49.93 | 0.0086 | -0.1184 | 0.0016 |
| 193 | SLU 64 | -7.55 | -0.03 | 44.91 | 0.0072 | -0.106 | 0.0014 |
| 193 | SLU 65 | -7.55 | -0.03 | 44.96 | 0.0072 | -0.1062 | 0.0014 |
| 193 | SLU 66 | -7.77 | -0.03 | 46.21 | 0.0073 | -0.1111 | 0.0014 |
| 193 | SLU 67 | -7.78 | -0.03 | 46.25 | 0.0073 | -0.1112 | 0.0014 |
| 193 | SLU 68 | -7.7 | -0.03 | 45.77 | 0.0073 | -0.1101 | 0.0014 |
| 193 | SLU 69 | -7.92 | -0.03 | 47.02 | 0.0074 | -0.1151 | 0.0014 |
| 193 | SLU 70 | -7.92 | -0.03 | 47.05 | 0.0074 | -0.1152 | 0.0014 |
| 193 | SLU 71 | -7.83 | -0.03 | 46.52 | 0.0073 | -0.1139 | 0.0014 |
| 193 | SLU 72 | -7.84 | -0.03 | 46.55 | 0.0073 | -0.114 | 0.0014 |
| 193 | SLU 73 | -8.68 | -0.03 | 51.6 | 0.0087 | -0.1213 | 0.0016 |
| 193 | SLU 74 | -8.9 | -0.03 | 52.86 | 0.0088 | -0.1262 | 0.0017 |
| 193 | SLU 75 | -8.91 | -0.03 | 52.89 | 0.0088 | -0.1263 | 0.0017 |
| 193 | SLU 76 | -8.83 | -0.03 | 52.41 | 0.0087 | -0.1252 | 0.0017 |
| 193 | SLU 77 | -9.04 | -0.03 | 53.66 | 0.0088 | -0.1302 | 0.0017 |
| 193 | SLU 78 | -9.05 | -0.03 | 53.7 | 0.0088 | -0.1303 | 0.0017 |
| 193 | SLU 79 | -8.96 | -0.03 | 53.16 | 0.0088 | -0.129 | 0.0017 |
| 193 | SLU 80 | -8.96 | -0.03 | 53.19 | 0.0088 | -0.1291 | 0.0017 |
| 193 | SLU 81 | -9.16 | -0.04 | 54.39 | 0.0093 | -0.1276 | 0.0018 |
| 193 | SLU 82 | -9.16 | -0.04 | 54.43 | 0.0093 | -0.1277 | 0.0018 |
| 193 | SLU 83 | -9.3 | -0.04 | 55.2 | 0.0093 | -0.1315 | 0.0018 |
| 193 | SLU 84 | -9.31 | -0.04 | 55.24 | 0.0093 | -0.1317 | 0.0018 |
| 193 | SLE RA 1 | -5.61 | -0.02 | 33.38 | 0.0054 | -0.0787 | 0.001 |

| Nodo | Cont. | Reazione a traslazione | | | Reazione a rotazione | | |
|---|---|---|---|---|---|---|---|
| Ind. | N.br. | x | y | z | x | y | z |
| 193 | SLE RA 2 | -5.61 | -0.02 | 33.42 | 0.0054 | -0.0788 | 0.001 |
| 193 | SLE RA 3 | -5.76 | -0.02 | 34.25 | 0.0055 | -0.082 | 0.001 |
| 193 | SLE RA 4 | -5.76 | -0.02 | 34.27 | 0.0055 | -0.0821 | 0.001 |
| 193 | SLE RA 5 | -5.71 | -0.02 | 33.95 | 0.0054 | -0.0814 | 0.001 |
| 193 | SLE RA 6 | -5.85 | -0.02 | 34.79 | 0.0055 | -0.0847 | 0.001 |
| 193 | SLE RA 7 | -5.86 | -0.02 | 34.81 | 0.0055 | -0.0847 | 0.001 |
| 193 | SLE RA 8 | -5.8 | -0.02 | 34.45 | 0.0055 | -0.0839 | 0.001 |
| 193 | SLE RA 9 | -5.8 | -0.02 | 34.48 | 0.0055 | -0.084 | 0.001 |
| 193 | SLE RA 10 | -6.37 | -0.02 | 37.84 | 0.0064 | -0.0888 | 0.0012 |
| 193 | SLE RA 11 | -6.51 | -0.02 | 38.68 | 0.0064 | -0.0921 | 0.0012 |
| 193 | SLE RA 12 | -6.51 | -0.02 | 38.7 | 0.0064 | -0.0922 | 0.0012 |
| 193 | SLE RA 13 | -6.46 | -0.02 | 38.38 | 0.0064 | -0.0915 | 0.0012 |
| 193 | SLE RA 14 | -6.61 | -0.02 | 39.22 | 0.0065 | -0.0947 | 0.0012 |
| 193 | SLE RA 15 | -6.61 | -0.02 | 39.24 | 0.0065 | -0.0948 | 0.0012 |
| 193 | SLE RA 16 | -6.55 | -0.02 | 38.88 | 0.0064 | -0.094 | 0.0012 |
| 193 | SLE RA 17 | -6.55 | -0.02 | 38.9 | 0.0064 | -0.094 | 0.0012 |
| 193 | SLE RA 18 | -6.68 | -0.03 | 39.7 | 0.0068 | -0.093 | 0.0013 |
| 193 | SLE RA 19 | -6.69 | -0.03 | 39.73 | 0.0068 | -0.0931 | 0.0013 |
| 193 | SLE RA 20 | -6.78 | -0.03 | 40.24 | 0.0068 | -0.0957 | 0.0013 |
| 193 | SLE RA 21 | -6.78 | -0.03 | 40.26 | 0.0068 | -0.0957 | 0.0013 |
| 193 | SLE FR 1 | -5.61 | -0.02 | 33.38 | 0.0054 | -0.0787 | 0.001 |
| 193 | SLE FR 2 | -5.61 | -0.02 | 33.39 | 0.0054 | -0.0787 | 0.001 |
| 193 | SLE FR 3 | -5.65 | -0.02 | 33.59 | 0.0054 | -0.0797 | 0.001 |
| 193 | SLE FR 4 | -5.93 | -0.02 | 35.28 | 0.0058 | -0.083 | 0.0011 |
| 193 | SLE FR 5 | -5.97 | -0.02 | 35.49 | 0.0058 | -0.084 | 0.0011 |
| 193 | SLE FR 6 | -6.15 | -0.02 | 36.54 | 0.0061 | -0.0858 | 0.0012 |
| 193 | SLE QP 1 | -5.61 | -0.02 | 33.38 | 0.0054 | -0.0787 | 0.001 |
| 193 | SLE QP 2 | -5.93 | -0.02 | 35.28 | 0.0058 | -0.083 | 0.0011 |
| 193 | SLD 1 | -3.82 | 0.31 | 23.62 | -0.018 | 0.0535 | -0.0069 |
| 193 | SLD 2 | -3.82 | 0.31 | 23.62 | -0.018 | 0.0535 | -0.0069 |
| 193 | SLD 3 | -3.33 | 0.26 | 21.16 | -0.0129 | 0.0703 | -0.0056 |
| 193 | SLD 4 | -3.33 | 0.26 | 21.16 | -0.0129 | 0.0703 | -0.0056 |
| 193 | SLD 5 | -6.03 | 0.14 | 35.51 | -0.009 | -0.0676 | -0.0033 |
| 193 | SLD 6 | -6.03 | 0.14 | 35.51 | -0.009 | -0.0676 | -0.0033 |
| 193 | SLD 7 | -4.42 | 0 | 27.31 | 0.0078 | -0.0114 | 0.0011 |
| 193 | SLD 8 | -4.42 | 0 | 27.31 | 0.0078 | -0.0114 | 0.0011 |
| 193 | SLD 9 | -7.45 | -0.04 | 43.24 | 0.0038 | -0.1545 | 0.0011 |
| 193 | SLD 10 | -7.45 | -0.04 | 43.24 | 0.0038 | -0.1545 | 0.0011 |
| 193 | SLD 11 | -5.83 | -0.19 | 35.04 | 0.0206 | -0.0983 | 0.0055 |
| 193 | SLD 12 | -5.83 | -0.19 | 35.04 | 0.0206 | -0.0983 | 0.0055 |
| 193 | SLD 13 | -8.53 | -0.31 | 49.39 | 0.0245 | -0.2363 | 0.0078 |
| 193 | SLD 14 | -8.53 | -0.31 | 49.39 | 0.0245 | -0.2363 | 0.0078 |
| 193 | SLD 15 | -8.05 | -0.35 | 46.93 | 0.0296 | -0.2194 | 0.0091 |
| 193 | SLD 16 | -8.05 | -0.35 | 46.93 | 0.0296 | -0.2194 | 0.0091 |
| 193 | SLV 1 | -1 | 0.79 | 8.05 | -0.0529 | 0.2331 | -0.0187 |
| 193 | SLV 2 | -1 | 0.79 | 8.05 | -0.0529 | 0.2331 | -0.0187 |
| 193 | SLV 3 | 0.13 | 0.69 | 2.35 | -0.041 | 0.2726 | -0.0156 |
| 193 | SLV 4 | 0.13 | 0.69 | 2.35 | -0.041 | 0.2726 | -0.0156 |
| 193 | SLV 5 | -6.16 | 0.38 | 35.75 | -0.0298 | -0.048 | -0.0096 |
| 193 | SLV 6 | -6.16 | 0.38 | 35.75 | -0.0298 | -0.048 | -0.0096 |
| 193 | SLV 7 | -2.41 | 0.04 | 16.75 | 0.0097 | 0.0836 | 0.0008 |
| 193 | SLV 8 | -2.41 | 0.04 | 16.75 | 0.0097 | 0.0836 | 0.0008 |
| 193 | SLV 9 | -9.45 | -0.08 | 53.8 | 0.0019 | -0.2495 | 0.0014 |
| 193 | SLV 10 | -9.45 | -0.08 | 53.8 | 0.0019 | -0.2495 | 0.0014 |
| 193 | SLV 11 | -5.7 | -0.42 | 34.8 | 0.0414 | -0.1179 | 0.0118 |
| 193 | SLV 12 | -5.7 | -0.42 | 34.8 | 0.0414 | -0.1179 | 0.0118 |
| 193 | SLV 13 | -11.99 | -0.73 | 68.2 | 0.0526 | -0.4385 | 0.0178 |
| 193 | SLV 14 | -11.99 | -0.73 | 68.2 | 0.0526 | -0.4385 | 0.0178 |
| 193 | SLV 15 | -10.86 | -0.84 | 62.5 | 0.0645 | -0.399 | 0.0209 |
| 193 | SLV 16 | -10.86 | -0.84 | 62.5 | 0.0645 | -0.399 | 0.0209 |
| 194 | SLU 1 | 9.21 | -0.19 | 27.86 | 0.0243 | 0.0856 | -0.007 |
| 194 | SLU 2 | 9.31 | -0.19 | 28.12 | 0.0248 | 0.0866 | -0.0071 |
| 194 | SLU 3 | 9.34 | -0.2 | 28.28 | 0.0246 | 0.0861 | -0.0071 |
| 194 | SLU 4 | 9.4 | -0.2 | 28.43 | 0.0249 | 0.0867 | -0.0071 |
| 194 | SLU 5 | 9.26 | -0.19 | 28.01 | 0.0246 | 0.0855 | -0.007 |
| 194 | SLU 6 | 9.3 | -0.2 | 28.17 | 0.0245 | 0.085 | -0.007 |
| 194 | SLU 7 | 9.36 | -0.2 | 28.32 | 0.0247 | 0.0857 | -0.0071 |
| 194 | SLU 8 | 9.12 | -0.2 | 27.65 | 0.024 | 0.0834 | -0.0069 |
| 194 | SLU 9 | 9.18 | -0.2 | 27.8 | 0.0243 | 0.084 | -0.007 |
| 194 | SLU 10 | 11.38 | -0.23 | 34.37 | 0.0299 | 0.1062 | -0.0085 |
| 194 | SLU 11 | 11.42 | -0.23 | 34.52 | 0.0297 | 0.1057 | -0.0085 |
| 194 | SLU 12 | 11.47 | -0.23 | 34.68 | 0.03 | 0.1064 | -0.0086 |
| 194 | SLU 13 | 11.34 | -0.23 | 34.26 | 0.0297 | 0.1051 | -0.0085 |
| 194 | SLU 14 | 11.37 | -0.24 | 34.42 | 0.0295 | 0.1047 | -0.0085 |
| 194 | SLU 15 | 11.43 | -0.24 | 34.57 | 0.0298 | 0.1053 | -0.0085 |
| 194 | SLU 16 | 11.2 | -0.23 | 33.89 | 0.0291 | 0.103 | -0.0084 |
| 194 | SLU 17 | 11.26 | -0.23 | 34.05 | 0.0293 | 0.1036 | -0.0084 |
| 194 | SLU 18 | 12.18 | -0.25 | 36.79 | 0.0316 | 0.1136 | -0.009 |
| 194 | SLU 19 | 12.23 | -0.25 | 36.94 | 0.0319 | 0.1142 | -0.0091 |
| 194 | SLU 20 | 12.13 | -0.25 | 36.68 | 0.0314 | 0.1125 | -0.009 |
| 194 | SLU 21 | 12.19 | -0.25 | 36.84 | 0.0317 | 0.1131 | -0.0091 |
| 194 | SLU 22 | 10.79 | -0.22 | 32.65 | 0.0281 | 0.1003 | -0.008 |
| 194 | SLU 23 | 10.89 | -0.22 | 32.91 | 0.0285 | 0.1013 | -0.0082 |
| 194 | SLU 24 | 10.93 | -0.23 | 33.07 | 0.0284 | 0.1008 | -0.0082 |
| 194 | SLU 25 | 10.98 | -0.23 | 33.22 | 0.0286 | 0.1015 | -0.0082 |
| 194 | SLU 26 | 10.85 | -0.23 | 32.8 | 0.0283 | 0.1003 | -0.0081 |
| 194 | SLU 27 | 10.88 | -0.23 | 32.96 | 0.0282 | 0.0998 | -0.0081 |
| 194 | SLU 28 | 10.94 | -0.23 | 33.12 | 0.0285 | 0.1004 | -0.0082 |

| Nodo | Cont. | Reazione a traslazione | | | Reazione a rotazione | | |
|---|---|---|---|---|---|---|---|
| Ind. | N.br. | x | y | z | x | y | z |
| 194 | SLU 29 | 10.71 | -0.23 | 32.44 | 0.0277 | 0.0981 | -0.008 |
| 194 | SLU 30 | 10.76 | -0.23 | 32.59 | 0.028 | 0.0988 | -0.0081 |
| 194 | SLU 31 | 12.96 | -0.26 | 39.16 | 0.0336 | 0.1209 | -0.0096 |
| 194 | SLU 32 | 13 | -0.27 | 39.31 | 0.0334 | 0.1205 | -0.0096 |
| 194 | SLU 33 | 13.06 | -0.27 | 39.47 | 0.0337 | 0.1211 | -0.0097 |
| 194 | SLU 34 | 12.92 | -0.26 | 39.05 | 0.0334 | 0.1199 | -0.0096 |
| 194 | SLU 35 | 12.96 | -0.27 | 39.21 | 0.0333 | 0.1194 | -0.0096 |
| 194 | SLU 36 | 13.01 | -0.27 | 39.36 | 0.0335 | 0.12 | -0.0096 |
| 194 | SLU 37 | 12.78 | -0.27 | 38.68 | 0.0328 | 0.1177 | -0.0095 |
| 194 | SLU 38 | 12.84 | -0.27 | 38.84 | 0.0331 | 0.1184 | -0.0095 |
| 194 | SLU 39 | 13.76 | -0.28 | 41.58 | 0.0353 | 0.1283 | -0.0101 |
| 194 | SLU 40 | 13.82 | -0.28 | 41.73 | 0.0356 | 0.1289 | -0.0102 |
| 194 | SLU 41 | 13.72 | -0.28 | 41.47 | 0.0351 | 0.1272 | -0.0101 |
| 194 | SLU 42 | 13.77 | -0.28 | 41.63 | 0.0354 | 0.1279 | -0.0102 |
| 194 | SLU 43 | 11.43 | -0.24 | 34.58 | 0.0304 | 0.1062 | -0.0087 |
| 194 | SLU 44 | 11.53 | -0.24 | 34.84 | 0.0308 | 0.1072 | -0.0088 |
| 194 | SLU 45 | 11.56 | -0.24 | 34.99 | 0.0307 | 0.1067 | -0.0088 |
| 194 | SLU 46 | 11.62 | -0.24 | 35.15 | 0.0309 | 0.1074 | -0.0088 |
| 194 | SLU 47 | 11.48 | -0.24 | 34.73 | 0.0306 | 0.1061 | -0.0087 |
| 194 | SLU 48 | 11.52 | -0.25 | 34.88 | 0.0305 | 0.1057 | -0.0088 |
| 194 | SLU 49 | 11.58 | -0.25 | 35.04 | 0.0308 | 0.1063 | -0.0088 |
| 194 | SLU 50 | 11.35 | -0.24 | 34.36 | 0.03 | 0.104 | -0.0086 |
| 194 | SLU 51 | 11.4 | -0.24 | 34.52 | 0.0303 | 0.1047 | -0.0087 |
| 194 | SLU 52 | 13.6 | -0.28 | 41.09 | 0.0359 | 0.1268 | -0.0102 |
| 194 | SLU 53 | 13.64 | -0.28 | 41.24 | 0.0357 | 0.1263 | -0.0102 |
| 194 | SLU 54 | 13.69 | -0.28 | 41.4 | 0.036 | 0.127 | -0.0103 |
| 194 | SLU 55 | 13.56 | -0.28 | 40.98 | 0.0357 | 0.1258 | -0.0102 |
| 194 | SLU 56 | 13.59 | -0.28 | 41.13 | 0.0356 | 0.1253 | -0.0102 |
| 194 | SLU 57 | 13.65 | -0.28 | 41.29 | 0.0358 | 0.1259 | -0.0103 |
| 194 | SLU 58 | 13.42 | -0.28 | 40.61 | 0.0351 | 0.1236 | -0.0101 |
| 194 | SLU 59 | 13.48 | -0.28 | 40.77 | 0.0354 | 0.1243 | -0.0101 |
| 194 | SLU 60 | 14.4 | -0.29 | 43.5 | 0.0376 | 0.1342 | -0.0107 |
| 194 | SLU 61 | 14.45 | -0.29 | 43.66 | 0.0379 | 0.1348 | -0.0108 |
| 194 | SLU 62 | 14.35 | -0.29 | 43.4 | 0.0374 | 0.1331 | -0.0107 |
| 194 | SLU 63 | 14.41 | -0.29 | 43.55 | 0.0377 | 0.1337 | -0.0108 |
| 194 | SLU 64 | 13.02 | -0.27 | 39.37 | 0.0341 | 0.1209 | -0.0098 |
| 194 | SLU 65 | 13.11 | -0.27 | 39.63 | 0.0345 | 0.1219 | -0.0099 |
| 194 | SLU 66 | 13.15 | -0.27 | 39.78 | 0.0344 | 0.1215 | -0.0099 |
| 194 | SLU 67 | 13.2 | -0.27 | 39.94 | 0.0346 | 0.1221 | -0.0099 |
| 194 | SLU 68 | 13.07 | -0.27 | 39.52 | 0.0344 | 0.1209 | -0.0098 |
| 194 | SLU 69 | 13.1 | -0.28 | 39.67 | 0.0342 | 0.1204 | -0.0098 |
| 194 | SLU 70 | 13.16 | -0.28 | 39.83 | 0.0345 | 0.121 | -0.0099 |
| 194 | SLU 71 | 12.93 | -0.27 | 39.15 | 0.0338 | 0.1187 | -0.0097 |
| 194 | SLU 72 | 12.98 | -0.27 | 39.31 | 0.034 | 0.1194 | -0.0098 |
| 194 | SLU 73 | 15.18 | -0.31 | 45.88 | 0.0396 | 0.1416 | -0.0113 |
| 194 | SLU 74 | 15.22 | -0.31 | 46.03 | 0.0394 | 0.1411 | -0.0113 |
| 194 | SLU 75 | 15.28 | -0.31 | 46.19 | 0.0397 | 0.1417 | -0.0114 |
| 194 | SLU 76 | 15.14 | -0.31 | 45.77 | 0.0394 | 0.1405 | -0.0113 |
| 194 | SLU 77 | 15.18 | -0.32 | 45.92 | 0.0393 | 0.14 | -0.0113 |
| 194 | SLU 78 | 15.23 | -0.32 | 46.08 | 0.0395 | 0.1406 | -0.0114 |
| 194 | SLU 79 | 15 | -0.31 | 45.4 | 0.0388 | 0.1384 | -0.0112 |
| 194 | SLU 80 | 15.06 | -0.31 | 45.56 | 0.0391 | 0.139 | -0.0112 |
| 194 | SLU 81 | 15.98 | -0.32 | 48.29 | 0.0413 | 0.1489 | -0.0118 |
| 194 | SLU 82 | 16.04 | -0.32 | 48.45 | 0.0416 | 0.1495 | -0.0119 |
| 194 | SLU 83 | 15.94 | -0.33 | 48.19 | 0.0412 | 0.1478 | -0.0118 |
| 194 | SLU 84 | 15.99 | -0.33 | 48.34 | 0.0414 | 0.1485 | -0.0119 |
| 194 | SLE RA 1 | 9.66 | -0.2 | 29.23 | 0.0254 | 0.0898 | -0.0073 |
| 194 | SLE RA 2 | 9.73 | -0.2 | 29.4 | 0.0257 | 0.0905 | -0.0073 |
| 194 | SLE RA 3 | 9.75 | -0.2 | 29.51 | 0.0256 | 0.0901 | -0.0073 |
| 194 | SLE RA 4 | 9.79 | -0.2 | 29.61 | 0.0258 | 0.0906 | -0.0074 |
| 194 | SLE RA 5 | 9.7 | -0.2 | 29.33 | 0.0256 | 0.0897 | -0.0073 |
| 194 | SLE RA 6 | 9.72 | -0.21 | 29.43 | 0.0255 | 0.0894 | -0.0073 |
| 194 | SLE RA 7 | 9.76 | -0.21 | 29.54 | 0.0257 | 0.0898 | -0.0074 |
| 194 | SLE RA 8 | 9.61 | -0.2 | 29.09 | 0.0252 | 0.0883 | -0.0072 |
| 194 | SLE RA 9 | 9.64 | -0.2 | 29.19 | 0.0254 | 0.0887 | -0.0073 |
| 194 | SLE RA 10 | 11.11 | -0.23 | 33.57 | 0.0291 | 0.1035 | -0.0083 |
| 194 | SLE RA 11 | 11.13 | -0.23 | 33.67 | 0.029 | 0.1032 | -0.0083 |
| 194 | SLE RA 12 | 11.17 | -0.23 | 33.78 | 0.0292 | 0.1036 | -0.0083 |
| 194 | SLE RA 13 | 11.08 | -0.23 | 33.5 | 0.029 | 0.1028 | -0.0083 |
| 194 | SLE RA 14 | 11.11 | -0.23 | 33.6 | 0.0289 | 0.1025 | -0.0083 |
| 194 | SLE RA 15 | 11.14 | -0.23 | 33.7 | 0.029 | 0.1029 | -0.0083 |
| 194 | SLE RA 16 | 10.99 | -0.23 | 33.25 | 0.0286 | 0.1014 | -0.0082 |
| 194 | SLE RA 17 | 11.03 | -0.23 | 33.36 | 0.0287 | 0.1018 | -0.0082 |
| 194 | SLE RA 18 | 11.64 | -0.24 | 35.18 | 0.0302 | 0.1084 | -0.0086 |
| 194 | SLE RA 19 | 11.68 | -0.24 | 35.28 | 0.0304 | 0.1089 | -0.0087 |
| 194 | SLE RA 20 | 11.61 | -0.24 | 35.11 | 0.0301 | 0.1077 | -0.0086 |
| 194 | SLE RA 21 | 11.65 | -0.24 | 35.21 | 0.0303 | 0.1081 | -0.0087 |
| 194 | SLE FR 1 | 9.66 | -0.2 | 29.23 | 0.0254 | 0.0898 | -0.0073 |
| 194 | SLE FR 2 | 9.68 | -0.2 | 29.26 | 0.0255 | 0.0899 | -0.0073 |
| 194 | SLE FR 3 | 9.65 | -0.2 | 29.2 | 0.0254 | 0.0895 | -0.0073 |
| 194 | SLE FR 4 | 10.27 | -0.21 | 31.05 | 0.0269 | 0.0955 | -0.0077 |
| 194 | SLE FR 5 | 10.25 | -0.21 | 30.99 | 0.0268 | 0.0951 | -0.0077 |
| 194 | SLE FR 6 | 10.65 | -0.22 | 32.2 | 0.0278 | 0.0991 | -0.008 |
| 194 | SLE QP 1 | 9.66 | -0.2 | 29.23 | 0.0254 | 0.0898 | -0.0073 |
| 194 | SLE QP 2 | 10.26 | -0.21 | 31.01 | 0.0269 | 0.0954 | -0.0077 |
| 194 | SLD 1 | 13.24 | -0.56 | 40.17 | 0.0518 | 0.1475 | -0.016 |
| 194 | SLD 2 | 13.24 | -0.56 | 40.17 | 0.0518 | 0.1475 | -0.016 |
| 194 | SLD 3 | 14.81 | -0.62 | 44.75 | 0.0579 | 0.1658 | -0.0178 |

| Nodo | Cont. | Reazione a traslazione | | | Reazione a rotazione | | |
|---|---|---|---|---|---|---|---|
| Ind. | N.br. | x | y | z | x | y | z |
| 194 | SLD 4 | 14.81 | -0.62 | 44.75 | 0.0579 | 0.1658 | -0.0178 |
| 194 | SLD 5 | 8.77 | -0.23 | 26.81 | 0.025 | 0.0834 | -0.0075 |
| 194 | SLD 6 | 8.77 | -0.23 | 26.81 | 0.025 | 0.0834 | -0.0075 |
| 194 | SLD 7 | 14 | -0.43 | 42.09 | 0.0454 | 0.1441 | -0.0134 |
| 194 | SLD 8 | 14 | -0.43 | 42.09 | 0.0454 | 0.1441 | -0.0134 |
| 194 | SLD 9 | 6.51 | 0 | 19.94 | 0.0083 | 0.0466 | -0.002 |
| 194 | SLD 10 | 6.51 | 0 | 19.94 | 0.0083 | 0.0466 | -0.002 |
| 194 | SLD 11 | 11.74 | -0.2 | 35.22 | 0.0287 | 0.1073 | -0.0079 |
| 194 | SLD 12 | 11.74 | -0.2 | 35.22 | 0.0287 | 0.1073 | -0.0079 |
| 194 | SLD 13 | 5.7 | 0.2 | 17.27 | -0.0042 | 0.025 | 0.0024 |
| 194 | SLD 14 | 5.7 | 0.2 | 17.27 | -0.0042 | 0.025 | 0.0024 |
| 194 | SLD 15 | 7.27 | 0.14 | 21.86 | 0.002 | 0.0432 | 0.0007 |
| 194 | SLD 16 | 7.27 | 0.14 | 21.86 | 0.002 | 0.0432 | 0.0007 |
| 194 | SLV 1 | 17.16 | -1.08 | 52.21 | 0.0888 | 0.2161 | -0.0284 |
| 194 | SLV 2 | 17.16 | -1.08 | 52.21 | 0.0888 | 0.2161 | -0.0284 |
| 194 | SLV 3 | 20.86 | -1.23 | 63.02 | 0.1039 | 0.259 | -0.0328 |
| 194 | SLV 4 | 20.86 | -1.23 | 63.02 | 0.1039 | 0.259 | -0.0328 |
| 194 | SLV 5 | 6.71 | -0.24 | 20.97 | 0.0226 | 0.0664 | -0.0072 |
| 194 | SLV 6 | 6.71 | -0.24 | 20.97 | 0.0226 | 0.0664 | -0.0072 |
| 194 | SLV 7 | 19.05 | -0.75 | 57.02 | 0.0728 | 0.2096 | -0.0219 |
| 194 | SLV 8 | 19.05 | -0.75 | 57.02 | 0.0728 | 0.2096 | -0.0219 |
| 194 | SLV 9 | 1.46 | 0.32 | 5.01 | -0.0191 | -0.0189 | 0.0065 |
| 194 | SLV 10 | 1.46 | 0.32 | 5.01 | -0.0191 | -0.0189 | 0.0065 |
| 194 | SLV 11 | 13.8 | -0.18 | 41.06 | 0.0311 | 0.1243 | -0.0081 |
| 194 | SLV 12 | 13.8 | -0.18 | 41.06 | 0.0311 | 0.1243 | -0.0081 |
| 194 | SLV 13 | -0.35 | 0.81 | -1 | -0.0502 | -0.0683 | 0.0175 |
| 194 | SLV 14 | -0.35 | 0.81 | -1 | -0.0502 | -0.0683 | 0.0175 |
| 194 | SLV 15 | 3.35 | 0.66 | 9.82 | -0.0351 | -0.0254 | 0.0131 |
| 194 | SLV 16 | 3.35 | 0.66 | 9.82 | -0.0351 | -0.0254 | 0.0131 |
| 195 | SLU 1 | -0.6 | -9.55 | 82.22 | 0.2988 | 0.2867 | 0.0629 |
| 195 | SLU 2 | -0.63 | -9.81 | 83.42 | 0.31 | 0.2866 | 0.0647 |
| 195 | SLU 3 | -0.59 | -9.58 | 83.49 | 0.297 | 0.2918 | 0.0631 |
| 195 | SLU 4 | -0.6 | -9.74 | 84.21 | 0.3038 | 0.2917 | 0.0642 |
| 195 | SLU 5 | -0.6 | -9.65 | 83.08 | 0.3019 | 0.2869 | 0.0636 |
| 195 | SLU 6 | -0.55 | -9.42 | 83.15 | 0.2889 | 0.292 | 0.0621 |
| 195 | SLU 7 | -0.57 | -9.58 | 83.87 | 0.2956 | 0.2919 | 0.0631 |
| 195 | SLU 8 | -0.54 | -9.23 | 81.54 | 0.2825 | 0.2872 | 0.0608 |
| 195 | SLU 9 | -0.56 | -9.38 | 82.26 | 0.2892 | 0.2871 | 0.0618 |
| 195 | SLU 10 | -0.76 | -11.87 | 101.47 | 0.3738 | 0.3525 | 0.0782 |
| 195 | SLU 11 | -0.71 | -11.63 | 101.54 | 0.3608 | 0.3577 | 0.0767 |
| 195 | SLU 12 | -0.73 | -11.79 | 102.26 | 0.3675 | 0.3576 | 0.0777 |
| 195 | SLU 13 | -0.72 | -11.71 | 101.13 | 0.3656 | 0.3528 | 0.0771 |
| 195 | SLU 14 | -0.68 | -11.47 | 101.2 | 0.3526 | 0.3579 | 0.0756 |
| 195 | SLU 15 | -0.69 | -11.63 | 101.92 | 0.3594 | 0.3578 | 0.0766 |
| 195 | SLU 16 | -0.66 | -11.28 | 99.59 | 0.3462 | 0.3531 | 0.0743 |
| 195 | SLU 17 | -0.68 | -11.44 | 100.31 | 0.353 | 0.353 | 0.0754 |
| 195 | SLU 18 | -0.78 | -12.48 | 108.01 | 0.3898 | 0.3809 | 0.0823 |
| 195 | SLU 19 | -0.8 | -12.64 | 108.73 | 0.3966 | 0.3808 | 0.0833 |
| 195 | SLU 20 | -0.75 | -12.32 | 107.67 | 0.3817 | 0.3811 | 0.0812 |
| 195 | SLU 21 | -0.77 | -12.48 | 108.39 | 0.3884 | 0.3811 | 0.0822 |
| 195 | SLU 22 | -0.67 | -10.91 | 95.65 | 0.3381 | 0.3396 | 0.0719 |
| 195 | SLU 23 | -0.7 | -11.18 | 96.85 | 0.3493 | 0.3395 | 0.0737 |
| 195 | SLU 24 | -0.65 | -10.95 | 96.92 | 0.3363 | 0.3446 | 0.0721 |
| 195 | SLU 25 | -0.67 | -11.11 | 97.64 | 0.3431 | 0.3446 | 0.0732 |
| 195 | SLU 26 | -0.67 | -11.02 | 96.51 | 0.3412 | 0.3397 | 0.0726 |
| 195 | SLU 27 | -0.62 | -10.79 | 96.58 | 0.3282 | 0.3449 | 0.0711 |
| 195 | SLU 28 | -0.63 | -10.94 | 97.3 | 0.3349 | 0.3448 | 0.0721 |
| 195 | SLU 29 | -0.6 | -10.59 | 94.97 | 0.3218 | 0.3401 | 0.0698 |
| 195 | SLU 30 | -0.62 | -10.75 | 95.69 | 0.3285 | 0.34 | 0.0708 |
| 195 | SLU 31 | -0.82 | -13.23 | 114.9 | 0.4131 | 0.4054 | 0.0872 |
| 195 | SLU 32 | -0.77 | -13 | 114.96 | 0.4001 | 0.4105 | 0.0857 |
| 195 | SLU 33 | -0.79 | -13.16 | 115.68 | 0.4068 | 0.4105 | 0.0867 |
| 195 | SLU 34 | -0.79 | -13.07 | 114.56 | 0.4049 | 0.4056 | 0.0861 |
| 195 | SLU 35 | -0.74 | -12.84 | 114.62 | 0.3919 | 0.4108 | 0.0846 |
| 195 | SLU 36 | -0.76 | -13 | 115.34 | 0.3987 | 0.4107 | 0.0856 |
| 195 | SLU 37 | -0.73 | -12.65 | 113.02 | 0.3856 | 0.406 | 0.0833 |
| 195 | SLU 38 | -0.74 | -12.8 | 113.74 | 0.3923 | 0.4059 | 0.0844 |
| 195 | SLU 39 | -0.85 | -13.85 | 121.43 | 0.4292 | 0.4338 | 0.0913 |
| 195 | SLU 40 | -0.86 | -14.01 | 122.15 | 0.4359 | 0.4337 | 0.0923 |
| 195 | SLU 41 | -0.81 | -13.69 | 121.09 | 0.421 | 0.434 | 0.0902 |
| 195 | SLU 42 | -0.83 | -13.85 | 121.81 | 0.4278 | 0.4339 | 0.0912 |
| 195 | SLU 43 | -0.76 | -11.94 | 102.29 | 0.3749 | 0.3546 | 0.0787 |
| 195 | SLU 44 | -0.79 | -12.21 | 103.49 | 0.3862 | 0.3545 | 0.0805 |
| 195 | SLU 45 | -0.74 | -11.98 | 103.55 | 0.3732 | 0.3597 | 0.0789 |
| 195 | SLU 46 | -0.76 | -12.14 | 104.27 | 0.3799 | 0.3596 | 0.08 |
| 195 | SLU 47 | -0.76 | -12.05 | 103.15 | 0.378 | 0.3548 | 0.0794 |
| 195 | SLU 48 | -0.71 | -11.82 | 103.21 | 0.365 | 0.3599 | 0.0779 |
| 195 | SLU 49 | -0.73 | -11.97 | 103.93 | 0.3718 | 0.3598 | 0.0789 |
| 195 | SLU 50 | -0.7 | -11.62 | 101.61 | 0.3586 | 0.3551 | 0.0766 |
| 195 | SLU 51 | -0.72 | -11.78 | 102.33 | 0.3654 | 0.355 | 0.0776 |
| 195 | SLU 52 | -0.92 | -14.26 | 121.54 | 0.4499 | 0.4204 | 0.094 |
| 195 | SLU 53 | -0.87 | -14.03 | 121.6 | 0.4369 | 0.4256 | 0.0925 |
| 195 | SLU 54 | -0.89 | -14.19 | 122.32 | 0.4437 | 0.4255 | 0.0935 |
| 195 | SLU 55 | -0.88 | -14.1 | 121.2 | 0.4418 | 0.4207 | 0.0929 |
| 195 | SLU 56 | -0.84 | -13.87 | 121.26 | 0.4288 | 0.4258 | 0.0914 |
| 195 | SLU 57 | -0.85 | -14.03 | 121.98 | 0.4355 | 0.4257 | 0.0924 |
| 195 | SLU 58 | -0.82 | -13.68 | 119.66 | 0.4224 | 0.421 | 0.0901 |
| 195 | SLU 59 | -0.84 | -13.83 | 120.38 | 0.4291 | 0.4209 | 0.0912 |

| Nodo | Cont. | Reazione a traslazione | | | Reazione a rotazione | | |
|---|---|---|---|---|---|---|---|
| Ind. | N.br. | x | y | z | x | y | z |
| 195 | SLU 60 | -0.94 | -14.88 | 128.07 | 0.466 | 0.4488 | 0.0981 |
| 195 | SLU 61 | -0.96 | -15.04 | 128.79 | 0.4727 | 0.4487 | 0.0991 |
| 195 | SLU 62 | -0.91 | -14.72 | 127.73 | 0.4579 | 0.449 | 0.097 |
| 195 | SLU 63 | -0.93 | -14.88 | 128.45 | 0.4646 | 0.449 | 0.098 |
| 195 | SLU 64 | -0.83 | -13.31 | 115.71 | 0.4142 | 0.4075 | 0.0877 |
| 195 | SLU 65 | -0.86 | -13.58 | 116.91 | 0.4255 | 0.4074 | 0.0895 |
| 195 | SLU 66 | -0.81 | -13.34 | 116.98 | 0.4125 | 0.4125 | 0.0879 |
| 195 | SLU 67 | -0.83 | -13.5 | 117.7 | 0.4192 | 0.4125 | 0.089 |
| 195 | SLU 68 | -0.82 | -13.41 | 116.57 | 0.4173 | 0.4076 | 0.0884 |
| 195 | SLU 69 | -0.78 | -13.18 | 116.64 | 0.4043 | 0.4128 | 0.0869 |
| 195 | SLU 70 | -0.79 | -13.34 | 117.36 | 0.4111 | 0.4127 | 0.0879 |
| 195 | SLU 71 | -0.76 | -12.99 | 115.03 | 0.3979 | 0.408 | 0.0856 |
| 195 | SLU 72 | -0.78 | -13.15 | 115.75 | 0.4047 | 0.4079 | 0.0866 |
| 195 | SLU 73 | -0.98 | -15.63 | 134.96 | 0.4892 | 0.4733 | 0.103 |
| 195 | SLU 74 | -0.93 | -15.4 | 135.03 | 0.4762 | 0.4784 | 0.1015 |
| 195 | SLU 75 | -0.95 | -15.56 | 135.75 | 0.483 | 0.4784 | 0.1025 |
| 195 | SLU 76 | -0.95 | -15.47 | 134.62 | 0.4811 | 0.4735 | 0.1019 |
| 195 | SLU 77 | -0.9 | -15.23 | 134.69 | 0.4681 | 0.4787 | 0.1004 |
| 195 | SLU 78 | -0.92 | -15.39 | 135.41 | 0.4748 | 0.4786 | 0.1014 |
| 195 | SLU 79 | -0.89 | -15.04 | 133.08 | 0.4617 | 0.4739 | 0.0991 |
| 195 | SLU 80 | -0.9 | -15.2 | 133.8 | 0.4684 | 0.4738 | 0.1002 |
| 195 | SLU 81 | -1.01 | -16.24 | 141.5 | 0.5053 | 0.5017 | 0.1071 |
| 195 | SLU 82 | -1.02 | -16.4 | 142.22 | 0.5121 | 0.5016 | 0.1081 |
| 195 | SLU 83 | -0.97 | -16.08 | 141.16 | 0.4972 | 0.5019 | 0.106 |
| 195 | SLU 84 | -0.99 | -16.24 | 141.88 | 0.5039 | 0.5018 | 0.107 |
| 195 | SLE RA 1 | -0.62 | -9.94 | 86.06 | 0.31 | 0.3019 | 0.0655 |
| 195 | SLE RA 2 | -0.64 | -10.12 | 86.86 | 0.3175 | 0.3018 | 0.0667 |
| 195 | SLE RA 3 | -0.61 | -9.96 | 86.9 | 0.3088 | 0.3052 | 0.0656 |
| 195 | SLE RA 4 | -0.62 | -10.07 | 87.38 | 0.3133 | 0.3052 | 0.0663 |
| 195 | SLE RA 5 | -0.62 | -10.01 | 86.63 | 0.3121 | 0.3019 | 0.066 |
| 195 | SLE RA 6 | -0.59 | -9.85 | 86.68 | 0.3034 | 0.3054 | 0.0649 |
| 195 | SLE RA 7 | -0.6 | -9.96 | 87.16 | 0.3079 | 0.3053 | 0.0656 |
| 195 | SLE RA 8 | -0.58 | -9.72 | 85.61 | 0.2991 | 0.3022 | 0.0641 |
| 195 | SLE RA 9 | -0.59 | -9.83 | 86.09 | 0.3036 | 0.3021 | 0.0648 |
| 195 | SLE RA 10 | -0.72 | -11.48 | 98.89 | 0.36 | 0.3457 | 0.0757 |
| 195 | SLE RA 11 | -0.69 | -11.33 | 98.94 | 0.3513 | 0.3491 | 0.0747 |
| 195 | SLE RA 12 | -0.7 | -11.44 | 99.42 | 0.3558 | 0.3491 | 0.0754 |
| 195 | SLE RA 13 | -0.7 | -11.38 | 98.67 | 0.3546 | 0.3459 | 0.075 |
| 195 | SLE RA 14 | -0.67 | -11.22 | 98.71 | 0.3459 | 0.3493 | 0.0739 |
| 195 | SLE RA 15 | -0.68 | -11.33 | 99.19 | 0.3504 | 0.3492 | 0.0746 |
| 195 | SLE RA 16 | -0.66 | -11.09 | 97.64 | 0.3416 | 0.3461 | 0.0731 |
| 195 | SLE RA 17 | -0.67 | -11.2 | 98.12 | 0.3461 | 0.3461 | 0.0738 |
| 195 | SLE RA 18 | -0.74 | -11.89 | 103.25 | 0.3707 | 0.3646 | 0.0784 |
| 195 | SLE RA 19 | -0.75 | -12 | 103.73 | 0.3752 | 0.3646 | 0.0791 |
| 195 | SLE RA 20 | -0.72 | -11.79 | 103.02 | 0.3653 | 0.3648 | 0.0777 |
| 195 | SLE RA 21 | -0.73 | -11.89 | 103.5 | 0.3698 | 0.3647 | 0.0784 |
| 195 | SLE FR 1 | -0.62 | -9.94 | 86.06 | 0.31 | 0.3019 | 0.0655 |
| 195 | SLE FR 2 | -0.63 | -9.97 | 86.22 | 0.3115 | 0.3018 | 0.0658 |
| 195 | SLE FR 3 | -0.61 | -9.9 | 85.97 | 0.3078 | 0.3019 | 0.0652 |
| 195 | SLE FR 4 | -0.66 | -10.56 | 91.38 | 0.3297 | 0.3207 | 0.0696 |
| 195 | SLE FR 5 | -0.65 | -10.48 | 91.13 | 0.326 | 0.3207 | 0.0691 |
| 195 | SLE FR 6 | -0.68 | -10.92 | 94.65 | 0.3404 | 0.3332 | 0.072 |
| 195 | SLE QP 1 | -0.62 | -9.94 | 86.06 | 0.31 | 0.3019 | 0.0655 |
| 195 | SLE QP 2 | -0.66 | -10.53 | 91.22 | 0.3282 | 0.3207 | 0.0694 |
| 195 | SLD 1 | -1.29 | -10.27 | 93.24 | 0.3064 | 0.5259 | 0.0685 |
| 195 | SLD 2 | -1.29 | -10.27 | 93.24 | 0.3064 | 0.5259 | 0.0685 |
| 195 | SLD 3 | -1.59 | -12.77 | 107.33 | 0.4076 | 0.5648 | 0.085 |
| 195 | SLD 4 | -1.59 | -12.77 | 107.33 | 0.4076 | 0.5648 | 0.085 |
| 195 | SLD 5 | -0.4 | -6.65 | 70.44 | 0.1681 | 0.3232 | 0.044 |
| 195 | SLD 6 | -0.4 | -6.65 | 70.44 | 0.1681 | 0.3232 | 0.044 |
| 195 | SLD 7 | -1.38 | -14.99 | 117.43 | 0.5056 | 0.4529 | 0.0992 |
| 195 | SLD 8 | -1.38 | -14.99 | 117.43 | 0.5056 | 0.4529 | 0.0992 |
| 195 | SLD 9 | 0.06 | -6.06 | 65 | 0.1509 | 0.1885 | 0.0396 |
| 195 | SLD 10 | 0.06 | -6.06 | 65 | 0.1509 | 0.1885 | 0.0396 |
| 195 | SLD 11 | -0.91 | -14.4 | 111.99 | 0.4883 | 0.3181 | 0.0947 |
| 195 | SLD 12 | -0.91 | -14.4 | 111.99 | 0.4883 | 0.3181 | 0.0947 |
| 195 | SLD 13 | 0.27 | -8.28 | 75.1 | 0.2488 | 0.0766 | 0.0537 |
| 195 | SLD 14 | 0.27 | -8.28 | 75.1 | 0.2488 | 0.0766 | 0.0537 |
| 195 | SLD 15 | -0.02 | -10.78 | 89.19 | 0.35 | 0.1155 | 0.0703 |
| 195 | SLD 16 | -0.02 | -10.78 | 89.19 | 0.35 | 0.1155 | 0.0703 |
| 195 | SLV 1 | -2.15 | -9.95 | 95.92 | 0.2777 | 0.7954 | 0.0675 |
| 195 | SLV 2 | -2.15 | -9.95 | 95.92 | 0.2777 | 0.7954 | 0.0675 |
| 195 | SLV 3 | -2.84 | -15.82 | 129.13 | 0.5148 | 0.8874 | 0.1063 |
| 195 | SLV 4 | -2.84 | -15.82 | 129.13 | 0.5148 | 0.8874 | 0.1063 |
| 195 | SLV 5 | -0.06 | -1.45 | 42.26 | -0.0466 | 0.3236 | 0.0099 |
| 195 | SLV 6 | -0.06 | -1.45 | 42.26 | -0.0466 | 0.3236 | 0.0099 |
| 195 | SLV 7 | -2.36 | -21.02 | 152.96 | 0.7438 | 0.6302 | 0.1393 |
| 195 | SLV 8 | -2.36 | -21.02 | 152.96 | 0.7438 | 0.6302 | 0.1393 |
| 195 | SLV 9 | 1.04 | -0.03 | 29.47 | -0.0874 | 0.0111 | -0.0006 |
| 195 | SLV 10 | 1.04 | -0.03 | 29.47 | -0.0874 | 0.0111 | -0.0006 |
| 195 | SLV 11 | -1.26 | -19.6 | 140.18 | 0.703 | 0.3178 | 0.1288 |
| 195 | SLV 12 | -1.26 | -19.6 | 140.18 | 0.703 | 0.3178 | 0.1288 |
| 195 | SLV 13 | 1.52 | -5.23 | 53.3 | 0.1416 | -0.2461 | 0.0325 |
| 195 | SLV 14 | 1.52 | -5.23 | 53.3 | 0.1416 | -0.2461 | 0.0325 |
| 195 | SLV 15 | 0.83 | -11.1 | 86.51 | 0.3787 | -0.1541 | 0.0713 |
| 195 | SLV 16 | 0.83 | -11.1 | 86.51 | 0.3787 | -0.1541 | 0.0713 |
| 196 | SLU 1 | -6.64 | 0.07 | 30.62 | 0.0073 | -0.032 | 0.0002 |
| 196 | SLU 2 | -6.8 | 0.07 | 31.21 | 0.0082 | -0.0353 | 0.0004 |

| Nodo | Cont. | Reazione a traslazione | | | Reazione a rotazione | | |
|---|---|---|---|---|---|---|---|
| Ind. | N.br. | x | y | z | x | y | z |
| 196 | SLU 3 | -6.74 | 0.08 | 31.15 | 0.0066 | -0.0322 | 0.0001 |
| 196 | SLU 4 | -6.83 | 0.08 | 31.5 | 0.0071 | -0.0342 | 0.0002 |
| 196 | SLU 5 | -6.76 | 0.07 | 31.11 | 0.0072 | -0.0344 | 0.0002 |
| 196 | SLU 6 | -6.69 | 0.08 | 31.05 | 0.0056 | -0.0314 | -0.0001 |
| 196 | SLU 7 | -6.79 | 0.08 | 31.4 | 0.0062 | -0.0333 | 0 |
| 196 | SLU 8 | -6.55 | 0.08 | 30.42 | 0.0054 | -0.0302 | -0.0002 |
| 196 | SLU 9 | -6.64 | 0.08 | 30.77 | 0.0059 | -0.0322 | -0.0001 |
| 196 | SLU 10 | -8.22 | 0.08 | 37.82 | 0.0101 | -0.0403 | 0.0006 |
| 196 | SLU 11 | -8.16 | 0.09 | 37.76 | 0.0085 | -0.0373 | 0.0002 |
| 196 | SLU 12 | -8.25 | 0.09 | 38.11 | 0.009 | -0.0392 | 0.0003 |
| 196 | SLU 13 | -8.18 | 0.09 | 37.72 | 0.0091 | -0.0394 | 0.0004 |
| 196 | SLU 14 | -8.11 | 0.1 | 37.66 | 0.0075 | -0.0364 | 0 |
| 196 | SLU 15 | -8.21 | 0.09 | 38.01 | 0.0081 | -0.0384 | 0.0001 |
| 196 | SLU 16 | -7.97 | 0.1 | 37.03 | 0.0073 | -0.0353 | 0 |
| 196 | SLU 17 | -8.06 | 0.09 | 37.38 | 0.0078 | -0.0372 | 0.0001 |
| 196 | SLU 18 | -8.67 | 0.09 | 40.06 | 0.01 | -0.0392 | 0.0004 |
| 196 | SLU 19 | -8.77 | 0.09 | 40.41 | 0.0105 | -0.0411 | 0.0006 |
| 196 | SLU 20 | -8.62 | 0.1 | 39.97 | 0.009 | -0.0383 | 0.0002 |
| 196 | SLU 21 | -8.72 | 0.09 | 40.32 | 0.0096 | -0.0403 | 0.0003 |
| 196 | SLU 22 | -7.64 | 0.09 | 35.45 | 0.0076 | -0.0331 | 0.0001 |
| 196 | SLU 23 | -7.8 | 0.09 | 36.03 | 0.0086 | -0.0363 | 0.0003 |
| 196 | SLU 24 | -7.73 | 0.09 | 35.98 | 0.007 | -0.0333 | -0.0001 |
| 196 | SLU 25 | -7.83 | 0.09 | 36.33 | 0.0075 | -0.0353 | 0 |
| 196 | SLU 26 | -7.75 | 0.09 | 35.93 | 0.0076 | -0.0355 | 0.0001 |
| 196 | SLU 27 | -7.68 | 0.1 | 35.88 | 0.006 | -0.0324 | -0.0003 |
| 196 | SLU 28 | -7.78 | 0.1 | 36.23 | 0.0066 | -0.0344 | -0.0002 |
| 196 | SLU 29 | -7.54 | 0.1 | 35.25 | 0.0057 | -0.0313 | -0.0003 |
| 196 | SLU 30 | -7.64 | 0.1 | 35.6 | 0.0063 | -0.0333 | -0.0002 |
| 196 | SLU 31 | -9.22 | 0.1 | 42.64 | 0.0105 | -0.0414 | 0.0004 |
| 196 | SLU 32 | -9.15 | 0.11 | 42.59 | 0.0089 | -0.0383 | 0.0001 |
| 196 | SLU 33 | -9.25 | 0.11 | 42.94 | 0.0094 | -0.0403 | 0.0002 |
| 196 | SLU 34 | -9.17 | 0.1 | 42.54 | 0.0095 | -0.0405 | 0.0002 |
| 196 | SLU 35 | -9.1 | 0.11 | 42.49 | 0.0079 | -0.0375 | -0.0001 |
| 196 | SLU 36 | -9.2 | 0.11 | 42.84 | 0.0085 | -0.0394 | 0 |
| 196 | SLU 37 | -8.96 | 0.11 | 41.86 | 0.0076 | -0.0363 | -0.0002 |
| 196 | SLU 38 | -9.06 | 0.11 | 42.21 | 0.0082 | -0.0383 | -0.0001 |
| 196 | SLU 39 | -9.66 | 0.11 | 44.89 | 0.0103 | -0.0402 | 0.0003 |
| 196 | SLU 40 | -9.76 | 0.11 | 45.24 | 0.0109 | -0.0422 | 0.0004 |
| 196 | SLU 41 | -9.62 | 0.11 | 44.79 | 0.0094 | -0.0394 | 0.0001 |
| 196 | SLU 42 | -9.72 | 0.11 | 45.14 | 0.01 | -0.0413 | 0.0002 |
| 196 | SLU 43 | -8.29 | 0.09 | 38.15 | 0.0093 | -0.0412 | 0.0004 |
| 196 | SLU 44 | -8.46 | 0.09 | 38.74 | 0.0102 | -0.0445 | 0.0006 |
| 196 | SLU 45 | -8.39 | 0.1 | 38.68 | 0.0086 | -0.0415 | 0.0002 |
| 196 | SLU 46 | -8.49 | 0.09 | 39.03 | 0.0092 | -0.0434 | 0.0003 |
| 196 | SLU 47 | -8.41 | 0.09 | 38.64 | 0.0093 | -0.0436 | 0.0004 |
| 196 | SLU 48 | -8.34 | 0.1 | 38.59 | 0.0077 | -0.0406 | 0 |
| 196 | SLU 49 | -8.44 | 0.1 | 38.94 | 0.0083 | -0.0426 | 0.0001 |
| 196 | SLU 50 | -8.2 | 0.1 | 37.95 | 0.0074 | -0.0395 | -0.0001 |
| 196 | SLU 51 | -8.29 | 0.1 | 38.31 | 0.008 | -0.0414 | 0.0001 |
| 196 | SLU 52 | -9.87 | 0.1 | 45.35 | 0.0121 | -0.0495 | 0.0007 |
| 196 | SLU 53 | -9.81 | 0.11 | 45.29 | 0.0105 | -0.0465 | 0.0003 |
| 196 | SLU 54 | -9.9 | 0.11 | 45.64 | 0.0111 | -0.0485 | 0.0004 |
| 196 | SLU 55 | -9.83 | 0.1 | 45.25 | 0.0112 | -0.0486 | 0.0005 |
| 196 | SLU 56 | -9.76 | 0.11 | 45.2 | 0.0096 | -0.0456 | 0.0001 |
| 196 | SLU 57 | -9.86 | 0.11 | 45.55 | 0.0102 | -0.0476 | 0.0002 |
| 196 | SLU 58 | -9.62 | 0.11 | 44.56 | 0.0093 | -0.0445 | 0.0001 |
| 196 | SLU 59 | -9.71 | 0.11 | 44.92 | 0.0099 | -0.0465 | 0.0002 |
| 196 | SLU 60 | -10.32 | 0.11 | 47.6 | 0.012 | -0.0484 | 0.0006 |
| 196 | SLU 61 | -10.42 | 0.11 | 47.95 | 0.0126 | -0.0504 | 0.0007 |
| 196 | SLU 62 | -10.27 | 0.11 | 47.5 | 0.0111 | -0.0475 | 0.0004 |
| 196 | SLU 63 | -10.37 | 0.11 | 47.85 | 0.0116 | -0.0495 | 0.0005 |
| 196 | SLU 64 | -9.29 | 0.11 | 42.98 | 0.0097 | -0.0423 | 0.0002 |
| 196 | SLU 65 | -9.45 | 0.1 | 43.56 | 0.0106 | -0.0456 | 0.0004 |
| 196 | SLU 66 | -9.38 | 0.11 | 43.51 | 0.009 | -0.0425 | 0 |
| 196 | SLU 67 | -9.48 | 0.11 | 43.86 | 0.0096 | -0.0445 | 0.0002 |
| 196 | SLU 68 | -9.4 | 0.11 | 43.46 | 0.0097 | -0.0447 | 0.0002 |
| 196 | SLU 69 | -9.34 | 0.12 | 43.41 | 0.0081 | -0.0417 | -0.0002 |
| 196 | SLU 70 | -9.43 | 0.11 | 43.76 | 0.0086 | -0.0436 | 0 |
| 196 | SLU 71 | -9.19 | 0.12 | 42.78 | 0.0078 | -0.0405 | -0.0002 |
| 196 | SLU 72 | -9.29 | 0.11 | 43.13 | 0.0083 | -0.0425 | -0.0001 |
| 196 | SLU 73 | -10.87 | 0.12 | 50.17 | 0.0125 | -0.0506 | 0.0006 |
| 196 | SLU 74 | -10.8 | 0.12 | 50.12 | 0.0109 | -0.0476 | 0.0002 |
| 196 | SLU 75 | -10.9 | 0.12 | 50.47 | 0.0115 | -0.0495 | 0.0003 |
| 196 | SLU 76 | -10.82 | 0.12 | 50.07 | 0.0116 | -0.0497 | 0.0003 |
| 196 | SLU 77 | -10.75 | 0.13 | 50.02 | 0.01 | -0.0467 | 0 |
| 196 | SLU 78 | -10.85 | 0.13 | 50.37 | 0.0105 | -0.0487 | 0.0001 |
| 196 | SLU 79 | -10.61 | 0.13 | 49.39 | 0.0097 | -0.0456 | -0.0001 |
| 196 | SLU 80 | -10.71 | 0.13 | 49.74 | 0.0102 | -0.0475 | 0.0001 |
| 196 | SLU 81 | -11.32 | 0.12 | 52.42 | 0.0124 | -0.0495 | 0.0004 |
| 196 | SLU 82 | -11.41 | 0.12 | 52.77 | 0.0129 | -0.0514 | 0.0005 |
| 196 | SLU 83 | -11.27 | 0.13 | 52.32 | 0.0114 | -0.0486 | 0.0002 |
| 196 | SLU 84 | -11.37 | 0.13 | 52.67 | 0.012 | -0.0506 | 0.0003 |
| 196 | SLE RA 1 | -6.93 | 0.08 | 32 | 0.0074 | -0.0323 | 0.0002 |
| 196 | SLE RA 2 | -7.03 | 0.08 | 32.39 | 0.008 | -0.0345 | 0.0003 |
| 196 | SLE RA 3 | -6.99 | 0.08 | 32.35 | 0.0069 | -0.0325 | 0.0001 |
| 196 | SLE RA 4 | -7.05 | 0.08 | 32.59 | 0.0073 | -0.0338 | 0.0002 |
| 196 | SLE RA 5 | -7 | 0.08 | 32.32 | 0.0074 | -0.0339 | 0.0002 |
| 196 | SLE RA 6 | -6.96 | 0.08 | 32.29 | 0.0063 | -0.0319 | -0.0001 |

| Nodo | Cont. | Reazione a traslazione | | | Reazione a rotazione | | |
|---|---|---|---|---|---|---|---|
| Ind. | N.br. | x | y | z | x | y | z |
| 196 | SLE RA 7 | -7.02 | 0.08 | 32.52 | 0.0067 | -0.0332 | 0 |
| 196 | SLE RA 8 | -6.86 | 0.08 | 31.87 | 0.0061 | -0.0311 | -0.0001 |
| 196 | SLE RA 9 | -6.93 | 0.08 | 32.1 | 0.0065 | -0.0324 | 0 |
| 196 | SLE RA 10 | -7.98 | 0.08 | 36.8 | 0.0092 | -0.0378 | 0.0004 |
| 196 | SLE RA 11 | -7.93 | 0.09 | 36.76 | 0.0082 | -0.0358 | 0.0002 |
| 196 | SLE RA 12 | -8 | 0.09 | 36.99 | 0.0086 | -0.0371 | 0.0003 |
| 196 | SLE RA 13 | -7.95 | 0.09 | 36.73 | 0.0086 | -0.0372 | 0.0003 |
| 196 | SLE RA 14 | -7.9 | 0.09 | 36.7 | 0.0076 | -0.0352 | 0 |
| 196 | SLE RA 15 | -7.97 | 0.09 | 36.93 | 0.0079 | -0.0365 | 0.0001 |
| 196 | SLE RA 16 | -7.81 | 0.09 | 36.27 | 0.0074 | -0.0345 | 0 |
| 196 | SLE RA 17 | -7.87 | 0.09 | 36.51 | 0.0077 | -0.0358 | 0.0001 |
| 196 | SLE RA 18 | -8.28 | 0.09 | 38.3 | 0.0092 | -0.0371 | 0.0003 |
| 196 | SLE RA 19 | -8.34 | 0.09 | 38.53 | 0.0095 | -0.0384 | 0.0004 |
| 196 | SLE RA 20 | -8.25 | 0.09 | 38.23 | 0.0085 | -0.0365 | 0.0002 |
| 196 | SLE RA 21 | -8.31 | 0.09 | 38.46 | 0.0089 | -0.0378 | 0.0003 |
| 196 | SLE FR 1 | -6.93 | 0.08 | 32 | 0.0074 | -0.0323 | 0.0002 |
| 196 | SLE FR 2 | -6.95 | 0.08 | 32.08 | 0.0075 | -0.0327 | 0.0002 |
| 196 | SLE FR 3 | -6.91 | 0.08 | 31.97 | 0.0071 | -0.0321 | 0.0001 |
| 196 | SLE FR 4 | -7.35 | 0.08 | 33.97 | 0.008 | -0.0342 | 0.0003 |
| 196 | SLE FR 5 | -7.32 | 0.08 | 33.86 | 0.0076 | -0.0335 | 0.0002 |
| 196 | SLE FR 6 | -7.6 | 0.08 | 35.15 | 0.0083 | -0.0347 | 0.0003 |
| 196 | SLE QP 1 | -6.93 | 0.08 | 32 | 0.0074 | -0.0323 | 0.0002 |
| 196 | SLE QP 2 | -7.33 | 0.08 | 33.89 | 0.0079 | -0.0337 | 0.0002 |
| 196 | SLD 1 | -4.17 | 0.55 | 23.32 | -0.0441 | 0.1033 | -0.0135 |
| 196 | SLD 2 | -4.17 | 0.55 | 23.32 | -0.0441 | 0.1033 | -0.0135 |
| 196 | SLD 3 | -5.52 | 0.48 | 28.66 | -0.0331 | 0.0873 | -0.0109 |
| 196 | SLD 4 | -5.52 | 0.48 | 28.66 | -0.0331 | 0.0873 | -0.0109 |
| 196 | SLD 5 | -4.32 | 0.34 | 22.63 | -0.0245 | 0.0317 | -0.0078 |
| 196 | SLD 6 | -4.32 | 0.34 | 22.63 | -0.0245 | 0.0317 | -0.0078 |
| 196 | SLD 7 | -8.85 | 0.09 | 40.41 | 0.0123 | -0.0217 | 0.0009 |
| 196 | SLD 8 | -8.85 | 0.09 | 40.41 | 0.0123 | -0.0217 | 0.0009 |
| 196 | SLD 9 | -5.82 | 0.08 | 27.36 | 0.0034 | -0.0457 | -0.0004 |
| 196 | SLD 10 | -5.82 | 0.08 | 27.36 | 0.0034 | -0.0457 | -0.0004 |
| 196 | SLD 11 | -10.34 | -0.17 | 45.15 | 0.0402 | -0.0991 | 0.0083 |
| 196 | SLD 12 | -10.34 | -0.17 | 45.15 | 0.0402 | -0.0991 | 0.0083 |
| 196 | SLD 13 | -9.14 | -0.31 | 39.12 | 0.0489 | -0.1547 | 0.0113 |
| 196 | SLD 14 | -9.14 | -0.31 | 39.12 | 0.0489 | -0.1547 | 0.0113 |
| 196 | SLD 15 | -10.49 | -0.39 | 44.45 | 0.0599 | -0.1708 | 0.0139 |
| 196 | SLD 16 | -10.49 | -0.39 | 44.45 | 0.0599 | -0.1708 | 0.0139 |
| 196 | SLV 1 | 0.01 | 1.25 | 9.35 | -0.1212 | 0.2835 | -0.0338 |
| 196 | SLV 2 | 0.01 | 1.25 | 9.35 | -0.1212 | 0.2835 | -0.0338 |
| 196 | SLV 3 | -3.18 | 1.07 | 21.9 | -0.0948 | 0.2463 | -0.0275 |
| 196 | SLV 4 | -3.18 | 1.07 | 21.9 | -0.0948 | 0.2463 | -0.0275 |
| 196 | SLV 5 | -0.29 | 0.71 | 7.48 | -0.0709 | 0.118 | -0.0195 |
| 196 | SLV 6 | -0.29 | 0.71 | 7.48 | -0.0709 | 0.118 | -0.0195 |
| 196 | SLV 7 | -10.92 | 0.1 | 49.34 | 0.0172 | -0.0063 | 0.0014 |
| 196 | SLV 8 | -10.92 | 0.1 | 49.34 | 0.0172 | -0.0063 | 0.0014 |
| 196 | SLV 9 | -3.74 | 0.06 | 18.44 | -0.0014 | -0.0612 | -0.0009 |
| 196 | SLV 10 | -3.74 | 0.06 | 18.44 | -0.0014 | -0.0612 | -0.0009 |
| 196 | SLV 11 | -14.37 | -0.55 | 60.29 | 0.0867 | -0.1854 | 0.02 |
| 196 | SLV 12 | -14.37 | -0.55 | 60.29 | 0.0867 | -0.1854 | 0.02 |
| 196 | SLV 13 | -11.48 | -0.9 | 45.87 | 0.1106 | -0.3137 | 0.028 |
| 196 | SLV 14 | -11.48 | -0.9 | 45.87 | 0.1106 | -0.3137 | 0.028 |
| 196 | SLV 15 | -14.67 | -1.09 | 58.43 | 0.137 | -0.351 | 0.0343 |
| 196 | SLV 16 | -14.67 | -1.09 | 58.43 | 0.137 | -0.351 | 0.0343 |
| 197 | SLU 1 | 9.79 | 0.01 | 38.31 | -0.0046 | 0.2169 | 0.0008 |
| 197 | SLU 2 | 9.46 | 0.01 | 37.46 | -0.0041 | 0.2052 | 0.0007 |
| 197 | SLU 3 | 10.07 | 0.01 | 39.38 | -0.0043 | 0.2233 | 0.0008 |
| 197 | SLU 4 | 9.87 | 0.01 | 38.87 | -0.004 | 0.2163 | 0.0007 |
| 197 | SLU 5 | 9.65 | 0.01 | 38.1 | -0.004 | 0.2107 | 0.0007 |
| 197 | SLU 6 | 10.27 | 0.01 | 40.02 | -0.0042 | 0.2288 | 0.0007 |
| 197 | SLU 7 | 10.07 | 0.01 | 39.51 | -0.0039 | 0.2218 | 0.0007 |
| 197 | SLU 8 | 10.18 | 0.01 | 39.59 | -0.0043 | 0.2279 | 0.0008 |
| 197 | SLU 9 | 9.98 | 0.01 | 39.08 | -0.004 | 0.2209 | 0.0007 |
| 197 | SLU 10 | 11.38 | 0.01 | 45.35 | -0.0085 | 0.2442 | 0.0015 |
| 197 | SLU 11 | 11.99 | 0.02 | 47.27 | -0.0087 | 0.2623 | 0.0015 |
| 197 | SLU 12 | 11.8 | 0.02 | 46.76 | -0.0084 | 0.2553 | 0.0015 |
| 197 | SLU 13 | 11.58 | 0.01 | 45.99 | -0.0084 | 0.2497 | 0.0015 |
| 197 | SLU 14 | 12.19 | 0.02 | 47.91 | -0.0086 | 0.2678 | 0.0015 |
| 197 | SLU 15 | 11.99 | 0.02 | 47.4 | -0.0083 | 0.2608 | 0.0014 |
| 197 | SLU 16 | 12.1 | 0.02 | 47.48 | -0.0087 | 0.2669 | 0.0015 |
| 197 | SLU 17 | 11.91 | 0.02 | 46.97 | -0.0084 | 0.2599 | 0.0015 |
| 197 | SLU 18 | 12.53 | 0.02 | 49.57 | -0.0109 | 0.2726 | 0.0019 |
| 197 | SLU 19 | 12.34 | 0.02 | 49.07 | -0.0106 | 0.2656 | 0.0018 |
| 197 | SLU 20 | 12.73 | 0.02 | 50.21 | -0.0107 | 0.2781 | 0.0019 |
| 197 | SLU 21 | 12.53 | 0.02 | 49.71 | -0.0105 | 0.2711 | 0.0018 |
| 197 | SLU 22 | 11.59 | 0.02 | 45.37 | -0.0075 | 0.2567 | 0.0013 |
| 197 | SLU 23 | 11.26 | 0.01 | 44.53 | -0.007 | 0.245 | 0.0012 |
| 197 | SLU 24 | 11.87 | 0.01 | 46.44 | -0.0072 | 0.2632 | 0.0013 |
| 197 | SLU 25 | 11.68 | 0.01 | 45.94 | -0.0069 | 0.2561 | 0.0012 |
| 197 | SLU 26 | 11.46 | 0.01 | 45.17 | -0.0069 | 0.2505 | 0.0012 |
| 197 | SLU 27 | 12.07 | 0.01 | 47.09 | -0.007 | 0.2687 | 0.0012 |
| 197 | SLU 28 | 11.87 | 0.01 | 46.58 | -0.0068 | 0.2617 | 0.0012 |
| 197 | SLU 29 | 11.98 | 0.02 | 46.65 | -0.0072 | 0.2677 | 0.0013 |
| 197 | SLU 30 | 11.79 | 0.01 | 46.15 | -0.0069 | 0.2607 | 0.0012 |
| 197 | SLU 31 | 13.19 | 0.02 | 52.41 | -0.0114 | 0.284 | 0.002 |
| 197 | SLU 32 | 13.8 | 0.02 | 54.33 | -0.0116 | 0.3021 | 0.002 |
| 197 | SLU 33 | 13.6 | 0.02 | 53.82 | -0.0113 | 0.2951 | 0.002 |

| Nodo | Cont. | Reazione a traslazione | | | Reazione a rotazione | | |
|---|---|---|---|---|---|---|---|
| Ind. | N.br. | x | y | z | x | y | z |
| 197 | SLU 34 | 13.38 | 0.02 | 53.05 | -0.0113 | 0.2895 | 0.002 |
| 197 | SLU 35 | 13.99 | 0.02 | 54.97 | -0.0115 | 0.3076 | 0.002 |
| 197 | SLU 36 | 13.8 | 0.02 | 54.46 | -0.0112 | 0.3006 | 0.002 |
| 197 | SLU 37 | 13.91 | 0.02 | 54.54 | -0.0116 | 0.3067 | 0.002 |
| 197 | SLU 38 | 13.71 | 0.02 | 54.03 | -0.0113 | 0.2997 | 0.002 |
| 197 | SLU 39 | 14.34 | 0.03 | 56.64 | -0.0138 | 0.3124 | 0.0024 |
| 197 | SLU 40 | 14.14 | 0.03 | 56.13 | -0.0135 | 0.3054 | 0.0024 |
| 197 | SLU 41 | 14.53 | 0.03 | 57.28 | -0.0136 | 0.3179 | 0.0024 |
| 197 | SLU 42 | 14.34 | 0.03 | 56.77 | -0.0133 | 0.3109 | 0.0023 |
| 197 | SLU 43 | 12.1 | 0.01 | 47.38 | -0.005 | 0.2683 | 0.0009 |
| 197 | SLU 44 | 11.78 | 0.01 | 46.53 | -0.0045 | 0.2566 | 0.0008 |
| 197 | SLU 45 | 12.39 | 0.01 | 48.45 | -0.0047 | 0.2747 | 0.0008 |
| 197 | SLU 46 | 12.19 | 0.01 | 47.94 | -0.0044 | 0.2677 | 0.0008 |
| 197 | SLU 47 | 11.97 | 0.01 | 47.17 | -0.0044 | 0.2621 | 0.0007 |
| 197 | SLU 48 | 12.58 | 0.01 | 49.09 | -0.0045 | 0.2803 | 0.0008 |
| 197 | SLU 49 | 12.39 | 0.01 | 48.58 | -0.0042 | 0.2732 | 0.0007 |
| 197 | SLU 50 | 12.5 | 0.01 | 48.66 | -0.0047 | 0.2793 | 0.0008 |
| 197 | SLU 51 | 12.3 | 0.01 | 48.15 | -0.0044 | 0.2723 | 0.0008 |
| 197 | SLU 52 | 13.7 | 0.01 | 54.42 | -0.0089 | 0.2956 | 0.0015 |
| 197 | SLU 53 | 14.31 | 0.02 | 56.34 | -0.0091 | 0.3137 | 0.0016 |
| 197 | SLU 54 | 14.12 | 0.02 | 55.83 | -0.0088 | 0.3067 | 0.0015 |
| 197 | SLU 55 | 13.9 | 0.02 | 55.06 | -0.0088 | 0.3011 | 0.0015 |
| 197 | SLU 56 | 14.51 | 0.02 | 56.98 | -0.0089 | 0.3192 | 0.0016 |
| 197 | SLU 57 | 14.31 | 0.02 | 56.47 | -0.0087 | 0.3122 | 0.0015 |
| 197 | SLU 58 | 14.42 | 0.02 | 56.55 | -0.0091 | 0.3183 | 0.0016 |
| 197 | SLU 59 | 14.22 | 0.02 | 56.04 | -0.0088 | 0.3113 | 0.0015 |
| 197 | SLU 60 | 14.85 | 0.02 | 58.64 | -0.0113 | 0.324 | 0.002 |
| 197 | SLU 61 | 14.66 | 0.02 | 58.14 | -0.011 | 0.317 | 0.0019 |
| 197 | SLU 62 | 15.05 | 0.02 | 59.29 | -0.0111 | 0.3295 | 0.002 |
| 197 | SLU 63 | 14.85 | 0.02 | 58.78 | -0.0108 | 0.3225 | 0.0019 |
| 197 | SLU 64 | 13.91 | 0.02 | 54.44 | -0.0078 | 0.3082 | 0.0014 |
| 197 | SLU 65 | 13.58 | 0.01 | 53.6 | -0.0074 | 0.2965 | 0.0013 |
| 197 | SLU 66 | 14.19 | 0.02 | 55.52 | -0.0076 | 0.3146 | 0.0013 |
| 197 | SLU 67 | 13.99 | 0.01 | 55.01 | -0.0073 | 0.3076 | 0.0013 |
| 197 | SLU 68 | 13.78 | 0.01 | 54.24 | -0.0072 | 0.302 | 0.0013 |
| 197 | SLU 69 | 14.39 | 0.02 | 56.16 | -0.0074 | 0.3201 | 0.0013 |
| 197 | SLU 70 | 14.19 | 0.01 | 55.65 | -0.0071 | 0.3131 | 0.0012 |
| 197 | SLU 71 | 14.3 | 0.02 | 55.72 | -0.0076 | 0.3192 | 0.0013 |
| 197 | SLU 72 | 14.1 | 0.01 | 55.22 | -0.0073 | 0.3121 | 0.0013 |
| 197 | SLU 73 | 15.5 | 0.02 | 61.48 | -0.0118 | 0.3354 | 0.002 |
| 197 | SLU 74 | 16.11 | 0.02 | 63.4 | -0.012 | 0.3535 | 0.0021 |
| 197 | SLU 75 | 15.92 | 0.02 | 62.89 | -0.0117 | 0.3465 | 0.002 |
| 197 | SLU 76 | 15.7 | 0.02 | 62.12 | -0.0116 | 0.3409 | 0.002 |
| 197 | SLU 77 | 16.31 | 0.02 | 64.04 | -0.0118 | 0.3591 | 0.0021 |
| 197 | SLU 78 | 16.11 | 0.02 | 63.53 | -0.0115 | 0.352 | 0.002 |
| 197 | SLU 79 | 16.22 | 0.02 | 63.61 | -0.012 | 0.3581 | 0.0021 |
| 197 | SLU 80 | 16.03 | 0.02 | 63.1 | -0.0117 | 0.3511 | 0.002 |
| 197 | SLU 81 | 16.65 | 0.03 | 65.71 | -0.0141 | 0.3638 | 0.0025 |
| 197 | SLU 82 | 16.46 | 0.03 | 65.2 | -0.0139 | 0.3568 | 0.0024 |
| 197 | SLU 83 | 16.85 | 0.03 | 66.35 | -0.014 | 0.3693 | 0.0025 |
| 197 | SLU 84 | 16.65 | 0.03 | 65.84 | -0.0137 | 0.3623 | 0.0024 |
| 197 | SLE RA 1 | 10.3 | 0.01 | 40.33 | -0.0054 | 0.2283 | 0.0009 |
| 197 | SLE RA 2 | 10.08 | 0.01 | 39.76 | -0.0051 | 0.2205 | 0.0009 |
| 197 | SLE RA 3 | 10.49 | 0.01 | 41.04 | -0.0052 | 0.2326 | 0.0009 |
| 197 | SLE RA 4 | 10.36 | 0.01 | 40.7 | -0.005 | 0.2279 | 0.0009 |
| 197 | SLE RA 5 | 10.21 | 0.01 | 40.19 | -0.005 | 0.2242 | 0.0009 |
| 197 | SLE RA 6 | 10.62 | 0.01 | 41.47 | -0.0051 | 0.2362 | 0.0009 |
| 197 | SLE RA 7 | 10.49 | 0.01 | 41.13 | -0.0049 | 0.2316 | 0.0009 |
| 197 | SLE RA 8 | 10.56 | 0.01 | 41.18 | -0.0052 | 0.2356 | 0.0009 |
| 197 | SLE RA 9 | 10.43 | 0.01 | 40.84 | -0.005 | 0.2309 | 0.0009 |
| 197 | SLE RA 10 | 11.37 | 0.01 | 45.02 | -0.008 | 0.2465 | 0.0014 |
| 197 | SLE RA 11 | 11.77 | 0.02 | 46.3 | -0.0081 | 0.2586 | 0.0014 |
| 197 | SLE RA 12 | 11.64 | 0.02 | 45.96 | -0.0079 | 0.2539 | 0.0014 |
| 197 | SLE RA 13 | 11.5 | 0.01 | 45.45 | -0.0079 | 0.2501 | 0.0014 |
| 197 | SLE RA 14 | 11.9 | 0.02 | 46.73 | -0.0081 | 0.2622 | 0.0014 |
| 197 | SLE RA 15 | 11.77 | 0.02 | 46.39 | -0.0079 | 0.2575 | 0.0014 |
| 197 | SLE RA 16 | 11.85 | 0.02 | 46.44 | -0.0082 | 0.2616 | 0.0014 |
| 197 | SLE RA 17 | 11.71 | 0.02 | 46.1 | -0.008 | 0.2569 | 0.0014 |
| 197 | SLE RA 18 | 12.13 | 0.02 | 47.84 | -0.0096 | 0.2654 | 0.0017 |
| 197 | SLE RA 19 | 12 | 0.02 | 47.5 | -0.0094 | 0.2607 | 0.0016 |
| 197 | SLE RA 20 | 12.26 | 0.02 | 48.26 | -0.0095 | 0.2691 | 0.0017 |
| 197 | SLE RA 21 | 12.13 | 0.02 | 47.93 | -0.0093 | 0.2644 | 0.0016 |
| 197 | SLE FR 1 | 10.3 | 0.01 | 40.33 | -0.0054 | 0.2283 | 0.0009 |
| 197 | SLE FR 2 | 10.26 | 0.01 | 40.21 | -0.0053 | 0.2267 | 0.0009 |
| 197 | SLE FR 3 | 10.35 | 0.01 | 40.5 | -0.0054 | 0.2298 | 0.0009 |
| 197 | SLE FR 4 | 10.81 | 0.01 | 42.47 | -0.0066 | 0.2379 | 0.0012 |
| 197 | SLE FR 5 | 10.9 | 0.01 | 42.75 | -0.0066 | 0.2409 | 0.0012 |
| 197 | SLE FR 6 | 11.22 | 0.02 | 44.08 | -0.0075 | 0.2468 | 0.0013 |
| 197 | SLE QP 1 | 10.3 | 0.01 | 40.33 | -0.0054 | 0.2283 | 0.0009 |
| 197 | SLE QP 2 | 10.85 | 0.01 | 42.58 | -0.0067 | 0.2394 | 0.0012 |
| 197 | SLD 1 | 19.4 | 0.07 | 67 | 0.028 | 0.5455 | 0.0005 |
| 197 | SLD 2 | 19.4 | 0.07 | 67 | 0.028 | 0.5455 | 0.0005 |
| 197 | SLD 3 | 19.95 | 0.36 | 69.26 | -0.014 | 0.561 | 0.0091 |
| 197 | SLD 4 | 19.95 | 0.36 | 69.26 | -0.014 | 0.561 | 0.0091 |
| 197 | SLD 5 | 12.59 | -0.41 | 46.48 | 0.0674 | 0.3078 | -0.0121 |
| 197 | SLD 6 | 12.59 | -0.41 | 46.48 | 0.0674 | 0.3078 | -0.0121 |
| 197 | SLD 7 | 14.41 | 0.56 | 54.01 | -0.0725 | 0.3593 | 0.0166 |
| 197 | SLD 8 | 14.41 | 0.56 | 54.01 | -0.0725 | 0.3593 | 0.0166 |

| Nodo | Cont. | Reazione a traslazione | | | Reazione a rotazione | | |
|---|---|---|---|---|---|---|---|
| Ind. | N.br. | x | y | z | x | y | z |
| 197 | SLD 9 | 7.29 | -0.53 | 31.15 | 0.0592 | 0.1195 | -0.0143 |
| 197 | SLD 10 | 7.29 | -0.53 | 31.15 | 0.0592 | 0.1195 | -0.0143 |
| 197 | SLD 11 | 9.11 | 0.43 | 38.68 | -0.0807 | 0.171 | 0.0144 |
| 197 | SLD 12 | 9.11 | 0.43 | 38.68 | -0.0807 | 0.171 | 0.0144 |
| 197 | SLD 13 | 1.75 | -0.34 | 15.9 | 0.0007 | -0.0821 | -0.0068 |
| 197 | SLD 14 | 1.75 | -0.34 | 15.9 | 0.0007 | -0.0821 | -0.0068 |
| 197 | SLD 15 | 2.3 | -0.05 | 18.16 | -0.0413 | -0.0667 | 0.0018 |
| 197 | SLD 16 | 2.3 | -0.05 | 18.16 | -0.0413 | -0.0667 | 0.0018 |
| 197 | SLV 1 | 30.66 | 0.17 | 99.14 | 0.0772 | 0.9483 | -0.0001 |
| 197 | SLV 2 | 30.66 | 0.17 | 99.14 | 0.0772 | 0.9483 | -0.0001 |
| 197 | SLV 3 | 31.96 | 0.89 | 104.49 | -0.0233 | 0.9846 | 0.0207 |
| 197 | SLV 4 | 31.96 | 0.89 | 104.49 | -0.0233 | 0.9846 | 0.0207 |
| 197 | SLV 5 | 14.83 | -1.02 | 51.43 | 0.1709 | 0.397 | -0.0308 |
| 197 | SLV 6 | 14.83 | -1.02 | 51.43 | 0.1709 | 0.397 | -0.0308 |
| 197 | SLV 7 | 19.14 | 1.36 | 69.27 | -0.1641 | 0.5181 | 0.0387 |
| 197 | SLV 8 | 19.14 | 1.36 | 69.27 | -0.1641 | 0.5181 | 0.0387 |
| 197 | SLV 9 | 2.56 | -1.33 | 15.89 | 0.1507 | -0.0392 | -0.0363 |
| 197 | SLV 10 | 2.56 | -1.33 | 15.89 | 0.1507 | -0.0392 | -0.0363 |
| 197 | SLV 11 | 6.87 | 1.05 | 33.73 | -0.1842 | 0.0819 | 0.0332 |
| 197 | SLV 12 | 6.87 | 1.05 | 33.73 | -0.1842 | 0.0819 | 0.0332 |
| 197 | SLV 13 | -10.26 | -0.86 | -19.33 | 0.0099 | -0.5058 | -0.0184 |
| 197 | SLV 14 | -10.26 | -0.86 | -19.33 | 0.0099 | -0.5058 | -0.0184 |
| 197 | SLV 15 | -8.96 | -0.15 | -13.98 | -0.0906 | -0.4695 | 0.0024 |
| 197 | SLV 16 | -8.96 | -0.15 | -13.98 | -0.0906 | -0.4695 | 0.0024 |
| 198 | SLU 1 | 5.3 | 0.01 | 67.52 | -0.0077 | 0.2759 | 0 |
| 198 | SLU 2 | 4.88 | 0.01 | 66.46 | -0.0076 | 0.2537 | 0 |
| 198 | SLU 3 | 5.48 | 0.01 | 69.46 | -0.0071 | 0.2844 | 0 |
| 198 | SLU 4 | 5.23 | 0.01 | 68.82 | -0.0071 | 0.2711 | 0 |
| 198 | SLU 5 | 5.06 | 0.01 | 67.52 | -0.0073 | 0.2626 | 0 |
| 198 | SLU 6 | 5.66 | 0.01 | 70.51 | -0.0068 | 0.2933 | 0 |
| 198 | SLU 7 | 5.4 | 0.01 | 69.88 | -0.0067 | 0.28 | 0 |
| 198 | SLU 8 | 5.66 | 0.01 | 69.62 | -0.0071 | 0.2937 | 0 |
| 198 | SLU 9 | 5.41 | 0.01 | 68.99 | -0.007 | 0.2804 | 0 |
| 198 | SLU 10 | 5.69 | 0.02 | 80.74 | -0.015 | 0.2953 | -0.0001 |
| 198 | SLU 11 | 6.29 | 0.02 | 83.73 | -0.0146 | 0.3259 | -0.0001 |
| 198 | SLU 12 | 6.04 | 0.02 | 83.1 | -0.0145 | 0.3126 | -0.0001 |
| 198 | SLU 13 | 5.87 | 0.02 | 81.79 | -0.0147 | 0.3042 | -0.0001 |
| 198 | SLU 14 | 6.47 | 0.02 | 84.78 | -0.0142 | 0.3348 | -0.0001 |
| 198 | SLU 15 | 6.21 | 0.02 | 84.15 | -0.0142 | 0.3215 | -0.0001 |
| 198 | SLU 16 | 6.47 | 0.02 | 83.9 | -0.0145 | 0.3352 | -0.0001 |
| 198 | SLU 17 | 6.22 | 0.02 | 83.27 | -0.0144 | 0.3219 | -0.0001 |
| 198 | SLU 18 | 6.46 | 0.03 | 87.91 | -0.0183 | 0.3353 | -0.0001 |
| 198 | SLU 19 | 6.21 | 0.03 | 87.28 | -0.0182 | 0.3219 | -0.0001 |
| 198 | SLU 20 | 6.64 | 0.03 | 88.96 | -0.018 | 0.3442 | -0.0001 |
| 198 | SLU 21 | 6.39 | 0.03 | 88.33 | -0.0179 | 0.3308 | -0.0001 |
| 198 | SLU 22 | 6.25 | 0.02 | 79.98 | -0.0125 | 0.3249 | -0.0001 |
| 198 | SLU 23 | 5.83 | 0.02 | 78.93 | -0.0124 | 0.3027 | -0.0001 |
| 198 | SLU 24 | 6.42 | 0.02 | 81.92 | -0.0119 | 0.3334 | 0 |
| 198 | SLU 25 | 6.17 | 0.02 | 81.29 | -0.0119 | 0.3201 | 0 |
| 198 | SLU 26 | 6.01 | 0.02 | 79.99 | -0.0121 | 0.3116 | -0.0001 |
| 198 | SLU 27 | 6.6 | 0.02 | 82.98 | -0.0116 | 0.3423 | 0 |
| 198 | SLU 28 | 6.35 | 0.02 | 82.35 | -0.0115 | 0.329 | 0 |
| 198 | SLU 29 | 6.6 | 0.02 | 82.09 | -0.0119 | 0.3427 | 0 |
| 198 | SLU 30 | 6.35 | 0.02 | 81.46 | -0.0118 | 0.3294 | 0 |
| 198 | SLU 31 | 6.64 | 0.03 | 93.21 | -0.0198 | 0.3443 | -0.0001 |
| 198 | SLU 32 | 7.23 | 0.03 | 96.2 | -0.0193 | 0.3749 | -0.0001 |
| 198 | SLU 33 | 6.98 | 0.03 | 95.57 | -0.0193 | 0.3616 | -0.0001 |
| 198 | SLU 34 | 6.82 | 0.03 | 94.26 | -0.0195 | 0.3532 | -0.0001 |
| 198 | SLU 35 | 7.41 | 0.03 | 97.25 | -0.019 | 0.3838 | -0.0001 |
| 198 | SLU 36 | 7.16 | 0.03 | 96.62 | -0.019 | 0.3705 | -0.0001 |
| 198 | SLU 37 | 7.41 | 0.03 | 96.37 | -0.0193 | 0.3842 | -0.0001 |
| 198 | SLU 38 | 7.16 | 0.03 | 95.74 | -0.0192 | 0.3709 | -0.0001 |
| 198 | SLU 39 | 7.4 | 0.03 | 100.38 | -0.0231 | 0.3843 | -0.0001 |
| 198 | SLU 40 | 7.15 | 0.03 | 99.74 | -0.023 | 0.3709 | -0.0001 |
| 198 | SLU 41 | 7.58 | 0.03 | 101.43 | -0.0228 | 0.3932 | -0.0001 |
| 198 | SLU 42 | 7.33 | 0.03 | 100.8 | -0.0227 | 0.3798 | -0.0001 |
| 198 | SLU 43 | 6.57 | 0.01 | 83.5 | -0.0084 | 0.3419 | 0 |
| 198 | SLU 44 | 6.15 | 0.01 | 82.44 | -0.0083 | 0.3197 | 0 |
| 198 | SLU 45 | 6.74 | 0.01 | 85.43 | -0.0078 | 0.3504 | 0 |
| 198 | SLU 46 | 6.49 | 0.01 | 84.8 | -0.0077 | 0.3371 | 0 |
| 198 | SLU 47 | 6.33 | 0.01 | 83.5 | -0.0079 | 0.3286 | 0 |
| 198 | SLU 48 | 6.92 | 0.01 | 86.49 | -0.0075 | 0.3593 | 0 |
| 198 | SLU 49 | 6.67 | 0.01 | 85.86 | -0.0074 | 0.346 | 0 |
| 198 | SLU 50 | 6.92 | 0.01 | 85.6 | -0.0077 | 0.3597 | 0 |
| 198 | SLU 51 | 6.67 | 0.01 | 84.97 | -0.0077 | 0.3464 | 0 |
| 198 | SLU 52 | 6.96 | 0.02 | 96.72 | -0.0157 | 0.3612 | -0.0001 |
| 198 | SLU 53 | 7.55 | 0.02 | 99.71 | -0.0152 | 0.3919 | -0.0001 |
| 198 | SLU 54 | 7.3 | 0.02 | 99.08 | -0.0151 | 0.3786 | -0.0001 |
| 198 | SLU 55 | 7.14 | 0.02 | 97.77 | -0.0154 | 0.3701 | -0.0001 |
| 198 | SLU 56 | 7.73 | 0.02 | 100.76 | -0.0149 | 0.4008 | -0.0001 |
| 198 | SLU 57 | 7.48 | 0.02 | 100.13 | -0.0148 | 0.3875 | -0.0001 |
| 198 | SLU 58 | 7.73 | 0.02 | 99.88 | -0.0152 | 0.4012 | -0.0001 |
| 198 | SLU 59 | 7.48 | 0.02 | 99.25 | -0.0151 | 0.3879 | -0.0001 |
| 198 | SLU 60 | 7.73 | 0.03 | 103.89 | -0.019 | 0.4012 | -0.0001 |
| 198 | SLU 61 | 7.47 | 0.03 | 103.26 | -0.0189 | 0.3879 | -0.0001 |
| 198 | SLU 62 | 7.9 | 0.03 | 104.94 | -0.0187 | 0.4101 | -0.0001 |
| 198 | SLU 63 | 7.65 | 0.03 | 104.31 | -0.0186 | 0.3968 | -0.0001 |
| 198 | SLU 64 | 7.51 | 0.02 | 95.96 | -0.0132 | 0.3909 | -0.0001 |

| Nodo | Cont. | Reazione a traslazione | | | Reazione a rotazione | | |
|---|---|---|---|---|---|---|---|
| Ind. | N.br. | x | y | z | x | y | z |
| 198 | SLU 65 | 7.09 | 0.02 | 94.91 | -0.0131 | 0.3687 | -0.0001 |
| 198 | SLU 66 | 7.69 | 0.02 | 97.9 | -0.0126 | 0.3994 | -0.0001 |
| 198 | SLU 67 | 7.44 | 0.02 | 97.27 | -0.0125 | 0.3861 | -0.0001 |
| 198 | SLU 68 | 7.27 | 0.02 | 95.96 | -0.0127 | 0.3776 | -0.0001 |
| 198 | SLU 69 | 7.87 | 0.02 | 98.96 | -0.0123 | 0.4083 | -0.0001 |
| 198 | SLU 70 | 7.62 | 0.02 | 98.33 | -0.0122 | 0.395 | -0.0001 |
| 198 | SLU 71 | 7.87 | 0.02 | 98.07 | -0.0125 | 0.4087 | -0.0001 |
| 198 | SLU 72 | 7.62 | 0.02 | 97.44 | -0.0125 | 0.3954 | -0.0001 |
| 198 | SLU 73 | 7.9 | 0.03 | 109.19 | -0.0205 | 0.4102 | -0.0001 |
| 198 | SLU 74 | 8.5 | 0.03 | 112.18 | -0.02 | 0.4409 | -0.0001 |
| 198 | SLU 75 | 8.25 | 0.03 | 111.55 | -0.0199 | 0.4276 | -0.0001 |
| 198 | SLU 76 | 8.08 | 0.03 | 110.24 | -0.0202 | 0.4191 | -0.0001 |
| 198 | SLU 77 | 8.68 | 0.03 | 113.23 | -0.0197 | 0.4498 | -0.0001 |
| 198 | SLU 78 | 8.43 | 0.03 | 112.6 | -0.0196 | 0.4365 | -0.0001 |
| 198 | SLU 79 | 8.68 | 0.03 | 112.35 | -0.0199 | 0.4502 | -0.0001 |
| 198 | SLU 80 | 8.43 | 0.03 | 111.72 | -0.0199 | 0.4369 | -0.0001 |
| 198 | SLU 81 | 8.67 | 0.03 | 116.36 | -0.0238 | 0.4502 | -0.0001 |
| 198 | SLU 82 | 8.42 | 0.03 | 115.72 | -0.0237 | 0.4369 | -0.0001 |
| 198 | SLU 83 | 8.85 | 0.03 | 117.41 | -0.0234 | 0.4591 | -0.0001 |
| 198 | SLU 84 | 8.6 | 0.03 | 116.78 | -0.0234 | 0.4458 | -0.0001 |
| 198 | SLE RA 1 | 5.57 | 0.01 | 71.08 | -0.0091 | 0.2899 | 0 |
| 198 | SLE RA 2 | 5.29 | 0.01 | 70.38 | -0.009 | 0.2751 | 0 |
| 198 | SLE RA 3 | 5.69 | 0.01 | 72.37 | -0.0087 | 0.2956 | 0 |
| 198 | SLE RA 4 | 5.52 | 0.01 | 71.95 | -0.0086 | 0.2867 | 0 |
| 198 | SLE RA 5 | 5.41 | 0.01 | 71.08 | -0.0088 | 0.2811 | 0 |
| 198 | SLE RA 6 | 5.81 | 0.01 | 73.07 | -0.0085 | 0.3015 | 0 |
| 198 | SLE RA 7 | 5.64 | 0.01 | 72.65 | -0.0084 | 0.2926 | 0 |
| 198 | SLE RA 8 | 5.81 | 0.01 | 72.48 | -0.0087 | 0.3018 | 0 |
| 198 | SLE RA 9 | 5.64 | 0.01 | 72.06 | -0.0086 | 0.2929 | 0 |
| 198 | SLE RA 10 | 5.83 | 0.02 | 79.89 | -0.0139 | 0.3028 | -0.0001 |
| 198 | SLE RA 11 | 6.23 | 0.02 | 81.89 | -0.0136 | 0.3233 | -0.0001 |
| 198 | SLE RA 12 | 6.06 | 0.02 | 81.47 | -0.0136 | 0.3144 | -0.0001 |
| 198 | SLE RA 13 | 5.95 | 0.02 | 80.6 | -0.0137 | 0.3088 | -0.0001 |
| 198 | SLE RA 14 | 6.35 | 0.02 | 82.59 | -0.0134 | 0.3292 | -0.0001 |
| 198 | SLE RA 15 | 6.18 | 0.02 | 82.17 | -0.0134 | 0.3203 | -0.0001 |
| 198 | SLE RA 16 | 6.35 | 0.02 | 82 | -0.0136 | 0.3295 | -0.0001 |
| 198 | SLE RA 17 | 6.18 | 0.02 | 81.58 | -0.0135 | 0.3206 | -0.0001 |
| 198 | SLE RA 18 | 6.34 | 0.02 | 84.67 | -0.0161 | 0.3295 | -0.0001 |
| 198 | SLE RA 19 | 6.18 | 0.02 | 84.25 | -0.0161 | 0.3206 | -0.0001 |
| 198 | SLE RA 20 | 6.46 | 0.02 | 85.38 | -0.0159 | 0.3354 | -0.0001 |
| 198 | SLE RA 21 | 6.29 | 0.02 | 84.95 | -0.0159 | 0.3265 | -0.0001 |
| 198 | SLE FR 1 | 5.57 | 0.01 | 71.08 | -0.0091 | 0.2899 | 0 |
| 198 | SLE FR 2 | 5.52 | 0.01 | 70.94 | -0.0091 | 0.287 | 0 |
| 198 | SLE FR 3 | 5.62 | 0.01 | 71.36 | -0.009 | 0.2923 | 0 |
| 198 | SLE FR 4 | 5.75 | 0.02 | 75.02 | -0.0112 | 0.2988 | 0 |
| 198 | SLE FR 5 | 5.85 | 0.02 | 75.44 | -0.0111 | 0.3042 | 0 |
| 198 | SLE FR 6 | 5.96 | 0.02 | 77.88 | -0.0126 | 0.3097 | -0.0001 |
| 198 | SLE QP 1 | 5.57 | 0.01 | 71.08 | -0.0091 | 0.2899 | 0 |
| 198 | SLE QP 2 | 5.8 | 0.02 | 75.16 | -0.0112 | 0.3018 | 0 |
| 198 | SLD 1 | 15.63 | -0.08 | 100.8 | 0.057 | 0.8925 | 0.0001 |
| 198 | SLD 2 | 15.63 | -0.08 | 100.8 | 0.057 | 0.8925 | 0.0001 |
| 198 | SLD 3 | 15.1 | 0.02 | 104.94 | -0.0028 | 0.862 | -0.0001 |
| 198 | SLD 4 | 15.1 | 0.02 | 104.94 | -0.0028 | 0.862 | -0.0001 |
| 198 | SLD 5 | 9.55 | -0.16 | 76.57 | 0.1 | 0.5253 | 0.0002 |
| 198 | SLD 6 | 9.55 | -0.16 | 76.57 | 0.1 | 0.5253 | 0.0002 |
| 198 | SLD 7 | 7.8 | 0.17 | 90.37 | -0.0994 | 0.4235 | -0.0003 |
| 198 | SLD 8 | 7.8 | 0.17 | 90.37 | -0.0994 | 0.4235 | -0.0003 |
| 198 | SLD 9 | 3.81 | -0.13 | 59.95 | 0.077 | 0.18 | 0.0002 |
| 198 | SLD 10 | 3.81 | -0.13 | 59.95 | 0.077 | 0.18 | 0.0002 |
| 198 | SLD 11 | 2.06 | 0.2 | 73.74 | -0.1224 | 0.0783 | -0.0003 |
| 198 | SLD 12 | 2.06 | 0.2 | 73.74 | -0.1224 | 0.0783 | -0.0003 |
| 198 | SLD 13 | -3.5 | 0.02 | 45.37 | -0.0196 | -0.2584 | 0 |
| 198 | SLD 14 | -3.5 | 0.02 | 45.37 | -0.0196 | -0.2584 | 0 |
| 198 | SLD 15 | -4.02 | 0.11 | 49.51 | -0.0794 | -0.2889 | -0.0002 |
| 198 | SLD 16 | -4.02 | 0.11 | 49.51 | -0.0794 | -0.2889 | -0.0002 |
| 198 | SLV 1 | 28.56 | -0.22 | 134.54 | 0.1536 | 1.6703 | 0.0002 |
| 198 | SLV 2 | 28.56 | -0.22 | 134.54 | 0.1536 | 1.6703 | 0.0002 |
| 198 | SLV 3 | 27.33 | 0.01 | 144.37 | 0.0159 | 1.5985 | -0.0001 |
| 198 | SLV 4 | 27.33 | 0.01 | 144.37 | 0.0159 | 1.5985 | -0.0001 |
| 198 | SLV 5 | 14.5 | -0.4 | 78.06 | 0.2472 | 0.8212 | 0.0006 |
| 198 | SLV 6 | 14.5 | -0.4 | 78.06 | 0.2472 | 0.8212 | 0.0006 |
| 198 | SLV 7 | 10.39 | 0.36 | 110.83 | -0.212 | 0.582 | -0.0006 |
| 198 | SLV 8 | 10.39 | 0.36 | 110.83 | -0.212 | 0.582 | -0.0006 |
| 198 | SLV 9 | 1.22 | -0.33 | 39.49 | 0.1896 | 0.0216 | 0.0005 |
| 198 | SLV 10 | 1.22 | -0.33 | 39.49 | 0.1896 | 0.0216 | 0.0005 |
| 198 | SLV 11 | -2.9 | 0.43 | 72.25 | -0.2696 | -0.2176 | -0.0007 |
| 198 | SLV 12 | -2.9 | 0.43 | 72.25 | -0.2696 | -0.2176 | -0.0007 |
| 198 | SLV 13 | -15.72 | 0.02 | 5.95 | -0.0383 | -0.9949 | 0 |
| 198 | SLV 14 | -15.72 | 0.02 | 5.95 | -0.0383 | -0.9949 | 0 |
| 198 | SLV 15 | -16.95 | 0.25 | 15.78 | -0.176 | -1.0667 | -0.0003 |
| 198 | SLV 16 | -16.95 | 0.25 | 15.78 | -0.176 | -1.0667 | -0.0003 |
| 199 | SLU 1 | 1.24 | 0.01 | 67.21 | -0.0054 | 0.0503 | 0 |
| 199 | SLU 2 | 0.75 | 0.01 | 66.37 | -0.0062 | 0.027 | 0 |
| 199 | SLU 3 | 1.3 | 0.01 | 69.24 | -0.0049 | 0.0525 | 0 |
| 199 | SLU 4 | 1 | 0.01 | 68.73 | -0.0054 | 0.0384 | 0 |
| 199 | SLU 5 | 0.89 | 0.01 | 67.43 | -0.0059 | 0.0336 | 0 |
| 199 | SLU 6 | 1.45 | 0 | 70.3 | -0.0046 | 0.0591 | 0 |
| 199 | SLU 7 | 1.15 | 0.01 | 69.8 | -0.005 | 0.0451 | 0 |

| Nodo | Cont. | Reazione a traslazione | | | Reazione a rotazione | | |
|---|---|---|---|---|---|---|---|
| Ind. | N.br. | x | y | z | x | y | z |
| 199 | SLU 8 | 1.54 | 0.01 | 69.33 | -0.0047 | 0.0636 | 0 |
| 199 | SLU 9 | 1.24 | 0.01 | 68.83 | -0.0052 | 0.0495 | 0 |
| 199 | SLU 10 | 0.57 | 0.01 | 80.76 | -0.0116 | 0.0171 | 0 |
| 199 | SLU 11 | 1.12 | 0.01 | 83.63 | -0.0102 | 0.0426 | 0 |
| 199 | SLU 12 | 0.83 | 0.01 | 83.13 | -0.0107 | 0.0285 | 0 |
| 199 | SLU 13 | 0.72 | 0.01 | 81.82 | -0.0112 | 0.0237 | 0 |
| 199 | SLU 14 | 1.27 | 0.01 | 84.7 | -0.0099 | 0.0492 | 0 |
| 199 | SLU 15 | 0.98 | 0.01 | 84.19 | -0.0104 | 0.0352 | 0 |
| 199 | SLU 16 | 1.36 | 0.01 | 83.73 | -0.01 | 0.0537 | 0 |
| 199 | SLU 17 | 1.06 | 0.01 | 83.22 | -0.0105 | 0.0396 | 0 |
| 199 | SLU 18 | 0.99 | 0.01 | 87.77 | -0.013 | 0.0362 | 0 |
| 199 | SLU 19 | 0.69 | 0.01 | 87.26 | -0.0135 | 0.0222 | 0 |
| 199 | SLU 20 | 1.13 | 0.01 | 88.83 | -0.0127 | 0.0428 | 0 |
| 199 | SLU 21 | 0.84 | 0.01 | 88.33 | -0.0131 | 0.0288 | 0 |
| 199 | SLU 22 | 1.42 | 0.01 | 79.64 | -0.0088 | 0.0575 | 0 |
| 199 | SLU 23 | 0.92 | 0.01 | 78.79 | -0.0096 | 0.0341 | 0 |
| 199 | SLU 24 | 1.48 | 0.01 | 81.67 | -0.0083 | 0.0596 | 0 |
| 199 | SLU 25 | 1.18 | 0.01 | 81.16 | -0.0088 | 0.0456 | 0 |
| 199 | SLU 26 | 1.07 | 0.01 | 79.85 | -0.0092 | 0.0407 | 0 |
| 199 | SLU 27 | 1.63 | 0.01 | 82.73 | -0.0079 | 0.0662 | 0 |
| 199 | SLU 28 | 1.33 | 0.01 | 82.22 | -0.0084 | 0.0522 | 0 |
| 199 | SLU 29 | 1.72 | 0.01 | 81.76 | -0.0081 | 0.0707 | 0 |
| 199 | SLU 30 | 1.42 | 0.01 | 81.25 | -0.0085 | 0.0567 | 0 |
| 199 | SLU 31 | 0.75 | 0.01 | 93.19 | -0.0149 | 0.0242 | 0 |
| 199 | SLU 32 | 1.3 | 0.01 | 96.06 | -0.0136 | 0.0497 | 0 |
| 199 | SLU 33 | 1.01 | 0.01 | 95.55 | -0.0141 | 0.0357 | 0 |
| 199 | SLU 34 | 0.9 | 0.01 | 94.25 | -0.0145 | 0.0308 | 0 |
| 199 | SLU 35 | 1.45 | 0.01 | 97.12 | -0.0132 | 0.0563 | 0 |
| 199 | SLU 36 | 1.16 | 0.01 | 96.62 | -0.0137 | 0.0423 | 0 |
| 199 | SLU 37 | 1.54 | 0.01 | 96.15 | -0.0134 | 0.0608 | 0 |
| 199 | SLU 38 | 1.24 | 0.01 | 95.65 | -0.0138 | 0.0468 | 0 |
| 199 | SLU 39 | 1.16 | 0.02 | 100.2 | -0.0164 | 0.0434 | 0 |
| 199 | SLU 40 | 0.87 | 0.02 | 99.69 | -0.0169 | 0.0293 | 0 |
| 199 | SLU 41 | 1.31 | 0.02 | 101.26 | -0.016 | 0.05 | 0 |
| 199 | SLU 42 | 1.02 | 0.02 | 100.75 | -0.0165 | 0.0359 | 0 |
| 199 | SLU 43 | 1.55 | 0.01 | 83.11 | -0.0059 | 0.063 | 0 |
| 199 | SLU 44 | 1.06 | 0.01 | 82.27 | -0.0067 | 0.0396 | 0 |
| 199 | SLU 45 | 1.61 | 0.01 | 85.14 | -0.0054 | 0.0651 | 0 |
| 199 | SLU 46 | 1.31 | 0.01 | 84.64 | -0.0059 | 0.0511 | 0 |
| 199 | SLU 47 | 1.2 | 0.01 | 83.33 | -0.0064 | 0.0462 | 0 |
| 199 | SLU 48 | 1.76 | 0.01 | 86.2 | -0.0051 | 0.0717 | 0 |
| 199 | SLU 49 | 1.46 | 0.01 | 85.7 | -0.0055 | 0.0577 | 0 |
| 199 | SLU 50 | 1.85 | 0.01 | 85.24 | -0.0052 | 0.0762 | 0 |
| 199 | SLU 51 | 1.55 | 0.01 | 84.73 | -0.0057 | 0.0622 | 0 |
| 199 | SLU 52 | 0.88 | 0.01 | 96.66 | -0.012 | 0.0297 | 0 |
| 199 | SLU 53 | 1.43 | 0.01 | 99.54 | -0.0107 | 0.0552 | 0 |
| 199 | SLU 54 | 1.14 | 0.01 | 99.03 | -0.0112 | 0.0412 | 0 |
| 199 | SLU 55 | 1.03 | 0.01 | 97.72 | -0.0117 | 0.0363 | 0 |
| 199 | SLU 56 | 1.58 | 0.01 | 100.6 | -0.0104 | 0.0618 | 0 |
| 199 | SLU 57 | 1.29 | 0.01 | 100.09 | -0.0108 | 0.0478 | 0 |
| 199 | SLU 58 | 1.67 | 0.01 | 99.63 | -0.0105 | 0.0663 | 0 |
| 199 | SLU 59 | 1.37 | 0.01 | 99.12 | -0.011 | 0.0523 | 0 |
| 199 | SLU 60 | 1.3 | 0.01 | 103.67 | -0.0135 | 0.0489 | 0 |
| 199 | SLU 61 | 1 | 0.01 | 103.17 | -0.014 | 0.0348 | 0 |
| 199 | SLU 62 | 1.45 | 0.01 | 104.74 | -0.0132 | 0.0555 | 0 |
| 199 | SLU 63 | 1.15 | 0.01 | 104.23 | -0.0136 | 0.0414 | 0 |
| 199 | SLU 64 | 1.73 | 0.01 | 95.54 | -0.0093 | 0.0702 | 0 |
| 199 | SLU 65 | 1.23 | 0.01 | 94.69 | -0.0101 | 0.0468 | 0 |
| 199 | SLU 66 | 1.79 | 0.01 | 97.57 | -0.0088 | 0.0723 | 0 |
| 199 | SLU 67 | 1.49 | 0.01 | 97.06 | -0.0092 | 0.0582 | 0 |
| 199 | SLU 68 | 1.38 | 0.01 | 95.76 | -0.0097 | 0.0534 | 0 |
| 199 | SLU 69 | 1.94 | 0.01 | 98.63 | -0.0084 | 0.0789 | 0 |
| 199 | SLU 70 | 1.64 | 0.01 | 98.12 | -0.0089 | 0.0649 | 0 |
| 199 | SLU 71 | 2.03 | 0.01 | 97.66 | -0.0085 | 0.0834 | 0 |
| 199 | SLU 72 | 1.73 | 0.01 | 97.16 | -0.009 | 0.0694 | 0 |
| 199 | SLU 73 | 1.06 | 0.02 | 109.09 | -0.0154 | 0.0369 | 0 |
| 199 | SLU 74 | 1.61 | 0.01 | 111.96 | -0.0141 | 0.0624 | 0 |
| 199 | SLU 75 | 1.32 | 0.01 | 111.46 | -0.0146 | 0.0484 | 0 |
| 199 | SLU 76 | 1.21 | 0.01 | 110.15 | -0.015 | 0.0435 | 0 |
| 199 | SLU 77 | 1.76 | 0.01 | 113.02 | -0.0137 | 0.069 | 0 |
| 199 | SLU 78 | 1.47 | 0.01 | 112.52 | -0.0142 | 0.055 | 0 |
| 199 | SLU 79 | 1.85 | 0.01 | 112.06 | -0.0139 | 0.0735 | 0 |
| 199 | SLU 80 | 1.55 | 0.01 | 111.55 | -0.0143 | 0.0595 | 0 |
| 199 | SLU 81 | 1.47 | 0.02 | 116.1 | -0.0169 | 0.056 | 0 |
| 199 | SLU 82 | 1.18 | 0.02 | 115.59 | -0.0173 | 0.042 | 0 |
| 199 | SLU 83 | 1.62 | 0.02 | 117.16 | -0.0165 | 0.0626 | 0 |
| 199 | SLU 84 | 1.33 | 0.02 | 116.66 | -0.017 | 0.0486 | 0 |
| 199 | SLE RA 1 | 1.29 | 0.01 | 70.76 | -0.0064 | 0.0524 | 0 |
| 199 | SLE RA 2 | 0.96 | 0.01 | 70.2 | -0.0069 | 0.0368 | 0 |
| 199 | SLE RA 3 | 1.33 | 0.01 | 72.11 | -0.0061 | 0.0538 | 0 |
| 199 | SLE RA 4 | 1.13 | 0.01 | 71.78 | -0.0064 | 0.0445 | 0 |
| 199 | SLE RA 5 | 1.06 | 0.01 | 70.91 | -0.0067 | 0.0412 | 0 |
| 199 | SLE RA 6 | 1.43 | 0.01 | 72.82 | -0.0058 | 0.0582 | 0 |
| 199 | SLE RA 7 | 1.23 | 0.01 | 72.48 | -0.0061 | 0.0489 | 0 |
| 199 | SLE RA 8 | 1.49 | 0.01 | 72.18 | -0.0059 | 0.0612 | 0 |
| 199 | SLE RA 9 | 1.29 | 0.01 | 71.84 | -0.0062 | 0.0519 | 0 |
| 199 | SLE RA 10 | 0.84 | 0.01 | 79.79 | -0.0105 | 0.0302 | 0 |
| 199 | SLE RA 11 | 1.21 | 0.01 | 81.71 | -0.0096 | 0.0472 | 0 |

| Nodo | Cont. | Reazione a traslazione | | | Reazione a rotazione | | |
|---|---|---|---|---|---|---|---|
| Ind. | N.br. | x | y | z | x | y | z |
| 199 | SLE RA 12 | 1.02 | 0.01 | 81.37 | -0.0099 | 0.0379 | 0 |
| 199 | SLE RA 13 | 0.94 | 0.01 | 80.5 | -0.0102 | 0.0346 | 0 |
| 199 | SLE RA 14 | 1.31 | 0.01 | 82.42 | -0.0094 | 0.0516 | 0 |
| 199 | SLE RA 15 | 1.12 | 0.01 | 82.08 | -0.0097 | 0.0423 | 0 |
| 199 | SLE RA 16 | 1.37 | 0.01 | 81.77 | -0.0095 | 0.0546 | 0 |
| 199 | SLE RA 17 | 1.17 | 0.01 | 81.43 | -0.0098 | 0.0453 | 0 |
| 199 | SLE RA 18 | 1.12 | 0.01 | 84.47 | -0.0115 | 0.043 | 0 |
| 199 | SLE RA 19 | 0.92 | 0.01 | 84.13 | -0.0118 | 0.0336 | 0 |
| 199 | SLE RA 20 | 1.22 | 0.01 | 85.18 | -0.0112 | 0.0474 | 0 |
| 199 | SLE RA 21 | 1.02 | 0.01 | 84.84 | -0.0115 | 0.038 | 0 |
| 199 | SLE FR 1 | 1.29 | 0.01 | 70.76 | -0.0064 | 0.0524 | 0 |
| 199 | SLE FR 2 | 1.22 | 0.01 | 70.65 | -0.0065 | 0.0493 | 0 |
| 199 | SLE FR 3 | 1.33 | 0.01 | 71.04 | -0.0063 | 0.0542 | 0 |
| 199 | SLE FR 4 | 1.17 | 0.01 | 74.76 | -0.008 | 0.0464 | 0 |
| 199 | SLE FR 5 | 1.28 | 0.01 | 75.16 | -0.0078 | 0.0513 | 0 |
| 199 | SLE FR 6 | 1.21 | 0.01 | 77.61 | -0.0089 | 0.0477 | 0 |
| 199 | SLE QP 1 | 1.29 | 0.01 | 70.76 | -0.0064 | 0.0524 | 0 |
| 199 | SLE QP 2 | 1.24 | 0.01 | 74.87 | -0.0079 | 0.0496 | 0 |
| 199 | SLD 1 | 13.19 | -0.05 | 85.19 | 0.0287 | 0.6718 | 0 |
| 199 | SLD 2 | 13.19 | -0.05 | 85.19 | 0.0287 | 0.6718 | 0 |
| 199 | SLD 3 | 12.36 | -0.19 | 89.39 | 0.1323 | 0.6309 | 0.0001 |
| 199 | SLD 4 | 12.36 | -0.19 | 89.39 | 0.1323 | 0.6309 | 0.0001 |
| 199 | SLD 5 | 6.09 | 0.19 | 71.61 | -0.1541 | 0.2983 | -0.0001 |
| 199 | SLD 6 | 6.09 | 0.19 | 71.61 | -0.1541 | 0.2983 | -0.0001 |
| 199 | SLD 7 | 3.31 | -0.26 | 85.59 | 0.1913 | 0.1619 | 0.0002 |
| 199 | SLD 8 | 3.31 | -0.26 | 85.59 | 0.1913 | 0.1619 | 0.0002 |
| 199 | SLD 9 | -0.83 | 0.27 | 64.16 | -0.2072 | -0.0627 | -0.0002 |
| 199 | SLD 10 | -0.83 | 0.27 | 64.16 | -0.2072 | -0.0627 | -0.0002 |
| 199 | SLD 11 | -3.61 | -0.18 | 78.14 | 0.1383 | -0.1992 | 0.0002 |
| 199 | SLD 12 | -3.61 | -0.18 | 78.14 | 0.1383 | -0.1992 | 0.0002 |
| 199 | SLD 13 | -9.88 | 0.21 | 60.36 | -0.1481 | -0.5317 | -0.0001 |
| 199 | SLD 14 | -9.88 | 0.21 | 60.36 | -0.1481 | -0.5317 | -0.0001 |
| 199 | SLD 15 | -10.72 | 0.07 | 64.55 | -0.0445 | -0.5727 | 0 |
| 199 | SLD 16 | -10.72 | 0.07 | 64.55 | -0.0445 | -0.5727 | 0 |
| 199 | SLV 1 | 28.94 | -0.16 | 98.74 | 0.0902 | 1.4911 | 0 |
| 199 | SLV 2 | 28.94 | -0.16 | 98.74 | 0.0902 | 1.4911 | 0 |
| 199 | SLV 3 | 26.97 | -0.48 | 108.72 | 0.3406 | 1.3948 | 0.0003 |
| 199 | SLV 4 | 26.97 | -0.48 | 108.72 | 0.3406 | 1.3948 | 0.0003 |
| 199 | SLV 5 | 12.53 | 0.45 | 66.9 | -0.3583 | 0.6281 | -0.0004 |
| 199 | SLV 6 | 12.53 | 0.45 | 66.9 | -0.3583 | 0.6281 | -0.0004 |
| 199 | SLV 7 | 5.98 | -0.63 | 100.16 | 0.4765 | 0.307 | 0.0005 |
| 199 | SLV 8 | 5.98 | -0.63 | 100.16 | 0.4765 | 0.307 | 0.0005 |
| 199 | SLV 9 | -3.5 | 0.65 | 49.58 | -0.4923 | -0.2079 | -0.0005 |
| 199 | SLV 10 | -3.5 | 0.65 | 49.58 | -0.4923 | -0.2079 | -0.0005 |
| 199 | SLV 11 | -10.05 | -0.43 | 82.85 | 0.3425 | -0.529 | 0.0004 |
| 199 | SLV 12 | -10.05 | -0.43 | 82.85 | 0.3425 | -0.529 | 0.0004 |
| 199 | SLV 13 | -24.49 | 0.5 | 41.02 | -0.3564 | -1.2957 | -0.0003 |
| 199 | SLV 14 | -24.49 | 0.5 | 41.02 | -0.3564 | -1.2957 | -0.0003 |
| 199 | SLV 15 | -26.46 | 0.17 | 51 | -0.106 | -1.392 | 0 |
| 199 | SLV 16 | -26.46 | 0.17 | 51 | -0.106 | -1.392 | 0 |
| 200 | SLU 1 | -2.4 | 0 | 68.08 | -0.0034 | -0.1178 | 0 |
| 200 | SLU 2 | -2.88 | 0 | 67.22 | -0.005 | -0.1392 | 0 |
| 200 | SLU 3 | -2.45 | 0 | 70.24 | -0.0029 | -0.1209 | 0 |
| 200 | SLU 4 | -2.74 | 0 | 69.73 | -0.0039 | -0.1338 | 0 |
| 200 | SLU 5 | -2.78 | 0 | 68.36 | -0.0046 | -0.1353 | 0 |
| 200 | SLU 6 | -2.35 | 0 | 71.38 | -0.0026 | -0.117 | 0 |
| 200 | SLU 7 | -2.64 | 0 | 70.87 | -0.0035 | -0.1299 | 0 |
| 200 | SLU 8 | -2.21 | 0 | 70.36 | -0.0026 | -0.11 | 0 |
| 200 | SLU 9 | -2.49 | 0 | 69.85 | -0.0036 | -0.1228 | 0 |
| 200 | SLU 10 | -3.87 | 0.01 | 81.82 | -0.0086 | -0.1867 | 0 |
| 200 | SLU 11 | -3.44 | 0.01 | 84.84 | -0.0066 | -0.1683 | 0 |
| 200 | SLU 12 | -3.73 | 0.01 | 84.33 | -0.0075 | -0.1812 | 0 |
| 200 | SLU 13 | -3.77 | 0.01 | 82.96 | -0.0082 | -0.1827 | 0 |
| 200 | SLU 14 | -3.34 | 0.01 | 85.98 | -0.0062 | -0.1644 | 0 |
| 200 | SLU 15 | -3.63 | 0.01 | 85.47 | -0.0071 | -0.1773 | 0 |
| 200 | SLU 16 | -3.2 | 0.01 | 84.96 | -0.0062 | -0.1574 | 0 |
| 200 | SLU 17 | -3.48 | 0.01 | 84.45 | -0.0072 | -0.1702 | 0 |
| 200 | SLU 18 | -3.82 | 0.01 | 88.93 | -0.0086 | -0.1855 | 0 |
| 200 | SLU 19 | -4.11 | 0.01 | 88.42 | -0.0095 | -0.1984 | 0 |
| 200 | SLU 20 | -3.72 | 0.01 | 90.07 | -0.0082 | -0.1816 | 0 |
| 200 | SLU 21 | -4.01 | 0.01 | 89.56 | -0.0091 | -0.1945 | 0 |
| 200 | SLU 22 | -2.91 | 0.01 | 80.68 | -0.0056 | -0.1427 | 0 |
| 200 | SLU 23 | -3.38 | 0.01 | 79.83 | -0.0071 | -0.1641 | 0 |
| 200 | SLU 24 | -2.95 | 0.01 | 82.85 | -0.0051 | -0.1458 | 0 |
| 200 | SLU 25 | -3.24 | 0.01 | 82.34 | -0.006 | -0.1586 | 0 |
| 200 | SLU 26 | -3.29 | 0.01 | 80.97 | -0.0067 | -0.1602 | 0 |
| 200 | SLU 27 | -2.86 | 0 | 83.99 | -0.0047 | -0.1419 | 0 |
| 200 | SLU 28 | -3.14 | 0.01 | 83.48 | -0.0057 | -0.1547 | 0 |
| 200 | SLU 29 | -2.71 | 0 | 82.97 | -0.0048 | -0.1348 | 0 |
| 200 | SLU 30 | -3 | 0.01 | 82.46 | -0.0057 | -0.1477 | 0 |
| 200 | SLU 31 | -4.38 | 0.01 | 94.43 | -0.0107 | -0.2115 | 0 |
| 200 | SLU 32 | -3.95 | 0.01 | 97.45 | -0.0087 | -0.1932 | 0 |
| 200 | SLU 33 | -4.23 | 0.01 | 96.93 | -0.0097 | -0.2061 | 0 |
| 200 | SLU 34 | -4.28 | 0.01 | 95.57 | -0.0103 | -0.2076 | 0 |
| 200 | SLU 35 | -3.85 | 0.01 | 98.59 | -0.0083 | -0.1893 | 0 |
| 200 | SLU 36 | -4.13 | 0.01 | 98.08 | -0.0093 | -0.2021 | 0 |
| 200 | SLU 37 | -3.7 | 0.01 | 97.57 | -0.0084 | -0.1822 | 0 |
| 200 | SLU 38 | -3.99 | 0.01 | 97.05 | -0.0093 | -0.1951 | 0 |

| Nodo | Cont. | Reazione a traslazione | | | Reazione a rotazione | | |
|---|---|---|---|---|---|---|---|
| Ind. | N.br. | x | y | z | x | y | z |
| 200 | SLU 39 | -4.32 | 0.01 | 101.54 | -0.0107 | -0.2104 | 0 |
| 200 | SLU 40 | -4.61 | 0.01 | 101.02 | -0.0117 | -0.2233 | 0 |
| 200 | SLU 41 | -4.23 | 0.01 | 102.68 | -0.0103 | -0.2065 | 0 |
| 200 | SLU 42 | -4.51 | 0.01 | 102.17 | -0.0113 | -0.2194 | 0 |
| 200 | SLU 43 | -2.95 | 0 | 84.18 | -0.0037 | -0.1446 | 0 |
| 200 | SLU 44 | -3.43 | 0 | 83.32 | -0.0052 | -0.166 | 0 |
| 200 | SLU 45 | -3 | 0 | 86.34 | -0.0032 | -0.1477 | 0 |
| 200 | SLU 46 | -3.29 | 0 | 85.83 | -0.0042 | -0.1606 | 0 |
| 200 | SLU 47 | -3.33 | 0 | 84.46 | -0.0048 | -0.1621 | 0 |
| 200 | SLU 48 | -2.9 | 0 | 87.49 | -0.0028 | -0.1438 | 0 |
| 200 | SLU 49 | -3.19 | 0 | 86.97 | -0.0038 | -0.1567 | 0 |
| 200 | SLU 50 | -2.75 | 0 | 86.46 | -0.0029 | -0.1368 | 0 |
| 200 | SLU 51 | -3.04 | 0 | 85.95 | -0.0038 | -0.1496 | 0 |
| 200 | SLU 52 | -4.42 | 0.01 | 97.92 | -0.0088 | -0.2135 | 0 |
| 200 | SLU 53 | -3.99 | 0.01 | 100.94 | -0.0068 | -0.1951 | 0 |
| 200 | SLU 54 | -4.28 | 0.01 | 100.43 | -0.0078 | -0.208 | 0 |
| 200 | SLU 55 | -4.32 | 0.01 | 99.06 | -0.0085 | -0.2095 | 0 |
| 200 | SLU 56 | -3.89 | 0.01 | 102.08 | -0.0065 | -0.1912 | 0 |
| 200 | SLU 57 | -4.18 | 0.01 | 101.57 | -0.0074 | -0.2041 | 0 |
| 200 | SLU 58 | -3.75 | 0.01 | 101.06 | -0.0065 | -0.1842 | 0 |
| 200 | SLU 59 | -4.03 | 0.01 | 100.55 | -0.0075 | -0.197 | 0 |
| 200 | SLU 60 | -4.37 | 0.01 | 105.03 | -0.0088 | -0.2123 | 0 |
| 200 | SLU 61 | -4.65 | 0.01 | 104.52 | -0.0098 | -0.2252 | 0 |
| 200 | SLU 62 | -4.27 | 0.01 | 106.17 | -0.0085 | -0.2084 | 0 |
| 200 | SLU 63 | -4.56 | 0.01 | 105.66 | -0.0094 | -0.2213 | 0 |
| 200 | SLU 64 | -3.45 | 0.01 | 96.78 | -0.0058 | -0.1695 | 0 |
| 200 | SLU 65 | -3.93 | 0.01 | 95.93 | -0.0074 | -0.1909 | 0 |
| 200 | SLU 66 | -3.5 | 0.01 | 98.95 | -0.0054 | -0.1726 | 0 |
| 200 | SLU 67 | -3.79 | 0.01 | 98.44 | -0.0063 | -0.1854 | 0 |
| 200 | SLU 68 | -3.83 | 0.01 | 97.07 | -0.007 | -0.187 | 0 |
| 200 | SLU 69 | -3.4 | 0.01 | 100.09 | -0.005 | -0.1687 | 0 |
| 200 | SLU 70 | -3.69 | 0.01 | 99.58 | -0.0059 | -0.1815 | 0 |
| 200 | SLU 71 | -3.26 | 0.01 | 99.07 | -0.0051 | -0.1616 | 0 |
| 200 | SLU 72 | -3.54 | 0.01 | 98.56 | -0.006 | -0.1745 | 0 |
| 200 | SLU 73 | -4.92 | 0.01 | 110.53 | -0.011 | -0.2383 | 0 |
| 200 | SLU 74 | -4.49 | 0.01 | 113.55 | -0.009 | -0.22 | 0 |
| 200 | SLU 75 | -4.78 | 0.01 | 113.03 | -0.0099 | -0.2329 | 0 |
| 200 | SLU 76 | -4.83 | 0.01 | 111.67 | -0.0106 | -0.2344 | 0 |
| 200 | SLU 77 | -4.4 | 0.01 | 114.69 | -0.0086 | -0.2161 | 0 |
| 200 | SLU 78 | -4.68 | 0.01 | 114.18 | -0.0095 | -0.2289 | 0 |
| 200 | SLU 79 | -4.25 | 0.01 | 113.67 | -0.0087 | -0.209 | 0 |
| 200 | SLU 80 | -4.54 | 0.01 | 113.15 | -0.0096 | -0.2219 | 0 |
| 200 | SLU 81 | -4.87 | 0.01 | 117.64 | -0.011 | -0.2372 | 0 |
| 200 | SLU 82 | -5.16 | 0.01 | 117.13 | -0.0119 | -0.2501 | 0 |
| 200 | SLU 83 | -4.77 | 0.01 | 118.78 | -0.0106 | -0.2333 | 0 |
| 200 | SLU 84 | -5.06 | 0.01 | 118.27 | -0.0115 | -0.2462 | 0 |
| 200 | SLE RA 1 | -2.55 | 0 | 71.68 | -0.004 | -0.1249 | 0 |
| 200 | SLE RA 2 | -2.86 | 0 | 71.11 | -0.0051 | -0.1392 | 0 |
| 200 | SLE RA 3 | -2.58 | 0 | 73.12 | -0.0037 | -0.127 | 0 |
| 200 | SLE RA 4 | -2.77 | 0 | 72.78 | -0.0043 | -0.1355 | 0 |
| 200 | SLE RA 5 | -2.8 | 0 | 71.87 | -0.0048 | -0.1366 | 0 |
| 200 | SLE RA 6 | -2.51 | 0 | 73.88 | -0.0035 | -0.1243 | 0 |
| 200 | SLE RA 7 | -2.7 | 0 | 73.54 | -0.0041 | -0.1329 | 0 |
| 200 | SLE RA 8 | -2.42 | 0 | 73.2 | -0.0035 | -0.1197 | 0 |
| 200 | SLE RA 9 | -2.61 | 0 | 72.86 | -0.0041 | -0.1283 | 0 |
| 200 | SLE RA 10 | -3.53 | 0.01 | 80.84 | -0.0075 | -0.1708 | 0 |
| 200 | SLE RA 11 | -3.24 | 0.01 | 82.85 | -0.0061 | -0.1586 | 0 |
| 200 | SLE RA 12 | -3.43 | 0.01 | 82.51 | -0.0067 | -0.1672 | 0 |
| 200 | SLE RA 13 | -3.46 | 0.01 | 81.6 | -0.0072 | -0.1682 | 0 |
| 200 | SLE RA 14 | -3.17 | 0.01 | 83.62 | -0.0059 | -0.156 | 0 |
| 200 | SLE RA 15 | -3.37 | 0.01 | 83.27 | -0.0065 | -0.1645 | 0 |
| 200 | SLE RA 16 | -3.08 | 0.01 | 82.93 | -0.0059 | -0.1513 | 0 |
| 200 | SLE RA 17 | -3.27 | 0.01 | 82.59 | -0.0065 | -0.1599 | 0 |
| 200 | SLE RA 18 | -3.49 | 0.01 | 85.58 | -0.0075 | -0.17 | 0 |
| 200 | SLE RA 19 | -3.68 | 0.01 | 85.24 | -0.0081 | -0.1786 | 0 |
| 200 | SLE RA 20 | -3.43 | 0.01 | 86.34 | -0.0072 | -0.1674 | 0 |
| 200 | SLE RA 21 | -3.62 | 0.01 | 86 | -0.0078 | -0.176 | 0 |
| 200 | SLE FR 1 | -2.55 | 0 | 71.68 | -0.004 | -0.1249 | 0 |
| 200 | SLE FR 2 | -2.61 | 0 | 71.56 | -0.0042 | -0.1277 | 0 |
| 200 | SLE FR 3 | -2.52 | 0 | 71.98 | -0.0039 | -0.1238 | 0 |
| 200 | SLE FR 4 | -2.89 | 0.01 | 75.74 | -0.0053 | -0.1413 | 0 |
| 200 | SLE FR 5 | -2.8 | 0.01 | 76.15 | -0.005 | -0.1374 | 0 |
| 200 | SLE FR 6 | -3.02 | 0.01 | 78.63 | -0.0057 | -0.1475 | 0 |
| 200 | SLE QP 1 | -2.55 | 0 | 71.68 | -0.004 | -0.1249 | 0 |
| 200 | SLE QP 2 | -2.83 | 0.01 | 75.85 | -0.0051 | -0.1384 | 0 |
| 200 | SLD 1 | 9.57 | -0.06 | 77.42 | 0.0379 | 0.4784 | 0 |
| 200 | SLD 2 | 9.57 | -0.06 | 77.42 | 0.0379 | 0.4784 | 0 |
| 200 | SLD 3 | 8.52 | -0.24 | 81.59 | 0.1856 | 0.4293 | 0.0001 |
| 200 | SLD 4 | 8.52 | -0.24 | 81.59 | 0.1856 | 0.4293 | 0.0001 |
| 200 | SLD 5 | 2.47 | 0.25 | 69.99 | -0.2162 | 0.1212 | 0 |
| 200 | SLD 6 | 2.47 | 0.25 | 69.99 | -0.2162 | 0.1212 | 0 |
| 200 | SLD 7 | -1.01 | -0.33 | 83.9 | 0.2762 | -0.0427 | 0.0001 |
| 200 | SLD 8 | -1.01 | -0.33 | 83.9 | 0.2762 | -0.0427 | 0.0001 |
| 200 | SLD 9 | -4.65 | 0.35 | 67.8 | -0.2863 | -0.2342 | -0.0001 |
| 200 | SLD 10 | -4.65 | 0.35 | 67.8 | -0.2863 | -0.2342 | -0.0001 |
| 200 | SLD 11 | -8.13 | -0.24 | 81.71 | 0.2061 | -0.3981 | 0 |
| 200 | SLD 12 | -8.13 | -0.24 | 81.71 | 0.2061 | -0.3981 | 0 |
| 200 | SLD 13 | -14.18 | 0.25 | 70.11 | -0.1957 | -0.7061 | -0.0001 |

| Nodo | Cont. | Reazione a traslazione | | | Reazione a rotazione | | |
|---|---|---|---|---|---|---|---|
| Ind. | N.br. | x | y | z | x | y | z |
| 200 | SLD 14 | -14.18 | 0.25 | 70.11 | -0.1957 | -0.7061 | -0.0001 |
| 200 | SLD 15 | -15.23 | 0.07 | 74.28 | -0.048 | -0.7553 | 0 |
| 200 | SLD 16 | -15.23 | 0.07 | 74.28 | -0.048 | -0.7553 | 0 |
| 200 | SLV 1 | 25.89 | -0.17 | 79.46 | 0.1093 | 1.2906 | 0.0001 |
| 200 | SLV 2 | 25.89 | -0.17 | 79.46 | 0.1093 | 1.2906 | 0.0001 |
| 200 | SLV 3 | 23.43 | -0.6 | 89.39 | 0.4703 | 1.1746 | 0.0002 |
| 200 | SLV 4 | 23.43 | -0.6 | 89.39 | 0.4703 | 1.1746 | 0.0002 |
| 200 | SLV 5 | 9.52 | 0.6 | 61.86 | -0.5182 | 0.4663 | -0.0001 |
| 200 | SLV 6 | 9.52 | 0.6 | 61.86 | -0.5182 | 0.4663 | -0.0001 |
| 200 | SLV 7 | 1.31 | -0.83 | 94.98 | 0.6851 | 0.0795 | 0.0002 |
| 200 | SLV 8 | 1.31 | -0.83 | 94.98 | 0.6851 | 0.0795 | 0.0002 |
| 200 | SLV 9 | -6.97 | 0.84 | 56.72 | -0.6952 | -0.3563 | -0.0001 |
| 200 | SLV 10 | -6.97 | 0.84 | 56.72 | -0.6952 | -0.3563 | -0.0001 |
| 200 | SLV 11 | -15.18 | -0.59 | 89.84 | 0.5081 | -0.7431 | 0.0001 |
| 200 | SLV 12 | -15.18 | -0.59 | 89.84 | 0.5081 | -0.7431 | 0.0001 |
| 200 | SLV 13 | -29.09 | 0.61 | 62.31 | -0.4804 | -1.4514 | -0.0001 |
| 200 | SLV 14 | -29.09 | 0.61 | 62.31 | -0.4804 | -1.4514 | -0.0001 |
| 200 | SLV 15 | -31.55 | 0.18 | 72.24 | -0.1194 | -1.5675 | -0.0001 |
| 200 | SLV 16 | -31.55 | 0.18 | 72.24 | -0.1194 | -1.5675 | -0.0001 |
| 201 | SLU 1 | -5.66 | 0 | 68.73 | -0.0014 | -0.2604 | 0 |
| 201 | SLU 2 | -6.06 | 0 | 67.86 | -0.0037 | -0.28 | 0 |
| 201 | SLU 3 | -5.81 | 0 | 71.02 | -0.001 | -0.2682 | 0 |
| 201 | SLU 4 | -6.06 | 0 | 70.51 | -0.0024 | -0.28 | 0 |
| 201 | SLU 5 | -6.03 | 0 | 69.09 | -0.0034 | -0.2786 | 0 |
| 201 | SLU 6 | -5.78 | 0 | 72.25 | -0.0006 | -0.2669 | 0 |
| 201 | SLU 7 | -6.02 | 0 | 71.73 | -0.002 | -0.2786 | 0 |
| 201 | SLU 8 | -5.59 | 0 | 71.18 | -0.0006 | -0.2577 | 0 |
| 201 | SLU 9 | -5.83 | 0 | 70.66 | -0.002 | -0.2694 | 0 |
| 201 | SLU 10 | -7.72 | 0.01 | 82.64 | -0.006 | -0.357 | 0 |
| 201 | SLU 11 | -7.47 | 0 | 85.81 | -0.0033 | -0.3453 | 0 |
| 201 | SLU 12 | -7.72 | 0 | 85.29 | -0.0046 | -0.357 | 0 |
| 201 | SLU 13 | -7.69 | 0.01 | 83.87 | -0.0056 | -0.3557 | 0 |
| 201 | SLU 14 | -7.44 | 0 | 87.03 | -0.0029 | -0.3439 | 0 |
| 201 | SLU 15 | -7.68 | 0 | 86.51 | -0.0043 | -0.3557 | 0 |
| 201 | SLU 16 | -7.25 | 0 | 85.96 | -0.0029 | -0.3347 | 0 |
| 201 | SLU 17 | -7.49 | 0 | 85.44 | -0.0043 | -0.3465 | 0 |
| 201 | SLU 18 | -8.03 | 0 | 89.84 | -0.0046 | -0.3705 | 0 |
| 201 | SLU 19 | -8.27 | 0.01 | 89.33 | -0.006 | -0.3822 | 0 |
| 201 | SLU 20 | -7.99 | 0 | 91.07 | -0.0043 | -0.3691 | 0 |
| 201 | SLU 21 | -8.24 | 0.01 | 90.55 | -0.0056 | -0.3809 | 0 |
| 201 | SLU 22 | -6.76 | 0 | 81.5 | -0.0026 | -0.3113 | 0 |
| 201 | SLU 23 | -7.17 | 0 | 80.63 | -0.0049 | -0.3309 | 0 |
| 201 | SLU 24 | -6.92 | 0 | 83.8 | -0.0022 | -0.3191 | 0 |
| 201 | SLU 25 | -7.16 | 0 | 83.28 | -0.0036 | -0.3309 | 0 |
| 201 | SLU 26 | -7.13 | 0 | 81.86 | -0.0046 | -0.3296 | 0 |
| 201 | SLU 27 | -6.88 | 0 | 85.02 | -0.0018 | -0.3178 | 0 |
| 201 | SLU 28 | -7.13 | 0 | 84.5 | -0.0032 | -0.3295 | 0 |
| 201 | SLU 29 | -6.69 | 0 | 83.95 | -0.0019 | -0.3086 | 0 |
| 201 | SLU 30 | -6.94 | 0 | 83.43 | -0.0032 | -0.3204 | 0 |
| 201 | SLU 31 | -8.83 | 0.01 | 95.42 | -0.0072 | -0.408 | 0 |
| 201 | SLU 32 | -8.57 | 0 | 98.58 | -0.0045 | -0.3962 | 0 |
| 201 | SLU 33 | -8.82 | 0.01 | 98.06 | -0.0058 | -0.4079 | 0 |
| 201 | SLU 34 | -8.79 | 0.01 | 96.64 | -0.0068 | -0.4066 | 0 |
| 201 | SLU 35 | -8.54 | 0 | 99.8 | -0.0041 | -0.3948 | 0 |
| 201 | SLU 36 | -8.79 | 0.01 | 99.29 | -0.0055 | -0.4066 | 0 |
| 201 | SLU 37 | -8.35 | 0 | 98.73 | -0.0041 | -0.3857 | 0 |
| 201 | SLU 38 | -8.6 | 0.01 | 98.21 | -0.0055 | -0.3974 | 0 |
| 201 | SLU 39 | -9.13 | 0.01 | 102.62 | -0.0058 | -0.4214 | 0 |
| 201 | SLU 40 | -9.37 | 0.01 | 102.1 | -0.0072 | -0.4331 | 0 |
| 201 | SLU 41 | -9.1 | 0.01 | 103.84 | -0.0055 | -0.42 | 0 |
| 201 | SLU 42 | -9.34 | 0.01 | 103.32 | -0.0068 | -0.4318 | 0 |
| 201 | SLU 43 | -6.98 | 0 | 84.96 | -0.0015 | -0.321 | 0 |
| 201 | SLU 44 | -7.38 | 0 | 84.1 | -0.0038 | -0.3406 | 0 |
| 201 | SLU 45 | -7.13 | 0 | 87.26 | -0.001 | -0.3288 | 0 |
| 201 | SLU 46 | -7.38 | 0 | 86.74 | -0.0024 | -0.3406 | 0 |
| 201 | SLU 47 | -7.35 | 0 | 85.32 | -0.0034 | -0.3393 | 0 |
| 201 | SLU 48 | -7.1 | 0 | 88.49 | -0.0006 | -0.3275 | 0 |
| 201 | SLU 49 | -7.34 | 0 | 87.97 | -0.002 | -0.3393 | 0 |
| 201 | SLU 50 | -6.91 | 0 | 87.41 | -0.0007 | -0.3183 | 0 |
| 201 | SLU 51 | -7.15 | 0 | 86.89 | -0.0021 | -0.3301 | 0 |
| 201 | SLU 52 | -9.04 | 0.01 | 98.88 | -0.006 | -0.4177 | 0 |
| 201 | SLU 53 | -8.79 | 0 | 102.05 | -0.0033 | -0.4059 | 0 |
| 201 | SLU 54 | -9.04 | 0 | 101.53 | -0.0047 | -0.4177 | 0 |
| 201 | SLU 55 | -9.01 | 0.01 | 100.11 | -0.0056 | -0.4163 | 0 |
| 201 | SLU 56 | -8.76 | 0 | 103.27 | -0.0029 | -0.4046 | 0 |
| 201 | SLU 57 | -9 | 0 | 102.75 | -0.0043 | -0.4163 | 0 |
| 201 | SLU 58 | -8.57 | 0 | 102.2 | -0.0029 | -0.3954 | 0 |
| 201 | SLU 59 | -8.81 | 0 | 101.68 | -0.0043 | -0.4071 | 0 |
| 201 | SLU 60 | -9.35 | 0.01 | 106.08 | -0.0047 | -0.4311 | 0 |
| 201 | SLU 61 | -9.59 | 0.01 | 105.56 | -0.006 | -0.4429 | 0 |
| 201 | SLU 62 | -9.31 | 0 | 107.31 | -0.0043 | -0.4298 | 0 |
| 201 | SLU 63 | -9.56 | 0.01 | 106.79 | -0.0057 | -0.4415 | 0 |
| 201 | SLU 64 | -8.08 | 0 | 97.74 | -0.0027 | -0.3719 | 0 |
| 201 | SLU 65 | -8.49 | 0 | 96.87 | -0.005 | -0.3915 | 0 |
| 201 | SLU 66 | -8.24 | 0 | 100.04 | -0.0022 | -0.3798 | 0 |
| 201 | SLU 67 | -8.48 | 0 | 99.52 | -0.0036 | -0.3915 | 0 |
| 201 | SLU 68 | -8.45 | 0 | 98.1 | -0.0046 | -0.3902 | 0 |
| 201 | SLU 69 | -8.2 | 0 | 101.26 | -0.0018 | -0.3784 | 0 |

| Nodo | Cont. | Reazione a traslazione | | | Reazione a rotazione | | |
|---|---|---|---|---|---|---|---|
| Ind. | N.br. | x | y | z | x | y | z |
| 201 | SLU 70 | -8.45 | 0 | 100.74 | -0.0032 | -0.3902 | 0 |
| 201 | SLU 71 | -8.01 | 0 | 100.19 | -0.0019 | -0.3693 | 0 |
| 201 | SLU 72 | -8.26 | 0 | 99.67 | -0.0033 | -0.381 | 0 |
| 201 | SLU 73 | -10.15 | 0.01 | 111.65 | -0.0072 | -0.4686 | 0 |
| 201 | SLU 74 | -9.89 | 0.01 | 114.82 | -0.0045 | -0.4568 | 0 |
| 201 | SLU 75 | -10.14 | 0.01 | 114.3 | -0.0059 | -0.4686 | 0 |
| 201 | SLU 76 | -10.11 | 0.01 | 112.88 | -0.0068 | -0.4673 | 0 |
| 201 | SLU 77 | -9.86 | 0 | 116.04 | -0.0041 | -0.4555 | 0 |
| 201 | SLU 78 | -10.1 | 0.01 | 115.52 | -0.0055 | -0.4672 | 0 |
| 201 | SLU 79 | -9.67 | 0 | 114.97 | -0.0041 | -0.4463 | 0 |
| 201 | SLU 80 | -9.91 | 0.01 | 114.45 | -0.0055 | -0.4581 | 0 |
| 201 | SLU 81 | -10.45 | 0.01 | 118.86 | -0.0059 | -0.482 | 0 |
| 201 | SLU 82 | -10.69 | 0.01 | 118.34 | -0.0073 | -0.4938 | 0 |
| 201 | SLU 83 | -10.41 | 0.01 | 120.08 | -0.0055 | -0.4807 | 0 |
| 201 | SLU 84 | -10.66 | 0.01 | 119.56 | -0.0069 | -0.4924 | 0 |
| 201 | SLE RA 1 | -5.97 | 0 | 72.38 | -0.0018 | -0.2749 | 0 |
| 201 | SLE RA 2 | -6.24 | 0 | 71.8 | -0.0033 | -0.288 | 0 |
| 201 | SLE RA 3 | -6.08 | 0 | 73.91 | -0.0015 | -0.2801 | 0 |
| 201 | SLE RA 4 | -6.24 | 0 | 73.56 | -0.0024 | -0.288 | 0 |
| 201 | SLE RA 5 | -6.22 | 0 | 72.61 | -0.0031 | -0.2871 | 0 |
| 201 | SLE RA 6 | -6.05 | 0 | 74.72 | -0.0012 | -0.2792 | 0 |
| 201 | SLE RA 7 | -6.22 | 0 | 74.38 | -0.0022 | -0.2871 | 0 |
| 201 | SLE RA 8 | -5.93 | 0 | 74.01 | -0.0013 | -0.2731 | 0 |
| 201 | SLE RA 9 | -6.09 | 0 | 73.66 | -0.0022 | -0.281 | 0 |
| 201 | SLE RA 10 | -7.35 | 0 | 81.65 | -0.0048 | -0.3394 | 0 |
| 201 | SLE RA 11 | -7.18 | 0 | 83.76 | -0.003 | -0.3315 | 0 |
| 201 | SLE RA 12 | -7.35 | 0 | 83.42 | -0.0039 | -0.3393 | 0 |
| 201 | SLE RA 13 | -7.33 | 0 | 82.47 | -0.0046 | -0.3385 | 0 |
| 201 | SLE RA 14 | -7.16 | 0 | 84.58 | -0.0027 | -0.3306 | 0 |
| 201 | SLE RA 15 | -7.32 | 0 | 84.23 | -0.0037 | -0.3385 | 0 |
| 201 | SLE RA 16 | -7.03 | 0 | 83.86 | -0.0028 | -0.3245 | 0 |
| 201 | SLE RA 17 | -7.2 | 0 | 83.52 | -0.0037 | -0.3323 | 0 |
| 201 | SLE RA 18 | -7.55 | 0 | 86.45 | -0.0039 | -0.3483 | 0 |
| 201 | SLE RA 19 | -7.72 | 0 | 86.11 | -0.0048 | -0.3561 | 0 |
| 201 | SLE RA 20 | -7.53 | 0 | 87.27 | -0.0037 | -0.3474 | 0 |
| 201 | SLE RA 21 | -7.69 | 0 | 86.92 | -0.0046 | -0.3553 | 0 |
| 201 | SLE FR 1 | -5.97 | 0 | 72.38 | -0.0018 | -0.2749 | 0 |
| 201 | SLE FR 2 | -6.03 | 0 | 72.26 | -0.0021 | -0.2775 | 0 |
| 201 | SLE FR 3 | -5.96 | 0 | 72.7 | -0.0017 | -0.2746 | 0 |
| 201 | SLE FR 4 | -6.5 | 0 | 76.48 | -0.0027 | -0.2995 | 0 |
| 201 | SLE FR 5 | -6.44 | 0 | 76.93 | -0.0023 | -0.2966 | 0 |
| 201 | SLE FR 6 | -6.76 | 0 | 79.41 | -0.0029 | -0.3116 | 0 |
| 201 | SLE QP 1 | -5.97 | 0 | 72.38 | -0.0018 | -0.2749 | 0 |
| 201 | SLE QP 2 | -6.45 | 0 | 76.6 | -0.0024 | -0.2969 | 0 |
| 201 | SLD 1 | 5.47 | -0.05 | 67.98 | 0.0377 | 0.3216 | 0.0001 |
| 201 | SLD 2 | 5.47 | -0.05 | 67.98 | 0.0377 | 0.3216 | 0.0001 |
| 201 | SLD 3 | 4.33 | -0.26 | 72.16 | 0.2164 | 0.2674 | 0 |
| 201 | SLD 4 | 4.33 | -0.26 | 72.16 | 0.2164 | 0.2674 | 0 |
| 201 | SLD 5 | -1.14 | 0.3 | 67.68 | -0.2614 | -0.0291 | 0.0001 |
| 201 | SLD 6 | -1.14 | 0.3 | 67.68 | -0.2614 | -0.0291 | 0.0001 |
| 201 | SLD 7 | -4.94 | -0.39 | 81.6 | 0.3342 | -0.2099 | -0.0001 |
| 201 | SLD 8 | -4.94 | -0.39 | 81.6 | 0.3342 | -0.2099 | -0.0001 |
| 201 | SLD 9 | -7.95 | 0.4 | 71.59 | -0.3391 | -0.384 | 0.0001 |
| 201 | SLD 10 | -7.95 | 0.4 | 71.59 | -0.3391 | -0.384 | 0.0001 |
| 201 | SLD 11 | -11.75 | -0.3 | 85.52 | 0.2565 | -0.5647 | -0.0001 |
| 201 | SLD 12 | -11.75 | -0.3 | 85.52 | 0.2565 | -0.5647 | -0.0001 |
| 201 | SLD 13 | -17.22 | 0.27 | 81.04 | -0.2213 | -0.8613 | 0 |
| 201 | SLD 14 | -17.22 | 0.27 | 81.04 | -0.2213 | -0.8613 | 0 |
| 201 | SLD 15 | -18.37 | 0.06 | 85.22 | -0.0426 | -0.9155 | -0.0001 |
| 201 | SLD 16 | -18.37 | 0.06 | 85.22 | -0.0426 | -0.9155 | -0.0001 |
| 201 | SLV 1 | 21.17 | -0.15 | 56.54 | 0.105 | 1.1362 | 0.0002 |
| 201 | SLV 2 | 21.17 | -0.15 | 56.54 | 0.105 | 1.1362 | 0.0002 |
| 201 | SLV 3 | 18.48 | -0.66 | 66.5 | 0.5428 | 1.0082 | 0.0001 |
| 201 | SLV 4 | 18.48 | -0.66 | 66.5 | 0.5428 | 1.0082 | 0.0001 |
| 201 | SLV 5 | 5.93 | 0.73 | 55.47 | -0.6342 | 0.3271 | 0.0003 |
| 201 | SLV 6 | 5.93 | 0.73 | 55.47 | -0.6342 | 0.3271 | 0.0003 |
| 201 | SLV 7 | -3.06 | -0.97 | 88.68 | 0.8252 | -0.0995 | -0.0002 |
| 201 | SLV 8 | -3.06 | -0.97 | 88.68 | 0.8252 | -0.0995 | -0.0002 |
| 201 | SLV 9 | -9.83 | 0.98 | 64.52 | -0.83 | -0.4943 | 0.0002 |
| 201 | SLV 10 | -9.83 | 0.98 | 64.52 | -0.83 | -0.4943 | 0.0002 |
| 201 | SLV 11 | -18.82 | -0.73 | 97.73 | 0.6293 | -0.921 | -0.0003 |
| 201 | SLV 12 | -18.82 | -0.73 | 97.73 | 0.6293 | -0.921 | -0.0003 |
| 201 | SLV 13 | -31.37 | 0.66 | 86.7 | -0.5477 | -1.6021 | 0 |
| 201 | SLV 14 | -31.37 | 0.66 | 86.7 | -0.5477 | -1.6021 | 0 |
| 201 | SLV 15 | -34.07 | 0.15 | 96.66 | -0.1099 | -1.7301 | -0.0002 |
| 201 | SLV 16 | -34.07 | 0.15 | 96.66 | -0.1099 | -1.7301 | -0.0002 |
| 202 | SLU 1 | -8.85 | 0 | 72.68 | 0.0008 | -0.4847 | 0 |
| 202 | SLU 2 | -9.09 | 0 | 71.98 | -0.0023 | -0.4972 | 0 |
| 202 | SLU 3 | -9.12 | 0 | 75.23 | 0.0012 | -0.5007 | 0 |
| 202 | SLU 4 | -9.27 | 0 | 74.8 | -0.0007 | -0.5082 | 0 |
| 202 | SLU 5 | -9.15 | 0 | 73.29 | -0.0019 | -0.5012 | 0 |
| 202 | SLU 6 | -9.18 | 0 | 76.54 | 0.0016 | -0.5047 | 0 |
| 202 | SLU 7 | -9.33 | 0 | 76.12 | -0.0003 | -0.5122 | 0 |
| 202 | SLU 8 | -8.97 | 0 | 75.31 | 0.0016 | -0.4927 | 0 |
| 202 | SLU 9 | -9.11 | 0 | 74.89 | -0.0003 | -0.5002 | 0 |
| 202 | SLU 10 | -11.33 | 0 | 87.88 | -0.0032 | -0.6205 | 0 |
| 202 | SLU 11 | -11.37 | 0 | 91.14 | 0.0003 | -0.624 | 0 |
| 202 | SLU 12 | -11.51 | 0 | 90.71 | -0.0016 | -0.6315 | 0 |

| Nodo | Cont. | Reazione a traslazione | | | Reazione a rotazione | | |
|---|---|---|---|---|---|---|---|
| Ind. | N.br. | x | y | z | x | y | z |
| 202 | SLU 13 | -11.39 | 0 | 89.2 | -0.0028 | -0.6245 | 0 |
| 202 | SLU 14 | -11.43 | 0 | 92.45 | 0.0007 | -0.628 | 0 |
| 202 | SLU 15 | -11.57 | 0 | 92.03 | -0.0012 | -0.6355 | 0 |
| 202 | SLU 16 | -11.21 | 0 | 91.22 | 0.0007 | -0.616 | 0 |
| 202 | SLU 17 | -11.35 | 0 | 90.8 | -0.0012 | -0.6235 | 0 |
| 202 | SLU 18 | -12.05 | 0 | 95.41 | -0.0005 | -0.6608 | 0 |
| 202 | SLU 19 | -12.19 | 0 | 94.99 | -0.0024 | -0.6683 | 0 |
| 202 | SLU 20 | -12.11 | 0 | 96.73 | -0.0001 | -0.6649 | 0 |
| 202 | SLU 21 | -12.25 | 0 | 96.3 | -0.002 | -0.6723 | 0 |
| 202 | SLU 22 | -10.54 | 0 | 86.29 | 0.0006 | -0.5781 | 0 |
| 202 | SLU 23 | -10.78 | 0 | 85.58 | -0.0025 | -0.5906 | 0 |
| 202 | SLU 24 | -10.82 | 0 | 88.83 | 0.0009 | -0.5941 | 0 |
| 202 | SLU 25 | -10.96 | 0 | 88.41 | -0.0009 | -0.6016 | 0 |
| 202 | SLU 26 | -10.84 | 0 | 86.9 | -0.0021 | -0.5946 | 0 |
| 202 | SLU 27 | -10.88 | 0 | 90.15 | 0.0013 | -0.5982 | 0 |
| 202 | SLU 28 | -11.02 | 0 | 89.73 | -0.0005 | -0.6056 | 0 |
| 202 | SLU 29 | -10.66 | 0 | 88.92 | 0.0013 | -0.5862 | 0 |
| 202 | SLU 30 | -10.8 | 0 | 88.5 | -0.0005 | -0.5937 | 0 |
| 202 | SLU 31 | -13.02 | 0 | 101.49 | -0.0035 | -0.7139 | 0 |
| 202 | SLU 32 | -13.06 | 0 | 104.74 | 0 | -0.7175 | 0 |
| 202 | SLU 33 | -13.2 | 0 | 104.32 | -0.0018 | -0.7249 | 0 |
| 202 | SLU 34 | -13.08 | 0 | 102.81 | -0.0031 | -0.7179 | 0 |
| 202 | SLU 35 | -13.12 | 0 | 106.06 | 0.0004 | -0.7215 | 0 |
| 202 | SLU 36 | -13.26 | 0 | 105.64 | -0.0014 | -0.729 | 0 |
| 202 | SLU 37 | -12.9 | 0 | 104.83 | 0.0004 | -0.7095 | 0 |
| 202 | SLU 38 | -13.05 | 0 | 104.41 | -0.0014 | -0.717 | 0 |
| 202 | SLU 39 | -13.74 | 0 | 109.02 | -0.0008 | -0.7543 | 0 |
| 202 | SLU 40 | -13.89 | 0 | 108.59 | -0.0026 | -0.7618 | 0 |
| 202 | SLU 41 | -13.8 | 0 | 110.33 | -0.0004 | -0.7583 | 0 |
| 202 | SLU 42 | -13.95 | 0 | 109.91 | -0.0022 | -0.7658 | 0 |
| 202 | SLU 43 | -10.92 | 0 | 89.82 | 0.0011 | -0.5981 | 0 |
| 202 | SLU 44 | -11.16 | 0 | 89.11 | -0.002 | -0.6105 | 0 |
| 202 | SLU 45 | -11.2 | 0 | 92.36 | 0.0015 | -0.6141 | 0 |
| 202 | SLU 46 | -11.34 | 0 | 91.94 | -0.0003 | -0.6215 | 0 |
| 202 | SLU 47 | -11.22 | 0 | 90.43 | -0.0016 | -0.6145 | 0 |
| 202 | SLU 48 | -11.26 | 0 | 93.68 | 0.0019 | -0.6181 | 0 |
| 202 | SLU 49 | -11.4 | 0 | 93.26 | 0.0001 | -0.6256 | 0 |
| 202 | SLU 50 | -11.04 | 0 | 92.45 | 0.0019 | -0.6061 | 0 |
| 202 | SLU 51 | -11.19 | 0 | 92.03 | 0.0001 | -0.6136 | 0 |
| 202 | SLU 52 | -13.4 | 0 | 105.02 | -0.0029 | -0.7338 | 0 |
| 202 | SLU 53 | -13.44 | 0 | 108.27 | 0.0006 | -0.7374 | 0 |
| 202 | SLU 54 | -13.58 | 0 | 107.85 | -0.0013 | -0.7448 | 0 |
| 202 | SLU 55 | -13.46 | 0 | 106.34 | -0.0025 | -0.7378 | 0 |
| 202 | SLU 56 | -13.5 | 0 | 109.59 | 0.001 | -0.7414 | 0 |
| 202 | SLU 57 | -13.64 | 0 | 109.17 | -0.0009 | -0.7489 | 0 |
| 202 | SLU 58 | -13.29 | 0 | 108.36 | 0.001 | -0.7294 | 0 |
| 202 | SLU 59 | -13.43 | 0 | 107.94 | -0.0009 | -0.7369 | 0 |
| 202 | SLU 60 | -14.12 | 0 | 112.55 | -0.0002 | -0.7742 | 0 |
| 202 | SLU 61 | -14.27 | 0 | 112.12 | -0.002 | -0.7817 | 0 |
| 202 | SLU 62 | -14.19 | 0 | 113.86 | 0.0002 | -0.7782 | 0 |
| 202 | SLU 63 | -14.33 | 0 | 113.44 | -0.0016 | -0.7857 | 0 |
| 202 | SLU 64 | -12.61 | 0 | 103.43 | 0.0009 | -0.6915 | 0 |
| 202 | SLU 65 | -12.85 | 0 | 102.72 | -0.0022 | -0.704 | 0 |
| 202 | SLU 66 | -12.89 | 0 | 105.97 | 0.0013 | -0.7075 | 0 |
| 202 | SLU 67 | -13.03 | 0 | 105.55 | -0.0006 | -0.715 | 0 |
| 202 | SLU 68 | -12.91 | 0 | 104.04 | -0.0018 | -0.708 | 0 |
| 202 | SLU 69 | -12.95 | 0 | 107.29 | 0.0017 | -0.7115 | 0 |
| 202 | SLU 70 | -13.09 | 0 | 106.87 | -0.0002 | -0.719 | 0 |
| 202 | SLU 71 | -12.74 | 0 | 106.06 | 0.0017 | -0.6996 | 0 |
| 202 | SLU 72 | -12.88 | 0 | 105.64 | -0.0002 | -0.707 | 0 |
| 202 | SLU 73 | -15.09 | 0 | 118.63 | -0.0031 | -0.8273 | 0 |
| 202 | SLU 74 | -15.13 | 0 | 121.88 | 0.0003 | -0.8308 | 0 |
| 202 | SLU 75 | -15.27 | 0 | 121.46 | -0.0015 | -0.8383 | 0 |
| 202 | SLU 76 | -15.16 | 0 | 119.95 | -0.0027 | -0.8313 | 0 |
| 202 | SLU 77 | -15.19 | 0 | 123.2 | 0.0007 | -0.8348 | 0 |
| 202 | SLU 78 | -15.34 | 0 | 122.78 | -0.0011 | -0.8423 | 0 |
| 202 | SLU 79 | -14.98 | 0 | 121.97 | 0.0007 | -0.8229 | 0 |
| 202 | SLU 80 | -15.12 | 0 | 121.55 | -0.0011 | -0.8303 | 0 |
| 202 | SLU 81 | -15.82 | 0 | 126.15 | -0.0004 | -0.8677 | 0 |
| 202 | SLU 82 | -15.96 | 0 | 125.73 | -0.0023 | -0.8751 | 0 |
| 202 | SLU 83 | -15.88 | 0 | 127.47 | 0 | -0.8717 | 0 |
| 202 | SLU 84 | -16.02 | 0 | 127.05 | -0.0019 | -0.8792 | 0 |
| 202 | SLE RA 1 | -9.33 | 0 | 76.57 | 0.0007 | -0.5114 | 0 |
| 202 | SLE RA 2 | -9.49 | 0 | 76.1 | -0.0013 | -0.5197 | 0 |
| 202 | SLE RA 3 | -9.51 | 0 | 78.27 | 0.001 | -0.5221 | 0 |
| 202 | SLE RA 4 | -9.61 | 0 | 77.98 | -0.0002 | -0.527 | 0 |
| 202 | SLE RA 5 | -9.53 | 0 | 76.98 | -0.0011 | -0.5224 | 0 |
| 202 | SLE RA 6 | -9.56 | 0 | 79.14 | 0.0013 | -0.5247 | 0 |
| 202 | SLE RA 7 | -9.65 | 0 | 78.86 | 0 | -0.5297 | 0 |
| 202 | SLE RA 8 | -9.41 | 0 | 78.32 | 0.0013 | -0.5168 | 0 |
| 202 | SLE RA 9 | -9.51 | 0 | 78.04 | 0 | -0.5217 | 0 |
| 202 | SLE RA 10 | -10.98 | 0 | 86.7 | -0.0019 | -0.6019 | 0 |
| 202 | SLE RA 11 | -11.01 | 0 | 88.87 | 0.0004 | -0.6043 | 0 |
| 202 | SLE RA 12 | -11.11 | 0 | 88.59 | -0.0009 | -0.6093 | 0 |
| 202 | SLE RA 13 | -11.03 | 0 | 87.58 | -0.0017 | -0.6046 | 0 |
| 202 | SLE RA 14 | -11.05 | 0 | 89.75 | 0.0006 | -0.6069 | 0 |
| 202 | SLE RA 15 | -11.15 | 0 | 89.47 | -0.0006 | -0.6119 | 0 |
| 202 | SLE RA 16 | -10.91 | 0 | 88.93 | 0.0006 | -0.599 | 0 |

| Nodo | Cont. | Reazione a traslazione | | | Reazione a rotazione | | |
|---|---|---|---|---|---|---|---|
| Ind. | N.br. | x | y | z | x | y | z |
| 202 | SLE RA 17 | -11 | 0 | 88.65 | -0.0006 | -0.6039 | 0 |
| 202 | SLE RA 18 | -11.47 | 0 | 91.72 | -0.0001 | -0.6288 | 0 |
| 202 | SLE RA 19 | -11.56 | 0 | 91.44 | -0.0014 | -0.6338 | 0 |
| 202 | SLE RA 20 | -11.51 | 0 | 92.6 | 0.0001 | -0.6315 | 0 |
| 202 | SLE RA 21 | -11.6 | 0 | 92.32 | -0.0011 | -0.6365 | 0 |
| 202 | SLE FR 1 | -9.33 | 0 | 76.57 | 0.0007 | -0.5114 | 0 |
| 202 | SLE FR 2 | -9.36 | 0 | 76.47 | 0.0003 | -0.5131 | 0 |
| 202 | SLE FR 3 | -9.35 | 0 | 76.92 | 0.0008 | -0.5125 | 0 |
| 202 | SLE FR 4 | -10 | 0 | 81.02 | 0.0001 | -0.5483 | 0 |
| 202 | SLE FR 5 | -9.99 | 0 | 81.46 | 0.0006 | -0.5477 | 0 |
| 202 | SLE FR 6 | -10.4 | 0 | 84.14 | 0.0003 | -0.5701 | 0 |
| 202 | SLE QP 1 | -9.33 | 0 | 76.57 | 0.0007 | -0.5114 | 0 |
| 202 | SLE QP 2 | -9.97 | 0 | 81.11 | 0.0005 | -0.5466 | 0 |
| 202 | SLD 1 | -0.31 | -0.04 | 57.38 | 0.0319 | 0.0356 | -0.0001 |
| 202 | SLD 2 | -0.31 | -0.04 | 57.38 | 0.0319 | 0.0356 | -0.0001 |
| 202 | SLD 3 | -1.42 | -0.3 | 62.11 | 0.2236 | -0.0256 | -0.0006 |
| 202 | SLD 4 | -1.42 | -0.3 | 62.11 | 0.2236 | -0.0256 | -0.0006 |
| 202 | SLD 5 | -5.39 | 0.38 | 66.82 | -0.2808 | -0.2791 | 0.0009 |
| 202 | SLD 6 | -5.39 | 0.38 | 66.82 | -0.2808 | -0.2791 | 0.0009 |
| 202 | SLD 7 | -9.09 | -0.49 | 82.58 | 0.3581 | -0.4832 | -0.0011 |
| 202 | SLD 8 | -9.09 | -0.49 | 82.58 | 0.3581 | -0.4832 | -0.0011 |
| 202 | SLD 9 | -10.86 | 0.48 | 79.64 | -0.3572 | -0.6101 | 0.0011 |
| 202 | SLD 10 | -10.86 | 0.48 | 79.64 | -0.3572 | -0.6101 | 0.0011 |
| 202 | SLD 11 | -14.55 | -0.38 | 95.4 | 0.2818 | -0.8141 | -0.0009 |
| 202 | SLD 12 | -14.55 | -0.38 | 95.4 | 0.2818 | -0.8141 | -0.0009 |
| 202 | SLD 13 | -18.53 | 0.3 | 100.12 | -0.2227 | -1.0676 | 0.0006 |
| 202 | SLD 14 | -18.53 | 0.3 | 100.12 | -0.2227 | -1.0676 | 0.0006 |
| 202 | SLD 15 | -19.64 | 0.04 | 104.84 | -0.031 | -1.1288 | 0.0001 |
| 202 | SLD 16 | -19.64 | 0.04 | 104.84 | -0.031 | -1.1288 | 0.0001 |
| 202 | SLV 1 | 12.42 | -0.12 | 26.06 | 0.0855 | 0.8026 | -0.0002 |
| 202 | SLV 2 | 12.42 | -0.12 | 26.06 | 0.0855 | 0.8026 | -0.0002 |
| 202 | SLV 3 | 9.8 | -0.75 | 37.32 | 0.5552 | 0.6576 | -0.0016 |
| 202 | SLV 4 | 9.8 | -0.75 | 37.32 | 0.5552 | 0.6576 | -0.0016 |
| 202 | SLV 5 | 0.73 | 0.93 | 47.51 | -0.6864 | 0.078 | 0.0021 |
| 202 | SLV 6 | 0.73 | 0.93 | 47.51 | -0.6864 | 0.078 | 0.0021 |
| 202 | SLV 7 | -8.02 | -1.19 | 85.06 | 0.8793 | -0.4052 | -0.0026 |
| 202 | SLV 8 | -8.02 | -1.19 | 85.06 | 0.8793 | -0.4052 | -0.0026 |
| 202 | SLV 9 | -11.92 | 1.19 | 77.17 | -0.8783 | -0.688 | 0.0026 |
| 202 | SLV 10 | -11.92 | 1.19 | 77.17 | -0.8783 | -0.688 | 0.0026 |
| 202 | SLV 11 | -20.67 | -0.93 | 114.71 | 0.6873 | -1.1713 | -0.0021 |
| 202 | SLV 12 | -20.67 | -0.93 | 114.71 | 0.6873 | -1.1713 | -0.0021 |
| 202 | SLV 13 | -29.74 | 0.75 | 124.9 | -0.5543 | -1.7508 | 0.0016 |
| 202 | SLV 14 | -29.74 | 0.75 | 124.9 | -0.5543 | -1.7508 | 0.0016 |
| 202 | SLV 15 | -32.37 | 0.11 | 136.17 | -0.0846 | -1.8958 | 0.0002 |
| 202 | SLV 16 | -32.37 | 0.11 | 136.17 | -0.0846 | -1.8958 | 0.0002 |
| 203 | SLU 1 | -12.23 | -0.01 | 44.21 | 0.0013 | -0.308 | 0.0003 |
| 203 | SLU 2 | -12.28 | -0.01 | 44.02 | -0.0004 | -0.3133 | 0 |
| 203 | SLU 3 | -12.66 | -0.01 | 45.79 | 0.0015 | -0.3186 | 0.0003 |
| 203 | SLU 4 | -12.69 | -0.01 | 45.68 | 0.0005 | -0.3217 | 0.0001 |
| 203 | SLU 5 | -12.46 | -0.01 | 44.78 | -0.0002 | -0.3168 | 0 |
| 203 | SLU 6 | -12.84 | -0.01 | 46.55 | 0.0017 | -0.3221 | 0.0003 |
| 203 | SLU 7 | -12.87 | -0.01 | 46.44 | 0.0006 | -0.3252 | 0.0002 |
| 203 | SLU 8 | -12.59 | -0.01 | 45.73 | 0.0017 | -0.315 | 0.0003 |
| 203 | SLU 9 | -12.62 | -0.01 | 45.62 | 0.0007 | -0.3182 | 0.0002 |
| 203 | SLU 10 | -15.14 | -0.01 | 53.96 | -0.0003 | -0.3885 | 0 |
| 203 | SLU 11 | -15.51 | -0.01 | 55.73 | 0.0016 | -0.3938 | 0.0004 |
| 203 | SLU 12 | -15.54 | -0.01 | 55.62 | 0.0006 | -0.397 | 0.0002 |
| 203 | SLU 13 | -15.32 | -0.01 | 54.73 | -0.0001 | -0.392 | 0 |
| 203 | SLU 14 | -15.69 | -0.01 | 56.5 | 0.0018 | -0.3973 | 0.0004 |
| 203 | SLU 15 | -15.72 | -0.01 | 56.38 | 0.0007 | -0.4005 | 0.0002 |
| 203 | SLU 16 | -15.44 | -0.01 | 55.68 | 0.0018 | -0.3903 | 0.0004 |
| 203 | SLU 17 | -15.47 | -0.01 | 55.57 | 0.0007 | -0.3934 | 0.0002 |
| 203 | SLU 18 | -16.31 | -0.01 | 58.41 | 0.0015 | -0.4156 | 0.0003 |
| 203 | SLU 19 | -16.34 | -0.01 | 58.3 | 0.0004 | -0.4187 | 0.0002 |
| 203 | SLU 20 | -16.49 | -0.01 | 59.18 | 0.0016 | -0.419 | 0.0004 |
| 203 | SLU 21 | -16.52 | -0.01 | 59.06 | 0.0006 | -0.4222 | 0.0002 |
| 203 | SLU 22 | -14.56 | -0.01 | 52.55 | 0.0016 | -0.367 | 0.0003 |
| 203 | SLU 23 | -14.61 | -0.01 | 52.36 | -0.0001 | -0.3722 | 0 |
| 203 | SLU 24 | -14.98 | -0.01 | 54.13 | 0.0018 | -0.3775 | 0.0004 |
| 203 | SLU 25 | -15.01 | -0.01 | 54.02 | 0.0007 | -0.3806 | 0.0002 |
| 203 | SLU 26 | -14.79 | -0.01 | 53.13 | 0.0001 | -0.3757 | 0.0001 |
| 203 | SLU 27 | -15.16 | -0.01 | 54.89 | 0.002 | -0.381 | 0.0004 |
| 203 | SLU 28 | -15.19 | -0.01 | 54.78 | 0.0009 | -0.3841 | 0.0002 |
| 203 | SLU 29 | -14.91 | -0.01 | 54.08 | 0.002 | -0.3739 | 0.0004 |
| 203 | SLU 30 | -14.95 | -0.01 | 53.96 | 0.0009 | -0.3771 | 0.0002 |
| 203 | SLU 31 | -17.46 | -0.01 | 62.31 | 0 | -0.4474 | 0.0001 |
| 203 | SLU 32 | -17.83 | -0.01 | 64.08 | 0.0019 | -0.4527 | 0.0004 |
| 203 | SLU 33 | -17.87 | -0.01 | 63.96 | 0.0008 | -0.4559 | 0.0002 |
| 203 | SLU 34 | -17.64 | -0.01 | 63.07 | 0.0001 | -0.4509 | 0.0001 |
| 203 | SLU 35 | -18.01 | -0.01 | 64.84 | 0.002 | -0.4562 | 0.0004 |
| 203 | SLU 36 | -18.04 | -0.01 | 64.73 | 0.001 | -0.4594 | 0.0003 |
| 203 | SLU 37 | -17.77 | -0.01 | 64.02 | 0.0021 | -0.4492 | 0.0005 |
| 203 | SLU 38 | -17.8 | -0.01 | 63.91 | 0.001 | -0.4523 | 0.0003 |
| 203 | SLU 39 | -18.63 | -0.02 | 66.76 | 0.0017 | -0.4745 | 0.0004 |
| 203 | SLU 40 | -18.66 | -0.01 | 66.64 | 0.0007 | -0.4776 | 0.0002 |
| 203 | SLU 41 | -18.81 | -0.02 | 67.52 | 0.0019 | -0.4779 | 0.0004 |
| 203 | SLU 42 | -18.84 | -0.01 | 67.41 | 0.0009 | -0.4811 | 0.0003 |
| 203 | SLU 43 | -15.11 | -0.01 | 54.61 | 0.0016 | -0.3803 | 0.0003 |

| Nodo | Cont. | Reazione a traslazione | | | Reazione a rotazione | | |
|---|---|---|---|---|---|---|---|
| Ind. | N.br. | x | y | z | x | y | z |
| 203 | SLU 44 | -15.16 | -0.01 | 54.42 | -0.0001 | -0.3855 | 0 |
| 203 | SLU 45 | -15.53 | -0.01 | 56.19 | 0.0018 | -0.3908 | 0.0004 |
| 203 | SLU 46 | -15.56 | -0.01 | 56.08 | 0.0008 | -0.3939 | 0.0002 |
| 203 | SLU 47 | -15.34 | -0.01 | 55.19 | 0.0001 | -0.389 | 0.0001 |
| 203 | SLU 48 | -15.71 | -0.01 | 56.95 | 0.002 | -0.3943 | 0.0004 |
| 203 | SLU 49 | -15.74 | -0.01 | 56.84 | 0.001 | -0.3974 | 0.0002 |
| 203 | SLU 50 | -15.46 | -0.01 | 56.14 | 0.002 | -0.3872 | 0.0004 |
| 203 | SLU 51 | -15.49 | -0.01 | 56.02 | 0.001 | -0.3904 | 0.0002 |
| 203 | SLU 52 | -18.01 | -0.01 | 64.37 | 0 | -0.4608 | 0.0001 |
| 203 | SLU 53 | -18.38 | -0.01 | 66.13 | 0.0019 | -0.4661 | 0.0004 |
| 203 | SLU 54 | -18.41 | -0.01 | 66.02 | 0.0009 | -0.4692 | 0.0002 |
| 203 | SLU 55 | -18.19 | -0.01 | 65.13 | 0.0002 | -0.4642 | 0.0001 |
| 203 | SLU 56 | -18.56 | -0.01 | 66.9 | 0.0021 | -0.4695 | 0.0004 |
| 203 | SLU 57 | -18.59 | -0.01 | 66.78 | 0.001 | -0.4727 | 0.0003 |
| 203 | SLU 58 | -18.32 | -0.01 | 66.08 | 0.0021 | -0.4625 | 0.0004 |
| 203 | SLU 59 | -18.35 | -0.01 | 65.97 | 0.0011 | -0.4656 | 0.0003 |
| 203 | SLU 60 | -19.18 | -0.01 | 68.82 | 0.0018 | -0.4878 | 0.0004 |
| 203 | SLU 61 | -19.21 | -0.01 | 68.7 | 0.0007 | -0.4909 | 0.0002 |
| 203 | SLU 62 | -19.36 | -0.01 | 69.58 | 0.002 | -0.4913 | 0.0004 |
| 203 | SLU 63 | -19.39 | -0.01 | 69.47 | 0.0009 | -0.4944 | 0.0003 |
| 203 | SLU 64 | -17.43 | -0.01 | 62.95 | 0.0019 | -0.4392 | 0.0004 |
| 203 | SLU 65 | -17.48 | -0.01 | 62.77 | 0.0002 | -0.4444 | 0.0001 |
| 203 | SLU 66 | -17.86 | -0.01 | 64.53 | 0.0021 | -0.4497 | 0.0004 |
| 203 | SLU 67 | -17.89 | -0.01 | 64.42 | 0.001 | -0.4528 | 0.0003 |
| 203 | SLU 68 | -17.66 | -0.01 | 63.53 | 0.0004 | -0.4479 | 0.0001 |
| 203 | SLU 69 | -18.03 | -0.01 | 65.3 | 0.0023 | -0.4532 | 0.0005 |
| 203 | SLU 70 | -18.06 | -0.01 | 65.18 | 0.0012 | -0.4563 | 0.0003 |
| 203 | SLU 71 | -17.79 | -0.01 | 64.48 | 0.0023 | -0.4461 | 0.0005 |
| 203 | SLU 72 | -17.82 | -0.01 | 64.37 | 0.0012 | -0.4493 | 0.0003 |
| 203 | SLU 73 | -20.33 | -0.01 | 72.71 | 0.0003 | -0.5197 | 0.0001 |
| 203 | SLU 74 | -20.71 | -0.02 | 74.48 | 0.0022 | -0.525 | 0.0005 |
| 203 | SLU 75 | -20.74 | -0.01 | 74.36 | 0.0011 | -0.5281 | 0.0003 |
| 203 | SLU 76 | -20.51 | -0.01 | 73.47 | 0.0004 | -0.5231 | 0.0002 |
| 203 | SLU 77 | -20.89 | -0.02 | 75.24 | 0.0024 | -0.5284 | 0.0005 |
| 203 | SLU 78 | -20.92 | -0.01 | 75.13 | 0.0013 | -0.5316 | 0.0003 |
| 203 | SLU 79 | -20.64 | -0.02 | 74.42 | 0.0024 | -0.5214 | 0.0005 |
| 203 | SLU 80 | -20.67 | -0.01 | 74.31 | 0.0013 | -0.5245 | 0.0003 |
| 203 | SLU 81 | -21.5 | -0.02 | 77.16 | 0.002 | -0.5467 | 0.0005 |
| 203 | SLU 82 | -21.54 | -0.02 | 77.05 | 0.001 | -0.5498 | 0.0003 |
| 203 | SLU 83 | -21.68 | -0.02 | 77.92 | 0.0022 | -0.5502 | 0.0005 |
| 203 | SLU 84 | -21.71 | -0.02 | 77.81 | 0.0012 | -0.5533 | 0.0003 |
| 203 | SLE RA 1 | -12.9 | -0.01 | 46.59 | 0.0014 | -0.3249 | 0.0003 |
| 203 | SLE RA 2 | -12.93 | -0.01 | 46.47 | 0.0003 | -0.3284 | 0.0001 |
| 203 | SLE RA 3 | -13.18 | -0.01 | 47.65 | 0.0015 | -0.3319 | 0.0003 |
| 203 | SLE RA 4 | -13.2 | -0.01 | 47.57 | 0.0008 | -0.334 | 0.0002 |
| 203 | SLE RA 5 | -13.05 | -0.01 | 46.98 | 0.0004 | -0.3307 | 0.0001 |
| 203 | SLE RA 6 | -13.3 | -0.01 | 48.15 | 0.0016 | -0.3342 | 0.0003 |
| 203 | SLE RA 7 | -13.32 | -0.01 | 48.08 | 0.001 | -0.3363 | 0.0002 |
| 203 | SLE RA 8 | -13.14 | -0.01 | 47.61 | 0.0017 | -0.3295 | 0.0003 |
| 203 | SLE RA 9 | -13.16 | -0.01 | 47.53 | 0.001 | -0.3316 | 0.0002 |
| 203 | SLE RA 10 | -14.83 | -0.01 | 53.1 | 0.0003 | -0.3785 | 0.0001 |
| 203 | SLE RA 11 | -15.08 | -0.01 | 54.27 | 0.0016 | -0.3821 | 0.0003 |
| 203 | SLE RA 12 | -15.1 | -0.01 | 54.2 | 0.0009 | -0.3842 | 0.0002 |
| 203 | SLE RA 13 | -14.95 | -0.01 | 53.6 | 0.0004 | -0.3809 | 0.0001 |
| 203 | SLE RA 14 | -15.2 | -0.01 | 54.78 | 0.0017 | -0.3844 | 0.0004 |
| 203 | SLE RA 15 | -15.22 | -0.01 | 54.71 | 0.001 | -0.3865 | 0.0002 |
| 203 | SLE RA 16 | -15.04 | -0.01 | 54.24 | 0.0017 | -0.3797 | 0.0004 |
| 203 | SLE RA 17 | -15.06 | -0.01 | 54.16 | 0.001 | -0.3818 | 0.0002 |
| 203 | SLE RA 18 | -15.61 | -0.01 | 56.06 | 0.0015 | -0.3965 | 0.0003 |
| 203 | SLE RA 19 | -15.63 | -0.01 | 55.99 | 0.0008 | -0.3986 | 0.0002 |
| 203 | SLE RA 20 | -15.73 | -0.01 | 56.57 | 0.0016 | -0.3989 | 0.0004 |
| 203 | SLE RA 21 | -15.75 | -0.01 | 56.5 | 0.0009 | -0.401 | 0.0002 |
| 203 | SLE FR 1 | -12.9 | -0.01 | 46.59 | 0.0014 | -0.3249 | 0.0003 |
| 203 | SLE FR 2 | -12.9 | -0.01 | 46.57 | 0.0012 | -0.3256 | 0.0003 |
| 203 | SLE FR 3 | -12.94 | -0.01 | 46.8 | 0.0015 | -0.3258 | 0.0003 |
| 203 | SLE FR 4 | -13.72 | -0.01 | 49.41 | 0.0012 | -0.3471 | 0.0003 |
| 203 | SLE FR 5 | -13.76 | -0.01 | 49.64 | 0.0015 | -0.3473 | 0.0003 |
| 203 | SLE FR 6 | -14.26 | -0.01 | 51.33 | 0.0015 | -0.3607 | 0.0003 |
| 203 | SLE QP 1 | -12.9 | -0.01 | 46.59 | 0.0014 | -0.3249 | 0.0003 |
| 203 | SLE QP 2 | -13.71 | -0.01 | 49.43 | 0.0014 | -0.3464 | 0.0003 |
| 203 | SLD 1 | -5.29 | 0.02 | 25.96 | 0.0121 | -0.0393 | 0.0019 |
| 203 | SLD 2 | -5.29 | 0.02 | 25.96 | 0.0121 | -0.0393 | 0.0019 |
| 203 | SLD 3 | -6.36 | 0.06 | 29.23 | 0.1024 | -0.0721 | 0.0168 |
| 203 | SLD 4 | -6.36 | 0.06 | 29.23 | 0.1024 | -0.0721 | 0.0168 |
| 203 | SLD 5 | -9.57 | -0.07 | 37.44 | -0.1322 | -0.2044 | -0.0219 |
| 203 | SLD 6 | -9.57 | -0.07 | 37.44 | -0.1322 | -0.2044 | -0.0219 |
| 203 | SLD 7 | -13.12 | 0.08 | 48.33 | 0.1686 | -0.314 | 0.0279 |
| 203 | SLD 8 | -13.12 | 0.08 | 48.33 | 0.1686 | -0.314 | 0.0279 |
| 203 | SLD 9 | -14.3 | -0.1 | 50.54 | -0.1657 | -0.3788 | -0.0273 |
| 203 | SLD 10 | -14.3 | -0.1 | 50.54 | -0.1657 | -0.3788 | -0.0273 |
| 203 | SLD 11 | -17.85 | 0.05 | 61.43 | 0.1351 | -0.4884 | 0.0225 |
| 203 | SLD 12 | -17.85 | 0.05 | 61.43 | 0.1351 | -0.4884 | 0.0225 |
| 203 | SLD 13 | -21.06 | -0.08 | 69.64 | -0.0995 | -0.6206 | -0.0162 |
| 203 | SLD 14 | -21.06 | -0.08 | 69.64 | -0.0995 | -0.6206 | -0.0162 |
| 203 | SLD 15 | -22.13 | -0.04 | 72.9 | -0.0093 | -0.6535 | -0.0012 |
| 203 | SLD 16 | -22.13 | -0.04 | 72.9 | -0.0093 | -0.6535 | -0.0012 |
| 203 | SLV 1 | 5.8 | 0.06 | -4.98 | 0.0309 | 0.3653 | 0.0046 |
| 203 | SLV 2 | 5.8 | 0.06 | -4.98 | 0.0309 | 0.3653 | 0.0046 |

| Nodo | Cont. | Reazione a traslazione | | | Reazione a rotazione | | |
|---|---|---|---|---|---|---|---|
| Ind. | N.br. | x | y | z | x | y | z |
| 203 | SLV 3 | 3.27 | 0.17 | 2.79 | 0.2518 | 0.2875 | 0.0412 |
| 203 | SLV 4 | 3.27 | 0.17 | 2.79 | 0.2518 | 0.2875 | 0.0412 |
| 203 | SLV 5 | -4.02 | -0.16 | 21.32 | -0.3248 | -0.0147 | -0.0538 |
| 203 | SLV 6 | -4.02 | -0.16 | 21.32 | -0.3248 | -0.0147 | -0.0538 |
| 203 | SLV 7 | -12.46 | 0.22 | 47.23 | 0.4116 | -0.2743 | 0.068 |
| 203 | SLV 8 | -12.46 | 0.22 | 47.23 | 0.4116 | -0.2743 | 0.068 |
| 203 | SLV 9 | -14.97 | -0.24 | 51.64 | -0.4087 | -0.4184 | -0.0673 |
| 203 | SLV 10 | -14.97 | -0.24 | 51.64 | -0.4087 | -0.4184 | -0.0673 |
| 203 | SLV 11 | -23.4 | 0.14 | 77.55 | 0.3276 | -0.678 | 0.0544 |
| 203 | SLV 12 | -23.4 | 0.14 | 77.55 | 0.3276 | -0.678 | 0.0544 |
| 203 | SLV 13 | -30.69 | -0.19 | 96.08 | -0.2489 | -0.9802 | -0.0405 |
| 203 | SLV 14 | -30.69 | -0.19 | 96.08 | -0.2489 | -0.9802 | -0.0405 |
| 203 | SLV 15 | -33.22 | -0.08 | 103.85 | -0.028 | -1.0581 | -0.004 |
| 203 | SLV 16 | -33.22 | -0.08 | 103.85 | -0.028 | -1.0581 | -0.004 |
| 204 | SLU 1 | 6.85 | -0.04 | 25.19 | 0.0127 | 0.0533 | -0.0029 |
| 204 | SLU 2 | 6.2 | -0.02 | 23.01 | 0.0088 | 0.0445 | -0.002 |
| 204 | SLU 3 | 7.13 | -0.04 | 26.2 | 0.0134 | 0.0551 | -0.0031 |
| 204 | SLU 4 | 6.74 | -0.03 | 24.89 | 0.0111 | 0.0499 | -0.0025 |
| 204 | SLU 5 | 6.42 | -0.02 | 23.8 | 0.0095 | 0.0466 | -0.0021 |
| 204 | SLU 6 | 7.36 | -0.04 | 26.98 | 0.0141 | 0.0572 | -0.0032 |
| 204 | SLU 7 | 6.96 | -0.03 | 25.68 | 0.0118 | 0.052 | -0.0027 |
| 204 | SLU 8 | 7.3 | -0.04 | 26.76 | 0.0141 | 0.0574 | -0.0032 |
| 204 | SLU 9 | 6.91 | -0.03 | 25.46 | 0.0117 | 0.0521 | -0.0027 |
| 204 | SLU 10 | 7.43 | -0.03 | 27.58 | 0.0109 | 0.0515 | -0.0025 |
| 204 | SLU 11 | 8.36 | -0.05 | 30.77 | 0.0156 | 0.0621 | -0.0036 |
| 204 | SLU 12 | 7.97 | -0.04 | 29.46 | 0.0133 | 0.0568 | -0.003 |
| 204 | SLU 13 | 7.65 | -0.03 | 28.37 | 0.0116 | 0.0535 | -0.0026 |
| 204 | SLU 14 | 8.58 | -0.05 | 31.56 | 0.0163 | 0.0641 | -0.0037 |
| 204 | SLU 15 | 8.19 | -0.04 | 30.25 | 0.014 | 0.0589 | -0.0032 |
| 204 | SLU 16 | 8.53 | -0.05 | 31.33 | 0.0162 | 0.0643 | -0.0037 |
| 204 | SLU 17 | 8.14 | -0.04 | 30.03 | 0.0139 | 0.0591 | -0.0032 |
| 204 | SLU 18 | 8.61 | -0.05 | 31.72 | 0.0158 | 0.0632 | -0.0036 |
| 204 | SLU 19 | 8.22 | -0.04 | 30.41 | 0.0134 | 0.0579 | -0.0031 |
| 204 | SLU 20 | 8.83 | -0.05 | 32.51 | 0.0165 | 0.0652 | -0.0038 |
| 204 | SLU 21 | 8.44 | -0.04 | 31.2 | 0.0141 | 0.06 | -0.0032 |
| 204 | SLU 22 | 8.06 | -0.05 | 29.66 | 0.0149 | 0.0614 | -0.0034 |
| 204 | SLU 23 | 7.41 | -0.03 | 27.48 | 0.011 | 0.0527 | -0.0025 |
| 204 | SLU 24 | 8.34 | -0.05 | 30.66 | 0.0156 | 0.0633 | -0.0036 |
| 204 | SLU 25 | 7.95 | -0.04 | 29.36 | 0.0133 | 0.0581 | -0.003 |
| 204 | SLU 26 | 7.63 | -0.03 | 28.26 | 0.0117 | 0.0548 | -0.0026 |
| 204 | SLU 27 | 8.57 | -0.05 | 31.45 | 0.0163 | 0.0654 | -0.0037 |
| 204 | SLU 28 | 8.17 | -0.04 | 30.14 | 0.014 | 0.0601 | -0.0032 |
| 204 | SLU 29 | 8.51 | -0.05 | 31.23 | 0.0163 | 0.0655 | -0.0037 |
| 204 | SLU 30 | 8.12 | -0.04 | 29.92 | 0.0139 | 0.0603 | -0.0032 |
| 204 | SLU 31 | 8.64 | -0.04 | 32.05 | 0.0131 | 0.0597 | -0.003 |
| 204 | SLU 32 | 9.57 | -0.06 | 35.23 | 0.0178 | 0.0702 | -0.0041 |
| 204 | SLU 33 | 9.18 | -0.05 | 33.93 | 0.0155 | 0.065 | -0.0035 |
| 204 | SLU 34 | 8.86 | -0.04 | 32.83 | 0.0138 | 0.0617 | -0.0031 |
| 204 | SLU 35 | 9.8 | -0.06 | 36.02 | 0.0185 | 0.0723 | -0.0042 |
| 204 | SLU 36 | 9.4 | -0.05 | 34.71 | 0.0162 | 0.0671 | -0.0037 |
| 204 | SLU 37 | 9.74 | -0.06 | 35.8 | 0.0184 | 0.0725 | -0.0042 |
| 204 | SLU 38 | 9.35 | -0.05 | 34.49 | 0.0161 | 0.0673 | -0.0037 |
| 204 | SLU 39 | 9.82 | -0.06 | 36.19 | 0.018 | 0.0713 | -0.0041 |
| 204 | SLU 40 | 9.43 | -0.05 | 34.88 | 0.0156 | 0.0661 | -0.0036 |
| 204 | SLU 41 | 10.04 | -0.06 | 36.97 | 0.0187 | 0.0734 | -0.0043 |
| 204 | SLU 42 | 9.65 | -0.05 | 35.66 | 0.0163 | 0.0682 | -0.0037 |
| 204 | SLU 43 | 8.49 | -0.05 | 31.22 | 0.0157 | 0.0664 | -0.0036 |
| 204 | SLU 44 | 7.84 | -0.03 | 29.04 | 0.0118 | 0.0577 | -0.0027 |
| 204 | SLU 45 | 8.77 | -0.05 | 32.22 | 0.0165 | 0.0683 | -0.0038 |
| 204 | SLU 46 | 8.38 | -0.04 | 30.92 | 0.0142 | 0.0631 | -0.0032 |
| 204 | SLU 47 | 8.06 | -0.03 | 29.82 | 0.0125 | 0.0598 | -0.0028 |
| 204 | SLU 48 | 9 | -0.05 | 33.01 | 0.0172 | 0.0704 | -0.0039 |
| 204 | SLU 49 | 8.6 | -0.04 | 31.7 | 0.0149 | 0.0651 | -0.0034 |
| 204 | SLU 50 | 8.94 | -0.05 | 32.79 | 0.0171 | 0.0705 | -0.0039 |
| 204 | SLU 51 | 8.55 | -0.04 | 31.48 | 0.0148 | 0.0653 | -0.0034 |
| 204 | SLU 52 | 9.07 | -0.04 | 33.61 | 0.014 | 0.0647 | -0.0032 |
| 204 | SLU 53 | 10 | -0.06 | 36.79 | 0.0187 | 0.0752 | -0.0043 |
| 204 | SLU 54 | 9.61 | -0.05 | 35.49 | 0.0163 | 0.07 | -0.0037 |
| 204 | SLU 55 | 9.29 | -0.04 | 34.4 | 0.0147 | 0.0667 | -0.0033 |
| 204 | SLU 56 | 10.22 | -0.06 | 37.58 | 0.0194 | 0.0773 | -0.0044 |
| 204 | SLU 57 | 9.83 | -0.05 | 36.27 | 0.017 | 0.0721 | -0.0039 |
| 204 | SLU 58 | 10.17 | -0.06 | 37.36 | 0.0193 | 0.0775 | -0.0044 |
| 204 | SLU 59 | 9.78 | -0.05 | 36.05 | 0.0169 | 0.0723 | -0.0039 |
| 204 | SLU 60 | 10.25 | -0.06 | 37.75 | 0.0188 | 0.0763 | -0.0043 |
| 204 | SLU 61 | 9.86 | -0.05 | 36.44 | 0.0165 | 0.0711 | -0.0038 |
| 204 | SLU 62 | 10.47 | -0.06 | 38.53 | 0.0195 | 0.0784 | -0.0045 |
| 204 | SLU 63 | 10.08 | -0.05 | 37.23 | 0.0172 | 0.0732 | -0.0039 |
| 204 | SLU 64 | 9.7 | -0.06 | 35.68 | 0.0179 | 0.0746 | -0.0041 |
| 204 | SLU 65 | 9.05 | -0.04 | 33.5 | 0.014 | 0.0659 | -0.0032 |
| 204 | SLU 66 | 9.98 | -0.06 | 36.69 | 0.0187 | 0.0765 | -0.0043 |
| 204 | SLU 67 | 9.59 | -0.05 | 35.38 | 0.0163 | 0.0712 | -0.0037 |
| 204 | SLU 68 | 9.27 | -0.04 | 34.29 | 0.0147 | 0.0679 | -0.0033 |
| 204 | SLU 69 | 10.21 | -0.06 | 37.48 | 0.0194 | 0.0785 | -0.0044 |
| 204 | SLU 70 | 9.81 | -0.05 | 36.17 | 0.017 | 0.0733 | -0.0039 |
| 204 | SLU 71 | 10.15 | -0.06 | 37.26 | 0.0193 | 0.0787 | -0.0044 |
| 204 | SLU 72 | 9.76 | -0.05 | 35.95 | 0.017 | 0.0735 | -0.0039 |
| 204 | SLU 73 | 10.28 | -0.05 | 38.07 | 0.0162 | 0.0728 | -0.0037 |
| 204 | SLU 74 | 11.21 | -0.07 | 41.26 | 0.0209 | 0.0834 | -0.0048 |

| Nodo | Cont. | Reazione a traslazione | | | Reazione a rotazione | | |
|---|---|---|---|---|---|---|---|
| Ind. | N.br. | x | y | z | x | y | z |
| 204 | SLU 75 | 10.82 | -0.06 | 39.95 | 0.0185 | 0.0782 | -0.0042 |
| 204 | SLU 76 | 10.5 | -0.05 | 38.86 | 0.0169 | 0.0749 | -0.0038 |
| 204 | SLU 77 | 11.44 | -0.07 | 42.05 | 0.0215 | 0.0855 | -0.0049 |
| 204 | SLU 78 | 11.04 | -0.06 | 40.74 | 0.0192 | 0.0802 | -0.0044 |
| 204 | SLU 79 | 11.38 | -0.07 | 41.83 | 0.0215 | 0.0857 | -0.0049 |
| 204 | SLU 80 | 10.99 | -0.06 | 40.52 | 0.0191 | 0.0804 | -0.0044 |
| 204 | SLU 81 | 11.46 | -0.07 | 42.21 | 0.021 | 0.0845 | -0.0048 |
| 204 | SLU 82 | 11.07 | -0.06 | 40.9 | 0.0187 | 0.0793 | -0.0043 |
| 204 | SLU 83 | 11.68 | -0.07 | 43 | 0.0217 | 0.0866 | -0.005 |
| 204 | SLU 84 | 11.29 | -0.06 | 41.69 | 0.0194 | 0.0814 | -0.0044 |
| 204 | SLE RA 1 | 7.2 | -0.04 | 26.47 | 0.0133 | 0.0556 | -0.003 |
| 204 | SLE RA 2 | 6.76 | -0.03 | 25.01 | 0.0107 | 0.0498 | -0.0024 |
| 204 | SLE RA 3 | 7.38 | -0.04 | 27.14 | 0.0138 | 0.0568 | -0.0032 |
| 204 | SLE RA 4 | 7.12 | -0.04 | 26.27 | 0.0123 | 0.0534 | -0.0028 |
| 204 | SLE RA 5 | 6.91 | -0.03 | 25.54 | 0.0112 | 0.0512 | -0.0025 |
| 204 | SLE RA 6 | 7.53 | -0.04 | 27.66 | 0.0143 | 0.0582 | -0.0033 |
| 204 | SLE RA 7 | 7.27 | -0.04 | 26.79 | 0.0127 | 0.0547 | -0.0029 |
| 204 | SLE RA 8 | 7.5 | -0.04 | 27.52 | 0.0142 | 0.0583 | -0.0032 |
| 204 | SLE RA 9 | 7.23 | -0.04 | 26.64 | 0.0127 | 0.0549 | -0.0029 |
| 204 | SLE RA 10 | 7.58 | -0.04 | 28.06 | 0.0121 | 0.0544 | -0.0028 |
| 204 | SLE RA 11 | 8.2 | -0.05 | 30.18 | 0.0153 | 0.0615 | -0.0035 |
| 204 | SLE RA 12 | 7.94 | -0.04 | 29.31 | 0.0137 | 0.058 | -0.0031 |
| 204 | SLE RA 13 | 7.73 | -0.04 | 28.59 | 0.0126 | 0.0558 | -0.0029 |
| 204 | SLE RA 14 | 8.35 | -0.05 | 30.71 | 0.0157 | 0.0628 | -0.0036 |
| 204 | SLE RA 15 | 8.09 | -0.04 | 29.84 | 0.0142 | 0.0594 | -0.0032 |
| 204 | SLE RA 16 | 8.32 | -0.05 | 30.56 | 0.0157 | 0.063 | -0.0036 |
| 204 | SLE RA 17 | 8.05 | -0.04 | 29.69 | 0.0141 | 0.0595 | -0.0032 |
| 204 | SLE RA 18 | 8.37 | -0.05 | 30.82 | 0.0154 | 0.0622 | -0.0035 |
| 204 | SLE RA 19 | 8.11 | -0.04 | 29.95 | 0.0138 | 0.0587 | -0.0031 |
| 204 | SLE RA 20 | 8.52 | -0.05 | 31.34 | 0.0158 | 0.0636 | -0.0036 |
| 204 | SLE RA 21 | 8.26 | -0.04 | 30.47 | 0.0143 | 0.0601 | -0.0032 |
| 204 | SLE FR 1 | 7.2 | -0.04 | 26.47 | 0.0133 | 0.0556 | -0.003 |
| 204 | SLE FR 2 | 7.11 | -0.04 | 26.18 | 0.0128 | 0.0544 | -0.0029 |
| 204 | SLE FR 3 | 7.26 | -0.04 | 26.68 | 0.0135 | 0.0561 | -0.0031 |
| 204 | SLE FR 4 | 7.46 | -0.04 | 27.48 | 0.0134 | 0.0564 | -0.0031 |
| 204 | SLE FR 5 | 7.61 | -0.04 | 27.98 | 0.0141 | 0.0581 | -0.0032 |
| 204 | SLE FR 6 | 7.78 | -0.05 | 28.64 | 0.0143 | 0.0589 | -0.0033 |
| 204 | SLE QP 1 | 7.2 | -0.04 | 26.47 | 0.0133 | 0.0556 | -0.003 |
| 204 | SLE QP 2 | 7.55 | -0.04 | 27.77 | 0.0139 | 0.0576 | -0.0032 |
| 204 | SLD 1 | 9.6 | -0.21 | 34.56 | 0.0275 | 0.1275 | -0.0073 |
| 204 | SLD 2 | 9.6 | -0.21 | 34.56 | 0.0275 | 0.1275 | -0.0073 |
| 204 | SLD 3 | 10.33 | -0.36 | 36.94 | 0.0428 | 0.1373 | -0.0118 |
| 204 | SLD 4 | 10.33 | -0.36 | 36.94 | 0.0428 | 0.1373 | -0.0118 |
| 204 | SLD 5 | 7.06 | 0.14 | 26.21 | -0.0053 | 0.0636 | 0.0024 |
| 204 | SLD 6 | 7.06 | 0.14 | 26.21 | -0.0053 | 0.0636 | 0.0024 |
| 204 | SLD 7 | 9.48 | -0.37 | 34.12 | 0.0458 | 0.0964 | -0.0126 |
| 204 | SLD 8 | 9.48 | -0.37 | 34.12 | 0.0458 | 0.0964 | -0.0126 |
| 204 | SLD 9 | 5.62 | 0.28 | 21.42 | -0.018 | 0.0187 | 0.0062 |
| 204 | SLD 10 | 5.62 | 0.28 | 21.42 | -0.018 | 0.0187 | 0.0062 |
| 204 | SLD 11 | 8.03 | -0.23 | 29.34 | 0.0331 | 0.0515 | -0.0088 |
| 204 | SLD 12 | 8.03 | -0.23 | 29.34 | 0.0331 | 0.0515 | -0.0088 |
| 204 | SLD 13 | 4.77 | 0.27 | 18.61 | -0.015 | -0.0221 | 0.0054 |
| 204 | SLD 14 | 4.77 | 0.27 | 18.61 | -0.015 | -0.0221 | 0.0054 |
| 204 | SLD 15 | 5.5 | 0.12 | 20.98 | 0.0004 | -0.0123 | 0.0009 |
| 204 | SLD 16 | 5.5 | 0.12 | 20.98 | 0.0004 | -0.0123 | 0.0009 |
| 204 | SLV 1 | 12.27 | -0.44 | 43.41 | 0.0472 | 0.2183 | -0.0133 |
| 204 | SLV 2 | 12.27 | -0.44 | 43.41 | 0.0472 | 0.2183 | -0.0133 |
| 204 | SLV 3 | 13.99 | -0.82 | 49.03 | 0.0855 | 0.2416 | -0.0246 |
| 204 | SLV 4 | 13.99 | -0.82 | 49.03 | 0.0855 | 0.2416 | -0.0246 |
| 204 | SLV 5 | 6.36 | 0.42 | 23.93 | -0.0343 | 0.0706 | 0.0109 |
| 204 | SLV 6 | 6.36 | 0.42 | 23.93 | -0.0343 | 0.0706 | 0.0109 |
| 204 | SLV 7 | 12.08 | -0.86 | 42.68 | 0.0936 | 0.148 | -0.0267 |
| 204 | SLV 8 | 12.08 | -0.86 | 42.68 | 0.0936 | 0.148 | -0.0267 |
| 204 | SLV 9 | 3.02 | 0.77 | 12.86 | -0.0657 | -0.0329 | 0.0204 |
| 204 | SLV 10 | 3.02 | 0.77 | 12.86 | -0.0657 | -0.0329 | 0.0204 |
| 204 | SLV 11 | 8.74 | -0.51 | 31.61 | 0.0621 | 0.0446 | -0.0173 |
| 204 | SLV 12 | 8.74 | -0.51 | 31.61 | 0.0621 | 0.0446 | -0.0173 |
| 204 | SLV 13 | 1.11 | 0.74 | 6.51 | -0.0577 | -0.1264 | 0.0182 |
| 204 | SLV 14 | 1.11 | 0.74 | 6.51 | -0.0577 | -0.1264 | 0.0182 |
| 204 | SLV 15 | 2.83 | 0.35 | 12.14 | -0.0194 | -0.1032 | 0.0069 |
| 204 | SLV 16 | 2.83 | 0.35 | 12.14 | -0.0194 | -0.1032 | 0.0069 |
| 205 | SLU 1 | 0.1 | -7.46 | 77.94 | 0.2003 | -0.0266 | -0.0001 |
| 205 | SLU 2 | 0.12 | -6.14 | 71.49 | 0.1412 | -0.0272 | -0.0001 |
| 205 | SLU 3 | 0.11 | -7.87 | 81.34 | 0.214 | -0.0296 | -0.0001 |
| 205 | SLU 4 | 0.12 | -7.08 | 77.48 | 0.1785 | -0.03 | -0.0001 |
| 205 | SLU 5 | 0.12 | -6.49 | 74.01 | 0.154 | -0.0285 | -0.0001 |
| 205 | SLU 6 | 0.11 | -8.22 | 83.86 | 0.2269 | -0.0309 | -0.0001 |
| 205 | SLU 7 | 0.12 | -7.43 | 80 | 0.1913 | -0.0312 | -0.0001 |
| 205 | SLU 8 | 0.1 | -8.16 | 82.97 | 0.226 | -0.0292 | -0.0001 |
| 205 | SLU 9 | 0.12 | -7.37 | 79.11 | 0.1905 | -0.0295 | -0.0001 |
| 205 | SLU 10 | 0.15 | -7.43 | 86.37 | 0.1739 | -0.038 | -0.0002 |
| 205 | SLU 11 | 0.14 | -9.16 | 96.22 | 0.2468 | -0.0404 | -0.0002 |
| 205 | SLU 12 | 0.15 | -8.37 | 92.36 | 0.2113 | -0.0408 | -0.0002 |
| 205 | SLU 13 | 0.15 | -7.78 | 88.89 | 0.1867 | -0.0393 | -0.0002 |
| 205 | SLU 14 | 0.14 | -9.51 | 98.74 | 0.2596 | -0.0417 | -0.0002 |
| 205 | SLU 15 | 0.15 | -8.72 | 94.88 | 0.2241 | -0.042 | -0.0002 |
| 205 | SLU 16 | 0.14 | -9.45 | 97.85 | 0.2587 | -0.04 | -0.0002 |
| 205 | SLU 17 | 0.15 | -8.66 | 93.99 | 0.2232 | -0.0403 | -0.0002 |

| Nodo | Cont. | Reazione a traslazione | | | Reazione a rotazione | | |
|---|---|---|---|---|---|---|---|
| Ind. | N.br. | x | y | z | x | y | z |
| 205 | SLU 18 | 0.15 | -9.3 | 99.19 | 0.2471 | -0.0421 | -0.0002 |
| 205 | SLU 19 | 0.16 | -8.51 | 95.33 | 0.2116 | -0.0424 | -0.0002 |
| 205 | SLU 20 | 0.15 | -9.65 | 101.71 | 0.2599 | -0.0433 | -0.0002 |
| 205 | SLU 21 | 0.16 | -8.86 | 97.85 | 0.2244 | -0.0437 | -0.0002 |
| 205 | SLU 22 | 0.13 | -8.74 | 92.08 | 0.2347 | -0.0343 | -0.0001 |
| 205 | SLU 23 | 0.15 | -7.42 | 85.64 | 0.1755 | -0.0349 | -0.0002 |
| 205 | SLU 24 | 0.13 | -9.15 | 95.49 | 0.2484 | -0.0373 | -0.0002 |
| 205 | SLU 25 | 0.14 | -8.36 | 91.63 | 0.2129 | -0.0376 | -0.0002 |
| 205 | SLU 26 | 0.15 | -7.77 | 88.16 | 0.1883 | -0.0361 | -0.0002 |
| 205 | SLU 27 | 0.13 | -9.5 | 98.01 | 0.2612 | -0.0386 | -0.0002 |
| 205 | SLU 28 | 0.15 | -8.71 | 94.15 | 0.2257 | -0.0389 | -0.0002 |
| 205 | SLU 29 | 0.13 | -9.44 | 97.12 | 0.2603 | -0.0369 | -0.0002 |
| 205 | SLU 30 | 0.14 | -8.65 | 93.26 | 0.2248 | -0.0372 | -0.0002 |
| 205 | SLU 31 | 0.18 | -8.71 | 100.52 | 0.2083 | -0.0457 | -0.0002 |
| 205 | SLU 32 | 0.16 | -10.44 | 110.37 | 0.2811 | -0.0481 | -0.0002 |
| 205 | SLU 33 | 0.18 | -9.65 | 106.51 | 0.2456 | -0.0484 | -0.0002 |
| 205 | SLU 34 | 0.18 | -9.06 | 103.04 | 0.2211 | -0.0469 | -0.0002 |
| 205 | SLU 35 | 0.17 | -10.79 | 112.89 | 0.2939 | -0.0494 | -0.0002 |
| 205 | SLU 36 | 0.18 | -10 | 109.02 | 0.2584 | -0.0497 | -0.0002 |
| 205 | SLU 37 | 0.16 | -10.73 | 112 | 0.2931 | -0.0477 | -0.0002 |
| 205 | SLU 38 | 0.17 | -9.94 | 108.14 | 0.2576 | -0.048 | -0.0002 |
| 205 | SLU 39 | 0.17 | -10.58 | 113.34 | 0.2815 | -0.0497 | -0.0002 |
| 205 | SLU 40 | 0.18 | -9.79 | 109.47 | 0.246 | -0.0501 | -0.0002 |
| 205 | SLU 41 | 0.17 | -10.94 | 115.86 | 0.2943 | -0.051 | -0.0002 |
| 205 | SLU 42 | 0.19 | -10.14 | 111.99 | 0.2588 | -0.0513 | -0.0002 |
| 205 | SLU 43 | 0.12 | -9.26 | 96.47 | 0.2487 | -0.032 | -0.0001 |
| 205 | SLU 44 | 0.14 | -7.94 | 90.02 | 0.1895 | -0.0326 | -0.0001 |
| 205 | SLU 45 | 0.13 | -9.66 | 99.87 | 0.2624 | -0.035 | -0.0001 |
| 205 | SLU 46 | 0.14 | -8.87 | 96.01 | 0.2269 | -0.0353 | -0.0002 |
| 205 | SLU 47 | 0.14 | -8.29 | 92.54 | 0.2023 | -0.0338 | -0.0001 |
| 205 | SLU 48 | 0.13 | -10.01 | 102.39 | 0.2752 | -0.0363 | -0.0002 |
| 205 | SLU 49 | 0.14 | -9.22 | 98.53 | 0.2397 | -0.0366 | -0.0002 |
| 205 | SLU 50 | 0.12 | -9.96 | 101.51 | 0.2743 | -0.0346 | -0.0001 |
| 205 | SLU 51 | 0.14 | -9.17 | 97.64 | 0.2388 | -0.0349 | -0.0002 |
| 205 | SLU 52 | 0.17 | -9.23 | 104.9 | 0.2222 | -0.0434 | -0.0002 |
| 205 | SLU 53 | 0.16 | -10.95 | 114.75 | 0.2951 | -0.0458 | -0.0002 |
| 205 | SLU 54 | 0.17 | -10.16 | 110.89 | 0.2596 | -0.0461 | -0.0002 |
| 205 | SLU 55 | 0.18 | -9.58 | 107.42 | 0.235 | -0.0446 | -0.0002 |
| 205 | SLU 56 | 0.16 | -11.31 | 117.27 | 0.3079 | -0.0471 | -0.0002 |
| 205 | SLU 57 | 0.17 | -10.52 | 113.41 | 0.2724 | -0.0474 | -0.0002 |
| 205 | SLU 58 | 0.16 | -11.25 | 116.39 | 0.307 | -0.0454 | -0.0002 |
| 205 | SLU 59 | 0.17 | -10.46 | 112.52 | 0.2715 | -0.0457 | -0.0002 |
| 205 | SLU 60 | 0.17 | -11.1 | 117.72 | 0.2954 | -0.0474 | -0.0002 |
| 205 | SLU 61 | 0.18 | -10.31 | 113.86 | 0.2599 | -0.0478 | -0.0002 |
| 205 | SLU 62 | 0.17 | -11.45 | 120.24 | 0.3082 | -0.0487 | -0.0002 |
| 205 | SLU 63 | 0.18 | -10.66 | 116.38 | 0.2727 | -0.049 | -0.0002 |
| 205 | SLU 64 | 0.15 | -10.54 | 110.61 | 0.283 | -0.0397 | -0.0002 |
| 205 | SLU 65 | 0.17 | -9.22 | 104.17 | 0.2238 | -0.0402 | -0.0002 |
| 205 | SLU 66 | 0.15 | -10.95 | 114.02 | 0.2967 | -0.0427 | -0.0002 |
| 205 | SLU 67 | 0.17 | -10.16 | 110.16 | 0.2612 | -0.043 | -0.0002 |
| 205 | SLU 68 | 0.17 | -9.57 | 106.69 | 0.2366 | -0.0415 | -0.0002 |
| 205 | SLU 69 | 0.16 | -11.3 | 116.54 | 0.3095 | -0.0439 | -0.0002 |
| 205 | SLU 70 | 0.17 | -10.51 | 112.68 | 0.274 | -0.0443 | -0.0002 |
| 205 | SLU 71 | 0.15 | -11.24 | 115.65 | 0.3086 | -0.0422 | -0.0002 |
| 205 | SLU 72 | 0.16 | -10.45 | 111.79 | 0.2731 | -0.0426 | -0.0002 |
| 205 | SLU 73 | 0.2 | -10.51 | 119.05 | 0.2566 | -0.051 | -0.0002 |
| 205 | SLU 74 | 0.19 | -12.24 | 128.9 | 0.3295 | -0.0535 | -0.0002 |
| 205 | SLU 75 | 0.2 | -11.45 | 125.04 | 0.2939 | -0.0538 | -0.0002 |
| 205 | SLU 76 | 0.2 | -10.86 | 121.57 | 0.2694 | -0.0523 | -0.0002 |
| 205 | SLU 77 | 0.19 | -12.59 | 131.42 | 0.3423 | -0.0547 | -0.0002 |
| 205 | SLU 78 | 0.2 | -11.8 | 127.56 | 0.3068 | -0.0551 | -0.0002 |
| 205 | SLU 79 | 0.18 | -12.53 | 130.53 | 0.3414 | -0.053 | -0.0002 |
| 205 | SLU 80 | 0.2 | -11.74 | 126.67 | 0.3059 | -0.0534 | -0.0002 |
| 205 | SLU 81 | 0.19 | -12.38 | 131.87 | 0.3298 | -0.0551 | -0.0002 |
| 205 | SLU 82 | 0.21 | -11.59 | 128 | 0.2943 | -0.0554 | -0.0002 |
| 205 | SLU 83 | 0.19 | -12.73 | 134.39 | 0.3426 | -0.0564 | -0.0002 |
| 205 | SLU 84 | 0.21 | -11.94 | 130.52 | 0.3071 | -0.0567 | -0.0002 |
| 205 | SLE RA 1 | 0.11 | -7.82 | 81.98 | 0.2102 | -0.0288 | -0.0001 |
| 205 | SLE RA 2 | 0.12 | -6.95 | 77.68 | 0.1707 | -0.0292 | -0.0001 |
| 205 | SLE RA 3 | 0.11 | -8.1 | 84.25 | 0.2193 | -0.0308 | -0.0001 |
| 205 | SLE RA 4 | 0.12 | -7.57 | 81.67 | 0.1956 | -0.031 | -0.0001 |
| 205 | SLE RA 5 | 0.12 | -7.18 | 79.36 | 0.1792 | -0.0301 | -0.0001 |
| 205 | SLE RA 6 | 0.11 | -8.33 | 85.93 | 0.2278 | -0.0317 | -0.0001 |
| 205 | SLE RA 7 | 0.12 | -7.8 | 83.35 | 0.2042 | -0.0319 | -0.0001 |
| 205 | SLE RA 8 | 0.11 | -8.29 | 85.34 | 0.2272 | -0.0305 | -0.0001 |
| 205 | SLE RA 9 | 0.12 | -7.76 | 82.76 | 0.2036 | -0.0308 | -0.0001 |
| 205 | SLE RA 10 | 0.14 | -7.81 | 87.6 | 0.1925 | -0.0364 | -0.0002 |
| 205 | SLE RA 11 | 0.13 | -8.96 | 94.17 | 0.2411 | -0.038 | -0.0002 |
| 205 | SLE RA 12 | 0.14 | -8.43 | 91.59 | 0.2174 | -0.0382 | -0.0002 |
| 205 | SLE RA 13 | 0.14 | -8.04 | 89.28 | 0.2011 | -0.0373 | -0.0002 |
| 205 | SLE RA 14 | 0.13 | -9.19 | 95.85 | 0.2497 | -0.0389 | -0.0002 |
| 205 | SLE RA 15 | 0.14 | -8.66 | 93.27 | 0.226 | -0.0391 | -0.0002 |
| 205 | SLE RA 16 | 0.13 | -9.15 | 95.26 | 0.2491 | -0.0377 | -0.0002 |
| 205 | SLE RA 17 | 0.14 | -8.63 | 92.68 | 0.2254 | -0.038 | -0.0002 |
| 205 | SLE RA 18 | 0.14 | -9.05 | 96.15 | 0.2413 | -0.0391 | -0.0002 |
| 205 | SLE RA 19 | 0.15 | -8.53 | 93.57 | 0.2177 | -0.0393 | -0.0002 |
| 205 | SLE RA 20 | 0.14 | -9.29 | 97.83 | 0.2499 | -0.04 | -0.0002 |
| 205 | SLE RA 21 | 0.15 | -8.76 | 95.25 | 0.2262 | -0.0402 | -0.0002 |

| Nodo | Cont. | Reazione a traslazione | | | Reazione a rotazione | | |
|---|---|---|---|---|---|---|---|
| Ind. | N.br. | x | y | z | x | y | z |
| 205 | SLE FR 1 | 0.11 | -7.82 | 81.98 | 0.2102 | -0.0288 | -0.0001 |
| 205 | SLE FR 2 | 0.11 | -7.65 | 81.12 | 0.2023 | -0.0289 | -0.0001 |
| 205 | SLE FR 3 | 0.11 | -7.92 | 82.65 | 0.2136 | -0.0292 | -0.0001 |
| 205 | SLE FR 4 | 0.12 | -8.02 | 85.37 | 0.2116 | -0.032 | -0.0001 |
| 205 | SLE FR 5 | 0.12 | -8.29 | 86.9 | 0.2229 | -0.0323 | -0.0001 |
| 205 | SLE FR 6 | 0.12 | -8.44 | 89.06 | 0.2257 | -0.034 | -0.0001 |
| 205 | SLE QP 1 | 0.11 | -7.82 | 81.98 | 0.2102 | -0.0288 | -0.0001 |
| 205 | SLE QP 2 | 0.12 | -8.19 | 86.23 | 0.2195 | -0.0319 | -0.0001 |
| 205 | SLD 1 | -0.31 | -8.06 | 86.11 | 0.2123 | 0.1345 | 0.0006 |
| 205 | SLD 2 | -0.31 | -8.06 | 86.11 | 0.2123 | 0.1345 | 0.0006 |
| 205 | SLD 3 | -0.37 | -10.1 | 94.52 | 0.3061 | 0.1173 | 0.0004 |
| 205 | SLD 4 | -0.37 | -10.1 | 94.52 | 0.3061 | 0.1173 | 0.0004 |
| 205 | SLD 5 | 0.07 | -5.05 | 73.43 | 0.0751 | 0.044 | 0.0003 |
| 205 | SLD 6 | 0.07 | -5.05 | 73.43 | 0.0751 | 0.044 | 0.0003 |
| 205 | SLD 7 | -0.11 | -11.87 | 101.48 | 0.3878 | -0.0132 | -0.0002 |
| 205 | SLD 8 | -0.11 | -11.87 | 101.48 | 0.3878 | -0.0132 | -0.0002 |
| 205 | SLD 9 | 0.35 | -4.52 | 70.98 | 0.0512 | -0.0507 | -0.0001 |
| 205 | SLD 10 | 0.35 | -4.52 | 70.98 | 0.0512 | -0.0507 | -0.0001 |
| 205 | SLD 11 | 0.16 | -11.34 | 99.03 | 0.364 | -0.1079 | -0.0006 |
| 205 | SLD 12 | 0.16 | -11.34 | 99.03 | 0.364 | -0.1079 | -0.0006 |
| 205 | SLD 13 | 0.6 | -6.28 | 77.94 | 0.1329 | -0.1812 | -0.0007 |
| 205 | SLD 14 | 0.6 | -6.28 | 77.94 | 0.1329 | -0.1812 | -0.0007 |
| 205 | SLD 15 | 0.55 | -8.33 | 86.35 | 0.2267 | -0.1983 | -0.0008 |
| 205 | SLD 16 | 0.55 | -8.33 | 86.35 | 0.2267 | -0.1983 | -0.0008 |
| 205 | SLV 1 | -0.88 | -7.99 | 86.56 | 0.2072 | 0.3528 | 0.0016 |
| 205 | SLV 2 | -0.88 | -7.99 | 86.56 | 0.2072 | 0.3528 | 0.0016 |
| 205 | SLV 3 | -1.02 | -12.78 | 106.43 | 0.4268 | 0.3123 | 0.0012 |
| 205 | SLV 4 | -1.02 | -12.78 | 106.43 | 0.4268 | 0.3123 | 0.0012 |
| 205 | SLV 5 | 0.03 | -0.87 | 56.19 | -0.1172 | 0.1449 | 0.0009 |
| 205 | SLV 6 | 0.03 | -0.87 | 56.19 | -0.1172 | 0.1449 | 0.0009 |
| 205 | SLV 7 | -0.43 | -16.83 | 122.42 | 0.6147 | 0.0099 | -0.0003 |
| 205 | SLV 8 | -0.43 | -16.83 | 122.42 | 0.6147 | 0.0099 | -0.0003 |
| 205 | SLV 9 | 0.67 | 0.45 | 50.03 | -0.1757 | -0.0737 | 0 |
| 205 | SLV 10 | 0.67 | 0.45 | 50.03 | -0.1757 | -0.0737 | 0 |
| 205 | SLV 11 | 0.21 | -15.52 | 116.26 | 0.5562 | -0.2088 | -0.0012 |
| 205 | SLV 12 | 0.21 | -15.52 | 116.26 | 0.5562 | -0.2088 | -0.0012 |
| 205 | SLV 13 | 1.25 | -3.61 | 66.03 | 0.0122 | -0.3761 | -0.0015 |
| 205 | SLV 14 | 1.25 | -3.61 | 66.03 | 0.0122 | -0.3761 | -0.0015 |
| 205 | SLV 15 | 1.12 | -8.4 | 85.9 | 0.2318 | -0.4166 | -0.0018 |
| 205 | SLV 16 | 1.12 | -8.4 | 85.9 | 0.2318 | -0.4166 | -0.0018 |
| 206 | SLU 1 | -7.8 | -0.04 | 30.33 | 0.0134 | -0.0866 | 0.0028 |
| 206 | SLU 2 | -7.16 | -0.04 | 28.1 | 0.0113 | -0.078 | 0.0025 |
| 206 | SLU 3 | -8.17 | -0.04 | 31.74 | 0.0142 | -0.0918 | 0.003 |
| 206 | SLU 4 | -7.79 | -0.05 | 30.4 | 0.013 | -0.0866 | 0.0028 |
| 206 | SLU 5 | -7.42 | -0.05 | 29.08 | 0.0121 | -0.0814 | 0.0026 |
| 206 | SLU 6 | -8.44 | -0.05 | 32.72 | 0.015 | -0.0952 | 0.0032 |
| 206 | SLU 7 | -8.05 | -0.05 | 31.38 | 0.0137 | -0.0901 | 0.003 |
| 206 | SLU 8 | -8.33 | -0.05 | 32.29 | 0.0149 | -0.0935 | 0.0031 |
| 206 | SLU 9 | -7.94 | -0.05 | 30.95 | 0.0137 | -0.0884 | 0.0029 |
| 206 | SLU 10 | -8.74 | -0.05 | 34.25 | 0.0135 | -0.0973 | 0.003 |
| 206 | SLU 11 | -9.76 | -0.05 | 37.89 | 0.0165 | -0.1111 | 0.0035 |
| 206 | SLU 12 | -9.38 | -0.05 | 36.55 | 0.0152 | -0.1059 | 0.0033 |
| 206 | SLU 13 | -9.01 | -0.05 | 35.23 | 0.0143 | -0.1007 | 0.0031 |
| 206 | SLU 14 | -10.03 | -0.05 | 38.87 | 0.0172 | -0.1145 | 0.0036 |
| 206 | SLU 15 | -9.64 | -0.05 | 37.53 | 0.016 | -0.1094 | 0.0034 |
| 206 | SLU 16 | -9.91 | -0.05 | 38.44 | 0.0172 | -0.1128 | 0.0036 |
| 206 | SLU 17 | -9.53 | -0.05 | 37.1 | 0.0159 | -0.1077 | 0.0034 |
| 206 | SLU 18 | -10.07 | -0.05 | 39.12 | 0.0166 | -0.1142 | 0.0035 |
| 206 | SLU 19 | -9.68 | -0.05 | 37.78 | 0.0153 | -0.109 | 0.0033 |
| 206 | SLU 20 | -10.33 | -0.05 | 40.1 | 0.0173 | -0.1176 | 0.0037 |
| 206 | SLU 21 | -9.95 | -0.05 | 38.76 | 0.0161 | -0.1125 | 0.0035 |
| 206 | SLU 22 | -9.27 | -0.05 | 36.03 | 0.0157 | -0.1038 | 0.0033 |
| 206 | SLU 23 | -8.63 | -0.05 | 33.8 | 0.0136 | -0.0951 | 0.003 |
| 206 | SLU 24 | -9.64 | -0.05 | 37.44 | 0.0165 | -0.1089 | 0.0035 |
| 206 | SLU 25 | -9.26 | -0.05 | 36.1 | 0.0153 | -0.1038 | 0.0033 |
| 206 | SLU 26 | -8.89 | -0.05 | 34.78 | 0.0144 | -0.0986 | 0.0031 |
| 206 | SLU 27 | -9.91 | -0.05 | 38.42 | 0.0173 | -0.1124 | 0.0036 |
| 206 | SLU 28 | -9.53 | -0.05 | 37.08 | 0.016 | -0.1072 | 0.0034 |
| 206 | SLU 29 | -9.8 | -0.05 | 37.99 | 0.0172 | -0.1107 | 0.0036 |
| 206 | SLU 30 | -9.41 | -0.05 | 36.65 | 0.016 | -0.1055 | 0.0034 |
| 206 | SLU 31 | -10.22 | -0.06 | 39.95 | 0.0158 | -0.1144 | 0.0034 |
| 206 | SLU 32 | -11.23 | -0.06 | 43.59 | 0.0188 | -0.1282 | 0.004 |
| 206 | SLU 33 | -10.85 | -0.06 | 42.25 | 0.0175 | -0.1231 | 0.0037 |
| 206 | SLU 34 | -10.48 | -0.06 | 40.93 | 0.0166 | -0.1179 | 0.0036 |
| 206 | SLU 35 | -11.5 | -0.06 | 44.57 | 0.0195 | -0.1317 | 0.0041 |
| 206 | SLU 36 | -11.11 | -0.06 | 43.23 | 0.0183 | -0.1265 | 0.0039 |
| 206 | SLU 37 | -11.39 | -0.06 | 44.14 | 0.0194 | -0.13 | 0.0041 |
| 206 | SLU 38 | -11 | -0.06 | 42.81 | 0.0182 | -0.1248 | 0.0039 |
| 206 | SLU 39 | -11.54 | -0.06 | 44.82 | 0.0189 | -0.1313 | 0.004 |
| 206 | SLU 40 | -11.15 | -0.06 | 43.48 | 0.0176 | -0.1262 | 0.0038 |
| 206 | SLU 41 | -11.8 | -0.06 | 45.8 | 0.0196 | -0.1348 | 0.0041 |
| 206 | SLU 42 | -11.42 | -0.06 | 44.46 | 0.0184 | -0.1296 | 0.0039 |
| 206 | SLU 43 | -9.63 | -0.05 | 37.47 | 0.0166 | -0.1067 | 0.0035 |
| 206 | SLU 44 | -8.99 | -0.05 | 35.24 | 0.0145 | -0.0981 | 0.0032 |
| 206 | SLU 45 | -10.01 | -0.05 | 38.88 | 0.0175 | -0.1119 | 0.0037 |
| 206 | SLU 46 | -9.62 | -0.06 | 37.54 | 0.0162 | -0.1067 | 0.0035 |
| 206 | SLU 47 | -9.26 | -0.06 | 36.22 | 0.0153 | -0.1015 | 0.0033 |
| 206 | SLU 48 | -10.27 | -0.06 | 39.86 | 0.0182 | -0.1153 | 0.0039 |

| Nodo | Cont. | Reazione a traslazione | | | Reazione a rotazione | | |
|---|---|---|---|---|---|---|---|
| Ind. | N.br. | x | y | z | x | y | z |
| 206 | SLU 49 | -9.89 | -0.06 | 38.52 | 0.017 | -0.1102 | 0.0036 |
| 206 | SLU 50 | -10.16 | -0.06 | 39.43 | 0.0182 | -0.1136 | 0.0038 |
| 206 | SLU 51 | -9.78 | -0.06 | 38.09 | 0.0169 | -0.1085 | 0.0036 |
| 206 | SLU 52 | -10.58 | -0.06 | 41.39 | 0.0168 | -0.1174 | 0.0036 |
| 206 | SLU 53 | -11.6 | -0.06 | 45.03 | 0.0197 | -0.1312 | 0.0042 |
| 206 | SLU 54 | -11.21 | -0.06 | 43.7 | 0.0184 | -0.126 | 0.004 |
| 206 | SLU 55 | -10.84 | -0.06 | 42.37 | 0.0175 | -0.1208 | 0.0038 |
| 206 | SLU 56 | -11.86 | -0.06 | 46.01 | 0.0205 | -0.1346 | 0.0043 |
| 206 | SLU 57 | -11.48 | -0.06 | 44.68 | 0.0192 | -0.1294 | 0.0041 |
| 206 | SLU 58 | -11.75 | -0.06 | 45.59 | 0.0204 | -0.1329 | 0.0043 |
| 206 | SLU 59 | -11.36 | -0.06 | 44.25 | 0.0191 | -0.1278 | 0.0041 |
| 206 | SLU 60 | -11.9 | -0.06 | 46.26 | 0.0198 | -0.1343 | 0.0042 |
| 206 | SLU 61 | -11.52 | -0.06 | 44.92 | 0.0185 | -0.1291 | 0.004 |
| 206 | SLU 62 | -12.16 | -0.06 | 47.24 | 0.0206 | -0.1377 | 0.0043 |
| 206 | SLU 63 | -11.78 | -0.06 | 45.9 | 0.0193 | -0.1326 | 0.0041 |
| 206 | SLU 64 | -11.1 | -0.06 | 43.17 | 0.0189 | -0.1239 | 0.004 |
| 206 | SLU 65 | -10.46 | -0.06 | 40.94 | 0.0168 | -0.1152 | 0.0037 |
| 206 | SLU 66 | -11.48 | -0.06 | 44.58 | 0.0198 | -0.129 | 0.0042 |
| 206 | SLU 67 | -11.09 | -0.06 | 43.24 | 0.0185 | -0.1239 | 0.004 |
| 206 | SLU 68 | -10.73 | -0.06 | 41.92 | 0.0176 | -0.1187 | 0.0038 |
| 206 | SLU 69 | -11.74 | -0.06 | 45.56 | 0.0205 | -0.1325 | 0.0043 |
| 206 | SLU 70 | -11.36 | -0.06 | 44.23 | 0.0193 | -0.1273 | 0.0041 |
| 206 | SLU 71 | -11.63 | -0.06 | 45.13 | 0.0205 | -0.1308 | 0.0043 |
| 206 | SLU 72 | -11.25 | -0.06 | 43.8 | 0.0192 | -0.1256 | 0.0041 |
| 206 | SLU 73 | -12.05 | -0.07 | 47.09 | 0.019 | -0.1345 | 0.0041 |
| 206 | SLU 74 | -13.07 | -0.07 | 50.73 | 0.022 | -0.1483 | 0.0046 |
| 206 | SLU 75 | -12.68 | -0.07 | 49.4 | 0.0207 | -0.1432 | 0.0044 |
| 206 | SLU 76 | -12.32 | -0.07 | 48.07 | 0.0198 | -0.138 | 0.0043 |
| 206 | SLU 77 | -13.33 | -0.07 | 51.72 | 0.0228 | -0.1518 | 0.0048 |
| 206 | SLU 78 | -12.95 | -0.07 | 50.38 | 0.0215 | -0.1466 | 0.0046 |
| 206 | SLU 79 | -13.22 | -0.07 | 51.29 | 0.0227 | -0.1501 | 0.0048 |
| 206 | SLU 80 | -12.84 | -0.07 | 49.95 | 0.0214 | -0.1449 | 0.0046 |
| 206 | SLU 81 | -13.37 | -0.07 | 51.96 | 0.0221 | -0.1514 | 0.0047 |
| 206 | SLU 82 | -12.99 | -0.07 | 50.62 | 0.0208 | -0.1463 | 0.0045 |
| 206 | SLU 83 | -13.64 | -0.07 | 52.94 | 0.0229 | -0.1549 | 0.0048 |
| 206 | SLU 84 | -13.25 | -0.07 | 51.6 | 0.0216 | -0.1497 | 0.0046 |
| 206 | SLE RA 1 | -8.22 | -0.04 | 31.95 | 0.014 | -0.0915 | 0.003 |
| 206 | SLE RA 2 | -7.79 | -0.05 | 30.47 | 0.0126 | -0.0858 | 0.0027 |
| 206 | SLE RA 3 | -8.47 | -0.04 | 32.9 | 0.0146 | -0.095 | 0.0031 |
| 206 | SLE RA 4 | -8.21 | -0.05 | 32 | 0.0138 | -0.0915 | 0.0029 |
| 206 | SLE RA 5 | -7.97 | -0.05 | 31.12 | 0.0132 | -0.0881 | 0.0028 |
| 206 | SLE RA 6 | -8.64 | -0.05 | 33.55 | 0.0151 | -0.0973 | 0.0032 |
| 206 | SLE RA 7 | -8.39 | -0.05 | 32.66 | 0.0143 | -0.0938 | 0.0031 |
| 206 | SLE RA 8 | -8.57 | -0.05 | 33.26 | 0.0151 | -0.0961 | 0.0032 |
| 206 | SLE RA 9 | -8.31 | -0.05 | 32.37 | 0.0142 | -0.0927 | 0.003 |
| 206 | SLE RA 10 | -8.85 | -0.05 | 34.57 | 0.0141 | -0.0986 | 0.0031 |
| 206 | SLE RA 11 | -9.53 | -0.05 | 37 | 0.0161 | -0.1078 | 0.0034 |
| 206 | SLE RA 12 | -9.27 | -0.05 | 36.11 | 0.0153 | -0.1044 | 0.0033 |
| 206 | SLE RA 13 | -9.03 | -0.05 | 35.22 | 0.0146 | -0.1009 | 0.0032 |
| 206 | SLE RA 14 | -9.7 | -0.05 | 37.65 | 0.0166 | -0.1101 | 0.0035 |
| 206 | SLE RA 15 | -9.45 | -0.05 | 36.76 | 0.0158 | -0.1067 | 0.0034 |
| 206 | SLE RA 16 | -9.63 | -0.05 | 37.37 | 0.0166 | -0.109 | 0.0035 |
| 206 | SLE RA 17 | -9.37 | -0.05 | 36.47 | 0.0157 | -0.1055 | 0.0034 |
| 206 | SLE RA 18 | -9.73 | -0.05 | 37.81 | 0.0162 | -0.1099 | 0.0034 |
| 206 | SLE RA 19 | -9.47 | -0.05 | 36.92 | 0.0153 | -0.1064 | 0.0033 |
| 206 | SLE RA 20 | -9.91 | -0.05 | 38.47 | 0.0167 | -0.1122 | 0.0035 |
| 206 | SLE RA 21 | -9.65 | -0.05 | 37.58 | 0.0158 | -0.1088 | 0.0034 |
| 206 | SLE FR 1 | -8.22 | -0.04 | 31.95 | 0.014 | -0.0915 | 0.003 |
| 206 | SLE FR 2 | -8.13 | -0.04 | 31.66 | 0.0138 | -0.0904 | 0.0029 |
| 206 | SLE FR 3 | -8.29 | -0.04 | 32.22 | 0.0143 | -0.0924 | 0.003 |
| 206 | SLE FR 4 | -8.59 | -0.05 | 33.41 | 0.0144 | -0.0959 | 0.0031 |
| 206 | SLE FR 5 | -8.74 | -0.05 | 33.97 | 0.0149 | -0.098 | 0.0031 |
| 206 | SLE FR 6 | -8.97 | -0.05 | 34.88 | 0.0151 | -0.1007 | 0.0032 |
| 206 | SLE QP 1 | -8.22 | -0.04 | 31.95 | 0.014 | -0.0915 | 0.003 |
| 206 | SLE QP 2 | -8.67 | -0.04 | 33.71 | 0.0147 | -0.097 | 0.0031 |
| 206 | SLD 1 | -5.68 | 0.13 | 23.42 | -0.0166 | -0.004 | -0.0017 |
| 206 | SLD 2 | -5.68 | 0.13 | 23.42 | -0.0166 | -0.004 | -0.0017 |
| 206 | SLD 3 | -6.7 | 0.27 | 26.87 | -0.0024 | -0.0227 | -0.0057 |
| 206 | SLD 4 | -6.7 | 0.27 | 26.87 | -0.0024 | -0.0227 | -0.0057 |
| 206 | SLD 5 | -6.21 | -0.22 | 25.4 | -0.0162 | -0.0409 | 0.0077 |
| 206 | SLD 6 | -6.21 | -0.22 | 25.4 | -0.0162 | -0.0409 | 0.0077 |
| 206 | SLD 7 | -9.64 | 0.28 | 36.88 | 0.0311 | -0.103 | -0.0056 |
| 206 | SLD 8 | -9.64 | 0.28 | 36.88 | 0.0311 | -0.103 | -0.0056 |
| 206 | SLD 9 | -7.7 | -0.37 | 30.54 | -0.0017 | -0.0911 | 0.0118 |
| 206 | SLD 10 | -7.7 | -0.37 | 30.54 | -0.0017 | -0.0911 | 0.0118 |
| 206 | SLD 11 | -11.13 | 0.13 | 42.02 | 0.0456 | -0.1532 | -0.0015 |
| 206 | SLD 12 | -11.13 | 0.13 | 42.02 | 0.0456 | -0.1532 | -0.0015 |
| 206 | SLD 13 | -10.64 | -0.36 | 40.56 | 0.0318 | -0.1714 | 0.0119 |
| 206 | SLD 14 | -10.64 | -0.36 | 40.56 | 0.0318 | -0.1714 | 0.0119 |
| 206 | SLD 15 | -11.67 | -0.22 | 44 | 0.046 | -0.19 | 0.0079 |
| 206 | SLD 16 | -11.67 | -0.22 | 44 | 0.046 | -0.19 | 0.0079 |
| 206 | SLV 1 | -1.71 | 0.37 | 9.79 | -0.063 | 0.118 | -0.0087 |
| 206 | SLV 2 | -1.71 | 0.37 | 9.79 | -0.063 | 0.118 | -0.0087 |
| 206 | SLV 3 | -4.13 | 0.75 | 17.92 | -0.0275 | 0.0742 | -0.0188 |
| 206 | SLV 4 | -4.13 | 0.75 | 17.92 | -0.0275 | 0.0742 | -0.0188 |
| 206 | SLV 5 | -2.91 | -0.49 | 14.2 | -0.0625 | 0.0338 | 0.0148 |
| 206 | SLV 6 | -2.91 | -0.49 | 14.2 | -0.0625 | 0.0338 | 0.0148 |
| 206 | SLV 7 | -10.99 | 0.76 | 41.31 | 0.0559 | -0.112 | -0.0188 |

| Nodo | Cont. | Reazione a traslazione | | | Reazione a rotazione | | |
|---|---|---|---|---|---|---|---|
| Ind. | N.br. | x | y | z | x | y | z |
| 206 | SLV 8 | -10.99 | 0.76 | 41.31 | 0.0559 | -0.112 | -0.0188 |
| 206 | SLV 9 | -6.36 | -0.85 | 26.12 | -0.0265 | -0.0821 | 0.025 |
| 206 | SLV 10 | -6.36 | -0.85 | 26.12 | -0.0265 | -0.0821 | 0.025 |
| 206 | SLV 11 | -14.43 | 0.4 | 53.22 | 0.0919 | -0.2279 | -0.0086 |
| 206 | SLV 12 | -14.43 | 0.4 | 53.22 | 0.0919 | -0.2279 | -0.0086 |
| 206 | SLV 13 | -13.21 | -0.84 | 49.5 | 0.0569 | -0.2683 | 0.025 |
| 206 | SLV 14 | -13.21 | -0.84 | 49.5 | 0.0569 | -0.2683 | 0.025 |
| 206 | SLV 15 | -15.63 | -0.46 | 57.63 | 0.0924 | -0.312 | 0.0149 |
| 206 | SLV 16 | -15.63 | -0.46 | 57.63 | 0.0924 | -0.312 | 0.0149 |
| 207 | SLU 1 | 6.48 | 0.01 | 26.9 | -0.0047 | 0.112 | 0.0008 |
| 207 | SLU 2 | 6.6 | 0.03 | 26.93 | -0.0072 | 0.1189 | 0.0013 |
| 207 | SLU 3 | 6.49 | 0.01 | 27.21 | -0.0046 | 0.1086 | 0.0008 |
| 207 | SLU 4 | 6.56 | 0.02 | 27.24 | -0.0061 | 0.1127 | 0.0011 |
| 207 | SLU 5 | 6.6 | 0.03 | 27.15 | -0.007 | 0.1168 | 0.0013 |
| 207 | SLU 6 | 6.49 | 0.01 | 27.43 | -0.0044 | 0.1064 | 0.0008 |
| 207 | SLU 7 | 6.56 | 0.02 | 27.45 | -0.0059 | 0.1106 | 0.0011 |
| 207 | SLU 8 | 6.49 | 0.01 | 27.32 | -0.0043 | 0.1078 | 0.0007 |
| 207 | SLU 9 | 6.56 | 0.02 | 27.35 | -0.0058 | 0.1119 | 0.0011 |
| 207 | SLU 10 | 7.5 | 0.03 | 31.29 | -0.008 | 0.1273 | 0.0015 |
| 207 | SLU 11 | 7.39 | 0.01 | 31.57 | -0.0055 | 0.1169 | 0.0009 |
| 207 | SLU 12 | 7.46 | 0.02 | 31.59 | -0.0069 | 0.1211 | 0.0013 |
| 207 | SLU 13 | 7.51 | 0.03 | 31.51 | -0.0078 | 0.1251 | 0.0014 |
| 207 | SLU 14 | 7.4 | 0.01 | 31.79 | -0.0053 | 0.1148 | 0.0009 |
| 207 | SLU 15 | 7.47 | 0.02 | 31.81 | -0.0067 | 0.1189 | 0.0012 |
| 207 | SLU 16 | 7.4 | 0.01 | 31.68 | -0.0052 | 0.1161 | 0.0009 |
| 207 | SLU 17 | 7.47 | 0.02 | 31.71 | -0.0067 | 0.1203 | 0.0012 |
| 207 | SLU 18 | 7.77 | 0.01 | 33.12 | -0.0059 | 0.1239 | 0.001 |
| 207 | SLU 19 | 7.84 | 0.02 | 33.15 | -0.0074 | 0.1281 | 0.0013 |
| 207 | SLU 20 | 7.78 | 0.01 | 33.34 | -0.0057 | 0.1218 | 0.001 |
| 207 | SLU 21 | 7.85 | 0.02 | 33.36 | -0.0072 | 0.1259 | 0.0013 |
| 207 | SLU 22 | 7.31 | 0.01 | 30.89 | -0.0054 | 0.1198 | 0.0009 |
| 207 | SLU 23 | 7.43 | 0.03 | 30.93 | -0.0079 | 0.1267 | 0.0014 |
| 207 | SLU 24 | 7.32 | 0.01 | 31.2 | -0.0053 | 0.1164 | 0.0009 |
| 207 | SLU 25 | 7.39 | 0.02 | 31.23 | -0.0068 | 0.1205 | 0.0012 |
| 207 | SLU 26 | 7.43 | 0.03 | 31.14 | -0.0077 | 0.1246 | 0.0014 |
| 207 | SLU 27 | 7.32 | 0.01 | 31.42 | -0.0051 | 0.1142 | 0.0009 |
| 207 | SLU 28 | 7.39 | 0.02 | 31.44 | -0.0066 | 0.1184 | 0.0012 |
| 207 | SLU 29 | 7.32 | 0.01 | 31.32 | -0.005 | 0.1156 | 0.0009 |
| 207 | SLU 30 | 7.39 | 0.02 | 31.34 | -0.0065 | 0.1197 | 0.0012 |
| 207 | SLU 31 | 8.33 | 0.03 | 35.29 | -0.0087 | 0.135 | 0.0016 |
| 207 | SLU 32 | 8.22 | 0.01 | 35.56 | -0.0062 | 0.1247 | 0.0011 |
| 207 | SLU 33 | 8.29 | 0.02 | 35.59 | -0.0076 | 0.1288 | 0.0014 |
| 207 | SLU 34 | 8.34 | 0.03 | 35.5 | -0.0085 | 0.1329 | 0.0016 |
| 207 | SLU 35 | 8.23 | 0.01 | 35.78 | -0.006 | 0.1226 | 0.001 |
| 207 | SLU 36 | 8.3 | 0.02 | 35.8 | -0.0074 | 0.1267 | 0.0013 |
| 207 | SLU 37 | 8.23 | 0.01 | 35.68 | -0.0059 | 0.1239 | 0.001 |
| 207 | SLU 38 | 8.3 | 0.02 | 35.7 | -0.0074 | 0.128 | 0.0013 |
| 207 | SLU 39 | 8.6 | 0.01 | 37.11 | -0.0066 | 0.1317 | 0.0011 |
| 207 | SLU 40 | 8.67 | 0.02 | 37.14 | -0.0081 | 0.1358 | 0.0015 |
| 207 | SLU 41 | 8.61 | 0.01 | 37.33 | -0.0064 | 0.1296 | 0.0011 |
| 207 | SLU 42 | 8.68 | 0.02 | 37.35 | -0.0079 | 0.1337 | 0.0014 |
| 207 | SLU 43 | 8.14 | 0.01 | 33.6 | -0.0059 | 0.1429 | 0.001 |
| 207 | SLU 44 | 8.25 | 0.03 | 33.63 | -0.0084 | 0.1499 | 0.0015 |
| 207 | SLU 45 | 8.14 | 0.01 | 33.91 | -0.0058 | 0.1395 | 0.001 |
| 207 | SLU 46 | 8.22 | 0.02 | 33.94 | -0.0073 | 0.1436 | 0.0013 |
| 207 | SLU 47 | 8.26 | 0.03 | 33.85 | -0.0082 | 0.1477 | 0.0015 |
| 207 | SLU 48 | 8.15 | 0.01 | 34.13 | -0.0056 | 0.1374 | 0.001 |
| 207 | SLU 49 | 8.22 | 0.02 | 34.15 | -0.0071 | 0.1415 | 0.0013 |
| 207 | SLU 50 | 8.15 | 0.01 | 34.02 | -0.0055 | 0.1387 | 0.001 |
| 207 | SLU 51 | 8.22 | 0.02 | 34.05 | -0.007 | 0.1429 | 0.0013 |
| 207 | SLU 52 | 9.16 | 0.03 | 37.99 | -0.0092 | 0.1582 | 0.0017 |
| 207 | SLU 53 | 9.05 | 0.02 | 38.27 | -0.0066 | 0.1478 | 0.0011 |
| 207 | SLU 54 | 9.12 | 0.02 | 38.29 | -0.0081 | 0.152 | 0.0015 |
| 207 | SLU 55 | 9.17 | 0.03 | 38.21 | -0.009 | 0.1561 | 0.0016 |
| 207 | SLU 56 | 9.05 | 0.02 | 38.49 | -0.0064 | 0.1457 | 0.0011 |
| 207 | SLU 57 | 9.13 | 0.02 | 38.51 | -0.0079 | 0.1499 | 0.0014 |
| 207 | SLU 58 | 9.05 | 0.01 | 38.38 | -0.0064 | 0.147 | 0.0011 |
| 207 | SLU 59 | 9.12 | 0.02 | 38.41 | -0.0078 | 0.1512 | 0.0014 |
| 207 | SLU 60 | 9.43 | 0.02 | 39.82 | -0.0071 | 0.1549 | 0.0012 |
| 207 | SLU 61 | 9.5 | 0.03 | 39.85 | -0.0086 | 0.159 | 0.0015 |
| 207 | SLU 62 | 9.43 | 0.02 | 40.04 | -0.0069 | 0.1527 | 0.0012 |
| 207 | SLU 63 | 9.51 | 0.03 | 40.06 | -0.0084 | 0.1569 | 0.0015 |
| 207 | SLU 64 | 8.97 | 0.01 | 37.59 | -0.0066 | 0.1507 | 0.0011 |
| 207 | SLU 65 | 9.08 | 0.03 | 37.63 | -0.0091 | 0.1576 | 0.0017 |
| 207 | SLU 66 | 8.97 | 0.01 | 37.9 | -0.0065 | 0.1473 | 0.0011 |
| 207 | SLU 67 | 9.05 | 0.02 | 37.93 | -0.008 | 0.1514 | 0.0014 |
| 207 | SLU 68 | 9.09 | 0.03 | 37.84 | -0.0089 | 0.1555 | 0.0016 |
| 207 | SLU 69 | 8.98 | 0.01 | 38.12 | -0.0063 | 0.1452 | 0.0011 |
| 207 | SLU 70 | 9.05 | 0.02 | 38.14 | -0.0078 | 0.1493 | 0.0014 |
| 207 | SLU 71 | 8.98 | 0.01 | 38.02 | -0.0062 | 0.1465 | 0.0011 |
| 207 | SLU 72 | 9.05 | 0.02 | 38.04 | -0.0077 | 0.1506 | 0.0014 |
| 207 | SLU 73 | 9.99 | 0.03 | 41.98 | -0.0099 | 0.166 | 0.0018 |
| 207 | SLU 74 | 9.88 | 0.02 | 42.26 | -0.0073 | 0.1556 | 0.0013 |
| 207 | SLU 75 | 9.95 | 0.03 | 42.29 | -0.0088 | 0.1598 | 0.0016 |
| 207 | SLU 76 | 10 | 0.03 | 42.2 | -0.0097 | 0.1639 | 0.0018 |
| 207 | SLU 77 | 9.89 | 0.02 | 42.48 | -0.0071 | 0.1535 | 0.0012 |
| 207 | SLU 78 | 9.96 | 0.03 | 42.5 | -0.0086 | 0.1576 | 0.0015 |
| 207 | SLU 79 | 9.88 | 0.02 | 42.38 | -0.007 | 0.1548 | 0.0012 |

| Nodo | Cont. | Reazione a traslazione | | | Reazione a rotazione | | |
|---|---|---|---|---|---|---|---|
| Ind. | N.br. | x | y | z | x | y | z |
| 207 | SLU 80 | 9.96 | 0.03 | 42.4 | -0.0085 | 0.159 | 0.0015 |
| 207 | SLU 81 | 10.26 | 0.02 | 43.81 | -0.0078 | 0.1626 | 0.0013 |
| 207 | SLU 82 | 10.33 | 0.03 | 43.84 | -0.0093 | 0.1668 | 0.0017 |
| 207 | SLU 83 | 10.26 | 0.02 | 44.03 | -0.0076 | 0.1605 | 0.0013 |
| 207 | SLU 84 | 10.34 | 0.03 | 44.05 | -0.0091 | 0.1647 | 0.0016 |
| 207 | SLE RA 1 | 6.71 | 0.01 | 28.04 | -0.0049 | 0.1142 | 0.0008 |
| 207 | SLE RA 2 | 6.79 | 0.02 | 28.06 | -0.0066 | 0.1188 | 0.0012 |
| 207 | SLE RA 3 | 6.72 | 0.01 | 28.25 | -0.0049 | 0.1119 | 0.0008 |
| 207 | SLE RA 4 | 6.77 | 0.02 | 28.26 | -0.0058 | 0.1147 | 0.001 |
| 207 | SLE RA 5 | 6.8 | 0.02 | 28.2 | -0.0064 | 0.1174 | 0.0012 |
| 207 | SLE RA 6 | 6.72 | 0.01 | 28.39 | -0.0047 | 0.1105 | 0.0008 |
| 207 | SLE RA 7 | 6.77 | 0.02 | 28.41 | -0.0057 | 0.1133 | 0.001 |
| 207 | SLE RA 8 | 6.72 | 0.01 | 28.32 | -0.0047 | 0.1114 | 0.0008 |
| 207 | SLE RA 9 | 6.77 | 0.02 | 28.34 | -0.0056 | 0.1142 | 0.001 |
| 207 | SLE RA 10 | 7.4 | 0.02 | 30.97 | -0.0071 | 0.1244 | 0.0013 |
| 207 | SLE RA 11 | 7.32 | 0.01 | 31.15 | -0.0054 | 0.1175 | 0.0009 |
| 207 | SLE RA 12 | 7.37 | 0.02 | 31.17 | -0.0064 | 0.1203 | 0.0011 |
| 207 | SLE RA 13 | 7.4 | 0.02 | 31.11 | -0.007 | 0.123 | 0.0013 |
| 207 | SLE RA 14 | 7.33 | 0.01 | 31.3 | -0.0053 | 0.1161 | 0.0009 |
| 207 | SLE RA 15 | 7.37 | 0.02 | 31.31 | -0.0063 | 0.1188 | 0.0011 |
| 207 | SLE RA 16 | 7.33 | 0.01 | 31.23 | -0.0052 | 0.117 | 0.0009 |
| 207 | SLE RA 17 | 7.37 | 0.02 | 31.24 | -0.0062 | 0.1197 | 0.0011 |
| 207 | SLE RA 18 | 7.58 | 0.01 | 32.19 | -0.0057 | 0.1222 | 0.001 |
| 207 | SLE RA 19 | 7.62 | 0.02 | 32.2 | -0.0067 | 0.1249 | 0.0012 |
| 207 | SLE RA 20 | 7.58 | 0.01 | 32.33 | -0.0056 | 0.1208 | 0.001 |
| 207 | SLE RA 21 | 7.63 | 0.02 | 32.35 | -0.0066 | 0.1235 | 0.0012 |
| 207 | SLE FR 1 | 6.71 | 0.01 | 28.04 | -0.0049 | 0.1142 | 0.0008 |
| 207 | SLE FR 2 | 6.73 | 0.01 | 28.04 | -0.0053 | 0.1152 | 0.0009 |
| 207 | SLE FR 3 | 6.72 | 0.01 | 28.09 | -0.0049 | 0.1137 | 0.0008 |
| 207 | SLE FR 4 | 6.99 | 0.01 | 29.29 | -0.0055 | 0.1175 | 0.001 |
| 207 | SLE FR 5 | 6.97 | 0.01 | 29.34 | -0.0051 | 0.1161 | 0.0009 |
| 207 | SLE FR 6 | 7.14 | 0.01 | 30.11 | -0.0053 | 0.1182 | 0.0009 |
| 207 | SLE QP 1 | 6.71 | 0.01 | 28.04 | -0.0049 | 0.1142 | 0.0008 |
| 207 | SLE QP 2 | 6.97 | 0.01 | 29.28 | -0.0052 | 0.1166 | 0.0009 |
| 207 | SLD 1 | 14.02 | -0.16 | 48.97 | 0.0391 | 0.3673 | -0.0078 |
| 207 | SLD 2 | 14.02 | -0.16 | 48.97 | 0.0391 | 0.3673 | -0.0078 |
| 207 | SLD 3 | 13.67 | 0.33 | 47.92 | -0.0211 | 0.3553 | 0.0053 |
| 207 | SLD 4 | 13.67 | 0.33 | 47.92 | -0.0211 | 0.3553 | 0.0053 |
| 207 | SLD 5 | 9.62 | -0.78 | 36.79 | 0.0994 | 0.21 | -0.0216 |
| 207 | SLD 6 | 9.62 | -0.78 | 36.79 | 0.0994 | 0.21 | -0.0216 |
| 207 | SLD 7 | 8.45 | 0.85 | 33.27 | -0.1012 | 0.1701 | 0.0222 |
| 207 | SLD 8 | 8.45 | 0.85 | 33.27 | -0.1012 | 0.1701 | 0.0222 |
| 207 | SLD 9 | 5.49 | -0.83 | 25.29 | 0.0909 | 0.0631 | -0.0204 |
| 207 | SLD 10 | 5.49 | -0.83 | 25.29 | 0.0909 | 0.0631 | -0.0204 |
| 207 | SLD 11 | 4.33 | 0.8 | 21.78 | -0.1097 | 0.0233 | 0.0234 |
| 207 | SLD 12 | 4.33 | 0.8 | 21.78 | -0.1097 | 0.0233 | 0.0234 |
| 207 | SLD 13 | 0.28 | -0.31 | 10.65 | 0.0107 | -0.1221 | -0.0036 |
| 207 | SLD 14 | 0.28 | -0.31 | 10.65 | 0.0107 | -0.1221 | -0.0036 |
| 207 | SLD 15 | -0.07 | 0.18 | 9.59 | -0.0494 | -0.134 | 0.0096 |
| 207 | SLD 16 | -0.07 | 0.18 | 9.59 | -0.0494 | -0.134 | 0.0096 |
| 207 | SLV 1 | 23.24 | -0.42 | 74.76 | 0.1063 | 0.695 | -0.0211 |
| 207 | SLV 2 | 23.24 | -0.42 | 74.76 | 0.1063 | 0.695 | -0.0211 |
| 207 | SLV 3 | 22.42 | 0.83 | 72.3 | -0.0453 | 0.6668 | 0.0123 |
| 207 | SLV 4 | 22.42 | 0.83 | 72.3 | -0.0453 | 0.6668 | 0.0123 |
| 207 | SLV 5 | 13.09 | -2.02 | 46.66 | 0.2581 | 0.333 | -0.0562 |
| 207 | SLV 6 | 13.09 | -2.02 | 46.66 | 0.2581 | 0.333 | -0.0562 |
| 207 | SLV 7 | 10.37 | 2.16 | 38.45 | -0.247 | 0.2388 | 0.0548 |
| 207 | SLV 8 | 10.37 | 2.16 | 38.45 | -0.247 | 0.2388 | 0.0548 |
| 207 | SLV 9 | 3.58 | -2.14 | 20.12 | 0.2367 | -0.0056 | -0.0531 |
| 207 | SLV 10 | 3.58 | -2.14 | 20.12 | 0.2367 | -0.0056 | -0.0531 |
| 207 | SLV 11 | 0.85 | 2.04 | 11.9 | -0.2684 | -0.0997 | 0.058 |
| 207 | SLV 12 | 0.85 | 2.04 | 11.9 | -0.2684 | -0.0997 | 0.058 |
| 207 | SLV 13 | -8.47 | -0.81 | -13.73 | 0.0349 | -0.4335 | -0.0105 |
| 207 | SLV 14 | -8.47 | -0.81 | -13.73 | 0.0349 | -0.4335 | -0.0105 |
| 207 | SLV 15 | -9.29 | 0.45 | -16.2 | -0.1166 | -0.4618 | 0.0229 |
| 207 | SLV 16 | -9.29 | 0.45 | -16.2 | -0.1166 | -0.4618 | 0.0229 |
| 208 | SLU 1 | 3.18 | 0.01 | 49.36 | -0.0077 | 0.172 | -0.0001 |
| 208 | SLU 2 | 3.48 | 0.02 | 49.07 | -0.0089 | 0.1872 | -0.0001 |
| 208 | SLU 3 | 3.03 | 0.01 | 50.29 | -0.0074 | 0.164 | -0.0001 |
| 208 | SLU 4 | 3.21 | 0.01 | 50.12 | -0.0082 | 0.1731 | -0.0001 |
| 208 | SLU 5 | 3.38 | 0.02 | 49.67 | -0.0085 | 0.1821 | -0.0001 |
| 208 | SLU 6 | 2.94 | 0.01 | 50.9 | -0.007 | 0.1588 | -0.0001 |
| 208 | SLU 7 | 3.12 | 0.01 | 50.73 | -0.0078 | 0.168 | -0.0001 |
| 208 | SLU 8 | 2.99 | 0.01 | 50.57 | -0.0069 | 0.1617 | -0.0001 |
| 208 | SLU 9 | 3.17 | 0.01 | 50.4 | -0.0076 | 0.1708 | -0.0001 |
| 208 | SLU 10 | 3.57 | 0.02 | 57.73 | -0.0103 | 0.1927 | -0.0001 |
| 208 | SLU 11 | 3.13 | 0.01 | 58.96 | -0.0088 | 0.1694 | -0.0001 |
| 208 | SLU 12 | 3.31 | 0.02 | 58.79 | -0.0095 | 0.1786 | -0.0001 |
| 208 | SLU 13 | 3.48 | 0.02 | 58.34 | -0.0099 | 0.1875 | -0.0001 |
| 208 | SLU 14 | 3.03 | 0.01 | 59.56 | -0.0084 | 0.1643 | -0.0001 |
| 208 | SLU 15 | 3.21 | 0.02 | 59.39 | -0.0091 | 0.1734 | -0.0001 |
| 208 | SLU 16 | 3.08 | 0.01 | 59.24 | -0.0082 | 0.1671 | -0.0001 |
| 208 | SLU 17 | 3.26 | 0.02 | 59.06 | -0.009 | 0.1763 | -0.0001 |
| 208 | SLU 18 | 3.31 | 0.01 | 61.74 | -0.0096 | 0.1797 | -0.0001 |
| 208 | SLU 19 | 3.49 | 0.02 | 61.56 | -0.0104 | 0.1889 | -0.0001 |
| 208 | SLU 20 | 3.22 | 0.01 | 62.34 | -0.0092 | 0.1746 | -0.0001 |
| 208 | SLU 21 | 3.4 | 0.02 | 62.17 | -0.01 | 0.1837 | -0.0001 |
| 208 | SLU 22 | 3.28 | 0.01 | 57.26 | -0.0088 | 0.1779 | -0.0001 |

| Nodo | Cont. | Reazione a traslazione | | | Reazione a rotazione | | |
|---|---|---|---|---|---|---|---|
| Ind. | N.br. | x | y | z | x | y | z |
| 208 | SLU 23 | 3.58 | 0.02 | 56.97 | -0.0101 | 0.1932 | -0.0001 |
| 208 | SLU 24 | 3.13 | 0.01 | 58.2 | -0.0085 | 0.1699 | -0.0001 |
| 208 | SLU 25 | 3.31 | 0.02 | 58.02 | -0.0093 | 0.1791 | -0.0001 |
| 208 | SLU 26 | 3.48 | 0.02 | 57.58 | -0.0097 | 0.188 | -0.0001 |
| 208 | SLU 27 | 3.04 | 0.01 | 58.8 | -0.0081 | 0.1648 | -0.0001 |
| 208 | SLU 28 | 3.22 | 0.02 | 58.63 | -0.0089 | 0.1739 | -0.0001 |
| 208 | SLU 29 | 3.08 | 0.01 | 58.47 | -0.008 | 0.1676 | -0.0001 |
| 208 | SLU 30 | 3.27 | 0.02 | 58.3 | -0.0088 | 0.1768 | -0.0001 |
| 208 | SLU 31 | 3.67 | 0.02 | 65.64 | -0.0114 | 0.1986 | -0.0001 |
| 208 | SLU 32 | 3.23 | 0.02 | 66.86 | -0.0099 | 0.1754 | -0.0001 |
| 208 | SLU 33 | 3.41 | 0.02 | 66.69 | -0.0107 | 0.1845 | -0.0001 |
| 208 | SLU 34 | 3.58 | 0.02 | 66.24 | -0.011 | 0.1934 | -0.0001 |
| 208 | SLU 35 | 3.13 | 0.01 | 67.47 | -0.0095 | 0.1702 | -0.0001 |
| 208 | SLU 36 | 3.31 | 0.02 | 67.29 | -0.0103 | 0.1793 | -0.0001 |
| 208 | SLU 37 | 3.18 | 0.01 | 67.14 | -0.0094 | 0.173 | -0.0001 |
| 208 | SLU 38 | 3.36 | 0.02 | 66.96 | -0.0101 | 0.1822 | -0.0001 |
| 208 | SLU 39 | 3.41 | 0.02 | 69.64 | -0.0107 | 0.1857 | -0.0001 |
| 208 | SLU 40 | 3.59 | 0.02 | 69.46 | -0.0115 | 0.1948 | -0.0001 |
| 208 | SLU 41 | 3.32 | 0.02 | 70.24 | -0.0103 | 0.1805 | -0.0001 |
| 208 | SLU 42 | 3.5 | 0.02 | 70.07 | -0.0111 | 0.1897 | -0.0001 |
| 208 | SLU 43 | 4.09 | 0.01 | 61.46 | -0.0096 | 0.2215 | -0.0001 |
| 208 | SLU 44 | 4.4 | 0.02 | 61.17 | -0.0109 | 0.2368 | -0.0001 |
| 208 | SLU 45 | 3.95 | 0.01 | 62.39 | -0.0093 | 0.2136 | -0.0001 |
| 208 | SLU 46 | 4.13 | 0.02 | 62.22 | -0.0101 | 0.2227 | -0.0001 |
| 208 | SLU 47 | 4.3 | 0.02 | 61.77 | -0.0105 | 0.2316 | -0.0001 |
| 208 | SLU 48 | 3.85 | 0.01 | 63 | -0.0089 | 0.2084 | -0.0001 |
| 208 | SLU 49 | 4.04 | 0.02 | 62.82 | -0.0097 | 0.2175 | -0.0001 |
| 208 | SLU 50 | 3.9 | 0.01 | 62.67 | -0.0088 | 0.2112 | -0.0001 |
| 208 | SLU 51 | 4.08 | 0.02 | 62.49 | -0.0096 | 0.2204 | -0.0001 |
| 208 | SLU 52 | 4.49 | 0.02 | 69.83 | -0.0122 | 0.2422 | -0.0001 |
| 208 | SLU 53 | 4.04 | 0.02 | 71.06 | -0.0107 | 0.219 | -0.0001 |
| 208 | SLU 54 | 4.23 | 0.02 | 70.88 | -0.0115 | 0.2281 | -0.0001 |
| 208 | SLU 55 | 4.4 | 0.02 | 70.44 | -0.0118 | 0.2371 | -0.0001 |
| 208 | SLU 56 | 3.95 | 0.02 | 71.66 | -0.0103 | 0.2138 | -0.0001 |
| 208 | SLU 57 | 4.13 | 0.02 | 71.49 | -0.0111 | 0.223 | -0.0001 |
| 208 | SLU 58 | 4 | 0.02 | 71.33 | -0.0102 | 0.2167 | -0.0001 |
| 208 | SLU 59 | 4.18 | 0.02 | 71.16 | -0.0109 | 0.2258 | -0.0001 |
| 208 | SLU 60 | 4.23 | 0.02 | 73.84 | -0.0115 | 0.2293 | -0.0001 |
| 208 | SLU 61 | 4.41 | 0.02 | 73.66 | -0.0123 | 0.2385 | -0.0001 |
| 208 | SLU 62 | 4.13 | 0.02 | 74.44 | -0.0111 | 0.2242 | -0.0001 |
| 208 | SLU 63 | 4.32 | 0.02 | 74.27 | -0.0119 | 0.2333 | -0.0001 |
| 208 | SLU 64 | 4.19 | 0.02 | 69.36 | -0.0107 | 0.2275 | -0.0001 |
| 208 | SLU 65 | 4.5 | 0.02 | 69.07 | -0.012 | 0.2427 | -0.0001 |
| 208 | SLU 66 | 4.05 | 0.02 | 70.29 | -0.0105 | 0.2195 | -0.0001 |
| 208 | SLU 67 | 4.23 | 0.02 | 70.12 | -0.0112 | 0.2286 | -0.0001 |
| 208 | SLU 68 | 4.4 | 0.02 | 69.67 | -0.0116 | 0.2376 | -0.0001 |
| 208 | SLU 69 | 3.95 | 0.02 | 70.9 | -0.0101 | 0.2143 | -0.0001 |
| 208 | SLU 70 | 4.14 | 0.02 | 70.73 | -0.0108 | 0.2235 | -0.0001 |
| 208 | SLU 71 | 4 | 0.02 | 70.57 | -0.0099 | 0.2172 | -0.0001 |
| 208 | SLU 72 | 4.18 | 0.02 | 70.4 | -0.0107 | 0.2263 | -0.0001 |
| 208 | SLU 73 | 4.59 | 0.02 | 77.73 | -0.0133 | 0.2482 | -0.0001 |
| 208 | SLU 74 | 4.14 | 0.02 | 78.96 | -0.0118 | 0.2249 | -0.0001 |
| 208 | SLU 75 | 4.33 | 0.02 | 78.79 | -0.0126 | 0.2341 | -0.0001 |
| 208 | SLU 76 | 4.5 | 0.02 | 78.34 | -0.0129 | 0.243 | -0.0001 |
| 208 | SLU 77 | 4.05 | 0.02 | 79.56 | -0.0114 | 0.2198 | -0.0001 |
| 208 | SLU 78 | 4.23 | 0.02 | 79.39 | -0.0122 | 0.2289 | -0.0001 |
| 208 | SLU 79 | 4.1 | 0.02 | 79.23 | -0.0113 | 0.2226 | -0.0001 |
| 208 | SLU 80 | 4.28 | 0.02 | 79.06 | -0.012 | 0.2317 | -0.0001 |
| 208 | SLU 81 | 4.33 | 0.02 | 81.74 | -0.0127 | 0.2352 | -0.0001 |
| 208 | SLU 82 | 4.51 | 0.02 | 81.56 | -0.0134 | 0.2444 | -0.0001 |
| 208 | SLU 83 | 4.23 | 0.02 | 82.34 | -0.0123 | 0.2301 | -0.0001 |
| 208 | SLU 84 | 4.41 | 0.02 | 82.17 | -0.013 | 0.2392 | -0.0001 |
| 208 | SLE RA 1 | 3.2 | 0.01 | 51.62 | -0.008 | 0.1737 | -0.0001 |
| 208 | SLE RA 2 | 3.41 | 0.02 | 51.42 | -0.0088 | 0.1839 | -0.0001 |
| 208 | SLE RA 3 | 3.11 | 0.01 | 52.24 | -0.0078 | 0.1684 | -0.0001 |
| 208 | SLE RA 4 | 3.23 | 0.01 | 52.12 | -0.0083 | 0.1745 | -0.0001 |
| 208 | SLE RA 5 | 3.34 | 0.02 | 51.83 | -0.0086 | 0.1804 | -0.0001 |
| 208 | SLE RA 6 | 3.04 | 0.01 | 52.64 | -0.0076 | 0.1649 | -0.0001 |
| 208 | SLE RA 7 | 3.17 | 0.01 | 52.53 | -0.0081 | 0.171 | -0.0001 |
| 208 | SLE RA 8 | 3.08 | 0.01 | 52.42 | -0.0075 | 0.1668 | -0.0001 |
| 208 | SLE RA 9 | 3.2 | 0.01 | 52.31 | -0.008 | 0.1729 | -0.0001 |
| 208 | SLE RA 10 | 3.47 | 0.02 | 57.2 | -0.0097 | 0.1875 | -0.0001 |
| 208 | SLE RA 11 | 3.17 | 0.01 | 58.02 | -0.0087 | 0.172 | -0.0001 |
| 208 | SLE RA 12 | 3.29 | 0.02 | 57.9 | -0.0092 | 0.1781 | -0.0001 |
| 208 | SLE RA 13 | 3.41 | 0.02 | 57.6 | -0.0095 | 0.184 | -0.0001 |
| 208 | SLE RA 14 | 3.11 | 0.01 | 58.42 | -0.0085 | 0.1685 | -0.0001 |
| 208 | SLE RA 15 | 3.23 | 0.02 | 58.3 | -0.009 | 0.1746 | -0.0001 |
| 208 | SLE RA 16 | 3.14 | 0.01 | 58.2 | -0.0084 | 0.1704 | -0.0001 |
| 208 | SLE RA 17 | 3.26 | 0.02 | 58.08 | -0.0089 | 0.1765 | -0.0001 |
| 208 | SLE RA 18 | 3.29 | 0.01 | 59.87 | -0.0093 | 0.1789 | -0.0001 |
| 208 | SLE RA 19 | 3.42 | 0.02 | 59.75 | -0.0098 | 0.185 | -0.0001 |
| 208 | SLE RA 20 | 3.23 | 0.01 | 60.27 | -0.009 | 0.1754 | -0.0001 |
| 208 | SLE RA 21 | 3.35 | 0.02 | 60.16 | -0.0095 | 0.1815 | -0.0001 |
| 208 | SLE FR 1 | 3.2 | 0.01 | 51.62 | -0.008 | 0.1737 | -0.0001 |
| 208 | SLE FR 2 | 3.24 | 0.01 | 51.58 | -0.0082 | 0.1757 | -0.0001 |
| 208 | SLE FR 3 | 3.18 | 0.01 | 51.78 | -0.0079 | 0.1723 | -0.0001 |
| 208 | SLE FR 4 | 3.27 | 0.01 | 54.05 | -0.0086 | 0.1773 | -0.0001 |
| 208 | SLE FR 5 | 3.21 | 0.01 | 54.25 | -0.0083 | 0.1739 | -0.0001 |

| Nodo | Cont. | Reazione a traslazione | | | Reazione a rotazione | | |
|---|---|---|---|---|---|---|---|
| Ind. | N.br. | x | y | z | x | y | z |
| 208 | SLE FR 6 | 3.25 | 0.01 | 55.74 | -0.0086 | 0.1763 | -0.0001 |
| 208 | SLE QP 1 | 3.2 | 0.01 | 51.62 | -0.008 | 0.1737 | -0.0001 |
| 208 | SLE QP 2 | 3.23 | 0.01 | 54.09 | -0.0084 | 0.1752 | -0.0001 |
| 208 | SLD 1 | 11.63 | -0.1 | 75.29 | 0.0041 | 0.6638 | 0.0004 |
| 208 | SLD 2 | 11.63 | -0.1 | 75.29 | 0.0041 | 0.6638 | 0.0004 |
| 208 | SLD 3 | 11.18 | 0.01 | 74.02 | 0.0584 | 0.6354 | 0.0001 |
| 208 | SLD 4 | 11.18 | 0.01 | 74.02 | 0.0584 | 0.6354 | 0.0001 |
| 208 | SLD 5 | 6.44 | -0.19 | 62.38 | -0.0869 | 0.3649 | 0.0006 |
| 208 | SLD 6 | 6.44 | -0.19 | 62.38 | -0.0869 | 0.3649 | 0.0006 |
| 208 | SLD 7 | 4.93 | 0.18 | 58.14 | 0.094 | 0.2702 | -0.0005 |
| 208 | SLD 8 | 4.93 | 0.18 | 58.14 | 0.094 | 0.2702 | -0.0005 |
| 208 | SLD 9 | 1.54 | -0.16 | 50.04 | -0.1107 | 0.0803 | 0.0004 |
| 208 | SLD 10 | 1.54 | -0.16 | 50.04 | -0.1107 | 0.0803 | 0.0004 |
| 208 | SLD 11 | 0.02 | 0.22 | 45.8 | 0.0702 | -0.0144 | -0.0007 |
| 208 | SLD 12 | 0.02 | 0.22 | 45.8 | 0.0702 | -0.0144 | -0.0007 |
| 208 | SLD 13 | -4.72 | 0.01 | 34.17 | -0.0752 | -0.2849 | -0.0002 |
| 208 | SLD 14 | -4.72 | 0.01 | 34.17 | -0.0752 | -0.2849 | -0.0002 |
| 208 | SLD 15 | -5.17 | 0.13 | 32.89 | -0.0209 | -0.3133 | -0.0005 |
| 208 | SLD 16 | -5.17 | 0.13 | 32.89 | -0.0209 | -0.3133 | -0.0005 |
| 208 | SLV 1 | 22.64 | -0.27 | 103.09 | 0.0295 | 1.3047 | 0.0011 |
| 208 | SLV 2 | 22.64 | -0.27 | 103.09 | 0.0295 | 1.3047 | 0.0011 |
| 208 | SLV 3 | 21.55 | 0 | 100.09 | 0.1552 | 1.2365 | 0.0003 |
| 208 | SLV 4 | 21.55 | 0 | 100.09 | 0.1552 | 1.2365 | 0.0003 |
| 208 | SLV 5 | 10.71 | -0.49 | 73.34 | -0.1877 | 0.6175 | 0.0014 |
| 208 | SLV 6 | 10.71 | -0.49 | 73.34 | -0.1877 | 0.6175 | 0.0014 |
| 208 | SLV 7 | 7.08 | 0.42 | 63.34 | 0.2314 | 0.3902 | -0.0011 |
| 208 | SLV 8 | 7.08 | 0.42 | 63.34 | 0.2314 | 0.3902 | -0.0011 |
| 208 | SLV 9 | -0.61 | -0.4 | 44.84 | -0.2481 | -0.0397 | 0.001 |
| 208 | SLV 10 | -0.61 | -0.4 | 44.84 | -0.2481 | -0.0397 | 0.001 |
| 208 | SLV 11 | -4.24 | 0.51 | 34.85 | 0.1709 | -0.2671 | -0.0015 |
| 208 | SLV 12 | -4.24 | 0.51 | 34.85 | 0.1709 | -0.2671 | -0.0015 |
| 208 | SLV 13 | -15.09 | 0.03 | 8.1 | -0.172 | -0.886 | -0.0004 |
| 208 | SLV 14 | -15.09 | 0.03 | 8.1 | -0.172 | -0.886 | -0.0004 |
| 208 | SLV 15 | -16.18 | 0.3 | 5.1 | -0.0463 | -0.9542 | -0.0012 |
| 208 | SLV 16 | -16.18 | 0.3 | 5.1 | -0.0463 | -0.9542 | -0.0012 |
| 209 | SLU 1 | -0.45 | 0.01 | 50.56 | -0.0052 | -0.0437 | 0 |
| 209 | SLU 2 | 0 | 0 | 50.18 | -0.0025 | -0.0231 | 0 |
| 209 | SLU 3 | -0.77 | 0 | 51.74 | -0.0049 | -0.0591 | 0 |
| 209 | SLU 4 | -0.49 | 0 | 51.51 | -0.0033 | -0.0468 | 0 |
| 209 | SLU 5 | -0.2 | 0 | 50.92 | -0.0021 | -0.033 | 0 |
| 209 | SLU 6 | -0.97 | 0 | 52.48 | -0.0046 | -0.069 | 0 |
| 209 | SLU 7 | -0.7 | 0 | 52.25 | -0.003 | -0.0566 | 0 |
| 209 | SLU 8 | -0.86 | 0 | 52.04 | -0.0045 | -0.0633 | 0 |
| 209 | SLU 9 | -0.59 | 0 | 51.81 | -0.0029 | -0.051 | 0 |
| 209 | SLU 10 | -0.77 | 0.01 | 59.41 | -0.0034 | -0.0633 | 0 |
| 209 | SLU 11 | -1.54 | 0.01 | 60.97 | -0.0059 | -0.0993 | 0 |
| 209 | SLU 12 | -1.27 | 0.01 | 60.74 | -0.0042 | -0.087 | 0 |
| 209 | SLU 13 | -0.98 | 0.01 | 60.15 | -0.003 | -0.0731 | 0 |
| 209 | SLU 14 | -1.74 | 0.01 | 61.71 | -0.0055 | -0.1091 | 0 |
| 209 | SLU 15 | -1.47 | 0.01 | 61.48 | -0.0039 | -0.0968 | 0 |
| 209 | SLU 16 | -1.63 | 0.01 | 61.27 | -0.0054 | -0.1035 | 0 |
| 209 | SLU 17 | -1.36 | 0.01 | 61.04 | -0.0038 | -0.0912 | 0 |
| 209 | SLU 18 | -1.56 | 0.01 | 63.75 | -0.0065 | -0.1011 | 0 |
| 209 | SLU 19 | -1.29 | 0.01 | 63.52 | -0.0049 | -0.0887 | 0 |
| 209 | SLU 20 | -1.76 | 0.01 | 64.49 | -0.0061 | -0.1109 | 0 |
| 209 | SLU 21 | -1.49 | 0.01 | 64.26 | -0.0045 | -0.0986 | 0 |
| 209 | SLU 22 | -1.14 | 0.01 | 58.95 | -0.0059 | -0.0793 | 0 |
| 209 | SLU 23 | -0.68 | 0.01 | 58.57 | -0.0032 | -0.0588 | 0 |
| 209 | SLU 24 | -1.45 | 0.01 | 60.13 | -0.0057 | -0.0948 | 0 |
| 209 | SLU 25 | -1.18 | 0.01 | 59.9 | -0.004 | -0.0825 | 0 |
| 209 | SLU 26 | -0.89 | 0.01 | 59.3 | -0.0029 | -0.0687 | 0 |
| 209 | SLU 27 | -1.65 | 0.01 | 60.87 | -0.0053 | -0.1046 | 0 |
| 209 | SLU 28 | -1.38 | 0.01 | 60.64 | -0.0037 | -0.0923 | 0 |
| 209 | SLU 29 | -1.54 | 0.01 | 60.43 | -0.0052 | -0.099 | 0 |
| 209 | SLU 30 | -1.27 | 0.01 | 60.2 | -0.0036 | -0.0867 | 0 |
| 209 | SLU 31 | -1.46 | 0.01 | 67.8 | -0.0041 | -0.099 | 0 |
| 209 | SLU 32 | -2.22 | 0.01 | 69.36 | -0.0066 | -0.135 | 0 |
| 209 | SLU 33 | -1.95 | 0.01 | 69.13 | -0.005 | -0.1227 | 0 |
| 209 | SLU 34 | -1.66 | 0.01 | 68.54 | -0.0038 | -0.1088 | 0 |
| 209 | SLU 35 | -2.43 | 0.01 | 70.1 | -0.0062 | -0.1448 | 0 |
| 209 | SLU 36 | -2.15 | 0.01 | 69.87 | -0.0046 | -0.1325 | 0 |
| 209 | SLU 37 | -2.31 | 0.01 | 69.66 | -0.0061 | -0.1392 | 0 |
| 209 | SLU 38 | -2.04 | 0.01 | 69.43 | -0.0045 | -0.1269 | 0 |
| 209 | SLU 39 | -2.24 | 0.01 | 72.14 | -0.0072 | -0.1367 | 0 |
| 209 | SLU 40 | -1.97 | 0.01 | 71.91 | -0.0056 | -0.1244 | 0 |
| 209 | SLU 41 | -2.44 | 0.01 | 72.88 | -0.0069 | -0.1466 | 0 |
| 209 | SLU 42 | -2.17 | 0.01 | 72.65 | -0.0053 | -0.1343 | 0 |
| 209 | SLU 43 | -0.35 | 0.01 | 62.86 | -0.0065 | -0.0445 | 0 |
| 209 | SLU 44 | 0.1 | 0.01 | 62.47 | -0.0038 | -0.024 | 0 |
| 209 | SLU 45 | -0.67 | 0.01 | 64.03 | -0.0062 | -0.06 | 0 |
| 209 | SLU 46 | -0.4 | 0.01 | 63.8 | -0.0046 | -0.0477 | 0 |
| 209 | SLU 47 | -0.1 | 0.01 | 63.21 | -0.0034 | -0.0338 | 0 |
| 209 | SLU 48 | -0.87 | 0.01 | 64.77 | -0.0059 | -0.0698 | 0 |
| 209 | SLU 49 | -0.6 | 0.01 | 64.54 | -0.0043 | -0.0575 | 0 |
| 209 | SLU 50 | -0.76 | 0.01 | 64.33 | -0.0058 | -0.0642 | 0 |
| 209 | SLU 51 | -0.49 | 0.01 | 64.1 | -0.0042 | -0.0518 | 0 |
| 209 | SLU 52 | -0.68 | 0.01 | 71.7 | -0.0047 | -0.0642 | 0 |
| 209 | SLU 53 | -1.44 | 0.01 | 73.27 | -0.0072 | -0.1002 | 0 |

| Nodo | Cont. | Reazione a traslazione | | | Reazione a rotazione | | |
|---|---|---|---|---|---|---|---|
| Ind. | N.br. | x | y | z | x | y | z |
| 209 | SLU 54 | -1.17 | 0.01 | 73.03 | -0.0055 | -0.0879 | 0 |
| 209 | SLU 55 | -0.88 | 0.01 | 72.44 | -0.0043 | -0.074 | 0 |
| 209 | SLU 56 | -1.64 | 0.01 | 74 | -0.0068 | -0.11 | 0 |
| 209 | SLU 57 | -1.37 | 0.01 | 73.77 | -0.0052 | -0.0977 | 0 |
| 209 | SLU 58 | -1.53 | 0.01 | 73.56 | -0.0067 | -0.1043 | 0 |
| 209 | SLU 59 | -1.26 | 0.01 | 73.33 | -0.0051 | -0.092 | 0 |
| 209 | SLU 60 | -1.46 | 0.01 | 76.05 | -0.0078 | -0.1019 | 0 |
| 209 | SLU 61 | -1.19 | 0.01 | 75.81 | -0.0062 | -0.0896 | 0 |
| 209 | SLU 62 | -1.66 | 0.01 | 76.78 | -0.0075 | -0.1117 | 0 |
| 209 | SLU 63 | -1.39 | 0.01 | 76.55 | -0.0058 | -0.0994 | 0 |
| 209 | SLU 64 | -1.04 | 0.01 | 71.25 | -0.0072 | -0.0802 | 0 |
| 209 | SLU 65 | -0.59 | 0.01 | 70.86 | -0.0045 | -0.0597 | 0 |
| 209 | SLU 66 | -1.35 | 0.01 | 72.42 | -0.007 | -0.0957 | 0 |
| 209 | SLU 67 | -1.08 | 0.01 | 72.19 | -0.0053 | -0.0834 | 0 |
| 209 | SLU 68 | -0.79 | 0.01 | 71.6 | -0.0042 | -0.0695 | 0 |
| 209 | SLU 69 | -1.55 | 0.01 | 73.16 | -0.0066 | -0.1055 | 0 |
| 209 | SLU 70 | -1.28 | 0.01 | 72.93 | -0.005 | -0.0932 | 0 |
| 209 | SLU 71 | -1.44 | 0.01 | 72.72 | -0.0065 | -0.0998 | 0 |
| 209 | SLU 72 | -1.17 | 0.01 | 72.49 | -0.0049 | -0.0875 | 0 |
| 209 | SLU 73 | -1.36 | 0.01 | 80.09 | -0.0054 | -0.0999 | 0 |
| 209 | SLU 74 | -2.12 | 0.01 | 81.65 | -0.0079 | -0.1359 | 0 |
| 209 | SLU 75 | -1.85 | 0.01 | 81.42 | -0.0063 | -0.1236 | 0 |
| 209 | SLU 76 | -1.56 | 0.01 | 80.83 | -0.0051 | -0.1097 | 0 |
| 209 | SLU 77 | -2.33 | 0.01 | 82.39 | -0.0075 | -0.1457 | 0 |
| 209 | SLU 78 | -2.05 | 0.01 | 82.16 | -0.0059 | -0.1334 | 0 |
| 209 | SLU 79 | -2.22 | 0.01 | 81.95 | -0.0074 | -0.14 | 0 |
| 209 | SLU 80 | -1.94 | 0.01 | 81.72 | -0.0058 | -0.1277 | 0 |
| 209 | SLU 81 | -2.14 | 0.01 | 84.43 | -0.0085 | -0.1376 | 0 |
| 209 | SLU 82 | -1.87 | 0.01 | 84.2 | -0.0069 | -0.1253 | 0 |
| 209 | SLU 83 | -2.34 | 0.01 | 85.17 | -0.0082 | -0.1474 | 0 |
| 209 | SLU 84 | -2.07 | 0.01 | 84.94 | -0.0066 | -0.1351 | 0 |
| 209 | SLE RA 1 | -0.65 | 0.01 | 52.96 | -0.0054 | -0.0539 | 0 |
| 209 | SLE RA 2 | -0.35 | 0.01 | 52.7 | -0.0036 | -0.0402 | 0 |
| 209 | SLE RA 3 | -0.86 | 0.01 | 53.75 | -0.0052 | -0.0642 | 0 |
| 209 | SLE RA 4 | -0.68 | 0.01 | 53.59 | -0.0041 | -0.056 | 0 |
| 209 | SLE RA 5 | -0.48 | 0.01 | 53.19 | -0.0034 | -0.0467 | 0 |
| 209 | SLE RA 6 | -0.99 | 0.01 | 54.24 | -0.005 | -0.0707 | 0 |
| 209 | SLE RA 7 | -0.81 | 0 | 54.08 | -0.0039 | -0.0625 | 0 |
| 209 | SLE RA 8 | -0.92 | 0 | 53.94 | -0.0049 | -0.0669 | 0 |
| 209 | SLE RA 9 | -0.74 | 0 | 53.79 | -0.0038 | -0.0587 | 0 |
| 209 | SLE RA 10 | -0.86 | 0.01 | 58.86 | -0.0042 | -0.067 | 0 |
| 209 | SLE RA 11 | -1.37 | 0.01 | 59.9 | -0.0058 | -0.091 | 0 |
| 209 | SLE RA 12 | -1.19 | 0.01 | 59.75 | -0.0048 | -0.0828 | 0 |
| 209 | SLE RA 13 | -1 | 0.01 | 59.35 | -0.004 | -0.0735 | 0 |
| 209 | SLE RA 14 | -1.51 | 0.01 | 60.39 | -0.0056 | -0.0975 | 0 |
| 209 | SLE RA 15 | -1.33 | 0.01 | 60.24 | -0.0045 | -0.0893 | 0 |
| 209 | SLE RA 16 | -1.43 | 0.01 | 60.1 | -0.0055 | -0.0937 | 0 |
| 209 | SLE RA 17 | -1.25 | 0.01 | 59.94 | -0.0045 | -0.0855 | 0 |
| 209 | SLE RA 18 | -1.38 | 0.01 | 61.75 | -0.0063 | -0.0921 | 0 |
| 209 | SLE RA 19 | -1.2 | 0.01 | 61.6 | -0.0052 | -0.0839 | 0 |
| 209 | SLE RA 20 | -1.52 | 0.01 | 62.24 | -0.006 | -0.0987 | 0 |
| 209 | SLE RA 21 | -1.34 | 0.01 | 62.09 | -0.005 | -0.0905 | 0 |
| 209 | SLE FR 1 | -0.65 | 0.01 | 52.96 | -0.0054 | -0.0539 | 0 |
| 209 | SLE FR 2 | -0.59 | 0.01 | 52.91 | -0.005 | -0.0511 | 0 |
| 209 | SLE FR 3 | -0.7 | 0.01 | 53.16 | -0.0053 | -0.0565 | 0 |
| 209 | SLE FR 4 | -0.81 | 0.01 | 55.55 | -0.0053 | -0.0626 | 0 |
| 209 | SLE FR 5 | -0.92 | 0.01 | 55.79 | -0.0056 | -0.068 | 0 |
| 209 | SLE FR 6 | -1.02 | 0.01 | 57.36 | -0.0058 | -0.073 | 0 |
| 209 | SLE QP 1 | -0.65 | 0.01 | 52.96 | -0.0054 | -0.0539 | 0 |
| 209 | SLE QP 2 | -0.87 | 0.01 | 55.6 | -0.0057 | -0.0653 | 0 |
| 209 | SLD 1 | 9.65 | 0.01 | 66.15 | -0.0268 | 0.4486 | -0.0001 |
| 209 | SLD 2 | 9.65 | 0.01 | 66.15 | -0.0268 | 0.4486 | -0.0001 |
| 209 | SLD 3 | 9.08 | -0.14 | 65.3 | 0.1212 | 0.4219 | 0.0005 |
| 209 | SLD 4 | 9.08 | -0.14 | 65.3 | 0.1212 | 0.4219 | 0.0005 |
| 209 | SLD 5 | 3.14 | 0.24 | 60.06 | -0.2365 | 0.1293 | -0.001 |
| 209 | SLD 6 | 3.14 | 0.24 | 60.06 | -0.2365 | 0.1293 | -0.001 |
| 209 | SLD 7 | 1.26 | -0.27 | 57.21 | 0.2569 | 0.0404 | 0.0011 |
| 209 | SLD 8 | 1.26 | -0.27 | 57.21 | 0.2569 | 0.0404 | 0.0011 |
| 209 | SLD 9 | -3 | 0.28 | 53.99 | -0.2682 | -0.1711 | -0.0012 |
| 209 | SLD 10 | -3 | 0.28 | 53.99 | -0.2682 | -0.1711 | -0.0012 |
| 209 | SLD 11 | -4.88 | -0.23 | 51.13 | 0.2252 | -0.2599 | 0.001 |
| 209 | SLD 12 | -4.88 | -0.23 | 51.13 | 0.2252 | -0.2599 | 0.001 |
| 209 | SLD 13 | -10.82 | 0.15 | 45.9 | -0.1325 | -0.5526 | -0.0006 |
| 209 | SLD 14 | -10.82 | 0.15 | 45.9 | -0.1325 | -0.5526 | -0.0006 |
| 209 | SLD 15 | -11.39 | 0 | 45.04 | 0.0155 | -0.5793 | 0.0001 |
| 209 | SLD 16 | -11.39 | 0 | 45.04 | 0.0155 | -0.5793 | 0.0001 |
| 209 | SLV 1 | 23.42 | 0.02 | 80.04 | -0.0581 | 1.1209 | -0.0002 |
| 209 | SLV 2 | 23.42 | 0.02 | 80.04 | -0.0581 | 1.1209 | -0.0002 |
| 209 | SLV 3 | 22.05 | -0.37 | 77.97 | 0.3167 | 1.057 | 0.0014 |
| 209 | SLV 4 | 22.05 | -0.37 | 77.97 | 0.3167 | 1.057 | 0.0014 |
| 209 | SLV 5 | 8.49 | 0.59 | 66.06 | -0.5899 | 0.3876 | -0.0026 |
| 209 | SLV 6 | 8.49 | 0.59 | 66.06 | -0.5899 | 0.3876 | -0.0026 |
| 209 | SLV 7 | 3.94 | -0.69 | 59.18 | 0.6595 | 0.1743 | 0.0029 |
| 209 | SLV 8 | 3.94 | -0.69 | 59.18 | 0.6595 | 0.1743 | 0.0029 |
| 209 | SLV 9 | -5.68 | 0.7 | 52.02 | -0.6708 | -0.305 | -0.0029 |
| 209 | SLV 10 | -5.68 | 0.7 | 52.02 | -0.6708 | -0.305 | -0.0029 |
| 209 | SLV 11 | -10.22 | -0.58 | 45.14 | 0.5786 | -0.5182 | 0.0026 |
| 209 | SLV 12 | -10.22 | -0.58 | 45.14 | 0.5786 | -0.5182 | 0.0026 |

| Nodo | Cont. | Reazione a traslazione | | | Reazione a rotazione | | |
|---|---|---|---|---|---|---|---|
| Ind. | N.br. | x | y | z | x | y | z |
| 209 | SLV 13 | -23.79 | 0.38 | 33.22 | -0.328 | -1.1876 | -0.0014 |
| 209 | SLV 14 | -23.79 | 0.38 | 33.22 | -0.328 | -1.1876 | -0.0014 |
| 209 | SLV 15 | -25.16 | -0.01 | 31.16 | 0.0468 | -1.2516 | 0.0002 |
| 209 | SLV 16 | -25.16 | -0.01 | 31.16 | 0.0468 | -1.2516 | 0.0002 |
| 210 | SLU 1 | -2.68 | 0 | 51.36 | -0.0033 | -0.1123 | 0 |
| 210 | SLU 2 | -2.17 | 0 | 51.09 | 0.0026 | -0.0905 | 0 |
| 210 | SLU 3 | -3.08 | 0 | 52.61 | -0.0031 | -0.1301 | 0 |
| 210 | SLU 4 | -2.78 | 0 | 52.45 | 0.0005 | -0.1171 | 0 |
| 210 | SLU 5 | -2.43 | 0 | 51.85 | 0.0029 | -0.1018 | 0 |
| 210 | SLU 6 | -3.33 | 0 | 53.38 | -0.0028 | -0.1414 | 0 |
| 210 | SLU 7 | -3.03 | 0 | 53.21 | 0.0007 | -0.1284 | 0 |
| 210 | SLU 8 | -3.19 | 0 | 52.89 | -0.0027 | -0.1349 | 0 |
| 210 | SLU 9 | -2.89 | 0 | 52.73 | 0.0008 | -0.1219 | 0 |
| 210 | SLU 10 | -3.47 | 0 | 60.49 | 0.002 | -0.147 | 0 |
| 210 | SLU 11 | -4.38 | 0 | 62.01 | -0.0036 | -0.1866 | 0 |
| 210 | SLU 12 | -4.07 | 0 | 61.85 | -0.0001 | -0.1736 | 0 |
| 210 | SLU 13 | -3.73 | 0 | 61.25 | 0.0023 | -0.1584 | 0 |
| 210 | SLU 14 | -4.63 | 0 | 62.78 | -0.0034 | -0.1979 | 0 |
| 210 | SLU 15 | -4.33 | 0 | 62.61 | 0.0002 | -0.1849 | 0 |
| 210 | SLU 16 | -4.49 | 0 | 62.29 | -0.0033 | -0.1914 | 0 |
| 210 | SLU 17 | -4.18 | 0 | 62.13 | 0.0002 | -0.1784 | 0 |
| 210 | SLU 18 | -4.53 | 0 | 64.79 | -0.0041 | -0.193 | 0 |
| 210 | SLU 19 | -4.23 | 0 | 64.63 | -0.0006 | -0.18 | 0 |
| 210 | SLU 20 | -4.79 | 0 | 65.55 | -0.0038 | -0.2043 | 0 |
| 210 | SLU 21 | -4.48 | 0 | 65.39 | -0.0003 | -0.1913 | 0 |
| 210 | SLU 22 | -3.83 | 0 | 59.89 | -0.0038 | -0.1621 | 0 |
| 210 | SLU 23 | -3.32 | 0 | 59.62 | 0.0021 | -0.1403 | 0 |
| 210 | SLU 24 | -4.22 | 0 | 61.14 | -0.0035 | -0.1799 | 0 |
| 210 | SLU 25 | -3.92 | 0 | 60.98 | 0 | -0.1668 | 0 |
| 210 | SLU 26 | -3.58 | 0 | 60.38 | 0.0024 | -0.1516 | 0 |
| 210 | SLU 27 | -4.48 | 0 | 61.9 | -0.0032 | -0.1912 | 0 |
| 210 | SLU 28 | -4.18 | 0 | 61.74 | 0.0003 | -0.1782 | 0 |
| 210 | SLU 29 | -4.34 | 0 | 61.42 | -0.0032 | -0.1847 | 0 |
| 210 | SLU 30 | -4.03 | 0 | 61.25 | 0.0003 | -0.1717 | 0 |
| 210 | SLU 31 | -4.62 | 0 | 69.02 | 0.0015 | -0.1968 | 0 |
| 210 | SLU 32 | -5.52 | 0 | 70.54 | -0.0041 | -0.2364 | 0 |
| 210 | SLU 33 | -5.22 | 0 | 70.38 | -0.0006 | -0.2234 | 0 |
| 210 | SLU 34 | -4.87 | 0 | 69.78 | 0.0018 | -0.2081 | 0 |
| 210 | SLU 35 | -5.78 | 0 | 71.3 | -0.0038 | -0.2477 | 0 |
| 210 | SLU 36 | -5.48 | 0 | 71.14 | -0.0003 | -0.2347 | 0 |
| 210 | SLU 37 | -5.63 | 0 | 70.82 | -0.0038 | -0.2412 | 0 |
| 210 | SLU 38 | -5.33 | 0 | 70.65 | -0.0003 | -0.2282 | 0 |
| 210 | SLU 39 | -5.68 | 0 | 73.32 | -0.0046 | -0.2428 | 0 |
| 210 | SLU 40 | -5.38 | 0 | 73.15 | -0.0011 | -0.2298 | 0 |
| 210 | SLU 41 | -5.93 | 0 | 74.08 | -0.0043 | -0.2541 | 0 |
| 210 | SLU 42 | -5.63 | 0 | 73.92 | -0.0008 | -0.2411 | 0 |
| 210 | SLU 43 | -3.09 | 0 | 63.85 | -0.0041 | -0.1289 | 0 |
| 210 | SLU 44 | -2.58 | 0 | 63.58 | 0.0017 | -0.1072 | 0 |
| 210 | SLU 45 | -3.49 | 0 | 65.1 | -0.0039 | -0.1467 | 0 |
| 210 | SLU 46 | -3.19 | 0 | 64.93 | -0.0004 | -0.1337 | 0 |
| 210 | SLU 47 | -2.84 | 0 | 64.34 | 0.002 | -0.1185 | 0 |
| 210 | SLU 48 | -3.74 | 0 | 65.86 | -0.0036 | -0.158 | 0 |
| 210 | SLU 49 | -3.44 | 0 | 65.7 | -0.0001 | -0.145 | 0 |
| 210 | SLU 50 | -3.6 | 0 | 65.38 | -0.0035 | -0.1515 | 0 |
| 210 | SLU 51 | -3.3 | 0 | 65.21 | 0 | -0.1385 | 0 |
| 210 | SLU 52 | -3.88 | 0 | 72.98 | 0.0011 | -0.1637 | 0 |
| 210 | SLU 53 | -4.79 | 0 | 74.5 | -0.0045 | -0.2032 | 0 |
| 210 | SLU 54 | -4.48 | 0 | 74.33 | -0.001 | -0.1902 | 0 |
| 210 | SLU 55 | -4.14 | 0 | 73.74 | 0.0014 | -0.175 | 0 |
| 210 | SLU 56 | -5.04 | 0 | 75.26 | -0.0042 | -0.2146 | 0 |
| 210 | SLU 57 | -4.74 | 0 | 75.1 | -0.0007 | -0.2015 | 0 |
| 210 | SLU 58 | -4.9 | 0 | 74.78 | -0.0041 | -0.2081 | 0 |
| 210 | SLU 59 | -4.59 | 0 | 74.61 | -0.0006 | -0.195 | 0 |
| 210 | SLU 60 | -4.94 | 0 | 77.28 | -0.005 | -0.2096 | 0 |
| 210 | SLU 61 | -4.64 | 0 | 77.11 | -0.0014 | -0.1966 | 0 |
| 210 | SLU 62 | -5.2 | 0 | 78.04 | -0.0047 | -0.221 | 0 |
| 210 | SLU 63 | -4.89 | 0 | 77.88 | -0.0012 | -0.2079 | 0 |
| 210 | SLU 64 | -4.24 | 0 | 72.37 | -0.0046 | -0.1787 | 0 |
| 210 | SLU 65 | -3.73 | 0 | 72.1 | 0.0013 | -0.1569 | 0 |
| 210 | SLU 66 | -4.63 | 0 | 73.62 | -0.0044 | -0.1965 | 0 |
| 210 | SLU 67 | -4.33 | 0 | 73.46 | -0.0008 | -0.1835 | 0 |
| 210 | SLU 68 | -3.99 | 0 | 72.87 | 0.0016 | -0.1683 | 0 |
| 210 | SLU 69 | -4.89 | 0 | 74.39 | -0.0041 | -0.2078 | 0 |
| 210 | SLU 70 | -4.59 | 0 | 74.23 | -0.0006 | -0.1948 | 0 |
| 210 | SLU 71 | -4.75 | 0 | 73.9 | -0.004 | -0.2013 | 0 |
| 210 | SLU 72 | -4.44 | 0 | 73.74 | -0.0005 | -0.1883 | 0 |
| 210 | SLU 73 | -5.03 | 0 | 81.5 | 0.0007 | -0.2135 | 0 |
| 210 | SLU 74 | -5.93 | 0 | 83.02 | -0.0049 | -0.253 | 0 |
| 210 | SLU 75 | -5.63 | 0 | 82.86 | -0.0014 | -0.24 | 0 |
| 210 | SLU 76 | -5.28 | 0 | 82.27 | 0.001 | -0.2248 | 0 |
| 210 | SLU 77 | -6.19 | 0 | 83.79 | -0.0047 | -0.2643 | 0 |
| 210 | SLU 78 | -5.89 | 0 | 83.63 | -0.0011 | -0.2513 | 0 |
| 210 | SLU 79 | -6.04 | 0 | 83.3 | -0.0046 | -0.2578 | 0 |
| 210 | SLU 80 | -5.74 | 0 | 83.14 | -0.0011 | -0.2448 | 0 |
| 210 | SLU 81 | -6.09 | 0 | 85.8 | -0.0054 | -0.2594 | 0 |
| 210 | SLU 82 | -5.79 | 0 | 85.64 | -0.0019 | -0.2464 | 0 |
| 210 | SLU 83 | -6.34 | 0 | 86.57 | -0.0051 | -0.2708 | 0 |
| 210 | SLU 84 | -6.04 | 0 | 86.4 | -0.0016 | -0.2577 | 0 |

| Nodo | Cont. | Reazione a traslazione | | | Reazione a rotazione | | |
|---|---|---|---|---|---|---|---|
| Ind. | N.br. | x | y | z | x | y | z |
| 210 | SLE RA 1 | -3.01 | 0 | 53.8 | -0.0034 | -0.1265 | 0 |
| 210 | SLE RA 2 | -2.67 | 0 | 53.62 | 0.0005 | -0.112 | 0 |
| 210 | SLE RA 3 | -3.27 | 0 | 54.63 | -0.0033 | -0.1384 | 0 |
| 210 | SLE RA 4 | -3.07 | 0 | 54.52 | -0.0009 | -0.1297 | 0 |
| 210 | SLE RA 5 | -2.84 | 0 | 54.13 | 0.0007 | -0.1196 | 0 |
| 210 | SLE RA 6 | -3.44 | 0 | 55.14 | -0.0031 | -0.1459 | 0 |
| 210 | SLE RA 7 | -3.24 | 0 | 55.03 | -0.0007 | -0.1372 | 0 |
| 210 | SLE RA 8 | -3.35 | 0 | 54.82 | -0.003 | -0.1416 | 0 |
| 210 | SLE RA 9 | -3.14 | 0 | 54.71 | -0.0007 | -0.1329 | 0 |
| 210 | SLE RA 10 | -3.54 | 0 | 59.88 | 0.0001 | -0.1497 | 0 |
| 210 | SLE RA 11 | -4.14 | 0 | 60.9 | -0.0037 | -0.1761 | 0 |
| 210 | SLE RA 12 | -3.94 | 0 | 60.79 | -0.0013 | -0.1674 | 0 |
| 210 | SLE RA 13 | -3.71 | 0 | 60.39 | 0.0003 | -0.1572 | 0 |
| 210 | SLE RA 14 | -4.31 | 0 | 61.41 | -0.0035 | -0.1836 | 0 |
| 210 | SLE RA 15 | -4.11 | 0 | 61.3 | -0.0011 | -0.1749 | 0 |
| 210 | SLE RA 16 | -4.21 | 0 | 61.08 | -0.0034 | -0.1793 | 0 |
| 210 | SLE RA 17 | -4.01 | 0 | 60.98 | -0.0011 | -0.1706 | 0 |
| 210 | SLE RA 18 | -4.24 | 0 | 62.75 | -0.004 | -0.1803 | 0 |
| 210 | SLE RA 19 | -4.04 | 0 | 62.64 | -0.0016 | -0.1716 | 0 |
| 210 | SLE RA 20 | -4.41 | 0 | 63.26 | -0.0038 | -0.1879 | 0 |
| 210 | SLE RA 21 | -4.21 | 0 | 63.15 | -0.0014 | -0.1792 | 0 |
| 210 | SLE FR 1 | -3.01 | 0 | 53.8 | -0.0034 | -0.1265 | 0 |
| 210 | SLE FR 2 | -2.94 | 0 | 53.76 | -0.0026 | -0.1236 | 0 |
| 210 | SLE FR 3 | -3.07 | 0 | 54 | -0.0033 | -0.1295 | 0 |
| 210 | SLE FR 4 | -3.31 | 0 | 56.45 | -0.0028 | -0.1398 | 0 |
| 210 | SLE FR 5 | -3.44 | 0 | 56.69 | -0.0035 | -0.1457 | 0 |
| 210 | SLE FR 6 | -3.62 | 0 | 58.27 | -0.0037 | -0.1534 | 0 |
| 210 | SLE QP 1 | -3.01 | 0 | 53.8 | -0.0034 | -0.1265 | 0 |
| 210 | SLE QP 2 | -3.38 | 0 | 56.48 | -0.0036 | -0.1427 | 0 |
| 210 | SLD 1 | 8.28 | 0.05 | 62.4 | -0.0622 | 0.4013 | -0.0002 |
| 210 | SLD 2 | 8.28 | 0.05 | 62.4 | -0.0622 | 0.4013 | -0.0002 |
| 210 | SLD 3 | 7.61 | -0.18 | 61.74 | 0.1727 | 0.3692 | 0.0008 |
| 210 | SLD 4 | 7.61 | -0.18 | 61.74 | 0.1727 | 0.3692 | 0.0008 |
| 210 | SLD 5 | 1.14 | 0.37 | 59.27 | -0.3775 | 0.0691 | -0.0016 |
| 210 | SLD 6 | 1.14 | 0.37 | 59.27 | -0.3775 | 0.0691 | -0.0016 |
| 210 | SLD 7 | -1.09 | -0.4 | 57.05 | 0.4056 | -0.0377 | 0.0018 |
| 210 | SLD 8 | -1.09 | -0.4 | 57.05 | 0.4056 | -0.0377 | 0.0018 |
| 210 | SLD 9 | -5.66 | 0.41 | 55.92 | -0.4128 | -0.2476 | -0.0018 |
| 210 | SLD 10 | -5.66 | 0.41 | 55.92 | -0.4128 | -0.2476 | -0.0018 |
| 210 | SLD 11 | -7.89 | -0.36 | 53.7 | 0.3703 | -0.3545 | 0.0016 |
| 210 | SLD 12 | -7.89 | -0.36 | 53.7 | 0.3703 | -0.3545 | 0.0016 |
| 210 | SLD 13 | -14.37 | 0.19 | 51.23 | -0.1799 | -0.6546 | -0.0008 |
| 210 | SLD 14 | -14.37 | 0.19 | 51.23 | -0.1799 | -0.6546 | -0.0008 |
| 210 | SLD 15 | -15.04 | -0.04 | 50.56 | 0.0551 | -0.6866 | 0.0002 |
| 210 | SLD 16 | -15.04 | -0.04 | 50.56 | 0.0551 | -0.6866 | 0.0002 |
| 210 | SLV 1 | 23.55 | 0.11 | 70.22 | -0.1531 | 1.1142 | -0.0005 |
| 210 | SLV 2 | 23.55 | 0.11 | 70.22 | -0.1531 | 1.1142 | -0.0005 |
| 210 | SLV 3 | 21.94 | -0.47 | 68.59 | 0.4465 | 1.0368 | 0.0021 |
| 210 | SLV 4 | 21.94 | -0.47 | 68.59 | 0.4465 | 1.0368 | 0.0021 |
| 210 | SLV 5 | 7.16 | 0.92 | 63.07 | -0.9578 | 0.3518 | -0.0041 |
| 210 | SLV 6 | 7.16 | 0.92 | 63.07 | -0.9578 | 0.3518 | -0.0041 |
| 210 | SLV 7 | 1.76 | -1.03 | 57.64 | 1.0408 | 0.0937 | 0.0045 |
| 210 | SLV 8 | 1.76 | -1.03 | 57.64 | 1.0408 | 0.0937 | 0.0045 |
| 210 | SLV 9 | -8.52 | 1.03 | 55.32 | -1.048 | -0.379 | -0.0046 |
| 210 | SLV 10 | -8.52 | 1.03 | 55.32 | -1.048 | -0.379 | -0.0046 |
| 210 | SLV 11 | -13.91 | -0.92 | 49.89 | 0.9506 | -0.6372 | 0.004 |
| 210 | SLV 12 | -13.91 | -0.92 | 49.89 | 0.9506 | -0.6372 | 0.004 |
| 210 | SLV 13 | -28.69 | 0.48 | 44.38 | -0.4537 | -1.3221 | -0.0021 |
| 210 | SLV 14 | -28.69 | 0.48 | 44.38 | -0.4537 | -1.3221 | -0.0021 |
| 210 | SLV 15 | -30.31 | -0.11 | 42.75 | 0.1459 | -1.3995 | 0.0004 |
| 210 | SLV 16 | -30.31 | -0.11 | 42.75 | 0.1459 | -1.3995 | 0.0004 |
| 211 | SLU 1 | -4.36 | 0 | 51.49 | -0.0019 | -0.2017 | 0 |
| 211 | SLU 2 | -3.86 | 0 | 51.37 | 0.0068 | -0.1802 | 0 |
| 211 | SLU 3 | -4.81 | 0 | 52.75 | -0.0017 | -0.2218 | 0 |
| 211 | SLU 4 | -4.51 | 0 | 52.68 | 0.0035 | -0.209 | 0 |
| 211 | SLU 5 | -4.14 | 0 | 52.13 | 0.007 | -0.1928 | 0 |
| 211 | SLU 6 | -5.09 | 0 | 53.51 | -0.0015 | -0.2345 | 0 |
| 211 | SLU 7 | -4.79 | 0 | 53.44 | 0.0037 | -0.2216 | 0 |
| 211 | SLU 8 | -4.93 | 0 | 53 | -0.0015 | -0.2269 | 0 |
| 211 | SLU 9 | -4.62 | 0 | 52.93 | 0.0038 | -0.214 | 0 |
| 211 | SLU 10 | -5.54 | 0 | 60.71 | 0.0064 | -0.2558 | 0 |
| 211 | SLU 11 | -6.49 | 0 | 62.09 | -0.0021 | -0.2974 | 0 |
| 211 | SLU 12 | -6.19 | 0 | 62.02 | 0.0032 | -0.2846 | 0 |
| 211 | SLU 13 | -5.82 | 0 | 61.47 | 0.0067 | -0.2684 | 0 |
| 211 | SLU 14 | -6.78 | 0 | 62.84 | -0.0018 | -0.3101 | 0 |
| 211 | SLU 15 | -6.47 | 0 | 62.78 | 0.0034 | -0.2972 | 0 |
| 211 | SLU 16 | -6.61 | 0 | 62.34 | -0.0018 | -0.3025 | 0 |
| 211 | SLU 17 | -6.31 | 0 | 62.27 | 0.0034 | -0.2896 | 0 |
| 211 | SLU 18 | -6.76 | 0 | 64.82 | -0.0024 | -0.3097 | 0 |
| 211 | SLU 19 | -6.46 | 0 | 64.76 | 0.0028 | -0.2968 | 0 |
| 211 | SLU 20 | -7.05 | 0 | 65.58 | -0.0022 | -0.3223 | 0 |
| 211 | SLU 21 | -6.75 | 0 | 65.51 | 0.003 | -0.3094 | 0 |
| 211 | SLU 22 | -5.84 | 0 | 59.95 | -0.0022 | -0.2684 | 0 |
| 211 | SLU 23 | -5.34 | 0 | 59.84 | 0.0065 | -0.247 | 0 |
| 211 | SLU 24 | -6.29 | 0 | 61.22 | -0.002 | -0.2886 | 0 |
| 211 | SLU 25 | -5.99 | 0 | 61.15 | 0.0032 | -0.2758 | 0 |
| 211 | SLU 26 | -5.62 | 0 | 60.6 | 0.0067 | -0.2596 | 0 |
| 211 | SLU 27 | -6.58 | 0 | 61.98 | -0.0018 | -0.3012 | 0 |

| Nodo | Cont. | Reazione a traslazione | | | Reazione a rotazione | | |
|---|---|---|---|---|---|---|---|
| Ind. | N.br. | x | y | z | x | y | z |
| 211 | SLU 28 | -6.28 | 0 | 61.91 | 0.0035 | -0.2884 | 0 |
| 211 | SLU 29 | -6.41 | 0 | 61.47 | -0.0017 | -0.2937 | 0 |
| 211 | SLU 30 | -6.11 | 0 | 61.4 | 0.0035 | -0.2808 | 0 |
| 211 | SLU 31 | -7.02 | 0 | 69.18 | 0.0062 | -0.3226 | 0 |
| 211 | SLU 32 | -7.98 | 0 | 70.56 | -0.0024 | -0.3642 | 0 |
| 211 | SLU 33 | -7.68 | 0 | 70.49 | 0.0029 | -0.3514 | 0 |
| 211 | SLU 34 | -7.31 | 0 | 69.94 | 0.0064 | -0.3352 | 0 |
| 211 | SLU 35 | -8.26 | 0 | 71.31 | -0.0021 | -0.3768 | 0 |
| 211 | SLU 36 | -7.96 | 0 | 71.25 | 0.0031 | -0.364 | 0 |
| 211 | SLU 37 | -8.09 | 0 | 70.81 | -0.0021 | -0.3693 | 0 |
| 211 | SLU 38 | -7.79 | 0 | 70.74 | 0.0031 | -0.3564 | 0 |
| 211 | SLU 39 | -8.25 | 0 | 73.29 | -0.0027 | -0.3764 | 0 |
| 211 | SLU 40 | -7.95 | 0 | 73.23 | 0.0025 | -0.3636 | 0 |
| 211 | SLU 41 | -8.53 | 0 | 74.05 | -0.0025 | -0.389 | 0 |
| 211 | SLU 42 | -8.23 | 0 | 73.98 | 0.0028 | -0.3762 | 0 |
| 211 | SLU 43 | -5.16 | 0 | 64.03 | -0.0024 | -0.2393 | 0 |
| 211 | SLU 44 | -4.65 | 0 | 63.91 | 0.0063 | -0.2178 | 0 |
| 211 | SLU 45 | -5.61 | 0 | 65.29 | -0.0022 | -0.2594 | 0 |
| 211 | SLU 46 | -5.31 | 0 | 65.22 | 0.003 | -0.2466 | 0 |
| 211 | SLU 47 | -4.94 | 0 | 64.67 | 0.0065 | -0.2304 | 0 |
| 211 | SLU 48 | -5.89 | 0 | 66.05 | -0.002 | -0.2721 | 0 |
| 211 | SLU 49 | -5.59 | 0 | 65.98 | 0.0033 | -0.2592 | 0 |
| 211 | SLU 50 | -5.72 | 0 | 65.54 | -0.0019 | -0.2645 | 0 |
| 211 | SLU 51 | -5.42 | 0 | 65.47 | 0.0033 | -0.2516 | 0 |
| 211 | SLU 52 | -6.34 | 0 | 73.25 | 0.006 | -0.2934 | 0 |
| 211 | SLU 53 | -7.29 | 0 | 74.63 | -0.0026 | -0.335 | 0 |
| 211 | SLU 54 | -6.99 | 0 | 74.56 | 0.0027 | -0.3222 | 0 |
| 211 | SLU 55 | -6.62 | 0 | 74.01 | 0.0062 | -0.306 | 0 |
| 211 | SLU 56 | -7.58 | 0 | 75.39 | -0.0023 | -0.3477 | 0 |
| 211 | SLU 57 | -7.27 | 0 | 75.32 | 0.0029 | -0.3348 | 0 |
| 211 | SLU 58 | -7.41 | 0 | 74.88 | -0.0023 | -0.3401 | 0 |
| 211 | SLU 59 | -7.11 | 0 | 74.81 | 0.0029 | -0.3272 | 0 |
| 211 | SLU 60 | -7.56 | 0 | 77.37 | -0.0029 | -0.3472 | 0 |
| 211 | SLU 61 | -7.26 | 0 | 77.3 | 0.0023 | -0.3344 | 0 |
| 211 | SLU 62 | -7.85 | 0 | 78.12 | -0.0027 | -0.3599 | 0 |
| 211 | SLU 63 | -7.54 | 0 | 78.06 | 0.0026 | -0.347 | 0 |
| 211 | SLU 64 | -6.64 | 0 | 72.5 | -0.0027 | -0.306 | 0 |
| 211 | SLU 65 | -6.14 | 0 | 72.38 | 0.006 | -0.2846 | 0 |
| 211 | SLU 66 | -7.09 | 0 | 73.76 | -0.0025 | -0.3262 | 0 |
| 211 | SLU 67 | -6.79 | 0 | 73.69 | 0.0027 | -0.3134 | 0 |
| 211 | SLU 68 | -6.42 | 0 | 73.14 | 0.0063 | -0.2972 | 0 |
| 211 | SLU 69 | -7.38 | 0 | 74.52 | -0.0023 | -0.3388 | 0 |
| 211 | SLU 70 | -7.07 | 0 | 74.45 | 0.003 | -0.326 | 0 |
| 211 | SLU 71 | -7.21 | 0 | 74.01 | -0.0022 | -0.3313 | 0 |
| 211 | SLU 72 | -6.91 | 0 | 73.94 | 0.003 | -0.3184 | 0 |
| 211 | SLU 73 | -7.82 | 0 | 81.72 | 0.0057 | -0.3602 | 0 |
| 211 | SLU 74 | -8.78 | 0 | 83.1 | -0.0028 | -0.4018 | 0 |
| 211 | SLU 75 | -8.47 | 0 | 83.03 | 0.0024 | -0.389 | 0 |
| 211 | SLU 76 | -8.11 | 0 | 82.48 | 0.0059 | -0.3728 | 0 |
| 211 | SLU 77 | -9.06 | 0 | 83.86 | -0.0026 | -0.4144 | 0 |
| 211 | SLU 78 | -8.76 | 0 | 83.79 | 0.0026 | -0.4016 | 0 |
| 211 | SLU 79 | -8.89 | 0 | 83.35 | -0.0026 | -0.4069 | 0 |
| 211 | SLU 80 | -8.59 | 0 | 83.28 | 0.0027 | -0.394 | 0 |
| 211 | SLU 81 | -9.05 | 0 | 85.83 | -0.0032 | -0.414 | 0 |
| 211 | SLU 82 | -8.75 | 0 | 85.77 | 0.002 | -0.4012 | 0 |
| 211 | SLU 83 | -9.33 | 0 | 86.59 | -0.003 | -0.4266 | 0 |
| 211 | SLU 84 | -9.03 | 0 | 86.52 | 0.0023 | -0.4138 | 0 |
| 211 | SLE RA 1 | -4.78 | 0 | 53.9 | -0.002 | -0.2207 | 0 |
| 211 | SLE RA 2 | -4.45 | 0 | 53.83 | 0.0038 | -0.2064 | 0 |
| 211 | SLE RA 3 | -5.08 | 0 | 54.75 | -0.0019 | -0.2342 | 0 |
| 211 | SLE RA 4 | -4.88 | 0 | 54.7 | 0.0016 | -0.2256 | 0 |
| 211 | SLE RA 5 | -4.64 | 0 | 54.33 | 0.004 | -0.2148 | 0 |
| 211 | SLE RA 6 | -5.27 | 0 | 55.25 | -0.0017 | -0.2426 | 0 |
| 211 | SLE RA 7 | -5.07 | 0 | 55.21 | 0.0018 | -0.234 | 0 |
| 211 | SLE RA 8 | -5.16 | 0 | 54.91 | -0.0017 | -0.2376 | 0 |
| 211 | SLE RA 9 | -4.96 | 0 | 54.87 | 0.0018 | -0.229 | 0 |
| 211 | SLE RA 10 | -5.57 | 0 | 60.05 | 0.0036 | -0.2568 | 0 |
| 211 | SLE RA 11 | -6.21 | 0 | 60.97 | -0.0021 | -0.2846 | 0 |
| 211 | SLE RA 12 | -6 | 0 | 60.93 | 0.0014 | -0.276 | 0 |
| 211 | SLE RA 13 | -5.76 | 0 | 60.56 | 0.0037 | -0.2652 | 0 |
| 211 | SLE RA 14 | -6.39 | 0 | 61.48 | -0.002 | -0.293 | 0 |
| 211 | SLE RA 15 | -6.19 | 0 | 61.43 | 0.0015 | -0.2844 | 0 |
| 211 | SLE RA 16 | -6.28 | 0 | 61.14 | -0.0019 | -0.288 | 0 |
| 211 | SLE RA 17 | -6.08 | 0 | 61.09 | 0.0016 | -0.2794 | 0 |
| 211 | SLE RA 18 | -6.39 | 0 | 62.8 | -0.0023 | -0.2927 | 0 |
| 211 | SLE RA 19 | -6.19 | 0 | 62.75 | 0.0011 | -0.2842 | 0 |
| 211 | SLE RA 20 | -6.58 | 0 | 63.3 | -0.0022 | -0.3011 | 0 |
| 211 | SLE RA 21 | -6.37 | 0 | 63.26 | 0.0013 | -0.2926 | 0 |
| 211 | SLE FR 1 | -4.78 | 0 | 53.9 | -0.002 | -0.2207 | 0 |
| 211 | SLE FR 2 | -4.72 | 0 | 53.89 | -0.0008 | -0.2179 | 0 |
| 211 | SLE FR 3 | -4.86 | 0 | 54.11 | -0.0019 | -0.2241 | 0 |
| 211 | SLE FR 4 | -5.2 | 0 | 56.56 | -0.0009 | -0.2395 | 0 |
| 211 | SLE FR 5 | -5.34 | 0 | 56.77 | -0.002 | -0.2457 | 0 |
| 211 | SLE FR 6 | -5.59 | 0 | 58.35 | -0.0022 | -0.2567 | 0 |
| 211 | SLE QP 1 | -4.78 | 0 | 53.9 | -0.002 | -0.2207 | 0 |
| 211 | SLE QP 2 | -5.26 | 0 | 56.57 | -0.0021 | -0.2423 | 0 |
| 211 | SLD 1 | 6.98 | 0.08 | 59.87 | -0.0929 | 0.3113 | -0.0004 |
| 211 | SLD 2 | 6.98 | 0.08 | 59.87 | -0.0929 | 0.3113 | -0.0004 |

| Nodo | Cont. | Reazione a traslazione | | | Reazione a rotazione | | |
|---|---|---|---|---|---|---|---|
| Ind. | N.br. | x | y | z | x | y | z |
| 211 | SLD 3 | 6.28 | -0.21 | 59.33 | 0.2082 | 0.2808 | 0.0011 |
| 211 | SLD 4 | 6.28 | -0.21 | 59.33 | 0.2082 | 0.2808 | 0.0011 |
| 211 | SLD 5 | -0.53 | 0.47 | 58.38 | -0.486 | -0.03 | -0.0024 |
| 211 | SLD 6 | -0.53 | 0.47 | 58.38 | -0.486 | -0.03 | -0.0024 |
| 211 | SLD 7 | -2.86 | -0.51 | 56.58 | 0.5176 | -0.1316 | 0.0026 |
| 211 | SLD 8 | -2.86 | -0.51 | 56.58 | 0.5176 | -0.1316 | 0.0026 |
| 211 | SLD 9 | -7.67 | 0.51 | 56.56 | -0.5218 | -0.353 | -0.0026 |
| 211 | SLD 10 | -7.67 | 0.51 | 56.56 | -0.5218 | -0.353 | -0.0026 |
| 211 | SLD 11 | -9.99 | -0.47 | 54.76 | 0.4818 | -0.4546 | 0.0024 |
| 211 | SLD 12 | -9.99 | -0.47 | 54.76 | 0.4818 | -0.4546 | 0.0024 |
| 211 | SLD 13 | -16.81 | 0.21 | 53.81 | -0.2124 | -0.7655 | -0.0011 |
| 211 | SLD 14 | -16.81 | 0.21 | 53.81 | -0.2124 | -0.7655 | -0.0011 |
| 211 | SLD 15 | -17.51 | -0.08 | 53.27 | 0.0887 | -0.7959 | 0.0004 |
| 211 | SLD 16 | -17.51 | -0.08 | 53.27 | 0.0887 | -0.7959 | 0.0004 |
| 211 | SLV 1 | 23 | 0.21 | 64.25 | -0.2345 | 1.0352 | -0.001 |
| 211 | SLV 2 | 23 | 0.21 | 64.25 | -0.2345 | 1.0352 | -0.001 |
| 211 | SLV 3 | 21.32 | -0.54 | 62.92 | 0.5355 | 0.9619 | 0.0028 |
| 211 | SLV 4 | 21.32 | -0.54 | 62.92 | 0.5355 | 0.9619 | 0.0028 |
| 211 | SLV 5 | 5.76 | 1.2 | 60.9 | -1.2398 | 0.2521 | -0.0061 |
| 211 | SLV 6 | 5.76 | 1.2 | 60.9 | -1.2398 | 0.2521 | -0.0061 |
| 211 | SLV 7 | 0.16 | -1.3 | 56.45 | 1.3272 | 0.0077 | 0.0066 |
| 211 | SLV 8 | 0.16 | -1.3 | 56.45 | 1.3272 | 0.0077 | 0.0066 |
| 211 | SLV 9 | -10.69 | 1.3 | 56.69 | -1.3314 | -0.4924 | -0.0066 |
| 211 | SLV 10 | -10.69 | 1.3 | 56.69 | -1.3314 | -0.4924 | -0.0066 |
| 211 | SLV 11 | -16.29 | -1.2 | 52.25 | 1.2356 | -0.7368 | 0.0061 |
| 211 | SLV 12 | -16.29 | -1.2 | 52.25 | 1.2356 | -0.7368 | 0.0061 |
| 211 | SLV 13 | -31.85 | 0.54 | 50.23 | -0.5398 | -1.4466 | -0.0028 |
| 211 | SLV 14 | -31.85 | 0.54 | 50.23 | -0.5398 | -1.4466 | -0.0028 |
| 211 | SLV 15 | -33.53 | -0.21 | 48.9 | 0.2303 | -1.5199 | 0.001 |
| 211 | SLV 16 | -33.53 | -0.21 | 48.9 | 0.2303 | -1.5199 | 0.001 |
| 212 | SLU 1 | -5.29 | 0 | 51.4 | -0.0009 | -0.2277 | 0 |
| 212 | SLU 2 | -4.82 | -0.01 | 51.44 | 0.0105 | -0.2074 | 0 |
| 212 | SLU 3 | -5.76 | 0 | 52.66 | -0.0007 | -0.2482 | 0 |
| 212 | SLU 4 | -5.47 | 0 | 52.69 | 0.0061 | -0.236 | 0 |
| 212 | SLU 5 | -5.11 | -0.01 | 52.18 | 0.0107 | -0.2201 | 0 |
| 212 | SLU 6 | -6.05 | 0 | 53.4 | -0.0006 | -0.2609 | 0 |
| 212 | SLU 7 | -5.76 | 0 | 53.43 | 0.0063 | -0.2487 | 0 |
| 212 | SLU 8 | -5.87 | 0 | 52.88 | -0.0006 | -0.2532 | 0 |
| 212 | SLU 9 | -5.59 | 0 | 52.91 | 0.0063 | -0.241 | 0 |
| 212 | SLU 10 | -6.72 | -0.01 | 60.62 | 0.0103 | -0.2897 | 0 |
| 212 | SLU 11 | -7.67 | 0 | 61.84 | -0.0009 | -0.3305 | 0 |
| 212 | SLU 12 | -7.38 | 0 | 61.87 | 0.0059 | -0.3183 | 0 |
| 212 | SLU 13 | -7.02 | -0.01 | 61.36 | 0.0105 | -0.3024 | 0 |
| 212 | SLU 14 | -7.96 | 0 | 62.58 | -0.0008 | -0.3432 | 0 |
| 212 | SLU 15 | -7.67 | 0 | 62.61 | 0.0061 | -0.331 | 0 |
| 212 | SLU 16 | -7.78 | 0 | 62.06 | -0.0008 | -0.3355 | 0 |
| 212 | SLU 17 | -7.5 | 0 | 62.09 | 0.0061 | -0.3233 | 0 |
| 212 | SLU 18 | -8.02 | 0 | 64.52 | -0.0012 | -0.3453 | 0 |
| 212 | SLU 19 | -7.73 | 0 | 64.54 | 0.0057 | -0.3331 | 0 |
| 212 | SLU 20 | -8.31 | 0 | 65.26 | -0.001 | -0.358 | 0 |
| 212 | SLU 21 | -8.02 | 0 | 65.28 | 0.0058 | -0.3458 | 0 |
| 212 | SLU 22 | -6.97 | 0 | 59.74 | -0.0011 | -0.3 | 0 |
| 212 | SLU 23 | -6.49 | -0.01 | 59.78 | 0.0104 | -0.2796 | 0 |
| 212 | SLU 24 | -7.43 | 0 | 61 | -0.0009 | -0.3204 | 0 |
| 212 | SLU 25 | -7.15 | 0 | 61.03 | 0.0059 | -0.3083 | 0 |
| 212 | SLU 26 | -6.78 | -0.01 | 60.52 | 0.0105 | -0.2924 | 0 |
| 212 | SLU 27 | -7.72 | 0 | 61.74 | -0.0007 | -0.3332 | 0 |
| 212 | SLU 28 | -7.44 | 0 | 61.77 | 0.0061 | -0.321 | 0 |
| 212 | SLU 29 | -7.55 | 0 | 61.22 | -0.0007 | -0.3254 | 0 |
| 212 | SLU 30 | -7.26 | 0 | 61.25 | 0.0061 | -0.3132 | 0 |
| 212 | SLU 31 | -8.4 | -0.01 | 68.96 | 0.0102 | -0.362 | 0 |
| 212 | SLU 32 | -9.34 | 0 | 70.18 | -0.0011 | -0.4027 | 0 |
| 212 | SLU 33 | -9.05 | 0 | 70.21 | 0.0058 | -0.3906 | 0 |
| 212 | SLU 34 | -8.69 | -0.01 | 69.71 | 0.0103 | -0.3747 | 0 |
| 212 | SLU 35 | -9.63 | 0 | 70.93 | -0.0009 | -0.4155 | 0 |
| 212 | SLU 36 | -9.35 | 0 | 70.95 | 0.0059 | -0.4033 | 0 |
| 212 | SLU 37 | -9.46 | 0 | 70.41 | -0.0009 | -0.4077 | 0 |
| 212 | SLU 38 | -9.17 | 0 | 70.43 | 0.0059 | -0.3955 | 0 |
| 212 | SLU 39 | -9.69 | 0 | 72.86 | -0.0013 | -0.4175 | 0 |
| 212 | SLU 40 | -9.41 | 0 | 72.88 | 0.0055 | -0.4054 | 0 |
| 212 | SLU 41 | -9.98 | 0 | 73.6 | -0.0012 | -0.4303 | 0 |
| 212 | SLU 42 | -9.7 | 0 | 73.62 | 0.0057 | -0.4181 | 0 |
| 212 | SLU 43 | -6.31 | 0 | 63.96 | -0.0011 | -0.2713 | 0 |
| 212 | SLU 44 | -5.83 | -0.01 | 64 | 0.0103 | -0.251 | 0 |
| 212 | SLU 45 | -6.77 | 0 | 65.22 | -0.001 | -0.2918 | 0 |
| 212 | SLU 46 | -6.49 | 0 | 65.25 | 0.0059 | -0.2796 | 0 |
| 212 | SLU 47 | -6.12 | -0.01 | 64.74 | 0.0105 | -0.2637 | 0 |
| 212 | SLU 48 | -7.06 | 0 | 65.96 | -0.0008 | -0.3045 | 0 |
| 212 | SLU 49 | -6.78 | 0 | 65.99 | 0.0061 | -0.2923 | 0 |
| 212 | SLU 50 | -6.89 | 0 | 65.44 | -0.0008 | -0.2967 | 0 |
| 212 | SLU 51 | -6.6 | 0 | 65.47 | 0.0061 | -0.2845 | 0 |
| 212 | SLU 52 | -7.74 | -0.01 | 73.18 | 0.0101 | -0.3333 | 0 |
| 212 | SLU 53 | -8.68 | 0 | 74.4 | -0.0012 | -0.3741 | 0 |
| 212 | SLU 54 | -8.39 | 0 | 74.43 | 0.0057 | -0.3619 | 0 |
| 212 | SLU 55 | -8.03 | -0.01 | 73.92 | 0.0103 | -0.346 | 0 |
| 212 | SLU 56 | -8.97 | 0 | 75.14 | -0.001 | -0.3868 | 0 |
| 212 | SLU 57 | -8.69 | 0 | 75.17 | 0.0059 | -0.3746 | 0 |
| 212 | SLU 58 | -8.8 | 0 | 74.62 | -0.001 | -0.379 | 0 |

| Nodo | Cont. | Reazione a traslazione | | | Reazione a rotazione | | |
|---|---|---|---|---|---|---|---|
| Ind. | N.br. | x | y | z | x | y | z |
| 212 | SLU 59 | -8.51 | 0 | 74.65 | 0.0059 | -0.3668 | 0 |
| 212 | SLU 60 | -9.03 | 0 | 77.08 | -0.0014 | -0.3889 | 0 |
| 212 | SLU 61 | -8.75 | 0 | 77.1 | 0.0054 | -0.3767 | 0 |
| 212 | SLU 62 | -9.32 | 0 | 77.82 | -0.0012 | -0.4016 | 0 |
| 212 | SLU 63 | -9.04 | 0 | 77.84 | 0.0056 | -0.3894 | 0 |
| 212 | SLU 64 | -7.98 | 0 | 72.3 | -0.0013 | -0.3435 | 0 |
| 212 | SLU 65 | -7.5 | -0.01 | 72.34 | 0.0101 | -0.3232 | 0 |
| 212 | SLU 66 | -8.45 | 0 | 73.56 | -0.0011 | -0.364 | 0 |
| 212 | SLU 67 | -8.16 | 0 | 73.59 | 0.0057 | -0.3518 | 0 |
| 212 | SLU 68 | -7.8 | -0.01 | 73.08 | 0.0103 | -0.3359 | 0 |
| 212 | SLU 69 | -8.74 | 0 | 74.3 | -0.0009 | -0.3767 | 0 |
| 212 | SLU 70 | -8.45 | 0 | 74.33 | 0.0059 | -0.3645 | 0 |
| 212 | SLU 71 | -8.56 | 0 | 73.78 | -0.0009 | -0.369 | 0 |
| 212 | SLU 72 | -8.28 | 0 | 73.81 | 0.0059 | -0.3568 | 0 |
| 212 | SLU 73 | -9.41 | -0.01 | 81.52 | 0.0099 | -0.4055 | 0 |
| 212 | SLU 74 | -10.35 | 0 | 82.74 | -0.0013 | -0.4463 | 0 |
| 212 | SLU 75 | -10.07 | 0 | 82.77 | 0.0055 | -0.4341 | 0 |
| 212 | SLU 76 | -9.7 | -0.01 | 82.26 | 0.0101 | -0.4182 | 0 |
| 212 | SLU 77 | -10.64 | 0 | 83.49 | -0.0011 | -0.459 | 0 |
| 212 | SLU 78 | -10.36 | 0 | 83.51 | 0.0057 | -0.4468 | 0 |
| 212 | SLU 79 | -10.47 | 0 | 82.96 | -0.0011 | -0.4513 | 0 |
| 212 | SLU 80 | -10.18 | 0 | 82.99 | 0.0057 | -0.4391 | 0 |
| 212 | SLU 81 | -10.7 | 0 | 85.42 | -0.0016 | -0.4611 | 0 |
| 212 | SLU 82 | -10.42 | 0 | 85.44 | 0.0053 | -0.4489 | 0 |
| 212 | SLU 83 | -11 | 0 | 86.16 | -0.0014 | -0.4738 | 0 |
| 212 | SLU 84 | -10.71 | 0 | 86.18 | 0.0055 | -0.4616 | 0 |
| 212 | SLE RA 1 | -5.77 | 0 | 53.78 | -0.001 | -0.2484 | 0 |
| 212 | SLE RA 2 | -5.45 | 0 | 53.81 | 0.0067 | -0.2348 | 0 |
| 212 | SLE RA 3 | -6.08 | 0 | 54.62 | -0.0008 | -0.262 | 0 |
| 212 | SLE RA 4 | -5.89 | 0 | 54.64 | 0.0037 | -0.2539 | 0 |
| 212 | SLE RA 5 | -5.65 | 0 | 54.3 | 0.0068 | -0.2433 | 0 |
| 212 | SLE RA 6 | -6.28 | 0 | 55.12 | -0.0007 | -0.2705 | 0 |
| 212 | SLE RA 7 | -6.09 | 0 | 55.13 | 0.0038 | -0.2624 | 0 |
| 212 | SLE RA 8 | -6.16 | 0 | 54.77 | -0.0007 | -0.2653 | 0 |
| 212 | SLE RA 9 | -5.97 | 0 | 54.79 | 0.0038 | -0.2572 | 0 |
| 212 | SLE RA 10 | -6.72 | 0 | 59.93 | 0.0065 | -0.2897 | 0 |
| 212 | SLE RA 11 | -7.35 | 0 | 60.74 | -0.001 | -0.3169 | 0 |
| 212 | SLE RA 12 | -7.16 | 0 | 60.76 | 0.0036 | -0.3088 | 0 |
| 212 | SLE RA 13 | -6.92 | 0 | 60.43 | 0.0066 | -0.2982 | 0 |
| 212 | SLE RA 14 | -7.55 | 0 | 61.24 | -0.0009 | -0.3254 | 0 |
| 212 | SLE RA 15 | -7.36 | 0 | 61.26 | 0.0037 | -0.3172 | 0 |
| 212 | SLE RA 16 | -7.43 | 0 | 60.89 | -0.0008 | -0.3202 | 0 |
| 212 | SLE RA 17 | -7.24 | 0 | 60.91 | 0.0037 | -0.3121 | 0 |
| 212 | SLE RA 18 | -7.59 | 0 | 62.53 | -0.0011 | -0.3268 | 0 |
| 212 | SLE RA 19 | -7.4 | 0 | 62.54 | 0.0034 | -0.3186 | 0 |
| 212 | SLE RA 20 | -7.78 | 0 | 63.02 | -0.001 | -0.3352 | 0 |
| 212 | SLE RA 21 | -7.59 | 0 | 63.04 | 0.0035 | -0.3271 | 0 |
| 212 | SLE FR 1 | -5.77 | 0 | 53.78 | -0.001 | -0.2484 | 0 |
| 212 | SLE FR 2 | -5.71 | 0 | 53.79 | 0.0006 | -0.2457 | 0 |
| 212 | SLE FR 3 | -5.85 | 0 | 53.98 | -0.0009 | -0.2518 | 0 |
| 212 | SLE FR 4 | -6.25 | 0 | 56.41 | 0.0005 | -0.2692 | 0 |
| 212 | SLE FR 5 | -6.39 | 0 | 56.6 | -0.001 | -0.2753 | 0 |
| 212 | SLE FR 6 | -6.68 | 0 | 58.15 | -0.001 | -0.2876 | 0 |
| 212 | SLE QP 1 | -5.77 | 0 | 53.78 | -0.001 | -0.2484 | 0 |
| 212 | SLE QP 2 | -6.32 | 0 | 56.4 | -0.001 | -0.2719 | 0 |
| 212 | SLD 1 | 6.17 | 0.11 | 58.39 | -0.1162 | 0.2883 | -0.0006 |
| 212 | SLD 2 | 6.17 | 0.11 | 58.39 | -0.1162 | 0.2883 | -0.0006 |
| 212 | SLD 3 | 5.44 | -0.23 | 57.94 | 0.2289 | 0.2552 | 0.0012 |
| 212 | SLD 4 | 5.44 | -0.23 | 57.94 | 0.2289 | 0.2552 | 0.0012 |
| 212 | SLD 5 | -1.46 | 0.55 | 57.68 | -0.5589 | -0.0537 | -0.0029 |
| 212 | SLD 6 | -1.46 | 0.55 | 57.68 | -0.5589 | -0.0537 | -0.0029 |
| 212 | SLD 7 | -3.9 | -0.58 | 56.18 | 0.5913 | -0.164 | 0.0031 |
| 212 | SLD 8 | -3.9 | -0.58 | 56.18 | 0.5913 | -0.164 | 0.0031 |
| 212 | SLD 9 | -8.73 | 0.59 | 56.63 | -0.5933 | -0.3798 | -0.0031 |
| 212 | SLD 10 | -8.73 | 0.59 | 56.63 | -0.5933 | -0.3798 | -0.0031 |
| 212 | SLD 11 | -11.17 | -0.55 | 55.13 | 0.5568 | -0.4901 | 0.0029 |
| 212 | SLD 12 | -11.17 | -0.55 | 55.13 | 0.5568 | -0.4901 | 0.0029 |
| 212 | SLD 13 | -18.07 | 0.23 | 54.87 | -0.2309 | -0.7989 | -0.0012 |
| 212 | SLD 14 | -18.07 | 0.23 | 54.87 | -0.2309 | -0.7989 | -0.0012 |
| 212 | SLD 15 | -18.8 | -0.11 | 54.42 | 0.1141 | -0.832 | 0.0006 |
| 212 | SLD 16 | -18.8 | -0.11 | 54.42 | 0.1141 | -0.832 | 0.0006 |
| 212 | SLV 1 | 22.5 | 0.29 | 61.05 | -0.2961 | 1.0213 | -0.0015 |
| 212 | SLV 2 | 22.5 | 0.29 | 61.05 | -0.2961 | 1.0213 | -0.0015 |
| 212 | SLV 3 | 20.74 | -0.58 | 59.94 | 0.5872 | 0.9416 | 0.0032 |
| 212 | SLV 4 | 20.74 | -0.58 | 59.94 | 0.5872 | 0.9416 | 0.0032 |
| 212 | SLV 5 | 5 | 1.41 | 59.49 | -1.4291 | 0.237 | -0.0075 |
| 212 | SLV 6 | 5 | 1.41 | 59.49 | -1.4291 | 0.237 | -0.0075 |
| 212 | SLV 7 | -0.87 | -1.49 | 55.78 | 1.515 | -0.0287 | 0.008 |
| 212 | SLV 8 | -0.87 | -1.49 | 55.78 | 1.515 | -0.0287 | 0.008 |
| 212 | SLV 9 | -11.76 | 1.5 | 57.03 | -1.517 | -0.515 | -0.008 |
| 212 | SLV 10 | -11.76 | 1.5 | 57.03 | -1.517 | -0.515 | -0.008 |
| 212 | SLV 11 | -17.63 | -1.41 | 53.32 | 1.4271 | -0.7807 | 0.0075 |
| 212 | SLV 12 | -17.63 | -1.41 | 53.32 | 1.4271 | -0.7807 | 0.0075 |
| 212 | SLV 13 | -33.37 | 0.58 | 52.87 | -0.5892 | -1.4853 | -0.0032 |
| 212 | SLV 14 | -33.37 | 0.58 | 52.87 | -0.5892 | -1.4853 | -0.0032 |
| 212 | SLV 15 | -35.13 | -0.29 | 51.76 | 0.2941 | -1.565 | 0.0015 |
| 212 | SLV 16 | -35.13 | -0.29 | 51.76 | 0.2941 | -1.565 | 0.0015 |
| 213 | SLU 1 | -6.28 | 0 | 51.36 | -0.0001 | -0.2797 | 0 |

| Nodo | Cont. | Reazione a traslazione | | | Reazione a rotazione | | |
|---|---|---|---|---|---|---|---|
| Ind. | N.br. | x | y | z | x | y | z |
| 213 | SLU 2 | -5.84 | -0.01 | 51.53 | 0.0137 | -0.2615 | 0.0001 |
| 213 | SLU 3 | -6.76 | 0 | 52.62 | 0 | -0.3008 | 0 |
| 213 | SLU 4 | -6.5 | -0.01 | 52.72 | 0.0083 | -0.2899 | 0 |
| 213 | SLU 5 | -6.14 | -0.01 | 52.26 | 0.0138 | -0.2745 | 0.0001 |
| 213 | SLU 6 | -7.05 | 0 | 53.35 | 0.0001 | -0.3137 | 0 |
| 213 | SLU 7 | -6.79 | -0.01 | 53.46 | 0.0084 | -0.3028 | 0 |
| 213 | SLU 8 | -6.87 | 0 | 52.82 | 0.0001 | -0.3056 | 0 |
| 213 | SLU 9 | -6.61 | -0.01 | 52.92 | 0.0084 | -0.2947 | 0 |
| 213 | SLU 10 | -7.97 | -0.01 | 60.54 | 0.0136 | -0.3545 | 0.0001 |
| 213 | SLU 11 | -8.88 | 0 | 61.63 | -0.0001 | -0.3938 | 0 |
| 213 | SLU 12 | -8.62 | -0.01 | 61.73 | 0.0082 | -0.3828 | 0 |
| 213 | SLU 13 | -8.26 | -0.01 | 61.27 | 0.0137 | -0.3674 | 0.0001 |
| 213 | SLU 14 | -9.18 | 0 | 62.36 | 0 | -0.4067 | 0 |
| 213 | SLU 15 | -8.92 | -0.01 | 62.47 | 0.0083 | -0.3958 | 0 |
| 213 | SLU 16 | -8.99 | 0 | 61.83 | 0 | -0.3985 | 0 |
| 213 | SLU 17 | -8.73 | -0.01 | 61.93 | 0.0083 | -0.3876 | 0 |
| 213 | SLU 18 | -9.31 | 0 | 64.23 | -0.0002 | -0.4125 | 0 |
| 213 | SLU 19 | -9.05 | -0.01 | 64.33 | 0.008 | -0.4016 | 0 |
| 213 | SLU 20 | -9.61 | 0 | 64.96 | -0.0001 | -0.4254 | 0 |
| 213 | SLU 21 | -9.35 | -0.01 | 65.06 | 0.0082 | -0.4145 | 0 |
| 213 | SLU 22 | -8.14 | 0 | 59.57 | -0.0002 | -0.3613 | 0 |
| 213 | SLU 23 | -7.71 | -0.01 | 59.74 | 0.0136 | -0.3431 | 0.0001 |
| 213 | SLU 24 | -8.62 | 0 | 60.83 | -0.0001 | -0.3824 | 0 |
| 213 | SLU 25 | -8.36 | -0.01 | 60.93 | 0.0082 | -0.3715 | 0 |
| 213 | SLU 26 | -8 | -0.01 | 60.47 | 0.0137 | -0.3561 | 0.0001 |
| 213 | SLU 27 | -8.91 | 0 | 61.56 | 0 | -0.3954 | 0 |
| 213 | SLU 28 | -8.65 | -0.01 | 61.67 | 0.0083 | -0.3844 | 0 |
| 213 | SLU 29 | -8.73 | 0 | 61.03 | 0 | -0.3872 | 0 |
| 213 | SLU 30 | -8.47 | -0.01 | 61.13 | 0.0083 | -0.3763 | 0 |
| 213 | SLU 31 | -9.83 | -0.01 | 68.75 | 0.0135 | -0.4361 | 0.0001 |
| 213 | SLU 32 | -10.74 | 0 | 69.84 | -0.0002 | -0.4754 | 0 |
| 213 | SLU 33 | -10.48 | -0.01 | 69.94 | 0.0081 | -0.4644 | 0 |
| 213 | SLU 34 | -10.13 | -0.01 | 69.48 | 0.0137 | -0.449 | 0.0001 |
| 213 | SLU 35 | -11.04 | 0 | 70.57 | 0 | -0.4883 | 0 |
| 213 | SLU 36 | -10.78 | -0.01 | 70.68 | 0.0082 | -0.4774 | 0 |
| 213 | SLU 37 | -10.85 | 0 | 70.04 | 0 | -0.4801 | 0 |
| 213 | SLU 38 | -10.59 | -0.01 | 70.14 | 0.0083 | -0.4692 | 0 |
| 213 | SLU 39 | -11.18 | 0 | 72.44 | -0.0003 | -0.4941 | 0 |
| 213 | SLU 40 | -10.91 | -0.01 | 72.54 | 0.008 | -0.4832 | 0 |
| 213 | SLU 41 | -11.47 | 0 | 73.17 | -0.0002 | -0.507 | 0 |
| 213 | SLU 42 | -11.21 | -0.01 | 73.27 | 0.0081 | -0.4961 | 0 |
| 213 | SLU 43 | -7.52 | 0 | 63.95 | -0.0002 | -0.3357 | 0 |
| 213 | SLU 44 | -7.09 | -0.01 | 64.12 | 0.0136 | -0.3175 | 0.0001 |
| 213 | SLU 45 | -8 | 0 | 65.21 | 0 | -0.3568 | 0 |
| 213 | SLU 46 | -7.74 | -0.01 | 65.32 | 0.0082 | -0.3458 | 0 |
| 213 | SLU 47 | -7.38 | -0.01 | 64.85 | 0.0138 | -0.3304 | 0.0001 |
| 213 | SLU 48 | -8.3 | 0 | 65.95 | 0.0001 | -0.3697 | 0 |
| 213 | SLU 49 | -8.03 | -0.01 | 66.05 | 0.0084 | -0.3588 | 0 |
| 213 | SLU 50 | -8.11 | 0 | 65.41 | 0.0001 | -0.3615 | 0 |
| 213 | SLU 51 | -7.85 | -0.01 | 65.51 | 0.0084 | -0.3506 | 0 |
| 213 | SLU 52 | -9.21 | -0.01 | 73.13 | 0.0136 | -0.4104 | 0.0001 |
| 213 | SLU 53 | -10.13 | 0 | 74.22 | -0.0001 | -0.4497 | 0 |
| 213 | SLU 54 | -9.87 | -0.01 | 74.33 | 0.0082 | -0.4388 | 0 |
| 213 | SLU 55 | -9.51 | -0.01 | 73.86 | 0.0137 | -0.4233 | 0.0001 |
| 213 | SLU 56 | -10.42 | 0 | 74.96 | 0 | -0.4626 | 0 |
| 213 | SLU 57 | -10.16 | -0.01 | 75.06 | 0.0083 | -0.4517 | 0 |
| 213 | SLU 58 | -10.24 | 0 | 74.42 | 0 | -0.4545 | 0 |
| 213 | SLU 59 | -9.98 | -0.01 | 74.52 | 0.0083 | -0.4435 | 0 |
| 213 | SLU 60 | -10.56 | 0 | 76.82 | -0.0003 | -0.4684 | 0 |
| 213 | SLU 61 | -10.3 | -0.01 | 76.92 | 0.008 | -0.4575 | 0 |
| 213 | SLU 62 | -10.85 | 0 | 77.55 | -0.0002 | -0.4814 | 0 |
| 213 | SLU 63 | -10.59 | -0.01 | 77.65 | 0.0081 | -0.4704 | 0 |
| 213 | SLU 64 | -9.38 | 0 | 72.16 | -0.0002 | -0.4173 | 0 |
| 213 | SLU 65 | -8.95 | -0.01 | 72.33 | 0.0136 | -0.3991 | 0.0001 |
| 213 | SLU 66 | -9.86 | 0 | 73.42 | -0.0001 | -0.4384 | 0 |
| 213 | SLU 67 | -9.6 | -0.01 | 73.53 | 0.0082 | -0.4274 | 0 |
| 213 | SLU 68 | -9.24 | -0.01 | 73.06 | 0.0137 | -0.412 | 0.0001 |
| 213 | SLU 69 | -10.16 | 0 | 74.16 | 0 | -0.4513 | 0 |
| 213 | SLU 70 | -9.9 | -0.01 | 74.26 | 0.0083 | -0.4404 | 0 |
| 213 | SLU 71 | -9.97 | 0 | 73.62 | 0 | -0.4431 | 0 |
| 213 | SLU 72 | -9.71 | -0.01 | 73.72 | 0.0083 | -0.4322 | 0 |
| 213 | SLU 73 | -11.08 | -0.01 | 81.34 | 0.0135 | -0.492 | 0.0001 |
| 213 | SLU 74 | -11.99 | 0 | 82.43 | -0.0002 | -0.5313 | 0 |
| 213 | SLU 75 | -11.73 | -0.01 | 82.54 | 0.0081 | -0.5204 | 0 |
| 213 | SLU 76 | -11.37 | -0.01 | 82.07 | 0.0136 | -0.5049 | 0.0001 |
| 213 | SLU 77 | -12.28 | 0 | 83.17 | -0.0001 | -0.5442 | 0 |
| 213 | SLU 78 | -12.02 | -0.01 | 83.27 | 0.0082 | -0.5333 | 0 |
| 213 | SLU 79 | -12.1 | 0 | 82.63 | -0.0001 | -0.5361 | 0 |
| 213 | SLU 80 | -11.84 | -0.01 | 82.73 | 0.0082 | -0.5251 | 0 |
| 213 | SLU 81 | -12.42 | 0 | 85.03 | -0.0003 | -0.55 | 0 |
| 213 | SLU 82 | -12.16 | -0.01 | 85.13 | 0.008 | -0.5391 | 0 |
| 213 | SLU 83 | -12.71 | 0 | 85.76 | -0.0002 | -0.563 | 0 |
| 213 | SLU 84 | -12.45 | -0.01 | 85.86 | 0.0081 | -0.552 | 0 |
| 213 | SLE RA 1 | -6.81 | 0 | 53.7 | -0.0002 | -0.303 | 0 |
| 213 | SLE RA 2 | -6.52 | -0.01 | 53.82 | 0.009 | -0.2909 | 0 |
| 213 | SLE RA 3 | -7.13 | 0 | 54.55 | -0.0001 | -0.3171 | 0 |
| 213 | SLE RA 4 | -6.95 | 0 | 54.61 | 0.0054 | -0.3098 | 0 |
| 213 | SLE RA 5 | -6.72 | -0.01 | 54.3 | 0.0091 | -0.2995 | 0 |

| Nodo | Cont. | Reazione a traslazione | | | Reazione a rotazione | | |
|---|---|---|---|---|---|---|---|
| Ind. | N.br. | x | y | z | x | y | z |
| 213 | SLE RA 6 | -7.32 | 0 | 55.03 | 0 | -0.3257 | 0 |
| 213 | SLE RA 7 | -7.15 | 0 | 55.1 | 0.0055 | -0.3184 | 0 |
| 213 | SLE RA 8 | -7.2 | 0 | 54.68 | 0 | -0.3203 | 0 |
| 213 | SLE RA 9 | -7.03 | 0 | 54.75 | 0.0055 | -0.313 | 0 |
| 213 | SLE RA 10 | -7.94 | -0.01 | 59.82 | 0.009 | -0.3529 | 0 |
| 213 | SLE RA 11 | -8.54 | 0 | 60.55 | -0.0001 | -0.3791 | 0 |
| 213 | SLE RA 12 | -8.37 | 0 | 60.62 | 0.0054 | -0.3718 | 0 |
| 213 | SLE RA 13 | -8.13 | -0.01 | 60.31 | 0.0091 | -0.3615 | 0 |
| 213 | SLE RA 14 | -8.74 | 0 | 61.04 | -0.0001 | -0.3877 | 0 |
| 213 | SLE RA 15 | -8.57 | 0 | 61.11 | 0.0055 | -0.3804 | 0 |
| 213 | SLE RA 16 | -8.62 | 0 | 60.68 | 0 | -0.3822 | 0 |
| 213 | SLE RA 17 | -8.45 | 0 | 60.75 | 0.0055 | -0.375 | 0 |
| 213 | SLE RA 18 | -8.83 | 0 | 62.28 | -0.0002 | -0.3916 | 0 |
| 213 | SLE RA 19 | -8.66 | 0 | 62.35 | 0.0053 | -0.3843 | 0 |
| 213 | SLE RA 20 | -9.03 | 0 | 62.77 | -0.0002 | -0.4002 | 0 |
| 213 | SLE RA 21 | -8.86 | 0 | 62.84 | 0.0054 | -0.3929 | 0 |
| 213 | SLE FR 1 | -6.81 | 0 | 53.7 | -0.0002 | -0.303 | 0 |
| 213 | SLE FR 2 | -6.75 | 0 | 53.72 | 0.0017 | -0.3006 | 0 |
| 213 | SLE FR 3 | -6.89 | 0 | 53.9 | -0.0001 | -0.3065 | 0 |
| 213 | SLE FR 4 | -7.36 | 0 | 56.3 | 0.0017 | -0.3272 | 0 |
| 213 | SLE FR 5 | -7.49 | 0 | 56.47 | -0.0002 | -0.333 | 0 |
| 213 | SLE FR 6 | -7.82 | 0 | 57.99 | -0.0002 | -0.3473 | 0 |
| 213 | SLE QP 1 | -6.81 | 0 | 53.7 | -0.0002 | -0.303 | 0 |
| 213 | SLE QP 2 | -7.42 | 0 | 56.28 | -0.0002 | -0.3296 | 0 |
| 213 | SLD 1 | 4.98 | 0.13 | 54.46 | -0.1289 | 0.2181 | -0.0007 |
| 213 | SLD 2 | 4.98 | 0.13 | 54.46 | -0.1289 | 0.2181 | -0.0007 |
| 213 | SLD 3 | 4.26 | -0.23 | 54.07 | 0.2342 | 0.1873 | 0.0012 |
| 213 | SLD 4 | 4.26 | -0.23 | 54.07 | 0.2342 | 0.1873 | 0.0012 |
| 213 | SLD 5 | -2.61 | 0.58 | 56.32 | -0.5894 | -0.1185 | -0.0031 |
| 213 | SLD 6 | -2.61 | 0.58 | 56.32 | -0.5894 | -0.1185 | -0.0031 |
| 213 | SLD 7 | -5 | -0.62 | 55.03 | 0.6208 | -0.2213 | 0.0032 |
| 213 | SLD 8 | -5 | -0.62 | 55.03 | 0.6208 | -0.2213 | 0.0032 |
| 213 | SLD 9 | -9.83 | 0.61 | 57.52 | -0.6211 | -0.4379 | -0.0032 |
| 213 | SLD 10 | -9.83 | 0.61 | 57.52 | -0.6211 | -0.4379 | -0.0032 |
| 213 | SLD 11 | -12.22 | -0.59 | 56.23 | 0.5891 | -0.5407 | 0.0031 |
| 213 | SLD 12 | -12.22 | -0.59 | 56.23 | 0.5891 | -0.5407 | 0.0031 |
| 213 | SLD 13 | -19.1 | 0.23 | 58.48 | -0.2345 | -0.8465 | -0.0012 |
| 213 | SLD 14 | -19.1 | 0.23 | 58.48 | -0.2345 | -0.8465 | -0.0012 |
| 213 | SLD 15 | -19.81 | -0.13 | 58.09 | 0.1285 | -0.8773 | 0.0007 |
| 213 | SLD 16 | -19.81 | -0.13 | 58.09 | 0.1285 | -0.8773 | 0.0007 |
| 213 | SLV 1 | 21.18 | 0.33 | 52.05 | -0.3301 | 0.9336 | -0.0017 |
| 213 | SLV 2 | 21.18 | 0.33 | 52.05 | -0.3301 | 0.9336 | -0.0017 |
| 213 | SLV 3 | 19.46 | -0.59 | 51.1 | 0.5995 | 0.8596 | 0.0031 |
| 213 | SLV 4 | 19.46 | -0.59 | 51.1 | 0.5995 | 0.8596 | 0.0031 |
| 213 | SLV 5 | 3.78 | 1.5 | 56.46 | -1.509 | 0.1616 | -0.0079 |
| 213 | SLV 6 | 3.78 | 1.5 | 56.46 | -1.509 | 0.1616 | -0.0079 |
| 213 | SLV 7 | -1.97 | -1.57 | 53.27 | 1.5896 | -0.0851 | 0.0083 |
| 213 | SLV 8 | -1.97 | -1.57 | 53.27 | 1.5896 | -0.0851 | 0.0083 |
| 213 | SLV 9 | -12.86 | 1.57 | 59.28 | -1.5899 | -0.5741 | -0.0083 |
| 213 | SLV 10 | -12.86 | 1.57 | 59.28 | -1.5899 | -0.5741 | -0.0083 |
| 213 | SLV 11 | -18.61 | -1.5 | 56.09 | 1.5086 | -0.8208 | 0.0079 |
| 213 | SLV 12 | -18.61 | -1.5 | 56.09 | 1.5086 | -0.8208 | 0.0079 |
| 213 | SLV 13 | -34.29 | 0.59 | 61.46 | -0.5999 | -1.5188 | -0.0031 |
| 213 | SLV 14 | -34.29 | 0.59 | 61.46 | -0.5999 | -1.5188 | -0.0031 |
| 213 | SLV 15 | -36.01 | -0.33 | 60.5 | 0.3297 | -1.5928 | 0.0017 |
| 213 | SLV 16 | -36.01 | -0.33 | 60.5 | 0.3297 | -1.5928 | 0.0017 |
| 214 | SLU 1 | -7.13 | 0 | 51.34 | 0.0004 | -0.3074 | 0 |
| 214 | SLU 2 | -6.73 | -0.01 | 51.62 | 0.0161 | -0.2902 | 0.0001 |
| 214 | SLU 3 | -7.62 | 0 | 52.62 | 0.0005 | -0.3287 | 0 |
| 214 | SLU 4 | -7.38 | -0.01 | 52.78 | 0.0099 | -0.3184 | 0 |
| 214 | SLU 5 | -7.03 | -0.01 | 52.35 | 0.0162 | -0.3033 | 0.0001 |
| 214 | SLU 6 | -7.92 | 0 | 53.35 | 0.0006 | -0.3418 | 0 |
| 214 | SLU 7 | -7.68 | -0.01 | 53.51 | 0.01 | -0.3315 | 0 |
| 214 | SLU 8 | -7.73 | 0 | 52.8 | 0.0006 | -0.3335 | 0 |
| 214 | SLU 9 | -7.49 | -0.01 | 52.96 | 0.01 | -0.3231 | 0 |
| 214 | SLU 10 | -9.05 | -0.01 | 60.44 | 0.0162 | -0.3896 | 0.0001 |
| 214 | SLU 11 | -9.94 | 0 | 61.44 | 0.0005 | -0.4282 | 0 |
| 214 | SLU 12 | -9.7 | -0.01 | 61.6 | 0.01 | -0.4178 | 0 |
| 214 | SLU 13 | -9.35 | -0.01 | 61.17 | 0.0162 | -0.4027 | 0.0001 |
| 214 | SLU 14 | -10.24 | 0 | 62.17 | 0.0006 | -0.4412 | 0 |
| 214 | SLU 15 | -10 | -0.01 | 62.33 | 0.01 | -0.4309 | 0 |
| 214 | SLU 16 | -10.05 | 0 | 61.62 | 0.0006 | -0.4329 | 0 |
| 214 | SLU 17 | -9.81 | -0.01 | 61.78 | 0.01 | -0.4226 | 0 |
| 214 | SLU 18 | -10.44 | 0 | 63.94 | 0.0005 | -0.4494 | 0 |
| 214 | SLU 19 | -10.2 | -0.01 | 64.11 | 0.0099 | -0.4391 | 0 |
| 214 | SLU 20 | -10.74 | 0 | 64.67 | 0.0005 | -0.4624 | 0 |
| 214 | SLU 21 | -10.5 | -0.01 | 64.83 | 0.01 | -0.4521 | 0 |
| 214 | SLU 22 | -9.16 | 0 | 59.41 | 0.0004 | -0.3945 | 0 |
| 214 | SLU 23 | -8.76 | -0.01 | 59.69 | 0.0162 | -0.3774 | 0.0001 |
| 214 | SLU 24 | -9.65 | 0 | 60.69 | 0.0005 | -0.4159 | 0 |
| 214 | SLU 25 | -9.41 | -0.01 | 60.86 | 0.01 | -0.4056 | 0 |
| 214 | SLU 26 | -9.06 | -0.01 | 60.42 | 0.0162 | -0.3904 | 0.0001 |
| 214 | SLU 27 | -9.95 | 0 | 61.42 | 0.0006 | -0.4289 | 0 |
| 214 | SLU 28 | -9.71 | -0.01 | 61.59 | 0.01 | -0.4186 | 0 |
| 214 | SLU 29 | -9.76 | 0 | 60.87 | 0.0006 | -0.4206 | 0 |
| 214 | SLU 30 | -9.52 | -0.01 | 61.04 | 0.01 | -0.4103 | 0 |
| 214 | SLU 31 | -11.08 | -0.01 | 68.51 | 0.0162 | -0.4768 | 0.0001 |
| 214 | SLU 32 | -11.97 | 0 | 69.51 | 0.0005 | -0.5153 | 0 |

| Nodo | Cont. | Reazione a traslazione | | | Reazione a rotazione | | |
|---|---|---|---|---|---|---|---|
| Ind. | N.br. | x | y | z | x | y | z |
| 214 | SLU 33 | -11.73 | -0.01 | 69.68 | 0.01 | -0.505 | 0 |
| 214 | SLU 34 | -11.38 | -0.01 | 69.24 | 0.0162 | -0.4898 | 0.0001 |
| 214 | SLU 35 | -12.27 | 0 | 70.24 | 0.0006 | -0.5283 | 0 |
| 214 | SLU 36 | -12.03 | -0.01 | 70.41 | 0.01 | -0.518 | 0 |
| 214 | SLU 37 | -12.08 | 0 | 69.69 | 0.0006 | -0.52 | 0 |
| 214 | SLU 38 | -11.84 | -0.01 | 69.86 | 0.01 | -0.5097 | 0 |
| 214 | SLU 39 | -12.47 | 0 | 72.01 | 0.0005 | -0.5366 | 0 |
| 214 | SLU 40 | -12.23 | -0.01 | 72.18 | 0.0099 | -0.5263 | 0 |
| 214 | SLU 41 | -12.77 | 0 | 72.74 | 0.0005 | -0.5496 | 0 |
| 214 | SLU 42 | -12.53 | -0.01 | 72.91 | 0.01 | -0.5393 | 0 |
| 214 | SLU 43 | -8.58 | 0 | 63.98 | 0.0006 | -0.3697 | 0 |
| 214 | SLU 44 | -8.17 | -0.01 | 64.25 | 0.0163 | -0.3526 | 0.0001 |
| 214 | SLU 45 | -9.06 | 0 | 65.25 | 0.0006 | -0.3911 | 0 |
| 214 | SLU 46 | -8.82 | -0.01 | 65.42 | 0.0101 | -0.3808 | 0 |
| 214 | SLU 47 | -8.47 | -0.01 | 64.98 | 0.0163 | -0.3656 | 0.0001 |
| 214 | SLU 48 | -9.36 | 0 | 65.98 | 0.0007 | -0.4041 | 0 |
| 214 | SLU 49 | -9.12 | -0.01 | 66.15 | 0.0101 | -0.3938 | 0 |
| 214 | SLU 50 | -9.17 | 0 | 65.43 | 0.0007 | -0.3958 | 0 |
| 214 | SLU 51 | -8.93 | -0.01 | 65.6 | 0.0101 | -0.3855 | 0 |
| 214 | SLU 52 | -10.49 | -0.01 | 73.07 | 0.0163 | -0.452 | 0.0001 |
| 214 | SLU 53 | -11.38 | 0 | 74.07 | 0.0007 | -0.4905 | 0 |
| 214 | SLU 54 | -11.14 | -0.01 | 74.24 | 0.0101 | -0.4802 | 0 |
| 214 | SLU 55 | -10.79 | -0.01 | 73.8 | 0.0164 | -0.465 | 0.0001 |
| 214 | SLU 56 | -11.68 | 0 | 74.8 | 0.0007 | -0.5035 | 0 |
| 214 | SLU 57 | -11.44 | -0.01 | 74.97 | 0.0102 | -0.4932 | 0 |
| 214 | SLU 58 | -11.49 | 0 | 74.25 | 0.0007 | -0.4952 | 0 |
| 214 | SLU 59 | -11.25 | -0.01 | 74.42 | 0.0102 | -0.4849 | 0 |
| 214 | SLU 60 | -11.89 | 0 | 76.57 | 0.0006 | -0.5118 | 0 |
| 214 | SLU 61 | -11.65 | -0.01 | 76.74 | 0.01 | -0.5015 | 0 |
| 214 | SLU 62 | -12.19 | 0 | 77.3 | 0.0007 | -0.5248 | 0 |
| 214 | SLU 63 | -11.95 | -0.01 | 77.47 | 0.0101 | -0.5145 | 0 |
| 214 | SLU 64 | -10.6 | 0 | 72.05 | 0.0006 | -0.4569 | 0 |
| 214 | SLU 65 | -10.2 | -0.01 | 72.32 | 0.0163 | -0.4397 | 0.0001 |
| 214 | SLU 66 | -11.09 | 0 | 73.33 | 0.0007 | -0.4782 | 0 |
| 214 | SLU 67 | -10.85 | -0.01 | 73.49 | 0.0101 | -0.4679 | 0 |
| 214 | SLU 68 | -10.5 | -0.01 | 73.05 | 0.0164 | -0.4527 | 0.0001 |
| 214 | SLU 69 | -11.39 | 0 | 74.05 | 0.0007 | -0.4913 | 0 |
| 214 | SLU 70 | -11.15 | -0.01 | 74.22 | 0.0102 | -0.481 | 0 |
| 214 | SLU 71 | -11.2 | 0 | 73.51 | 0.0007 | -0.4829 | 0 |
| 214 | SLU 72 | -10.96 | -0.01 | 73.67 | 0.0101 | -0.4726 | 0 |
| 214 | SLU 73 | -12.52 | -0.01 | 81.14 | 0.0163 | -0.5391 | 0.0001 |
| 214 | SLU 74 | -13.41 | 0 | 82.15 | 0.0007 | -0.5776 | 0 |
| 214 | SLU 75 | -13.17 | -0.01 | 82.31 | 0.0101 | -0.5673 | 0 |
| 214 | SLU 76 | -12.82 | -0.01 | 81.87 | 0.0164 | -0.5521 | 0.0001 |
| 214 | SLU 77 | -13.71 | 0 | 82.87 | 0.0007 | -0.5907 | 0 |
| 214 | SLU 78 | -13.47 | -0.01 | 83.04 | 0.0102 | -0.5804 | 0 |
| 214 | SLU 79 | -13.52 | 0 | 82.33 | 0.0007 | -0.5823 | 0 |
| 214 | SLU 80 | -13.28 | -0.01 | 82.49 | 0.0102 | -0.572 | 0 |
| 214 | SLU 81 | -13.92 | 0 | 84.65 | 0.0006 | -0.5989 | 0 |
| 214 | SLU 82 | -13.68 | -0.01 | 84.81 | 0.01 | -0.5886 | 0 |
| 214 | SLU 83 | -14.22 | 0 | 85.38 | 0.0007 | -0.6119 | 0 |
| 214 | SLU 84 | -13.98 | -0.01 | 85.54 | 0.0101 | -0.6016 | 0 |
| 214 | SLE RA 1 | -7.71 | 0 | 53.65 | 0.0004 | -0.3323 | 0 |
| 214 | SLE RA 2 | -7.44 | -0.01 | 53.83 | 0.0109 | -0.3209 | 0 |
| 214 | SLE RA 3 | -8.04 | 0 | 54.5 | 0.0005 | -0.3465 | 0 |
| 214 | SLE RA 4 | -7.88 | -0.01 | 54.61 | 0.0068 | -0.3397 | 0 |
| 214 | SLE RA 5 | -7.64 | -0.01 | 54.32 | 0.011 | -0.3295 | 0 |
| 214 | SLE RA 6 | -8.24 | 0 | 54.99 | 0.0005 | -0.3552 | 0 |
| 214 | SLE RA 7 | -8.08 | -0.01 | 55.1 | 0.0068 | -0.3483 | 0 |
| 214 | SLE RA 8 | -8.11 | 0 | 54.62 | 0.0005 | -0.3497 | 0 |
| 214 | SLE RA 9 | -7.95 | -0.01 | 54.73 | 0.0068 | -0.3428 | 0 |
| 214 | SLE RA 10 | -8.99 | -0.01 | 59.71 | 0.0109 | -0.3871 | 0 |
| 214 | SLE RA 11 | -9.58 | 0 | 60.38 | 0.0005 | -0.4128 | 0 |
| 214 | SLE RA 12 | -9.42 | -0.01 | 60.49 | 0.0068 | -0.4059 | 0 |
| 214 | SLE RA 13 | -9.19 | -0.01 | 60.2 | 0.011 | -0.3958 | 0 |
| 214 | SLE RA 14 | -9.78 | 0 | 60.87 | 0.0006 | -0.4215 | 0 |
| 214 | SLE RA 15 | -9.62 | -0.01 | 60.98 | 0.0068 | -0.4146 | 0 |
| 214 | SLE RA 16 | -9.66 | 0 | 60.5 | 0.0005 | -0.4159 | 0 |
| 214 | SLE RA 17 | -9.5 | -0.01 | 60.61 | 0.0068 | -0.4091 | 0 |
| 214 | SLE RA 18 | -9.92 | 0 | 62.05 | 0.0004 | -0.427 | 0 |
| 214 | SLE RA 19 | -9.76 | -0.01 | 62.16 | 0.0067 | -0.4201 | 0 |
| 214 | SLE RA 20 | -10.12 | 0 | 62.53 | 0.0005 | -0.4357 | 0 |
| 214 | SLE RA 21 | -9.96 | -0.01 | 62.64 | 0.0068 | -0.4288 | 0 |
| 214 | SLE FR 1 | -7.71 | 0 | 53.65 | 0.0004 | -0.3323 | 0 |
| 214 | SLE FR 2 | -7.66 | 0 | 53.68 | 0.0025 | -0.33 | 0 |
| 214 | SLE FR 3 | -7.79 | 0 | 53.84 | 0.0005 | -0.3358 | 0 |
| 214 | SLE FR 4 | -8.32 | 0 | 56.2 | 0.0025 | -0.3584 | 0 |
| 214 | SLE FR 5 | -8.45 | 0 | 56.36 | 0.0005 | -0.3642 | 0 |
| 214 | SLE FR 6 | -8.82 | 0 | 57.85 | 0.0004 | -0.3796 | 0 |
| 214 | SLE QP 1 | -7.71 | 0 | 53.65 | 0.0004 | -0.3323 | 0 |
| 214 | SLE QP 2 | -8.37 | 0 | 56.17 | 0.0004 | -0.3607 | 0 |
| 214 | SLD 1 | 3.91 | 0.13 | 53.04 | -0.1295 | 0.1825 | -0.0006 |
| 214 | SLD 2 | 3.91 | 0.13 | 53.04 | -0.1295 | 0.1825 | -0.0006 |
| 214 | SLD 3 | 3.19 | -0.22 | 52.69 | 0.2236 | 0.1507 | 0.0011 |
| 214 | SLD 4 | 3.19 | -0.22 | 52.69 | 0.2236 | 0.1507 | 0.0011 |
| 214 | SLD 5 | -3.6 | 0.56 | 55.77 | -0.5741 | -0.1496 | -0.0028 |
| 214 | SLD 6 | -3.6 | 0.56 | 55.77 | -0.5741 | -0.1496 | -0.0028 |
| 214 | SLD 7 | -5.99 | -0.59 | 54.58 | 0.603 | -0.2554 | 0.0029 |

| Nodo | Cont. | Reazione a traslazione | | | Reazione a rotazione | | |
|---|---|---|---|---|---|---|---|
| Ind. | N.br. | x | y | z | x | y | z |
| 214 | SLD 8 | -5.99 | -0.59 | 54.58 | 0.603 | -0.2554 | 0.0029 |
| 214 | SLD 9 | -10.76 | 0.59 | 57.75 | -0.6021 | -0.466 | -0.0029 |
| 214 | SLD 10 | -10.76 | 0.59 | 57.75 | -0.6021 | -0.466 | -0.0029 |
| 214 | SLD 11 | -13.15 | -0.57 | 56.56 | 0.575 | -0.5718 | 0.0028 |
| 214 | SLD 12 | -13.15 | -0.57 | 56.56 | 0.575 | -0.5718 | 0.0028 |
| 214 | SLD 13 | -19.94 | 0.22 | 59.65 | -0.2228 | -0.8721 | -0.0011 |
| 214 | SLD 14 | -19.94 | 0.22 | 59.65 | -0.2228 | -0.8721 | -0.0011 |
| 214 | SLD 15 | -20.66 | -0.13 | 59.29 | 0.1304 | -0.9039 | 0.0006 |
| 214 | SLD 16 | -20.66 | -0.13 | 59.29 | 0.1304 | -0.9039 | 0.0006 |
| 214 | SLV 1 | 19.96 | 0.33 | 48.88 | -0.3326 | 0.8923 | -0.0016 |
| 214 | SLV 2 | 19.96 | 0.33 | 48.88 | -0.3326 | 0.8923 | -0.0016 |
| 214 | SLV 3 | 18.24 | -0.55 | 48 | 0.5713 | 0.8161 | 0.0027 |
| 214 | SLV 4 | 18.24 | -0.55 | 48 | 0.5713 | 0.8161 | 0.0027 |
| 214 | SLV 5 | 2.74 | 1.44 | 55.32 | -1.4704 | 0.1309 | -0.0071 |
| 214 | SLV 6 | 2.74 | 1.44 | 55.32 | -1.4704 | 0.1309 | -0.0071 |
| 214 | SLV 7 | -3 | -1.51 | 52.38 | 1.5426 | -0.1234 | 0.0074 |
| 214 | SLV 8 | -3 | -1.51 | 52.38 | 1.5426 | -0.1234 | 0.0074 |
| 214 | SLV 9 | -13.74 | 1.51 | 59.95 | -1.5417 | -0.598 | -0.0074 |
| 214 | SLV 10 | -13.74 | 1.51 | 59.95 | -1.5417 | -0.598 | -0.0074 |
| 214 | SLV 11 | -19.49 | -1.45 | 57.02 | 1.4713 | -0.8523 | 0.0071 |
| 214 | SLV 12 | -19.49 | -1.45 | 57.02 | 1.4713 | -0.8523 | 0.0071 |
| 214 | SLV 13 | -34.99 | 0.55 | 64.33 | -0.5704 | -1.5375 | -0.0027 |
| 214 | SLV 14 | -34.99 | 0.55 | 64.33 | -0.5704 | -1.5375 | -0.0027 |
| 214 | SLV 15 | -36.71 | -0.34 | 63.45 | 0.3335 | -1.6138 | 0.0016 |
| 214 | SLV 16 | -36.71 | -0.34 | 63.45 | 0.3335 | -1.6138 | 0.0016 |
| 215 | SLU 1 | -8.24 | 0 | 51.33 | 0.0009 | -0.3606 | 0 |
| 215 | SLU 2 | -7.88 | -0.02 | 51.69 | 0.0177 | -0.3454 | 0.0001 |
| 215 | SLU 3 | -8.75 | 0 | 52.63 | 0.0009 | -0.3826 | 0 |
| 215 | SLU 4 | -8.53 | -0.01 | 52.84 | 0.011 | -0.3735 | 0 |
| 215 | SLU 5 | -8.19 | -0.02 | 52.42 | 0.0177 | -0.3587 | 0.0001 |
| 215 | SLU 6 | -9.06 | 0 | 53.36 | 0.0009 | -0.396 | 0 |
| 215 | SLU 7 | -8.84 | -0.01 | 53.58 | 0.0111 | -0.3869 | 0 |
| 215 | SLU 8 | -8.86 | 0 | 52.79 | 0.0009 | -0.3872 | 0 |
| 215 | SLU 9 | -8.64 | -0.01 | 53.01 | 0.011 | -0.3781 | 0 |
| 215 | SLU 10 | -10.43 | -0.02 | 60.3 | 0.0178 | -0.4552 | 0.0001 |
| 215 | SLU 11 | -11.3 | 0 | 61.23 | 0.001 | -0.4925 | 0 |
| 215 | SLU 12 | -11.08 | -0.01 | 61.45 | 0.0111 | -0.4834 | 0 |
| 215 | SLU 13 | -10.74 | -0.02 | 61.03 | 0.0178 | -0.4685 | 0.0001 |
| 215 | SLU 14 | -11.61 | 0 | 61.97 | 0.001 | -0.5058 | 0 |
| 215 | SLU 15 | -11.39 | -0.01 | 62.19 | 0.0111 | -0.4967 | 0 |
| 215 | SLU 16 | -11.41 | 0 | 61.4 | 0.001 | -0.4971 | 0 |
| 215 | SLU 17 | -11.19 | -0.01 | 61.62 | 0.0111 | -0.488 | 0 |
| 215 | SLU 18 | -11.89 | 0 | 63.63 | 0.001 | -0.5174 | 0 |
| 215 | SLU 19 | -11.67 | -0.01 | 63.84 | 0.0111 | -0.5083 | 0 |
| 215 | SLU 20 | -12.2 | 0 | 64.36 | 0.001 | -0.5308 | 0 |
| 215 | SLU 21 | -11.98 | -0.01 | 64.58 | 0.0111 | -0.5217 | 0 |
| 215 | SLU 22 | -10.48 | 0 | 59.25 | 0.0009 | -0.457 | 0 |
| 215 | SLU 23 | -10.11 | -0.02 | 59.62 | 0.0178 | -0.4418 | 0.0001 |
| 215 | SLU 24 | -10.99 | 0 | 60.55 | 0.001 | -0.4791 | 0 |
| 215 | SLU 25 | -10.77 | -0.01 | 60.77 | 0.0111 | -0.47 | 0 |
| 215 | SLU 26 | -10.42 | -0.02 | 60.35 | 0.0178 | -0.4552 | 0.0001 |
| 215 | SLU 27 | -11.29 | 0 | 61.28 | 0.001 | -0.4925 | 0 |
| 215 | SLU 28 | -11.07 | -0.01 | 61.5 | 0.0111 | -0.4834 | 0 |
| 215 | SLU 29 | -11.09 | 0 | 60.72 | 0.001 | -0.4837 | 0 |
| 215 | SLU 30 | -10.87 | -0.01 | 60.94 | 0.0111 | -0.4746 | 0 |
| 215 | SLU 31 | -12.66 | -0.02 | 68.22 | 0.0178 | -0.5517 | 0.0001 |
| 215 | SLU 32 | -13.54 | 0 | 69.16 | 0.001 | -0.589 | 0 |
| 215 | SLU 33 | -13.32 | -0.01 | 69.38 | 0.0112 | -0.5798 | 0 |
| 215 | SLU 34 | -12.97 | -0.02 | 68.96 | 0.0179 | -0.565 | 0.0001 |
| 215 | SLU 35 | -13.84 | 0 | 69.89 | 0.0011 | -0.6023 | 0 |
| 215 | SLU 36 | -13.62 | -0.01 | 70.11 | 0.0112 | -0.5932 | 0 |
| 215 | SLU 37 | -13.64 | 0 | 69.33 | 0.0011 | -0.5935 | 0 |
| 215 | SLU 38 | -13.42 | -0.01 | 69.54 | 0.0112 | -0.5844 | 0 |
| 215 | SLU 39 | -14.12 | 0 | 71.55 | 0.001 | -0.6139 | 0 |
| 215 | SLU 40 | -13.9 | -0.01 | 71.77 | 0.0111 | -0.6048 | 0 |
| 215 | SLU 41 | -14.43 | 0 | 72.28 | 0.0011 | -0.6273 | 0 |
| 215 | SLU 42 | -14.21 | -0.01 | 72.5 | 0.0112 | -0.6182 | 0 |
| 215 | SLU 43 | -9.95 | 0 | 64.01 | 0.0011 | -0.4356 | 0 |
| 215 | SLU 44 | -9.59 | -0.02 | 64.37 | 0.0179 | -0.4205 | 0.0001 |
| 215 | SLU 45 | -10.46 | 0 | 65.31 | 0.0011 | -0.4577 | 0 |
| 215 | SLU 46 | -10.24 | -0.01 | 65.53 | 0.0113 | -0.4486 | 0 |
| 215 | SLU 47 | -9.89 | -0.02 | 65.11 | 0.018 | -0.4338 | 0.0001 |
| 215 | SLU 48 | -10.76 | 0 | 66.04 | 0.0012 | -0.4711 | 0 |
| 215 | SLU 49 | -10.55 | -0.01 | 66.26 | 0.0113 | -0.462 | 0 |
| 215 | SLU 50 | -10.57 | 0 | 65.48 | 0.0012 | -0.4623 | 0 |
| 215 | SLU 51 | -10.35 | -0.01 | 65.69 | 0.0113 | -0.4532 | 0 |
| 215 | SLU 52 | -12.14 | -0.02 | 72.98 | 0.018 | -0.5303 | 0.0001 |
| 215 | SLU 53 | -13.01 | 0 | 73.92 | 0.0012 | -0.5676 | 0 |
| 215 | SLU 54 | -12.79 | -0.01 | 74.13 | 0.0113 | -0.5585 | 0 |
| 215 | SLU 55 | -12.44 | -0.02 | 73.71 | 0.0181 | -0.5436 | 0.0001 |
| 215 | SLU 56 | -13.32 | 0 | 74.65 | 0.0013 | -0.5809 | 0 |
| 215 | SLU 57 | -13.1 | -0.01 | 74.87 | 0.0114 | -0.5718 | 0 |
| 215 | SLU 58 | -13.12 | 0 | 74.08 | 0.0012 | -0.5722 | 0 |
| 215 | SLU 59 | -12.9 | -0.01 | 74.3 | 0.0114 | -0.563 | 0 |
| 215 | SLU 60 | -13.6 | 0 | 76.31 | 0.0012 | -0.5925 | 0 |
| 215 | SLU 61 | -13.38 | -0.01 | 76.52 | 0.0113 | -0.5834 | 0 |
| 215 | SLU 62 | -13.9 | 0 | 77.04 | 0.0012 | -0.6059 | 0 |
| 215 | SLU 63 | -13.68 | -0.01 | 77.26 | 0.0113 | -0.5968 | 0 |

| Nodo | Cont. | Reazione a traslazione | | | Reazione a rotazione | | |
|---|---|---|---|---|---|---|---|
| Ind. | N.br. | x | y | z | x | y | z |
| 215 | SLU 64 | -12.19 | 0 | 71.93 | 0.0012 | -0.5321 | 0 |
| 215 | SLU 65 | -11.82 | -0.02 | 72.3 | 0.018 | -0.5169 | 0.0001 |
| 215 | SLU 66 | -12.69 | 0 | 73.23 | 0.0012 | -0.5542 | 0 |
| 215 | SLU 67 | -12.47 | -0.01 | 73.45 | 0.0113 | -0.5451 | 0 |
| 215 | SLU 68 | -12.13 | -0.02 | 73.03 | 0.018 | -0.5303 | 0.0001 |
| 215 | SLU 69 | -13 | 0 | 73.97 | 0.0012 | -0.5676 | 0 |
| 215 | SLU 70 | -12.78 | -0.01 | 74.18 | 0.0113 | -0.5584 | 0 |
| 215 | SLU 71 | -12.8 | 0 | 73.4 | 0.0012 | -0.5588 | 0 |
| 215 | SLU 72 | -12.58 | -0.01 | 73.62 | 0.0113 | -0.5497 | 0 |
| 215 | SLU 73 | -14.37 | -0.02 | 80.9 | 0.0181 | -0.6268 | 0.0001 |
| 215 | SLU 74 | -15.24 | 0 | 81.84 | 0.0013 | -0.664 | 0 |
| 215 | SLU 75 | -15.02 | -0.01 | 82.06 | 0.0114 | -0.6549 | 0 |
| 215 | SLU 76 | -14.68 | -0.02 | 81.64 | 0.0181 | -0.6401 | 0.0001 |
| 215 | SLU 77 | -15.55 | 0 | 82.57 | 0.0013 | -0.6774 | 0 |
| 215 | SLU 78 | -15.33 | -0.01 | 82.79 | 0.0114 | -0.6683 | 0 |
| 215 | SLU 79 | -15.35 | 0 | 82.01 | 0.0013 | -0.6686 | 0 |
| 215 | SLU 80 | -15.13 | -0.01 | 82.23 | 0.0114 | -0.6595 | 0 |
| 215 | SLU 81 | -15.83 | 0 | 84.23 | 0.0013 | -0.689 | 0 |
| 215 | SLU 82 | -15.61 | -0.01 | 84.45 | 0.0114 | -0.6799 | 0 |
| 215 | SLU 83 | -16.14 | 0 | 84.96 | 0.0013 | -0.7024 | 0 |
| 215 | SLU 84 | -15.92 | -0.01 | 85.18 | 0.0114 | -0.6932 | 0 |
| 215 | SLE RA 1 | -8.88 | 0 | 53.59 | 0.0009 | -0.3881 | 0 |
| 215 | SLE RA 2 | -8.64 | -0.01 | 53.83 | 0.0121 | -0.378 | 0 |
| 215 | SLE RA 3 | -9.22 | 0 | 54.46 | 0.0009 | -0.4028 | 0 |
| 215 | SLE RA 4 | -9.07 | -0.01 | 54.6 | 0.0076 | -0.3968 | 0 |
| 215 | SLE RA 5 | -8.84 | -0.01 | 54.32 | 0.0121 | -0.3869 | 0 |
| 215 | SLE RA 6 | -9.43 | 0 | 54.95 | 0.0009 | -0.4117 | 0 |
| 215 | SLE RA 7 | -9.28 | -0.01 | 55.09 | 0.0077 | -0.4057 | 0 |
| 215 | SLE RA 8 | -9.29 | 0 | 54.57 | 0.0009 | -0.4059 | 0 |
| 215 | SLE RA 9 | -9.15 | -0.01 | 54.72 | 0.0077 | -0.3998 | 0 |
| 215 | SLE RA 10 | -10.34 | -0.01 | 59.57 | 0.0122 | -0.4512 | 0 |
| 215 | SLE RA 11 | -10.92 | 0 | 60.2 | 0.001 | -0.4761 | 0 |
| 215 | SLE RA 12 | -10.77 | -0.01 | 60.34 | 0.0077 | -0.47 | 0 |
| 215 | SLE RA 13 | -10.54 | -0.01 | 60.06 | 0.0122 | -0.4601 | 0 |
| 215 | SLE RA 14 | -11.13 | 0 | 60.69 | 0.001 | -0.485 | 0 |
| 215 | SLE RA 15 | -10.98 | -0.01 | 60.83 | 0.0077 | -0.4789 | 0 |
| 215 | SLE RA 16 | -10.99 | 0 | 60.31 | 0.001 | -0.4791 | 0 |
| 215 | SLE RA 17 | -10.85 | -0.01 | 60.45 | 0.0077 | -0.4731 | 0 |
| 215 | SLE RA 18 | -11.31 | 0 | 61.79 | 0.0009 | -0.4927 | 0 |
| 215 | SLE RA 19 | -11.17 | -0.01 | 61.94 | 0.0077 | -0.4866 | 0 |
| 215 | SLE RA 20 | -11.52 | 0 | 62.28 | 0.001 | -0.5016 | 0 |
| 215 | SLE RA 21 | -11.37 | -0.01 | 62.42 | 0.0077 | -0.4955 | 0 |
| 215 | SLE FR 1 | -8.88 | 0 | 53.59 | 0.0009 | -0.3881 | 0 |
| 215 | SLE FR 2 | -8.83 | 0 | 53.64 | 0.0031 | -0.3861 | 0 |
| 215 | SLE FR 3 | -8.97 | 0 | 53.79 | 0.0009 | -0.3917 | 0 |
| 215 | SLE FR 4 | -9.56 | 0 | 56.1 | 0.0031 | -0.4175 | 0 |
| 215 | SLE FR 5 | -9.69 | 0 | 56.25 | 0.0009 | -0.4231 | 0 |
| 215 | SLE FR 6 | -10.1 | 0 | 57.69 | 0.0009 | -0.4404 | 0 |
| 215 | SLE QP 1 | -8.88 | 0 | 53.59 | 0.0009 | -0.3881 | 0 |
| 215 | SLE QP 2 | -9.61 | 0 | 56.05 | 0.0009 | -0.4195 | 0 |
| 215 | SLD 1 | 2.47 | 0.19 | 51.27 | -0.1181 | 0.1092 | -0.0008 |
| 215 | SLD 2 | 2.47 | 0.19 | 51.27 | -0.1181 | 0.1092 | -0.0008 |
| 215 | SLD 3 | 1.78 | -0.12 | 50.91 | 0.1983 | 0.0795 | 0.0005 |
| 215 | SLD 4 | 1.78 | -0.12 | 50.91 | 0.1983 | 0.0795 | 0.0005 |
| 215 | SLD 5 | -4.93 | 0.51 | 55.16 | -0.5147 | -0.2158 | -0.0022 |
| 215 | SLD 6 | -4.93 | 0.51 | 55.16 | -0.5147 | -0.2158 | -0.0022 |
| 215 | SLD 7 | -7.25 | -0.49 | 53.96 | 0.54 | -0.3149 | 0.0021 |
| 215 | SLD 8 | -7.25 | -0.49 | 53.96 | 0.54 | -0.3149 | 0.0021 |
| 215 | SLD 9 | -11.97 | 0.49 | 58.14 | -0.5382 | -0.5241 | -0.0021 |
| 215 | SLD 10 | -11.97 | 0.49 | 58.14 | -0.5382 | -0.5241 | -0.0021 |
| 215 | SLD 11 | -14.29 | -0.51 | 56.94 | 0.5165 | -0.6232 | 0.0022 |
| 215 | SLD 12 | -14.29 | -0.51 | 56.94 | 0.5165 | -0.6232 | 0.0022 |
| 215 | SLD 13 | -21 | 0.11 | 61.19 | -0.1965 | -0.9185 | -0.0005 |
| 215 | SLD 14 | -21 | 0.11 | 61.19 | -0.1965 | -0.9185 | -0.0005 |
| 215 | SLD 15 | -21.7 | -0.19 | 60.83 | 0.1199 | -0.9482 | 0.0008 |
| 215 | SLD 16 | -21.7 | -0.19 | 60.83 | 0.1199 | -0.9482 | 0.0008 |
| 215 | SLV 1 | 18.25 | 0.47 | 44.9 | -0.3039 | 0.7993 | -0.0021 |
| 215 | SLV 2 | 18.25 | 0.47 | 44.9 | -0.3039 | 0.7993 | -0.0021 |
| 215 | SLV 3 | 16.58 | -0.29 | 44.01 | 0.5053 | 0.7281 | 0.0013 |
| 215 | SLV 4 | 16.58 | -0.29 | 44.01 | 0.5053 | 0.7281 | 0.0013 |
| 215 | SLV 5 | 1.27 | 1.31 | 54.04 | -1.318 | 0.0542 | -0.0057 |
| 215 | SLV 6 | 1.27 | 1.31 | 54.04 | -1.318 | 0.0542 | -0.0057 |
| 215 | SLV 7 | -4.28 | -1.25 | 51.1 | 1.3797 | -0.1833 | 0.0055 |
| 215 | SLV 8 | -4.28 | -1.25 | 51.1 | 1.3797 | -0.1833 | 0.0055 |
| 215 | SLV 9 | -14.94 | 1.25 | 61 | -1.3779 | -0.6557 | -0.0055 |
| 215 | SLV 10 | -14.94 | 1.25 | 61 | -1.3779 | -0.6557 | -0.0055 |
| 215 | SLV 11 | -20.5 | -1.31 | 58.06 | 1.3198 | -0.8932 | 0.0057 |
| 215 | SLV 12 | -20.5 | -1.31 | 58.06 | 1.3198 | -0.8932 | 0.0057 |
| 215 | SLV 13 | -35.8 | 0.29 | 68.09 | -0.5036 | -1.5671 | -0.0013 |
| 215 | SLV 14 | -35.8 | 0.29 | 68.09 | -0.5036 | -1.5671 | -0.0013 |
| 215 | SLV 15 | -37.47 | -0.48 | 67.21 | 0.3057 | -1.6383 | 0.0021 |
| 215 | SLV 16 | -37.47 | -0.48 | 67.21 | 0.3057 | -1.6383 | 0.0021 |
| 216 | SLU 1 | -9.41 | 0 | 51.28 | 0.0011 | -0.4031 | 0 |
| 216 | SLU 2 | -9.07 | -0.02 | 51.73 | 0.018 | -0.3885 | 0.0001 |
| 216 | SLU 3 | -9.94 | 0 | 52.61 | 0.0011 | -0.426 | 0 |
| 216 | SLU 4 | -9.73 | -0.01 | 52.87 | 0.0113 | -0.4172 | 0 |
| 216 | SLU 5 | -9.38 | -0.02 | 52.47 | 0.018 | -0.4022 | 0.0001 |
| 216 | SLU 6 | -10.26 | 0 | 53.35 | 0.0012 | -0.4398 | 0 |

| Nodo | Cont. | Reazione a traslazione | | | Reazione a rotazione | | |
|---|---|---|---|---|---|---|---|
| Ind. | N.br. | x | y | z | x | y | z |
| 216 | SLU 7 | -10.05 | -0.01 | 53.62 | 0.0113 | -0.431 | 0 |
| 216 | SLU 8 | -10.05 | 0 | 52.77 | 0.0011 | -0.4307 | 0 |
| 216 | SLU 9 | -9.84 | -0.01 | 53.03 | 0.0113 | -0.4219 | 0 |
| 216 | SLU 10 | -11.85 | -0.02 | 60.09 | 0.0182 | -0.5069 | 0.0001 |
| 216 | SLU 11 | -12.72 | 0 | 60.98 | 0.0013 | -0.5445 | 0 |
| 216 | SLU 12 | -12.52 | -0.01 | 61.24 | 0.0114 | -0.5357 | 0 |
| 216 | SLU 13 | -12.17 | -0.02 | 60.83 | 0.0182 | -0.5207 | 0.0001 |
| 216 | SLU 14 | -13.04 | 0 | 61.72 | 0.0013 | -0.5583 | 0 |
| 216 | SLU 15 | -12.83 | -0.01 | 61.98 | 0.0114 | -0.5494 | 0 |
| 216 | SLU 16 | -12.83 | 0 | 61.13 | 0.0013 | -0.5491 | 0 |
| 216 | SLU 17 | -12.62 | -0.01 | 61.4 | 0.0114 | -0.5403 | 0 |
| 216 | SLU 18 | -13.39 | 0 | 63.23 | 0.0013 | -0.5723 | 0 |
| 216 | SLU 19 | -13.18 | -0.01 | 63.5 | 0.0114 | -0.5635 | 0 |
| 216 | SLU 20 | -13.71 | 0 | 63.98 | 0.0013 | -0.5861 | 0 |
| 216 | SLU 21 | -13.5 | -0.01 | 64.24 | 0.0114 | -0.5773 | 0 |
| 216 | SLU 22 | -11.85 | 0 | 59.04 | 0.0012 | -0.5073 | 0 |
| 216 | SLU 23 | -11.51 | -0.02 | 59.48 | 0.0181 | -0.4926 | 0.0001 |
| 216 | SLU 24 | -12.38 | 0 | 60.37 | 0.0012 | -0.5302 | 0 |
| 216 | SLU 25 | -12.17 | -0.01 | 60.63 | 0.0114 | -0.5214 | 0 |
| 216 | SLU 26 | -11.83 | -0.02 | 60.22 | 0.0181 | -0.5064 | 0.0001 |
| 216 | SLU 27 | -12.7 | 0 | 61.11 | 0.0012 | -0.544 | 0 |
| 216 | SLU 28 | -12.49 | -0.01 | 61.37 | 0.0114 | -0.5352 | 0 |
| 216 | SLU 29 | -12.49 | 0 | 60.52 | 0.0012 | -0.5349 | 0 |
| 216 | SLU 30 | -12.28 | -0.01 | 60.79 | 0.0114 | -0.5261 | 0 |
| 216 | SLU 31 | -14.29 | -0.02 | 67.85 | 0.0183 | -0.611 | 0.0001 |
| 216 | SLU 32 | -15.17 | 0 | 68.73 | 0.0014 | -0.6486 | 0 |
| 216 | SLU 33 | -14.96 | -0.01 | 69 | 0.0115 | -0.6398 | 0 |
| 216 | SLU 34 | -14.61 | -0.02 | 68.59 | 0.0183 | -0.6248 | 0.0001 |
| 216 | SLU 35 | -15.48 | 0 | 69.47 | 0.0014 | -0.6624 | 0 |
| 216 | SLU 36 | -15.28 | -0.01 | 69.74 | 0.0115 | -0.6536 | 0 |
| 216 | SLU 37 | -15.27 | 0 | 68.89 | 0.0013 | -0.6533 | 0 |
| 216 | SLU 38 | -15.07 | -0.01 | 69.15 | 0.0115 | -0.6445 | 0 |
| 216 | SLU 39 | -15.83 | 0 | 70.99 | 0.0014 | -0.6765 | 0 |
| 216 | SLU 40 | -15.62 | -0.01 | 71.26 | 0.0115 | -0.6677 | 0 |
| 216 | SLU 41 | -16.15 | 0 | 71.73 | 0.0014 | -0.6903 | 0 |
| 216 | SLU 42 | -15.94 | -0.01 | 72 | 0.0115 | -0.6815 | 0 |
| 216 | SLU 43 | -11.39 | 0 | 64.01 | 0.0014 | -0.4884 | 0 |
| 216 | SLU 44 | -11.05 | -0.02 | 64.45 | 0.0183 | -0.4737 | 0.0001 |
| 216 | SLU 45 | -11.92 | 0 | 65.34 | 0.0015 | -0.5113 | 0 |
| 216 | SLU 46 | -11.72 | -0.01 | 65.6 | 0.0116 | -0.5025 | 0 |
| 216 | SLU 47 | -11.37 | -0.02 | 65.19 | 0.0184 | -0.4875 | 0.0001 |
| 216 | SLU 48 | -12.24 | 0 | 66.08 | 0.0015 | -0.5251 | 0 |
| 216 | SLU 49 | -12.03 | -0.01 | 66.34 | 0.0116 | -0.5163 | 0 |
| 216 | SLU 50 | -12.03 | 0 | 65.49 | 0.0014 | -0.5159 | 0 |
| 216 | SLU 51 | -11.82 | -0.01 | 65.76 | 0.0116 | -0.5071 | 0 |
| 216 | SLU 52 | -13.84 | -0.02 | 72.82 | 0.0185 | -0.5921 | 0.0001 |
| 216 | SLU 53 | -14.71 | 0 | 73.7 | 0.0016 | -0.6297 | 0 |
| 216 | SLU 54 | -14.5 | -0.01 | 73.97 | 0.0117 | -0.6209 | 0 |
| 216 | SLU 55 | -14.15 | -0.02 | 73.56 | 0.0185 | -0.6059 | 0.0001 |
| 216 | SLU 56 | -15.02 | 0 | 74.44 | 0.0016 | -0.6435 | 0 |
| 216 | SLU 57 | -14.82 | -0.01 | 74.71 | 0.0117 | -0.6347 | 0 |
| 216 | SLU 58 | -14.81 | 0 | 73.86 | 0.0016 | -0.6344 | 0 |
| 216 | SLU 59 | -14.61 | -0.01 | 74.12 | 0.0117 | -0.6256 | 0 |
| 216 | SLU 60 | -15.37 | 0 | 75.96 | 0.0016 | -0.6575 | 0 |
| 216 | SLU 61 | -15.17 | -0.01 | 76.23 | 0.0118 | -0.6487 | 0 |
| 216 | SLU 62 | -15.69 | 0 | 76.7 | 0.0016 | -0.6713 | 0 |
| 216 | SLU 63 | -15.48 | -0.01 | 76.97 | 0.0118 | -0.6625 | 0 |
| 216 | SLU 64 | -13.84 | 0 | 71.77 | 0.0015 | -0.5925 | 0 |
| 216 | SLU 65 | -13.49 | -0.02 | 72.21 | 0.0184 | -0.5779 | 0.0001 |
| 216 | SLU 66 | -14.37 | 0 | 73.09 | 0.0015 | -0.6154 | 0 |
| 216 | SLU 67 | -14.16 | -0.01 | 73.36 | 0.0117 | -0.6066 | 0 |
| 216 | SLU 68 | -13.81 | -0.02 | 72.95 | 0.0184 | -0.5916 | 0.0001 |
| 216 | SLU 69 | -14.68 | 0 | 73.83 | 0.0016 | -0.6292 | 0 |
| 216 | SLU 70 | -14.48 | -0.01 | 74.1 | 0.0117 | -0.6204 | 0 |
| 216 | SLU 71 | -14.47 | 0 | 73.25 | 0.0015 | -0.6201 | 0 |
| 216 | SLU 72 | -14.27 | -0.01 | 73.51 | 0.0117 | -0.6113 | 0 |
| 216 | SLU 73 | -16.28 | -0.02 | 80.57 | 0.0186 | -0.6963 | 0.0001 |
| 216 | SLU 74 | -17.15 | 0 | 81.46 | 0.0017 | -0.7339 | 0 |
| 216 | SLU 75 | -16.94 | -0.01 | 81.72 | 0.0118 | -0.7251 | 0 |
| 216 | SLU 76 | -16.6 | -0.02 | 81.31 | 0.0186 | -0.7101 | 0.0001 |
| 216 | SLU 77 | -17.47 | 0 | 82.2 | 0.0017 | -0.7476 | 0 |
| 216 | SLU 78 | -17.26 | -0.01 | 82.46 | 0.0118 | -0.7388 | 0 |
| 216 | SLU 79 | -17.26 | 0 | 81.62 | 0.0017 | -0.7385 | 0 |
| 216 | SLU 80 | -17.05 | -0.01 | 81.88 | 0.0118 | -0.7297 | 0 |
| 216 | SLU 81 | -17.82 | 0 | 83.72 | 0.0017 | -0.7617 | 0 |
| 216 | SLU 82 | -17.61 | -0.01 | 83.98 | 0.0118 | -0.7529 | 0 |
| 216 | SLU 83 | -18.13 | 0 | 84.46 | 0.0017 | -0.7755 | 0 |
| 216 | SLU 84 | -17.93 | -0.01 | 84.72 | 0.0118 | -0.7667 | 0 |
| 216 | SLE RA 1 | -10.11 | 0 | 53.5 | 0.0012 | -0.4329 | 0 |
| 216 | SLE RA 2 | -9.88 | -0.01 | 53.79 | 0.0124 | -0.4231 | 0 |
| 216 | SLE RA 3 | -10.46 | 0 | 54.38 | 0.0012 | -0.4482 | 0 |
| 216 | SLE RA 4 | -10.32 | -0.01 | 54.56 | 0.0079 | -0.4423 | 0 |
| 216 | SLE RA 5 | -10.09 | -0.01 | 54.29 | 0.0124 | -0.4323 | 0 |
| 216 | SLE RA 6 | -10.67 | 0 | 54.88 | 0.0012 | -0.4574 | 0 |
| 216 | SLE RA 7 | -10.53 | -0.01 | 55.05 | 0.0079 | -0.4515 | 0 |
| 216 | SLE RA 8 | -10.53 | 0 | 54.49 | 0.0012 | -0.4513 | 0 |
| 216 | SLE RA 9 | -10.39 | -0.01 | 54.67 | 0.0079 | -0.4454 | 0 |
| 216 | SLE RA 10 | -11.73 | -0.01 | 59.37 | 0.0125 | -0.5021 | 0 |

| Nodo | Cont. | Reazione a traslazione | | | Reazione a rotazione | | |
|---|---|---|---|---|---|---|---|
| Ind. | N.br. | x | y | z | x | y | z |
| 216 | SLE RA 11 | -12.32 | 0 | 59.96 | 0.0012 | -0.5271 | 0 |
| 216 | SLE RA 12 | -12.18 | -0.01 | 60.14 | 0.008 | -0.5212 | 0 |
| 216 | SLE RA 13 | -11.95 | -0.01 | 59.87 | 0.0125 | -0.5113 | 0 |
| 216 | SLE RA 14 | -12.53 | 0 | 60.46 | 0.0012 | -0.5363 | 0 |
| 216 | SLE RA 15 | -12.39 | -0.01 | 60.63 | 0.008 | -0.5304 | 0 |
| 216 | SLE RA 16 | -12.39 | 0 | 60.07 | 0.0012 | -0.5302 | 0 |
| 216 | SLE RA 17 | -12.25 | -0.01 | 60.24 | 0.008 | -0.5244 | 0 |
| 216 | SLE RA 18 | -12.76 | 0 | 61.47 | 0.0013 | -0.5457 | 0 |
| 216 | SLE RA 19 | -12.62 | -0.01 | 61.64 | 0.008 | -0.5398 | 0 |
| 216 | SLE RA 20 | -12.97 | 0 | 61.96 | 0.0013 | -0.5549 | 0 |
| 216 | SLE RA 21 | -12.83 | -0.01 | 62.14 | 0.008 | -0.549 | 0 |
| 216 | SLE FR 1 | -10.11 | 0 | 53.5 | 0.0012 | -0.4329 | 0 |
| 216 | SLE FR 2 | -10.06 | 0 | 53.56 | 0.0034 | -0.4309 | 0 |
| 216 | SLE FR 3 | -10.19 | 0 | 53.7 | 0.0012 | -0.4366 | 0 |
| 216 | SLE FR 4 | -10.86 | 0 | 55.95 | 0.0034 | -0.4648 | 0 |
| 216 | SLE FR 5 | -10.99 | 0 | 56.09 | 0.0012 | -0.4704 | 0 |
| 216 | SLE FR 6 | -11.43 | 0 | 57.48 | 0.0012 | -0.4893 | 0 |
| 216 | SLE QP 1 | -10.11 | 0 | 53.5 | 0.0012 | -0.4329 | 0 |
| 216 | SLE QP 2 | -10.9 | 0 | 55.89 | 0.0012 | -0.4667 | 0 |
| 216 | SLD 1 | 1.04 | 0.14 | 49.26 | -0.0963 | 0.0575 | -0.0005 |
| 216 | SLD 2 | 1.04 | 0.14 | 49.26 | -0.0963 | 0.0575 | -0.0005 |
| 216 | SLD 3 | 0.36 | -0.09 | 48.86 | 0.1613 | 0.0275 | 0.0003 |
| 216 | SLD 4 | 0.36 | -0.09 | 48.86 | 0.1613 | 0.0275 | 0.0003 |
| 216 | SLD 5 | -6.28 | 0.39 | 54.5 | -0.4188 | -0.264 | -0.0015 |
| 216 | SLD 6 | -6.28 | 0.39 | 54.5 | -0.4188 | -0.264 | -0.0015 |
| 216 | SLD 7 | -8.56 | -0.37 | 53.18 | 0.44 | -0.3639 | 0.0014 |
| 216 | SLD 8 | -8.56 | -0.37 | 53.18 | 0.44 | -0.3639 | 0.0014 |
| 216 | SLD 9 | -13.24 | 0.37 | 58.6 | -0.4376 | -0.5696 | -0.0014 |
| 216 | SLD 10 | -13.24 | 0.37 | 58.6 | -0.4376 | -0.5696 | -0.0014 |
| 216 | SLD 11 | -15.53 | -0.39 | 57.28 | 0.4212 | -0.6694 | 0.0015 |
| 216 | SLD 12 | -15.53 | -0.39 | 57.28 | 0.4212 | -0.6694 | 0.0015 |
| 216 | SLD 13 | -22.16 | 0.08 | 62.92 | -0.159 | -0.961 | -0.0003 |
| 216 | SLD 14 | -22.16 | 0.08 | 62.92 | -0.159 | -0.961 | -0.0003 |
| 216 | SLD 15 | -22.85 | -0.15 | 62.52 | 0.0987 | -0.991 | 0.0005 |
| 216 | SLD 16 | -22.85 | -0.15 | 62.52 | 0.0987 | -0.991 | 0.0005 |
| 216 | SLV 1 | 16.63 | 0.36 | 40.4 | -0.2485 | 0.7422 | -0.0014 |
| 216 | SLV 2 | 16.63 | 0.36 | 40.4 | -0.2485 | 0.7422 | -0.0014 |
| 216 | SLV 3 | 14.99 | -0.21 | 39.43 | 0.4096 | 0.6703 | 0.0008 |
| 216 | SLV 4 | 14.99 | -0.21 | 39.43 | 0.4096 | 0.6703 | 0.0008 |
| 216 | SLV 5 | -0.15 | 0.99 | 52.71 | -1.0717 | 0.005 | -0.0037 |
| 216 | SLV 6 | -0.15 | 0.99 | 52.71 | -1.0717 | 0.005 | -0.0037 |
| 216 | SLV 7 | -5.63 | -0.94 | 49.49 | 1.1217 | -0.2347 | 0.0036 |
| 216 | SLV 8 | -5.63 | -0.94 | 49.49 | 1.1217 | -0.2347 | 0.0036 |
| 216 | SLV 9 | -16.18 | 0.94 | 62.29 | -1.1193 | -0.6988 | -0.0036 |
| 216 | SLV 10 | -16.18 | 0.94 | 62.29 | -1.1193 | -0.6988 | -0.0036 |
| 216 | SLV 11 | -21.66 | -0.99 | 59.07 | 1.0741 | -0.9384 | 0.0037 |
| 216 | SLV 12 | -21.66 | -0.99 | 59.07 | 1.0741 | -0.9384 | 0.0037 |
| 216 | SLV 13 | -36.79 | 0.21 | 72.35 | -0.4072 | -1.6037 | -0.0008 |
| 216 | SLV 14 | -36.79 | 0.21 | 72.35 | -0.4072 | -1.6037 | -0.0008 |
| 216 | SLV 15 | -38.44 | -0.37 | 71.38 | 0.2509 | -1.6756 | 0.0014 |
| 216 | SLV 16 | -38.44 | -0.37 | 71.38 | 0.2509 | -1.6756 | 0.0014 |
| 217 | SLU 1 | -10.89 | 0 | 51.28 | 0.0012 | -0.4711 | 0 |
| 217 | SLU 2 | -10.58 | -0.02 | 51.79 | 0.0167 | -0.4585 | 0 |
| 217 | SLU 3 | -11.45 | 0 | 52.64 | 0.0012 | -0.4953 | 0 |
| 217 | SLU 4 | -11.26 | -0.01 | 52.95 | 0.0105 | -0.4878 | 0 |
| 217 | SLU 5 | -10.92 | -0.02 | 52.55 | 0.0167 | -0.473 | 0 |
| 217 | SLU 6 | -11.78 | 0 | 53.4 | 0.0012 | -0.5098 | 0 |
| 217 | SLU 7 | -11.6 | -0.01 | 53.71 | 0.0105 | -0.5022 | 0 |
| 217 | SLU 8 | -11.56 | 0 | 52.79 | 0.0012 | -0.5 | 0 |
| 217 | SLU 9 | -11.37 | -0.01 | 53.1 | 0.0105 | -0.4924 | 0 |
| 217 | SLU 10 | -13.63 | -0.02 | 59.9 | 0.0169 | -0.5886 | 0 |
| 217 | SLU 11 | -14.5 | 0 | 60.76 | 0.0014 | -0.6255 | 0 |
| 217 | SLU 12 | -14.31 | -0.01 | 61.06 | 0.0107 | -0.6179 | 0 |
| 217 | SLU 13 | -13.97 | -0.02 | 60.66 | 0.0169 | -0.6031 | 0 |
| 217 | SLU 14 | -14.83 | 0 | 61.51 | 0.0013 | -0.6399 | 0 |
| 217 | SLU 15 | -14.65 | -0.01 | 61.82 | 0.0107 | -0.6323 | 0 |
| 217 | SLU 16 | -14.61 | 0 | 60.91 | 0.0013 | -0.6301 | 0 |
| 217 | SLU 17 | -14.42 | -0.01 | 61.21 | 0.0106 | -0.6225 | 0 |
| 217 | SLU 18 | -15.25 | 0 | 62.87 | 0.0014 | -0.657 | 0 |
| 217 | SLU 19 | -15.06 | -0.01 | 63.18 | 0.0107 | -0.6494 | 0 |
| 217 | SLU 20 | -15.58 | 0 | 63.63 | 0.0014 | -0.6714 | 0 |
| 217 | SLU 21 | -15.4 | -0.01 | 63.93 | 0.0107 | -0.6639 | 0 |
| 217 | SLU 22 | -13.58 | 0 | 58.87 | 0.0013 | -0.586 | 0 |
| 217 | SLU 23 | -13.27 | -0.02 | 59.38 | 0.0168 | -0.5734 | 0 |
| 217 | SLU 24 | -14.13 | 0 | 60.23 | 0.0013 | -0.6102 | 0 |
| 217 | SLU 25 | -13.95 | -0.01 | 60.54 | 0.0106 | -0.6027 | 0 |
| 217 | SLU 26 | -13.6 | -0.02 | 60.14 | 0.0168 | -0.5879 | 0 |
| 217 | SLU 27 | -14.47 | 0 | 60.99 | 0.0013 | -0.6247 | 0 |
| 217 | SLU 28 | -14.28 | -0.01 | 61.3 | 0.0106 | -0.6171 | 0 |
| 217 | SLU 29 | -14.24 | 0 | 60.38 | 0.0013 | -0.6149 | 0 |
| 217 | SLU 30 | -14.06 | -0.01 | 60.69 | 0.0106 | -0.6073 | 0 |
| 217 | SLU 31 | -16.32 | -0.02 | 67.49 | 0.017 | -0.7035 | 0 |
| 217 | SLU 32 | -17.18 | 0 | 68.35 | 0.0015 | -0.7403 | 0 |
| 217 | SLU 33 | -17 | -0.01 | 68.65 | 0.0108 | -0.7328 | 0 |
| 217 | SLU 34 | -16.65 | -0.02 | 68.25 | 0.017 | -0.718 | 0 |
| 217 | SLU 35 | -17.52 | 0 | 69.1 | 0.0015 | -0.7548 | 0 |
| 217 | SLU 36 | -17.33 | -0.01 | 69.41 | 0.0108 | -0.7472 | 0 |
| 217 | SLU 37 | -17.29 | 0 | 68.5 | 0.0014 | -0.745 | 0 |

| Nodo | Cont. | Reazione a traslazione | | | Reazione a rotazione | | |
|---|---|---|---|---|---|---|---|
| Ind. | N.br. | x | y | z | x | y | z |
| 217 | SLU 38 | -17.11 | -0.01 | 68.8 | 0.0107 | -0.7374 | 0 |
| 217 | SLU 39 | -17.93 | 0 | 70.46 | 0.0015 | -0.7719 | 0 |
| 217 | SLU 40 | -17.75 | -0.01 | 70.77 | 0.0108 | -0.7643 | 0 |
| 217 | SLU 41 | -18.27 | 0 | 71.22 | 0.0015 | -0.7863 | 0 |
| 217 | SLU 42 | -18.08 | -0.01 | 71.52 | 0.0108 | -0.7788 | 0 |
| 217 | SLU 43 | -13.24 | 0 | 64.06 | 0.0015 | -0.5731 | 0 |
| 217 | SLU 44 | -12.93 | -0.02 | 64.57 | 0.0171 | -0.5605 | 0 |
| 217 | SLU 45 | -13.8 | 0 | 65.43 | 0.0015 | -0.5973 | 0 |
| 217 | SLU 46 | -13.61 | -0.01 | 65.73 | 0.0109 | -0.5897 | 0 |
| 217 | SLU 47 | -13.26 | -0.02 | 65.33 | 0.017 | -0.5749 | 0 |
| 217 | SLU 48 | -14.13 | 0 | 66.18 | 0.0015 | -0.6117 | 0 |
| 217 | SLU 49 | -13.94 | -0.01 | 66.49 | 0.0108 | -0.6042 | 0 |
| 217 | SLU 50 | -13.91 | 0 | 65.58 | 0.0015 | -0.6019 | 0 |
| 217 | SLU 51 | -13.72 | -0.01 | 65.88 | 0.0108 | -0.5944 | 0 |
| 217 | SLU 52 | -15.98 | -0.02 | 72.69 | 0.0172 | -0.6906 | 0 |
| 217 | SLU 53 | -16.85 | 0 | 73.54 | 0.0017 | -0.7274 | 0 |
| 217 | SLU 54 | -16.66 | -0.01 | 73.85 | 0.011 | -0.7198 | 0 |
| 217 | SLU 55 | -16.31 | -0.02 | 73.44 | 0.0172 | -0.705 | 0 |
| 217 | SLU 56 | -17.18 | 0 | 74.3 | 0.0017 | -0.7418 | 0 |
| 217 | SLU 57 | -16.99 | -0.01 | 74.6 | 0.011 | -0.7343 | 0 |
| 217 | SLU 58 | -16.96 | 0 | 73.69 | 0.0016 | -0.732 | 0 |
| 217 | SLU 59 | -16.77 | -0.01 | 74 | 0.011 | -0.7245 | 0 |
| 217 | SLU 60 | -17.6 | 0 | 75.65 | 0.0017 | -0.7589 | 0 |
| 217 | SLU 61 | -17.41 | -0.01 | 75.96 | 0.011 | -0.7514 | 0 |
| 217 | SLU 62 | -17.93 | 0 | 76.41 | 0.0017 | -0.7734 | 0 |
| 217 | SLU 63 | -17.74 | -0.01 | 76.72 | 0.011 | -0.7658 | 0 |
| 217 | SLU 64 | -15.92 | 0 | 71.65 | 0.0017 | -0.688 | 0 |
| 217 | SLU 65 | -15.62 | -0.02 | 72.16 | 0.0172 | -0.6754 | 0 |
| 217 | SLU 66 | -16.48 | 0 | 73.02 | 0.0017 | -0.7122 | 0 |
| 217 | SLU 67 | -16.3 | -0.01 | 73.32 | 0.011 | -0.7046 | 0 |
| 217 | SLU 68 | -15.95 | -0.02 | 72.92 | 0.0172 | -0.6898 | 0 |
| 217 | SLU 69 | -16.81 | 0 | 73.77 | 0.0016 | -0.7266 | 0 |
| 217 | SLU 70 | -16.63 | -0.01 | 74.08 | 0.011 | -0.7191 | 0 |
| 217 | SLU 71 | -16.59 | 0 | 73.17 | 0.0016 | -0.7168 | 0 |
| 217 | SLU 72 | -16.41 | -0.01 | 73.47 | 0.0109 | -0.7093 | 0 |
| 217 | SLU 73 | -18.67 | -0.02 | 80.28 | 0.0173 | -0.8055 | 0 |
| 217 | SLU 74 | -19.53 | 0 | 81.13 | 0.0018 | -0.8423 | 0 |
| 217 | SLU 75 | -19.35 | -0.01 | 81.43 | 0.0111 | -0.8347 | 0 |
| 217 | SLU 76 | -19 | -0.02 | 81.03 | 0.0173 | -0.8199 | 0 |
| 217 | SLU 77 | -19.86 | 0 | 81.89 | 0.0018 | -0.8567 | 0 |
| 217 | SLU 78 | -19.68 | -0.01 | 82.19 | 0.0111 | -0.8492 | 0 |
| 217 | SLU 79 | -19.64 | 0 | 81.28 | 0.0018 | -0.8469 | 0 |
| 217 | SLU 80 | -19.46 | -0.01 | 81.58 | 0.0111 | -0.8394 | 0 |
| 217 | SLU 81 | -20.28 | 0 | 83.24 | 0.0019 | -0.8738 | 0 |
| 217 | SLU 82 | -20.1 | -0.01 | 83.55 | 0.0112 | -0.8663 | 0 |
| 217 | SLU 83 | -20.61 | 0 | 84 | 0.0018 | -0.8883 | 0 |
| 217 | SLU 84 | -20.43 | -0.01 | 84.31 | 0.0111 | -0.8807 | 0 |
| 217 | SLE RA 1 | -11.66 | 0 | 53.45 | 0.0012 | -0.5039 | 0 |
| 217 | SLE RA 2 | -11.45 | -0.01 | 53.79 | 0.0116 | -0.4956 | 0 |
| 217 | SLE RA 3 | -12.03 | 0 | 54.36 | 0.0013 | -0.5201 | 0 |
| 217 | SLE RA 4 | -11.91 | -0.01 | 54.56 | 0.0075 | -0.5151 | 0 |
| 217 | SLE RA 5 | -11.68 | -0.01 | 54.29 | 0.0116 | -0.5052 | 0 |
| 217 | SLE RA 6 | -12.25 | 0 | 54.86 | 0.0012 | -0.5297 | 0 |
| 217 | SLE RA 7 | -12.13 | -0.01 | 55.07 | 0.0074 | -0.5247 | 0 |
| 217 | SLE RA 8 | -12.1 | 0 | 54.46 | 0.0012 | -0.5232 | 0 |
| 217 | SLE RA 9 | -11.98 | -0.01 | 54.66 | 0.0074 | -0.5182 | 0 |
| 217 | SLE RA 10 | -13.49 | -0.01 | 59.2 | 0.0117 | -0.5823 | 0 |
| 217 | SLE RA 11 | -14.06 | 0 | 59.77 | 0.0013 | -0.6068 | 0 |
| 217 | SLE RA 12 | -13.94 | -0.01 | 59.97 | 0.0076 | -0.6018 | 0 |
| 217 | SLE RA 13 | -13.71 | -0.01 | 59.7 | 0.0117 | -0.5919 | 0 |
| 217 | SLE RA 14 | -14.29 | 0 | 60.27 | 0.0013 | -0.6165 | 0 |
| 217 | SLE RA 15 | -14.16 | -0.01 | 60.48 | 0.0075 | -0.6114 | 0 |
| 217 | SLE RA 16 | -14.14 | 0 | 59.87 | 0.0013 | -0.6099 | 0 |
| 217 | SLE RA 17 | -14.01 | -0.01 | 60.07 | 0.0075 | -0.6049 | 0 |
| 217 | SLE RA 18 | -14.56 | 0 | 61.18 | 0.0014 | -0.6279 | 0 |
| 217 | SLE RA 19 | -14.44 | -0.01 | 61.38 | 0.0076 | -0.6228 | 0 |
| 217 | SLE RA 20 | -14.79 | 0 | 61.68 | 0.0014 | -0.6375 | 0 |
| 217 | SLE RA 21 | -14.66 | -0.01 | 61.88 | 0.0076 | -0.6324 | 0 |
| 217 | SLE FR 1 | -11.66 | 0 | 53.45 | 0.0012 | -0.5039 | 0 |
| 217 | SLE FR 2 | -11.62 | 0 | 53.52 | 0.0033 | -0.5023 | 0 |
| 217 | SLE FR 3 | -11.75 | 0 | 53.65 | 0.0012 | -0.5078 | 0 |
| 217 | SLE FR 4 | -12.49 | 0 | 55.83 | 0.0034 | -0.5394 | 0 |
| 217 | SLE FR 5 | -12.62 | 0 | 55.97 | 0.0013 | -0.545 | 0 |
| 217 | SLE FR 6 | -13.11 | 0 | 57.31 | 0.0013 | -0.5659 | 0 |
| 217 | SLE QP 1 | -11.66 | 0 | 53.45 | 0.0012 | -0.5039 | 0 |
| 217 | SLE QP 2 | -12.53 | 0 | 55.77 | 0.0013 | -0.5411 | 0 |
| 217 | SLD 1 | -0.79 | 0.1 | 47.07 | -0.1151 | -0.0288 | -0.0003 |
| 217 | SLD 2 | -0.79 | 0.1 | 47.07 | -0.1151 | -0.0288 | -0.0003 |
| 217 | SLD 3 | -1.45 | -0.04 | 46.61 | 0.0702 | -0.057 | 0.0002 |
| 217 | SLD 4 | -1.45 | -0.04 | 46.61 | 0.0702 | -0.057 | 0.0002 |
| 217 | SLD 5 | -8.01 | 0.24 | 53.86 | -0.3146 | -0.3446 | -0.0008 |
| 217 | SLD 6 | -8.01 | 0.24 | 53.86 | -0.3146 | -0.3446 | -0.0008 |
| 217 | SLD 7 | -10.21 | -0.23 | 52.32 | 0.3029 | -0.4387 | 0.0008 |
| 217 | SLD 8 | -10.21 | -0.23 | 52.32 | 0.3029 | -0.4387 | 0.0008 |
| 217 | SLD 9 | -14.85 | 0.23 | 59.21 | -0.3004 | -0.6435 | -0.0008 |
| 217 | SLD 10 | -14.85 | 0.23 | 59.21 | -0.3004 | -0.6435 | -0.0008 |
| 217 | SLD 11 | -17.05 | -0.25 | 57.67 | 0.3172 | -0.7377 | 0.0008 |
| 217 | SLD 12 | -17.05 | -0.25 | 57.67 | 0.3172 | -0.7377 | 0.0008 |

| Nodo | Cont. | Reazione a traslazione | | | Reazione a rotazione | | |
|---|---|---|---|---|---|---|---|
| Ind. | N.br. | x | y | z | x | y | z |
| 217 | SLD 13 | -23.61 | 0.04 | 64.92 | -0.0676 | -1.0252 | -0.0002 |
| 217 | SLD 14 | -23.61 | 0.04 | 64.92 | -0.0676 | -1.0252 | -0.0002 |
| 217 | SLD 15 | -24.27 | -0.1 | 64.46 | 0.1177 | -1.0535 | 0.0003 |
| 217 | SLD 16 | -24.27 | -0.1 | 64.46 | 0.1177 | -1.0535 | 0.0003 |
| 217 | SLV 1 | 14.53 | 0.25 | 35.47 | -0.2945 | 0.6398 | -0.0008 |
| 217 | SLV 2 | 14.53 | 0.25 | 35.47 | -0.2945 | 0.6398 | -0.0008 |
| 217 | SLV 3 | 12.95 | -0.11 | 34.35 | 0.1776 | 0.5721 | 0.0004 |
| 217 | SLV 4 | 12.95 | -0.11 | 34.35 | 0.1776 | 0.5721 | 0.0004 |
| 217 | SLV 5 | -2.01 | 0.61 | 51.36 | -0.8033 | -0.0842 | -0.002 |
| 217 | SLV 6 | -2.01 | 0.61 | 51.36 | -0.8033 | -0.0842 | -0.002 |
| 217 | SLV 7 | -7.29 | -0.57 | 47.66 | 0.7701 | -0.3098 | 0.0019 |
| 217 | SLV 8 | -7.29 | -0.57 | 47.66 | 0.7701 | -0.3098 | 0.0019 |
| 217 | SLV 9 | -17.77 | 0.56 | 63.88 | -0.7675 | -0.7725 | -0.0019 |
| 217 | SLV 10 | -17.77 | 0.56 | 63.88 | -0.7675 | -0.7725 | -0.0019 |
| 217 | SLV 11 | -23.05 | -0.61 | 60.17 | 0.8059 | -0.998 | 0.002 |
| 217 | SLV 12 | -23.05 | -0.61 | 60.17 | 0.8059 | -0.998 | 0.002 |
| 217 | SLV 13 | -38.01 | 0.1 | 77.18 | -0.175 | -1.6544 | -0.0004 |
| 217 | SLV 14 | -38.01 | 0.1 | 77.18 | -0.175 | -1.6544 | -0.0004 |
| 217 | SLV 15 | -39.59 | -0.25 | 76.07 | 0.297 | -1.7221 | 0.0008 |
| 217 | SLV 16 | -39.59 | -0.25 | 76.07 | 0.297 | -1.7221 | 0.0008 |
| 218 | SLU 1 | -12.74 | 0 | 51.4 | 0.0011 | -0.5422 | 0 |
| 218 | SLU 2 | -12.46 | -0.02 | 51.98 | 0.0133 | -0.5304 | 0 |
| 218 | SLU 3 | -13.34 | 0 | 52.82 | 0.0011 | -0.5681 | 0 |
| 218 | SLU 4 | -13.17 | -0.01 | 53.17 | 0.0084 | -0.561 | 0 |
| 218 | SLU 5 | -12.82 | -0.02 | 52.76 | 0.0133 | -0.5457 | 0 |
| 218 | SLU 6 | -13.69 | 0 | 53.61 | 0.0011 | -0.5835 | 0 |
| 218 | SLU 7 | -13.53 | -0.01 | 53.95 | 0.0084 | -0.5764 | 0 |
| 218 | SLU 8 | -13.45 | 0 | 52.97 | 0.0011 | -0.5729 | 0 |
| 218 | SLU 9 | -13.28 | -0.01 | 53.31 | 0.0084 | -0.5658 | 0 |
| 218 | SLU 10 | -15.8 | -0.02 | 59.87 | 0.0134 | -0.6716 | 0 |
| 218 | SLU 11 | -16.67 | 0 | 60.71 | 0.0013 | -0.7094 | 0 |
| 218 | SLU 12 | -16.51 | -0.01 | 61.06 | 0.0086 | -0.7023 | 0 |
| 218 | SLU 13 | -16.15 | -0.02 | 60.65 | 0.0134 | -0.687 | 0 |
| 218 | SLU 14 | -17.03 | 0 | 61.49 | 0.0012 | -0.7247 | 0 |
| 218 | SLU 15 | -16.86 | -0.01 | 61.84 | 0.0085 | -0.7176 | 0 |
| 218 | SLU 16 | -16.79 | 0 | 60.86 | 0.0012 | -0.7142 | 0 |
| 218 | SLU 17 | -16.62 | -0.01 | 61.2 | 0.0085 | -0.7071 | 0 |
| 218 | SLU 18 | -17.51 | 0 | 62.67 | 0.0013 | -0.744 | 0 |
| 218 | SLU 19 | -17.34 | -0.01 | 63.02 | 0.0086 | -0.7369 | 0 |
| 218 | SLU 20 | -17.86 | 0 | 63.46 | 0.0013 | -0.7594 | 0 |
| 218 | SLU 21 | -17.7 | -0.01 | 63.8 | 0.0086 | -0.7523 | 0 |
| 218 | SLU 22 | -15.69 | 0 | 58.86 | 0.0013 | -0.6676 | 0 |
| 218 | SLU 23 | -15.42 | -0.02 | 59.43 | 0.0134 | -0.6558 | 0 |
| 218 | SLU 24 | -16.29 | 0 | 60.27 | 0.0013 | -0.6935 | 0 |
| 218 | SLU 25 | -16.13 | -0.01 | 60.62 | 0.0086 | -0.6864 | 0 |
| 218 | SLU 26 | -15.77 | -0.02 | 60.21 | 0.0134 | -0.6711 | 0 |
| 218 | SLU 27 | -16.65 | 0 | 61.06 | 0.0012 | -0.7088 | 0 |
| 218 | SLU 28 | -16.48 | -0.01 | 61.4 | 0.0085 | -0.7017 | 0 |
| 218 | SLU 29 | -16.4 | 0 | 60.42 | 0.0012 | -0.6983 | 0 |
| 218 | SLU 30 | -16.24 | -0.01 | 60.76 | 0.0085 | -0.6912 | 0 |
| 218 | SLU 31 | -18.75 | -0.02 | 67.32 | 0.0136 | -0.797 | 0 |
| 218 | SLU 32 | -19.63 | 0 | 68.16 | 0.0014 | -0.8347 | 0 |
| 218 | SLU 33 | -19.46 | -0.01 | 68.51 | 0.0087 | -0.8277 | 0 |
| 218 | SLU 34 | -19.11 | -0.02 | 68.1 | 0.0135 | -0.8124 | 0 |
| 218 | SLU 35 | -19.99 | 0 | 68.95 | 0.0014 | -0.8501 | 0 |
| 218 | SLU 36 | -19.82 | -0.01 | 69.29 | 0.0087 | -0.843 | 0 |
| 218 | SLU 37 | -19.74 | 0 | 68.31 | 0.0013 | -0.8395 | 0 |
| 218 | SLU 38 | -19.58 | -0.01 | 68.65 | 0.0086 | -0.8324 | 0 |
| 218 | SLU 39 | -20.46 | 0 | 70.12 | 0.0015 | -0.8694 | 0 |
| 218 | SLU 40 | -20.3 | -0.01 | 70.47 | 0.0087 | -0.8623 | 0 |
| 218 | SLU 41 | -20.82 | 0 | 70.91 | 0.0014 | -0.8847 | 0 |
| 218 | SLU 42 | -20.65 | -0.01 | 71.25 | 0.0087 | -0.8776 | 0 |
| 218 | SLU 43 | -15.54 | 0 | 64.27 | 0.0014 | -0.6619 | 0 |
| 218 | SLU 44 | -15.27 | -0.02 | 64.84 | 0.0136 | -0.6501 | 0 |
| 218 | SLU 45 | -16.14 | 0 | 65.69 | 0.0014 | -0.6878 | 0 |
| 218 | SLU 46 | -15.98 | -0.01 | 66.03 | 0.0087 | -0.6807 | 0 |
| 218 | SLU 47 | -15.62 | -0.02 | 65.63 | 0.0136 | -0.6654 | 0 |
| 218 | SLU 48 | -16.5 | 0 | 66.47 | 0.0014 | -0.7032 | 0 |
| 218 | SLU 49 | -16.33 | -0.01 | 66.82 | 0.0087 | -0.6961 | 0 |
| 218 | SLU 50 | -16.26 | 0 | 65.84 | 0.0014 | -0.6926 | 0 |
| 218 | SLU 51 | -16.09 | -0.01 | 66.18 | 0.0087 | -0.6855 | 0 |
| 218 | SLU 52 | -18.61 | -0.02 | 72.73 | 0.0137 | -0.7913 | 0 |
| 218 | SLU 53 | -19.48 | 0 | 73.58 | 0.0016 | -0.8291 | 0 |
| 218 | SLU 54 | -19.32 | -0.01 | 73.92 | 0.0089 | -0.822 | 0 |
| 218 | SLU 55 | -18.96 | -0.02 | 73.51 | 0.0137 | -0.8067 | 0 |
| 218 | SLU 56 | -19.84 | 0 | 74.36 | 0.0015 | -0.8444 | 0 |
| 218 | SLU 57 | -19.67 | -0.01 | 74.7 | 0.0088 | -0.8373 | 0 |
| 218 | SLU 58 | -19.59 | 0 | 73.72 | 0.0015 | -0.8338 | 0 |
| 218 | SLU 59 | -19.43 | -0.01 | 74.07 | 0.0088 | -0.8268 | 0 |
| 218 | SLU 60 | -20.31 | 0 | 75.54 | 0.0016 | -0.8637 | 0 |
| 218 | SLU 61 | -20.15 | -0.01 | 75.88 | 0.0089 | -0.8566 | 0 |
| 218 | SLU 62 | -20.67 | 0 | 76.32 | 0.0016 | -0.879 | 0 |
| 218 | SLU 63 | -20.5 | -0.01 | 76.67 | 0.0089 | -0.8719 | 0 |
| 218 | SLU 64 | -18.5 | 0 | 71.72 | 0.0016 | -0.7873 | 0 |
| 218 | SLU 65 | -18.22 | -0.02 | 72.3 | 0.0137 | -0.7754 | 0 |
| 218 | SLU 66 | -19.1 | 0 | 73.14 | 0.0016 | -0.8132 | 0 |
| 218 | SLU 67 | -18.93 | -0.01 | 73.49 | 0.0089 | -0.8061 | 0 |
| 218 | SLU 68 | -18.58 | -0.02 | 73.08 | 0.0137 | -0.7908 | 0 |

| Nodo | Cont. | Reazione a traslazione | | | Reazione a rotazione | | |
|---|---|---|---|---|---|---|---|
| Ind. | N.br. | x | y | z | x | y | z |
| 218 | SLU 69 | -19.45 | 0 | 73.92 | 0.0015 | -0.8285 | 0 |
| 218 | SLU 70 | -19.29 | -0.01 | 74.27 | 0.0088 | -0.8214 | 0 |
| 218 | SLU 71 | -19.21 | 0 | 73.29 | 0.0015 | -0.818 | 0 |
| 218 | SLU 72 | -19.05 | -0.01 | 73.63 | 0.0088 | -0.8109 | 0 |
| 218 | SLU 73 | -21.56 | -0.02 | 80.18 | 0.0139 | -0.9167 | 0 |
| 218 | SLU 74 | -22.44 | 0 | 81.03 | 0.0017 | -0.9544 | 0 |
| 218 | SLU 75 | -22.27 | -0.01 | 81.37 | 0.009 | -0.9473 | 0 |
| 218 | SLU 76 | -21.92 | -0.02 | 80.97 | 0.0138 | -0.932 | 0 |
| 218 | SLU 77 | -22.79 | 0 | 81.81 | 0.0017 | -0.9698 | 0 |
| 218 | SLU 78 | -22.63 | -0.01 | 82.16 | 0.009 | -0.9627 | 0 |
| 218 | SLU 79 | -22.55 | 0 | 81.18 | 0.0016 | -0.9592 | 0 |
| 218 | SLU 80 | -22.38 | -0.01 | 81.52 | 0.0089 | -0.9521 | 0 |
| 218 | SLU 81 | -23.27 | 0 | 82.99 | 0.0017 | -0.9891 | 0 |
| 218 | SLU 82 | -23.1 | -0.01 | 83.33 | 0.009 | -0.982 | 0 |
| 218 | SLU 83 | -23.62 | 0 | 83.77 | 0.0017 | -1.0044 | 0 |
| 218 | SLU 84 | -23.46 | -0.01 | 84.12 | 0.009 | -0.9973 | 0 |
| 218 | SLE RA 1 | -13.58 | 0 | 53.53 | 0.0012 | -0.578 | 0 |
| 218 | SLE RA 2 | -13.4 | -0.01 | 53.92 | 0.0093 | -0.5702 | 0 |
| 218 | SLE RA 3 | -13.98 | 0 | 54.48 | 0.0012 | -0.5953 | 0 |
| 218 | SLE RA 4 | -13.87 | -0.01 | 54.71 | 0.006 | -0.5906 | 0 |
| 218 | SLE RA 5 | -13.63 | -0.01 | 54.44 | 0.0093 | -0.5804 | 0 |
| 218 | SLE RA 6 | -14.22 | 0 | 55 | 0.0012 | -0.6055 | 0 |
| 218 | SLE RA 7 | -14.11 | -0.01 | 55.23 | 0.006 | -0.6008 | 0 |
| 218 | SLE RA 8 | -14.05 | 0 | 54.58 | 0.0011 | -0.5985 | 0 |
| 218 | SLE RA 9 | -13.94 | -0.01 | 54.81 | 0.006 | -0.5938 | 0 |
| 218 | SLE RA 10 | -15.62 | -0.01 | 59.17 | 0.0094 | -0.6643 | 0 |
| 218 | SLE RA 11 | -16.21 | 0 | 59.74 | 0.0013 | -0.6895 | 0 |
| 218 | SLE RA 12 | -16.1 | -0.01 | 59.97 | 0.0061 | -0.6848 | 0 |
| 218 | SLE RA 13 | -15.86 | -0.01 | 59.7 | 0.0094 | -0.6746 | 0 |
| 218 | SLE RA 14 | -16.44 | 0 | 60.26 | 0.0012 | -0.6997 | 0 |
| 218 | SLE RA 15 | -16.33 | -0.01 | 60.49 | 0.0061 | -0.695 | 0 |
| 218 | SLE RA 16 | -16.28 | 0 | 59.84 | 0.0012 | -0.6927 | 0 |
| 218 | SLE RA 17 | -16.17 | -0.01 | 60.06 | 0.0061 | -0.6879 | 0 |
| 218 | SLE RA 18 | -16.76 | 0 | 61.05 | 0.0013 | -0.7126 | 0 |
| 218 | SLE RA 19 | -16.65 | -0.01 | 61.28 | 0.0062 | -0.7078 | 0 |
| 218 | SLE RA 20 | -17 | 0 | 61.57 | 0.0013 | -0.7228 | 0 |
| 218 | SLE RA 21 | -16.89 | -0.01 | 61.8 | 0.0061 | -0.7181 | 0 |
| 218 | SLE FR 1 | -13.58 | 0 | 53.53 | 0.0012 | -0.578 | 0 |
| 218 | SLE FR 2 | -13.54 | 0 | 53.61 | 0.0028 | -0.5765 | 0 |
| 218 | SLE FR 3 | -13.68 | 0 | 53.74 | 0.0012 | -0.5821 | 0 |
| 218 | SLE FR 4 | -14.5 | 0 | 55.86 | 0.0028 | -0.6168 | 0 |
| 218 | SLE FR 5 | -14.63 | 0 | 56 | 0.0012 | -0.6225 | 0 |
| 218 | SLE FR 6 | -15.17 | 0 | 57.29 | 0.0012 | -0.6453 | 0 |
| 218 | SLE QP 1 | -13.58 | 0 | 53.53 | 0.0012 | -0.578 | 0 |
| 218 | SLE QP 2 | -14.53 | 0 | 55.79 | 0.0012 | -0.6184 | 0 |
| 218 | SLD 1 | -2.93 | -0.01 | 44.75 | -0.0713 | -0.1079 | -0.0002 |
| 218 | SLD 2 | -2.93 | -0.01 | 44.75 | -0.0713 | -0.1079 | -0.0002 |
| 218 | SLD 3 | -3.58 | 0.06 | 44.2 | 0.04 | -0.136 | 0.0001 |
| 218 | SLD 4 | -3.58 | 0.06 | 44.2 | 0.04 | -0.136 | 0.0001 |
| 218 | SLD 5 | -10.08 | -0.11 | 53.3 | -0.1894 | -0.4226 | -0.0004 |
| 218 | SLD 6 | -10.08 | -0.11 | 53.3 | -0.1894 | -0.4226 | -0.0004 |
| 218 | SLD 7 | -12.22 | 0.13 | 51.48 | 0.1817 | -0.5163 | 0.0004 |
| 218 | SLD 8 | -12.22 | 0.13 | 51.48 | 0.1817 | -0.5163 | 0.0004 |
| 218 | SLD 9 | -16.85 | -0.13 | 60.09 | -0.1793 | -0.7205 | -0.0004 |
| 218 | SLD 10 | -16.85 | -0.13 | 60.09 | -0.1793 | -0.7205 | -0.0004 |
| 218 | SLD 11 | -18.99 | 0.11 | 58.27 | 0.1918 | -0.8142 | 0.0004 |
| 218 | SLD 12 | -18.99 | 0.11 | 58.27 | 0.1918 | -0.8142 | 0.0004 |
| 218 | SLD 13 | -25.49 | -0.07 | 67.37 | -0.0376 | -1.1008 | -0.0001 |
| 218 | SLD 14 | -25.49 | -0.07 | 67.37 | -0.0376 | -1.1008 | -0.0001 |
| 218 | SLD 15 | -26.14 | 0 | 66.83 | 0.0737 | -1.1289 | 0.0002 |
| 218 | SLD 16 | -26.14 | 0 | 66.83 | 0.0737 | -1.1289 | 0.0002 |
| 218 | SLV 1 | 12.22 | -0.01 | 30.02 | -0.1821 | 0.5591 | -0.0004 |
| 218 | SLV 2 | 12.22 | -0.01 | 30.02 | -0.1821 | 0.5591 | -0.0004 |
| 218 | SLV 3 | 10.67 | 0.16 | 28.71 | 0.1004 | 0.4917 | 0.0002 |
| 218 | SLV 4 | 10.67 | 0.16 | 28.71 | 0.1004 | 0.4917 | 0.0002 |
| 218 | SLV 5 | -4.17 | -0.27 | 50.04 | -0.4823 | -0.1628 | -0.0011 |
| 218 | SLV 6 | -4.17 | -0.27 | 50.04 | -0.4823 | -0.1628 | -0.0011 |
| 218 | SLV 7 | -9.31 | 0.31 | 45.68 | 0.4594 | -0.3877 | 0.001 |
| 218 | SLV 8 | -9.31 | 0.31 | 45.68 | 0.4594 | -0.3877 | 0.001 |
| 218 | SLV 9 | -19.76 | -0.31 | 65.9 | -0.457 | -0.8491 | -0.001 |
| 218 | SLV 10 | -19.76 | -0.31 | 65.9 | -0.457 | -0.8491 | -0.001 |
| 218 | SLV 11 | -24.9 | 0.26 | 61.53 | 0.4847 | -1.074 | 0.0011 |
| 218 | SLV 12 | -24.9 | 0.26 | 61.53 | 0.4847 | -1.074 | 0.0011 |
| 218 | SLV 13 | -39.74 | -0.16 | 82.86 | -0.098 | -1.7284 | -0.0002 |
| 218 | SLV 14 | -39.74 | -0.16 | 82.86 | -0.098 | -1.7284 | -0.0002 |
| 218 | SLV 15 | -41.29 | 0.01 | 81.55 | 0.1845 | -1.7959 | 0.0004 |
| 218 | SLV 16 | -41.29 | 0.01 | 81.55 | 0.1845 | -1.7959 | 0.0004 |
| 219 | SLU 1 | -15.3 | 0 | 53.22 | 0.0009 | -0.6835 | 0 |
| 219 | SLU 2 | -15.09 | -0.01 | 53.84 | 0.0073 | -0.6752 | 0 |
| 219 | SLU 3 | -15.95 | 0 | 54.77 | 0.0009 | -0.7131 | 0 |
| 219 | SLU 4 | -15.83 | -0.01 | 55.14 | 0.0047 | -0.7081 | 0 |
| 219 | SLU 5 | -15.47 | -0.01 | 54.69 | 0.0073 | -0.6924 | 0 |
| 219 | SLU 6 | -16.34 | 0 | 55.63 | 0.0009 | -0.7303 | 0 |
| 219 | SLU 7 | -16.21 | -0.01 | 56 | 0.0047 | -0.7253 | 0 |
| 219 | SLU 8 | -16.06 | 0 | 54.93 | 0.0009 | -0.718 | 0 |
| 219 | SLU 9 | -15.94 | -0.01 | 55.3 | 0.0047 | -0.713 | 0 |
| 219 | SLU 10 | -18.74 | -0.01 | 61.88 | 0.0074 | -0.8362 | 0 |
| 219 | SLU 11 | -19.61 | 0 | 62.82 | 0.001 | -0.8741 | 0 |

| Nodo | Cont. | Reazione a traslazione | | | Reazione a rotazione | | |
|---|---|---|---|---|---|---|---|
| Ind. | N.br. | x | y | z | x | y | z |
| 219 | SLU 12 | -19.48 | -0.01 | 63.19 | 0.0048 | -0.8691 | 0 |
| 219 | SLU 13 | -19.13 | -0.01 | 62.74 | 0.0073 | -0.8534 | 0 |
| 219 | SLU 14 | -19.99 | 0 | 63.67 | 0.001 | -0.8913 | 0 |
| 219 | SLU 15 | -19.87 | -0.01 | 64.05 | 0.0048 | -0.8863 | 0 |
| 219 | SLU 16 | -19.72 | 0 | 62.97 | 0.0009 | -0.879 | 0 |
| 219 | SLU 17 | -19.6 | -0.01 | 63.35 | 0.0048 | -0.874 | 0 |
| 219 | SLU 18 | -20.52 | 0 | 64.71 | 0.001 | -0.9136 | 0 |
| 219 | SLU 19 | -20.39 | -0.01 | 65.08 | 0.0048 | -0.9085 | 0 |
| 219 | SLU 20 | -20.9 | 0 | 65.57 | 0.001 | -0.9308 | 0 |
| 219 | SLU 21 | -20.78 | -0.01 | 65.94 | 0.0048 | -0.9258 | 0 |
| 219 | SLU 22 | -18.56 | 0 | 60.88 | 0.001 | -0.828 | 0 |
| 219 | SLU 23 | -18.36 | -0.01 | 61.5 | 0.0074 | -0.8196 | 0 |
| 219 | SLU 24 | -19.22 | 0 | 62.44 | 0.001 | -0.8575 | 0 |
| 219 | SLU 25 | -19.1 | -0.01 | 62.81 | 0.0049 | -0.8525 | 0 |
| 219 | SLU 26 | -18.74 | -0.01 | 62.36 | 0.0074 | -0.8369 | 0 |
| 219 | SLU 27 | -19.61 | 0 | 63.29 | 0.001 | -0.8748 | 0 |
| 219 | SLU 28 | -19.48 | -0.01 | 63.67 | 0.0048 | -0.8698 | 0 |
| 219 | SLU 29 | -19.33 | 0 | 62.6 | 0.001 | -0.8625 | 0 |
| 219 | SLU 30 | -19.21 | -0.01 | 62.97 | 0.0048 | -0.8575 | 0 |
| 219 | SLU 31 | -22.01 | -0.01 | 69.55 | 0.0075 | -0.9806 | 0 |
| 219 | SLU 32 | -22.88 | 0 | 70.49 | 0.0011 | -1.0185 | 0 |
| 219 | SLU 33 | -22.75 | -0.01 | 70.86 | 0.0049 | -1.0135 | 0 |
| 219 | SLU 34 | -22.4 | -0.01 | 70.41 | 0.0075 | -0.9979 | 0 |
| 219 | SLU 35 | -23.26 | 0 | 71.34 | 0.0011 | -1.0358 | 0 |
| 219 | SLU 36 | -23.14 | -0.01 | 71.71 | 0.0049 | -1.0308 | 0 |
| 219 | SLU 37 | -22.99 | 0 | 70.64 | 0.0011 | -1.0235 | 0 |
| 219 | SLU 38 | -22.86 | -0.01 | 71.01 | 0.0049 | -1.0185 | 0 |
| 219 | SLU 39 | -23.78 | 0 | 72.38 | 0.0011 | -1.058 | 0 |
| 219 | SLU 40 | -23.66 | -0.01 | 72.75 | 0.005 | -1.053 | 0 |
| 219 | SLU 41 | -24.17 | 0 | 73.24 | 0.0011 | -1.0753 | 0 |
| 219 | SLU 42 | -24.04 | -0.01 | 73.61 | 0.005 | -1.0702 | 0 |
| 219 | SLU 43 | -18.76 | 0 | 66.55 | 0.0011 | -0.8391 | 0 |
| 219 | SLU 44 | -18.56 | -0.01 | 67.17 | 0.0075 | -0.8307 | 0 |
| 219 | SLU 45 | -19.42 | 0 | 68.11 | 0.0011 | -0.8686 | 0 |
| 219 | SLU 46 | -19.3 | -0.01 | 68.48 | 0.0049 | -0.8636 | 0 |
| 219 | SLU 47 | -18.94 | -0.01 | 68.03 | 0.0075 | -0.848 | 0 |
| 219 | SLU 48 | -19.81 | 0 | 68.96 | 0.0011 | -0.8858 | 0 |
| 219 | SLU 49 | -19.68 | -0.01 | 69.33 | 0.0049 | -0.8808 | 0 |
| 219 | SLU 50 | -19.53 | 0 | 68.26 | 0.0011 | -0.8736 | 0 |
| 219 | SLU 51 | -19.41 | -0.01 | 68.64 | 0.0049 | -0.8685 | 0 |
| 219 | SLU 52 | -22.21 | -0.01 | 75.22 | 0.0076 | -0.9917 | 0 |
| 219 | SLU 53 | -23.08 | 0 | 76.15 | 0.0012 | -1.0296 | 0 |
| 219 | SLU 54 | -22.95 | -0.01 | 76.53 | 0.005 | -1.0246 | 0 |
| 219 | SLU 55 | -22.6 | -0.01 | 76.07 | 0.0076 | -1.009 | 0 |
| 219 | SLU 56 | -23.46 | 0 | 77.01 | 0.0012 | -1.0469 | 0 |
| 219 | SLU 57 | -23.34 | -0.01 | 77.38 | 0.005 | -1.0418 | 0 |
| 219 | SLU 58 | -23.19 | 0 | 76.31 | 0.0012 | -1.0346 | 0 |
| 219 | SLU 59 | -23.06 | -0.01 | 76.68 | 0.005 | -1.0296 | 0 |
| 219 | SLU 60 | -23.99 | 0 | 78.05 | 0.0012 | -1.0691 | 0 |
| 219 | SLU 61 | -23.86 | -0.01 | 78.42 | 0.005 | -1.0641 | 0 |
| 219 | SLU 62 | -24.37 | 0 | 78.9 | 0.0012 | -1.0863 | 0 |
| 219 | SLU 63 | -24.25 | -0.01 | 79.28 | 0.005 | -1.0813 | 0 |
| 219 | SLU 64 | -22.03 | 0 | 74.22 | 0.0012 | -0.9835 | 0 |
| 219 | SLU 65 | -21.82 | -0.01 | 74.84 | 0.0076 | -0.9752 | 0 |
| 219 | SLU 66 | -22.69 | 0 | 75.77 | 0.0012 | -1.0131 | 0 |
| 219 | SLU 67 | -22.56 | -0.01 | 76.15 | 0.0051 | -1.008 | 0 |
| 219 | SLU 68 | -22.21 | -0.01 | 75.69 | 0.0076 | -0.9924 | 0 |
| 219 | SLU 69 | -23.07 | 0 | 76.63 | 0.0012 | -1.0303 | 0 |
| 219 | SLU 70 | -22.95 | -0.01 | 77 | 0.0051 | -1.0253 | 0 |
| 219 | SLU 71 | -22.8 | 0 | 75.93 | 0.0012 | -1.018 | 0 |
| 219 | SLU 72 | -22.68 | -0.01 | 76.3 | 0.005 | -1.013 | 0 |
| 219 | SLU 73 | -25.48 | -0.01 | 82.89 | 0.0077 | -1.1362 | 0 |
| 219 | SLU 74 | -26.34 | 0 | 83.82 | 0.0013 | -1.1741 | 0 |
| 219 | SLU 75 | -26.22 | -0.01 | 84.19 | 0.0052 | -1.1691 | 0 |
| 219 | SLU 76 | -25.86 | -0.01 | 83.74 | 0.0077 | -1.1534 | 0 |
| 219 | SLU 77 | -26.73 | 0 | 84.68 | 0.0013 | -1.1913 | 0 |
| 219 | SLU 78 | -26.6 | -0.01 | 85.05 | 0.0052 | -1.1863 | 0 |
| 219 | SLU 79 | -26.46 | 0 | 83.98 | 0.0013 | -1.179 | 0 |
| 219 | SLU 80 | -26.33 | -0.01 | 84.35 | 0.0051 | -1.174 | 0 |
| 219 | SLU 81 | -27.25 | 0 | 85.71 | 0.0013 | -1.2136 | 0 |
| 219 | SLU 82 | -27.13 | -0.01 | 86.09 | 0.0052 | -1.2085 | 0 |
| 219 | SLU 83 | -27.64 | 0 | 86.57 | 0.0013 | -1.2308 | 0 |
| 219 | SLU 84 | -27.51 | -0.01 | 86.94 | 0.0052 | -1.2258 | 0 |
| 219 | SLE RA 1 | -16.23 | 0 | 55.41 | 0.0009 | -0.7248 | 0 |
| 219 | SLE RA 2 | -16.09 | -0.01 | 55.82 | 0.0052 | -0.7192 | 0 |
| 219 | SLE RA 3 | -16.67 | 0 | 56.44 | 0.0009 | -0.7445 | 0 |
| 219 | SLE RA 4 | -16.58 | -0.01 | 56.69 | 0.0035 | -0.7412 | 0 |
| 219 | SLE RA 5 | -16.35 | -0.01 | 56.39 | 0.0052 | -0.7307 | 0 |
| 219 | SLE RA 6 | -16.92 | 0 | 57.01 | 0.0009 | -0.756 | 0 |
| 219 | SLE RA 7 | -16.84 | -0.01 | 57.26 | 0.0035 | -0.7527 | 0 |
| 219 | SLE RA 8 | -16.74 | 0 | 56.55 | 0.0009 | -0.7478 | 0 |
| 219 | SLE RA 9 | -16.66 | -0.01 | 56.8 | 0.0035 | -0.7445 | 0 |
| 219 | SLE RA 10 | -18.53 | -0.01 | 61.18 | 0.0052 | -0.8266 | 0 |
| 219 | SLE RA 11 | -19.1 | 0 | 61.81 | 0.001 | -0.8518 | 0 |
| 219 | SLE RA 12 | -19.02 | -0.01 | 62.06 | 0.0035 | -0.8485 | 0 |
| 219 | SLE RA 13 | -18.78 | -0.01 | 61.76 | 0.0052 | -0.8381 | 0 |
| 219 | SLE RA 14 | -19.36 | 0 | 62.38 | 0.001 | -0.8633 | 0 |
| 219 | SLE RA 15 | -19.28 | -0.01 | 62.63 | 0.0035 | -0.86 | 0 |

| Nodo | Cont. | Reazione a traslazione | | | Reazione a rotazione | | |
|---|---|---|---|---|---|---|---|
| Ind. | N.br. | x | y | z | x | y | z |
| 219 | SLE RA 16 | -19.18 | 0 | 61.91 | 0.001 | -0.8551 | 0 |
| 219 | SLE RA 17 | -19.1 | -0.01 | 62.16 | 0.0035 | -0.8518 | 0 |
| 219 | SLE RA 18 | -19.71 | 0 | 63.07 | 0.001 | -0.8782 | 0 |
| 219 | SLE RA 19 | -19.63 | -0.01 | 63.32 | 0.0035 | -0.8748 | 0 |
| 219 | SLE RA 20 | -19.97 | 0 | 63.64 | 0.001 | -0.8897 | 0 |
| 219 | SLE RA 21 | -19.88 | -0.01 | 63.89 | 0.0035 | -0.8863 | 0 |
| 219 | SLE FR 1 | -16.23 | 0 | 55.41 | 0.0009 | -0.7248 | 0 |
| 219 | SLE FR 2 | -16.2 | 0 | 55.49 | 0.0018 | -0.7237 | 0 |
| 219 | SLE FR 3 | -16.33 | 0 | 55.63 | 0.0009 | -0.7294 | 0 |
| 219 | SLE FR 4 | -17.25 | 0 | 57.79 | 0.0018 | -0.7697 | 0 |
| 219 | SLE FR 5 | -17.38 | 0 | 57.93 | 0.0009 | -0.7754 | 0 |
| 219 | SLE FR 6 | -17.97 | 0 | 59.24 | 0.0009 | -0.8015 | 0 |
| 219 | SLE QP 1 | -16.23 | 0 | 55.41 | 0.0009 | -0.7248 | 0 |
| 219 | SLE QP 2 | -17.27 | 0 | 57.71 | 0.0009 | -0.7708 | 0 |
| 219 | SLD 1 | -5.96 | -0.01 | 43.17 | -0.0336 | -0.2568 | 0 |
| 219 | SLD 2 | -5.96 | -0.01 | 43.17 | -0.0336 | -0.2568 | 0 |
| 219 | SLD 3 | -6.56 | 0.05 | 42.49 | 0.0162 | -0.2837 | -0.0001 |
| 219 | SLD 4 | -6.56 | 0.05 | 42.49 | 0.0162 | -0.2837 | -0.0001 |
| 219 | SLD 5 | -12.96 | -0.08 | 54.38 | -0.085 | -0.5759 | 0.0002 |
| 219 | SLD 6 | -12.96 | -0.08 | 54.38 | -0.085 | -0.5759 | 0.0002 |
| 219 | SLD 7 | -14.97 | 0.09 | 52.11 | 0.0811 | -0.6654 | -0.0003 |
| 219 | SLD 8 | -14.97 | 0.09 | 52.11 | 0.0811 | -0.6654 | -0.0003 |
| 219 | SLD 9 | -19.57 | -0.1 | 63.3 | -0.0792 | -0.8762 | 0.0002 |
| 219 | SLD 10 | -19.57 | -0.1 | 63.3 | -0.0792 | -0.8762 | 0.0002 |
| 219 | SLD 11 | -21.58 | 0.08 | 61.03 | 0.0868 | -0.9658 | -0.0002 |
| 219 | SLD 12 | -21.58 | 0.08 | 61.03 | 0.0868 | -0.9658 | -0.0002 |
| 219 | SLD 13 | -27.99 | -0.05 | 72.92 | -0.0144 | -1.258 | 0.0001 |
| 219 | SLD 14 | -27.99 | -0.05 | 72.92 | -0.0144 | -1.258 | 0.0001 |
| 219 | SLD 15 | -28.59 | 0 | 72.24 | 0.0354 | -1.2849 | 0 |
| 219 | SLD 16 | -28.59 | 0 | 72.24 | 0.0354 | -1.2849 | 0 |
| 219 | SLV 1 | 8.83 | -0.01 | 23.84 | -0.0856 | 0.4151 | 0 |
| 219 | SLV 2 | 8.83 | -0.01 | 23.84 | -0.0856 | 0.4151 | 0 |
| 219 | SLV 3 | 7.38 | 0.12 | 22.21 | 0.0397 | 0.3507 | -0.0003 |
| 219 | SLV 4 | 7.38 | 0.12 | 22.21 | 0.0397 | 0.3507 | -0.0003 |
| 219 | SLV 5 | -7.25 | -0.2 | 50.01 | -0.2151 | -0.3173 | 0.0006 |
| 219 | SLV 6 | -7.25 | -0.2 | 50.01 | -0.2151 | -0.3173 | 0.0006 |
| 219 | SLV 7 | -12.07 | 0.23 | 44.59 | 0.2027 | -0.5321 | -0.0006 |
| 219 | SLV 8 | -12.07 | 0.23 | 44.59 | 0.2027 | -0.5321 | -0.0006 |
| 219 | SLV 9 | -22.47 | -0.24 | 70.82 | -0.2008 | -1.0095 | 0.0006 |
| 219 | SLV 10 | -22.47 | -0.24 | 70.82 | -0.2008 | -1.0095 | 0.0006 |
| 219 | SLV 11 | -27.3 | 0.2 | 65.4 | 0.217 | -1.2243 | -0.0006 |
| 219 | SLV 12 | -27.3 | 0.2 | 65.4 | 0.217 | -1.2243 | -0.0006 |
| 219 | SLV 13 | -41.93 | -0.13 | 93.2 | -0.0379 | -1.8923 | 0.0003 |
| 219 | SLV 14 | -41.93 | -0.13 | 93.2 | -0.0379 | -1.8923 | 0.0003 |
| 219 | SLV 15 | -43.38 | 0 | 91.57 | 0.0875 | -1.9568 | -0.0001 |
| 219 | SLV 16 | -43.38 | 0 | 91.57 | 0.0875 | -1.9568 | -0.0001 |
| 220 | SLU 1 | -13.36 | -0.18 | 97.06 | -0.0058 | -0.455 | 0.0001 |
| 220 | SLU 2 | -13.32 | 0.2 | 98.2 | -0.024 | -0.4516 | 0 |
| 220 | SLU 3 | -13.86 | -0.2 | 100.07 | -0.0056 | -0.4736 | 0.0001 |
| 220 | SLU 4 | -13.84 | 0.02 | 100.75 | -0.0165 | -0.4716 | 0 |
| 220 | SLU 5 | -13.61 | 0.18 | 99.86 | -0.0238 | -0.4624 | 0 |
| 220 | SLU 6 | -14.15 | -0.22 | 101.72 | -0.0055 | -0.4844 | 0.0001 |
| 220 | SLU 7 | -14.13 | 0 | 102.41 | -0.0164 | -0.4824 | 0.0001 |
| 220 | SLU 8 | -13.94 | -0.22 | 100.37 | -0.0055 | -0.4766 | 0.0001 |
| 220 | SLU 9 | -13.91 | 0.01 | 101.06 | -0.0165 | -0.4745 | 0.0001 |
| 220 | SLU 10 | -16.02 | 0.18 | 112.89 | -0.0254 | -0.5514 | 0 |
| 220 | SLU 11 | -16.56 | -0.22 | 114.75 | -0.007 | -0.5734 | 0.0001 |
| 220 | SLU 12 | -16.54 | 0.01 | 115.44 | -0.0179 | -0.5714 | 0.0001 |
| 220 | SLU 13 | -16.31 | 0.16 | 114.54 | -0.0252 | -0.5622 | 0 |
| 220 | SLU 14 | -16.85 | -0.24 | 116.41 | -0.0069 | -0.5842 | 0.0001 |
| 220 | SLU 15 | -16.83 | -0.01 | 117.1 | -0.0178 | -0.5822 | 0.0001 |
| 220 | SLU 16 | -16.63 | -0.23 | 115.06 | -0.0069 | -0.5764 | 0.0001 |
| 220 | SLU 17 | -16.61 | -0.01 | 115.75 | -0.0178 | -0.5743 | 0.0001 |
| 220 | SLU 18 | -17.21 | -0.2 | 118.04 | -0.0078 | -0.5976 | 0.0001 |
| 220 | SLU 19 | -17.19 | 0.03 | 118.73 | -0.0187 | -0.5956 | 0.0001 |
| 220 | SLU 20 | -17.5 | -0.22 | 119.7 | -0.0076 | -0.6084 | 0.0001 |
| 220 | SLU 21 | -17.48 | 0.01 | 120.38 | -0.0186 | -0.6063 | 0.0001 |
| 220 | SLU 22 | -15.82 | -0.25 | 111.13 | -0.0053 | -0.5454 | 0.0001 |
| 220 | SLU 23 | -15.79 | 0.13 | 112.28 | -0.0235 | -0.542 | 0 |
| 220 | SLU 24 | -16.33 | -0.27 | 114.14 | -0.0051 | -0.564 | 0.0001 |
| 220 | SLU 25 | -16.31 | -0.05 | 114.83 | -0.016 | -0.562 | 0.0001 |
| 220 | SLU 26 | -16.08 | 0.11 | 113.93 | -0.0233 | -0.5528 | 0 |
| 220 | SLU 27 | -16.62 | -0.29 | 115.8 | -0.005 | -0.5748 | 0.0001 |
| 220 | SLU 28 | -16.6 | -0.07 | 116.48 | -0.0159 | -0.5727 | 0.0001 |
| 220 | SLU 29 | -16.4 | -0.29 | 114.45 | -0.005 | -0.5669 | 0.0001 |
| 220 | SLU 30 | -16.38 | -0.06 | 115.13 | -0.0159 | -0.5649 | 0.0001 |
| 220 | SLU 31 | -18.48 | 0.11 | 126.96 | -0.0248 | -0.6418 | 0 |
| 220 | SLU 32 | -19.03 | -0.29 | 128.83 | -0.0065 | -0.6638 | 0.0001 |
| 220 | SLU 33 | -19 | -0.06 | 129.52 | -0.0174 | -0.6618 | 0.0001 |
| 220 | SLU 34 | -18.77 | 0.09 | 128.62 | -0.0247 | -0.6526 | 0.0001 |
| 220 | SLU 35 | -19.32 | -0.31 | 130.49 | -0.0064 | -0.6746 | 0.0001 |
| 220 | SLU 36 | -19.29 | -0.08 | 131.17 | -0.0173 | -0.6725 | 0.0001 |
| 220 | SLU 37 | -19.1 | -0.3 | 129.14 | -0.0064 | -0.6668 | 0.0001 |
| 220 | SLU 38 | -19.08 | -0.08 | 129.82 | -0.0173 | -0.6647 | 0.0001 |
| 220 | SLU 39 | -19.68 | -0.27 | 132.12 | -0.0072 | -0.688 | 0.0001 |
| 220 | SLU 40 | -19.65 | -0.04 | 132.8 | -0.0182 | -0.6859 | 0.0001 |
| 220 | SLU 41 | -19.97 | -0.29 | 133.78 | -0.0071 | -0.6988 | 0.0001 |
| 220 | SLU 42 | -19.94 | -0.06 | 134.46 | -0.018 | -0.6967 | 0.0001 |

| Nodo | Cont. | Reazione a traslazione | | | Reazione a rotazione | | |
|---|---|---|---|---|---|---|---|
| Ind. | N.br. | x | y | z | x | y | z |
| 220 | SLU 43 | -16.52 | -0.21 | 121.35 | -0.0077 | -0.5605 | 0.0001 |
| 220 | SLU 44 | -16.48 | 0.17 | 122.49 | -0.0259 | -0.5571 | 0 |
| 220 | SLU 45 | -17.02 | -0.23 | 124.36 | -0.0075 | -0.5791 | 0.0001 |
| 220 | SLU 46 | -17 | -0.01 | 125.04 | -0.0184 | -0.5771 | 0.0001 |
| 220 | SLU 47 | -16.77 | 0.15 | 124.15 | -0.0258 | -0.5679 | 0 |
| 220 | SLU 48 | -17.31 | -0.25 | 126.02 | -0.0074 | -0.5899 | 0.0001 |
| 220 | SLU 49 | -17.29 | -0.03 | 126.7 | -0.0183 | -0.5879 | 0.0001 |
| 220 | SLU 50 | -17.1 | -0.25 | 124.66 | -0.0074 | -0.5821 | 0.0001 |
| 220 | SLU 51 | -17.07 | -0.02 | 125.35 | -0.0184 | -0.58 | 0.0001 |
| 220 | SLU 52 | -19.18 | 0.15 | 137.18 | -0.0273 | -0.657 | 0 |
| 220 | SLU 53 | -19.72 | -0.25 | 139.05 | -0.0089 | -0.6789 | 0.0001 |
| 220 | SLU 54 | -19.7 | -0.02 | 139.73 | -0.0198 | -0.6769 | 0.0001 |
| 220 | SLU 55 | -19.47 | 0.13 | 138.84 | -0.0272 | -0.6677 | 0 |
| 220 | SLU 56 | -20.01 | -0.27 | 140.7 | -0.0088 | -0.6897 | 0.0001 |
| 220 | SLU 57 | -19.99 | -0.04 | 141.39 | -0.0197 | -0.6877 | 0.0001 |
| 220 | SLU 58 | -19.79 | -0.26 | 139.35 | -0.0088 | -0.6819 | 0.0001 |
| 220 | SLU 59 | -19.77 | -0.04 | 140.04 | -0.0198 | -0.6798 | 0.0001 |
| 220 | SLU 60 | -20.37 | -0.23 | 142.33 | -0.0097 | -0.7031 | 0.0001 |
| 220 | SLU 61 | -20.35 | 0 | 143.02 | -0.0206 | -0.7011 | 0.0001 |
| 220 | SLU 62 | -20.66 | -0.25 | 143.99 | -0.0096 | -0.7139 | 0.0001 |
| 220 | SLU 63 | -20.64 | -0.02 | 144.67 | -0.0205 | -0.7119 | 0.0001 |
| 220 | SLU 64 | -18.98 | -0.28 | 135.43 | -0.0072 | -0.6509 | 0.0001 |
| 220 | SLU 65 | -18.95 | 0.1 | 136.57 | -0.0254 | -0.6475 | 0.0001 |
| 220 | SLU 66 | -19.49 | -0.3 | 138.43 | -0.007 | -0.6695 | 0.0001 |
| 220 | SLU 67 | -19.47 | -0.08 | 139.12 | -0.0179 | -0.6675 | 0.0001 |
| 220 | SLU 68 | -19.24 | 0.08 | 138.22 | -0.0252 | -0.6583 | 0.0001 |
| 220 | SLU 69 | -19.78 | -0.32 | 140.09 | -0.0069 | -0.6803 | 0.0001 |
| 220 | SLU 70 | -19.76 | -0.1 | 140.78 | -0.0178 | -0.6783 | 0.0001 |
| 220 | SLU 71 | -19.56 | -0.32 | 138.74 | -0.0069 | -0.6725 | 0.0001 |
| 220 | SLU 72 | -19.54 | -0.09 | 139.43 | -0.0178 | -0.6704 | 0.0001 |
| 220 | SLU 73 | -21.65 | 0.08 | 151.25 | -0.0268 | -0.7473 | 0.0001 |
| 220 | SLU 74 | -22.19 | -0.32 | 153.12 | -0.0084 | -0.7693 | 0.0002 |
| 220 | SLU 75 | -22.17 | -0.09 | 153.81 | -0.0193 | -0.7673 | 0.0001 |
| 220 | SLU 76 | -21.94 | 0.06 | 152.91 | -0.0266 | -0.7581 | 0.0001 |
| 220 | SLU 77 | -22.48 | -0.34 | 154.78 | -0.0083 | -0.7801 | 0.0002 |
| 220 | SLU 78 | -22.46 | -0.11 | 155.46 | -0.0192 | -0.7781 | 0.0001 |
| 220 | SLU 79 | -22.26 | -0.33 | 153.43 | -0.0083 | -0.7723 | 0.0002 |
| 220 | SLU 80 | -22.24 | -0.11 | 154.11 | -0.0192 | -0.7702 | 0.0001 |
| 220 | SLU 81 | -22.84 | -0.3 | 156.41 | -0.0092 | -0.7935 | 0.0002 |
| 220 | SLU 82 | -22.82 | -0.07 | 157.09 | -0.0201 | -0.7915 | 0.0001 |
| 220 | SLU 83 | -23.13 | -0.32 | 158.07 | -0.009 | -0.8043 | 0.0002 |
| 220 | SLU 84 | -23.11 | -0.09 | 158.75 | -0.02 | -0.8022 | 0.0001 |
| 220 | SLE RA 1 | -14.06 | -0.2 | 101.08 | -0.0056 | -0.4808 | 0.0001 |
| 220 | SLE RA 2 | -14.04 | 0.05 | 101.84 | -0.0178 | -0.4786 | 0 |
| 220 | SLE RA 3 | -14.4 | -0.21 | 103.09 | -0.0055 | -0.4932 | 0.0001 |
| 220 | SLE RA 4 | -14.38 | -0.06 | 103.54 | -0.0128 | -0.4919 | 0.0001 |
| 220 | SLE RA 5 | -14.23 | 0.04 | 102.95 | -0.0177 | -0.4858 | 0 |
| 220 | SLE RA 6 | -14.59 | -0.23 | 104.19 | -0.0054 | -0.5004 | 0.0001 |
| 220 | SLE RA 7 | -14.58 | -0.08 | 104.65 | -0.0127 | -0.4991 | 0.0001 |
| 220 | SLE RA 8 | -14.45 | -0.22 | 103.29 | -0.0055 | -0.4952 | 0.0001 |
| 220 | SLE RA 9 | -14.43 | -0.07 | 103.75 | -0.0127 | -0.4939 | 0.0001 |
| 220 | SLE RA 10 | -15.83 | 0.04 | 111.63 | -0.0187 | -0.5451 | 0.0001 |
| 220 | SLE RA 11 | -16.2 | -0.22 | 112.88 | -0.0064 | -0.5598 | 0.0001 |
| 220 | SLE RA 12 | -16.18 | -0.07 | 113.33 | -0.0137 | -0.5584 | 0.0001 |
| 220 | SLE RA 13 | -16.03 | 0.03 | 112.74 | -0.0186 | -0.5523 | 0.0001 |
| 220 | SLE RA 14 | -16.39 | -0.24 | 113.98 | -0.0064 | -0.567 | 0.0001 |
| 220 | SLE RA 15 | -16.38 | -0.09 | 114.44 | -0.0136 | -0.5656 | 0.0001 |
| 220 | SLE RA 16 | -16.25 | -0.23 | 113.08 | -0.0064 | -0.5617 | 0.0001 |
| 220 | SLE RA 17 | -16.23 | -0.08 | 113.54 | -0.0137 | -0.5604 | 0.0001 |
| 220 | SLE RA 18 | -16.63 | -0.21 | 115.07 | -0.007 | -0.5759 | 0.0001 |
| 220 | SLE RA 19 | -16.62 | -0.06 | 115.53 | -0.0142 | -0.5745 | 0.0001 |
| 220 | SLE RA 20 | -16.82 | -0.22 | 116.17 | -0.0069 | -0.5831 | 0.0001 |
| 220 | SLE RA 21 | -16.81 | -0.07 | 116.63 | -0.0142 | -0.5817 | 0.0001 |
| 220 | SLE FR 1 | -14.06 | -0.2 | 101.08 | -0.0056 | -0.4808 | 0.0001 |
| 220 | SLE FR 2 | -14.06 | -0.15 | 101.23 | -0.008 | -0.4804 | 0.0001 |
| 220 | SLE FR 3 | -14.14 | -0.2 | 101.52 | -0.0056 | -0.4837 | 0.0001 |
| 220 | SLE FR 4 | -14.83 | -0.15 | 105.43 | -0.0084 | -0.5089 | 0.0001 |
| 220 | SLE FR 5 | -14.91 | -0.21 | 105.72 | -0.006 | -0.5122 | 0.0001 |
| 220 | SLE FR 6 | -15.35 | -0.2 | 108.07 | -0.0063 | -0.5284 | 0.0001 |
| 220 | SLE QP 1 | -14.06 | -0.2 | 101.08 | -0.0056 | -0.4808 | 0.0001 |
| 220 | SLE QP 2 | -14.83 | -0.2 | 105.28 | -0.006 | -0.5094 | 0.0001 |
| 220 | SLD 1 | -7.51 | 1.37 | 72.83 | -0.0721 | -0.2039 | -0.0005 |
| 220 | SLD 2 | -7.51 | 1.37 | 72.83 | -0.0721 | -0.2039 | -0.0005 |
| 220 | SLD 3 | -7.87 | -3.37 | 71.36 | 0.1324 | -0.2198 | 0.0004 |
| 220 | SLD 4 | -7.87 | -3.37 | 71.36 | 0.1324 | -0.2198 | 0.0004 |
| 220 | SLD 5 | -12.09 | 7.46 | 97.77 | -0.3359 | -0.3936 | -0.0016 |
| 220 | SLD 6 | -12.09 | 7.46 | 97.77 | -0.3359 | -0.3936 | -0.0016 |
| 220 | SLD 7 | -13.29 | -8.34 | 92.88 | 0.3455 | -0.4466 | 0.0017 |
| 220 | SLD 8 | -13.29 | -8.34 | 92.88 | 0.3455 | -0.4466 | 0.0017 |
| 220 | SLD 9 | -16.37 | 7.94 | 117.68 | -0.3576 | -0.5721 | -0.0015 |
| 220 | SLD 10 | -16.37 | 7.94 | 117.68 | -0.3576 | -0.5721 | -0.0015 |
| 220 | SLD 11 | -17.57 | -7.86 | 112.79 | 0.3238 | -0.6251 | 0.0018 |
| 220 | SLD 12 | -17.57 | -7.86 | 112.79 | 0.3238 | -0.6251 | 0.0018 |
| 220 | SLD 13 | -21.79 | 2.96 | 139.19 | -0.1444 | -0.7989 | -0.0002 |
| 220 | SLD 14 | -21.79 | 2.96 | 139.19 | -0.1444 | -0.7989 | -0.0002 |
| 220 | SLD 15 | -22.15 | -1.78 | 137.72 | 0.06 | -0.8148 | 0.0007 |
| 220 | SLD 16 | -22.15 | -1.78 | 137.72 | 0.06 | -0.8148 | 0.0007 |
| 220 | SLV 1 | 2.1 | 3.4 | 29.84 | -0.1572 | 0.196 | -0.0014 |

| Nodo | Cont. | Reazione a traslazione | | | Reazione a rotazione | | |
|---|---|---|---|---|---|---|---|
| Ind. | N.br. | x | y | z | x | y | z |
| 220 | SLV 2 | 2.1 | 3.4 | 29.84 | -0.1572 | 0.196 | -0.0014 |
| 220 | SLV 3 | 1.23 | -7.6 | 26.33 | 0.3172 | 0.1577 | 0.0008 |
| 220 | SLV 4 | 1.23 | -7.6 | 26.33 | 0.3172 | 0.1577 | 0.0008 |
| 220 | SLV 5 | -8.44 | 17.56 | 87.95 | -0.7709 | -0.2398 | -0.0038 |
| 220 | SLV 6 | -8.44 | 17.56 | 87.95 | -0.7709 | -0.2398 | -0.0038 |
| 220 | SLV 7 | -11.33 | -19.1 | 76.29 | 0.8104 | -0.3672 | 0.0037 |
| 220 | SLV 8 | -11.33 | -19.1 | 76.29 | 0.8104 | -0.3672 | 0.0037 |
| 220 | SLV 9 | -18.34 | 18.7 | 134.27 | -0.8225 | -0.6515 | -0.0035 |
| 220 | SLV 10 | -18.34 | 18.7 | 134.27 | -0.8225 | -0.6515 | -0.0035 |
| 220 | SLV 11 | -21.22 | -17.96 | 122.6 | 0.7588 | -0.779 | 0.004 |
| 220 | SLV 12 | -21.22 | -17.96 | 122.6 | 0.7588 | -0.779 | 0.004 |
| 220 | SLV 13 | -30.89 | 7.2 | 184.22 | -0.3292 | -1.1765 | -0.0006 |
| 220 | SLV 14 | -30.89 | 7.2 | 184.22 | -0.3292 | -1.1765 | -0.0006 |
| 220 | SLV 15 | -31.76 | -3.8 | 180.72 | 0.1452 | -1.2147 | 0.0016 |
| 220 | SLV 16 | -31.76 | -3.8 | 180.72 | 0.1452 | -1.2147 | 0.0016 |
| 221 | SLU 1 | 14.4 | -10.08 | 80.91 | -9.1591 | 0.4503 | 3.1897 |
| 221 | SLU 2 | 14.29 | -10.04 | 80.61 | -9.1205 | 0.4462 | 3.1543 |
| 221 | SLU 3 | 15.06 | -10.43 | 84.04 | -9.5435 | 0.4724 | 3.3359 |
| 221 | SLU 4 | 15 | -10.4 | 83.86 | -9.5203 | 0.47 | 3.3147 |
| 221 | SLU 5 | 14.75 | -10.26 | 82.71 | -9.3842 | 0.4615 | 3.2552 |
| 221 | SLU 6 | 15.51 | -10.65 | 86.14 | -9.8073 | 0.4877 | 3.4368 |
| 221 | SLU 7 | 15.45 | -10.62 | 85.96 | -9.7841 | 0.4853 | 3.4155 |
| 221 | SLU 8 | 15.31 | -10.53 | 85.12 | -9.6867 | 0.4809 | 3.3914 |
| 221 | SLU 9 | 15.25 | -10.5 | 84.94 | -9.6635 | 0.4784 | 3.3702 |
| 221 | SLU 10 | 17.2 | -11.48 | 94.05 | -10.7793 | 0.5452 | 3.8007 |
| 221 | SLU 11 | 17.97 | -11.87 | 97.48 | -11.2024 | 0.5714 | 3.9823 |
| 221 | SLU 12 | 17.91 | -11.84 | 97.3 | -11.1792 | 0.5689 | 3.9611 |
| 221 | SLU 13 | 17.66 | -11.7 | 96.15 | -11.0431 | 0.5604 | 3.9016 |
| 221 | SLU 14 | 18.43 | -12.09 | 99.58 | -11.4661 | 0.5867 | 4.0832 |
| 221 | SLU 15 | 18.36 | -12.06 | 99.4 | -11.4429 | 0.5842 | 4.062 |
| 221 | SLU 16 | 18.22 | -11.97 | 98.56 | -11.3455 | 0.5798 | 4.0378 |
| 221 | SLU 17 | 18.16 | -11.94 | 98.38 | -11.3223 | 0.5774 | 4.0166 |
| 221 | SLU 18 | 18.56 | -12.14 | 100.11 | -11.5289 | 0.5917 | 4.1131 |
| 221 | SLU 19 | 18.49 | -12.11 | 99.93 | -11.5057 | 0.5892 | 4.0919 |
| 221 | SLU 20 | 19.01 | -12.37 | 102.21 | -11.7927 | 0.607 | 4.214 |
| 221 | SLU 21 | 18.95 | -12.34 | 102.03 | -11.7695 | 0.6045 | 4.1928 |
| 221 | SLU 22 | 17.11 | -11.49 | 93.72 | -10.7234 | 0.5414 | 3.7905 |
| 221 | SLU 23 | 17 | -11.44 | 93.43 | -10.6847 | 0.5373 | 3.7551 |
| 221 | SLU 24 | 17.77 | -11.83 | 96.85 | -11.1077 | 0.5635 | 3.9367 |
| 221 | SLU 25 | 17.7 | -11.81 | 96.67 | -11.0845 | 0.5611 | 3.9155 |
| 221 | SLU 26 | 17.46 | -11.67 | 95.53 | -10.9485 | 0.5526 | 3.856 |
| 221 | SLU 27 | 18.22 | -12.06 | 98.96 | -11.3715 | 0.5788 | 4.0376 |
| 221 | SLU 28 | 18.16 | -12.03 | 98.78 | -11.3483 | 0.5763 | 4.0163 |
| 221 | SLU 29 | 18.02 | -11.94 | 97.93 | -11.2509 | 0.572 | 3.9922 |
| 221 | SLU 30 | 17.95 | -11.91 | 97.76 | -11.2277 | 0.5695 | 3.971 |
| 221 | SLU 31 | 19.91 | -12.89 | 106.87 | -12.3436 | 0.6363 | 4.4015 |
| 221 | SLU 32 | 20.68 | -13.28 | 110.29 | -12.7666 | 0.6625 | 4.5831 |
| 221 | SLU 33 | 20.61 | -13.25 | 110.12 | -12.7434 | 0.66 | 4.5619 |
| 221 | SLU 34 | 20.37 | -13.11 | 108.97 | -12.6074 | 0.6515 | 4.5024 |
| 221 | SLU 35 | 21.13 | -13.5 | 112.4 | -13.0304 | 0.6778 | 4.684 |
| 221 | SLU 36 | 21.07 | -13.47 | 112.22 | -13.0072 | 0.6753 | 4.6628 |
| 221 | SLU 37 | 20.93 | -13.38 | 111.38 | -12.9098 | 0.6709 | 4.6386 |
| 221 | SLU 38 | 20.86 | -13.35 | 111.2 | -12.8866 | 0.6685 | 4.6174 |
| 221 | SLU 39 | 21.27 | -13.55 | 112.93 | -13.0932 | 0.6828 | 4.7139 |
| 221 | SLU 40 | 21.2 | -13.52 | 112.75 | -13.07 | 0.6803 | 4.6927 |
| 221 | SLU 41 | 21.72 | -13.77 | 115.03 | -13.357 | 0.6981 | 4.8148 |
| 221 | SLU 42 | 21.66 | -13.75 | 114.85 | -13.3338 | 0.6956 | 4.7936 |
| 221 | SLU 43 | 17.79 | -12.63 | 100.78 | -11.3705 | 0.5541 | 3.9406 |
| 221 | SLU 44 | 17.68 | -12.58 | 100.49 | -11.3319 | 0.55 | 3.9052 |
| 221 | SLU 45 | 18.45 | -12.97 | 103.91 | -11.7549 | 0.5763 | 4.0868 |
| 221 | SLU 46 | 18.39 | -12.94 | 103.73 | -11.7317 | 0.5738 | 4.0656 |
| 221 | SLU 47 | 18.14 | -12.8 | 102.59 | -11.5956 | 0.5653 | 4.0061 |
| 221 | SLU 48 | 18.91 | -13.19 | 106.02 | -12.0187 | 0.5916 | 4.1877 |
| 221 | SLU 49 | 18.84 | -13.16 | 105.84 | -11.9955 | 0.5891 | 4.1665 |
| 221 | SLU 50 | 18.7 | -13.07 | 104.99 | -11.8981 | 0.5847 | 4.1423 |
| 221 | SLU 51 | 18.64 | -13.04 | 104.82 | -11.8749 | 0.5823 | 4.1211 |
| 221 | SLU 52 | 20.6 | -14.02 | 113.93 | -12.9907 | 0.649 | 4.5517 |
| 221 | SLU 53 | 21.36 | -14.41 | 117.35 | -13.4138 | 0.6752 | 4.7333 |
| 221 | SLU 54 | 21.3 | -14.38 | 117.18 | -13.3906 | 0.6728 | 4.712 |
| 221 | SLU 55 | 21.05 | -14.24 | 116.03 | -13.2545 | 0.6643 | 4.6525 |
| 221 | SLU 56 | 21.82 | -14.63 | 119.46 | -13.6775 | 0.6905 | 4.8341 |
| 221 | SLU 57 | 21.75 | -14.6 | 119.28 | -13.6543 | 0.6881 | 4.8129 |
| 221 | SLU 58 | 21.61 | -14.51 | 118.44 | -13.557 | 0.6837 | 4.7888 |
| 221 | SLU 59 | 21.55 | -14.48 | 118.26 | -13.5338 | 0.6812 | 4.7675 |
| 221 | SLU 60 | 21.95 | -14.69 | 119.99 | -13.7404 | 0.6955 | 4.8641 |
| 221 | SLU 61 | 21.89 | -14.66 | 119.81 | -13.7172 | 0.6931 | 4.8428 |
| 221 | SLU 62 | 22.4 | -14.91 | 122.09 | -14.0041 | 0.7108 | 4.9649 |
| 221 | SLU 63 | 22.34 | -14.88 | 121.91 | -13.9809 | 0.7084 | 4.9437 |
| 221 | SLU 64 | 20.5 | -14.04 | 113.6 | -12.9348 | 0.6452 | 4.5414 |
| 221 | SLU 65 | 20.39 | -13.99 | 113.3 | -12.8961 | 0.6411 | 4.506 |
| 221 | SLU 66 | 21.16 | -14.38 | 116.73 | -13.3192 | 0.6674 | 4.6876 |
| 221 | SLU 67 | 21.09 | -14.35 | 116.55 | -13.296 | 0.6649 | 4.6664 |
| 221 | SLU 68 | 20.85 | -14.21 | 115.41 | -13.1599 | 0.6564 | 4.6069 |
| 221 | SLU 69 | 21.61 | -14.6 | 118.84 | -13.5829 | 0.6827 | 4.7885 |
| 221 | SLU 70 | 21.55 | -14.57 | 118.66 | -13.5597 | 0.6802 | 4.7673 |
| 221 | SLU 71 | 21.41 | -14.48 | 117.81 | -13.4623 | 0.6758 | 4.7431 |
| 221 | SLU 72 | 21.34 | -14.45 | 117.63 | -13.4391 | 0.6734 | 4.7219 |
| 221 | SLU 73 | 23.3 | -15.43 | 126.74 | -14.555 | 0.7401 | 5.1524 |

| Nodo | Cont. | Reazione a traslazione | | | Reazione a rotazione | | |
|---|---|---|---|---|---|---|---|
| Ind. | N.br. | x | y | z | x | y | z |
| 221 | SLU 74 | 24.07 | -15.82 | 130.17 | -14.978 | 0.7663 | 5.334 |
| 221 | SLU 75 | 24.01 | -15.79 | 129.99 | -14.9548 | 0.7639 | 5.3128 |
| 221 | SLU 76 | 23.76 | -15.65 | 128.85 | -14.8188 | 0.7554 | 5.2533 |
| 221 | SLU 77 | 24.52 | -16.04 | 132.28 | -15.2418 | 0.7816 | 5.4349 |
| 221 | SLU 78 | 24.46 | -16.01 | 132.1 | -15.2186 | 0.7792 | 5.4137 |
| 221 | SLU 79 | 24.32 | -15.92 | 131.25 | -15.1212 | 0.7748 | 5.3895 |
| 221 | SLU 80 | 24.26 | -15.89 | 131.07 | -15.098 | 0.7723 | 5.3683 |
| 221 | SLU 81 | 24.66 | -16.09 | 132.8 | -15.3046 | 0.7866 | 5.4648 |
| 221 | SLU 82 | 24.59 | -16.07 | 132.62 | -15.2814 | 0.7842 | 5.4436 |
| 221 | SLU 83 | 25.11 | -16.32 | 134.91 | -15.5684 | 0.8019 | 5.5657 |
| 221 | SLU 84 | 25.05 | -16.29 | 134.73 | -15.5452 | 0.7994 | 5.5445 |
| 221 | SLE RA 1 | 15.17 | -10.49 | 84.57 | -9.6061 | 0.4763 | 3.3613 |
| 221 | SLE RA 2 | 15.1 | -10.45 | 84.37 | -9.5803 | 0.4736 | 3.3377 |
| 221 | SLE RA 3 | 15.61 | -10.71 | 86.66 | -9.8623 | 0.4911 | 3.4588 |
| 221 | SLE RA 4 | 15.57 | -10.69 | 86.54 | -9.8468 | 0.4894 | 3.4447 |
| 221 | SLE RA 5 | 15.41 | -10.6 | 85.77 | -9.7561 | 0.4838 | 3.405 |
| 221 | SLE RA 6 | 15.92 | -10.86 | 88.06 | -10.0381 | 0.5013 | 3.5261 |
| 221 | SLE RA 7 | 15.87 | -10.84 | 87.94 | -10.0227 | 0.4996 | 3.5119 |
| 221 | SLE RA 8 | 15.78 | -10.78 | 87.38 | -9.9578 | 0.4967 | 3.4958 |
| 221 | SLE RA 9 | 15.74 | -10.76 | 87.26 | -9.9423 | 0.4951 | 3.4817 |
| 221 | SLE RA 10 | 17.04 | -11.41 | 93.33 | -10.6862 | 0.5396 | 3.7687 |
| 221 | SLE RA 11 | 17.55 | -11.68 | 95.62 | -10.9682 | 0.5571 | 3.8898 |
| 221 | SLE RA 12 | 17.51 | -11.66 | 95.5 | -10.9527 | 0.5554 | 3.8756 |
| 221 | SLE RA 13 | 17.35 | -11.56 | 94.73 | -10.862 | 0.5498 | 3.8359 |
| 221 | SLE RA 14 | 17.86 | -11.82 | 97.02 | -11.1441 | 0.5672 | 3.957 |
| 221 | SLE RA 15 | 17.81 | -11.8 | 96.9 | -11.1286 | 0.5656 | 3.9429 |
| 221 | SLE RA 16 | 17.72 | -11.74 | 96.34 | -11.0637 | 0.5627 | 3.9268 |
| 221 | SLE RA 17 | 17.68 | -11.72 | 96.22 | -11.0482 | 0.561 | 3.9126 |
| 221 | SLE RA 18 | 17.95 | -11.86 | 97.37 | -11.1859 | 0.5706 | 3.977 |
| 221 | SLE RA 19 | 17.9 | -11.84 | 97.25 | -11.1705 | 0.5689 | 3.9628 |
| 221 | SLE RA 20 | 18.25 | -12.01 | 98.77 | -11.3618 | 0.5808 | 4.0442 |
| 221 | SLE RA 21 | 18.21 | -11.99 | 98.65 | -11.3463 | 0.5791 | 4.0301 |
| 221 | SLE FR 1 | 15.17 | -10.49 | 84.57 | -9.6061 | 0.4763 | 3.3613 |
| 221 | SLE FR 2 | 15.16 | -10.48 | 84.53 | -9.6009 | 0.4758 | 3.3566 |
| 221 | SLE FR 3 | 15.29 | -10.55 | 85.13 | -9.6764 | 0.4804 | 3.3882 |
| 221 | SLE FR 4 | 15.99 | -10.89 | 88.37 | -10.0749 | 0.5041 | 3.5413 |
| 221 | SLE FR 5 | 16.13 | -10.96 | 88.97 | -10.1504 | 0.5087 | 3.5729 |
| 221 | SLE FR 6 | 16.56 | -11.17 | 90.97 | -10.396 | 0.5234 | 3.6692 |
| 221 | SLE QP 1 | 15.17 | -10.49 | 84.57 | -9.6061 | 0.4763 | 3.3613 |
| 221 | SLE QP 2 | 16 | -10.9 | 88.41 | -10.08 | 0.5046 | 3.546 |
| 221 | SLD 1 | 23.31 | -13.46 | 116.49 | -13.7894 | 0.7775 | 5.1922 |
| 221 | SLD 2 | 23.31 | -13.46 | 116.49 | -13.7894 | 0.7775 | 5.1922 |
| 221 | SLD 3 | 22.89 | -15.97 | 123.93 | -14.0502 | 0.7595 | 5.0967 |
| 221 | SLD 4 | 22.89 | -15.97 | 123.93 | -14.0502 | 0.7595 | 5.0967 |
| 221 | SLD 5 | 18.84 | -7.86 | 85.55 | -10.7972 | 0.6139 | 4.1848 |
| 221 | SLD 6 | 18.84 | -7.86 | 85.55 | -10.7972 | 0.6139 | 4.1848 |
| 221 | SLD 7 | 17.43 | -16.22 | 110.35 | -11.6667 | 0.5537 | 3.8663 |
| 221 | SLD 8 | 17.43 | -16.22 | 110.35 | -11.6667 | 0.5537 | 3.8663 |
| 221 | SLD 9 | 14.58 | -5.57 | 66.47 | -8.4933 | 0.4555 | 3.2257 |
| 221 | SLD 10 | 14.58 | -5.57 | 66.47 | -8.4933 | 0.4555 | 3.2257 |
| 221 | SLD 11 | 13.17 | -13.93 | 91.27 | -9.3628 | 0.3953 | 2.9073 |
| 221 | SLD 12 | 13.17 | -13.93 | 91.27 | -9.3628 | 0.3953 | 2.9073 |
| 221 | SLD 13 | 9.12 | -5.83 | 52.89 | -6.1098 | 0.2497 | 1.9954 |
| 221 | SLD 14 | 9.12 | -5.83 | 52.89 | -6.1098 | 0.2497 | 1.9954 |
| 221 | SLD 15 | 8.7 | -8.33 | 60.33 | -6.3707 | 0.2317 | 1.8999 |
| 221 | SLD 16 | 8.7 | -8.33 | 60.33 | -6.3707 | 0.2317 | 1.8999 |
| 221 | SLV 1 | 32.93 | -16.9 | 153.73 | -18.6869 | 1.1357 | 7.3595 |
| 221 | SLV 2 | 32.93 | -16.9 | 153.73 | -18.6869 | 1.1357 | 7.3595 |
| 221 | SLV 3 | 31.94 | -22.71 | 170.94 | -19.2948 | 1.0928 | 7.1326 |
| 221 | SLV 4 | 31.94 | -22.71 | 170.94 | -19.2948 | 1.0928 | 7.1326 |
| 221 | SLV 5 | 22.59 | -3.88 | 81.91 | -11.7401 | 0.7591 | 5.0342 |
| 221 | SLV 6 | 22.59 | -3.88 | 81.91 | -11.7401 | 0.7591 | 5.0342 |
| 221 | SLV 7 | 19.28 | -23.26 | 139.27 | -13.7665 | 0.6159 | 4.2779 |
| 221 | SLV 8 | 19.28 | -23.26 | 139.27 | -13.7665 | 0.6159 | 4.2779 |
| 221 | SLV 9 | 12.73 | 1.46 | 37.55 | -6.3935 | 0.3932 | 2.8142 |
| 221 | SLV 10 | 12.73 | 1.46 | 37.55 | -6.3935 | 0.3932 | 2.8142 |
| 221 | SLV 11 | 9.42 | -17.91 | 94.91 | -8.42 | 0.2501 | 2.0578 |
| 221 | SLV 12 | 9.42 | -17.91 | 94.91 | -8.42 | 0.2501 | 2.0578 |
| 221 | SLV 13 | 0.07 | 0.92 | 5.88 | -0.8652 | -0.0836 | -0.0406 |
| 221 | SLV 14 | 0.07 | 0.92 | 5.88 | -0.8652 | -0.0836 | -0.0406 |
| 221 | SLV 15 | -0.92 | -4.9 | 23.08 | -1.4731 | -0.1265 | -0.2675 |
| 221 | SLV 16 | -0.92 | -4.9 | 23.08 | -1.4731 | -0.1265 | -0.2675 |
| 222 | SLU 1 | -0.11 | -2.83 | 61.1 | 0.0966 | -0.0375 | -0.0005 |
| 222 | SLU 2 | -0.13 | -2.42 | 61.61 | 0.0792 | -0.0459 | -0.0004 |
| 222 | SLU 3 | -0.12 | -2.98 | 62.85 | 0.1018 | -0.0391 | -0.0005 |
| 222 | SLU 4 | -0.13 | -2.73 | 63.15 | 0.0914 | -0.0441 | -0.0005 |
| 222 | SLU 5 | -0.13 | -2.51 | 62.54 | 0.0826 | -0.0468 | -0.0004 |
| 222 | SLU 6 | -0.12 | -3.08 | 63.78 | 0.1052 | -0.0399 | -0.0005 |
| 222 | SLU 7 | -0.13 | -2.83 | 64.08 | 0.0948 | -0.0449 | -0.0005 |
| 222 | SLU 8 | -0.12 | -3.02 | 62.96 | 0.1033 | -0.0393 | -0.0005 |
| 222 | SLU 9 | -0.13 | -2.77 | 63.26 | 0.0929 | -0.0443 | -0.0005 |
| 222 | SLU 10 | -0.15 | -3.12 | 70.04 | 0.1019 | -0.054 | -0.0005 |
| 222 | SLU 11 | -0.14 | -3.68 | 71.28 | 0.1246 | -0.0472 | -0.0006 |
| 222 | SLU 12 | -0.15 | -3.44 | 71.58 | 0.1142 | -0.0522 | -0.0006 |
| 222 | SLU 13 | -0.15 | -3.21 | 70.97 | 0.1053 | -0.0549 | -0.0005 |
| 222 | SLU 14 | -0.14 | -3.78 | 72.21 | 0.128 | -0.0481 | -0.0006 |
| 222 | SLU 15 | -0.15 | -3.53 | 72.51 | 0.1175 | -0.0531 | -0.0006 |
| 222 | SLU 16 | -0.14 | -3.72 | 71.39 | 0.1261 | -0.0474 | -0.0006 |

| Nodo | Cont. | Reazione a traslazione | | | Reazione a rotazione | | |
|---|---|---|---|---|---|---|---|
| Ind. | N.br. | x | y | z | x | y | z |
| 222 | SLU 17 | -0.15 | -3.47 | 71.69 | 0.1156 | -0.0524 | -0.0006 |
| 222 | SLU 18 | -0.15 | -3.83 | 73.14 | 0.1291 | -0.0492 | -0.0006 |
| 222 | SLU 19 | -0.16 | -3.58 | 73.45 | 0.1186 | -0.0542 | -0.0006 |
| 222 | SLU 20 | -0.15 | -3.93 | 74.07 | 0.1324 | -0.0501 | -0.0006 |
| 222 | SLU 21 | -0.16 | -3.68 | 74.37 | 0.122 | -0.0551 | -0.0006 |
| 222 | SLU 22 | -0.14 | -3.51 | 69.27 | 0.1194 | -0.0449 | -0.0005 |
| 222 | SLU 23 | -0.15 | -3.1 | 69.78 | 0.102 | -0.0533 | -0.0005 |
| 222 | SLU 24 | -0.14 | -3.67 | 71.02 | 0.1246 | -0.0465 | -0.0006 |
| 222 | SLU 25 | -0.15 | -3.42 | 71.32 | 0.1142 | -0.0515 | -0.0005 |
| 222 | SLU 26 | -0.15 | -3.2 | 70.71 | 0.1053 | -0.0541 | -0.0005 |
| 222 | SLU 27 | -0.14 | -3.76 | 71.95 | 0.128 | -0.0473 | -0.0006 |
| 222 | SLU 28 | -0.15 | -3.51 | 72.25 | 0.1176 | -0.0523 | -0.0006 |
| 222 | SLU 29 | -0.14 | -3.71 | 71.13 | 0.1261 | -0.0467 | -0.0006 |
| 222 | SLU 30 | -0.15 | -3.46 | 71.43 | 0.1157 | -0.0517 | -0.0005 |
| 222 | SLU 31 | -0.17 | -3.8 | 78.21 | 0.1247 | -0.0614 | -0.0006 |
| 222 | SLU 32 | -0.16 | -4.37 | 79.45 | 0.1474 | -0.0546 | -0.0006 |
| 222 | SLU 33 | -0.17 | -4.12 | 79.75 | 0.1369 | -0.0596 | -0.0006 |
| 222 | SLU 34 | -0.17 | -3.9 | 79.13 | 0.1281 | -0.0623 | -0.0006 |
| 222 | SLU 35 | -0.17 | -4.46 | 80.37 | 0.1508 | -0.0555 | -0.0007 |
| 222 | SLU 36 | -0.17 | -4.22 | 80.68 | 0.1403 | -0.0605 | -0.0006 |
| 222 | SLU 37 | -0.16 | -4.41 | 79.56 | 0.1489 | -0.0548 | -0.0006 |
| 222 | SLU 38 | -0.17 | -4.16 | 79.86 | 0.1384 | -0.0598 | -0.0006 |
| 222 | SLU 39 | -0.17 | -4.51 | 81.31 | 0.1519 | -0.0566 | -0.0007 |
| 222 | SLU 40 | -0.18 | -4.27 | 81.62 | 0.1414 | -0.0616 | -0.0007 |
| 222 | SLU 41 | -0.17 | -4.61 | 82.24 | 0.1552 | -0.0574 | -0.0007 |
| 222 | SLU 42 | -0.18 | -4.36 | 82.54 | 0.1448 | -0.0625 | -0.0007 |
| 222 | SLU 43 | -0.14 | -3.44 | 76.63 | 0.1177 | -0.0463 | -0.0006 |
| 222 | SLU 44 | -0.15 | -3.03 | 77.14 | 0.1003 | -0.0546 | -0.0005 |
| 222 | SLU 45 | -0.15 | -3.6 | 78.38 | 0.123 | -0.0478 | -0.0006 |
| 222 | SLU 46 | -0.15 | -3.35 | 78.69 | 0.1126 | -0.0528 | -0.0006 |
| 222 | SLU 47 | -0.16 | -3.13 | 78.07 | 0.1037 | -0.0555 | -0.0005 |
| 222 | SLU 48 | -0.15 | -3.69 | 79.31 | 0.1264 | -0.0487 | -0.0006 |
| 222 | SLU 49 | -0.16 | -3.45 | 79.61 | 0.1159 | -0.0537 | -0.0006 |
| 222 | SLU 50 | -0.15 | -3.64 | 78.49 | 0.1245 | -0.048 | -0.0006 |
| 222 | SLU 51 | -0.15 | -3.39 | 78.79 | 0.114 | -0.053 | -0.0006 |
| 222 | SLU 52 | -0.18 | -3.73 | 85.57 | 0.1231 | -0.0628 | -0.0006 |
| 222 | SLU 53 | -0.17 | -4.3 | 86.81 | 0.1458 | -0.0559 | -0.0007 |
| 222 | SLU 54 | -0.18 | -4.05 | 87.11 | 0.1353 | -0.061 | -0.0007 |
| 222 | SLU 55 | -0.18 | -3.83 | 86.5 | 0.1265 | -0.0636 | -0.0006 |
| 222 | SLU 56 | -0.17 | -4.39 | 87.74 | 0.1491 | -0.0568 | -0.0007 |
| 222 | SLU 57 | -0.18 | -4.15 | 88.04 | 0.1387 | -0.0618 | -0.0007 |
| 222 | SLU 58 | -0.17 | -4.34 | 86.92 | 0.1472 | -0.0562 | -0.0007 |
| 222 | SLU 59 | -0.18 | -4.09 | 87.22 | 0.1368 | -0.0612 | -0.0007 |
| 222 | SLU 60 | -0.17 | -4.44 | 88.67 | 0.1502 | -0.0579 | -0.0007 |
| 222 | SLU 61 | -0.18 | -4.2 | 88.98 | 0.1398 | -0.0629 | -0.0007 |
| 222 | SLU 62 | -0.18 | -4.54 | 89.6 | 0.1536 | -0.0588 | -0.0007 |
| 222 | SLU 63 | -0.18 | -4.29 | 89.9 | 0.1432 | -0.0638 | -0.0007 |
| 222 | SLU 64 | -0.16 | -4.13 | 84.8 | 0.1405 | -0.0536 | -0.0006 |
| 222 | SLU 65 | -0.17 | -3.71 | 85.31 | 0.1231 | -0.062 | -0.0006 |
| 222 | SLU 66 | -0.17 | -4.28 | 86.55 | 0.1458 | -0.0552 | -0.0007 |
| 222 | SLU 67 | -0.17 | -4.03 | 86.85 | 0.1354 | -0.0602 | -0.0006 |
| 222 | SLU 68 | -0.18 | -3.81 | 86.24 | 0.1265 | -0.0629 | -0.0006 |
| 222 | SLU 69 | -0.17 | -4.38 | 87.48 | 0.1492 | -0.056 | -0.0007 |
| 222 | SLU 70 | -0.18 | -4.13 | 87.78 | 0.1387 | -0.0611 | -0.0007 |
| 222 | SLU 71 | -0.17 | -4.32 | 86.66 | 0.1473 | -0.0554 | -0.0007 |
| 222 | SLU 72 | -0.18 | -4.07 | 86.96 | 0.1368 | -0.0604 | -0.0007 |
| 222 | SLU 73 | -0.2 | -4.42 | 93.74 | 0.1459 | -0.0702 | -0.0007 |
| 222 | SLU 74 | -0.19 | -4.98 | 94.98 | 0.1685 | -0.0633 | -0.0008 |
| 222 | SLU 75 | -0.2 | -4.73 | 95.28 | 0.1581 | -0.0683 | -0.0007 |
| 222 | SLU 76 | -0.2 | -4.51 | 94.67 | 0.1493 | -0.071 | -0.0007 |
| 222 | SLU 77 | -0.19 | -5.08 | 95.91 | 0.1719 | -0.0642 | -0.0008 |
| 222 | SLU 78 | -0.2 | -4.83 | 96.21 | 0.1615 | -0.0692 | -0.0008 |
| 222 | SLU 79 | -0.19 | -5.02 | 95.09 | 0.17 | -0.0635 | -0.0008 |
| 222 | SLU 80 | -0.2 | -4.77 | 95.39 | 0.1596 | -0.0686 | -0.0007 |
| 222 | SLU 81 | -0.2 | -5.13 | 96.84 | 0.173 | -0.0653 | -0.0008 |
| 222 | SLU 82 | -0.2 | -4.88 | 97.15 | 0.1626 | -0.0703 | -0.0008 |
| 222 | SLU 83 | -0.2 | -5.22 | 97.77 | 0.1764 | -0.0662 | -0.0008 |
| 222 | SLU 84 | -0.21 | -4.98 | 98.07 | 0.166 | -0.0712 | -0.0008 |
| 222 | SLE RA 1 | -0.12 | -3.02 | 63.44 | 0.1031 | -0.0396 | -0.0005 |
| 222 | SLE RA 2 | -0.13 | -2.75 | 63.78 | 0.0915 | -0.0452 | -0.0005 |
| 222 | SLE RA 3 | -0.12 | -3.13 | 64.6 | 0.1066 | -0.0407 | -0.0005 |
| 222 | SLE RA 4 | -0.13 | -2.96 | 64.81 | 0.0996 | -0.044 | -0.0005 |
| 222 | SLE RA 5 | -0.13 | -2.81 | 64.39 | 0.0937 | -0.0458 | -0.0005 |
| 222 | SLE RA 6 | -0.13 | -3.19 | 65.22 | 0.1088 | -0.0412 | -0.0005 |
| 222 | SLE RA 7 | -0.13 | -3.03 | 65.42 | 0.1019 | -0.0446 | -0.0005 |
| 222 | SLE RA 8 | -0.12 | -3.15 | 64.67 | 0.1076 | -0.0408 | -0.0005 |
| 222 | SLE RA 9 | -0.13 | -2.99 | 64.88 | 0.1006 | -0.0441 | -0.0005 |
| 222 | SLE RA 10 | -0.14 | -3.22 | 69.39 | 0.1067 | -0.0506 | -0.0005 |
| 222 | SLE RA 11 | -0.14 | -3.59 | 70.22 | 0.1218 | -0.0461 | -0.0005 |
| 222 | SLE RA 12 | -0.14 | -3.43 | 70.42 | 0.1148 | -0.0494 | -0.0005 |
| 222 | SLE RA 13 | -0.15 | -3.28 | 70.01 | 0.1089 | -0.0512 | -0.0005 |
| 222 | SLE RA 14 | -0.14 | -3.66 | 70.84 | 0.124 | -0.0467 | -0.0006 |
| 222 | SLE RA 15 | -0.15 | -3.49 | 71.04 | 0.1171 | -0.05 | -0.0005 |
| 222 | SLE RA 16 | -0.14 | -3.62 | 70.29 | 0.1227 | -0.0462 | -0.0005 |
| 222 | SLE RA 17 | -0.14 | -3.46 | 70.5 | 0.1158 | -0.0496 | -0.0005 |
| 222 | SLE RA 18 | -0.14 | -3.69 | 71.46 | 0.1248 | -0.0474 | -0.0006 |
| 222 | SLE RA 19 | -0.15 | -3.53 | 71.67 | 0.1178 | -0.0508 | -0.0006 |
| 222 | SLE RA 20 | -0.14 | -3.76 | 72.08 | 0.127 | -0.048 | -0.0006 |

| Nodo | Cont. | Reazione a traslazione | | | Reazione a rotazione | | |
|---|---|---|---|---|---|---|---|
| Ind. | N.br. | x | y | z | x | y | z |
| 222 | SLE RA 21 | -0.15 | -3.59 | 72.29 | 0.12 | -0.0513 | -0.0006 |
| 222 | SLE FR 1 | -0.12 | -3.02 | 63.44 | 0.1031 | -0.0396 | -0.0005 |
| 222 | SLE FR 2 | -0.12 | -2.97 | 63.51 | 0.1008 | -0.0408 | -0.0005 |
| 222 | SLE FR 3 | -0.12 | -3.05 | 63.69 | 0.104 | -0.0399 | -0.0005 |
| 222 | SLE FR 4 | -0.13 | -3.17 | 65.91 | 0.1073 | -0.0431 | -0.0005 |
| 222 | SLE FR 5 | -0.13 | -3.25 | 66.09 | 0.1105 | -0.0422 | -0.0005 |
| 222 | SLE FR 6 | -0.13 | -3.36 | 67.45 | 0.1139 | -0.0435 | -0.0005 |
| 222 | SLE QP 1 | -0.12 | -3.02 | 63.44 | 0.1031 | -0.0396 | -0.0005 |
| 222 | SLE QP 2 | -0.13 | -3.22 | 65.85 | 0.1096 | -0.042 | -0.0005 |
| 222 | SLD 1 | 0.02 | 1.14 | 46.59 | -0.052 | 0.0288 | -0.0003 |
| 222 | SLD 2 | 0.02 | 1.14 | 46.59 | -0.052 | 0.0288 | -0.0003 |
| 222 | SLD 3 | -0.06 | -3.75 | 47.38 | 0.1505 | -0.0187 | -0.0002 |
| 222 | SLD 4 | -0.06 | -3.75 | 47.38 | 0.1505 | -0.0187 | -0.0002 |
| 222 | SLD 5 | 0.05 | 5.51 | 58.88 | -0.2461 | 0.0513 | -0.0006 |
| 222 | SLD 6 | 0.05 | 5.51 | 58.88 | -0.2461 | 0.0513 | -0.0006 |
| 222 | SLD 7 | -0.24 | -10.81 | 61.5 | 0.429 | -0.107 | -0.0003 |
| 222 | SLD 8 | -0.24 | -10.81 | 61.5 | 0.429 | -0.107 | -0.0003 |
| 222 | SLD 9 | -0.01 | 4.36 | 70.19 | -0.2099 | 0.0231 | -0.0007 |
| 222 | SLD 10 | -0.01 | 4.36 | 70.19 | -0.2099 | 0.0231 | -0.0007 |
| 222 | SLD 11 | -0.31 | -11.96 | 72.81 | 0.4653 | -0.1352 | -0.0004 |
| 222 | SLD 12 | -0.31 | -11.96 | 72.81 | 0.4653 | -0.1352 | -0.0004 |
| 222 | SLD 13 | -0.19 | -2.7 | 84.31 | 0.0687 | -0.0652 | -0.0008 |
| 222 | SLD 14 | -0.19 | -2.7 | 84.31 | 0.0687 | -0.0652 | -0.0008 |
| 222 | SLD 15 | -0.28 | -7.59 | 85.1 | 0.2712 | -0.1127 | -0.0007 |
| 222 | SLD 16 | -0.28 | -7.59 | 85.1 | 0.2712 | -0.1127 | -0.0007 |
| 222 | SLV 1 | 0.24 | 6.91 | 20.91 | -0.2661 | 0.1276 | 0.0001 |
| 222 | SLV 2 | 0.24 | 6.91 | 20.91 | -0.2661 | 0.1276 | 0.0001 |
| 222 | SLV 3 | 0.01 | -4.44 | 22.8 | 0.2035 | 0.0065 | 0.0003 |
| 222 | SLV 4 | 0.01 | -4.44 | 22.8 | 0.2035 | 0.0065 | 0.0003 |
| 222 | SLV 5 | 0.33 | 17.03 | 49.5 | -0.7154 | 0.1925 | -0.0007 |
| 222 | SLV 6 | 0.33 | 17.03 | 49.5 | -0.7154 | 0.1925 | -0.0007 |
| 222 | SLV 7 | -0.43 | -20.81 | 55.79 | 0.8501 | -0.2111 | 0.0001 |
| 222 | SLV 8 | -0.43 | -20.81 | 55.79 | 0.8501 | -0.2111 | 0.0001 |
| 222 | SLV 9 | 0.17 | 14.36 | 75.9 | -0.6309 | 0.1272 | -0.0011 |
| 222 | SLV 10 | 0.17 | 14.36 | 75.9 | -0.6309 | 0.1272 | -0.0011 |
| 222 | SLV 11 | -0.58 | -23.48 | 82.19 | 0.9346 | -0.2765 | -0.0003 |
| 222 | SLV 12 | -0.58 | -23.48 | 82.19 | 0.9346 | -0.2765 | -0.0003 |
| 222 | SLV 13 | -0.27 | -2.01 | 108.89 | 0.0156 | -0.0904 | -0.0013 |
| 222 | SLV 14 | -0.27 | -2.01 | 108.89 | 0.0156 | -0.0904 | -0.0013 |
| 222 | SLV 15 | -0.5 | -13.36 | 110.78 | 0.4853 | -0.2115 | -0.0011 |
| 222 | SLV 16 | -0.5 | -13.36 | 110.78 | 0.4853 | -0.2115 | -0.0011 |
| 223 | SLU 1 | -0.02 | -2.45 | 57.18 | 0.0828 | -0.0153 | 0.0002 |
| 223 | SLU 2 | -0.04 | -2 | 57.32 | 0.0614 | -0.03 | 0.0002 |
| 223 | SLU 3 | -0.02 | -2.58 | 58.7 | 0.0871 | -0.0159 | 0.0002 |
| 223 | SLU 4 | -0.03 | -2.31 | 58.78 | 0.0742 | -0.0248 | 0.0002 |
| 223 | SLU 5 | -0.04 | -2.08 | 58.09 | 0.0638 | -0.0303 | 0.0002 |
| 223 | SLU 6 | -0.02 | -2.66 | 59.47 | 0.0895 | -0.0163 | 0.0002 |
| 223 | SLU 7 | -0.03 | -2.39 | 59.55 | 0.0766 | -0.0251 | 0.0002 |
| 223 | SLU 8 | -0.02 | -2.61 | 58.72 | 0.0876 | -0.016 | 0.0002 |
| 223 | SLU 9 | -0.03 | -2.34 | 58.8 | 0.0748 | -0.0248 | 0.0002 |
| 223 | SLU 10 | -0.04 | -2.62 | 64.68 | 0.0824 | -0.0336 | 0.0002 |
| 223 | SLU 11 | -0.03 | -3.2 | 66.06 | 0.1082 | -0.0195 | 0.0002 |
| 223 | SLU 12 | -0.04 | -2.93 | 66.14 | 0.0953 | -0.0283 | 0.0002 |
| 223 | SLU 13 | -0.04 | -2.7 | 65.45 | 0.0848 | -0.0339 | 0.0002 |
| 223 | SLU 14 | -0.03 | -3.28 | 66.83 | 0.1106 | -0.0198 | 0.0002 |
| 223 | SLU 15 | -0.04 | -3.01 | 66.91 | 0.0977 | -0.0287 | 0.0002 |
| 223 | SLU 16 | -0.03 | -3.23 | 66.09 | 0.1087 | -0.0195 | 0.0002 |
| 223 | SLU 17 | -0.04 | -2.96 | 66.17 | 0.0958 | -0.0283 | 0.0002 |
| 223 | SLU 18 | -0.03 | -3.33 | 67.7 | 0.113 | -0.0204 | 0.0002 |
| 223 | SLU 19 | -0.04 | -3.06 | 67.78 | 0.1001 | -0.0292 | 0.0002 |
| 223 | SLU 20 | -0.03 | -3.41 | 68.47 | 0.1154 | -0.0207 | 0.0002 |
| 223 | SLU 21 | -0.04 | -3.14 | 68.55 | 0.1025 | -0.0296 | 0.0002 |
| 223 | SLU 22 | -0.02 | -3.05 | 64.36 | 0.1034 | -0.0185 | 0.0002 |
| 223 | SLU 23 | -0.04 | -2.6 | 64.49 | 0.0819 | -0.0332 | 0.0002 |
| 223 | SLU 24 | -0.03 | -3.18 | 65.87 | 0.1076 | -0.0191 | 0.0002 |
| 223 | SLU 25 | -0.04 | -2.91 | 65.95 | 0.0947 | -0.0279 | 0.0002 |
| 223 | SLU 26 | -0.04 | -2.68 | 65.26 | 0.0843 | -0.0335 | 0.0002 |
| 223 | SLU 27 | -0.03 | -3.27 | 66.64 | 0.11 | -0.0194 | 0.0002 |
| 223 | SLU 28 | -0.04 | -2.99 | 66.72 | 0.0971 | -0.0283 | 0.0002 |
| 223 | SLU 29 | -0.03 | -3.21 | 65.9 | 0.1082 | -0.0191 | 0.0002 |
| 223 | SLU 30 | -0.04 | -2.94 | 65.98 | 0.0953 | -0.0279 | 0.0002 |
| 223 | SLU 31 | -0.05 | -3.22 | 71.86 | 0.1029 | -0.0368 | 0.0002 |
| 223 | SLU 32 | -0.03 | -3.8 | 73.24 | 0.1287 | -0.0227 | 0.0002 |
| 223 | SLU 33 | -0.04 | -3.53 | 73.32 | 0.1158 | -0.0315 | 0.0002 |
| 223 | SLU 34 | -0.05 | -3.3 | 72.63 | 0.1053 | -0.0371 | 0.0002 |
| 223 | SLU 35 | -0.03 | -3.88 | 74.01 | 0.1311 | -0.023 | 0.0002 |
| 223 | SLU 36 | -0.04 | -3.61 | 74.09 | 0.1182 | -0.0318 | 0.0002 |
| 223 | SLU 37 | -0.03 | -3.83 | 73.26 | 0.1292 | -0.0227 | 0.0002 |
| 223 | SLU 38 | -0.04 | -3.56 | 73.34 | 0.1163 | -0.0315 | 0.0002 |
| 223 | SLU 39 | -0.03 | -3.93 | 74.88 | 0.1335 | -0.0236 | 0.0002 |
| 223 | SLU 40 | -0.04 | -3.66 | 74.96 | 0.1206 | -0.0324 | 0.0002 |
| 223 | SLU 41 | -0.03 | -4.01 | 75.65 | 0.1359 | -0.0239 | 0.0002 |
| 223 | SLU 42 | -0.04 | -3.74 | 75.73 | 0.123 | -0.0327 | 0.0002 |
| 223 | SLU 43 | -0.03 | -2.98 | 71.87 | 0.1007 | -0.0188 | 0.0002 |
| 223 | SLU 44 | -0.04 | -2.53 | 72.01 | 0.0792 | -0.0335 | 0.0002 |
| 223 | SLU 45 | -0.03 | -3.11 | 73.39 | 0.1049 | -0.0194 | 0.0002 |
| 223 | SLU 46 | -0.04 | -2.84 | 73.47 | 0.092 | -0.0283 | 0.0002 |
| 223 | SLU 47 | -0.04 | -2.61 | 72.78 | 0.0816 | -0.0338 | 0.0002 |

| Nodo | Cont. | Reazione a traslazione | | | Reazione a rotazione | | |
|---|---|---|---|---|---|---|---|
| Ind. | N.br. | x | y | z | x | y | z |
| 223 | SLU 48 | -0.03 | -3.19 | 74.16 | 0.1073 | -0.0198 | 0.0002 |
| 223 | SLU 49 | -0.04 | -2.92 | 74.24 | 0.0944 | -0.0286 | 0.0002 |
| 223 | SLU 50 | -0.03 | -3.14 | 73.41 | 0.1055 | -0.0195 | 0.0002 |
| 223 | SLU 51 | -0.04 | -2.87 | 73.5 | 0.0926 | -0.0283 | 0.0002 |
| 223 | SLU 52 | -0.05 | -3.14 | 79.38 | 0.1003 | -0.0371 | 0.0002 |
| 223 | SLU 53 | -0.03 | -3.73 | 80.75 | 0.126 | -0.023 | 0.0002 |
| 223 | SLU 54 | -0.04 | -3.46 | 80.84 | 0.1131 | -0.0318 | 0.0002 |
| 223 | SLU 55 | -0.05 | -3.22 | 80.15 | 0.1027 | -0.0374 | 0.0002 |
| 223 | SLU 56 | -0.03 | -3.81 | 81.52 | 0.1284 | -0.0233 | 0.0002 |
| 223 | SLU 57 | -0.04 | -3.54 | 81.61 | 0.1155 | -0.0322 | 0.0002 |
| 223 | SLU 58 | -0.03 | -3.76 | 80.78 | 0.1265 | -0.023 | 0.0002 |
| 223 | SLU 59 | -0.04 | -3.49 | 80.86 | 0.1137 | -0.0319 | 0.0002 |
| 223 | SLU 60 | -0.03 | -3.86 | 82.4 | 0.1308 | -0.0239 | 0.0003 |
| 223 | SLU 61 | -0.04 | -3.59 | 82.48 | 0.1179 | -0.0327 | 0.0002 |
| 223 | SLU 62 | -0.03 | -3.94 | 83.17 | 0.1332 | -0.0243 | 0.0003 |
| 223 | SLU 63 | -0.04 | -3.67 | 83.25 | 0.1203 | -0.0331 | 0.0003 |
| 223 | SLU 64 | -0.03 | -3.58 | 79.05 | 0.1212 | -0.022 | 0.0002 |
| 223 | SLU 65 | -0.05 | -3.13 | 79.19 | 0.0997 | -0.0367 | 0.0002 |
| 223 | SLU 66 | -0.03 | -3.71 | 80.57 | 0.1254 | -0.0226 | 0.0002 |
| 223 | SLU 67 | -0.04 | -3.44 | 80.65 | 0.1125 | -0.0314 | 0.0002 |
| 223 | SLU 68 | -0.05 | -3.21 | 79.96 | 0.1021 | -0.037 | 0.0002 |
| 223 | SLU 69 | -0.03 | -3.79 | 81.34 | 0.1278 | -0.0229 | 0.0002 |
| 223 | SLU 70 | -0.04 | -3.52 | 81.42 | 0.1149 | -0.0318 | 0.0002 |
| 223 | SLU 71 | -0.03 | -3.74 | 80.59 | 0.126 | -0.0226 | 0.0002 |
| 223 | SLU 72 | -0.04 | -3.47 | 80.67 | 0.1131 | -0.0315 | 0.0002 |
| 223 | SLU 73 | -0.05 | -3.75 | 86.55 | 0.1208 | -0.0403 | 0.0003 |
| 223 | SLU 74 | -0.03 | -4.33 | 87.93 | 0.1465 | -0.0262 | 0.0003 |
| 223 | SLU 75 | -0.05 | -4.06 | 88.01 | 0.1336 | -0.035 | 0.0003 |
| 223 | SLU 76 | -0.05 | -3.83 | 87.32 | 0.1232 | -0.0406 | 0.0003 |
| 223 | SLU 77 | -0.03 | -4.41 | 88.7 | 0.1489 | -0.0265 | 0.0003 |
| 223 | SLU 78 | -0.05 | -4.14 | 88.78 | 0.136 | -0.0353 | 0.0003 |
| 223 | SLU 79 | -0.03 | -4.36 | 87.96 | 0.1471 | -0.0262 | 0.0003 |
| 223 | SLU 80 | -0.05 | -4.09 | 88.04 | 0.1342 | -0.035 | 0.0003 |
| 223 | SLU 81 | -0.03 | -4.46 | 89.57 | 0.1513 | -0.0271 | 0.0003 |
| 223 | SLU 82 | -0.05 | -4.19 | 89.65 | 0.1384 | -0.0359 | 0.0003 |
| 223 | SLU 83 | -0.04 | -4.54 | 90.34 | 0.1537 | -0.0274 | 0.0003 |
| 223 | SLU 84 | -0.05 | -4.27 | 90.42 | 0.1408 | -0.0362 | 0.0003 |
| 223 | SLE RA 1 | -0.02 | -2.62 | 59.23 | 0.0887 | -0.0162 | 0.0002 |
| 223 | SLE RA 2 | -0.03 | -2.32 | 59.32 | 0.0744 | -0.026 | 0.0002 |
| 223 | SLE RA 3 | -0.02 | -2.71 | 60.24 | 0.0915 | -0.0166 | 0.0002 |
| 223 | SLE RA 4 | -0.03 | -2.53 | 60.3 | 0.0829 | -0.0225 | 0.0002 |
| 223 | SLE RA 5 | -0.03 | -2.38 | 59.84 | 0.076 | -0.0262 | 0.0002 |
| 223 | SLE RA 6 | -0.02 | -2.76 | 60.75 | 0.0931 | -0.0169 | 0.0002 |
| 223 | SLE RA 7 | -0.03 | -2.58 | 60.81 | 0.0845 | -0.0227 | 0.0002 |
| 223 | SLE RA 8 | -0.02 | -2.73 | 60.26 | 0.0919 | -0.0166 | 0.0002 |
| 223 | SLE RA 9 | -0.03 | -2.55 | 60.31 | 0.0833 | -0.0225 | 0.0002 |
| 223 | SLE RA 10 | -0.04 | -2.73 | 64.23 | 0.0884 | -0.0284 | 0.0002 |
| 223 | SLE RA 11 | -0.02 | -3.12 | 65.15 | 0.1056 | -0.019 | 0.0002 |
| 223 | SLE RA 12 | -0.03 | -2.94 | 65.21 | 0.097 | -0.0249 | 0.0002 |
| 223 | SLE RA 13 | -0.04 | -2.79 | 64.75 | 0.09 | -0.0286 | 0.0002 |
| 223 | SLE RA 14 | -0.03 | -3.17 | 65.66 | 0.1072 | -0.0192 | 0.0002 |
| 223 | SLE RA 15 | -0.03 | -2.99 | 65.72 | 0.0986 | -0.0251 | 0.0002 |
| 223 | SLE RA 16 | -0.02 | -3.14 | 65.17 | 0.106 | -0.019 | 0.0002 |
| 223 | SLE RA 17 | -0.03 | -2.96 | 65.22 | 0.0974 | -0.0249 | 0.0002 |
| 223 | SLE RA 18 | -0.03 | -3.21 | 66.24 | 0.1088 | -0.0196 | 0.0002 |
| 223 | SLE RA 19 | -0.03 | -3.03 | 66.3 | 0.1002 | -0.0255 | 0.0002 |
| 223 | SLE RA 20 | -0.03 | -3.26 | 66.76 | 0.1104 | -0.0198 | 0.0002 |
| 223 | SLE RA 21 | -0.03 | -3.08 | 66.81 | 0.1018 | -0.0257 | 0.0002 |
| 223 | SLE FR 1 | -0.02 | -2.62 | 59.23 | 0.0887 | -0.0162 | 0.0002 |
| 223 | SLE FR 2 | -0.02 | -2.56 | 59.25 | 0.0858 | -0.0182 | 0.0002 |
| 223 | SLE FR 3 | -0.02 | -2.64 | 59.44 | 0.0893 | -0.0163 | 0.0002 |
| 223 | SLE FR 4 | -0.03 | -2.74 | 61.35 | 0.0919 | -0.0192 | 0.0002 |
| 223 | SLE FR 5 | -0.02 | -2.82 | 61.54 | 0.0954 | -0.0173 | 0.0002 |
| 223 | SLE FR 6 | -0.02 | -2.92 | 62.74 | 0.0987 | -0.0179 | 0.0002 |
| 223 | SLE QP 1 | -0.02 | -2.62 | 59.23 | 0.0887 | -0.0162 | 0.0002 |
| 223 | SLE QP 2 | -0.02 | -2.8 | 61.34 | 0.0947 | -0.0172 | 0.0002 |
| 223 | SLD 1 | -0.08 | 1.12 | 44.33 | -0.0577 | 0.1169 | -0.0001 |
| 223 | SLD 2 | -0.08 | 1.12 | 44.33 | -0.0577 | 0.1169 | -0.0001 |
| 223 | SLD 3 | -0.2 | -3.78 | 45.57 | 0.1452 | 0.0377 | -0.0002 |
| 223 | SLD 4 | -0.2 | -3.78 | 45.57 | 0.1452 | 0.0377 | -0.0002 |
| 223 | SLD 5 | 0.14 | 5.81 | 54.35 | -0.2587 | 0.1432 | 0.0002 |
| 223 | SLD 6 | 0.14 | 5.81 | 54.35 | -0.2587 | 0.1432 | 0.0002 |
| 223 | SLD 7 | -0.26 | -10.52 | 58.49 | 0.4176 | -0.121 | 0 |
| 223 | SLD 8 | -0.26 | -10.52 | 58.49 | 0.4176 | -0.121 | 0 |
| 223 | SLD 9 | 0.21 | 4.92 | 64.18 | -0.2281 | 0.0865 | 0.0004 |
| 223 | SLD 10 | 0.21 | 4.92 | 64.18 | -0.2281 | 0.0865 | 0.0004 |
| 223 | SLD 11 | -0.19 | -11.4 | 68.32 | 0.4482 | -0.1777 | 0.0002 |
| 223 | SLD 12 | -0.19 | -11.4 | 68.32 | 0.4482 | -0.1777 | 0.0002 |
| 223 | SLD 13 | 0.15 | -1.82 | 77.1 | 0.0443 | -0.0722 | 0.0006 |
| 223 | SLD 14 | 0.15 | -1.82 | 77.1 | 0.0443 | -0.0722 | 0.0006 |
| 223 | SLD 15 | 0.03 | -6.72 | 78.34 | 0.2471 | -0.1514 | 0.0005 |
| 223 | SLD 16 | 0.03 | -6.72 | 78.34 | 0.2471 | -0.1514 | 0.0005 |
| 223 | SLV 1 | -0.14 | 6.32 | 21.56 | -0.2602 | 0.3065 | -0.0006 |
| 223 | SLV 2 | -0.14 | 6.32 | 21.56 | -0.2602 | 0.3065 | -0.0006 |
| 223 | SLV 3 | -0.45 | -5.04 | 24.52 | 0.2104 | 0.1044 | -0.0007 |
| 223 | SLV 4 | -0.45 | -5.04 | 24.52 | 0.2104 | 0.1044 | -0.0007 |
| 223 | SLV 5 | 0.41 | 17.16 | 44.92 | -0.7254 | 0.3863 | 0.0002 |
| 223 | SLV 6 | 0.41 | 17.16 | 44.92 | -0.7254 | 0.3863 | 0.0002 |

| Nodo | Cont. | Reazione a traslazione | | | Reazione a rotazione | | |
|---|---|---|---|---|---|---|---|
| Ind. | N.br. | x | y | z | x | y | z |
| 223 | SLV 7 | -0.61 | -20.7 | 54.78 | 0.8431 | -0.2872 | -0.0004 |
| 223 | SLV 8 | -0.61 | -20.7 | 54.78 | 0.8431 | -0.2872 | -0.0004 |
| 223 | SLV 9 | 0.57 | 15.1 | 67.89 | -0.6537 | 0.2527 | 0.0007 |
| 223 | SLV 10 | 0.57 | 15.1 | 67.89 | -0.6537 | 0.2527 | 0.0007 |
| 223 | SLV 11 | -0.45 | -22.76 | 77.75 | 0.9149 | -0.4208 | 0.0001 |
| 223 | SLV 12 | -0.45 | -22.76 | 77.75 | 0.9149 | -0.4208 | 0.0001 |
| 223 | SLV 13 | 0.4 | -0.56 | 98.15 | -0.0209 | -0.1389 | 0.0011 |
| 223 | SLV 14 | 0.4 | -0.56 | 98.15 | -0.0209 | -0.1389 | 0.0011 |
| 223 | SLV 15 | 0.09 | -11.92 | 101.11 | 0.4496 | -0.341 | 0.0009 |
| 223 | SLV 16 | 0.09 | -11.92 | 101.11 | 0.4496 | -0.341 | 0.0009 |
| 224 | SLU 1 | 0 | 7.97 | 29.83 | -0.2175 | 0.0006 | -0.0001 |
| 224 | SLU 2 | 0 | 7.91 | 29.53 | -0.216 | 0.0003 | -0.0001 |
| 224 | SLU 3 | 0 | 8.49 | 31.64 | -0.2334 | 0.0007 | -0.0001 |
| 224 | SLU 4 | 0 | 8.45 | 31.46 | -0.2325 | 0.0005 | -0.0001 |
| 224 | SLU 5 | 0 | 8.4 | 31.22 | -0.2322 | 0.0004 | -0.0001 |
| 224 | SLU 6 | 0 | 8.98 | 33.33 | -0.2496 | 0.0007 | -0.0001 |
| 224 | SLU 7 | 0 | 8.94 | 33.15 | -0.2487 | 0.0006 | -0.0001 |
| 224 | SLU 8 | 0 | 8.96 | 33.22 | -0.2498 | 0.0007 | -0.0001 |
| 224 | SLU 9 | 0 | 8.92 | 33.04 | -0.2489 | 0.0006 | -0.0001 |
| 224 | SLU 10 | 0 | 9.28 | 34.84 | -0.2527 | 0.0005 | -0.0001 |
| 224 | SLU 11 | 0 | 9.86 | 36.95 | -0.2701 | 0.0008 | -0.0001 |
| 224 | SLU 12 | 0 | 9.82 | 36.76 | -0.2693 | 0.0007 | -0.0001 |
| 224 | SLU 13 | 0 | 9.77 | 36.53 | -0.2689 | 0.0006 | -0.0001 |
| 224 | SLU 14 | 0 | 10.35 | 38.64 | -0.2863 | 0.0009 | -0.0001 |
| 224 | SLU 15 | 0 | 10.31 | 38.46 | -0.2854 | 0.0008 | -0.0001 |
| 224 | SLU 16 | 0 | 10.33 | 38.53 | -0.2865 | 0.0009 | -0.0001 |
| 224 | SLU 17 | 0 | 10.3 | 38.35 | -0.2857 | 0.0008 | -0.0001 |
| 224 | SLU 18 | 0 | 9.93 | 37.42 | -0.27 | 0.0008 | -0.0001 |
| 224 | SLU 19 | 0 | 9.89 | 37.23 | -0.2691 | 0.0007 | -0.0001 |
| 224 | SLU 20 | 0 | 10.43 | 39.11 | -0.2861 | 0.0009 | -0.0001 |
| 224 | SLU 21 | 0 | 10.39 | 38.93 | -0.2852 | 0.0008 | -0.0001 |
| 224 | SLU 22 | 0 | 9.4 | 35.21 | -0.2569 | 0.0008 | -0.0001 |
| 224 | SLU 23 | 0 | 9.33 | 34.91 | -0.2554 | 0.0005 | -0.0001 |
| 224 | SLU 24 | 0 | 9.91 | 37.02 | -0.2728 | 0.0008 | -0.0001 |
| 224 | SLU 25 | 0 | 9.87 | 36.84 | -0.2719 | 0.0007 | -0.0001 |
| 224 | SLU 26 | 0 | 9.83 | 36.6 | -0.2716 | 0.0006 | -0.0001 |
| 224 | SLU 27 | 0 | 10.4 | 38.71 | -0.289 | 0.0009 | -0.0001 |
| 224 | SLU 28 | 0 | 10.36 | 38.53 | -0.2881 | 0.0008 | -0.0001 |
| 224 | SLU 29 | 0 | 10.38 | 38.6 | -0.2892 | 0.0009 | -0.0001 |
| 224 | SLU 30 | 0 | 10.35 | 38.42 | -0.2883 | 0.0008 | -0.0001 |
| 224 | SLU 31 | 0 | 10.7 | 40.22 | -0.2922 | 0.0007 | -0.0001 |
| 224 | SLU 32 | 0 | 11.28 | 42.33 | -0.3096 | 0.001 | -0.0002 |
| 224 | SLU 33 | 0 | 11.24 | 42.15 | -0.3087 | 0.0009 | -0.0001 |
| 224 | SLU 34 | 0 | 11.2 | 41.91 | -0.3083 | 0.0008 | -0.0001 |
| 224 | SLU 35 | 0 | 11.77 | 44.02 | -0.3257 | 0.0011 | -0.0002 |
| 224 | SLU 36 | 0 | 11.73 | 43.84 | -0.3249 | 0.001 | -0.0002 |
| 224 | SLU 37 | 0 | 11.76 | 43.91 | -0.326 | 0.0011 | -0.0002 |
| 224 | SLU 38 | 0 | 11.72 | 43.73 | -0.3251 | 0.0009 | -0.0002 |
| 224 | SLU 39 | 0 | 11.35 | 42.8 | -0.3094 | 0.001 | -0.0002 |
| 224 | SLU 40 | 0 | 11.32 | 42.61 | -0.3085 | 0.0009 | -0.0001 |
| 224 | SLU 41 | 0 | 11.85 | 44.49 | -0.3256 | 0.0011 | -0.0002 |
| 224 | SLU 42 | 0 | 11.81 | 44.31 | -0.3247 | 0.0009 | -0.0002 |
| 224 | SLU 43 | 0 | 9.88 | 36.94 | -0.2692 | 0.0007 | -0.0001 |
| 224 | SLU 44 | 0 | 9.81 | 36.63 | -0.2677 | 0.0004 | -0.0001 |
| 224 | SLU 45 | 0 | 10.39 | 38.74 | -0.2851 | 0.0008 | -0.0001 |
| 224 | SLU 46 | 0 | 10.35 | 38.56 | -0.2842 | 0.0006 | -0.0001 |
| 224 | SLU 47 | 0 | 10.31 | 38.32 | -0.2839 | 0.0005 | -0.0001 |
| 224 | SLU 48 | 0 | 10.88 | 40.44 | -0.3013 | 0.0009 | -0.0001 |
| 224 | SLU 49 | 0 | 10.85 | 40.25 | -0.3004 | 0.0007 | -0.0001 |
| 224 | SLU 50 | 0 | 10.87 | 40.32 | -0.3015 | 0.0008 | -0.0001 |
| 224 | SLU 51 | 0 | 10.83 | 40.14 | -0.3006 | 0.0007 | -0.0001 |
| 224 | SLU 52 | 0 | 11.18 | 41.94 | -0.3045 | 0.0006 | -0.0001 |
| 224 | SLU 53 | 0 | 11.76 | 44.05 | -0.3219 | 0.001 | -0.0002 |
| 224 | SLU 54 | 0 | 11.72 | 43.87 | -0.321 | 0.0008 | -0.0001 |
| 224 | SLU 55 | 0 | 11.68 | 43.63 | -0.3206 | 0.0007 | -0.0001 |
| 224 | SLU 56 | 0 | 12.26 | 45.75 | -0.338 | 0.001 | -0.0002 |
| 224 | SLU 57 | 0 | 12.22 | 45.56 | -0.3372 | 0.0009 | -0.0001 |
| 224 | SLU 58 | 0 | 12.24 | 45.63 | -0.3383 | 0.001 | -0.0002 |
| 224 | SLU 59 | 0 | 12.2 | 45.45 | -0.3374 | 0.0009 | -0.0001 |
| 224 | SLU 60 | 0 | 11.84 | 44.52 | -0.3217 | 0.001 | -0.0002 |
| 224 | SLU 61 | 0 | 11.8 | 44.34 | -0.3208 | 0.0008 | -0.0001 |
| 224 | SLU 62 | 0 | 12.33 | 46.22 | -0.3378 | 0.001 | -0.0002 |
| 224 | SLU 63 | 0 | 12.29 | 46.03 | -0.337 | 0.0009 | -0.0001 |
| 224 | SLU 64 | 0 | 11.3 | 42.32 | -0.3086 | 0.0009 | -0.0001 |
| 224 | SLU 65 | 0 | 11.24 | 42.01 | -0.3071 | 0.0006 | -0.0001 |
| 224 | SLU 66 | 0 | 11.81 | 44.13 | -0.3245 | 0.001 | -0.0002 |
| 224 | SLU 67 | 0 | 11.77 | 43.94 | -0.3237 | 0.0008 | -0.0001 |
| 224 | SLU 68 | 0 | 11.73 | 43.71 | -0.3233 | 0.0007 | -0.0001 |
| 224 | SLU 69 | 0 | 12.31 | 45.82 | -0.3407 | 0.001 | -0.0002 |
| 224 | SLU 70 | 0 | 12.27 | 45.64 | -0.3398 | 0.0009 | -0.0001 |
| 224 | SLU 71 | 0 | 12.29 | 45.71 | -0.3409 | 0.001 | -0.0002 |
| 224 | SLU 72 | 0 | 12.25 | 45.52 | -0.3401 | 0.0009 | -0.0001 |
| 224 | SLU 73 | 0 | 12.61 | 47.32 | -0.3439 | 0.0008 | -0.0001 |
| 224 | SLU 74 | 0 | 13.18 | 49.43 | -0.3613 | 0.0011 | -0.0002 |
| 224 | SLU 75 | 0 | 13.14 | 49.25 | -0.3604 | 0.001 | -0.0002 |
| 224 | SLU 76 | 0 | 13.1 | 49.02 | -0.3601 | 0.0009 | -0.0001 |
| 224 | SLU 77 | 0 | 13.68 | 51.13 | -0.3775 | 0.0012 | -0.0002 |
| 224 | SLU 78 | 0 | 13.64 | 50.94 | -0.3766 | 0.0011 | -0.0002 |

| Nodo | Cont. | Reazione a traslazione | | | Reazione a rotazione | | |
|---|---|---|---|---|---|---|---|
| Ind. | N.br. | x | y | z | x | y | z |
| 224 | SLU 79 | 0 | 13.66 | 51.02 | -0.3777 | 0.0012 | -0.0002 |
| 224 | SLU 80 | 0 | 13.62 | 50.83 | -0.3768 | 0.0011 | -0.0002 |
| 224 | SLU 81 | 0 | 13.26 | 49.9 | -0.3611 | 0.0011 | -0.0002 |
| 224 | SLU 82 | 0 | 13.22 | 49.72 | -0.3602 | 0.001 | -0.0002 |
| 224 | SLU 83 | 0 | 13.75 | 51.6 | -0.3773 | 0.0012 | -0.0002 |
| 224 | SLU 84 | 0 | 13.71 | 51.41 | -0.3764 | 0.0011 | -0.0002 |
| 224 | SLE RA 1 | 0 | 8.38 | 31.37 | -0.2287 | 0.0006 | -0.0001 |
| 224 | SLE RA 2 | 0 | 8.34 | 31.17 | -0.2277 | 0.0005 | -0.0001 |
| 224 | SLE RA 3 | 0 | 8.72 | 32.57 | -0.2393 | 0.0007 | -0.0001 |
| 224 | SLE RA 4 | 0 | 8.7 | 32.45 | -0.2388 | 0.0006 | -0.0001 |
| 224 | SLE RA 5 | 0 | 8.67 | 32.29 | -0.2385 | 0.0005 | -0.0001 |
| 224 | SLE RA 6 | 0 | 9.05 | 33.7 | -0.2501 | 0.0007 | -0.0001 |
| 224 | SLE RA 7 | 0 | 9.02 | 33.58 | -0.2495 | 0.0006 | -0.0001 |
| 224 | SLE RA 8 | 0 | 9.04 | 33.63 | -0.2503 | 0.0007 | -0.0001 |
| 224 | SLE RA 9 | 0 | 9.01 | 33.51 | -0.2497 | 0.0006 | -0.0001 |
| 224 | SLE RA 10 | 0 | 9.25 | 34.71 | -0.2522 | 0.0006 | -0.0001 |
| 224 | SLE RA 11 | 0 | 9.64 | 36.11 | -0.2638 | 0.0008 | -0.0001 |
| 224 | SLE RA 12 | 0 | 9.61 | 35.99 | -0.2633 | 0.0007 | -0.0001 |
| 224 | SLE RA 13 | 0 | 9.58 | 35.83 | -0.263 | 0.0006 | -0.0001 |
| 224 | SLE RA 14 | 0 | 9.96 | 37.24 | -0.2746 | 0.0009 | -0.0001 |
| 224 | SLE RA 15 | 0 | 9.94 | 37.12 | -0.274 | 0.0008 | -0.0001 |
| 224 | SLE RA 16 | 0 | 9.95 | 37.17 | -0.2748 | 0.0009 | -0.0001 |
| 224 | SLE RA 17 | 0 | 9.93 | 37.05 | -0.2742 | 0.0008 | -0.0001 |
| 224 | SLE RA 18 | 0 | 9.69 | 36.43 | -0.2637 | 0.0008 | -0.0001 |
| 224 | SLE RA 19 | 0 | 9.66 | 36.3 | -0.2631 | 0.0007 | -0.0001 |
| 224 | SLE RA 20 | 0 | 10.02 | 37.56 | -0.2745 | 0.0009 | -0.0001 |
| 224 | SLE RA 21 | 0 | 9.99 | 37.43 | -0.2739 | 0.0008 | -0.0001 |
| 224 | SLE FR 1 | 0 | 8.38 | 31.37 | -0.2287 | 0.0006 | -0.0001 |
| 224 | SLE FR 2 | 0 | 8.37 | 31.33 | -0.2285 | 0.0006 | -0.0001 |
| 224 | SLE FR 3 | 0 | 8.51 | 31.82 | -0.233 | 0.0007 | -0.0001 |
| 224 | SLE FR 4 | 0 | 8.76 | 32.85 | -0.239 | 0.0006 | -0.0001 |
| 224 | SLE FR 5 | 0 | 8.9 | 33.34 | -0.2435 | 0.0007 | -0.0001 |
| 224 | SLE FR 6 | 0 | 9.03 | 33.9 | -0.2462 | 0.0007 | -0.0001 |
| 224 | SLE QP 1 | 0 | 8.38 | 31.37 | -0.2287 | 0.0006 | -0.0001 |
| 224 | SLE QP 2 | 0 | 8.77 | 32.89 | -0.2392 | 0.0007 | -0.0001 |
| 224 | SLD 1 | -0.31 | 9.43 | 35.2 | -0.2601 | 0.0642 | -0.0077 |
| 224 | SLD 2 | -0.31 | 9.43 | 35.2 | -0.2601 | 0.0642 | -0.0077 |
| 224 | SLD 3 | -0.37 | 5.88 | 25.25 | -0.1305 | 0.0517 | -0.0058 |
| 224 | SLD 4 | -0.37 | 5.88 | 25.25 | -0.1305 | 0.0517 | -0.0058 |
| 224 | SLD 5 | 0 | 14.35 | 48.67 | -0.442 | 0.0386 | -0.0053 |
| 224 | SLD 6 | 0 | 14.35 | 48.67 | -0.442 | 0.0386 | -0.0053 |
| 224 | SLD 7 | -0.2 | 2.52 | 15.51 | -0.0101 | -0.0028 | 0.0011 |
| 224 | SLD 8 | -0.2 | 2.52 | 15.51 | -0.0101 | -0.0028 | 0.0011 |
| 224 | SLD 9 | 0.2 | 15.02 | 50.26 | -0.4684 | 0.0042 | -0.0013 |
| 224 | SLD 10 | 0.2 | 15.02 | 50.26 | -0.4684 | 0.0042 | -0.0013 |
| 224 | SLD 11 | 0 | 3.19 | 17.11 | -0.0364 | -0.0372 | 0.0051 |
| 224 | SLD 12 | 0 | 3.19 | 17.11 | -0.0364 | -0.0372 | 0.0051 |
| 224 | SLD 13 | 0.37 | 11.66 | 40.53 | -0.3479 | -0.0504 | 0.0056 |
| 224 | SLD 14 | 0.37 | 11.66 | 40.53 | -0.3479 | -0.0504 | 0.0056 |
| 224 | SLD 15 | 0.31 | 8.11 | 30.58 | -0.2183 | -0.0628 | 0.0075 |
| 224 | SLD 16 | 0.31 | 8.11 | 30.58 | -0.2183 | -0.0628 | 0.0075 |
| 224 | SLV 1 | -0.78 | 10.3 | 38.25 | -0.2876 | 0.1607 | -0.0191 |
| 224 | SLV 2 | -0.78 | 10.3 | 38.25 | -0.2876 | 0.1607 | -0.0191 |
| 224 | SLV 3 | -0.94 | 1.94 | 14.77 | 0.0172 | 0.129 | -0.0142 |
| 224 | SLV 4 | -0.94 | 1.94 | 14.77 | 0.0172 | 0.129 | -0.0142 |
| 224 | SLV 5 | 0 | 21.91 | 70.1 | -0.7159 | 0.0968 | -0.0132 |
| 224 | SLV 6 | 0 | 21.91 | 70.1 | -0.7159 | 0.0968 | -0.0132 |
| 224 | SLV 7 | -0.51 | -5.96 | -8.15 | 0.2999 | -0.009 | 0.0031 |
| 224 | SLV 8 | -0.51 | -5.96 | -8.15 | 0.2999 | -0.009 | 0.0031 |
| 224 | SLV 9 | 0.52 | 23.5 | 73.93 | -0.7784 | 0.0103 | -0.0033 |
| 224 | SLV 10 | 0.52 | 23.5 | 73.93 | -0.7784 | 0.0103 | -0.0033 |
| 224 | SLV 11 | 0 | -4.37 | -4.33 | 0.2375 | -0.0954 | 0.013 |
| 224 | SLV 12 | 0 | -4.37 | -4.33 | 0.2375 | -0.0954 | 0.013 |
| 224 | SLV 13 | 0.94 | 15.6 | 51 | -0.4956 | -0.1276 | 0.014 |
| 224 | SLV 14 | 0.94 | 15.6 | 51 | -0.4956 | -0.1276 | 0.014 |
| 224 | SLV 15 | 0.79 | 7.24 | 27.52 | -0.1909 | -0.1593 | 0.0189 |
| 224 | SLV 16 | 0.79 | 7.24 | 27.52 | -0.1909 | -0.1593 | 0.0189 |
| 225 | SLU 1 | 0 | 7.18 | 25.66 | -0.2146 | -0.001 | 0.0001 |
| 225 | SLU 2 | 0 | 7.14 | 25.42 | -0.2145 | -0.0006 | 0.0001 |
| 225 | SLU 3 | 0 | 7.32 | 26.29 | -0.2173 | -0.0011 | 0.0002 |
| 225 | SLU 4 | 0 | 7.3 | 26.15 | -0.2172 | -0.0008 | 0.0001 |
| 225 | SLU 5 | 0 | 7.2 | 25.77 | -0.2146 | -0.0006 | 0.0001 |
| 225 | SLU 6 | 0 | 7.38 | 26.64 | -0.2175 | -0.0011 | 0.0002 |
| 225 | SLU 7 | 0 | 7.36 | 26.5 | -0.2174 | -0.0009 | 0.0001 |
| 225 | SLU 8 | 0 | 7.3 | 26.36 | -0.2149 | -0.0011 | 0.0002 |
| 225 | SLU 9 | 0 | 7.28 | 26.22 | -0.2148 | -0.0008 | 0.0001 |
| 225 | SLU 10 | 0 | 8.39 | 29.97 | -0.2506 | -0.0008 | 0.0001 |
| 225 | SLU 11 | 0 | 8.57 | 30.84 | -0.2534 | -0.0013 | 0.0002 |
| 225 | SLU 12 | 0 | 8.54 | 30.7 | -0.2534 | -0.0011 | 0.0002 |
| 225 | SLU 13 | 0 | 8.45 | 30.32 | -0.2507 | -0.0009 | 0.0001 |
| 225 | SLU 14 | 0 | 8.63 | 31.19 | -0.2536 | -0.0013 | 0.0002 |
| 225 | SLU 15 | 0 | 8.61 | 31.05 | -0.2535 | -0.0011 | 0.0002 |
| 225 | SLU 16 | 0 | 8.55 | 30.91 | -0.251 | -0.0013 | 0.0002 |
| 225 | SLU 17 | 0 | 8.53 | 30.77 | -0.251 | -0.0011 | 0.0002 |
| 225 | SLU 18 | 0 | 8.96 | 32.16 | -0.2662 | -0.0013 | 0.0002 |
| 225 | SLU 19 | 0 | 8.93 | 32.02 | -0.2661 | -0.0011 | 0.0002 |
| 225 | SLU 20 | 0 | 9.02 | 32.51 | -0.2663 | -0.0014 | 0.0002 |
| 225 | SLU 21 | 0 | 9 | 32.37 | -0.2663 | -0.0011 | 0.0002 |

| Nodo | Cont. | Reazione a traslazione | | | Reazione a rotazione | | |
|---|---|---|---|---|---|---|---|
| Ind. | N.br. | x | y | z | x | y | z |
| 225 | SLU 22 | 0 | 8.32 | 29.87 | -0.2472 | -0.0012 | 0.0002 |
| 225 | SLU 23 | 0 | 8.28 | 29.63 | -0.2471 | -0.0008 | 0.0001 |
| 225 | SLU 24 | 0 | 8.46 | 30.5 | -0.2499 | -0.0013 | 0.0002 |
| 225 | SLU 25 | 0 | 8.44 | 30.36 | -0.2498 | -0.0011 | 0.0002 |
| 225 | SLU 26 | 0 | 8.34 | 29.98 | -0.2472 | -0.0009 | 0.0001 |
| 225 | SLU 27 | 0 | 8.53 | 30.85 | -0.2501 | -0.0013 | 0.0002 |
| 225 | SLU 28 | 0 | 8.5 | 30.71 | -0.25 | -0.0011 | 0.0002 |
| 225 | SLU 29 | 0 | 8.44 | 30.57 | -0.2475 | -0.0013 | 0.0002 |
| 225 | SLU 30 | 0 | 8.42 | 30.43 | -0.2474 | -0.0011 | 0.0002 |
| 225 | SLU 31 | 0 | 9.53 | 34.18 | -0.2832 | -0.0011 | 0.0002 |
| 225 | SLU 32 | 0 | 9.71 | 35.05 | -0.286 | -0.0015 | 0.0002 |
| 225 | SLU 33 | 0 | 9.69 | 34.91 | -0.286 | -0.0013 | 0.0002 |
| 225 | SLU 34 | 0 | 9.59 | 34.53 | -0.2834 | -0.0011 | 0.0002 |
| 225 | SLU 35 | 0 | 9.77 | 35.4 | -0.2862 | -0.0016 | 0.0002 |
| 225 | SLU 36 | 0 | 9.75 | 35.26 | -0.2861 | -0.0013 | 0.0002 |
| 225 | SLU 37 | 0 | 9.69 | 35.12 | -0.2836 | -0.0016 | 0.0002 |
| 225 | SLU 38 | 0 | 9.67 | 34.98 | -0.2836 | -0.0013 | 0.0002 |
| 225 | SLU 39 | 0 | 10.1 | 36.37 | -0.2988 | -0.0016 | 0.0002 |
| 225 | SLU 40 | 0 | 10.08 | 36.23 | -0.2987 | -0.0013 | 0.0002 |
| 225 | SLU 41 | 0 | 10.16 | 36.72 | -0.299 | -0.0016 | 0.0002 |
| 225 | SLU 42 | 0 | 10.14 | 36.58 | -0.2989 | -0.0014 | 0.0002 |
| 225 | SLU 43 | 0 | 8.94 | 31.91 | -0.2678 | -0.0012 | 0.0002 |
| 225 | SLU 44 | 0 | 8.9 | 31.67 | -0.2677 | -0.0008 | 0.0001 |
| 225 | SLU 45 | 0 | 9.08 | 32.55 | -0.2705 | -0.0013 | 0.0002 |
| 225 | SLU 46 | 0 | 9.06 | 32.4 | -0.2704 | -0.001 | 0.0002 |
| 225 | SLU 47 | 0 | 8.97 | 32.02 | -0.2678 | -0.0009 | 0.0001 |
| 225 | SLU 48 | 0 | 9.15 | 32.9 | -0.2707 | -0.0013 | 0.0002 |
| 225 | SLU 49 | 0 | 9.12 | 32.75 | -0.2706 | -0.0011 | 0.0002 |
| 225 | SLU 50 | 0 | 9.07 | 32.61 | -0.2681 | -0.0013 | 0.0002 |
| 225 | SLU 51 | 0 | 9.04 | 32.47 | -0.268 | -0.0011 | 0.0002 |
| 225 | SLU 52 | 0 | 10.15 | 36.22 | -0.3038 | -0.0011 | 0.0002 |
| 225 | SLU 53 | 0 | 10.33 | 37.1 | -0.3066 | -0.0015 | 0.0002 |
| 225 | SLU 54 | 0 | 10.31 | 36.95 | -0.3065 | -0.0013 | 0.0002 |
| 225 | SLU 55 | 0 | 10.21 | 36.57 | -0.3039 | -0.0011 | 0.0002 |
| 225 | SLU 56 | 0 | 10.39 | 37.45 | -0.3068 | -0.0016 | 0.0002 |
| 225 | SLU 57 | 0 | 10.37 | 37.3 | -0.3067 | -0.0013 | 0.0002 |
| 225 | SLU 58 | 0 | 10.31 | 37.16 | -0.3042 | -0.0015 | 0.0002 |
| 225 | SLU 59 | 0 | 10.29 | 37.02 | -0.3042 | -0.0013 | 0.0002 |
| 225 | SLU 60 | 0 | 10.72 | 38.41 | -0.3194 | -0.0016 | 0.0002 |
| 225 | SLU 61 | 0 | 10.7 | 38.27 | -0.3193 | -0.0013 | 0.0002 |
| 225 | SLU 62 | 0 | 10.78 | 38.76 | -0.3195 | -0.0016 | 0.0002 |
| 225 | SLU 63 | 0 | 10.76 | 38.62 | -0.3195 | -0.0014 | 0.0002 |
| 225 | SLU 64 | 0 | 10.08 | 36.13 | -0.3004 | -0.0014 | 0.0002 |
| 225 | SLU 65 | 0 | 10.04 | 35.89 | -0.3003 | -0.001 | 0.0002 |
| 225 | SLU 66 | 0 | 10.23 | 36.76 | -0.3031 | -0.0015 | 0.0002 |
| 225 | SLU 67 | 0 | 10.2 | 36.61 | -0.303 | -0.0013 | 0.0002 |
| 225 | SLU 68 | 0 | 10.11 | 36.24 | -0.3004 | -0.0011 | 0.0002 |
| 225 | SLU 69 | 0 | 10.29 | 37.11 | -0.3033 | -0.0015 | 0.0002 |
| 225 | SLU 70 | 0 | 10.27 | 36.96 | -0.3032 | -0.0013 | 0.0002 |
| 225 | SLU 71 | 0 | 10.21 | 36.83 | -0.3007 | -0.0015 | 0.0002 |
| 225 | SLU 72 | 0 | 10.18 | 36.68 | -0.3006 | -0.0013 | 0.0002 |
| 225 | SLU 73 | 0 | 11.29 | 40.44 | -0.3364 | -0.0013 | 0.0002 |
| 225 | SLU 74 | 0 | 11.47 | 41.31 | -0.3392 | -0.0017 | 0.0003 |
| 225 | SLU 75 | 0 | 11.45 | 41.16 | -0.3392 | -0.0015 | 0.0002 |
| 225 | SLU 76 | 0 | 11.35 | 40.79 | -0.3365 | -0.0013 | 0.0002 |
| 225 | SLU 77 | 0 | 11.53 | 41.66 | -0.3394 | -0.0018 | 0.0003 |
| 225 | SLU 78 | 0 | 11.51 | 41.51 | -0.3393 | -0.0016 | 0.0002 |
| 225 | SLU 79 | 0 | 11.45 | 41.38 | -0.3368 | -0.0018 | 0.0003 |
| 225 | SLU 80 | 0 | 11.43 | 41.23 | -0.3368 | -0.0015 | 0.0002 |
| 225 | SLU 81 | 0 | 11.86 | 42.63 | -0.352 | -0.0018 | 0.0003 |
| 225 | SLU 82 | 0 | 11.84 | 42.48 | -0.3519 | -0.0016 | 0.0002 |
| 225 | SLU 83 | 0 | 11.92 | 42.98 | -0.3521 | -0.0018 | 0.0003 |
| 225 | SLU 84 | 0 | 11.9 | 42.83 | -0.3521 | -0.0016 | 0.0002 |
| 225 | SLE RA 1 | 0 | 7.5 | 26.86 | -0.2239 | -0.0011 | 0.0002 |
| 225 | SLE RA 2 | 0 | 7.48 | 26.7 | -0.2238 | -0.0008 | 0.0001 |
| 225 | SLE RA 3 | 0 | 7.6 | 27.28 | -0.2257 | -0.0011 | 0.0002 |
| 225 | SLE RA 4 | 0 | 7.59 | 27.19 | -0.2257 | -0.0009 | 0.0001 |
| 225 | SLE RA 5 | 0 | 7.52 | 26.94 | -0.2239 | -0.0008 | 0.0001 |
| 225 | SLE RA 6 | 0 | 7.64 | 27.52 | -0.2258 | -0.0011 | 0.0002 |
| 225 | SLE RA 7 | 0 | 7.63 | 27.42 | -0.2258 | -0.001 | 0.0001 |
| 225 | SLE RA 8 | 0 | 7.59 | 27.33 | -0.2241 | -0.0011 | 0.0002 |
| 225 | SLE RA 9 | 0 | 7.57 | 27.23 | -0.2241 | -0.001 | 0.0001 |
| 225 | SLE RA 10 | 0 | 8.31 | 29.74 | -0.2479 | -0.001 | 0.0001 |
| 225 | SLE RA 11 | 0 | 8.43 | 30.32 | -0.2498 | -0.0013 | 0.0002 |
| 225 | SLE RA 12 | 0 | 8.42 | 30.22 | -0.2497 | -0.0011 | 0.0002 |
| 225 | SLE RA 13 | 0 | 8.35 | 29.97 | -0.248 | -0.001 | 0.0001 |
| 225 | SLE RA 14 | 0 | 8.47 | 30.55 | -0.2499 | -0.0013 | 0.0002 |
| 225 | SLE RA 15 | 0 | 8.46 | 30.45 | -0.2499 | -0.0011 | 0.0002 |
| 225 | SLE RA 16 | 0 | 8.42 | 30.36 | -0.2482 | -0.0013 | 0.0002 |
| 225 | SLE RA 17 | 0 | 8.4 | 30.27 | -0.2481 | -0.0011 | 0.0002 |
| 225 | SLE RA 18 | 0 | 8.69 | 31.2 | -0.2583 | -0.0013 | 0.0002 |
| 225 | SLE RA 19 | 0 | 8.67 | 31.1 | -0.2582 | -0.0011 | 0.0002 |
| 225 | SLE RA 20 | 0 | 8.73 | 31.43 | -0.2584 | -0.0013 | 0.0002 |
| 225 | SLE RA 21 | 0 | 8.72 | 31.33 | -0.2584 | -0.0012 | 0.0002 |
| 225 | SLE FR 1 | 0 | 7.5 | 26.86 | -0.2239 | -0.0011 | 0.0002 |
| 225 | SLE FR 2 | 0 | 7.5 | 26.83 | -0.2239 | -0.001 | 0.0002 |
| 225 | SLE FR 3 | 0 | 7.52 | 26.96 | -0.2239 | -0.0011 | 0.0002 |
| 225 | SLE FR 4 | 0 | 7.86 | 28.13 | -0.2342 | -0.0011 | 0.0002 |

| Nodo | Cont. | Reazione a traslazione | | | Reazione a rotazione | | |
|---|---|---|---|---|---|---|---|
| Ind. | N.br. | x | y | z | x | y | z |
| 225 | SLE FR 5 | 0 | 7.88 | 28.26 | -0.2343 | -0.0011 | 0.0002 |
| 225 | SLE FR 6 | 0 | 8.1 | 29.03 | -0.2411 | -0.0012 | 0.0002 |
| 225 | SLE QP 1 | 0 | 7.5 | 26.86 | -0.2239 | -0.0011 | 0.0002 |
| 225 | SLE QP 2 | 0 | 7.86 | 28.16 | -0.2342 | -0.0011 | 0.0002 |
| 225 | SLD 1 | -0.34 | 10.44 | 34.92 | -0.3389 | 0.0339 | -0.0038 |
| 225 | SLD 2 | -0.34 | 10.44 | 34.92 | -0.3389 | 0.0339 | -0.0038 |
| 225 | SLD 3 | -0.26 | 7.79 | 28.05 | -0.2311 | 0.0499 | -0.0064 |
| 225 | SLD 4 | -0.26 | 7.79 | 28.05 | -0.2311 | 0.0499 | -0.0064 |
| 225 | SLD 5 | -0.22 | 12.65 | 40.6 | -0.4291 | -0.0149 | 0.0028 |
| 225 | SLD 6 | -0.22 | 12.65 | 40.6 | -0.4291 | -0.0149 | 0.0028 |
| 225 | SLD 7 | 0.04 | 3.82 | 17.72 | -0.0698 | 0.0384 | -0.0056 |
| 225 | SLD 8 | 0.04 | 3.82 | 17.72 | -0.0698 | 0.0384 | -0.0056 |
| 225 | SLD 9 | -0.04 | 11.9 | 38.61 | -0.3986 | -0.0407 | 0.006 |
| 225 | SLD 10 | -0.04 | 11.9 | 38.61 | -0.3986 | -0.0407 | 0.006 |
| 225 | SLD 11 | 0.22 | 3.07 | 15.73 | -0.0393 | 0.0126 | -0.0024 |
| 225 | SLD 12 | 0.22 | 3.07 | 15.73 | -0.0393 | 0.0126 | -0.0024 |
| 225 | SLD 13 | 0.26 | 7.93 | 28.28 | -0.2373 | -0.0521 | 0.0067 |
| 225 | SLD 14 | 0.26 | 7.93 | 28.28 | -0.2373 | -0.0521 | 0.0067 |
| 225 | SLD 15 | 0.34 | 5.28 | 21.41 | -0.1295 | -0.0361 | 0.0042 |
| 225 | SLD 16 | 0.34 | 5.28 | 21.41 | -0.1295 | -0.0361 | 0.0042 |
| 225 | SLV 1 | -0.87 | 13.88 | 43.96 | -0.4786 | 0.0848 | -0.0094 |
| 225 | SLV 2 | -0.87 | 13.88 | 43.96 | -0.4786 | 0.0848 | -0.0094 |
| 225 | SLV 3 | -0.67 | 7.7 | 27.96 | -0.2274 | 0.1256 | -0.0158 |
| 225 | SLV 4 | -0.67 | 7.7 | 27.96 | -0.2274 | 0.1256 | -0.0158 |
| 225 | SLV 5 | -0.56 | 19.03 | 57.17 | -0.6885 | -0.0372 | 0.007 |
| 225 | SLV 6 | -0.56 | 19.03 | 57.17 | -0.6885 | -0.0372 | 0.007 |
| 225 | SLV 7 | 0.1 | -1.55 | 3.84 | 0.1487 | 0.0988 | -0.0144 |
| 225 | SLV 8 | 0.1 | -1.55 | 3.84 | 0.1487 | 0.0988 | -0.0144 |
| 225 | SLV 9 | -0.09 | 17.27 | 52.49 | -0.6172 | -0.101 | 0.0147 |
| 225 | SLV 10 | -0.09 | 17.27 | 52.49 | -0.6172 | -0.101 | 0.0147 |
| 225 | SLV 11 | 0.56 | -3.31 | -0.84 | 0.22 | 0.035 | -0.0067 |
| 225 | SLV 12 | 0.56 | -3.31 | -0.84 | 0.22 | 0.035 | -0.0067 |
| 225 | SLV 13 | 0.67 | 8.02 | 28.36 | -0.241 | -0.1278 | 0.0161 |
| 225 | SLV 14 | 0.67 | 8.02 | 28.36 | -0.241 | -0.1278 | 0.0161 |
| 225 | SLV 15 | 0.87 | 1.84 | 12.37 | 0.0102 | -0.087 | 0.0097 |
| 225 | SLV 16 | 0.87 | 1.84 | 12.37 | 0.0102 | -0.087 | 0.0097 |
| 226 | SLU 1 | 0 | 1.82 | 10.87 | 0.014 | -0.0003 | 0.0001 |
| 226 | SLU 2 | 0 | 1.83 | 10.88 | 0.0137 | -0.0005 | 0.0001 |
| 226 | SLU 3 | 0 | 1.75 | 10.74 | 0.0186 | -0.0003 | 0.0001 |
| 226 | SLU 4 | 0 | 1.76 | 10.75 | 0.0184 | -0.0004 | 0.0001 |
| 226 | SLU 5 | 0 | 1.79 | 10.8 | 0.0164 | -0.0004 | 0.0001 |
| 226 | SLU 6 | 0 | 1.71 | 10.67 | 0.0214 | -0.0003 | 0.0001 |
| 226 | SLU 7 | 0 | 1.71 | 10.67 | 0.0212 | -0.0004 | 0.0001 |
| 226 | SLU 8 | 0 | 1.74 | 10.71 | 0.0195 | -0.0002 | 0 |
| 226 | SLU 9 | 0 | 1.74 | 10.72 | 0.0193 | -0.0003 | 0.0001 |
| 226 | SLU 10 | 0 | 2.75 | 15.34 | 0.0006 | -0.0006 | 0.0001 |
| 226 | SLU 11 | 0 | 2.68 | 15.2 | 0.0056 | -0.0004 | 0.0001 |
| 226 | SLU 12 | 0 | 2.68 | 15.21 | 0.0054 | -0.0005 | 0.0001 |
| 226 | SLU 13 | 0 | 2.71 | 15.26 | 0.0034 | -0.0005 | 0.0001 |
| 226 | SLU 14 | 0 | 2.64 | 15.13 | 0.0083 | -0.0004 | 0.0001 |
| 226 | SLU 15 | 0 | 2.64 | 15.13 | 0.0081 | -0.0005 | 0.0001 |
| 226 | SLU 16 | 0 | 2.67 | 15.17 | 0.0065 | -0.0003 | 0.0001 |
| 226 | SLU 17 | 0 | 2.67 | 15.18 | 0.0063 | -0.0004 | 0.0001 |
| 226 | SLU 18 | 0 | 3.15 | 17.24 | -0.0046 | -0.0005 | 0.0001 |
| 226 | SLU 19 | 0 | 3.15 | 17.24 | -0.0048 | -0.0005 | 0.0001 |
| 226 | SLU 20 | 0 | 3.11 | 17.16 | -0.0019 | -0.0004 | 0.0001 |
| 226 | SLU 21 | 0 | 3.11 | 17.17 | -0.0021 | -0.0005 | 0.0001 |
| 226 | SLU 22 | 0 | 2.44 | 14.02 | 0.0088 | -0.0004 | 0.0001 |
| 226 | SLU 23 | 0 | 2.44 | 14.02 | 0.0085 | -0.0005 | 0.0001 |
| 226 | SLU 24 | 0 | 2.37 | 13.89 | 0.0134 | -0.0004 | 0.0001 |
| 226 | SLU 25 | 0 | 2.37 | 13.9 | 0.0132 | -0.0004 | 0.0001 |
| 226 | SLU 26 | 0 | 2.4 | 13.95 | 0.0112 | -0.0005 | 0.0001 |
| 226 | SLU 27 | 0 | 2.33 | 13.81 | 0.0162 | -0.0003 | 0.0001 |
| 226 | SLU 28 | 0 | 2.33 | 13.82 | 0.016 | -0.0004 | 0.0001 |
| 226 | SLU 29 | 0 | 2.35 | 13.86 | 0.0143 | -0.0003 | 0.0001 |
| 226 | SLU 30 | 0 | 2.36 | 13.87 | 0.0141 | -0.0004 | 0.0001 |
| 226 | SLU 31 | 0 | 3.37 | 18.48 | -0.0045 | -0.0006 | 0.0001 |
| 226 | SLU 32 | 0 | 3.3 | 18.35 | 0.0004 | -0.0005 | 0.0001 |
| 226 | SLU 33 | 0 | 3.3 | 18.36 | 0.0002 | -0.0005 | 0.0001 |
| 226 | SLU 34 | 0 | 3.33 | 18.41 | -0.0018 | -0.0006 | 0.0001 |
| 226 | SLU 35 | 0 | 3.25 | 18.27 | 0.0031 | -0.0004 | 0.0001 |
| 226 | SLU 36 | 0 | 3.26 | 18.28 | 0.0029 | -0.0005 | 0.0001 |
| 226 | SLU 37 | 0 | 3.28 | 18.32 | 0.0013 | -0.0004 | 0.0001 |
| 226 | SLU 38 | 0 | 3.29 | 18.33 | 0.0011 | -0.0005 | 0.0001 |
| 226 | SLU 39 | 0 | 3.76 | 20.39 | -0.0098 | -0.0005 | 0.0001 |
| 226 | SLU 40 | 0 | 3.76 | 20.39 | -0.01 | -0.0006 | 0.0001 |
| 226 | SLU 41 | 0 | 3.72 | 20.31 | -0.0071 | -0.0005 | 0.0001 |
| 226 | SLU 42 | 0 | 3.72 | 20.32 | -0.0073 | -0.0006 | 0.0001 |
| 226 | SLU 43 | 0 | 2.16 | 13.05 | 0.02 | -0.0004 | 0.0001 |
| 226 | SLU 44 | 0 | 2.16 | 13.06 | 0.0197 | -0.0005 | 0.0001 |
| 226 | SLU 45 | 0 | 2.09 | 12.93 | 0.0246 | -0.0004 | 0.0001 |
| 226 | SLU 46 | 0 | 2.09 | 12.93 | 0.0244 | -0.0005 | 0.0001 |
| 226 | SLU 47 | 0 | 2.12 | 12.98 | 0.0224 | -0.0005 | 0.0001 |
| 226 | SLU 48 | 0 | 2.05 | 12.85 | 0.0273 | -0.0004 | 0.0001 |
| 226 | SLU 49 | 0 | 2.05 | 12.85 | 0.0272 | -0.0004 | 0.0001 |
| 226 | SLU 50 | 0 | 2.08 | 12.9 | 0.0255 | -0.0003 | 0.0001 |
| 226 | SLU 51 | 0 | 2.08 | 12.9 | 0.0253 | -0.0004 | 0.0001 |
| 226 | SLU 52 | 0 | 3.09 | 17.52 | 0.0066 | -0.0006 | 0.0001 |

| Nodo | Cont. | Reazione a traslazione | | | Reazione a rotazione | | |
|---|---|---|---|---|---|---|---|
| Ind. | N.br. | x | y | z | x | y | z |
| 226 | SLU 53 | 0 | 3.02 | 17.39 | 0.0116 | -0.0005 | 0.0001 |
| 226 | SLU 54 | 0 | 3.02 | 17.39 | 0.0114 | -0.0006 | 0.0001 |
| 226 | SLU 55 | 0 | 3.05 | 17.44 | 0.0094 | -0.0006 | 0.0001 |
| 226 | SLU 56 | 0 | 2.98 | 17.31 | 0.0143 | -0.0005 | 0.0001 |
| 226 | SLU 57 | 0 | 2.98 | 17.31 | 0.0141 | -0.0005 | 0.0001 |
| 226 | SLU 58 | 0 | 3 | 17.36 | 0.0124 | -0.0004 | 0.0001 |
| 226 | SLU 59 | 0 | 3.01 | 17.36 | 0.0122 | -0.0005 | 0.0001 |
| 226 | SLU 60 | 0 | 3.48 | 19.42 | 0.0014 | -0.0005 | 0.0001 |
| 226 | SLU 61 | 0 | 3.48 | 19.43 | 0.0012 | -0.0006 | 0.0001 |
| 226 | SLU 62 | 0 | 3.44 | 19.34 | 0.0041 | -0.0005 | 0.0001 |
| 226 | SLU 63 | 0 | 3.44 | 19.35 | 0.0039 | -0.0006 | 0.0001 |
| 226 | SLU 64 | 0 | 2.77 | 16.2 | 0.0148 | -0.0005 | 0.0001 |
| 226 | SLU 65 | 0 | 2.78 | 16.2 | 0.0145 | -0.0006 | 0.0001 |
| 226 | SLU 66 | 0 | 2.7 | 16.07 | 0.0194 | -0.0004 | 0.0001 |
| 226 | SLU 67 | 0 | 2.71 | 16.08 | 0.0192 | -0.0005 | 0.0001 |
| 226 | SLU 68 | 0 | 2.74 | 16.13 | 0.0172 | -0.0006 | 0.0001 |
| 226 | SLU 69 | 0 | 2.66 | 16 | 0.0221 | -0.0004 | 0.0001 |
| 226 | SLU 70 | 0 | 2.67 | 16 | 0.022 | -0.0005 | 0.0001 |
| 226 | SLU 71 | 0 | 2.69 | 16.04 | 0.0203 | -0.0004 | 0.0001 |
| 226 | SLU 72 | 0 | 2.69 | 16.05 | 0.0201 | -0.0005 | 0.0001 |
| 226 | SLU 73 | 0 | 3.7 | 20.67 | 0.0014 | -0.0007 | 0.0001 |
| 226 | SLU 74 | 0 | 3.63 | 20.53 | 0.0064 | -0.0005 | 0.0001 |
| 226 | SLU 75 | 0 | 3.63 | 20.54 | 0.0062 | -0.0006 | 0.0001 |
| 226 | SLU 76 | 0 | 3.66 | 20.59 | 0.0042 | -0.0007 | 0.0001 |
| 226 | SLU 77 | 0 | 3.59 | 20.46 | 0.0091 | -0.0005 | 0.0001 |
| 226 | SLU 78 | 0 | 3.59 | 20.46 | 0.0089 | -0.0006 | 0.0001 |
| 226 | SLU 79 | 0 | 3.62 | 20.5 | 0.0072 | -0.0005 | 0.0001 |
| 226 | SLU 80 | 0 | 3.62 | 20.51 | 0.0071 | -0.0006 | 0.0001 |
| 226 | SLU 81 | 0 | 4.1 | 22.57 | -0.0038 | -0.0006 | 0.0001 |
| 226 | SLU 82 | 0 | 4.1 | 22.57 | -0.004 | -0.0007 | 0.0001 |
| 226 | SLU 83 | 0 | 4.06 | 22.49 | -0.0011 | -0.0006 | 0.0001 |
| 226 | SLU 84 | 0 | 4.06 | 22.5 | -0.0013 | -0.0006 | 0.0001 |
| 226 | SLE RA 1 | 0 | 2 | 11.77 | 0.0125 | -0.0003 | 0.0001 |
| 226 | SLE RA 2 | 0 | 2 | 11.77 | 0.0123 | -0.0004 | 0.0001 |
| 226 | SLE RA 3 | 0 | 1.95 | 11.68 | 0.0156 | -0.0003 | 0.0001 |
| 226 | SLE RA 4 | 0 | 1.95 | 11.69 | 0.0155 | -0.0004 | 0.0001 |
| 226 | SLE RA 5 | 0 | 1.97 | 11.72 | 0.0141 | -0.0004 | 0.0001 |
| 226 | SLE RA 6 | 0 | 1.92 | 11.63 | 0.0174 | -0.0003 | 0.0001 |
| 226 | SLE RA 7 | 0 | 1.93 | 11.64 | 0.0173 | -0.0004 | 0.0001 |
| 226 | SLE RA 8 | 0 | 1.94 | 11.67 | 0.0162 | -0.0003 | 0.0001 |
| 226 | SLE RA 9 | 0 | 1.94 | 11.67 | 0.0161 | -0.0003 | 0.0001 |
| 226 | SLE RA 10 | 0 | 2.62 | 14.75 | 0.0036 | -0.0005 | 0.0001 |
| 226 | SLE RA 11 | 0 | 2.57 | 14.66 | 0.0069 | -0.0004 | 0.0001 |
| 226 | SLE RA 12 | 0 | 2.57 | 14.66 | 0.0068 | -0.0005 | 0.0001 |
| 226 | SLE RA 13 | 0 | 2.59 | 14.7 | 0.0054 | -0.0005 | 0.0001 |
| 226 | SLE RA 14 | 0 | 2.54 | 14.61 | 0.0087 | -0.0004 | 0.0001 |
| 226 | SLE RA 15 | 0 | 2.54 | 14.61 | 0.0086 | -0.0004 | 0.0001 |
| 226 | SLE RA 16 | 0 | 2.56 | 14.64 | 0.0075 | -0.0004 | 0.0001 |
| 226 | SLE RA 17 | 0 | 2.56 | 14.64 | 0.0074 | -0.0004 | 0.0001 |
| 226 | SLE RA 18 | 0 | 2.88 | 16.02 | 0.0001 | -0.0004 | 0.0001 |
| 226 | SLE RA 19 | 0 | 2.88 | 16.02 | 0 | -0.0005 | 0.0001 |
| 226 | SLE RA 20 | 0 | 2.85 | 15.96 | 0.0019 | -0.0004 | 0.0001 |
| 226 | SLE RA 21 | 0 | 2.86 | 15.97 | 0.0018 | -0.0005 | 0.0001 |
| 226 | SLE FR 1 | 0 | 2 | 11.77 | 0.0125 | -0.0003 | 0.0001 |
| 226 | SLE FR 2 | 0 | 2 | 11.77 | 0.0125 | -0.0004 | 0.0001 |
| 226 | SLE FR 3 | 0 | 1.99 | 11.75 | 0.0133 | -0.0003 | 0.0001 |
| 226 | SLE FR 4 | 0 | 2.26 | 13.04 | 0.0088 | -0.0004 | 0.0001 |
| 226 | SLE FR 5 | 0 | 2.25 | 13.02 | 0.0095 | -0.0004 | 0.0001 |
| 226 | SLE FR 6 | 0 | 2.44 | 13.89 | 0.0063 | -0.0004 | 0.0001 |
| 226 | SLE QP 1 | 0 | 2 | 11.77 | 0.0125 | -0.0003 | 0.0001 |
| 226 | SLE QP 2 | 0 | 2.26 | 13.04 | 0.0088 | -0.0004 | 0.0001 |
| 226 | SLD 1 | -0.67 | 4.21 | 18.67 | -0.0637 | 0.0476 | -0.0059 |
| 226 | SLD 2 | -0.67 | 4.21 | 18.67 | -0.0637 | 0.0476 | -0.0059 |
| 226 | SLD 3 | -0.64 | 1.26 | 10.16 | 0.0463 | 0.0544 | -0.0072 |
| 226 | SLD 4 | -0.64 | 1.26 | 10.16 | 0.0463 | 0.0544 | -0.0072 |
| 226 | SLD 5 | -0.24 | 7.32 | 27.64 | -0.1797 | 0.0037 | 0.0001 |
| 226 | SLD 6 | -0.24 | 7.32 | 27.64 | -0.1797 | 0.0037 | 0.0001 |
| 226 | SLD 7 | -0.15 | -2.51 | -0.74 | 0.1868 | 0.0263 | -0.004 |
| 226 | SLD 8 | -0.15 | -2.51 | -0.74 | 0.1868 | 0.0263 | -0.004 |
| 226 | SLD 9 | 0.15 | 7.03 | 26.82 | -0.1692 | -0.0271 | 0.0041 |
| 226 | SLD 10 | 0.15 | 7.03 | 26.82 | -0.1692 | -0.0271 | 0.0041 |
| 226 | SLD 11 | 0.24 | -2.8 | -1.56 | 0.1973 | -0.0045 | 0 |
| 226 | SLD 12 | 0.24 | -2.8 | -1.56 | 0.1973 | -0.0045 | 0 |
| 226 | SLD 13 | 0.64 | 3.26 | 15.92 | -0.0287 | -0.0551 | 0.0073 |
| 226 | SLD 14 | 0.64 | 3.26 | 15.92 | -0.0287 | -0.0551 | 0.0073 |
| 226 | SLD 15 | 0.67 | 0.31 | 7.41 | 0.0813 | -0.0483 | 0.0061 |
| 226 | SLD 16 | 0.67 | 0.31 | 7.41 | 0.0813 | -0.0483 | 0.0061 |
| 226 | SLV 1 | -1.71 | 6.83 | 26.23 | -0.161 | 0.1177 | -0.0144 |
| 226 | SLV 2 | -1.71 | 6.83 | 26.23 | -0.161 | 0.1177 | -0.0144 |
| 226 | SLV 3 | -1.64 | -0.06 | 6.35 | 0.0959 | 0.135 | -0.0175 |
| 226 | SLV 4 | -1.64 | -0.06 | 6.35 | 0.0959 | 0.135 | -0.0175 |
| 226 | SLV 5 | -0.63 | 14.08 | 47.16 | -0.4317 | 0.0089 | 0.0005 |
| 226 | SLV 6 | -0.63 | 14.08 | 47.16 | -0.4317 | 0.0089 | 0.0005 |
| 226 | SLV 7 | -0.38 | -8.88 | -19.13 | 0.4245 | 0.0664 | -0.0099 |
| 226 | SLV 8 | -0.38 | -8.88 | -19.13 | 0.4245 | 0.0664 | -0.0099 |
| 226 | SLV 9 | 0.38 | 13.41 | 45.21 | -0.4069 | -0.0672 | 0.0101 |
| 226 | SLV 10 | 0.38 | 13.41 | 45.21 | -0.4069 | -0.0672 | 0.0101 |
| 226 | SLV 11 | 0.62 | -9.56 | -21.08 | 0.4493 | -0.0096 | -0.0003 |

| Nodo | Cont. | Reazione a traslazione | | | Reazione a rotazione | | |
|---|---|---|---|---|---|---|---|
| Ind. | N.br. | x | y | z | x | y | z |
| 226 | SLV 12 | 0.62 | -9.56 | -21.08 | 0.4493 | -0.0096 | -0.0003 |
| 226 | SLV 13 | 1.63 | 4.58 | 19.74 | -0.0783 | -0.1357 | 0.0176 |
| 226 | SLV 14 | 1.63 | 4.58 | 19.74 | -0.0783 | -0.1357 | 0.0176 |
| 226 | SLV 15 | 1.71 | -2.31 | -0.15 | 0.1786 | -0.1184 | 0.0145 |
| 226 | SLV 16 | 1.71 | -2.31 | -0.15 | 0.1786 | -0.1184 | 0.0145 |
| 227 | SLU 1 | -0.14 | 7.02 | 29.01 | -0.1223 | -0.1149 | 0.0183 |
| 227 | SLU 2 | -0.14 | 7.4 | 30.01 | -0.1402 | -0.1054 | 0.0168 |
| 227 | SLU 3 | -0.15 | 7.25 | 29.93 | -0.1274 | -0.1186 | 0.0189 |
| 227 | SLU 4 | -0.15 | 7.47 | 30.53 | -0.1381 | -0.1129 | 0.018 |
| 227 | SLU 5 | -0.15 | 7.57 | 30.69 | -0.1449 | -0.1077 | 0.0172 |
| 227 | SLU 6 | -0.15 | 7.42 | 30.62 | -0.1321 | -0.1209 | 0.0193 |
| 227 | SLU 7 | -0.15 | 7.65 | 31.22 | -0.1428 | -0.1152 | 0.0184 |
| 227 | SLU 8 | -0.15 | 7.37 | 30.38 | -0.1317 | -0.1195 | 0.0191 |
| 227 | SLU 9 | -0.15 | 7.6 | 30.98 | -0.1425 | -0.1138 | 0.0182 |
| 227 | SLU 10 | -0.16 | 8.07 | 32.93 | -0.1497 | -0.1196 | 0.0191 |
| 227 | SLU 11 | -0.16 | 7.93 | 32.85 | -0.1369 | -0.1328 | 0.0212 |
| 227 | SLU 12 | -0.16 | 8.15 | 33.46 | -0.1476 | -0.1271 | 0.0203 |
| 227 | SLU 13 | -0.16 | 8.25 | 33.62 | -0.1544 | -0.122 | 0.0195 |
| 227 | SLU 14 | -0.17 | 8.1 | 33.54 | -0.1416 | -0.1352 | 0.0215 |
| 227 | SLU 15 | -0.17 | 8.33 | 34.14 | -0.1523 | -0.1295 | 0.0207 |
| 227 | SLU 16 | -0.17 | 8.05 | 33.3 | -0.1413 | -0.1338 | 0.0213 |
| 227 | SLU 17 | -0.17 | 8.28 | 33.9 | -0.152 | -0.1281 | 0.0204 |
| 227 | SLU 18 | -0.16 | 7.99 | 33.18 | -0.1359 | -0.1352 | 0.0215 |
| 227 | SLU 19 | -0.16 | 8.22 | 33.78 | -0.1466 | -0.1295 | 0.0207 |
| 227 | SLU 20 | -0.17 | 8.17 | 33.87 | -0.1406 | -0.1376 | 0.0219 |
| 227 | SLU 21 | -0.17 | 8.39 | 34.47 | -0.1513 | -0.1319 | 0.021 |
| 227 | SLU 22 | -0.16 | 7.74 | 32.07 | -0.1336 | -0.1294 | 0.0206 |
| 227 | SLU 23 | -0.16 | 8.12 | 33.07 | -0.1514 | -0.1199 | 0.0192 |
| 227 | SLU 24 | -0.16 | 7.97 | 32.99 | -0.1387 | -0.1331 | 0.0212 |
| 227 | SLU 25 | -0.16 | 8.19 | 33.59 | -0.1494 | -0.1274 | 0.0203 |
| 227 | SLU 26 | -0.16 | 8.29 | 33.75 | -0.1562 | -0.1222 | 0.0195 |
| 227 | SLU 27 | -0.17 | 8.14 | 33.68 | -0.1434 | -0.1354 | 0.0216 |
| 227 | SLU 28 | -0.17 | 8.37 | 34.28 | -0.1541 | -0.1297 | 0.0207 |
| 227 | SLU 29 | -0.17 | 8.09 | 33.44 | -0.143 | -0.1341 | 0.0214 |
| 227 | SLU 30 | -0.17 | 8.32 | 34.04 | -0.1537 | -0.1284 | 0.0205 |
| 227 | SLU 31 | -0.18 | 8.79 | 35.99 | -0.161 | -0.1342 | 0.0214 |
| 227 | SLU 32 | -0.18 | 8.65 | 35.91 | -0.1482 | -0.1474 | 0.0235 |
| 227 | SLU 33 | -0.18 | 8.87 | 36.51 | -0.1589 | -0.1417 | 0.0226 |
| 227 | SLU 34 | -0.18 | 8.97 | 36.67 | -0.1657 | -0.1365 | 0.0218 |
| 227 | SLU 35 | -0.18 | 8.82 | 36.6 | -0.1529 | -0.1497 | 0.0239 |
| 227 | SLU 36 | -0.18 | 9.05 | 37.2 | -0.1636 | -0.144 | 0.023 |
| 227 | SLU 37 | -0.18 | 8.77 | 36.36 | -0.1525 | -0.1483 | 0.0236 |
| 227 | SLU 38 | -0.18 | 9 | 36.96 | -0.1633 | -0.1426 | 0.0228 |
| 227 | SLU 39 | -0.18 | 8.71 | 36.24 | -0.1472 | -0.1498 | 0.0238 |
| 227 | SLU 40 | -0.18 | 8.94 | 36.84 | -0.1579 | -0.1441 | 0.023 |
| 227 | SLU 41 | -0.19 | 8.89 | 36.92 | -0.1519 | -0.1521 | 0.0242 |
| 227 | SLU 42 | -0.19 | 9.11 | 37.53 | -0.1626 | -0.1464 | 0.0234 |
| 227 | SLU 43 | -0.18 | 8.88 | 36.66 | -0.1551 | -0.1443 | 0.023 |
| 227 | SLU 44 | -0.18 | 9.25 | 37.67 | -0.173 | -0.1348 | 0.0215 |
| 227 | SLU 45 | -0.18 | 9.11 | 37.59 | -0.1602 | -0.148 | 0.0236 |
| 227 | SLU 46 | -0.18 | 9.33 | 38.19 | -0.1709 | -0.1423 | 0.0227 |
| 227 | SLU 47 | -0.18 | 9.43 | 38.35 | -0.1777 | -0.1372 | 0.0219 |
| 227 | SLU 48 | -0.19 | 9.28 | 38.27 | -0.1649 | -0.1504 | 0.024 |
| 227 | SLU 49 | -0.19 | 9.51 | 38.87 | -0.1756 | -0.1447 | 0.0231 |
| 227 | SLU 50 | -0.19 | 9.23 | 38.03 | -0.1645 | -0.149 | 0.0238 |
| 227 | SLU 51 | -0.19 | 9.45 | 38.63 | -0.1753 | -0.1433 | 0.0229 |
| 227 | SLU 52 | -0.19 | 9.93 | 40.59 | -0.1825 | -0.1491 | 0.0238 |
| 227 | SLU 53 | -0.2 | 9.79 | 40.51 | -0.1697 | -0.1623 | 0.0259 |
| 227 | SLU 54 | -0.2 | 10.01 | 41.11 | -0.1804 | -0.1566 | 0.025 |
| 227 | SLU 55 | -0.2 | 10.11 | 41.27 | -0.1872 | -0.1514 | 0.0242 |
| 227 | SLU 56 | -0.2 | 9.96 | 41.19 | -0.1744 | -0.1647 | 0.0262 |
| 227 | SLU 57 | -0.2 | 10.19 | 41.79 | -0.1852 | -0.159 | 0.0254 |
| 227 | SLU 58 | -0.2 | 9.91 | 40.95 | -0.1741 | -0.1633 | 0.026 |
| 227 | SLU 59 | -0.2 | 10.13 | 41.55 | -0.1848 | -0.1576 | 0.0251 |
| 227 | SLU 60 | -0.2 | 9.85 | 40.84 | -0.1687 | -0.1647 | 0.0262 |
| 227 | SLU 61 | -0.2 | 10.07 | 41.44 | -0.1794 | -0.159 | 0.0254 |
| 227 | SLU 62 | -0.2 | 10.02 | 41.52 | -0.1734 | -0.1671 | 0.0266 |
| 227 | SLU 63 | -0.2 | 10.25 | 42.12 | -0.1842 | -0.1614 | 0.0257 |
| 227 | SLU 64 | -0.2 | 9.6 | 39.72 | -0.1664 | -0.1589 | 0.0253 |
| 227 | SLU 65 | -0.2 | 9.97 | 40.72 | -0.1843 | -0.1494 | 0.0238 |
| 227 | SLU 66 | -0.2 | 9.83 | 40.65 | -0.1715 | -0.1626 | 0.0259 |
| 227 | SLU 67 | -0.2 | 10.05 | 41.25 | -0.1822 | -0.1569 | 0.025 |
| 227 | SLU 68 | -0.2 | 10.15 | 41.41 | -0.189 | -0.1517 | 0.0242 |
| 227 | SLU 69 | -0.2 | 10 | 41.33 | -0.1762 | -0.1649 | 0.0263 |
| 227 | SLU 70 | -0.2 | 10.23 | 41.93 | -0.1869 | -0.1592 | 0.0254 |
| 227 | SLU 71 | -0.2 | 9.95 | 41.09 | -0.1758 | -0.1635 | 0.0261 |
| 227 | SLU 72 | -0.2 | 10.17 | 41.69 | -0.1866 | -0.1578 | 0.0252 |
| 227 | SLU 73 | -0.21 | 10.65 | 43.65 | -0.1938 | -0.1636 | 0.0261 |
| 227 | SLU 74 | -0.22 | 10.51 | 43.57 | -0.181 | -0.1768 | 0.0282 |
| 227 | SLU 75 | -0.22 | 10.73 | 44.17 | -0.1917 | -0.1711 | 0.0273 |
| 227 | SLU 76 | -0.22 | 10.83 | 44.33 | -0.1985 | -0.166 | 0.0265 |
| 227 | SLU 77 | -0.22 | 10.68 | 44.25 | -0.1857 | -0.1792 | 0.0286 |
| 227 | SLU 78 | -0.22 | 10.91 | 44.85 | -0.1964 | -0.1735 | 0.0277 |
| 227 | SLU 79 | -0.22 | 10.63 | 44.01 | -0.1854 | -0.1778 | 0.0283 |
| 227 | SLU 80 | -0.22 | 10.85 | 44.61 | -0.1961 | -0.1721 | 0.0275 |
| 227 | SLU 81 | -0.22 | 10.57 | 43.9 | -0.18 | -0.1792 | 0.0285 |
| 227 | SLU 82 | -0.22 | 10.79 | 44.5 | -0.1907 | -0.1735 | 0.0277 |
| 227 | SLU 83 | -0.22 | 10.74 | 44.58 | -0.1847 | -0.1816 | 0.0289 |

| Nodo | Cont. | Reazione a traslazione | | | Reazione a rotazione | | |
|---|---|---|---|---|---|---|---|
| Ind. | N.br. | x | y | z | x | y | z |
| 227 | SLU 84 | -0.22 | 10.97 | 45.18 | -0.1954 | -0.1759 | 0.028 |
| 227 | SLE RA 1 | -0.15 | 7.23 | 29.88 | -0.1255 | -0.119 | 0.019 |
| 227 | SLE RA 2 | -0.15 | 7.48 | 30.55 | -0.1374 | -0.1127 | 0.018 |
| 227 | SLE RA 3 | -0.15 | 7.38 | 30.5 | -0.1289 | -0.1215 | 0.0194 |
| 227 | SLE RA 4 | -0.15 | 7.53 | 30.9 | -0.1361 | -0.1177 | 0.0188 |
| 227 | SLE RA 5 | -0.15 | 7.59 | 31.01 | -0.1406 | -0.1142 | 0.0182 |
| 227 | SLE RA 6 | -0.15 | 7.49 | 30.96 | -0.132 | -0.123 | 0.0196 |
| 227 | SLE RA 7 | -0.15 | 7.64 | 31.36 | -0.1392 | -0.1192 | 0.019 |
| 227 | SLE RA 8 | -0.15 | 7.46 | 30.8 | -0.1318 | -0.1221 | 0.0195 |
| 227 | SLE RA 9 | -0.15 | 7.61 | 31.2 | -0.139 | -0.1183 | 0.0189 |
| 227 | SLE RA 10 | -0.16 | 7.93 | 32.5 | -0.1438 | -0.1222 | 0.0195 |
| 227 | SLE RA 11 | -0.16 | 7.83 | 32.45 | -0.1353 | -0.131 | 0.0209 |
| 227 | SLE RA 12 | -0.16 | 7.98 | 32.85 | -0.1424 | -0.1272 | 0.0203 |
| 227 | SLE RA 13 | -0.16 | 8.05 | 32.95 | -0.1469 | -0.1237 | 0.0197 |
| 227 | SLE RA 14 | -0.16 | 7.95 | 32.9 | -0.1384 | -0.1326 | 0.0211 |
| 227 | SLE RA 15 | -0.16 | 8.1 | 33.3 | -0.1455 | -0.1288 | 0.0205 |
| 227 | SLE RA 16 | -0.16 | 7.91 | 32.74 | -0.1382 | -0.1316 | 0.021 |
| 227 | SLE RA 17 | -0.16 | 8.06 | 33.14 | -0.1453 | -0.1278 | 0.0204 |
| 227 | SLE RA 18 | -0.16 | 7.87 | 32.67 | -0.1346 | -0.1326 | 0.0211 |
| 227 | SLE RA 19 | -0.16 | 8.02 | 33.07 | -0.1417 | -0.1288 | 0.0205 |
| 227 | SLE RA 20 | -0.16 | 7.99 | 33.12 | -0.1377 | -0.1342 | 0.0214 |
| 227 | SLE RA 21 | -0.16 | 8.14 | 33.52 | -0.1449 | -0.1304 | 0.0208 |
| 227 | SLE FR 1 | -0.15 | 7.23 | 29.88 | -0.1255 | -0.119 | 0.019 |
| 227 | SLE FR 2 | -0.15 | 7.28 | 30.02 | -0.1279 | -0.1177 | 0.0188 |
| 227 | SLE FR 3 | -0.15 | 7.27 | 30.07 | -0.1268 | -0.1196 | 0.0191 |
| 227 | SLE FR 4 | -0.15 | 7.47 | 30.85 | -0.1306 | -0.1218 | 0.0194 |
| 227 | SLE FR 5 | -0.15 | 7.47 | 30.9 | -0.1295 | -0.1237 | 0.0197 |
| 227 | SLE FR 6 | -0.15 | 7.55 | 31.28 | -0.13 | -0.1258 | 0.02 |
| 227 | SLE QP 1 | -0.15 | 7.23 | 29.88 | -0.1255 | -0.119 | 0.019 |
| 227 | SLE QP 2 | -0.15 | 7.42 | 30.72 | -0.1282 | -0.1231 | 0.0196 |
| 227 | SLD 1 | -0.46 | 10.46 | 41.45 | -0.2109 | -0.1871 | 0.0349 |
| 227 | SLD 2 | -0.46 | 10.46 | 41.45 | -0.2109 | -0.1871 | 0.0349 |
| 227 | SLD 3 | -0.36 | 7.94 | 34.5 | -0.1171 | -0.2255 | 0.0287 |
| 227 | SLD 4 | -0.36 | 7.94 | 34.5 | -0.1171 | -0.2255 | 0.0287 |
| 227 | SLD 5 | -0.38 | 12.15 | 44.49 | -0.2953 | -0.084 | 0.0336 |
| 227 | SLD 6 | -0.38 | 12.15 | 44.49 | -0.2953 | -0.084 | 0.0336 |
| 227 | SLD 7 | -0.08 | 3.75 | 21.31 | 0.0174 | -0.2121 | 0.013 |
| 227 | SLD 8 | -0.08 | 3.75 | 21.31 | 0.0174 | -0.2121 | 0.013 |
| 227 | SLD 9 | -0.23 | 11.09 | 40.13 | -0.2738 | -0.0341 | 0.0263 |
| 227 | SLD 10 | -0.23 | 11.09 | 40.13 | -0.2738 | -0.0341 | 0.0263 |
| 227 | SLD 11 | 0.08 | 2.69 | 16.95 | 0.0388 | -0.1622 | 0.0056 |
| 227 | SLD 12 | 0.08 | 2.69 | 16.95 | 0.0388 | -0.1622 | 0.0056 |
| 227 | SLD 13 | 0.06 | 6.9 | 26.94 | -0.1393 | -0.0206 | 0.0105 |
| 227 | SLD 14 | 0.06 | 6.9 | 26.94 | -0.1393 | -0.0206 | 0.0105 |
| 227 | SLD 15 | 0.15 | 4.38 | 19.98 | -0.0455 | -0.0591 | 0.0043 |
| 227 | SLD 16 | 0.15 | 4.38 | 19.98 | -0.0455 | -0.0591 | 0.0043 |
| 227 | SLV 1 | -0.9 | 14.51 | 55.77 | -0.3212 | -0.2691 | 0.0561 |
| 227 | SLV 2 | -0.9 | 14.51 | 55.77 | -0.3212 | -0.2691 | 0.0561 |
| 227 | SLV 3 | -0.68 | 8.66 | 39.63 | -0.1036 | -0.3673 | 0.0403 |
| 227 | SLV 4 | -0.68 | 8.66 | 39.63 | -0.1036 | -0.3673 | 0.0403 |
| 227 | SLV 5 | -0.72 | 18.41 | 62.72 | -0.5162 | -0.0179 | 0.0546 |
| 227 | SLV 6 | -0.72 | 18.41 | 62.72 | -0.5162 | -0.0179 | 0.0546 |
| 227 | SLV 7 | 0.04 | -1.07 | 8.91 | 0.2092 | -0.3453 | 0.0018 |
| 227 | SLV 8 | 0.04 | -1.07 | 8.91 | 0.2092 | -0.3453 | 0.0018 |
| 227 | SLV 9 | -0.34 | 15.91 | 52.53 | -0.4656 | 0.0991 | 0.0374 |
| 227 | SLV 10 | -0.34 | 15.91 | 52.53 | -0.4656 | 0.0991 | 0.0374 |
| 227 | SLV 11 | 0.42 | -3.57 | -1.28 | 0.2597 | -0.2282 | -0.0153 |
| 227 | SLV 12 | 0.42 | -3.57 | -1.28 | 0.2597 | -0.2282 | -0.0153 |
| 227 | SLV 13 | 0.37 | 6.18 | 21.81 | -0.1528 | 0.1211 | -0.0011 |
| 227 | SLV 14 | 0.37 | 6.18 | 21.81 | -0.1528 | 0.1211 | -0.0011 |
| 227 | SLV 15 | 0.6 | 0.33 | 5.66 | 0.0648 | 0.0229 | -0.0169 |
| 227 | SLV 16 | 0.6 | 0.33 | 5.66 | 0.0648 | 0.0229 | -0.0169 |
| 228 | SLU 1 | 0 | 6.46 | 24.59 | -0.0957 | -0.0005 | 0.0001 |
| 228 | SLU 2 | 0 | 6.43 | 24.45 | -0.0948 | -0.0005 | 0.0001 |
| 228 | SLU 3 | 0 | 6.43 | 24.59 | -0.0921 | -0.0006 | 0.0001 |
| 228 | SLU 4 | 0 | 6.41 | 24.51 | -0.0916 | -0.0006 | 0.0001 |
| 228 | SLU 5 | 0 | 6.28 | 24.01 | -0.0894 | -0.0006 | 0.0001 |
| 228 | SLU 6 | 0 | 6.28 | 24.14 | -0.0867 | -0.0006 | 0.0001 |
| 228 | SLU 7 | 0 | 6.26 | 24.06 | -0.0862 | -0.0006 | 0.0001 |
| 228 | SLU 8 | 0 | 6.16 | 23.7 | -0.0849 | -0.0006 | 0.0001 |
| 228 | SLU 9 | 0 | 6.14 | 23.62 | -0.0843 | -0.0006 | 0.0001 |
| 228 | SLU 10 | 0 | 7.84 | 29.7 | -0.1198 | -0.0005 | 0.0001 |
| 228 | SLU 11 | 0 | 7.85 | 29.84 | -0.1171 | -0.0006 | 0.0001 |
| 228 | SLU 12 | 0 | 7.83 | 29.76 | -0.1166 | -0.0006 | 0.0001 |
| 228 | SLU 13 | 0 | 7.69 | 29.26 | -0.1144 | -0.0006 | 0.0001 |
| 228 | SLU 14 | 0 | 7.7 | 29.39 | -0.1117 | -0.0007 | 0.0001 |
| 228 | SLU 15 | 0 | 7.67 | 29.31 | -0.1112 | -0.0007 | 0.0001 |
| 228 | SLU 16 | 0 | 7.58 | 28.95 | -0.1099 | -0.0007 | 0.0001 |
| 228 | SLU 17 | 0 | 7.55 | 28.87 | -0.1093 | -0.0007 | 0.0001 |
| 228 | SLU 18 | 0 | 8.49 | 32.09 | -0.1314 | -0.0006 | 0.0001 |
| 228 | SLU 19 | 0 | 8.46 | 32 | -0.1309 | -0.0006 | 0.0001 |
| 228 | SLU 20 | 0 | 8.33 | 31.64 | -0.126 | -0.0007 | 0.0001 |
| 228 | SLU 21 | 0 | 8.31 | 31.56 | -0.1255 | -0.0006 | 0.0001 |
| 228 | SLU 22 | 0 | 7.59 | 28.84 | -0.1134 | -0.0006 | 0.0001 |
| 228 | SLU 23 | 0 | 7.56 | 28.71 | -0.1125 | -0.0006 | 0.0001 |
| 228 | SLU 24 | 0 | 7.56 | 28.84 | -0.1098 | -0.0007 | 0.0001 |
| 228 | SLU 25 | 0 | 7.54 | 28.76 | -0.1093 | -0.0007 | 0.0001 |
| 228 | SLU 26 | 0 | 7.4 | 28.26 | -0.1071 | -0.0007 | 0.0001 |

| Nodo | Cont. | Reazione a traslazione | | | Reazione a rotazione | | |
|---|---|---|---|---|---|---|---|
| Ind. | N.br. | x | y | z | x | y | z |
| 228 | SLU 27 | 0 | 7.41 | 28.4 | -0.1044 | -0.0007 | 0.0001 |
| 228 | SLU 28 | 0 | 7.39 | 28.32 | -0.1039 | -0.0007 | 0.0001 |
| 228 | SLU 29 | 0 | 7.29 | 27.95 | -0.1025 | -0.0007 | 0.0001 |
| 228 | SLU 30 | 0 | 7.27 | 27.87 | -0.102 | -0.0007 | 0.0001 |
| 228 | SLU 31 | 0 | 8.97 | 33.95 | -0.1375 | -0.0006 | 0.0001 |
| 228 | SLU 32 | 0 | 8.98 | 34.09 | -0.1348 | -0.0007 | 0.0001 |
| 228 | SLU 33 | 0 | 8.95 | 34.01 | -0.1343 | -0.0007 | 0.0001 |
| 228 | SLU 34 | 0 | 8.82 | 33.51 | -0.1321 | -0.0007 | 0.0001 |
| 228 | SLU 35 | 0 | 8.82 | 33.65 | -0.1294 | -0.0008 | 0.0001 |
| 228 | SLU 36 | 0 | 8.8 | 33.56 | -0.1289 | -0.0008 | 0.0001 |
| 228 | SLU 37 | 0 | 8.7 | 33.2 | -0.1276 | -0.0008 | 0.0001 |
| 228 | SLU 38 | 0 | 8.68 | 33.12 | -0.127 | -0.0008 | 0.0001 |
| 228 | SLU 39 | 0 | 9.61 | 36.34 | -0.1491 | -0.0007 | 0.0001 |
| 228 | SLU 40 | 0 | 9.59 | 36.26 | -0.1486 | -0.0007 | 0.0001 |
| 228 | SLU 41 | 0 | 9.46 | 35.9 | -0.1437 | -0.0008 | 0.0001 |
| 228 | SLU 42 | 0 | 9.44 | 35.81 | -0.1432 | -0.0007 | 0.0001 |
| 228 | SLU 43 | 0 | 8.02 | 30.51 | -0.1183 | -0.0006 | 0.0001 |
| 228 | SLU 44 | 0 | 7.98 | 30.37 | -0.1175 | -0.0006 | 0.0001 |
| 228 | SLU 45 | 0 | 7.99 | 30.51 | -0.1147 | -0.0007 | 0.0001 |
| 228 | SLU 46 | 0 | 7.96 | 30.43 | -0.1142 | -0.0007 | 0.0001 |
| 228 | SLU 47 | 0 | 7.83 | 29.93 | -0.1121 | -0.0007 | 0.0001 |
| 228 | SLU 48 | 0 | 7.83 | 30.06 | -0.1093 | -0.0008 | 0.0001 |
| 228 | SLU 49 | 0 | 7.81 | 29.98 | -0.1088 | -0.0007 | 0.0001 |
| 228 | SLU 50 | 0 | 7.71 | 29.62 | -0.1075 | -0.0008 | 0.0001 |
| 228 | SLU 51 | 0 | 7.69 | 29.54 | -0.107 | -0.0007 | 0.0001 |
| 228 | SLU 52 | 0 | 9.4 | 35.62 | -0.1425 | -0.0007 | 0.0001 |
| 228 | SLU 53 | 0 | 9.4 | 35.76 | -0.1397 | -0.0008 | 0.0001 |
| 228 | SLU 54 | 0 | 9.38 | 35.67 | -0.1392 | -0.0007 | 0.0001 |
| 228 | SLU 55 | 0 | 9.24 | 35.17 | -0.1371 | -0.0007 | 0.0001 |
| 228 | SLU 56 | 0 | 9.25 | 35.31 | -0.1343 | -0.0008 | 0.0001 |
| 228 | SLU 57 | 0 | 9.23 | 35.23 | -0.1338 | -0.0008 | 0.0001 |
| 228 | SLU 58 | 0 | 9.13 | 34.87 | -0.1325 | -0.0008 | 0.0001 |
| 228 | SLU 59 | 0 | 9.11 | 34.78 | -0.132 | -0.0008 | 0.0001 |
| 228 | SLU 60 | 0 | 10.04 | 38.01 | -0.154 | -0.0007 | 0.0001 |
| 228 | SLU 61 | 0 | 10.02 | 37.92 | -0.1535 | -0.0007 | 0.0001 |
| 228 | SLU 62 | 0 | 9.89 | 37.56 | -0.1486 | -0.0008 | 0.0001 |
| 228 | SLU 63 | 0 | 9.86 | 37.48 | -0.1481 | -0.0008 | 0.0001 |
| 228 | SLU 64 | 0 | 9.14 | 34.76 | -0.136 | -0.0007 | 0.0001 |
| 228 | SLU 65 | 0 | 9.11 | 34.62 | -0.1352 | -0.0007 | 0.0001 |
| 228 | SLU 66 | 0 | 9.11 | 34.76 | -0.1324 | -0.0008 | 0.0001 |
| 228 | SLU 67 | 0 | 9.09 | 34.68 | -0.1319 | -0.0008 | 0.0001 |
| 228 | SLU 68 | 0 | 8.96 | 34.18 | -0.1297 | -0.0008 | 0.0001 |
| 228 | SLU 69 | 0 | 8.96 | 34.32 | -0.127 | -0.0009 | 0.0001 |
| 228 | SLU 70 | 0 | 8.94 | 34.23 | -0.1265 | -0.0008 | 0.0001 |
| 228 | SLU 71 | 0 | 8.84 | 33.87 | -0.1252 | -0.0009 | 0.0001 |
| 228 | SLU 72 | 0 | 8.82 | 33.79 | -0.1247 | -0.0008 | 0.0001 |
| 228 | SLU 73 | 0 | 10.52 | 39.87 | -0.1602 | -0.0008 | 0.0001 |
| 228 | SLU 74 | 0 | 10.53 | 40.01 | -0.1574 | -0.0009 | 0.0001 |
| 228 | SLU 75 | 0 | 10.51 | 39.93 | -0.1569 | -0.0008 | 0.0001 |
| 228 | SLU 76 | 0 | 10.37 | 39.43 | -0.1547 | -0.0008 | 0.0001 |
| 228 | SLU 77 | 0.01 | 10.38 | 39.57 | -0.152 | -0.0009 | 0.0001 |
| 228 | SLU 78 | 0.01 | 10.35 | 39.48 | -0.1515 | -0.0009 | 0.0001 |
| 228 | SLU 79 | 0.01 | 10.26 | 39.12 | -0.1502 | -0.0009 | 0.0001 |
| 228 | SLU 80 | 0.01 | 10.23 | 39.04 | -0.1497 | -0.0009 | 0.0001 |
| 228 | SLU 81 | 0 | 11.17 | 42.26 | -0.1717 | -0.0008 | 0.0001 |
| 228 | SLU 82 | 0 | 11.14 | 42.18 | -0.1712 | -0.0008 | 0.0001 |
| 228 | SLU 83 | 0 | 11.01 | 41.81 | -0.1663 | -0.0009 | 0.0001 |
| 228 | SLU 84 | 0 | 10.99 | 41.73 | -0.1658 | -0.0009 | 0.0001 |
| 228 | SLE RA 1 | 0 | 6.79 | 25.81 | -0.1007 | -0.0005 | 0.0001 |
| 228 | SLE RA 2 | 0 | 6.76 | 25.71 | -0.1002 | -0.0005 | 0.0001 |
| 228 | SLE RA 3 | 0 | 6.77 | 25.81 | -0.0983 | -0.0006 | 0.0001 |
| 228 | SLE RA 4 | 0 | 6.75 | 25.75 | -0.098 | -0.0006 | 0.0001 |
| 228 | SLE RA 5 | 0 | 6.66 | 25.42 | -0.0966 | -0.0006 | 0.0001 |
| 228 | SLE RA 6 | 0 | 6.66 | 25.51 | -0.0947 | -0.0006 | 0.0001 |
| 228 | SLE RA 7 | 0 | 6.65 | 25.45 | -0.0944 | -0.0006 | 0.0001 |
| 228 | SLE RA 8 | 0 | 6.58 | 25.21 | -0.0935 | -0.0006 | 0.0001 |
| 228 | SLE RA 9 | 0 | 6.57 | 25.16 | -0.0932 | -0.0006 | 0.0001 |
| 228 | SLE RA 10 | 0 | 7.71 | 29.21 | -0.1168 | -0.0006 | 0.0001 |
| 228 | SLE RA 11 | 0 | 7.71 | 29.3 | -0.115 | -0.0006 | 0.0001 |
| 228 | SLE RA 12 | 0 | 7.69 | 29.25 | -0.1147 | -0.0006 | 0.0001 |
| 228 | SLE RA 13 | 0 | 7.6 | 28.92 | -0.1132 | -0.0006 | 0.0001 |
| 228 | SLE RA 14 | 0 | 7.61 | 29.01 | -0.1114 | -0.0007 | 0.0001 |
| 228 | SLE RA 15 | 0 | 7.59 | 28.95 | -0.1111 | -0.0007 | 0.0001 |
| 228 | SLE RA 16 | 0 | 7.53 | 28.71 | -0.1102 | -0.0007 | 0.0001 |
| 228 | SLE RA 17 | 0 | 7.51 | 28.66 | -0.1098 | -0.0007 | 0.0001 |
| 228 | SLE RA 18 | 0 | 8.13 | 30.8 | -0.1245 | -0.0006 | 0.0001 |
| 228 | SLE RA 19 | 0 | 8.12 | 30.75 | -0.1242 | -0.0006 | 0.0001 |
| 228 | SLE RA 20 | 0 | 8.03 | 30.51 | -0.1209 | -0.0006 | 0.0001 |
| 228 | SLE RA 21 | 0 | 8.02 | 30.45 | -0.1206 | -0.0006 | 0.0001 |
| 228 | SLE FR 1 | 0 | 6.79 | 25.81 | -0.1007 | -0.0005 | 0.0001 |
| 228 | SLE FR 2 | 0 | 6.78 | 25.79 | -0.1006 | -0.0005 | 0.0001 |
| 228 | SLE FR 3 | 0 | 6.75 | 25.69 | -0.0993 | -0.0006 | 0.0001 |
| 228 | SLE FR 4 | 0 | 7.19 | 27.29 | -0.1078 | -0.0006 | 0.0001 |
| 228 | SLE FR 5 | 0 | 7.15 | 27.19 | -0.1064 | -0.0006 | 0.0001 |
| 228 | SLE FR 6 | 0 | 7.46 | 28.3 | -0.1126 | -0.0006 | 0.0001 |
| 228 | SLE QP 1 | 0 | 6.79 | 25.81 | -0.1007 | -0.0005 | 0.0001 |
| 228 | SLE QP 2 | 0 | 7.19 | 27.3 | -0.1079 | -0.0006 | 0.0001 |
| 228 | SLD 1 | -0.3 | 9.29 | 34.32 | -0.1724 | 0.2699 | -0.0416 |

| Nodo | Cont. | Reazione a traslazione | | | Reazione a rotazione | | |
|---|---|---|---|---|---|---|---|
| Ind. | N.br. | x | y | z | x | y | z |
| 228 | SLD 2 | -0.3 | 9.29 | 34.32 | -0.1724 | 0.2699 | -0.0416 |
| 228 | SLD 3 | -0.27 | 6.25 | 24.45 | -0.0765 | 0.251 | -0.0386 |
| 228 | SLD 4 | -0.27 | 6.25 | 24.45 | -0.0765 | 0.251 | -0.0386 |
| 228 | SLD 5 | -0.14 | 12.43 | 44.37 | -0.2726 | 0.1092 | -0.017 |
| 228 | SLD 6 | -0.14 | 12.43 | 44.37 | -0.2726 | 0.1092 | -0.017 |
| 228 | SLD 7 | -0.03 | 2.3 | 11.49 | 0.0469 | 0.0463 | -0.007 |
| 228 | SLD 8 | -0.03 | 2.3 | 11.49 | 0.0469 | 0.0463 | -0.007 |
| 228 | SLD 9 | 0.03 | 12.08 | 43.12 | -0.2626 | -0.0474 | 0.0071 |
| 228 | SLD 10 | 0.03 | 12.08 | 43.12 | -0.2626 | -0.0474 | 0.0071 |
| 228 | SLD 11 | 0.15 | 1.95 | 10.24 | 0.0568 | -0.1103 | 0.0171 |
| 228 | SLD 12 | 0.15 | 1.95 | 10.24 | 0.0568 | -0.1103 | 0.0171 |
| 228 | SLD 13 | 0.28 | 8.13 | 30.16 | -0.1392 | -0.2521 | 0.0388 |
| 228 | SLD 14 | 0.28 | 8.13 | 30.16 | -0.1392 | -0.2521 | 0.0388 |
| 228 | SLD 15 | 0.31 | 5.09 | 20.29 | -0.0434 | -0.271 | 0.0418 |
| 228 | SLD 16 | 0.31 | 5.09 | 20.29 | -0.0434 | -0.271 | 0.0418 |
| 228 | SLV 1 | -0.78 | 12.21 | 44.09 | -0.2613 | 0.8127 | -0.1247 |
| 228 | SLV 2 | -0.78 | 12.21 | 44.09 | -0.2613 | 0.8127 | -0.1247 |
| 228 | SLV 3 | -0.69 | 4.96 | 20.45 | -0.0335 | 0.7605 | -0.1164 |
| 228 | SLV 4 | -0.69 | 4.96 | 20.45 | -0.0335 | 0.7605 | -0.1164 |
| 228 | SLV 5 | -0.36 | 19.69 | 68.19 | -0.4993 | 0.3226 | -0.0499 |
| 228 | SLV 6 | -0.36 | 19.69 | 68.19 | -0.4993 | 0.3226 | -0.0499 |
| 228 | SLV 7 | -0.08 | -4.47 | -10.61 | 0.2599 | 0.1486 | -0.0224 |
| 228 | SLV 8 | -0.08 | -4.47 | -10.61 | 0.2599 | 0.1486 | -0.0224 |
| 228 | SLV 9 | 0.08 | 18.85 | 65.22 | -0.4756 | -0.1497 | 0.0225 |
| 228 | SLV 10 | 0.08 | 18.85 | 65.22 | -0.4756 | -0.1497 | 0.0225 |
| 228 | SLV 11 | 0.37 | -5.31 | -13.58 | 0.2836 | -0.3237 | 0.05 |
| 228 | SLV 12 | 0.37 | -5.31 | -13.58 | 0.2836 | -0.3237 | 0.05 |
| 228 | SLV 13 | 0.7 | 9.42 | 34.16 | -0.1822 | -0.7616 | 0.1166 |
| 228 | SLV 14 | 0.7 | 9.42 | 34.16 | -0.1822 | -0.7616 | 0.1166 |
| 228 | SLV 15 | 0.78 | 2.18 | 10.52 | 0.0455 | -0.8138 | 0.1248 |
| 228 | SLV 16 | 0.78 | 2.18 | 10.52 | 0.0455 | -0.8138 | 0.1248 |
| 229 | SLU 1 | -0.01 | -2.71 | 55.6 | 0.11 | -0.0039 | 0 |
| 229 | SLU 2 | -0.03 | -2.26 | 55.33 | 0.0905 | -0.022 | 0 |
| 229 | SLU 3 | -0.01 | -2.85 | 56.98 | 0.1156 | -0.0041 | 0 |
| 229 | SLU 4 | -0.02 | -2.58 | 56.82 | 0.1039 | -0.0149 | 0 |
| 229 | SLU 5 | -0.03 | -2.35 | 56 | 0.094 | -0.0219 | 0 |
| 229 | SLU 6 | -0.01 | -2.93 | 57.66 | 0.119 | -0.004 | 0 |
| 229 | SLU 7 | -0.02 | -2.67 | 57.5 | 0.1074 | -0.0148 | 0 |
| 229 | SLU 8 | -0.01 | -2.88 | 56.95 | 0.1169 | -0.0039 | 0 |
| 229 | SLU 9 | -0.02 | -2.61 | 56.78 | 0.1052 | -0.0147 | 0 |
| 229 | SLU 10 | -0.03 | -2.88 | 62.21 | 0.1146 | -0.0233 | 0 |
| 229 | SLU 11 | -0.01 | -3.46 | 63.86 | 0.1396 | -0.0054 | 0 |
| 229 | SLU 12 | -0.02 | -3.2 | 63.7 | 0.128 | -0.0162 | 0 |
| 229 | SLU 13 | -0.03 | -2.96 | 62.88 | 0.118 | -0.0233 | 0 |
| 229 | SLU 14 | -0.01 | -3.55 | 64.54 | 0.1431 | -0.0054 | 0 |
| 229 | SLU 15 | -0.02 | -3.28 | 64.38 | 0.1314 | -0.0162 | 0 |
| 229 | SLU 16 | -0.01 | -3.49 | 63.82 | 0.1409 | -0.0052 | 0 |
| 229 | SLU 17 | -0.02 | -3.23 | 63.66 | 0.1292 | -0.0161 | 0 |
| 229 | SLU 18 | -0.01 | -3.59 | 65.42 | 0.1443 | -0.0059 | 0 |
| 229 | SLU 19 | -0.02 | -3.32 | 65.26 | 0.1326 | -0.0167 | 0 |
| 229 | SLU 20 | -0.01 | -3.67 | 66.1 | 0.1477 | -0.0059 | 0 |
| 229 | SLU 21 | -0.02 | -3.4 | 65.94 | 0.1361 | -0.0167 | 0 |
| 229 | SLU 22 | -0.01 | -3.32 | 62.29 | 0.134 | -0.005 | 0 |
| 229 | SLU 23 | -0.03 | -2.87 | 62.03 | 0.1145 | -0.0231 | 0 |
| 229 | SLU 24 | -0.01 | -3.46 | 63.68 | 0.1396 | -0.0051 | 0 |
| 229 | SLU 25 | -0.02 | -3.19 | 63.52 | 0.1279 | -0.016 | 0 |
| 229 | SLU 26 | -0.03 | -2.96 | 62.7 | 0.118 | -0.023 | 0 |
| 229 | SLU 27 | -0.01 | -3.54 | 64.36 | 0.143 | -0.0051 | 0 |
| 229 | SLU 28 | -0.02 | -3.28 | 64.2 | 0.1314 | -0.0159 | 0 |
| 229 | SLU 29 | -0.01 | -3.49 | 63.64 | 0.1409 | -0.005 | 0 |
| 229 | SLU 30 | -0.02 | -3.22 | 63.48 | 0.1292 | -0.0158 | 0 |
| 229 | SLU 31 | -0.03 | -3.49 | 68.9 | 0.1386 | -0.0244 | 0 |
| 229 | SLU 32 | -0.01 | -4.07 | 70.56 | 0.1636 | -0.0065 | 0 |
| 229 | SLU 33 | -0.02 | -3.8 | 70.4 | 0.1519 | -0.0173 | 0 |
| 229 | SLU 34 | -0.03 | -3.57 | 69.58 | 0.142 | -0.0244 | 0 |
| 229 | SLU 35 | -0.01 | -4.16 | 71.24 | 0.167 | -0.0065 | 0 |
| 229 | SLU 36 | -0.02 | -3.89 | 71.08 | 0.1554 | -0.0173 | 0 |
| 229 | SLU 37 | -0.01 | -4.1 | 70.52 | 0.1649 | -0.0063 | 0 |
| 229 | SLU 38 | -0.02 | -3.84 | 70.36 | 0.1532 | -0.0171 | 0 |
| 229 | SLU 39 | -0.01 | -4.2 | 72.12 | 0.1683 | -0.007 | 0 |
| 229 | SLU 40 | -0.02 | -3.93 | 71.96 | 0.1566 | -0.0178 | 0 |
| 229 | SLU 41 | -0.01 | -4.28 | 72.79 | 0.1717 | -0.0069 | 0 |
| 229 | SLU 42 | -0.02 | -4.01 | 72.63 | 0.1601 | -0.0178 | 0 |
| 229 | SLU 43 | -0.01 | -3.31 | 69.98 | 0.1348 | -0.0048 | 0 |
| 229 | SLU 44 | -0.03 | -2.87 | 69.71 | 0.1153 | -0.0228 | 0 |
| 229 | SLU 45 | -0.01 | -3.45 | 71.37 | 0.1404 | -0.0049 | 0 |
| 229 | SLU 46 | -0.02 | -3.19 | 71.21 | 0.1287 | -0.0157 | 0 |
| 229 | SLU 47 | -0.03 | -2.95 | 70.38 | 0.1188 | -0.0228 | 0 |
| 229 | SLU 48 | -0.01 | -3.54 | 72.04 | 0.1438 | -0.0048 | 0 |
| 229 | SLU 49 | -0.02 | -3.27 | 71.88 | 0.1321 | -0.0157 | 0 |
| 229 | SLU 50 | -0.01 | -3.48 | 71.33 | 0.1416 | -0.0047 | 0 |
| 229 | SLU 51 | -0.02 | -3.22 | 71.17 | 0.13 | -0.0155 | 0 |
| 229 | SLU 52 | -0.03 | -3.48 | 76.59 | 0.1393 | -0.0241 | 0 |
| 229 | SLU 53 | -0.01 | -4.07 | 78.24 | 0.1644 | -0.0062 | 0 |
| 229 | SLU 54 | -0.02 | -3.8 | 78.08 | 0.1527 | -0.017 | 0 |
| 229 | SLU 55 | -0.03 | -3.57 | 77.26 | 0.1428 | -0.0241 | 0 |
| 229 | SLU 56 | -0.01 | -4.15 | 78.92 | 0.1678 | -0.0062 | 0 |
| 229 | SLU 57 | -0.02 | -3.88 | 78.76 | 0.1562 | -0.017 | 0 |

| Nodo | Cont. | Reazione a traslazione | | | Reazione a rotazione | | |
|---|---|---|---|---|---|---|---|
| Ind. | N.br. | x | y | z | x | y | z |
| 229 | SLU 58 | -0.01 | -4.1 | 78.2 | 0.1657 | -0.0061 | 0 |
| 229 | SLU 59 | -0.02 | -3.83 | 78.04 | 0.154 | -0.0169 | 0 |
| 229 | SLU 60 | -0.01 | -4.19 | 79.8 | 0.1691 | -0.0067 | 0 |
| 229 | SLU 61 | -0.02 | -3.92 | 79.64 | 0.1574 | -0.0175 | 0 |
| 229 | SLU 62 | -0.01 | -4.27 | 80.48 | 0.1725 | -0.0067 | 0 |
| 229 | SLU 63 | -0.02 | -4.01 | 80.32 | 0.1608 | -0.0175 | 0 |
| 229 | SLU 64 | -0.01 | -3.92 | 76.68 | 0.1588 | -0.0058 | 0 |
| 229 | SLU 65 | -0.03 | -3.48 | 76.41 | 0.1393 | -0.0239 | 0 |
| 229 | SLU 66 | -0.01 | -4.06 | 78.06 | 0.1644 | -0.006 | 0 |
| 229 | SLU 67 | -0.02 | -3.79 | 77.9 | 0.1527 | -0.0168 | 0 |
| 229 | SLU 68 | -0.03 | -3.56 | 77.08 | 0.1427 | -0.0238 | 0 |
| 229 | SLU 69 | -0.01 | -4.15 | 78.74 | 0.1678 | -0.0059 | 0 |
| 229 | SLU 70 | -0.02 | -3.88 | 78.58 | 0.1561 | -0.0167 | 0 |
| 229 | SLU 71 | -0.01 | -4.09 | 78.03 | 0.1656 | -0.0058 | 0 |
| 229 | SLU 72 | -0.02 | -3.83 | 77.87 | 0.154 | -0.0166 | 0 |
| 229 | SLU 73 | -0.03 | -4.09 | 83.29 | 0.1633 | -0.0252 | 0 |
| 229 | SLU 74 | -0.01 | -4.68 | 84.94 | 0.1884 | -0.0073 | 0 |
| 229 | SLU 75 | -0.03 | -4.41 | 84.78 | 0.1767 | -0.0181 | 0 |
| 229 | SLU 76 | -0.03 | -4.18 | 83.96 | 0.1668 | -0.0252 | 0 |
| 229 | SLU 77 | -0.01 | -4.76 | 85.62 | 0.1918 | -0.0073 | 0 |
| 229 | SLU 78 | -0.03 | -4.49 | 85.46 | 0.1802 | -0.0181 | 0 |
| 229 | SLU 79 | -0.01 | -4.71 | 84.9 | 0.1897 | -0.0071 | 0 |
| 229 | SLU 80 | -0.03 | -4.44 | 84.74 | 0.178 | -0.018 | 0 |
| 229 | SLU 81 | -0.01 | -4.8 | 86.5 | 0.1931 | -0.0078 | 0 |
| 229 | SLU 82 | -0.03 | -4.53 | 86.34 | 0.1814 | -0.0186 | 0 |
| 229 | SLU 83 | -0.01 | -4.88 | 87.18 | 0.1965 | -0.0078 | 0 |
| 229 | SLU 84 | -0.03 | -4.62 | 87.02 | 0.1848 | -0.0186 | 0 |
| 229 | SLE RA 1 | -0.01 | -2.88 | 57.51 | 0.1169 | -0.0043 | 0 |
| 229 | SLE RA 2 | -0.02 | -2.59 | 57.33 | 0.1039 | -0.0163 | 0 |
| 229 | SLE RA 3 | -0.01 | -2.98 | 58.44 | 0.1206 | -0.0043 | 0 |
| 229 | SLE RA 4 | -0.02 | -2.8 | 58.33 | 0.1128 | -0.0115 | 0 |
| 229 | SLE RA 5 | -0.02 | -2.64 | 57.78 | 0.1062 | -0.0163 | 0 |
| 229 | SLE RA 6 | -0.01 | -3.03 | 58.89 | 0.1229 | -0.0043 | 0 |
| 229 | SLE RA 7 | -0.02 | -2.86 | 58.78 | 0.1151 | -0.0115 | 0 |
| 229 | SLE RA 8 | -0.01 | -3 | 58.41 | 0.1214 | -0.0042 | 0 |
| 229 | SLE RA 9 | -0.02 | -2.82 | 58.3 | 0.1137 | -0.0114 | 0 |
| 229 | SLE RA 10 | -0.02 | -2.99 | 61.92 | 0.1199 | -0.0172 | 0 |
| 229 | SLE RA 11 | -0.01 | -3.39 | 63.02 | 0.1366 | -0.0052 | 0 |
| 229 | SLE RA 12 | -0.02 | -3.21 | 62.91 | 0.1288 | -0.0124 | 0 |
| 229 | SLE RA 13 | -0.02 | -3.05 | 62.37 | 0.1222 | -0.0172 | 0 |
| 229 | SLE RA 14 | -0.01 | -3.44 | 63.47 | 0.1389 | -0.0052 | 0 |
| 229 | SLE RA 15 | -0.02 | -3.26 | 63.36 | 0.1311 | -0.0124 | 0 |
| 229 | SLE RA 16 | -0.01 | -3.41 | 62.99 | 0.1374 | -0.0051 | 0 |
| 229 | SLE RA 17 | -0.02 | -3.23 | 62.89 | 0.1297 | -0.0123 | 0 |
| 229 | SLE RA 18 | -0.01 | -3.47 | 64.06 | 0.1397 | -0.0055 | 0 |
| 229 | SLE RA 19 | -0.02 | -3.29 | 63.95 | 0.1319 | -0.0128 | 0 |
| 229 | SLE RA 20 | -0.01 | -3.52 | 64.51 | 0.142 | -0.0055 | 0 |
| 229 | SLE RA 21 | -0.02 | -3.35 | 64.4 | 0.1342 | -0.0127 | 0 |
| 229 | SLE FR 1 | -0.01 | -2.88 | 57.51 | 0.1169 | -0.0043 | 0 |
| 229 | SLE FR 2 | -0.01 | -2.82 | 57.47 | 0.1143 | -0.0067 | 0 |
| 229 | SLE FR 3 | -0.01 | -2.91 | 57.69 | 0.1178 | -0.0042 | 0 |
| 229 | SLE FR 4 | -0.01 | -3 | 59.44 | 0.1211 | -0.007 | 0 |
| 229 | SLE FR 5 | -0.01 | -3.08 | 59.65 | 0.1246 | -0.0046 | 0 |
| 229 | SLE FR 6 | -0.01 | -3.18 | 60.78 | 0.1283 | -0.0049 | 0 |
| 229 | SLE QP 1 | -0.01 | -2.88 | 57.51 | 0.1169 | -0.0043 | 0 |
| 229 | SLE QP 2 | -0.01 | -3.06 | 59.47 | 0.1237 | -0.0046 | 0 |
| 229 | SLD 1 | 0.23 | 0.62 | 43.15 | -0.0249 | 0.2128 | -0.0002 |
| 229 | SLD 2 | 0.23 | 0.62 | 43.15 | -0.0249 | 0.2128 | -0.0002 |
| 229 | SLD 3 | 0.11 | -4.26 | 45.1 | 0.1768 | 0.1168 | -0.0002 |
| 229 | SLD 4 | 0.11 | -4.26 | 45.1 | 0.1768 | 0.1168 | -0.0002 |
| 229 | SLD 5 | 0.24 | 5.44 | 51.61 | -0.2268 | 0.2062 | 0 |
| 229 | SLD 6 | 0.24 | 5.44 | 51.61 | -0.2268 | 0.2062 | 0 |
| 229 | SLD 7 | -0.15 | -10.81 | 58.12 | 0.4456 | -0.1138 | -0.0001 |
| 229 | SLD 8 | -0.15 | -10.81 | 58.12 | 0.4456 | -0.1138 | -0.0001 |
| 229 | SLD 9 | 0.14 | 4.69 | 60.82 | -0.1981 | 0.1045 | 0.0002 |
| 229 | SLD 10 | 0.14 | 4.69 | 60.82 | -0.1981 | 0.1045 | 0.0002 |
| 229 | SLD 11 | -0.26 | -11.55 | 67.34 | 0.4742 | -0.2155 | 0 |
| 229 | SLD 12 | -0.26 | -11.55 | 67.34 | 0.4742 | -0.2155 | 0 |
| 229 | SLD 13 | -0.13 | -1.86 | 73.85 | 0.0706 | -0.1261 | 0.0003 |
| 229 | SLD 14 | -0.13 | -1.86 | 73.85 | 0.0706 | -0.1261 | 0.0003 |
| 229 | SLD 15 | -0.25 | -6.73 | 75.8 | 0.2723 | -0.2221 | 0.0002 |
| 229 | SLD 16 | -0.25 | -6.73 | 75.8 | 0.2723 | -0.2221 | 0.0002 |
| 229 | SLV 1 | 0.55 | 5.5 | 21.26 | -0.2227 | 0.5209 | -0.0004 |
| 229 | SLV 2 | 0.55 | 5.5 | 21.26 | -0.2227 | 0.5209 | -0.0004 |
| 229 | SLV 3 | 0.25 | -5.8 | 25.9 | 0.245 | 0.2765 | -0.0006 |
| 229 | SLV 4 | 0.25 | -5.8 | 25.9 | 0.245 | 0.2765 | -0.0006 |
| 229 | SLV 5 | 0.62 | 16.65 | 40.98 | -0.6895 | 0.5237 | 0.0001 |
| 229 | SLV 6 | 0.62 | 16.65 | 40.98 | -0.6895 | 0.5237 | 0.0001 |
| 229 | SLV 7 | -0.39 | -21.02 | 56.43 | 0.8694 | -0.291 | -0.0004 |
| 229 | SLV 8 | -0.39 | -21.02 | 56.43 | 0.8694 | -0.291 | -0.0004 |
| 229 | SLV 9 | 0.37 | 14.9 | 62.51 | -0.622 | 0.2817 | 0.0004 |
| 229 | SLV 10 | 0.37 | 14.9 | 62.51 | -0.622 | 0.2817 | 0.0004 |
| 229 | SLV 11 | -0.64 | -22.76 | 77.97 | 0.937 | -0.533 | -0.0001 |
| 229 | SLV 12 | -0.64 | -22.76 | 77.97 | 0.937 | -0.533 | -0.0001 |
| 229 | SLV 13 | -0.27 | -0.32 | 93.05 | 0.0024 | -0.2858 | 0.0006 |
| 229 | SLV 14 | -0.27 | -0.32 | 93.05 | 0.0024 | -0.2858 | 0.0006 |
| 229 | SLV 15 | -0.57 | -11.62 | 97.69 | 0.4701 | -0.5302 | 0.0005 |
| 229 | SLV 16 | -0.57 | -11.62 | 97.69 | 0.4701 | -0.5302 | 0.0005 |

| Nodo | Cont. | Reazione a traslazione | | | Reazione a rotazione | | |
|---|---|---|---|---|---|---|---|
| Ind. | N.br. | x | y | z | x | y | z |
| 230 | SLU 1 | 0 | 5.45 | 44.04 | -0.262 | -0.0022 | 0 |
| 230 | SLU 2 | 0 | 5.46 | 43.54 | -0.263 | -0.0015 | 0 |
| 230 | SLU 3 | 0 | 5.55 | 45.44 | -0.2626 | -0.0024 | 0 |
| 230 | SLU 4 | 0 | 5.56 | 45.14 | -0.2632 | -0.0019 | 0 |
| 230 | SLU 5 | 0 | 5.5 | 44.47 | -0.2605 | -0.0016 | 0 |
| 230 | SLU 6 | 0 | 5.6 | 46.37 | -0.2601 | -0.0025 | 0 |
| 230 | SLU 7 | 0 | 5.6 | 46.07 | -0.2607 | -0.002 | 0 |
| 230 | SLU 8 | 0 | 5.54 | 45.91 | -0.2569 | -0.0024 | 0 |
| 230 | SLU 9 | 0 | 5.54 | 45.61 | -0.2575 | -0.002 | 0 |
| 230 | SLU 10 | 0 | 6.35 | 51.4 | -0.3062 | -0.002 | 0 |
| 230 | SLU 11 | 0 | 6.45 | 53.3 | -0.3058 | -0.0029 | 0 |
| 230 | SLU 12 | 0 | 6.45 | 53 | -0.3064 | -0.0024 | 0 |
| 230 | SLU 13 | 0 | 6.4 | 52.33 | -0.3037 | -0.0021 | 0 |
| 230 | SLU 14 | 0 | 6.49 | 54.23 | -0.3033 | -0.003 | 0 |
| 230 | SLU 15 | 0 | 6.5 | 53.93 | -0.3039 | -0.0025 | 0 |
| 230 | SLU 16 | 0 | 6.43 | 53.77 | -0.3001 | -0.0029 | 0 |
| 230 | SLU 17 | 0 | 6.44 | 53.47 | -0.3008 | -0.0025 | 0 |
| 230 | SLU 18 | 0 | 6.73 | 55.27 | -0.3237 | -0.003 | 0 |
| 230 | SLU 19 | 0 | 6.73 | 54.97 | -0.3243 | -0.0025 | 0 |
| 230 | SLU 20 | 0 | 6.77 | 56.2 | -0.3212 | -0.0031 | 0 |
| 230 | SLU 21 | 0 | 6.78 | 55.9 | -0.3218 | -0.0026 | 0 |
| 230 | SLU 22 | 0 | 6.27 | 51.45 | -0.2993 | -0.0027 | 0 |
| 230 | SLU 23 | 0 | 6.28 | 50.95 | -0.3003 | -0.0019 | 0 |
| 230 | SLU 24 | 0 | 6.37 | 52.84 | -0.2999 | -0.0029 | 0 |
| 230 | SLU 25 | 0 | 6.38 | 52.54 | -0.3005 | -0.0024 | 0 |
| 230 | SLU 26 | 0 | 6.32 | 51.88 | -0.2978 | -0.002 | 0 |
| 230 | SLU 27 | 0 | 6.41 | 53.77 | -0.2974 | -0.003 | 0 |
| 230 | SLU 28 | 0 | 6.42 | 53.47 | -0.298 | -0.0025 | 0 |
| 230 | SLU 29 | 0 | 6.35 | 53.31 | -0.2942 | -0.0029 | 0 |
| 230 | SLU 30 | 0 | 6.36 | 53.01 | -0.2949 | -0.0025 | 0 |
| 230 | SLU 31 | 0 | 7.17 | 58.81 | -0.3435 | -0.0024 | 0 |
| 230 | SLU 32 | 0 | 7.26 | 60.7 | -0.3431 | -0.0034 | 0 |
| 230 | SLU 33 | 0 | 7.27 | 60.4 | -0.3437 | -0.0029 | 0 |
| 230 | SLU 34 | 0 | 7.21 | 59.74 | -0.341 | -0.0025 | 0 |
| 230 | SLU 35 | 0 | 7.31 | 61.63 | -0.3406 | -0.0035 | 0.0001 |
| 230 | SLU 36 | 0 | 7.31 | 61.33 | -0.3412 | -0.003 | 0 |
| 230 | SLU 37 | 0 | 7.25 | 61.17 | -0.3374 | -0.0034 | 0.0001 |
| 230 | SLU 38 | 0 | 7.25 | 60.87 | -0.3381 | -0.003 | 0 |
| 230 | SLU 39 | 0 | 7.54 | 62.68 | -0.361 | -0.0034 | 0.0001 |
| 230 | SLU 40 | 0 | 7.55 | 62.38 | -0.3616 | -0.003 | 0 |
| 230 | SLU 41 | 0 | 7.59 | 63.61 | -0.3585 | -0.0035 | 0.0001 |
| 230 | SLU 42 | 0 | 7.59 | 63.31 | -0.3591 | -0.0031 | 0 |
| 230 | SLU 43 | 0 | 6.81 | 54.72 | -0.3278 | -0.0028 | 0 |
| 230 | SLU 44 | 0 | 6.82 | 54.22 | -0.3288 | -0.002 | 0 |
| 230 | SLU 45 | 0 | 6.91 | 56.11 | -0.3284 | -0.0029 | 0 |
| 230 | SLU 46 | 0 | 6.92 | 55.81 | -0.329 | -0.0024 | 0 |
| 230 | SLU 47 | 0 | 6.86 | 55.15 | -0.3263 | -0.0021 | 0 |
| 230 | SLU 48 | 0 | 6.95 | 57.04 | -0.3259 | -0.003 | 0 |
| 230 | SLU 49 | 0 | 6.96 | 56.74 | -0.3265 | -0.0025 | 0 |
| 230 | SLU 50 | 0 | 6.89 | 56.58 | -0.3227 | -0.003 | 0 |
| 230 | SLU 51 | 0 | 6.9 | 56.28 | -0.3234 | -0.0025 | 0 |
| 230 | SLU 52 | 0 | 7.71 | 62.08 | -0.372 | -0.0025 | 0 |
| 230 | SLU 53 | 0 | 7.8 | 63.97 | -0.3716 | -0.0034 | 0 |
| 230 | SLU 54 | 0 | 7.81 | 63.67 | -0.3722 | -0.0029 | 0 |
| 230 | SLU 55 | 0 | 7.75 | 63.01 | -0.3695 | -0.0026 | 0 |
| 230 | SLU 56 | 0 | 7.85 | 64.9 | -0.3691 | -0.0035 | 0.0001 |
| 230 | SLU 57 | 0 | 7.85 | 64.6 | -0.3697 | -0.003 | 0 |
| 230 | SLU 58 | 0 | 7.79 | 64.44 | -0.3659 | -0.0035 | 0.0001 |
| 230 | SLU 59 | 0 | 7.79 | 64.14 | -0.3666 | -0.003 | 0 |
| 230 | SLU 60 | 0 | 8.08 | 65.95 | -0.3895 | -0.0035 | 0.0001 |
| 230 | SLU 61 | 0 | 8.09 | 65.65 | -0.3901 | -0.003 | 0 |
| 230 | SLU 62 | 0 | 8.13 | 66.88 | -0.387 | -0.0036 | 0.0001 |
| 230 | SLU 63 | 0 | 8.13 | 66.58 | -0.3876 | -0.0031 | 0 |
| 230 | SLU 64 | 0 | 7.62 | 62.12 | -0.3651 | -0.0032 | 0 |
| 230 | SLU 65 | 0 | 7.63 | 61.62 | -0.3661 | -0.0025 | 0 |
| 230 | SLU 66 | 0 | 7.73 | 63.52 | -0.3657 | -0.0034 | 0 |
| 230 | SLU 67 | 0 | 7.73 | 63.22 | -0.3663 | -0.0029 | 0 |
| 230 | SLU 68 | 0 | 7.68 | 62.55 | -0.3636 | -0.0026 | 0 |
| 230 | SLU 69 | 0 | 7.77 | 64.45 | -0.3632 | -0.0035 | 0.0001 |
| 230 | SLU 70 | 0 | 7.78 | 64.15 | -0.3638 | -0.003 | 0 |
| 230 | SLU 71 | 0 | 7.71 | 63.99 | -0.36 | -0.0034 | 0 |
| 230 | SLU 72 | 0 | 7.72 | 63.69 | -0.3607 | -0.003 | 0 |
| 230 | SLU 73 | 0 | 8.53 | 69.48 | -0.4093 | -0.003 | 0 |
| 230 | SLU 74 | 0 | 8.62 | 71.38 | -0.4089 | -0.0039 | 0.0001 |
| 230 | SLU 75 | 0 | 8.63 | 71.07 | -0.4095 | -0.0034 | 0 |
| 230 | SLU 76 | 0 | 8.57 | 70.41 | -0.4068 | -0.0031 | 0 |
| 230 | SLU 77 | 0 | 8.66 | 72.31 | -0.4064 | -0.004 | 0.0001 |
| 230 | SLU 78 | 0 | 8.67 | 72.01 | -0.407 | -0.0035 | 0.0001 |
| 230 | SLU 79 | 0 | 8.6 | 71.85 | -0.4032 | -0.0039 | 0.0001 |
| 230 | SLU 80 | 0 | 8.61 | 71.55 | -0.4039 | -0.0035 | 0.0001 |
| 230 | SLU 81 | 0 | 8.9 | 73.35 | -0.4268 | -0.004 | 0.0001 |
| 230 | SLU 82 | 0 | 8.9 | 73.05 | -0.4274 | -0.0035 | 0.0001 |
| 230 | SLU 83 | 0 | 8.94 | 74.28 | -0.4243 | -0.004 | 0.0001 |
| 230 | SLU 84 | 0 | 8.95 | 73.98 | -0.4249 | -0.0036 | 0.0001 |
| 230 | SLE RA 1 | 0 | 5.68 | 46.16 | -0.2726 | -0.0024 | 0 |
| 230 | SLE RA 2 | 0 | 5.69 | 45.83 | -0.2733 | -0.0019 | 0 |
| 230 | SLE RA 3 | 0 | 5.75 | 47.09 | -0.273 | -0.0025 | 0 |
| 230 | SLE RA 4 | 0 | 5.76 | 46.89 | -0.2735 | -0.0022 | 0 |

| Nodo | Cont. | Reazione a traslazione | | | Reazione a rotazione | | |
|---|---|---|---|---|---|---|---|
| Ind. | N.br. | x | y | z | x | y | z |
| 230 | SLE RA 5 | 0 | 5.72 | 46.45 | -0.2716 | -0.0019 | 0 |
| 230 | SLE RA 6 | 0 | 5.78 | 47.71 | -0.2714 | -0.0025 | 0 |
| 230 | SLE RA 7 | 0 | 5.79 | 47.51 | -0.2718 | -0.0022 | 0 |
| 230 | SLE RA 8 | 0 | 5.74 | 47.4 | -0.2693 | -0.0025 | 0 |
| 230 | SLE RA 9 | 0 | 5.75 | 47.2 | -0.2697 | -0.0022 | 0 |
| 230 | SLE RA 10 | 0 | 6.29 | 51.07 | -0.3021 | -0.0022 | 0 |
| 230 | SLE RA 11 | 0 | 6.35 | 52.33 | -0.3018 | -0.0028 | 0 |
| 230 | SLE RA 12 | 0 | 6.35 | 52.13 | -0.3023 | -0.0025 | 0 |
| 230 | SLE RA 13 | 0 | 6.31 | 51.69 | -0.3004 | -0.0023 | 0 |
| 230 | SLE RA 14 | 0 | 6.38 | 52.95 | -0.3002 | -0.0029 | 0 |
| 230 | SLE RA 15 | 0 | 6.38 | 52.75 | -0.3006 | -0.0026 | 0 |
| 230 | SLE RA 16 | 0 | 6.34 | 52.64 | -0.2981 | -0.0028 | 0 |
| 230 | SLE RA 17 | 0 | 6.34 | 52.44 | -0.2985 | -0.0025 | 0 |
| 230 | SLE RA 18 | 0 | 6.53 | 53.65 | -0.3138 | -0.0029 | 0 |
| 230 | SLE RA 19 | 0 | 6.54 | 53.44 | -0.3142 | -0.0025 | 0 |
| 230 | SLE RA 20 | 0 | 6.56 | 54.27 | -0.3121 | -0.0029 | 0 |
| 230 | SLE RA 21 | 0 | 6.57 | 54.07 | -0.3125 | -0.0026 | 0 |
| 230 | SLE FR 1 | 0 | 5.68 | 46.16 | -0.2726 | -0.0024 | 0 |
| 230 | SLE FR 2 | 0 | 5.69 | 46.09 | -0.2728 | -0.0023 | 0 |
| 230 | SLE FR 3 | 0 | 5.7 | 46.41 | -0.272 | -0.0024 | 0 |
| 230 | SLE FR 4 | 0 | 5.94 | 48.34 | -0.2851 | -0.0024 | 0 |
| 230 | SLE FR 5 | 0 | 5.95 | 48.65 | -0.2843 | -0.0026 | 0 |
| 230 | SLE FR 6 | 0 | 6.11 | 49.9 | -0.2932 | -0.0026 | 0 |
| 230 | SLE QP 1 | 0 | 5.68 | 46.16 | -0.2726 | -0.0024 | 0 |
| 230 | SLE QP 2 | 0 | 5.94 | 48.41 | -0.285 | -0.0025 | 0 |
| 230 | SLD 1 | 0.14 | 8.32 | 56 | -0.4443 | 0.1356 | -0.001 |
| 230 | SLD 2 | 0.14 | 8.32 | 56 | -0.4443 | 0.1356 | -0.001 |
| 230 | SLD 3 | 0.18 | 5.83 | 48.39 | -0.2775 | 0.1731 | -0.0015 |
| 230 | SLD 4 | 0.18 | 5.83 | 48.39 | -0.2775 | 0.1731 | -0.0015 |
| 230 | SLD 5 | -0.03 | 10.44 | 62.23 | -0.5859 | -0.018 | 0.0006 |
| 230 | SLD 6 | -0.03 | 10.44 | 62.23 | -0.5859 | -0.018 | 0.0006 |
| 230 | SLD 7 | 0.12 | 2.12 | 36.86 | -0.0296 | 0.1071 | -0.0013 |
| 230 | SLD 8 | 0.12 | 2.12 | 36.86 | -0.0296 | 0.1071 | -0.0013 |
| 230 | SLD 9 | -0.12 | 9.76 | 59.95 | -0.5403 | -0.1122 | 0.0013 |
| 230 | SLD 10 | -0.12 | 9.76 | 59.95 | -0.5403 | -0.1122 | 0.0013 |
| 230 | SLD 11 | 0.02 | 1.44 | 34.59 | 0.0159 | 0.013 | -0.0005 |
| 230 | SLD 12 | 0.02 | 1.44 | 34.59 | 0.0159 | 0.013 | -0.0005 |
| 230 | SLD 13 | -0.18 | 6.05 | 48.42 | -0.2925 | -0.1782 | 0.0016 |
| 230 | SLD 14 | -0.18 | 6.05 | 48.42 | -0.2925 | -0.1782 | 0.0016 |
| 230 | SLD 15 | -0.14 | 3.55 | 40.81 | -0.1256 | -0.1407 | 0.001 |
| 230 | SLD 16 | -0.14 | 3.55 | 40.81 | -0.1256 | -0.1407 | 0.001 |
| 230 | SLV 1 | 0.35 | 11.51 | 66.19 | -0.6576 | 0.3481 | -0.0023 |
| 230 | SLV 2 | 0.35 | 11.51 | 66.19 | -0.6576 | 0.3481 | -0.0023 |
| 230 | SLV 3 | 0.46 | 5.69 | 48.45 | -0.269 | 0.4441 | -0.0038 |
| 230 | SLV 4 | 0.46 | 5.69 | 48.45 | -0.269 | 0.4441 | -0.0038 |
| 230 | SLV 5 | -0.06 | 16.43 | 80.65 | -0.9862 | -0.043 | 0.0015 |
| 230 | SLV 6 | -0.06 | 16.43 | 80.65 | -0.9862 | -0.043 | 0.0015 |
| 230 | SLV 7 | 0.3 | -2.95 | 21.51 | 0.3092 | 0.2771 | -0.0033 |
| 230 | SLV 8 | 0.3 | -2.95 | 21.51 | 0.3092 | 0.2771 | -0.0033 |
| 230 | SLV 9 | -0.3 | 14.83 | 75.3 | -0.8792 | -0.2822 | 0.0033 |
| 230 | SLV 10 | -0.3 | 14.83 | 75.3 | -0.8792 | -0.2822 | 0.0033 |
| 230 | SLV 11 | 0.06 | -4.55 | 16.16 | 0.4162 | 0.038 | -0.0014 |
| 230 | SLV 12 | 0.06 | -4.55 | 16.16 | 0.4162 | 0.038 | -0.0014 |
| 230 | SLV 13 | -0.46 | 6.19 | 48.36 | -0.301 | -0.4492 | 0.0038 |
| 230 | SLV 14 | -0.46 | 6.19 | 48.36 | -0.301 | -0.4492 | 0.0038 |
| 230 | SLV 15 | -0.35 | 0.37 | 30.62 | 0.0877 | -0.3531 | 0.0024 |
| 230 | SLV 16 | -0.35 | 0.37 | 30.62 | 0.0877 | -0.3531 | 0.0024 |
| 231 | SLU 1 | 0 | 5.21 | 49.97 | -0.2392 | 0.0011 | 0 |
| 231 | SLU 2 | 0 | 5.2 | 49.44 | -0.2391 | 0.0005 | 0 |
| 231 | SLU 3 | 0 | 5.57 | 52.65 | -0.257 | 0.0013 | 0 |
| 231 | SLU 4 | 0 | 5.56 | 52.33 | -0.2569 | 0.0009 | 0 |
| 231 | SLU 5 | 0 | 5.58 | 51.81 | -0.2581 | 0.0007 | 0 |
| 231 | SLU 6 | 0 | 5.94 | 55.02 | -0.2759 | 0.0015 | 0 |
| 231 | SLU 7 | 0 | 5.94 | 54.7 | -0.2758 | 0.0011 | 0 |
| 231 | SLU 8 | 0 | 5.95 | 54.71 | -0.2771 | 0.0015 | 0 |
| 231 | SLU 9 | 0 | 5.95 | 54.39 | -0.277 | 0.0011 | 0 |
| 231 | SLU 10 | 0 | 5.94 | 58.48 | -0.2716 | 0.0008 | 0 |
| 231 | SLU 11 | 0 | 6.31 | 61.7 | -0.2895 | 0.0015 | 0 |
| 231 | SLU 12 | 0 | 6.31 | 61.38 | -0.2894 | 0.0012 | 0 |
| 231 | SLU 13 | 0 | 6.32 | 60.85 | -0.2906 | 0.001 | 0 |
| 231 | SLU 14 | 0 | 6.68 | 64.07 | -0.3084 | 0.0017 | 0 |
| 231 | SLU 15 | 0 | 6.68 | 63.75 | -0.3084 | 0.0014 | 0 |
| 231 | SLU 16 | 0 | 6.69 | 63.75 | -0.3096 | 0.0017 | 0 |
| 231 | SLU 17 | 0 | 6.69 | 63.43 | -0.3095 | 0.0014 | 0 |
| 231 | SLU 18 | 0 | 6.26 | 62.89 | -0.2857 | 0.0015 | 0 |
| 231 | SLU 19 | 0 | 6.26 | 62.57 | -0.2856 | 0.0011 | 0 |
| 231 | SLU 20 | 0 | 6.64 | 65.26 | -0.3046 | 0.0017 | 0 |
| 231 | SLU 21 | 0 | 6.64 | 64.94 | -0.3046 | 0.0013 | 0 |
| 231 | SLU 22 | 0 | 6.04 | 58.91 | -0.2772 | 0.0014 | 0 |
| 231 | SLU 23 | 0 | 6.04 | 58.37 | -0.277 | 0.0008 | 0 |
| 231 | SLU 24 | 0 | 6.4 | 61.59 | -0.2949 | 0.0016 | 0 |
| 231 | SLU 25 | 0 | 6.4 | 61.27 | -0.2948 | 0.0012 | 0 |
| 231 | SLU 26 | 0 | 6.41 | 60.74 | -0.296 | 0.001 | 0 |
| 231 | SLU 27 | 0 | 6.77 | 63.96 | -0.3138 | 0.0018 | 0 |
| 231 | SLU 28 | 0 | 6.77 | 63.64 | -0.3137 | 0.0014 | 0 |
| 231 | SLU 29 | 0 | 6.79 | 63.65 | -0.315 | 0.0018 | 0 |
| 231 | SLU 30 | 0 | 6.79 | 63.33 | -0.3149 | 0.0014 | 0 |
| 231 | SLU 31 | 0 | 6.78 | 67.42 | -0.3096 | 0.0011 | 0 |

| Nodo | Cont. | Reazione a traslazione | | | Reazione a rotazione | | |
|---|---|---|---|---|---|---|---|
| Ind. | N.br. | x | y | z | x | y | z |
| 231 | SLU 32 | 0 | 7.14 | 70.63 | -0.3274 | 0.0018 | 0 |
| 231 | SLU 33 | 0 | 7.14 | 70.31 | -0.3273 | 0.0015 | 0 |
| 231 | SLU 34 | 0 | 7.15 | 69.78 | -0.3285 | 0.0013 | 0 |
| 231 | SLU 35 | 0 | 7.52 | 73 | -0.3463 | 0.002 | 0 |
| 231 | SLU 36 | 0 | 7.51 | 72.68 | -0.3463 | 0.0017 | 0 |
| 231 | SLU 37 | 0 | 7.53 | 72.69 | -0.3475 | 0.002 | 0 |
| 231 | SLU 38 | 0 | 7.53 | 72.37 | -0.3475 | 0.0017 | 0 |
| 231 | SLU 39 | 0 | 7.1 | 71.82 | -0.3236 | 0.0018 | 0 |
| 231 | SLU 40 | 0 | 7.1 | 71.5 | -0.3235 | 0.0014 | 0 |
| 231 | SLU 41 | 0 | 7.47 | 74.19 | -0.3425 | 0.002 | 0 |
| 231 | SLU 42 | 0 | 7.47 | 73.87 | -0.3425 | 0.0016 | 0 |
| 231 | SLU 43 | 0 | 6.48 | 61.9 | -0.298 | 0.0013 | 0 |
| 231 | SLU 44 | 0 | 6.48 | 61.37 | -0.2979 | 0.0007 | 0 |
| 231 | SLU 45 | 0 | 6.84 | 64.58 | -0.3158 | 0.0015 | 0 |
| 231 | SLU 46 | 0 | 6.84 | 64.26 | -0.3157 | 0.0011 | 0 |
| 231 | SLU 47 | 0 | 6.85 | 63.74 | -0.3168 | 0.0009 | 0 |
| 231 | SLU 48 | 0 | 7.21 | 66.95 | -0.3347 | 0.0017 | 0 |
| 231 | SLU 49 | 0 | 7.21 | 66.63 | -0.3346 | 0.0013 | 0 |
| 231 | SLU 50 | 0 | 7.23 | 66.64 | -0.3359 | 0.0017 | 0 |
| 231 | SLU 51 | 0 | 7.23 | 66.32 | -0.3358 | 0.0013 | 0 |
| 231 | SLU 52 | 0 | 7.22 | 70.41 | -0.3304 | 0.001 | 0 |
| 231 | SLU 53 | 0 | 7.58 | 73.63 | -0.3483 | 0.0017 | 0 |
| 231 | SLU 54 | 0 | 7.58 | 73.3 | -0.3482 | 0.0014 | 0 |
| 231 | SLU 55 | 0 | 7.59 | 72.78 | -0.3494 | 0.0012 | 0 |
| 231 | SLU 56 | 0 | 7.96 | 75.99 | -0.3672 | 0.0019 | 0 |
| 231 | SLU 57 | 0 | 7.95 | 75.67 | -0.3671 | 0.0016 | 0 |
| 231 | SLU 58 | 0 | 7.97 | 75.68 | -0.3684 | 0.0019 | 0 |
| 231 | SLU 59 | 0 | 7.97 | 75.36 | -0.3683 | 0.0016 | 0 |
| 231 | SLU 60 | 0 | 7.54 | 74.82 | -0.3445 | 0.0017 | 0 |
| 231 | SLU 61 | 0 | 7.54 | 74.5 | -0.3444 | 0.0013 | 0 |
| 231 | SLU 62 | 0 | 7.91 | 77.19 | -0.3634 | 0.0019 | 0 |
| 231 | SLU 63 | 0 | 7.91 | 76.87 | -0.3633 | 0.0015 | 0 |
| 231 | SLU 64 | 0 | 7.32 | 70.84 | -0.3359 | 0.0016 | 0 |
| 231 | SLU 65 | 0 | 7.31 | 70.3 | -0.3358 | 0.001 | 0 |
| 231 | SLU 66 | 0 | 7.68 | 73.52 | -0.3537 | 0.0018 | 0 |
| 231 | SLU 67 | 0 | 7.67 | 73.2 | -0.3536 | 0.0014 | 0 |
| 231 | SLU 68 | 0 | 7.69 | 72.67 | -0.3547 | 0.0012 | 0 |
| 231 | SLU 69 | 0 | 8.05 | 75.89 | -0.3726 | 0.002 | 0 |
| 231 | SLU 70 | 0 | 8.05 | 75.57 | -0.3725 | 0.0016 | 0 |
| 231 | SLU 71 | 0 | 8.06 | 75.57 | -0.3738 | 0.002 | 0 |
| 231 | SLU 72 | 0 | 8.06 | 75.25 | -0.3737 | 0.0016 | 0 |
| 231 | SLU 73 | 0 | 8.06 | 79.34 | -0.3683 | 0.0013 | 0 |
| 231 | SLU 74 | 0 | 8.42 | 82.56 | -0.3862 | 0.0021 | 0 |
| 231 | SLU 75 | 0 | 8.42 | 82.24 | -0.3861 | 0.0017 | 0 |
| 231 | SLU 76 | 0 | 8.43 | 81.71 | -0.3873 | 0.0015 | 0 |
| 231 | SLU 77 | 0 | 8.79 | 84.93 | -0.4051 | 0.0023 | 0 |
| 231 | SLU 78 | 0 | 8.79 | 84.61 | -0.405 | 0.0019 | 0 |
| 231 | SLU 79 | 0 | 8.8 | 84.62 | -0.4063 | 0.0023 | 0 |
| 231 | SLU 80 | 0 | 8.8 | 84.3 | -0.4062 | 0.0019 | 0 |
| 231 | SLU 81 | 0 | 8.38 | 83.75 | -0.3824 | 0.002 | 0 |
| 231 | SLU 82 | 0 | 8.37 | 83.43 | -0.3823 | 0.0016 | 0 |
| 231 | SLU 83 | 0 | 8.75 | 86.12 | -0.4013 | 0.0022 | 0 |
| 231 | SLU 84 | 0 | 8.75 | 85.8 | -0.4012 | 0.0018 | 0 |
| 231 | SLE RA 1 | 0 | 5.44 | 52.53 | -0.2501 | 0.0011 | 0 |
| 231 | SLE RA 2 | 0 | 5.44 | 52.17 | -0.25 | 0.0008 | 0 |
| 231 | SLE RA 3 | 0 | 5.68 | 54.31 | -0.2619 | 0.0013 | 0 |
| 231 | SLE RA 4 | 0 | 5.68 | 54.1 | -0.2619 | 0.001 | 0 |
| 231 | SLE RA 5 | 0 | 5.69 | 53.75 | -0.2626 | 0.0009 | 0 |
| 231 | SLE RA 6 | 0 | 5.93 | 55.89 | -0.2745 | 0.0014 | 0 |
| 231 | SLE RA 7 | 0 | 5.93 | 55.68 | -0.2745 | 0.0012 | 0 |
| 231 | SLE RA 8 | 0 | 5.94 | 55.68 | -0.2753 | 0.0014 | 0 |
| 231 | SLE RA 9 | 0 | 5.94 | 55.47 | -0.2753 | 0.0012 | 0 |
| 231 | SLE RA 10 | 0 | 5.94 | 58.2 | -0.2717 | 0.0009 | 0 |
| 231 | SLE RA 11 | 0 | 6.18 | 60.34 | -0.2836 | 0.0015 | 0 |
| 231 | SLE RA 12 | 0 | 6.18 | 60.13 | -0.2835 | 0.0012 | 0 |
| 231 | SLE RA 13 | 0 | 6.19 | 59.78 | -0.2843 | 0.0011 | 0 |
| 231 | SLE RA 14 | 0 | 6.43 | 61.92 | -0.2962 | 0.0016 | 0 |
| 231 | SLE RA 15 | 0 | 6.43 | 61.71 | -0.2962 | 0.0014 | 0 |
| 231 | SLE RA 16 | 0 | 6.44 | 61.71 | -0.297 | 0.0016 | 0 |
| 231 | SLE RA 17 | 0 | 6.44 | 61.5 | -0.2969 | 0.0014 | 0 |
| 231 | SLE RA 18 | 0 | 6.15 | 61.14 | -0.281 | 0.0014 | 0 |
| 231 | SLE RA 19 | 0 | 6.15 | 60.92 | -0.281 | 0.0012 | 0 |
| 231 | SLE RA 20 | 0 | 6.4 | 62.72 | -0.2937 | 0.0015 | 0 |
| 231 | SLE RA 21 | 0 | 6.4 | 62.5 | -0.2936 | 0.0013 | 0 |
| 231 | SLE FR 1 | 0 | 5.44 | 52.53 | -0.2501 | 0.0011 | 0 |
| 231 | SLE FR 2 | 0 | 5.44 | 52.45 | -0.2501 | 0.0011 | 0 |
| 231 | SLE FR 3 | 0 | 5.54 | 53.16 | -0.2551 | 0.0012 | 0 |
| 231 | SLE FR 4 | 0 | 5.66 | 55.04 | -0.2594 | 0.0011 | 0 |
| 231 | SLE FR 5 | 0 | 5.76 | 55.74 | -0.2644 | 0.0013 | 0 |
| 231 | SLE FR 6 | 0 | 5.8 | 56.83 | -0.2656 | 0.0013 | 0 |
| 231 | SLE QP 1 | 0 | 5.44 | 52.53 | -0.2501 | 0.0011 | 0 |
| 231 | SLE QP 2 | 0 | 5.66 | 55.11 | -0.2594 | 0.0012 | 0 |
| 231 | SLD 1 | 0.24 | 6.09 | 58.11 | -0.2822 | 0.2296 | 0.0007 |
| 231 | SLD 2 | 0.24 | 6.09 | 58.11 | -0.2822 | 0.2296 | 0.0007 |
| 231 | SLD 3 | 0.21 | 1.91 | 47.9 | -0.0538 | 0.1974 | 0.0006 |
| 231 | SLD 4 | 0.21 | 1.91 | 47.9 | -0.0538 | 0.1974 | 0.0006 |
| 231 | SLD 5 | 0.13 | 12.13 | 71.49 | -0.6126 | 0.1186 | 0.0004 |
| 231 | SLD 6 | 0.13 | 12.13 | 71.49 | -0.6126 | 0.1186 | 0.0004 |

| Nodo | Cont. | Reazione a traslazione | | | Reazione a rotazione | | |
|---|---|---|---|---|---|---|---|
| Ind. | N.br. | x | y | z | x | y | z |
| 231 | SLD 7 | 0.01 | -1.81 | 37.47 | 0.1487 | 0.0113 | 0 |
| 231 | SLD 8 | 0.01 | -1.81 | 37.47 | 0.1487 | 0.0113 | 0 |
| 231 | SLD 9 | -0.01 | 13.12 | 72.75 | -0.6674 | -0.0088 | 0 |
| 231 | SLD 10 | -0.01 | 13.12 | 72.75 | -0.6674 | -0.0088 | 0 |
| 231 | SLD 11 | -0.12 | -0.82 | 38.73 | 0.0939 | -0.1161 | -0.0004 |
| 231 | SLD 12 | -0.12 | -0.82 | 38.73 | 0.0939 | -0.1161 | -0.0004 |
| 231 | SLD 13 | -0.2 | 9.4 | 62.32 | -0.4649 | -0.195 | -0.0006 |
| 231 | SLD 14 | -0.2 | 9.4 | 62.32 | -0.4649 | -0.195 | -0.0006 |
| 231 | SLD 15 | -0.24 | 5.22 | 52.11 | -0.2365 | -0.2272 | -0.0007 |
| 231 | SLD 16 | -0.24 | 5.22 | 52.11 | -0.2365 | -0.2272 | -0.0007 |
| 231 | SLV 1 | 0.61 | 6.67 | 62.05 | -0.3129 | 0.5836 | 0.0018 |
| 231 | SLV 2 | 0.61 | 6.67 | 62.05 | -0.3129 | 0.5836 | 0.0018 |
| 231 | SLV 3 | 0.52 | -3.17 | 37.93 | 0.2253 | 0.5011 | 0.0015 |
| 231 | SLV 4 | 0.52 | -3.17 | 37.93 | 0.2253 | 0.5011 | 0.0015 |
| 231 | SLV 5 | 0.32 | 20.89 | 93.78 | -1.0918 | 0.3011 | 0.001 |
| 231 | SLV 6 | 0.32 | 20.89 | 93.78 | -1.0918 | 0.3011 | 0.001 |
| 231 | SLV 7 | 0.02 | -11.92 | 13.37 | 0.7024 | 0.0261 | 0 |
| 231 | SLV 8 | 0.02 | -11.92 | 13.37 | 0.7024 | 0.0261 | 0 |
| 231 | SLV 9 | -0.02 | 23.23 | 96.85 | -1.2211 | -0.0236 | 0 |
| 231 | SLV 10 | -0.02 | 23.23 | 96.85 | -1.2211 | -0.0236 | 0 |
| 231 | SLV 11 | -0.32 | -9.57 | 16.44 | 0.573 | -0.2986 | -0.001 |
| 231 | SLV 12 | -0.32 | -9.57 | 16.44 | 0.573 | -0.2986 | -0.001 |
| 231 | SLV 13 | -0.52 | 14.48 | 72.29 | -0.7441 | -0.4986 | -0.0015 |
| 231 | SLV 14 | -0.52 | 14.48 | 72.29 | -0.7441 | -0.4986 | -0.0015 |
| 231 | SLV 15 | -0.61 | 4.64 | 48.17 | -0.2058 | -0.5811 | -0.0018 |
| 231 | SLV 16 | -0.61 | 4.64 | 48.17 | -0.2058 | -0.5811 | -0.0018 |
| 232 | SLU 1 | 0 | 1.17 | 19.54 | -0.1878 | -0.0004 | 0 |
| 232 | SLU 2 | 0 | 1.18 | 19.55 | -0.1877 | -0.0007 | 0 |
| 232 | SLU 3 | 0 | 1.15 | 19.4 | -0.1909 | -0.0004 | 0 |
| 232 | SLU 4 | 0 | 1.15 | 19.41 | -0.1909 | -0.0005 | 0 |
| 232 | SLU 5 | 0 | 1.16 | 19.46 | -0.1897 | -0.0006 | 0 |
| 232 | SLU 6 | 0 | 1.13 | 19.32 | -0.193 | -0.0003 | 0 |
| 232 | SLU 7 | 0 | 1.14 | 19.32 | -0.1929 | -0.0005 | 0 |
| 232 | SLU 8 | 0 | 1.15 | 19.37 | -0.1919 | -0.0003 | 0 |
| 232 | SLU 9 | 0 | 1.15 | 19.37 | -0.1918 | -0.0004 | 0 |
| 232 | SLU 10 | 0 | 1.62 | 27.06 | -0.2421 | -0.0008 | 0 |
| 232 | SLU 11 | 0 | 1.6 | 26.92 | -0.2453 | -0.0005 | 0 |
| 232 | SLU 12 | 0 | 1.6 | 26.92 | -0.2453 | -0.0007 | 0 |
| 232 | SLU 13 | 0 | 1.61 | 26.98 | -0.2441 | -0.0007 | 0 |
| 232 | SLU 14 | 0 | 1.58 | 26.83 | -0.2474 | -0.0005 | 0 |
| 232 | SLU 15 | 0 | 1.59 | 26.84 | -0.2473 | -0.0006 | 0 |
| 232 | SLU 16 | 0 | 1.6 | 26.88 | -0.2463 | -0.0004 | 0 |
| 232 | SLU 17 | 0 | 1.6 | 26.89 | -0.2462 | -0.0006 | 0 |
| 232 | SLU 18 | 0 | 1.81 | 30.28 | -0.2655 | -0.0006 | 0 |
| 232 | SLU 19 | 0 | 1.82 | 30.28 | -0.2654 | -0.0008 | 0 |
| 232 | SLU 20 | 0 | 1.8 | 30.19 | -0.2675 | -0.0005 | 0 |
| 232 | SLU 21 | 0 | 1.8 | 30.19 | -0.2675 | -0.0007 | 0 |
| 232 | SLU 22 | 0 | 1.48 | 24.91 | -0.2307 | -0.0005 | 0 |
| 232 | SLU 23 | 0 | 1.48 | 24.92 | -0.2306 | -0.0007 | 0 |
| 232 | SLU 24 | 0 | 1.45 | 24.78 | -0.2339 | -0.0004 | 0 |
| 232 | SLU 25 | 0 | 1.46 | 24.78 | -0.2338 | -0.0006 | 0 |
| 232 | SLU 26 | 0 | 1.47 | 24.83 | -0.2327 | -0.0007 | 0 |
| 232 | SLU 27 | 0 | 1.44 | 24.69 | -0.2359 | -0.0004 | 0 |
| 232 | SLU 28 | 0 | 1.44 | 24.69 | -0.2359 | -0.0005 | 0 |
| 232 | SLU 29 | 0 | 1.45 | 24.74 | -0.2348 | -0.0003 | 0 |
| 232 | SLU 30 | 0 | 1.46 | 24.74 | -0.2348 | -0.0005 | 0 |
| 232 | SLU 31 | 0 | 1.93 | 32.43 | -0.285 | -0.0009 | 0 |
| 232 | SLU 32 | 0 | 1.9 | 32.29 | -0.2883 | -0.0006 | 0 |
| 232 | SLU 33 | 0 | 1.91 | 32.3 | -0.2882 | -0.0007 | 0 |
| 232 | SLU 34 | 0 | 1.92 | 32.35 | -0.287 | -0.0008 | 0 |
| 232 | SLU 35 | 0 | 1.89 | 32.21 | -0.2903 | -0.0005 | 0 |
| 232 | SLU 36 | 0 | 1.89 | 32.21 | -0.2903 | -0.0007 | 0 |
| 232 | SLU 37 | 0 | 1.9 | 32.25 | -0.2892 | -0.0005 | 0 |
| 232 | SLU 38 | 0 | 1.91 | 32.26 | -0.2891 | -0.0006 | 0 |
| 232 | SLU 39 | 0 | 2.12 | 35.65 | -0.3084 | -0.0007 | 0 |
| 232 | SLU 40 | 0 | 2.12 | 35.65 | -0.3083 | -0.0008 | 0 |
| 232 | SLU 41 | 0 | 2.11 | 35.56 | -0.3105 | -0.0006 | 0 |
| 232 | SLU 42 | 0 | 2.11 | 35.57 | -0.3104 | -0.0008 | 0 |
| 232 | SLU 43 | 0 | 1.42 | 23.56 | -0.2294 | -0.0005 | 0 |
| 232 | SLU 44 | 0 | 1.42 | 23.57 | -0.2293 | -0.0008 | 0 |
| 232 | SLU 45 | 0 | 1.39 | 23.42 | -0.2326 | -0.0005 | 0 |
| 232 | SLU 46 | 0 | 1.4 | 23.43 | -0.2325 | -0.0006 | 0 |
| 232 | SLU 47 | 0 | 1.41 | 23.48 | -0.2313 | -0.0007 | 0 |
| 232 | SLU 48 | 0 | 1.38 | 23.34 | -0.2346 | -0.0004 | 0 |
| 232 | SLU 49 | 0 | 1.38 | 23.34 | -0.2345 | -0.0006 | 0 |
| 232 | SLU 50 | 0 | 1.39 | 23.39 | -0.2335 | -0.0004 | 0 |
| 232 | SLU 51 | 0 | 1.39 | 23.39 | -0.2334 | -0.0005 | 0 |
| 232 | SLU 52 | 0 | 1.87 | 31.08 | -0.2837 | -0.0009 | 0 |
| 232 | SLU 53 | 0 | 1.84 | 30.94 | -0.2869 | -0.0006 | 0 |
| 232 | SLU 54 | 0 | 1.85 | 30.94 | -0.2869 | -0.0008 | 0 |
| 232 | SLU 55 | 0 | 1.86 | 30.99 | -0.2857 | -0.0009 | 0 |
| 232 | SLU 56 | 0 | 1.83 | 30.85 | -0.289 | -0.0006 | 0 |
| 232 | SLU 57 | 0 | 1.83 | 30.86 | -0.2889 | -0.0007 | 0 |
| 232 | SLU 58 | 0 | 1.84 | 30.9 | -0.2879 | -0.0005 | 0 |
| 232 | SLU 59 | 0 | 1.84 | 30.91 | -0.2878 | -0.0007 | 0 |
| 232 | SLU 60 | 0 | 2.06 | 34.3 | -0.3071 | -0.0007 | 0 |
| 232 | SLU 61 | 0 | 2.06 | 34.3 | -0.307 | -0.0009 | 0 |
| 232 | SLU 62 | 0 | 2.05 | 34.21 | -0.3091 | -0.0007 | 0 |

| Nodo | Cont. | Reazione a traslazione | | | Reazione a rotazione | | |
|---|---|---|---|---|---|---|---|
| Ind. | N.br. | x | y | z | x | y | z |
| 232 | SLU 63 | 0 | 2.05 | 34.21 | -0.3091 | -0.0008 | 0 |
| 232 | SLU 64 | 0 | 1.73 | 28.93 | -0.2723 | -0.0006 | 0 |
| 232 | SLU 65 | 0 | 1.73 | 28.94 | -0.2722 | -0.0008 | 0 |
| 232 | SLU 66 | 0 | 1.7 | 28.8 | -0.2755 | -0.0005 | 0 |
| 232 | SLU 67 | 0 | 1.7 | 28.8 | -0.2754 | -0.0007 | 0 |
| 232 | SLU 68 | 0 | 1.72 | 28.85 | -0.2743 | -0.0008 | 0 |
| 232 | SLU 69 | 0 | 1.69 | 28.71 | -0.2776 | -0.0005 | 0 |
| 232 | SLU 70 | 0 | 1.69 | 28.71 | -0.2775 | -0.0006 | 0 |
| 232 | SLU 71 | 0 | 1.7 | 28.76 | -0.2764 | -0.0004 | 0 |
| 232 | SLU 72 | 0 | 1.7 | 28.76 | -0.2764 | -0.0006 | 0 |
| 232 | SLU 73 | 0 | 2.18 | 36.45 | -0.3266 | -0.001 | 0 |
| 232 | SLU 74 | 0 | 2.15 | 36.31 | -0.3299 | -0.0007 | 0 |
| 232 | SLU 75 | 0 | 2.15 | 36.32 | -0.3298 | -0.0008 | 0 |
| 232 | SLU 76 | 0 | 2.17 | 36.37 | -0.3287 | -0.0009 | 0 |
| 232 | SLU 77 | 0 | 2.14 | 36.23 | -0.3319 | -0.0006 | 0 |
| 232 | SLU 78 | 0 | 2.14 | 36.23 | -0.3319 | -0.0008 | 0 |
| 232 | SLU 79 | 0 | 2.15 | 36.27 | -0.3308 | -0.0006 | 0 |
| 232 | SLU 80 | 0 | 2.15 | 36.28 | -0.3307 | -0.0007 | 0 |
| 232 | SLU 81 | 0 | 2.37 | 39.67 | -0.35 | -0.0008 | 0 |
| 232 | SLU 82 | 0 | 2.37 | 39.67 | -0.35 | -0.0009 | 0 |
| 232 | SLU 83 | 0 | 2.36 | 39.58 | -0.3521 | -0.0007 | 0 |
| 232 | SLU 84 | 0 | 2.36 | 39.59 | -0.352 | -0.0009 | 0 |
| 232 | SLE RA 1 | 0 | 1.26 | 21.07 | -0.2 | -0.0004 | 0 |
| 232 | SLE RA 2 | 0 | 1.26 | 21.08 | -0.2 | -0.0006 | 0 |
| 232 | SLE RA 3 | 0 | 1.24 | 20.98 | -0.2022 | -0.0004 | 0 |
| 232 | SLE RA 4 | 0 | 1.24 | 20.99 | -0.2021 | -0.0005 | 0 |
| 232 | SLE RA 5 | 0 | 1.25 | 21.02 | -0.2013 | -0.0006 | 0 |
| 232 | SLE RA 6 | 0 | 1.24 | 20.93 | -0.2035 | -0.0004 | 0 |
| 232 | SLE RA 7 | 0 | 1.24 | 20.93 | -0.2035 | -0.0005 | 0 |
| 232 | SLE RA 8 | 0 | 1.24 | 20.96 | -0.2028 | -0.0003 | 0 |
| 232 | SLE RA 9 | 0 | 1.24 | 20.96 | -0.2027 | -0.0004 | 0 |
| 232 | SLE RA 10 | 0 | 1.56 | 26.09 | -0.2362 | -0.0007 | 0 |
| 232 | SLE RA 11 | 0 | 1.54 | 26 | -0.2384 | -0.0005 | 0 |
| 232 | SLE RA 12 | 0 | 1.54 | 26 | -0.2384 | -0.0006 | 0 |
| 232 | SLE RA 13 | 0 | 1.55 | 26.03 | -0.2376 | -0.0007 | 0 |
| 232 | SLE RA 14 | 0 | 1.53 | 25.94 | -0.2398 | -0.0005 | 0 |
| 232 | SLE RA 15 | 0 | 1.54 | 25.94 | -0.2397 | -0.0006 | 0 |
| 232 | SLE RA 16 | 0 | 1.54 | 25.97 | -0.239 | -0.0004 | 0 |
| 232 | SLE RA 17 | 0 | 1.54 | 25.97 | -0.239 | -0.0005 | 0 |
| 232 | SLE RA 18 | 0 | 1.69 | 28.23 | -0.2518 | -0.0006 | 0 |
| 232 | SLE RA 19 | 0 | 1.69 | 28.23 | -0.2518 | -0.0007 | 0 |
| 232 | SLE RA 20 | 0 | 1.68 | 28.17 | -0.2532 | -0.0005 | 0 |
| 232 | SLE RA 21 | 0 | 1.68 | 28.18 | -0.2532 | -0.0006 | 0 |
| 232 | SLE FR 1 | 0 | 1.26 | 21.07 | -0.2 | -0.0004 | 0 |
| 232 | SLE FR 2 | 0 | 1.26 | 21.08 | -0.2 | -0.0005 | 0 |
| 232 | SLE FR 3 | 0 | 1.26 | 21.05 | -0.2006 | -0.0004 | 0 |
| 232 | SLE FR 4 | 0 | 1.39 | 23.22 | -0.2156 | -0.0005 | 0 |
| 232 | SLE FR 5 | 0 | 1.39 | 23.2 | -0.2161 | -0.0005 | 0 |
| 232 | SLE FR 6 | 0 | 1.47 | 24.65 | -0.2259 | -0.0005 | 0 |
| 232 | SLE QP 1 | 0 | 1.26 | 21.07 | -0.2 | -0.0004 | 0 |
| 232 | SLE QP 2 | 0 | 1.39 | 23.22 | -0.2156 | -0.0005 | 0 |
| 232 | SLD 1 | 0.21 | 2.31 | 29.91 | -0.0789 | 0.2457 | -0.0014 |
| 232 | SLD 2 | 0.21 | 2.31 | 29.91 | -0.0789 | 0.2457 | -0.0014 |
| 232 | SLD 3 | 0.23 | -0.52 | 19.78 | -0.2784 | 0.2562 | -0.0017 |
| 232 | SLD 4 | 0.23 | -0.52 | 19.78 | -0.2784 | 0.2562 | -0.0017 |
| 232 | SLD 5 | 0.04 | 5.96 | 40.59 | 0.128 | 0.0575 | 0 |
| 232 | SLD 6 | 0.04 | 5.96 | 40.59 | 0.128 | 0.0575 | 0 |
| 232 | SLD 7 | 0.09 | -3.47 | 6.83 | -0.537 | 0.0925 | -0.0009 |
| 232 | SLD 8 | 0.09 | -3.47 | 6.83 | -0.537 | 0.0925 | -0.0009 |
| 232 | SLD 9 | -0.09 | 6.25 | 39.61 | 0.1059 | -0.0934 | 0.0009 |
| 232 | SLD 10 | -0.09 | 6.25 | 39.61 | 0.1059 | -0.0934 | 0.0009 |
| 232 | SLD 11 | -0.04 | -3.18 | 5.85 | -0.5592 | -0.0584 | 0.0001 |
| 232 | SLD 12 | -0.04 | -3.18 | 5.85 | -0.5592 | -0.0584 | 0.0001 |
| 232 | SLD 13 | -0.23 | 3.29 | 26.66 | -0.1528 | -0.2572 | 0.0017 |
| 232 | SLD 14 | -0.23 | 3.29 | 26.66 | -0.1528 | -0.2572 | 0.0017 |
| 232 | SLD 15 | -0.22 | 0.47 | 16.53 | -0.3523 | -0.2467 | 0.0014 |
| 232 | SLD 16 | -0.22 | 0.47 | 16.53 | -0.3523 | -0.2467 | 0.0014 |
| 232 | SLV 1 | 0.54 | 3.54 | 38.89 | 0.1045 | 0.6269 | -0.0034 |
| 232 | SLV 2 | 0.54 | 3.54 | 38.89 | 0.1045 | 0.6269 | -0.0034 |
| 232 | SLV 3 | 0.58 | -3.08 | 15.24 | -0.3618 | 0.6532 | -0.004 |
| 232 | SLV 4 | 0.58 | -3.08 | 15.24 | -0.3618 | 0.6532 | -0.004 |
| 232 | SLV 5 | 0.11 | 12.06 | 63.81 | 0.5877 | 0.1478 | -0.0001 |
| 232 | SLV 6 | 0.11 | 12.06 | 63.81 | 0.5877 | 0.1478 | -0.0001 |
| 232 | SLV 7 | 0.23 | -9.98 | -15.06 | -0.9667 | 0.2355 | -0.0021 |
| 232 | SLV 8 | 0.23 | -9.98 | -15.06 | -0.9667 | 0.2355 | -0.0021 |
| 232 | SLV 9 | -0.23 | 12.76 | 61.5 | 0.5355 | -0.2364 | 0.0021 |
| 232 | SLV 10 | -0.23 | 12.76 | 61.5 | 0.5355 | -0.2364 | 0.0021 |
| 232 | SLV 11 | -0.11 | -9.29 | -17.36 | -1.0188 | -0.1488 | 0.0001 |
| 232 | SLV 12 | -0.11 | -9.29 | -17.36 | -1.0188 | -0.1488 | 0.0001 |
| 232 | SLV 13 | -0.58 | 5.85 | 31.21 | -0.0694 | -0.6541 | 0.004 |
| 232 | SLV 14 | -0.58 | 5.85 | 31.21 | -0.0694 | -0.6541 | 0.004 |
| 232 | SLV 15 | -0.54 | -0.76 | 7.55 | -0.5357 | -0.6278 | 0.0034 |
| 232 | SLV 16 | -0.54 | -0.76 | 7.55 | -0.5357 | -0.6278 | 0.0034 |
| 233 | SLU 1 | 0 | 7.97 | 39.57 | -0.5113 | -0.0018 | 0 |
| 233 | SLU 2 | 0 | 7.94 | 39.37 | -0.5093 | -0.0017 | 0 |
| 233 | SLU 3 | 0 | 7.97 | 39.77 | -0.5134 | -0.002 | 0 |
| 233 | SLU 4 | 0 | 7.95 | 39.65 | -0.5123 | -0.002 | 0 |
| 233 | SLU 5 | 0 | 7.77 | 38.9 | -0.501 | -0.002 | 0 |

| Nodo | Cont. | Reazione a traslazione | | | Reazione a rotazione | | |
|---|---|---|---|---|---|---|---|
| Ind. | N.br. | x | y | z | x | y | z |
| 233 | SLU 6 | 0 | 7.8 | 39.3 | -0.5051 | -0.0023 | 0 |
| 233 | SLU 7 | 0 | 7.78 | 39.18 | -0.5039 | -0.0022 | 0 |
| 233 | SLU 8 | 0 | 7.64 | 38.63 | -0.4946 | -0.0023 | 0 |
| 233 | SLU 9 | 0 | 7.62 | 38.51 | -0.4934 | -0.0022 | 0 |
| 233 | SLU 10 | 0 | 9.58 | 47.64 | -0.6117 | -0.002 | 0 |
| 233 | SLU 11 | 0 | 9.61 | 48.04 | -0.6158 | -0.0022 | 0 |
| 233 | SLU 12 | 0 | 9.59 | 47.92 | -0.6146 | -0.0022 | 0 |
| 233 | SLU 13 | 0 | 9.42 | 47.17 | -0.6033 | -0.0022 | 0 |
| 233 | SLU 14 | 0 | 9.45 | 47.58 | -0.6074 | -0.0025 | 0 |
| 233 | SLU 15 | 0 | 9.43 | 47.46 | -0.6062 | -0.0025 | 0 |
| 233 | SLU 16 | 0 | 9.29 | 46.9 | -0.5969 | -0.0025 | 0 |
| 233 | SLU 17 | 0 | 9.27 | 46.79 | -0.5957 | -0.0025 | 0 |
| 233 | SLU 18 | 0 | 10.32 | 51.38 | -0.6575 | -0.0021 | 0 |
| 233 | SLU 19 | 0 | 10.3 | 51.27 | -0.6563 | -0.0021 | 0 |
| 233 | SLU 20 | 0 | 10.16 | 50.92 | -0.6492 | -0.0024 | 0 |
| 233 | SLU 21 | 0 | 10.14 | 50.8 | -0.648 | -0.0023 | 0 |
| 233 | SLU 22 | 0 | 9.32 | 46.38 | -0.5973 | -0.0021 | 0 |
| 233 | SLU 23 | 0 | 9.29 | 46.18 | -0.5954 | -0.0021 | 0 |
| 233 | SLU 24 | 0 | 9.32 | 46.59 | -0.5994 | -0.0024 | 0 |
| 233 | SLU 25 | 0 | 9.3 | 46.47 | -0.5983 | -0.0023 | 0 |
| 233 | SLU 26 | 0 | 9.13 | 45.72 | -0.587 | -0.0023 | 0 |
| 233 | SLU 27 | 0 | 9.15 | 46.12 | -0.5911 | -0.0026 | 0 |
| 233 | SLU 28 | 0 | 9.14 | 46 | -0.5899 | -0.0026 | 0 |
| 233 | SLU 29 | 0 | 9 | 45.45 | -0.5806 | -0.0026 | 0 |
| 233 | SLU 30 | 0 | 8.98 | 45.33 | -0.5794 | -0.0026 | 0 |
| 233 | SLU 31 | 0 | 10.93 | 54.46 | -0.6977 | -0.0023 | 0 |
| 233 | SLU 32 | 0 | 10.96 | 54.86 | -0.7018 | -0.0026 | 0 |
| 233 | SLU 33 | 0 | 10.94 | 54.74 | -0.7006 | -0.0026 | 0 |
| 233 | SLU 34 | 0 | 10.77 | 53.99 | -0.6893 | -0.0026 | 0 |
| 233 | SLU 35 | 0 | 10.8 | 54.39 | -0.6934 | -0.0029 | 0 |
| 233 | SLU 36 | 0 | 10.78 | 54.27 | -0.6922 | -0.0028 | 0 |
| 233 | SLU 37 | 0 | 10.64 | 53.72 | -0.6829 | -0.0029 | 0 |
| 233 | SLU 38 | 0 | 10.62 | 53.6 | -0.6817 | -0.0028 | 0 |
| 233 | SLU 39 | 0 | 11.67 | 58.2 | -0.7435 | -0.0025 | 0 |
| 233 | SLU 40 | 0 | 11.65 | 58.08 | -0.7424 | -0.0024 | 0 |
| 233 | SLU 41 | 0 | 11.51 | 57.73 | -0.7352 | -0.0027 | 0 |
| 233 | SLU 42 | 0 | 11.49 | 57.61 | -0.734 | -0.0027 | 0 |
| 233 | SLU 43 | 0 | 9.89 | 49.1 | -0.6352 | -0.0022 | 0 |
| 233 | SLU 44 | 0 | 9.86 | 48.9 | -0.6332 | -0.0021 | 0 |
| 233 | SLU 45 | 0 | 9.89 | 49.3 | -0.6373 | -0.0024 | 0 |
| 233 | SLU 46 | 0 | 9.87 | 49.19 | -0.6362 | -0.0024 | 0 |
| 233 | SLU 47 | 0 | 9.7 | 48.43 | -0.6249 | -0.0024 | 0 |
| 233 | SLU 48 | 0 | 9.73 | 48.84 | -0.629 | -0.0027 | 0 |
| 233 | SLU 49 | 0 | 9.71 | 48.72 | -0.6278 | -0.0026 | 0 |
| 233 | SLU 50 | 0 | 9.57 | 48.17 | -0.6185 | -0.0027 | 0 |
| 233 | SLU 51 | 0 | 9.55 | 48.05 | -0.6173 | -0.0026 | 0 |
| 233 | SLU 52 | 0 | 11.51 | 57.17 | -0.7356 | -0.0024 | 0 |
| 233 | SLU 53 | 0 | 11.54 | 57.58 | -0.7397 | -0.0027 | 0 |
| 233 | SLU 54 | 0 | 11.52 | 57.46 | -0.7385 | -0.0026 | 0 |
| 233 | SLU 55 | 0 | 11.35 | 56.71 | -0.7272 | -0.0026 | 0 |
| 233 | SLU 56 | 0 | 11.38 | 57.11 | -0.7313 | -0.0029 | 0 |
| 233 | SLU 57 | 0 | 11.36 | 56.99 | -0.7301 | -0.0029 | 0 |
| 233 | SLU 58 | 0 | 11.22 | 56.44 | -0.7208 | -0.0029 | 0 |
| 233 | SLU 59 | 0 | 11.2 | 56.32 | -0.7196 | -0.0029 | 0 |
| 233 | SLU 60 | 0 | 12.25 | 60.92 | -0.7814 | -0.0025 | 0 |
| 233 | SLU 61 | 0 | 12.23 | 60.8 | -0.7802 | -0.0025 | 0 |
| 233 | SLU 62 | 0 | 12.08 | 60.45 | -0.7731 | -0.0028 | 0 |
| 233 | SLU 63 | 0 | 12.06 | 60.33 | -0.7719 | -0.0027 | 0 |
| 233 | SLU 64 | 0 | 11.25 | 55.91 | -0.7212 | -0.0026 | 0 |
| 233 | SLU 65 | 0 | 11.21 | 55.72 | -0.7193 | -0.0025 | 0 |
| 233 | SLU 66 | 0 | 11.24 | 56.12 | -0.7233 | -0.0028 | 0 |
| 233 | SLU 67 | 0 | 11.22 | 56 | -0.7222 | -0.0028 | 0 |
| 233 | SLU 68 | 0 | 11.05 | 55.25 | -0.7109 | -0.0027 | 0 |
| 233 | SLU 69 | 0 | 11.08 | 55.65 | -0.715 | -0.003 | 0 |
| 233 | SLU 70 | 0 | 11.06 | 55.53 | -0.7138 | -0.003 | 0 |
| 233 | SLU 71 | 0 | 10.92 | 54.98 | -0.7045 | -0.003 | 0 |
| 233 | SLU 72 | 0 | 10.9 | 54.86 | -0.7033 | -0.003 | 0 |
| 233 | SLU 73 | 0 | 12.86 | 63.99 | -0.8216 | -0.0027 | 0 |
| 233 | SLU 74 | 0 | 12.89 | 64.39 | -0.8257 | -0.003 | 0 |
| 233 | SLU 75 | 0 | 12.87 | 64.27 | -0.8245 | -0.003 | 0 |
| 233 | SLU 76 | 0 | 12.7 | 63.52 | -0.8132 | -0.003 | 0 |
| 233 | SLU 77 | 0 | 12.73 | 63.92 | -0.8173 | -0.0033 | 0 |
| 233 | SLU 78 | 0 | 12.71 | 63.81 | -0.8162 | -0.0032 | 0 |
| 233 | SLU 79 | 0 | 12.57 | 63.25 | -0.8068 | -0.0033 | 0 |
| 233 | SLU 80 | 0 | 12.55 | 63.13 | -0.8056 | -0.0032 | 0 |
| 233 | SLU 81 | 0 | 13.6 | 67.73 | -0.8674 | -0.0029 | 0 |
| 233 | SLU 82 | 0 | 13.58 | 67.61 | -0.8663 | -0.0029 | 0 |
| 233 | SLU 83 | 0 | 13.43 | 67.27 | -0.8591 | -0.0031 | 0 |
| 233 | SLU 84 | 0 | 13.42 | 67.15 | -0.8579 | -0.0031 | 0 |
| 233 | SLE RA 1 | 0 | 8.35 | 41.51 | -0.5359 | -0.0019 | 0 |
| 233 | SLE RA 2 | 0 | 8.33 | 41.38 | -0.5346 | -0.0018 | 0 |
| 233 | SLE RA 3 | 0 | 8.35 | 41.65 | -0.5373 | -0.002 | 0 |
| 233 | SLE RA 4 | 0 | 8.34 | 41.57 | -0.5365 | -0.002 | 0 |
| 233 | SLE RA 5 | 0 | 8.22 | 41.07 | -0.529 | -0.002 | 0 |
| 233 | SLE RA 6 | 0 | 8.24 | 41.34 | -0.5317 | -0.0022 | 0 |
| 233 | SLE RA 7 | 0 | 8.23 | 41.26 | -0.5309 | -0.0022 | 0 |
| 233 | SLE RA 8 | 0 | 8.14 | 40.89 | -0.5247 | -0.0022 | 0 |
| 233 | SLE RA 9 | 0 | 8.12 | 40.81 | -0.5239 | -0.0022 | 0 |

| Nodo | Cont. | Reazione a traslazione | | | Reazione a rotazione | | |
|---|---|---|---|---|---|---|---|
| Ind. | N.br. | x | y | z | x | y | z |
| 233 | SLE RA 10 | 0 | 9.43 | 46.9 | -0.6028 | -0.002 | 0 |
| 233 | SLE RA 11 | 0 | 9.45 | 47.17 | -0.6055 | -0.0022 | 0 |
| 233 | SLE RA 12 | 0 | 9.44 | 47.09 | -0.6048 | -0.0022 | 0 |
| 233 | SLE RA 13 | 0 | 9.32 | 46.58 | -0.5972 | -0.0022 | 0 |
| 233 | SLE RA 14 | 0 | 9.34 | 46.85 | -0.6 | -0.0024 | 0 |
| 233 | SLE RA 15 | 0 | 9.33 | 46.77 | -0.5992 | -0.0023 | 0 |
| 233 | SLE RA 16 | 0 | 9.23 | 46.41 | -0.5929 | -0.0024 | 0 |
| 233 | SLE RA 17 | 0 | 9.22 | 46.33 | -0.5922 | -0.0023 | 0 |
| 233 | SLE RA 18 | 0 | 9.92 | 49.39 | -0.6334 | -0.0021 | 0 |
| 233 | SLE RA 19 | 0 | 9.91 | 49.31 | -0.6326 | -0.0021 | 0 |
| 233 | SLE RA 20 | 0 | 9.81 | 49.08 | -0.6278 | -0.0023 | 0 |
| 233 | SLE RA 21 | 0 | 9.8 | 49 | -0.627 | -0.0022 | 0 |
| 233 | SLE FR 1 | 0 | 8.35 | 41.51 | -0.5359 | -0.0019 | 0 |
| 233 | SLE FR 2 | 0 | 8.35 | 41.49 | -0.5356 | -0.0019 | 0 |
| 233 | SLE FR 3 | 0 | 8.31 | 41.39 | -0.5336 | -0.002 | 0 |
| 233 | SLE FR 4 | 0 | 8.82 | 43.85 | -0.5649 | -0.0019 | 0 |
| 233 | SLE FR 5 | 0 | 8.78 | 43.75 | -0.5629 | -0.002 | 0 |
| 233 | SLE FR 6 | 0 | 9.14 | 45.45 | -0.5846 | -0.002 | 0 |
| 233 | SLE QP 1 | 0 | 8.35 | 41.51 | -0.5359 | -0.0019 | 0 |
| 233 | SLE QP 2 | 0 | 8.82 | 43.88 | -0.5651 | -0.002 | 0 |
| 233 | SLD 1 | 0.59 | 10.89 | 52.94 | -0.6767 | 0.5385 | 0.0025 |
| 233 | SLD 2 | 0.59 | 10.89 | 52.94 | -0.6767 | 0.5385 | 0.0025 |
| 233 | SLD 3 | 0.55 | 7.83 | 40.52 | -0.5138 | 0.5041 | 0.0024 |
| 233 | SLD 4 | 0.55 | 7.83 | 40.52 | -0.5138 | 0.5041 | 0.0024 |
| 233 | SLD 5 | 0.24 | 14.09 | 65.45 | -0.8458 | 0.2123 | 0.001 |
| 233 | SLD 6 | 0.24 | 14.09 | 65.45 | -0.8458 | 0.2123 | 0.001 |
| 233 | SLD 7 | 0.1 | 3.88 | 24.02 | -0.3026 | 0.0977 | 0.0004 |
| 233 | SLD 8 | 0.1 | 3.88 | 24.02 | -0.3026 | 0.0977 | 0.0004 |
| 233 | SLD 9 | -0.11 | 13.77 | 63.74 | -0.8277 | -0.1017 | -0.0005 |
| 233 | SLD 10 | -0.11 | 13.77 | 63.74 | -0.8277 | -0.1017 | -0.0005 |
| 233 | SLD 11 | -0.24 | 3.56 | 22.31 | -0.2845 | -0.2162 | -0.001 |
| 233 | SLD 12 | -0.24 | 3.56 | 22.31 | -0.2845 | -0.2162 | -0.001 |
| 233 | SLD 13 | -0.56 | 9.82 | 47.24 | -0.6165 | -0.508 | -0.0024 |
| 233 | SLD 14 | -0.56 | 9.82 | 47.24 | -0.6165 | -0.508 | -0.0024 |
| 233 | SLD 15 | -0.6 | 6.76 | 34.81 | -0.4535 | -0.5424 | -0.0025 |
| 233 | SLD 16 | -0.6 | 6.76 | 34.81 | -0.4535 | -0.5424 | -0.0025 |
| 233 | SLV 1 | 1.79 | 13.73 | 65.63 | -0.8302 | 1.6449 | 0.0077 |
| 233 | SLV 2 | 1.79 | 13.73 | 65.63 | -0.8302 | 1.6449 | 0.0077 |
| 233 | SLV 3 | 1.68 | 6.48 | 35.72 | -0.4439 | 1.548 | 0.0072 |
| 233 | SLV 4 | 1.68 | 6.48 | 35.72 | -0.4439 | 1.548 | 0.0072 |
| 233 | SLV 5 | 0.71 | 21.29 | 95.76 | -1.2305 | 0.6391 | 0.003 |
| 233 | SLV 6 | 0.71 | 21.29 | 95.76 | -1.2305 | 0.6391 | 0.003 |
| 233 | SLV 7 | 0.34 | -2.88 | -3.92 | 0.0571 | 0.3161 | 0.0014 |
| 233 | SLV 8 | 0.34 | -2.88 | -3.92 | 0.0571 | 0.3161 | 0.0014 |
| 233 | SLV 9 | -0.34 | 20.52 | 91.68 | -1.1873 | -0.32 | -0.0015 |
| 233 | SLV 10 | -0.34 | 20.52 | 91.68 | -1.1873 | -0.32 | -0.0015 |
| 233 | SLV 11 | -0.71 | -3.64 | -8 | 0.1002 | -0.643 | -0.003 |
| 233 | SLV 12 | -0.71 | -3.64 | -8 | 0.1002 | -0.643 | -0.003 |
| 233 | SLV 13 | -1.69 | 11.17 | 52.03 | -0.6864 | -1.5519 | -0.0072 |
| 233 | SLV 14 | -1.69 | 11.17 | 52.03 | -0.6864 | -1.5519 | -0.0072 |
| 233 | SLV 15 | -1.8 | 3.92 | 22.13 | -0.3001 | -1.6488 | -0.0077 |
| 233 | SLV 16 | -1.8 | 3.92 | 22.13 | -0.3001 | -1.6488 | -0.0077 |
| 234 | SLU 1 | -0.34 | 5.03 | 50.85 | -0.3192 | -0.2269 | -0.0001 |
| 234 | SLU 2 | -0.32 | 5.39 | 51.54 | -0.3374 | -0.2058 | 0 |
| 234 | SLU 3 | -0.36 | 5.16 | 52.39 | -0.3273 | -0.2339 | -0.0001 |
| 234 | SLU 4 | -0.34 | 5.38 | 52.8 | -0.3383 | -0.2213 | -0.0001 |
| 234 | SLU 5 | -0.33 | 5.49 | 52.62 | -0.3431 | -0.2102 | 0 |
| 234 | SLU 6 | -0.36 | 5.26 | 53.46 | -0.333 | -0.2383 | -0.0001 |
| 234 | SLU 7 | -0.35 | 5.48 | 53.88 | -0.3439 | -0.2257 | -0.0001 |
| 234 | SLU 8 | -0.36 | 5.23 | 53 | -0.3306 | -0.2356 | -0.0001 |
| 234 | SLU 9 | -0.34 | 5.44 | 53.42 | -0.3415 | -0.223 | -0.0001 |
| 234 | SLU 10 | -0.36 | 5.84 | 56.83 | -0.3676 | -0.2344 | -0.0001 |
| 234 | SLU 11 | -0.4 | 5.61 | 57.68 | -0.3575 | -0.2625 | -0.0001 |
| 234 | SLU 12 | -0.38 | 5.83 | 58.09 | -0.3684 | -0.2498 | -0.0001 |
| 234 | SLU 13 | -0.37 | 5.94 | 57.91 | -0.3733 | -0.2387 | -0.0001 |
| 234 | SLU 14 | -0.41 | 5.71 | 58.76 | -0.3631 | -0.2668 | -0.0001 |
| 234 | SLU 15 | -0.39 | 5.93 | 59.17 | -0.3741 | -0.2542 | -0.0001 |
| 234 | SLU 16 | -0.4 | 5.68 | 58.3 | -0.3607 | -0.2641 | -0.0001 |
| 234 | SLU 17 | -0.39 | 5.89 | 58.71 | -0.3716 | -0.2515 | -0.0001 |
| 234 | SLU 18 | -0.41 | 5.67 | 58.41 | -0.3623 | -0.2676 | -0.0001 |
| 234 | SLU 19 | -0.39 | 5.89 | 58.83 | -0.3732 | -0.255 | -0.0001 |
| 234 | SLU 20 | -0.41 | 5.77 | 59.49 | -0.3679 | -0.272 | -0.0001 |
| 234 | SLU 21 | -0.4 | 5.99 | 59.9 | -0.3789 | -0.2594 | -0.0001 |
| 234 | SLU 22 | -0.39 | 5.5 | 56.3 | -0.3502 | -0.2556 | -0.0001 |
| 234 | SLU 23 | -0.36 | 5.86 | 56.99 | -0.3684 | -0.2345 | -0.0001 |
| 234 | SLU 24 | -0.4 | 5.63 | 57.84 | -0.3583 | -0.2626 | -0.0001 |
| 234 | SLU 25 | -0.38 | 5.84 | 58.25 | -0.3692 | -0.25 | -0.0001 |
| 234 | SLU 26 | -0.37 | 5.96 | 58.07 | -0.3741 | -0.2389 | -0.0001 |
| 234 | SLU 27 | -0.41 | 5.73 | 58.91 | -0.364 | -0.267 | -0.0001 |
| 234 | SLU 28 | -0.39 | 5.94 | 59.33 | -0.3749 | -0.2544 | -0.0001 |
| 234 | SLU 29 | -0.4 | 5.7 | 58.45 | -0.3616 | -0.2643 | -0.0001 |
| 234 | SLU 30 | -0.39 | 5.91 | 58.87 | -0.3725 | -0.2517 | -0.0001 |
| 234 | SLU 31 | -0.41 | 6.3 | 62.28 | -0.3985 | -0.2631 | -0.0001 |
| 234 | SLU 32 | -0.44 | 6.08 | 63.13 | -0.3884 | -0.2912 | -0.0001 |
| 234 | SLU 33 | -0.43 | 6.29 | 63.54 | -0.3994 | -0.2786 | -0.0001 |
| 234 | SLU 34 | -0.41 | 6.4 | 63.36 | -0.4042 | -0.2674 | -0.0001 |
| 234 | SLU 35 | -0.45 | 6.18 | 64.2 | -0.3941 | -0.2955 | -0.0001 |
| 234 | SLU 36 | -0.43 | 6.39 | 64.62 | -0.405 | -0.2829 | -0.0001 |

| Nodo | Cont. | Reazione a traslazione | | | Reazione a rotazione | | |
|---|---|---|---|---|---|---|---|
| Ind. | N.br. | x | y | z | x | y | z |
| 234 | SLU 37 | -0.44 | 6.15 | 63.74 | -0.3917 | -0.2928 | -0.0001 |
| 234 | SLU 38 | -0.43 | 6.36 | 64.16 | -0.4026 | -0.2802 | -0.0001 |
| 234 | SLU 39 | -0.45 | 6.14 | 63.86 | -0.3932 | -0.2963 | -0.0001 |
| 234 | SLU 40 | -0.43 | 6.35 | 64.28 | -0.4042 | -0.2837 | -0.0001 |
| 234 | SLU 41 | -0.46 | 6.24 | 64.94 | -0.3989 | -0.3007 | -0.0001 |
| 234 | SLU 42 | -0.44 | 6.45 | 65.35 | -0.4098 | -0.2881 | -0.0001 |
| 234 | SLU 43 | -0.43 | 6.38 | 64.24 | -0.4044 | -0.2851 | -0.0001 |
| 234 | SLU 44 | -0.41 | 6.74 | 64.93 | -0.4226 | -0.264 | -0.0001 |
| 234 | SLU 45 | -0.44 | 6.51 | 65.78 | -0.4125 | -0.2921 | -0.0001 |
| 234 | SLU 46 | -0.43 | 6.72 | 66.19 | -0.4234 | -0.2795 | -0.0001 |
| 234 | SLU 47 | -0.41 | 6.84 | 66.01 | -0.4283 | -0.2684 | -0.0001 |
| 234 | SLU 48 | -0.45 | 6.61 | 66.85 | -0.4182 | -0.2965 | -0.0001 |
| 234 | SLU 49 | -0.44 | 6.82 | 67.27 | -0.4291 | -0.2839 | -0.0001 |
| 234 | SLU 50 | -0.45 | 6.58 | 66.39 | -0.4157 | -0.2938 | -0.0001 |
| 234 | SLU 51 | -0.43 | 6.79 | 66.81 | -0.4267 | -0.2812 | -0.0001 |
| 234 | SLU 52 | -0.45 | 7.18 | 70.22 | -0.4527 | -0.2926 | -0.0001 |
| 234 | SLU 53 | -0.49 | 6.96 | 71.07 | -0.4426 | -0.3207 | -0.0001 |
| 234 | SLU 54 | -0.47 | 7.17 | 71.48 | -0.4535 | -0.3081 | -0.0001 |
| 234 | SLU 55 | -0.46 | 7.28 | 71.3 | -0.4584 | -0.297 | -0.0001 |
| 234 | SLU 56 | -0.49 | 7.06 | 72.14 | -0.4483 | -0.325 | -0.0001 |
| 234 | SLU 57 | -0.48 | 7.27 | 72.56 | -0.4592 | -0.3124 | -0.0001 |
| 234 | SLU 58 | -0.49 | 7.03 | 71.68 | -0.4459 | -0.3224 | -0.0001 |
| 234 | SLU 59 | -0.47 | 7.24 | 72.1 | -0.4568 | -0.3097 | -0.0001 |
| 234 | SLU 60 | -0.49 | 7.02 | 71.8 | -0.4474 | -0.3259 | -0.0001 |
| 234 | SLU 61 | -0.48 | 7.23 | 72.21 | -0.4583 | -0.3132 | -0.0001 |
| 234 | SLU 62 | -0.5 | 7.12 | 72.88 | -0.4531 | -0.3302 | -0.0001 |
| 234 | SLU 63 | -0.49 | 7.33 | 73.29 | -0.464 | -0.3176 | -0.0001 |
| 234 | SLU 64 | -0.48 | 6.85 | 69.69 | -0.4353 | -0.3138 | -0.0001 |
| 234 | SLU 65 | -0.45 | 7.2 | 70.38 | -0.4536 | -0.2928 | -0.0001 |
| 234 | SLU 66 | -0.49 | 6.98 | 71.23 | -0.4434 | -0.3208 | -0.0001 |
| 234 | SLU 67 | -0.47 | 7.19 | 71.64 | -0.4544 | -0.3082 | -0.0001 |
| 234 | SLU 68 | -0.46 | 7.3 | 71.45 | -0.4592 | -0.2971 | -0.0001 |
| 234 | SLU 69 | -0.49 | 7.08 | 72.3 | -0.4491 | -0.3252 | -0.0001 |
| 234 | SLU 70 | -0.48 | 7.29 | 72.71 | -0.4601 | -0.3126 | -0.0001 |
| 234 | SLU 71 | -0.49 | 7.05 | 71.84 | -0.4467 | -0.3225 | -0.0001 |
| 234 | SLU 72 | -0.47 | 7.26 | 72.25 | -0.4576 | -0.3099 | -0.0001 |
| 234 | SLU 73 | -0.49 | 7.65 | 75.67 | -0.4837 | -0.3213 | -0.0001 |
| 234 | SLU 74 | -0.53 | 7.43 | 76.52 | -0.4736 | -0.3494 | -0.0001 |
| 234 | SLU 75 | -0.52 | 7.64 | 76.93 | -0.4845 | -0.3368 | -0.0001 |
| 234 | SLU 76 | -0.5 | 7.75 | 76.75 | -0.4894 | -0.3257 | -0.0001 |
| 234 | SLU 77 | -0.54 | 7.53 | 77.59 | -0.4793 | -0.3538 | -0.0001 |
| 234 | SLU 78 | -0.52 | 7.74 | 78.01 | -0.4902 | -0.3411 | -0.0001 |
| 234 | SLU 79 | -0.53 | 7.5 | 77.13 | -0.4768 | -0.3511 | -0.0001 |
| 234 | SLU 80 | -0.52 | 7.71 | 77.55 | -0.4878 | -0.3384 | -0.0001 |
| 234 | SLU 81 | -0.54 | 7.49 | 77.25 | -0.4784 | -0.3546 | -0.0001 |
| 234 | SLU 82 | -0.52 | 7.7 | 77.66 | -0.4893 | -0.3419 | -0.0001 |
| 234 | SLU 83 | -0.54 | 7.59 | 78.33 | -0.4841 | -0.3589 | -0.0001 |
| 234 | SLU 84 | -0.53 | 7.8 | 78.74 | -0.495 | -0.3463 | -0.0001 |
| 234 | SLE RA 1 | -0.36 | 5.16 | 52.41 | -0.3281 | -0.2351 | -0.0001 |
| 234 | SLE RA 2 | -0.34 | 5.4 | 52.87 | -0.3402 | -0.221 | -0.0001 |
| 234 | SLE RA 3 | -0.36 | 5.25 | 53.43 | -0.3335 | -0.2398 | -0.0001 |
| 234 | SLE RA 4 | -0.35 | 5.39 | 53.71 | -0.3408 | -0.2314 | -0.0001 |
| 234 | SLE RA 5 | -0.34 | 5.47 | 53.59 | -0.344 | -0.224 | -0.0001 |
| 234 | SLE RA 6 | -0.37 | 5.32 | 54.15 | -0.3373 | -0.2427 | -0.0001 |
| 234 | SLE RA 7 | -0.36 | 5.46 | 54.43 | -0.3446 | -0.2343 | -0.0001 |
| 234 | SLE RA 8 | -0.37 | 5.3 | 53.84 | -0.3356 | -0.2409 | -0.0001 |
| 234 | SLE RA 9 | -0.36 | 5.44 | 54.12 | -0.3429 | -0.2325 | -0.0001 |
| 234 | SLE RA 10 | -0.37 | 5.7 | 56.4 | -0.3603 | -0.2401 | -0.0001 |
| 234 | SLE RA 11 | -0.39 | 5.55 | 56.96 | -0.3536 | -0.2588 | -0.0001 |
| 234 | SLE RA 12 | -0.38 | 5.69 | 57.24 | -0.3608 | -0.2504 | -0.0001 |
| 234 | SLE RA 13 | -0.37 | 5.77 | 57.11 | -0.3641 | -0.243 | -0.0001 |
| 234 | SLE RA 14 | -0.4 | 5.62 | 57.68 | -0.3573 | -0.2617 | -0.0001 |
| 234 | SLE RA 15 | -0.39 | 5.76 | 57.95 | -0.3646 | -0.2533 | -0.0001 |
| 234 | SLE RA 16 | -0.39 | 5.6 | 57.37 | -0.3557 | -0.2599 | -0.0001 |
| 234 | SLE RA 17 | -0.38 | 5.74 | 57.65 | -0.363 | -0.2515 | -0.0001 |
| 234 | SLE RA 18 | -0.4 | 5.59 | 57.45 | -0.3568 | -0.2622 | -0.0001 |
| 234 | SLE RA 19 | -0.39 | 5.73 | 57.73 | -0.364 | -0.2538 | -0.0001 |
| 234 | SLE RA 20 | -0.4 | 5.66 | 58.17 | -0.3606 | -0.2652 | -0.0001 |
| 234 | SLE RA 21 | -0.39 | 5.8 | 58.44 | -0.3678 | -0.2567 | -0.0001 |
| 234 | SLE FR 1 | -0.36 | 5.16 | 52.41 | -0.3281 | -0.2351 | -0.0001 |
| 234 | SLE FR 2 | -0.35 | 5.21 | 52.5 | -0.3305 | -0.2323 | -0.0001 |
| 234 | SLE FR 3 | -0.36 | 5.19 | 52.7 | -0.3296 | -0.2362 | -0.0001 |
| 234 | SLE FR 4 | -0.37 | 5.34 | 54.02 | -0.3391 | -0.2404 | -0.0001 |
| 234 | SLE FR 5 | -0.37 | 5.32 | 54.21 | -0.3382 | -0.2444 | -0.0001 |
| 234 | SLE FR 6 | -0.38 | 5.38 | 54.93 | -0.3424 | -0.2487 | -0.0001 |
| 234 | SLE QP 1 | -0.36 | 5.16 | 52.41 | -0.3281 | -0.2351 | -0.0001 |
| 234 | SLE QP 2 | -0.37 | 5.29 | 53.92 | -0.3367 | -0.2432 | -0.0001 |
| 234 | SLD 1 | -0.6 | 8.25 | 70.44 | -0.5086 | -0.4225 | 0 |
| 234 | SLD 2 | -0.6 | 8.25 | 70.44 | -0.5086 | -0.4225 | 0 |
| 234 | SLD 3 | -0.7 | 5.12 | 63.23 | -0.3311 | -0.5031 | 0.0002 |
| 234 | SLD 4 | -0.7 | 5.12 | 63.23 | -0.3311 | -0.5031 | 0.0002 |
| 234 | SLD 5 | -0.29 | 10.93 | 69.81 | -0.6575 | -0.1748 | -0.0003 |
| 234 | SLD 6 | -0.29 | 10.93 | 69.81 | -0.6575 | -0.1748 | -0.0003 |
| 234 | SLD 7 | -0.62 | 0.49 | 45.78 | -0.0657 | -0.4434 | 0.0002 |
| 234 | SLD 8 | -0.62 | 0.49 | 45.78 | -0.0657 | -0.4434 | 0.0002 |
| 234 | SLD 9 | -0.12 | 10.09 | 62.06 | -0.6076 | -0.043 | -0.0004 |
| 234 | SLD 10 | -0.12 | 10.09 | 62.06 | -0.6076 | -0.043 | -0.0004 |
| 234 | SLD 11 | -0.45 | -0.34 | 38.04 | -0.0158 | -0.3117 | 0.0001 |

| Nodo | Cont. | Reazione a traslazione | | | Reazione a rotazione | | |
|---|---|---|---|---|---|---|---|
| Ind. | N.br. | x | y | z | x | y | z |
| 234 | SLD 12 | -0.45 | -0.34 | 38.04 | -0.0158 | -0.3117 | 0.0001 |
| 234 | SLD 13 | -0.04 | 5.46 | 44.62 | -0.3423 | 0.0167 | -0.0003 |
| 234 | SLD 14 | -0.04 | 5.46 | 44.62 | -0.3423 | 0.0167 | -0.0003 |
| 234 | SLD 15 | -0.14 | 2.33 | 37.41 | -0.1647 | -0.0639 | -0.0002 |
| 234 | SLD 16 | -0.14 | 2.33 | 37.41 | -0.1647 | -0.0639 | -0.0002 |
| 234 | SLV 1 | -0.91 | 12.23 | 92.51 | -0.7392 | -0.6613 | 0.0002 |
| 234 | SLV 2 | -0.91 | 12.23 | 92.51 | -0.7392 | -0.6613 | 0.0002 |
| 234 | SLV 3 | -1.16 | 4.97 | 75.74 | -0.3275 | -0.8664 | 0.0006 |
| 234 | SLV 4 | -1.16 | 4.97 | 75.74 | -0.3275 | -0.8664 | 0.0006 |
| 234 | SLV 5 | -0.15 | 18.38 | 90.94 | -1.0819 | -0.0576 | -0.0005 |
| 234 | SLV 6 | -0.15 | 18.38 | 90.94 | -1.0819 | -0.0576 | -0.0005 |
| 234 | SLV 7 | -0.99 | -5.81 | 35.03 | 0.2905 | -0.7412 | 0.0007 |
| 234 | SLV 8 | -0.99 | -5.81 | 35.03 | 0.2905 | -0.7412 | 0.0007 |
| 234 | SLV 9 | 0.25 | 16.39 | 72.82 | -0.9639 | 0.2547 | -0.0008 |
| 234 | SLV 10 | 0.25 | 16.39 | 72.82 | -0.9639 | 0.2547 | -0.0008 |
| 234 | SLV 11 | -0.59 | -7.79 | 16.91 | 0.4085 | -0.4288 | 0.0004 |
| 234 | SLV 12 | -0.59 | -7.79 | 16.91 | 0.4085 | -0.4288 | 0.0004 |
| 234 | SLV 13 | 0.42 | 5.61 | 32.11 | -0.3459 | 0.3799 | -0.0007 |
| 234 | SLV 14 | 0.42 | 5.61 | 32.11 | -0.3459 | 0.3799 | -0.0007 |
| 234 | SLV 15 | 0.17 | -1.64 | 15.33 | 0.0658 | 0.1749 | -0.0004 |
| 234 | SLV 16 | 0.17 | -1.64 | 15.33 | 0.0658 | 0.1749 | -0.0004 |
| 235 | SLU 1 | 0 | -2.9 | 54.56 | 0.1132 | 0.0046 | 0 |
| 235 | SLU 2 | -0.02 | -2.41 | 53.87 | 0.0905 | -0.0143 | 0 |
| 235 | SLU 3 | 0 | -3.03 | 55.85 | 0.1181 | 0.0049 | 0 |
| 235 | SLU 4 | -0.01 | -2.74 | 55.44 | 0.1045 | -0.0064 | 0 |
| 235 | SLU 5 | -0.02 | -2.49 | 54.47 | 0.0931 | -0.014 | 0 |
| 235 | SLU 6 | 0 | -3.11 | 56.45 | 0.1207 | 0.0052 | 0 |
| 235 | SLU 7 | -0.01 | -2.82 | 56.03 | 0.107 | -0.0061 | 0 |
| 235 | SLU 8 | 0 | -3.05 | 55.75 | 0.1184 | 0.0053 | 0 |
| 235 | SLU 9 | -0.01 | -2.76 | 55.34 | 0.1047 | -0.0061 | 0 |
| 235 | SLU 10 | -0.02 | -3.01 | 60.42 | 0.1134 | -0.0141 | 0 |
| 235 | SLU 11 | 0 | -3.62 | 62.41 | 0.141 | 0.0051 | 0 |
| 235 | SLU 12 | -0.01 | -3.33 | 61.99 | 0.1274 | -0.0062 | 0 |
| 235 | SLU 13 | -0.02 | -3.08 | 61.02 | 0.116 | -0.0138 | 0 |
| 235 | SLU 14 | 0 | -3.7 | 63 | 0.1436 | 0.0054 | 0 |
| 235 | SLU 15 | -0.01 | -3.41 | 62.59 | 0.13 | -0.0059 | 0 |
| 235 | SLU 16 | 0 | -3.64 | 62.31 | 0.1413 | 0.0055 | 0 |
| 235 | SLU 17 | -0.01 | -3.35 | 61.89 | 0.1277 | -0.0059 | 0 |
| 235 | SLU 18 | 0 | -3.74 | 63.92 | 0.146 | 0.0049 | 0 |
| 235 | SLU 19 | -0.01 | -3.45 | 63.51 | 0.1324 | -0.0065 | 0 |
| 235 | SLU 20 | 0 | -3.82 | 64.52 | 0.1486 | 0.0052 | 0 |
| 235 | SLU 21 | -0.01 | -3.53 | 64.1 | 0.1349 | -0.0061 | 0 |
| 235 | SLU 22 | 0 | -3.49 | 60.93 | 0.1359 | 0.005 | 0 |
| 235 | SLU 23 | -0.02 | -3.01 | 60.23 | 0.1131 | -0.0139 | 0 |
| 235 | SLU 24 | 0 | -3.62 | 62.22 | 0.1408 | 0.0053 | 0 |
| 235 | SLU 25 | -0.01 | -3.33 | 61.8 | 0.1271 | -0.006 | 0 |
| 235 | SLU 26 | -0.02 | -3.08 | 60.83 | 0.1157 | -0.0136 | 0 |
| 235 | SLU 27 | 0 | -3.7 | 62.81 | 0.1433 | 0.0057 | 0 |
| 235 | SLU 28 | -0.01 | -3.41 | 62.4 | 0.1297 | -0.0057 | 0 |
| 235 | SLU 29 | 0 | -3.64 | 62.12 | 0.141 | 0.0057 | 0 |
| 235 | SLU 30 | -0.01 | -3.35 | 61.7 | 0.1274 | -0.0057 | 0 |
| 235 | SLU 31 | -0.02 | -3.6 | 66.79 | 0.1361 | -0.0137 | 0 |
| 235 | SLU 32 | 0 | -4.22 | 68.77 | 0.1637 | 0.0055 | 0 |
| 235 | SLU 33 | -0.01 | -3.93 | 68.35 | 0.15 | -0.0058 | 0 |
| 235 | SLU 34 | -0.02 | -3.68 | 67.38 | 0.1386 | -0.0134 | 0 |
| 235 | SLU 35 | 0 | -4.29 | 69.36 | 0.1663 | 0.0059 | 0 |
| 235 | SLU 36 | -0.01 | -4 | 68.95 | 0.1526 | -0.0055 | 0 |
| 235 | SLU 37 | 0 | -4.24 | 68.67 | 0.164 | 0.0059 | 0 |
| 235 | SLU 38 | -0.01 | -3.95 | 68.25 | 0.1503 | -0.0055 | 0 |
| 235 | SLU 39 | 0 | -4.33 | 70.29 | 0.1686 | 0.0053 | 0 |
| 235 | SLU 40 | -0.01 | -4.04 | 69.87 | 0.155 | -0.006 | 0 |
| 235 | SLU 41 | 0 | -4.41 | 70.88 | 0.1712 | 0.0056 | 0 |
| 235 | SLU 42 | -0.01 | -4.12 | 70.47 | 0.1576 | -0.0057 | 0 |
| 235 | SLU 43 | 0 | -3.56 | 68.75 | 0.1395 | 0.0059 | 0 |
| 235 | SLU 44 | -0.02 | -3.08 | 68.06 | 0.1167 | -0.0131 | 0 |
| 235 | SLU 45 | 0 | -3.7 | 70.04 | 0.1443 | 0.0062 | 0 |
| 235 | SLU 46 | -0.01 | -3.41 | 69.62 | 0.1307 | -0.0052 | 0 |
| 235 | SLU 47 | -0.02 | -3.16 | 68.65 | 0.1193 | -0.0127 | 0 |
| 235 | SLU 48 | 0 | -3.78 | 70.64 | 0.1469 | 0.0065 | 0 |
| 235 | SLU 49 | -0.01 | -3.49 | 70.22 | 0.1333 | -0.0049 | 0 |
| 235 | SLU 50 | 0 | -3.72 | 69.94 | 0.1446 | 0.0065 | 0 |
| 235 | SLU 51 | -0.01 | -3.43 | 69.53 | 0.131 | -0.0048 | 0 |
| 235 | SLU 52 | -0.02 | -3.67 | 74.61 | 0.1396 | -0.0129 | 0 |
| 235 | SLU 53 | 0 | -4.29 | 76.59 | 0.1673 | 0.0064 | 0 |
| 235 | SLU 54 | -0.01 | -4 | 76.18 | 0.1536 | -0.005 | 0 |
| 235 | SLU 55 | -0.02 | -3.75 | 75.21 | 0.1422 | -0.0125 | 0 |
| 235 | SLU 56 | 0 | -4.37 | 77.19 | 0.1698 | 0.0067 | 0 |
| 235 | SLU 57 | -0.01 | -4.08 | 76.77 | 0.1562 | -0.0047 | 0 |
| 235 | SLU 58 | 0 | -4.31 | 76.49 | 0.1675 | 0.0067 | 0 |
| 235 | SLU 59 | -0.01 | -4.02 | 76.08 | 0.1539 | -0.0046 | 0 |
| 235 | SLU 60 | 0 | -4.41 | 78.11 | 0.1722 | 0.0061 | 0 |
| 235 | SLU 61 | -0.01 | -4.12 | 77.7 | 0.1586 | -0.0052 | 0 |
| 235 | SLU 62 | 0 | -4.49 | 78.71 | 0.1748 | 0.0065 | 0 |
| 235 | SLU 63 | -0.01 | -4.2 | 78.29 | 0.1611 | -0.0049 | 0 |
| 235 | SLU 64 | 0 | -4.15 | 75.11 | 0.1621 | 0.0063 | 0 |
| 235 | SLU 65 | -0.02 | -3.67 | 74.42 | 0.1393 | -0.0126 | 0 |
| 235 | SLU 66 | 0 | -4.29 | 76.4 | 0.167 | 0.0066 | 0 |
| 235 | SLU 67 | -0.01 | -4 | 75.99 | 0.1533 | -0.0048 | 0 |

| Nodo | Cont. | Reazione a traslazione | | | Reazione a rotazione | | |
|---|---|---|---|---|---|---|---|
| Ind. | N.br. | x | y | z | x | y | z |
| 235 | SLU 68 | -0.02 | -3.75 | 75.02 | 0.1419 | -0.0123 | 0 |
| 235 | SLU 69 | 0 | -4.37 | 77 | 0.1695 | 0.0069 | 0 |
| 235 | SLU 70 | -0.01 | -4.08 | 76.58 | 0.1559 | -0.0045 | 0 |
| 235 | SLU 71 | 0 | -4.31 | 76.3 | 0.1672 | 0.0069 | 0 |
| 235 | SLU 72 | -0.01 | -4.02 | 75.89 | 0.1536 | -0.0044 | 0 |
| 235 | SLU 73 | -0.02 | -4.26 | 80.97 | 0.1623 | -0.0124 | 0 |
| 235 | SLU 74 | 0 | -4.88 | 82.96 | 0.1899 | 0.0068 | 0 |
| 235 | SLU 75 | -0.01 | -4.59 | 82.54 | 0.1762 | -0.0046 | 0 |
| 235 | SLU 76 | -0.02 | -4.34 | 81.57 | 0.1648 | -0.0121 | 0 |
| 235 | SLU 77 | 0 | -4.96 | 83.55 | 0.1925 | 0.0071 | 0 |
| 235 | SLU 78 | -0.01 | -4.67 | 83.14 | 0.1788 | -0.0043 | 0 |
| 235 | SLU 79 | 0 | -4.9 | 82.86 | 0.1902 | 0.0071 | 0 |
| 235 | SLU 80 | -0.01 | -4.61 | 82.44 | 0.1765 | -0.0042 | 0 |
| 235 | SLU 81 | 0 | -5 | 84.47 | 0.1948 | 0.0066 | 0 |
| 235 | SLU 82 | -0.01 | -4.71 | 84.06 | 0.1812 | -0.0048 | 0 |
| 235 | SLU 83 | 0 | -5.08 | 85.07 | 0.1974 | 0.0069 | 0 |
| 235 | SLU 84 | -0.01 | -4.79 | 84.65 | 0.1838 | -0.0045 | 0 |
| 235 | SLE RA 1 | 0 | -3.07 | 56.38 | 0.1197 | 0.0047 | 0 |
| 235 | SLE RA 2 | -0.01 | -2.74 | 55.92 | 0.1045 | -0.0079 | 0 |
| 235 | SLE RA 3 | 0 | -3.16 | 57.24 | 0.123 | 0.0049 | 0 |
| 235 | SLE RA 4 | -0.01 | -2.96 | 56.96 | 0.1139 | -0.0026 | 0 |
| 235 | SLE RA 5 | -0.01 | -2.8 | 56.32 | 0.1063 | -0.0077 | 0 |
| 235 | SLE RA 6 | 0 | -3.21 | 57.64 | 0.1247 | 0.0052 | 0 |
| 235 | SLE RA 7 | -0.01 | -3.01 | 57.36 | 0.1156 | -0.0024 | 0 |
| 235 | SLE RA 8 | 0 | -3.17 | 57.17 | 0.1231 | 0.0052 | 0 |
| 235 | SLE RA 9 | -0.01 | -2.98 | 56.9 | 0.114 | -0.0024 | 0 |
| 235 | SLE RA 10 | -0.01 | -3.14 | 60.29 | 0.1198 | -0.0077 | 0 |
| 235 | SLE RA 11 | 0 | -3.55 | 61.61 | 0.1382 | 0.0051 | 0 |
| 235 | SLE RA 12 | -0.01 | -3.36 | 61.33 | 0.1291 | -0.0025 | 0 |
| 235 | SLE RA 13 | -0.01 | -3.19 | 60.68 | 0.1215 | -0.0075 | 0 |
| 235 | SLE RA 14 | 0 | -3.6 | 62.01 | 0.14 | 0.0053 | 0 |
| 235 | SLE RA 15 | -0.01 | -3.41 | 61.73 | 0.1309 | -0.0023 | 0 |
| 235 | SLE RA 16 | 0 | -3.56 | 61.54 | 0.1384 | 0.0053 | 0 |
| 235 | SLE RA 17 | -0.01 | -3.37 | 61.27 | 0.1293 | -0.0023 | 0 |
| 235 | SLE RA 18 | 0 | -3.63 | 62.62 | 0.1415 | 0.0049 | 0 |
| 235 | SLE RA 19 | -0.01 | -3.44 | 62.34 | 0.1324 | -0.0026 | 0 |
| 235 | SLE RA 20 | 0 | -3.68 | 63.02 | 0.1433 | 0.0051 | 0 |
| 235 | SLE RA 21 | -0.01 | -3.49 | 62.74 | 0.1342 | -0.0024 | 0 |
| 235 | SLE FR 1 | 0 | -3.07 | 56.38 | 0.1197 | 0.0047 | 0 |
| 235 | SLE FR 2 | 0 | -3 | 56.29 | 0.1167 | 0.0022 | 0 |
| 235 | SLE FR 3 | 0 | -3.09 | 56.54 | 0.1204 | 0.0048 | 0 |
| 235 | SLE FR 4 | 0 | -3.17 | 58.16 | 0.1232 | 0.0023 | 0 |
| 235 | SLE FR 5 | 0 | -3.26 | 58.41 | 0.127 | 0.0049 | 0 |
| 235 | SLE FR 6 | 0 | -3.35 | 59.5 | 0.1306 | 0.0048 | 0 |
| 235 | SLE QP 1 | 0 | -3.07 | 56.38 | 0.1197 | 0.0047 | 0 |
| 235 | SLE QP 2 | 0 | -3.24 | 58.25 | 0.1263 | 0.0048 | 0 |
| 235 | SLD 1 | 0.32 | 0.25 | 42.18 | -0.0162 | 0.3004 | -0.0002 |
| 235 | SLD 2 | 0.32 | 0.25 | 42.18 | -0.0162 | 0.3004 | -0.0002 |
| 235 | SLD 3 | 0.21 | -4.58 | 44.92 | 0.1841 | 0.1974 | -0.0002 |
| 235 | SLD 4 | 0.21 | -4.58 | 44.92 | 0.1841 | 0.1974 | -0.0002 |
| 235 | SLD 5 | 0.27 | 5.14 | 49.27 | -0.2203 | 0.2496 | 0 |
| 235 | SLD 6 | 0.27 | 5.14 | 49.27 | -0.2203 | 0.2496 | 0 |
| 235 | SLD 7 | -0.1 | -10.97 | 58.41 | 0.4474 | -0.0936 | -0.0001 |
| 235 | SLD 8 | -0.1 | -10.97 | 58.41 | 0.4474 | -0.0936 | -0.0001 |
| 235 | SLD 9 | 0.11 | 4.5 | 58.1 | -0.1949 | 0.1032 | 0.0001 |
| 235 | SLD 10 | 0.11 | 4.5 | 58.1 | -0.1949 | 0.1032 | 0.0001 |
| 235 | SLD 11 | -0.26 | -11.61 | 67.23 | 0.4728 | -0.2401 | 0 |
| 235 | SLD 12 | -0.26 | -11.61 | 67.23 | 0.4728 | -0.2401 | 0 |
| 235 | SLD 13 | -0.21 | -1.89 | 71.59 | 0.0684 | -0.1878 | 0.0002 |
| 235 | SLD 14 | -0.21 | -1.89 | 71.59 | 0.0684 | -0.1878 | 0.0002 |
| 235 | SLD 15 | -0.32 | -6.72 | 74.33 | 0.2687 | -0.2908 | 0.0001 |
| 235 | SLD 16 | -0.32 | -6.72 | 74.33 | 0.2687 | -0.2908 | 0.0001 |
| 235 | SLV 1 | 0.77 | 4.9 | 20.61 | -0.2063 | 0.72 | -0.0004 |
| 235 | SLV 2 | 0.77 | 4.9 | 20.61 | -0.2063 | 0.72 | -0.0004 |
| 235 | SLV 3 | 0.49 | -6.3 | 27.1 | 0.2582 | 0.4581 | -0.0004 |
| 235 | SLV 4 | 0.49 | -6.3 | 27.1 | 0.2582 | 0.4581 | -0.0004 |
| 235 | SLV 5 | 0.66 | 16.2 | 37.12 | -0.678 | 0.6164 | 0 |
| 235 | SLV 6 | 0.66 | 16.2 | 37.12 | -0.678 | 0.6164 | 0 |
| 235 | SLV 7 | -0.28 | -21.15 | 58.75 | 0.8703 | -0.2563 | -0.0003 |
| 235 | SLV 8 | -0.28 | -21.15 | 58.75 | 0.8703 | -0.2563 | -0.0003 |
| 235 | SLV 9 | 0.28 | 14.68 | 57.75 | -0.6178 | 0.2659 | 0.0003 |
| 235 | SLV 10 | 0.28 | 14.68 | 57.75 | -0.6178 | 0.2659 | 0.0003 |
| 235 | SLV 11 | -0.66 | -22.67 | 79.39 | 0.9305 | -0.6068 | 0 |
| 235 | SLV 12 | -0.66 | -22.67 | 79.39 | 0.9305 | -0.6068 | 0 |
| 235 | SLV 13 | -0.49 | -0.17 | 89.41 | -0.0057 | -0.4486 | 0.0004 |
| 235 | SLV 14 | -0.49 | -0.17 | 89.41 | -0.0057 | -0.4486 | 0.0004 |
| 235 | SLV 15 | -0.77 | -11.37 | 95.9 | 0.4588 | -0.7104 | 0.0003 |
| 235 | SLV 16 | -0.77 | -11.37 | 95.9 | 0.4588 | -0.7104 | 0.0003 |
| 236 | SLU 1 | 0 | 3.57 | 43.71 | -0.1334 | -0.0022 | 0 |
| 236 | SLU 2 | 0 | 3.65 | 43.16 | -0.1365 | -0.0014 | 0 |
| 236 | SLU 3 | 0 | 3.51 | 45.47 | -0.1301 | -0.0023 | 0 |
| 236 | SLU 4 | 0 | 3.56 | 45.14 | -0.132 | -0.0019 | 0 |
| 236 | SLU 5 | 0 | 3.54 | 44.49 | -0.1313 | -0.0015 | 0 |
| 236 | SLU 6 | 0 | 3.41 | 46.8 | -0.1249 | -0.0024 | 0 |
| 236 | SLU 7 | 0 | 3.45 | 46.47 | -0.1267 | -0.002 | 0 |
| 236 | SLU 8 | 0 | 3.36 | 46.37 | -0.1229 | -0.0023 | 0 |
| 236 | SLU 9 | 0 | 3.4 | 46.04 | -0.1248 | -0.0019 | 0 |
| 236 | SLU 10 | 0 | 4.15 | 50.97 | -0.1551 | -0.0019 | 0 |

| Nodo | Cont. | Reazione a traslazione | | | Reazione a rotazione | | |
|---|---|---|---|---|---|---|---|
| Ind. | N.br. | x | y | z | x | y | z |
| 236 | SLU 11 | 0 | 4.01 | 53.28 | -0.1487 | -0.0027 | 0 |
| 236 | SLU 12 | 0 | 4.06 | 52.95 | -0.1506 | -0.0023 | 0 |
| 236 | SLU 13 | 0 | 4.04 | 52.3 | -0.1499 | -0.002 | 0 |
| 236 | SLU 14 | 0 | 3.9 | 54.61 | -0.1435 | -0.0028 | 0.0001 |
| 236 | SLU 15 | 0 | 3.95 | 54.28 | -0.1453 | -0.0024 | 0 |
| 236 | SLU 16 | 0 | 3.86 | 54.18 | -0.1415 | -0.0028 | 0 |
| 236 | SLU 17 | 0 | 3.9 | 53.85 | -0.1434 | -0.0023 | 0 |
| 236 | SLU 18 | 0 | 4.28 | 54.87 | -0.16 | -0.0028 | 0 |
| 236 | SLU 19 | 0 | 4.33 | 54.54 | -0.1618 | -0.0023 | 0 |
| 236 | SLU 20 | 0 | 4.18 | 56.2 | -0.1547 | -0.0029 | 0.0001 |
| 236 | SLU 21 | 0 | 4.22 | 55.87 | -0.1566 | -0.0024 | 0 |
| 236 | SLU 22 | 0 | 3.98 | 51.23 | -0.1483 | -0.0026 | 0 |
| 236 | SLU 23 | 0 | 4.06 | 50.68 | -0.1514 | -0.0019 | 0 |
| 236 | SLU 24 | 0 | 3.92 | 52.99 | -0.145 | -0.0027 | 0 |
| 236 | SLU 25 | 0 | 3.97 | 52.66 | -0.1469 | -0.0023 | 0 |
| 236 | SLU 26 | 0 | 3.95 | 52.01 | -0.1462 | -0.002 | 0 |
| 236 | SLU 27 | 0 | 3.81 | 54.32 | -0.1398 | -0.0028 | 0.0001 |
| 236 | SLU 28 | 0 | 3.86 | 53.99 | -0.1416 | -0.0024 | 0 |
| 236 | SLU 29 | 0 | 3.77 | 53.89 | -0.1378 | -0.0028 | 0 |
| 236 | SLU 30 | 0 | 3.81 | 53.56 | -0.1397 | -0.0023 | 0 |
| 236 | SLU 31 | 0 | 4.56 | 58.49 | -0.17 | -0.0023 | 0 |
| 236 | SLU 32 | 0 | 4.42 | 60.8 | -0.1636 | -0.0031 | 0.0001 |
| 236 | SLU 33 | 0 | 4.47 | 60.47 | -0.1654 | -0.0027 | 0 |
| 236 | SLU 34 | 0 | 4.45 | 59.82 | -0.1648 | -0.0024 | 0 |
| 236 | SLU 35 | 0 | 4.31 | 62.13 | -0.1584 | -0.0032 | 0.0001 |
| 236 | SLU 36 | 0 | 4.36 | 61.8 | -0.1602 | -0.0028 | 0 |
| 236 | SLU 37 | 0 | 4.26 | 61.7 | -0.1564 | -0.0032 | 0.0001 |
| 236 | SLU 38 | 0 | 4.31 | 61.37 | -0.1583 | -0.0028 | 0 |
| 236 | SLU 39 | 0 | 4.69 | 62.39 | -0.1749 | -0.0032 | 0.0001 |
| 236 | SLU 40 | 0 | 4.74 | 62.05 | -0.1767 | -0.0028 | 0 |
| 236 | SLU 41 | 0 | 4.59 | 63.71 | -0.1696 | -0.0033 | 0.0001 |
| 236 | SLU 42 | 0 | 4.63 | 63.38 | -0.1715 | -0.0029 | 0.0001 |
| 236 | SLU 43 | 0 | 4.5 | 54.25 | -0.1683 | -0.0027 | 0 |
| 236 | SLU 44 | 0 | 4.58 | 53.7 | -0.1714 | -0.0019 | 0 |
| 236 | SLU 45 | 0 | 4.44 | 56.01 | -0.165 | -0.0028 | 0 |
| 236 | SLU 46 | 0 | 4.49 | 55.68 | -0.1669 | -0.0024 | 0 |
| 236 | SLU 47 | 0 | 4.48 | 55.03 | -0.1662 | -0.002 | 0 |
| 236 | SLU 48 | 0 | 4.34 | 57.34 | -0.1598 | -0.0029 | 0.0001 |
| 236 | SLU 49 | 0 | 4.38 | 57.01 | -0.1617 | -0.0025 | 0 |
| 236 | SLU 50 | 0 | 4.29 | 56.91 | -0.1579 | -0.0028 | 0 |
| 236 | SLU 51 | 0 | 4.34 | 56.58 | -0.1597 | -0.0024 | 0 |
| 236 | SLU 52 | 0 | 5.08 | 61.51 | -0.19 | -0.0024 | 0 |
| 236 | SLU 53 | 0 | 4.94 | 63.82 | -0.1836 | -0.0032 | 0.0001 |
| 236 | SLU 54 | 0 | 4.99 | 63.49 | -0.1855 | -0.0028 | 0 |
| 236 | SLU 55 | 0 | 4.97 | 62.84 | -0.1848 | -0.0025 | 0 |
| 236 | SLU 56 | 0 | 4.84 | 65.15 | -0.1784 | -0.0033 | 0.0001 |
| 236 | SLU 57 | 0 | 4.88 | 64.82 | -0.1802 | -0.0029 | 0.0001 |
| 236 | SLU 58 | 0 | 4.79 | 64.72 | -0.1765 | -0.0033 | 0.0001 |
| 236 | SLU 59 | 0 | 4.83 | 64.39 | -0.1783 | -0.0028 | 0 |
| 236 | SLU 60 | 0 | 5.22 | 65.4 | -0.1949 | -0.0033 | 0.0001 |
| 236 | SLU 61 | 0 | 5.26 | 65.07 | -0.1967 | -0.0028 | 0 |
| 236 | SLU 62 | 0 | 5.11 | 66.73 | -0.1896 | -0.0034 | 0.0001 |
| 236 | SLU 63 | 0 | 5.16 | 66.4 | -0.1915 | -0.0029 | 0.0001 |
| 236 | SLU 64 | 0 | 4.91 | 61.77 | -0.1832 | -0.0031 | 0.0001 |
| 236 | SLU 65 | 0 | 4.99 | 61.21 | -0.1863 | -0.0024 | 0 |
| 236 | SLU 66 | 0 | 4.85 | 63.53 | -0.1799 | -0.0032 | 0.0001 |
| 236 | SLU 67 | 0 | 4.9 | 63.19 | -0.1818 | -0.0028 | 0 |
| 236 | SLU 68 | 0 | 4.88 | 62.54 | -0.1811 | -0.0025 | 0 |
| 236 | SLU 69 | 0 | 4.75 | 64.85 | -0.1747 | -0.0033 | 0.0001 |
| 236 | SLU 70 | 0 | 4.79 | 64.52 | -0.1765 | -0.0029 | 0.0001 |
| 236 | SLU 71 | 0 | 4.7 | 64.42 | -0.1728 | -0.0033 | 0.0001 |
| 236 | SLU 72 | 0 | 4.74 | 64.09 | -0.1746 | -0.0028 | 0 |
| 236 | SLU 73 | 0 | 5.49 | 69.02 | -0.2049 | -0.0028 | 0 |
| 236 | SLU 74 | 0 | 5.35 | 71.33 | -0.1985 | -0.0036 | 0.0001 |
| 236 | SLU 75 | 0 | 5.4 | 71 | -0.2004 | -0.0032 | 0.0001 |
| 236 | SLU 76 | 0 | 5.38 | 70.35 | -0.1997 | -0.0029 | 0.0001 |
| 236 | SLU 77 | 0 | 5.24 | 72.66 | -0.1933 | -0.0037 | 0.0001 |
| 236 | SLU 78 | 0 | 5.29 | 72.33 | -0.1951 | -0.0033 | 0.0001 |
| 236 | SLU 79 | 0 | 5.2 | 72.23 | -0.1913 | -0.0037 | 0.0001 |
| 236 | SLU 80 | 0 | 5.24 | 71.9 | -0.1932 | -0.0033 | 0.0001 |
| 236 | SLU 81 | 0 | 5.63 | 72.92 | -0.2098 | -0.0037 | 0.0001 |
| 236 | SLU 82 | 0 | 5.67 | 72.59 | -0.2116 | -0.0033 | 0.0001 |
| 236 | SLU 83 | 0 | 5.52 | 74.25 | -0.2045 | -0.0038 | 0.0001 |
| 236 | SLU 84 | 0 | 5.56 | 73.92 | -0.2064 | -0.0034 | 0.0001 |
| 236 | SLE RA 1 | 0 | 3.69 | 45.86 | -0.1377 | -0.0023 | 0 |
| 236 | SLE RA 2 | 0 | 3.74 | 45.49 | -0.1397 | -0.0018 | 0 |
| 236 | SLE RA 3 | 0 | 3.65 | 47.03 | -0.1355 | -0.0024 | 0 |
| 236 | SLE RA 4 | 0 | 3.68 | 46.81 | -0.1367 | -0.0021 | 0 |
| 236 | SLE RA 5 | 0 | 3.67 | 46.38 | -0.1362 | -0.0019 | 0 |
| 236 | SLE RA 6 | 0 | 3.58 | 47.92 | -0.132 | -0.0024 | 0 |
| 236 | SLE RA 7 | 0 | 3.61 | 47.7 | -0.1332 | -0.0021 | 0 |
| 236 | SLE RA 8 | 0 | 3.55 | 47.63 | -0.1307 | -0.0024 | 0 |
| 236 | SLE RA 9 | 0 | 3.58 | 47.41 | -0.1319 | -0.0021 | 0 |
| 236 | SLE RA 10 | 0 | 4.07 | 50.7 | -0.1521 | -0.0021 | 0 |
| 236 | SLE RA 11 | 0 | 3.98 | 52.24 | -0.1478 | -0.0027 | 0 |
| 236 | SLE RA 12 | 0 | 4.01 | 52.02 | -0.1491 | -0.0024 | 0 |
| 236 | SLE RA 13 | 0 | 4 | 51.58 | -0.1486 | -0.0022 | 0 |
| 236 | SLE RA 14 | 0 | 3.91 | 53.13 | -0.1444 | -0.0027 | 0 |

| Nodo | Cont. | Reazione a traslazione | | | Reazione a rotazione | | |
|---|---|---|---|---|---|---|---|
| Ind. | N.br. | x | y | z | x | y | z |
| 236 | SLE RA 15 | 0 | 3.94 | 52.9 | -0.1456 | -0.0024 | 0 |
| 236 | SLE RA 16 | 0 | 3.88 | 52.84 | -0.1431 | -0.0027 | 0 |
| 236 | SLE RA 17 | 0 | 3.91 | 52.62 | -0.1443 | -0.0024 | 0 |
| 236 | SLE RA 18 | 0 | 4.16 | 53.3 | -0.1554 | -0.0027 | 0 |
| 236 | SLE RA 19 | 0 | 4.2 | 53.08 | -0.1566 | -0.0024 | 0 |
| 236 | SLE RA 20 | 0 | 4.09 | 54.18 | -0.1519 | -0.0028 | 0 |
| 236 | SLE RA 21 | 0 | 4.12 | 53.96 | -0.1531 | -0.0025 | 0 |
| 236 | SLE FR 1 | 0 | 3.69 | 45.86 | -0.1377 | -0.0023 | 0 |
| 236 | SLE FR 2 | 0 | 3.7 | 45.79 | -0.1381 | -0.0022 | 0 |
| 236 | SLE FR 3 | 0 | 3.66 | 46.21 | -0.1363 | -0.0023 | 0 |
| 236 | SLE FR 4 | 0 | 3.84 | 48.02 | -0.1434 | -0.0023 | 0 |
| 236 | SLE FR 5 | 0 | 3.8 | 48.45 | -0.1416 | -0.0024 | 0 |
| 236 | SLE FR 6 | 0 | 3.93 | 49.58 | -0.1465 | -0.0025 | 0 |
| 236 | SLE QP 1 | 0 | 3.69 | 45.86 | -0.1377 | -0.0023 | 0 |
| 236 | SLE QP 2 | 0 | 3.83 | 48.09 | -0.143 | -0.0024 | 0 |
| 236 | SLD 1 | 0.21 | 7.47 | 51.57 | -0.2937 | 0.1961 | -0.0038 |
| 236 | SLD 2 | 0.21 | 7.47 | 51.57 | -0.2937 | 0.1961 | -0.0038 |
| 236 | SLD 3 | 0.26 | 3.66 | 48.25 | -0.1365 | 0.2431 | -0.0047 |
| 236 | SLD 4 | 0.26 | 3.66 | 48.25 | -0.1365 | 0.2431 | -0.0047 |
| 236 | SLD 5 | -0.01 | 10.71 | 54.18 | -0.4266 | -0.0141 | 0.0002 |
| 236 | SLD 6 | -0.01 | 10.71 | 54.18 | -0.4266 | -0.0141 | 0.0002 |
| 236 | SLD 7 | 0.15 | -2.01 | 43.1 | 0.0974 | 0.1425 | -0.0027 |
| 236 | SLD 8 | 0.15 | -2.01 | 43.1 | 0.0974 | 0.1425 | -0.0027 |
| 236 | SLD 9 | -0.15 | 9.67 | 53.09 | -0.3833 | -0.1473 | 0.0028 |
| 236 | SLD 10 | -0.15 | 9.67 | 53.09 | -0.3833 | -0.1473 | 0.0028 |
| 236 | SLD 11 | 0.01 | -3.05 | 42 | 0.1407 | 0.0092 | -0.0002 |
| 236 | SLD 12 | 0.01 | -3.05 | 42 | 0.1407 | 0.0092 | -0.0002 |
| 236 | SLD 13 | -0.26 | 4.01 | 47.93 | -0.1494 | -0.2479 | 0.0047 |
| 236 | SLD 14 | -0.26 | 4.01 | 47.93 | -0.1494 | -0.2479 | 0.0047 |
| 236 | SLD 15 | -0.21 | 0.19 | 44.61 | 0.0078 | -0.2009 | 0.0039 |
| 236 | SLD 16 | -0.21 | 0.19 | 44.61 | 0.0078 | -0.2009 | 0.0039 |
| 236 | SLV 1 | 0.53 | 12.32 | 56.29 | -0.4945 | 0.5048 | -0.0096 |
| 236 | SLV 2 | 0.53 | 12.32 | 56.29 | -0.4945 | 0.5048 | -0.0096 |
| 236 | SLV 3 | 0.66 | 3.44 | 48.52 | -0.1284 | 0.6251 | -0.0119 |
| 236 | SLV 4 | 0.66 | 3.44 | 48.52 | -0.1284 | 0.6251 | -0.0119 |
| 236 | SLV 5 | -0.03 | 19.85 | 62.32 | -0.8038 | -0.0328 | 0.0006 |
| 236 | SLV 6 | -0.03 | 19.85 | 62.32 | -0.8038 | -0.0328 | 0.0006 |
| 236 | SLV 7 | 0.39 | -9.76 | 36.45 | 0.4168 | 0.3684 | -0.007 |
| 236 | SLV 8 | 0.39 | -9.76 | 36.45 | 0.4168 | 0.3684 | -0.007 |
| 236 | SLV 9 | -0.39 | 17.42 | 59.74 | -0.7027 | -0.3732 | 0.0071 |
| 236 | SLV 10 | -0.39 | 17.42 | 59.74 | -0.7027 | -0.3732 | 0.0071 |
| 236 | SLV 11 | 0.03 | -12.19 | 33.86 | 0.5179 | 0.028 | -0.0005 |
| 236 | SLV 12 | 0.03 | -12.19 | 33.86 | 0.5179 | 0.028 | -0.0005 |
| 236 | SLV 13 | -0.66 | 4.22 | 47.66 | -0.1576 | -0.63 | 0.012 |
| 236 | SLV 14 | -0.66 | 4.22 | 47.66 | -0.1576 | -0.63 | 0.012 |
| 236 | SLV 15 | -0.54 | -4.66 | 39.9 | 0.2086 | -0.5096 | 0.0097 |
| 236 | SLV 16 | -0.54 | -4.66 | 39.9 | 0.2086 | -0.5096 | 0.0097 |
| 237 | SLU 1 | 0 | 3.4 | 47.79 | -0.1691 | 0.0008 | 0 |
| 237 | SLU 2 | 0 | 3.43 | 47.31 | -0.17 | 0.0002 | 0 |
| 237 | SLU 3 | 0 | 3.74 | 49.97 | -0.1876 | 0.0009 | 0 |
| 237 | SLU 4 | 0 | 3.76 | 49.68 | -0.1881 | 0.0006 | 0 |
| 237 | SLU 5 | 0 | 3.82 | 49.07 | -0.1913 | 0.0004 | 0 |
| 237 | SLU 6 | 0 | 4.13 | 51.73 | -0.209 | 0.0012 | 0 |
| 237 | SLU 7 | 0 | 4.15 | 51.44 | -0.2095 | 0.0008 | 0 |
| 237 | SLU 8 | 0 | 4.18 | 51.31 | -0.2119 | 0.0012 | 0 |
| 237 | SLU 9 | 0 | 4.2 | 51.02 | -0.2124 | 0.0008 | 0 |
| 237 | SLU 10 | 0 | 3.79 | 55.96 | -0.191 | 0.0003 | 0 |
| 237 | SLU 11 | 0 | 4.1 | 58.62 | -0.2087 | 0.0011 | 0 |
| 237 | SLU 12 | 0 | 4.12 | 58.34 | -0.2092 | 0.0008 | 0 |
| 237 | SLU 13 | 0 | 4.18 | 57.72 | -0.2124 | 0.0005 | 0 |
| 237 | SLU 14 | 0 | 4.49 | 60.38 | -0.2301 | 0.0013 | 0 |
| 237 | SLU 15 | 0 | 4.51 | 60.1 | -0.2306 | 0.001 | 0 |
| 237 | SLU 16 | 0 | 4.54 | 59.96 | -0.233 | 0.0013 | 0 |
| 237 | SLU 17 | 0 | 4.56 | 59.68 | -0.2335 | 0.001 | 0 |
| 237 | SLU 18 | 0 | 3.91 | 60.15 | -0.1992 | 0.001 | 0 |
| 237 | SLU 19 | 0 | 3.93 | 59.86 | -0.1997 | 0.0006 | 0 |
| 237 | SLU 20 | 0 | 4.3 | 61.91 | -0.2206 | 0.0012 | 0 |
| 237 | SLU 21 | 0 | 4.32 | 61.62 | -0.2211 | 0.0008 | 0 |
| 237 | SLU 22 | 0 | 3.91 | 56.14 | -0.1978 | 0.001 | 0 |
| 237 | SLU 23 | 0 | 3.95 | 55.66 | -0.1987 | 0.0004 | 0 |
| 237 | SLU 24 | 0 | 4.25 | 58.32 | -0.2164 | 0.0012 | 0 |
| 237 | SLU 25 | 0 | 4.27 | 58.03 | -0.2169 | 0.0008 | 0 |
| 237 | SLU 26 | 0 | 4.34 | 57.42 | -0.22 | 0.0006 | 0 |
| 237 | SLU 27 | 0 | 4.64 | 60.08 | -0.2377 | 0.0014 | 0 |
| 237 | SLU 28 | 0 | 4.66 | 59.79 | -0.2382 | 0.001 | 0 |
| 237 | SLU 29 | 0 | 4.69 | 59.66 | -0.2406 | 0.0014 | 0 |
| 237 | SLU 30 | 0 | 4.72 | 59.37 | -0.2411 | 0.0011 | 0 |
| 237 | SLU 31 | 0 | 4.31 | 64.31 | -0.2198 | 0.0005 | 0 |
| 237 | SLU 32 | 0 | 4.61 | 66.97 | -0.2374 | 0.0013 | 0 |
| 237 | SLU 33 | 0 | 4.63 | 66.69 | -0.2379 | 0.001 | 0 |
| 237 | SLU 34 | 0 | 4.7 | 66.07 | -0.2411 | 0.0008 | 0 |
| 237 | SLU 35 | 0 | 5 | 68.73 | -0.2588 | 0.0015 | 0 |
| 237 | SLU 36 | 0 | 5.02 | 68.45 | -0.2593 | 0.0012 | 0 |
| 237 | SLU 37 | 0 | 5.05 | 68.31 | -0.2617 | 0.0015 | 0 |
| 237 | SLU 38 | 0 | 5.08 | 68.02 | -0.2622 | 0.0012 | 0 |
| 237 | SLU 39 | 0 | 4.43 | 68.5 | -0.228 | 0.0012 | 0 |
| 237 | SLU 40 | 0 | 4.45 | 68.21 | -0.2285 | 0.0008 | 0 |
| 237 | SLU 41 | 0 | 4.82 | 70.26 | -0.2493 | 0.0014 | 0 |

| Nodo | Cont. | Reazione a traslazione | | | Reazione a rotazione | | |
|---|---|---|---|---|---|---|---|
| Ind. | N.br. | x | y | z | x | y | z |
| 237 | SLU 42 | 0 | 4.84 | 69.97 | -0.2498 | 0.001 | 0 |
| 237 | SLU 43 | 0 | 4.24 | 59.27 | -0.21 | 0.0009 | 0 |
| 237 | SLU 44 | 0 | 4.28 | 58.79 | -0.2109 | 0.0003 | 0 |
| 237 | SLU 45 | 0 | 4.58 | 61.45 | -0.2285 | 0.0011 | 0 |
| 237 | SLU 46 | 0 | 4.6 | 61.16 | -0.229 | 0.0008 | 0 |
| 237 | SLU 47 | 0 | 4.67 | 60.55 | -0.2322 | 0.0006 | 0 |
| 237 | SLU 48 | 0 | 4.97 | 63.21 | -0.2499 | 0.0013 | 0 |
| 237 | SLU 49 | 0 | 4.99 | 62.92 | -0.2504 | 0.001 | 0 |
| 237 | SLU 50 | 0 | 5.02 | 62.79 | -0.2528 | 0.0013 | 0 |
| 237 | SLU 51 | 0 | 5.04 | 62.5 | -0.2533 | 0.001 | 0 |
| 237 | SLU 52 | 0 | 4.64 | 67.44 | -0.2319 | 0.0005 | 0 |
| 237 | SLU 53 | 0 | 4.94 | 70.1 | -0.2496 | 0.0012 | 0 |
| 237 | SLU 54 | 0 | 4.96 | 69.81 | -0.2501 | 0.0009 | 0 |
| 237 | SLU 55 | 0 | 5.03 | 69.2 | -0.2533 | 0.0007 | 0 |
| 237 | SLU 56 | 0 | 5.33 | 71.86 | -0.271 | 0.0015 | 0 |
| 237 | SLU 57 | 0 | 5.35 | 71.57 | -0.2715 | 0.0011 | 0 |
| 237 | SLU 58 | 0 | 5.38 | 71.44 | -0.2738 | 0.0015 | 0 |
| 237 | SLU 59 | 0 | 5.4 | 71.15 | -0.2743 | 0.0011 | 0 |
| 237 | SLU 60 | 0 | 4.76 | 71.63 | -0.2401 | 0.0011 | 0 |
| 237 | SLU 61 | 0 | 4.78 | 71.34 | -0.2406 | 0.0008 | 0 |
| 237 | SLU 62 | 0 | 5.15 | 73.39 | -0.2615 | 0.0013 | 0 |
| 237 | SLU 63 | 0 | 5.17 | 73.1 | -0.262 | 0.001 | 0 |
| 237 | SLU 64 | 0 | 4.76 | 67.61 | -0.2387 | 0.0011 | 0 |
| 237 | SLU 65 | 0 | 4.79 | 67.13 | -0.2396 | 0.0006 | 0 |
| 237 | SLU 66 | 0 | 5.09 | 69.8 | -0.2572 | 0.0013 | 0 |
| 237 | SLU 67 | 0 | 5.11 | 69.51 | -0.2577 | 0.001 | 0 |
| 237 | SLU 68 | 0 | 5.18 | 68.89 | -0.2609 | 0.0008 | 0 |
| 237 | SLU 69 | 0 | 5.49 | 71.55 | -0.2786 | 0.0015 | 0 |
| 237 | SLU 70 | 0 | 5.51 | 71.27 | -0.2791 | 0.0012 | 0 |
| 237 | SLU 71 | 0 | 5.54 | 71.13 | -0.2815 | 0.0015 | 0 |
| 237 | SLU 72 | 0 | 5.56 | 70.85 | -0.282 | 0.0012 | 0 |
| 237 | SLU 73 | 0 | 5.15 | 75.79 | -0.2606 | 0.0007 | 0 |
| 237 | SLU 74 | 0 | 5.45 | 78.45 | -0.2783 | 0.0015 | 0 |
| 237 | SLU 75 | 0 | 5.47 | 78.16 | -0.2788 | 0.0011 | 0 |
| 237 | SLU 76 | 0 | 5.54 | 77.55 | -0.282 | 0.0009 | 0 |
| 237 | SLU 77 | 0 | 5.85 | 80.21 | -0.2997 | 0.0017 | 0 |
| 237 | SLU 78 | 0 | 5.87 | 79.92 | -0.3002 | 0.0013 | 0 |
| 237 | SLU 79 | 0 | 5.9 | 79.79 | -0.3026 | 0.0017 | 0 |
| 237 | SLU 80 | 0 | 5.92 | 79.5 | -0.3031 | 0.0014 | 0 |
| 237 | SLU 81 | 0 | 5.27 | 79.98 | -0.2688 | 0.0013 | 0 |
| 237 | SLU 82 | 0 | 5.29 | 79.69 | -0.2693 | 0.001 | 0 |
| 237 | SLU 83 | 0 | 5.66 | 81.74 | -0.2902 | 0.0015 | 0 |
| 237 | SLU 84 | 0 | 5.68 | 81.45 | -0.2907 | 0.0012 | 0 |
| 237 | SLE RA 1 | 0 | 3.55 | 50.18 | -0.1773 | 0.0008 | 0 |
| 237 | SLE RA 2 | 0 | 3.57 | 49.86 | -0.1779 | 0.0004 | 0 |
| 237 | SLE RA 3 | 0 | 3.77 | 51.63 | -0.1897 | 0.0009 | 0 |
| 237 | SLE RA 4 | 0 | 3.78 | 51.44 | -0.19 | 0.0007 | 0 |
| 237 | SLE RA 5 | 0 | 3.83 | 51.03 | -0.1921 | 0.0006 | 0 |
| 237 | SLE RA 6 | 0 | 4.03 | 52.8 | -0.2039 | 0.0011 | 0 |
| 237 | SLE RA 7 | 0 | 4.05 | 52.61 | -0.2043 | 0.0009 | 0 |
| 237 | SLE RA 8 | 0 | 4.07 | 52.52 | -0.2058 | 0.0011 | 0 |
| 237 | SLE RA 9 | 0 | 4.08 | 52.33 | -0.2062 | 0.0009 | 0 |
| 237 | SLE RA 10 | 0 | 3.81 | 55.62 | -0.1919 | 0.0005 | 0 |
| 237 | SLE RA 11 | 0 | 4.01 | 57.4 | -0.2037 | 0.001 | 0 |
| 237 | SLE RA 12 | 0 | 4.02 | 57.21 | -0.2041 | 0.0008 | 0 |
| 237 | SLE RA 13 | 0 | 4.07 | 56.8 | -0.2062 | 0.0007 | 0 |
| 237 | SLE RA 14 | 0 | 4.27 | 58.57 | -0.218 | 0.0012 | 0 |
| 237 | SLE RA 15 | 0 | 4.29 | 58.38 | -0.2183 | 0.001 | 0 |
| 237 | SLE RA 16 | 0 | 4.31 | 58.29 | -0.2199 | 0.0012 | 0 |
| 237 | SLE RA 17 | 0 | 4.32 | 58.1 | -0.2202 | 0.001 | 0 |
| 237 | SLE RA 18 | 0 | 3.89 | 58.42 | -0.1974 | 0.0009 | 0 |
| 237 | SLE RA 19 | 0 | 3.9 | 58.23 | -0.1977 | 0.0007 | 0 |
| 237 | SLE RA 20 | 0 | 4.15 | 59.59 | -0.2117 | 0.0011 | 0 |
| 237 | SLE RA 21 | 0 | 4.16 | 59.4 | -0.212 | 0.0009 | 0 |
| 237 | SLE FR 1 | 0 | 3.55 | 50.18 | -0.1773 | 0.0008 | 0 |
| 237 | SLE FR 2 | 0 | 3.55 | 50.11 | -0.1774 | 0.0007 | 0 |
| 237 | SLE FR 3 | 0 | 3.65 | 50.65 | -0.183 | 0.0009 | 0 |
| 237 | SLE FR 4 | 0 | 3.65 | 52.58 | -0.1835 | 0.0008 | 0 |
| 237 | SLE FR 5 | 0 | 3.75 | 53.12 | -0.1891 | 0.0009 | 0 |
| 237 | SLE FR 6 | 0 | 3.72 | 54.3 | -0.1874 | 0.0009 | 0 |
| 237 | SLE QP 1 | 0 | 3.55 | 50.18 | -0.1773 | 0.0008 | 0 |
| 237 | SLE QP 2 | 0 | 3.65 | 52.65 | -0.1834 | 0.0009 | 0 |
| 237 | SLD 1 | 0.33 | 4.06 | 55.96 | -0.2081 | 0.3098 | 0.0001 |
| 237 | SLD 2 | 0.33 | 4.06 | 55.96 | -0.2081 | 0.3098 | 0.0001 |
| 237 | SLD 3 | 0.29 | -1.2 | 51.81 | 0.0469 | 0.2685 | 0.0001 |
| 237 | SLD 4 | 0.29 | -1.2 | 51.81 | 0.0469 | 0.2685 | 0.0001 |
| 237 | SLD 5 | 0.17 | 11.76 | 59.95 | -0.5776 | 0.1561 | 0 |
| 237 | SLD 6 | 0.17 | 11.76 | 59.95 | -0.5776 | 0.1561 | 0 |
| 237 | SLD 7 | 0.02 | -5.79 | 46.09 | 0.2726 | 0.0185 | 0 |
| 237 | SLD 8 | 0.02 | -5.79 | 46.09 | 0.2726 | 0.0185 | 0 |
| 237 | SLD 9 | -0.02 | 13.09 | 59.21 | -0.6393 | -0.0168 | -0.0001 |
| 237 | SLD 10 | -0.02 | 13.09 | 59.21 | -0.6393 | -0.0168 | -0.0001 |
| 237 | SLD 11 | -0.16 | -4.46 | 45.35 | 0.2109 | -0.1544 | 0 |
| 237 | SLD 12 | -0.16 | -4.46 | 45.35 | 0.2109 | -0.1544 | 0 |
| 237 | SLD 13 | -0.29 | 8.5 | 53.49 | -0.4137 | -0.2668 | -0.0001 |
| 237 | SLD 14 | -0.29 | 8.5 | 53.49 | -0.4137 | -0.2668 | -0.0001 |
| 237 | SLD 15 | -0.33 | 3.24 | 49.34 | -0.1586 | -0.3081 | -0.0001 |
| 237 | SLD 16 | -0.33 | 3.24 | 49.34 | -0.1586 | -0.3081 | -0.0001 |

| Nodo | Cont. | Reazione a traslazione | | | Reazione a rotazione | | |
|---|---|---|---|---|---|---|---|
| Ind. | N.br. | x | y | z | x | y | z |
| 237 | SLV 1 | 0.84 | 4.6 | 60.54 | -0.2404 | 0.7905 | 0.0001 |
| 237 | SLV 2 | 0.84 | 4.6 | 60.54 | -0.2404 | 0.7905 | 0.0001 |
| 237 | SLV 3 | 0.73 | -7.78 | 50.68 | 0.3589 | 0.6846 | 0.0002 |
| 237 | SLV 4 | 0.73 | -7.78 | 50.68 | 0.3589 | 0.6846 | 0.0002 |
| 237 | SLV 5 | 0.42 | 22.7 | 69.97 | -1.1094 | 0.3983 | 0 |
| 237 | SLV 6 | 0.42 | 22.7 | 69.97 | -1.1094 | 0.3983 | 0 |
| 237 | SLV 7 | 0.05 | -18.55 | 37.11 | 0.8882 | 0.0454 | 0.0001 |
| 237 | SLV 8 | 0.05 | -18.55 | 37.11 | 0.8882 | 0.0454 | 0.0001 |
| 237 | SLV 9 | -0.05 | 25.85 | 68.19 | -1.2549 | -0.0437 | -0.0001 |
| 237 | SLV 10 | -0.05 | 25.85 | 68.19 | -1.2549 | -0.0437 | -0.0001 |
| 237 | SLV 11 | -0.42 | -15.41 | 35.33 | 0.7427 | -0.3966 | 0 |
| 237 | SLV 12 | -0.42 | -15.41 | 35.33 | 0.7427 | -0.3966 | 0 |
| 237 | SLV 13 | -0.73 | 15.08 | 54.61 | -0.7256 | -0.6829 | -0.0002 |
| 237 | SLV 14 | -0.73 | 15.08 | 54.61 | -0.7256 | -0.6829 | -0.0002 |
| 237 | SLV 15 | -0.84 | 2.7 | 44.76 | -0.1263 | -0.7888 | -0.0002 |
| 237 | SLV 16 | -0.84 | 2.7 | 44.76 | -0.1263 | -0.7888 | -0.0002 |
| 238 | SLU 1 | 0 | -2.34 | 18.37 | 0.1568 | -0.0001 | 0 |
| 238 | SLU 2 | 0 | -2.33 | 18.37 | 0.1562 | -0.0003 | 0 |
| 238 | SLU 3 | 0 | -2.47 | 18.3 | 0.1648 | -0.0001 | 0 |
| 238 | SLU 4 | 0 | -2.46 | 18.3 | 0.1645 | -0.0002 | 0 |
| 238 | SLU 5 | 0 | -2.4 | 18.32 | 0.161 | -0.0003 | 0 |
| 238 | SLU 6 | 0 | -2.54 | 18.25 | 0.1695 | 0 | 0 |
| 238 | SLU 7 | 0 | -2.54 | 18.25 | 0.1692 | -0.0001 | 0 |
| 238 | SLU 8 | 0 | -2.49 | 18.27 | 0.1663 | 0 | 0 |
| 238 | SLU 9 | 0 | -2.48 | 18.27 | 0.1659 | -0.0001 | 0 |
| 238 | SLU 10 | 0 | -2.73 | 24.95 | 0.1829 | -0.0004 | 0 |
| 238 | SLU 11 | 0 | -2.87 | 24.88 | 0.1914 | -0.0002 | 0 |
| 238 | SLU 12 | 0 | -2.87 | 24.88 | 0.1911 | -0.0003 | 0 |
| 238 | SLU 13 | 0 | -2.81 | 24.9 | 0.1876 | -0.0003 | 0 |
| 238 | SLU 14 | 0 | -2.95 | 24.84 | 0.1961 | -0.0001 | 0 |
| 238 | SLU 15 | 0 | -2.94 | 24.84 | 0.1958 | -0.0002 | 0 |
| 238 | SLU 16 | 0 | -2.89 | 24.86 | 0.1929 | -0.0001 | 0 |
| 238 | SLU 17 | 0 | -2.89 | 24.86 | 0.1925 | -0.0002 | 0 |
| 238 | SLU 18 | 0 | -2.92 | 27.77 | 0.1948 | -0.0002 | 0 |
| 238 | SLU 19 | 0 | -2.91 | 27.77 | 0.1945 | -0.0004 | 0 |
| 238 | SLU 20 | 0 | -2.99 | 27.72 | 0.1996 | -0.0002 | 0 |
| 238 | SLU 21 | 0 | -2.99 | 27.73 | 0.1992 | -0.0003 | 0 |
| 238 | SLU 22 | 0 | -2.76 | 23.12 | 0.1838 | -0.0001 | 0 |
| 238 | SLU 23 | 0 | -2.75 | 23.12 | 0.1833 | -0.0003 | 0 |
| 238 | SLU 24 | 0 | -2.89 | 23.05 | 0.1918 | -0.0001 | 0 |
| 238 | SLU 25 | 0 | -2.88 | 23.06 | 0.1915 | -0.0002 | 0 |
| 238 | SLU 26 | 0 | -2.82 | 23.08 | 0.188 | -0.0003 | 0 |
| 238 | SLU 27 | 0 | -2.96 | 23.01 | 0.1965 | 0 | 0 |
| 238 | SLU 28 | 0 | -2.96 | 23.01 | 0.1962 | -0.0002 | 0 |
| 238 | SLU 29 | 0 | -2.91 | 23.03 | 0.1933 | 0 | 0 |
| 238 | SLU 30 | 0 | -2.9 | 23.03 | 0.1929 | -0.0001 | 0 |
| 238 | SLU 31 | 0 | -3.15 | 29.71 | 0.2099 | -0.0004 | 0 |
| 238 | SLU 32 | 0 | -3.29 | 29.64 | 0.2184 | -0.0002 | 0 |
| 238 | SLU 33 | 0 | -3.28 | 29.64 | 0.2181 | -0.0003 | 0 |
| 238 | SLU 34 | 0 | -3.23 | 29.66 | 0.2146 | -0.0004 | 0 |
| 238 | SLU 35 | 0 | -3.37 | 29.59 | 0.2231 | -0.0001 | 0 |
| 238 | SLU 36 | 0 | -3.36 | 29.59 | 0.2228 | -0.0002 | 0 |
| 238 | SLU 37 | 0 | -3.31 | 29.61 | 0.2199 | -0.0001 | 0 |
| 238 | SLU 38 | 0 | -3.31 | 29.61 | 0.2195 | -0.0002 | 0 |
| 238 | SLU 39 | 0 | -3.33 | 32.53 | 0.2219 | -0.0002 | 0 |
| 238 | SLU 40 | 0 | -3.33 | 32.53 | 0.2215 | -0.0004 | 0 |
| 238 | SLU 41 | 0 | -3.41 | 32.48 | 0.2266 | -0.0002 | 0 |
| 238 | SLU 42 | 0 | -3.4 | 32.48 | 0.2262 | -0.0003 | 0 |
| 238 | SLU 43 | 0 | -2.9 | 22.24 | 0.1946 | -0.0002 | 0 |
| 238 | SLU 44 | 0 | -2.89 | 22.25 | 0.194 | -0.0004 | 0 |
| 238 | SLU 45 | 0 | -3.03 | 22.18 | 0.2026 | -0.0001 | 0 |
| 238 | SLU 46 | 0 | -3.02 | 22.18 | 0.2022 | -0.0002 | 0 |
| 238 | SLU 47 | 0 | -2.96 | 22.2 | 0.1987 | -0.0003 | 0 |
| 238 | SLU 48 | 0 | -3.1 | 22.13 | 0.2073 | -0.0001 | 0 |
| 238 | SLU 49 | 0 | -3.1 | 22.13 | 0.207 | -0.0002 | 0 |
| 238 | SLU 50 | 0 | -3.05 | 22.15 | 0.204 | 0 | 0 |
| 238 | SLU 51 | 0 | -3.04 | 22.15 | 0.2037 | -0.0002 | 0 |
| 238 | SLU 52 | 0 | -3.29 | 28.83 | 0.2206 | -0.0004 | 0 |
| 238 | SLU 53 | 0 | -3.43 | 28.76 | 0.2292 | -0.0002 | 0 |
| 238 | SLU 54 | 0 | -3.43 | 28.76 | 0.2289 | -0.0003 | 0 |
| 238 | SLU 55 | 0 | -3.37 | 28.78 | 0.2254 | -0.0004 | 0 |
| 238 | SLU 56 | 0 | -3.51 | 28.72 | 0.2339 | -0.0001 | 0 |
| 238 | SLU 57 | 0 | -3.5 | 28.72 | 0.2336 | -0.0003 | 0 |
| 238 | SLU 58 | 0 | -3.45 | 28.74 | 0.2307 | -0.0001 | 0 |
| 238 | SLU 59 | 0 | -3.45 | 28.74 | 0.2303 | -0.0002 | 0 |
| 238 | SLU 60 | 0 | -3.48 | 31.65 | 0.2326 | -0.0003 | 0 |
| 238 | SLU 61 | 0 | -3.47 | 31.65 | 0.2323 | -0.0004 | 0 |
| 238 | SLU 62 | 0 | -3.55 | 31.6 | 0.2373 | -0.0002 | 0 |
| 238 | SLU 63 | 0 | -3.54 | 31.6 | 0.237 | -0.0003 | 0 |
| 238 | SLU 64 | 0 | -3.31 | 27 | 0.2216 | -0.0002 | 0 |
| 238 | SLU 65 | 0 | -3.3 | 27 | 0.221 | -0.0004 | 0 |
| 238 | SLU 66 | 0 | -3.44 | 26.93 | 0.2296 | -0.0001 | 0 |
| 238 | SLU 67 | 0 | -3.44 | 26.93 | 0.2292 | -0.0003 | 0 |
| 238 | SLU 68 | 0 | -3.38 | 26.96 | 0.2258 | -0.0003 | 0 |
| 238 | SLU 69 | 0 | -3.52 | 26.89 | 0.2343 | -0.0001 | 0 |
| 238 | SLU 70 | 0 | -3.51 | 26.89 | 0.234 | -0.0002 | 0 |
| 238 | SLU 71 | 0 | -3.47 | 26.91 | 0.2311 | 0 | 0 |
| 238 | SLU 72 | 0 | -3.46 | 26.91 | 0.2307 | -0.0002 | 0 |

| Nodo | Cont. | Reazione a traslazione | | | Reazione a rotazione | | |
|---|---|---|---|---|---|---|---|
| Ind. | N.br. | x | y | z | x | y | z |
| 238 | SLU 73 | 0 | -3.71 | 33.59 | 0.2477 | -0.0005 | 0 |
| 238 | SLU 74 | 0 | -3.85 | 33.52 | 0.2562 | -0.0002 | 0 |
| 238 | SLU 75 | 0 | -3.84 | 33.52 | 0.2559 | -0.0003 | 0 |
| 238 | SLU 76 | 0 | -3.78 | 33.54 | 0.2524 | -0.0004 | 0 |
| 238 | SLU 77 | 0 | -3.92 | 33.47 | 0.2609 | -0.0001 | 0 |
| 238 | SLU 78 | 0 | -3.92 | 33.47 | 0.2606 | -0.0003 | 0 |
| 238 | SLU 79 | 0 | -3.87 | 33.49 | 0.2577 | -0.0001 | 0 |
| 238 | SLU 80 | 0 | -3.86 | 33.49 | 0.2573 | -0.0002 | 0 |
| 238 | SLU 81 | 0 | -3.89 | 36.41 | 0.2596 | -0.0003 | 0 |
| 238 | SLU 82 | 0 | -3.89 | 36.41 | 0.2593 | -0.0004 | 0 |
| 238 | SLU 83 | 0 | -3.97 | 36.36 | 0.2644 | -0.0002 | 0 |
| 238 | SLU 84 | 0 | -3.96 | 36.36 | 0.264 | -0.0003 | 0 |
| 238 | SLE RA 1 | 0 | -2.46 | 19.72 | 0.1645 | -0.0001 | 0 |
| 238 | SLE RA 2 | 0 | -2.45 | 19.73 | 0.1642 | -0.0003 | 0 |
| 238 | SLE RA 3 | 0 | -2.54 | 19.68 | 0.1699 | -0.0001 | 0 |
| 238 | SLE RA 4 | 0 | -2.54 | 19.68 | 0.1696 | -0.0002 | 0 |
| 238 | SLE RA 5 | 0 | -2.5 | 19.69 | 0.1673 | -0.0002 | 0 |
| 238 | SLE RA 6 | 0 | -2.59 | 19.65 | 0.173 | -0.0001 | 0 |
| 238 | SLE RA 7 | 0 | -2.59 | 19.65 | 0.1728 | -0.0001 | 0 |
| 238 | SLE RA 8 | 0 | -2.56 | 19.66 | 0.1708 | 0 | 0 |
| 238 | SLE RA 9 | 0 | -2.55 | 19.66 | 0.1706 | -0.0001 | 0 |
| 238 | SLE RA 10 | 0 | -2.72 | 24.11 | 0.1819 | -0.0003 | 0 |
| 238 | SLE RA 11 | 0 | -2.81 | 24.07 | 0.1876 | -0.0001 | 0 |
| 238 | SLE RA 12 | 0 | -2.81 | 24.07 | 0.1874 | -0.0002 | 0 |
| 238 | SLE RA 13 | 0 | -2.77 | 24.08 | 0.185 | -0.0003 | 0 |
| 238 | SLE RA 14 | 0 | -2.86 | 24.04 | 0.1907 | -0.0001 | 0 |
| 238 | SLE RA 15 | 0 | -2.86 | 24.04 | 0.1905 | -0.0002 | 0 |
| 238 | SLE RA 16 | 0 | -2.83 | 24.05 | 0.1886 | -0.0001 | 0 |
| 238 | SLE RA 17 | 0 | -2.82 | 24.05 | 0.1883 | -0.0002 | 0 |
| 238 | SLE RA 18 | 0 | -2.84 | 25.99 | 0.1899 | -0.0002 | 0 |
| 238 | SLE RA 19 | 0 | -2.84 | 25.99 | 0.1897 | -0.0003 | 0 |
| 238 | SLE RA 20 | 0 | -2.89 | 25.96 | 0.193 | -0.0002 | 0 |
| 238 | SLE RA 21 | 0 | -2.89 | 25.96 | 0.1928 | -0.0002 | 0 |
| 238 | SLE FR 1 | 0 | -2.46 | 19.72 | 0.1645 | -0.0001 | 0 |
| 238 | SLE FR 2 | 0 | -2.46 | 19.72 | 0.1645 | -0.0002 | 0 |
| 238 | SLE FR 3 | 0 | -2.48 | 19.71 | 0.1658 | -0.0001 | 0 |
| 238 | SLE FR 4 | 0 | -2.57 | 21.61 | 0.1721 | -0.0002 | 0 |
| 238 | SLE FR 5 | 0 | -2.59 | 21.59 | 0.1734 | -0.0001 | 0 |
| 238 | SLE FR 6 | 0 | -2.65 | 22.86 | 0.1772 | -0.0002 | 0 |
| 238 | SLE QP 1 | 0 | -2.46 | 19.72 | 0.1645 | -0.0001 | 0 |
| 238 | SLE QP 2 | 0 | -2.57 | 21.61 | 0.1721 | -0.0001 | 0 |
| 238 | SLD 1 | 0.4 | -0.06 | 25.11 | 0.0733 | 0.3948 | -0.008 |
| 238 | SLD 2 | 0.4 | -0.06 | 25.11 | 0.0733 | 0.3948 | -0.008 |
| 238 | SLD 3 | 0.42 | -3.84 | 19.8 | 0.223 | 0.4059 | -0.0083 |
| 238 | SLD 4 | 0.42 | -3.84 | 19.8 | 0.223 | 0.4059 | -0.0083 |
| 238 | SLD 5 | 0.09 | 3.91 | 30.7 | -0.0847 | 0.1015 | -0.0018 |
| 238 | SLD 6 | 0.09 | 3.91 | 30.7 | -0.0847 | 0.1015 | -0.0018 |
| 238 | SLD 7 | 0.15 | -8.68 | 13.02 | 0.4146 | 0.1385 | -0.0031 |
| 238 | SLD 8 | 0.15 | -8.68 | 13.02 | 0.4146 | 0.1385 | -0.0031 |
| 238 | SLD 9 | -0.15 | 3.53 | 30.19 | -0.0703 | -0.1388 | 0.0031 |
| 238 | SLD 10 | -0.15 | 3.53 | 30.19 | -0.0703 | -0.1388 | 0.0031 |
| 238 | SLD 11 | -0.09 | -9.06 | 12.51 | 0.429 | -0.1018 | 0.0018 |
| 238 | SLD 12 | -0.09 | -9.06 | 12.51 | 0.429 | -0.1018 | 0.0018 |
| 238 | SLD 13 | -0.42 | -1.31 | 23.41 | 0.1212 | -0.4062 | 0.0084 |
| 238 | SLD 14 | -0.42 | -1.31 | 23.41 | 0.1212 | -0.4062 | 0.0084 |
| 238 | SLD 15 | -0.4 | -5.09 | 18.1 | 0.271 | -0.3951 | 0.008 |
| 238 | SLD 16 | -0.4 | -5.09 | 18.1 | 0.271 | -0.3951 | 0.008 |
| 238 | SLV 1 | 1.03 | 3.31 | 29.82 | -0.0597 | 1.01 | -0.0202 |
| 238 | SLV 2 | 1.03 | 3.31 | 29.82 | -0.0597 | 1.01 | -0.0202 |
| 238 | SLV 3 | 1.07 | -5.51 | 17.42 | 0.2905 | 1.0375 | -0.0211 |
| 238 | SLV 4 | 1.07 | -5.51 | 17.42 | 0.2905 | 1.0375 | -0.0211 |
| 238 | SLV 5 | 0.24 | 12.58 | 42.87 | -0.4284 | 0.2612 | -0.0047 |
| 238 | SLV 6 | 0.24 | 12.58 | 42.87 | -0.4284 | 0.2612 | -0.0047 |
| 238 | SLV 7 | 0.39 | -16.84 | 1.55 | 0.7387 | 0.3529 | -0.0077 |
| 238 | SLV 8 | 0.39 | -16.84 | 1.55 | 0.7387 | 0.3529 | -0.0077 |
| 238 | SLV 9 | -0.39 | 11.7 | 41.66 | -0.3944 | -0.3532 | 0.0077 |
| 238 | SLV 10 | -0.39 | 11.7 | 41.66 | -0.3944 | -0.3532 | 0.0077 |
| 238 | SLV 11 | -0.24 | -17.73 | 0.34 | 0.7727 | -0.2614 | 0.0047 |
| 238 | SLV 12 | -0.24 | -17.73 | 0.34 | 0.7727 | -0.2614 | 0.0047 |
| 238 | SLV 13 | -1.07 | 0.37 | 25.79 | 0.0538 | -1.0378 | 0.0211 |
| 238 | SLV 14 | -1.07 | 0.37 | 25.79 | 0.0538 | -1.0378 | 0.0211 |
| 238 | SLV 15 | -1.03 | -8.46 | 13.39 | 0.404 | -1.0102 | 0.0202 |
| 238 | SLV 16 | -1.03 | -8.46 | 13.39 | 0.404 | -1.0102 | 0.0202 |
| 239 | SLU 1 | 0 | 4.1 | 37.87 | -0.0216 | -0.0023 | 0 |
| 239 | SLU 2 | 0 | 4.08 | 37.72 | -0.0207 | -0.0022 | 0 |
| 239 | SLU 3 | 0 | 3.98 | 38.29 | -0.0119 | -0.0026 | 0 |
| 239 | SLU 4 | 0 | 3.97 | 38.2 | -0.0114 | -0.0026 | 0 |
| 239 | SLU 5 | 0 | 3.86 | 37.53 | -0.01 | -0.0026 | 0 |
| 239 | SLU 6 | 0 | 3.76 | 38.11 | -0.0012 | -0.0029 | 0 |
| 239 | SLU 7 | 0 | 3.75 | 38.01 | -0.0007 | -0.0029 | 0 |
| 239 | SLU 8 | 0 | 3.67 | 37.51 | -0.0001 | -0.0029 | 0 |
| 239 | SLU 9 | 0 | 3.66 | 37.41 | 0.0004 | -0.0029 | 0 |
| 239 | SLU 10 | 0 | 5.02 | 45.44 | -0.0344 | -0.0026 | 0 |
| 239 | SLU 11 | 0 | 4.92 | 46.01 | -0.0256 | -0.0029 | 0 |
| 239 | SLU 12 | 0 | 4.91 | 45.92 | -0.0251 | -0.0029 | 0 |
| 239 | SLU 13 | 0 | 4.8 | 45.26 | -0.0237 | -0.0029 | 0 |
| 239 | SLU 14 | 0 | 4.7 | 45.83 | -0.0149 | -0.0033 | 0 |
| 239 | SLU 15 | 0 | 4.69 | 45.74 | -0.0144 | -0.0032 | 0 |

| Nodo | Cont. | Reazione a traslazione | | | Reazione a rotazione | | |
|---|---|---|---|---|---|---|---|
| Ind. | N.br. | x | y | z | x | y | z |
| 239 | SLU 16 | 0 | 4.61 | 45.23 | -0.0138 | -0.0033 | 0 |
| 239 | SLU 17 | 0 | 4.6 | 45.14 | -0.0133 | -0.0032 | 0 |
| 239 | SLU 18 | 0 | 5.44 | 48.91 | -0.0411 | -0.0028 | 0 |
| 239 | SLU 19 | 0 | 5.43 | 48.82 | -0.0406 | -0.0027 | 0 |
| 239 | SLU 20 | 0 | 5.23 | 48.73 | -0.0304 | -0.0031 | 0 |
| 239 | SLU 21 | 0 | 5.21 | 48.63 | -0.0299 | -0.0031 | 0 |
| 239 | SLU 22 | 0 | 4.8 | 44.36 | -0.0264 | -0.0028 | 0 |
| 239 | SLU 23 | 0 | 4.78 | 44.21 | -0.0255 | -0.0027 | 0 |
| 239 | SLU 24 | 0 | 4.68 | 44.78 | -0.0168 | -0.0031 | 0 |
| 239 | SLU 25 | 0 | 4.66 | 44.69 | -0.0162 | -0.0031 | 0 |
| 239 | SLU 26 | 0 | 4.56 | 44.03 | -0.0148 | -0.003 | 0 |
| 239 | SLU 27 | 0 | 4.46 | 44.6 | -0.006 | -0.0034 | 0 |
| 239 | SLU 28 | 0 | 4.45 | 44.5 | -0.0055 | -0.0034 | 0 |
| 239 | SLU 29 | 0 | 4.37 | 44 | -0.0049 | -0.0034 | 0 |
| 239 | SLU 30 | 0 | 4.36 | 43.9 | -0.0044 | -0.0034 | 0 |
| 239 | SLU 31 | 0 | 5.72 | 51.93 | -0.0392 | -0.0031 | 0 |
| 239 | SLU 32 | 0 | 5.62 | 52.51 | -0.0305 | -0.0034 | 0 |
| 239 | SLU 33 | 0 | 5.6 | 52.41 | -0.0299 | -0.0034 | 0 |
| 239 | SLU 34 | 0 | 5.5 | 51.75 | -0.0285 | -0.0034 | 0 |
| 239 | SLU 35 | 0 | 5.4 | 52.32 | -0.0197 | -0.0037 | 0 |
| 239 | SLU 36 | 0 | 5.39 | 52.23 | -0.0192 | -0.0037 | 0 |
| 239 | SLU 37 | 0 | 5.31 | 51.72 | -0.0186 | -0.0038 | 0 |
| 239 | SLU 38 | 0 | 5.3 | 51.63 | -0.0181 | -0.0037 | 0 |
| 239 | SLU 39 | 0 | 6.14 | 55.4 | -0.046 | -0.0033 | 0 |
| 239 | SLU 40 | 0 | 6.13 | 55.31 | -0.0455 | -0.0032 | 0 |
| 239 | SLU 41 | 0 | 5.93 | 55.22 | -0.0352 | -0.0036 | 0 |
| 239 | SLU 42 | 0 | 5.91 | 55.13 | -0.0347 | -0.0035 | 0 |
| 239 | SLU 43 | 0 | 5.09 | 47.01 | -0.0264 | -0.0028 | 0 |
| 239 | SLU 44 | 0 | 5.07 | 46.85 | -0.0255 | -0.0028 | 0 |
| 239 | SLU 45 | 0 | 4.97 | 47.42 | -0.0167 | -0.0031 | 0 |
| 239 | SLU 46 | 0 | 4.96 | 47.33 | -0.0162 | -0.0031 | 0 |
| 239 | SLU 47 | 0 | 4.85 | 46.67 | -0.0148 | -0.0031 | 0 |
| 239 | SLU 48 | 0 | 4.76 | 47.24 | -0.006 | -0.0035 | 0 |
| 239 | SLU 49 | 0 | 4.74 | 47.15 | -0.0055 | -0.0034 | 0 |
| 239 | SLU 50 | 0 | 4.66 | 46.64 | -0.0049 | -0.0035 | 0 |
| 239 | SLU 51 | 0 | 4.65 | 46.55 | -0.0044 | -0.0034 | 0 |
| 239 | SLU 52 | 0 | 6.01 | 54.58 | -0.0392 | -0.0031 | 0 |
| 239 | SLU 53 | 0 | 5.91 | 55.15 | -0.0304 | -0.0035 | 0 |
| 239 | SLU 54 | 0 | 5.9 | 55.06 | -0.0299 | -0.0034 | 0 |
| 239 | SLU 55 | 0 | 5.79 | 54.4 | -0.0285 | -0.0034 | 0 |
| 239 | SLU 56 | 0 | 5.7 | 54.97 | -0.0197 | -0.0038 | 0 |
| 239 | SLU 57 | 0 | 5.68 | 54.88 | -0.0192 | -0.0038 | 0 |
| 239 | SLU 58 | 0 | 5.6 | 54.37 | -0.0186 | -0.0038 | 0 |
| 239 | SLU 59 | 0 | 5.59 | 54.28 | -0.0181 | -0.0038 | 0 |
| 239 | SLU 60 | 0 | 6.43 | 58.04 | -0.0459 | -0.0033 | 0 |
| 239 | SLU 61 | 0 | 6.42 | 57.95 | -0.0454 | -0.0033 | 0 |
| 239 | SLU 62 | 0 | 6.22 | 57.86 | -0.0352 | -0.0036 | 0 |
| 239 | SLU 63 | 0 | 6.21 | 57.77 | -0.0347 | -0.0036 | 0 |
| 239 | SLU 64 | 0 | 5.79 | 53.5 | -0.0312 | -0.0033 | 0 |
| 239 | SLU 65 | 0 | 5.77 | 53.34 | -0.0303 | -0.0032 | 0 |
| 239 | SLU 66 | 0 | 5.67 | 53.91 | -0.0216 | -0.0036 | 0 |
| 239 | SLU 67 | 0 | 5.66 | 53.82 | -0.021 | -0.0036 | 0 |
| 239 | SLU 68 | 0 | 5.55 | 53.16 | -0.0196 | -0.0036 | 0 |
| 239 | SLU 69 | 0 | 5.45 | 53.73 | -0.0108 | -0.0039 | 0 |
| 239 | SLU 70 | 0 | 5.44 | 53.64 | -0.0103 | -0.0039 | 0 |
| 239 | SLU 71 | 0 | 5.36 | 53.13 | -0.0097 | -0.004 | 0 |
| 239 | SLU 72 | 0 | 5.35 | 53.04 | -0.0092 | -0.0039 | 0 |
| 239 | SLU 73 | 0 | 6.71 | 61.07 | -0.044 | -0.0036 | 0 |
| 239 | SLU 74 | 0 | 6.61 | 61.64 | -0.0353 | -0.004 | 0 |
| 239 | SLU 75 | 0 | 6.6 | 61.55 | -0.0347 | -0.0039 | 0 |
| 239 | SLU 76 | 0 | 6.49 | 60.89 | -0.0333 | -0.0039 | 0 |
| 239 | SLU 77 | 0 | 6.39 | 61.46 | -0.0245 | -0.0043 | 0 |
| 239 | SLU 78 | 0 | 6.38 | 61.37 | -0.024 | -0.0042 | 0 |
| 239 | SLU 79 | 0 | 6.3 | 60.86 | -0.0234 | -0.0043 | 0 |
| 239 | SLU 80 | 0 | 6.29 | 60.77 | -0.0229 | -0.0042 | 0 |
| 239 | SLU 81 | 0 | 7.13 | 64.53 | -0.0508 | -0.0038 | 0 |
| 239 | SLU 82 | 0 | 7.12 | 64.44 | -0.0503 | -0.0037 | 0 |
| 239 | SLU 83 | 0 | 6.92 | 64.35 | -0.04 | -0.0041 | 0 |
| 239 | SLU 84 | 0 | 6.9 | 64.26 | -0.0395 | -0.0041 | 0 |
| 239 | SLE RA 1 | 0 | 4.3 | 39.72 | -0.0229 | -0.0024 | 0 |
| 239 | SLE RA 2 | 0 | 4.29 | 39.62 | -0.0224 | -0.0024 | 0 |
| 239 | SLE RA 3 | 0 | 4.22 | 40 | -0.0165 | -0.0026 | 0 |
| 239 | SLE RA 4 | 0 | 4.21 | 39.94 | -0.0162 | -0.0026 | 0 |
| 239 | SLE RA 5 | 0 | 4.14 | 39.5 | -0.0152 | -0.0026 | 0 |
| 239 | SLE RA 6 | 0 | 4.08 | 39.88 | -0.0094 | -0.0029 | 0 |
| 239 | SLE RA 7 | 0 | 4.07 | 39.82 | -0.009 | -0.0028 | 0 |
| 239 | SLE RA 8 | 0 | 4.01 | 39.48 | -0.0086 | -0.0029 | 0 |
| 239 | SLE RA 9 | 0 | 4 | 39.42 | -0.0083 | -0.0028 | 0 |
| 239 | SLE RA 10 | 0 | 4.91 | 44.77 | -0.0315 | -0.0026 | 0 |
| 239 | SLE RA 11 | 0 | 4.85 | 45.15 | -0.0256 | -0.0029 | 0 |
| 239 | SLE RA 12 | 0 | 4.84 | 45.09 | -0.0253 | -0.0028 | 0 |
| 239 | SLE RA 13 | 0 | 4.77 | 44.65 | -0.0243 | -0.0028 | 0 |
| 239 | SLE RA 14 | 0 | 4.7 | 45.03 | -0.0185 | -0.0031 | 0 |
| 239 | SLE RA 15 | 0 | 4.69 | 44.97 | -0.0181 | -0.0031 | 0 |
| 239 | SLE RA 16 | 0 | 4.64 | 44.63 | -0.0178 | -0.0031 | 0 |
| 239 | SLE RA 17 | 0 | 4.63 | 44.57 | -0.0174 | -0.0031 | 0 |
| 239 | SLE RA 18 | 0 | 5.19 | 47.08 | -0.036 | -0.0028 | 0 |
| 239 | SLE RA 19 | 0 | 5.19 | 47.02 | -0.0356 | -0.0027 | 0 |

| Nodo | Cont. | Reazione a traslazione | | | Reazione a rotazione | | |
|---|---|---|---|---|---|---|---|
| Ind. | N.br. | x | y | z | x | y | z |
| 239 | SLE RA 20 | 0 | 5.05 | 46.96 | -0.0288 | -0.003 | 0 |
| 239 | SLE RA 21 | 0 | 5.04 | 46.9 | -0.0285 | -0.0029 | 0 |
| 239 | SLE FR 1 | 0 | 4.3 | 39.72 | -0.0229 | -0.0024 | 0 |
| 239 | SLE FR 2 | 0 | 4.3 | 39.7 | -0.0228 | -0.0024 | 0 |
| 239 | SLE FR 3 | 0 | 4.24 | 39.68 | -0.0201 | -0.0025 | 0 |
| 239 | SLE FR 4 | 0 | 4.57 | 41.91 | -0.0267 | -0.0025 | 0 |
| 239 | SLE FR 5 | 0 | 4.51 | 41.88 | -0.024 | -0.0026 | 0 |
| 239 | SLE FR 6 | 0 | 4.75 | 43.4 | -0.0295 | -0.0026 | 0 |
| 239 | SLE QP 1 | 0 | 4.3 | 39.72 | -0.0229 | -0.0024 | 0 |
| 239 | SLE QP 2 | 0 | 4.57 | 41.93 | -0.0269 | -0.0025 | 0 |
| 239 | SLD 1 | 0.36 | 6.87 | 43.86 | -0.1354 | 0.4808 | 0.0001 |
| 239 | SLD 2 | 0.36 | 6.87 | 43.86 | -0.1354 | 0.4808 | 0.0001 |
| 239 | SLD 3 | 0.33 | 3.36 | 35.92 | 0.0307 | 0.4524 | 0.0001 |
| 239 | SLD 4 | 0.33 | 3.36 | 35.92 | 0.0307 | 0.4524 | 0.0001 |
| 239 | SLD 5 | 0.14 | 10.58 | 54.55 | -0.3113 | 0.1855 | 0.0001 |
| 239 | SLD 6 | 0.14 | 10.58 | 54.55 | -0.3113 | 0.1855 | 0.0001 |
| 239 | SLD 7 | 0.07 | -1.11 | 28.09 | 0.2423 | 0.0909 | 0 |
| 239 | SLD 8 | 0.07 | -1.11 | 28.09 | 0.2423 | 0.0909 | 0 |
| 239 | SLD 9 | -0.07 | 10.25 | 55.77 | -0.296 | -0.096 | 0 |
| 239 | SLD 10 | -0.07 | 10.25 | 55.77 | -0.296 | -0.096 | 0 |
| 239 | SLD 11 | -0.14 | -1.44 | 29.32 | 0.2576 | -0.1905 | -0.0001 |
| 239 | SLD 12 | -0.14 | -1.44 | 29.32 | 0.2576 | -0.1905 | -0.0001 |
| 239 | SLD 13 | -0.34 | 5.77 | 47.95 | -0.0844 | -0.4575 | -0.0001 |
| 239 | SLD 14 | -0.34 | 5.77 | 47.95 | -0.0844 | -0.4575 | -0.0001 |
| 239 | SLD 15 | -0.36 | 2.26 | 40.01 | 0.0817 | -0.4858 | -0.0001 |
| 239 | SLD 16 | -0.36 | 2.26 | 40.01 | 0.0817 | -0.4858 | -0.0001 |
| 239 | SLV 1 | 1.07 | 10.01 | 46.65 | -0.2835 | 1.4808 | 0.0004 |
| 239 | SLV 2 | 1.07 | 10.01 | 46.65 | -0.2835 | 1.4808 | 0.0004 |
| 239 | SLV 3 | 1.01 | 1.74 | 27.48 | 0.1087 | 1.3995 | 0.0004 |
| 239 | SLV 4 | 1.01 | 1.74 | 27.48 | 0.1087 | 1.3995 | 0.0004 |
| 239 | SLV 5 | 0.41 | 18.74 | 72.42 | -0.6987 | 0.5657 | 0.0002 |
| 239 | SLV 6 | 0.41 | 18.74 | 72.42 | -0.6987 | 0.5657 | 0.0002 |
| 239 | SLV 7 | 0.21 | -8.82 | 8.53 | 0.6087 | 0.2948 | 0.0001 |
| 239 | SLV 8 | 0.21 | -8.82 | 8.53 | 0.6087 | 0.2948 | 0.0001 |
| 239 | SLV 9 | -0.21 | 17.95 | 75.34 | -0.6624 | -0.2999 | -0.0001 |
| 239 | SLV 10 | -0.21 | 17.95 | 75.34 | -0.6624 | -0.2999 | -0.0001 |
| 239 | SLV 11 | -0.42 | -9.6 | 11.45 | 0.645 | -0.5708 | -0.0002 |
| 239 | SLV 12 | -0.42 | -9.6 | 11.45 | 0.645 | -0.5708 | -0.0002 |
| 239 | SLV 13 | -1.01 | 7.39 | 56.38 | -0.1624 | -1.4046 | -0.0004 |
| 239 | SLV 14 | -1.01 | 7.39 | 56.38 | -0.1624 | -1.4046 | -0.0004 |
| 239 | SLV 15 | -1.08 | -0.87 | 37.22 | 0.2298 | -1.4859 | -0.0004 |
| 239 | SLV 16 | -1.08 | -0.87 | 37.22 | 0.2298 | -1.4859 | -0.0004 |
| 240 | SLU 1 | -0.27 | 0.82 | 50.34 | 0.0447 | -0.2096 | 0.0011 |
| 240 | SLU 2 | -0.25 | 1.43 | 49.98 | 0.0073 | -0.1888 | 0.001 |
| 240 | SLU 3 | -0.28 | 0.85 | 51.74 | 0.0437 | -0.2158 | 0.0011 |
| 240 | SLU 4 | -0.26 | 1.22 | 51.52 | 0.0212 | -0.2034 | 0.0011 |
| 240 | SLU 5 | -0.25 | 1.49 | 50.89 | 0.004 | -0.1926 | 0.001 |
| 240 | SLU 6 | -0.28 | 0.91 | 52.65 | 0.0405 | -0.2196 | 0.0011 |
| 240 | SLU 7 | -0.27 | 1.27 | 52.43 | 0.018 | -0.2071 | 0.0011 |
| 240 | SLU 8 | -0.28 | 0.93 | 52.17 | 0.0383 | -0.2171 | 0.0011 |
| 240 | SLU 9 | -0.27 | 1.3 | 51.95 | 0.0158 | -0.2046 | 0.0011 |
| 240 | SLU 10 | -0.28 | 1.37 | 55.35 | 0.0202 | -0.2155 | 0.0011 |
| 240 | SLU 11 | -0.31 | 0.79 | 57.12 | 0.0567 | -0.2425 | 0.0012 |
| 240 | SLU 12 | -0.3 | 1.16 | 56.9 | 0.0342 | -0.23 | 0.0012 |
| 240 | SLU 13 | -0.29 | 1.43 | 56.26 | 0.017 | -0.2193 | 0.0011 |
| 240 | SLU 14 | -0.31 | 0.85 | 58.03 | 0.0535 | -0.2463 | 0.0012 |
| 240 | SLU 15 | -0.3 | 1.21 | 57.81 | 0.031 | -0.2338 | 0.0012 |
| 240 | SLU 16 | -0.31 | 0.87 | 57.54 | 0.0513 | -0.2438 | 0.0012 |
| 240 | SLU 17 | -0.3 | 1.24 | 57.32 | 0.0288 | -0.2313 | 0.0012 |
| 240 | SLU 18 | -0.32 | 0.73 | 58.02 | 0.0633 | -0.2478 | 0.0013 |
| 240 | SLU 19 | -0.3 | 1.1 | 57.8 | 0.0408 | -0.2353 | 0.0012 |
| 240 | SLU 20 | -0.32 | 0.79 | 58.94 | 0.0601 | -0.2515 | 0.0013 |
| 240 | SLU 21 | -0.31 | 1.16 | 58.71 | 0.0376 | -0.239 | 0.0012 |
| 240 | SLU 22 | -0.3 | 0.79 | 55.78 | 0.055 | -0.2361 | 0.0012 |
| 240 | SLU 23 | -0.28 | 1.41 | 55.41 | 0.0175 | -0.2153 | 0.0011 |
| 240 | SLU 24 | -0.31 | 0.83 | 57.18 | 0.054 | -0.2424 | 0.0012 |
| 240 | SLU 25 | -0.3 | 1.19 | 56.96 | 0.0315 | -0.2299 | 0.0012 |
| 240 | SLU 26 | -0.29 | 1.46 | 56.32 | 0.0143 | -0.2191 | 0.0011 |
| 240 | SLU 27 | -0.31 | 0.88 | 58.09 | 0.0508 | -0.2461 | 0.0012 |
| 240 | SLU 28 | -0.3 | 1.25 | 57.87 | 0.0283 | -0.2336 | 0.0012 |
| 240 | SLU 29 | -0.31 | 0.9 | 57.6 | 0.0486 | -0.2436 | 0.0012 |
| 240 | SLU 30 | -0.3 | 1.27 | 57.38 | 0.0261 | -0.2312 | 0.0012 |
| 240 | SLU 31 | -0.32 | 1.35 | 60.79 | 0.0305 | -0.242 | 0.0013 |
| 240 | SLU 32 | -0.34 | 0.77 | 62.55 | 0.067 | -0.269 | 0.0014 |
| 240 | SLU 33 | -0.33 | 1.13 | 62.33 | 0.0445 | -0.2566 | 0.0013 |
| 240 | SLU 34 | -0.32 | 1.4 | 61.7 | 0.0273 | -0.2458 | 0.0013 |
| 240 | SLU 35 | -0.35 | 0.82 | 63.47 | 0.0638 | -0.2728 | 0.0014 |
| 240 | SLU 36 | -0.34 | 1.19 | 63.24 | 0.0413 | -0.2603 | 0.0013 |
| 240 | SLU 37 | -0.35 | 0.84 | 62.98 | 0.0616 | -0.2703 | 0.0014 |
| 240 | SLU 38 | -0.33 | 1.21 | 62.76 | 0.0391 | -0.2578 | 0.0013 |
| 240 | SLU 39 | -0.35 | 0.71 | 63.46 | 0.0736 | -0.2743 | 0.0014 |
| 240 | SLU 40 | -0.34 | 1.08 | 63.24 | 0.0511 | -0.2618 | 0.0013 |
| 240 | SLU 41 | -0.36 | 0.76 | 64.37 | 0.0704 | -0.278 | 0.0014 |
| 240 | SLU 42 | -0.34 | 1.13 | 64.15 | 0.0479 | -0.2655 | 0.0014 |
| 240 | SLU 43 | -0.34 | 1.07 | 63.58 | 0.0546 | -0.2634 | 0.0013 |
| 240 | SLU 44 | -0.32 | 1.69 | 63.22 | 0.0171 | -0.2426 | 0.0013 |
| 240 | SLU 45 | -0.34 | 1.11 | 64.98 | 0.0536 | -0.2696 | 0.0014 |
| 240 | SLU 46 | -0.33 | 1.47 | 64.76 | 0.0311 | -0.2572 | 0.0013 |

| Nodo | Cont. | Reazione a traslazione | | | Reazione a rotazione | | |
|---|---|---|---|---|---|---|---|
| Ind. | N.br. | x | y | z | x | y | z |
| 240 | SLU 47 | -0.32 | 1.74 | 64.13 | 0.0139 | -0.2464 | 0.0013 |
| 240 | SLU 48 | -0.35 | 1.16 | 65.89 | 0.0504 | -0.2734 | 0.0014 |
| 240 | SLU 49 | -0.34 | 1.53 | 65.67 | 0.0279 | -0.2609 | 0.0013 |
| 240 | SLU 50 | -0.35 | 1.18 | 65.41 | 0.0482 | -0.2709 | 0.0014 |
| 240 | SLU 51 | -0.33 | 1.55 | 65.19 | 0.0257 | -0.2584 | 0.0013 |
| 240 | SLU 52 | -0.35 | 1.63 | 68.59 | 0.0301 | -0.2693 | 0.0014 |
| 240 | SLU 53 | -0.38 | 1.05 | 70.36 | 0.0666 | -0.2963 | 0.0015 |
| 240 | SLU 54 | -0.37 | 1.41 | 70.14 | 0.0441 | -0.2838 | 0.0015 |
| 240 | SLU 55 | -0.36 | 1.68 | 69.5 | 0.0269 | -0.2731 | 0.0014 |
| 240 | SLU 56 | -0.38 | 1.1 | 71.27 | 0.0634 | -0.3001 | 0.0015 |
| 240 | SLU 57 | -0.37 | 1.47 | 71.05 | 0.0409 | -0.2876 | 0.0015 |
| 240 | SLU 58 | -0.38 | 1.12 | 70.78 | 0.0612 | -0.2976 | 0.0015 |
| 240 | SLU 59 | -0.37 | 1.49 | 70.56 | 0.0387 | -0.2851 | 0.0015 |
| 240 | SLU 60 | -0.39 | 0.99 | 71.26 | 0.0732 | -0.3016 | 0.0015 |
| 240 | SLU 61 | -0.37 | 1.36 | 71.04 | 0.0507 | -0.2891 | 0.0015 |
| 240 | SLU 62 | -0.39 | 1.04 | 72.18 | 0.07 | -0.3053 | 0.0015 |
| 240 | SLU 63 | -0.38 | 1.41 | 71.95 | 0.0475 | -0.2928 | 0.0015 |
| 240 | SLU 64 | -0.37 | 1.05 | 69.02 | 0.0649 | -0.2899 | 0.0015 |
| 240 | SLU 65 | -0.35 | 1.66 | 68.65 | 0.0274 | -0.2691 | 0.0014 |
| 240 | SLU 66 | -0.38 | 1.08 | 70.42 | 0.0639 | -0.2962 | 0.0015 |
| 240 | SLU 67 | -0.37 | 1.45 | 70.2 | 0.0414 | -0.2837 | 0.0015 |
| 240 | SLU 68 | -0.36 | 1.72 | 69.56 | 0.0242 | -0.2729 | 0.0014 |
| 240 | SLU 69 | -0.38 | 1.13 | 71.33 | 0.0607 | -0.2999 | 0.0015 |
| 240 | SLU 70 | -0.37 | 1.5 | 71.11 | 0.0382 | -0.2874 | 0.0015 |
| 240 | SLU 71 | -0.38 | 1.16 | 70.84 | 0.0585 | -0.2974 | 0.0015 |
| 240 | SLU 72 | -0.37 | 1.52 | 70.62 | 0.036 | -0.285 | 0.0015 |
| 240 | SLU 73 | -0.38 | 1.6 | 74.03 | 0.0404 | -0.2958 | 0.0015 |
| 240 | SLU 74 | -0.41 | 1.02 | 75.79 | 0.0769 | -0.3228 | 0.0016 |
| 240 | SLU 75 | -0.4 | 1.39 | 75.57 | 0.0544 | -0.3104 | 0.0016 |
| 240 | SLU 76 | -0.39 | 1.66 | 74.94 | 0.0372 | -0.2996 | 0.0016 |
| 240 | SLU 77 | -0.42 | 1.07 | 76.71 | 0.0737 | -0.3266 | 0.0017 |
| 240 | SLU 78 | -0.41 | 1.44 | 76.48 | 0.0512 | -0.3141 | 0.0016 |
| 240 | SLU 79 | -0.41 | 1.1 | 76.22 | 0.0715 | -0.3241 | 0.0016 |
| 240 | SLU 80 | -0.4 | 1.47 | 76 | 0.049 | -0.3116 | 0.0016 |
| 240 | SLU 81 | -0.42 | 0.96 | 76.7 | 0.0835 | -0.3281 | 0.0017 |
| 240 | SLU 82 | -0.41 | 1.33 | 76.48 | 0.061 | -0.3156 | 0.0016 |
| 240 | SLU 83 | -0.42 | 1.02 | 77.61 | 0.0803 | -0.3318 | 0.0017 |
| 240 | SLU 84 | -0.41 | 1.39 | 77.39 | 0.0578 | -0.3193 | 0.0016 |
| 240 | SLE RA 1 | -0.28 | 0.81 | 51.9 | 0.0477 | -0.2172 | 0.0011 |
| 240 | SLE RA 2 | -0.26 | 1.22 | 51.65 | 0.0227 | -0.2033 | 0.0011 |
| 240 | SLE RA 3 | -0.28 | 0.83 | 52.83 | 0.047 | -0.2213 | 0.0011 |
| 240 | SLE RA 4 | -0.27 | 1.08 | 52.68 | 0.032 | -0.213 | 0.0011 |
| 240 | SLE RA 5 | -0.27 | 1.26 | 52.26 | 0.0205 | -0.2058 | 0.0011 |
| 240 | SLE RA 6 | -0.29 | 0.87 | 53.44 | 0.0449 | -0.2239 | 0.0011 |
| 240 | SLE RA 7 | -0.28 | 1.11 | 53.29 | 0.0299 | -0.2155 | 0.0011 |
| 240 | SLE RA 8 | -0.28 | 0.88 | 53.11 | 0.0434 | -0.2222 | 0.0011 |
| 240 | SLE RA 9 | -0.28 | 1.13 | 52.96 | 0.0284 | -0.2139 | 0.0011 |
| 240 | SLE RA 10 | -0.29 | 1.18 | 55.24 | 0.0314 | -0.2211 | 0.0011 |
| 240 | SLE RA 11 | -0.31 | 0.79 | 56.41 | 0.0557 | -0.2391 | 0.0012 |
| 240 | SLE RA 12 | -0.3 | 1.04 | 56.27 | 0.0407 | -0.2308 | 0.0012 |
| 240 | SLE RA 13 | -0.29 | 1.22 | 55.84 | 0.0292 | -0.2236 | 0.0012 |
| 240 | SLE RA 14 | -0.31 | 0.83 | 57.02 | 0.0535 | -0.2416 | 0.0012 |
| 240 | SLE RA 15 | -0.3 | 1.08 | 56.87 | 0.0385 | -0.2333 | 0.0012 |
| 240 | SLE RA 16 | -0.31 | 0.84 | 56.7 | 0.052 | -0.24 | 0.0012 |
| 240 | SLE RA 17 | -0.3 | 1.09 | 56.55 | 0.037 | -0.2317 | 0.0012 |
| 240 | SLE RA 18 | -0.31 | 0.75 | 57.02 | 0.0601 | -0.2426 | 0.0012 |
| 240 | SLE RA 19 | -0.3 | 1 | 56.87 | 0.0451 | -0.2343 | 0.0012 |
| 240 | SLE RA 20 | -0.31 | 0.79 | 57.62 | 0.0579 | -0.2451 | 0.0012 |
| 240 | SLE RA 21 | -0.31 | 1.04 | 57.48 | 0.0429 | -0.2368 | 0.0012 |
| 240 | SLE FR 1 | -0.28 | 0.81 | 51.9 | 0.0477 | -0.2172 | 0.0011 |
| 240 | SLE FR 2 | -0.27 | 0.89 | 51.85 | 0.0427 | -0.2144 | 0.0011 |
| 240 | SLE FR 3 | -0.28 | 0.83 | 52.14 | 0.0468 | -0.2182 | 0.0011 |
| 240 | SLE FR 4 | -0.28 | 0.88 | 53.38 | 0.0464 | -0.2221 | 0.0011 |
| 240 | SLE FR 5 | -0.29 | 0.81 | 53.68 | 0.0505 | -0.2258 | 0.0011 |
| 240 | SLE FR 6 | -0.29 | 0.78 | 54.46 | 0.0539 | -0.2299 | 0.0012 |
| 240 | SLE QP 1 | -0.28 | 0.81 | 51.9 | 0.0477 | -0.2172 | 0.0011 |
| 240 | SLE QP 2 | -0.29 | 0.79 | 53.43 | 0.0514 | -0.2248 | 0.0011 |
| 240 | SLD 1 | -0.55 | 3.89 | 64.54 | -0.103 | -0.4483 | 0.002 |
| 240 | SLD 2 | -0.55 | 3.89 | 64.54 | -0.103 | -0.4483 | 0.002 |
| 240 | SLD 3 | -0.64 | -0.05 | 68.38 | 0.0874 | -0.5324 | 0.0023 |
| 240 | SLD 4 | -0.64 | -0.05 | 68.38 | 0.0874 | -0.5324 | 0.0023 |
| 240 | SLD 5 | -0.23 | 7.7 | 50.93 | -0.2837 | -0.1644 | 0.001 |
| 240 | SLD 6 | -0.23 | 7.7 | 50.93 | -0.2837 | -0.1644 | 0.001 |
| 240 | SLD 7 | -0.53 | -5.43 | 63.75 | 0.351 | -0.4446 | 0.0019 |
| 240 | SLD 8 | -0.53 | -5.43 | 63.75 | 0.351 | -0.4446 | 0.0019 |
| 240 | SLD 9 | -0.05 | 7.02 | 43.12 | -0.2482 | -0.0051 | 0.0004 |
| 240 | SLD 10 | -0.05 | 7.02 | 43.12 | -0.2482 | -0.0051 | 0.0004 |
| 240 | SLD 11 | -0.34 | -6.11 | 55.93 | 0.3865 | -0.2853 | 0.0013 |
| 240 | SLD 12 | -0.34 | -6.11 | 55.93 | 0.3865 | -0.2853 | 0.0013 |
| 240 | SLD 13 | 0.07 | 1.63 | 38.49 | 0.0154 | 0.0827 | 0 |
| 240 | SLD 14 | 0.07 | 1.63 | 38.49 | 0.0154 | 0.0827 | 0 |
| 240 | SLD 15 | -0.02 | -2.31 | 42.33 | 0.2058 | -0.0013 | 0.0003 |
| 240 | SLD 16 | -0.02 | -2.31 | 42.33 | 0.2058 | -0.0013 | 0.0003 |
| 240 | SLV 1 | -0.92 | 8.07 | 79.37 | -0.3097 | -0.7535 | 0.0031 |
| 240 | SLV 2 | -0.92 | 8.07 | 79.37 | -0.3097 | -0.7535 | 0.0031 |
| 240 | SLV 3 | -1.14 | -1.06 | 88.44 | 0.1321 | -0.9654 | 0.0038 |
| 240 | SLV 4 | -1.14 | -1.06 | 88.44 | 0.1321 | -0.9654 | 0.0038 |
| 240 | SLV 5 | -0.14 | 16.82 | 47.47 | -0.727 | -0.062 | 0.0007 |

| Nodo | Cont. | Reazione a traslazione | | | Reazione a rotazione | | |
|---|---|---|---|---|---|---|---|
| Ind. | N.br. | x | y | z | x | y | z |
| 240 | SLV 6 | -0.14 | 16.82 | 47.47 | -0.727 | -0.062 | 0.0007 |
| 240 | SLV 7 | -0.87 | -13.61 | 77.68 | 0.7457 | -0.7685 | 0.003 |
| 240 | SLV 8 | -0.87 | -13.61 | 77.68 | 0.7457 | -0.7685 | 0.003 |
| 240 | SLV 9 | 0.3 | 15.19 | 29.18 | -0.6429 | 0.3188 | -0.0007 |
| 240 | SLV 10 | 0.3 | 15.19 | 29.18 | -0.6429 | 0.3188 | -0.0007 |
| 240 | SLV 11 | -0.43 | -15.23 | 59.4 | 0.8298 | -0.3877 | 0.0016 |
| 240 | SLV 12 | -0.43 | -15.23 | 59.4 | 0.8298 | -0.3877 | 0.0016 |
| 240 | SLV 13 | 0.56 | 2.65 | 18.43 | -0.0293 | 0.5158 | -0.0015 |
| 240 | SLV 14 | 0.56 | 2.65 | 18.43 | -0.0293 | 0.5158 | -0.0015 |
| 240 | SLV 15 | 0.34 | -6.48 | 27.5 | 0.4125 | 0.3038 | -0.0008 |
| 240 | SLV 16 | 0.34 | -6.48 | 27.5 | 0.4125 | 0.3038 | -0.0008 |
| 241 | SLU 1 | 0.01 | -3.28 | 53.98 | 0.1336 | 0.0119 | 0 |
| 241 | SLU 2 | -0.01 | -2.79 | 52.85 | 0.1119 | -0.0061 | 0 |
| 241 | SLU 3 | 0.01 | -3.42 | 55.19 | 0.1394 | 0.0126 | 0 |
| 241 | SLU 4 | 0 | -3.13 | 54.51 | 0.1263 | 0.0018 | 0 |
| 241 | SLU 5 | 0 | -2.87 | 53.38 | 0.1152 | -0.0055 | 0 |
| 241 | SLU 6 | 0.01 | -3.5 | 55.72 | 0.1427 | 0.0132 | 0 |
| 241 | SLU 7 | 0 | -3.21 | 55.04 | 0.1296 | 0.0024 | 0 |
| 241 | SLU 8 | 0.01 | -3.44 | 55.04 | 0.1402 | 0.0131 | 0 |
| 241 | SLU 9 | 0 | -3.15 | 54.36 | 0.1272 | 0.0023 | 0 |
| 241 | SLU 10 | 0 | -3.37 | 59.21 | 0.1352 | -0.0046 | 0 |
| 241 | SLU 11 | 0.01 | -4.01 | 61.55 | 0.1627 | 0.0141 | 0 |
| 241 | SLU 12 | 0 | -3.71 | 60.87 | 0.1497 | 0.0032 | 0 |
| 241 | SLU 13 | 0 | -3.45 | 59.73 | 0.1385 | -0.004 | 0 |
| 241 | SLU 14 | 0.01 | -4.09 | 62.08 | 0.166 | 0.0147 | 0 |
| 241 | SLU 15 | 0 | -3.79 | 61.4 | 0.153 | 0.0038 | 0 |
| 241 | SLU 16 | 0.01 | -4.03 | 61.39 | 0.1635 | 0.0146 | 0 |
| 241 | SLU 17 | 0 | -3.73 | 60.71 | 0.1505 | 0.0038 | 0 |
| 241 | SLU 18 | 0.01 | -4.11 | 63.06 | 0.1669 | 0.014 | 0 |
| 241 | SLU 19 | 0 | -3.82 | 62.38 | 0.1539 | 0.0032 | 0 |
| 241 | SLU 20 | 0.01 | -4.19 | 63.59 | 0.1702 | 0.0146 | 0 |
| 241 | SLU 21 | 0 | -3.9 | 62.91 | 0.1572 | 0.0038 | 0 |
| 241 | SLU 22 | 0.01 | -3.87 | 60.12 | 0.1574 | 0.0136 | 0 |
| 241 | SLU 23 | 0 | -3.38 | 58.99 | 0.1357 | -0.0044 | 0 |
| 241 | SLU 24 | 0.01 | -4.02 | 61.33 | 0.1632 | 0.0143 | 0 |
| 241 | SLU 25 | 0 | -3.72 | 60.65 | 0.1502 | 0.0035 | 0 |
| 241 | SLU 26 | 0 | -3.46 | 59.52 | 0.139 | -0.0038 | 0 |
| 241 | SLU 27 | 0.01 | -4.1 | 61.86 | 0.1665 | 0.0149 | 0 |
| 241 | SLU 28 | 0 | -3.8 | 61.18 | 0.1535 | 0.0041 | 0 |
| 241 | SLU 29 | 0.01 | -4.04 | 61.18 | 0.164 | 0.0148 | 0 |
| 241 | SLU 30 | 0 | -3.74 | 60.5 | 0.151 | 0.004 | 0 |
| 241 | SLU 31 | 0 | -3.97 | 65.34 | 0.1591 | -0.003 | 0 |
| 241 | SLU 32 | 0.01 | -4.6 | 67.69 | 0.1865 | 0.0157 | 0 |
| 241 | SLU 33 | 0 | -4.31 | 67.01 | 0.1735 | 0.0049 | 0 |
| 241 | SLU 34 | 0 | -4.05 | 65.87 | 0.1624 | -0.0024 | 0 |
| 241 | SLU 35 | 0.01 | -4.68 | 68.22 | 0.1898 | 0.0163 | 0 |
| 241 | SLU 36 | 0 | -4.39 | 67.54 | 0.1768 | 0.0055 | 0 |
| 241 | SLU 37 | 0.01 | -4.62 | 67.53 | 0.1874 | 0.0163 | 0 |
| 241 | SLU 38 | 0 | -4.33 | 66.85 | 0.1743 | 0.0055 | 0 |
| 241 | SLU 39 | 0.01 | -4.71 | 69.2 | 0.1908 | 0.0157 | 0 |
| 241 | SLU 40 | 0 | -4.41 | 68.52 | 0.1777 | 0.0049 | 0 |
| 241 | SLU 41 | 0.01 | -4.79 | 69.73 | 0.1941 | 0.0163 | 0 |
| 241 | SLU 42 | 0 | -4.49 | 69.05 | 0.181 | 0.0055 | 0 |
| 241 | SLU 43 | 0.01 | -4.06 | 68.07 | 0.1655 | 0.0149 | 0 |
| 241 | SLU 44 | 0 | -3.57 | 66.94 | 0.1438 | -0.0031 | 0 |
| 241 | SLU 45 | 0.01 | -4.2 | 69.28 | 0.1713 | 0.0156 | 0 |
| 241 | SLU 46 | 0 | -3.91 | 68.6 | 0.1583 | 0.0048 | 0 |
| 241 | SLU 47 | 0 | -3.65 | 67.47 | 0.1471 | -0.0025 | 0 |
| 241 | SLU 48 | 0.01 | -4.28 | 69.81 | 0.1746 | 0.0162 | 0 |
| 241 | SLU 49 | 0 | -3.99 | 69.13 | 0.1616 | 0.0054 | 0 |
| 241 | SLU 50 | 0.01 | -4.22 | 69.13 | 0.1721 | 0.0162 | 0 |
| 241 | SLU 51 | 0 | -3.93 | 68.45 | 0.1591 | 0.0053 | 0 |
| 241 | SLU 52 | 0 | -4.15 | 73.29 | 0.1671 | -0.0016 | 0 |
| 241 | SLU 53 | 0.01 | -4.78 | 75.64 | 0.1946 | 0.0171 | 0 |
| 241 | SLU 54 | 0.01 | -4.49 | 74.96 | 0.1816 | 0.0063 | 0 |
| 241 | SLU 55 | 0 | -4.23 | 73.82 | 0.1704 | -0.001 | 0 |
| 241 | SLU 56 | 0.01 | -4.87 | 76.16 | 0.1979 | 0.0177 | 0 |
| 241 | SLU 57 | 0.01 | -4.57 | 75.49 | 0.1849 | 0.0069 | 0 |
| 241 | SLU 58 | 0.01 | -4.8 | 75.48 | 0.1954 | 0.0176 | 0 |
| 241 | SLU 59 | 0.01 | -4.51 | 74.8 | 0.1824 | 0.0068 | 0 |
| 241 | SLU 60 | 0.01 | -4.89 | 77.15 | 0.1989 | 0.017 | 0 |
| 241 | SLU 61 | 0.01 | -4.6 | 76.47 | 0.1858 | 0.0062 | 0 |
| 241 | SLU 62 | 0.01 | -4.97 | 77.68 | 0.2022 | 0.0176 | 0 |
| 241 | SLU 63 | 0.01 | -4.68 | 77 | 0.1891 | 0.0068 | 0 |
| 241 | SLU 64 | 0.01 | -4.65 | 74.21 | 0.1893 | 0.0166 | 0 |
| 241 | SLU 65 | 0 | -4.16 | 73.08 | 0.1676 | -0.0014 | 0 |
| 241 | SLU 66 | 0.01 | -4.8 | 75.42 | 0.1951 | 0.0173 | 0 |
| 241 | SLU 67 | 0.01 | -4.5 | 74.74 | 0.1821 | 0.0065 | 0 |
| 241 | SLU 68 | 0 | -4.24 | 73.61 | 0.1709 | -0.0008 | 0 |
| 241 | SLU 69 | 0.01 | -4.88 | 75.95 | 0.1984 | 0.0179 | 0 |
| 241 | SLU 70 | 0.01 | -4.58 | 75.27 | 0.1854 | 0.0071 | 0 |
| 241 | SLU 71 | 0.01 | -4.82 | 75.27 | 0.1959 | 0.0178 | 0 |
| 241 | SLU 72 | 0.01 | -4.52 | 74.59 | 0.1829 | 0.007 | 0 |
| 241 | SLU 73 | 0 | -4.74 | 79.43 | 0.191 | 0.0001 | 0 |
| 241 | SLU 74 | 0.02 | -5.38 | 81.78 | 0.2184 | 0.0187 | 0 |
| 241 | SLU 75 | 0.01 | -5.08 | 81.1 | 0.2054 | 0.0079 | 0 |
| 241 | SLU 76 | 0 | -4.83 | 79.96 | 0.1943 | 0.0007 | 0 |
| 241 | SLU 77 | 0.02 | -5.46 | 82.3 | 0.2217 | 0.0193 | 0 |

| Nodo | Cont. | Reazione a traslazione | | | Reazione a rotazione | | |
|---|---|---|---|---|---|---|---|
| Ind. | N.br. | x | y | z | x | y | z |
| 241 | SLU 78 | 0.01 | -5.17 | 81.63 | 0.2087 | 0.0085 | 0 |
| 241 | SLU 79 | 0.02 | -5.4 | 81.62 | 0.2193 | 0.0193 | 0 |
| 241 | SLU 80 | 0.01 | -5.1 | 80.94 | 0.2062 | 0.0085 | 0 |
| 241 | SLU 81 | 0.02 | -5.49 | 83.29 | 0.2227 | 0.0187 | 0 |
| 241 | SLU 82 | 0.01 | -5.19 | 82.61 | 0.2096 | 0.0079 | 0 |
| 241 | SLU 83 | 0.02 | -5.57 | 83.82 | 0.226 | 0.0193 | 0 |
| 241 | SLU 84 | 0.01 | -5.27 | 83.14 | 0.2129 | 0.0085 | 0 |
| 241 | SLE RA 1 | 0.01 | -3.45 | 55.73 | 0.1404 | 0.0124 | 0 |
| 241 | SLE RA 2 | 0 | -3.12 | 54.98 | 0.1259 | 0.0004 | 0 |
| 241 | SLE RA 3 | 0.01 | -3.54 | 56.54 | 0.1442 | 0.0129 | 0 |
| 241 | SLE RA 4 | 0 | -3.35 | 56.09 | 0.1356 | 0.0056 | 0 |
| 241 | SLE RA 5 | 0 | -3.17 | 55.33 | 0.1281 | 0.0008 | 0 |
| 241 | SLE RA 6 | 0.01 | -3.6 | 56.89 | 0.1464 | 0.0133 | 0 |
| 241 | SLE RA 7 | 0 | -3.4 | 56.44 | 0.1378 | 0.006 | 0 |
| 241 | SLE RA 8 | 0.01 | -3.56 | 56.44 | 0.1448 | 0.0132 | 0 |
| 241 | SLE RA 9 | 0 | -3.36 | 55.99 | 0.1361 | 0.006 | 0 |
| 241 | SLE RA 10 | 0 | -3.51 | 59.22 | 0.1415 | 0.0014 | 0 |
| 241 | SLE RA 11 | 0.01 | -3.93 | 60.78 | 0.1598 | 0.0138 | 0 |
| 241 | SLE RA 12 | 0.01 | -3.74 | 60.33 | 0.1511 | 0.0066 | 0 |
| 241 | SLE RA 13 | 0 | -3.56 | 59.57 | 0.1437 | 0.0018 | 0 |
| 241 | SLE RA 14 | 0.01 | -3.99 | 61.13 | 0.162 | 0.0142 | 0 |
| 241 | SLE RA 15 | 0.01 | -3.79 | 60.68 | 0.1533 | 0.007 | 0 |
| 241 | SLE RA 16 | 0.01 | -3.95 | 60.68 | 0.1604 | 0.0142 | 0 |
| 241 | SLE RA 17 | 0.01 | -3.75 | 60.22 | 0.1517 | 0.007 | 0 |
| 241 | SLE RA 18 | 0.01 | -4 | 61.79 | 0.1626 | 0.0138 | 0 |
| 241 | SLE RA 19 | 0.01 | -3.81 | 61.33 | 0.1539 | 0.0066 | 0 |
| 241 | SLE RA 20 | 0.01 | -4.06 | 62.14 | 0.1648 | 0.0142 | 0 |
| 241 | SLE RA 21 | 0.01 | -3.86 | 61.69 | 0.1561 | 0.007 | 0 |
| 241 | SLE FR 1 | 0.01 | -3.45 | 55.73 | 0.1404 | 0.0124 | 0 |
| 241 | SLE FR 2 | 0.01 | -3.38 | 55.58 | 0.1375 | 0.01 | 0 |
| 241 | SLE FR 3 | 0.01 | -3.47 | 55.87 | 0.1413 | 0.0126 | 0 |
| 241 | SLE FR 4 | 0.01 | -3.55 | 57.4 | 0.1442 | 0.0104 | 0 |
| 241 | SLE FR 5 | 0.01 | -3.64 | 57.69 | 0.1479 | 0.013 | 0 |
| 241 | SLE FR 6 | 0.01 | -3.73 | 58.76 | 0.1515 | 0.0131 | 0 |
| 241 | SLE QP 1 | 0.01 | -3.45 | 55.73 | 0.1404 | 0.0124 | 0 |
| 241 | SLE QP 2 | 0.01 | -3.62 | 57.55 | 0.1471 | 0.0128 | 0 |
| 241 | SLD 1 | 0.41 | -0.22 | 41.42 | 0.0074 | 0.3648 | -0.0001 |
| 241 | SLD 2 | 0.41 | -0.22 | 41.42 | 0.0074 | 0.3648 | -0.0001 |
| 241 | SLD 3 | 0.3 | -5 | 44.99 | 0.2055 | 0.2608 | -0.0001 |
| 241 | SLD 4 | 0.3 | -5 | 44.99 | 0.2055 | 0.2608 | -0.0001 |
| 241 | SLD 5 | 0.29 | 4.64 | 47.3 | -0.1954 | 0.276 | 0 |
| 241 | SLD 6 | 0.29 | 4.64 | 47.3 | -0.1954 | 0.276 | 0 |
| 241 | SLD 7 | -0.06 | -11.27 | 59.19 | 0.4652 | -0.0704 | -0.0001 |
| 241 | SLD 8 | -0.06 | -11.27 | 59.19 | 0.4652 | -0.0704 | -0.0001 |
| 241 | SLD 9 | 0.08 | 4.04 | 55.91 | -0.171 | 0.096 | 0.0001 |
| 241 | SLD 10 | 0.08 | 4.04 | 55.91 | -0.171 | 0.096 | 0.0001 |
| 241 | SLD 11 | -0.27 | -11.87 | 67.8 | 0.4895 | -0.2503 | 0 |
| 241 | SLD 12 | -0.27 | -11.87 | 67.8 | 0.4895 | -0.2503 | 0 |
| 241 | SLD 13 | -0.28 | -2.23 | 70.11 | 0.0886 | -0.2352 | 0.0001 |
| 241 | SLD 14 | -0.28 | -2.23 | 70.11 | 0.0886 | -0.2352 | 0.0001 |
| 241 | SLD 15 | -0.39 | -7.01 | 73.68 | 0.2868 | -0.3391 | 0.0001 |
| 241 | SLD 16 | -0.39 | -7.01 | 73.68 | 0.2868 | -0.3391 | 0.0001 |
| 241 | SLV 1 | 0.96 | 4.3 | 19.77 | -0.1792 | 0.8646 | -0.0002 |
| 241 | SLV 2 | 0.96 | 4.3 | 19.77 | -0.1792 | 0.8646 | -0.0002 |
| 241 | SLV 3 | 0.7 | -6.77 | 28.21 | 0.2803 | 0.6005 | -0.0002 |
| 241 | SLV 4 | 0.7 | -6.77 | 28.21 | 0.2803 | 0.6005 | -0.0002 |
| 241 | SLV 5 | 0.69 | 15.55 | 33.42 | -0.6476 | 0.6689 | 0 |
| 241 | SLV 6 | 0.69 | 15.55 | 33.42 | -0.6476 | 0.6689 | 0 |
| 241 | SLV 7 | -0.18 | -21.35 | 61.54 | 0.8839 | -0.2114 | -0.0002 |
| 241 | SLV 8 | -0.18 | -21.35 | 61.54 | 0.8839 | -0.2114 | -0.0002 |
| 241 | SLV 9 | 0.2 | 14.12 | 53.56 | -0.5897 | 0.2371 | 0.0002 |
| 241 | SLV 10 | 0.2 | 14.12 | 53.56 | -0.5897 | 0.2371 | 0.0002 |
| 241 | SLV 11 | -0.67 | -22.78 | 81.68 | 0.9418 | -0.6433 | -0.0001 |
| 241 | SLV 12 | -0.67 | -22.78 | 81.68 | 0.9418 | -0.6433 | -0.0001 |
| 241 | SLV 13 | -0.68 | -0.46 | 86.89 | 0.0138 | -0.5749 | 0.0002 |
| 241 | SLV 14 | -0.68 | -0.46 | 86.89 | 0.0138 | -0.5749 | 0.0002 |
| 241 | SLV 15 | -0.94 | -11.53 | 95.33 | 0.4733 | -0.839 | 0.0002 |
| 241 | SLV 16 | -0.94 | -11.53 | 95.33 | 0.4733 | -0.839 | 0.0002 |
| 242 | SLU 1 | 0 | 2.25 | 45.16 | -0.0642 | -0.0016 | 0 |
| 242 | SLU 2 | 0 | 2.36 | 44.61 | -0.0677 | -0.001 | 0 |
| 242 | SLU 3 | 0 | 2.13 | 47.22 | -0.0593 | -0.0017 | 0 |
| 242 | SLU 4 | 0 | 2.19 | 46.89 | -0.0614 | -0.0014 | 0 |
| 242 | SLU 5 | 0 | 2.2 | 46.24 | -0.0617 | -0.0011 | 0 |
| 242 | SLU 6 | 0 | 1.96 | 48.84 | -0.0533 | -0.0018 | 0 |
| 242 | SLU 7 | 0 | 2.03 | 48.51 | -0.0554 | -0.0014 | 0 |
| 242 | SLU 8 | 0 | 1.93 | 48.42 | -0.0522 | -0.0017 | 0 |
| 242 | SLU 9 | 0 | 1.99 | 48.09 | -0.0543 | -0.0014 | 0 |
| 242 | SLU 10 | 0 | 2.61 | 52.62 | -0.0749 | -0.0013 | 0 |
| 242 | SLU 11 | 0 | 2.38 | 55.22 | -0.0665 | -0.002 | 0 |
| 242 | SLU 12 | 0 | 2.44 | 54.89 | -0.0686 | -0.0016 | 0 |
| 242 | SLU 13 | 0 | 2.45 | 54.24 | -0.0689 | -0.0014 | 0 |
| 242 | SLU 14 | 0 | 2.22 | 56.84 | -0.0605 | -0.0021 | 0 |
| 242 | SLU 15 | 0 | 2.28 | 56.51 | -0.0626 | -0.0017 | 0 |
| 242 | SLU 16 | 0 | 2.18 | 56.42 | -0.0594 | -0.002 | 0 |
| 242 | SLU 17 | 0 | 2.24 | 56.09 | -0.0615 | -0.0017 | 0 |
| 242 | SLU 18 | 0 | 2.61 | 56.59 | -0.0745 | -0.002 | 0 |
| 242 | SLU 19 | 0 | 2.68 | 56.26 | -0.0766 | -0.0017 | 0 |
| 242 | SLU 20 | 0 | 2.45 | 58.22 | -0.0685 | -0.0021 | 0 |

| Nodo | Cont. | Reazione a traslazione | | | Reazione a rotazione | | |
|---|---|---|---|---|---|---|---|
| Ind. | N.br. | x | y | z | x | y | z |
| 242 | SLU 21 | 0 | 2.51 | 57.89 | -0.0706 | -0.0017 | 0 |
| 242 | SLU 22 | 0 | 2.42 | 52.98 | -0.0682 | -0.0019 | 0 |
| 242 | SLU 23 | 0 | 2.52 | 52.43 | -0.0716 | -0.0013 | 0 |
| 242 | SLU 24 | 0 | 2.29 | 55.03 | -0.0633 | -0.002 | 0 |
| 242 | SLU 25 | 0 | 2.36 | 54.7 | -0.0654 | -0.0017 | 0 |
| 242 | SLU 26 | 0 | 2.36 | 54.05 | -0.0656 | -0.0014 | 0 |
| 242 | SLU 27 | 0 | 2.13 | 56.65 | -0.0573 | -0.0021 | 0 |
| 242 | SLU 28 | 0 | 2.19 | 56.33 | -0.0594 | -0.0017 | 0 |
| 242 | SLU 29 | 0 | 2.09 | 56.23 | -0.0561 | -0.002 | 0 |
| 242 | SLU 30 | 0 | 2.16 | 55.9 | -0.0582 | -0.0017 | 0 |
| 242 | SLU 31 | 0 | 2.78 | 60.43 | -0.0788 | -0.0016 | 0 |
| 242 | SLU 32 | 0 | 2.54 | 63.03 | -0.0705 | -0.0023 | 0 |
| 242 | SLU 33 | 0 | 2.61 | 62.7 | -0.0726 | -0.0019 | 0 |
| 242 | SLU 34 | 0 | 2.61 | 62.05 | -0.0728 | -0.0017 | 0 |
| 242 | SLU 35 | 0 | 2.38 | 64.66 | -0.0645 | -0.0024 | 0 |
| 242 | SLU 36 | 0 | 2.44 | 64.33 | -0.0666 | -0.002 | 0 |
| 242 | SLU 37 | 0 | 2.34 | 64.23 | -0.0633 | -0.0023 | 0 |
| 242 | SLU 38 | 0 | 2.41 | 63.9 | -0.0654 | -0.002 | 0 |
| 242 | SLU 39 | 0 | 2.78 | 64.41 | -0.0784 | -0.0023 | 0 |
| 242 | SLU 40 | 0 | 2.84 | 64.08 | -0.0805 | -0.002 | 0 |
| 242 | SLU 41 | 0 | 2.61 | 66.03 | -0.0724 | -0.0024 | 0 |
| 242 | SLU 42 | 0 | 2.68 | 65.7 | -0.0745 | -0.002 | 0 |
| 242 | SLU 43 | 0 | 2.87 | 56.03 | -0.0821 | -0.002 | 0 |
| 242 | SLU 44 | 0 | 2.98 | 55.49 | -0.0856 | -0.0014 | 0 |
| 242 | SLU 45 | 0 | 2.75 | 58.09 | -0.0772 | -0.0021 | 0 |
| 242 | SLU 46 | 0 | 2.81 | 57.76 | -0.0793 | -0.0017 | 0 |
| 242 | SLU 47 | 0 | 2.82 | 57.11 | -0.0796 | -0.0015 | 0 |
| 242 | SLU 48 | 0 | 2.58 | 59.71 | -0.0712 | -0.0022 | 0 |
| 242 | SLU 49 | 0 | 2.65 | 59.38 | -0.0733 | -0.0018 | 0 |
| 242 | SLU 50 | 0 | 2.55 | 59.29 | -0.0701 | -0.0021 | 0 |
| 242 | SLU 51 | 0 | 2.61 | 58.96 | -0.0722 | -0.0018 | 0 |
| 242 | SLU 52 | 0 | 3.23 | 63.49 | -0.0928 | -0.0017 | 0 |
| 242 | SLU 53 | 0 | 3 | 66.09 | -0.0844 | -0.0024 | 0 |
| 242 | SLU 54 | 0 | 3.06 | 65.76 | -0.0865 | -0.002 | 0 |
| 242 | SLU 55 | 0 | 3.07 | 65.11 | -0.0868 | -0.0018 | 0 |
| 242 | SLU 56 | 0 | 2.84 | 67.71 | -0.0784 | -0.0024 | 0 |
| 242 | SLU 57 | 0 | 2.9 | 67.38 | -0.0805 | -0.0021 | 0 |
| 242 | SLU 58 | 0 | 2.8 | 67.29 | -0.0773 | -0.0024 | 0 |
| 242 | SLU 59 | 0 | 2.86 | 66.96 | -0.0794 | -0.0021 | 0 |
| 242 | SLU 60 | 0 | 3.23 | 67.46 | -0.0924 | -0.0024 | 0 |
| 242 | SLU 61 | 0 | 3.3 | 67.13 | -0.0945 | -0.0021 | 0 |
| 242 | SLU 62 | 0 | 3.07 | 69.09 | -0.0864 | -0.0025 | 0 |
| 242 | SLU 63 | 0 | 3.13 | 68.76 | -0.0884 | -0.0021 | 0 |
| 242 | SLU 64 | 0 | 3.04 | 63.85 | -0.0861 | -0.0023 | 0 |
| 242 | SLU 65 | 0 | 3.14 | 63.3 | -0.0895 | -0.0017 | 0 |
| 242 | SLU 66 | 0 | 2.91 | 65.9 | -0.0812 | -0.0024 | 0 |
| 242 | SLU 67 | 0 | 2.98 | 65.57 | -0.0833 | -0.002 | 0 |
| 242 | SLU 68 | 0 | 2.98 | 64.92 | -0.0835 | -0.0018 | 0 |
| 242 | SLU 69 | 0 | 2.75 | 67.53 | -0.0752 | -0.0025 | 0 |
| 242 | SLU 70 | 0 | 2.81 | 67.2 | -0.0773 | -0.0021 | 0 |
| 242 | SLU 71 | 0 | 2.71 | 67.1 | -0.074 | -0.0024 | 0 |
| 242 | SLU 72 | 0 | 2.78 | 66.77 | -0.0761 | -0.0021 | 0 |
| 242 | SLU 73 | 0 | 3.4 | 71.3 | -0.0967 | -0.002 | 0 |
| 242 | SLU 74 | 0 | 3.16 | 73.9 | -0.0884 | -0.0027 | 0 |
| 242 | SLU 75 | 0 | 3.23 | 73.57 | -0.0905 | -0.0023 | 0 |
| 242 | SLU 76 | 0 | 3.23 | 72.92 | -0.0907 | -0.0021 | 0 |
| 242 | SLU 77 | 0 | 3 | 75.53 | -0.0824 | -0.0027 | 0 |
| 242 | SLU 78 | 0 | 3.06 | 75.2 | -0.0845 | -0.0024 | 0 |
| 242 | SLU 79 | 0 | 2.96 | 75.1 | -0.0812 | -0.0027 | 0 |
| 242 | SLU 80 | 0 | 3.03 | 74.77 | -0.0833 | -0.0024 | 0 |
| 242 | SLU 81 | 0 | 3.4 | 75.28 | -0.0963 | -0.0027 | 0 |
| 242 | SLU 82 | 0 | 3.46 | 74.95 | -0.0984 | -0.0024 | 0 |
| 242 | SLU 83 | 0 | 3.23 | 76.9 | -0.0903 | -0.0028 | 0 |
| 242 | SLU 84 | 0 | 3.3 | 76.57 | -0.0924 | -0.0024 | 0 |
| 242 | SLE RA 1 | 0 | 2.3 | 47.4 | -0.0653 | -0.0017 | 0 |
| 242 | SLE RA 2 | 0 | 2.37 | 47.03 | -0.0676 | -0.0013 | 0 |
| 242 | SLE RA 3 | 0 | 2.22 | 48.76 | -0.0621 | -0.0018 | 0 |
| 242 | SLE RA 4 | 0 | 2.26 | 48.54 | -0.0635 | -0.0015 | 0 |
| 242 | SLE RA 5 | 0 | 2.26 | 48.11 | -0.0636 | -0.0013 | 0 |
| 242 | SLE RA 6 | 0 | 2.11 | 49.85 | -0.0581 | -0.0018 | 0 |
| 242 | SLE RA 7 | 0 | 2.15 | 49.63 | -0.0595 | -0.0016 | 0 |
| 242 | SLE RA 8 | 0 | 2.08 | 49.56 | -0.0573 | -0.0018 | 0 |
| 242 | SLE RA 9 | 0 | 2.13 | 49.34 | -0.0587 | -0.0015 | 0 |
| 242 | SLE RA 10 | 0 | 2.54 | 52.36 | -0.0724 | -0.0015 | 0 |
| 242 | SLE RA 11 | 0 | 2.38 | 54.1 | -0.0669 | -0.002 | 0 |
| 242 | SLE RA 12 | 0 | 2.43 | 53.88 | -0.0683 | -0.0017 | 0 |
| 242 | SLE RA 13 | 0 | 2.43 | 53.45 | -0.0684 | -0.0015 | 0 |
| 242 | SLE RA 14 | 0 | 2.28 | 55.18 | -0.0629 | -0.002 | 0 |
| 242 | SLE RA 15 | 0 | 2.32 | 54.96 | -0.0643 | -0.0018 | 0 |
| 242 | SLE RA 16 | 0 | 2.25 | 54.9 | -0.0621 | -0.002 | 0 |
| 242 | SLE RA 17 | 0 | 2.29 | 54.68 | -0.0635 | -0.0017 | 0 |
| 242 | SLE RA 18 | 0 | 2.54 | 55.02 | -0.0722 | -0.002 | 0 |
| 242 | SLE RA 19 | 0 | 2.58 | 54.8 | -0.0736 | -0.0017 | 0 |
| 242 | SLE RA 20 | 0 | 2.43 | 56.1 | -0.0682 | -0.002 | 0 |
| 242 | SLE RA 21 | 0 | 2.47 | 55.88 | -0.0696 | -0.0018 | 0 |
| 242 | SLE FR 1 | 0 | 2.3 | 47.4 | -0.0653 | -0.0017 | 0 |
| 242 | SLE FR 2 | 0 | 2.31 | 47.32 | -0.0658 | -0.0016 | 0 |
| 242 | SLE FR 3 | 0 | 2.26 | 47.83 | -0.0637 | -0.0017 | 0 |

| Nodo | Cont. | Reazione a traslazione | | | Reazione a rotazione | | |
|---|---|---|---|---|---|---|---|
| Ind. | N.br. | x | y | z | x | y | z |
| 242 | SLE FR 4 | 0 | 2.39 | 49.61 | -0.0678 | -0.0017 | 0 |
| 242 | SLE FR 5 | 0 | 2.33 | 50.12 | -0.0658 | -0.0018 | 0 |
| 242 | SLE FR 6 | 0 | 2.42 | 51.21 | -0.0688 | -0.0018 | 0 |
| 242 | SLE QP 1 | 0 | 2.3 | 47.4 | -0.0653 | -0.0017 | 0 |
| 242 | SLE QP 2 | 0 | 2.37 | 49.68 | -0.0674 | -0.0018 | 0 |
| 242 | SLD 1 | 0.23 | 6.15 | 49.97 | -0.1891 | 0.2246 | -0.0025 |
| 242 | SLD 2 | 0.23 | 6.15 | 49.97 | -0.1891 | 0.2246 | -0.0025 |
| 242 | SLD 3 | 0.28 | 2.15 | 51.74 | -0.0597 | 0.2772 | -0.0031 |
| 242 | SLD 4 | 0.28 | 2.15 | 51.74 | -0.0597 | 0.2772 | -0.0031 |
| 242 | SLD 5 | -0.01 | 9.56 | 47.08 | -0.3003 | -0.0135 | 0.0001 |
| 242 | SLD 6 | -0.01 | 9.56 | 47.08 | -0.3003 | -0.0135 | 0.0001 |
| 242 | SLD 7 | 0.16 | -3.75 | 52.99 | 0.1313 | 0.1616 | -0.0018 |
| 242 | SLD 8 | 0.16 | -3.75 | 52.99 | 0.1313 | 0.1616 | -0.0018 |
| 242 | SLD 9 | -0.17 | 8.5 | 46.38 | -0.2661 | -0.1651 | 0.0018 |
| 242 | SLD 10 | -0.17 | 8.5 | 46.38 | -0.2661 | -0.1651 | 0.0018 |
| 242 | SLD 11 | 0.01 | -4.82 | 52.28 | 0.1655 | 0.0099 | -0.0001 |
| 242 | SLD 12 | 0.01 | -4.82 | 52.28 | 0.1655 | 0.0099 | -0.0001 |
| 242 | SLD 13 | -0.28 | 2.59 | 47.62 | -0.0751 | -0.2807 | 0.0031 |
| 242 | SLD 14 | -0.28 | 2.59 | 47.62 | -0.0751 | -0.2807 | 0.0031 |
| 242 | SLD 15 | -0.23 | -1.4 | 49.4 | 0.0544 | -0.2282 | 0.0025 |
| 242 | SLD 16 | -0.23 | -1.4 | 49.4 | 0.0544 | -0.2282 | 0.0025 |
| 242 | SLV 1 | 0.58 | 11.18 | 50.39 | -0.3515 | 0.5773 | -0.0064 |
| 242 | SLV 2 | 0.58 | 11.18 | 50.39 | -0.3515 | 0.5773 | -0.0064 |
| 242 | SLV 3 | 0.71 | 1.87 | 54.57 | -0.05 | 0.7121 | -0.0078 |
| 242 | SLV 4 | 0.71 | 1.87 | 54.57 | -0.05 | 0.7121 | -0.0078 |
| 242 | SLV 5 | -0.03 | 19.13 | 43.55 | -0.6099 | -0.0324 | 0.0003 |
| 242 | SLV 6 | -0.03 | 19.13 | 43.55 | -0.6099 | -0.0324 | 0.0003 |
| 242 | SLV 7 | 0.42 | -11.89 | 57.49 | 0.3951 | 0.4167 | -0.0045 |
| 242 | SLV 8 | 0.42 | -11.89 | 57.49 | 0.3951 | 0.4167 | -0.0045 |
| 242 | SLV 9 | -0.42 | 16.63 | 41.88 | -0.5299 | -0.4203 | 0.0046 |
| 242 | SLV 10 | -0.42 | 16.63 | 41.88 | -0.5299 | -0.4203 | 0.0046 |
| 242 | SLV 11 | 0.03 | -14.38 | 55.81 | 0.4751 | 0.0288 | -0.0003 |
| 242 | SLV 12 | 0.03 | -14.38 | 55.81 | 0.4751 | 0.0288 | -0.0003 |
| 242 | SLV 13 | -0.72 | 2.87 | 44.79 | -0.0848 | -0.7157 | 0.0079 |
| 242 | SLV 14 | -0.72 | 2.87 | 44.79 | -0.0848 | -0.7157 | 0.0079 |
| 242 | SLV 15 | -0.58 | -6.43 | 48.97 | 0.2167 | -0.5809 | 0.0064 |
| 242 | SLV 16 | -0.58 | -6.43 | 48.97 | 0.2167 | -0.5809 | 0.0064 |
| 243 | SLU 1 | 0 | 1.18 | 47.6 | -0.0368 | 0.0003 | 0 |
| 243 | SLU 2 | 0 | 1.25 | 47.18 | -0.0396 | -0.0002 | 0 |
| 243 | SLU 3 | 0 | 1.42 | 49.49 | -0.0467 | 0.0005 | 0 |
| 243 | SLU 4 | 0 | 1.46 | 49.24 | -0.0484 | 0.0002 | 0 |
| 243 | SLU 5 | 0 | 1.56 | 48.58 | -0.0533 | 0 | 0 |
| 243 | SLU 6 | 0 | 1.74 | 50.89 | -0.0603 | 0.0007 | 0 |
| 243 | SLU 7 | 0 | 1.78 | 50.64 | -0.0621 | 0.0004 | 0 |
| 243 | SLU 8 | 0 | 1.82 | 50.4 | -0.0641 | 0.0007 | 0 |
| 243 | SLU 9 | 0 | 1.86 | 50.15 | -0.0658 | 0.0004 | 0 |
| 243 | SLU 10 | 0 | 1.15 | 55.69 | -0.0323 | -0.0002 | 0 |
| 243 | SLU 11 | 0 | 1.32 | 58.01 | -0.0393 | 0.0005 | 0 |
| 243 | SLU 12 | 0 | 1.36 | 57.76 | -0.041 | 0.0002 | 0 |
| 243 | SLU 13 | 0 | 1.47 | 57.09 | -0.0459 | 0 | 0 |
| 243 | SLU 14 | 0 | 1.64 | 59.41 | -0.053 | 0.0007 | 0 |
| 243 | SLU 15 | 0 | 1.68 | 59.16 | -0.0547 | 0.0004 | 0 |
| 243 | SLU 16 | 0 | 1.72 | 58.91 | -0.0567 | 0.0007 | 0 |
| 243 | SLU 17 | 0 | 1.76 | 58.66 | -0.0585 | 0.0004 | 0 |
| 243 | SLU 18 | 0 | 1.04 | 59.76 | -0.0263 | 0.0003 | 0 |
| 243 | SLU 19 | 0 | 1.08 | 59.51 | -0.028 | 0 | 0 |
| 243 | SLU 20 | 0 | 1.36 | 61.16 | -0.0399 | 0.0005 | 0 |
| 243 | SLU 21 | 0 | 1.4 | 60.91 | -0.0416 | 0.0002 | 0 |
| 243 | SLU 22 | 0 | 1.27 | 55.7 | -0.0378 | 0.0004 | 0 |
| 243 | SLU 23 | 0 | 1.33 | 55.28 | -0.0407 | -0.0001 | 0 |
| 243 | SLU 24 | 0 | 1.51 | 57.6 | -0.0477 | 0.0006 | 0 |
| 243 | SLU 25 | 0 | 1.55 | 57.35 | -0.0494 | 0.0003 | 0 |
| 243 | SLU 26 | 0 | 1.65 | 56.69 | -0.0543 | 0.0001 | 0 |
| 243 | SLU 27 | 0 | 1.82 | 59 | -0.0614 | 0.0008 | 0 |
| 243 | SLU 28 | 0 | 1.86 | 58.75 | -0.0631 | 0.0005 | 0 |
| 243 | SLU 29 | 0 | 1.9 | 58.5 | -0.0651 | 0.0008 | 0 |
| 243 | SLU 30 | 0 | 1.94 | 58.25 | -0.0668 | 0.0005 | 0 |
| 243 | SLU 31 | 0 | 1.24 | 63.8 | -0.0333 | -0.0001 | 0 |
| 243 | SLU 32 | 0 | 1.41 | 66.11 | -0.0404 | 0.0006 | 0 |
| 243 | SLU 33 | 0 | 1.45 | 65.86 | -0.0421 | 0.0003 | 0 |
| 243 | SLU 34 | 0 | 1.55 | 65.2 | -0.047 | 0.0001 | 0 |
| 243 | SLU 35 | 0 | 1.73 | 67.51 | -0.054 | 0.0008 | 0 |
| 243 | SLU 36 | 0 | 1.77 | 67.26 | -0.0557 | 0.0005 | 0 |
| 243 | SLU 37 | 0 | 1.81 | 67.02 | -0.0578 | 0.0008 | 0 |
| 243 | SLU 38 | 0 | 1.85 | 66.77 | -0.0595 | 0.0005 | 0 |
| 243 | SLU 39 | 0 | 1.13 | 67.87 | -0.0273 | 0.0004 | 0 |
| 243 | SLU 40 | 0 | 1.17 | 67.62 | -0.029 | 0.0001 | 0 |
| 243 | SLU 41 | 0 | 1.45 | 69.27 | -0.041 | 0.0006 | 0 |
| 243 | SLU 42 | 0 | 1.49 | 69.02 | -0.0427 | 0.0003 | 0 |
| 243 | SLU 43 | 0 | 1.5 | 59.1 | -0.0475 | 0.0003 | 0 |
| 243 | SLU 44 | 0 | 1.57 | 58.68 | -0.0503 | -0.0002 | 0 |
| 243 | SLU 45 | 0 | 1.74 | 60.99 | -0.0574 | 0.0005 | 0 |
| 243 | SLU 46 | 0 | 1.78 | 60.74 | -0.0591 | 0.0002 | 0 |
| 243 | SLU 47 | 0 | 1.89 | 60.08 | -0.064 | 0 | 0 |
| 243 | SLU 48 | 0 | 2.06 | 62.39 | -0.071 | 0.0007 | 0 |
| 243 | SLU 49 | 0 | 2.1 | 62.14 | -0.0727 | 0.0004 | 0 |
| 243 | SLU 50 | 0 | 2.14 | 61.9 | -0.0748 | 0.0008 | 0 |
| 243 | SLU 51 | 0 | 2.18 | 61.65 | -0.0765 | 0.0005 | 0 |

| Nodo | Cont. | Reazione a traslazione | | | Reazione a rotazione | | |
|---|---|---|---|---|---|---|---|
| Ind. | N.br. | x | y | z | x | y | z |
| 243 | SLU 52 | 0 | 1.47 | 67.19 | -0.043 | -0.0002 | 0 |
| 243 | SLU 53 | 0 | 1.64 | 69.51 | -0.05 | 0.0005 | 0 |
| 243 | SLU 54 | 0 | 1.68 | 69.26 | -0.0517 | 0.0002 | 0 |
| 243 | SLU 55 | 0 | 1.79 | 68.59 | -0.0566 | 0.0001 | 0 |
| 243 | SLU 56 | 0 | 1.96 | 70.91 | -0.0637 | 0.0007 | 0 |
| 243 | SLU 57 | 0 | 2 | 70.66 | -0.0654 | 0.0004 | 0 |
| 243 | SLU 58 | 0 | 2.04 | 70.41 | -0.0674 | 0.0008 | 0 |
| 243 | SLU 59 | 0 | 2.08 | 70.16 | -0.0691 | 0.0005 | 0 |
| 243 | SLU 60 | 0 | 1.36 | 71.26 | -0.037 | 0.0003 | 0 |
| 243 | SLU 61 | 0 | 1.4 | 71.01 | -0.0387 | 0 | 0 |
| 243 | SLU 62 | 0 | 1.68 | 72.66 | -0.0506 | 0.0006 | 0 |
| 243 | SLU 63 | 0 | 1.72 | 72.41 | -0.0523 | 0.0003 | 0 |
| 243 | SLU 64 | 0 | 1.59 | 67.2 | -0.0485 | 0.0004 | 0 |
| 243 | SLU 65 | 0 | 1.66 | 66.78 | -0.0514 | -0.0001 | 0 |
| 243 | SLU 66 | 0 | 1.83 | 69.1 | -0.0584 | 0.0006 | 0 |
| 243 | SLU 67 | 0 | 1.87 | 68.85 | -0.0601 | 0.0003 | 0 |
| 243 | SLU 68 | 0 | 1.98 | 68.19 | -0.065 | 0.0001 | 0 |
| 243 | SLU 69 | 0 | 2.15 | 70.5 | -0.0721 | 0.0008 | 0 |
| 243 | SLU 70 | 0 | 2.19 | 70.25 | -0.0738 | 0.0005 | 0 |
| 243 | SLU 71 | 0 | 2.23 | 70 | -0.0758 | 0.0009 | 0 |
| 243 | SLU 72 | 0 | 2.27 | 69.75 | -0.0775 | 0.0006 | 0 |
| 243 | SLU 73 | 0 | 1.56 | 75.3 | -0.044 | -0.0001 | 0 |
| 243 | SLU 74 | 0 | 1.73 | 77.61 | -0.051 | 0.0006 | 0 |
| 243 | SLU 75 | 0 | 1.77 | 77.36 | -0.0528 | 0.0003 | 0 |
| 243 | SLU 76 | 0 | 1.88 | 76.7 | -0.0577 | 0.0001 | 0 |
| 243 | SLU 77 | 0 | 2.05 | 79.01 | -0.0647 | 0.0008 | 0 |
| 243 | SLU 78 | 0 | 2.09 | 78.76 | -0.0664 | 0.0005 | 0 |
| 243 | SLU 79 | 0 | 2.13 | 78.52 | -0.0684 | 0.0009 | 0 |
| 243 | SLU 80 | 0 | 2.17 | 78.27 | -0.0702 | 0.0006 | 0 |
| 243 | SLU 81 | 0 | 1.45 | 79.37 | -0.038 | 0.0004 | 0 |
| 243 | SLU 82 | 0 | 1.49 | 79.12 | -0.0397 | 0.0001 | 0 |
| 243 | SLU 83 | 0 | 1.77 | 80.77 | -0.0516 | 0.0007 | 0 |
| 243 | SLU 84 | 0 | 1.81 | 80.52 | -0.0534 | 0.0004 | 0 |
| 243 | SLE RA 1 | 0 | 1.2 | 49.91 | -0.0371 | 0.0003 | 0 |
| 243 | SLE RA 2 | 0 | 1.25 | 49.63 | -0.039 | 0 | 0 |
| 243 | SLE RA 3 | 0 | 1.36 | 51.18 | -0.0437 | 0.0004 | 0 |
| 243 | SLE RA 4 | 0 | 1.39 | 51.01 | -0.0448 | 0.0002 | 0 |
| 243 | SLE RA 5 | 0 | 1.46 | 50.57 | -0.0481 | 0.0001 | 0 |
| 243 | SLE RA 6 | 0 | 1.58 | 52.11 | -0.0528 | 0.0006 | 0 |
| 243 | SLE RA 7 | 0 | 1.6 | 51.94 | -0.0539 | 0.0004 | 0 |
| 243 | SLE RA 8 | 0 | 1.63 | 51.78 | -0.0553 | 0.0006 | 0 |
| 243 | SLE RA 9 | 0 | 1.66 | 51.61 | -0.0564 | 0.0004 | 0 |
| 243 | SLE RA 10 | 0 | 1.18 | 55.31 | -0.0341 | 0 | 0 |
| 243 | SLE RA 11 | 0 | 1.3 | 56.85 | -0.0388 | 0.0004 | 0 |
| 243 | SLE RA 12 | 0 | 1.32 | 56.69 | -0.0399 | 0.0002 | 0 |
| 243 | SLE RA 13 | 0 | 1.4 | 56.24 | -0.0432 | 0.0001 | 0 |
| 243 | SLE RA 14 | 0 | 1.51 | 57.79 | -0.0479 | 0.0006 | 0 |
| 243 | SLE RA 15 | 0 | 1.54 | 57.62 | -0.049 | 0.0004 | 0 |
| 243 | SLE RA 16 | 0 | 1.56 | 57.46 | -0.0504 | 0.0006 | 0 |
| 243 | SLE RA 17 | 0 | 1.59 | 57.29 | -0.0515 | 0.0004 | 0 |
| 243 | SLE RA 18 | 0 | 1.11 | 58.02 | -0.0301 | 0.0003 | 0 |
| 243 | SLE RA 19 | 0 | 1.14 | 57.85 | -0.0312 | 0.0001 | 0 |
| 243 | SLE RA 20 | 0 | 1.32 | 58.96 | -0.0392 | 0.0005 | 0 |
| 243 | SLE RA 21 | 0 | 1.35 | 58.79 | -0.0403 | 0.0003 | 0 |
| 243 | SLE FR 1 | 0 | 1.2 | 49.91 | -0.0371 | 0.0003 | 0 |
| 243 | SLE FR 2 | 0 | 1.21 | 49.86 | -0.0375 | 0.0002 | 0 |
| 243 | SLE FR 3 | 0 | 1.29 | 50.29 | -0.0407 | 0.0004 | 0 |
| 243 | SLE FR 4 | 0 | 1.18 | 52.29 | -0.0354 | 0.0002 | 0 |
| 243 | SLE FR 5 | 0 | 1.26 | 52.72 | -0.0386 | 0.0004 | 0 |
| 243 | SLE FR 6 | 0 | 1.16 | 53.97 | -0.0336 | 0.0003 | 0 |
| 243 | SLE QP 1 | 0 | 1.2 | 49.91 | -0.0371 | 0.0003 | 0 |
| 243 | SLE QP 2 | 0 | 1.18 | 52.35 | -0.035 | 0.0003 | 0 |
| 243 | SLD 1 | 0.35 | 1.45 | 54.81 | -0.0475 | 0.3384 | -0.0002 |
| 243 | SLD 2 | 0.35 | 1.45 | 54.81 | -0.0475 | 0.3384 | -0.0002 |
| 243 | SLD 3 | 0.3 | -4.2 | 53.36 | 0.2088 | 0.2929 | -0.0001 |
| 243 | SLD 4 | 0.3 | -4.2 | 53.36 | 0.2088 | 0.2929 | -0.0001 |
| 243 | SLD 5 | 0.18 | 9.82 | 55.29 | -0.4275 | 0.1708 | -0.0001 |
| 243 | SLD 6 | 0.18 | 9.82 | 55.29 | -0.4275 | 0.1708 | -0.0001 |
| 243 | SLD 7 | 0.02 | -9 | 50.44 | 0.4269 | 0.0191 | 0 |
| 243 | SLD 8 | 0.02 | -9 | 50.44 | 0.4269 | 0.0191 | 0 |
| 243 | SLD 9 | -0.02 | 11.35 | 54.25 | -0.4969 | -0.0185 | 0 |
| 243 | SLD 10 | -0.02 | 11.35 | 54.25 | -0.4969 | -0.0185 | 0 |
| 243 | SLD 11 | -0.18 | -7.47 | 49.4 | 0.3576 | -0.1701 | 0.0001 |
| 243 | SLD 12 | -0.18 | -7.47 | 49.4 | 0.3576 | -0.1701 | 0.0001 |
| 243 | SLD 13 | -0.3 | 6.55 | 51.33 | -0.2788 | -0.2923 | 0.0001 |
| 243 | SLD 14 | -0.3 | 6.55 | 51.33 | -0.2788 | -0.2923 | 0.0001 |
| 243 | SLD 15 | -0.35 | 0.9 | 49.88 | -0.0224 | -0.3378 | 0.0002 |
| 243 | SLD 16 | -0.35 | 0.9 | 49.88 | -0.0224 | -0.3378 | 0.0002 |
| 243 | SLV 1 | 0.89 | 1.81 | 58.2 | -0.0643 | 0.865 | -0.0004 |
| 243 | SLV 2 | 0.89 | 1.81 | 58.2 | -0.0643 | 0.865 | -0.0004 |
| 243 | SLV 3 | 0.78 | -11.47 | 54.68 | 0.539 | 0.7483 | -0.0003 |
| 243 | SLV 4 | 0.78 | -11.47 | 54.68 | 0.539 | 0.7483 | -0.0003 |
| 243 | SLV 5 | 0.45 | 21.5 | 59.45 | -0.9588 | 0.4366 | -0.0002 |
| 243 | SLV 6 | 0.45 | 21.5 | 59.45 | -0.9588 | 0.4366 | -0.0002 |
| 243 | SLV 7 | 0.05 | -22.75 | 47.7 | 1.0523 | 0.0478 | 0 |
| 243 | SLV 8 | 0.05 | -22.75 | 47.7 | 1.0523 | 0.0478 | 0 |
| 243 | SLV 9 | -0.05 | 25.11 | 56.99 | -1.1222 | -0.0472 | 0 |
| 243 | SLV 10 | -0.05 | 25.11 | 56.99 | -1.1222 | -0.0472 | 0 |

| Nodo | Cont. | Reazione a traslazione | | | Reazione a rotazione | | |
|---|---|---|---|---|---|---|---|
| Ind. | N.br. | x | y | z | x | y | z |
| 243 | SLV 11 | -0.45 | -19.15 | 45.24 | 0.8889 | -0.436 | 0.0002 |
| 243 | SLV 12 | -0.45 | -19.15 | 45.24 | 0.8889 | -0.436 | 0.0002 |
| 243 | SLV 13 | -0.77 | 13.82 | 50.01 | -0.609 | -0.7477 | 0.0003 |
| 243 | SLV 14 | -0.77 | 13.82 | 50.01 | -0.609 | -0.7477 | 0.0003 |
| 243 | SLV 15 | -0.89 | 0.55 | 46.49 | -0.0057 | -0.8644 | 0.0004 |
| 243 | SLV 16 | -0.89 | 0.55 | 46.49 | -0.0057 | -0.8644 | 0.0004 |
| 244 | SLU 1 | 0 | -0.27 | 16.24 | -0.1106 | 0.0001 | 0 |
| 244 | SLU 2 | 0 | -0.26 | 16.24 | -0.1104 | 0 | 0 |
| 244 | SLU 3 | 0 | -0.28 | 16.17 | -0.115 | 0.0002 | 0 |
| 244 | SLU 4 | 0 | -0.28 | 16.17 | -0.1149 | 0.0001 | 0 |
| 244 | SLU 5 | 0 | -0.27 | 16.2 | -0.1132 | 0 | 0 |
| 244 | SLU 6 | 0 | -0.29 | 16.13 | -0.1178 | 0.0002 | 0 |
| 244 | SLU 7 | 0 | -0.28 | 16.13 | -0.1177 | 0.0001 | 0 |
| 244 | SLU 8 | 0 | -0.28 | 16.15 | -0.1162 | 0.0002 | 0 |
| 244 | SLU 9 | 0 | -0.28 | 16.15 | -0.1161 | 0.0001 | 0 |
| 244 | SLU 10 | 0 | -0.37 | 21.83 | -0.1311 | -0.0001 | 0 |
| 244 | SLU 11 | 0 | -0.39 | 21.76 | -0.1357 | 0.0001 | 0 |
| 244 | SLU 12 | 0 | -0.39 | 21.76 | -0.1356 | 0 | 0 |
| 244 | SLU 13 | 0 | -0.38 | 21.78 | -0.1339 | 0 | 0 |
| 244 | SLU 14 | 0 | -0.4 | 21.71 | -0.1385 | 0.0002 | 0 |
| 244 | SLU 15 | 0 | -0.39 | 21.71 | -0.1384 | 0.0001 | 0 |
| 244 | SLU 16 | 0 | -0.39 | 21.74 | -0.1369 | 0.0002 | 0 |
| 244 | SLU 17 | 0 | -0.38 | 21.74 | -0.1368 | 0.0001 | 0 |
| 244 | SLU 18 | 0 | -0.42 | 24.22 | -0.1401 | 0.0001 | 0 |
| 244 | SLU 19 | 0 | -0.42 | 24.22 | -0.14 | 0 | 0 |
| 244 | SLU 20 | 0 | -0.43 | 24.18 | -0.1429 | 0.0002 | 0 |
| 244 | SLU 21 | 0 | -0.43 | 24.18 | -0.1428 | 0.0001 | 0 |
| 244 | SLU 22 | 0 | -0.36 | 20.27 | -0.1301 | 0.0002 | 0 |
| 244 | SLU 23 | 0 | -0.35 | 20.27 | -0.1299 | 0 | 0 |
| 244 | SLU 24 | 0 | -0.37 | 20.2 | -0.1345 | 0.0002 | 0 |
| 244 | SLU 25 | 0 | -0.37 | 20.2 | -0.1344 | 0.0001 | 0 |
| 244 | SLU 26 | 0 | -0.36 | 20.22 | -0.1327 | 0 | 0 |
| 244 | SLU 27 | 0 | -0.38 | 20.15 | -0.1373 | 0.0002 | 0 |
| 244 | SLU 28 | 0 | -0.38 | 20.15 | -0.1372 | 0.0001 | 0 |
| 244 | SLU 29 | 0 | -0.37 | 20.17 | -0.1357 | 0.0003 | 0 |
| 244 | SLU 30 | 0 | -0.37 | 20.18 | -0.1356 | 0.0002 | 0 |
| 244 | SLU 31 | 0 | -0.46 | 25.86 | -0.1505 | 0 | 0 |
| 244 | SLU 32 | 0 | -0.48 | 25.79 | -0.1552 | 0.0002 | 0 |
| 244 | SLU 33 | 0 | -0.48 | 25.79 | -0.155 | 0.0001 | 0 |
| 244 | SLU 34 | 0 | -0.47 | 25.81 | -0.1533 | 0 | 0 |
| 244 | SLU 35 | 0 | -0.49 | 25.74 | -0.158 | 0.0002 | 0 |
| 244 | SLU 36 | 0 | -0.48 | 25.74 | -0.1578 | 0.0001 | 0 |
| 244 | SLU 37 | 0 | -0.48 | 25.76 | -0.1563 | 0.0002 | 0 |
| 244 | SLU 38 | 0 | -0.47 | 25.76 | -0.1562 | 0.0001 | 0 |
| 244 | SLU 39 | 0 | -0.51 | 28.25 | -0.1596 | 0.0001 | 0 |
| 244 | SLU 40 | 0 | -0.51 | 28.25 | -0.1595 | 0 | 0 |
| 244 | SLU 41 | 0 | -0.52 | 28.2 | -0.1624 | 0.0002 | 0 |
| 244 | SLU 42 | 0 | -0.52 | 28.2 | -0.1623 | 0.0001 | 0 |
| 244 | SLU 43 | 0 | -0.32 | 19.73 | -0.1371 | 0.0001 | 0 |
| 244 | SLU 44 | 0 | -0.31 | 19.73 | -0.1369 | 0 | 0 |
| 244 | SLU 45 | 0 | -0.33 | 19.66 | -0.1416 | 0.0002 | 0 |
| 244 | SLU 46 | 0 | -0.33 | 19.66 | -0.1414 | 0.0001 | 0 |
| 244 | SLU 47 | 0 | -0.32 | 19.69 | -0.1397 | 0 | 0 |
| 244 | SLU 48 | 0 | -0.34 | 19.62 | -0.1444 | 0.0002 | 0 |
| 244 | SLU 49 | 0 | -0.33 | 19.62 | -0.1442 | 0.0001 | 0 |
| 244 | SLU 50 | 0 | -0.33 | 19.64 | -0.1427 | 0.0003 | 0 |
| 244 | SLU 51 | 0 | -0.32 | 19.64 | -0.1426 | 0.0002 | 0 |
| 244 | SLU 52 | 0 | -0.42 | 25.32 | -0.1576 | 0 | 0 |
| 244 | SLU 53 | 0 | -0.44 | 25.25 | -0.1622 | 0.0002 | 0 |
| 244 | SLU 54 | 0 | -0.44 | 25.25 | -0.1621 | 0.0001 | 0 |
| 244 | SLU 55 | 0 | -0.43 | 25.28 | -0.1604 | 0 | 0 |
| 244 | SLU 56 | 0 | -0.44 | 25.2 | -0.165 | 0.0002 | 0 |
| 244 | SLU 57 | 0 | -0.44 | 25.21 | -0.1649 | 0.0001 | 0 |
| 244 | SLU 58 | 0 | -0.43 | 25.23 | -0.1634 | 0.0002 | 0 |
| 244 | SLU 59 | 0 | -0.43 | 25.23 | -0.1633 | 0.0001 | 0 |
| 244 | SLU 60 | 0 | -0.47 | 27.71 | -0.1666 | 0.0001 | 0 |
| 244 | SLU 61 | 0 | -0.47 | 27.72 | -0.1665 | 0 | 0 |
| 244 | SLU 62 | 0 | -0.48 | 27.67 | -0.1694 | 0.0002 | 0 |
| 244 | SLU 63 | 0 | -0.47 | 27.67 | -0.1693 | 0.0001 | 0 |
| 244 | SLU 64 | 0 | -0.41 | 23.76 | -0.1566 | 0.0002 | 0 |
| 244 | SLU 65 | 0 | -0.4 | 23.76 | -0.1564 | 0 | 0 |
| 244 | SLU 66 | 0 | -0.42 | 23.69 | -0.161 | 0.0002 | 0 |
| 244 | SLU 67 | 0 | -0.42 | 23.69 | -0.1609 | 0.0001 | 0 |
| 244 | SLU 68 | 0 | -0.41 | 23.71 | -0.1592 | 0.0001 | 0 |
| 244 | SLU 69 | 0 | -0.43 | 23.64 | -0.1638 | 0.0003 | 0 |
| 244 | SLU 70 | 0 | -0.42 | 23.64 | -0.1637 | 0.0002 | 0 |
| 244 | SLU 71 | 0 | -0.42 | 23.67 | -0.1622 | 0.0003 | 0 |
| 244 | SLU 72 | 0 | -0.42 | 23.67 | -0.1621 | 0.0002 | 0 |
| 244 | SLU 73 | 0 | -0.51 | 29.35 | -0.177 | 0 | 0 |
| 244 | SLU 74 | 0 | -0.53 | 29.28 | -0.1817 | 0.0002 | 0 |
| 244 | SLU 75 | 0 | -0.53 | 29.28 | -0.1816 | 0.0001 | 0 |
| 244 | SLU 76 | 0 | -0.52 | 29.3 | -0.1798 | 0.0001 | 0 |
| 244 | SLU 77 | 0 | -0.53 | 29.23 | -0.1845 | 0.0003 | 0 |
| 244 | SLU 78 | 0 | -0.53 | 29.23 | -0.1844 | 0.0002 | 0 |
| 244 | SLU 79 | 0 | -0.53 | 29.25 | -0.1829 | 0.0003 | 0 |
| 244 | SLU 80 | 0 | -0.52 | 29.26 | -0.1827 | 0.0002 | 0 |
| 244 | SLU 81 | 0 | -0.56 | 31.74 | -0.1861 | 0.0002 | 0 |
| 244 | SLU 82 | 0 | -0.56 | 31.74 | -0.186 | 0.0001 | 0 |

| Nodo | Cont. | Reazione a traslazione | | | Reazione a rotazione | | |
|---|---|---|---|---|---|---|---|
| Ind. | N.br. | x | y | z | x | y | z |
| 244 | SLU 83 | 0 | -0.57 | 31.7 | -0.1889 | 0.0002 | 0 |
| 244 | SLU 84 | 0 | -0.56 | 31.7 | -0.1888 | 0.0001 | 0 |
| 244 | SLE RA 1 | 0 | -0.29 | 17.39 | -0.1162 | 0.0001 | 0 |
| 244 | SLE RA 2 | 0 | -0.29 | 17.39 | -0.116 | 0 | 0 |
| 244 | SLE RA 3 | 0 | -0.3 | 17.34 | -0.1191 | 0.0002 | 0 |
| 244 | SLE RA 4 | 0 | -0.3 | 17.34 | -0.119 | 0.0001 | 0 |
| 244 | SLE RA 5 | 0 | -0.29 | 17.36 | -0.1179 | 0.0001 | 0 |
| 244 | SLE RA 6 | 0 | -0.31 | 17.31 | -0.121 | 0.0002 | 0 |
| 244 | SLE RA 7 | 0 | -0.3 | 17.31 | -0.1209 | 0.0001 | 0 |
| 244 | SLE RA 8 | 0 | -0.3 | 17.33 | -0.1199 | 0.0002 | 0 |
| 244 | SLE RA 9 | 0 | -0.3 | 17.33 | -0.1198 | 0.0001 | 0 |
| 244 | SLE RA 10 | 0 | -0.36 | 21.12 | -0.1298 | 0 | 0 |
| 244 | SLE RA 11 | 0 | -0.37 | 21.07 | -0.1329 | 0.0001 | 0 |
| 244 | SLE RA 12 | 0 | -0.37 | 21.07 | -0.1328 | 0.0001 | 0 |
| 244 | SLE RA 13 | 0 | -0.37 | 21.09 | -0.1317 | 0 | 0 |
| 244 | SLE RA 14 | 0 | -0.38 | 21.04 | -0.1348 | 0.0002 | 0 |
| 244 | SLE RA 15 | 0 | -0.38 | 21.04 | -0.1347 | 0.0001 | 0 |
| 244 | SLE RA 16 | 0 | -0.37 | 21.05 | -0.1337 | 0.0002 | 0 |
| 244 | SLE RA 17 | 0 | -0.37 | 21.06 | -0.1336 | 0.0001 | 0 |
| 244 | SLE RA 18 | 0 | -0.4 | 22.71 | -0.1359 | 0.0001 | 0 |
| 244 | SLE RA 19 | 0 | -0.39 | 22.71 | -0.1358 | 0.0001 | 0 |
| 244 | SLE RA 20 | 0 | -0.4 | 22.68 | -0.1377 | 0.0002 | 0 |
| 244 | SLE RA 21 | 0 | -0.4 | 22.68 | -0.1376 | 0.0001 | 0 |
| 244 | SLE FR 1 | 0 | -0.29 | 17.39 | -0.1162 | 0.0001 | 0 |
| 244 | SLE FR 2 | 0 | -0.29 | 17.39 | -0.1161 | 0.0001 | 0 |
| 244 | SLE FR 3 | 0 | -0.29 | 17.38 | -0.1169 | 0.0001 | 0 |
| 244 | SLE FR 4 | 0 | -0.32 | 18.99 | -0.122 | 0.0001 | 0 |
| 244 | SLE FR 5 | 0 | -0.32 | 18.97 | -0.1228 | 0.0001 | 0 |
| 244 | SLE FR 6 | 0 | -0.34 | 20.05 | -0.126 | 0.0001 | 0 |
| 244 | SLE QP 1 | 0 | -0.29 | 17.39 | -0.1162 | 0.0001 | 0 |
| 244 | SLE QP 2 | 0 | -0.32 | 18.99 | -0.1221 | 0.0001 | 0 |
| 244 | SLD 1 | 0.46 | 1.02 | 20.94 | -0.0247 | 0.4746 | -0.0081 |
| 244 | SLD 2 | 0.46 | 1.02 | 20.94 | -0.0247 | 0.4746 | -0.0081 |
| 244 | SLD 3 | 0.48 | -3.15 | 17.99 | -0.1639 | 0.4878 | -0.0084 |
| 244 | SLD 4 | 0.48 | -3.15 | 17.99 | -0.1639 | 0.4878 | -0.0084 |
| 244 | SLD 5 | 0.11 | 6.41 | 24.05 | 0.1182 | 0.1226 | -0.0019 |
| 244 | SLD 6 | 0.11 | 6.41 | 24.05 | 0.1182 | 0.1226 | -0.0019 |
| 244 | SLD 7 | 0.18 | -7.5 | 14.21 | -0.3457 | 0.1663 | -0.0031 |
| 244 | SLD 8 | 0.18 | -7.5 | 14.21 | -0.3457 | 0.1663 | -0.0031 |
| 244 | SLD 9 | -0.18 | 6.86 | 23.77 | 0.1015 | -0.1661 | 0.0031 |
| 244 | SLD 10 | -0.18 | 6.86 | 23.77 | 0.1015 | -0.1661 | 0.0031 |
| 244 | SLD 11 | -0.11 | -7.06 | 13.92 | -0.3624 | -0.1223 | 0.0019 |
| 244 | SLD 12 | -0.11 | -7.06 | 13.92 | -0.3624 | -0.1223 | 0.0019 |
| 244 | SLD 13 | -0.48 | 2.51 | 19.99 | -0.0803 | -0.4875 | 0.0084 |
| 244 | SLD 14 | -0.48 | 2.51 | 19.99 | -0.0803 | -0.4875 | 0.0084 |
| 244 | SLD 15 | -0.46 | -1.67 | 17.03 | -0.2194 | -0.4744 | 0.0081 |
| 244 | SLD 16 | -0.46 | -1.67 | 17.03 | -0.2194 | -0.4744 | 0.0081 |
| 244 | SLV 1 | 1.17 | 2.8 | 23.57 | 0.1059 | 1.2143 | -0.0206 |
| 244 | SLV 2 | 1.17 | 2.8 | 23.57 | 0.1059 | 1.2143 | -0.0206 |
| 244 | SLV 3 | 1.22 | -6.95 | 16.66 | -0.2194 | 1.2471 | -0.0214 |
| 244 | SLV 4 | 1.22 | -6.95 | 16.66 | -0.2194 | 1.2471 | -0.0214 |
| 244 | SLV 5 | 0.27 | 15.41 | 30.84 | 0.4398 | 0.3146 | -0.0049 |
| 244 | SLV 6 | 0.27 | 15.41 | 30.84 | 0.4398 | 0.3146 | -0.0049 |
| 244 | SLV 7 | 0.45 | -17.11 | 7.81 | -0.6447 | 0.4239 | -0.0077 |
| 244 | SLV 8 | 0.45 | -17.11 | 7.81 | -0.6447 | 0.4239 | -0.0077 |
| 244 | SLV 9 | -0.44 | 16.46 | 30.16 | 0.4006 | -0.4237 | 0.0077 |
| 244 | SLV 10 | -0.44 | 16.46 | 30.16 | 0.4006 | -0.4237 | 0.0077 |
| 244 | SLV 11 | -0.27 | -16.06 | 7.13 | -0.6839 | -0.3144 | 0.0049 |
| 244 | SLV 12 | -0.27 | -16.06 | 7.13 | -0.6839 | -0.3144 | 0.0049 |
| 244 | SLV 13 | -1.22 | 6.31 | 21.31 | -0.0247 | -1.2468 | 0.0214 |
| 244 | SLV 14 | -1.22 | 6.31 | 21.31 | -0.0247 | -1.2468 | 0.0214 |
| 244 | SLV 15 | -1.17 | -3.45 | 14.41 | -0.3501 | -1.214 | 0.0206 |
| 244 | SLV 16 | -1.17 | -3.45 | 14.41 | -0.3501 | -1.214 | 0.0206 |
| 245 | SLU 1 | 0 | 5.89 | 39.16 | -0.3981 | -0.0025 | 0 |
| 245 | SLU 2 | 0 | 5.86 | 39.03 | -0.3968 | -0.0025 | 0 |
| 245 | SLU 3 | 0 | 5.8 | 39.73 | -0.3974 | -0.0029 | 0 |
| 245 | SLU 4 | 0 | 5.78 | 39.66 | -0.3966 | -0.0028 | 0 |
| 245 | SLU 5 | 0 | 5.63 | 39.01 | -0.3869 | -0.0028 | 0 |
| 245 | SLU 6 | 0 | 5.56 | 39.72 | -0.3876 | -0.0032 | 0 |
| 245 | SLU 7 | 0 | 5.55 | 39.64 | -0.3868 | -0.0032 | 0 |
| 245 | SLU 8 | 0 | 5.42 | 39.12 | -0.3784 | -0.0032 | 0 |
| 245 | SLU 9 | 0 | 5.4 | 39.05 | -0.3776 | -0.0032 | 0 |
| 245 | SLU 10 | 0 | 7.07 | 46.88 | -0.4748 | -0.0029 | 0 |
| 245 | SLU 11 | 0 | 7 | 47.58 | -0.4754 | -0.0033 | 0 |
| 245 | SLU 12 | 0 | 6.99 | 47.51 | -0.4746 | -0.0032 | 0 |
| 245 | SLU 13 | 0 | 6.84 | 46.86 | -0.465 | -0.0032 | 0 |
| 245 | SLU 14 | 0 | 6.77 | 47.57 | -0.4656 | -0.0036 | 0 |
| 245 | SLU 15 | 0 | 6.76 | 47.49 | -0.4648 | -0.0036 | 0 |
| 245 | SLU 16 | 0 | 6.63 | 46.97 | -0.4564 | -0.0036 | 0 |
| 245 | SLU 17 | 0 | 6.61 | 46.9 | -0.4557 | -0.0036 | 0 |
| 245 | SLU 18 | 0 | 7.61 | 50.37 | -0.5095 | -0.0031 | 0 |
| 245 | SLU 19 | 0 | 7.6 | 50.3 | -0.5087 | -0.003 | 0 |
| 245 | SLU 20 | 0 | 7.38 | 50.35 | -0.4997 | -0.0034 | 0 |
| 245 | SLU 21 | 0 | 7.37 | 50.28 | -0.4989 | -0.0034 | 0 |
| 245 | SLU 22 | 0 | 6.84 | 45.84 | -0.4631 | -0.0031 | 0 |
| 245 | SLU 23 | 0 | 6.82 | 45.72 | -0.4618 | -0.003 | 0 |
| 245 | SLU 24 | 0 | 6.75 | 46.42 | -0.4624 | -0.0034 | 0 |
| 245 | SLU 25 | 0 | 6.74 | 46.35 | -0.4617 | -0.0034 | 0 |

| Nodo | Cont. | Reazione a traslazione | | | Reazione a rotazione | | |
|---|---|---|---|---|---|---|---|
| Ind. | N.br. | x | y | z | x | y | z |
| 245 | SLU 26 | 0 | 6.59 | 45.7 | -0.452 | -0.0034 | 0 |
| 245 | SLU 27 | 0 | 6.52 | 46.4 | -0.4526 | -0.0038 | 0 |
| 245 | SLU 28 | 0 | 6.5 | 46.33 | -0.4518 | -0.0037 | 0 |
| 245 | SLU 29 | 0 | 6.38 | 45.81 | -0.4435 | -0.0038 | 0 |
| 245 | SLU 30 | 0 | 6.36 | 45.73 | -0.4427 | -0.0037 | 0 |
| 245 | SLU 31 | 0 | 8.03 | 53.57 | -0.5398 | -0.0034 | 0 |
| 245 | SLU 32 | 0 | 7.96 | 54.27 | -0.5405 | -0.0038 | 0 |
| 245 | SLU 33 | 0 | 7.95 | 54.2 | -0.5397 | -0.0038 | 0 |
| 245 | SLU 34 | 0 | 7.8 | 53.55 | -0.53 | -0.0038 | 0 |
| 245 | SLU 35 | 0 | 7.73 | 54.25 | -0.5307 | -0.0042 | 0 |
| 245 | SLU 36 | 0 | 7.71 | 54.18 | -0.5299 | -0.0041 | 0 |
| 245 | SLU 37 | 0 | 7.59 | 53.66 | -0.5215 | -0.0042 | 0 |
| 245 | SLU 38 | 0 | 7.57 | 53.58 | -0.5207 | -0.0041 | 0 |
| 245 | SLU 39 | 0 | 8.57 | 57.06 | -0.5746 | -0.0036 | 0 |
| 245 | SLU 40 | 0 | 8.56 | 56.98 | -0.5738 | -0.0036 | 0 |
| 245 | SLU 41 | 0 | 8.34 | 57.04 | -0.5648 | -0.004 | 0 |
| 245 | SLU 42 | 0 | 8.32 | 56.97 | -0.564 | -0.0039 | 0 |
| 245 | SLU 43 | 0 | 7.32 | 48.61 | -0.4952 | -0.0031 | 0 |
| 245 | SLU 44 | 0 | 7.3 | 48.49 | -0.4939 | -0.003 | 0 |
| 245 | SLU 45 | 0 | 7.23 | 49.19 | -0.4945 | -0.0034 | 0 |
| 245 | SLU 46 | 0 | 7.22 | 49.11 | -0.4937 | -0.0034 | 0 |
| 245 | SLU 47 | 0 | 7.07 | 48.47 | -0.484 | -0.0034 | 0 |
| 245 | SLU 48 | 0 | 7 | 49.17 | -0.4847 | -0.0038 | 0 |
| 245 | SLU 49 | 0 | 6.98 | 49.1 | -0.4839 | -0.0038 | 0 |
| 245 | SLU 50 | 0 | 6.86 | 48.57 | -0.4755 | -0.0038 | 0 |
| 245 | SLU 51 | 0 | 6.84 | 48.5 | -0.4747 | -0.0038 | 0 |
| 245 | SLU 52 | 0 | 8.51 | 56.34 | -0.5719 | -0.0034 | 0 |
| 245 | SLU 53 | 0 | 8.44 | 57.04 | -0.5725 | -0.0038 | 0 |
| 245 | SLU 54 | 0 | 8.43 | 56.96 | -0.5717 | -0.0038 | 0 |
| 245 | SLU 55 | 0 | 8.28 | 56.32 | -0.5621 | -0.0038 | 0 |
| 245 | SLU 56 | 0 | 8.21 | 57.02 | -0.5627 | -0.0042 | 0 |
| 245 | SLU 57 | 0 | 8.19 | 56.95 | -0.5619 | -0.0042 | 0 |
| 245 | SLU 58 | 0 | 8.06 | 56.42 | -0.5535 | -0.0042 | 0 |
| 245 | SLU 59 | 0 | 8.05 | 56.35 | -0.5528 | -0.0042 | 0 |
| 245 | SLU 60 | 0 | 9.05 | 59.82 | -0.6066 | -0.0037 | 0 |
| 245 | SLU 61 | 0 | 9.04 | 59.75 | -0.6058 | -0.0036 | 0 |
| 245 | SLU 62 | 0 | 8.82 | 59.81 | -0.5968 | -0.004 | 0 |
| 245 | SLU 63 | 0 | 8.8 | 59.73 | -0.596 | -0.004 | 0 |
| 245 | SLU 64 | 0 | 8.28 | 55.3 | -0.5602 | -0.0036 | 0 |
| 245 | SLU 65 | 0 | 8.26 | 55.17 | -0.5589 | -0.0036 | 0 |
| 245 | SLU 66 | 0 | 8.19 | 55.88 | -0.5596 | -0.004 | 0 |
| 245 | SLU 67 | 0 | 8.18 | 55.8 | -0.5588 | -0.0039 | 0 |
| 245 | SLU 68 | 0 | 8.02 | 55.16 | -0.5491 | -0.0039 | 0 |
| 245 | SLU 69 | 0 | 7.96 | 55.86 | -0.5497 | -0.0043 | 0 |
| 245 | SLU 70 | 0 | 7.94 | 55.78 | -0.549 | -0.0043 | 0 |
| 245 | SLU 71 | 0 | 7.81 | 55.26 | -0.5406 | -0.0043 | 0 |
| 245 | SLU 72 | 0 | 7.8 | 55.19 | -0.5398 | -0.0043 | 0 |
| 245 | SLU 73 | 0 | 9.47 | 63.02 | -0.637 | -0.004 | 0 |
| 245 | SLU 74 | 0 | 9.4 | 63.73 | -0.6376 | -0.0044 | 0 |
| 245 | SLU 75 | 0 | 9.39 | 63.65 | -0.6368 | -0.0043 | 0 |
| 245 | SLU 76 | 0 | 9.23 | 63.01 | -0.6271 | -0.0043 | 0 |
| 245 | SLU 77 | 0 | 9.17 | 63.71 | -0.6278 | -0.0047 | 0 |
| 245 | SLU 78 | 0 | 9.15 | 63.63 | -0.627 | -0.0047 | 0 |
| 245 | SLU 79 | 0 | 9.02 | 63.11 | -0.6186 | -0.0047 | 0 |
| 245 | SLU 80 | 0 | 9.01 | 63.04 | -0.6178 | -0.0047 | 0 |
| 245 | SLU 81 | 0 | 10.01 | 66.51 | -0.6717 | -0.0042 | 0 |
| 245 | SLU 82 | 0 | 10 | 66.44 | -0.6709 | -0.0042 | 0 |
| 245 | SLU 83 | 0 | 9.78 | 66.49 | -0.6619 | -0.0045 | 0 |
| 245 | SLU 84 | 0 | 9.76 | 66.42 | -0.6611 | -0.0045 | 0 |
| 245 | SLE RA 1 | 0 | 6.16 | 41.07 | -0.4166 | -0.0027 | 0 |
| 245 | SLE RA 2 | 0 | 6.15 | 40.98 | -0.4158 | -0.0026 | 0 |
| 245 | SLE RA 3 | 0 | 6.1 | 41.45 | -0.4162 | -0.0029 | 0 |
| 245 | SLE RA 4 | 0 | 6.09 | 41.4 | -0.4157 | -0.0029 | 0 |
| 245 | SLE RA 5 | 0 | 5.99 | 40.97 | -0.4092 | -0.0029 | 0 |
| 245 | SLE RA 6 | 0 | 5.94 | 41.44 | -0.4096 | -0.0031 | 0 |
| 245 | SLE RA 7 | 0 | 5.93 | 41.39 | -0.4091 | -0.0031 | 0 |
| 245 | SLE RA 8 | 0 | 5.85 | 41.04 | -0.4036 | -0.0032 | 0 |
| 245 | SLE RA 9 | 0 | 5.84 | 40.99 | -0.403 | -0.0031 | 0 |
| 245 | SLE RA 10 | 0 | 6.95 | 46.22 | -0.4678 | -0.0029 | 0 |
| 245 | SLE RA 11 | 0 | 6.91 | 46.69 | -0.4682 | -0.0032 | 0 |
| 245 | SLE RA 12 | 0 | 6.9 | 46.64 | -0.4677 | -0.0031 | 0 |
| 245 | SLE RA 13 | 0 | 6.79 | 46.21 | -0.4612 | -0.0031 | 0 |
| 245 | SLE RA 14 | 0 | 6.75 | 46.67 | -0.4617 | -0.0034 | 0 |
| 245 | SLE RA 15 | 0 | 6.74 | 46.62 | -0.4611 | -0.0034 | 0 |
| 245 | SLE RA 16 | 0 | 6.65 | 46.28 | -0.4556 | -0.0034 | 0 |
| 245 | SLE RA 17 | 0 | 6.64 | 46.23 | -0.4551 | -0.0034 | 0 |
| 245 | SLE RA 18 | 0 | 7.31 | 48.54 | -0.491 | -0.0031 | 0 |
| 245 | SLE RA 19 | 0 | 7.3 | 48.49 | -0.4904 | -0.003 | 0 |
| 245 | SLE RA 20 | 0 | 7.16 | 48.53 | -0.4844 | -0.0033 | 0 |
| 245 | SLE RA 21 | 0 | 7.15 | 48.48 | -0.4839 | -0.0033 | 0 |
| 245 | SLE FR 1 | 0 | 6.16 | 41.07 | -0.4166 | -0.0027 | 0 |
| 245 | SLE FR 2 | 0 | 6.16 | 41.05 | -0.4165 | -0.0027 | 0 |
| 245 | SLE FR 3 | 0 | 6.1 | 41.06 | -0.414 | -0.0028 | 0 |
| 245 | SLE FR 4 | 0 | 6.5 | 43.29 | -0.4388 | -0.0028 | 0 |
| 245 | SLE FR 5 | 0 | 6.44 | 43.31 | -0.4363 | -0.0029 | 0 |
| 245 | SLE FR 6 | 0 | 6.74 | 44.8 | -0.4538 | -0.0029 | 0 |
| 245 | SLE QP 1 | 0 | 6.16 | 41.07 | -0.4166 | -0.0027 | 0 |
| 245 | SLE QP 2 | 0 | 6.51 | 43.31 | -0.4389 | -0.0028 | 0 |

| Nodo | Cont. | Reazione a traslazione | | | Reazione a rotazione | | |
|---|---|---|---|---|---|---|---|
| Ind. | N.br. | x | y | z | x | y | z |
| 245 | SLD 1 | 0.29 | 8.97 | 44.44 | -0.5476 | 0.4182 | -0.0001 |
| 245 | SLD 2 | 0.29 | 8.97 | 44.44 | -0.5476 | 0.4182 | -0.0001 |
| 245 | SLD 3 | 0.27 | 5.23 | 39.15 | -0.3847 | 0.3942 | -0.0001 |
| 245 | SLD 4 | 0.27 | 5.23 | 39.15 | -0.3847 | 0.3942 | -0.0001 |
| 245 | SLD 5 | 0.11 | 12.91 | 51.69 | -0.7186 | 0.1599 | 0 |
| 245 | SLD 6 | 0.11 | 12.91 | 51.69 | -0.7186 | 0.1599 | 0 |
| 245 | SLD 7 | 0.05 | 0.46 | 34.03 | -0.1756 | 0.08 | 0 |
| 245 | SLD 8 | 0.05 | 0.46 | 34.03 | -0.1756 | 0.08 | 0 |
| 245 | SLD 9 | -0.05 | 12.55 | 52.59 | -0.7023 | -0.0855 | 0 |
| 245 | SLD 10 | -0.05 | 12.55 | 52.59 | -0.7023 | -0.0855 | 0 |
| 245 | SLD 11 | -0.12 | 0.11 | 34.93 | -0.1593 | -0.1655 | 0 |
| 245 | SLD 12 | -0.12 | 0.11 | 34.93 | -0.1593 | -0.1655 | 0 |
| 245 | SLD 13 | -0.27 | 7.78 | 47.47 | -0.4932 | -0.3998 | 0.0001 |
| 245 | SLD 14 | -0.27 | 7.78 | 47.47 | -0.4932 | -0.3998 | 0.0001 |
| 245 | SLD 15 | -0.29 | 4.04 | 42.18 | -0.3303 | -0.4238 | 0.0001 |
| 245 | SLD 16 | -0.29 | 4.04 | 42.18 | -0.3303 | -0.4238 | 0.0001 |
| 245 | SLV 1 | 0.85 | 12.31 | 46.11 | -0.6952 | 1.2882 | -0.0001 |
| 245 | SLV 2 | 0.85 | 12.31 | 46.11 | -0.6952 | 1.2882 | -0.0001 |
| 245 | SLV 3 | 0.8 | 3.53 | 33.3 | -0.3121 | 1.2194 | -0.0002 |
| 245 | SLV 4 | 0.8 | 3.53 | 33.3 | -0.3121 | 1.2194 | -0.0002 |
| 245 | SLV 5 | 0.33 | 21.56 | 63.58 | -1.0968 | 0.4889 | 0 |
| 245 | SLV 6 | 0.33 | 21.56 | 63.58 | -1.0968 | 0.4889 | 0 |
| 245 | SLV 7 | 0.16 | -7.7 | 20.88 | 0.1801 | 0.2594 | -0.0001 |
| 245 | SLV 8 | 0.16 | -7.7 | 20.88 | 0.1801 | 0.2594 | -0.0001 |
| 245 | SLV 9 | -0.16 | 20.71 | 65.74 | -1.058 | -0.265 | 0.0001 |
| 245 | SLV 10 | -0.16 | 20.71 | 65.74 | -1.058 | -0.265 | 0.0001 |
| 245 | SLV 11 | -0.34 | -8.55 | 23.04 | 0.219 | -0.4945 | 0 |
| 245 | SLV 12 | -0.34 | -8.55 | 23.04 | 0.219 | -0.4945 | 0 |
| 245 | SLV 13 | -0.8 | 9.48 | 53.32 | -0.5658 | -1.2249 | 0.0002 |
| 245 | SLV 14 | -0.8 | 9.48 | 53.32 | -0.5658 | -1.2249 | 0.0002 |
| 245 | SLV 15 | -0.85 | 0.7 | 40.51 | -0.1827 | -1.2938 | 0.0001 |
| 245 | SLV 16 | -0.85 | 0.7 | 40.51 | -0.1827 | -1.2938 | 0.0001 |
| 246 | SLU 1 | -0.26 | 0.18 | 50.73 | -0.0945 | -0.1933 | 0.0011 |
| 246 | SLU 2 | -0.24 | 0.78 | 49.66 | -0.1172 | -0.1741 | 0.0011 |
| 246 | SLU 3 | -0.26 | 0.17 | 52.04 | -0.0959 | -0.1988 | 0.0012 |
| 246 | SLU 4 | -0.25 | 0.53 | 51.4 | -0.1095 | -0.1873 | 0.0011 |
| 246 | SLU 5 | -0.24 | 0.8 | 50.45 | -0.1185 | -0.1773 | 0.0011 |
| 246 | SLU 6 | -0.27 | 0.19 | 52.83 | -0.0972 | -0.2021 | 0.0012 |
| 246 | SLU 7 | -0.26 | 0.55 | 52.19 | -0.1108 | -0.1905 | 0.0012 |
| 246 | SLU 8 | -0.26 | 0.22 | 52.32 | -0.0972 | -0.1998 | 0.0012 |
| 246 | SLU 9 | -0.25 | 0.58 | 51.68 | -0.1108 | -0.1883 | 0.0011 |
| 246 | SLU 10 | -0.27 | 0.67 | 55.15 | -0.1228 | -0.1989 | 0.0012 |
| 246 | SLU 11 | -0.29 | 0.06 | 57.52 | -0.1014 | -0.2236 | 0.0013 |
| 246 | SLU 12 | -0.28 | 0.42 | 56.88 | -0.115 | -0.2121 | 0.0013 |
| 246 | SLU 13 | -0.27 | 0.69 | 55.94 | -0.1241 | -0.2021 | 0.0012 |
| 246 | SLU 14 | -0.3 | 0.08 | 58.31 | -0.1028 | -0.2269 | 0.0013 |
| 246 | SLU 15 | -0.29 | 0.44 | 57.67 | -0.1164 | -0.2153 | 0.0013 |
| 246 | SLU 16 | -0.3 | 0.1 | 57.8 | -0.1027 | -0.2246 | 0.0013 |
| 246 | SLU 17 | -0.29 | 0.46 | 57.16 | -0.1163 | -0.213 | 0.0013 |
| 246 | SLU 18 | -0.3 | 0.02 | 58.57 | -0.1025 | -0.2287 | 0.0014 |
| 246 | SLU 19 | -0.29 | 0.38 | 57.92 | -0.1161 | -0.2172 | 0.0013 |
| 246 | SLU 20 | -0.31 | 0.04 | 59.36 | -0.1038 | -0.232 | 0.0014 |
| 246 | SLU 21 | -0.29 | 0.4 | 58.72 | -0.1174 | -0.2204 | 0.0013 |
| 246 | SLU 22 | -0.29 | 0.08 | 56.2 | -0.1004 | -0.2177 | 0.0013 |
| 246 | SLU 23 | -0.27 | 0.69 | 55.13 | -0.1231 | -0.1985 | 0.0012 |
| 246 | SLU 24 | -0.29 | 0.08 | 57.5 | -0.1017 | -0.2232 | 0.0013 |
| 246 | SLU 25 | -0.28 | 0.44 | 56.86 | -0.1153 | -0.2117 | 0.0013 |
| 246 | SLU 26 | -0.27 | 0.7 | 55.92 | -0.1244 | -0.2017 | 0.0012 |
| 246 | SLU 27 | -0.3 | 0.1 | 58.3 | -0.103 | -0.2265 | 0.0013 |
| 246 | SLU 28 | -0.29 | 0.46 | 57.65 | -0.1166 | -0.2149 | 0.0013 |
| 246 | SLU 29 | -0.3 | 0.12 | 57.79 | -0.103 | -0.2242 | 0.0013 |
| 246 | SLU 30 | -0.28 | 0.48 | 57.14 | -0.1166 | -0.2127 | 0.0013 |
| 246 | SLU 31 | -0.3 | 0.57 | 60.61 | -0.1286 | -0.2232 | 0.0014 |
| 246 | SLU 32 | -0.33 | -0.04 | 62.99 | -0.1073 | -0.248 | 0.0015 |
| 246 | SLU 33 | -0.32 | 0.32 | 62.34 | -0.1209 | -0.2364 | 0.0014 |
| 246 | SLU 34 | -0.31 | 0.59 | 61.4 | -0.13 | -0.2265 | 0.0014 |
| 246 | SLU 35 | -0.33 | -0.02 | 63.78 | -0.1086 | -0.2512 | 0.0015 |
| 246 | SLU 36 | -0.32 | 0.34 | 63.14 | -0.1222 | -0.2397 | 0.0014 |
| 246 | SLU 37 | -0.33 | 0.01 | 63.27 | -0.1086 | -0.249 | 0.0015 |
| 246 | SLU 38 | -0.32 | 0.37 | 62.63 | -0.1222 | -0.2374 | 0.0014 |
| 246 | SLU 39 | -0.33 | -0.08 | 64.03 | -0.1084 | -0.2531 | 0.0015 |
| 246 | SLU 40 | -0.32 | 0.28 | 63.39 | -0.122 | -0.2416 | 0.0015 |
| 246 | SLU 41 | -0.34 | -0.06 | 64.83 | -0.1097 | -0.2564 | 0.0015 |
| 246 | SLU 42 | -0.33 | 0.3 | 64.18 | -0.1233 | -0.2448 | 0.0015 |
| 246 | SLU 43 | -0.32 | 0.27 | 64.08 | -0.1209 | -0.243 | 0.0014 |
| 246 | SLU 44 | -0.3 | 0.87 | 63.01 | -0.1436 | -0.2237 | 0.0014 |
| 246 | SLU 45 | -0.33 | 0.26 | 65.38 | -0.1222 | -0.2485 | 0.0015 |
| 246 | SLU 46 | -0.32 | 0.62 | 64.74 | -0.1358 | -0.2369 | 0.0014 |
| 246 | SLU 47 | -0.31 | 0.89 | 63.8 | -0.1449 | -0.227 | 0.0014 |
| 246 | SLU 48 | -0.33 | 0.28 | 66.18 | -0.1235 | -0.2517 | 0.0015 |
| 246 | SLU 49 | -0.32 | 0.64 | 65.53 | -0.1371 | -0.2402 | 0.0014 |
| 246 | SLU 50 | -0.33 | 0.31 | 65.67 | -0.1235 | -0.2495 | 0.0015 |
| 246 | SLU 51 | -0.32 | 0.67 | 65.02 | -0.1371 | -0.2379 | 0.0014 |
| 246 | SLU 52 | -0.34 | 0.75 | 68.49 | -0.1491 | -0.2485 | 0.0015 |
| 246 | SLU 53 | -0.36 | 0.15 | 70.87 | -0.1278 | -0.2733 | 0.0016 |
| 246 | SLU 54 | -0.35 | 0.51 | 70.22 | -0.1414 | -0.2617 | 0.0016 |
| 246 | SLU 55 | -0.34 | 0.77 | 69.28 | -0.1504 | -0.2517 | 0.0015 |
| 246 | SLU 56 | -0.36 | 0.16 | 71.66 | -0.1291 | -0.2765 | 0.0016 |

| Nodo | Cont. | Reazione a traslazione | | | Reazione a rotazione | | |
|---|---|---|---|---|---|---|---|
| Ind. | N.br. | x | y | z | x | y | z |
| 246 | SLU 57 | -0.35 | 0.53 | 71.02 | -0.1427 | -0.2649 | 0.0016 |
| 246 | SLU 58 | -0.36 | 0.19 | 71.15 | -0.1291 | -0.2742 | 0.0016 |
| 246 | SLU 59 | -0.35 | 0.55 | 70.51 | -0.1427 | -0.2627 | 0.0016 |
| 246 | SLU 60 | -0.37 | 0.1 | 71.91 | -0.1289 | -0.2784 | 0.0016 |
| 246 | SLU 61 | -0.36 | 0.47 | 71.27 | -0.1425 | -0.2668 | 0.0016 |
| 246 | SLU 62 | -0.37 | 0.12 | 72.71 | -0.1302 | -0.2816 | 0.0017 |
| 246 | SLU 63 | -0.36 | 0.48 | 72.06 | -0.1438 | -0.2701 | 0.0016 |
| 246 | SLU 64 | -0.35 | 0.17 | 69.55 | -0.1268 | -0.2674 | 0.0016 |
| 246 | SLU 65 | -0.33 | 0.77 | 68.47 | -0.1494 | -0.2481 | 0.0015 |
| 246 | SLU 66 | -0.36 | 0.16 | 70.85 | -0.1281 | -0.2729 | 0.0016 |
| 246 | SLU 67 | -0.35 | 0.53 | 70.21 | -0.1417 | -0.2613 | 0.0016 |
| 246 | SLU 68 | -0.34 | 0.79 | 69.27 | -0.1507 | -0.2514 | 0.0015 |
| 246 | SLU 69 | -0.36 | 0.18 | 71.64 | -0.1294 | -0.2761 | 0.0016 |
| 246 | SLU 70 | -0.35 | 0.54 | 71 | -0.143 | -0.2646 | 0.0016 |
| 246 | SLU 71 | -0.36 | 0.21 | 71.13 | -0.1294 | -0.2739 | 0.0016 |
| 246 | SLU 72 | -0.35 | 0.57 | 70.49 | -0.143 | -0.2623 | 0.0016 |
| 246 | SLU 73 | -0.37 | 0.66 | 73.96 | -0.155 | -0.2729 | 0.0017 |
| 246 | SLU 74 | -0.39 | 0.05 | 76.33 | -0.1337 | -0.2976 | 0.0018 |
| 246 | SLU 75 | -0.38 | 0.41 | 75.69 | -0.1473 | -0.2861 | 0.0017 |
| 246 | SLU 76 | -0.37 | 0.68 | 74.75 | -0.1563 | -0.2761 | 0.0017 |
| 246 | SLU 77 | -0.4 | 0.07 | 77.13 | -0.135 | -0.3009 | 0.0018 |
| 246 | SLU 78 | -0.39 | 0.43 | 76.48 | -0.1486 | -0.2893 | 0.0017 |
| 246 | SLU 79 | -0.39 | 0.09 | 76.62 | -0.1349 | -0.2986 | 0.0018 |
| 246 | SLU 80 | -0.38 | 0.45 | 75.97 | -0.1486 | -0.2871 | 0.0017 |
| 246 | SLU 81 | -0.4 | 0.01 | 77.38 | -0.1347 | -0.3027 | 0.0018 |
| 246 | SLU 82 | -0.39 | 0.37 | 76.74 | -0.1483 | -0.2912 | 0.0017 |
| 246 | SLU 83 | -0.4 | 0.03 | 78.17 | -0.136 | -0.306 | 0.0018 |
| 246 | SLU 84 | -0.39 | 0.39 | 77.53 | -0.1496 | -0.2944 | 0.0018 |
| 246 | SLE RA 1 | -0.26 | 0.15 | 52.3 | -0.0962 | -0.2003 | 0.0012 |
| 246 | SLE RA 2 | -0.25 | 0.55 | 51.58 | -0.1113 | -0.1875 | 0.0011 |
| 246 | SLE RA 3 | -0.27 | 0.15 | 53.17 | -0.0971 | -0.204 | 0.0012 |
| 246 | SLE RA 4 | -0.26 | 0.39 | 52.74 | -0.1062 | -0.1963 | 0.0012 |
| 246 | SLE RA 5 | -0.25 | 0.57 | 52.11 | -0.1122 | -0.1896 | 0.0011 |
| 246 | SLE RA 6 | -0.27 | 0.16 | 53.69 | -0.098 | -0.2061 | 0.0012 |
| 246 | SLE RA 7 | -0.26 | 0.4 | 53.27 | -0.107 | -0.1984 | 0.0012 |
| 246 | SLE RA 8 | -0.27 | 0.18 | 53.35 | -0.098 | -0.2046 | 0.0012 |
| 246 | SLE RA 9 | -0.26 | 0.42 | 52.92 | -0.107 | -0.1969 | 0.0012 |
| 246 | SLE RA 10 | -0.27 | 0.48 | 55.24 | -0.115 | -0.204 | 0.0012 |
| 246 | SLE RA 11 | -0.29 | 0.07 | 56.82 | -0.1008 | -0.2205 | 0.0013 |
| 246 | SLE RA 12 | -0.28 | 0.31 | 56.39 | -0.1099 | -0.2128 | 0.0013 |
| 246 | SLE RA 13 | -0.28 | 0.49 | 55.77 | -0.1159 | -0.2061 | 0.0012 |
| 246 | SLE RA 14 | -0.29 | 0.08 | 57.35 | -0.1017 | -0.2227 | 0.0013 |
| 246 | SLE RA 15 | -0.29 | 0.32 | 56.92 | -0.1108 | -0.2149 | 0.0013 |
| 246 | SLE RA 16 | -0.29 | 0.1 | 57.01 | -0.1017 | -0.2211 | 0.0013 |
| 246 | SLE RA 17 | -0.28 | 0.34 | 56.58 | -0.1107 | -0.2134 | 0.0013 |
| 246 | SLE RA 18 | -0.3 | 0.04 | 57.52 | -0.1015 | -0.2239 | 0.0013 |
| 246 | SLE RA 19 | -0.29 | 0.28 | 57.09 | -0.1106 | -0.2162 | 0.0013 |
| 246 | SLE RA 20 | -0.3 | 0.06 | 58.05 | -0.1024 | -0.2261 | 0.0013 |
| 246 | SLE RA 21 | -0.29 | 0.3 | 57.62 | -0.1115 | -0.2184 | 0.0013 |
| 246 | SLE FR 1 | -0.26 | 0.15 | 52.3 | -0.0962 | -0.2003 | 0.0012 |
| 246 | SLE FR 2 | -0.26 | 0.23 | 52.15 | -0.0992 | -0.1977 | 0.0012 |
| 246 | SLE FR 3 | -0.27 | 0.16 | 52.51 | -0.0966 | -0.2012 | 0.0012 |
| 246 | SLE FR 4 | -0.27 | 0.2 | 53.72 | -0.1008 | -0.2048 | 0.0012 |
| 246 | SLE FR 5 | -0.27 | 0.13 | 54.07 | -0.0982 | -0.2082 | 0.0012 |
| 246 | SLE FR 6 | -0.28 | 0.1 | 54.91 | -0.0989 | -0.2121 | 0.0013 |
| 246 | SLE QP 1 | -0.26 | 0.15 | 52.3 | -0.0962 | -0.2003 | 0.0012 |
| 246 | SLE QP 2 | -0.27 | 0.12 | 53.86 | -0.0978 | -0.2074 | 0.0012 |
| 246 | SLD 1 | -0.55 | 3.53 | 65.35 | -0.2485 | 0.1188 | 0.0024 |
| 246 | SLD 2 | -0.55 | 3.53 | 65.35 | -0.2485 | 0.1188 | 0.0024 |
| 246 | SLD 3 | -0.64 | -0.87 | 68.93 | -0.048 | 0.0311 | 0.0027 |
| 246 | SLD 4 | -0.64 | -0.87 | 68.93 | -0.048 | 0.0311 | 0.0027 |
| 246 | SLD 5 | -0.22 | 7.82 | 51.89 | -0.4471 | 0.0233 | 0.001 |
| 246 | SLD 6 | -0.22 | 7.82 | 51.89 | -0.4471 | 0.0233 | 0.001 |
| 246 | SLD 7 | -0.53 | -6.86 | 63.8 | 0.2212 | -0.2687 | 0.0023 |
| 246 | SLD 8 | -0.53 | -6.86 | 63.8 | 0.2212 | -0.2687 | 0.0023 |
| 246 | SLD 9 | -0.02 | 7.1 | 43.92 | -0.4168 | -0.146 | 0.0002 |
| 246 | SLD 10 | -0.02 | 7.1 | 43.92 | -0.4168 | -0.146 | 0.0002 |
| 246 | SLD 11 | -0.33 | -7.58 | 55.84 | 0.2515 | -0.4381 | 0.0015 |
| 246 | SLD 12 | -0.33 | -7.58 | 55.84 | 0.2515 | -0.4381 | 0.0015 |
| 246 | SLD 13 | 0.1 | 1.12 | 38.8 | -0.1476 | -0.4459 | -0.0003 |
| 246 | SLD 14 | 0.1 | 1.12 | 38.8 | -0.1476 | -0.4459 | -0.0003 |
| 246 | SLD 15 | 0 | -3.29 | 42.37 | 0.0529 | -0.5335 | 0.0001 |
| 246 | SLD 16 | 0 | -3.29 | 42.37 | 0.0529 | -0.5335 | 0.0001 |
| 246 | SLV 1 | -0.93 | 8.12 | 80.67 | -0.4524 | 0.5782 | 0.0039 |
| 246 | SLV 2 | -0.93 | 8.12 | 80.67 | -0.4524 | 0.5782 | 0.0039 |
| 246 | SLV 3 | -1.16 | -2.08 | 89.18 | 0.0121 | 0.3591 | 0.0048 |
| 246 | SLV 4 | -1.16 | -2.08 | 89.18 | 0.0121 | 0.3591 | 0.0048 |
| 246 | SLV 5 | -0.12 | 18 | 49 | -0.9086 | 0.3607 | 0.0006 |
| 246 | SLV 6 | -0.12 | 18 | 49 | -0.9086 | 0.3607 | 0.0006 |
| 246 | SLV 7 | -0.89 | -16.01 | 77.36 | 0.6396 | -0.3698 | 0.0038 |
| 246 | SLV 8 | -0.89 | -16.01 | 77.36 | 0.6396 | -0.3698 | 0.0038 |
| 246 | SLV 9 | 0.34 | 16.26 | 30.36 | -0.8352 | -0.0449 | -0.0013 |
| 246 | SLV 10 | 0.34 | 16.26 | 30.36 | -0.8352 | -0.0449 | -0.0013 |
| 246 | SLV 11 | -0.43 | -17.76 | 58.72 | 0.713 | -0.7754 | 0.0019 |
| 246 | SLV 12 | -0.43 | -17.76 | 58.72 | 0.713 | -0.7754 | 0.0019 |
| 246 | SLV 13 | 0.61 | 2.32 | 18.54 | -0.2077 | -0.7738 | -0.0024 |
| 246 | SLV 14 | 0.61 | 2.32 | 18.54 | -0.2077 | -0.7738 | -0.0024 |
| 246 | SLV 15 | 0.38 | -7.88 | 27.05 | 0.2568 | -0.993 | -0.0014 |

| Nodo | Cont. | Reazione a traslazione | | | Reazione a rotazione | | |
|---|---|---|---|---|---|---|---|
| Ind. | N.br. | x | y | z | x | y | z |
| 246 | SLV 16 | 0.38 | -7.88 | 27.05 | 0.2568 | -0.993 | -0.0014 |
| 247 | SLU 1 | 0.02 | -3.78 | 53.64 | 0.1556 | 0.0174 | 0 |
| 247 | SLU 2 | 0.01 | -3.24 | 52.05 | 0.1306 | 0.0016 | 0 |
| 247 | SLU 3 | 0.02 | -3.93 | 54.78 | 0.1611 | 0.0184 | 0 |
| 247 | SLU 4 | 0.01 | -3.6 | 53.83 | 0.1461 | 0.0089 | 0 |
| 247 | SLU 5 | 0.01 | -3.32 | 52.52 | 0.1332 | 0.0024 | 0 |
| 247 | SLU 6 | 0.02 | -4 | 55.25 | 0.1637 | 0.0192 | 0 |
| 247 | SLU 7 | 0.01 | -3.68 | 54.3 | 0.1487 | 0.0097 | 0 |
| 247 | SLU 8 | 0.02 | -3.93 | 54.58 | 0.1608 | 0.0191 | 0 |
| 247 | SLU 9 | 0.01 | -3.61 | 53.63 | 0.1458 | 0.0096 | 0 |
| 247 | SLU 10 | 0.01 | -3.84 | 58.3 | 0.1549 | 0.004 | 0 |
| 247 | SLU 11 | 0.02 | -4.52 | 61.03 | 0.1854 | 0.0208 | 0 |
| 247 | SLU 12 | 0.01 | -4.2 | 60.08 | 0.1704 | 0.0113 | 0 |
| 247 | SLU 13 | 0.01 | -3.91 | 58.77 | 0.1575 | 0.0048 | 0 |
| 247 | SLU 14 | 0.02 | -4.59 | 61.5 | 0.188 | 0.0216 | 0 |
| 247 | SLU 15 | 0.01 | -4.27 | 60.55 | 0.173 | 0.0121 | 0 |
| 247 | SLU 16 | 0.02 | -4.53 | 60.82 | 0.1851 | 0.0215 | 0 |
| 247 | SLU 17 | 0.01 | -4.2 | 59.87 | 0.1701 | 0.012 | 0 |
| 247 | SLU 18 | 0.02 | -4.63 | 62.56 | 0.1903 | 0.0209 | 0 |
| 247 | SLU 19 | 0.01 | -4.31 | 61.61 | 0.1753 | 0.0114 | 0 |
| 247 | SLU 20 | 0.02 | -4.7 | 63.03 | 0.1929 | 0.0217 | 0 |
| 247 | SLU 21 | 0.01 | -4.38 | 62.08 | 0.1779 | 0.0122 | 0 |
| 247 | SLU 22 | 0.02 | -4.39 | 59.63 | 0.1801 | 0.0201 | 0 |
| 247 | SLU 23 | 0.01 | -3.85 | 58.04 | 0.1551 | 0.0042 | 0 |
| 247 | SLU 24 | 0.02 | -4.53 | 60.77 | 0.1856 | 0.021 | 0 |
| 247 | SLU 25 | 0.01 | -4.21 | 59.82 | 0.1705 | 0.0115 | 0 |
| 247 | SLU 26 | 0.01 | -3.93 | 58.51 | 0.1577 | 0.005 | 0 |
| 247 | SLU 27 | 0.02 | -4.61 | 61.24 | 0.1882 | 0.0218 | 0 |
| 247 | SLU 28 | 0.01 | -4.29 | 60.29 | 0.1731 | 0.0123 | 0 |
| 247 | SLU 29 | 0.02 | -4.54 | 60.57 | 0.1853 | 0.0217 | 0 |
| 247 | SLU 30 | 0.01 | -4.22 | 59.62 | 0.1703 | 0.0122 | 0 |
| 247 | SLU 31 | 0.01 | -4.44 | 64.29 | 0.1794 | 0.0066 | 0 |
| 247 | SLU 32 | 0.02 | -5.13 | 67.02 | 0.2099 | 0.0234 | 0 |
| 247 | SLU 33 | 0.02 | -4.8 | 66.07 | 0.1948 | 0.0139 | 0 |
| 247 | SLU 34 | 0.01 | -4.52 | 64.76 | 0.182 | 0.0075 | 0 |
| 247 | SLU 35 | 0.02 | -5.2 | 67.49 | 0.2125 | 0.0243 | 0 |
| 247 | SLU 36 | 0.02 | -4.88 | 66.54 | 0.1974 | 0.0148 | 0 |
| 247 | SLU 37 | 0.02 | -5.13 | 66.81 | 0.2096 | 0.0241 | 0 |
| 247 | SLU 38 | 0.02 | -4.81 | 65.86 | 0.1946 | 0.0146 | 0 |
| 247 | SLU 39 | 0.02 | -5.24 | 68.55 | 0.2148 | 0.0235 | 0 |
| 247 | SLU 40 | 0.02 | -4.91 | 67.6 | 0.1998 | 0.014 | 0 |
| 247 | SLU 41 | 0.02 | -5.31 | 69.02 | 0.2174 | 0.0243 | 0 |
| 247 | SLU 42 | 0.02 | -4.99 | 68.07 | 0.2024 | 0.0148 | 0 |
| 247 | SLU 43 | 0.02 | -4.71 | 67.68 | 0.1939 | 0.0217 | 0 |
| 247 | SLU 44 | 0.01 | -4.17 | 66.09 | 0.1689 | 0.0059 | 0 |
| 247 | SLU 45 | 0.02 | -4.85 | 68.82 | 0.1994 | 0.0227 | 0 |
| 247 | SLU 46 | 0.02 | -4.53 | 67.87 | 0.1844 | 0.0132 | 0 |
| 247 | SLU 47 | 0.01 | -4.25 | 66.56 | 0.1715 | 0.0067 | 0 |
| 247 | SLU 48 | 0.02 | -4.93 | 69.29 | 0.202 | 0.0235 | 0 |
| 247 | SLU 49 | 0.02 | -4.61 | 68.34 | 0.187 | 0.014 | 0 |
| 247 | SLU 50 | 0.02 | -4.86 | 68.61 | 0.1991 | 0.0234 | 0 |
| 247 | SLU 51 | 0.02 | -4.54 | 67.66 | 0.1841 | 0.0139 | 0 |
| 247 | SLU 52 | 0.01 | -4.76 | 72.34 | 0.1932 | 0.0083 | 0 |
| 247 | SLU 53 | 0.03 | -5.45 | 75.07 | 0.2237 | 0.0251 | 0 |
| 247 | SLU 54 | 0.02 | -5.12 | 74.12 | 0.2087 | 0.0156 | 0 |
| 247 | SLU 55 | 0.01 | -4.84 | 72.81 | 0.1958 | 0.0092 | 0 |
| 247 | SLU 56 | 0.03 | -5.52 | 75.54 | 0.2263 | 0.026 | 0 |
| 247 | SLU 57 | 0.02 | -5.2 | 74.58 | 0.2113 | 0.0165 | 0 |
| 247 | SLU 58 | 0.03 | -5.45 | 74.86 | 0.2234 | 0.0258 | 0 |
| 247 | SLU 59 | 0.02 | -5.13 | 73.91 | 0.2084 | 0.0163 | 0 |
| 247 | SLU 60 | 0.03 | -5.56 | 76.6 | 0.2286 | 0.0252 | 0 |
| 247 | SLU 61 | 0.02 | -5.23 | 75.65 | 0.2136 | 0.0157 | 0 |
| 247 | SLU 62 | 0.03 | -5.63 | 77.07 | 0.2312 | 0.026 | 0 |
| 247 | SLU 63 | 0.02 | -5.31 | 76.12 | 0.2162 | 0.0165 | 0 |
| 247 | SLU 64 | 0.02 | -5.32 | 73.67 | 0.2184 | 0.0244 | 0 |
| 247 | SLU 65 | 0.01 | -4.78 | 72.08 | 0.1934 | 0.0085 | 0 |
| 247 | SLU 66 | 0.03 | -5.46 | 74.81 | 0.2239 | 0.0253 | 0 |
| 247 | SLU 67 | 0.02 | -5.14 | 73.86 | 0.2088 | 0.0158 | 0 |
| 247 | SLU 68 | 0.01 | -4.85 | 72.55 | 0.196 | 0.0094 | 0 |
| 247 | SLU 69 | 0.03 | -5.54 | 75.28 | 0.2265 | 0.0262 | 0 |
| 247 | SLU 70 | 0.02 | -5.21 | 74.33 | 0.2114 | 0.0167 | 0 |
| 247 | SLU 71 | 0.03 | -5.47 | 74.6 | 0.2236 | 0.026 | 0 |
| 247 | SLU 72 | 0.02 | -5.14 | 73.65 | 0.2086 | 0.0165 | 0 |
| 247 | SLU 73 | 0.02 | -5.37 | 78.33 | 0.2177 | 0.011 | 0 |
| 247 | SLU 74 | 0.03 | -6.05 | 81.06 | 0.2482 | 0.0278 | 0 |
| 247 | SLU 75 | 0.02 | -5.73 | 80.11 | 0.2331 | 0.0183 | 0 |
| 247 | SLU 76 | 0.02 | -5.45 | 78.8 | 0.2203 | 0.0118 | 0 |
| 247 | SLU 77 | 0.03 | -6.13 | 81.53 | 0.2508 | 0.0286 | 0 |
| 247 | SLU 78 | 0.02 | -5.8 | 80.58 | 0.2357 | 0.0191 | 0 |
| 247 | SLU 79 | 0.03 | -6.06 | 80.85 | 0.2479 | 0.0285 | 0 |
| 247 | SLU 80 | 0.02 | -5.74 | 79.9 | 0.2329 | 0.019 | 0 |
| 247 | SLU 81 | 0.03 | -6.16 | 82.59 | 0.2531 | 0.0278 | 0 |
| 247 | SLU 82 | 0.02 | -5.84 | 81.64 | 0.2381 | 0.0183 | 0 |
| 247 | SLU 83 | 0.03 | -6.24 | 83.06 | 0.2557 | 0.0287 | 0 |
| 247 | SLU 84 | 0.02 | -5.91 | 82.11 | 0.2407 | 0.0192 | 0 |
| 247 | SLE RA 1 | 0.02 | -3.96 | 55.35 | 0.1626 | 0.0182 | 0 |
| 247 | SLE RA 2 | 0.01 | -3.6 | 54.29 | 0.1459 | 0.0076 | 0 |
| 247 | SLE RA 3 | 0.02 | -4.05 | 56.11 | 0.1663 | 0.0188 | 0 |

| Nodo | Cont. | Reazione a traslazione | | | Reazione a rotazione | | |
|---|---|---|---|---|---|---|---|
| Ind. | N.br. | x | y | z | x | y | z |
| 247 | SLE RA 4 | 0.01 | -3.84 | 55.48 | 0.1562 | 0.0125 | 0 |
| 247 | SLE RA 5 | 0.01 | -3.65 | 54.61 | 0.1477 | 0.0082 | 0 |
| 247 | SLE RA 6 | 0.02 | -4.1 | 56.43 | 0.168 | 0.0194 | 0 |
| 247 | SLE RA 7 | 0.01 | -3.89 | 55.79 | 0.158 | 0.013 | 0 |
| 247 | SLE RA 8 | 0.02 | -4.06 | 55.98 | 0.1661 | 0.0193 | 0 |
| 247 | SLE RA 9 | 0.01 | -3.84 | 55.34 | 0.1561 | 0.0129 | 0 |
| 247 | SLE RA 10 | 0.01 | -3.99 | 58.46 | 0.1621 | 0.0092 | 0 |
| 247 | SLE RA 11 | 0.02 | -4.45 | 60.28 | 0.1825 | 0.0204 | 0 |
| 247 | SLE RA 12 | 0.02 | -4.23 | 59.64 | 0.1724 | 0.0141 | 0 |
| 247 | SLE RA 13 | 0.01 | -4.04 | 58.77 | 0.1639 | 0.0098 | 0 |
| 247 | SLE RA 14 | 0.02 | -4.5 | 60.59 | 0.1842 | 0.021 | 0 |
| 247 | SLE RA 15 | 0.02 | -4.28 | 59.96 | 0.1742 | 0.0146 | 0 |
| 247 | SLE RA 16 | 0.02 | -4.45 | 60.14 | 0.1823 | 0.0209 | 0 |
| 247 | SLE RA 17 | 0.02 | -4.24 | 59.5 | 0.1723 | 0.0146 | 0 |
| 247 | SLE RA 18 | 0.02 | -4.52 | 61.3 | 0.1858 | 0.0205 | 0 |
| 247 | SLE RA 19 | 0.02 | -4.31 | 60.66 | 0.1758 | 0.0141 | 0 |
| 247 | SLE RA 20 | 0.02 | -4.57 | 61.61 | 0.1875 | 0.021 | 0 |
| 247 | SLE RA 21 | 0.02 | -4.36 | 60.98 | 0.1775 | 0.0147 | 0 |
| 247 | SLE FR 1 | 0.02 | -3.96 | 55.35 | 0.1626 | 0.0182 | 0 |
| 247 | SLE FR 2 | 0.02 | -3.88 | 55.14 | 0.1593 | 0.0161 | 0 |
| 247 | SLE FR 3 | 0.02 | -3.98 | 55.48 | 0.1633 | 0.0184 | 0 |
| 247 | SLE FR 4 | 0.02 | -4.05 | 56.92 | 0.1662 | 0.0168 | 0 |
| 247 | SLE FR 5 | 0.02 | -4.15 | 57.26 | 0.1703 | 0.0191 | 0 |
| 247 | SLE FR 6 | 0.02 | -4.24 | 58.32 | 0.1742 | 0.0193 | 0 |
| 247 | SLE QP 1 | 0.02 | -3.96 | 55.35 | 0.1626 | 0.0182 | 0 |
| 247 | SLE QP 2 | 0.02 | -4.13 | 57.13 | 0.1696 | 0.0189 | 0 |
| 247 | SLD 1 | 0.35 | -0.72 | 40.74 | 0.0284 | 0.2923 | 0 |
| 247 | SLD 2 | 0.35 | -0.72 | 40.74 | 0.0284 | 0.2923 | 0 |
| 247 | SLD 3 | 0.45 | -5.42 | 45.19 | 0.2239 | 0.3933 | 0 |
| 247 | SLD 4 | 0.45 | -5.42 | 45.19 | 0.2239 | 0.3933 | 0 |
| 247 | SLD 5 | -0.03 | 4.02 | 45.48 | -0.1693 | -0.0522 | 0 |
| 247 | SLD 6 | -0.03 | 4.02 | 45.48 | -0.1693 | -0.0522 | 0 |
| 247 | SLD 7 | 0.3 | -11.64 | 60.28 | 0.4823 | 0.2843 | -0.0001 |
| 247 | SLD 8 | 0.3 | -11.64 | 60.28 | 0.4823 | 0.2843 | -0.0001 |
| 247 | SLD 9 | -0.26 | 3.39 | 53.98 | -0.1432 | -0.2466 | 0 |
| 247 | SLD 10 | -0.26 | 3.39 | 53.98 | -0.1432 | -0.2466 | 0 |
| 247 | SLD 11 | 0.07 | -12.27 | 68.79 | 0.5084 | 0.09 | 0 |
| 247 | SLD 12 | 0.07 | -12.27 | 68.79 | 0.5084 | 0.09 | 0 |
| 247 | SLD 13 | -0.41 | -2.83 | 69.08 | 0.1153 | -0.3555 | 0 |
| 247 | SLD 14 | -0.41 | -2.83 | 69.08 | 0.1153 | -0.3555 | 0 |
| 247 | SLD 15 | -0.31 | -7.53 | 73.52 | 0.3108 | -0.2546 | 0 |
| 247 | SLD 16 | -0.31 | -7.53 | 73.52 | 0.3108 | -0.2546 | 0 |
| 247 | SLV 1 | 0.8 | 3.82 | 18.73 | -0.1602 | 0.6683 | 0 |
| 247 | SLV 2 | 0.8 | 3.82 | 18.73 | -0.1602 | 0.6683 | 0 |
| 247 | SLV 3 | 1.05 | -7.07 | 29.22 | 0.2932 | 0.9252 | -0.0001 |
| 247 | SLV 4 | 1.05 | -7.07 | 29.22 | 0.2932 | 0.9252 | -0.0001 |
| 247 | SLV 5 | -0.12 | 14.78 | 29.71 | -0.6169 | -0.1759 | 0.0001 |
| 247 | SLV 6 | -0.12 | 14.78 | 29.71 | -0.6169 | -0.1759 | 0.0001 |
| 247 | SLV 7 | 0.7 | -21.53 | 64.67 | 0.8942 | 0.6804 | -0.0001 |
| 247 | SLV 8 | 0.7 | -21.53 | 64.67 | 0.8942 | 0.6804 | -0.0001 |
| 247 | SLV 9 | -0.67 | 13.28 | 49.6 | -0.555 | -0.6427 | 0.0001 |
| 247 | SLV 10 | -0.67 | 13.28 | 49.6 | -0.555 | -0.6427 | 0.0001 |
| 247 | SLV 11 | 0.16 | -23.03 | 84.56 | 0.956 | 0.2136 | -0.0001 |
| 247 | SLV 12 | 0.16 | -23.03 | 84.56 | 0.956 | 0.2136 | -0.0001 |
| 247 | SLV 13 | -1.01 | -1.18 | 85.05 | 0.046 | -0.8875 | 0.0001 |
| 247 | SLV 14 | -1.01 | -1.18 | 85.05 | 0.046 | -0.8875 | 0.0001 |
| 247 | SLV 15 | -0.76 | -12.07 | 95.54 | 0.4993 | -0.6306 | 0 |
| 247 | SLV 16 | -0.76 | -12.07 | 95.54 | 0.4993 | -0.6306 | 0 |
| 248 | SLU 1 | 0 | 1.89 | 46.84 | -0.0512 | -0.0006 | 0 |
| 248 | SLU 2 | 0 | 2 | 46.3 | -0.0547 | -0.0002 | 0 |
| 248 | SLU 3 | 0 | 1.73 | 49.15 | -0.0451 | -0.0007 | 0 |
| 248 | SLU 4 | 0 | 1.8 | 48.83 | -0.0472 | -0.0004 | 0 |
| 248 | SLU 5 | 0 | 1.81 | 48.19 | -0.0475 | -0.0002 | 0 |
| 248 | SLU 6 | 0 | 1.53 | 51.04 | -0.0379 | -0.0007 | 0 |
| 248 | SLU 7 | 0 | 1.6 | 50.72 | -0.04 | -0.0004 | 0 |
| 248 | SLU 8 | 0 | 1.49 | 50.62 | -0.0367 | -0.0007 | 0 |
| 248 | SLU 9 | 0 | 1.56 | 50.3 | -0.0388 | -0.0004 | 0 |
| 248 | SLU 10 | 0 | 2.18 | 54.52 | -0.0588 | -0.0003 | 0 |
| 248 | SLU 11 | 0 | 1.9 | 57.37 | -0.0492 | -0.0008 | 0 |
| 248 | SLU 12 | 0 | 1.97 | 57.05 | -0.0513 | -0.0005 | 0 |
| 248 | SLU 13 | 0 | 1.98 | 56.41 | -0.0515 | -0.0003 | 0 |
| 248 | SLU 14 | 0 | 1.7 | 59.26 | -0.0419 | -0.0008 | 0 |
| 248 | SLU 15 | 0 | 1.77 | 58.94 | -0.044 | -0.0005 | 0 |
| 248 | SLU 16 | 0 | 1.67 | 58.83 | -0.0408 | -0.0008 | 0 |
| 248 | SLU 17 | 0 | 1.74 | 58.51 | -0.0429 | -0.0005 | 0 |
| 248 | SLU 18 | 0 | 2.13 | 58.57 | -0.057 | -0.0008 | 0 |
| 248 | SLU 19 | 0 | 2.2 | 58.25 | -0.0591 | -0.0005 | 0 |
| 248 | SLU 20 | 0 | 1.94 | 60.46 | -0.0497 | -0.0008 | 0 |
| 248 | SLU 21 | 0 | 2.01 | 60.14 | -0.0519 | -0.0005 | 0 |
| 248 | SLU 22 | 0 | 1.97 | 54.95 | -0.0523 | -0.0008 | 0 |
| 248 | SLU 23 | 0 | 2.09 | 54.42 | -0.0558 | -0.0003 | 0 |
| 248 | SLU 24 | 0 | 1.81 | 57.27 | -0.0462 | -0.0008 | 0 |
| 248 | SLU 25 | 0 | 1.88 | 56.95 | -0.0483 | -0.0005 | 0 |
| 248 | SLU 26 | 0 | 1.89 | 56.31 | -0.0486 | -0.0003 | 0 |
| 248 | SLU 27 | 0 | 1.61 | 59.16 | -0.039 | -0.0008 | 0 |
| 248 | SLU 28 | 0 | 1.68 | 58.84 | -0.0411 | -0.0005 | 0 |
| 248 | SLU 29 | 0 | 1.58 | 58.74 | -0.0378 | -0.0008 | 0 |
| 248 | SLU 30 | 0 | 1.65 | 58.42 | -0.0399 | -0.0005 | 0 |

| Nodo | Cont. | Reazione a traslazione | | | Reazione a rotazione | | |
|---|---|---|---|---|---|---|---|
| Ind. | N.br. | x | y | z | x | y | z |
| 248 | SLU 31 | 0 | 2.26 | 62.64 | -0.0599 | -0.0004 | 0 |
| 248 | SLU 32 | 0 | 1.98 | 65.49 | -0.0502 | -0.0009 | 0 |
| 248 | SLU 33 | 0 | 2.05 | 65.17 | -0.0524 | -0.0006 | 0 |
| 248 | SLU 34 | 0 | 2.06 | 64.53 | -0.0526 | -0.0004 | 0 |
| 248 | SLU 35 | 0 | 1.79 | 67.38 | -0.043 | -0.0009 | 0 |
| 248 | SLU 36 | 0 | 1.86 | 67.06 | -0.0451 | -0.0006 | 0 |
| 248 | SLU 37 | 0 | 1.75 | 66.95 | -0.0418 | -0.0009 | 0 |
| 248 | SLU 38 | 0 | 1.82 | 66.63 | -0.0439 | -0.0006 | 0 |
| 248 | SLU 39 | 0 | 2.22 | 66.69 | -0.0581 | -0.0009 | 0 |
| 248 | SLU 40 | 0 | 2.29 | 66.37 | -0.0602 | -0.0006 | 0 |
| 248 | SLU 41 | 0 | 2.02 | 68.58 | -0.0508 | -0.0009 | 0 |
| 248 | SLU 42 | 0 | 2.09 | 68.26 | -0.0529 | -0.0006 | 0 |
| 248 | SLU 43 | 0 | 2.42 | 58.1 | -0.0662 | -0.0008 | 0 |
| 248 | SLU 44 | 0 | 2.54 | 57.57 | -0.0697 | -0.0003 | 0 |
| 248 | SLU 45 | 0 | 2.26 | 60.42 | -0.0601 | -0.0008 | 0 |
| 248 | SLU 46 | 0 | 2.33 | 60.1 | -0.0622 | -0.0005 | 0 |
| 248 | SLU 47 | 0 | 2.34 | 59.46 | -0.0625 | -0.0003 | 0 |
| 248 | SLU 48 | 0 | 2.07 | 62.31 | -0.0529 | -0.0008 | 0 |
| 248 | SLU 49 | 0 | 2.14 | 61.99 | -0.055 | -0.0005 | 0 |
| 248 | SLU 50 | 0 | 2.03 | 61.88 | -0.0517 | -0.0008 | 0 |
| 248 | SLU 51 | 0 | 2.1 | 61.56 | -0.0538 | -0.0005 | 0 |
| 248 | SLU 52 | 0 | 2.71 | 65.78 | -0.0738 | -0.0004 | 0 |
| 248 | SLU 53 | 0 | 2.44 | 68.63 | -0.0642 | -0.0009 | 0 |
| 248 | SLU 54 | 0 | 2.51 | 68.31 | -0.0663 | -0.0006 | 0 |
| 248 | SLU 55 | 0 | 2.52 | 67.67 | -0.0665 | -0.0004 | 0 |
| 248 | SLU 56 | 0 | 2.24 | 70.53 | -0.0569 | -0.0009 | 0 |
| 248 | SLU 57 | 0 | 2.31 | 70.21 | -0.059 | -0.0007 | 0 |
| 248 | SLU 58 | 0 | 2.2 | 70.1 | -0.0558 | -0.0009 | 0 |
| 248 | SLU 59 | 0 | 2.27 | 69.78 | -0.0579 | -0.0006 | 0 |
| 248 | SLU 60 | 0 | 2.67 | 69.84 | -0.072 | -0.001 | 0 |
| 248 | SLU 61 | 0 | 2.74 | 69.52 | -0.0741 | -0.0007 | 0 |
| 248 | SLU 62 | 0 | 2.47 | 71.73 | -0.0647 | -0.001 | 0 |
| 248 | SLU 63 | 0 | 2.54 | 71.41 | -0.0669 | -0.0007 | 0 |
| 248 | SLU 64 | 0 | 2.51 | 66.22 | -0.0673 | -0.0009 | 0 |
| 248 | SLU 65 | 0 | 2.62 | 65.69 | -0.0708 | -0.0004 | 0 |
| 248 | SLU 66 | 0 | 2.35 | 68.54 | -0.0612 | -0.0009 | 0 |
| 248 | SLU 67 | 0 | 2.42 | 68.22 | -0.0633 | -0.0006 | 0 |
| 248 | SLU 68 | 0 | 2.43 | 67.58 | -0.0636 | -0.0004 | 0 |
| 248 | SLU 69 | 0 | 2.15 | 70.43 | -0.054 | -0.0009 | 0 |
| 248 | SLU 70 | 0 | 2.22 | 70.11 | -0.0561 | -0.0007 | 0 |
| 248 | SLU 71 | 0 | 2.11 | 70 | -0.0528 | -0.0009 | 0 |
| 248 | SLU 72 | 0 | 2.18 | 69.68 | -0.0549 | -0.0006 | 0 |
| 248 | SLU 73 | 0 | 2.8 | 73.9 | -0.0749 | -0.0005 | 0 |
| 248 | SLU 74 | 0 | 2.52 | 76.75 | -0.0652 | -0.001 | 0 |
| 248 | SLU 75 | 0 | 2.59 | 76.43 | -0.0674 | -0.0008 | 0 |
| 248 | SLU 76 | 0 | 2.6 | 75.79 | -0.0676 | -0.0006 | 0 |
| 248 | SLU 77 | 0 | 2.32 | 78.65 | -0.058 | -0.0011 | 0 |
| 248 | SLU 78 | 0 | 2.39 | 78.33 | -0.0601 | -0.0008 | 0 |
| 248 | SLU 79 | 0 | 2.29 | 78.22 | -0.0568 | -0.001 | 0 |
| 248 | SLU 80 | 0 | 2.36 | 77.9 | -0.0589 | -0.0007 | 0 |
| 248 | SLU 81 | 0 | 2.76 | 77.96 | -0.0731 | -0.0011 | 0 |
| 248 | SLU 82 | 0 | 2.83 | 77.64 | -0.0752 | -0.0008 | 0 |
| 248 | SLU 83 | 0 | 2.56 | 79.85 | -0.0658 | -0.0011 | 0 |
| 248 | SLU 84 | 0 | 2.63 | 79.53 | -0.0679 | -0.0008 | 0 |
| 248 | SLE RA 1 | 0 | 1.91 | 49.16 | -0.0515 | -0.0007 | 0 |
| 248 | SLE RA 2 | 0 | 1.99 | 48.8 | -0.0539 | -0.0004 | 0 |
| 248 | SLE RA 3 | 0 | 1.8 | 50.7 | -0.0475 | -0.0007 | 0 |
| 248 | SLE RA 4 | 0 | 1.85 | 50.49 | -0.0489 | -0.0005 | 0 |
| 248 | SLE RA 5 | 0 | 1.86 | 50.06 | -0.049 | -0.0004 | 0 |
| 248 | SLE RA 6 | 0 | 1.67 | 51.96 | -0.0426 | -0.0007 | 0 |
| 248 | SLE RA 7 | 0 | 1.72 | 51.75 | -0.044 | -0.0005 | 0 |
| 248 | SLE RA 8 | 0 | 1.65 | 51.68 | -0.0419 | -0.0007 | 0 |
| 248 | SLE RA 9 | 0 | 1.69 | 51.46 | -0.0433 | -0.0005 | 0 |
| 248 | SLE RA 10 | 0 | 2.1 | 54.28 | -0.0566 | -0.0004 | 0 |
| 248 | SLE RA 11 | 0 | 1.92 | 56.18 | -0.0502 | -0.0008 | 0 |
| 248 | SLE RA 12 | 0 | 1.97 | 55.96 | -0.0516 | -0.0006 | 0 |
| 248 | SLE RA 13 | 0 | 1.97 | 55.54 | -0.0517 | -0.0004 | 0 |
| 248 | SLE RA 14 | 0 | 1.79 | 57.44 | -0.0453 | -0.0008 | 0 |
| 248 | SLE RA 15 | 0 | 1.83 | 57.22 | -0.0467 | -0.0006 | 0 |
| 248 | SLE RA 16 | 0 | 1.76 | 57.15 | -0.0446 | -0.0008 | 0 |
| 248 | SLE RA 17 | 0 | 1.81 | 56.94 | -0.046 | -0.0006 | 0 |
| 248 | SLE RA 18 | 0 | 2.08 | 56.98 | -0.0554 | -0.0008 | 0 |
| 248 | SLE RA 19 | 0 | 2.12 | 56.77 | -0.0568 | -0.0006 | 0 |
| 248 | SLE RA 20 | 0 | 1.94 | 58.24 | -0.0505 | -0.0008 | 0 |
| 248 | SLE RA 21 | 0 | 1.99 | 58.03 | -0.052 | -0.0006 | 0 |
| 248 | SLE FR 1 | 0 | 1.91 | 49.16 | -0.0515 | -0.0007 | 0 |
| 248 | SLE FR 2 | 0 | 1.93 | 49.08 | -0.052 | -0.0006 | 0 |
| 248 | SLE FR 3 | 0 | 1.86 | 49.66 | -0.0496 | -0.0007 | 0 |
| 248 | SLE FR 4 | 0 | 1.98 | 51.43 | -0.0531 | -0.0006 | 0 |
| 248 | SLE FR 5 | 0 | 1.91 | 52.01 | -0.0507 | -0.0007 | 0 |
| 248 | SLE FR 6 | 0 | 1.99 | 53.07 | -0.0534 | -0.0007 | 0 |
| 248 | SLE QP 1 | 0 | 1.91 | 49.16 | -0.0515 | -0.0007 | 0 |
| 248 | SLE QP 2 | 0 | 1.96 | 51.5 | -0.0527 | -0.0007 | 0 |
| 248 | SLD 1 | 0.27 | 6.04 | 51.85 | -0.1866 | 0.2261 | -0.0012 |
| 248 | SLD 2 | 0.27 | 6.04 | 51.85 | -0.1866 | 0.2261 | -0.0012 |
| 248 | SLD 3 | 0.22 | 1.72 | 53.34 | -0.0457 | 0.2789 | -0.0014 |
| 248 | SLD 4 | 0.22 | 1.72 | 53.34 | -0.0457 | 0.2789 | -0.0014 |
| 248 | SLD 5 | 0.16 | 9.75 | 49.35 | -0.3065 | -0.0128 | 0.0001 |

| Nodo | Cont. | Reazione a traslazione | | | Reazione a rotazione | | |
|---|---|---|---|---|---|---|---|
| Ind. | N.br. | x | y | z | x | y | z |
| 248 | SLD 6 | 0.16 | 9.75 | 49.35 | -0.3065 | -0.0128 | 0.0001 |
| 248 | SLD 7 | -0.01 | -4.67 | 54.31 | 0.1631 | 0.1633 | -0.0008 |
| 248 | SLD 8 | -0.01 | -4.67 | 54.31 | 0.1631 | 0.1633 | -0.0008 |
| 248 | SLD 9 | 0.01 | 8.59 | 48.69 | -0.2684 | -0.1647 | 0.0008 |
| 248 | SLD 10 | 0.01 | 8.59 | 48.69 | -0.2684 | -0.1647 | 0.0008 |
| 248 | SLD 11 | -0.16 | -5.83 | 53.66 | 0.2012 | 0.0114 | -0.0001 |
| 248 | SLD 12 | -0.16 | -5.83 | 53.66 | 0.2012 | 0.0114 | -0.0001 |
| 248 | SLD 13 | -0.22 | 2.2 | 49.66 | -0.0596 | -0.2803 | 0.0014 |
| 248 | SLD 14 | -0.22 | 2.2 | 49.66 | -0.0596 | -0.2803 | 0.0014 |
| 248 | SLD 15 | -0.27 | -2.12 | 51.15 | 0.0813 | -0.2275 | 0.0012 |
| 248 | SLD 16 | -0.27 | -2.12 | 51.15 | 0.0813 | -0.2275 | 0.0012 |
| 248 | SLV 1 | 0.69 | 11.48 | 52.33 | -0.3651 | 0.579 | -0.003 |
| 248 | SLV 2 | 0.69 | 11.48 | 52.33 | -0.3651 | 0.579 | -0.003 |
| 248 | SLV 3 | 0.56 | 1.4 | 55.91 | -0.0369 | 0.7145 | -0.0037 |
| 248 | SLV 4 | 0.56 | 1.4 | 55.91 | -0.0369 | 0.7145 | -0.0037 |
| 248 | SLV 5 | 0.41 | 20.1 | 46.32 | -0.6442 | -0.0322 | 0.0002 |
| 248 | SLV 6 | 0.41 | 20.1 | 46.32 | -0.6442 | -0.0322 | 0.0002 |
| 248 | SLV 7 | -0.03 | -13.49 | 58.25 | 0.4498 | 0.4193 | -0.0022 |
| 248 | SLV 8 | -0.03 | -13.49 | 58.25 | 0.4498 | 0.4193 | -0.0022 |
| 248 | SLV 9 | 0.03 | 17.41 | 44.75 | -0.5552 | -0.4207 | 0.0022 |
| 248 | SLV 10 | 0.03 | 17.41 | 44.75 | -0.5552 | -0.4207 | 0.0022 |
| 248 | SLV 11 | -0.41 | -16.18 | 56.68 | 0.5388 | 0.0308 | -0.0002 |
| 248 | SLV 12 | -0.41 | -16.18 | 56.68 | 0.5388 | 0.0308 | -0.0002 |
| 248 | SLV 13 | -0.56 | 2.51 | 47.1 | -0.0685 | -0.7159 | 0.0037 |
| 248 | SLV 14 | -0.56 | 2.51 | 47.1 | -0.0685 | -0.7159 | 0.0037 |
| 248 | SLV 15 | -0.69 | -7.56 | 50.67 | 0.2597 | -0.5804 | 0.003 |
| 248 | SLV 16 | -0.69 | -7.56 | 50.67 | 0.2597 | -0.5804 | 0.003 |
| 249 | SLU 1 | 0 | -0.04 | 47.49 | -0.0079 | -0.0004 | 0 |
| 249 | SLU 2 | 0 | 0.03 | 47.14 | -0.0103 | -0.0009 | 0 |
| 249 | SLU 3 | 0 | 0.18 | 49.14 | -0.0202 | -0.0003 | 0 |
| 249 | SLU 4 | 0 | 0.22 | 48.93 | -0.0217 | -0.0005 | 0 |
| 249 | SLU 5 | 0 | 0.35 | 48.22 | -0.0274 | -0.0006 | 0 |
| 249 | SLU 6 | 0 | 0.5 | 50.22 | -0.0373 | 0 | 0 |
| 249 | SLU 7 | 0 | 0.55 | 50.01 | -0.0388 | -0.0003 | 0 |
| 249 | SLU 8 | 0 | 0.6 | 49.66 | -0.0421 | 0 | 0 |
| 249 | SLU 9 | 0 | 0.65 | 49.45 | -0.0435 | -0.0003 | 0 |
| 249 | SLU 10 | 0 | -0.26 | 55.51 | -0.001 | -0.001 | 0 |
| 249 | SLU 11 | 0 | -0.11 | 57.5 | -0.0109 | -0.0004 | 0 |
| 249 | SLU 12 | 0 | -0.07 | 57.29 | -0.0124 | -0.0007 | 0 |
| 249 | SLU 13 | 0 | 0.06 | 56.59 | -0.0181 | -0.0008 | 0 |
| 249 | SLU 14 | 0 | 0.21 | 58.59 | -0.028 | -0.0002 | 0 |
| 249 | SLU 15 | 0 | 0.25 | 58.38 | -0.0295 | -0.0005 | 0 |
| 249 | SLU 16 | 0 | 0.31 | 58.03 | -0.0328 | -0.0002 | 0 |
| 249 | SLU 17 | 0 | 0.35 | 57.82 | -0.0343 | -0.0004 | 0 |
| 249 | SLU 18 | 0 | -0.46 | 59.44 | 0.0054 | -0.0007 | 0 |
| 249 | SLU 19 | 0 | -0.41 | 59.23 | 0.0039 | -0.0009 | 0 |
| 249 | SLU 20 | 0 | -0.13 | 60.53 | -0.0117 | -0.0004 | 0 |
| 249 | SLU 21 | 0 | -0.09 | 60.32 | -0.0132 | -0.0007 | 0 |
| 249 | SLU 22 | 0 | -0.12 | 55.37 | -0.0081 | -0.0005 | 0 |
| 249 | SLU 23 | 0 | -0.05 | 55.02 | -0.0106 | -0.0009 | 0 |
| 249 | SLU 24 | 0 | 0.1 | 57.02 | -0.0204 | -0.0003 | 0 |
| 249 | SLU 25 | 0 | 0.14 | 56.81 | -0.0219 | -0.0006 | 0 |
| 249 | SLU 26 | 0 | 0.27 | 56.1 | -0.0277 | -0.0007 | 0 |
| 249 | SLU 27 | 0 | 0.42 | 58.1 | -0.0375 | -0.0001 | 0 |
| 249 | SLU 28 | 0 | 0.46 | 57.89 | -0.039 | -0.0004 | 0 |
| 249 | SLU 29 | 0 | 0.52 | 57.54 | -0.0423 | 0 | 0 |
| 249 | SLU 30 | 0 | 0.56 | 57.33 | -0.0438 | -0.0003 | 0 |
| 249 | SLU 31 | 0 | -0.34 | 63.39 | -0.0013 | -0.0011 | 0 |
| 249 | SLU 32 | 0 | -0.19 | 65.38 | -0.0112 | -0.0005 | 0 |
| 249 | SLU 33 | 0 | -0.15 | 65.17 | -0.0126 | -0.0007 | 0 |
| 249 | SLU 34 | 0 | -0.02 | 64.47 | -0.0184 | -0.0009 | 0 |
| 249 | SLU 35 | 0 | 0.13 | 66.47 | -0.0283 | -0.0003 | 0 |
| 249 | SLU 36 | 0 | 0.17 | 66.26 | -0.0297 | -0.0005 | 0 |
| 249 | SLU 37 | 0 | 0.23 | 65.91 | -0.0331 | -0.0002 | 0 |
| 249 | SLU 38 | 0 | 0.27 | 65.7 | -0.0345 | -0.0005 | 0 |
| 249 | SLU 39 | 0 | -0.54 | 67.32 | 0.0051 | -0.0007 | 0 |
| 249 | SLU 40 | 0 | -0.5 | 67.11 | 0.0037 | -0.001 | 0 |
| 249 | SLU 41 | 0 | -0.22 | 68.41 | -0.012 | -0.0005 | 0 |
| 249 | SLU 42 | 0 | -0.18 | 68.2 | -0.0134 | -0.0008 | 0 |
| 249 | SLU 43 | 0 | -0.02 | 59.03 | -0.0102 | -0.0005 | 0 |
| 249 | SLU 44 | 0 | 0.05 | 58.68 | -0.0126 | -0.001 | 0 |
| 249 | SLU 45 | 0 | 0.2 | 60.68 | -0.0225 | -0.0004 | 0 |
| 249 | SLU 46 | 0 | 0.24 | 60.47 | -0.0239 | -0.0006 | 0 |
| 249 | SLU 47 | 0 | 0.37 | 59.77 | -0.0297 | -0.0008 | 0 |
| 249 | SLU 48 | 0 | 0.52 | 61.77 | -0.0396 | -0.0001 | 0 |
| 249 | SLU 49 | 0 | 0.56 | 61.56 | -0.041 | -0.0004 | 0 |
| 249 | SLU 50 | 0 | 0.62 | 61.2 | -0.0444 | -0.0001 | 0 |
| 249 | SLU 51 | 0 | 0.66 | 60.99 | -0.0458 | -0.0004 | 0 |
| 249 | SLU 52 | 0 | -0.24 | 67.05 | -0.0033 | -0.0011 | 0 |
| 249 | SLU 53 | 0 | -0.09 | 69.05 | -0.0132 | -0.0005 | 0 |
| 249 | SLU 54 | 0 | -0.05 | 68.84 | -0.0147 | -0.0008 | 0 |
| 249 | SLU 55 | 0 | 0.08 | 68.14 | -0.0204 | -0.0009 | 0 |
| 249 | SLU 56 | 0 | 0.23 | 70.14 | -0.0303 | -0.0003 | 0 |
| 249 | SLU 57 | 0 | 0.27 | 69.93 | -0.0318 | -0.0006 | 0 |
| 249 | SLU 58 | 0 | 0.33 | 69.57 | -0.0351 | -0.0003 | 0 |
| 249 | SLU 59 | 0 | 0.37 | 69.36 | -0.0365 | -0.0005 | 0 |
| 249 | SLU 60 | 0 | -0.44 | 70.99 | 0.0031 | -0.0008 | 0 |
| 249 | SLU 61 | 0 | -0.39 | 70.78 | 0.0016 | -0.001 | 0 |

| Nodo | Cont. | Reazione a traslazione | | | Reazione a rotazione | | |
|---|---|---|---|---|---|---|---|
| Ind. | N.br. | x | y | z | x | y | z |
| 249 | SLU 62 | 0 | -0.12 | 72.07 | -0.014 | -0.0006 | 0 |
| 249 | SLU 63 | 0 | -0.07 | 71.87 | -0.0155 | -0.0008 | 0 |
| 249 | SLU 64 | 0 | -0.11 | 66.91 | -0.0104 | -0.0006 | 0 |
| 249 | SLU 65 | 0 | -0.04 | 66.56 | -0.0128 | -0.001 | 0 |
| 249 | SLU 66 | 0 | 0.11 | 68.56 | -0.0227 | -0.0004 | 0 |
| 249 | SLU 67 | 0 | 0.16 | 68.35 | -0.0242 | -0.0007 | 0 |
| 249 | SLU 68 | 0 | 0.28 | 67.65 | -0.0299 | -0.0008 | 0 |
| 249 | SLU 69 | 0 | 0.44 | 69.65 | -0.0398 | -0.0002 | 0 |
| 249 | SLU 70 | 0 | 0.48 | 69.44 | -0.0413 | -0.0005 | 0 |
| 249 | SLU 71 | 0 | 0.53 | 69.08 | -0.0446 | -0.0001 | 0 |
| 249 | SLU 72 | 0 | 0.58 | 68.87 | -0.0461 | -0.0004 | 0 |
| 249 | SLU 73 | 0 | -0.33 | 74.93 | -0.0036 | -0.0012 | 0 |
| 249 | SLU 74 | 0 | -0.18 | 76.93 | -0.0134 | -0.0006 | 0 |
| 249 | SLU 75 | 0 | -0.13 | 76.72 | -0.0149 | -0.0008 | 0 |
| 249 | SLU 76 | 0 | -0.01 | 76.02 | -0.0207 | -0.001 | 0 |
| 249 | SLU 77 | 0 | 0.14 | 78.01 | -0.0305 | -0.0004 | 0 |
| 249 | SLU 78 | 0 | 0.19 | 77.81 | -0.032 | -0.0006 | 0 |
| 249 | SLU 79 | 0 | 0.24 | 77.45 | -0.0353 | -0.0003 | 0 |
| 249 | SLU 80 | 0 | 0.29 | 77.24 | -0.0368 | -0.0006 | 0 |
| 249 | SLU 81 | 0 | -0.52 | 78.87 | 0.0029 | -0.0008 | 0 |
| 249 | SLU 82 | 0 | -0.48 | 78.66 | 0.0014 | -0.0011 | 0 |
| 249 | SLU 83 | 0 | -0.2 | 79.95 | -0.0142 | -0.0006 | 0 |
| 249 | SLU 84 | 0 | -0.16 | 79.74 | -0.0157 | -0.0009 | 0 |
| 249 | SLE RA 1 | 0 | -0.06 | 49.74 | -0.0079 | -0.0004 | 0 |
| 249 | SLE RA 2 | 0 | -0.02 | 49.51 | -0.0096 | -0.0007 | 0 |
| 249 | SLE RA 3 | 0 | 0.08 | 50.84 | -0.0162 | -0.0003 | 0 |
| 249 | SLE RA 4 | 0 | 0.11 | 50.7 | -0.0171 | -0.0005 | 0 |
| 249 | SLE RA 5 | 0 | 0.2 | 50.23 | -0.021 | -0.0006 | 0 |
| 249 | SLE RA 6 | 0 | 0.3 | 51.56 | -0.0276 | -0.0002 | 0 |
| 249 | SLE RA 7 | 0 | 0.33 | 51.42 | -0.0285 | -0.0004 | 0 |
| 249 | SLE RA 8 | 0 | 0.36 | 51.19 | -0.0308 | -0.0001 | 0 |
| 249 | SLE RA 9 | 0 | 0.39 | 51.05 | -0.0317 | -0.0003 | 0 |
| 249 | SLE RA 10 | 0 | -0.21 | 55.09 | -0.0034 | -0.0008 | 0 |
| 249 | SLE RA 11 | 0 | -0.11 | 56.42 | -0.01 | -0.0004 | 0 |
| 249 | SLE RA 12 | 0 | -0.08 | 56.28 | -0.0109 | -0.0006 | 0 |
| 249 | SLE RA 13 | 0 | 0 | 55.81 | -0.0148 | -0.0007 | 0 |
| 249 | SLE RA 14 | 0 | 0.1 | 57.14 | -0.0214 | -0.0003 | 0 |
| 249 | SLE RA 15 | 0 | 0.13 | 57 | -0.0224 | -0.0005 | 0 |
| 249 | SLE RA 16 | 0 | 0.17 | 56.77 | -0.0246 | -0.0003 | 0 |
| 249 | SLE RA 17 | 0 | 0.2 | 56.63 | -0.0255 | -0.0004 | 0 |
| 249 | SLE RA 18 | 0 | -0.34 | 57.71 | 0.0009 | -0.0006 | 0 |
| 249 | SLE RA 19 | 0 | -0.31 | 57.57 | -0.0001 | -0.0008 | 0 |
| 249 | SLE RA 20 | 0 | -0.13 | 58.43 | -0.0105 | -0.0005 | 0 |
| 249 | SLE RA 21 | 0 | -0.1 | 58.29 | -0.0115 | -0.0006 | 0 |
| 249 | SLE FR 1 | 0 | -0.06 | 49.74 | -0.0079 | -0.0004 | 0 |
| 249 | SLE FR 2 | 0 | -0.05 | 49.69 | -0.0083 | -0.0005 | 0 |
| 249 | SLE FR 3 | 0 | 0.02 | 50.03 | -0.0125 | -0.0004 | 0 |
| 249 | SLE FR 4 | 0 | -0.14 | 52.08 | -0.0056 | -0.0005 | 0 |
| 249 | SLE FR 5 | 0 | -0.06 | 52.42 | -0.0099 | -0.0004 | 0 |
| 249 | SLE FR 6 | 0 | -0.2 | 53.72 | -0.0035 | -0.0005 | 0 |
| 249 | SLE QP 1 | 0 | -0.06 | 49.74 | -0.0079 | -0.0004 | 0 |
| 249 | SLE QP 2 | 0 | -0.15 | 52.13 | -0.0053 | -0.0005 | 0 |
| 249 | SLD 1 | 0.34 | 0.13 | 53.26 | -0.0232 | 0.331 | -0.0001 |
| 249 | SLD 2 | 0.34 | 0.13 | 53.26 | -0.0232 | 0.331 | -0.0001 |
| 249 | SLD 3 | 0.3 | -5.63 | 55.59 | 0.243 | 0.2857 | -0.0001 |
| 249 | SLD 4 | 0.3 | -5.63 | 55.59 | 0.243 | 0.2857 | -0.0001 |
| 249 | SLD 5 | 0.17 | 8.66 | 48.93 | -0.4144 | 0.1678 | -0.0001 |
| 249 | SLD 6 | 0.17 | 8.66 | 48.93 | -0.4144 | 0.1678 | -0.0001 |
| 249 | SLD 7 | 0.02 | -10.51 | 56.71 | 0.4729 | 0.0166 | 0 |
| 249 | SLD 8 | 0.02 | -10.51 | 56.71 | 0.4729 | 0.0166 | 0 |
| 249 | SLD 9 | -0.02 | 10.22 | 47.55 | -0.4835 | -0.0175 | 0 |
| 249 | SLD 10 | -0.02 | 10.22 | 47.55 | -0.4835 | -0.0175 | 0 |
| 249 | SLD 11 | -0.17 | -8.95 | 55.33 | 0.4038 | -0.1687 | 0.0001 |
| 249 | SLD 12 | -0.17 | -8.95 | 55.33 | 0.4038 | -0.1687 | 0.0001 |
| 249 | SLD 13 | -0.3 | 5.33 | 48.67 | -0.2536 | -0.2866 | 0.0001 |
| 249 | SLD 14 | -0.3 | 5.33 | 48.67 | -0.2536 | -0.2866 | 0.0001 |
| 249 | SLD 15 | -0.34 | -0.42 | 51 | 0.0126 | -0.332 | 0.0001 |
| 249 | SLD 16 | -0.34 | -0.42 | 51 | 0.0126 | -0.332 | 0.0001 |
| 249 | SLV 1 | 0.87 | 0.48 | 54.72 | -0.0465 | 0.8471 | -0.0003 |
| 249 | SLV 2 | 0.87 | 0.48 | 54.72 | -0.0465 | 0.8471 | -0.0003 |
| 249 | SLV 3 | 0.75 | -13.04 | 60.32 | 0.5792 | 0.7309 | -0.0003 |
| 249 | SLV 4 | 0.75 | -13.04 | 60.32 | 0.5792 | 0.7309 | -0.0003 |
| 249 | SLV 5 | 0.44 | 20.55 | 44.42 | -0.9666 | 0.4301 | -0.0002 |
| 249 | SLV 6 | 0.44 | 20.55 | 44.42 | -0.9666 | 0.4301 | -0.0002 |
| 249 | SLV 7 | 0.04 | -24.52 | 63.07 | 1.119 | 0.0427 | 0 |
| 249 | SLV 8 | 0.04 | -24.52 | 63.07 | 1.119 | 0.0427 | 0 |
| 249 | SLV 9 | -0.04 | 24.23 | 41.19 | -1.1296 | -0.0436 | 0 |
| 249 | SLV 10 | -0.04 | 24.23 | 41.19 | -1.1296 | -0.0436 | 0 |
| 249 | SLV 11 | -0.44 | -20.84 | 59.84 | 0.956 | -0.431 | 0.0002 |
| 249 | SLV 12 | -0.44 | -20.84 | 59.84 | 0.956 | -0.431 | 0.0002 |
| 249 | SLV 13 | -0.75 | 12.74 | 43.95 | -0.5898 | -0.7319 | 0.0003 |
| 249 | SLV 14 | -0.75 | 12.74 | 43.95 | -0.5898 | -0.7319 | 0.0003 |
| 249 | SLV 15 | -0.87 | -0.78 | 49.54 | 0.0359 | -0.8481 | 0.0003 |
| 249 | SLV 16 | -0.87 | -0.78 | 49.54 | 0.0359 | -0.8481 | 0.0003 |
| 250 | SLU 1 | 0 | -3.69 | 14.99 | 0.2474 | 0.0003 | 0 |
| 250 | SLU 2 | 0 | -3.68 | 15 | 0.2466 | 0.0002 | 0 |
| 250 | SLU 3 | 0 | -3.84 | 14.95 | 0.2582 | 0.0003 | 0 |
| 250 | SLU 4 | 0 | -3.84 | 14.95 | 0.2577 | 0.0003 | 0 |

| Nodo | Cont. | Reazione a traslazione | | | Reazione a rotazione | | |
|---|---|---|---|---|---|---|---|
| Ind. | N.br. | x | y | z | x | y | z |
| 250 | SLU 5 | 0 | -3.77 | 14.97 | 0.2531 | 0.0002 | 0 |
| 250 | SLU 6 | 0 | -3.94 | 14.92 | 0.2647 | 0.0004 | 0 |
| 250 | SLU 7 | 0 | -3.93 | 14.92 | 0.2642 | 0.0003 | 0 |
| 250 | SLU 8 | 0 | -3.87 | 14.93 | 0.2604 | 0.0004 | 0 |
| 250 | SLU 9 | 0 | -3.86 | 14.93 | 0.2599 | 0.0003 | 0 |
| 250 | SLU 10 | 0 | -4.43 | 19.85 | 0.2932 | 0.0002 | 0 |
| 250 | SLU 11 | 0 | -4.6 | 19.8 | 0.3047 | 0.0004 | 0 |
| 250 | SLU 12 | 0 | -4.59 | 19.8 | 0.3043 | 0.0003 | 0 |
| 250 | SLU 13 | 0 | -4.52 | 19.82 | 0.2997 | 0.0002 | 0 |
| 250 | SLU 14 | 0 | -4.69 | 19.77 | 0.3112 | 0.0004 | 0 |
| 250 | SLU 15 | 0 | -4.68 | 19.77 | 0.3108 | 0.0003 | 0 |
| 250 | SLU 16 | 0 | -4.63 | 19.79 | 0.3069 | 0.0004 | 0 |
| 250 | SLU 17 | 0 | -4.62 | 19.79 | 0.3065 | 0.0003 | 0 |
| 250 | SLU 18 | 0 | -4.77 | 21.93 | 0.3139 | 0.0003 | 0 |
| 250 | SLU 19 | 0 | -4.76 | 21.93 | 0.3134 | 0.0003 | 0 |
| 250 | SLU 20 | 0 | -4.86 | 21.9 | 0.3204 | 0.0004 | 0 |
| 250 | SLU 21 | 0 | -4.85 | 21.9 | 0.3199 | 0.0003 | 0 |
| 250 | SLU 22 | 0 | -4.39 | 18.51 | 0.2917 | 0.0004 | 0 |
| 250 | SLU 23 | 0 | -4.38 | 18.51 | 0.291 | 0.0002 | 0 |
| 250 | SLU 24 | 0 | -4.54 | 18.46 | 0.3025 | 0.0004 | 0 |
| 250 | SLU 25 | 0 | -4.54 | 18.46 | 0.3021 | 0.0003 | 0 |
| 250 | SLU 26 | 0 | -4.47 | 18.48 | 0.2975 | 0.0003 | 0 |
| 250 | SLU 27 | 0 | -4.64 | 18.43 | 0.309 | 0.0004 | 0 |
| 250 | SLU 28 | 0 | -4.63 | 18.43 | 0.3086 | 0.0004 | 0 |
| 250 | SLU 29 | 0 | -4.57 | 18.44 | 0.3047 | 0.0005 | 0 |
| 250 | SLU 30 | 0 | -4.56 | 18.44 | 0.3043 | 0.0004 | 0 |
| 250 | SLU 31 | 0 | -5.13 | 23.36 | 0.3375 | 0.0003 | 0 |
| 250 | SLU 32 | 0 | -5.3 | 23.31 | 0.3491 | 0.0004 | 0 |
| 250 | SLU 33 | 0 | -5.29 | 23.31 | 0.3486 | 0.0003 | 0 |
| 250 | SLU 34 | 0 | -5.22 | 23.33 | 0.344 | 0.0003 | 0 |
| 250 | SLU 35 | 0 | -5.39 | 23.28 | 0.3556 | 0.0005 | 0 |
| 250 | SLU 36 | 0 | -5.38 | 23.28 | 0.3552 | 0.0004 | 0 |
| 250 | SLU 37 | 0 | -5.33 | 23.3 | 0.3513 | 0.0005 | 0 |
| 250 | SLU 38 | 0 | -5.32 | 23.3 | 0.3508 | 0.0004 | 0 |
| 250 | SLU 39 | 0 | -5.47 | 25.44 | 0.3582 | 0.0004 | 0 |
| 250 | SLU 40 | 0 | -5.46 | 25.44 | 0.3578 | 0.0003 | 0 |
| 250 | SLU 41 | 0 | -5.56 | 25.41 | 0.3647 | 0.0004 | 0 |
| 250 | SLU 42 | 0 | -5.55 | 25.41 | 0.3643 | 0.0004 | 0 |
| 250 | SLU 43 | 0 | -4.55 | 18.29 | 0.3064 | 0.0004 | 0 |
| 250 | SLU 44 | 0 | -4.54 | 18.29 | 0.3056 | 0.0002 | 0 |
| 250 | SLU 45 | 0 | -4.71 | 18.24 | 0.3172 | 0.0004 | 0 |
| 250 | SLU 46 | 0 | -4.7 | 18.24 | 0.3167 | 0.0003 | 0 |
| 250 | SLU 47 | 0 | -4.63 | 18.26 | 0.3121 | 0.0003 | 0 |
| 250 | SLU 48 | 0 | -4.8 | 18.21 | 0.3237 | 0.0004 | 0 |
| 250 | SLU 49 | 0 | -4.8 | 18.21 | 0.3232 | 0.0004 | 0 |
| 250 | SLU 50 | 0 | -4.74 | 18.23 | 0.3194 | 0.0005 | 0 |
| 250 | SLU 51 | 0 | -4.73 | 18.23 | 0.3189 | 0.0004 | 0 |
| 250 | SLU 52 | 0 | -5.3 | 23.14 | 0.3522 | 0.0003 | 0 |
| 250 | SLU 53 | 0 | -5.47 | 23.1 | 0.3637 | 0.0004 | 0 |
| 250 | SLU 54 | 0 | -5.46 | 23.1 | 0.3633 | 0.0004 | 0 |
| 250 | SLU 55 | 0 | -5.39 | 23.11 | 0.3587 | 0.0003 | 0 |
| 250 | SLU 56 | 0 | -5.56 | 23.06 | 0.3703 | 0.0005 | 0 |
| 250 | SLU 57 | 0 | -5.55 | 23.07 | 0.3698 | 0.0004 | 0 |
| 250 | SLU 58 | 0 | -5.49 | 23.08 | 0.366 | 0.0005 | 0 |
| 250 | SLU 59 | 0 | -5.49 | 23.08 | 0.3655 | 0.0004 | 0 |
| 250 | SLU 60 | 0 | -5.64 | 25.22 | 0.3729 | 0.0004 | 0 |
| 250 | SLU 61 | 0 | -5.63 | 25.22 | 0.3725 | 0.0003 | 0 |
| 250 | SLU 62 | 0 | -5.73 | 25.19 | 0.3794 | 0.0005 | 0 |
| 250 | SLU 63 | 0 | -5.72 | 25.19 | 0.379 | 0.0004 | 0 |
| 250 | SLU 64 | 0 | -5.25 | 21.8 | 0.3507 | 0.0004 | 0 |
| 250 | SLU 65 | 0 | -5.24 | 21.8 | 0.35 | 0.0003 | 0 |
| 250 | SLU 66 | 0 | -5.41 | 21.75 | 0.3615 | 0.0005 | 0 |
| 250 | SLU 67 | 0 | -5.4 | 21.75 | 0.3611 | 0.0004 | 0 |
| 250 | SLU 68 | 0 | -5.33 | 21.77 | 0.3565 | 0.0003 | 0 |
| 250 | SLU 69 | 0 | -5.5 | 21.72 | 0.368 | 0.0005 | 0 |
| 250 | SLU 70 | 0 | -5.49 | 21.72 | 0.3676 | 0.0004 | 0 |
| 250 | SLU 71 | 0 | -5.44 | 21.74 | 0.3637 | 0.0005 | 0 |
| 250 | SLU 72 | 0 | -5.43 | 21.74 | 0.3633 | 0.0004 | 0 |
| 250 | SLU 73 | 0 | -6 | 26.65 | 0.3965 | 0.0003 | 0 |
| 250 | SLU 74 | 0 | -6.17 | 26.61 | 0.4081 | 0.0005 | 0 |
| 250 | SLU 75 | 0 | -6.16 | 26.61 | 0.4077 | 0.0004 | 0 |
| 250 | SLU 76 | 0 | -6.09 | 26.62 | 0.4031 | 0.0004 | 0 |
| 250 | SLU 77 | 0 | -6.26 | 26.58 | 0.4146 | 0.0005 | 0 |
| 250 | SLU 78 | 0 | -6.25 | 26.58 | 0.4142 | 0.0005 | 0 |
| 250 | SLU 79 | 0 | -6.19 | 26.59 | 0.4103 | 0.0005 | 0 |
| 250 | SLU 80 | 0 | -6.19 | 26.59 | 0.4099 | 0.0005 | 0 |
| 250 | SLU 81 | 0 | -6.33 | 28.73 | 0.4172 | 0.0005 | 0 |
| 250 | SLU 82 | 0 | -6.33 | 28.73 | 0.4168 | 0.0004 | 0 |
| 250 | SLU 83 | 0 | -6.43 | 28.7 | 0.4238 | 0.0005 | 0 |
| 250 | SLU 84 | 0 | -6.42 | 28.7 | 0.4233 | 0.0004 | 0 |
| 250 | SLE RA 1 | 0 | -3.89 | 16 | 0.26 | 0.0003 | 0 |
| 250 | SLE RA 2 | 0 | -3.88 | 16 | 0.2595 | 0.0002 | 0 |
| 250 | SLE RA 3 | 0 | -3.99 | 15.97 | 0.2672 | 0.0003 | 0 |
| 250 | SLE RA 4 | 0 | -3.99 | 15.97 | 0.267 | 0.0003 | 0 |
| 250 | SLE RA 5 | 0 | -3.94 | 15.98 | 0.2639 | 0.0003 | 0 |
| 250 | SLE RA 6 | 0 | -4.05 | 15.95 | 0.2716 | 0.0004 | 0 |
| 250 | SLE RA 7 | 0 | -4.05 | 15.95 | 0.2713 | 0.0003 | 0 |
| 250 | SLE RA 8 | 0 | -4.01 | 15.96 | 0.2687 | 0.0004 | 0 |

| Nodo | Cont. | Reazione a traslazione | | | Reazione a rotazione | | |
|---|---|---|---|---|---|---|---|
| Ind. | N.br. | x | y | z | x | y | z |
| 250 | SLE RA 9 | 0 | -4.01 | 15.96 | 0.2684 | 0.0003 | 0 |
| 250 | SLE RA 10 | 0 | -4.38 | 19.23 | 0.2906 | 0.0002 | 0 |
| 250 | SLE RA 11 | 0 | -4.5 | 19.2 | 0.2983 | 0.0004 | 0 |
| 250 | SLE RA 12 | 0 | -4.49 | 19.2 | 0.298 | 0.0003 | 0 |
| 250 | SLE RA 13 | 0 | -4.45 | 19.21 | 0.2949 | 0.0003 | 0 |
| 250 | SLE RA 14 | 0 | -4.56 | 19.18 | 0.3026 | 0.0004 | 0 |
| 250 | SLE RA 15 | 0 | -4.55 | 19.18 | 0.3023 | 0.0003 | 0 |
| 250 | SLE RA 16 | 0 | -4.51 | 19.19 | 0.2998 | 0.0004 | 0 |
| 250 | SLE RA 17 | 0 | -4.51 | 19.19 | 0.2995 | 0.0003 | 0 |
| 250 | SLE RA 18 | 0 | -4.61 | 20.62 | 0.3044 | 0.0003 | 0 |
| 250 | SLE RA 19 | 0 | -4.6 | 20.62 | 0.3041 | 0.0003 | 0 |
| 250 | SLE RA 20 | 0 | -4.67 | 20.6 | 0.3087 | 0.0004 | 0 |
| 250 | SLE RA 21 | 0 | -4.66 | 20.6 | 0.3084 | 0.0003 | 0 |
| 250 | SLE FR 1 | 0 | -3.89 | 16 | 0.26 | 0.0003 | 0 |
| 250 | SLE FR 2 | 0 | -3.89 | 16 | 0.2599 | 0.0003 | 0 |
| 250 | SLE FR 3 | 0 | -3.91 | 15.99 | 0.2618 | 0.0003 | 0 |
| 250 | SLE FR 4 | 0 | -4.1 | 17.38 | 0.2732 | 0.0003 | 0 |
| 250 | SLE FR 5 | 0 | -4.13 | 17.38 | 0.2751 | 0.0003 | 0 |
| 250 | SLE FR 6 | 0 | -4.25 | 18.31 | 0.2822 | 0.0003 | 0 |
| 250 | SLE QP 1 | 0 | -3.89 | 16 | 0.26 | 0.0003 | 0 |
| 250 | SLE QP 2 | 0 | -4.1 | 17.38 | 0.2733 | 0.0003 | 0 |
| 250 | SLD 1 | 0.45 | -1.1 | 18.37 | 0.1839 | 0.4939 | -0.0063 |
| 250 | SLD 2 | 0.45 | -1.1 | 18.37 | 0.1839 | 0.4939 | -0.0063 |
| 250 | SLD 3 | 0.47 | -5.63 | 16.88 | 0.3191 | 0.5075 | -0.0066 |
| 250 | SLD 4 | 0.47 | -5.63 | 16.88 | 0.3191 | 0.5075 | -0.0066 |
| 250 | SLD 5 | 0.11 | 3.66 | 19.93 | 0.0414 | 0.1278 | -0.0015 |
| 250 | SLD 6 | 0.11 | 3.66 | 19.93 | 0.0414 | 0.1278 | -0.0015 |
| 250 | SLD 7 | 0.17 | -11.43 | 14.98 | 0.4922 | 0.1731 | -0.0024 |
| 250 | SLD 8 | 0.17 | -11.43 | 14.98 | 0.4922 | 0.1731 | -0.0024 |
| 250 | SLD 9 | -0.17 | 3.22 | 19.79 | 0.0545 | -0.1725 | 0.0024 |
| 250 | SLD 10 | -0.17 | 3.22 | 19.79 | 0.0545 | -0.1725 | 0.0024 |
| 250 | SLD 11 | -0.11 | -11.87 | 14.84 | 0.5053 | -0.1271 | 0.0015 |
| 250 | SLD 12 | -0.11 | -11.87 | 14.84 | 0.5053 | -0.1271 | 0.0015 |
| 250 | SLD 13 | -0.47 | -2.58 | 17.89 | 0.2276 | -0.5069 | 0.0066 |
| 250 | SLD 14 | -0.47 | -2.58 | 17.89 | 0.2276 | -0.5069 | 0.0066 |
| 250 | SLD 15 | -0.45 | -7.11 | 16.4 | 0.3628 | -0.4933 | 0.0063 |
| 250 | SLD 16 | -0.45 | -7.11 | 16.4 | 0.3628 | -0.4933 | 0.0063 |
| 250 | SLV 1 | 1.15 | 2.94 | 19.7 | 0.0633 | 1.2631 | -0.0161 |
| 250 | SLV 2 | 1.15 | 2.94 | 19.7 | 0.0633 | 1.2631 | -0.0161 |
| 250 | SLV 3 | 1.2 | -7.64 | 16.21 | 0.3797 | 1.2972 | -0.0168 |
| 250 | SLV 4 | 1.2 | -7.64 | 16.21 | 0.3797 | 1.2972 | -0.0168 |
| 250 | SLV 5 | 0.27 | 14.06 | 23.36 | -0.2694 | 0.3275 | -0.0038 |
| 250 | SLV 6 | 0.27 | 14.06 | 23.36 | -0.2694 | 0.3275 | -0.0038 |
| 250 | SLV 7 | 0.44 | -21.21 | 11.75 | 0.785 | 0.4411 | -0.006 |
| 250 | SLV 8 | 0.44 | -21.21 | 11.75 | 0.785 | 0.4411 | -0.006 |
| 250 | SLV 9 | -0.43 | 13.01 | 23.02 | -0.2383 | -0.4404 | 0.006 |
| 250 | SLV 10 | -0.43 | 13.01 | 23.02 | -0.2383 | -0.4404 | 0.006 |
| 250 | SLV 11 | -0.27 | -22.26 | 11.41 | 0.8161 | -0.3268 | 0.0038 |
| 250 | SLV 12 | -0.27 | -22.26 | 11.41 | 0.8161 | -0.3268 | 0.0038 |
| 250 | SLV 13 | -1.2 | -0.56 | 18.55 | 0.167 | -1.2965 | 0.0168 |
| 250 | SLV 14 | -1.2 | -0.56 | 18.55 | 0.167 | -1.2965 | 0.0168 |
| 250 | SLV 15 | -1.15 | -11.14 | 15.07 | 0.4834 | -1.2625 | 0.0161 |
| 250 | SLV 16 | -1.15 | -11.14 | 15.07 | 0.4834 | -1.2625 | 0.0161 |
| 251 | SLU 1 | 0 | 1.46 | 40.39 | 0.1182 | -0.0026 | 0 |
| 251 | SLU 2 | 0 | 1.44 | 40.29 | 0.119 | -0.0026 | 0 |
| 251 | SLU 3 | 0 | 1.24 | 41.09 | 0.1322 | -0.003 | 0 |
| 251 | SLU 4 | 0 | 1.23 | 41.03 | 0.1327 | -0.003 | 0 |
| 251 | SLU 5 | 0 | 1.15 | 40.39 | 0.1323 | -0.0029 | 0 |
| 251 | SLU 6 | 0 | 0.95 | 41.19 | 0.1455 | -0.0033 | 0 |
| 251 | SLU 7 | 0 | 0.94 | 41.13 | 0.146 | -0.0033 | 0 |
| 251 | SLU 8 | 0 | 0.89 | 40.59 | 0.1449 | -0.0034 | 0 |
| 251 | SLU 9 | 0 | 0.88 | 40.53 | 0.1454 | -0.0033 | 0 |
| 251 | SLU 10 | 0 | 1.81 | 48.27 | 0.1349 | -0.003 | 0 |
| 251 | SLU 11 | 0 | 1.61 | 49.06 | 0.1481 | -0.0034 | 0 |
| 251 | SLU 12 | 0 | 1.6 | 49 | 0.1486 | -0.0034 | 0 |
| 251 | SLU 13 | 0 | 1.53 | 48.36 | 0.1483 | -0.0034 | 0 |
| 251 | SLU 14 | 0 | 1.33 | 49.16 | 0.1615 | -0.0038 | 0 |
| 251 | SLU 15 | 0 | 1.32 | 49.1 | 0.1619 | -0.0037 | 0 |
| 251 | SLU 16 | 0 | 1.26 | 48.56 | 0.1608 | -0.0038 | 0 |
| 251 | SLU 17 | 0 | 1.25 | 48.5 | 0.1613 | -0.0037 | 0 |
| 251 | SLU 18 | 0 | 1.99 | 51.78 | 0.141 | -0.0032 | 0 |
| 251 | SLU 19 | 0 | 1.98 | 51.72 | 0.1414 | -0.0032 | 0 |
| 251 | SLU 20 | 0 | 1.7 | 51.88 | 0.1543 | -0.0036 | 0 |
| 251 | SLU 21 | 0 | 1.69 | 51.82 | 0.1548 | -0.0036 | 0 |
| 251 | SLU 22 | 0 | 1.65 | 47.26 | 0.1396 | -0.0032 | 0 |
| 251 | SLU 23 | 0 | 1.63 | 47.16 | 0.1404 | -0.0031 | 0 |
| 251 | SLU 24 | 0 | 1.43 | 47.96 | 0.1536 | -0.0035 | 0 |
| 251 | SLU 25 | 0 | 1.42 | 47.9 | 0.1541 | -0.0035 | 0 |
| 251 | SLU 26 | 0 | 1.34 | 47.26 | 0.1537 | -0.0035 | 0 |
| 251 | SLU 27 | 0 | 1.15 | 48.05 | 0.167 | -0.0039 | 0 |
| 251 | SLU 28 | 0 | 1.13 | 47.99 | 0.1674 | -0.0039 | 0 |
| 251 | SLU 29 | 0 | 1.08 | 47.45 | 0.1663 | -0.0039 | 0 |
| 251 | SLU 30 | 0 | 1.07 | 47.39 | 0.1668 | -0.0039 | 0 |
| 251 | SLU 31 | 0 | 2 | 55.13 | 0.1563 | -0.0036 | 0 |
| 251 | SLU 32 | 0 | 1.8 | 55.93 | 0.1696 | -0.004 | 0 |
| 251 | SLU 33 | 0 | 1.79 | 55.87 | 0.17 | -0.0039 | 0 |
| 251 | SLU 34 | 0 | 1.72 | 55.23 | 0.1697 | -0.0039 | 0 |
| 251 | SLU 35 | 0 | 1.52 | 56.03 | 0.1829 | -0.0043 | 0 |

| Nodo | Cont. | Reazione a traslazione | | | Reazione a rotazione | | |
|---|---|---|---|---|---|---|---|
| Ind. | N.br. | x | y | z | x | y | z |
| 251 | SLU 36 | 0 | 1.51 | 55.97 | 0.1833 | -0.0043 | 0 |
| 251 | SLU 37 | 0 | 1.45 | 55.43 | 0.1822 | -0.0043 | 0 |
| 251 | SLU 38 | 0 | 1.44 | 55.37 | 0.1827 | -0.0043 | 0 |
| 251 | SLU 39 | 0 | 2.18 | 58.65 | 0.1624 | -0.0038 | 0 |
| 251 | SLU 40 | 0 | 2.17 | 58.59 | 0.1629 | -0.0038 | 0 |
| 251 | SLU 41 | 0 | 1.9 | 58.75 | 0.1757 | -0.0042 | 0 |
| 251 | SLU 42 | 0 | 1.89 | 58.69 | 0.1762 | -0.0041 | 0 |
| 251 | SLU 43 | 0 | 1.83 | 50.15 | 0.1464 | -0.0032 | 0 |
| 251 | SLU 44 | 0 | 1.81 | 50.05 | 0.1471 | -0.0032 | 0 |
| 251 | SLU 45 | 0 | 1.61 | 50.85 | 0.1603 | -0.0036 | 0 |
| 251 | SLU 46 | 0 | 1.6 | 50.79 | 0.1608 | -0.0036 | 0 |
| 251 | SLU 47 | 0 | 1.52 | 50.15 | 0.1605 | -0.0035 | 0 |
| 251 | SLU 48 | 0 | 1.32 | 50.95 | 0.1737 | -0.0039 | 0 |
| 251 | SLU 49 | 0 | 1.31 | 50.89 | 0.1741 | -0.0039 | 0 |
| 251 | SLU 50 | 0 | 1.26 | 50.35 | 0.173 | -0.004 | 0 |
| 251 | SLU 51 | 0 | 1.25 | 50.29 | 0.1735 | -0.0039 | 0 |
| 251 | SLU 52 | 0 | 2.18 | 58.03 | 0.1631 | -0.0036 | 0 |
| 251 | SLU 53 | 0 | 1.98 | 58.83 | 0.1763 | -0.004 | 0 |
| 251 | SLU 54 | 0 | 1.97 | 58.77 | 0.1767 | -0.004 | 0 |
| 251 | SLU 55 | 0 | 1.9 | 58.13 | 0.1764 | -0.004 | 0 |
| 251 | SLU 56 | 0 | 1.7 | 58.93 | 0.1896 | -0.0044 | 0 |
| 251 | SLU 57 | 0 | 1.69 | 58.87 | 0.1901 | -0.0043 | 0 |
| 251 | SLU 58 | 0 | 1.63 | 58.33 | 0.189 | -0.0044 | 0 |
| 251 | SLU 59 | 0 | 1.62 | 58.27 | 0.1894 | -0.0043 | 0 |
| 251 | SLU 60 | 0 | 2.36 | 61.55 | 0.1691 | -0.0038 | 0 |
| 251 | SLU 61 | 0 | 2.35 | 61.49 | 0.1696 | -0.0038 | 0 |
| 251 | SLU 62 | 0 | 2.08 | 61.65 | 0.1825 | -0.0042 | 0 |
| 251 | SLU 63 | 0 | 2.06 | 61.59 | 0.1829 | -0.0042 | 0 |
| 251 | SLU 64 | 0 | 2.02 | 57.02 | 0.1678 | -0.0038 | 0 |
| 251 | SLU 65 | 0 | 2 | 56.92 | 0.1685 | -0.0037 | 0 |
| 251 | SLU 66 | 0 | 1.8 | 57.72 | 0.1818 | -0.0041 | 0 |
| 251 | SLU 67 | 0 | 1.79 | 57.66 | 0.1822 | -0.0041 | 0 |
| 251 | SLU 68 | 0 | 1.72 | 57.02 | 0.1819 | -0.0041 | 0 |
| 251 | SLU 69 | 0 | 1.52 | 57.82 | 0.1951 | -0.0045 | 0 |
| 251 | SLU 70 | 0 | 1.51 | 57.76 | 0.1955 | -0.0045 | 0 |
| 251 | SLU 71 | 0 | 1.45 | 57.22 | 0.1944 | -0.0045 | 0 |
| 251 | SLU 72 | 0 | 1.44 | 57.16 | 0.1949 | -0.0045 | 0 |
| 251 | SLU 73 | 0 | 2.37 | 64.9 | 0.1845 | -0.0042 | 0 |
| 251 | SLU 74 | 0 | 2.17 | 65.69 | 0.1977 | -0.0046 | 0 |
| 251 | SLU 75 | 0 | 2.16 | 65.63 | 0.1981 | -0.0045 | 0 |
| 251 | SLU 76 | 0 | 2.09 | 64.99 | 0.1978 | -0.0045 | 0 |
| 251 | SLU 77 | 0 | 1.89 | 65.79 | 0.211 | -0.0049 | 0 |
| 251 | SLU 78 | 0 | 1.88 | 65.73 | 0.2115 | -0.0049 | 0 |
| 251 | SLU 79 | 0 | 1.82 | 65.19 | 0.2104 | -0.0049 | 0 |
| 251 | SLU 80 | 0 | 1.81 | 65.13 | 0.2108 | -0.0049 | 0 |
| 251 | SLU 81 | 0 | 2.55 | 68.41 | 0.1905 | -0.0044 | 0 |
| 251 | SLU 82 | 0 | 2.54 | 68.35 | 0.191 | -0.0044 | 0 |
| 251 | SLU 83 | 0 | 2.27 | 68.51 | 0.2039 | -0.0047 | 0 |
| 251 | SLU 84 | 0 | 2.26 | 68.45 | 0.2043 | -0.0047 | 0 |
| 251 | SLE RA 1 | 0 | 1.51 | 42.35 | 0.1244 | -0.0028 | 0 |
| 251 | SLE RA 2 | 0 | 1.5 | 42.29 | 0.1249 | -0.0028 | 0 |
| 251 | SLE RA 3 | 0 | 1.37 | 42.82 | 0.1337 | -0.003 | 0 |
| 251 | SLE RA 4 | 0 | 1.36 | 42.78 | 0.134 | -0.003 | 0 |
| 251 | SLE RA 5 | 0 | 1.31 | 42.35 | 0.1337 | -0.003 | 0 |
| 251 | SLE RA 6 | 0 | 1.18 | 42.88 | 0.1426 | -0.0033 | 0 |
| 251 | SLE RA 7 | 0 | 1.17 | 42.84 | 0.1429 | -0.0032 | 0 |
| 251 | SLE RA 8 | 0 | 1.13 | 42.48 | 0.1421 | -0.0033 | 0 |
| 251 | SLE RA 9 | 0 | 1.12 | 42.44 | 0.1424 | -0.0033 | 0 |
| 251 | SLE RA 10 | 0 | 1.75 | 47.6 | 0.1355 | -0.003 | 0 |
| 251 | SLE RA 11 | 0 | 1.61 | 48.14 | 0.1443 | -0.0033 | 0 |
| 251 | SLE RA 12 | 0 | 1.61 | 48.1 | 0.1446 | -0.0033 | 0 |
| 251 | SLE RA 13 | 0 | 1.56 | 47.67 | 0.1444 | -0.0033 | 0 |
| 251 | SLE RA 14 | 0 | 1.42 | 48.2 | 0.1532 | -0.0035 | 0 |
| 251 | SLE RA 15 | 0 | 1.42 | 48.16 | 0.1535 | -0.0035 | 0 |
| 251 | SLE RA 16 | 0 | 1.38 | 47.8 | 0.1528 | -0.0036 | 0 |
| 251 | SLE RA 17 | 0 | 1.37 | 47.76 | 0.1531 | -0.0035 | 0 |
| 251 | SLE RA 18 | 0 | 1.87 | 49.95 | 0.1395 | -0.0032 | 0 |
| 251 | SLE RA 19 | 0 | 1.86 | 49.91 | 0.1398 | -0.0032 | 0 |
| 251 | SLE RA 20 | 0 | 1.68 | 50.01 | 0.1484 | -0.0034 | 0 |
| 251 | SLE RA 21 | 0 | 1.67 | 49.97 | 0.1487 | -0.0034 | 0 |
| 251 | SLE FR 1 | 0 | 1.51 | 42.35 | 0.1244 | -0.0028 | 0 |
| 251 | SLE FR 2 | 0 | 1.51 | 42.34 | 0.1245 | -0.0028 | 0 |
| 251 | SLE FR 3 | 0 | 1.43 | 42.38 | 0.1279 | -0.0029 | 0 |
| 251 | SLE FR 4 | 0 | 1.61 | 44.62 | 0.129 | -0.0029 | 0 |
| 251 | SLE FR 5 | 0 | 1.54 | 44.66 | 0.1325 | -0.003 | 0 |
| 251 | SLE FR 6 | 0 | 1.69 | 46.15 | 0.1319 | -0.003 | 0 |
| 251 | SLE QP 1 | 0 | 1.51 | 42.35 | 0.1244 | -0.0028 | 0 |
| 251 | SLE QP 2 | 0 | 1.62 | 44.63 | 0.1289 | -0.0029 | 0 |
| 251 | SLD 1 | 0.26 | 4.32 | 45.2 | 0.0071 | 0.3615 | -0.0001 |
| 251 | SLD 2 | 0.26 | 4.32 | 45.2 | 0.0071 | 0.3615 | -0.0001 |
| 251 | SLD 3 | 0.24 | 0.18 | 41.87 | 0.1944 | 0.3406 | -0.0001 |
| 251 | SLD 4 | 0.24 | 0.18 | 41.87 | 0.1944 | 0.3406 | -0.0001 |
| 251 | SLD 5 | 0.1 | 8.71 | 49.84 | -0.1917 | 0.1382 | 0 |
| 251 | SLD 6 | 0.1 | 8.71 | 49.84 | -0.1917 | 0.1382 | 0 |
| 251 | SLD 7 | 0.04 | -5.09 | 38.76 | 0.4326 | 0.0684 | 0 |
| 251 | SLD 8 | 0.04 | -5.09 | 38.76 | 0.4326 | 0.0684 | 0 |
| 251 | SLD 9 | -0.05 | 8.33 | 50.5 | -0.1748 | -0.0742 | 0 |
| 251 | SLD 10 | -0.05 | 8.33 | 50.5 | -0.1748 | -0.0742 | 0 |

| Nodo | Cont. | Reazione a traslazione | | | Reazione a rotazione | | |
|---|---|---|---|---|---|---|---|
| Ind. | N.br. | x | y | z | x | y | z |
| 251 | SLD 11 | -0.11 | -5.47 | 39.42 | 0.4496 | -0.144 | 0 |
| 251 | SLD 12 | -0.11 | -5.47 | 39.42 | 0.4496 | -0.144 | 0 |
| 251 | SLD 13 | -0.25 | 3.05 | 47.39 | 0.0634 | -0.3464 | 0.0001 |
| 251 | SLD 14 | -0.25 | 3.05 | 47.39 | 0.0634 | -0.3464 | 0.0001 |
| 251 | SLD 15 | -0.26 | -1.09 | 44.07 | 0.2508 | -0.3673 | 0.0001 |
| 251 | SLD 16 | -0.26 | -1.09 | 44.07 | 0.2508 | -0.3673 | 0.0001 |
| 251 | SLV 1 | 0.74 | 8 | 46.04 | -0.1593 | 1.1078 | -0.0001 |
| 251 | SLV 2 | 0.74 | 8 | 46.04 | -0.1593 | 1.1078 | -0.0001 |
| 251 | SLV 3 | 0.69 | -1.75 | 38.01 | 0.2831 | 1.0481 | -0.0001 |
| 251 | SLV 4 | 0.69 | -1.75 | 38.01 | 0.2831 | 1.0481 | -0.0001 |
| 251 | SLV 5 | 0.29 | 18.32 | 57.23 | -0.6286 | 0.4207 | 0 |
| 251 | SLV 6 | 0.29 | 18.32 | 57.23 | -0.6286 | 0.4207 | 0 |
| 251 | SLV 7 | 0.13 | -14.18 | 30.47 | 0.8461 | 0.222 | -0.0001 |
| 251 | SLV 8 | 0.13 | -14.18 | 30.47 | 0.8461 | 0.222 | -0.0001 |
| 251 | SLV 9 | -0.14 | 17.41 | 58.79 | -0.5883 | -0.2278 | 0.0001 |
| 251 | SLV 10 | -0.14 | 17.41 | 58.79 | -0.5883 | -0.2278 | 0.0001 |
| 251 | SLV 11 | -0.3 | -15.08 | 32.03 | 0.8864 | -0.4266 | 0 |
| 251 | SLV 12 | -0.3 | -15.08 | 32.03 | 0.8864 | -0.4266 | 0 |
| 251 | SLV 13 | -0.69 | 4.98 | 51.25 | -0.0253 | -1.054 | 0.0001 |
| 251 | SLV 14 | -0.69 | 4.98 | 51.25 | -0.0253 | -1.054 | 0.0001 |
| 251 | SLV 15 | -0.74 | -4.77 | 43.22 | 0.4171 | -1.1136 | 0.0001 |
| 251 | SLV 16 | -0.74 | -4.77 | 43.22 | 0.4171 | -1.1136 | 0.0001 |
| 252 | SLU 1 | -0.24 | -3.11 | 50.57 | 0.2356 | -0.1748 | 0.0011 |
| 252 | SLU 2 | -0.23 | -2.27 | 48.93 | 0.1889 | -0.1579 | 0.001 |
| 252 | SLU 3 | -0.25 | -3.17 | 51.77 | 0.2393 | -0.1796 | 0.0011 |
| 252 | SLU 4 | -0.24 | -2.67 | 50.79 | 0.2113 | -0.1695 | 0.0011 |
| 252 | SLU 5 | -0.23 | -2.27 | 49.61 | 0.1881 | -0.1607 | 0.001 |
| 252 | SLU 6 | -0.25 | -3.17 | 52.45 | 0.2385 | -0.1824 | 0.0011 |
| 252 | SLU 7 | -0.24 | -2.67 | 51.47 | 0.2105 | -0.1723 | 0.0011 |
| 252 | SLU 8 | -0.25 | -3.1 | 51.93 | 0.234 | -0.1804 | 0.0011 |
| 252 | SLU 9 | -0.24 | -2.6 | 50.95 | 0.206 | -0.1702 | 0.0011 |
| 252 | SLU 10 | -0.26 | -2.76 | 54.44 | 0.2232 | -0.1803 | 0.0011 |
| 252 | SLU 11 | -0.28 | -3.66 | 57.28 | 0.2735 | -0.202 | 0.0012 |
| 252 | SLU 12 | -0.27 | -3.16 | 56.3 | 0.2455 | -0.1919 | 0.0012 |
| 252 | SLU 13 | -0.26 | -2.76 | 55.12 | 0.2224 | -0.1831 | 0.0011 |
| 252 | SLU 14 | -0.29 | -3.66 | 57.96 | 0.2728 | -0.2048 | 0.0012 |
| 252 | SLU 15 | -0.28 | -3.16 | 56.97 | 0.2447 | -0.1947 | 0.0012 |
| 252 | SLU 16 | -0.28 | -3.59 | 57.44 | 0.2683 | -0.2028 | 0.0012 |
| 252 | SLU 17 | -0.27 | -3.09 | 56.45 | 0.2403 | -0.1927 | 0.0012 |
| 252 | SLU 18 | -0.29 | -3.81 | 58.44 | 0.2845 | -0.2068 | 0.0013 |
| 252 | SLU 19 | -0.28 | -3.31 | 57.45 | 0.2565 | -0.1967 | 0.0012 |
| 252 | SLU 20 | -0.29 | -3.8 | 59.12 | 0.2837 | -0.2096 | 0.0013 |
| 252 | SLU 21 | -0.28 | -3.3 | 58.13 | 0.2557 | -0.1995 | 0.0012 |
| 252 | SLU 22 | -0.27 | -3.56 | 56 | 0.267 | -0.1967 | 0.0012 |
| 252 | SLU 23 | -0.26 | -2.73 | 54.35 | 0.2203 | -0.1799 | 0.0011 |
| 252 | SLU 24 | -0.28 | -3.63 | 57.2 | 0.2706 | -0.2016 | 0.0012 |
| 252 | SLU 25 | -0.27 | -3.12 | 56.21 | 0.2426 | -0.1914 | 0.0012 |
| 252 | SLU 26 | -0.26 | -2.72 | 55.03 | 0.2195 | -0.1827 | 0.0011 |
| 252 | SLU 27 | -0.28 | -3.62 | 57.88 | 0.2699 | -0.2044 | 0.0012 |
| 252 | SLU 28 | -0.28 | -3.12 | 56.89 | 0.2418 | -0.1942 | 0.0012 |
| 252 | SLU 29 | -0.28 | -3.55 | 57.35 | 0.2654 | -0.2023 | 0.0012 |
| 252 | SLU 30 | -0.27 | -3.05 | 56.37 | 0.2374 | -0.1922 | 0.0012 |
| 252 | SLU 31 | -0.29 | -3.22 | 59.86 | 0.2545 | -0.2023 | 0.0013 |
| 252 | SLU 32 | -0.31 | -4.11 | 62.7 | 0.3049 | -0.224 | 0.0014 |
| 252 | SLU 33 | -0.3 | -3.61 | 61.72 | 0.2769 | -0.2139 | 0.0013 |
| 252 | SLU 34 | -0.29 | -3.21 | 60.54 | 0.2537 | -0.2051 | 0.0013 |
| 252 | SLU 35 | -0.32 | -4.11 | 63.38 | 0.3041 | -0.2268 | 0.0014 |
| 252 | SLU 36 | -0.31 | -3.61 | 62.4 | 0.2761 | -0.2167 | 0.0013 |
| 252 | SLU 37 | -0.31 | -4.04 | 62.86 | 0.2996 | -0.2248 | 0.0014 |
| 252 | SLU 38 | -0.3 | -3.54 | 61.87 | 0.2716 | -0.2146 | 0.0013 |
| 252 | SLU 39 | -0.32 | -4.26 | 63.86 | 0.3159 | -0.2288 | 0.0014 |
| 252 | SLU 40 | -0.31 | -3.76 | 62.88 | 0.2879 | -0.2187 | 0.0013 |
| 252 | SLU 41 | -0.32 | -4.26 | 64.54 | 0.3151 | -0.2316 | 0.0014 |
| 252 | SLU 42 | -0.31 | -3.76 | 63.55 | 0.2871 | -0.2215 | 0.0014 |
| 252 | SLU 43 | -0.31 | -3.88 | 63.89 | 0.2955 | -0.2197 | 0.0013 |
| 252 | SLU 44 | -0.29 | -3.05 | 62.24 | 0.2489 | -0.2028 | 0.0013 |
| 252 | SLU 45 | -0.31 | -3.95 | 65.09 | 0.2992 | -0.2245 | 0.0014 |
| 252 | SLU 46 | -0.3 | -3.45 | 64.1 | 0.2712 | -0.2144 | 0.0013 |
| 252 | SLU 47 | -0.29 | -3.04 | 62.92 | 0.2481 | -0.2056 | 0.0013 |
| 252 | SLU 48 | -0.32 | -3.94 | 65.77 | 0.2984 | -0.2273 | 0.0014 |
| 252 | SLU 49 | -0.31 | -3.44 | 64.78 | 0.2704 | -0.2172 | 0.0013 |
| 252 | SLU 50 | -0.31 | -3.87 | 65.24 | 0.294 | -0.2253 | 0.0014 |
| 252 | SLU 51 | -0.3 | -3.37 | 64.26 | 0.266 | -0.2151 | 0.0013 |
| 252 | SLU 52 | -0.32 | -3.54 | 67.75 | 0.2831 | -0.2252 | 0.0014 |
| 252 | SLU 53 | -0.34 | -4.44 | 70.59 | 0.3335 | -0.2469 | 0.0015 |
| 252 | SLU 54 | -0.33 | -3.94 | 69.61 | 0.3055 | -0.2368 | 0.0015 |
| 252 | SLU 55 | -0.33 | -3.53 | 68.43 | 0.2823 | -0.228 | 0.0014 |
| 252 | SLU 56 | -0.35 | -4.43 | 71.27 | 0.3327 | -0.2497 | 0.0015 |
| 252 | SLU 57 | -0.34 | -3.93 | 70.29 | 0.3047 | -0.2396 | 0.0015 |
| 252 | SLU 58 | -0.35 | -4.36 | 70.75 | 0.3282 | -0.2477 | 0.0015 |
| 252 | SLU 59 | -0.34 | -3.86 | 69.76 | 0.3002 | -0.2376 | 0.0015 |
| 252 | SLU 60 | -0.35 | -4.58 | 71.75 | 0.3445 | -0.2517 | 0.0015 |
| 252 | SLU 61 | -0.34 | -4.08 | 70.77 | 0.3165 | -0.2416 | 0.0015 |
| 252 | SLU 62 | -0.35 | -4.58 | 72.43 | 0.3437 | -0.2545 | 0.0015 |
| 252 | SLU 63 | -0.35 | -4.08 | 71.45 | 0.3157 | -0.2444 | 0.0015 |
| 252 | SLU 64 | -0.34 | -4.34 | 69.31 | 0.3269 | -0.2416 | 0.0015 |
| 252 | SLU 65 | -0.32 | -3.5 | 67.67 | 0.2802 | -0.2248 | 0.0014 |
| 252 | SLU 66 | -0.34 | -4.4 | 70.51 | 0.3306 | -0.2465 | 0.0015 |

| Nodo | Cont. | Reazione a traslazione | | | Reazione a rotazione | | |
|---|---|---|---|---|---|---|---|
| Ind. | N.br. | x | y | z | x | y | z |
| 252 | SLU 67 | -0.33 | -3.9 | 69.52 | 0.3026 | -0.2363 | 0.0015 |
| 252 | SLU 68 | -0.32 | -3.5 | 68.34 | 0.2794 | -0.2276 | 0.0014 |
| 252 | SLU 69 | -0.35 | -4.4 | 71.19 | 0.3298 | -0.2493 | 0.0015 |
| 252 | SLU 70 | -0.34 | -3.9 | 70.2 | 0.3018 | -0.2391 | 0.0015 |
| 252 | SLU 71 | -0.34 | -4.33 | 70.67 | 0.3253 | -0.2472 | 0.0015 |
| 252 | SLU 72 | -0.34 | -3.83 | 69.68 | 0.2973 | -0.2371 | 0.0015 |
| 252 | SLU 73 | -0.35 | -3.99 | 73.17 | 0.3145 | -0.2472 | 0.0015 |
| 252 | SLU 74 | -0.38 | -4.89 | 76.02 | 0.3648 | -0.2689 | 0.0016 |
| 252 | SLU 75 | -0.37 | -4.39 | 75.03 | 0.3368 | -0.2588 | 0.0016 |
| 252 | SLU 76 | -0.36 | -3.99 | 73.85 | 0.3137 | -0.25 | 0.0016 |
| 252 | SLU 77 | -0.38 | -4.89 | 76.69 | 0.364 | -0.2717 | 0.0017 |
| 252 | SLU 78 | -0.37 | -4.39 | 75.71 | 0.336 | -0.2616 | 0.0016 |
| 252 | SLU 79 | -0.38 | -4.82 | 76.17 | 0.3596 | -0.2697 | 0.0016 |
| 252 | SLU 80 | -0.37 | -4.32 | 75.19 | 0.3316 | -0.2595 | 0.0016 |
| 252 | SLU 81 | -0.38 | -5.04 | 77.17 | 0.3758 | -0.2737 | 0.0017 |
| 252 | SLU 82 | -0.37 | -4.54 | 76.19 | 0.3478 | -0.2636 | 0.0016 |
| 252 | SLU 83 | -0.39 | -5.03 | 77.85 | 0.375 | -0.2765 | 0.0017 |
| 252 | SLU 84 | -0.38 | -4.53 | 76.87 | 0.347 | -0.2664 | 0.0016 |
| 252 | SLE RA 1 | -0.25 | -3.24 | 52.12 | 0.2446 | -0.1811 | 0.0011 |
| 252 | SLE RA 2 | -0.24 | -2.68 | 51.03 | 0.2134 | -0.1698 | 0.0011 |
| 252 | SLE RA 3 | -0.26 | -3.28 | 52.92 | 0.247 | -0.1843 | 0.0011 |
| 252 | SLE RA 4 | -0.25 | -2.95 | 52.27 | 0.2283 | -0.1775 | 0.0011 |
| 252 | SLE RA 5 | -0.24 | -2.68 | 51.48 | 0.2129 | -0.1717 | 0.0011 |
| 252 | SLE RA 6 | -0.26 | -3.28 | 53.38 | 0.2465 | -0.1861 | 0.0011 |
| 252 | SLE RA 7 | -0.25 | -2.94 | 52.72 | 0.2278 | -0.1794 | 0.0011 |
| 252 | SLE RA 8 | -0.26 | -3.23 | 53.03 | 0.2435 | -0.1848 | 0.0011 |
| 252 | SLE RA 9 | -0.25 | -2.9 | 52.37 | 0.2248 | -0.178 | 0.0011 |
| 252 | SLE RA 10 | -0.26 | -3.01 | 54.7 | 0.2363 | -0.1848 | 0.0011 |
| 252 | SLE RA 11 | -0.28 | -3.61 | 56.59 | 0.2699 | -0.1992 | 0.0012 |
| 252 | SLE RA 12 | -0.27 | -3.27 | 55.94 | 0.2512 | -0.1925 | 0.0012 |
| 252 | SLE RA 13 | -0.27 | -3 | 55.15 | 0.2357 | -0.1866 | 0.0012 |
| 252 | SLE RA 14 | -0.28 | -3.6 | 57.05 | 0.2693 | -0.2011 | 0.0012 |
| 252 | SLE RA 15 | -0.27 | -3.27 | 56.39 | 0.2507 | -0.1943 | 0.0012 |
| 252 | SLE RA 16 | -0.28 | -3.56 | 56.7 | 0.2663 | -0.1997 | 0.0012 |
| 252 | SLE RA 17 | -0.27 | -3.22 | 56.04 | 0.2477 | -0.193 | 0.0012 |
| 252 | SLE RA 18 | -0.28 | -3.7 | 57.37 | 0.2772 | -0.2024 | 0.0012 |
| 252 | SLE RA 19 | -0.28 | -3.37 | 56.71 | 0.2585 | -0.1957 | 0.0012 |
| 252 | SLE RA 20 | -0.28 | -3.7 | 57.82 | 0.2767 | -0.2043 | 0.0012 |
| 252 | SLE RA 21 | -0.28 | -3.37 | 57.16 | 0.258 | -0.1975 | 0.0012 |
| 252 | SLE FR 1 | -0.25 | -3.24 | 52.12 | 0.2446 | -0.1811 | 0.0011 |
| 252 | SLE FR 2 | -0.25 | -3.13 | 51.9 | 0.2383 | -0.1788 | 0.0011 |
| 252 | SLE FR 3 | -0.25 | -3.24 | 52.3 | 0.2444 | -0.1818 | 0.0011 |
| 252 | SLE FR 4 | -0.26 | -3.27 | 53.48 | 0.2481 | -0.1852 | 0.0011 |
| 252 | SLE FR 5 | -0.26 | -3.38 | 53.88 | 0.2541 | -0.1882 | 0.0011 |
| 252 | SLE FR 6 | -0.27 | -3.47 | 54.74 | 0.2609 | -0.1917 | 0.0012 |
| 252 | SLE QP 1 | -0.25 | -3.24 | 52.12 | 0.2446 | -0.1811 | 0.0011 |
| 252 | SLE QP 2 | -0.26 | -3.38 | 53.7 | 0.2543 | -0.1875 | 0.0011 |
| 252 | SLD 1 | -0.53 | -2.76 | 64.9 | 0.2459 | 0.1342 | 0.0022 |
| 252 | SLD 2 | -0.53 | -2.76 | 64.9 | 0.2459 | 0.1342 | 0.0022 |
| 252 | SLD 3 | -0.63 | -7.46 | 69.16 | 0.4582 | 0.0424 | 0.0027 |
| 252 | SLD 4 | -0.63 | -7.46 | 69.16 | 0.4582 | 0.0424 | 0.0027 |
| 252 | SLD 5 | -0.18 | 3.95 | 50.6 | -0.0701 | 0.0483 | 0.0008 |
| 252 | SLD 6 | -0.18 | 3.95 | 50.6 | -0.0701 | 0.0483 | 0.0008 |
| 252 | SLD 7 | -0.53 | -11.74 | 64.79 | 0.6375 | -0.2578 | 0.0023 |
| 252 | SLD 8 | -0.53 | -11.74 | 64.79 | 0.6375 | -0.2578 | 0.0023 |
| 252 | SLD 9 | 0.01 | 4.99 | 42.6 | -0.1288 | -0.1171 | 0 |
| 252 | SLD 10 | 0.01 | 4.99 | 42.6 | -0.1288 | -0.1171 | 0 |
| 252 | SLD 11 | -0.34 | -10.7 | 56.79 | 0.5788 | -0.4233 | 0.0015 |
| 252 | SLD 12 | -0.34 | -10.7 | 56.79 | 0.5788 | -0.4233 | 0.0015 |
| 252 | SLD 13 | 0.11 | 0.71 | 38.24 | 0.0505 | -0.4173 | -0.0004 |
| 252 | SLD 14 | 0.11 | 0.71 | 38.24 | 0.0505 | -0.4173 | -0.0004 |
| 252 | SLD 15 | 0.01 | -4 | 42.49 | 0.2628 | -0.5091 | 0 |
| 252 | SLD 16 | 0.01 | -4 | 42.49 | 0.2628 | -0.5091 | 0 |
| 252 | SLV 1 | -0.89 | -2.02 | 79.84 | 0.2376 | 0.586 | 0.0037 |
| 252 | SLV 2 | -0.89 | -2.02 | 79.84 | 0.2376 | 0.586 | 0.0037 |
| 252 | SLV 3 | -1.15 | -12.93 | 89.95 | 0.7303 | 0.3577 | 0.0048 |
| 252 | SLV 4 | -1.15 | -12.93 | 89.95 | 0.7303 | 0.3577 | 0.0048 |
| 252 | SLV 5 | -0.06 | 13.57 | 46.19 | -0.4979 | 0.3909 | 0.0002 |
| 252 | SLV 6 | -0.06 | 13.57 | 46.19 | -0.4979 | 0.3909 | 0.0002 |
| 252 | SLV 7 | -0.92 | -22.79 | 79.92 | 1.1443 | -0.3702 | 0.0039 |
| 252 | SLV 8 | -0.92 | -22.79 | 79.92 | 1.1443 | -0.3702 | 0.0039 |
| 252 | SLV 9 | 0.4 | 16.03 | 27.47 | -0.6356 | -0.0047 | -0.0016 |
| 252 | SLV 10 | 0.4 | 16.03 | 27.47 | -0.6356 | -0.0047 | -0.0016 |
| 252 | SLV 11 | -0.46 | -20.33 | 61.2 | 1.0066 | -0.7658 | 0.0021 |
| 252 | SLV 12 | -0.46 | -20.33 | 61.2 | 1.0066 | -0.7658 | 0.0021 |
| 252 | SLV 13 | 0.63 | 6.17 | 17.44 | -0.2216 | -0.7326 | -0.0025 |
| 252 | SLV 14 | 0.63 | 6.17 | 17.44 | -0.2216 | -0.7326 | -0.0025 |
| 252 | SLV 15 | 0.37 | -4.74 | 27.55 | 0.2711 | -0.9609 | -0.0014 |
| 252 | SLV 16 | 0.37 | -4.74 | 27.55 | 0.2711 | -0.9609 | -0.0014 |
| 253 | SLU 1 | 0.02 | -4.46 | 53.53 | 0.181 | 0.0199 | 0 |
| 253 | SLU 2 | 0.01 | -3.89 | 51.47 | 0.1559 | 0.0072 | 0 |
| 253 | SLU 3 | 0.02 | -4.62 | 54.62 | 0.1873 | 0.021 | 0 |
| 253 | SLU 4 | 0.02 | -4.28 | 53.39 | 0.1722 | 0.0134 | 0 |
| 253 | SLU 5 | 0.02 | -3.97 | 51.89 | 0.1591 | 0.0081 | 0 |
| 253 | SLU 6 | 0.02 | -4.7 | 55.03 | 0.1905 | 0.022 | 0 |
| 253 | SLU 7 | 0.02 | -4.35 | 53.8 | 0.1754 | 0.0143 | 0 |
| 253 | SLU 8 | 0.02 | -4.62 | 54.36 | 0.1874 | 0.0218 | 0 |
| 253 | SLU 9 | 0.02 | -4.28 | 53.13 | 0.1723 | 0.0142 | 0 |

| Nodo | Cont. | Reazione a traslazione | | | Reazione a rotazione | | |
|---|---|---|---|---|---|---|---|
| Ind. | N.br. | x | y | z | x | y | z |
| 253 | SLU 10 | 0.02 | -4.51 | 57.69 | 0.1809 | 0.0101 | 0 |
| 253 | SLU 11 | 0.03 | -5.24 | 60.83 | 0.2123 | 0.0239 | 0 |
| 253 | SLU 12 | 0.02 | -4.89 | 59.6 | 0.1972 | 0.0163 | 0 |
| 253 | SLU 13 | 0.02 | -4.59 | 58.1 | 0.1841 | 0.0111 | 0 |
| 253 | SLU 14 | 0.03 | -5.31 | 61.25 | 0.2155 | 0.0249 | 0 |
| 253 | SLU 15 | 0.02 | -4.97 | 60.01 | 0.2004 | 0.0173 | 0 |
| 253 | SLU 16 | 0.03 | -5.24 | 60.57 | 0.2124 | 0.0248 | 0 |
| 253 | SLU 17 | 0.02 | -4.9 | 59.34 | 0.1973 | 0.0171 | 0 |
| 253 | SLU 18 | 0.03 | -5.34 | 62.4 | 0.2167 | 0.0241 | 0 |
| 253 | SLU 19 | 0.02 | -5 | 61.17 | 0.2016 | 0.0164 | 0 |
| 253 | SLU 20 | 0.03 | -5.42 | 62.82 | 0.2199 | 0.025 | 0 |
| 253 | SLU 21 | 0.02 | -5.08 | 61.59 | 0.2048 | 0.0174 | 0 |
| 253 | SLU 22 | 0.03 | -5.1 | 59.44 | 0.2068 | 0.023 | 0 |
| 253 | SLU 23 | 0.02 | -4.53 | 57.38 | 0.1817 | 0.0103 | 0 |
| 253 | SLU 24 | 0.03 | -5.26 | 60.53 | 0.2131 | 0.0241 | 0 |
| 253 | SLU 25 | 0.02 | -4.92 | 59.3 | 0.198 | 0.0165 | 0 |
| 253 | SLU 26 | 0.02 | -4.61 | 57.8 | 0.1849 | 0.0113 | 0 |
| 253 | SLU 27 | 0.03 | -5.34 | 60.94 | 0.2163 | 0.0251 | 0 |
| 253 | SLU 28 | 0.02 | -4.99 | 59.71 | 0.2012 | 0.0175 | 0 |
| 253 | SLU 29 | 0.03 | -5.26 | 60.27 | 0.2132 | 0.025 | 0 |
| 253 | SLU 30 | 0.02 | -4.92 | 59.04 | 0.1981 | 0.0173 | 0 |
| 253 | SLU 31 | 0.02 | -5.15 | 63.6 | 0.2067 | 0.0132 | 0 |
| 253 | SLU 32 | 0.03 | -5.87 | 66.74 | 0.2381 | 0.0271 | 0 |
| 253 | SLU 33 | 0.03 | -5.53 | 65.51 | 0.223 | 0.0194 | 0 |
| 253 | SLU 34 | 0.02 | -5.23 | 64.01 | 0.2099 | 0.0142 | 0 |
| 253 | SLU 35 | 0.03 | -5.95 | 67.16 | 0.2413 | 0.028 | 0 |
| 253 | SLU 36 | 0.03 | -5.61 | 65.92 | 0.2262 | 0.0204 | 0 |
| 253 | SLU 37 | 0.03 | -5.88 | 66.48 | 0.2382 | 0.0279 | 0 |
| 253 | SLU 38 | 0.03 | -5.54 | 65.25 | 0.2231 | 0.0203 | 0 |
| 253 | SLU 39 | 0.03 | -5.98 | 68.31 | 0.2425 | 0.0272 | 0 |
| 253 | SLU 40 | 0.03 | -5.64 | 67.08 | 0.2275 | 0.0196 | 0 |
| 253 | SLU 41 | 0.03 | -6.06 | 68.73 | 0.2457 | 0.0282 | 0 |
| 253 | SLU 42 | 0.03 | -5.72 | 67.5 | 0.2307 | 0.0205 | 0 |
| 253 | SLU 43 | 0.03 | -5.58 | 67.56 | 0.2265 | 0.0248 | 0 |
| 253 | SLU 44 | 0.02 | -5.01 | 65.5 | 0.2013 | 0.0121 | 0 |
| 253 | SLU 45 | 0.03 | -5.74 | 68.65 | 0.2327 | 0.0259 | 0 |
| 253 | SLU 46 | 0.02 | -5.39 | 67.42 | 0.2177 | 0.0183 | 0 |
| 253 | SLU 47 | 0.02 | -5.09 | 65.92 | 0.2045 | 0.013 | 0 |
| 253 | SLU 48 | 0.03 | -5.82 | 69.07 | 0.2359 | 0.0269 | 0 |
| 253 | SLU 49 | 0.02 | -5.47 | 67.83 | 0.2209 | 0.0192 | 0 |
| 253 | SLU 50 | 0.03 | -5.74 | 68.39 | 0.2329 | 0.0267 | 0 |
| 253 | SLU 51 | 0.02 | -5.4 | 67.16 | 0.2178 | 0.0191 | 0 |
| 253 | SLU 52 | 0.02 | -5.63 | 71.72 | 0.2263 | 0.015 | 0 |
| 253 | SLU 53 | 0.03 | -6.35 | 74.86 | 0.2577 | 0.0288 | 0 |
| 253 | SLU 54 | 0.03 | -6.01 | 73.63 | 0.2427 | 0.0212 | 0 |
| 253 | SLU 55 | 0.02 | -5.71 | 72.13 | 0.2295 | 0.016 | 0 |
| 253 | SLU 56 | 0.03 | -6.43 | 75.28 | 0.2609 | 0.0298 | 0 |
| 253 | SLU 57 | 0.03 | -6.09 | 74.05 | 0.2459 | 0.0222 | 0 |
| 253 | SLU 58 | 0.03 | -6.36 | 74.6 | 0.2578 | 0.0297 | 0 |
| 253 | SLU 59 | 0.03 | -6.01 | 73.37 | 0.2428 | 0.022 | 0 |
| 253 | SLU 60 | 0.03 | -6.46 | 76.44 | 0.2622 | 0.029 | 0 |
| 253 | SLU 61 | 0.03 | -6.12 | 75.2 | 0.2471 | 0.0213 | 0 |
| 253 | SLU 62 | 0.03 | -6.54 | 76.85 | 0.2654 | 0.0299 | 0 |
| 253 | SLU 63 | 0.03 | -6.2 | 75.62 | 0.2503 | 0.0223 | 0 |
| 253 | SLU 64 | 0.03 | -6.22 | 73.47 | 0.2523 | 0.0279 | 0 |
| 253 | SLU 65 | 0.02 | -5.65 | 71.41 | 0.2271 | 0.0152 | 0 |
| 253 | SLU 66 | 0.03 | -6.38 | 74.56 | 0.2586 | 0.029 | 0 |
| 253 | SLU 67 | 0.03 | -6.03 | 73.33 | 0.2435 | 0.0214 | 0 |
| 253 | SLU 68 | 0.02 | -5.73 | 71.83 | 0.2303 | 0.0162 | 0 |
| 253 | SLU 69 | 0.03 | -6.46 | 74.98 | 0.2618 | 0.03 | 0 |
| 253 | SLU 70 | 0.03 | -6.11 | 73.74 | 0.2467 | 0.0224 | 0 |
| 253 | SLU 71 | 0.03 | -6.38 | 74.3 | 0.2587 | 0.0299 | 0 |
| 253 | SLU 72 | 0.03 | -6.04 | 73.07 | 0.2436 | 0.0222 | 0 |
| 253 | SLU 73 | 0.03 | -6.27 | 77.63 | 0.2521 | 0.0181 | 0 |
| 253 | SLU 74 | 0.04 | -6.99 | 80.77 | 0.2836 | 0.032 | 0 |
| 253 | SLU 75 | 0.03 | -6.65 | 79.54 | 0.2685 | 0.0243 | 0 |
| 253 | SLU 76 | 0.03 | -6.35 | 78.04 | 0.2553 | 0.0191 | 0 |
| 253 | SLU 77 | 0.04 | -7.07 | 81.19 | 0.2868 | 0.0329 | 0 |
| 253 | SLU 78 | 0.03 | -6.73 | 79.96 | 0.2717 | 0.0253 | 0 |
| 253 | SLU 79 | 0.04 | -7 | 80.51 | 0.2837 | 0.0328 | 0 |
| 253 | SLU 80 | 0.03 | -6.65 | 79.28 | 0.2686 | 0.0251 | 0 |
| 253 | SLU 81 | 0.04 | -7.1 | 82.35 | 0.288 | 0.0321 | 0 |
| 253 | SLU 82 | 0.03 | -6.76 | 81.11 | 0.2729 | 0.0245 | 0 |
| 253 | SLU 83 | 0.04 | -7.18 | 82.76 | 0.2912 | 0.0331 | 0 |
| 253 | SLU 84 | 0.03 | -6.84 | 81.53 | 0.2761 | 0.0254 | 0 |
| 253 | SLE RA 1 | 0.02 | -4.64 | 55.22 | 0.1884 | 0.0208 | 0 |
| 253 | SLE RA 2 | 0.02 | -4.26 | 53.85 | 0.1716 | 0.0123 | 0 |
| 253 | SLE RA 3 | 0.02 | -4.75 | 55.94 | 0.1926 | 0.0215 | 0 |
| 253 | SLE RA 4 | 0.02 | -4.52 | 55.12 | 0.1825 | 0.0164 | 0 |
| 253 | SLE RA 5 | 0.02 | -4.32 | 54.12 | 0.1738 | 0.013 | 0 |
| 253 | SLE RA 6 | 0.02 | -4.8 | 56.22 | 0.1947 | 0.0222 | 0 |
| 253 | SLE RA 7 | 0.02 | -4.57 | 55.4 | 0.1847 | 0.0171 | 0 |
| 253 | SLE RA 8 | 0.02 | -4.75 | 55.77 | 0.1926 | 0.0221 | 0 |
| 253 | SLE RA 9 | 0.02 | -4.52 | 54.95 | 0.1826 | 0.017 | 0 |
| 253 | SLE RA 10 | 0.02 | -4.68 | 57.99 | 0.1883 | 0.0142 | 0 |
| 253 | SLE RA 11 | 0.03 | -5.16 | 60.09 | 0.2092 | 0.0235 | 0 |
| 253 | SLE RA 12 | 0.02 | -4.93 | 59.26 | 0.1992 | 0.0184 | 0 |
| 253 | SLE RA 13 | 0.02 | -4.73 | 58.27 | 0.1904 | 0.0149 | 0 |

| Nodo | Cont. | Reazione a traslazione | | | Reazione a rotazione | | |
|---|---|---|---|---|---|---|---|
| Ind. | N.br. | x | y | z | x | y | z |
| 253 | SLE RA 14 | 0.03 | -5.21 | 60.36 | 0.2114 | 0.0241 | 0 |
| 253 | SLE RA 15 | 0.02 | -4.98 | 59.54 | 0.2013 | 0.019 | 0 |
| 253 | SLE RA 16 | 0.03 | -5.16 | 59.91 | 0.2093 | 0.024 | 0 |
| 253 | SLE RA 17 | 0.02 | -4.93 | 59.09 | 0.1993 | 0.0189 | 0 |
| 253 | SLE RA 18 | 0.03 | -5.23 | 61.13 | 0.2122 | 0.0236 | 0 |
| 253 | SLE RA 19 | 0.02 | -5.01 | 60.31 | 0.2021 | 0.0185 | 0 |
| 253 | SLE RA 20 | 0.03 | -5.29 | 61.41 | 0.2143 | 0.0242 | 0 |
| 253 | SLE RA 21 | 0.02 | -5.06 | 60.59 | 0.2043 | 0.0191 | 0 |
| 253 | SLE FR 1 | 0.02 | -4.64 | 55.22 | 0.1884 | 0.0208 | 0 |
| 253 | SLE FR 2 | 0.02 | -4.57 | 54.94 | 0.185 | 0.0191 | 0 |
| 253 | SLE FR 3 | 0.02 | -4.67 | 55.33 | 0.1892 | 0.021 | 0 |
| 253 | SLE FR 4 | 0.02 | -4.75 | 56.72 | 0.1922 | 0.0199 | 0 |
| 253 | SLE FR 5 | 0.02 | -4.84 | 57.1 | 0.1964 | 0.0219 | 0 |
| 253 | SLE FR 6 | 0.02 | -4.94 | 58.18 | 0.2003 | 0.0222 | 0 |
| 253 | SLE QP 1 | 0.02 | -4.64 | 55.22 | 0.1884 | 0.0208 | 0 |
| 253 | SLE QP 2 | 0.02 | -4.82 | 56.99 | 0.1955 | 0.0216 | 0 |
| 253 | SLD 1 | 0.34 | -1.3 | 40.13 | 0.0502 | 0.2846 | 0.0001 |
| 253 | SLD 2 | 0.34 | -1.3 | 40.13 | 0.0502 | 0.2846 | 0.0001 |
| 253 | SLD 3 | 0.43 | -5.91 | 45.5 | 0.2423 | 0.3806 | 0.0001 |
| 253 | SLD 4 | 0.43 | -5.91 | 45.5 | 0.2423 | 0.3806 | 0.0001 |
| 253 | SLD 5 | -0.03 | 3.22 | 43.79 | -0.1395 | -0.0451 | 0.0001 |
| 253 | SLD 6 | -0.03 | 3.22 | 43.79 | -0.1395 | -0.0451 | 0.0001 |
| 253 | SLD 7 | 0.29 | -12.13 | 61.68 | 0.501 | 0.2749 | 0 |
| 253 | SLD 8 | 0.29 | -12.13 | 61.68 | 0.501 | 0.2749 | 0 |
| 253 | SLD 9 | -0.25 | 2.49 | 52.3 | -0.11 | -0.2317 | 0 |
| 253 | SLD 10 | -0.25 | 2.49 | 52.3 | -0.11 | -0.2317 | 0 |
| 253 | SLD 11 | 0.08 | -12.86 | 70.19 | 0.5306 | 0.0884 | -0.0001 |
| 253 | SLD 12 | 0.08 | -12.86 | 70.19 | 0.5306 | 0.0884 | -0.0001 |
| 253 | SLD 13 | -0.39 | -3.73 | 68.48 | 0.1487 | -0.3373 | -0.0001 |
| 253 | SLD 14 | -0.39 | -3.73 | 68.48 | 0.1487 | -0.3373 | -0.0001 |
| 253 | SLD 15 | -0.29 | -8.34 | 73.85 | 0.3409 | -0.2413 | -0.0001 |
| 253 | SLD 16 | -0.29 | -8.34 | 73.85 | 0.3409 | -0.2413 | -0.0001 |
| 253 | SLV 1 | 0.76 | 3.38 | 17.48 | -0.1436 | 0.6461 | 0.0002 |
| 253 | SLV 2 | 0.76 | 3.38 | 17.48 | -0.1436 | 0.6461 | 0.0002 |
| 253 | SLV 3 | 1.01 | -7.3 | 30.15 | 0.3021 | 0.8907 | 0.0002 |
| 253 | SLV 4 | 1.01 | -7.3 | 30.15 | 0.3021 | 0.8907 | 0.0002 |
| 253 | SLV 5 | -0.13 | 13.84 | 25.94 | -0.5821 | -0.1621 | 0.0002 |
| 253 | SLV 6 | -0.13 | 13.84 | 25.94 | -0.5821 | -0.1621 | 0.0002 |
| 253 | SLV 7 | 0.69 | -21.76 | 68.14 | 0.9034 | 0.6534 | -0.0001 |
| 253 | SLV 8 | 0.69 | -21.76 | 68.14 | 0.9034 | 0.6534 | -0.0001 |
| 253 | SLV 9 | -0.65 | 12.12 | 45.84 | -0.5124 | -0.6101 | 0.0001 |
| 253 | SLV 10 | -0.65 | 12.12 | 45.84 | -0.5124 | -0.6101 | 0.0001 |
| 253 | SLV 11 | 0.18 | -23.48 | 88.05 | 0.9732 | 0.2053 | -0.0002 |
| 253 | SLV 12 | 0.18 | -23.48 | 88.05 | 0.9732 | 0.2053 | -0.0002 |
| 253 | SLV 13 | -0.96 | -2.34 | 83.84 | 0.089 | -0.8475 | -0.0002 |
| 253 | SLV 14 | -0.96 | -2.34 | 83.84 | 0.089 | -0.8475 | -0.0002 |
| 253 | SLV 15 | -0.71 | -13.02 | 96.5 | 0.5346 | -0.6028 | -0.0003 |
| 253 | SLV 16 | -0.71 | -13.02 | 96.5 | 0.5346 | -0.6028 | -0.0003 |
| 254 | SLU 1 | 0 | 1.9 | 49.35 | -0.0537 | 0.0008 | 0 |
| 254 | SLU 2 | 0 | 2.01 | 48.83 | -0.0573 | 0.0012 | 0 |
| 254 | SLU 3 | 0 | 1.74 | 51.96 | -0.0483 | 0.0009 | 0 |
| 254 | SLU 4 | 0 | 1.81 | 51.64 | -0.0505 | 0.0011 | 0 |
| 254 | SLU 5 | 0 | 1.81 | 51 | -0.0506 | 0.0012 | 0 |
| 254 | SLU 6 | 0 | 1.54 | 54.13 | -0.0416 | 0.0009 | 0 |
| 254 | SLU 7 | 0 | 1.61 | 53.81 | -0.0438 | 0.0012 | 0 |
| 254 | SLU 8 | 0 | 1.5 | 53.69 | -0.0403 | 0.001 | 0 |
| 254 | SLU 9 | 0 | 1.57 | 53.37 | -0.0425 | 0.0012 | 0 |
| 254 | SLU 10 | 0 | 2.21 | 57.41 | -0.0633 | 0.0013 | 0 |
| 254 | SLU 11 | 0 | 1.93 | 60.53 | -0.0544 | 0.001 | 0 |
| 254 | SLU 12 | 0 | 2 | 60.22 | -0.0565 | 0.0012 | 0 |
| 254 | SLU 13 | 0 | 2.01 | 59.58 | -0.0567 | 0.0014 | 0 |
| 254 | SLU 14 | 0 | 1.73 | 62.7 | -0.0477 | 0.0011 | 0 |
| 254 | SLU 15 | 0 | 1.8 | 62.39 | -0.0499 | 0.0013 | 0 |
| 254 | SLU 16 | 0 | 1.69 | 62.27 | -0.0464 | 0.0011 | 0 |
| 254 | SLU 17 | 0 | 1.76 | 61.95 | -0.0486 | 0.0013 | 0 |
| 254 | SLU 18 | 0 | 2.18 | 61.6 | -0.0624 | 0.001 | 0 |
| 254 | SLU 19 | 0 | 2.25 | 61.29 | -0.0645 | 0.0012 | 0 |
| 254 | SLU 20 | 0 | 1.98 | 63.77 | -0.0557 | 0.0011 | 0 |
| 254 | SLU 21 | 0 | 2.05 | 63.46 | -0.0578 | 0.0013 | 0 |
| 254 | SLU 22 | 0 | 1.99 | 57.92 | -0.0563 | 0.001 | 0 |
| 254 | SLU 23 | 0 | 2.11 | 57.39 | -0.0598 | 0.0013 | 0 |
| 254 | SLU 24 | 0 | 1.83 | 60.52 | -0.0509 | 0.001 | 0 |
| 254 | SLU 25 | 0 | 1.91 | 60.21 | -0.053 | 0.0012 | 0 |
| 254 | SLU 26 | 0 | 1.91 | 59.56 | -0.0532 | 0.0014 | 0 |
| 254 | SLU 27 | 0 | 1.63 | 62.69 | -0.0442 | 0.0011 | 0 |
| 254 | SLU 28 | 0 | 1.7 | 62.38 | -0.0464 | 0.0013 | 0 |
| 254 | SLU 29 | 0 | 1.59 | 62.25 | -0.0429 | 0.0011 | 0 |
| 254 | SLU 30 | 0 | 1.66 | 61.94 | -0.0451 | 0.0013 | 0 |
| 254 | SLU 31 | 0 | 2.31 | 65.97 | -0.0659 | 0.0014 | 0 |
| 254 | SLU 32 | 0 | 2.03 | 69.1 | -0.057 | 0.0012 | 0 |
| 254 | SLU 33 | 0 | 2.1 | 68.79 | -0.0591 | 0.0014 | 0 |
| 254 | SLU 34 | 0 | 2.1 | 68.14 | -0.0592 | 0.0015 | 0 |
| 254 | SLU 35 | 0 | 1.83 | 71.27 | -0.0503 | 0.0012 | 0 |
| 254 | SLU 36 | 0 | 1.9 | 70.96 | -0.0524 | 0.0014 | 0 |
| 254 | SLU 37 | 0 | 1.79 | 70.83 | -0.049 | 0.0012 | 0 |
| 254 | SLU 38 | 0 | 1.86 | 70.52 | -0.0511 | 0.0014 | 0 |
| 254 | SLU 39 | 0 | 2.27 | 70.17 | -0.065 | 0.0011 | 0 |
| 254 | SLU 40 | 0 | 2.34 | 69.86 | -0.0671 | 0.0014 | 0 |

| Nodo | Cont. | Reazione a traslazione | | | Reazione a rotazione | | |
|---|---|---|---|---|---|---|---|
| Ind. | N.br. | x | y | z | x | y | z |
| 254 | SLU 41 | 0 | 2.07 | 72.34 | -0.0583 | 0.0012 | 0 |
| 254 | SLU 42 | 0 | 2.14 | 72.03 | -0.0604 | 0.0014 | 0 |
| 254 | SLU 43 | 0 | 2.43 | 61.22 | -0.0689 | 0.001 | 0 |
| 254 | SLU 44 | 0 | 2.55 | 60.69 | -0.0725 | 0.0013 | 0 |
| 254 | SLU 45 | 0 | 2.28 | 63.82 | -0.0636 | 0.0011 | 0 |
| 254 | SLU 46 | 0 | 2.35 | 63.51 | -0.0657 | 0.0013 | 0 |
| 254 | SLU 47 | 0 | 2.35 | 62.86 | -0.0658 | 0.0014 | 0 |
| 254 | SLU 48 | 0 | 2.07 | 65.99 | -0.0569 | 0.0011 | 0 |
| 254 | SLU 49 | 0 | 2.14 | 65.68 | -0.059 | 0.0013 | 0 |
| 254 | SLU 50 | 0 | 2.03 | 65.55 | -0.0556 | 0.0011 | 0 |
| 254 | SLU 51 | 0 | 2.1 | 65.24 | -0.0577 | 0.0014 | 0 |
| 254 | SLU 52 | 0 | 2.75 | 69.27 | -0.0786 | 0.0015 | 0 |
| 254 | SLU 53 | 0 | 2.47 | 72.4 | -0.0696 | 0.0012 | 0 |
| 254 | SLU 54 | 0 | 2.54 | 72.09 | -0.0718 | 0.0014 | 0 |
| 254 | SLU 55 | 0 | 2.55 | 71.44 | -0.0719 | 0.0016 | 0 |
| 254 | SLU 56 | 0 | 2.27 | 74.57 | -0.063 | 0.0013 | 0 |
| 254 | SLU 57 | 0 | 2.34 | 74.26 | -0.0651 | 0.0015 | 0 |
| 254 | SLU 58 | 0 | 2.23 | 74.13 | -0.0617 | 0.0013 | 0 |
| 254 | SLU 59 | 0 | 2.3 | 73.82 | -0.0638 | 0.0015 | 0 |
| 254 | SLU 60 | 0 | 2.71 | 73.47 | -0.0776 | 0.0012 | 0 |
| 254 | SLU 61 | 0 | 2.78 | 73.16 | -0.0798 | 0.0014 | 0 |
| 254 | SLU 62 | 0 | 2.51 | 75.64 | -0.0709 | 0.0013 | 0 |
| 254 | SLU 63 | 0 | 2.58 | 75.33 | -0.0731 | 0.0015 | 0 |
| 254 | SLU 64 | 0 | 2.53 | 69.78 | -0.0715 | 0.0011 | 0 |
| 254 | SLU 65 | 0 | 2.65 | 69.26 | -0.0751 | 0.0015 | 0 |
| 254 | SLU 66 | 0 | 2.37 | 72.39 | -0.0661 | 0.0012 | 0 |
| 254 | SLU 67 | 0 | 2.44 | 72.08 | -0.0683 | 0.0014 | 0 |
| 254 | SLU 68 | 0 | 2.45 | 71.43 | -0.0684 | 0.0016 | 0 |
| 254 | SLU 69 | 0 | 2.17 | 74.56 | -0.0594 | 0.0013 | 0 |
| 254 | SLU 70 | 0 | 2.24 | 74.25 | -0.0616 | 0.0015 | 0 |
| 254 | SLU 71 | 0 | 2.13 | 74.12 | -0.0582 | 0.0013 | 0 |
| 254 | SLU 72 | 0 | 2.2 | 73.81 | -0.0603 | 0.0015 | 0 |
| 254 | SLU 73 | 0 | 2.84 | 77.84 | -0.0811 | 0.0016 | 0 |
| 254 | SLU 74 | 0 | 2.57 | 80.97 | -0.0722 | 0.0013 | 0 |
| 254 | SLU 75 | 0 | 2.64 | 80.66 | -0.0743 | 0.0016 | 0 |
| 254 | SLU 76 | 0 | 2.64 | 80.01 | -0.0745 | 0.0017 | 0 |
| 254 | SLU 77 | 0 | 2.37 | 83.14 | -0.0655 | 0.0014 | 0 |
| 254 | SLU 78 | 0 | 2.44 | 82.83 | -0.0677 | 0.0016 | 0 |
| 254 | SLU 79 | 0 | 2.32 | 82.7 | -0.0642 | 0.0014 | 0 |
| 254 | SLU 80 | 0 | 2.39 | 82.39 | -0.0664 | 0.0016 | 0 |
| 254 | SLU 81 | 0 | 2.81 | 82.04 | -0.0802 | 0.0013 | 0 |
| 254 | SLU 82 | 0 | 2.88 | 81.72 | -0.0823 | 0.0015 | 0 |
| 254 | SLU 83 | 0 | 2.61 | 84.21 | -0.0735 | 0.0014 | 0 |
| 254 | SLU 84 | 0 | 2.68 | 83.89 | -0.0756 | 0.0016 | 0 |
| 254 | SLE RA 1 | 0 | 1.92 | 51.8 | -0.0544 | 0.0008 | 0 |
| 254 | SLE RA 2 | 0 | 2 | 51.45 | -0.0568 | 0.0011 | 0 |
| 254 | SLE RA 3 | 0 | 1.82 | 53.53 | -0.0509 | 0.0009 | 0 |
| 254 | SLE RA 4 | 0 | 1.87 | 53.33 | -0.0523 | 0.001 | 0 |
| 254 | SLE RA 5 | 0 | 1.87 | 52.89 | -0.0524 | 0.0011 | 0 |
| 254 | SLE RA 6 | 0 | 1.69 | 54.98 | -0.0464 | 0.0009 | 0 |
| 254 | SLE RA 7 | 0 | 1.73 | 54.77 | -0.0478 | 0.0011 | 0 |
| 254 | SLE RA 8 | 0 | 1.66 | 54.69 | -0.0455 | 0.0009 | 0 |
| 254 | SLE RA 9 | 0 | 1.7 | 54.48 | -0.047 | 0.0011 | 0 |
| 254 | SLE RA 10 | 0 | 2.13 | 57.17 | -0.0609 | 0.0012 | 0 |
| 254 | SLE RA 11 | 0 | 1.95 | 59.25 | -0.0549 | 0.001 | 0 |
| 254 | SLE RA 12 | 0 | 2 | 59.05 | -0.0563 | 0.0011 | 0 |
| 254 | SLE RA 13 | 0 | 2 | 58.61 | -0.0564 | 0.0012 | 0 |
| 254 | SLE RA 14 | 0 | 1.82 | 60.7 | -0.0505 | 0.001 | 0 |
| 254 | SLE RA 15 | 0 | 1.86 | 60.49 | -0.0519 | 0.0012 | 0 |
| 254 | SLE RA 16 | 0 | 1.79 | 60.41 | -0.0496 | 0.001 | 0 |
| 254 | SLE RA 17 | 0 | 1.83 | 60.2 | -0.051 | 0.0012 | 0 |
| 254 | SLE RA 18 | 0 | 2.11 | 59.97 | -0.0602 | 0.001 | 0 |
| 254 | SLE RA 19 | 0 | 2.16 | 59.76 | -0.0617 | 0.0011 | 0 |
| 254 | SLE RA 20 | 0 | 1.98 | 61.41 | -0.0558 | 0.001 | 0 |
| 254 | SLE RA 21 | 0 | 2.02 | 61.2 | -0.0572 | 0.0012 | 0 |
| 254 | SLE FR 1 | 0 | 1.92 | 51.8 | -0.0544 | 0.0008 | 0 |
| 254 | SLE FR 2 | 0 | 1.94 | 51.73 | -0.0549 | 0.0009 | 0 |
| 254 | SLE FR 3 | 0 | 1.87 | 52.37 | -0.0527 | 0.0009 | 0 |
| 254 | SLE FR 4 | 0 | 2 | 54.18 | -0.0567 | 0.0009 | 0 |
| 254 | SLE FR 5 | 0 | 1.93 | 54.83 | -0.0544 | 0.0009 | 0 |
| 254 | SLE FR 6 | 0 | 2.02 | 55.88 | -0.0573 | 0.0009 | 0 |
| 254 | SLE QP 1 | 0 | 1.92 | 51.8 | -0.0544 | 0.0008 | 0 |
| 254 | SLE QP 2 | 0 | 1.98 | 54.25 | -0.0562 | 0.0009 | 0 |
| 254 | SLD 1 | 0.24 | 6.04 | 54.6 | -0.1787 | 0.2087 | -0.0005 |
| 254 | SLD 2 | 0.24 | 6.04 | 54.6 | -0.1787 | 0.2087 | -0.0005 |
| 254 | SLD 3 | 0.19 | 1.68 | 56.61 | -0.0459 | 0.2574 | -0.0006 |
| 254 | SLD 4 | 0.19 | 1.68 | 56.61 | -0.0459 | 0.2574 | -0.0006 |
| 254 | SLD 5 | 0.14 | 9.81 | 51.31 | -0.2944 | -0.0106 | 0 |
| 254 | SLD 6 | 0.14 | 9.81 | 51.31 | -0.2944 | -0.0106 | 0 |
| 254 | SLD 7 | -0.01 | -4.73 | 58 | 0.1484 | 0.1517 | -0.0004 |
| 254 | SLD 8 | -0.01 | -4.73 | 58 | 0.1484 | 0.1517 | -0.0004 |
| 254 | SLD 9 | 0.01 | 8.69 | 50.5 | -0.2608 | -0.1499 | 0.0004 |
| 254 | SLD 10 | 0.01 | 8.69 | 50.5 | -0.2608 | -0.1499 | 0.0004 |
| 254 | SLD 11 | -0.14 | -5.85 | 57.18 | 0.1821 | 0.0124 | 0 |
| 254 | SLD 12 | -0.14 | -5.85 | 57.18 | 0.1821 | 0.0124 | 0 |
| 254 | SLD 13 | -0.19 | 2.29 | 51.89 | -0.0665 | -0.2556 | 0.0006 |
| 254 | SLD 14 | -0.19 | 2.29 | 51.89 | -0.0665 | -0.2556 | 0.0006 |
| 254 | SLD 15 | -0.23 | -2.08 | 53.89 | 0.0664 | -0.2069 | 0.0005 |

| Nodo | Cont. | Reazione a traslazione | | | Reazione a rotazione | | |
|---|---|---|---|---|---|---|---|
| Ind. | N.br. | x | y | z | x | y | z |
| 254 | SLD 16 | -0.23 | -2.08 | 53.89 | 0.0664 | -0.2069 | 0.0005 |
| 254 | SLV 1 | 0.6 | 11.44 | 55.08 | -0.3419 | 0.5307 | -0.0013 |
| 254 | SLV 2 | 0.6 | 11.44 | 55.08 | -0.3419 | 0.5307 | -0.0013 |
| 254 | SLV 3 | 0.49 | 1.28 | 59.88 | -0.0325 | 0.6554 | -0.0016 |
| 254 | SLV 4 | 0.49 | 1.28 | 59.88 | -0.0325 | 0.6554 | -0.0016 |
| 254 | SLV 5 | 0.36 | 20.22 | 47.21 | -0.6112 | -0.0293 | 0.0001 |
| 254 | SLV 6 | 0.36 | 20.22 | 47.21 | -0.6112 | -0.0293 | 0.0001 |
| 254 | SLV 7 | -0.03 | -13.63 | 63.23 | 0.4202 | 0.3864 | -0.0009 |
| 254 | SLV 8 | -0.03 | -13.63 | 63.23 | 0.4202 | 0.3864 | -0.0009 |
| 254 | SLV 9 | 0.04 | 17.6 | 45.27 | -0.5326 | -0.3846 | 0.0009 |
| 254 | SLV 10 | 0.04 | 17.6 | 45.27 | -0.5326 | -0.3846 | 0.0009 |
| 254 | SLV 11 | -0.36 | -16.26 | 61.29 | 0.4988 | 0.0311 | -0.0001 |
| 254 | SLV 12 | -0.36 | -16.26 | 61.29 | 0.4988 | 0.0311 | -0.0001 |
| 254 | SLV 13 | -0.48 | 2.68 | 48.61 | -0.0799 | -0.6536 | 0.0016 |
| 254 | SLV 14 | -0.48 | 2.68 | 48.61 | -0.0799 | -0.6536 | 0.0016 |
| 254 | SLV 15 | -0.6 | -7.48 | 53.42 | 0.2296 | -0.5289 | 0.0013 |
| 254 | SLV 16 | -0.6 | -7.48 | 53.42 | 0.2296 | -0.5289 | 0.0013 |
| 255 | SLU 1 | 0 | -2.13 | 47.66 | 0.0967 | -0.0015 | 0 |
| 255 | SLU 2 | 0 | -2.05 | 47.38 | 0.0932 | -0.0019 | 0 |
| 255 | SLU 3 | 0 | -2.01 | 49.07 | 0.0912 | -0.0014 | 0 |
| 255 | SLU 4 | 0 | -1.96 | 48.9 | 0.0891 | -0.0016 | 0 |
| 255 | SLU 5 | 0 | -1.82 | 48.15 | 0.0824 | -0.0017 | 0 |
| 255 | SLU 6 | 0 | -1.78 | 49.84 | 0.0804 | -0.0012 | 0 |
| 255 | SLU 7 | 0 | -1.73 | 49.67 | 0.0783 | -0.0014 | 0 |
| 255 | SLU 8 | 0 | -1.66 | 49.2 | 0.0752 | -0.0011 | 0 |
| 255 | SLU 9 | 0 | -1.62 | 49.03 | 0.0731 | -0.0013 | 0 |
| 255 | SLU 10 | 0 | -2.7 | 55.68 | 0.1227 | -0.0023 | 0 |
| 255 | SLU 11 | 0 | -2.66 | 57.37 | 0.1208 | -0.0018 | 0 |
| 255 | SLU 12 | 0 | -2.61 | 57.2 | 0.1187 | -0.002 | 0 |
| 255 | SLU 13 | 0 | -2.47 | 56.45 | 0.112 | -0.0021 | 0 |
| 255 | SLU 14 | 0 | -2.43 | 58.14 | 0.11 | -0.0016 | 0 |
| 255 | SLU 15 | 0 | -2.38 | 57.97 | 0.1079 | -0.0018 | 0 |
| 255 | SLU 16 | 0 | -2.31 | 57.51 | 0.1047 | -0.0015 | 0 |
| 255 | SLU 17 | 0 | -2.26 | 57.33 | 0.1026 | -0.0017 | 0 |
| 255 | SLU 18 | 0 | -3.06 | 59.53 | 0.1389 | -0.0021 | 0 |
| 255 | SLU 19 | 0 | -3.01 | 59.35 | 0.1368 | -0.0023 | 0 |
| 255 | SLU 20 | 0 | -2.83 | 60.3 | 0.1282 | -0.0019 | 0 |
| 255 | SLU 21 | 0 | -2.78 | 60.12 | 0.1261 | -0.0021 | 0 |
| 255 | SLU 22 | 0 | -2.57 | 55.39 | 0.1168 | -0.0018 | 0 |
| 255 | SLU 23 | 0 | -2.49 | 55.1 | 0.1133 | -0.0021 | 0 |
| 255 | SLU 24 | 0 | -2.45 | 56.79 | 0.1113 | -0.0017 | 0 |
| 255 | SLU 25 | 0 | -2.41 | 56.62 | 0.1092 | -0.0019 | 0 |
| 255 | SLU 26 | 0 | -2.26 | 55.87 | 0.1025 | -0.0019 | 0 |
| 255 | SLU 27 | 0 | -2.22 | 57.56 | 0.1006 | -0.0014 | 0 |
| 255 | SLU 28 | 0 | -2.17 | 57.39 | 0.0985 | -0.0017 | 0 |
| 255 | SLU 29 | 0 | -2.11 | 56.93 | 0.0953 | -0.0014 | 0 |
| 255 | SLU 30 | 0 | -2.06 | 56.75 | 0.0932 | -0.0016 | 0 |
| 255 | SLU 31 | 0 | -3.14 | 63.4 | 0.1429 | -0.0025 | 0 |
| 255 | SLU 32 | 0 | -3.1 | 65.1 | 0.1409 | -0.0021 | 0 |
| 255 | SLU 33 | 0 | -3.05 | 64.92 | 0.1388 | -0.0023 | 0 |
| 255 | SLU 34 | 0 | -2.91 | 64.17 | 0.1321 | -0.0023 | 0 |
| 255 | SLU 35 | 0 | -2.87 | 65.87 | 0.1301 | -0.0018 | 0 |
| 255 | SLU 36 | 0 | -2.82 | 65.69 | 0.128 | -0.0021 | 0 |
| 255 | SLU 37 | 0 | -2.75 | 65.23 | 0.1249 | -0.0018 | 0 |
| 255 | SLU 38 | 0 | -2.71 | 65.06 | 0.1228 | -0.002 | 0 |
| 255 | SLU 39 | 0 | -3.5 | 67.25 | 0.1591 | -0.0024 | 0 |
| 255 | SLU 40 | 0 | -3.45 | 67.08 | 0.157 | -0.0026 | 0 |
| 255 | SLU 41 | 0 | -3.27 | 68.02 | 0.1483 | -0.0021 | 0 |
| 255 | SLU 42 | 0 | -3.22 | 67.85 | 0.1462 | -0.0024 | 0 |
| 255 | SLU 43 | 0 | -2.62 | 59.32 | 0.1188 | -0.0019 | 0 |
| 255 | SLU 44 | 0 | -2.54 | 59.03 | 0.1153 | -0.0023 | 0 |
| 255 | SLU 45 | 0 | -2.5 | 60.72 | 0.1133 | -0.0018 | 0 |
| 255 | SLU 46 | 0 | -2.45 | 60.55 | 0.1112 | -0.002 | 0 |
| 255 | SLU 47 | 0 | -2.31 | 59.8 | 0.1045 | -0.0021 | 0 |
| 255 | SLU 48 | 0 | -2.27 | 61.49 | 0.1025 | -0.0016 | 0 |
| 255 | SLU 49 | 0 | -2.22 | 61.32 | 0.1004 | -0.0018 | 0 |
| 255 | SLU 50 | 0 | -2.15 | 60.86 | 0.0972 | -0.0015 | 0 |
| 255 | SLU 51 | 0 | -2.1 | 60.68 | 0.0951 | -0.0017 | 0 |
| 255 | SLU 52 | 0 | -3.19 | 67.33 | 0.1448 | -0.0027 | 0 |
| 255 | SLU 53 | 0 | -3.15 | 69.03 | 0.1428 | -0.0022 | 0 |
| 255 | SLU 54 | 0 | -3.1 | 68.85 | 0.1407 | -0.0024 | 0 |
| 255 | SLU 55 | 0 | -2.96 | 68.1 | 0.1341 | -0.0025 | 0 |
| 255 | SLU 56 | 0 | -2.92 | 69.8 | 0.1321 | -0.002 | 0 |
| 255 | SLU 57 | 0 | -2.87 | 69.62 | 0.13 | -0.0022 | 0 |
| 255 | SLU 58 | 0 | -2.8 | 69.16 | 0.1268 | -0.0019 | 0 |
| 255 | SLU 59 | 0 | -2.75 | 68.99 | 0.1247 | -0.0021 | 0 |
| 255 | SLU 60 | 0 | -3.55 | 71.18 | 0.161 | -0.0025 | 0 |
| 255 | SLU 61 | 0 | -3.5 | 71 | 0.1589 | -0.0027 | 0 |
| 255 | SLU 62 | 0 | -3.31 | 71.95 | 0.1503 | -0.0023 | 0 |
| 255 | SLU 63 | 0 | -3.27 | 71.77 | 0.1482 | -0.0025 | 0 |
| 255 | SLU 64 | 0 | -3.06 | 67.04 | 0.1389 | -0.0022 | 0 |
| 255 | SLU 65 | 0 | -2.98 | 66.75 | 0.1354 | -0.0025 | 0 |
| 255 | SLU 66 | 0 | -2.94 | 68.44 | 0.1334 | -0.002 | 0 |
| 255 | SLU 67 | 0 | -2.89 | 68.27 | 0.1313 | -0.0022 | 0 |
| 255 | SLU 68 | 0 | -2.75 | 67.52 | 0.1246 | -0.0023 | 0 |
| 255 | SLU 69 | 0 | -2.71 | 69.21 | 0.1227 | -0.0018 | 0 |
| 255 | SLU 70 | 0 | -2.66 | 69.04 | 0.1206 | -0.002 | 0 |
| 255 | SLU 71 | 0 | -2.59 | 68.58 | 0.1174 | -0.0017 | 0 |

| Nodo | Cont. | Reazione a traslazione | | | Reazione a rotazione | | |
|---|---|---|---|---|---|---|---|
| Ind. | N.br. | x | y | z | x | y | z |
| 255 | SLU 72 | 0 | -2.55 | 68.41 | 0.1153 | -0.002 | 0 |
| 255 | SLU 73 | 0 | -3.63 | 75.05 | 0.165 | -0.0029 | 0 |
| 255 | SLU 74 | 0 | -3.59 | 76.75 | 0.163 | -0.0024 | 0 |
| 255 | SLU 75 | 0 | -3.54 | 76.57 | 0.1609 | -0.0026 | 0 |
| 255 | SLU 76 | 0 | -3.4 | 75.82 | 0.1542 | -0.0027 | 0 |
| 255 | SLU 77 | 0 | -3.36 | 77.52 | 0.1522 | -0.0022 | 0 |
| 255 | SLU 78 | 0 | -3.31 | 77.34 | 0.1501 | -0.0024 | 0 |
| 255 | SLU 79 | 0 | -3.24 | 76.88 | 0.147 | -0.0021 | 0 |
| 255 | SLU 80 | 0 | -3.19 | 76.71 | 0.1449 | -0.0024 | 0 |
| 255 | SLU 81 | 0 | -3.99 | 78.9 | 0.1811 | -0.0027 | 0 |
| 255 | SLU 82 | 0 | -3.94 | 78.73 | 0.179 | -0.003 | 0 |
| 255 | SLU 83 | 0 | -3.76 | 79.67 | 0.1704 | -0.0025 | 0 |
| 255 | SLU 84 | 0 | -3.71 | 79.5 | 0.1683 | -0.0027 | 0 |
| 255 | SLE RA 1 | 0 | -2.26 | 49.87 | 0.1024 | -0.0016 | 0 |
| 255 | SLE RA 2 | 0 | -2.2 | 49.68 | 0.1001 | -0.0018 | 0 |
| 255 | SLE RA 3 | 0 | -2.18 | 50.81 | 0.0988 | -0.0015 | 0 |
| 255 | SLE RA 4 | 0 | -2.15 | 50.69 | 0.0974 | -0.0017 | 0 |
| 255 | SLE RA 5 | 0 | -2.05 | 50.19 | 0.0929 | -0.0017 | 0 |
| 255 | SLE RA 6 | 0 | -2.02 | 51.32 | 0.0916 | -0.0014 | 0 |
| 255 | SLE RA 7 | 0 | -1.99 | 51.21 | 0.0902 | -0.0015 | 0 |
| 255 | SLE RA 8 | 0 | -1.95 | 50.9 | 0.0881 | -0.0013 | 0 |
| 255 | SLE RA 9 | 0 | -1.91 | 50.78 | 0.0867 | -0.0015 | 0 |
| 255 | SLE RA 10 | 0 | -2.64 | 55.21 | 0.1198 | -0.0021 | 0 |
| 255 | SLE RA 11 | 0 | -2.61 | 56.34 | 0.1185 | -0.0018 | 0 |
| 255 | SLE RA 12 | 0 | -2.58 | 56.23 | 0.1171 | -0.0019 | 0 |
| 255 | SLE RA 13 | 0 | -2.48 | 55.73 | 0.1126 | -0.002 | 0 |
| 255 | SLE RA 14 | 0 | -2.46 | 56.86 | 0.1113 | -0.0016 | 0 |
| 255 | SLE RA 15 | 0 | -2.42 | 56.74 | 0.1099 | -0.0018 | 0 |
| 255 | SLE RA 16 | 0 | -2.38 | 56.43 | 0.1078 | -0.0016 | 0 |
| 255 | SLE RA 17 | 0 | -2.35 | 56.32 | 0.1064 | -0.0017 | 0 |
| 255 | SLE RA 18 | 0 | -2.88 | 57.78 | 0.1306 | -0.002 | 0 |
| 255 | SLE RA 19 | 0 | -2.84 | 57.66 | 0.1292 | -0.0021 | 0 |
| 255 | SLE RA 20 | 0 | -2.72 | 58.29 | 0.1234 | -0.0018 | 0 |
| 255 | SLE RA 21 | 0 | -2.69 | 58.18 | 0.122 | -0.002 | 0 |
| 255 | SLE FR 1 | 0 | -2.26 | 49.87 | 0.1024 | -0.0016 | 0 |
| 255 | SLE FR 2 | 0 | -2.25 | 49.83 | 0.1019 | -0.0017 | 0 |
| 255 | SLE FR 3 | 0 | -2.2 | 50.08 | 0.0995 | -0.0016 | 0 |
| 255 | SLE FR 4 | 0 | -2.43 | 52.2 | 0.1104 | -0.0018 | 0 |
| 255 | SLE FR 5 | 0 | -2.38 | 52.45 | 0.108 | -0.0017 | 0 |
| 255 | SLE FR 6 | 0 | -2.57 | 53.82 | 0.1165 | -0.0018 | 0 |
| 255 | SLE QP 1 | 0 | -2.26 | 49.87 | 0.1024 | -0.0016 | 0 |
| 255 | SLE QP 2 | 0 | -2.44 | 52.24 | 0.1109 | -0.0017 | 0 |
| 255 | SLD 1 | 0.31 | -2.27 | 52.72 | 0.101 | 0.2887 | -0.0003 |
| 255 | SLD 2 | 0.31 | -2.27 | 52.72 | 0.101 | 0.2887 | -0.0003 |
| 255 | SLD 3 | 0.26 | -7.62 | 57.95 | 0.3535 | 0.2483 | -0.0002 |
| 255 | SLD 4 | 0.26 | -7.62 | 57.95 | 0.3535 | 0.2483 | -0.0002 |
| 255 | SLD 5 | 0.16 | 5.73 | 44.45 | -0.275 | 0.1467 | -0.0001 |
| 255 | SLD 6 | 0.16 | 5.73 | 44.45 | -0.275 | 0.1467 | -0.0001 |
| 255 | SLD 7 | 0.01 | -12.12 | 61.89 | 0.5666 | 0.012 | 0 |
| 255 | SLD 8 | 0.01 | -12.12 | 61.89 | 0.5666 | 0.012 | 0 |
| 255 | SLD 9 | -0.01 | 7.23 | 42.6 | -0.3448 | -0.0155 | 0 |
| 255 | SLD 10 | -0.01 | 7.23 | 42.6 | -0.3448 | -0.0155 | 0 |
| 255 | SLD 11 | -0.16 | -10.62 | 60.03 | 0.4968 | -0.1501 | 0.0001 |
| 255 | SLD 12 | -0.16 | -10.62 | 60.03 | 0.4968 | -0.1501 | 0.0001 |
| 255 | SLD 13 | -0.27 | 2.74 | 46.54 | -0.1317 | -0.2518 | 0.0002 |
| 255 | SLD 14 | -0.27 | 2.74 | 46.54 | -0.1317 | -0.2518 | 0.0002 |
| 255 | SLD 15 | -0.31 | -2.62 | 51.77 | 0.1208 | -0.2922 | 0.0003 |
| 255 | SLD 16 | -0.31 | -2.62 | 51.77 | 0.1208 | -0.2922 | 0.0003 |
| 255 | SLV 1 | 0.78 | -2.04 | 53.3 | 0.0876 | 0.7399 | -0.0007 |
| 255 | SLV 2 | 0.78 | -2.04 | 53.3 | 0.0876 | 0.7399 | -0.0007 |
| 255 | SLV 3 | 0.67 | -14.63 | 65.73 | 0.682 | 0.6365 | -0.0006 |
| 255 | SLV 4 | 0.67 | -14.63 | 65.73 | 0.682 | 0.6365 | -0.0006 |
| 255 | SLV 5 | 0.4 | 16.78 | 33.72 | -0.7976 | 0.3776 | -0.0004 |
| 255 | SLV 6 | 0.4 | 16.78 | 33.72 | -0.7976 | 0.3776 | -0.0004 |
| 255 | SLV 7 | 0.03 | -25.2 | 75.13 | 1.1837 | 0.0329 | 0 |
| 255 | SLV 8 | 0.03 | -25.2 | 75.13 | 1.1837 | 0.0329 | 0 |
| 255 | SLV 9 | -0.03 | 20.32 | 29.35 | -0.962 | -0.0363 | 0 |
| 255 | SLV 10 | -0.03 | 20.32 | 29.35 | -0.962 | -0.0363 | 0 |
| 255 | SLV 11 | -0.41 | -21.67 | 70.77 | 1.0193 | -0.3811 | 0.0003 |
| 255 | SLV 12 | -0.41 | -21.67 | 70.77 | 1.0193 | -0.3811 | 0.0003 |
| 255 | SLV 13 | -0.68 | 9.75 | 38.76 | -0.4603 | -0.6399 | 0.0006 |
| 255 | SLV 14 | -0.68 | 9.75 | 38.76 | -0.4603 | -0.6399 | 0.0006 |
| 255 | SLV 15 | -0.79 | -2.85 | 51.18 | 0.1341 | -0.7434 | 0.0007 |
| 255 | SLV 16 | -0.79 | -2.85 | 51.18 | 0.1341 | -0.7434 | 0.0007 |
| 256 | SLU 1 | 0 | 1.17 | 13.91 | -0.2036 | 0.0004 | 0 |
| 256 | SLU 2 | 0 | 1.16 | 13.92 | -0.2031 | 0.0003 | 0 |
| 256 | SLU 3 | 0 | 1.22 | 13.88 | -0.2124 | 0.0005 | 0 |
| 256 | SLU 4 | 0 | 1.22 | 13.88 | -0.2121 | 0.0004 | 0 |
| 256 | SLU 5 | 0 | 1.2 | 13.89 | -0.2085 | 0.0004 | 0 |
| 256 | SLU 6 | 0 | 1.26 | 13.86 | -0.2177 | 0.0005 | 0 |
| 256 | SLU 7 | 0 | 1.25 | 13.86 | -0.2174 | 0.0004 | 0 |
| 256 | SLU 8 | 0 | 1.24 | 13.87 | -0.2144 | 0.0005 | 0 |
| 256 | SLU 9 | 0 | 1.23 | 13.87 | -0.214 | 0.0005 | 0 |
| 256 | SLU 10 | 0 | 1.33 | 18.15 | -0.2411 | 0.0004 | 0 |
| 256 | SLU 11 | 0 | 1.39 | 18.12 | -0.2503 | 0.0005 | 0 |
| 256 | SLU 12 | 0 | 1.39 | 18.12 | -0.25 | 0.0005 | 0 |
| 256 | SLU 13 | 0 | 1.37 | 18.13 | -0.2464 | 0.0004 | 0 |
| 256 | SLU 14 | 0 | 1.42 | 18.1 | -0.2557 | 0.0006 | 0 |

| Nodo | Cont. | Reazione a traslazione | | | Reazione a rotazione | | |
|---|---|---|---|---|---|---|---|
| Ind. | N.br. | x | y | z | x | y | z |
| 256 | SLU 15 | 0 | 1.42 | 18.1 | -0.2554 | 0.0005 | 0 |
| 256 | SLU 16 | 0 | 1.4 | 18.11 | -0.2523 | 0.0006 | 0 |
| 256 | SLU 17 | 0 | 1.4 | 18.11 | -0.252 | 0.0005 | 0 |
| 256 | SLU 18 | 0 | 1.41 | 19.97 | -0.2578 | 0.0005 | 0 |
| 256 | SLU 19 | 0 | 1.41 | 19.97 | -0.2575 | 0.0005 | 0 |
| 256 | SLU 20 | 0 | 1.44 | 19.95 | -0.2632 | 0.0006 | 0 |
| 256 | SLU 21 | 0 | 1.44 | 19.95 | -0.2629 | 0.0005 | 0 |
| 256 | SLU 22 | 0 | 1.34 | 16.99 | -0.2398 | 0.0005 | 0 |
| 256 | SLU 23 | 0 | 1.34 | 16.99 | -0.2393 | 0.0004 | 0 |
| 256 | SLU 24 | 0 | 1.4 | 16.96 | -0.2486 | 0.0005 | 0 |
| 256 | SLU 25 | 0 | 1.4 | 16.96 | -0.2483 | 0.0005 | 0 |
| 256 | SLU 26 | 0 | 1.38 | 16.97 | -0.2447 | 0.0005 | 0 |
| 256 | SLU 27 | 0 | 1.43 | 16.94 | -0.2539 | 0.0006 | 0 |
| 256 | SLU 28 | 0 | 1.43 | 16.94 | -0.2536 | 0.0005 | 0 |
| 256 | SLU 29 | 0 | 1.41 | 16.95 | -0.2505 | 0.0006 | 0 |
| 256 | SLU 30 | 0 | 1.41 | 16.95 | -0.2502 | 0.0005 | 0 |
| 256 | SLU 31 | 0 | 1.51 | 21.23 | -0.2773 | 0.0005 | 0 |
| 256 | SLU 32 | 0 | 1.57 | 21.2 | -0.2865 | 0.0006 | 0 |
| 256 | SLU 33 | 0 | 1.57 | 21.2 | -0.2862 | 0.0005 | 0 |
| 256 | SLU 34 | 0 | 1.55 | 21.21 | -0.2826 | 0.0005 | 0 |
| 256 | SLU 35 | 0 | 1.6 | 21.18 | -0.2919 | 0.0006 | 0 |
| 256 | SLU 36 | 0 | 1.6 | 21.18 | -0.2916 | 0.0006 | 0 |
| 256 | SLU 37 | 0 | 1.58 | 21.19 | -0.2885 | 0.0007 | 0 |
| 256 | SLU 38 | 0 | 1.58 | 21.19 | -0.2882 | 0.0006 | 0 |
| 256 | SLU 39 | 0 | 1.58 | 23.05 | -0.294 | 0.0006 | 0 |
| 256 | SLU 40 | 0 | 1.58 | 23.05 | -0.2937 | 0.0005 | 0 |
| 256 | SLU 41 | 0 | 1.62 | 23.03 | -0.2994 | 0.0006 | 0 |
| 256 | SLU 42 | 0 | 1.62 | 23.03 | -0.2991 | 0.0006 | 0 |
| 256 | SLU 43 | 0 | 1.45 | 17.03 | -0.2523 | 0.0005 | 0 |
| 256 | SLU 44 | 0 | 1.45 | 17.03 | -0.2518 | 0.0004 | 0 |
| 256 | SLU 45 | 0 | 1.51 | 17 | -0.2611 | 0.0006 | 0 |
| 256 | SLU 46 | 0 | 1.51 | 17 | -0.2608 | 0.0005 | 0 |
| 256 | SLU 47 | 0 | 1.49 | 17.01 | -0.2572 | 0.0005 | 0 |
| 256 | SLU 48 | 0 | 1.54 | 16.98 | -0.2664 | 0.0006 | 0 |
| 256 | SLU 49 | 0 | 1.54 | 16.98 | -0.2661 | 0.0005 | 0 |
| 256 | SLU 50 | 0 | 1.52 | 16.99 | -0.263 | 0.0006 | 0 |
| 256 | SLU 51 | 0 | 1.52 | 16.99 | -0.2627 | 0.0005 | 0 |
| 256 | SLU 52 | 0 | 1.62 | 21.27 | -0.2898 | 0.0005 | 0 |
| 256 | SLU 53 | 0 | 1.68 | 21.24 | -0.299 | 0.0006 | 0 |
| 256 | SLU 54 | 0 | 1.68 | 21.24 | -0.2987 | 0.0006 | 0 |
| 256 | SLU 55 | 0 | 1.66 | 21.25 | -0.2951 | 0.0005 | 0 |
| 256 | SLU 56 | 0 | 1.71 | 21.22 | -0.3044 | 0.0007 | 0 |
| 256 | SLU 57 | 0 | 1.71 | 21.22 | -0.304 | 0.0006 | 0 |
| 256 | SLU 58 | 0 | 1.69 | 21.23 | -0.301 | 0.0007 | 0 |
| 256 | SLU 59 | 0 | 1.69 | 21.23 | -0.3007 | 0.0006 | 0 |
| 256 | SLU 60 | 0 | 1.7 | 23.09 | -0.3065 | 0.0006 | 0 |
| 256 | SLU 61 | 0 | 1.69 | 23.09 | -0.3062 | 0.0006 | 0 |
| 256 | SLU 62 | 0 | 1.73 | 23.07 | -0.3119 | 0.0006 | 0 |
| 256 | SLU 63 | 0 | 1.73 | 23.07 | -0.3116 | 0.0006 | 0 |
| 256 | SLU 64 | 0 | 1.63 | 20.11 | -0.2885 | 0.0006 | 0 |
| 256 | SLU 65 | 0 | 1.63 | 20.11 | -0.288 | 0.0005 | 0 |
| 256 | SLU 66 | 0 | 1.69 | 20.08 | -0.2973 | 0.0006 | 0 |
| 256 | SLU 67 | 0 | 1.69 | 20.08 | -0.297 | 0.0006 | 0 |
| 256 | SLU 68 | 0 | 1.67 | 20.09 | -0.2934 | 0.0006 | 0 |
| 256 | SLU 69 | 0 | 1.72 | 20.06 | -0.3026 | 0.0007 | 0 |
| 256 | SLU 70 | 0 | 1.72 | 20.06 | -0.3023 | 0.0006 | 0 |
| 256 | SLU 71 | 0 | 1.7 | 20.07 | -0.2992 | 0.0007 | 0 |
| 256 | SLU 72 | 0 | 1.7 | 20.07 | -0.2989 | 0.0006 | 0 |
| 256 | SLU 73 | 0 | 1.8 | 24.35 | -0.3259 | 0.0006 | 0 |
| 256 | SLU 74 | 0 | 1.86 | 24.32 | -0.3352 | 0.0007 | 0 |
| 256 | SLU 75 | 0 | 1.86 | 24.32 | -0.3349 | 0.0006 | 0 |
| 256 | SLU 76 | 0 | 1.83 | 24.33 | -0.3313 | 0.0006 | 0 |
| 256 | SLU 77 | 0 | 1.89 | 24.3 | -0.3405 | 0.0007 | 0 |
| 256 | SLU 78 | 0 | 1.89 | 24.3 | -0.3402 | 0.0007 | 0 |
| 256 | SLU 79 | 0 | 1.87 | 24.31 | -0.3372 | 0.0008 | 0 |
| 256 | SLU 80 | 0 | 1.87 | 24.31 | -0.3369 | 0.0007 | 0 |
| 256 | SLU 81 | 0 | 1.87 | 26.17 | -0.3427 | 0.0007 | 0 |
| 256 | SLU 82 | 0 | 1.87 | 26.17 | -0.3424 | 0.0006 | 0 |
| 256 | SLU 83 | 0 | 1.91 | 26.15 | -0.3481 | 0.0007 | 0 |
| 256 | SLU 84 | 0 | 1.91 | 26.15 | -0.3478 | 0.0007 | 0 |
| 256 | SLE RA 1 | 0 | 1.22 | 14.79 | -0.214 | 0.0004 | 0 |
| 256 | SLE RA 2 | 0 | 1.22 | 14.79 | -0.2136 | 0.0004 | 0 |
| 256 | SLE RA 3 | 0 | 1.25 | 14.77 | -0.2198 | 0.0005 | 0 |
| 256 | SLE RA 4 | 0 | 1.25 | 14.77 | -0.2196 | 0.0004 | 0 |
| 256 | SLE RA 5 | 0 | 1.24 | 14.78 | -0.2172 | 0.0004 | 0 |
| 256 | SLE RA 6 | 0 | 1.28 | 14.76 | -0.2234 | 0.0005 | 0 |
| 256 | SLE RA 7 | 0 | 1.28 | 14.76 | -0.2232 | 0.0005 | 0 |
| 256 | SLE RA 8 | 0 | 1.26 | 14.77 | -0.2211 | 0.0005 | 0 |
| 256 | SLE RA 9 | 0 | 1.26 | 14.77 | -0.2209 | 0.0005 | 0 |
| 256 | SLE RA 10 | 0 | 1.33 | 17.62 | -0.2389 | 0.0004 | 0 |
| 256 | SLE RA 11 | 0 | 1.37 | 17.6 | -0.2451 | 0.0005 | 0 |
| 256 | SLE RA 12 | 0 | 1.36 | 17.6 | -0.2449 | 0.0005 | 0 |
| 256 | SLE RA 13 | 0 | 1.35 | 17.61 | -0.2425 | 0.0005 | 0 |
| 256 | SLE RA 14 | 0 | 1.39 | 17.59 | -0.2487 | 0.0005 | 0 |
| 256 | SLE RA 15 | 0 | 1.39 | 17.59 | -0.2485 | 0.0005 | 0 |
| 256 | SLE RA 16 | 0 | 1.38 | 17.59 | -0.2464 | 0.0005 | 0 |
| 256 | SLE RA 17 | 0 | 1.37 | 17.59 | -0.2462 | 0.0005 | 0 |
| 256 | SLE RA 18 | 0 | 1.38 | 18.83 | -0.2501 | 0.0005 | 0 |

| Nodo | Cont. | Reazione a traslazione | | | Reazione a rotazione | | |
|---|---|---|---|---|---|---|---|
| Ind. | N.br. | x | y | z | x | y | z |
| 256 | SLE RA 19 | 0 | 1.38 | 18.83 | -0.2499 | 0.0005 | 0 |
| 256 | SLE RA 20 | 0 | 1.4 | 18.82 | -0.2537 | 0.0005 | 0 |
| 256 | SLE RA 21 | 0 | 1.4 | 18.82 | -0.2535 | 0.0005 | 0 |
| 256 | SLE FR 1 | 0 | 1.22 | 14.79 | -0.214 | 0.0004 | 0 |
| 256 | SLE FR 2 | 0 | 1.22 | 14.79 | -0.2139 | 0.0004 | 0 |
| 256 | SLE FR 3 | 0 | 1.23 | 14.79 | -0.2154 | 0.0005 | 0 |
| 256 | SLE FR 4 | 0 | 1.26 | 16 | -0.2248 | 0.0004 | 0 |
| 256 | SLE FR 5 | 0 | 1.27 | 16 | -0.2263 | 0.0005 | 0 |
| 256 | SLE FR 6 | 0 | 1.3 | 16.81 | -0.2321 | 0.0005 | 0 |
| 256 | SLE QP 1 | 0 | 1.22 | 14.79 | -0.214 | 0.0004 | 0 |
| 256 | SLE QP 2 | 0 | 1.27 | 16 | -0.2248 | 0.0005 | 0 |
| 256 | SLD 1 | 0.41 | 2.82 | 16.39 | -0.1286 | 0.4669 | -0.0036 |
| 256 | SLD 2 | 0.41 | 2.82 | 16.39 | -0.1286 | 0.4669 | -0.0036 |
| 256 | SLD 3 | 0.43 | -2.05 | 15.81 | -0.2628 | 0.4794 | -0.0038 |
| 256 | SLD 4 | 0.43 | -2.05 | 15.81 | -0.2628 | 0.4794 | -0.0038 |
| 256 | SLD 5 | 0.1 | 9.13 | 17.01 | 0.0076 | 0.1214 | -0.0009 |
| 256 | SLD 6 | 0.1 | 9.13 | 17.01 | 0.0076 | 0.1214 | -0.0009 |
| 256 | SLD 7 | 0.15 | -7.13 | 15.06 | -0.4397 | 0.1631 | -0.0013 |
| 256 | SLD 8 | 0.15 | -7.13 | 15.06 | -0.4397 | 0.1631 | -0.0013 |
| 256 | SLD 9 | -0.15 | 9.66 | 16.95 | -0.0099 | -0.1622 | 0.0013 |
| 256 | SLD 10 | -0.15 | 9.66 | 16.95 | -0.0099 | -0.1622 | 0.0013 |
| 256 | SLD 11 | -0.1 | -6.6 | 15 | -0.4572 | -0.1205 | 0.0009 |
| 256 | SLD 12 | -0.1 | -6.6 | 15 | -0.4572 | -0.1205 | 0.0009 |
| 256 | SLD 13 | -0.43 | 4.58 | 16.2 | -0.1869 | -0.4785 | 0.0038 |
| 256 | SLD 14 | -0.43 | 4.58 | 16.2 | -0.1869 | -0.4785 | 0.0038 |
| 256 | SLD 15 | -0.41 | -0.29 | 15.62 | -0.3211 | -0.4659 | 0.0036 |
| 256 | SLD 16 | -0.41 | -0.29 | 15.62 | -0.3211 | -0.4659 | 0.0036 |
| 256 | SLV 1 | 1.04 | 4.89 | 16.94 | 0.0007 | 1.1934 | -0.0092 |
| 256 | SLV 2 | 1.04 | 4.89 | 16.94 | 0.0007 | 1.1934 | -0.0092 |
| 256 | SLV 3 | 1.09 | -6.51 | 15.55 | -0.3132 | 1.2249 | -0.0096 |
| 256 | SLV 4 | 1.09 | -6.51 | 15.55 | -0.3132 | 1.2249 | -0.0096 |
| 256 | SLV 5 | 0.25 | 19.64 | 18.38 | 0.319 | 0.3106 | -0.0022 |
| 256 | SLV 6 | 0.25 | 19.64 | 18.38 | 0.319 | 0.3106 | -0.0022 |
| 256 | SLV 7 | 0.39 | -18.36 | 13.77 | -0.7275 | 0.4156 | -0.0034 |
| 256 | SLV 8 | 0.39 | -18.36 | 13.77 | -0.7275 | 0.4156 | -0.0034 |
| 256 | SLV 9 | -0.39 | 20.89 | 18.24 | 0.2779 | -0.4147 | 0.0034 |
| 256 | SLV 10 | -0.39 | 20.89 | 18.24 | 0.2779 | -0.4147 | 0.0034 |
| 256 | SLV 11 | -0.25 | -17.11 | 13.63 | -0.7687 | -0.3096 | 0.0022 |
| 256 | SLV 12 | -0.25 | -17.11 | 13.63 | -0.7687 | -0.3096 | 0.0022 |
| 256 | SLV 13 | -1.09 | 9.04 | 16.46 | -0.1364 | -1.224 | 0.0096 |
| 256 | SLV 14 | -1.09 | 9.04 | 16.46 | -0.1364 | -1.224 | 0.0096 |
| 256 | SLV 15 | -1.04 | -2.36 | 15.07 | -0.4504 | -1.1925 | 0.0092 |
| 256 | SLV 16 | -1.04 | -2.36 | 15.07 | -0.4504 | -1.1925 | 0.0092 |
| 257 | SLU 1 | 0 | 3.81 | 42.08 | -0.3466 | -0.0026 | 0 |
| 257 | SLU 2 | 0 | 3.79 | 42.01 | -0.3455 | -0.0026 | 0 |
| 257 | SLU 3 | 0 | 3.64 | 42.89 | -0.3437 | -0.0029 | 0 |
| 257 | SLU 4 | 0 | 3.62 | 42.84 | -0.343 | -0.0029 | 0 |
| 257 | SLU 5 | 0 | 3.49 | 42.19 | -0.3336 | -0.0029 | 0 |
| 257 | SLU 6 | 0 | 3.34 | 43.08 | -0.3318 | -0.0033 | 0 |
| 257 | SLU 7 | 0 | 3.33 | 43.03 | -0.3311 | -0.0033 | 0 |
| 257 | SLU 8 | 0 | 3.21 | 42.46 | -0.3228 | -0.0033 | 0 |
| 257 | SLU 9 | 0 | 3.2 | 42.41 | -0.3222 | -0.0033 | 0 |
| 257 | SLU 10 | 0 | 4.53 | 50.19 | -0.4109 | -0.003 | 0 |
| 257 | SLU 11 | 0 | 4.38 | 51.08 | -0.409 | -0.0034 | 0 |
| 257 | SLU 12 | 0 | 4.36 | 51.03 | -0.4084 | -0.0033 | 0 |
| 257 | SLU 13 | 0 | 4.23 | 50.38 | -0.399 | -0.0033 | 0 |
| 257 | SLU 14 | 0 | 4.08 | 51.26 | -0.3971 | -0.0037 | 0 |
| 257 | SLU 15 | 0 | 4.07 | 51.22 | -0.3964 | -0.0037 | 0 |
| 257 | SLU 16 | 0 | 3.96 | 50.64 | -0.3882 | -0.0037 | 0 |
| 257 | SLU 17 | 0 | 3.94 | 50.6 | -0.3875 | -0.0037 | 0 |
| 257 | SLU 18 | 0 | 4.87 | 53.78 | -0.44 | -0.0032 | 0 |
| 257 | SLU 19 | 0 | 4.86 | 53.73 | -0.4393 | -0.0032 | 0 |
| 257 | SLU 20 | 0 | 4.57 | 53.97 | -0.4281 | -0.0036 | 0 |
| 257 | SLU 21 | 0 | 4.56 | 53.92 | -0.4274 | -0.0035 | 0 |
| 257 | SLU 22 | 0 | 4.35 | 49.2 | -0.4006 | -0.0032 | 0 |
| 257 | SLU 23 | 0 | 4.33 | 49.12 | -0.3995 | -0.0031 | 0 |
| 257 | SLU 24 | 0 | 4.18 | 50 | -0.3976 | -0.0035 | 0 |
| 257 | SLU 25 | 0 | 4.16 | 49.96 | -0.397 | -0.0035 | 0 |
| 257 | SLU 26 | 0 | 4.03 | 49.31 | -0.3876 | -0.0035 | 0 |
| 257 | SLU 27 | 0 | 3.88 | 50.19 | -0.3857 | -0.0038 | 0 |
| 257 | SLU 28 | 0 | 3.87 | 50.14 | -0.3851 | -0.0038 | 0 |
| 257 | SLU 29 | 0 | 3.76 | 49.57 | -0.3768 | -0.0038 | 0 |
| 257 | SLU 30 | 0 | 3.74 | 49.52 | -0.3761 | -0.0038 | 0 |
| 257 | SLU 31 | 0 | 5.07 | 57.3 | -0.4649 | -0.0035 | 0 |
| 257 | SLU 32 | 0 | 4.92 | 58.19 | -0.463 | -0.0039 | 0 |
| 257 | SLU 33 | 0 | 4.91 | 58.14 | -0.4623 | -0.0039 | 0 |
| 257 | SLU 34 | 0 | 4.77 | 57.49 | -0.453 | -0.0039 | 0 |
| 257 | SLU 35 | 0 | 4.62 | 58.38 | -0.4511 | -0.0043 | 0 |
| 257 | SLU 36 | 0 | 4.61 | 58.33 | -0.4504 | -0.0042 | 0 |
| 257 | SLU 37 | 0 | 4.5 | 57.76 | -0.4422 | -0.0043 | 0 |
| 257 | SLU 38 | 0 | 4.48 | 57.71 | -0.4415 | -0.0042 | 0 |
| 257 | SLU 39 | 0 | 5.41 | 60.89 | -0.494 | -0.0038 | 0 |
| 257 | SLU 40 | 0 | 5.4 | 60.84 | -0.4933 | -0.0037 | 0 |
| 257 | SLU 41 | 0 | 5.11 | 61.08 | -0.4821 | -0.0041 | 0 |
| 257 | SLU 42 | 0 | 5.1 | 61.03 | -0.4814 | -0.0041 | 0 |
| 257 | SLU 43 | 0 | 4.77 | 52.27 | -0.4321 | -0.0032 | 0 |
| 257 | SLU 44 | 0 | 4.75 | 52.19 | -0.431 | -0.0032 | 0 |
| 257 | SLU 45 | 0 | 4.59 | 53.08 | -0.4292 | -0.0035 | 0 |

| Nodo | Cont. | Reazione a traslazione | | | Reazione a rotazione | | |
|---|---|---|---|---|---|---|---|
| Ind. | N.br. | x | y | z | x | y | z |
| 257 | SLU 46 | 0 | 4.58 | 53.03 | -0.4285 | -0.0035 | 0 |
| 257 | SLU 47 | 0 | 4.45 | 52.38 | -0.4191 | -0.0035 | 0 |
| 257 | SLU 48 | 0 | 4.3 | 53.26 | -0.4172 | -0.0039 | 0 |
| 257 | SLU 49 | 0 | 4.28 | 53.22 | -0.4166 | -0.0039 | 0 |
| 257 | SLU 50 | 0 | 4.17 | 52.65 | -0.4083 | -0.0039 | 0 |
| 257 | SLU 51 | 0 | 4.16 | 52.6 | -0.4077 | -0.0039 | 0 |
| 257 | SLU 52 | 0 | 5.49 | 60.38 | -0.4964 | -0.0036 | 0 |
| 257 | SLU 53 | 0 | 5.33 | 61.26 | -0.4945 | -0.004 | 0 |
| 257 | SLU 54 | 0 | 5.32 | 61.22 | -0.4938 | -0.0039 | 0 |
| 257 | SLU 55 | 0 | 5.19 | 60.57 | -0.4845 | -0.0039 | 0 |
| 257 | SLU 56 | 0 | 5.04 | 61.45 | -0.4826 | -0.0043 | 0 |
| 257 | SLU 57 | 0 | 5.02 | 61.4 | -0.4819 | -0.0043 | 0 |
| 257 | SLU 58 | 0 | 4.91 | 60.83 | -0.4737 | -0.0043 | 0 |
| 257 | SLU 59 | 0 | 4.9 | 60.78 | -0.473 | -0.0043 | 0 |
| 257 | SLU 60 | 0 | 5.83 | 63.97 | -0.5255 | -0.0038 | 0 |
| 257 | SLU 61 | 0 | 5.81 | 63.92 | -0.5248 | -0.0038 | 0 |
| 257 | SLU 62 | 0 | 5.53 | 64.15 | -0.5136 | -0.0042 | 0 |
| 257 | SLU 63 | 0 | 5.52 | 64.11 | -0.5129 | -0.0041 | 0 |
| 257 | SLU 64 | 0 | 5.31 | 59.38 | -0.4861 | -0.0038 | 0 |
| 257 | SLU 65 | 0 | 5.29 | 59.31 | -0.485 | -0.0037 | 0 |
| 257 | SLU 66 | 0 | 5.13 | 60.19 | -0.4831 | -0.0041 | 0 |
| 257 | SLU 67 | 0 | 5.12 | 60.14 | -0.4825 | -0.0041 | 0 |
| 257 | SLU 68 | 0 | 4.99 | 59.49 | -0.4731 | -0.0041 | 0 |
| 257 | SLU 69 | 0 | 4.84 | 60.38 | -0.4712 | -0.0044 | 0 |
| 257 | SLU 70 | 0 | 4.82 | 60.33 | -0.4706 | -0.0044 | 0 |
| 257 | SLU 71 | 0 | 4.71 | 59.76 | -0.4623 | -0.0044 | 0 |
| 257 | SLU 72 | 0 | 4.7 | 59.71 | -0.4616 | -0.0044 | 0 |
| 257 | SLU 73 | 0 | 6.03 | 67.49 | -0.5504 | -0.0041 | 0 |
| 257 | SLU 74 | 0 | 5.88 | 68.38 | -0.5485 | -0.0045 | 0 |
| 257 | SLU 75 | 0 | 5.86 | 68.33 | -0.5478 | -0.0045 | 0 |
| 257 | SLU 76 | 0 | 5.73 | 67.68 | -0.5384 | -0.0045 | 0 |
| 257 | SLU 77 | 0 | 5.58 | 68.56 | -0.5366 | -0.0049 | 0 |
| 257 | SLU 78 | 0 | 5.57 | 68.52 | -0.5359 | -0.0048 | 0 |
| 257 | SLU 79 | 0 | 5.45 | 67.94 | -0.5277 | -0.0049 | 0 |
| 257 | SLU 80 | 0 | 5.44 | 67.9 | -0.527 | -0.0048 | 0 |
| 257 | SLU 81 | 0 | 6.37 | 71.08 | -0.5795 | -0.0044 | 0 |
| 257 | SLU 82 | 0 | 6.35 | 71.03 | -0.5788 | -0.0043 | 0 |
| 257 | SLU 83 | 0 | 6.07 | 71.27 | -0.5676 | -0.0047 | 0 |
| 257 | SLU 84 | 0 | 6.06 | 71.22 | -0.5669 | -0.0047 | 0 |
| 257 | SLE RA 1 | 0 | 3.96 | 44.12 | -0.3621 | -0.0028 | 0 |
| 257 | SLE RA 2 | 0 | 3.95 | 44.06 | -0.3613 | -0.0027 | 0 |
| 257 | SLE RA 3 | 0 | 3.85 | 44.65 | -0.3601 | -0.003 | 0 |
| 257 | SLE RA 4 | 0 | 3.84 | 44.62 | -0.3596 | -0.003 | 0 |
| 257 | SLE RA 5 | 0 | 3.75 | 44.19 | -0.3534 | -0.003 | 0 |
| 257 | SLE RA 6 | 0 | 3.65 | 44.78 | -0.3521 | -0.0032 | 0 |
| 257 | SLE RA 7 | 0 | 3.64 | 44.75 | -0.3517 | -0.0032 | 0 |
| 257 | SLE RA 8 | 0 | 3.57 | 44.37 | -0.3462 | -0.0032 | 0 |
| 257 | SLE RA 9 | 0 | 3.56 | 44.34 | -0.3458 | -0.0032 | 0 |
| 257 | SLE RA 10 | 0 | 4.44 | 49.52 | -0.4049 | -0.003 | 0 |
| 257 | SLE RA 11 | 0 | 4.34 | 50.11 | -0.4036 | -0.0033 | 0 |
| 257 | SLE RA 12 | 0 | 4.33 | 50.08 | -0.4032 | -0.0033 | 0 |
| 257 | SLE RA 13 | 0 | 4.25 | 49.65 | -0.397 | -0.0032 | 0 |
| 257 | SLE RA 14 | 0 | 4.14 | 50.24 | -0.3957 | -0.0035 | 0 |
| 257 | SLE RA 15 | 0 | 4.14 | 50.2 | -0.3953 | -0.0035 | 0 |
| 257 | SLE RA 16 | 0 | 4.06 | 49.82 | -0.3898 | -0.0035 | 0 |
| 257 | SLE RA 17 | 0 | 4.05 | 49.79 | -0.3893 | -0.0035 | 0 |
| 257 | SLE RA 18 | 0 | 4.67 | 51.91 | -0.4243 | -0.0032 | 0 |
| 257 | SLE RA 19 | 0 | 4.66 | 51.88 | -0.4239 | -0.0032 | 0 |
| 257 | SLE RA 20 | 0 | 4.47 | 52.04 | -0.4164 | -0.0034 | 0 |
| 257 | SLE RA 21 | 0 | 4.46 | 52.01 | -0.4159 | -0.0034 | 0 |
| 257 | SLE FR 1 | 0 | 3.96 | 44.12 | -0.3621 | -0.0028 | 0 |
| 257 | SLE FR 2 | 0 | 3.96 | 44.11 | -0.3619 | -0.0028 | 0 |
| 257 | SLE FR 3 | 0 | 3.88 | 44.17 | -0.3589 | -0.0029 | 0 |
| 257 | SLE FR 4 | 0 | 4.17 | 46.45 | -0.3806 | -0.0029 | 0 |
| 257 | SLE FR 5 | 0 | 4.1 | 46.51 | -0.3776 | -0.003 | 0 |
| 257 | SLE FR 6 | 0 | 4.32 | 48.02 | -0.3932 | -0.003 | 0 |
| 257 | SLE QP 1 | 0 | 3.96 | 44.12 | -0.3621 | -0.0028 | 0 |
| 257 | SLE QP 2 | 0 | 4.18 | 46.46 | -0.3807 | -0.0029 | 0 |
| 257 | SLD 1 | 0.23 | 7.01 | 46.58 | -0.5013 | 0.3035 | 0.0001 |
| 257 | SLD 2 | 0.23 | 7.01 | 46.58 | -0.5013 | 0.3035 | 0.0001 |
| 257 | SLD 3 | 0.21 | 2.71 | 44.87 | -0.3204 | 0.2853 | 0.0001 |
| 257 | SLD 4 | 0.21 | 2.71 | 44.87 | -0.3204 | 0.2853 | 0.0001 |
| 257 | SLD 5 | 0.09 | 11.56 | 49.09 | -0.6913 | 0.1167 | 0 |
| 257 | SLD 6 | 0.09 | 11.56 | 49.09 | -0.6913 | 0.1167 | 0 |
| 257 | SLD 7 | 0.04 | -2.79 | 43.38 | -0.0882 | 0.0559 | 0 |
| 257 | SLD 8 | 0.04 | -2.79 | 43.38 | -0.0882 | 0.0559 | 0 |
| 257 | SLD 9 | -0.04 | 11.15 | 49.53 | -0.6733 | -0.0617 | 0 |
| 257 | SLD 10 | -0.04 | 11.15 | 49.53 | -0.6733 | -0.0617 | 0 |
| 257 | SLD 11 | -0.1 | -3.2 | 43.82 | -0.0702 | -0.1224 | 0 |
| 257 | SLD 12 | -0.1 | -3.2 | 43.82 | -0.0702 | -0.1224 | 0 |
| 257 | SLD 13 | -0.21 | 5.65 | 48.05 | -0.4411 | -0.2911 | -0.0001 |
| 257 | SLD 14 | -0.21 | 5.65 | 48.05 | -0.4411 | -0.2911 | -0.0001 |
| 257 | SLD 15 | -0.23 | 1.34 | 46.33 | -0.2602 | -0.3093 | -0.0001 |
| 257 | SLD 16 | -0.23 | 1.34 | 46.33 | -0.2602 | -0.3093 | -0.0001 |
| 257 | SLV 1 | 0.62 | 10.86 | 46.77 | -0.6646 | 0.9216 | 0.0002 |
| 257 | SLV 2 | 0.62 | 10.86 | 46.77 | -0.6646 | 0.9216 | 0.0002 |
| 257 | SLV 3 | 0.58 | 0.74 | 42.66 | -0.2398 | 0.8704 | 0.0001 |
| 257 | SLV 4 | 0.58 | 0.74 | 42.66 | -0.2398 | 0.8704 | 0.0001 |

| Nodo | Cont. | Reazione a traslazione | | | Reazione a rotazione | | |
|---|---|---|---|---|---|---|---|
| Ind. | N.br. | x | y | z | x | y | z |
| 257 | SLV 5 | 0.25 | 21.53 | 52.78 | -1.1101 | 0.3521 | 0.0001 |
| 257 | SLV 6 | 0.25 | 21.53 | 52.78 | -1.1101 | 0.3521 | 0.0001 |
| 257 | SLV 7 | 0.11 | -12.21 | 39.08 | 0.3057 | 0.1814 | 0 |
| 257 | SLV 8 | 0.11 | -12.21 | 39.08 | 0.3057 | 0.1814 | 0 |
| 257 | SLV 9 | -0.11 | 20.56 | 53.83 | -1.0672 | -0.1872 | 0 |
| 257 | SLV 10 | -0.11 | 20.56 | 53.83 | -1.0672 | -0.1872 | 0 |
| 257 | SLV 11 | -0.26 | -13.18 | 40.13 | 0.3486 | -0.3579 | -0.0001 |
| 257 | SLV 12 | -0.26 | -13.18 | 40.13 | 0.3486 | -0.3579 | -0.0001 |
| 257 | SLV 13 | -0.58 | 7.62 | 50.25 | -0.5217 | -0.8762 | -0.0001 |
| 257 | SLV 14 | -0.58 | 7.62 | 50.25 | -0.5217 | -0.8762 | -0.0001 |
| 257 | SLV 15 | -0.63 | -2.51 | 46.14 | -0.0969 | -0.9274 | -0.0002 |
| 257 | SLV 16 | -0.63 | -2.51 | 46.14 | -0.0969 | -0.9274 | -0.0002 |
| 258 | SLU 1 | -0.21 | -2.04 | 50.79 | -0.0342 | -0.1457 | 0.0008 |
| 258 | SLU 2 | -0.2 | -1.31 | 48.6 | -0.0592 | -0.1322 | 0.0007 |
| 258 | SLU 3 | -0.21 | -2.1 | 51.9 | -0.0343 | -0.1496 | 0.0008 |
| 258 | SLU 4 | -0.21 | -1.65 | 50.59 | -0.0493 | -0.1415 | 0.0008 |
| 258 | SLU 5 | -0.2 | -1.31 | 49.18 | -0.0598 | -0.1344 | 0.0008 |
| 258 | SLU 6 | -0.22 | -2.1 | 52.48 | -0.0349 | -0.1519 | 0.0008 |
| 258 | SLU 7 | -0.21 | -1.65 | 51.17 | -0.0499 | -0.1438 | 0.0008 |
| 258 | SLU 8 | -0.22 | -2.04 | 51.95 | -0.0355 | -0.1502 | 0.0008 |
| 258 | SLU 9 | -0.21 | -1.6 | 50.64 | -0.0505 | -0.1421 | 0.0008 |
| 258 | SLU 10 | -0.22 | -1.61 | 54.2 | -0.0615 | -0.1509 | 0.0008 |
| 258 | SLU 11 | -0.24 | -2.4 | 57.5 | -0.0367 | -0.1683 | 0.0009 |
| 258 | SLU 12 | -0.23 | -1.95 | 56.19 | -0.0516 | -0.1602 | 0.0009 |
| 258 | SLU 13 | -0.23 | -1.61 | 54.78 | -0.0622 | -0.1531 | 0.0009 |
| 258 | SLU 14 | -0.24 | -2.4 | 58.08 | -0.0373 | -0.1706 | 0.0009 |
| 258 | SLU 15 | -0.24 | -1.95 | 56.77 | -0.0523 | -0.1625 | 0.0009 |
| 258 | SLU 16 | -0.24 | -2.35 | 57.54 | -0.0379 | -0.1689 | 0.0009 |
| 258 | SLU 17 | -0.23 | -1.9 | 56.23 | -0.0528 | -0.1608 | 0.0009 |
| 258 | SLU 18 | -0.25 | -2.47 | 58.78 | -0.0376 | -0.1724 | 0.0009 |
| 258 | SLU 19 | -0.24 | -2.03 | 57.47 | -0.0526 | -0.1643 | 0.0009 |
| 258 | SLU 20 | -0.25 | -2.47 | 59.36 | -0.0382 | -0.1747 | 0.0009 |
| 258 | SLU 21 | -0.24 | -2.03 | 58.05 | -0.0532 | -0.1666 | 0.0009 |
| 258 | SLU 22 | -0.23 | -2.33 | 56.23 | -0.0363 | -0.1639 | 0.0009 |
| 258 | SLU 23 | -0.22 | -1.59 | 54.05 | -0.0613 | -0.1504 | 0.0008 |
| 258 | SLU 24 | -0.24 | -2.38 | 57.35 | -0.0364 | -0.1679 | 0.0009 |
| 258 | SLU 25 | -0.23 | -1.94 | 56.03 | -0.0514 | -0.1598 | 0.0009 |
| 258 | SLU 26 | -0.23 | -1.59 | 54.62 | -0.0619 | -0.1527 | 0.0009 |
| 258 | SLU 27 | -0.24 | -2.38 | 57.92 | -0.0371 | -0.1702 | 0.0009 |
| 258 | SLU 28 | -0.24 | -1.94 | 56.61 | -0.052 | -0.1621 | 0.0009 |
| 258 | SLU 29 | -0.24 | -2.33 | 57.39 | -0.0376 | -0.1685 | 0.0009 |
| 258 | SLU 30 | -0.23 | -1.89 | 56.08 | -0.0526 | -0.1604 | 0.0009 |
| 258 | SLU 31 | -0.25 | -1.89 | 59.64 | -0.0636 | -0.1691 | 0.0009 |
| 258 | SLU 32 | -0.27 | -2.69 | 62.94 | -0.0388 | -0.1866 | 0.001 |
| 258 | SLU 33 | -0.26 | -2.24 | 61.63 | -0.0537 | -0.1785 | 0.001 |
| 258 | SLU 34 | -0.25 | -1.9 | 60.22 | -0.0643 | -0.1714 | 0.001 |
| 258 | SLU 35 | -0.27 | -2.69 | 63.52 | -0.0394 | -0.1889 | 0.001 |
| 258 | SLU 36 | -0.26 | -2.24 | 62.21 | -0.0544 | -0.1808 | 0.001 |
| 258 | SLU 37 | -0.27 | -2.63 | 62.98 | -0.04 | -0.1872 | 0.001 |
| 258 | SLU 38 | -0.26 | -2.19 | 61.67 | -0.0549 | -0.1791 | 0.001 |
| 258 | SLU 39 | -0.27 | -2.76 | 64.22 | -0.0397 | -0.1907 | 0.001 |
| 258 | SLU 40 | -0.27 | -2.32 | 62.91 | -0.0547 | -0.1826 | 0.001 |
| 258 | SLU 41 | -0.28 | -2.76 | 64.8 | -0.0403 | -0.1929 | 0.001 |
| 258 | SLU 42 | -0.27 | -2.32 | 63.49 | -0.0553 | -0.1848 | 0.001 |
| 258 | SLU 43 | -0.26 | -2.56 | 64.16 | -0.0438 | -0.1831 | 0.001 |
| 258 | SLU 44 | -0.25 | -1.82 | 61.98 | -0.0687 | -0.1696 | 0.0009 |
| 258 | SLU 45 | -0.27 | -2.61 | 65.27 | -0.0439 | -0.187 | 0.001 |
| 258 | SLU 46 | -0.26 | -2.17 | 63.96 | -0.0588 | -0.1789 | 0.001 |
| 258 | SLU 47 | -0.25 | -1.82 | 62.55 | -0.0693 | -0.1719 | 0.001 |
| 258 | SLU 48 | -0.27 | -2.61 | 65.85 | -0.0445 | -0.1893 | 0.001 |
| 258 | SLU 49 | -0.26 | -2.17 | 64.54 | -0.0594 | -0.1812 | 0.001 |
| 258 | SLU 50 | -0.27 | -2.56 | 65.32 | -0.0451 | -0.1877 | 0.001 |
| 258 | SLU 51 | -0.26 | -2.12 | 64.01 | -0.06 | -0.1796 | 0.001 |
| 258 | SLU 52 | -0.28 | -2.12 | 67.57 | -0.0711 | -0.1883 | 0.001 |
| 258 | SLU 53 | -0.29 | -2.91 | 70.87 | -0.0462 | -0.2058 | 0.0011 |
| 258 | SLU 54 | -0.29 | -2.47 | 69.56 | -0.0612 | -0.1977 | 0.0011 |
| 258 | SLU 55 | -0.28 | -2.12 | 68.15 | -0.0717 | -0.1906 | 0.0011 |
| 258 | SLU 56 | -0.3 | -2.91 | 71.45 | -0.0469 | -0.208 | 0.0011 |
| 258 | SLU 57 | -0.29 | -2.47 | 70.14 | -0.0618 | -0.1999 | 0.0011 |
| 258 | SLU 58 | -0.3 | -2.86 | 70.91 | -0.0474 | -0.2064 | 0.0011 |
| 258 | SLU 59 | -0.29 | -2.42 | 69.6 | -0.0624 | -0.1983 | 0.0011 |
| 258 | SLU 60 | -0.3 | -2.99 | 72.15 | -0.0471 | -0.2098 | 0.0011 |
| 258 | SLU 61 | -0.29 | -2.55 | 70.84 | -0.0621 | -0.2017 | 0.0011 |
| 258 | SLU 62 | -0.3 | -2.99 | 72.73 | -0.0478 | -0.2121 | 0.0011 |
| 258 | SLU 63 | -0.3 | -2.55 | 71.42 | -0.0627 | -0.204 | 0.0011 |
| 258 | SLU 64 | -0.29 | -2.85 | 69.6 | -0.0459 | -0.2014 | 0.0011 |
| 258 | SLU 65 | -0.28 | -2.11 | 67.42 | -0.0708 | -0.1879 | 0.001 |
| 258 | SLU 66 | -0.29 | -2.9 | 70.72 | -0.046 | -0.2053 | 0.0011 |
| 258 | SLU 67 | -0.29 | -2.46 | 69.41 | -0.0609 | -0.1972 | 0.0011 |
| 258 | SLU 68 | -0.28 | -2.11 | 68 | -0.0714 | -0.1901 | 0.0011 |
| 258 | SLU 69 | -0.3 | -2.9 | 71.29 | -0.0466 | -0.2076 | 0.0011 |
| 258 | SLU 70 | -0.29 | -2.46 | 69.98 | -0.0616 | -0.1995 | 0.0011 |
| 258 | SLU 71 | -0.29 | -2.85 | 70.76 | -0.0472 | -0.2059 | 0.0011 |
| 258 | SLU 72 | -0.29 | -2.4 | 69.45 | -0.0621 | -0.1978 | 0.0011 |
| 258 | SLU 73 | -0.3 | -2.41 | 73.01 | -0.0732 | -0.2066 | 0.0011 |
| 258 | SLU 74 | -0.32 | -3.2 | 76.31 | -0.0483 | -0.224 | 0.0012 |
| 258 | SLU 75 | -0.31 | -2.76 | 75 | -0.0633 | -0.2159 | 0.0012 |
| 258 | SLU 76 | -0.31 | -2.41 | 73.59 | -0.0738 | -0.2088 | 0.0012 |

| Nodo | Cont. | Reazione a traslazione | | | Reazione a rotazione | | |
|---|---|---|---|---|---|---|---|
| Ind. | N.br. | x | y | z | x | y | z |
| 258 | SLU 77 | -0.32 | -3.2 | 76.89 | -0.049 | -0.2263 | 0.0012 |
| 258 | SLU 78 | -0.32 | -2.76 | 75.58 | -0.0639 | -0.2182 | 0.0012 |
| 258 | SLU 79 | -0.32 | -3.15 | 76.35 | -0.0495 | -0.2246 | 0.0012 |
| 258 | SLU 80 | -0.31 | -2.71 | 75.04 | -0.0645 | -0.2165 | 0.0012 |
| 258 | SLU 81 | -0.33 | -3.28 | 77.59 | -0.0493 | -0.2281 | 0.0012 |
| 258 | SLU 82 | -0.32 | -2.83 | 76.28 | -0.0642 | -0.22 | 0.0012 |
| 258 | SLU 83 | -0.33 | -3.28 | 78.17 | -0.0499 | -0.2304 | 0.0012 |
| 258 | SLU 84 | -0.32 | -2.83 | 76.86 | -0.0648 | -0.2223 | 0.0012 |
| 258 | SLE RA 1 | -0.22 | -2.13 | 52.34 | -0.0348 | -0.1509 | 0.0008 |
| 258 | SLE RA 2 | -0.21 | -1.63 | 50.89 | -0.0514 | -0.1419 | 0.0008 |
| 258 | SLE RA 3 | -0.22 | -2.16 | 53.09 | -0.0349 | -0.1535 | 0.0008 |
| 258 | SLE RA 4 | -0.21 | -1.87 | 52.21 | -0.0449 | -0.1481 | 0.0008 |
| 258 | SLE RA 5 | -0.21 | -1.63 | 51.27 | -0.0519 | -0.1434 | 0.0008 |
| 258 | SLE RA 6 | -0.22 | -2.16 | 53.47 | -0.0353 | -0.155 | 0.0008 |
| 258 | SLE RA 7 | -0.22 | -1.87 | 52.6 | -0.0453 | -0.1496 | 0.0008 |
| 258 | SLE RA 8 | -0.22 | -2.13 | 53.12 | -0.0357 | -0.1539 | 0.0008 |
| 258 | SLE RA 9 | -0.22 | -1.83 | 52.24 | -0.0457 | -0.1485 | 0.0008 |
| 258 | SLE RA 10 | -0.23 | -1.83 | 54.62 | -0.053 | -0.1543 | 0.0009 |
| 258 | SLE RA 11 | -0.24 | -2.36 | 56.82 | -0.0365 | -0.166 | 0.0009 |
| 258 | SLE RA 12 | -0.23 | -2.07 | 55.94 | -0.0464 | -0.1606 | 0.0009 |
| 258 | SLE RA 13 | -0.23 | -1.84 | 55 | -0.0534 | -0.1559 | 0.0009 |
| 258 | SLE RA 14 | -0.24 | -2.36 | 57.2 | -0.0369 | -0.1675 | 0.0009 |
| 258 | SLE RA 15 | -0.23 | -2.07 | 56.33 | -0.0469 | -0.1621 | 0.0009 |
| 258 | SLE RA 16 | -0.24 | -2.33 | 56.84 | -0.0373 | -0.1664 | 0.0009 |
| 258 | SLE RA 17 | -0.23 | -2.03 | 55.97 | -0.0472 | -0.161 | 0.0009 |
| 258 | SLE RA 18 | -0.24 | -2.41 | 57.67 | -0.0371 | -0.1687 | 0.0009 |
| 258 | SLE RA 19 | -0.24 | -2.12 | 56.8 | -0.047 | -0.1633 | 0.0009 |
| 258 | SLE RA 20 | -0.24 | -2.41 | 58.06 | -0.0375 | -0.1702 | 0.0009 |
| 258 | SLE RA 21 | -0.24 | -2.12 | 57.18 | -0.0475 | -0.1648 | 0.0009 |
| 258 | SLE FR 1 | -0.22 | -2.13 | 52.34 | -0.0348 | -0.1509 | 0.0008 |
| 258 | SLE FR 2 | -0.21 | -2.03 | 52.05 | -0.0382 | -0.1491 | 0.0008 |
| 258 | SLE FR 3 | -0.22 | -2.13 | 52.5 | -0.035 | -0.1515 | 0.0008 |
| 258 | SLE FR 4 | -0.22 | -2.11 | 53.65 | -0.0388 | -0.1544 | 0.0008 |
| 258 | SLE FR 5 | -0.22 | -2.21 | 54.1 | -0.0357 | -0.1568 | 0.0009 |
| 258 | SLE FR 6 | -0.23 | -2.27 | 55.01 | -0.036 | -0.1598 | 0.0009 |
| 258 | SLE QP 1 | -0.22 | -2.13 | 52.34 | -0.0348 | -0.1509 | 0.0008 |
| 258 | SLE QP 2 | -0.22 | -2.21 | 53.94 | -0.0355 | -0.1562 | 0.0008 |
| 258 | SLD 1 | -0.46 | 1.75 | 64.83 | -0.1938 | 0.138 | 0.0017 |
| 258 | SLD 2 | -0.46 | 1.75 | 64.83 | -0.1938 | 0.138 | 0.0017 |
| 258 | SLD 3 | -0.58 | -3.05 | 70.08 | 0.0168 | 0.043 | 0.0022 |
| 258 | SLD 4 | -0.58 | -3.05 | 70.08 | 0.0168 | 0.043 | 0.0022 |
| 258 | SLD 5 | -0.11 | 6.26 | 49.24 | -0.4025 | 0.0761 | 0.0004 |
| 258 | SLD 6 | -0.11 | 6.26 | 49.24 | -0.4025 | 0.0761 | 0.0004 |
| 258 | SLD 7 | -0.51 | -9.74 | 66.75 | 0.2996 | -0.2405 | 0.002 |
| 258 | SLD 8 | -0.51 | -9.74 | 66.75 | 0.2996 | -0.2405 | 0.002 |
| 258 | SLD 9 | 0.07 | 5.32 | 41.13 | -0.3706 | -0.0719 | -0.0003 |
| 258 | SLD 10 | 0.07 | 5.32 | 41.13 | -0.3706 | -0.0719 | -0.0003 |
| 258 | SLD 11 | -0.34 | -10.68 | 58.64 | 0.3314 | -0.3886 | 0.0013 |
| 258 | SLD 12 | -0.34 | -10.68 | 58.64 | 0.3314 | -0.3886 | 0.0013 |
| 258 | SLD 13 | 0.13 | -1.38 | 37.8 | -0.0878 | -0.3555 | -0.0005 |
| 258 | SLD 14 | 0.13 | -1.38 | 37.8 | -0.0878 | -0.3555 | -0.0005 |
| 258 | SLD 15 | 0.01 | -6.18 | 43.05 | 0.1228 | -0.4505 | 0 |
| 258 | SLD 16 | 0.01 | -6.18 | 43.05 | 0.1228 | -0.4505 | 0 |
| 258 | SLV 1 | -0.77 | 7.06 | 79.34 | -0.4081 | 0.5493 | 0.0029 |
| 258 | SLV 2 | -0.77 | 7.06 | 79.34 | -0.4081 | 0.5493 | 0.0029 |
| 258 | SLV 3 | -1.07 | -4.05 | 91.8 | 0.0795 | 0.3137 | 0.0041 |
| 258 | SLV 4 | -1.07 | -4.05 | 91.8 | 0.0795 | 0.3137 | 0.0041 |
| 258 | SLV 5 | 0.07 | 17.42 | 42.66 | -0.8868 | 0.4127 | -0.0004 |
| 258 | SLV 6 | 0.07 | 17.42 | 42.66 | -0.8868 | 0.4127 | -0.0004 |
| 258 | SLV 7 | -0.93 | -19.61 | 84.2 | 0.7385 | -0.3725 | 0.0036 |
| 258 | SLV 8 | -0.93 | -19.61 | 84.2 | 0.7385 | -0.3725 | 0.0036 |
| 258 | SLV 9 | 0.48 | 15.19 | 23.68 | -0.8095 | 0.0601 | -0.0019 |
| 258 | SLV 10 | 0.48 | 15.19 | 23.68 | -0.8095 | 0.0601 | -0.0019 |
| 258 | SLV 11 | -0.52 | -21.85 | 65.23 | 0.8158 | -0.7252 | 0.0021 |
| 258 | SLV 12 | -0.52 | -21.85 | 65.23 | 0.8158 | -0.7252 | 0.0021 |
| 258 | SLV 13 | 0.62 | -0.38 | 16.08 | -0.1505 | -0.6261 | -0.0024 |
| 258 | SLV 14 | 0.62 | -0.38 | 16.08 | -0.1505 | -0.6261 | -0.0024 |
| 258 | SLV 15 | 0.32 | -11.49 | 28.55 | 0.3371 | -0.8617 | -0.0012 |
| 258 | SLV 16 | 0.32 | -11.49 | 28.55 | 0.3371 | -0.8617 | -0.0012 |
| 259 | SLU 1 | 0.02 | -5.49 | 53.5 | 0.2311 | 0.0179 | 0 |
| 259 | SLU 2 | 0.02 | -4.84 | 50.96 | 0.2015 | 0.0088 | 0 |
| 259 | SLU 3 | 0.02 | -5.65 | 54.54 | 0.2376 | 0.019 | 0 |
| 259 | SLU 4 | 0.02 | -5.27 | 53.01 | 0.2199 | 0.0135 | 0 |
| 259 | SLU 5 | 0.02 | -4.92 | 51.32 | 0.2042 | 0.0098 | 0 |
| 259 | SLU 6 | 0.02 | -5.73 | 54.91 | 0.2404 | 0.0199 | 0 |
| 259 | SLU 7 | 0.02 | -5.34 | 53.38 | 0.2226 | 0.0145 | 0 |
| 259 | SLU 8 | 0.02 | -5.64 | 54.23 | 0.2366 | 0.0198 | 0 |
| 259 | SLU 9 | 0.02 | -5.25 | 52.71 | 0.2188 | 0.0144 | 0 |
| 259 | SLU 10 | 0.02 | -5.54 | 57.2 | 0.2311 | 0.0116 | 0 |
| 259 | SLU 11 | 0.02 | -6.35 | 60.78 | 0.2673 | 0.0217 | 0 |
| 259 | SLU 12 | 0.02 | -5.96 | 59.25 | 0.2495 | 0.0163 | 0 |
| 259 | SLU 13 | 0.02 | -5.61 | 57.56 | 0.2339 | 0.0125 | 0 |
| 259 | SLU 14 | 0.03 | -6.42 | 61.15 | 0.27 | 0.0227 | 0 |
| 259 | SLU 15 | 0.02 | -6.04 | 59.62 | 0.2523 | 0.0173 | 0 |
| 259 | SLU 16 | 0.02 | -6.33 | 60.47 | 0.2662 | 0.0226 | 0 |
| 259 | SLU 17 | 0.02 | -5.95 | 58.95 | 0.2485 | 0.0171 | 0 |
| 259 | SLU 18 | 0.02 | -6.48 | 62.41 | 0.2735 | 0.0218 | 0 |
| 259 | SLU 19 | 0.02 | -6.09 | 60.89 | 0.2557 | 0.0164 | 0 |

| Nodo | Cont. | Reazione a traslazione | | | Reazione a rotazione | | |
|---|---|---|---|---|---|---|---|
| Ind. | N.br. | x | y | z | x | y | z |
| 259 | SLU 20 | 0.03 | -6.55 | 62.78 | 0.2762 | 0.0228 | 0 |
| 259 | SLU 21 | 0.02 | -6.17 | 61.25 | 0.2584 | 0.0173 | 0 |
| 259 | SLU 22 | 0.02 | -6.2 | 59.38 | 0.261 | 0.0208 | 0 |
| 259 | SLU 23 | 0.02 | -5.56 | 56.83 | 0.2314 | 0.0118 | 0 |
| 259 | SLU 24 | 0.02 | -6.37 | 60.42 | 0.2676 | 0.0219 | 0 |
| 259 | SLU 25 | 0.02 | -5.98 | 58.89 | 0.2498 | 0.0165 | 0 |
| 259 | SLU 26 | 0.02 | -5.63 | 57.2 | 0.2341 | 0.0128 | 0 |
| 259 | SLU 27 | 0.03 | -6.44 | 60.78 | 0.2703 | 0.0229 | 0 |
| 259 | SLU 28 | 0.02 | -6.05 | 59.26 | 0.2525 | 0.0175 | 0 |
| 259 | SLU 29 | 0.03 | -6.35 | 60.11 | 0.2665 | 0.0228 | 0 |
| 259 | SLU 30 | 0.02 | -5.96 | 58.58 | 0.2487 | 0.0174 | 0 |
| 259 | SLU 31 | 0.02 | -6.25 | 63.07 | 0.2611 | 0.0145 | 0 |
| 259 | SLU 32 | 0.03 | -7.06 | 66.66 | 0.2972 | 0.0247 | 0 |
| 259 | SLU 33 | 0.03 | -6.67 | 65.13 | 0.2795 | 0.0192 | 0 |
| 259 | SLU 34 | 0.02 | -6.33 | 63.44 | 0.2638 | 0.0155 | 0 |
| 259 | SLU 35 | 0.03 | -7.14 | 67.02 | 0.3 | 0.0257 | 0 |
| 259 | SLU 36 | 0.03 | -6.75 | 65.5 | 0.2822 | 0.0202 | 0 |
| 259 | SLU 37 | 0.03 | -7.05 | 66.35 | 0.2962 | 0.0255 | 0 |
| 259 | SLU 38 | 0.03 | -6.66 | 64.82 | 0.2784 | 0.0201 | 0 |
| 259 | SLU 39 | 0.03 | -7.19 | 68.29 | 0.3034 | 0.0248 | 0 |
| 259 | SLU 40 | 0.03 | -6.81 | 66.76 | 0.2856 | 0.0193 | 0 |
| 259 | SLU 41 | 0.03 | -7.27 | 68.66 | 0.3061 | 0.0257 | 0 |
| 259 | SLU 42 | 0.03 | -6.88 | 67.13 | 0.2884 | 0.0203 | 0 |
| 259 | SLU 43 | 0.02 | -6.89 | 67.53 | 0.2901 | 0.0222 | 0 |
| 259 | SLU 44 | 0.02 | -6.24 | 64.99 | 0.2605 | 0.0132 | 0 |
| 259 | SLU 45 | 0.03 | -7.05 | 68.58 | 0.2967 | 0.0233 | 0 |
| 259 | SLU 46 | 0.02 | -6.67 | 67.05 | 0.2789 | 0.0179 | 0 |
| 259 | SLU 47 | 0.02 | -6.32 | 65.36 | 0.2633 | 0.0141 | 0 |
| 259 | SLU 48 | 0.03 | -7.13 | 68.94 | 0.2994 | 0.0243 | 0 |
| 259 | SLU 49 | 0.02 | -6.74 | 67.42 | 0.2817 | 0.0189 | 0 |
| 259 | SLU 50 | 0.03 | -7.04 | 68.27 | 0.2956 | 0.0242 | 0 |
| 259 | SLU 51 | 0.02 | -6.65 | 66.74 | 0.2778 | 0.0187 | 0 |
| 259 | SLU 52 | 0.02 | -6.94 | 71.23 | 0.2902 | 0.0159 | 0 |
| 259 | SLU 53 | 0.03 | -7.75 | 74.82 | 0.3264 | 0.0261 | 0 |
| 259 | SLU 54 | 0.03 | -7.36 | 73.29 | 0.3086 | 0.0206 | 0 |
| 259 | SLU 55 | 0.03 | -7.01 | 71.6 | 0.2929 | 0.0169 | 0 |
| 259 | SLU 56 | 0.03 | -7.82 | 75.18 | 0.3291 | 0.027 | 0 |
| 259 | SLU 57 | 0.03 | -7.44 | 73.66 | 0.3113 | 0.0216 | 0 |
| 259 | SLU 58 | 0.03 | -7.73 | 74.51 | 0.3253 | 0.0269 | 0 |
| 259 | SLU 59 | 0.03 | -7.35 | 72.98 | 0.3075 | 0.0215 | 0 |
| 259 | SLU 60 | 0.03 | -7.88 | 76.45 | 0.3325 | 0.0261 | 0 |
| 259 | SLU 61 | 0.03 | -7.49 | 74.92 | 0.3148 | 0.0207 | 0 |
| 259 | SLU 62 | 0.03 | -7.96 | 76.81 | 0.3353 | 0.0271 | 0 |
| 259 | SLU 63 | 0.03 | -7.57 | 75.29 | 0.3175 | 0.0217 | 0 |
| 259 | SLU 64 | 0.03 | -7.6 | 73.41 | 0.3201 | 0.0252 | 0 |
| 259 | SLU 65 | 0.02 | -6.96 | 70.87 | 0.2905 | 0.0161 | 0 |
| 259 | SLU 66 | 0.03 | -7.77 | 74.45 | 0.3266 | 0.0263 | 0 |
| 259 | SLU 67 | 0.03 | -7.38 | 72.93 | 0.3089 | 0.0208 | 0 |
| 259 | SLU 68 | 0.03 | -7.03 | 71.23 | 0.2932 | 0.0171 | 0 |
| 259 | SLU 69 | 0.03 | -7.84 | 74.82 | 0.3294 | 0.0273 | 0 |
| 259 | SLU 70 | 0.03 | -7.46 | 73.29 | 0.3116 | 0.0218 | 0 |
| 259 | SLU 71 | 0.03 | -7.75 | 74.14 | 0.3256 | 0.0271 | 0 |
| 259 | SLU 72 | 0.03 | -7.37 | 72.62 | 0.3078 | 0.0217 | 0 |
| 259 | SLU 73 | 0.03 | -7.65 | 77.11 | 0.3201 | 0.0189 | 0 |
| 259 | SLU 74 | 0.03 | -8.46 | 80.69 | 0.3563 | 0.029 | 0 |
| 259 | SLU 75 | 0.03 | -8.07 | 79.17 | 0.3385 | 0.0236 | 0 |
| 259 | SLU 76 | 0.03 | -7.73 | 77.47 | 0.3229 | 0.0198 | 0 |
| 259 | SLU 77 | 0.03 | -8.54 | 81.06 | 0.359 | 0.03 | 0 |
| 259 | SLU 78 | 0.03 | -8.15 | 79.53 | 0.3413 | 0.0246 | 0 |
| 259 | SLU 79 | 0.03 | -8.45 | 80.38 | 0.3552 | 0.0299 | 0 |
| 259 | SLU 80 | 0.03 | -8.06 | 78.86 | 0.3375 | 0.0245 | 0 |
| 259 | SLU 81 | 0.03 | -8.59 | 82.32 | 0.3625 | 0.0291 | 0 |
| 259 | SLU 82 | 0.03 | -8.21 | 80.8 | 0.3447 | 0.0237 | 0 |
| 259 | SLU 83 | 0.03 | -8.67 | 82.69 | 0.3652 | 0.0301 | 0 |
| 259 | SLU 84 | 0.03 | -8.28 | 81.16 | 0.3474 | 0.0247 | 0 |
| 259 | SLE RA 1 | 0.02 | -5.69 | 55.18 | 0.2396 | 0.0187 | 0 |
| 259 | SLE RA 2 | 0.02 | -5.26 | 53.48 | 0.2199 | 0.0127 | 0 |
| 259 | SLE RA 3 | 0.02 | -5.8 | 55.87 | 0.244 | 0.0194 | 0 |
| 259 | SLE RA 4 | 0.02 | -5.54 | 54.86 | 0.2322 | 0.0158 | 0 |
| 259 | SLE RA 5 | 0.02 | -5.31 | 53.73 | 0.2217 | 0.0133 | 0 |
| 259 | SLE RA 6 | 0.02 | -5.85 | 56.12 | 0.2458 | 0.0201 | 0 |
| 259 | SLE RA 7 | 0.02 | -5.59 | 55.1 | 0.234 | 0.0165 | 0 |
| 259 | SLE RA 8 | 0.02 | -5.79 | 55.67 | 0.2433 | 0.02 | 0 |
| 259 | SLE RA 9 | 0.02 | -5.53 | 54.65 | 0.2314 | 0.0164 | 0 |
| 259 | SLE RA 10 | 0.02 | -5.72 | 57.64 | 0.2397 | 0.0145 | 0 |
| 259 | SLE RA 11 | 0.02 | -6.26 | 60.03 | 0.2638 | 0.0213 | 0 |
| 259 | SLE RA 12 | 0.02 | -6.01 | 59.02 | 0.2519 | 0.0177 | 0 |
| 259 | SLE RA 13 | 0.02 | -5.77 | 57.89 | 0.2415 | 0.0152 | 0 |
| 259 | SLE RA 14 | 0.02 | -6.31 | 60.28 | 0.2656 | 0.0219 | 0 |
| 259 | SLE RA 15 | 0.02 | -6.06 | 59.26 | 0.2538 | 0.0183 | 0 |
| 259 | SLE RA 16 | 0.02 | -6.25 | 59.83 | 0.2631 | 0.0219 | 0 |
| 259 | SLE RA 17 | 0.02 | -6 | 58.81 | 0.2512 | 0.0182 | 0 |
| 259 | SLE RA 18 | 0.02 | -6.35 | 61.12 | 0.2679 | 0.0213 | 0 |
| 259 | SLE RA 19 | 0.02 | -6.09 | 60.1 | 0.256 | 0.0177 | 0 |
| 259 | SLE RA 20 | 0.02 | -6.4 | 61.36 | 0.2697 | 0.022 | 0 |
| 259 | SLE RA 21 | 0.02 | -6.14 | 60.35 | 0.2579 | 0.0184 | 0 |
| 259 | SLE FR 1 | 0.02 | -5.69 | 55.18 | 0.2396 | 0.0187 | 0 |
| 259 | SLE FR 2 | 0.02 | -5.6 | 54.84 | 0.2357 | 0.0175 | 0 |

| Nodo | Cont. | Reazione a traslazione | | | Reazione a rotazione | | |
|---|---|---|---|---|---|---|---|
| Ind. | N.br. | x | y | z | x | y | z |
| 259 | SLE FR 3 | 0.02 | -5.71 | 55.28 | 0.2404 | 0.019 | 0 |
| 259 | SLE FR 4 | 0.02 | -5.8 | 56.62 | 0.2442 | 0.0183 | 0 |
| 259 | SLE FR 5 | 0.02 | -5.91 | 57.06 | 0.2488 | 0.0198 | 0 |
| 259 | SLE FR 6 | 0.02 | -6.02 | 58.15 | 0.2538 | 0.02 | 0 |
| 259 | SLE QP 1 | 0.02 | -5.69 | 55.18 | 0.2396 | 0.0187 | 0 |
| 259 | SLE QP 2 | 0.02 | -5.89 | 56.96 | 0.2481 | 0.0195 | 0 |
| 259 | SLD 1 | 0.27 | -2.16 | 39.46 | 0.0937 | 0.2393 | 0.0002 |
| 259 | SLD 2 | 0.27 | -2.16 | 39.46 | 0.0937 | 0.2393 | 0.0002 |
| 259 | SLD 3 | 0.38 | -6.65 | 45.83 | 0.2824 | 0.3298 | 0.0001 |
| 259 | SLD 4 | 0.38 | -6.65 | 45.83 | 0.2824 | 0.3298 | 0.0001 |
| 259 | SLD 5 | -0.07 | 2.03 | 42.05 | -0.0844 | -0.0518 | 0.0001 |
| 259 | SLD 6 | -0.07 | 2.03 | 42.05 | -0.0844 | -0.0518 | 0.0001 |
| 259 | SLD 7 | 0.29 | -12.92 | 63.28 | 0.5446 | 0.2498 | 0 |
| 259 | SLD 8 | 0.29 | -12.92 | 63.28 | 0.5446 | 0.2498 | 0 |
| 259 | SLD 9 | -0.25 | 1.14 | 50.64 | -0.0484 | -0.2108 | 0 |
| 259 | SLD 10 | -0.25 | 1.14 | 50.64 | -0.0484 | -0.2108 | 0 |
| 259 | SLD 11 | 0.11 | -13.81 | 71.87 | 0.5806 | 0.0908 | -0.0001 |
| 259 | SLD 12 | 0.11 | -13.81 | 71.87 | 0.5806 | 0.0908 | -0.0001 |
| 259 | SLD 13 | -0.33 | -5.13 | 68.09 | 0.2139 | -0.2908 | -0.0001 |
| 259 | SLD 14 | -0.33 | -5.13 | 68.09 | 0.2139 | -0.2908 | -0.0001 |
| 259 | SLD 15 | -0.23 | -9.62 | 74.46 | 0.4026 | -0.2003 | -0.0002 |
| 259 | SLD 16 | -0.23 | -9.62 | 74.46 | 0.4026 | -0.2003 | -0.0002 |
| 259 | SLV 1 | 0.6 | 2.81 | 15.95 | -0.1123 | 0.5401 | 0.0004 |
| 259 | SLV 2 | 0.6 | 2.81 | 15.95 | -0.1123 | 0.5401 | 0.0004 |
| 259 | SLV 3 | 0.87 | -7.6 | 30.96 | 0.3256 | 0.7705 | 0.0003 |
| 259 | SLV 4 | 0.87 | -7.6 | 30.96 | 0.3256 | 0.7705 | 0.0003 |
| 259 | SLV 5 | -0.22 | 12.51 | 21.89 | -0.5242 | -0.1739 | 0.0003 |
| 259 | SLV 6 | -0.22 | 12.51 | 21.89 | -0.5242 | -0.1739 | 0.0003 |
| 259 | SLV 7 | 0.69 | -22.19 | 71.93 | 0.9355 | 0.5943 | -0.0001 |
| 259 | SLV 8 | 0.69 | -22.19 | 71.93 | 0.9355 | 0.5943 | -0.0001 |
| 259 | SLV 9 | -0.65 | 10.41 | 41.99 | -0.4393 | -0.5553 | 0.0001 |
| 259 | SLV 10 | -0.65 | 10.41 | 41.99 | -0.4393 | -0.5553 | 0.0001 |
| 259 | SLV 11 | 0.26 | -24.28 | 92.03 | 1.0204 | 0.2129 | -0.0003 |
| 259 | SLV 12 | 0.26 | -24.28 | 92.03 | 1.0204 | 0.2129 | -0.0003 |
| 259 | SLV 13 | -0.83 | -4.17 | 82.96 | 0.1706 | -0.7315 | -0.0003 |
| 259 | SLV 14 | -0.83 | -4.17 | 82.96 | 0.1706 | -0.7315 | -0.0003 |
| 259 | SLV 15 | -0.56 | -14.58 | 97.97 | 0.6085 | -0.5011 | -0.0004 |
| 259 | SLV 16 | -0.56 | -14.58 | 97.97 | 0.6085 | -0.5011 | -0.0004 |
| 260 | SLU 1 | 0 | 1.62 | 52.5 | -0.0265 | 0.0027 | 0 |
| 260 | SLU 2 | 0 | 1.73 | 51.98 | -0.0298 | 0.0029 | 0 |
| 260 | SLU 3 | 0.01 | 1.45 | 55.43 | -0.0194 | 0.0029 | 0 |
| 260 | SLU 4 | 0.01 | 1.51 | 55.12 | -0.0214 | 0.003 | 0 |
| 260 | SLU 5 | 0.01 | 1.51 | 54.45 | -0.0216 | 0.0031 | 0 |
| 260 | SLU 6 | 0.01 | 1.23 | 57.9 | -0.0113 | 0.003 | 0 |
| 260 | SLU 7 | 0.01 | 1.29 | 57.59 | -0.0133 | 0.0032 | 0 |
| 260 | SLU 8 | 0.01 | 1.18 | 57.44 | -0.0102 | 0.003 | 0 |
| 260 | SLU 9 | 0.01 | 1.25 | 57.13 | -0.0122 | 0.0031 | 0 |
| 260 | SLU 10 | 0.01 | 1.88 | 61.03 | -0.0298 | 0.0033 | 0 |
| 260 | SLU 11 | 0.01 | 1.59 | 64.48 | -0.0195 | 0.0033 | 0 |
| 260 | SLU 12 | 0.01 | 1.66 | 64.17 | -0.0214 | 0.0034 | 0 |
| 260 | SLU 13 | 0.01 | 1.66 | 63.5 | -0.0216 | 0.0035 | 0 |
| 260 | SLU 14 | 0.01 | 1.37 | 66.95 | -0.0113 | 0.0035 | 0 |
| 260 | SLU 15 | 0.01 | 1.44 | 66.64 | -0.0133 | 0.0036 | 0 |
| 260 | SLU 16 | 0.01 | 1.33 | 66.49 | -0.0102 | 0.0035 | 0 |
| 260 | SLU 17 | 0.01 | 1.39 | 66.18 | -0.0122 | 0.0036 | 0 |
| 260 | SLU 18 | 0.01 | 1.83 | 65.43 | -0.0265 | 0.0033 | 0 |
| 260 | SLU 19 | 0.01 | 1.9 | 65.12 | -0.0285 | 0.0034 | 0 |
| 260 | SLU 20 | 0.01 | 1.61 | 67.9 | -0.0184 | 0.0035 | 0 |
| 260 | SLU 21 | 0.01 | 1.68 | 67.59 | -0.0203 | 0.0036 | 0 |
| 260 | SLU 22 | 0.01 | 1.67 | 61.62 | -0.0236 | 0.0031 | 0 |
| 260 | SLU 23 | 0.01 | 1.78 | 61.11 | -0.0268 | 0.0034 | 0 |
| 260 | SLU 24 | 0.01 | 1.49 | 64.55 | -0.0165 | 0.0033 | 0 |
| 260 | SLU 25 | 0.01 | 1.56 | 64.24 | -0.0185 | 0.0035 | 0 |
| 260 | SLU 26 | 0.01 | 1.56 | 63.58 | -0.0187 | 0.0035 | 0 |
| 260 | SLU 27 | 0.01 | 1.27 | 67.03 | -0.0083 | 0.0035 | 0 |
| 260 | SLU 28 | 0.01 | 1.34 | 66.72 | -0.0103 | 0.0036 | 0 |
| 260 | SLU 29 | 0.01 | 1.23 | 66.57 | -0.0072 | 0.0035 | 0 |
| 260 | SLU 30 | 0.01 | 1.29 | 66.26 | -0.0092 | 0.0036 | 0 |
| 260 | SLU 31 | 0.01 | 1.92 | 70.16 | -0.0268 | 0.0038 | 0 |
| 260 | SLU 32 | 0.01 | 1.64 | 73.61 | -0.0165 | 0.0038 | 0 |
| 260 | SLU 33 | 0.01 | 1.7 | 73.3 | -0.0185 | 0.0039 | 0 |
| 260 | SLU 34 | 0.01 | 1.7 | 72.63 | -0.0187 | 0.004 | 0 |
| 260 | SLU 35 | 0.01 | 1.42 | 76.08 | -0.0083 | 0.0039 | 0 |
| 260 | SLU 36 | 0.01 | 1.48 | 75.77 | -0.0103 | 0.0041 | 0 |
| 260 | SLU 37 | 0.01 | 1.37 | 75.62 | -0.0072 | 0.0039 | 0 |
| 260 | SLU 38 | 0.01 | 1.44 | 75.31 | -0.0092 | 0.0041 | 0 |
| 260 | SLU 39 | 0.01 | 1.88 | 74.55 | -0.0236 | 0.0038 | 0 |
| 260 | SLU 40 | 0.01 | 1.94 | 74.24 | -0.0255 | 0.0039 | 0 |
| 260 | SLU 41 | 0.01 | 1.66 | 77.03 | -0.0154 | 0.0039 | 0 |
| 260 | SLU 42 | 0.01 | 1.72 | 76.72 | -0.0174 | 0.0041 | 0 |
| 260 | SLU 43 | 0.01 | 2.09 | 65.11 | -0.0355 | 0.0033 | 0 |
| 260 | SLU 44 | 0.01 | 2.2 | 64.6 | -0.0388 | 0.0035 | 0 |
| 260 | SLU 45 | 0.01 | 1.92 | 68.05 | -0.0284 | 0.0035 | 0 |
| 260 | SLU 46 | 0.01 | 1.98 | 67.74 | -0.0304 | 0.0036 | 0 |
| 260 | SLU 47 | 0.01 | 1.98 | 67.07 | -0.0306 | 0.0037 | 0 |
| 260 | SLU 48 | 0.01 | 1.7 | 70.52 | -0.0203 | 0.0037 | 0 |
| 260 | SLU 49 | 0.01 | 1.76 | 70.21 | -0.0222 | 0.0038 | 0 |
| 260 | SLU 50 | 0.01 | 1.65 | 70.06 | -0.0192 | 0.0037 | 0 |

| Nodo | Cont. | Reazione a traslazione | | | Reazione a rotazione | | |
|---|---|---|---|---|---|---|---|
| Ind. | N.br. | x | y | z | x | y | z |
| 260 | SLU 51 | 0.01 | 1.72 | 69.75 | -0.0211 | 0.0038 | 0 |
| 260 | SLU 52 | 0.01 | 2.35 | 73.65 | -0.0388 | 0.004 | 0 |
| 260 | SLU 53 | 0.01 | 2.06 | 77.1 | -0.0284 | 0.0039 | 0 |
| 260 | SLU 54 | 0.01 | 2.13 | 76.79 | -0.0304 | 0.0041 | 0 |
| 260 | SLU 55 | 0.01 | 2.13 | 76.12 | -0.0306 | 0.0041 | 0 |
| 260 | SLU 56 | 0.01 | 1.84 | 79.57 | -0.0203 | 0.0041 | 0 |
| 260 | SLU 57 | 0.01 | 1.91 | 79.26 | -0.0222 | 0.0042 | 0 |
| 260 | SLU 58 | 0.01 | 1.8 | 79.11 | -0.0192 | 0.0041 | 0 |
| 260 | SLU 59 | 0.01 | 1.86 | 78.8 | -0.0211 | 0.0042 | 0 |
| 260 | SLU 60 | 0.01 | 2.3 | 78.05 | -0.0355 | 0.0039 | 0 |
| 260 | SLU 61 | 0.01 | 2.37 | 77.74 | -0.0375 | 0.0041 | 0 |
| 260 | SLU 62 | 0.01 | 2.08 | 80.52 | -0.0273 | 0.0041 | 0 |
| 260 | SLU 63 | 0.01 | 2.15 | 80.21 | -0.0293 | 0.0042 | 0 |
| 260 | SLU 64 | 0.01 | 2.14 | 74.24 | -0.0325 | 0.0038 | 0 |
| 260 | SLU 65 | 0.01 | 2.25 | 73.73 | -0.0358 | 0.004 | 0 |
| 260 | SLU 66 | 0.01 | 1.96 | 77.17 | -0.0255 | 0.004 | 0 |
| 260 | SLU 67 | 0.01 | 2.03 | 76.86 | -0.0274 | 0.0041 | 0 |
| 260 | SLU 68 | 0.01 | 2.03 | 76.2 | -0.0276 | 0.0042 | 0 |
| 260 | SLU 69 | 0.01 | 1.74 | 79.64 | -0.0173 | 0.0041 | 0 |
| 260 | SLU 70 | 0.01 | 1.81 | 79.34 | -0.0193 | 0.0043 | 0 |
| 260 | SLU 71 | 0.01 | 1.7 | 79.19 | -0.0162 | 0.0041 | 0 |
| 260 | SLU 72 | 0.01 | 1.76 | 78.88 | -0.0182 | 0.0043 | 0 |
| 260 | SLU 73 | 0.01 | 2.4 | 82.78 | -0.0358 | 0.0044 | 0 |
| 260 | SLU 74 | 0.01 | 2.11 | 86.22 | -0.0255 | 0.0044 | 0 |
| 260 | SLU 75 | 0.01 | 2.17 | 85.92 | -0.0274 | 0.0045 | 0 |
| 260 | SLU 76 | 0.01 | 2.17 | 85.25 | -0.0276 | 0.0046 | 0 |
| 260 | SLU 77 | 0.01 | 1.89 | 88.7 | -0.0173 | 0.0046 | 0 |
| 260 | SLU 78 | 0.01 | 1.95 | 88.39 | -0.0193 | 0.0047 | 0 |
| 260 | SLU 79 | 0.01 | 1.84 | 88.24 | -0.0162 | 0.0046 | 0 |
| 260 | SLU 80 | 0.01 | 1.91 | 87.93 | -0.0182 | 0.0047 | 0 |
| 260 | SLU 81 | 0.01 | 2.35 | 87.17 | -0.0325 | 0.0044 | 0 |
| 260 | SLU 82 | 0.01 | 2.41 | 86.86 | -0.0345 | 0.0045 | 0 |
| 260 | SLU 83 | 0.01 | 2.13 | 89.65 | -0.0244 | 0.0046 | 0 |
| 260 | SLU 84 | 0.01 | 2.19 | 89.34 | -0.0263 | 0.0047 | 0 |
| 260 | SLE RA 1 | 0.01 | 1.64 | 55.1 | -0.0257 | 0.0028 | 0 |
| 260 | SLE RA 2 | 0.01 | 1.71 | 54.76 | -0.0279 | 0.0029 | 0 |
| 260 | SLE RA 3 | 0.01 | 1.52 | 57.06 | -0.021 | 0.0029 | 0 |
| 260 | SLE RA 4 | 0.01 | 1.56 | 56.85 | -0.0223 | 0.003 | 0 |
| 260 | SLE RA 5 | 0.01 | 1.56 | 56.41 | -0.0224 | 0.0031 | 0 |
| 260 | SLE RA 6 | 0.01 | 1.37 | 58.71 | -0.0155 | 0.003 | 0 |
| 260 | SLE RA 7 | 0.01 | 1.42 | 58.5 | -0.0168 | 0.0031 | 0 |
| 260 | SLE RA 8 | 0.01 | 1.34 | 58.4 | -0.0148 | 0.003 | 0 |
| 260 | SLE RA 9 | 0.01 | 1.39 | 58.19 | -0.0161 | 0.0031 | 0 |
| 260 | SLE RA 10 | 0.01 | 1.81 | 60.79 | -0.0279 | 0.0032 | 0 |
| 260 | SLE RA 11 | 0.01 | 1.61 | 63.09 | -0.021 | 0.0032 | 0 |
| 260 | SLE RA 12 | 0.01 | 1.66 | 62.89 | -0.0223 | 0.0033 | 0 |
| 260 | SLE RA 13 | 0.01 | 1.66 | 62.44 | -0.0224 | 0.0034 | 0 |
| 260 | SLE RA 14 | 0.01 | 1.47 | 64.74 | -0.0155 | 0.0033 | 0 |
| 260 | SLE RA 15 | 0.01 | 1.51 | 64.53 | -0.0168 | 0.0034 | 0 |
| 260 | SLE RA 16 | 0.01 | 1.44 | 64.43 | -0.0148 | 0.0033 | 0 |
| 260 | SLE RA 17 | 0.01 | 1.48 | 64.23 | -0.0161 | 0.0034 | 0 |
| 260 | SLE RA 18 | 0.01 | 1.77 | 63.72 | -0.0257 | 0.0032 | 0 |
| 260 | SLE RA 19 | 0.01 | 1.82 | 63.52 | -0.027 | 0.0033 | 0 |
| 260 | SLE RA 20 | 0.01 | 1.63 | 65.37 | -0.0202 | 0.0033 | 0 |
| 260 | SLE RA 21 | 0.01 | 1.67 | 65.17 | -0.0215 | 0.0034 | 0 |
| 260 | SLE FR 1 | 0.01 | 1.64 | 55.1 | -0.0257 | 0.0028 | 0 |
| 260 | SLE FR 2 | 0.01 | 1.65 | 55.03 | -0.0261 | 0.0028 | 0 |
| 260 | SLE FR 3 | 0.01 | 1.58 | 55.76 | -0.0235 | 0.0028 | 0 |
| 260 | SLE FR 4 | 0.01 | 1.69 | 57.62 | -0.0261 | 0.003 | 0 |
| 260 | SLE FR 5 | 0.01 | 1.62 | 58.35 | -0.0235 | 0.003 | 0 |
| 260 | SLE FR 6 | 0.01 | 1.71 | 59.41 | -0.0257 | 0.003 | 0 |
| 260 | SLE QP 1 | 0.01 | 1.64 | 55.1 | -0.0257 | 0.0028 | 0 |
| 260 | SLE QP 2 | 0.01 | 1.68 | 57.69 | -0.0257 | 0.0029 | 0 |
| 260 | SLD 1 | 0.2 | 5.77 | 58.06 | -0.1531 | 0.1797 | 0.0001 |
| 260 | SLD 2 | 0.2 | 5.77 | 58.06 | -0.1531 | 0.1797 | 0.0001 |
| 260 | SLD 3 | 0.16 | 1.36 | 60.78 | -0.0171 | 0.2207 | 0.0001 |
| 260 | SLD 4 | 0.16 | 1.36 | 60.78 | -0.0171 | 0.2207 | 0.0001 |
| 260 | SLD 5 | 0.12 | 9.6 | 53.67 | -0.2701 | -0.0062 | 0 |
| 260 | SLD 6 | 0.12 | 9.6 | 53.67 | -0.2701 | -0.0062 | 0 |
| 260 | SLD 7 | 0 | -5.11 | 62.75 | 0.1832 | 0.1304 | 0 |
| 260 | SLD 8 | 0 | -5.11 | 62.75 | 0.1832 | 0.1304 | 0 |
| 260 | SLD 9 | 0.01 | 8.47 | 52.63 | -0.2345 | -0.1246 | 0 |
| 260 | SLD 10 | 0.01 | 8.47 | 52.63 | -0.2345 | -0.1246 | 0 |
| 260 | SLD 11 | -0.11 | -6.24 | 61.71 | 0.2188 | 0.0121 | -0.0001 |
| 260 | SLD 12 | -0.11 | -6.24 | 61.71 | 0.2188 | 0.0121 | -0.0001 |
| 260 | SLD 13 | -0.15 | 1.99 | 54.59 | -0.0343 | -0.2148 | -0.0001 |
| 260 | SLD 14 | -0.15 | 1.99 | 54.59 | -0.0343 | -0.2148 | -0.0001 |
| 260 | SLD 15 | -0.19 | -2.42 | 57.32 | 0.1017 | -0.1738 | -0.0001 |
| 260 | SLD 16 | -0.19 | -2.42 | 57.32 | 0.1017 | -0.1738 | -0.0001 |
| 260 | SLV 1 | 0.5 | 11.23 | 58.56 | -0.3229 | 0.4505 | 0.0002 |
| 260 | SLV 2 | 0.5 | 11.23 | 58.56 | -0.3229 | 0.4505 | 0.0002 |
| 260 | SLV 3 | 0.4 | 0.95 | 65.06 | -0.006 | 0.5554 | 0.0002 |
| 260 | SLV 4 | 0.4 | 0.95 | 65.06 | -0.006 | 0.5554 | 0.0002 |
| 260 | SLV 5 | 0.3 | 20.13 | 48.1 | -0.5954 | -0.0218 | 0.0001 |
| 260 | SLV 6 | 0.3 | 20.13 | 48.1 | -0.5954 | -0.0218 | 0.0001 |
| 260 | SLV 7 | -0.02 | -14.13 | 69.75 | 0.4608 | 0.3277 | 0 |
| 260 | SLV 8 | -0.02 | -14.13 | 69.75 | 0.4608 | 0.3277 | 0 |
| 260 | SLV 9 | 0.03 | 17.49 | 45.63 | -0.5122 | -0.3218 | 0 |

| Nodo | Cont. | Reazione a traslazione | | | Reazione a rotazione | | |
|---|---|---|---|---|---|---|---|
| Ind. | N.br. | x | y | z | x | y | z |
| 260 | SLV 10 | 0.03 | 17.49 | 45.63 | -0.5122 | -0.3218 | 0 |
| 260 | SLV 11 | -0.29 | -16.78 | 67.28 | 0.5441 | 0.0277 | -0.0001 |
| 260 | SLV 12 | -0.29 | -16.78 | 67.28 | 0.5441 | 0.0277 | -0.0001 |
| 260 | SLV 13 | -0.39 | 2.41 | 50.32 | -0.0453 | -0.5495 | -0.0002 |
| 260 | SLV 14 | -0.39 | 2.41 | 50.32 | -0.0453 | -0.5495 | -0.0002 |
| 260 | SLV 15 | -0.49 | -7.87 | 56.82 | 0.2716 | -0.4446 | -0.0002 |
| 260 | SLV 16 | -0.49 | -7.87 | 56.82 | 0.2716 | -0.4446 | -0.0002 |
| 261 | SLU 1 | 0 | -4.65 | 49.06 | 0.2324 | -0.0032 | 0 |
| 261 | SLU 2 | -0.01 | -4.58 | 48.8 | 0.2294 | -0.0034 | 0 |
| 261 | SLU 3 | 0 | -4.63 | 50.15 | 0.2286 | -0.0031 | 0 |
| 261 | SLU 4 | 0 | -4.58 | 49.99 | 0.2268 | -0.0032 | 0 |
| 261 | SLU 5 | 0 | -4.42 | 49.11 | 0.2182 | -0.0032 | 0 |
| 261 | SLU 6 | 0 | -4.47 | 50.46 | 0.2174 | -0.0029 | 0 |
| 261 | SLU 7 | 0 | -4.42 | 50.31 | 0.2156 | -0.0031 | 0 |
| 261 | SLU 8 | 0 | -4.33 | 49.68 | 0.21 | -0.0028 | 0 |
| 261 | SLU 9 | 0 | -4.29 | 49.53 | 0.2082 | -0.003 | 0 |
| 261 | SLU 10 | -0.01 | -5.58 | 57.37 | 0.2784 | -0.0041 | 0 |
| 261 | SLU 11 | -0.01 | -5.63 | 58.71 | 0.2775 | -0.0038 | 0 |
| 261 | SLU 12 | -0.01 | -5.59 | 58.56 | 0.2758 | -0.004 | 0 |
| 261 | SLU 13 | -0.01 | -5.42 | 57.68 | 0.2672 | -0.0039 | 0 |
| 261 | SLU 14 | -0.01 | -5.47 | 59.03 | 0.2663 | -0.0036 | 0 |
| 261 | SLU 15 | -0.01 | -5.43 | 58.87 | 0.2645 | -0.0038 | 0 |
| 261 | SLU 16 | -0.01 | -5.34 | 58.25 | 0.259 | -0.0035 | 0 |
| 261 | SLU 17 | -0.01 | -5.29 | 58.1 | 0.2572 | -0.0037 | 0 |
| 261 | SLU 18 | -0.01 | -6.08 | 61.29 | 0.3024 | -0.0042 | 0 |
| 261 | SLU 19 | -0.01 | -6.04 | 61.14 | 0.3006 | -0.0044 | 0 |
| 261 | SLU 20 | -0.01 | -5.93 | 61.61 | 0.2912 | -0.004 | 0 |
| 261 | SLU 21 | -0.01 | -5.88 | 61.46 | 0.2894 | -0.0042 | 0 |
| 261 | SLU 22 | -0.01 | -5.45 | 56.85 | 0.2705 | -0.0038 | 0 |
| 261 | SLU 23 | -0.01 | -5.38 | 56.59 | 0.2675 | -0.004 | 0 |
| 261 | SLU 24 | -0.01 | -5.43 | 57.94 | 0.2666 | -0.0037 | 0 |
| 261 | SLU 25 | -0.01 | -5.38 | 57.78 | 0.2648 | -0.0038 | 0 |
| 261 | SLU 26 | -0.01 | -5.22 | 56.9 | 0.2563 | -0.0038 | 0 |
| 261 | SLU 27 | -0.01 | -5.27 | 58.25 | 0.2554 | -0.0035 | 0 |
| 261 | SLU 28 | -0.01 | -5.23 | 58.1 | 0.2536 | -0.0036 | 0 |
| 261 | SLU 29 | -0.01 | -5.14 | 57.48 | 0.2481 | -0.0034 | 0 |
| 261 | SLU 30 | -0.01 | -5.09 | 57.32 | 0.2463 | -0.0035 | 0 |
| 261 | SLU 31 | -0.01 | -6.38 | 65.16 | 0.3165 | -0.0047 | 0 |
| 261 | SLU 32 | -0.01 | -6.43 | 66.5 | 0.3156 | -0.0044 | 0 |
| 261 | SLU 33 | -0.01 | -6.39 | 66.35 | 0.3138 | -0.0045 | 0 |
| 261 | SLU 34 | -0.01 | -6.23 | 65.47 | 0.3053 | -0.0045 | 0 |
| 261 | SLU 35 | -0.01 | -6.27 | 66.82 | 0.3044 | -0.0042 | 0 |
| 261 | SLU 36 | -0.01 | -6.23 | 66.66 | 0.3026 | -0.0043 | 0 |
| 261 | SLU 37 | -0.01 | -6.14 | 66.04 | 0.297 | -0.0041 | 0 |
| 261 | SLU 38 | -0.01 | -6.1 | 65.89 | 0.2952 | -0.0042 | 0 |
| 261 | SLU 39 | -0.01 | -6.89 | 69.09 | 0.3404 | -0.0048 | 0 |
| 261 | SLU 40 | -0.01 | -6.84 | 68.93 | 0.3387 | -0.0049 | 0 |
| 261 | SLU 41 | -0.01 | -6.73 | 69.4 | 0.3292 | -0.0046 | 0 |
| 261 | SLU 42 | -0.01 | -6.68 | 69.25 | 0.3274 | -0.0047 | 0 |
| 261 | SLU 43 | -0.01 | -5.77 | 61.1 | 0.2891 | -0.004 | 0 |
| 261 | SLU 44 | -0.01 | -5.7 | 60.84 | 0.2861 | -0.0042 | 0 |
| 261 | SLU 45 | -0.01 | -5.74 | 62.19 | 0.2853 | -0.0039 | 0 |
| 261 | SLU 46 | -0.01 | -5.7 | 62.04 | 0.2835 | -0.004 | 0 |
| 261 | SLU 47 | -0.01 | -5.54 | 61.16 | 0.2749 | -0.004 | 0 |
| 261 | SLU 48 | -0.01 | -5.59 | 62.51 | 0.274 | -0.0037 | 0 |
| 261 | SLU 49 | -0.01 | -5.54 | 62.35 | 0.2723 | -0.0038 | 0 |
| 261 | SLU 50 | -0.01 | -5.45 | 61.73 | 0.2667 | -0.0036 | 0 |
| 261 | SLU 51 | -0.01 | -5.41 | 61.58 | 0.2649 | -0.0037 | 0 |
| 261 | SLU 52 | -0.01 | -6.7 | 69.41 | 0.3351 | -0.0049 | 0 |
| 261 | SLU 53 | -0.01 | -6.75 | 70.76 | 0.3342 | -0.0046 | 0 |
| 261 | SLU 54 | -0.01 | -6.71 | 70.6 | 0.3324 | -0.0047 | 0 |
| 261 | SLU 55 | -0.01 | -6.54 | 69.73 | 0.3239 | -0.0047 | 0 |
| 261 | SLU 56 | -0.01 | -6.59 | 71.07 | 0.323 | -0.0044 | 0 |
| 261 | SLU 57 | -0.01 | -6.55 | 70.92 | 0.3212 | -0.0045 | 0 |
| 261 | SLU 58 | -0.01 | -6.46 | 70.3 | 0.3156 | -0.0043 | 0 |
| 261 | SLU 59 | -0.01 | -6.41 | 70.14 | 0.3139 | -0.0044 | 0 |
| 261 | SLU 60 | -0.01 | -7.2 | 73.34 | 0.3591 | -0.005 | 0 |
| 261 | SLU 61 | -0.01 | -7.16 | 73.19 | 0.3573 | -0.0051 | 0 |
| 261 | SLU 62 | -0.01 | -7.05 | 73.66 | 0.3479 | -0.0048 | 0 |
| 261 | SLU 63 | -0.01 | -7 | 73.5 | 0.3461 | -0.0049 | 0 |
| 261 | SLU 64 | -0.01 | -6.57 | 68.89 | 0.3272 | -0.0045 | 0 |
| 261 | SLU 65 | -0.01 | -6.5 | 68.63 | 0.3242 | -0.0047 | 0 |
| 261 | SLU 66 | -0.01 | -6.55 | 69.98 | 0.3233 | -0.0044 | 0 |
| 261 | SLU 67 | -0.01 | -6.5 | 69.83 | 0.3215 | -0.0046 | 0 |
| 261 | SLU 68 | -0.01 | -6.34 | 68.95 | 0.313 | -0.0045 | 0 |
| 261 | SLU 69 | -0.01 | -6.39 | 70.3 | 0.3121 | -0.0042 | 0 |
| 261 | SLU 70 | -0.01 | -6.35 | 70.14 | 0.3103 | -0.0044 | 0 |
| 261 | SLU 71 | -0.01 | -6.26 | 69.52 | 0.3047 | -0.0041 | 0 |
| 261 | SLU 72 | -0.01 | -6.21 | 69.37 | 0.3029 | -0.0043 | 0 |
| 261 | SLU 73 | -0.01 | -7.5 | 77.2 | 0.3732 | -0.0055 | 0 |
| 261 | SLU 74 | -0.01 | -7.55 | 78.55 | 0.3723 | -0.0052 | 0 |
| 261 | SLU 75 | -0.01 | -7.51 | 78.4 | 0.3705 | -0.0053 | 0 |
| 261 | SLU 76 | -0.01 | -7.35 | 77.52 | 0.3619 | -0.0053 | 0 |
| 261 | SLU 77 | -0.01 | -7.39 | 78.86 | 0.3611 | -0.005 | 0 |
| 261 | SLU 78 | -0.01 | -7.35 | 78.71 | 0.3593 | -0.0051 | 0 |
| 261 | SLU 79 | -0.01 | -7.26 | 78.09 | 0.3537 | -0.0049 | 0 |
| 261 | SLU 80 | -0.01 | -7.22 | 77.93 | 0.3519 | -0.005 | 0 |
| 261 | SLU 81 | -0.01 | -8.01 | 81.13 | 0.3971 | -0.0055 | 0 |

| Nodo | Cont. | Reazione a traslazione | | | Reazione a rotazione | | |
|---|---|---|---|---|---|---|---|
| Ind. | N.br. | x | y | z | x | y | z |
| 261 | SLU 82 | -0.01 | -7.96 | 80.98 | 0.3953 | -0.0057 | 0 |
| 261 | SLU 83 | -0.01 | -7.85 | 81.45 | 0.3859 | -0.0054 | 0 |
| 261 | SLU 84 | -0.01 | -7.8 | 81.29 | 0.3841 | -0.0055 | 0 |
| 261 | SLE RA 1 | -0.01 | -4.88 | 51.28 | 0.2433 | -0.0034 | 0 |
| 261 | SLE RA 2 | -0.01 | -4.83 | 51.11 | 0.2413 | -0.0035 | 0 |
| 261 | SLE RA 3 | -0.01 | -4.86 | 52.01 | 0.2407 | -0.0033 | 0 |
| 261 | SLE RA 4 | -0.01 | -4.83 | 51.91 | 0.2395 | -0.0034 | 0 |
| 261 | SLE RA 5 | -0.01 | -4.73 | 51.32 | 0.2338 | -0.0034 | 0 |
| 261 | SLE RA 6 | -0.01 | -4.76 | 52.22 | 0.2333 | -0.0032 | 0 |
| 261 | SLE RA 7 | -0.01 | -4.73 | 52.11 | 0.2321 | -0.0033 | 0 |
| 261 | SLE RA 8 | 0 | -4.67 | 51.7 | 0.2284 | -0.0031 | 0 |
| 261 | SLE RA 9 | 0 | -4.64 | 51.6 | 0.2272 | -0.0032 | 0 |
| 261 | SLE RA 10 | -0.01 | -5.5 | 56.82 | 0.274 | -0.004 | 0 |
| 261 | SLE RA 11 | -0.01 | -5.53 | 57.72 | 0.2734 | -0.0038 | 0 |
| 261 | SLE RA 12 | -0.01 | -5.5 | 57.62 | 0.2722 | -0.0039 | 0 |
| 261 | SLE RA 13 | -0.01 | -5.4 | 57.03 | 0.2665 | -0.0039 | 0 |
| 261 | SLE RA 14 | -0.01 | -5.43 | 57.93 | 0.2659 | -0.0037 | 0 |
| 261 | SLE RA 15 | -0.01 | -5.4 | 57.83 | 0.2647 | -0.0037 | 0 |
| 261 | SLE RA 16 | -0.01 | -5.34 | 57.41 | 0.261 | -0.0036 | 0 |
| 261 | SLE RA 17 | -0.01 | -5.31 | 57.31 | 0.2598 | -0.0037 | 0 |
| 261 | SLE RA 18 | -0.01 | -5.84 | 59.44 | 0.2899 | -0.004 | 0 |
| 261 | SLE RA 19 | -0.01 | -5.81 | 59.34 | 0.2887 | -0.0041 | 0 |
| 261 | SLE RA 20 | -0.01 | -5.73 | 59.65 | 0.2825 | -0.0039 | 0 |
| 261 | SLE RA 21 | -0.01 | -5.7 | 59.55 | 0.2813 | -0.004 | 0 |
| 261 | SLE FR 1 | -0.01 | -4.88 | 51.28 | 0.2433 | -0.0034 | 0 |
| 261 | SLE FR 2 | -0.01 | -4.87 | 51.25 | 0.2429 | -0.0034 | 0 |
| 261 | SLE FR 3 | -0.01 | -4.84 | 51.37 | 0.2403 | -0.0033 | 0 |
| 261 | SLE FR 4 | -0.01 | -5.16 | 53.69 | 0.2569 | -0.0036 | 0 |
| 261 | SLE FR 5 | -0.01 | -5.12 | 53.81 | 0.2543 | -0.0035 | 0 |
| 261 | SLE FR 6 | -0.01 | -5.36 | 55.36 | 0.2666 | -0.0037 | 0 |
| 261 | SLE QP 1 | -0.01 | -4.88 | 51.28 | 0.2433 | -0.0034 | 0 |
| 261 | SLE QP 2 | -0.01 | -5.17 | 53.73 | 0.2573 | -0.0036 | 0 |
| 261 | SLD 1 | 0.21 | -5.01 | 53.28 | 0.2431 | 0.1997 | -0.0006 |
| 261 | SLD 2 | 0.21 | -5.01 | 53.28 | 0.2431 | 0.1997 | -0.0006 |
| 261 | SLD 3 | 0.18 | -9.44 | 64.45 | 0.4885 | 0.1713 | -0.0006 |
| 261 | SLD 4 | 0.18 | -9.44 | 64.45 | 0.4885 | 0.1713 | -0.0006 |
| 261 | SLD 5 | 0.1 | 1.59 | 36.66 | -0.1191 | 0.1006 | -0.0003 |
| 261 | SLD 6 | 0.1 | 1.59 | 36.66 | -0.1191 | 0.1006 | -0.0003 |
| 261 | SLD 7 | 0 | -13.16 | 73.88 | 0.6988 | 0.0058 | 0 |
| 261 | SLD 8 | 0 | -13.16 | 73.88 | 0.6988 | 0.0058 | 0 |
| 261 | SLD 9 | -0.02 | 2.82 | 33.58 | -0.1842 | -0.0129 | 0.0001 |
| 261 | SLD 10 | -0.02 | 2.82 | 33.58 | -0.1842 | -0.0129 | 0.0001 |
| 261 | SLD 11 | -0.11 | -11.92 | 70.8 | 0.6337 | -0.1077 | 0.0004 |
| 261 | SLD 12 | -0.11 | -11.92 | 70.8 | 0.6337 | -0.1077 | 0.0004 |
| 261 | SLD 13 | -0.19 | -0.9 | 43.01 | 0.0261 | -0.1784 | 0.0006 |
| 261 | SLD 14 | -0.19 | -0.9 | 43.01 | 0.0261 | -0.1784 | 0.0006 |
| 261 | SLD 15 | -0.22 | -5.32 | 54.18 | 0.2715 | -0.2069 | 0.0007 |
| 261 | SLD 16 | -0.22 | -5.32 | 54.18 | 0.2715 | -0.2069 | 0.0007 |
| 261 | SLV 1 | 0.52 | -4.81 | 52.63 | 0.2243 | 0.5116 | -0.0016 |
| 261 | SLV 2 | 0.52 | -4.81 | 52.63 | 0.2243 | 0.5116 | -0.0016 |
| 261 | SLV 3 | 0.45 | -15.22 | 79.04 | 0.8018 | 0.439 | -0.0014 |
| 261 | SLV 4 | 0.45 | -15.22 | 79.04 | 0.8018 | 0.439 | -0.0014 |
| 261 | SLV 5 | 0.27 | 10.73 | 13.34 | -0.6285 | 0.2612 | -0.0008 |
| 261 | SLV 6 | 0.27 | 10.73 | 13.34 | -0.6285 | 0.2612 | -0.0008 |
| 261 | SLV 7 | 0.02 | -23.97 | 101.38 | 1.2966 | 0.019 | -0.0001 |
| 261 | SLV 8 | 0.02 | -23.97 | 101.38 | 1.2966 | 0.019 | -0.0001 |
| 261 | SLV 9 | -0.03 | 13.64 | 6.08 | -0.782 | -0.0261 | 0.0001 |
| 261 | SLV 10 | -0.03 | 13.64 | 6.08 | -0.782 | -0.0261 | 0.0001 |
| 261 | SLV 11 | -0.28 | -21.06 | 94.11 | 1.1431 | -0.2683 | 0.0009 |
| 261 | SLV 12 | -0.28 | -21.06 | 94.11 | 1.1431 | -0.2683 | 0.0009 |
| 261 | SLV 13 | -0.46 | 4.89 | 28.41 | -0.2872 | -0.4461 | 0.0014 |
| 261 | SLV 14 | -0.46 | 4.89 | 28.41 | -0.2872 | -0.4461 | 0.0014 |
| 261 | SLV 15 | -0.53 | -5.52 | 54.82 | 0.2903 | -0.5188 | 0.0017 |
| 261 | SLV 16 | -0.53 | -5.52 | 54.82 | 0.2903 | -0.5188 | 0.0017 |
| 262 | SLU 1 | 0 | -3 | 13.03 | 0.1617 | 0.0005 | 0 |
| 262 | SLU 2 | 0 | -2.99 | 13.03 | 0.1612 | 0.0004 | 0 |
| 262 | SLU 3 | 0 | -3.12 | 13.01 | 0.1686 | 0.0005 | 0 |
| 262 | SLU 4 | 0 | -3.11 | 13.01 | 0.1683 | 0.0005 | 0 |
| 262 | SLU 5 | 0 | -3.06 | 13.02 | 0.1654 | 0.0005 | 0 |
| 262 | SLU 6 | 0 | -3.19 | 13 | 0.1728 | 0.0006 | 0 |
| 262 | SLU 7 | 0 | -3.19 | 13 | 0.1725 | 0.0005 | 0 |
| 262 | SLU 8 | 0 | -3.14 | 13.01 | 0.1701 | 0.0006 | 0 |
| 262 | SLU 9 | 0 | -3.14 | 13.01 | 0.1698 | 0.0005 | 0 |
| 262 | SLU 10 | 0 | -3.59 | 16.75 | 0.1916 | 0.0005 | 0 |
| 262 | SLU 11 | 0 | -3.72 | 16.73 | 0.199 | 0.0006 | 0 |
| 262 | SLU 12 | 0 | -3.72 | 16.73 | 0.1988 | 0.0006 | 0 |
| 262 | SLU 13 | 0 | -3.67 | 16.74 | 0.1959 | 0.0006 | 0 |
| 262 | SLU 14 | 0 | -3.8 | 16.72 | 0.2033 | 0.0007 | 0 |
| 262 | SLU 15 | 0 | -3.79 | 16.72 | 0.203 | 0.0006 | 0 |
| 262 | SLU 16 | 0 | -3.75 | 16.72 | 0.2005 | 0.0007 | 0 |
| 262 | SLU 17 | 0 | -3.74 | 16.72 | 0.2003 | 0.0006 | 0 |
| 262 | SLU 18 | 0 | -3.86 | 18.34 | 0.2052 | 0.0006 | 0 |
| 262 | SLU 19 | 0 | -3.85 | 18.34 | 0.2049 | 0.0006 | 0 |
| 262 | SLU 20 | 0 | -3.93 | 18.33 | 0.2094 | 0.0006 | 0 |
| 262 | SLU 21 | 0 | -3.93 | 18.33 | 0.2091 | 0.0006 | 0 |
| 262 | SLU 22 | 0 | -3.55 | 15.74 | 0.1905 | 0.0006 | 0 |
| 262 | SLU 23 | 0 | -3.54 | 15.74 | 0.19 | 0.0005 | 0 |
| 262 | SLU 24 | 0 | -3.67 | 15.73 | 0.1975 | 0.0006 | 0 |

| Nodo | Cont. | Reazione a traslazione | | | Reazione a rotazione | | |
|---|---|---|---|---|---|---|---|
| Ind. | N.br. | x | y | z | x | y | z |
| 262 | SLU 25 | 0 | -3.67 | 15.73 | 0.1972 | 0.0006 | 0 |
| 262 | SLU 26 | 0 | -3.62 | 15.73 | 0.1943 | 0.0006 | 0 |
| 262 | SLU 27 | 0 | -3.75 | 15.72 | 0.2017 | 0.0007 | 0 |
| 262 | SLU 28 | 0 | -3.74 | 15.72 | 0.2014 | 0.0006 | 0 |
| 262 | SLU 29 | 0 | -3.7 | 15.72 | 0.199 | 0.0007 | 0 |
| 262 | SLU 30 | 0 | -3.7 | 15.72 | 0.1987 | 0.0006 | 0 |
| 262 | SLU 31 | 0 | -4.15 | 19.46 | 0.2205 | 0.0006 | 0 |
| 262 | SLU 32 | 0 | -4.28 | 19.45 | 0.2279 | 0.0007 | 0 |
| 262 | SLU 33 | 0 | -4.27 | 19.45 | 0.2276 | 0.0007 | 0 |
| 262 | SLU 34 | 0 | -4.22 | 19.45 | 0.2247 | 0.0007 | 0 |
| 262 | SLU 35 | 0 | -4.35 | 19.43 | 0.2321 | 0.0008 | 0 |
| 262 | SLU 36 | 0 | -4.35 | 19.43 | 0.2318 | 0.0007 | 0 |
| 262 | SLU 37 | 0 | -4.31 | 19.44 | 0.2294 | 0.0008 | 0 |
| 262 | SLU 38 | 0 | -4.3 | 19.44 | 0.2291 | 0.0007 | 0 |
| 262 | SLU 39 | 0 | -4.42 | 21.06 | 0.234 | 0.0007 | 0 |
| 262 | SLU 40 | 0 | -4.41 | 21.06 | 0.2337 | 0.0007 | 0 |
| 262 | SLU 41 | 0 | -4.49 | 21.04 | 0.2382 | 0.0007 | 0 |
| 262 | SLU 42 | 0 | -4.49 | 21.04 | 0.238 | 0.0007 | 0 |
| 262 | SLU 43 | 0 | -3.7 | 16.01 | 0.2003 | 0.0006 | 0 |
| 262 | SLU 44 | 0 | -3.69 | 16.01 | 0.1998 | 0.0005 | 0 |
| 262 | SLU 45 | 0 | -3.82 | 15.99 | 0.2072 | 0.0006 | 0 |
| 262 | SLU 46 | 0 | -3.82 | 15.99 | 0.2069 | 0.0006 | 0 |
| 262 | SLU 47 | 0 | -3.77 | 16 | 0.204 | 0.0006 | 0 |
| 262 | SLU 48 | 0 | -3.9 | 15.98 | 0.2114 | 0.0007 | 0 |
| 262 | SLU 49 | 0 | -3.89 | 15.98 | 0.2111 | 0.0006 | 0 |
| 262 | SLU 50 | 0 | -3.85 | 15.99 | 0.2087 | 0.0007 | 0 |
| 262 | SLU 51 | 0 | -3.85 | 15.99 | 0.2084 | 0.0007 | 0 |
| 262 | SLU 52 | 0 | -4.3 | 19.73 | 0.2302 | 0.0006 | 0 |
| 262 | SLU 53 | 0 | -4.43 | 19.71 | 0.2376 | 0.0007 | 0 |
| 262 | SLU 54 | 0 | -4.42 | 19.71 | 0.2374 | 0.0007 | 0 |
| 262 | SLU 55 | 0 | -4.37 | 19.72 | 0.2345 | 0.0007 | 0 |
| 262 | SLU 56 | 0 | -4.5 | 19.7 | 0.2419 | 0.0008 | 0 |
| 262 | SLU 57 | 0 | -4.5 | 19.7 | 0.2416 | 0.0007 | 0 |
| 262 | SLU 58 | 0 | -4.46 | 19.7 | 0.2391 | 0.0008 | 0 |
| 262 | SLU 59 | 0 | -4.45 | 19.7 | 0.2389 | 0.0007 | 0 |
| 262 | SLU 60 | 0 | -4.57 | 21.32 | 0.2438 | 0.0007 | 0 |
| 262 | SLU 61 | 0 | -4.56 | 21.32 | 0.2435 | 0.0007 | 0 |
| 262 | SLU 62 | 0 | -4.64 | 21.31 | 0.248 | 0.0008 | 0 |
| 262 | SLU 63 | 0 | -4.64 | 21.31 | 0.2477 | 0.0007 | 0 |
| 262 | SLU 64 | 0 | -4.26 | 18.72 | 0.2291 | 0.0007 | 0 |
| 262 | SLU 65 | 0 | -4.25 | 18.72 | 0.2286 | 0.0006 | 0 |
| 262 | SLU 66 | 0 | -4.38 | 18.71 | 0.2361 | 0.0007 | 0 |
| 262 | SLU 67 | 0 | -4.38 | 18.71 | 0.2358 | 0.0007 | 0 |
| 262 | SLU 68 | 0 | -4.33 | 18.71 | 0.2329 | 0.0007 | 0 |
| 262 | SLU 69 | 0 | -4.46 | 18.69 | 0.2403 | 0.0008 | 0 |
| 262 | SLU 70 | 0 | -4.45 | 18.69 | 0.24 | 0.0007 | 0 |
| 262 | SLU 71 | 0 | -4.41 | 18.7 | 0.2376 | 0.0008 | 0 |
| 262 | SLU 72 | 0 | -4.4 | 18.7 | 0.2373 | 0.0008 | 0 |
| 262 | SLU 73 | 0 | -4.86 | 22.44 | 0.2591 | 0.0007 | 0 |
| 262 | SLU 74 | 0 | -4.99 | 22.43 | 0.2665 | 0.0008 | 0 |
| 262 | SLU 75 | 0 | -4.98 | 22.43 | 0.2662 | 0.0008 | 0 |
| 262 | SLU 76 | 0 | -4.93 | 22.43 | 0.2633 | 0.0008 | 0 |
| 262 | SLU 77 | 0 | -5.06 | 22.41 | 0.2707 | 0.0009 | 0 |
| 262 | SLU 78 | 0 | -5.06 | 22.41 | 0.2704 | 0.0008 | 0 |
| 262 | SLU 79 | 0 | -5.01 | 22.42 | 0.268 | 0.0009 | 0 |
| 262 | SLU 80 | 0 | -5.01 | 22.42 | 0.2677 | 0.0008 | 0 |
| 262 | SLU 81 | 0 | -5.12 | 24.04 | 0.2726 | 0.0008 | 0 |
| 262 | SLU 82 | 0 | -5.12 | 24.04 | 0.2723 | 0.0008 | 0 |
| 262 | SLU 83 | 0 | -5.2 | 24.02 | 0.2768 | 0.0009 | 0 |
| 262 | SLU 84 | 0 | -5.19 | 24.02 | 0.2766 | 0.0008 | 0 |
| 262 | SLE RA 1 | 0 | -3.15 | 13.81 | 0.1699 | 0.0005 | 0 |
| 262 | SLE RA 2 | 0 | -3.15 | 13.81 | 0.1696 | 0.0005 | 0 |
| 262 | SLE RA 3 | 0 | -3.24 | 13.8 | 0.1745 | 0.0005 | 0 |
| 262 | SLE RA 4 | 0 | -3.23 | 13.8 | 0.1743 | 0.0005 | 0 |
| 262 | SLE RA 5 | 0 | -3.2 | 13.8 | 0.1724 | 0.0005 | 0 |
| 262 | SLE RA 6 | 0 | -3.29 | 13.79 | 0.1773 | 0.0006 | 0 |
| 262 | SLE RA 7 | 0 | -3.28 | 13.79 | 0.1771 | 0.0005 | 0 |
| 262 | SLE RA 8 | 0 | -3.25 | 13.79 | 0.1755 | 0.0006 | 0 |
| 262 | SLE RA 9 | 0 | -3.25 | 13.79 | 0.1753 | 0.0006 | 0 |
| 262 | SLE RA 10 | 0 | -3.55 | 16.29 | 0.1899 | 0.0005 | 0 |
| 262 | SLE RA 11 | 0 | -3.64 | 16.27 | 0.1948 | 0.0006 | 0 |
| 262 | SLE RA 12 | 0 | -3.64 | 16.27 | 0.1946 | 0.0006 | 0 |
| 262 | SLE RA 13 | 0 | -3.6 | 16.28 | 0.1927 | 0.0006 | 0 |
| 262 | SLE RA 14 | 0 | -3.69 | 16.27 | 0.1976 | 0.0006 | 0 |
| 262 | SLE RA 15 | 0 | -3.69 | 16.27 | 0.1974 | 0.0006 | 0 |
| 262 | SLE RA 16 | 0 | -3.66 | 16.27 | 0.1958 | 0.0006 | 0 |
| 262 | SLE RA 17 | 0 | -3.65 | 16.27 | 0.1956 | 0.0006 | 0 |
| 262 | SLE RA 18 | 0 | -3.73 | 17.35 | 0.1989 | 0.0006 | 0 |
| 262 | SLE RA 19 | 0 | -3.73 | 17.35 | 0.1987 | 0.0006 | 0 |
| 262 | SLE RA 20 | 0 | -3.78 | 17.34 | 0.2017 | 0.0006 | 0 |
| 262 | SLE RA 21 | 0 | -3.78 | 17.34 | 0.2015 | 0.0006 | 0 |
| 262 | SLE FR 1 | 0 | -3.15 | 13.81 | 0.1699 | 0.0005 | 0 |
| 262 | SLE FR 2 | 0 | -3.15 | 13.81 | 0.1698 | 0.0005 | 0 |
| 262 | SLE FR 3 | 0 | -3.17 | 13.8 | 0.171 | 0.0005 | 0 |
| 262 | SLE FR 4 | 0 | -3.33 | 14.87 | 0.1785 | 0.0005 | 0 |
| 262 | SLE FR 5 | 0 | -3.35 | 14.87 | 0.1797 | 0.0005 | 0 |
| 262 | SLE FR 6 | 0 | -3.44 | 15.58 | 0.1844 | 0.0005 | 0 |
| 262 | SLE QP 1 | 0 | -3.15 | 13.81 | 0.1699 | 0.0005 | 0 |

| Nodo | Cont. | Reazione a traslazione | | | Reazione a rotazione | | |
|---|---|---|---|---|---|---|---|
| Ind. | N.br. | x | y | z | x | y | z |
| 262 | SLE QP 2 | 0 | -3.33 | 14.87 | 0.1786 | 0.0005 | 0 |
| 262 | SLD 1 | 0.34 | 0.06 | 15.14 | 0.0901 | 0.394 | 0.0015 |
| 262 | SLD 2 | 0.34 | 0.06 | 15.14 | 0.0901 | 0.394 | 0.0015 |
| 262 | SLD 3 | 0.36 | -5.04 | 14.75 | 0.2242 | 0.4044 | 0.0016 |
| 262 | SLD 4 | 0.36 | -5.04 | 14.75 | 0.2242 | 0.4044 | 0.0016 |
| 262 | SLD 5 | 0.08 | 5.42 | 15.54 | -0.0513 | 0.1027 | 0.0004 |
| 262 | SLD 6 | 0.08 | 5.42 | 15.54 | -0.0513 | 0.1027 | 0.0004 |
| 262 | SLD 7 | 0.13 | -11.57 | 14.24 | 0.3957 | 0.1376 | 0.0006 |
| 262 | SLD 8 | 0.13 | -11.57 | 14.24 | 0.3957 | 0.1376 | 0.0006 |
| 262 | SLD 9 | -0.13 | 4.92 | 15.5 | -0.0384 | -0.1365 | -0.0006 |
| 262 | SLD 10 | -0.13 | 4.92 | 15.5 | -0.0384 | -0.1365 | -0.0006 |
| 262 | SLD 11 | -0.08 | -12.08 | 14.19 | 0.4085 | -0.1017 | -0.0003 |
| 262 | SLD 12 | -0.08 | -12.08 | 14.19 | 0.4085 | -0.1017 | -0.0003 |
| 262 | SLD 13 | -0.36 | -1.61 | 14.99 | 0.133 | -0.4034 | -0.0016 |
| 262 | SLD 14 | -0.36 | -1.61 | 14.99 | 0.133 | -0.4034 | -0.0016 |
| 262 | SLD 15 | -0.34 | -6.71 | 14.6 | 0.2671 | -0.3929 | -0.0015 |
| 262 | SLD 16 | -0.34 | -6.71 | 14.6 | 0.2671 | -0.3929 | -0.0015 |
| 262 | SLV 1 | 0.87 | 4.61 | 15.52 | -0.0289 | 1.0065 | 0.0039 |
| 262 | SLV 2 | 0.87 | 4.61 | 15.52 | -0.0289 | 1.0065 | 0.0039 |
| 262 | SLV 3 | 0.91 | -7.31 | 14.58 | 0.2846 | 1.0329 | 0.0041 |
| 262 | SLV 4 | 0.91 | -7.31 | 14.58 | 0.2846 | 1.0329 | 0.0041 |
| 262 | SLV 5 | 0.21 | 17.13 | 16.48 | -0.3591 | 0.2624 | 0.0009 |
| 262 | SLV 6 | 0.21 | 17.13 | 16.48 | -0.3591 | 0.2624 | 0.0009 |
| 262 | SLV 7 | 0.33 | -22.6 | 13.37 | 0.6859 | 0.3502 | 0.0015 |
| 262 | SLV 8 | 0.33 | -22.6 | 13.37 | 0.6859 | 0.3502 | 0.0015 |
| 262 | SLV 9 | -0.32 | 15.94 | 16.37 | -0.3287 | -0.3491 | -0.0015 |
| 262 | SLV 10 | -0.32 | 15.94 | 16.37 | -0.3287 | -0.3491 | -0.0015 |
| 262 | SLV 11 | -0.21 | -23.78 | 13.26 | 0.7163 | -0.2613 | -0.0009 |
| 262 | SLV 12 | -0.21 | -23.78 | 13.26 | 0.7163 | -0.2613 | -0.0009 |
| 262 | SLV 13 | -0.91 | 0.66 | 15.15 | 0.0726 | -1.0318 | -0.0041 |
| 262 | SLV 14 | -0.91 | 0.66 | 15.15 | 0.0726 | -1.0318 | -0.0041 |
| 262 | SLV 15 | -0.87 | -11.26 | 14.22 | 0.3861 | -1.0055 | -0.0039 |
| 262 | SLV 16 | -0.87 | -11.26 | 14.22 | 0.3861 | -1.0055 | -0.0039 |
| 263 | SLU 1 | 0 | -1.93 | 42.84 | 0.3031 | -0.0024 | 0 |
| 263 | SLU 2 | 0 | -1.95 | 42.78 | 0.3039 | -0.0024 | 0 |
| 263 | SLU 3 | 0 | -2.25 | 43.71 | 0.3224 | -0.0027 | 0 |
| 263 | SLU 4 | 0 | -2.26 | 43.68 | 0.3229 | -0.0027 | 0 |
| 263 | SLU 5 | 0 | -2.29 | 43.03 | 0.32 | -0.0027 | 0 |
| 263 | SLU 6 | 0 | -2.6 | 43.96 | 0.3385 | -0.003 | 0 |
| 263 | SLU 7 | 0 | -2.61 | 43.93 | 0.339 | -0.003 | 0 |
| 263 | SLU 8 | 0 | -2.62 | 43.34 | 0.3353 | -0.003 | 0 |
| 263 | SLU 9 | 0 | -2.63 | 43.3 | 0.3358 | -0.003 | 0 |
| 263 | SLU 10 | 0 | -2.3 | 50.97 | 0.3586 | -0.0028 | 0 |
| 263 | SLU 11 | 0 | -2.61 | 51.91 | 0.3771 | -0.0031 | 0 |
| 263 | SLU 12 | 0 | -2.62 | 51.87 | 0.3776 | -0.0031 | 0 |
| 263 | SLU 13 | 0 | -2.65 | 51.22 | 0.3747 | -0.0031 | 0 |
| 263 | SLU 14 | 0 | -2.96 | 52.16 | 0.3932 | -0.0034 | 0 |
| 263 | SLU 15 | 0 | -2.97 | 52.12 | 0.3937 | -0.0034 | 0 |
| 263 | SLU 16 | 0 | -2.98 | 51.53 | 0.3899 | -0.0034 | 0 |
| 263 | SLU 17 | 0 | -2.99 | 51.5 | 0.3904 | -0.0034 | 0 |
| 263 | SLU 18 | 0 | -2.44 | 54.55 | 0.3811 | -0.003 | 0 |
| 263 | SLU 19 | 0 | -2.45 | 54.51 | 0.3817 | -0.0029 | 0 |
| 263 | SLU 20 | 0 | -2.79 | 54.8 | 0.3972 | -0.0033 | 0 |
| 263 | SLU 21 | 0 | -2.8 | 54.76 | 0.3978 | -0.0032 | 0 |
| 263 | SLU 22 | 0 | -2.38 | 50.01 | 0.359 | -0.0029 | 0 |
| 263 | SLU 23 | 0 | -2.4 | 49.95 | 0.3598 | -0.0029 | 0 |
| 263 | SLU 24 | 0 | -2.71 | 50.89 | 0.3783 | -0.0032 | 0 |
| 263 | SLU 25 | 0 | -2.72 | 50.85 | 0.3788 | -0.0032 | 0 |
| 263 | SLU 26 | 0 | -2.75 | 50.2 | 0.3759 | -0.0032 | 0 |
| 263 | SLU 27 | 0 | -3.05 | 51.14 | 0.3944 | -0.0035 | 0 |
| 263 | SLU 28 | 0 | -3.07 | 51.1 | 0.3949 | -0.0035 | 0 |
| 263 | SLU 29 | 0 | -3.08 | 50.51 | 0.3912 | -0.0035 | 0 |
| 263 | SLU 30 | 0 | -3.09 | 50.48 | 0.3917 | -0.0035 | 0 |
| 263 | SLU 31 | 0 | -2.76 | 58.15 | 0.4145 | -0.0033 | 0 |
| 263 | SLU 32 | 0 | -3.06 | 59.09 | 0.433 | -0.0036 | 0 |
| 263 | SLU 33 | 0 | -3.08 | 59.05 | 0.4335 | -0.0036 | 0 |
| 263 | SLU 34 | 0 | -3.11 | 58.4 | 0.4306 | -0.0036 | 0 |
| 263 | SLU 35 | 0 | -3.41 | 59.34 | 0.4491 | -0.0039 | 0 |
| 263 | SLU 36 | 0 | -3.42 | 59.3 | 0.4496 | -0.0039 | 0 |
| 263 | SLU 37 | 0 | -3.44 | 58.71 | 0.4458 | -0.0039 | 0 |
| 263 | SLU 38 | 0 | -3.45 | 58.67 | 0.4463 | -0.0039 | 0 |
| 263 | SLU 39 | 0 | -2.89 | 61.72 | 0.4371 | -0.0034 | 0 |
| 263 | SLU 40 | 0 | -2.91 | 61.69 | 0.4376 | -0.0034 | 0 |
| 263 | SLU 41 | 0 | -3.24 | 61.97 | 0.4532 | -0.0037 | 0 |
| 263 | SLU 42 | 0 | -3.25 | 61.94 | 0.4537 | -0.0037 | 0 |
| 263 | SLU 43 | 0 | -2.35 | 53.23 | 0.3748 | -0.0029 | 0 |
| 263 | SLU 44 | 0 | -2.37 | 53.17 | 0.3757 | -0.0029 | 0 |
| 263 | SLU 45 | 0 | -2.67 | 54.1 | 0.3942 | -0.0032 | 0 |
| 263 | SLU 46 | 0 | -2.68 | 54.07 | 0.3947 | -0.0032 | 0 |
| 263 | SLU 47 | 0 | -2.72 | 53.42 | 0.3918 | -0.0032 | 0 |
| 263 | SLU 48 | 0 | -3.02 | 54.35 | 0.4103 | -0.0035 | 0 |
| 263 | SLU 49 | 0 | -3.03 | 54.32 | 0.4108 | -0.0035 | 0 |
| 263 | SLU 50 | 0 | -3.04 | 53.73 | 0.407 | -0.0035 | 0 |
| 263 | SLU 51 | 0 | -3.06 | 53.69 | 0.4075 | -0.0035 | 0 |
| 263 | SLU 52 | 0 | -2.73 | 61.37 | 0.4303 | -0.0033 | 0 |
| 263 | SLU 53 | 0 | -3.03 | 62.3 | 0.4488 | -0.0036 | 0 |
| 263 | SLU 54 | 0 | -3.04 | 62.26 | 0.4493 | -0.0036 | 0 |
| 263 | SLU 55 | 0 | -3.07 | 61.61 | 0.4464 | -0.0036 | 0 |

| Nodo | Cont. | Reazione a traslazione | | | Reazione a rotazione | | |
|---|---|---|---|---|---|---|---|
| Ind. | N.br. | x | y | z | x | y | z |
| 263 | SLU 56 | 0 | -3.38 | 62.55 | 0.4649 | -0.0039 | 0 |
| 263 | SLU 57 | 0 | -3.39 | 62.51 | 0.4654 | -0.0039 | 0 |
| 263 | SLU 58 | 0 | -3.4 | 61.92 | 0.4617 | -0.0039 | 0 |
| 263 | SLU 59 | 0 | -3.41 | 61.89 | 0.4622 | -0.0039 | 0 |
| 263 | SLU 60 | 0 | -2.86 | 64.94 | 0.4529 | -0.0035 | 0 |
| 263 | SLU 61 | 0 | -2.87 | 64.9 | 0.4534 | -0.0035 | 0 |
| 263 | SLU 62 | 0 | -3.21 | 65.19 | 0.469 | -0.0038 | 0 |
| 263 | SLU 63 | 0 | -3.22 | 65.15 | 0.4695 | -0.0038 | 0 |
| 263 | SLU 64 | 0 | -2.81 | 60.4 | 0.4307 | -0.0034 | 0 |
| 263 | SLU 65 | 0 | -2.82 | 60.35 | 0.4316 | -0.0034 | 0 |
| 263 | SLU 66 | 0 | -3.13 | 61.28 | 0.4501 | -0.0037 | 0 |
| 263 | SLU 67 | 0 | -3.14 | 61.24 | 0.4506 | -0.0037 | 0 |
| 263 | SLU 68 | 0 | -3.17 | 60.59 | 0.4477 | -0.0037 | 0 |
| 263 | SLU 69 | 0 | -3.48 | 61.53 | 0.4662 | -0.004 | 0 |
| 263 | SLU 70 | 0 | -3.49 | 61.49 | 0.4667 | -0.004 | 0 |
| 263 | SLU 71 | 0 | -3.5 | 60.9 | 0.4629 | -0.004 | 0 |
| 263 | SLU 72 | 0 | -3.51 | 60.87 | 0.4634 | -0.004 | 0 |
| 263 | SLU 73 | 0 | -3.18 | 68.54 | 0.4862 | -0.0038 | 0 |
| 263 | SLU 74 | 0 | -3.49 | 69.48 | 0.5047 | -0.0041 | 0 |
| 263 | SLU 75 | 0 | -3.5 | 69.44 | 0.5052 | -0.0041 | 0 |
| 263 | SLU 76 | 0 | -3.53 | 68.79 | 0.5023 | -0.0041 | 0 |
| 263 | SLU 77 | 0 | -3.83 | 69.73 | 0.5208 | -0.0044 | 0 |
| 263 | SLU 78 | 0 | -3.85 | 69.69 | 0.5213 | -0.0044 | 0 |
| 263 | SLU 79 | 0 | -3.86 | 69.1 | 0.5176 | -0.0044 | 0 |
| 263 | SLU 80 | 0 | -3.87 | 69.07 | 0.5181 | -0.0044 | 0 |
| 263 | SLU 81 | 0 | -3.32 | 72.11 | 0.5088 | -0.004 | 0 |
| 263 | SLU 82 | 0 | -3.33 | 72.08 | 0.5093 | -0.004 | 0 |
| 263 | SLU 83 | 0 | -3.66 | 72.36 | 0.5249 | -0.0043 | 0 |
| 263 | SLU 84 | 0 | -3.68 | 72.33 | 0.5254 | -0.0043 | 0 |
| 263 | SLE RA 1 | 0 | -2.06 | 44.89 | 0.319 | -0.0025 | 0 |
| 263 | SLE RA 2 | 0 | -2.07 | 44.85 | 0.3196 | -0.0025 | 0 |
| 263 | SLE RA 3 | 0 | -2.27 | 45.47 | 0.3319 | -0.0027 | 0 |
| 263 | SLE RA 4 | 0 | -2.28 | 45.45 | 0.3323 | -0.0027 | 0 |
| 263 | SLE RA 5 | 0 | -2.3 | 45.01 | 0.3303 | -0.0027 | 0 |
| 263 | SLE RA 6 | 0 | -2.5 | 45.64 | 0.3427 | -0.0029 | 0 |
| 263 | SLE RA 7 | 0 | -2.51 | 45.61 | 0.343 | -0.0029 | 0 |
| 263 | SLE RA 8 | 0 | -2.52 | 45.22 | 0.3405 | -0.0029 | 0 |
| 263 | SLE RA 9 | 0 | -2.53 | 45.2 | 0.3408 | -0.0029 | 0 |
| 263 | SLE RA 10 | 0 | -2.31 | 50.31 | 0.356 | -0.0028 | 0 |
| 263 | SLE RA 11 | 0 | -2.51 | 50.94 | 0.3684 | -0.003 | 0 |
| 263 | SLE RA 12 | 0 | -2.52 | 50.91 | 0.3687 | -0.003 | 0 |
| 263 | SLE RA 13 | 0 | -2.54 | 50.48 | 0.3668 | -0.003 | 0 |
| 263 | SLE RA 14 | 0 | -2.74 | 51.1 | 0.3791 | -0.0032 | 0 |
| 263 | SLE RA 15 | 0 | -2.75 | 51.08 | 0.3794 | -0.0032 | 0 |
| 263 | SLE RA 16 | 0 | -2.76 | 50.69 | 0.3769 | -0.0032 | 0 |
| 263 | SLE RA 17 | 0 | -2.77 | 50.66 | 0.3773 | -0.0032 | 0 |
| 263 | SLE RA 18 | 0 | -2.4 | 52.69 | 0.3711 | -0.0029 | 0 |
| 263 | SLE RA 19 | 0 | -2.41 | 52.67 | 0.3714 | -0.0029 | 0 |
| 263 | SLE RA 20 | 0 | -2.63 | 52.86 | 0.3818 | -0.0031 | 0 |
| 263 | SLE RA 21 | 0 | -2.64 | 52.84 | 0.3822 | -0.0031 | 0 |
| 263 | SLE FR 1 | 0 | -2.06 | 44.89 | 0.319 | -0.0025 | 0 |
| 263 | SLE FR 2 | 0 | -2.06 | 44.88 | 0.3192 | -0.0025 | 0 |
| 263 | SLE FR 3 | 0 | -2.15 | 44.95 | 0.3233 | -0.0026 | 0 |
| 263 | SLE FR 4 | 0 | -2.16 | 47.22 | 0.3348 | -0.0026 | 0 |
| 263 | SLE FR 5 | 0 | -2.25 | 47.3 | 0.339 | -0.0027 | 0 |
| 263 | SLE FR 6 | 0 | -2.23 | 48.79 | 0.3451 | -0.0027 | 0 |
| 263 | SLE QP 1 | 0 | -2.06 | 44.89 | 0.319 | -0.0025 | 0 |
| 263 | SLE QP 2 | 0 | -2.16 | 47.23 | 0.3347 | -0.0026 | 0 |
| 263 | SLD 1 | 0.18 | 0.9 | 46.39 | 0.1967 | 0.2409 | 0.0001 |
| 263 | SLD 2 | 0.18 | 0.9 | 46.39 | 0.1967 | 0.2409 | 0.0001 |
| 263 | SLD 3 | 0.17 | -3.79 | 47.07 | 0.4083 | 0.2256 | 0.0001 |
| 263 | SLD 4 | 0.17 | -3.79 | 47.07 | 0.4083 | 0.2256 | 0.0001 |
| 263 | SLD 5 | 0.08 | 5.87 | 45.96 | -0.0276 | 0.0937 | 0 |
| 263 | SLD 6 | 0.08 | 5.87 | 45.96 | -0.0276 | 0.0937 | 0 |
| 263 | SLD 7 | 0.03 | -9.76 | 48.2 | 0.6777 | 0.0426 | 0 |
| 263 | SLD 8 | 0.03 | -9.76 | 48.2 | 0.6777 | 0.0426 | 0 |
| 263 | SLD 9 | -0.03 | 5.44 | 46.26 | -0.0083 | -0.0479 | 0 |
| 263 | SLD 10 | -0.03 | 5.44 | 46.26 | -0.0083 | -0.0479 | 0 |
| 263 | SLD 11 | -0.08 | -10.19 | 48.5 | 0.697 | -0.0989 | 0 |
| 263 | SLD 12 | -0.08 | -10.19 | 48.5 | 0.697 | -0.0989 | 0 |
| 263 | SLD 13 | -0.17 | -0.53 | 47.39 | 0.2611 | -0.2309 | -0.0001 |
| 263 | SLD 14 | -0.17 | -0.53 | 47.39 | 0.2611 | -0.2309 | -0.0001 |
| 263 | SLD 15 | -0.19 | -5.22 | 48.07 | 0.4727 | -0.2462 | -0.0001 |
| 263 | SLD 16 | -0.19 | -5.22 | 48.07 | 0.4727 | -0.2462 | -0.0001 |
| 263 | SLV 1 | 0.48 | 5.08 | 45.26 | 0.0073 | 0.7223 | 0.0002 |
| 263 | SLV 2 | 0.48 | 5.08 | 45.26 | 0.0073 | 0.7223 | 0.0002 |
| 263 | SLV 3 | 0.45 | -5.99 | 46.84 | 0.5087 | 0.68 | 0.0002 |
| 263 | SLV 4 | 0.45 | -5.99 | 46.84 | 0.5087 | 0.68 | 0.0002 |
| 263 | SLV 5 | 0.2 | 16.8 | 44.24 | -0.5241 | 0.279 | 0.0001 |
| 263 | SLV 6 | 0.2 | 16.8 | 44.24 | -0.5241 | 0.279 | 0.0001 |
| 263 | SLV 7 | 0.08 | -20.1 | 49.51 | 1.1474 | 0.1379 | 0 |
| 263 | SLV 8 | 0.08 | -20.1 | 49.51 | 1.1474 | 0.1379 | 0 |
| 263 | SLV 9 | -0.08 | 15.78 | 44.95 | -0.4781 | -0.1432 | 0 |
| 263 | SLV 10 | -0.08 | 15.78 | 44.95 | -0.4781 | -0.1432 | 0 |
| 263 | SLV 11 | -0.2 | -21.12 | 50.22 | 1.1934 | -0.2843 | -0.0001 |
| 263 | SLV 12 | -0.2 | -21.12 | 50.22 | 1.1934 | -0.2843 | -0.0001 |
| 263 | SLV 13 | -0.45 | 1.67 | 47.62 | 0.1606 | -0.6853 | -0.0002 |
| 263 | SLV 14 | -0.45 | 1.67 | 47.62 | 0.1606 | -0.6853 | -0.0002 |

| Nodo | Cont. | Reazione a traslazione | | | Reazione a rotazione | | |
|---|---|---|---|---|---|---|---|
| Ind. | N.br. | x | y | z | x | y | z |
| 263 | SLV 15 | -0.49 | -9.4 | 49.2 | 0.6621 | -0.7276 | -0.0002 |
| 263 | SLV 16 | -0.49 | -9.4 | 49.2 | 0.6621 | -0.7276 | -0.0002 |
| 264 | SLU 1 | -0.13 | -6.23 | 50.74 | 0.4092 | -0.1019 | 0.0003 |
| 264 | SLU 2 | -0.13 | -5.19 | 48.04 | 0.3514 | -0.0928 | 0.0003 |
| 264 | SLU 3 | -0.14 | -6.35 | 51.76 | 0.416 | -0.1047 | 0.0004 |
| 264 | SLU 4 | -0.13 | -5.72 | 50.15 | 0.3814 | -0.0992 | 0.0003 |
| 264 | SLU 5 | -0.13 | -5.2 | 48.53 | 0.3517 | -0.0944 | 0.0003 |
| 264 | SLU 6 | -0.14 | -6.36 | 52.25 | 0.4164 | -0.1064 | 0.0004 |
| 264 | SLU 7 | -0.14 | -5.73 | 50.63 | 0.3817 | -0.1009 | 0.0004 |
| 264 | SLU 8 | -0.14 | -6.25 | 51.7 | 0.4098 | -0.1052 | 0.0004 |
| 264 | SLU 9 | -0.13 | -5.63 | 50.09 | 0.3751 | -0.0997 | 0.0004 |
| 264 | SLU 10 | -0.14 | -5.97 | 53.72 | 0.4038 | -0.1059 | 0.0004 |
| 264 | SLU 11 | -0.15 | -7.13 | 57.44 | 0.4685 | -0.1178 | 0.0004 |
| 264 | SLU 12 | -0.15 | -6.5 | 55.82 | 0.4338 | -0.1123 | 0.0004 |
| 264 | SLU 13 | -0.15 | -5.98 | 54.2 | 0.4041 | -0.1075 | 0.0004 |
| 264 | SLU 14 | -0.16 | -7.14 | 57.92 | 0.4688 | -0.1195 | 0.0004 |
| 264 | SLU 15 | -0.15 | -6.51 | 56.3 | 0.4341 | -0.114 | 0.0004 |
| 264 | SLU 16 | -0.16 | -7.03 | 57.38 | 0.4622 | -0.1183 | 0.0004 |
| 264 | SLU 17 | -0.15 | -6.41 | 55.76 | 0.4275 | -0.1128 | 0.0004 |
| 264 | SLU 18 | -0.16 | -7.35 | 58.84 | 0.484 | -0.1206 | 0.0004 |
| 264 | SLU 19 | -0.15 | -6.72 | 57.22 | 0.4493 | -0.1151 | 0.0004 |
| 264 | SLU 20 | -0.16 | -7.36 | 59.32 | 0.4843 | -0.1223 | 0.0004 |
| 264 | SLU 21 | -0.16 | -6.73 | 57.71 | 0.4497 | -0.1168 | 0.0004 |
| 264 | SLU 22 | -0.15 | -6.97 | 56.19 | 0.4581 | -0.1147 | 0.0004 |
| 264 | SLU 23 | -0.14 | -5.93 | 53.5 | 0.4003 | -0.1055 | 0.0004 |
| 264 | SLU 24 | -0.15 | -7.09 | 57.22 | 0.465 | -0.1175 | 0.0004 |
| 264 | SLU 25 | -0.15 | -6.46 | 55.6 | 0.4303 | -0.112 | 0.0004 |
| 264 | SLU 26 | -0.15 | -5.94 | 53.98 | 0.4006 | -0.1072 | 0.0004 |
| 264 | SLU 27 | -0.16 | -7.1 | 57.7 | 0.4653 | -0.1191 | 0.0004 |
| 264 | SLU 28 | -0.15 | -6.47 | 56.08 | 0.4306 | -0.1136 | 0.0004 |
| 264 | SLU 29 | -0.15 | -6.99 | 57.16 | 0.4587 | -0.118 | 0.0004 |
| 264 | SLU 30 | -0.15 | -6.37 | 55.54 | 0.424 | -0.1125 | 0.0004 |
| 264 | SLU 31 | -0.16 | -6.71 | 59.17 | 0.4527 | -0.1186 | 0.0004 |
| 264 | SLU 32 | -0.17 | -7.87 | 62.89 | 0.5174 | -0.1306 | 0.0004 |
| 264 | SLU 33 | -0.17 | -7.24 | 61.27 | 0.4827 | -0.1251 | 0.0004 |
| 264 | SLU 34 | -0.16 | -6.72 | 59.65 | 0.453 | -0.1203 | 0.0004 |
| 264 | SLU 35 | -0.17 | -7.88 | 63.37 | 0.5177 | -0.1322 | 0.0005 |
| 264 | SLU 36 | -0.17 | -7.25 | 61.76 | 0.483 | -0.1267 | 0.0004 |
| 264 | SLU 37 | -0.17 | -7.77 | 62.83 | 0.5111 | -0.1311 | 0.0004 |
| 264 | SLU 38 | -0.17 | -7.15 | 61.21 | 0.4764 | -0.1256 | 0.0004 |
| 264 | SLU 39 | -0.17 | -8.08 | 64.29 | 0.533 | -0.1334 | 0.0005 |
| 264 | SLU 40 | -0.17 | -7.46 | 62.68 | 0.4983 | -0.1279 | 0.0004 |
| 264 | SLU 41 | -0.18 | -8.09 | 64.78 | 0.5333 | -0.1351 | 0.0005 |
| 264 | SLU 42 | -0.17 | -7.47 | 63.16 | 0.4986 | -0.1296 | 0.0005 |
| 264 | SLU 43 | -0.17 | -7.85 | 64.09 | 0.5151 | -0.1281 | 0.0004 |
| 264 | SLU 44 | -0.16 | -6.8 | 61.39 | 0.4573 | -0.119 | 0.0004 |
| 264 | SLU 45 | -0.17 | -7.96 | 65.12 | 0.522 | -0.1309 | 0.0004 |
| 264 | SLU 46 | -0.17 | -7.34 | 63.5 | 0.4873 | -0.1254 | 0.0004 |
| 264 | SLU 47 | -0.16 | -6.81 | 61.88 | 0.4576 | -0.1206 | 0.0004 |
| 264 | SLU 48 | -0.17 | -7.97 | 65.6 | 0.5223 | -0.1326 | 0.0005 |
| 264 | SLU 49 | -0.17 | -7.35 | 63.98 | 0.4876 | -0.1271 | 0.0004 |
| 264 | SLU 50 | -0.17 | -7.87 | 65.05 | 0.5157 | -0.1314 | 0.0004 |
| 264 | SLU 51 | -0.17 | -7.24 | 63.44 | 0.4811 | -0.1259 | 0.0004 |
| 264 | SLU 52 | -0.18 | -7.58 | 67.07 | 0.5097 | -0.1321 | 0.0005 |
| 264 | SLU 53 | -0.19 | -8.74 | 70.79 | 0.5744 | -0.144 | 0.0005 |
| 264 | SLU 54 | -0.18 | -8.12 | 69.17 | 0.5397 | -0.1385 | 0.0005 |
| 264 | SLU 55 | -0.18 | -7.6 | 67.55 | 0.51 | -0.1337 | 0.0005 |
| 264 | SLU 56 | -0.19 | -8.75 | 71.27 | 0.5747 | -0.1457 | 0.0005 |
| 264 | SLU 57 | -0.19 | -8.13 | 69.66 | 0.5401 | -0.1402 | 0.0005 |
| 264 | SLU 58 | -0.19 | -8.65 | 70.73 | 0.5682 | -0.1445 | 0.0005 |
| 264 | SLU 59 | -0.19 | -8.02 | 69.11 | 0.5335 | -0.139 | 0.0005 |
| 264 | SLU 60 | -0.19 | -8.96 | 72.19 | 0.59 | -0.1468 | 0.0005 |
| 264 | SLU 61 | -0.19 | -8.34 | 70.58 | 0.5553 | -0.1413 | 0.0005 |
| 264 | SLU 62 | -0.19 | -8.97 | 72.68 | 0.5903 | -0.1485 | 0.0005 |
| 264 | SLU 63 | -0.19 | -8.35 | 71.06 | 0.5556 | -0.143 | 0.0005 |
| 264 | SLU 64 | -0.18 | -8.59 | 69.54 | 0.5641 | -0.1409 | 0.0005 |
| 264 | SLU 65 | -0.18 | -7.54 | 66.85 | 0.5063 | -0.1317 | 0.0005 |
| 264 | SLU 66 | -0.19 | -8.7 | 70.57 | 0.5709 | -0.1437 | 0.0005 |
| 264 | SLU 67 | -0.18 | -8.08 | 68.95 | 0.5363 | -0.1382 | 0.0005 |
| 264 | SLU 68 | -0.18 | -7.55 | 67.33 | 0.5066 | -0.1334 | 0.0005 |
| 264 | SLU 69 | -0.19 | -8.71 | 71.05 | 0.5713 | -0.1453 | 0.0005 |
| 264 | SLU 70 | -0.19 | -8.09 | 69.44 | 0.5366 | -0.1398 | 0.0005 |
| 264 | SLU 71 | -0.19 | -8.61 | 70.51 | 0.5647 | -0.1442 | 0.0005 |
| 264 | SLU 72 | -0.19 | -7.98 | 68.89 | 0.53 | -0.1387 | 0.0005 |
| 264 | SLU 73 | -0.2 | -8.32 | 72.52 | 0.5587 | -0.1448 | 0.0005 |
| 264 | SLU 74 | -0.21 | -9.48 | 76.24 | 0.6234 | -0.1568 | 0.0005 |
| 264 | SLU 75 | -0.2 | -8.86 | 74.63 | 0.5887 | -0.1513 | 0.0005 |
| 264 | SLU 76 | -0.2 | -8.33 | 73 | 0.559 | -0.1465 | 0.0005 |
| 264 | SLU 77 | -0.21 | -9.49 | 76.72 | 0.6237 | -0.1584 | 0.0005 |
| 264 | SLU 78 | -0.2 | -8.87 | 75.11 | 0.589 | -0.1529 | 0.0005 |
| 264 | SLU 79 | -0.21 | -9.39 | 76.18 | 0.6171 | -0.1573 | 0.0005 |
| 264 | SLU 80 | -0.2 | -8.76 | 74.56 | 0.5824 | -0.1518 | 0.0005 |
| 264 | SLU 81 | -0.21 | -9.7 | 77.65 | 0.6389 | -0.1596 | 0.0005 |
| 264 | SLU 82 | -0.21 | -9.07 | 76.03 | 0.6043 | -0.1541 | 0.0005 |
| 264 | SLU 83 | -0.21 | -9.71 | 78.13 | 0.6392 | -0.1613 | 0.0005 |
| 264 | SLU 84 | -0.21 | -9.09 | 76.51 | 0.6046 | -0.1558 | 0.0005 |
| 264 | SLE RA 1 | -0.14 | -6.44 | 52.29 | 0.4231 | -0.1056 | 0.0004 |
| 264 | SLE RA 2 | -0.13 | -5.75 | 50.5 | 0.3846 | -0.0995 | 0.0004 |

| Nodo | Cont. | Reazione a traslazione | | | Reazione a rotazione | | |
|---|---|---|---|---|---|---|---|
| Ind. | N.br. | x | y | z | x | y | z |
| 264 | SLE RA 3 | -0.14 | -6.52 | 52.98 | 0.4277 | -0.1074 | 0.0004 |
| 264 | SLE RA 4 | -0.14 | -6.1 | 51.9 | 0.4046 | -0.1038 | 0.0004 |
| 264 | SLE RA 5 | -0.14 | -5.75 | 50.82 | 0.3848 | -0.1006 | 0.0004 |
| 264 | SLE RA 6 | -0.14 | -6.53 | 53.3 | 0.4279 | -0.1085 | 0.0004 |
| 264 | SLE RA 7 | -0.14 | -6.11 | 52.22 | 0.4048 | -0.1049 | 0.0004 |
| 264 | SLE RA 8 | -0.14 | -6.46 | 52.94 | 0.4235 | -0.1078 | 0.0004 |
| 264 | SLE RA 9 | -0.14 | -6.04 | 51.86 | 0.4004 | -0.1041 | 0.0004 |
| 264 | SLE RA 10 | -0.15 | -6.27 | 54.28 | 0.4195 | -0.1082 | 0.0004 |
| 264 | SLE RA 11 | -0.15 | -7.04 | 56.76 | 0.4627 | -0.1162 | 0.0004 |
| 264 | SLE RA 12 | -0.15 | -6.62 | 55.68 | 0.4396 | -0.1125 | 0.0004 |
| 264 | SLE RA 13 | -0.15 | -6.27 | 54.6 | 0.4197 | -0.1093 | 0.0004 |
| 264 | SLE RA 14 | -0.15 | -7.05 | 57.08 | 0.4629 | -0.1173 | 0.0004 |
| 264 | SLE RA 15 | -0.15 | -6.63 | 56.01 | 0.4398 | -0.1136 | 0.0004 |
| 264 | SLE RA 16 | -0.15 | -6.98 | 56.72 | 0.4585 | -0.1165 | 0.0004 |
| 264 | SLE RA 17 | -0.15 | -6.56 | 55.64 | 0.4354 | -0.1128 | 0.0004 |
| 264 | SLE RA 18 | -0.15 | -7.18 | 57.7 | 0.4731 | -0.1181 | 0.0004 |
| 264 | SLE RA 19 | -0.15 | -6.77 | 56.62 | 0.4499 | -0.1144 | 0.0004 |
| 264 | SLE RA 20 | -0.16 | -7.19 | 58.02 | 0.4733 | -0.1192 | 0.0004 |
| 264 | SLE RA 21 | -0.15 | -6.78 | 56.94 | 0.4501 | -0.1155 | 0.0004 |
| 264 | SLE FR 1 | -0.14 | -6.44 | 52.29 | 0.4231 | -0.1056 | 0.0004 |
| 264 | SLE FR 2 | -0.14 | -6.3 | 51.94 | 0.4154 | -0.1044 | 0.0004 |
| 264 | SLE FR 3 | -0.14 | -6.44 | 52.42 | 0.4232 | -0.106 | 0.0004 |
| 264 | SLE FR 4 | -0.14 | -6.53 | 53.56 | 0.4304 | -0.1081 | 0.0004 |
| 264 | SLE FR 5 | -0.14 | -6.67 | 54.04 | 0.4382 | -0.1098 | 0.0004 |
| 264 | SLE FR 6 | -0.15 | -6.81 | 55 | 0.4481 | -0.1118 | 0.0004 |
| 264 | SLE QP 1 | -0.14 | -6.44 | 52.29 | 0.4231 | -0.1056 | 0.0004 |
| 264 | SLE QP 2 | -0.14 | -6.66 | 53.92 | 0.4381 | -0.1093 | 0.0004 |
| 264 | SLD 1 | -0.32 | -6.76 | 64.47 | 0.471 | 0.1351 | 0.0009 |
| 264 | SLD 2 | -0.32 | -6.76 | 64.47 | 0.471 | 0.1351 | 0.0009 |
| 264 | SLD 3 | -0.46 | -11.61 | 70.8 | 0.6903 | 0.0415 | 0.0013 |
| 264 | SLD 4 | -0.46 | -11.61 | 70.8 | 0.6903 | 0.0415 | 0.0013 |
| 264 | SLD 5 | 0.02 | 0.67 | 47.47 | 0.1154 | 0.106 | -0.0002 |
| 264 | SLD 6 | 0.02 | 0.67 | 47.47 | 0.1154 | 0.106 | -0.0002 |
| 264 | SLD 7 | -0.45 | -15.51 | 68.59 | 0.8463 | -0.2061 | 0.0014 |
| 264 | SLD 8 | -0.45 | -15.51 | 68.59 | 0.8463 | -0.2061 | 0.0014 |
| 264 | SLD 9 | 0.16 | 2.18 | 39.24 | 0.0299 | -0.0126 | -0.0006 |
| 264 | SLD 10 | 0.16 | 2.18 | 39.24 | 0.0299 | -0.0126 | -0.0006 |
| 264 | SLD 11 | -0.3 | -14 | 60.36 | 0.7608 | -0.3246 | 0.0009 |
| 264 | SLD 12 | -0.3 | -14 | 60.36 | 0.7608 | -0.3246 | 0.0009 |
| 264 | SLD 13 | 0.17 | -1.72 | 37.03 | 0.1859 | -0.2602 | -0.0006 |
| 264 | SLD 14 | 0.17 | -1.72 | 37.03 | 0.1859 | -0.2602 | -0.0006 |
| 264 | SLD 15 | 0.03 | -6.57 | 43.36 | 0.4052 | -0.3538 | -0.0001 |
| 264 | SLD 16 | 0.03 | -6.57 | 43.36 | 0.4052 | -0.3538 | -0.0001 |
| 264 | SLV 1 | -0.54 | -6.96 | 78.49 | 0.5177 | 0.4749 | 0.0015 |
| 264 | SLV 2 | -0.54 | -6.96 | 78.49 | 0.5177 | 0.4749 | 0.0015 |
| 264 | SLV 3 | -0.88 | -18.21 | 93.51 | 1.0273 | 0.2427 | 0.0026 |
| 264 | SLV 4 | -0.88 | -18.21 | 93.51 | 1.0273 | 0.2427 | 0.0026 |
| 264 | SLV 5 | 0.26 | 10.31 | 38.51 | -0.311 | 0.4181 | -0.0011 |
| 264 | SLV 6 | 0.26 | 10.31 | 38.51 | -0.311 | 0.4181 | -0.0011 |
| 264 | SLV 7 | -0.89 | -27.19 | 88.57 | 1.3879 | -0.3559 | 0.0028 |
| 264 | SLV 8 | -0.89 | -27.19 | 88.57 | 1.3879 | -0.3559 | 0.0028 |
| 264 | SLV 9 | 0.6 | 13.86 | 19.26 | -0.5117 | 0.1372 | -0.0021 |
| 264 | SLV 10 | 0.6 | 13.86 | 19.26 | -0.5117 | 0.1372 | -0.0021 |
| 264 | SLV 11 | -0.55 | -23.63 | 69.32 | 1.1873 | -0.6367 | 0.0018 |
| 264 | SLV 12 | -0.55 | -23.63 | 69.32 | 1.1873 | -0.6367 | 0.0018 |
| 264 | SLV 13 | 0.59 | 4.88 | 14.32 | -0.1511 | -0.4614 | -0.0019 |
| 264 | SLV 14 | 0.59 | 4.88 | 14.32 | -0.1511 | -0.4614 | -0.0019 |
| 264 | SLV 15 | 0.25 | -6.37 | 29.34 | 0.3586 | -0.6935 | -0.0007 |
| 264 | SLV 16 | 0.25 | -6.37 | 29.34 | 0.3586 | -0.6935 | -0.0007 |
| 265 | SLU 1 | 0.01 | 1.78 | 56.74 | -0.0606 | 0.0046 | 0 |
| 265 | SLU 2 | 0.01 | 1.88 | 56.21 | -0.0637 | 0.0047 | 0 |
| 265 | SLU 3 | 0.01 | 1.62 | 60.06 | -0.0557 | 0.0049 | 0 |
| 265 | SLU 4 | 0.01 | 1.69 | 59.74 | -0.0575 | 0.0049 | 0 |
| 265 | SLU 5 | 0.01 | 1.68 | 59.04 | -0.0571 | 0.0049 | 0 |
| 265 | SLU 6 | 0.01 | 1.42 | 62.89 | -0.0491 | 0.0052 | 0 |
| 265 | SLU 7 | 0.01 | 1.48 | 62.57 | -0.051 | 0.0052 | 0 |
| 265 | SLU 8 | 0.01 | 1.37 | 62.4 | -0.0475 | 0.0051 | 0 |
| 265 | SLU 9 | 0.01 | 1.43 | 62.08 | -0.0493 | 0.0052 | 0 |
| 265 | SLU 10 | 0.01 | 2.1 | 65.94 | -0.0724 | 0.0054 | 0 |
| 265 | SLU 11 | 0.01 | 1.84 | 69.79 | -0.0644 | 0.0056 | 0 |
| 265 | SLU 12 | 0.01 | 1.9 | 69.47 | -0.0663 | 0.0057 | 0 |
| 265 | SLU 13 | 0.01 | 1.89 | 68.77 | -0.0658 | 0.0057 | 0 |
| 265 | SLU 14 | 0.01 | 1.63 | 72.62 | -0.0579 | 0.0059 | 0 |
| 265 | SLU 15 | 0.01 | 1.69 | 72.3 | -0.0597 | 0.006 | 0 |
| 265 | SLU 16 | 0.01 | 1.58 | 72.13 | -0.0562 | 0.0059 | 0 |
| 265 | SLU 17 | 0.01 | 1.64 | 71.81 | -0.058 | 0.0059 | 0 |
| 265 | SLU 18 | 0.01 | 2.09 | 70.64 | -0.073 | 0.0056 | 0 |
| 265 | SLU 19 | 0.01 | 2.15 | 70.32 | -0.0749 | 0.0057 | 0 |
| 265 | SLU 20 | 0.01 | 1.88 | 73.47 | -0.0665 | 0.0059 | 0 |
| 265 | SLU 21 | 0.01 | 1.94 | 73.15 | -0.0683 | 0.006 | 0 |
| 265 | SLU 22 | 0.01 | 1.89 | 66.63 | -0.0654 | 0.0054 | 0 |
| 265 | SLU 23 | 0.01 | 1.99 | 66.1 | -0.0685 | 0.0054 | 0 |
| 265 | SLU 24 | 0.01 | 1.73 | 69.95 | -0.0605 | 0.0057 | 0 |
| 265 | SLU 25 | 0.01 | 1.79 | 69.63 | -0.0624 | 0.0057 | 0 |
| 265 | SLU 26 | 0.01 | 1.78 | 68.93 | -0.0619 | 0.0057 | 0 |
| 265 | SLU 27 | 0.01 | 1.52 | 72.78 | -0.054 | 0.006 | 0 |
| 265 | SLU 28 | 0.01 | 1.58 | 72.47 | -0.0558 | 0.006 | 0 |
| 265 | SLU 29 | 0.01 | 1.47 | 72.29 | -0.0523 | 0.0059 | 0 |

| Nodo | Cont. | Reazione a traslazione | | | Reazione a rotazione | | |
|---|---|---|---|---|---|---|---|
| Ind. | N.br. | x | y | z | x | y | z |
| 265 | SLU 30 | 0.01 | 1.53 | 71.98 | -0.0541 | 0.006 | 0 |
| 265 | SLU 31 | 0.01 | 2.2 | 75.83 | -0.0772 | 0.0062 | 0 |
| 265 | SLU 32 | 0.01 | 1.94 | 79.68 | -0.0692 | 0.0064 | 0 |
| 265 | SLU 33 | 0.01 | 2 | 79.37 | -0.0711 | 0.0065 | 0 |
| 265 | SLU 34 | 0.01 | 1.99 | 78.67 | -0.0707 | 0.0065 | 0 |
| 265 | SLU 35 | 0.01 | 1.73 | 82.51 | -0.0627 | 0.0067 | 0 |
| 265 | SLU 36 | 0.01 | 1.79 | 82.2 | -0.0645 | 0.0067 | 0 |
| 265 | SLU 37 | 0.01 | 1.68 | 82.02 | -0.061 | 0.0067 | 0 |
| 265 | SLU 38 | 0.01 | 1.74 | 81.71 | -0.0629 | 0.0067 | 0 |
| 265 | SLU 39 | 0.01 | 2.19 | 80.53 | -0.0779 | 0.0064 | 0 |
| 265 | SLU 40 | 0.01 | 2.25 | 80.21 | -0.0797 | 0.0065 | 0 |
| 265 | SLU 41 | 0.01 | 1.98 | 83.36 | -0.0713 | 0.0067 | 0 |
| 265 | SLU 42 | 0.01 | 2.04 | 83.05 | -0.0732 | 0.0067 | 0 |
| 265 | SLU 43 | 0.01 | 2.28 | 70.36 | -0.0771 | 0.0057 | 0 |
| 265 | SLU 44 | 0.01 | 2.38 | 69.84 | -0.0802 | 0.0058 | 0 |
| 265 | SLU 45 | 0.01 | 2.12 | 73.69 | -0.0722 | 0.006 | 0 |
| 265 | SLU 46 | 0.01 | 2.18 | 73.37 | -0.074 | 0.006 | 0 |
| 265 | SLU 47 | 0.01 | 2.18 | 72.67 | -0.0736 | 0.006 | 0 |
| 265 | SLU 48 | 0.01 | 1.91 | 76.52 | -0.0656 | 0.0063 | 0 |
| 265 | SLU 49 | 0.01 | 1.98 | 76.2 | -0.0675 | 0.0063 | 0 |
| 265 | SLU 50 | 0.01 | 1.86 | 76.03 | -0.064 | 0.0062 | 0 |
| 265 | SLU 51 | 0.01 | 1.93 | 75.71 | -0.0658 | 0.0063 | 0 |
| 265 | SLU 52 | 0.01 | 2.6 | 79.57 | -0.0889 | 0.0065 | 0 |
| 265 | SLU 53 | 0.01 | 2.34 | 83.42 | -0.0809 | 0.0067 | 0 |
| 265 | SLU 54 | 0.01 | 2.4 | 83.1 | -0.0828 | 0.0068 | 0 |
| 265 | SLU 55 | 0.01 | 2.39 | 82.4 | -0.0823 | 0.0068 | 0 |
| 265 | SLU 56 | 0.01 | 2.13 | 86.25 | -0.0744 | 0.007 | 0 |
| 265 | SLU 57 | 0.01 | 2.19 | 85.93 | -0.0762 | 0.0071 | 0 |
| 265 | SLU 58 | 0.01 | 2.08 | 85.76 | -0.0727 | 0.007 | 0 |
| 265 | SLU 59 | 0.01 | 2.14 | 85.44 | -0.0746 | 0.007 | 0 |
| 265 | SLU 60 | 0.01 | 2.59 | 84.27 | -0.0896 | 0.0067 | 0 |
| 265 | SLU 61 | 0.01 | 2.65 | 83.95 | -0.0914 | 0.0068 | 0 |
| 265 | SLU 62 | 0.01 | 2.38 | 87.1 | -0.083 | 0.007 | 0 |
| 265 | SLU 63 | 0.01 | 2.44 | 86.78 | -0.0849 | 0.0071 | 0 |
| 265 | SLU 64 | 0.01 | 2.39 | 80.26 | -0.0819 | 0.0065 | 0 |
| 265 | SLU 65 | 0.01 | 2.49 | 79.73 | -0.085 | 0.0065 | 0 |
| 265 | SLU 66 | 0.01 | 2.23 | 83.58 | -0.077 | 0.0068 | 0 |
| 265 | SLU 67 | 0.01 | 2.29 | 83.26 | -0.0789 | 0.0068 | 0 |
| 265 | SLU 68 | 0.01 | 2.28 | 82.56 | -0.0784 | 0.0068 | 0 |
| 265 | SLU 69 | 0.01 | 2.02 | 86.41 | -0.0705 | 0.0071 | 0 |
| 265 | SLU 70 | 0.01 | 2.08 | 86.09 | -0.0723 | 0.0071 | 0 |
| 265 | SLU 71 | 0.01 | 1.97 | 85.92 | -0.0688 | 0.007 | 0 |
| 265 | SLU 72 | 0.01 | 2.03 | 85.6 | -0.0706 | 0.0071 | 0 |
| 265 | SLU 73 | 0.01 | 2.7 | 89.46 | -0.0937 | 0.0073 | 0 |
| 265 | SLU 74 | 0.01 | 2.44 | 93.31 | -0.0858 | 0.0075 | 0 |
| 265 | SLU 75 | 0.01 | 2.5 | 92.99 | -0.0876 | 0.0076 | 0 |
| 265 | SLU 76 | 0.01 | 2.49 | 92.29 | -0.0872 | 0.0076 | 0 |
| 265 | SLU 77 | 0.01 | 2.23 | 96.14 | -0.0792 | 0.0078 | 0 |
| 265 | SLU 78 | 0.01 | 2.29 | 95.83 | -0.0811 | 0.0078 | 0 |
| 265 | SLU 79 | 0.01 | 2.18 | 95.65 | -0.0775 | 0.0078 | 0 |
| 265 | SLU 80 | 0.01 | 2.24 | 95.34 | -0.0794 | 0.0078 | 0 |
| 265 | SLU 81 | 0.01 | 2.69 | 94.16 | -0.0944 | 0.0075 | 0 |
| 265 | SLU 82 | 0.01 | 2.75 | 93.84 | -0.0962 | 0.0076 | 0 |
| 265 | SLU 83 | 0.01 | 2.48 | 96.99 | -0.0878 | 0.0078 | 0 |
| 265 | SLU 84 | 0.01 | 2.54 | 96.67 | -0.0897 | 0.0078 | 0 |
| 265 | SLE RA 1 | 0.01 | 1.81 | 59.56 | -0.0619 | 0.0048 | 0 |
| 265 | SLE RA 2 | 0.01 | 1.88 | 59.21 | -0.064 | 0.0049 | 0 |
| 265 | SLE RA 3 | 0.01 | 1.71 | 61.78 | -0.0587 | 0.005 | 0 |
| 265 | SLE RA 4 | 0.01 | 1.75 | 61.57 | -0.0599 | 0.005 | 0 |
| 265 | SLE RA 5 | 0.01 | 1.74 | 61.1 | -0.0596 | 0.005 | 0 |
| 265 | SLE RA 6 | 0.01 | 1.57 | 63.66 | -0.0543 | 0.0052 | 0 |
| 265 | SLE RA 7 | 0.01 | 1.61 | 63.45 | -0.0556 | 0.0052 | 0 |
| 265 | SLE RA 8 | 0.01 | 1.53 | 63.34 | -0.0532 | 0.0052 | 0 |
| 265 | SLE RA 9 | 0.01 | 1.58 | 63.13 | -0.0544 | 0.0052 | 0 |
| 265 | SLE RA 10 | 0.01 | 2.02 | 65.7 | -0.0698 | 0.0053 | 0 |
| 265 | SLE RA 11 | 0.01 | 1.85 | 68.26 | -0.0645 | 0.0055 | 0 |
| 265 | SLE RA 12 | 0.01 | 1.89 | 68.05 | -0.0657 | 0.0055 | 0 |
| 265 | SLE RA 13 | 0.01 | 1.88 | 67.59 | -0.0655 | 0.0055 | 0 |
| 265 | SLE RA 14 | 0.01 | 1.71 | 70.15 | -0.0601 | 0.0057 | 0 |
| 265 | SLE RA 15 | 0.01 | 1.75 | 69.94 | -0.0614 | 0.0057 | 0 |
| 265 | SLE RA 16 | 0.01 | 1.68 | 69.82 | -0.059 | 0.0057 | 0 |
| 265 | SLE RA 17 | 0.01 | 1.72 | 69.61 | -0.0603 | 0.0057 | 0 |
| 265 | SLE RA 18 | 0.01 | 2.02 | 68.83 | -0.0703 | 0.0055 | 0 |
| 265 | SLE RA 19 | 0.01 | 2.06 | 68.62 | -0.0715 | 0.0055 | 0 |
| 265 | SLE RA 20 | 0.01 | 1.88 | 70.72 | -0.0659 | 0.0057 | 0 |
| 265 | SLE RA 21 | 0.01 | 1.92 | 70.51 | -0.0671 | 0.0057 | 0 |
| 265 | SLE FR 1 | 0.01 | 1.81 | 59.56 | -0.0619 | 0.0048 | 0 |
| 265 | SLE FR 2 | 0.01 | 1.83 | 59.49 | -0.0624 | 0.0048 | 0 |
| 265 | SLE FR 3 | 0.01 | 1.76 | 60.32 | -0.0602 | 0.0049 | 0 |
| 265 | SLE FR 4 | 0.01 | 1.89 | 62.27 | -0.0649 | 0.005 | 0 |
| 265 | SLE FR 5 | 0.01 | 1.82 | 63.1 | -0.0627 | 0.0051 | 0 |
| 265 | SLE FR 6 | 0.01 | 1.91 | 64.2 | -0.0661 | 0.0052 | 0 |
| 265 | SLE QP 1 | 0.01 | 1.81 | 59.56 | -0.0619 | 0.0048 | 0 |
| 265 | SLE QP 2 | 0.01 | 1.87 | 62.34 | -0.0644 | 0.005 | 0 |
| 265 | SLD 1 | 0.14 | 5.76 | 62.77 | -0.0766 | 0.1475 | 0.0003 |
| 265 | SLD 2 | 0.14 | 5.76 | 62.77 | -0.0766 | 0.1475 | 0.0003 |
| 265 | SLD 3 | 0.17 | 1.51 | 66.33 | 0.054 | 0.1785 | 0.0002 |
| 265 | SLD 4 | 0.17 | 1.51 | 66.33 | 0.054 | 0.1785 | 0.0002 |

| Nodo | Cont. | Reazione a traslazione | | | Reazione a rotazione | | |
|---|---|---|---|---|---|---|---|
| Ind. | N.br. | x | y | z | x | y | z |
| 265 | SLD 5 | 0.01 | 9.49 | 57.07 | -0.2661 | 0.0007 | 0.0001 |
| 265 | SLD 6 | 0.01 | 9.49 | 57.07 | -0.2661 | 0.0007 | 0.0001 |
| 265 | SLD 7 | 0.1 | -4.69 | 68.94 | 0.1691 | 0.1041 | 0 |
| 265 | SLD 8 | 0.1 | -4.69 | 68.94 | 0.1691 | 0.1041 | 0 |
| 265 | SLD 9 | -0.08 | 8.43 | 55.75 | -0.298 | -0.0941 | 0 |
| 265 | SLD 10 | -0.08 | 8.43 | 55.75 | -0.298 | -0.0941 | 0 |
| 265 | SLD 11 | 0.01 | -5.74 | 67.61 | 0.1372 | 0.0093 | -0.0001 |
| 265 | SLD 12 | 0.01 | -5.74 | 67.61 | 0.1372 | 0.0093 | -0.0001 |
| 265 | SLD 13 | -0.15 | 2.24 | 58.35 | -0.1829 | -0.1685 | -0.0002 |
| 265 | SLD 14 | -0.15 | 2.24 | 58.35 | -0.1829 | -0.1685 | -0.0002 |
| 265 | SLD 15 | -0.12 | -2.01 | 61.91 | -0.0523 | -0.1375 | -0.0002 |
| 265 | SLD 16 | -0.12 | -2.01 | 61.91 | -0.0523 | -0.1375 | -0.0002 |
| 265 | SLV 1 | 0.32 | 10.93 | 63.36 | -0.0927 | 0.3602 | 0.0006 |
| 265 | SLV 2 | 0.32 | 10.93 | 63.36 | -0.0927 | 0.3602 | 0.0006 |
| 265 | SLV 3 | 0.39 | 1.03 | 71.83 | 0.2114 | 0.4393 | 0.0005 |
| 265 | SLV 4 | 0.39 | 1.03 | 71.83 | 0.2114 | 0.4393 | 0.0005 |
| 265 | SLV 5 | 0.01 | 19.61 | 49.81 | -0.5341 | -0.0084 | 0.0004 |
| 265 | SLV 6 | 0.01 | 19.61 | 49.81 | -0.5341 | -0.0084 | 0.0004 |
| 265 | SLV 7 | 0.22 | -13.4 | 78.02 | 0.4795 | 0.2553 | 0 |
| 265 | SLV 8 | 0.22 | -13.4 | 78.02 | 0.4795 | 0.2553 | 0 |
| 265 | SLV 9 | -0.2 | 17.15 | 46.66 | -0.6084 | -0.2452 | 0 |
| 265 | SLV 10 | -0.2 | 17.15 | 46.66 | -0.6084 | -0.2452 | 0 |
| 265 | SLV 11 | 0.01 | -15.87 | 74.87 | 0.4052 | 0.0184 | -0.0003 |
| 265 | SLV 12 | 0.01 | -15.87 | 74.87 | 0.4052 | 0.0184 | -0.0003 |
| 265 | SLV 13 | -0.37 | 2.72 | 52.86 | -0.3403 | -0.4293 | -0.0005 |
| 265 | SLV 14 | -0.37 | 2.72 | 52.86 | -0.3403 | -0.4293 | -0.0005 |
| 265 | SLV 15 | -0.31 | -7.18 | 61.32 | -0.0362 | -0.3501 | -0.0006 |
| 265 | SLV 16 | -0.31 | -7.18 | 61.32 | -0.0362 | -0.3501 | -0.0006 |
| 266 | SLU 1 | 0.01 | -6.66 | 53.67 | 0.2672 | 0.0103 | 0 |
| 266 | SLU 2 | 0.01 | -5.95 | 50.61 | 0.2361 | 0.005 | 0 |
| 266 | SLU 3 | 0.01 | -6.85 | 54.68 | 0.2746 | 0.0111 | 0 |
| 266 | SLU 4 | 0.01 | -6.42 | 52.84 | 0.2559 | 0.0079 | 0 |
| 266 | SLU 5 | 0.01 | -6.03 | 50.93 | 0.2393 | 0.0058 | 0 |
| 266 | SLU 6 | 0.01 | -6.93 | 55 | 0.2778 | 0.0119 | 0 |
| 266 | SLU 7 | 0.01 | -6.5 | 53.16 | 0.2591 | 0.0087 | 0 |
| 266 | SLU 8 | 0.01 | -6.83 | 54.32 | 0.2736 | 0.0119 | 0 |
| 266 | SLU 9 | 0.01 | -6.4 | 52.48 | 0.2549 | 0.0087 | 0 |
| 266 | SLU 10 | 0.01 | -6.74 | 56.95 | 0.2679 | 0.0067 | 0 |
| 266 | SLU 11 | 0.01 | -7.64 | 61.02 | 0.3065 | 0.0128 | 0 |
| 266 | SLU 12 | 0.01 | -7.21 | 59.18 | 0.2878 | 0.0097 | 0 |
| 266 | SLU 13 | 0.01 | -6.82 | 57.27 | 0.2711 | 0.0075 | 0 |
| 266 | SLU 14 | 0.01 | -7.72 | 61.34 | 0.3097 | 0.0136 | 0 |
| 266 | SLU 15 | 0.01 | -7.29 | 59.5 | 0.291 | 0.0105 | 0 |
| 266 | SLU 16 | 0.01 | -7.62 | 60.66 | 0.3055 | 0.0136 | 0 |
| 266 | SLU 17 | 0.01 | -7.19 | 58.82 | 0.2868 | 0.0105 | 0 |
| 266 | SLU 18 | 0.01 | -7.79 | 62.73 | 0.3127 | 0.0127 | 0 |
| 266 | SLU 19 | 0.01 | -7.37 | 60.89 | 0.294 | 0.0096 | 0 |
| 266 | SLU 20 | 0.01 | -7.87 | 63.05 | 0.316 | 0.0135 | 0 |
| 266 | SLU 21 | 0.01 | -7.45 | 61.21 | 0.2973 | 0.0104 | 0 |
| 266 | SLU 22 | 0.01 | -7.47 | 59.58 | 0.2997 | 0.0122 | 0 |
| 266 | SLU 23 | 0.01 | -6.76 | 56.52 | 0.2685 | 0.0069 | 0 |
| 266 | SLU 24 | 0.01 | -7.66 | 60.58 | 0.3071 | 0.013 | 0 |
| 266 | SLU 25 | 0.01 | -7.23 | 58.75 | 0.2884 | 0.0099 | 0 |
| 266 | SLU 26 | 0.01 | -6.84 | 56.84 | 0.2717 | 0.0078 | 0 |
| 266 | SLU 27 | 0.01 | -7.74 | 60.91 | 0.3103 | 0.0139 | 0 |
| 266 | SLU 28 | 0.01 | -7.31 | 59.07 | 0.2916 | 0.0107 | 0 |
| 266 | SLU 29 | 0.01 | -7.63 | 60.22 | 0.3061 | 0.0138 | 0 |
| 266 | SLU 30 | 0.01 | -7.21 | 58.39 | 0.2874 | 0.0107 | 0 |
| 266 | SLU 31 | 0.01 | -7.55 | 62.86 | 0.3004 | 0.0087 | 0 |
| 266 | SLU 32 | 0.01 | -8.45 | 66.92 | 0.339 | 0.0148 | 0 |
| 266 | SLU 33 | 0.01 | -8.02 | 65.08 | 0.3203 | 0.0116 | 0 |
| 266 | SLU 34 | 0.01 | -7.63 | 63.18 | 0.3036 | 0.0095 | 0 |
| 266 | SLU 35 | 0.01 | -8.53 | 67.24 | 0.3422 | 0.0156 | 0 |
| 266 | SLU 36 | 0.01 | -8.1 | 65.41 | 0.3235 | 0.0124 | 0 |
| 266 | SLU 37 | 0.01 | -8.42 | 66.56 | 0.338 | 0.0156 | 0 |
| 266 | SLU 38 | 0.01 | -8 | 64.73 | 0.3193 | 0.0124 | 0 |
| 266 | SLU 39 | 0.01 | -8.6 | 68.64 | 0.3452 | 0.0147 | 0 |
| 266 | SLU 40 | 0.01 | -8.17 | 66.8 | 0.3265 | 0.0115 | 0 |
| 266 | SLU 41 | 0.01 | -8.68 | 68.96 | 0.3484 | 0.0155 | 0 |
| 266 | SLU 42 | 0.01 | -8.25 | 67.12 | 0.3297 | 0.0123 | 0 |
| 266 | SLU 43 | 0.01 | -8.39 | 67.75 | 0.3362 | 0.0127 | 0 |
| 266 | SLU 44 | 0.01 | -7.67 | 64.69 | 0.3051 | 0.0074 | 0 |
| 266 | SLU 45 | 0.01 | -8.57 | 68.75 | 0.3436 | 0.0135 | 0 |
| 266 | SLU 46 | 0.01 | -8.14 | 66.92 | 0.3249 | 0.0104 | 0 |
| 266 | SLU 47 | 0.01 | -7.75 | 65.01 | 0.3083 | 0.0082 | 0 |
| 266 | SLU 48 | 0.01 | -8.65 | 69.08 | 0.3468 | 0.0143 | 0 |
| 266 | SLU 49 | 0.01 | -8.22 | 67.24 | 0.3282 | 0.0112 | 0 |
| 266 | SLU 50 | 0.01 | -8.55 | 68.39 | 0.3427 | 0.0143 | 0 |
| 266 | SLU 51 | 0.01 | -8.12 | 66.56 | 0.324 | 0.0111 | 0 |
| 266 | SLU 52 | 0.01 | -8.46 | 71.03 | 0.337 | 0.0091 | 0 |
| 266 | SLU 53 | 0.01 | -9.36 | 75.09 | 0.3755 | 0.0152 | 0 |
| 266 | SLU 54 | 0.01 | -8.93 | 73.25 | 0.3568 | 0.0121 | 0 |
| 266 | SLU 55 | 0.01 | -8.54 | 71.35 | 0.3402 | 0.0099 | 0 |
| 266 | SLU 56 | 0.01 | -9.44 | 75.41 | 0.3787 | 0.0161 | 0 |
| 266 | SLU 57 | 0.01 | -9.02 | 73.58 | 0.36 | 0.0129 | 0 |
| 266 | SLU 58 | 0.01 | -9.34 | 74.73 | 0.3745 | 0.016 | 0 |
| 266 | SLU 59 | 0.01 | -8.91 | 72.9 | 0.3558 | 0.0129 | 0 |
| 266 | SLU 60 | 0.01 | -9.52 | 76.81 | 0.3818 | 0.0152 | 0 |

| Nodo | Cont. | Reazione a traslazione | | | Reazione a rotazione | | |
|---|---|---|---|---|---|---|---|
| Ind. | N.br. | x | y | z | x | y | z |
| 266 | SLU 61 | 0.01 | -9.09 | 74.97 | 0.3631 | 0.012 | 0 |
| 266 | SLU 62 | 0.01 | -9.6 | 77.13 | 0.385 | 0.016 | 0 |
| 266 | SLU 63 | 0.01 | -9.17 | 75.29 | 0.3663 | 0.0128 | 0 |
| 266 | SLU 64 | 0.01 | -9.19 | 73.66 | 0.3687 | 0.0146 | 0 |
| 266 | SLU 65 | 0.01 | -8.48 | 70.59 | 0.3375 | 0.0094 | 0 |
| 266 | SLU 66 | 0.01 | -9.38 | 74.66 | 0.3761 | 0.0155 | 0 |
| 266 | SLU 67 | 0.01 | -8.95 | 72.82 | 0.3574 | 0.0123 | 0 |
| 266 | SLU 68 | 0.01 | -8.56 | 70.92 | 0.3408 | 0.0102 | 0 |
| 266 | SLU 69 | 0.01 | -9.46 | 74.98 | 0.3793 | 0.0163 | 0 |
| 266 | SLU 70 | 0.01 | -9.03 | 73.14 | 0.3606 | 0.0131 | 0 |
| 266 | SLU 71 | 0.01 | -9.36 | 74.3 | 0.3751 | 0.0163 | 0 |
| 266 | SLU 72 | 0.01 | -8.93 | 72.46 | 0.3564 | 0.0131 | 0 |
| 266 | SLU 73 | 0.01 | -9.27 | 76.93 | 0.3694 | 0.0111 | 0 |
| 266 | SLU 74 | 0.01 | -10.17 | 81 | 0.408 | 0.0172 | 0 |
| 266 | SLU 75 | 0.01 | -9.74 | 79.16 | 0.3893 | 0.014 | 0 |
| 266 | SLU 76 | 0.01 | -9.35 | 77.26 | 0.3726 | 0.0119 | 0 |
| 266 | SLU 77 | 0.01 | -10.25 | 81.32 | 0.4112 | 0.018 | 0 |
| 266 | SLU 78 | 0.01 | -9.82 | 79.48 | 0.3925 | 0.0148 | 0 |
| 266 | SLU 79 | 0.01 | -10.15 | 80.64 | 0.407 | 0.018 | 0 |
| 266 | SLU 80 | 0.01 | -9.72 | 78.8 | 0.3883 | 0.0148 | 0 |
| 266 | SLU 81 | 0.01 | -10.32 | 82.71 | 0.4142 | 0.0171 | 0 |
| 266 | SLU 82 | 0.01 | -9.9 | 80.87 | 0.3955 | 0.0139 | 0 |
| 266 | SLU 83 | 0.01 | -10.4 | 83.03 | 0.4174 | 0.0179 | 0 |
| 266 | SLU 84 | 0.01 | -9.98 | 81.2 | 0.3988 | 0.0147 | 0 |
| 266 | SLE RA 1 | 0.01 | -6.9 | 55.36 | 0.2765 | 0.0108 | 0 |
| 266 | SLE RA 2 | 0.01 | -6.42 | 53.32 | 0.2557 | 0.0073 | 0 |
| 266 | SLE RA 3 | 0.01 | -7.02 | 56.03 | 0.2814 | 0.0114 | 0 |
| 266 | SLE RA 4 | 0.01 | -6.73 | 54.81 | 0.269 | 0.0093 | 0 |
| 266 | SLE RA 5 | 0.01 | -6.47 | 53.53 | 0.2579 | 0.0079 | 0 |
| 266 | SLE RA 6 | 0.01 | -7.07 | 56.24 | 0.2836 | 0.0119 | 0 |
| 266 | SLE RA 7 | 0.01 | -6.79 | 55.02 | 0.2711 | 0.0098 | 0 |
| 266 | SLE RA 8 | 0.01 | -7 | 55.79 | 0.2808 | 0.0119 | 0 |
| 266 | SLE RA 9 | 0.01 | -6.72 | 54.57 | 0.2683 | 0.0098 | 0 |
| 266 | SLE RA 10 | 0.01 | -6.95 | 57.55 | 0.277 | 0.0085 | 0 |
| 266 | SLE RA 11 | 0.01 | -7.55 | 60.26 | 0.3027 | 0.0125 | 0 |
| 266 | SLE RA 12 | 0.01 | -7.26 | 59.03 | 0.2902 | 0.0104 | 0 |
| 266 | SLE RA 13 | 0.01 | -7 | 57.76 | 0.2791 | 0.009 | 0 |
| 266 | SLE RA 14 | 0.01 | -7.6 | 60.47 | 0.3048 | 0.0131 | 0 |
| 266 | SLE RA 15 | 0.01 | -7.31 | 59.25 | 0.2924 | 0.011 | 0 |
| 266 | SLE RA 16 | 0.01 | -7.53 | 60.02 | 0.302 | 0.0131 | 0 |
| 266 | SLE RA 17 | 0.01 | -7.24 | 58.79 | 0.2896 | 0.0109 | 0 |
| 266 | SLE RA 18 | 0.01 | -7.65 | 61.4 | 0.3068 | 0.0125 | 0 |
| 266 | SLE RA 19 | 0.01 | -7.36 | 60.17 | 0.2944 | 0.0104 | 0 |
| 266 | SLE RA 20 | 0.01 | -7.7 | 61.61 | 0.309 | 0.013 | 0 |
| 266 | SLE RA 21 | 0.01 | -7.42 | 60.39 | 0.2965 | 0.0109 | 0 |
| 266 | SLE FR 1 | 0.01 | -6.9 | 55.36 | 0.2765 | 0.0108 | 0 |
| 266 | SLE FR 2 | 0.01 | -6.8 | 54.95 | 0.2723 | 0.0101 | 0 |
| 266 | SLE FR 3 | 0.01 | -6.92 | 55.45 | 0.2773 | 0.011 | 0 |
| 266 | SLE FR 4 | 0.01 | -7.03 | 56.76 | 0.2814 | 0.0106 | 0 |
| 266 | SLE FR 5 | 0.01 | -7.14 | 57.26 | 0.2864 | 0.0115 | 0 |
| 266 | SLE FR 6 | 0.01 | -7.27 | 58.38 | 0.2916 | 0.0117 | 0 |
| 266 | SLE QP 1 | 0.01 | -6.9 | 55.36 | 0.2765 | 0.0108 | 0 |
| 266 | SLE QP 2 | 0.01 | -7.12 | 57.17 | 0.2856 | 0.0113 | 0 |
| 266 | SLD 1 | 0.16 | -3.13 | 38.75 | 0.1209 | 0.166 | 0.0002 |
| 266 | SLD 2 | 0.16 | -3.13 | 38.75 | 0.1209 | 0.166 | 0.0002 |
| 266 | SLD 3 | 0.29 | -7.45 | 46.28 | 0.3034 | 0.249 | 0.0001 |
| 266 | SLD 4 | 0.29 | -7.45 | 46.28 | 0.3034 | 0.249 | 0.0001 |
| 266 | SLD 5 | -0.14 | 0.62 | 40.23 | -0.0405 | -0.0681 | 0.0002 |
| 266 | SLD 6 | -0.14 | 0.62 | 40.23 | -0.0405 | -0.0681 | 0.0002 |
| 266 | SLD 7 | 0.29 | -13.77 | 65.32 | 0.5676 | 0.2085 | -0.0001 |
| 266 | SLD 8 | 0.29 | -13.77 | 65.32 | 0.5676 | 0.2085 | -0.0001 |
| 266 | SLD 9 | -0.27 | -0.48 | 49.02 | 0.0036 | -0.1859 | 0.0001 |
| 266 | SLD 10 | -0.27 | -0.48 | 49.02 | 0.0036 | -0.1859 | 0.0001 |
| 266 | SLD 11 | 0.15 | -14.87 | 74.12 | 0.6116 | 0.0908 | -0.0002 |
| 266 | SLD 12 | 0.15 | -14.87 | 74.12 | 0.6116 | 0.0908 | -0.0002 |
| 266 | SLD 13 | -0.28 | -6.8 | 68.07 | 0.2678 | -0.2264 | -0.0001 |
| 266 | SLD 14 | -0.28 | -6.8 | 68.07 | 0.2678 | -0.2264 | -0.0001 |
| 266 | SLD 15 | -0.15 | -11.11 | 75.59 | 0.4502 | -0.1434 | -0.0002 |
| 266 | SLD 16 | -0.15 | -11.11 | 75.59 | 0.4502 | -0.1434 | -0.0002 |
| 266 | SLV 1 | 0.36 | 2.18 | 14.03 | -0.0983 | 0.3752 | 0.0005 |
| 266 | SLV 2 | 0.36 | 2.18 | 14.03 | -0.0983 | 0.3752 | 0.0005 |
| 266 | SLV 3 | 0.68 | -7.84 | 31.75 | 0.3254 | 0.5859 | 0.0003 |
| 266 | SLV 4 | 0.68 | -7.84 | 31.75 | 0.3254 | 0.5859 | 0.0003 |
| 266 | SLV 5 | -0.38 | 10.88 | 17.35 | -0.4721 | -0.1992 | 0.0004 |
| 266 | SLV 6 | -0.38 | 10.88 | 17.35 | -0.4721 | -0.1992 | 0.0004 |
| 266 | SLV 7 | 0.7 | -22.54 | 76.42 | 0.9401 | 0.5034 | -0.0002 |
| 266 | SLV 8 | 0.7 | -22.54 | 76.42 | 0.9401 | 0.5034 | -0.0002 |
| 266 | SLV 9 | -0.69 | 8.3 | 37.92 | -0.3689 | -0.4807 | 0.0002 |
| 266 | SLV 10 | -0.69 | 8.3 | 37.92 | -0.3689 | -0.4807 | 0.0002 |
| 266 | SLV 11 | 0.39 | -25.12 | 96.99 | 1.0433 | 0.2218 | -0.0004 |
| 266 | SLV 12 | 0.39 | -25.12 | 96.99 | 1.0433 | 0.2218 | -0.0004 |
| 266 | SLV 13 | -0.67 | -6.4 | 82.6 | 0.2458 | -0.5633 | -0.0003 |
| 266 | SLV 14 | -0.67 | -6.4 | 82.6 | 0.2458 | -0.5633 | -0.0003 |
| 266 | SLV 15 | -0.35 | -16.42 | 100.32 | 0.6694 | -0.3525 | -0.0005 |
| 266 | SLV 16 | -0.35 | -16.42 | 100.32 | 0.6694 | -0.3525 | -0.0005 |
| 267 | SLU 1 | -0.01 | -7.28 | 28.68 | 0.1735 | -0.0023 | -0.0004 |
| 267 | SLU 2 | -0.01 | -7.22 | 28.52 | 0.1716 | -0.0023 | -0.0004 |
| 267 | SLU 3 | -0.01 | -7.36 | 29.12 | 0.1744 | -0.0023 | -0.0004 |

| Nodo | Cont. | Reazione a traslazione | | | Reazione a rotazione | | |
|---|---|---|---|---|---|---|---|
| Ind. | N.br. | x | y | z | x | y | z |
| 267 | SLU 4 | -0.01 | -7.33 | 29.03 | 0.1732 | -0.0023 | -0.0004 |
| 267 | SLU 5 | -0.01 | -7.15 | 28.43 | 0.1682 | -0.0022 | -0.0004 |
| 267 | SLU 6 | -0.01 | -7.29 | 29.03 | 0.171 | -0.0022 | -0.0004 |
| 267 | SLU 7 | -0.01 | -7.26 | 28.93 | 0.1699 | -0.0022 | -0.0004 |
| 267 | SLU 8 | -0.01 | -7.14 | 28.5 | 0.1668 | -0.0022 | -0.0004 |
| 267 | SLU 9 | -0.01 | -7.11 | 28.4 | 0.1657 | -0.0022 | -0.0004 |
| 267 | SLU 10 | -0.01 | -8.59 | 33.64 | 0.2067 | -0.0028 | -0.0005 |
| 267 | SLU 11 | -0.01 | -8.73 | 34.24 | 0.2095 | -0.0028 | -0.0005 |
| 267 | SLU 12 | -0.01 | -8.7 | 34.15 | 0.2083 | -0.0028 | -0.0005 |
| 267 | SLU 13 | -0.01 | -8.52 | 33.55 | 0.2033 | -0.0027 | -0.0005 |
| 267 | SLU 14 | -0.01 | -8.67 | 34.15 | 0.2061 | -0.0027 | -0.0005 |
| 267 | SLU 15 | -0.01 | -8.63 | 34.06 | 0.205 | -0.0027 | -0.0005 |
| 267 | SLU 16 | -0.01 | -8.51 | 33.62 | 0.2019 | -0.0026 | -0.0005 |
| 267 | SLU 17 | -0.01 | -8.48 | 33.53 | 0.2008 | -0.0026 | -0.0005 |
| 267 | SLU 18 | -0.01 | -9.24 | 36 | 0.2237 | -0.003 | -0.0005 |
| 267 | SLU 19 | -0.01 | -9.21 | 35.9 | 0.2225 | -0.003 | -0.0005 |
| 267 | SLU 20 | -0.01 | -9.17 | 35.91 | 0.2203 | -0.0029 | -0.0005 |
| 267 | SLU 21 | -0.01 | -9.14 | 35.81 | 0.2192 | -0.0029 | -0.0005 |
| 267 | SLU 22 | -0.01 | -8.47 | 33.22 | 0.2029 | -0.0027 | -0.0005 |
| 267 | SLU 23 | -0.01 | -8.41 | 33.06 | 0.2009 | -0.0027 | -0.0005 |
| 267 | SLU 24 | -0.01 | -8.55 | 33.66 | 0.2037 | -0.0027 | -0.0005 |
| 267 | SLU 25 | -0.01 | -8.51 | 33.56 | 0.2026 | -0.0027 | -0.0005 |
| 267 | SLU 26 | -0.01 | -8.34 | 32.97 | 0.1976 | -0.0026 | -0.0005 |
| 267 | SLU 27 | -0.01 | -8.48 | 33.57 | 0.2004 | -0.0026 | -0.0005 |
| 267 | SLU 28 | -0.01 | -8.44 | 33.47 | 0.1992 | -0.0026 | -0.0005 |
| 267 | SLU 29 | -0.01 | -8.33 | 33.04 | 0.1962 | -0.0025 | -0.0004 |
| 267 | SLU 30 | -0.01 | -8.29 | 32.94 | 0.195 | -0.0026 | -0.0004 |
| 267 | SLU 31 | -0.01 | -9.78 | 38.18 | 0.236 | -0.0032 | -0.0005 |
| 267 | SLU 32 | -0.01 | -9.92 | 38.78 | 0.2389 | -0.0032 | -0.0005 |
| 267 | SLU 33 | -0.01 | -9.89 | 38.68 | 0.2377 | -0.0032 | -0.0005 |
| 267 | SLU 34 | -0.01 | -9.71 | 38.09 | 0.2327 | -0.0031 | -0.0005 |
| 267 | SLU 35 | -0.01 | -9.85 | 38.69 | 0.2355 | -0.0031 | -0.0005 |
| 267 | SLU 36 | -0.01 | -9.82 | 38.59 | 0.2343 | -0.0031 | -0.0005 |
| 267 | SLU 37 | -0.01 | -9.7 | 38.16 | 0.2313 | -0.003 | -0.0005 |
| 267 | SLU 38 | -0.01 | -9.67 | 38.06 | 0.2301 | -0.003 | -0.0005 |
| 267 | SLU 39 | -0.01 | -10.43 | 40.53 | 0.253 | -0.0034 | -0.0006 |
| 267 | SLU 40 | -0.01 | -10.39 | 40.44 | 0.2519 | -0.0034 | -0.0006 |
| 267 | SLU 41 | -0.01 | -10.36 | 40.44 | 0.2497 | -0.0033 | -0.0006 |
| 267 | SLU 42 | -0.01 | -10.32 | 40.35 | 0.2485 | -0.0033 | -0.0006 |
| 267 | SLU 43 | -0.01 | -9.06 | 35.73 | 0.2155 | -0.0029 | -0.0005 |
| 267 | SLU 44 | -0.01 | -9 | 35.57 | 0.2135 | -0.0029 | -0.0005 |
| 267 | SLU 45 | -0.01 | -9.14 | 36.17 | 0.2164 | -0.0028 | -0.0005 |
| 267 | SLU 46 | -0.01 | -9.1 | 36.07 | 0.2152 | -0.0029 | -0.0005 |
| 267 | SLU 47 | -0.01 | -8.93 | 35.48 | 0.2102 | -0.0028 | -0.0005 |
| 267 | SLU 48 | -0.01 | -9.07 | 36.08 | 0.213 | -0.0028 | -0.0005 |
| 267 | SLU 49 | -0.01 | -9.03 | 35.98 | 0.2119 | -0.0028 | -0.0005 |
| 267 | SLU 50 | -0.01 | -8.92 | 35.55 | 0.2088 | -0.0027 | -0.0005 |
| 267 | SLU 51 | -0.01 | -8.88 | 35.45 | 0.2076 | -0.0027 | -0.0005 |
| 267 | SLU 52 | -0.01 | -10.37 | 40.69 | 0.2487 | -0.0034 | -0.0006 |
| 267 | SLU 53 | -0.01 | -10.51 | 41.29 | 0.2515 | -0.0033 | -0.0006 |
| 267 | SLU 54 | -0.01 | -10.48 | 41.2 | 0.2503 | -0.0033 | -0.0006 |
| 267 | SLU 55 | -0.01 | -10.3 | 40.6 | 0.2453 | -0.0033 | -0.0006 |
| 267 | SLU 56 | -0.01 | -10.44 | 41.2 | 0.2481 | -0.0032 | -0.0006 |
| 267 | SLU 57 | -0.01 | -10.41 | 41.11 | 0.247 | -0.0033 | -0.0006 |
| 267 | SLU 58 | -0.01 | -10.29 | 40.67 | 0.2439 | -0.0032 | -0.0005 |
| 267 | SLU 59 | -0.01 | -10.26 | 40.58 | 0.2428 | -0.0032 | -0.0005 |
| 267 | SLU 60 | -0.01 | -11.02 | 43.05 | 0.2656 | -0.0035 | -0.0006 |
| 267 | SLU 61 | -0.01 | -10.98 | 42.95 | 0.2645 | -0.0035 | -0.0006 |
| 267 | SLU 62 | -0.01 | -10.95 | 42.96 | 0.2623 | -0.0035 | -0.0006 |
| 267 | SLU 63 | -0.01 | -10.91 | 42.86 | 0.2611 | -0.0035 | -0.0006 |
| 267 | SLU 64 | -0.01 | -10.24 | 40.27 | 0.2449 | -0.0032 | -0.0006 |
| 267 | SLU 65 | -0.01 | -10.18 | 40.11 | 0.2429 | -0.0033 | -0.0006 |
| 267 | SLU 66 | -0.01 | -10.32 | 40.71 | 0.2457 | -0.0032 | -0.0006 |
| 267 | SLU 67 | -0.01 | -10.29 | 40.61 | 0.2446 | -0.0032 | -0.0006 |
| 267 | SLU 68 | -0.01 | -10.11 | 40.02 | 0.2396 | -0.0032 | -0.0005 |
| 267 | SLU 69 | -0.01 | -10.26 | 40.61 | 0.2424 | -0.0032 | -0.0005 |
| 267 | SLU 70 | -0.01 | -10.22 | 40.52 | 0.2412 | -0.0032 | -0.0005 |
| 267 | SLU 71 | -0.01 | -10.1 | 40.08 | 0.2382 | -0.0031 | -0.0005 |
| 267 | SLU 72 | -0.01 | -10.07 | 39.99 | 0.237 | -0.0031 | -0.0005 |
| 267 | SLU 73 | -0.01 | -11.56 | 45.23 | 0.278 | -0.0037 | -0.0006 |
| 267 | SLU 74 | -0.01 | -11.7 | 45.83 | 0.2808 | -0.0037 | -0.0006 |
| 267 | SLU 75 | -0.01 | -11.66 | 45.73 | 0.2797 | -0.0037 | -0.0006 |
| 267 | SLU 76 | -0.01 | -11.49 | 45.14 | 0.2747 | -0.0037 | -0.0006 |
| 267 | SLU 77 | -0.01 | -11.63 | 45.74 | 0.2775 | -0.0036 | -0.0006 |
| 267 | SLU 78 | -0.01 | -11.59 | 45.64 | 0.2763 | -0.0037 | -0.0006 |
| 267 | SLU 79 | -0.01 | -11.48 | 45.21 | 0.2733 | -0.0036 | -0.0006 |
| 267 | SLU 80 | -0.01 | -11.44 | 45.11 | 0.2721 | -0.0036 | -0.0006 |
| 267 | SLU 81 | -0.01 | -12.2 | 47.58 | 0.295 | -0.0039 | -0.0007 |
| 267 | SLU 82 | -0.01 | -12.17 | 47.49 | 0.2938 | -0.0039 | -0.0007 |
| 267 | SLU 83 | -0.01 | -12.14 | 47.49 | 0.2917 | -0.0039 | -0.0007 |
| 267 | SLU 84 | -0.01 | -12.1 | 47.4 | 0.2905 | -0.0039 | -0.0007 |
| 267 | SLE RA 1 | -0.01 | -7.62 | 29.98 | 0.1819 | -0.0024 | -0.0004 |
| 267 | SLE RA 2 | -0.01 | -7.58 | 29.87 | 0.1806 | -0.0024 | -0.0004 |
| 267 | SLE RA 3 | -0.01 | -7.67 | 30.27 | 0.1825 | -0.0024 | -0.0004 |
| 267 | SLE RA 4 | -0.01 | -7.65 | 30.21 | 0.1817 | -0.0024 | -0.0004 |
| 267 | SLE RA 5 | -0.01 | -7.53 | 29.81 | 0.1784 | -0.0024 | -0.0004 |
| 267 | SLE RA 6 | -0.01 | -7.63 | 30.21 | 0.1803 | -0.0024 | -0.0004 |
| 267 | SLE RA 7 | -0.01 | -7.6 | 30.15 | 0.1795 | -0.0024 | -0.0004 |

| Nodo | Cont. | Reazione a traslazione | | | Reazione a rotazione | | |
|---|---|---|---|---|---|---|---|
| Ind. | N.br. | x | y | z | x | y | z |
| 267 | SLE RA 8 | -0.01 | -7.53 | 29.86 | 0.1775 | -0.0023 | -0.0004 |
| 267 | SLE RA 9 | -0.01 | -7.5 | 29.79 | 0.1767 | -0.0023 | -0.0004 |
| 267 | SLE RA 10 | -0.01 | -8.49 | 33.29 | 0.204 | -0.0027 | -0.0005 |
| 267 | SLE RA 11 | -0.01 | -8.59 | 33.68 | 0.2059 | -0.0027 | -0.0005 |
| 267 | SLE RA 12 | -0.01 | -8.56 | 33.62 | 0.2051 | -0.0027 | -0.0005 |
| 267 | SLE RA 13 | -0.01 | -8.45 | 33.22 | 0.2018 | -0.0027 | -0.0005 |
| 267 | SLE RA 14 | -0.01 | -8.54 | 33.62 | 0.2037 | -0.0027 | -0.0005 |
| 267 | SLE RA 15 | -0.01 | -8.52 | 33.56 | 0.2029 | -0.0027 | -0.0005 |
| 267 | SLE RA 16 | -0.01 | -8.44 | 33.27 | 0.2009 | -0.0026 | -0.0005 |
| 267 | SLE RA 17 | -0.01 | -8.42 | 33.21 | 0.2001 | -0.0026 | -0.0005 |
| 267 | SLE RA 18 | -0.01 | -8.93 | 34.85 | 0.2153 | -0.0029 | -0.0005 |
| 267 | SLE RA 19 | -0.01 | -8.9 | 34.79 | 0.2146 | -0.0029 | -0.0005 |
| 267 | SLE RA 20 | -0.01 | -8.88 | 34.79 | 0.2131 | -0.0028 | -0.0005 |
| 267 | SLE RA 21 | -0.01 | -8.86 | 34.73 | 0.2123 | -0.0028 | -0.0005 |
| 267 | SLE FR 1 | -0.01 | -7.62 | 29.98 | 0.1819 | -0.0024 | -0.0004 |
| 267 | SLE FR 2 | -0.01 | -7.61 | 29.96 | 0.1816 | -0.0024 | -0.0004 |
| 267 | SLE FR 3 | -0.01 | -7.6 | 29.95 | 0.181 | -0.0024 | -0.0004 |
| 267 | SLE FR 4 | -0.01 | -8 | 31.42 | 0.1917 | -0.0025 | -0.0004 |
| 267 | SLE FR 5 | -0.01 | -7.99 | 31.42 | 0.191 | -0.0025 | -0.0004 |
| 267 | SLE FR 6 | -0.01 | -8.27 | 32.42 | 0.1986 | -0.0026 | -0.0005 |
| 267 | SLE QP 1 | -0.01 | -7.62 | 29.98 | 0.1819 | -0.0024 | -0.0004 |
| 267 | SLE QP 2 | -0.01 | -8.01 | 31.44 | 0.1919 | -0.0025 | -0.0004 |
| 267 | SLD 1 | -0.4 | -7.82 | 30.75 | 0.1857 | 0.0532 | 0.0069 |
| 267 | SLD 2 | -0.4 | -7.82 | 30.75 | 0.1857 | 0.0532 | 0.0069 |
| 267 | SLD 3 | -0.35 | -11.51 | 41.24 | 0.315 | 0.0459 | 0.006 |
| 267 | SLD 4 | -0.35 | -11.51 | 41.24 | 0.315 | 0.0459 | 0.006 |
| 267 | SLD 5 | -0.21 | -2.36 | 15.32 | -0.0061 | 0.0252 | 0.0031 |
| 267 | SLD 6 | -0.21 | -2.36 | 15.32 | -0.0061 | 0.0252 | 0.0031 |
| 267 | SLD 7 | -0.03 | -14.65 | 50.29 | 0.425 | 0.0009 | 0.0001 |
| 267 | SLD 8 | -0.03 | -14.65 | 50.29 | 0.425 | 0.0009 | 0.0001 |
| 267 | SLD 9 | 0.01 | -1.37 | 12.59 | -0.0412 | -0.006 | -0.001 |
| 267 | SLD 10 | 0.01 | -1.37 | 12.59 | -0.0412 | -0.006 | -0.001 |
| 267 | SLD 11 | 0.19 | -13.66 | 47.56 | 0.39 | -0.0303 | -0.004 |
| 267 | SLD 12 | 0.19 | -13.66 | 47.56 | 0.39 | -0.0303 | -0.004 |
| 267 | SLD 13 | 0.33 | -4.51 | 21.64 | 0.0689 | -0.051 | -0.0069 |
| 267 | SLD 14 | 0.33 | -4.51 | 21.64 | 0.0689 | -0.051 | -0.0069 |
| 267 | SLD 15 | 0.39 | -8.2 | 32.14 | 0.1982 | -0.0583 | -0.0078 |
| 267 | SLD 16 | 0.39 | -8.2 | 32.14 | 0.1982 | -0.0583 | -0.0078 |
| 267 | SLV 1 | -1.01 | -7.56 | 29.79 | 0.177 | 0.1335 | 0.017 |
| 267 | SLV 2 | -1.01 | -7.56 | 29.79 | 0.177 | 0.1335 | 0.017 |
| 267 | SLV 3 | -0.88 | -16.25 | 54.57 | 0.4819 | 0.115 | 0.0148 |
| 267 | SLV 4 | -0.88 | -16.25 | 54.57 | 0.4819 | 0.115 | 0.0148 |
| 267 | SLV 5 | -0.52 | 5.31 | -6.64 | -0.275 | 0.0663 | 0.0082 |
| 267 | SLV 6 | -0.52 | 5.31 | -6.64 | -0.275 | 0.0663 | 0.0082 |
| 267 | SLV 7 | -0.06 | -23.66 | 75.96 | 0.7414 | 0.0047 | 0.0007 |
| 267 | SLV 8 | -0.06 | -23.66 | 75.96 | 0.7414 | 0.0047 | 0.0007 |
| 267 | SLV 9 | 0.04 | 7.64 | -13.08 | -0.3575 | -0.0098 | -0.0016 |
| 267 | SLV 10 | 0.04 | 7.64 | -13.08 | -0.3575 | -0.0098 | -0.0016 |
| 267 | SLV 11 | 0.5 | -21.33 | 69.52 | 0.6588 | -0.0714 | -0.0091 |
| 267 | SLV 12 | 0.5 | -21.33 | 69.52 | 0.6588 | -0.0714 | -0.0091 |
| 267 | SLV 13 | 0.86 | 0.23 | 8.31 | -0.0981 | -0.1201 | -0.0157 |
| 267 | SLV 14 | 0.86 | 0.23 | 8.31 | -0.0981 | -0.1201 | -0.0157 |
| 267 | SLV 15 | 1 | -8.46 | 33.09 | 0.2068 | -0.1386 | -0.0179 |
| 267 | SLV 16 | 1 | -8.46 | 33.09 | 0.2068 | -0.1386 | -0.0179 |
| 268 | SLU 1 | 0 | 4.51 | 15.95 | -0.6053 | 0.0004 | 0 |
| 268 | SLU 2 | 0 | 4.5 | 15.93 | -0.6036 | 0.0004 | 0 |
| 268 | SLU 3 | 0 | 4.72 | 16.1 | -0.6319 | 0.0005 | 0 |
| 268 | SLU 4 | 0 | 4.71 | 16.09 | -0.6309 | 0.0004 | 0 |
| 268 | SLU 5 | 0 | 4.62 | 16.02 | -0.6198 | 0.0004 | 0 |
| 268 | SLU 6 | 0 | 4.85 | 16.19 | -0.6481 | 0.0005 | 0 |
| 268 | SLU 7 | 0 | 4.84 | 16.18 | -0.6471 | 0.0005 | 0 |
| 268 | SLU 8 | 0 | 4.77 | 16.12 | -0.6376 | 0.0005 | 0 |
| 268 | SLU 9 | 0 | 4.76 | 16.12 | -0.6366 | 0.0005 | 0 |
| 268 | SLU 10 | 0 | 5.24 | 19.85 | -0.7141 | 0.0004 | 0 |
| 268 | SLU 11 | 0 | 5.47 | 20.02 | -0.7424 | 0.0005 | 0 |
| 268 | SLU 12 | 0 | 5.46 | 20.01 | -0.7414 | 0.0005 | 0 |
| 268 | SLU 13 | 0 | 5.37 | 19.94 | -0.7303 | 0.0005 | 0 |
| 268 | SLU 14 | 0 | 5.6 | 20.11 | -0.7586 | 0.0006 | 0 |
| 268 | SLU 15 | 0 | 5.59 | 20.1 | -0.7576 | 0.0006 | 0 |
| 268 | SLU 16 | 0 | 5.51 | 20.04 | -0.7481 | 0.0006 | 0 |
| 268 | SLU 17 | 0 | 5.51 | 20.04 | -0.7471 | 0.0006 | 0 |
| 268 | SLU 18 | 0 | 5.58 | 21.54 | -0.7632 | 0.0005 | 0 |
| 268 | SLU 19 | 0 | 5.57 | 21.54 | -0.7622 | 0.0005 | 0 |
| 268 | SLU 20 | 0 | 5.71 | 21.63 | -0.7793 | 0.0006 | 0 |
| 268 | SLU 21 | 0 | 5.7 | 21.63 | -0.7783 | 0.0005 | 0 |
| 268 | SLU 22 | 0 | 5.26 | 18.97 | -0.7118 | 0.0005 | 0 |
| 268 | SLU 23 | 0 | 5.25 | 18.96 | -0.7101 | 0.0005 | 0 |
| 268 | SLU 24 | 0 | 5.48 | 19.13 | -0.7384 | 0.0006 | 0 |
| 268 | SLU 25 | 0 | 5.47 | 19.12 | -0.7374 | 0.0005 | 0 |
| 268 | SLU 26 | 0 | 5.38 | 19.05 | -0.7262 | 0.0005 | 0 |
| 268 | SLU 27 | 0 | 5.6 | 19.21 | -0.7545 | 0.0006 | 0 |
| 268 | SLU 28 | 0 | 5.6 | 19.21 | -0.7535 | 0.0006 | 0 |
| 268 | SLU 29 | 0 | 5.52 | 19.15 | -0.7441 | 0.0006 | 0 |
| 268 | SLU 30 | 0 | 5.51 | 19.14 | -0.7431 | 0.0006 | 0 |
| 268 | SLU 31 | 0 | 6 | 22.88 | -0.8206 | 0.0005 | 0 |
| 268 | SLU 32 | 0 | 6.22 | 23.04 | -0.8489 | 0.0006 | 0 |
| 268 | SLU 33 | 0 | 6.22 | 23.04 | -0.8479 | 0.0006 | 0 |
| 268 | SLU 34 | 0 | 6.13 | 22.97 | -0.8368 | 0.0006 | 0 |

| Nodo | Cont. | Reazione a traslazione | | | Reazione a rotazione | | |
|---|---|---|---|---|---|---|---|
| Ind. | N.br. | x | y | z | x | y | z |
| 268 | SLU 35 | 0 | 6.35 | 23.13 | -0.8651 | 0.0007 | 0 |
| 268 | SLU 36 | 0 | 6.34 | 23.13 | -0.864 | 0.0007 | 0 |
| 268 | SLU 37 | 0 | 6.27 | 23.07 | -0.8546 | 0.0007 | 0 |
| 268 | SLU 38 | 0 | 6.26 | 23.06 | -0.8536 | 0.0007 | 0 |
| 268 | SLU 39 | 0 | 6.33 | 24.57 | -0.8697 | 0.0006 | 0 |
| 268 | SLU 40 | 0 | 6.32 | 24.56 | -0.8686 | 0.0006 | 0 |
| 268 | SLU 41 | 0 | 6.46 | 24.66 | -0.8858 | 0.0007 | 0 |
| 268 | SLU 42 | 0 | 6.45 | 24.65 | -0.8848 | 0.0006 | 0 |
| 268 | SLU 43 | 0 | 5.6 | 19.69 | -0.7504 | 0.0005 | 0 |
| 268 | SLU 44 | 0 | 5.59 | 19.68 | -0.7487 | 0.0005 | 0 |
| 268 | SLU 45 | 0 | 5.82 | 19.85 | -0.777 | 0.0006 | 0 |
| 268 | SLU 46 | 0 | 5.81 | 19.84 | -0.776 | 0.0005 | 0 |
| 268 | SLU 47 | 0 | 5.72 | 19.77 | -0.7649 | 0.0005 | 0 |
| 268 | SLU 48 | 0 | 5.94 | 19.94 | -0.7931 | 0.0006 | 0 |
| 268 | SLU 49 | 0 | 5.94 | 19.93 | -0.7921 | 0.0006 | 0 |
| 268 | SLU 50 | 0 | 5.86 | 19.87 | -0.7827 | 0.0006 | 0 |
| 268 | SLU 51 | 0 | 5.85 | 19.86 | -0.7817 | 0.0006 | 0 |
| 268 | SLU 52 | 0 | 6.34 | 23.6 | -0.8592 | 0.0005 | 0 |
| 268 | SLU 53 | 0 | 6.56 | 23.76 | -0.8875 | 0.0006 | 0 |
| 268 | SLU 54 | 0 | 6.56 | 23.76 | -0.8865 | 0.0006 | 0 |
| 268 | SLU 55 | 0 | 6.47 | 23.69 | -0.8754 | 0.0006 | 0 |
| 268 | SLU 56 | 0 | 6.69 | 23.85 | -0.9037 | 0.0007 | 0 |
| 268 | SLU 57 | 0 | 6.68 | 23.85 | -0.9027 | 0.0007 | 0 |
| 268 | SLU 58 | 0 | 6.61 | 23.79 | -0.8932 | 0.0007 | 0 |
| 268 | SLU 59 | 0 | 6.6 | 23.78 | -0.8922 | 0.0007 | 0 |
| 268 | SLU 60 | 0 | 6.67 | 25.29 | -0.9083 | 0.0006 | 0 |
| 268 | SLU 61 | 0 | 6.66 | 25.28 | -0.9073 | 0.0006 | 0 |
| 268 | SLU 62 | 0 | 6.8 | 25.38 | -0.9244 | 0.0007 | 0 |
| 268 | SLU 63 | 0 | 6.79 | 25.37 | -0.9234 | 0.0006 | 0 |
| 268 | SLU 64 | 0 | 6.36 | 22.72 | -0.8569 | 0.0006 | 0 |
| 268 | SLU 65 | 0 | 6.34 | 22.71 | -0.8552 | 0.0005 | 0 |
| 268 | SLU 66 | 0 | 6.57 | 22.87 | -0.8835 | 0.0006 | 0 |
| 268 | SLU 67 | 0 | 6.56 | 22.86 | -0.8825 | 0.0006 | 0 |
| 268 | SLU 68 | 0 | 6.47 | 22.79 | -0.8713 | 0.0006 | 0 |
| 268 | SLU 69 | 0 | 6.7 | 22.96 | -0.8996 | 0.0007 | 0 |
| 268 | SLU 70 | 0 | 6.69 | 22.95 | -0.8986 | 0.0007 | 0 |
| 268 | SLU 71 | 0 | 6.61 | 22.9 | -0.8892 | 0.0007 | 0 |
| 268 | SLU 72 | 0 | 6.61 | 22.89 | -0.8882 | 0.0007 | 0 |
| 268 | SLU 73 | 0 | 7.09 | 26.62 | -0.9657 | 0.0006 | 0 |
| 268 | SLU 74 | 0 | 7.32 | 26.79 | -0.994 | 0.0007 | 0 |
| 268 | SLU 75 | 0 | 7.31 | 26.78 | -0.993 | 0.0007 | 0 |
| 268 | SLU 76 | 0 | 7.22 | 26.71 | -0.9818 | 0.0007 | 0 |
| 268 | SLU 77 | 0 | 7.45 | 26.88 | -1.0101 | 0.0008 | 0 |
| 268 | SLU 78 | 0 | 7.44 | 26.87 | -1.0091 | 0.0008 | 0 |
| 268 | SLU 79 | 0 | 7.36 | 26.81 | -0.9997 | 0.0008 | 0 |
| 268 | SLU 80 | 0 | 7.35 | 26.81 | -0.9987 | 0.0008 | 0 |
| 268 | SLU 81 | 0 | 7.43 | 28.31 | -1.0147 | 0.0007 | 0 |
| 268 | SLU 82 | 0 | 7.42 | 28.31 | -1.0137 | 0.0007 | 0 |
| 268 | SLU 83 | 0 | 7.55 | 28.4 | -1.0309 | 0.0008 | 0 |
| 268 | SLU 84 | 0 | 7.55 | 28.4 | -1.0299 | 0.0007 | 0 |
| 268 | SLE RA 1 | 0 | 4.72 | 16.81 | -0.6357 | 0.0004 | 0 |
| 268 | SLE RA 2 | 0 | 4.72 | 16.8 | -0.6346 | 0.0004 | 0 |
| 268 | SLE RA 3 | 0 | 4.87 | 16.91 | -0.6535 | 0.0005 | 0 |
| 268 | SLE RA 4 | 0 | 4.86 | 16.91 | -0.6528 | 0.0005 | 0 |
| 268 | SLE RA 5 | 0 | 4.8 | 16.86 | -0.6454 | 0.0004 | 0 |
| 268 | SLE RA 6 | 0 | 4.95 | 16.97 | -0.6642 | 0.0005 | 0 |
| 268 | SLE RA 7 | 0 | 4.95 | 16.97 | -0.6636 | 0.0005 | 0 |
| 268 | SLE RA 8 | 0 | 4.9 | 16.93 | -0.6573 | 0.0005 | 0 |
| 268 | SLE RA 9 | 0 | 4.89 | 16.92 | -0.6566 | 0.0005 | 0 |
| 268 | SLE RA 10 | 0 | 5.21 | 19.41 | -0.7083 | 0.0005 | 0 |
| 268 | SLE RA 11 | 0 | 5.37 | 19.53 | -0.7271 | 0.0005 | 0 |
| 268 | SLE RA 12 | 0 | 5.36 | 19.52 | -0.7265 | 0.0005 | 0 |
| 268 | SLE RA 13 | 0 | 5.3 | 19.47 | -0.719 | 0.0005 | 0 |
| 268 | SLE RA 14 | 0 | 5.45 | 19.58 | -0.7379 | 0.0006 | 0 |
| 268 | SLE RA 15 | 0 | 5.45 | 19.58 | -0.7372 | 0.0005 | 0 |
| 268 | SLE RA 16 | 0 | 5.39 | 19.54 | -0.7309 | 0.0006 | 0 |
| 268 | SLE RA 17 | 0 | 5.39 | 19.54 | -0.7303 | 0.0006 | 0 |
| 268 | SLE RA 18 | 0 | 5.44 | 20.54 | -0.741 | 0.0005 | 0 |
| 268 | SLE RA 19 | 0 | 5.43 | 20.54 | -0.7403 | 0.0005 | 0 |
| 268 | SLE RA 20 | 0 | 5.52 | 20.6 | -0.7517 | 0.0005 | 0 |
| 268 | SLE RA 21 | 0 | 5.52 | 20.6 | -0.7511 | 0.0005 | 0 |
| 268 | SLE FR 1 | 0 | 4.72 | 16.81 | -0.6357 | 0.0004 | 0 |
| 268 | SLE FR 2 | 0 | 4.72 | 16.81 | -0.6355 | 0.0004 | 0 |
| 268 | SLE FR 3 | 0 | 4.76 | 16.83 | -0.64 | 0.0004 | 0 |
| 268 | SLE FR 4 | 0 | 4.94 | 17.93 | -0.6671 | 0.0004 | 0 |
| 268 | SLE FR 5 | 0 | 4.97 | 17.95 | -0.6716 | 0.0005 | 0 |
| 268 | SLE FR 6 | 0 | 5.08 | 18.68 | -0.6883 | 0.0005 | 0 |
| 268 | SLE QP 1 | 0 | 4.72 | 16.81 | -0.6357 | 0.0004 | 0 |
| 268 | SLE QP 2 | 0 | 4.94 | 17.93 | -0.6673 | 0.0005 | 0 |
| 268 | SLD 1 | 0.17 | 1.23 | 18 | -0.5146 | 0.2867 | 0.0021 |
| 268 | SLD 2 | 0.17 | 1.23 | 18 | -0.5146 | 0.2867 | 0.0021 |
| 268 | SLD 3 | 0.18 | 6.58 | 17.42 | -0.7118 | 0.2948 | 0.0022 |
| 268 | SLD 4 | 0.18 | 6.58 | 17.42 | -0.7118 | 0.2948 | 0.0022 |
| 268 | SLD 5 | 0.04 | -4.29 | 18.84 | -0.3223 | 0.0741 | 0.0005 |
| 268 | SLD 6 | 0.04 | -4.29 | 18.84 | -0.3223 | 0.0741 | 0.0005 |
| 268 | SLD 7 | 0.07 | 13.54 | 16.89 | -0.9798 | 0.101 | 0.0008 |
| 268 | SLD 8 | 0.07 | 13.54 | 16.89 | -0.9798 | 0.101 | 0.0008 |
| 268 | SLD 9 | -0.07 | -3.66 | 18.97 | -0.3548 | -0.1001 | -0.0008 |

| Nodo | Cont. | Reazione a traslazione | | | Reazione a rotazione | | |
|---|---|---|---|---|---|---|---|
| Ind. | N.br. | x | y | z | x | y | z |
| 268 | SLD 10 | -0.07 | -3.66 | 18.97 | -0.3548 | -0.1001 | -0.0008 |
| 268 | SLD 11 | -0.04 | 14.16 | 17.02 | -1.0123 | -0.0732 | -0.0004 |
| 268 | SLD 12 | -0.04 | 14.16 | 17.02 | -1.0123 | -0.0732 | -0.0004 |
| 268 | SLD 13 | -0.18 | 3.3 | 18.44 | -0.6227 | -0.2939 | -0.0022 |
| 268 | SLD 14 | -0.18 | 3.3 | 18.44 | -0.6227 | -0.2939 | -0.0022 |
| 268 | SLD 15 | -0.17 | 8.65 | 17.85 | -0.82 | -0.2858 | -0.0021 |
| 268 | SLD 16 | -0.17 | 8.65 | 17.85 | -0.82 | -0.2858 | -0.0021 |
| 268 | SLV 1 | 0.43 | -3.75 | 18.1 | -0.3087 | 0.7319 | 0.0052 |
| 268 | SLV 2 | 0.43 | -3.75 | 18.1 | -0.3087 | 0.7319 | 0.0052 |
| 268 | SLV 3 | 0.46 | 8.75 | 16.75 | -0.7716 | 0.7522 | 0.0054 |
| 268 | SLV 4 | 0.46 | 8.75 | 16.75 | -0.7716 | 0.7522 | 0.0054 |
| 268 | SLV 5 | 0.1 | -16.64 | 20.03 | 0.1423 | 0.189 | 0.0011 |
| 268 | SLV 6 | 0.1 | -16.64 | 20.03 | 0.1423 | 0.189 | 0.0011 |
| 268 | SLV 7 | 0.17 | 25.05 | 15.52 | -1.4006 | 0.2569 | 0.0021 |
| 268 | SLV 8 | 0.17 | 25.05 | 15.52 | -1.4006 | 0.2569 | 0.0021 |
| 268 | SLV 9 | -0.17 | -15.17 | 20.34 | 0.066 | -0.256 | -0.002 |
| 268 | SLV 10 | -0.17 | -15.17 | 20.34 | 0.066 | -0.256 | -0.002 |
| 268 | SLV 11 | -0.09 | 26.51 | 15.83 | -1.4769 | -0.1881 | -0.0011 |
| 268 | SLV 12 | -0.09 | 26.51 | 15.83 | -1.4769 | -0.1881 | -0.0011 |
| 268 | SLV 13 | -0.46 | 1.13 | 19.11 | -0.563 | -0.7513 | -0.0054 |
| 268 | SLV 14 | -0.46 | 1.13 | 19.11 | -0.563 | -0.7513 | -0.0054 |
| 268 | SLV 15 | -0.43 | 13.63 | 17.76 | -1.0259 | -0.731 | -0.0051 |
| 268 | SLV 16 | -0.43 | 13.63 | 17.76 | -1.0259 | -0.731 | -0.0051 |
| 269 | SLU 1 | 0 | 0.87 | 43.67 | -0.2819 | -0.0019 | 0 |
| 269 | SLU 2 | 0 | 0.85 | 43.63 | -0.2809 | -0.0019 | 0 |
| 269 | SLU 3 | 0 | 0.61 | 44.61 | -0.2769 | -0.0022 | 0 |
| 269 | SLU 4 | 0 | 0.6 | 44.59 | -0.2763 | -0.0021 | 0 |
| 269 | SLU 5 | 0 | 0.5 | 43.93 | -0.2674 | -0.0021 | 0 |
| 269 | SLU 6 | 0 | 0.27 | 44.92 | -0.2635 | -0.0024 | 0 |
| 269 | SLU 7 | 0 | 0.26 | 44.89 | -0.2628 | -0.0024 | 0 |
| 269 | SLU 8 | 0 | 0.18 | 44.28 | -0.255 | -0.0024 | 0 |
| 269 | SLU 9 | 0 | 0.17 | 44.25 | -0.2544 | -0.0024 | 0 |
| 269 | SLU 10 | 0 | 0.94 | 51.83 | -0.3303 | -0.0022 | 0 |
| 269 | SLU 11 | 0 | 0.7 | 52.81 | -0.3263 | -0.0025 | 0 |
| 269 | SLU 12 | 0 | 0.69 | 52.78 | -0.3257 | -0.0024 | 0 |
| 269 | SLU 13 | 0 | 0.59 | 52.13 | -0.3168 | -0.0024 | 0 |
| 269 | SLU 14 | 0 | 0.36 | 53.11 | -0.3128 | -0.0027 | 0 |
| 269 | SLU 15 | 0 | 0.35 | 53.09 | -0.3122 | -0.0027 | 0 |
| 269 | SLU 16 | 0 | 0.27 | 52.47 | -0.3044 | -0.0027 | 0 |
| 269 | SLU 17 | 0 | 0.26 | 52.45 | -0.3038 | -0.0027 | 0 |
| 269 | SLU 18 | 0 | 1 | 55.38 | -0.3525 | -0.0024 | 0 |
| 269 | SLU 19 | 0 | 0.99 | 55.35 | -0.3518 | -0.0023 | 0 |
| 269 | SLU 20 | 0 | 0.65 | 55.68 | -0.339 | -0.0026 | 0 |
| 269 | SLU 21 | 0 | 0.64 | 55.66 | -0.3384 | -0.0026 | 0 |
| 269 | SLU 22 | 0 | 0.84 | 50.91 | -0.3222 | -0.0023 | 0 |
| 269 | SLU 23 | 0 | 0.82 | 50.86 | -0.3212 | -0.0023 | 0 |
| 269 | SLU 24 | 0 | 0.58 | 51.85 | -0.3172 | -0.0025 | 0 |
| 269 | SLU 25 | 0 | 0.57 | 51.82 | -0.3165 | -0.0025 | 0 |
| 269 | SLU 26 | 0 | 0.47 | 51.17 | -0.3077 | -0.0025 | 0 |
| 269 | SLU 27 | 0 | 0.24 | 52.15 | -0.3037 | -0.0028 | 0 |
| 269 | SLU 28 | 0 | 0.22 | 52.12 | -0.3031 | -0.0028 | 0 |
| 269 | SLU 29 | 0 | 0.15 | 51.51 | -0.2953 | -0.0028 | 0 |
| 269 | SLU 30 | 0 | 0.14 | 51.49 | -0.2947 | -0.0028 | 0 |
| 269 | SLU 31 | 0 | 0.91 | 59.06 | -0.3705 | -0.0026 | 0 |
| 269 | SLU 32 | 0 | 0.67 | 60.04 | -0.3665 | -0.0028 | 0 |
| 269 | SLU 33 | 0 | 0.66 | 60.02 | -0.3659 | -0.0028 | 0 |
| 269 | SLU 34 | 0 | 0.56 | 59.36 | -0.3571 | -0.0028 | 0 |
| 269 | SLU 35 | 0 | 0.33 | 60.34 | -0.3531 | -0.0031 | 0 |
| 269 | SLU 36 | 0 | 0.31 | 60.32 | -0.3525 | -0.0031 | 0 |
| 269 | SLU 37 | 0 | 0.24 | 59.71 | -0.3447 | -0.0031 | 0 |
| 269 | SLU 38 | 0 | 0.23 | 59.68 | -0.3441 | -0.0031 | 0 |
| 269 | SLU 39 | 0 | 0.97 | 62.61 | -0.3927 | -0.0027 | 0 |
| 269 | SLU 40 | 0 | 0.96 | 62.59 | -0.3921 | -0.0027 | 0 |
| 269 | SLU 41 | 0 | 0.62 | 62.92 | -0.3793 | -0.003 | 0 |
| 269 | SLU 42 | 0 | 0.61 | 62.89 | -0.3787 | -0.003 | 0 |
| 269 | SLU 43 | 0 | 1.15 | 54.29 | -0.3527 | -0.0024 | 0 |
| 269 | SLU 44 | 0 | 1.12 | 54.25 | -0.3517 | -0.0023 | 0 |
| 269 | SLU 45 | 0 | 0.89 | 55.24 | -0.3477 | -0.0026 | 0 |
| 269 | SLU 46 | 0 | 0.87 | 55.21 | -0.3471 | -0.0026 | 0 |
| 269 | SLU 47 | 0 | 0.78 | 54.56 | -0.3382 | -0.0026 | 0 |
| 269 | SLU 48 | 0 | 0.54 | 55.54 | -0.3342 | -0.0028 | 0 |
| 269 | SLU 49 | 0 | 0.53 | 55.51 | -0.3336 | -0.0028 | 0 |
| 269 | SLU 50 | 0 | 0.45 | 54.9 | -0.3258 | -0.0028 | 0 |
| 269 | SLU 51 | 0 | 0.44 | 54.87 | -0.3252 | -0.0028 | 0 |
| 269 | SLU 52 | 0 | 1.21 | 62.45 | -0.401 | -0.0026 | 0 |
| 269 | SLU 53 | 0 | 0.98 | 63.43 | -0.3971 | -0.0029 | 0 |
| 269 | SLU 54 | 0 | 0.96 | 63.41 | -0.3964 | -0.0029 | 0 |
| 269 | SLU 55 | 0 | 0.87 | 62.75 | -0.3876 | -0.0029 | 0 |
| 269 | SLU 56 | 0 | 0.63 | 63.73 | -0.3836 | -0.0031 | 0 |
| 269 | SLU 57 | 0 | 0.62 | 63.71 | -0.383 | -0.0031 | 0 |
| 269 | SLU 58 | 0 | 0.54 | 63.09 | -0.3752 | -0.0031 | 0 |
| 269 | SLU 59 | 0 | 0.53 | 63.07 | -0.3746 | -0.0031 | 0 |
| 269 | SLU 60 | 0 | 1.27 | 66 | -0.4232 | -0.0028 | 0 |
| 269 | SLU 61 | 0 | 1.26 | 65.98 | -0.4226 | -0.0028 | 0 |
| 269 | SLU 62 | 0 | 0.93 | 66.3 | -0.4098 | -0.003 | 0 |
| 269 | SLU 63 | 0 | 0.91 | 66.28 | -0.4092 | -0.003 | 0 |
| 269 | SLU 64 | 0 | 1.12 | 61.53 | -0.393 | -0.0027 | 0 |
| 269 | SLU 65 | 0 | 1.09 | 61.49 | -0.3919 | -0.0027 | 0 |

| Nodo | Cont. | Reazione a traslazione | | | Reazione a rotazione | | |
|---|---|---|---|---|---|---|---|
| Ind. | N.br. | x | y | z | x | y | z |
| 269 | SLU 66 | 0 | 0.86 | 62.47 | -0.3879 | -0.003 | 0 |
| 269 | SLU 67 | 0 | 0.84 | 62.44 | -0.3873 | -0.003 | 0 |
| 269 | SLU 68 | 0 | 0.75 | 61.79 | -0.3785 | -0.003 | 0 |
| 269 | SLU 69 | 0 | 0.51 | 62.77 | -0.3745 | -0.0032 | 0 |
| 269 | SLU 70 | 0 | 0.5 | 62.75 | -0.3739 | -0.0032 | 0 |
| 269 | SLU 71 | 0 | 0.42 | 62.13 | -0.3661 | -0.0032 | 0 |
| 269 | SLU 72 | 0 | 0.41 | 62.11 | -0.3655 | -0.0032 | 0 |
| 269 | SLU 73 | 0 | 1.18 | 69.68 | -0.4413 | -0.003 | 0 |
| 269 | SLU 74 | 0 | 0.95 | 70.66 | -0.4373 | -0.0033 | 0 |
| 269 | SLU 75 | 0 | 0.93 | 70.64 | -0.4367 | -0.0033 | 0 |
| 269 | SLU 76 | 0 | 0.84 | 69.98 | -0.4279 | -0.0033 | 0 |
| 269 | SLU 77 | 0 | 0.6 | 70.97 | -0.4239 | -0.0035 | 0 |
| 269 | SLU 78 | 0 | 0.59 | 70.94 | -0.4233 | -0.0035 | 0 |
| 269 | SLU 79 | 0 | 0.51 | 70.33 | -0.4154 | -0.0035 | 0 |
| 269 | SLU 80 | 0 | 0.5 | 70.3 | -0.4148 | -0.0035 | 0 |
| 269 | SLU 81 | 0 | 1.24 | 73.23 | -0.4635 | -0.0032 | 0 |
| 269 | SLU 82 | 0 | 1.23 | 73.21 | -0.4629 | -0.0032 | 0 |
| 269 | SLU 83 | 0 | 0.9 | 73.54 | -0.4501 | -0.0034 | 0 |
| 269 | SLU 84 | 0 | 0.88 | 73.51 | -0.4494 | -0.0034 | 0 |
| 269 | SLE RA 1 | 0 | 0.86 | 45.74 | -0.2934 | -0.002 | 0 |
| 269 | SLE RA 2 | 0 | 0.85 | 45.71 | -0.2927 | -0.002 | 0 |
| 269 | SLE RA 3 | 0 | 0.69 | 46.37 | -0.2901 | -0.0022 | 0 |
| 269 | SLE RA 4 | 0 | 0.68 | 46.35 | -0.2897 | -0.0022 | 0 |
| 269 | SLE RA 5 | 0 | 0.62 | 45.91 | -0.2838 | -0.0022 | 0 |
| 269 | SLE RA 6 | 0 | 0.46 | 46.57 | -0.2811 | -0.0023 | 0 |
| 269 | SLE RA 7 | 0 | 0.45 | 46.55 | -0.2807 | -0.0023 | 0 |
| 269 | SLE RA 8 | 0 | 0.4 | 46.14 | -0.2755 | -0.0023 | 0 |
| 269 | SLE RA 9 | 0 | 0.39 | 46.13 | -0.2751 | -0.0023 | 0 |
| 269 | SLE RA 10 | 0 | 0.91 | 51.17 | -0.3257 | -0.0022 | 0 |
| 269 | SLE RA 11 | 0 | 0.75 | 51.83 | -0.323 | -0.0024 | 0 |
| 269 | SLE RA 12 | 0 | 0.74 | 51.81 | -0.3226 | -0.0024 | 0 |
| 269 | SLE RA 13 | 0 | 0.68 | 51.38 | -0.3167 | -0.0024 | 0 |
| 269 | SLE RA 14 | 0 | 0.52 | 52.03 | -0.314 | -0.0025 | 0 |
| 269 | SLE RA 15 | 0 | 0.51 | 52.02 | -0.3136 | -0.0025 | 0 |
| 269 | SLE RA 16 | 0 | 0.46 | 51.61 | -0.3084 | -0.0025 | 0 |
| 269 | SLE RA 17 | 0 | 0.45 | 51.59 | -0.308 | -0.0025 | 0 |
| 269 | SLE RA 18 | 0 | 0.95 | 53.54 | -0.3405 | -0.0023 | 0 |
| 269 | SLE RA 19 | 0 | 0.94 | 53.53 | -0.34 | -0.0023 | 0 |
| 269 | SLE RA 20 | 0 | 0.72 | 53.75 | -0.3315 | -0.0025 | 0 |
| 269 | SLE RA 21 | 0 | 0.71 | 53.73 | -0.3311 | -0.0025 | 0 |
| 269 | SLE FR 1 | 0 | 0.86 | 45.74 | -0.2934 | -0.002 | 0 |
| 269 | SLE FR 2 | 0 | 0.86 | 45.73 | -0.2933 | -0.002 | 0 |
| 269 | SLE FR 3 | 0 | 0.77 | 45.82 | -0.2898 | -0.0021 | 0 |
| 269 | SLE FR 4 | 0 | 0.89 | 48.08 | -0.3074 | -0.0021 | 0 |
| 269 | SLE FR 5 | 0 | 0.8 | 48.16 | -0.304 | -0.0022 | 0 |
| 269 | SLE FR 6 | 0 | 0.91 | 49.64 | -0.3169 | -0.0022 | 0 |
| 269 | SLE QP 1 | 0 | 0.86 | 45.74 | -0.2934 | -0.002 | 0 |
| 269 | SLE QP 2 | 0 | 0.89 | 48.08 | -0.3075 | -0.0021 | 0 |
| 269 | SLD 1 | 0.13 | 3.99 | 47.07 | -0.437 | 0.174 | 0.0001 |
| 269 | SLD 2 | 0.13 | 3.99 | 47.07 | -0.437 | 0.174 | 0.0001 |
| 269 | SLD 3 | 0.12 | -0.72 | 48.18 | -0.243 | 0.1621 | 0.0001 |
| 269 | SLD 4 | 0.12 | -0.72 | 48.18 | -0.243 | 0.1621 | 0.0001 |
| 269 | SLD 5 | 0.06 | 8.97 | 46.09 | -0.6405 | 0.0689 | 0 |
| 269 | SLD 6 | 0.06 | 8.97 | 46.09 | -0.6405 | 0.0689 | 0 |
| 269 | SLD 7 | 0.02 | -6.74 | 49.8 | 0.0059 | 0.029 | 0 |
| 269 | SLD 8 | 0.02 | -6.74 | 49.8 | 0.0059 | 0.029 | 0 |
| 269 | SLD 9 | -0.02 | 8.52 | 46.36 | -0.621 | -0.0332 | 0 |
| 269 | SLD 10 | -0.02 | 8.52 | 46.36 | -0.621 | -0.0332 | 0 |
| 269 | SLD 11 | -0.06 | -7.19 | 50.07 | 0.0254 | -0.0731 | 0 |
| 269 | SLD 12 | -0.06 | -7.19 | 50.07 | 0.0254 | -0.0731 | 0 |
| 269 | SLD 13 | -0.12 | 2.5 | 47.98 | -0.372 | -0.1663 | -0.0001 |
| 269 | SLD 14 | -0.12 | 2.5 | 47.98 | -0.372 | -0.1663 | -0.0001 |
| 269 | SLD 15 | -0.14 | -2.21 | 49.09 | -0.1781 | -0.1783 | -0.0001 |
| 269 | SLD 16 | -0.14 | -2.21 | 49.09 | -0.1781 | -0.1783 | -0.0001 |
| 269 | SLV 1 | 0.33 | 8.2 | 45.64 | -0.6122 | 0.5131 | 0.0002 |
| 269 | SLV 2 | 0.33 | 8.2 | 45.64 | -0.6122 | 0.5131 | 0.0002 |
| 269 | SLV 3 | 0.3 | -2.89 | 48.37 | -0.157 | 0.4806 | 0.0002 |
| 269 | SLV 4 | 0.3 | -2.89 | 48.37 | -0.157 | 0.4806 | 0.0002 |
| 269 | SLV 5 | 0.14 | 19.92 | 43.21 | -1.0893 | 0.2017 | 0.0001 |
| 269 | SLV 6 | 0.14 | 19.92 | 43.21 | -1.0893 | 0.2017 | 0.0001 |
| 269 | SLV 7 | 0.04 | -17.08 | 52.3 | 0.428 | 0.0935 | 0 |
| 269 | SLV 8 | 0.04 | -17.08 | 52.3 | 0.428 | 0.0935 | 0 |
| 269 | SLV 9 | -0.05 | 18.86 | 43.86 | -1.0431 | -0.0977 | 0 |
| 269 | SLV 10 | -0.05 | 18.86 | 43.86 | -1.0431 | -0.0977 | 0 |
| 269 | SLV 11 | -0.15 | -18.14 | 52.95 | 0.4743 | -0.2059 | -0.0001 |
| 269 | SLV 12 | -0.15 | -18.14 | 52.95 | 0.4743 | -0.2059 | -0.0001 |
| 269 | SLV 13 | -0.3 | 4.67 | 47.79 | -0.4581 | -0.4848 | -0.0002 |
| 269 | SLV 14 | -0.3 | 4.67 | 47.79 | -0.4581 | -0.4848 | -0.0002 |
| 269 | SLV 15 | -0.33 | -6.42 | 50.52 | -0.0029 | -0.5173 | -0.0002 |
| 269 | SLV 16 | -0.33 | -6.42 | 50.52 | -0.0029 | -0.5173 | -0.0002 |
| 270 | SLU 1 | -0.02 | -5.02 | 50.96 | 0.0469 | -0.0474 | -0.0001 |
| 270 | SLU 2 | -0.02 | -4.09 | 47.72 | 0.0172 | -0.043 | -0.0001 |
| 270 | SLU 3 | -0.02 | -5.12 | 51.91 | 0.0478 | -0.0488 | -0.0001 |
| 270 | SLU 4 | -0.02 | -4.56 | 49.97 | 0.03 | -0.0462 | -0.0001 |
| 270 | SLU 5 | -0.02 | -4.1 | 48.11 | 0.0167 | -0.0439 | -0.0001 |
| 270 | SLU 6 | -0.02 | -5.13 | 52.31 | 0.0473 | -0.0497 | -0.0001 |
| 270 | SLU 7 | -0.02 | -4.57 | 50.36 | 0.0294 | -0.0471 | -0.0001 |
| 270 | SLU 8 | -0.02 | -5.04 | 51.75 | 0.0459 | -0.0493 | -0.0001 |

| Nodo | Cont. | Reazione a traslazione | | | Reazione a rotazione | | |
|---|---|---|---|---|---|---|---|
| Ind. | N.br. | x | y | z | x | y | z |
| 270 | SLU 9 | -0.02 | -4.48 | 49.81 | 0.0281 | -0.0466 | -0.0001 |
| 270 | SLU 10 | -0.02 | -4.65 | 53.55 | 0.0199 | -0.0491 | -0.0001 |
| 270 | SLU 11 | -0.02 | -5.67 | 57.75 | 0.0505 | -0.0549 | -0.0001 |
| 270 | SLU 12 | -0.02 | -5.11 | 55.8 | 0.0327 | -0.0522 | -0.0001 |
| 270 | SLU 13 | -0.02 | -4.66 | 53.95 | 0.0194 | -0.05 | -0.0001 |
| 270 | SLU 14 | -0.02 | -5.68 | 58.15 | 0.05 | -0.0558 | -0.0001 |
| 270 | SLU 15 | -0.02 | -5.12 | 56.2 | 0.0322 | -0.0531 | -0.0001 |
| 270 | SLU 16 | -0.02 | -5.6 | 57.59 | 0.0486 | -0.0553 | -0.0001 |
| 270 | SLU 17 | -0.02 | -5.04 | 55.64 | 0.0308 | -0.0527 | -0.0001 |
| 270 | SLU 18 | -0.02 | -5.82 | 59.3 | 0.0508 | -0.0561 | -0.0001 |
| 270 | SLU 19 | -0.02 | -5.26 | 57.35 | 0.033 | -0.0534 | -0.0001 |
| 270 | SLU 20 | -0.02 | -5.82 | 59.69 | 0.0503 | -0.057 | -0.0001 |
| 270 | SLU 21 | -0.02 | -5.27 | 57.75 | 0.0325 | -0.0544 | -0.0001 |
| 270 | SLU 22 | -0.02 | -5.56 | 56.5 | 0.05 | -0.0534 | -0.0001 |
| 270 | SLU 23 | -0.02 | -4.63 | 53.26 | 0.0203 | -0.049 | -0.0001 |
| 270 | SLU 24 | -0.02 | -5.65 | 57.45 | 0.0508 | -0.0548 | -0.0001 |
| 270 | SLU 25 | -0.02 | -5.09 | 55.51 | 0.033 | -0.0521 | -0.0001 |
| 270 | SLU 26 | -0.02 | -4.64 | 53.65 | 0.0197 | -0.0499 | -0.0001 |
| 270 | SLU 27 | -0.02 | -5.66 | 57.85 | 0.0503 | -0.0557 | -0.0001 |
| 270 | SLU 28 | -0.02 | -5.1 | 55.9 | 0.0325 | -0.053 | -0.0001 |
| 270 | SLU 29 | -0.02 | -5.58 | 57.29 | 0.0489 | -0.0552 | -0.0001 |
| 270 | SLU 30 | -0.02 | -5.02 | 55.35 | 0.0311 | -0.0526 | -0.0001 |
| 270 | SLU 31 | -0.02 | -5.18 | 59.09 | 0.023 | -0.055 | -0.0001 |
| 270 | SLU 32 | -0.02 | -6.21 | 63.29 | 0.0535 | -0.0608 | -0.0001 |
| 270 | SLU 33 | -0.02 | -5.65 | 61.34 | 0.0357 | -0.0582 | -0.0001 |
| 270 | SLU 34 | -0.02 | -5.19 | 59.49 | 0.0224 | -0.0559 | -0.0001 |
| 270 | SLU 35 | -0.02 | -6.22 | 63.69 | 0.053 | -0.0618 | -0.0001 |
| 270 | SLU 36 | -0.02 | -5.66 | 61.74 | 0.0352 | -0.0591 | -0.0001 |
| 270 | SLU 37 | -0.02 | -6.13 | 63.13 | 0.0516 | -0.0613 | -0.0001 |
| 270 | SLU 38 | -0.02 | -5.57 | 61.18 | 0.0338 | -0.0586 | -0.0001 |
| 270 | SLU 39 | -0.02 | -6.35 | 64.84 | 0.0538 | -0.0621 | -0.0001 |
| 270 | SLU 40 | -0.02 | -5.79 | 62.89 | 0.036 | -0.0594 | -0.0001 |
| 270 | SLU 41 | -0.02 | -6.36 | 65.23 | 0.0533 | -0.063 | -0.0001 |
| 270 | SLU 42 | -0.02 | -5.8 | 63.29 | 0.0355 | -0.0603 | -0.0001 |
| 270 | SLU 43 | -0.02 | -6.35 | 64.35 | 0.06 | -0.0596 | -0.0001 |
| 270 | SLU 44 | -0.02 | -5.42 | 61.1 | 0.0303 | -0.0552 | -0.0001 |
| 270 | SLU 45 | -0.02 | -6.44 | 65.3 | 0.0608 | -0.061 | -0.0001 |
| 270 | SLU 46 | -0.02 | -5.88 | 63.35 | 0.043 | -0.0584 | -0.0001 |
| 270 | SLU 47 | -0.02 | -5.43 | 61.5 | 0.0297 | -0.0561 | -0.0001 |
| 270 | SLU 48 | -0.02 | -6.45 | 65.7 | 0.0603 | -0.0619 | -0.0001 |
| 270 | SLU 49 | -0.02 | -5.89 | 63.75 | 0.0425 | -0.0593 | -0.0001 |
| 270 | SLU 50 | -0.02 | -6.37 | 65.14 | 0.0589 | -0.0615 | -0.0001 |
| 270 | SLU 51 | -0.02 | -5.81 | 63.19 | 0.0411 | -0.0588 | -0.0001 |
| 270 | SLU 52 | -0.02 | -5.97 | 66.94 | 0.033 | -0.0613 | -0.0001 |
| 270 | SLU 53 | -0.02 | -7 | 71.14 | 0.0635 | -0.0671 | -0.0001 |
| 270 | SLU 54 | -0.02 | -6.44 | 69.19 | 0.0457 | -0.0644 | -0.0001 |
| 270 | SLU 55 | -0.02 | -5.98 | 67.34 | 0.0325 | -0.0622 | -0.0001 |
| 270 | SLU 56 | -0.02 | -7.01 | 71.53 | 0.063 | -0.068 | -0.0001 |
| 270 | SLU 57 | -0.02 | -6.45 | 69.59 | 0.0452 | -0.0653 | -0.0001 |
| 270 | SLU 58 | -0.02 | -6.92 | 70.98 | 0.0616 | -0.0675 | -0.0001 |
| 270 | SLU 59 | -0.02 | -6.36 | 69.03 | 0.0438 | -0.0649 | -0.0001 |
| 270 | SLU 60 | -0.02 | -7.14 | 72.68 | 0.0639 | -0.0683 | -0.0001 |
| 270 | SLU 61 | -0.02 | -6.58 | 70.74 | 0.046 | -0.0656 | -0.0001 |
| 270 | SLU 62 | -0.02 | -7.15 | 73.08 | 0.0633 | -0.0692 | -0.0001 |
| 270 | SLU 63 | -0.02 | -6.59 | 71.14 | 0.0455 | -0.0665 | -0.0001 |
| 270 | SLU 64 | -0.02 | -6.88 | 69.89 | 0.063 | -0.0656 | -0.0001 |
| 270 | SLU 65 | -0.02 | -5.95 | 66.64 | 0.0333 | -0.0612 | -0.0001 |
| 270 | SLU 66 | -0.02 | -6.98 | 70.84 | 0.0639 | -0.067 | -0.0001 |
| 270 | SLU 67 | -0.02 | -6.42 | 68.9 | 0.046 | -0.0643 | -0.0001 |
| 270 | SLU 68 | -0.02 | -5.96 | 67.04 | 0.0328 | -0.0621 | -0.0001 |
| 270 | SLU 69 | -0.02 | -6.99 | 71.24 | 0.0633 | -0.0679 | -0.0001 |
| 270 | SLU 70 | -0.02 | -6.43 | 69.29 | 0.0455 | -0.0652 | -0.0001 |
| 270 | SLU 71 | -0.02 | -6.9 | 70.68 | 0.062 | -0.0674 | -0.0001 |
| 270 | SLU 72 | -0.02 | -6.34 | 68.74 | 0.0441 | -0.0647 | -0.0001 |
| 270 | SLU 73 | -0.03 | -6.51 | 72.48 | 0.036 | -0.0672 | -0.0001 |
| 270 | SLU 74 | -0.03 | -7.53 | 76.68 | 0.0666 | -0.073 | -0.0001 |
| 270 | SLU 75 | -0.03 | -6.97 | 74.73 | 0.0488 | -0.0704 | -0.0001 |
| 270 | SLU 76 | -0.03 | -6.51 | 72.88 | 0.0355 | -0.0681 | -0.0001 |
| 270 | SLU 77 | -0.03 | -7.54 | 77.07 | 0.0661 | -0.0739 | -0.0001 |
| 270 | SLU 78 | -0.03 | -6.98 | 75.13 | 0.0482 | -0.0713 | -0.0001 |
| 270 | SLU 79 | -0.03 | -7.46 | 76.52 | 0.0647 | -0.0735 | -0.0001 |
| 270 | SLU 80 | -0.03 | -6.9 | 74.57 | 0.0468 | -0.0708 | -0.0001 |
| 270 | SLU 81 | -0.03 | -7.67 | 78.22 | 0.0669 | -0.0742 | -0.0001 |
| 270 | SLU 82 | -0.03 | -7.12 | 76.28 | 0.0491 | -0.0716 | -0.0001 |
| 270 | SLU 83 | -0.03 | -7.68 | 78.62 | 0.0664 | -0.0752 | -0.0001 |
| 270 | SLU 84 | -0.03 | -7.12 | 76.68 | 0.0485 | -0.0725 | -0.0001 |
| 270 | SLE RA 1 | -0.02 | -5.18 | 52.54 | 0.0478 | -0.0491 | -0.0001 |
| 270 | SLE RA 2 | -0.02 | -4.56 | 50.38 | 0.028 | -0.0462 | -0.0001 |
| 270 | SLE RA 3 | -0.02 | -5.24 | 53.18 | 0.0484 | -0.0501 | -0.0001 |
| 270 | SLE RA 4 | -0.02 | -4.87 | 51.88 | 0.0365 | -0.0483 | -0.0001 |
| 270 | SLE RA 5 | -0.02 | -4.56 | 50.64 | 0.0276 | -0.0468 | -0.0001 |
| 270 | SLE RA 6 | -0.02 | -5.25 | 53.44 | 0.048 | -0.0507 | -0.0001 |
| 270 | SLE RA 7 | -0.02 | -4.87 | 52.14 | 0.0361 | -0.0489 | -0.0001 |
| 270 | SLE RA 8 | -0.02 | -5.19 | 53.07 | 0.0471 | -0.0504 | -0.0001 |
| 270 | SLE RA 9 | -0.02 | -4.82 | 51.77 | 0.0352 | -0.0486 | -0.0001 |
| 270 | SLE RA 10 | -0.02 | -4.93 | 54.27 | 0.0298 | -0.0502 | -0.0001 |
| 270 | SLE RA 11 | -0.02 | -5.61 | 57.07 | 0.0502 | -0.0541 | -0.0001 |
| 270 | SLE RA 12 | -0.02 | -5.24 | 55.77 | 0.0383 | -0.0523 | -0.0001 |

| Nodo | Cont. | Reazione a traslazione | | | Reazione a rotazione | | |
|---|---|---|---|---|---|---|---|
| Ind. | N.br. | x | y | z | x | y | z |
| 270 | SLE RA 13 | -0.02 | -4.93 | 54.54 | 0.0295 | -0.0508 | -0.0001 |
| 270 | SLE RA 14 | -0.02 | -5.62 | 57.33 | 0.0498 | -0.0547 | -0.0001 |
| 270 | SLE RA 15 | -0.02 | -5.24 | 56.04 | 0.0379 | -0.0529 | -0.0001 |
| 270 | SLE RA 16 | -0.02 | -5.56 | 56.96 | 0.0489 | -0.0544 | -0.0001 |
| 270 | SLE RA 17 | -0.02 | -5.19 | 55.67 | 0.037 | -0.0526 | -0.0001 |
| 270 | SLE RA 18 | -0.02 | -5.7 | 58.1 | 0.0504 | -0.0549 | -0.0001 |
| 270 | SLE RA 19 | -0.02 | -5.33 | 56.8 | 0.0385 | -0.0531 | -0.0001 |
| 270 | SLE RA 20 | -0.02 | -5.71 | 58.36 | 0.05 | -0.0555 | -0.0001 |
| 270 | SLE RA 21 | -0.02 | -5.34 | 57.07 | 0.0382 | -0.0538 | -0.0001 |
| 270 | SLE FR 1 | -0.02 | -5.18 | 52.54 | 0.0478 | -0.0491 | -0.0001 |
| 270 | SLE FR 2 | -0.02 | -5.05 | 52.11 | 0.0438 | -0.0486 | -0.0001 |
| 270 | SLE FR 3 | -0.02 | -5.18 | 52.65 | 0.0477 | -0.0494 | -0.0001 |
| 270 | SLE FR 4 | -0.02 | -5.21 | 53.78 | 0.0446 | -0.0503 | -0.0001 |
| 270 | SLE FR 5 | -0.02 | -5.34 | 54.31 | 0.0484 | -0.0511 | -0.0001 |
| 270 | SLE FR 6 | -0.02 | -5.44 | 55.32 | 0.0491 | -0.052 | -0.0001 |
| 270 | SLE QP 1 | -0.02 | -5.18 | 52.54 | 0.0478 | -0.0491 | -0.0001 |
| 270 | SLE QP 2 | -0.02 | -5.33 | 54.21 | 0.0486 | -0.0509 | -0.0001 |
| 270 | SLD 1 | 0.2 | -0.66 | 64.66 | -0.1194 | 0.1227 | -0.0002 |
| 270 | SLD 2 | 0.2 | -0.66 | 64.66 | -0.1194 | 0.1227 | -0.0002 |
| 270 | SLD 3 | 0.06 | -5.35 | 72.32 | 0.0853 | 0.041 | 0.0002 |
| 270 | SLD 4 | 0.06 | -5.35 | 72.32 | 0.0853 | 0.041 | 0.0002 |
| 270 | SLD 5 | 0.28 | 3.17 | 45.72 | -0.3122 | 0.125 | -0.0007 |
| 270 | SLD 6 | 0.28 | 3.17 | 45.72 | -0.3122 | 0.125 | -0.0007 |
| 270 | SLD 7 | -0.22 | -12.45 | 71.27 | 0.37 | -0.1471 | 0.0006 |
| 270 | SLD 8 | -0.22 | -12.45 | 71.27 | 0.37 | -0.1471 | 0.0006 |
| 270 | SLD 9 | 0.19 | 1.78 | 37.15 | -0.2729 | 0.0454 | -0.0008 |
| 270 | SLD 10 | 0.19 | 1.78 | 37.15 | -0.2729 | 0.0454 | -0.0008 |
| 270 | SLD 11 | -0.31 | -13.84 | 62.7 | 0.4094 | -0.2268 | 0.0005 |
| 270 | SLD 12 | -0.31 | -13.84 | 62.7 | 0.4094 | -0.2268 | 0.0005 |
| 270 | SLD 13 | -0.09 | -5.32 | 36.09 | 0.0118 | -0.1428 | -0.0004 |
| 270 | SLD 14 | -0.09 | -5.32 | 36.09 | 0.0118 | -0.1428 | -0.0004 |
| 270 | SLD 15 | -0.24 | -10 | 43.76 | 0.2165 | -0.2245 | 0 |
| 270 | SLD 16 | -0.24 | -10 | 43.76 | 0.2165 | -0.2245 | 0 |
| 270 | SLV 1 | 0.51 | 5.57 | 78.47 | -0.3459 | 0.3633 | -0.0003 |
| 270 | SLV 2 | 0.51 | 5.57 | 78.47 | -0.3459 | 0.3633 | -0.0003 |
| 270 | SLV 3 | 0.14 | -5.28 | 96.63 | 0.1281 | 0.1606 | 0.0007 |
| 270 | SLV 4 | 0.14 | -5.28 | 96.63 | 0.1281 | 0.1606 | 0.0007 |
| 270 | SLV 5 | 0.7 | 14.4 | 33.95 | -0.7886 | 0.3808 | -0.0016 |
| 270 | SLV 6 | 0.7 | 14.4 | 33.95 | -0.7886 | 0.3808 | -0.0016 |
| 270 | SLV 7 | -0.53 | -21.78 | 94.48 | 0.7912 | -0.2949 | 0.0016 |
| 270 | SLV 8 | -0.53 | -21.78 | 94.48 | 0.7912 | -0.2949 | 0.0016 |
| 270 | SLV 9 | 0.5 | 11.11 | 13.94 | -0.6941 | 0.1931 | -0.0018 |
| 270 | SLV 10 | 0.5 | 11.11 | 13.94 | -0.6941 | 0.1931 | -0.0018 |
| 270 | SLV 11 | -0.73 | -25.07 | 74.47 | 0.8857 | -0.4826 | 0.0014 |
| 270 | SLV 12 | -0.73 | -25.07 | 74.47 | 0.8857 | -0.4826 | 0.0014 |
| 270 | SLV 13 | -0.17 | -5.39 | 11.79 | -0.0309 | -0.2623 | -0.0009 |
| 270 | SLV 14 | -0.17 | -5.39 | 11.79 | -0.0309 | -0.2623 | -0.0009 |
| 270 | SLV 15 | -0.54 | -16.24 | 29.94 | 0.443 | -0.4651 | 0.0001 |
| 270 | SLV 16 | -0.54 | -16.24 | 29.94 | 0.443 | -0.4651 | 0.0001 |
| 271 | SLU 1 | 0.01 | 0.31 | 61.32 | 0.0373 | 0.0058 | 0 |
| 271 | SLU 2 | 0.01 | 0.41 | 60.78 | 0.034 | 0.0058 | 0 |
| 271 | SLU 3 | 0.01 | 0.08 | 65.07 | 0.0479 | 0.0062 | 0 |
| 271 | SLU 4 | 0.01 | 0.14 | 64.75 | 0.0459 | 0.0062 | 0 |
| 271 | SLU 5 | 0.01 | 0.14 | 64.01 | 0.0453 | 0.0062 | 0 |
| 271 | SLU 6 | 0.01 | -0.19 | 68.3 | 0.0591 | 0.0066 | 0 |
| 271 | SLU 7 | 0.01 | -0.13 | 67.97 | 0.0572 | 0.0066 | 0 |
| 271 | SLU 8 | 0.01 | -0.23 | 67.78 | 0.0598 | 0.0066 | 0 |
| 271 | SLU 9 | 0.01 | -0.17 | 67.45 | 0.0578 | 0.0065 | 0 |
| 271 | SLU 10 | 0.01 | 0.36 | 71.25 | 0.0449 | 0.0067 | 0 |
| 271 | SLU 11 | 0.02 | 0.02 | 75.54 | 0.0588 | 0.0071 | 0 |
| 271 | SLU 12 | 0.02 | 0.08 | 75.22 | 0.0569 | 0.0071 | 0 |
| 271 | SLU 13 | 0.01 | 0.09 | 74.47 | 0.0562 | 0.0071 | 0 |
| 271 | SLU 14 | 0.02 | -0.25 | 78.77 | 0.07 | 0.0075 | 0 |
| 271 | SLU 15 | 0.02 | -0.19 | 78.44 | 0.0681 | 0.0075 | 0 |
| 271 | SLU 16 | 0.02 | -0.28 | 78.24 | 0.0707 | 0.0075 | 0 |
| 271 | SLU 17 | 0.02 | -0.22 | 77.92 | 0.0687 | 0.0074 | 0 |
| 271 | SLU 18 | 0.02 | 0.23 | 76.28 | 0.0529 | 0.0071 | 0 |
| 271 | SLU 19 | 0.02 | 0.29 | 75.95 | 0.0509 | 0.0071 | 0 |
| 271 | SLU 20 | 0.02 | -0.04 | 79.5 | 0.0641 | 0.0075 | 0 |
| 271 | SLU 21 | 0.02 | 0.02 | 79.18 | 0.0622 | 0.0075 | 0 |
| 271 | SLU 22 | 0.01 | 0.16 | 72.05 | 0.0513 | 0.0068 | 0 |
| 271 | SLU 23 | 0.01 | 0.26 | 71.51 | 0.048 | 0.0068 | 0 |
| 271 | SLU 24 | 0.02 | -0.08 | 75.8 | 0.0619 | 0.0072 | 0 |
| 271 | SLU 25 | 0.02 | -0.02 | 75.48 | 0.06 | 0.0072 | 0 |
| 271 | SLU 26 | 0.02 | -0.01 | 74.74 | 0.0593 | 0.0071 | 0 |
| 271 | SLU 27 | 0.02 | -0.35 | 79.03 | 0.0732 | 0.0076 | 0 |
| 271 | SLU 28 | 0.02 | -0.29 | 78.7 | 0.0712 | 0.0076 | 0 |
| 271 | SLU 29 | 0.02 | -0.38 | 78.51 | 0.0738 | 0.0076 | 0 |
| 271 | SLU 30 | 0.02 | -0.32 | 78.18 | 0.0718 | 0.0075 | 0 |
| 271 | SLU 31 | 0.02 | 0.2 | 81.98 | 0.059 | 0.0077 | 0 |
| 271 | SLU 32 | 0.02 | -0.13 | 86.27 | 0.0728 | 0.0081 | 0 |
| 271 | SLU 33 | 0.02 | -0.07 | 85.95 | 0.0709 | 0.0081 | 0 |
| 271 | SLU 34 | 0.02 | -0.07 | 85.2 | 0.0702 | 0.0081 | 0 |
| 271 | SLU 35 | 0.02 | -0.4 | 89.5 | 0.0841 | 0.0085 | 0 |
| 271 | SLU 36 | 0.02 | -0.34 | 89.17 | 0.0821 | 0.0085 | 0 |
| 271 | SLU 37 | 0.02 | -0.44 | 88.97 | 0.0847 | 0.0085 | 0 |
| 271 | SLU 38 | 0.02 | -0.38 | 88.65 | 0.0827 | 0.0084 | 0 |
| 271 | SLU 39 | 0.02 | 0.08 | 87.01 | 0.0669 | 0.0081 | 0 |

| Nodo | Cont. | Reazione a traslazione | | | Reazione a rotazione | | |
|---|---|---|---|---|---|---|---|
| Ind. | N.br. | x | y | z | x | y | z |
| 271 | SLU 40 | 0.02 | 0.14 | 86.68 | 0.0649 | 0.0081 | 0 |
| 271 | SLU 41 | 0.02 | -0.19 | 90.23 | 0.0781 | 0.0085 | 0 |
| 271 | SLU 42 | 0.02 | -0.13 | 89.91 | 0.0762 | 0.0085 | 0 |
| 271 | SLU 43 | 0.02 | 0.46 | 76.04 | 0.0436 | 0.0073 | 0 |
| 271 | SLU 44 | 0.02 | 0.56 | 75.5 | 0.0404 | 0.0072 | 0 |
| 271 | SLU 45 | 0.02 | 0.23 | 79.79 | 0.0543 | 0.0076 | 0 |
| 271 | SLU 46 | 0.02 | 0.29 | 79.47 | 0.0523 | 0.0076 | 0 |
| 271 | SLU 47 | 0.02 | 0.29 | 78.72 | 0.0516 | 0.0076 | 0 |
| 271 | SLU 48 | 0.02 | -0.04 | 83.02 | 0.0655 | 0.008 | 0 |
| 271 | SLU 49 | 0.02 | 0.02 | 82.69 | 0.0636 | 0.008 | 0 |
| 271 | SLU 50 | 0.02 | -0.08 | 82.49 | 0.0661 | 0.008 | 0 |
| 271 | SLU 51 | 0.02 | -0.02 | 82.17 | 0.0642 | 0.0079 | 0 |
| 271 | SLU 52 | 0.02 | 0.51 | 85.97 | 0.0513 | 0.0081 | 0 |
| 271 | SLU 53 | 0.02 | 0.17 | 90.26 | 0.0652 | 0.0086 | 0 |
| 271 | SLU 54 | 0.02 | 0.23 | 89.93 | 0.0632 | 0.0085 | 0 |
| 271 | SLU 55 | 0.02 | 0.23 | 89.19 | 0.0626 | 0.0085 | 0 |
| 271 | SLU 56 | 0.02 | -0.1 | 93.49 | 0.0764 | 0.0089 | 0 |
| 271 | SLU 57 | 0.02 | -0.04 | 93.16 | 0.0745 | 0.0089 | 0 |
| 271 | SLU 58 | 0.02 | -0.14 | 92.96 | 0.077 | 0.0089 | 0 |
| 271 | SLU 59 | 0.02 | -0.08 | 92.64 | 0.0751 | 0.0089 | 0 |
| 271 | SLU 60 | 0.02 | 0.38 | 91 | 0.0592 | 0.0086 | 0 |
| 271 | SLU 61 | 0.02 | 0.44 | 90.67 | 0.0573 | 0.0085 | 0 |
| 271 | SLU 62 | 0.02 | 0.11 | 94.22 | 0.0705 | 0.0089 | 0 |
| 271 | SLU 63 | 0.02 | 0.17 | 93.9 | 0.0685 | 0.0089 | 0 |
| 271 | SLU 64 | 0.02 | 0.31 | 86.77 | 0.0577 | 0.0082 | 0 |
| 271 | SLU 65 | 0.02 | 0.41 | 86.23 | 0.0544 | 0.0082 | 0 |
| 271 | SLU 66 | 0.02 | 0.07 | 90.52 | 0.0683 | 0.0086 | 0 |
| 271 | SLU 67 | 0.02 | 0.13 | 90.2 | 0.0663 | 0.0086 | 0 |
| 271 | SLU 68 | 0.02 | 0.13 | 89.45 | 0.0657 | 0.0086 | 0 |
| 271 | SLU 69 | 0.02 | -0.2 | 93.75 | 0.0795 | 0.009 | 0 |
| 271 | SLU 70 | 0.02 | -0.14 | 93.42 | 0.0776 | 0.009 | 0 |
| 271 | SLU 71 | 0.02 | -0.24 | 93.22 | 0.0802 | 0.009 | 0 |
| 271 | SLU 72 | 0.02 | -0.18 | 92.9 | 0.0782 | 0.0089 | 0 |
| 271 | SLU 73 | 0.02 | 0.35 | 96.7 | 0.0653 | 0.0091 | 0 |
| 271 | SLU 74 | 0.02 | 0.02 | 100.99 | 0.0792 | 0.0096 | 0.0001 |
| 271 | SLU 75 | 0.02 | 0.07 | 100.66 | 0.0772 | 0.0095 | 0.0001 |
| 271 | SLU 76 | 0.02 | 0.08 | 99.92 | 0.0766 | 0.0095 | 0.0001 |
| 271 | SLU 77 | 0.02 | -0.26 | 104.22 | 0.0904 | 0.0099 | 0.0001 |
| 271 | SLU 78 | 0.02 | -0.2 | 103.89 | 0.0885 | 0.0099 | 0.0001 |
| 271 | SLU 79 | 0.02 | -0.29 | 103.69 | 0.0911 | 0.0099 | 0.0001 |
| 271 | SLU 80 | 0.02 | -0.23 | 103.37 | 0.0891 | 0.0098 | 0.0001 |
| 271 | SLU 81 | 0.02 | 0.23 | 101.73 | 0.0733 | 0.0095 | 0.0001 |
| 271 | SLU 82 | 0.02 | 0.29 | 101.4 | 0.0713 | 0.0095 | 0.0001 |
| 271 | SLU 83 | 0.02 | -0.05 | 104.95 | 0.0845 | 0.0099 | 0.0001 |
| 271 | SLU 84 | 0.02 | 0.01 | 104.63 | 0.0825 | 0.0099 | 0.0001 |
| 271 | SLE RA 1 | 0.01 | 0.27 | 64.39 | 0.0413 | 0.0061 | 0 |
| 271 | SLE RA 2 | 0.01 | 0.34 | 64.03 | 0.0391 | 0.0061 | 0 |
| 271 | SLE RA 3 | 0.01 | 0.11 | 66.89 | 0.0484 | 0.0064 | 0 |
| 271 | SLE RA 4 | 0.01 | 0.15 | 66.67 | 0.0471 | 0.0064 | 0 |
| 271 | SLE RA 5 | 0.01 | 0.16 | 66.18 | 0.0466 | 0.0063 | 0 |
| 271 | SLE RA 6 | 0.01 | -0.07 | 69.04 | 0.0559 | 0.0066 | 0 |
| 271 | SLE RA 7 | 0.01 | -0.03 | 68.82 | 0.0546 | 0.0066 | 0 |
| 271 | SLE RA 8 | 0.01 | -0.09 | 68.69 | 0.0563 | 0.0066 | 0 |
| 271 | SLE RA 9 | 0.01 | -0.05 | 68.47 | 0.055 | 0.0066 | 0 |
| 271 | SLE RA 10 | 0.01 | 0.3 | 71.01 | 0.0464 | 0.0067 | 0 |
| 271 | SLE RA 11 | 0.02 | 0.08 | 73.87 | 0.0556 | 0.007 | 0 |
| 271 | SLE RA 12 | 0.01 | 0.12 | 73.65 | 0.0543 | 0.007 | 0 |
| 271 | SLE RA 13 | 0.01 | 0.12 | 73.16 | 0.0539 | 0.0069 | 0 |
| 271 | SLE RA 14 | 0.02 | -0.1 | 76.02 | 0.0631 | 0.0072 | 0 |
| 271 | SLE RA 15 | 0.02 | -0.06 | 75.8 | 0.0618 | 0.0072 | 0 |
| 271 | SLE RA 16 | 0.02 | -0.13 | 75.67 | 0.0635 | 0.0072 | 0 |
| 271 | SLE RA 17 | 0.02 | -0.09 | 75.45 | 0.0622 | 0.0072 | 0 |
| 271 | SLE RA 18 | 0.02 | 0.22 | 74.36 | 0.0517 | 0.007 | 0 |
| 271 | SLE RA 19 | 0.01 | 0.26 | 74.14 | 0.0504 | 0.007 | 0 |
| 271 | SLE RA 20 | 0.02 | 0.04 | 76.51 | 0.0592 | 0.0072 | 0 |
| 271 | SLE RA 21 | 0.02 | 0.08 | 76.29 | 0.0579 | 0.0072 | 0 |
| 271 | SLE FR 1 | 0.01 | 0.27 | 64.39 | 0.0413 | 0.0061 | 0 |
| 271 | SLE FR 2 | 0.01 | 0.28 | 64.32 | 0.0408 | 0.0061 | 0 |
| 271 | SLE FR 3 | 0.01 | 0.2 | 65.25 | 0.0443 | 0.0062 | 0 |
| 271 | SLE FR 4 | 0.01 | 0.27 | 67.31 | 0.044 | 0.0064 | 0 |
| 271 | SLE FR 5 | 0.01 | 0.18 | 68.24 | 0.0474 | 0.0065 | 0 |
| 271 | SLE FR 6 | 0.01 | 0.24 | 69.37 | 0.0465 | 0.0066 | 0 |
| 271 | SLE QP 1 | 0.01 | 0.27 | 64.39 | 0.0413 | 0.0061 | 0 |
| 271 | SLE QP 2 | 0.01 | 0.25 | 67.38 | 0.0444 | 0.0064 | 0 |
| 271 | SLD 1 | 0.14 | 3.98 | 67.81 | -0.0763 | 0.1226 | 0.0005 |
| 271 | SLD 2 | 0.14 | 3.98 | 67.81 | -0.0763 | 0.1226 | 0.0005 |
| 271 | SLD 3 | 0.16 | -0.1 | 72.4 | 0.0541 | 0.1433 | 0.0005 |
| 271 | SLD 4 | 0.16 | -0.1 | 72.4 | 0.0541 | 0.1433 | 0.0005 |
| 271 | SLD 5 | 0.03 | 7.55 | 60.55 | -0.1897 | 0.0099 | 0.0001 |
| 271 | SLD 6 | 0.03 | 7.55 | 60.55 | -0.1897 | 0.0099 | 0.0001 |
| 271 | SLD 7 | 0.08 | -6.03 | 75.85 | 0.2452 | 0.0788 | 0.0003 |
| 271 | SLD 8 | 0.08 | -6.03 | 75.85 | 0.2452 | 0.0788 | 0.0003 |
| 271 | SLD 9 | -0.06 | 6.54 | 58.91 | -0.1564 | -0.0661 | -0.0002 |
| 271 | SLD 10 | -0.06 | 6.54 | 58.91 | -0.1564 | -0.0661 | -0.0002 |
| 271 | SLD 11 | 0 | -7.05 | 74.21 | 0.2785 | 0.0029 | 0 |
| 271 | SLD 12 | 0 | -7.05 | 74.21 | 0.2785 | 0.0029 | 0 |
| 271 | SLD 13 | -0.13 | 0.61 | 62.35 | 0.0347 | -0.1305 | -0.0005 |
| 271 | SLD 14 | -0.13 | 0.61 | 62.35 | 0.0347 | -0.1305 | -0.0005 |

| Nodo | Cont. | Reazione a traslazione | | | Reazione a rotazione | | |
|---|---|---|---|---|---|---|---|
| Ind. | N.br. | x | y | z | x | y | z |
| 271 | SLD 15 | -0.11 | -3.47 | 66.94 | 0.1651 | -0.1099 | -0.0004 |
| 271 | SLD 16 | -0.11 | -3.47 | 66.94 | 0.1651 | -0.1099 | -0.0004 |
| 271 | SLV 1 | 0.31 | 8.94 | 68.42 | -0.2374 | 0.2879 | 0.001 |
| 271 | SLV 2 | 0.31 | 8.94 | 68.42 | -0.2374 | 0.2879 | 0.001 |
| 271 | SLV 3 | 0.35 | -0.56 | 79.3 | 0.0667 | 0.3403 | 0.0012 |
| 271 | SLV 4 | 0.35 | -0.56 | 79.3 | 0.0667 | 0.3403 | 0.0012 |
| 271 | SLV 5 | 0.04 | 17.27 | 51.18 | -0.5013 | 0.0113 | 0.0001 |
| 271 | SLV 6 | 0.04 | 17.27 | 51.18 | -0.5013 | 0.0113 | 0.0001 |
| 271 | SLV 7 | 0.18 | -14.4 | 87.47 | 0.5122 | 0.1861 | 0.0006 |
| 271 | SLV 8 | 0.18 | -14.4 | 87.47 | 0.5122 | 0.1861 | 0.0006 |
| 271 | SLV 9 | -0.15 | 14.9 | 47.29 | -0.4235 | -0.1733 | -0.0005 |
| 271 | SLV 10 | -0.15 | 14.9 | 47.29 | -0.4235 | -0.1733 | -0.0005 |
| 271 | SLV 11 | -0.01 | -16.76 | 83.58 | 0.5901 | 0.0015 | 0 |
| 271 | SLV 12 | -0.01 | -16.76 | 83.58 | 0.5901 | 0.0015 | 0 |
| 271 | SLV 13 | -0.33 | 1.07 | 55.46 | 0.0221 | -0.3276 | -0.0011 |
| 271 | SLV 14 | -0.33 | 1.07 | 55.46 | 0.0221 | -0.3276 | -0.0011 |
| 271 | SLV 15 | -0.29 | -8.43 | 66.34 | 0.3261 | -0.2751 | -0.001 |
| 271 | SLV 16 | -0.29 | -8.43 | 66.34 | 0.3261 | -0.2751 | -0.001 |
| 272 | SLU 1 | -0.03 | -8.52 | 53.96 | 0.3694 | -0.0022 | 0.0001 |
| 272 | SLU 2 | -0.02 | -7.68 | 50.34 | 0.3306 | -0.0041 | 0.0001 |
| 272 | SLU 3 | -0.03 | -8.73 | 54.93 | 0.3782 | -0.0018 | 0.0001 |
| 272 | SLU 4 | -0.03 | -8.23 | 52.76 | 0.3549 | -0.003 | 0.0001 |
| 272 | SLU 5 | -0.02 | -7.76 | 50.62 | 0.3338 | -0.0037 | 0.0001 |
| 272 | SLU 6 | -0.03 | -8.82 | 55.21 | 0.3814 | -0.0014 | 0.0001 |
| 272 | SLU 7 | -0.03 | -8.31 | 53.04 | 0.3581 | -0.0025 | 0.0001 |
| 272 | SLU 8 | -0.03 | -8.69 | 54.52 | 0.3758 | -0.0012 | 0.0001 |
| 272 | SLU 9 | -0.03 | -8.18 | 52.35 | 0.3525 | -0.0024 | 0.0001 |
| 272 | SLU 10 | -0.03 | -8.66 | 56.85 | 0.3747 | -0.0043 | 0.0001 |
| 272 | SLU 11 | -0.03 | -9.72 | 61.44 | 0.4223 | -0.002 | 0.0001 |
| 272 | SLU 12 | -0.03 | -9.21 | 59.27 | 0.399 | -0.0031 | 0.0001 |
| 272 | SLU 13 | -0.03 | -8.74 | 57.13 | 0.3779 | -0.0038 | 0.0001 |
| 272 | SLU 14 | -0.03 | -9.8 | 61.72 | 0.4255 | -0.0015 | 0.0001 |
| 272 | SLU 15 | -0.03 | -9.29 | 59.55 | 0.4022 | -0.0027 | 0.0001 |
| 272 | SLU 16 | -0.03 | -9.67 | 61.03 | 0.4199 | -0.0014 | 0.0001 |
| 272 | SLU 17 | -0.03 | -9.16 | 58.85 | 0.3966 | -0.0025 | 0.0001 |
| 272 | SLU 18 | -0.03 | -9.93 | 63.25 | 0.4324 | -0.0024 | 0.0001 |
| 272 | SLU 19 | -0.03 | -9.42 | 61.08 | 0.4091 | -0.0035 | 0.0001 |
| 272 | SLU 20 | -0.03 | -10.01 | 63.53 | 0.4356 | -0.0019 | 0.0001 |
| 272 | SLU 21 | -0.03 | -9.5 | 61.36 | 0.4123 | -0.0031 | 0.0001 |
| 272 | SLU 22 | -0.03 | -9.51 | 59.96 | 0.4128 | -0.002 | 0.0001 |
| 272 | SLU 23 | -0.03 | -8.66 | 56.34 | 0.374 | -0.004 | 0.0001 |
| 272 | SLU 24 | -0.03 | -9.72 | 60.93 | 0.4215 | -0.0017 | 0.0001 |
| 272 | SLU 25 | -0.03 | -9.21 | 58.75 | 0.3982 | -0.0029 | 0.0001 |
| 272 | SLU 26 | -0.03 | -8.74 | 56.62 | 0.3771 | -0.0035 | 0.0001 |
| 272 | SLU 27 | -0.03 | -9.8 | 61.21 | 0.4247 | -0.0012 | 0.0001 |
| 272 | SLU 28 | -0.03 | -9.29 | 59.03 | 0.4014 | -0.0024 | 0.0001 |
| 272 | SLU 29 | -0.03 | -9.67 | 60.51 | 0.4191 | -0.0011 | 0.0001 |
| 272 | SLU 30 | -0.03 | -9.16 | 58.34 | 0.3958 | -0.0023 | 0.0001 |
| 272 | SLU 31 | -0.03 | -9.65 | 62.84 | 0.418 | -0.0041 | 0.0001 |
| 272 | SLU 32 | -0.04 | -10.7 | 67.43 | 0.4656 | -0.0018 | 0.0001 |
| 272 | SLU 33 | -0.03 | -10.19 | 65.26 | 0.4423 | -0.003 | 0.0001 |
| 272 | SLU 34 | -0.03 | -9.73 | 63.12 | 0.4212 | -0.0037 | 0.0001 |
| 272 | SLU 35 | -0.04 | -10.79 | 67.71 | 0.4688 | -0.0014 | 0.0001 |
| 272 | SLU 36 | -0.03 | -10.28 | 65.54 | 0.4455 | -0.0025 | 0.0001 |
| 272 | SLU 37 | -0.04 | -10.66 | 67.02 | 0.4632 | -0.0012 | 0.0001 |
| 272 | SLU 38 | -0.03 | -10.15 | 64.85 | 0.4399 | -0.0024 | 0.0001 |
| 272 | SLU 39 | -0.04 | -10.92 | 69.25 | 0.4758 | -0.0022 | 0.0001 |
| 272 | SLU 40 | -0.03 | -10.41 | 67.08 | 0.4525 | -0.0034 | 0.0001 |
| 272 | SLU 41 | -0.04 | -11 | 69.53 | 0.4789 | -0.0018 | 0.0001 |
| 272 | SLU 42 | -0.03 | -10.49 | 67.36 | 0.4557 | -0.0029 | 0.0001 |
| 272 | SLU 43 | -0.04 | -10.74 | 68.1 | 0.4654 | -0.0029 | 0.0001 |
| 272 | SLU 44 | -0.03 | -9.9 | 64.48 | 0.4266 | -0.0048 | 0.0001 |
| 272 | SLU 45 | -0.04 | -10.95 | 69.07 | 0.4741 | -0.0025 | 0.0001 |
| 272 | SLU 46 | -0.04 | -10.45 | 66.9 | 0.4509 | -0.0037 | 0.0001 |
| 272 | SLU 47 | -0.03 | -9.98 | 64.76 | 0.4298 | -0.0044 | 0.0001 |
| 272 | SLU 48 | -0.04 | -11.04 | 69.35 | 0.4773 | -0.002 | 0.0001 |
| 272 | SLU 49 | -0.04 | -10.53 | 67.18 | 0.454 | -0.0032 | 0.0001 |
| 272 | SLU 50 | -0.04 | -10.91 | 68.66 | 0.4718 | -0.0019 | 0.0001 |
| 272 | SLU 51 | -0.03 | -10.4 | 66.48 | 0.4485 | -0.0031 | 0.0001 |
| 272 | SLU 52 | -0.04 | -10.88 | 70.98 | 0.4707 | -0.005 | 0.0001 |
| 272 | SLU 53 | -0.04 | -11.94 | 75.57 | 0.5182 | -0.0026 | 0.0001 |
| 272 | SLU 54 | -0.04 | -11.43 | 73.4 | 0.495 | -0.0038 | 0.0001 |
| 272 | SLU 55 | -0.04 | -10.96 | 71.26 | 0.4739 | -0.0045 | 0.0001 |
| 272 | SLU 56 | -0.04 | -12.02 | 75.85 | 0.5214 | -0.0022 | 0.0001 |
| 272 | SLU 57 | -0.04 | -11.51 | 73.68 | 0.4981 | -0.0034 | 0.0001 |
| 272 | SLU 58 | -0.04 | -11.89 | 75.16 | 0.5159 | -0.0021 | 0.0001 |
| 272 | SLU 59 | -0.04 | -11.38 | 72.99 | 0.4926 | -0.0032 | 0.0001 |
| 272 | SLU 60 | -0.04 | -12.15 | 77.39 | 0.5284 | -0.003 | 0.0001 |
| 272 | SLU 61 | -0.04 | -11.64 | 75.22 | 0.5051 | -0.0042 | 0.0001 |
| 272 | SLU 62 | -0.04 | -12.23 | 77.67 | 0.5316 | -0.0026 | 0.0001 |
| 272 | SLU 63 | -0.04 | -11.72 | 75.5 | 0.5083 | -0.0038 | 0.0001 |
| 272 | SLU 64 | -0.04 | -11.73 | 74.09 | 0.5087 | -0.0027 | 0.0001 |
| 272 | SLU 65 | -0.04 | -10.88 | 70.47 | 0.4699 | -0.0047 | 0.0001 |
| 272 | SLU 66 | -0.04 | -11.94 | 75.06 | 0.5175 | -0.0024 | 0.0001 |
| 272 | SLU 67 | -0.04 | -11.43 | 72.89 | 0.4942 | -0.0036 | 0.0001 |
| 272 | SLU 68 | -0.04 | -10.96 | 70.75 | 0.4731 | -0.0042 | 0.0001 |
| 272 | SLU 69 | -0.04 | -12.02 | 75.34 | 0.5207 | -0.0019 | 0.0001 |
| 272 | SLU 70 | -0.04 | -11.51 | 73.17 | 0.4974 | -0.0031 | 0.0001 |

| Nodo | Cont. | Reazione a traslazione | | | Reazione a rotazione | | |
|---|---|---|---|---|---|---|---|
| Ind. | N.br. | x | y | z | x | y | z |
| 272 | SLU 71 | -0.04 | -11.89 | 74.65 | 0.5151 | -0.0018 | 0.0001 |
| 272 | SLU 72 | -0.04 | -11.38 | 72.48 | 0.4918 | -0.003 | 0.0001 |
| 272 | SLU 73 | -0.04 | -11.87 | 76.97 | 0.514 | -0.0048 | 0.0001 |
| 272 | SLU 74 | -0.04 | -12.92 | 81.56 | 0.5616 | -0.0025 | 0.0001 |
| 272 | SLU 75 | -0.04 | -12.41 | 79.39 | 0.5383 | -0.0037 | 0.0001 |
| 272 | SLU 76 | -0.04 | -11.95 | 77.25 | 0.5172 | -0.0044 | 0.0001 |
| 272 | SLU 77 | -0.04 | -13.01 | 81.84 | 0.5648 | -0.0021 | 0.0001 |
| 272 | SLU 78 | -0.04 | -12.5 | 79.67 | 0.5415 | -0.0032 | 0.0001 |
| 272 | SLU 79 | -0.04 | -12.88 | 81.15 | 0.5592 | -0.0019 | 0.0001 |
| 272 | SLU 80 | -0.04 | -12.37 | 78.98 | 0.5359 | -0.0031 | 0.0001 |
| 272 | SLU 81 | -0.05 | -13.13 | 83.38 | 0.5717 | -0.0029 | 0.0001 |
| 272 | SLU 82 | -0.04 | -12.63 | 81.21 | 0.5485 | -0.0041 | 0.0001 |
| 272 | SLU 83 | -0.05 | -13.22 | 83.66 | 0.5749 | -0.0025 | 0.0001 |
| 272 | SLU 84 | -0.04 | -12.71 | 81.49 | 0.5516 | -0.0036 | 0.0001 |
| 272 | SLE RA 1 | -0.03 | -8.81 | 55.68 | 0.3818 | -0.0021 | 0.0001 |
| 272 | SLE RA 2 | -0.03 | -8.24 | 53.26 | 0.3559 | -0.0034 | 0.0001 |
| 272 | SLE RA 3 | -0.03 | -8.95 | 56.32 | 0.3876 | -0.0019 | 0.0001 |
| 272 | SLE RA 4 | -0.03 | -8.61 | 54.87 | 0.3721 | -0.0027 | 0.0001 |
| 272 | SLE RA 5 | -0.03 | -8.29 | 53.45 | 0.3581 | -0.0031 | 0.0001 |
| 272 | SLE RA 6 | -0.03 | -9 | 56.51 | 0.3898 | -0.0016 | 0.0001 |
| 272 | SLE RA 7 | -0.03 | -8.66 | 55.06 | 0.3742 | -0.0024 | 0.0001 |
| 272 | SLE RA 8 | -0.03 | -8.91 | 56.05 | 0.3861 | -0.0015 | 0.0001 |
| 272 | SLE RA 9 | -0.03 | -8.58 | 54.6 | 0.3705 | -0.0023 | 0.0001 |
| 272 | SLE RA 10 | -0.03 | -8.9 | 57.6 | 0.3853 | -0.0035 | 0.0001 |
| 272 | SLE RA 11 | -0.03 | -9.6 | 60.66 | 0.417 | -0.002 | 0.0001 |
| 272 | SLE RA 12 | -0.03 | -9.26 | 59.21 | 0.4015 | -0.0028 | 0.0001 |
| 272 | SLE RA 13 | -0.03 | -8.95 | 57.78 | 0.3875 | -0.0032 | 0.0001 |
| 272 | SLE RA 14 | -0.03 | -9.66 | 60.84 | 0.4192 | -0.0017 | 0.0001 |
| 272 | SLE RA 15 | -0.03 | -9.32 | 59.4 | 0.4036 | -0.0025 | 0.0001 |
| 272 | SLE RA 16 | -0.03 | -9.57 | 60.38 | 0.4155 | -0.0016 | 0.0001 |
| 272 | SLE RA 17 | -0.03 | -9.23 | 58.94 | 0.3999 | -0.0024 | 0.0001 |
| 272 | SLE RA 18 | -0.03 | -9.74 | 61.87 | 0.4238 | -0.0023 | 0.0001 |
| 272 | SLE RA 19 | -0.03 | -9.4 | 60.42 | 0.4083 | -0.003 | 0.0001 |
| 272 | SLE RA 20 | -0.03 | -9.8 | 62.06 | 0.4259 | -0.0019 | 0.0001 |
| 272 | SLE RA 21 | -0.03 | -9.46 | 60.61 | 0.4104 | -0.0027 | 0.0001 |
| 272 | SLE FR 1 | -0.03 | -8.81 | 55.68 | 0.3818 | -0.0021 | 0.0001 |
| 272 | SLE FR 2 | -0.03 | -8.69 | 55.19 | 0.3766 | -0.0024 | 0.0001 |
| 272 | SLE FR 3 | -0.03 | -8.83 | 55.75 | 0.3827 | -0.002 | 0.0001 |
| 272 | SLE FR 4 | -0.03 | -8.97 | 57.05 | 0.3892 | -0.0024 | 0.0001 |
| 272 | SLE FR 5 | -0.03 | -9.11 | 57.61 | 0.3953 | -0.002 | 0.0001 |
| 272 | SLE FR 6 | -0.03 | -9.27 | 58.77 | 0.4028 | -0.0022 | 0.0001 |
| 272 | SLE QP 1 | -0.03 | -8.81 | 55.68 | 0.3818 | -0.0021 | 0.0001 |
| 272 | SLE QP 2 | -0.03 | -9.09 | 57.53 | 0.3944 | -0.0022 | 0.0001 |
| 272 | SLD 1 | 0 | -4.7 | 37.82 | 0.2126 | 0.0811 | -0.0001 |
| 272 | SLD 2 | 0 | -4.7 | 37.82 | 0.2126 | 0.0811 | -0.0001 |
| 272 | SLD 3 | 0.16 | -8.82 | 46.76 | 0.3928 | 0.148 | -0.0003 |
| 272 | SLD 4 | 0.16 | -8.82 | 46.76 | 0.3928 | 0.148 | -0.0003 |
| 272 | SLD 5 | -0.26 | -1.52 | 38.05 | 0.0666 | -0.0787 | 0.0004 |
| 272 | SLD 6 | -0.26 | -1.52 | 38.05 | 0.0666 | -0.0787 | 0.0004 |
| 272 | SLD 7 | 0.26 | -15.25 | 67.87 | 0.6672 | 0.1444 | -0.0004 |
| 272 | SLD 8 | 0.26 | -15.25 | 67.87 | 0.6672 | 0.1444 | -0.0004 |
| 272 | SLD 9 | -0.32 | -2.92 | 47.2 | 0.1216 | -0.1487 | 0.0006 |
| 272 | SLD 10 | -0.32 | -2.92 | 47.2 | 0.1216 | -0.1487 | 0.0006 |
| 272 | SLD 11 | 0.19 | -16.65 | 77.01 | 0.7223 | 0.0744 | -0.0002 |
| 272 | SLD 12 | 0.19 | -16.65 | 77.01 | 0.7223 | 0.0744 | -0.0002 |
| 272 | SLD 13 | -0.22 | -9.35 | 68.31 | 0.396 | -0.1523 | 0.0005 |
| 272 | SLD 14 | -0.22 | -9.35 | 68.31 | 0.396 | -0.1523 | 0.0005 |
| 272 | SLD 15 | -0.07 | -13.47 | 77.25 | 0.5762 | -0.0854 | 0.0003 |
| 272 | SLD 16 | -0.07 | -13.47 | 77.25 | 0.5762 | -0.0854 | 0.0003 |
| 272 | SLV 1 | 0.04 | 1.14 | 11.39 | -0.0303 | 0.1913 | -0.0003 |
| 272 | SLV 2 | 0.04 | 1.14 | 11.39 | -0.0303 | 0.1913 | -0.0003 |
| 272 | SLV 3 | 0.42 | -8.43 | 32.41 | 0.3886 | 0.3605 | -0.0009 |
| 272 | SLV 4 | 0.42 | -8.43 | 32.41 | 0.3886 | 0.3605 | -0.0009 |
| 272 | SLV 5 | -0.6 | 8.51 | 11.79 | -0.3683 | -0.2006 | 0.0008 |
| 272 | SLV 6 | -0.6 | 8.51 | 11.79 | -0.3683 | -0.2006 | 0.0008 |
| 272 | SLV 7 | 0.69 | -23.42 | 81.89 | 1.028 | 0.3631 | -0.0011 |
| 272 | SLV 8 | 0.69 | -23.42 | 81.89 | 1.028 | 0.3631 | -0.0011 |
| 272 | SLV 9 | -0.76 | 5.24 | 33.17 | -0.2391 | -0.3675 | 0.0012 |
| 272 | SLV 10 | -0.76 | 5.24 | 33.17 | -0.2391 | -0.3675 | 0.0012 |
| 272 | SLV 11 | 0.54 | -26.68 | 103.27 | 1.1571 | 0.1963 | -0.0007 |
| 272 | SLV 12 | 0.54 | -26.68 | 103.27 | 1.1571 | 0.1963 | -0.0007 |
| 272 | SLV 13 | -0.49 | -9.74 | 82.65 | 0.4002 | -0.3648 | 0.001 |
| 272 | SLV 14 | -0.49 | -9.74 | 82.65 | 0.4002 | -0.3648 | 0.001 |
| 272 | SLV 15 | -0.1 | -19.32 | 103.68 | 0.8191 | -0.1957 | 0.0005 |
| 272 | SLV 16 | -0.1 | -19.32 | 103.68 | 0.8191 | -0.1957 | 0.0005 |
| 273 | SLU 1 | 0 | -3.26 | 15.88 | 0.518 | 0.0001 | 0 |
| 273 | SLU 2 | 0 | -3.26 | 15.86 | 0.5166 | 0.0001 | 0 |
| 273 | SLU 3 | 0 | -3.37 | 16.07 | 0.5393 | 0.0002 | 0 |
| 273 | SLU 4 | 0 | -3.37 | 16.06 | 0.5385 | 0.0002 | 0 |
| 273 | SLU 5 | 0 | -3.32 | 15.97 | 0.5297 | 0.0002 | 0 |
| 273 | SLU 6 | 0 | -3.44 | 16.18 | 0.5524 | 0.0003 | 0 |
| 273 | SLU 7 | 0 | -3.44 | 16.17 | 0.5516 | 0.0003 | 0 |
| 273 | SLU 8 | 0 | -3.4 | 16.1 | 0.5441 | 0.0003 | 0 |
| 273 | SLU 9 | 0 | -3.4 | 16.09 | 0.5433 | 0.0003 | 0 |
| 273 | SLU 10 | 0 | -4.02 | 19.43 | 0.6174 | 0.0001 | 0 |
| 273 | SLU 11 | 0 | -4.13 | 19.64 | 0.6402 | 0.0002 | 0 |
| 273 | SLU 12 | 0 | -4.13 | 19.63 | 0.6394 | 0.0002 | 0 |
| 273 | SLU 13 | 0 | -4.08 | 19.54 | 0.6305 | 0.0002 | 0 |

| Nodo | Cont. | Reazione a traslazione | | | Reazione a rotazione | | |
|---|---|---|---|---|---|---|---|
| Ind. | N.br. | x | y | z | x | y | z |
| 273 | SLU 14 | 0 | -4.2 | 19.75 | 0.6533 | 0.0003 | 0 |
| 273 | SLU 15 | 0 | -4.2 | 19.74 | 0.6524 | 0.0003 | 0 |
| 273 | SLU 16 | 0 | -4.16 | 19.67 | 0.645 | 0.0003 | 0 |
| 273 | SLU 17 | 0 | -4.16 | 19.66 | 0.6441 | 0.0003 | 0 |
| 273 | SLU 18 | 0 | -4.35 | 20.98 | 0.6621 | 0.0002 | 0 |
| 273 | SLU 19 | 0 | -4.34 | 20.97 | 0.6612 | 0.0001 | 0 |
| 273 | SLU 20 | 0 | -4.42 | 21.09 | 0.6751 | 0.0003 | 0 |
| 273 | SLU 21 | 0 | -4.41 | 21.08 | 0.6743 | 0.0002 | 0 |
| 273 | SLU 22 | 0 | -3.92 | 18.69 | 0.6122 | 0.0002 | 0 |
| 273 | SLU 23 | 0 | -3.91 | 18.67 | 0.6108 | 0.0002 | 0 |
| 273 | SLU 24 | 0 | -4.03 | 18.88 | 0.6335 | 0.0003 | 0 |
| 273 | SLU 25 | 0 | -4.02 | 18.87 | 0.6327 | 0.0003 | 0 |
| 273 | SLU 26 | 0 | -3.98 | 18.79 | 0.6239 | 0.0003 | 0 |
| 273 | SLU 27 | 0 | -4.1 | 18.99 | 0.6466 | 0.0004 | 0 |
| 273 | SLU 28 | 0 | -4.09 | 18.99 | 0.6458 | 0.0003 | 0 |
| 273 | SLU 29 | 0 | -4.06 | 18.91 | 0.6383 | 0.0004 | 0 |
| 273 | SLU 30 | 0 | -4.05 | 18.9 | 0.6375 | 0.0004 | 0 |
| 273 | SLU 31 | 0 | -4.67 | 22.24 | 0.7116 | 0.0002 | 0 |
| 273 | SLU 32 | 0 | -4.79 | 22.45 | 0.7344 | 0.0003 | 0 |
| 273 | SLU 33 | 0 | -4.78 | 22.45 | 0.7335 | 0.0003 | 0 |
| 273 | SLU 34 | 0 | -4.74 | 22.36 | 0.7247 | 0.0003 | 0 |
| 273 | SLU 35 | 0 | -4.86 | 22.56 | 0.7474 | 0.0004 | 0 |
| 273 | SLU 36 | 0 | -4.85 | 22.56 | 0.7466 | 0.0004 | 0 |
| 273 | SLU 37 | 0 | -4.82 | 22.48 | 0.7392 | 0.0004 | 0 |
| 273 | SLU 38 | 0 | -4.81 | 22.47 | 0.7383 | 0.0004 | 0 |
| 273 | SLU 39 | 0 | -5.01 | 23.79 | 0.7562 | 0.0002 | 0 |
| 273 | SLU 40 | 0 | -5 | 23.78 | 0.7554 | 0.0002 | 0 |
| 273 | SLU 41 | 0 | -5.07 | 23.9 | 0.7693 | 0.0003 | 0 |
| 273 | SLU 42 | 0 | -5.07 | 23.89 | 0.7685 | 0.0003 | 0 |
| 273 | SLU 43 | 0 | -4.02 | 19.68 | 0.6411 | 0.0002 | 0 |
| 273 | SLU 44 | 0 | -4.01 | 19.66 | 0.6397 | 0.0001 | 0 |
| 273 | SLU 45 | 0 | -4.12 | 19.87 | 0.6624 | 0.0002 | 0 |
| 273 | SLU 46 | 0 | -4.12 | 19.86 | 0.6616 | 0.0002 | 0 |
| 273 | SLU 47 | 0 | -4.08 | 19.77 | 0.6528 | 0.0002 | 0 |
| 273 | SLU 48 | 0 | -4.19 | 19.98 | 0.6755 | 0.0003 | 0 |
| 273 | SLU 49 | 0 | -4.19 | 19.97 | 0.6747 | 0.0003 | 0 |
| 273 | SLU 50 | 0 | -4.15 | 19.9 | 0.6672 | 0.0003 | 0 |
| 273 | SLU 51 | 0 | -4.15 | 19.89 | 0.6664 | 0.0003 | 0 |
| 273 | SLU 52 | 0 | -4.77 | 23.23 | 0.7406 | 0.0002 | 0 |
| 273 | SLU 53 | 0 | -4.88 | 23.44 | 0.7633 | 0.0003 | 0 |
| 273 | SLU 54 | 0 | -4.88 | 23.43 | 0.7625 | 0.0002 | 0 |
| 273 | SLU 55 | 0 | -4.84 | 23.34 | 0.7536 | 0.0002 | 0 |
| 273 | SLU 56 | 0 | -4.95 | 23.55 | 0.7764 | 0.0003 | 0 |
| 273 | SLU 57 | 0 | -4.95 | 23.54 | 0.7755 | 0.0003 | 0 |
| 273 | SLU 58 | 0 | -4.91 | 23.47 | 0.7681 | 0.0004 | 0 |
| 273 | SLU 59 | 0 | -4.91 | 23.46 | 0.7673 | 0.0004 | 0 |
| 273 | SLU 60 | 0 | -5.1 | 24.78 | 0.7852 | 0.0002 | 0 |
| 273 | SLU 61 | 0 | -5.1 | 24.77 | 0.7843 | 0.0002 | 0 |
| 273 | SLU 62 | 0 | -5.17 | 24.89 | 0.7982 | 0.0003 | 0 |
| 273 | SLU 63 | 0 | -5.17 | 24.88 | 0.7974 | 0.0003 | 0 |
| 273 | SLU 64 | 0 | -4.67 | 22.49 | 0.7353 | 0.0002 | 0 |
| 273 | SLU 65 | 0 | -4.67 | 22.47 | 0.7339 | 0.0002 | 0 |
| 273 | SLU 66 | 0 | -4.78 | 22.68 | 0.7566 | 0.0003 | 0 |
| 273 | SLU 67 | 0 | -4.78 | 22.67 | 0.7558 | 0.0003 | 0 |
| 273 | SLU 68 | 0 | -4.73 | 22.58 | 0.747 | 0.0003 | 0 |
| 273 | SLU 69 | 0 | -4.85 | 22.79 | 0.7697 | 0.0004 | 0 |
| 273 | SLU 70 | 0 | -4.85 | 22.78 | 0.7689 | 0.0004 | 0 |
| 273 | SLU 71 | 0 | -4.81 | 22.71 | 0.7614 | 0.0004 | 0 |
| 273 | SLU 72 | 0 | -4.81 | 22.7 | 0.7606 | 0.0004 | 0 |
| 273 | SLU 73 | 0 | -5.43 | 26.04 | 0.8347 | 0.0002 | 0 |
| 273 | SLU 74 | 0 | -5.54 | 26.25 | 0.8575 | 0.0003 | 0 |
| 273 | SLU 75 | 0 | -5.54 | 26.24 | 0.8566 | 0.0003 | 0 |
| 273 | SLU 76 | 0 | -5.49 | 26.15 | 0.8478 | 0.0003 | 0 |
| 273 | SLU 77 | 0 | -5.61 | 26.36 | 0.8705 | 0.0004 | 0 |
| 273 | SLU 78 | 0 | -5.61 | 26.35 | 0.8697 | 0.0004 | 0 |
| 273 | SLU 79 | 0 | -5.57 | 26.28 | 0.8623 | 0.0004 | 0 |
| 273 | SLU 80 | 0 | -5.57 | 26.27 | 0.8614 | 0.0004 | 0 |
| 273 | SLU 81 | 0 | -5.76 | 27.59 | 0.8793 | 0.0002 | 0 |
| 273 | SLU 82 | 0 | -5.75 | 27.58 | 0.8785 | 0.0002 | 0 |
| 273 | SLU 83 | 0 | -5.83 | 27.7 | 0.8924 | 0.0003 | 0 |
| 273 | SLU 84 | 0 | -5.82 | 27.69 | 0.8916 | 0.0003 | 0 |
| 273 | SLE RA 1 | 0 | -3.45 | 16.68 | 0.5449 | 0.0002 | 0 |
| 273 | SLE RA 2 | 0 | -3.45 | 16.67 | 0.544 | 0.0001 | 0 |
| 273 | SLE RA 3 | 0 | -3.52 | 16.81 | 0.5591 | 0.0002 | 0 |
| 273 | SLE RA 4 | 0 | -3.52 | 16.8 | 0.5586 | 0.0002 | 0 |
| 273 | SLE RA 5 | 0 | -3.49 | 16.75 | 0.5527 | 0.0002 | 0 |
| 273 | SLE RA 6 | 0 | -3.57 | 16.88 | 0.5678 | 0.0003 | 0 |
| 273 | SLE RA 7 | 0 | -3.57 | 16.88 | 0.5673 | 0.0003 | 0 |
| 273 | SLE RA 8 | 0 | -3.54 | 16.83 | 0.5623 | 0.0003 | 0 |
| 273 | SLE RA 9 | 0 | -3.54 | 16.82 | 0.5618 | 0.0003 | 0 |
| 273 | SLE RA 10 | 0 | -3.95 | 19.05 | 0.6112 | 0.0002 | 0 |
| 273 | SLE RA 11 | 0 | -4.03 | 19.19 | 0.6264 | 0.0002 | 0 |
| 273 | SLE RA 12 | 0 | -4.03 | 19.18 | 0.6258 | 0.0002 | 0 |
| 273 | SLE RA 13 | 0 | -4 | 19.13 | 0.6199 | 0.0002 | 0 |
| 273 | SLE RA 14 | 0 | -4.08 | 19.26 | 0.6351 | 0.0003 | 0 |
| 273 | SLE RA 15 | 0 | -4.07 | 19.26 | 0.6345 | 0.0003 | 0 |
| 273 | SLE RA 16 | 0 | -4.05 | 19.21 | 0.6296 | 0.0003 | 0 |
| 273 | SLE RA 17 | 0 | -4.05 | 19.2 | 0.629 | 0.0003 | 0 |

| Nodo | Cont. | Reazione a traslazione | | | Reazione a rotazione | | |
|---|---|---|---|---|---|---|---|
| Ind. | N.br. | x | y | z | x | y | z |
| 273 | SLE RA 18 | 0 | -4.17 | 20.08 | 0.6409 | 0.0002 | 0 |
| 273 | SLE RA 19 | 0 | -4.17 | 20.08 | 0.6404 | 0.0002 | 0 |
| 273 | SLE RA 20 | 0 | -4.22 | 20.16 | 0.6497 | 0.0002 | 0 |
| 273 | SLE RA 21 | 0 | -4.22 | 20.15 | 0.6491 | 0.0002 | 0 |
| 273 | SLE FR 1 | 0 | -3.45 | 16.68 | 0.5449 | 0.0002 | 0 |
| 273 | SLE FR 2 | 0 | -3.45 | 16.68 | 0.5447 | 0.0002 | 0 |
| 273 | SLE FR 3 | 0 | -3.47 | 16.71 | 0.5484 | 0.0002 | 0 |
| 273 | SLE FR 4 | 0 | -3.67 | 17.7 | 0.5735 | 0.0002 | 0 |
| 273 | SLE FR 5 | 0 | -3.69 | 17.73 | 0.5772 | 0.0002 | 0 |
| 273 | SLE FR 6 | 0 | -3.81 | 18.38 | 0.5929 | 0.0002 | 0 |
| 273 | SLE QP 1 | 0 | -3.45 | 16.68 | 0.5449 | 0.0002 | 0 |
| 273 | SLE QP 2 | 0 | -3.67 | 17.7 | 0.5737 | 0.0002 | 0 |
| 273 | SLD 1 | 0.07 | -0.16 | 17.89 | 0.4373 | 0.1792 | 0.0006 |
| 273 | SLD 2 | 0.07 | -0.16 | 17.89 | 0.4373 | 0.1792 | 0.0006 |
| 273 | SLD 3 | 0.08 | -5.45 | 16.98 | 0.6398 | 0.1851 | 0.0007 |
| 273 | SLD 4 | 0.08 | -5.45 | 16.98 | 0.6398 | 0.1851 | 0.0007 |
| 273 | SLD 5 | 0.01 | 5.41 | 19.14 | 0.2257 | 0.045 | 0.0001 |
| 273 | SLD 6 | 0.01 | 5.41 | 19.14 | 0.2257 | 0.045 | 0.0001 |
| 273 | SLD 7 | 0.03 | -12.23 | 16.1 | 0.9006 | 0.0645 | 0.0003 |
| 273 | SLD 8 | 0.03 | -12.23 | 16.1 | 0.9006 | 0.0645 | 0.0003 |
| 273 | SLD 9 | -0.03 | 4.89 | 19.3 | 0.2468 | -0.0642 | -0.0003 |
| 273 | SLD 10 | -0.03 | 4.89 | 19.3 | 0.2468 | -0.0642 | -0.0003 |
| 273 | SLD 11 | -0.01 | -12.75 | 16.26 | 0.9217 | -0.0447 | -0.0001 |
| 273 | SLD 12 | -0.01 | -12.75 | 16.26 | 0.9217 | -0.0447 | -0.0001 |
| 273 | SLD 13 | -0.08 | -1.89 | 18.43 | 0.5076 | -0.1848 | -0.0007 |
| 273 | SLD 14 | -0.08 | -1.89 | 18.43 | 0.5076 | -0.1848 | -0.0007 |
| 273 | SLD 15 | -0.07 | -7.18 | 17.51 | 0.7101 | -0.1789 | -0.0006 |
| 273 | SLD 16 | -0.07 | -7.18 | 17.51 | 0.7101 | -0.1789 | -0.0006 |
| 273 | SLV 1 | 0.17 | 4.56 | 18.14 | 0.2531 | 0.4571 | 0.0015 |
| 273 | SLV 2 | 0.17 | 4.56 | 18.14 | 0.2531 | 0.4571 | 0.0015 |
| 273 | SLV 3 | 0.18 | -7.81 | 16.01 | 0.7274 | 0.4719 | 0.0017 |
| 273 | SLV 4 | 0.18 | -7.81 | 16.01 | 0.7274 | 0.4719 | 0.0017 |
| 273 | SLV 5 | 0.02 | 17.56 | 21.06 | -0.2419 | 0.1148 | 0.0002 |
| 273 | SLV 6 | 0.02 | 17.56 | 21.06 | -0.2419 | 0.1148 | 0.0002 |
| 273 | SLV 7 | 0.08 | -23.67 | 13.97 | 1.3393 | 0.1641 | 0.0007 |
| 273 | SLV 8 | 0.08 | -23.67 | 13.97 | 1.3393 | 0.1641 | 0.0007 |
| 273 | SLV 9 | -0.08 | 16.33 | 21.43 | -0.1919 | -0.1638 | -0.0007 |
| 273 | SLV 10 | -0.08 | 16.33 | 21.43 | -0.1919 | -0.1638 | -0.0007 |
| 273 | SLV 11 | -0.02 | -24.9 | 14.35 | 1.3893 | -0.1145 | -0.0002 |
| 273 | SLV 12 | -0.02 | -24.9 | 14.35 | 1.3893 | -0.1145 | -0.0002 |
| 273 | SLV 13 | -0.18 | 0.47 | 19.39 | 0.42 | -0.4715 | -0.0017 |
| 273 | SLV 14 | -0.18 | 0.47 | 19.39 | 0.42 | -0.4715 | -0.0017 |
| 273 | SLV 15 | -0.17 | -11.9 | 17.27 | 0.8943 | -0.4567 | -0.0015 |
| 273 | SLV 16 | -0.17 | -11.9 | 17.27 | 0.8943 | -0.4567 | -0.0015 |
| 274 | SLU 1 | 0 | -6.97 | 42.73 | 0.5576 | -0.0011 | 0 |
| 274 | SLU 2 | 0 | -6.99 | 42.71 | 0.5586 | -0.0011 | 0 |
| 274 | SLU 3 | 0 | -7.42 | 43.7 | 0.5834 | -0.0013 | 0 |
| 274 | SLU 4 | 0 | -7.43 | 43.68 | 0.584 | -0.0013 | 0 |
| 274 | SLU 5 | 0 | -7.39 | 43.05 | 0.5772 | -0.0013 | 0 |
| 274 | SLU 6 | 0 | -7.82 | 44.04 | 0.602 | -0.0014 | 0 |
| 274 | SLU 7 | 0 | -7.83 | 44.02 | 0.6026 | -0.0014 | 0 |
| 274 | SLU 8 | 0 | -7.77 | 43.41 | 0.5948 | -0.0014 | 0 |
| 274 | SLU 9 | 0 | -7.78 | 43.4 | 0.5954 | -0.0014 | 0 |
| 274 | SLU 10 | 0 | -8.39 | 50.53 | 0.6647 | -0.0013 | 0 |
| 274 | SLU 11 | 0 | -8.82 | 51.52 | 0.6896 | -0.0014 | 0 |
| 274 | SLU 12 | 0 | -8.83 | 51.51 | 0.6901 | -0.0014 | 0 |
| 274 | SLU 13 | 0 | -8.79 | 50.87 | 0.6833 | -0.0014 | 0 |
| 274 | SLU 14 | 0 | -9.22 | 51.86 | 0.7082 | -0.0016 | 0 |
| 274 | SLU 15 | 0 | -9.23 | 51.85 | 0.7088 | -0.0016 | 0 |
| 274 | SLU 16 | 0 | -9.17 | 51.24 | 0.701 | -0.0016 | 0 |
| 274 | SLU 17 | 0 | -9.18 | 51.22 | 0.7016 | -0.0016 | 0 |
| 274 | SLU 18 | 0 | -8.97 | 53.91 | 0.7092 | -0.0013 | 0 |
| 274 | SLU 19 | 0 | -8.98 | 53.9 | 0.7098 | -0.0013 | 0 |
| 274 | SLU 20 | 0 | -9.37 | 54.25 | 0.7278 | -0.0015 | 0 |
| 274 | SLU 21 | 0 | -9.38 | 54.24 | 0.7284 | -0.0015 | 0 |
| 274 | SLU 22 | 0 | -8.35 | 49.7 | 0.6594 | -0.0013 | 0 |
| 274 | SLU 23 | 0 | -8.37 | 49.67 | 0.6604 | -0.0013 | 0 |
| 274 | SLU 24 | 0 | -8.8 | 50.66 | 0.6852 | -0.0015 | 0 |
| 274 | SLU 25 | 0 | -8.81 | 50.64 | 0.6858 | -0.0015 | 0 |
| 274 | SLU 26 | 0 | -8.77 | 50.01 | 0.679 | -0.0015 | 0 |
| 274 | SLU 27 | 0 | -9.2 | 51 | 0.7039 | -0.0016 | 0 |
| 274 | SLU 28 | 0 | -9.21 | 50.98 | 0.7045 | -0.0016 | 0 |
| 274 | SLU 29 | 0 | -9.15 | 50.38 | 0.6967 | -0.0016 | 0 |
| 274 | SLU 30 | 0 | -9.16 | 50.36 | 0.6972 | -0.0016 | 0 |
| 274 | SLU 31 | 0 | -9.77 | 57.5 | 0.7665 | -0.0015 | 0 |
| 274 | SLU 32 | 0 | -10.2 | 58.48 | 0.7914 | -0.0016 | 0 |
| 274 | SLU 33 | 0 | -10.21 | 58.47 | 0.792 | -0.0016 | 0 |
| 274 | SLU 34 | 0 | -10.17 | 57.84 | 0.7851 | -0.0016 | 0 |
| 274 | SLU 35 | 0 | -10.6 | 58.82 | 0.81 | -0.0018 | 0 |
| 274 | SLU 36 | 0 | -10.61 | 58.81 | 0.8106 | -0.0018 | 0 |
| 274 | SLU 37 | 0 | -10.55 | 58.2 | 0.8028 | -0.0018 | 0 |
| 274 | SLU 38 | 0 | -10.56 | 58.19 | 0.8034 | -0.0018 | 0 |
| 274 | SLU 39 | 0 | -10.35 | 60.87 | 0.811 | -0.0015 | 0 |
| 274 | SLU 40 | 0 | -10.36 | 60.86 | 0.8116 | -0.0015 | 0 |
| 274 | SLU 41 | 0 | -10.75 | 61.21 | 0.8296 | -0.0017 | 0 |
| 274 | SLU 42 | 0 | -10.76 | 61.2 | 0.8302 | -0.0017 | 0 |
| 274 | SLU 43 | 0 | -8.58 | 53.17 | 0.6899 | -0.0014 | 0 |
| 274 | SLU 44 | 0 | -8.61 | 53.14 | 0.6909 | -0.0014 | 0 |

| Nodo | Cont. | Reazione a traslazione | | | Reazione a rotazione | | |
|---|---|---|---|---|---|---|---|
| Ind. | N.br. | x | y | z | x | y | z |
| 274 | SLU 45 | 0 | -9.04 | 54.13 | 0.7158 | -0.0015 | 0 |
| 274 | SLU 46 | 0 | -9.05 | 54.11 | 0.7164 | -0.0015 | 0 |
| 274 | SLU 47 | 0 | -9.01 | 53.48 | 0.7095 | -0.0015 | 0 |
| 274 | SLU 48 | 0 | -9.44 | 54.47 | 0.7344 | -0.0017 | 0 |
| 274 | SLU 49 | 0 | -9.45 | 54.45 | 0.735 | -0.0017 | 0 |
| 274 | SLU 50 | 0 | -9.39 | 53.85 | 0.7272 | -0.0017 | 0 |
| 274 | SLU 51 | 0 | -9.4 | 53.83 | 0.7278 | -0.0017 | 0 |
| 274 | SLU 52 | 0 | -10.01 | 60.96 | 0.7971 | -0.0015 | 0 |
| 274 | SLU 53 | 0 | -10.44 | 61.95 | 0.8219 | -0.0017 | 0 |
| 274 | SLU 54 | 0 | -10.45 | 61.94 | 0.8225 | -0.0017 | 0 |
| 274 | SLU 55 | 0 | -10.41 | 61.31 | 0.8157 | -0.0017 | 0 |
| 274 | SLU 56 | 0 | -10.84 | 62.29 | 0.8405 | -0.0018 | 0 |
| 274 | SLU 57 | 0 | -10.85 | 62.28 | 0.8411 | -0.0018 | 0 |
| 274 | SLU 58 | 0 | -10.78 | 61.67 | 0.8333 | -0.0018 | 0 |
| 274 | SLU 59 | 0 | -10.8 | 61.66 | 0.8339 | -0.0018 | 0 |
| 274 | SLU 60 | 0 | -10.58 | 64.34 | 0.8416 | -0.0016 | 0 |
| 274 | SLU 61 | 0 | -10.6 | 64.33 | 0.8421 | -0.0016 | 0 |
| 274 | SLU 62 | 0 | -10.98 | 64.68 | 0.8602 | -0.0017 | 0 |
| 274 | SLU 63 | 0 | -11 | 64.67 | 0.8608 | -0.0017 | 0 |
| 274 | SLU 64 | 0 | -9.96 | 60.13 | 0.7918 | -0.0016 | 0 |
| 274 | SLU 65 | 0 | -9.99 | 60.1 | 0.7927 | -0.0016 | 0 |
| 274 | SLU 66 | 0 | -10.42 | 61.09 | 0.8176 | -0.0017 | 0 |
| 274 | SLU 67 | 0 | -10.43 | 61.08 | 0.8182 | -0.0017 | 0 |
| 274 | SLU 68 | 0 | -10.39 | 60.44 | 0.8114 | -0.0017 | 0 |
| 274 | SLU 69 | 0 | -10.82 | 61.43 | 0.8362 | -0.0019 | 0 |
| 274 | SLU 70 | 0 | -10.83 | 61.42 | 0.8368 | -0.0019 | 0 |
| 274 | SLU 71 | 0 | -10.77 | 60.81 | 0.829 | -0.0019 | 0 |
| 274 | SLU 72 | 0 | -10.78 | 60.79 | 0.8296 | -0.0019 | 0 |
| 274 | SLU 73 | 0 | -11.38 | 67.93 | 0.8989 | -0.0017 | 0 |
| 274 | SLU 74 | 0 | -11.82 | 68.92 | 0.9237 | -0.0019 | 0 |
| 274 | SLU 75 | 0 | -11.83 | 68.9 | 0.9243 | -0.0019 | 0 |
| 274 | SLU 76 | 0 | -11.79 | 68.27 | 0.9175 | -0.0019 | 0 |
| 274 | SLU 77 | 0 | -12.22 | 69.26 | 0.9424 | -0.0021 | 0 |
| 274 | SLU 78 | 0 | -12.23 | 69.24 | 0.943 | -0.002 | 0 |
| 274 | SLU 79 | 0 | -12.16 | 68.63 | 0.9352 | -0.0021 | 0 |
| 274 | SLU 80 | 0 | -12.18 | 68.62 | 0.9357 | -0.0021 | 0 |
| 274 | SLU 81 | 0 | -11.96 | 71.31 | 0.9434 | -0.0018 | 0 |
| 274 | SLU 82 | 0 | -11.98 | 71.29 | 0.944 | -0.0018 | 0 |
| 274 | SLU 83 | 0 | -12.36 | 71.65 | 0.962 | -0.002 | 0 |
| 274 | SLU 84 | 0 | -12.38 | 71.63 | 0.9626 | -0.002 | 0 |
| 274 | SLE RA 1 | 0 | -7.36 | 44.72 | 0.5867 | -0.0012 | 0 |
| 274 | SLE RA 2 | 0 | -7.38 | 44.7 | 0.5873 | -0.0012 | 0 |
| 274 | SLE RA 3 | 0 | -7.66 | 45.36 | 0.6039 | -0.0013 | 0 |
| 274 | SLE RA 4 | 0 | -7.67 | 45.35 | 0.6043 | -0.0013 | 0 |
| 274 | SLE RA 5 | 0 | -7.64 | 44.93 | 0.5997 | -0.0013 | 0 |
| 274 | SLE RA 6 | 0 | -7.93 | 45.59 | 0.6163 | -0.0014 | 0 |
| 274 | SLE RA 7 | 0 | -7.94 | 45.58 | 0.6167 | -0.0014 | 0 |
| 274 | SLE RA 8 | 0 | -7.9 | 45.18 | 0.6115 | -0.0014 | 0 |
| 274 | SLE RA 9 | 0 | -7.9 | 45.17 | 0.6119 | -0.0014 | 0 |
| 274 | SLE RA 10 | 0 | -8.31 | 49.92 | 0.6581 | -0.0013 | 0 |
| 274 | SLE RA 11 | 0 | -8.6 | 50.58 | 0.6747 | -0.0014 | 0 |
| 274 | SLE RA 12 | 0 | -8.6 | 50.57 | 0.675 | -0.0014 | 0 |
| 274 | SLE RA 13 | 0 | -8.58 | 50.15 | 0.6705 | -0.0014 | 0 |
| 274 | SLE RA 14 | 0 | -8.86 | 50.81 | 0.6871 | -0.0015 | 0 |
| 274 | SLE RA 15 | 0 | -8.87 | 50.8 | 0.6875 | -0.0015 | 0 |
| 274 | SLE RA 16 | 0 | -8.83 | 50.39 | 0.6823 | -0.0015 | 0 |
| 274 | SLE RA 17 | 0 | -8.84 | 50.38 | 0.6827 | -0.0015 | 0 |
| 274 | SLE RA 18 | 0 | -8.69 | 52.17 | 0.6877 | -0.0013 | 0 |
| 274 | SLE RA 19 | 0 | -8.7 | 52.16 | 0.6881 | -0.0013 | 0 |
| 274 | SLE RA 20 | 0 | -8.96 | 52.4 | 0.7002 | -0.0014 | 0 |
| 274 | SLE RA 21 | 0 | -8.97 | 52.39 | 0.7006 | -0.0014 | 0 |
| 274 | SLE FR 1 | 0 | -7.36 | 44.72 | 0.5867 | -0.0012 | 0 |
| 274 | SLE FR 2 | 0 | -7.36 | 44.72 | 0.5868 | -0.0012 | 0 |
| 274 | SLE FR 3 | 0 | -7.47 | 44.81 | 0.5916 | -0.0012 | 0 |
| 274 | SLE FR 4 | 0 | -7.76 | 46.95 | 0.6171 | -0.0012 | 0 |
| 274 | SLE FR 5 | 0 | -7.87 | 47.05 | 0.622 | -0.0013 | 0 |
| 274 | SLE FR 6 | 0 | -8.03 | 48.45 | 0.6372 | -0.0012 | 0 |
| 274 | SLE QP 1 | 0 | -7.36 | 44.72 | 0.5867 | -0.0012 | 0 |
| 274 | SLE QP 2 | 0 | -7.76 | 46.96 | 0.617 | -0.0012 | 0 |
| 274 | SLD 1 | -0.09 | -4.42 | 45.41 | 0.4633 | 0.1078 | 0.0001 |
| 274 | SLD 2 | -0.09 | -4.42 | 45.41 | 0.4633 | 0.1078 | 0.0001 |
| 274 | SLD 3 | -0.1 | -9.53 | 47.37 | 0.697 | 0.0996 | 0.0001 |
| 274 | SLD 4 | -0.1 | -9.53 | 47.37 | 0.697 | 0.0996 | 0.0001 |
| 274 | SLD 5 | -0.02 | 0.99 | 43.53 | 0.2164 | 0.0439 | 0.0001 |
| 274 | SLD 6 | -0.02 | 0.99 | 43.53 | 0.2164 | 0.0439 | 0.0001 |
| 274 | SLD 7 | -0.04 | -16.05 | 50.05 | 0.9955 | 0.0166 | 0 |
| 274 | SLD 8 | -0.04 | -16.05 | 50.05 | 0.9955 | 0.0166 | 0 |
| 274 | SLD 9 | 0.04 | 0.52 | 43.87 | 0.2385 | -0.019 | 0 |
| 274 | SLD 10 | 0.04 | 0.52 | 43.87 | 0.2385 | -0.019 | 0 |
| 274 | SLD 11 | 0.01 | -16.52 | 50.39 | 1.0176 | -0.0464 | -0.0001 |
| 274 | SLD 12 | 0.01 | -16.52 | 50.39 | 1.0176 | -0.0464 | -0.0001 |
| 274 | SLD 13 | 0.1 | -5.99 | 46.55 | 0.537 | -0.102 | -0.0001 |
| 274 | SLD 14 | 0.1 | -5.99 | 46.55 | 0.537 | -0.102 | -0.0001 |
| 274 | SLD 15 | 0.09 | -11.1 | 48.51 | 0.7707 | -0.1102 | -0.0001 |
| 274 | SLD 16 | 0.09 | -11.1 | 48.51 | 0.7707 | -0.1102 | -0.0001 |
| 274 | SLV 1 | -0.23 | 0.16 | 43.21 | 0.251 | 0.3098 | 0.0004 |
| 274 | SLV 2 | -0.23 | 0.16 | 43.21 | 0.251 | 0.3098 | 0.0004 |
| 274 | SLV 3 | -0.25 | -11.95 | 48.02 | 0.8074 | 0.288 | 0.0003 |

| Nodo | Cont. | Reazione a traslazione | | | Reazione a rotazione | | |
|---|---|---|---|---|---|---|---|
| Ind. | N.br. | x | y | z | x | y | z |
| 274 | SLV 4 | -0.25 | -11.95 | 48.02 | 0.8074 | 0.288 | 0.0003 |
| 274 | SLV 5 | -0.04 | 12.98 | 38.55 | -0.3368 | 0.1252 | 0.0001 |
| 274 | SLV 6 | -0.04 | 12.98 | 38.55 | -0.3368 | 0.1252 | 0.0001 |
| 274 | SLV 7 | -0.11 | -27.39 | 54.56 | 1.5181 | 0.0524 | 0.0001 |
| 274 | SLV 8 | -0.11 | -27.39 | 54.56 | 1.5181 | 0.0524 | 0.0001 |
| 274 | SLV 9 | 0.1 | 11.86 | 39.35 | -0.2841 | -0.0549 | -0.0001 |
| 274 | SLV 10 | 0.1 | 11.86 | 39.35 | -0.2841 | -0.0549 | -0.0001 |
| 274 | SLV 11 | 0.04 | -28.51 | 55.37 | 1.5707 | -0.1276 | -0.0001 |
| 274 | SLV 12 | 0.04 | -28.51 | 55.37 | 1.5707 | -0.1276 | -0.0001 |
| 274 | SLV 13 | 0.25 | -3.57 | 45.9 | 0.4266 | -0.2904 | -0.0003 |
| 274 | SLV 14 | 0.25 | -3.57 | 45.9 | 0.4266 | -0.2904 | -0.0003 |
| 274 | SLV 15 | 0.23 | -15.68 | 50.71 | 0.983 | -0.3122 | -0.0004 |
| 274 | SLV 16 | 0.23 | -15.68 | 50.71 | 0.983 | -0.3122 | -0.0004 |
| 275 | SLU 1 | 0.12 | -11.27 | 52.5 | 0.6812 | 0.0011 | -0.0005 |
| 275 | SLU 2 | 0.11 | -9.9 | 48.51 | 0.6043 | 0.0017 | -0.0004 |
| 275 | SLU 3 | 0.12 | -11.46 | 53.41 | 0.6927 | 0.001 | -0.0005 |
| 275 | SLU 4 | 0.12 | -10.64 | 51.01 | 0.6465 | 0.0013 | -0.0004 |
| 275 | SLU 5 | 0.11 | -9.93 | 48.83 | 0.6059 | 0.0014 | -0.0004 |
| 275 | SLU 6 | 0.12 | -11.49 | 53.73 | 0.6944 | 0.0007 | -0.0005 |
| 275 | SLU 7 | 0.12 | -10.67 | 51.33 | 0.6482 | 0.0011 | -0.0004 |
| 275 | SLU 8 | 0.12 | -11.33 | 53.15 | 0.6845 | 0.0007 | -0.0005 |
| 275 | SLU 9 | 0.12 | -10.51 | 50.75 | 0.6384 | 0.001 | -0.0004 |
| 275 | SLU 10 | 0.13 | -11.19 | 54.75 | 0.6871 | 0.002 | -0.0005 |
| 275 | SLU 11 | 0.14 | -12.76 | 59.65 | 0.7756 | 0.0013 | -0.0005 |
| 275 | SLU 12 | 0.13 | -11.94 | 57.25 | 0.7294 | 0.0016 | -0.0005 |
| 275 | SLU 13 | 0.13 | -11.23 | 55.07 | 0.6888 | 0.0018 | -0.0005 |
| 275 | SLU 14 | 0.14 | -12.79 | 59.97 | 0.7772 | 0.0011 | -0.0005 |
| 275 | SLU 15 | 0.14 | -11.97 | 57.57 | 0.731 | 0.0014 | -0.0005 |
| 275 | SLU 16 | 0.14 | -12.62 | 59.39 | 0.7674 | 0.001 | -0.0005 |
| 275 | SLU 17 | 0.13 | -11.8 | 56.99 | 0.7212 | 0.0014 | -0.0005 |
| 275 | SLU 18 | 0.14 | -13.12 | 61.42 | 0.7996 | 0.0016 | -0.0005 |
| 275 | SLU 19 | 0.14 | -12.3 | 59.02 | 0.7534 | 0.0019 | -0.0005 |
| 275 | SLU 20 | 0.15 | -13.15 | 61.74 | 0.8013 | 0.0014 | -0.0005 |
| 275 | SLU 21 | 0.14 | -12.33 | 59.34 | 0.7551 | 0.0017 | -0.0005 |
| 275 | SLU 22 | 0.14 | -12.5 | 58.35 | 0.7589 | 0.0013 | -0.0005 |
| 275 | SLU 23 | 0.13 | -11.13 | 54.35 | 0.6819 | 0.0019 | -0.0005 |
| 275 | SLU 24 | 0.14 | -12.69 | 59.26 | 0.7704 | 0.0012 | -0.0005 |
| 275 | SLU 25 | 0.13 | -11.87 | 56.86 | 0.7242 | 0.0015 | -0.0005 |
| 275 | SLU 26 | 0.13 | -11.16 | 54.68 | 0.6836 | 0.0017 | -0.0005 |
| 275 | SLU 27 | 0.14 | -12.72 | 59.58 | 0.7721 | 0.001 | -0.0005 |
| 275 | SLU 28 | 0.13 | -11.9 | 57.18 | 0.7259 | 0.0013 | -0.0005 |
| 275 | SLU 29 | 0.14 | -12.56 | 59 | 0.7622 | 0.0009 | -0.0005 |
| 275 | SLU 30 | 0.13 | -11.74 | 56.6 | 0.716 | 0.0012 | -0.0005 |
| 275 | SLU 31 | 0.14 | -12.42 | 60.59 | 0.7648 | 0.0022 | -0.0005 |
| 275 | SLU 32 | 0.16 | -13.99 | 65.5 | 0.8533 | 0.0015 | -0.0006 |
| 275 | SLU 33 | 0.15 | -13.17 | 63.1 | 0.8071 | 0.0018 | -0.0006 |
| 275 | SLU 34 | 0.14 | -12.45 | 60.92 | 0.7665 | 0.002 | -0.0005 |
| 275 | SLU 35 | 0.16 | -14.02 | 65.82 | 0.8549 | 0.0013 | -0.0006 |
| 275 | SLU 36 | 0.15 | -13.2 | 63.42 | 0.8087 | 0.0016 | -0.0006 |
| 275 | SLU 37 | 0.15 | -13.85 | 65.24 | 0.8451 | 0.0012 | -0.0006 |
| 275 | SLU 38 | 0.15 | -13.03 | 62.84 | 0.7989 | 0.0016 | -0.0006 |
| 275 | SLU 39 | 0.16 | -14.35 | 67.26 | 0.8773 | 0.0018 | -0.0006 |
| 275 | SLU 40 | 0.15 | -13.53 | 64.87 | 0.8311 | 0.0021 | -0.0006 |
| 275 | SLU 41 | 0.16 | -14.38 | 67.59 | 0.8789 | 0.0016 | -0.0006 |
| 275 | SLU 42 | 0.15 | -13.56 | 65.19 | 0.8328 | 0.0019 | -0.0006 |
| 275 | SLU 43 | 0.15 | -14.23 | 66.25 | 0.859 | 0.0014 | -0.0006 |
| 275 | SLU 44 | 0.14 | -12.86 | 62.25 | 0.782 | 0.0019 | -0.0005 |
| 275 | SLU 45 | 0.16 | -14.42 | 67.15 | 0.8705 | 0.0012 | -0.0006 |
| 275 | SLU 46 | 0.15 | -13.6 | 64.76 | 0.8243 | 0.0015 | -0.0006 |
| 275 | SLU 47 | 0.14 | -12.89 | 62.58 | 0.7837 | 0.0017 | -0.0005 |
| 275 | SLU 48 | 0.16 | -14.45 | 67.48 | 0.8721 | 0.001 | -0.0006 |
| 275 | SLU 49 | 0.15 | -13.63 | 65.08 | 0.8259 | 0.0013 | -0.0006 |
| 275 | SLU 50 | 0.15 | -14.29 | 66.9 | 0.8623 | 0.001 | -0.0006 |
| 275 | SLU 51 | 0.15 | -13.47 | 64.5 | 0.8161 | 0.0013 | -0.0006 |
| 275 | SLU 52 | 0.16 | -14.15 | 68.49 | 0.8649 | 0.0023 | -0.0006 |
| 275 | SLU 53 | 0.17 | -15.72 | 73.39 | 0.9533 | 0.0016 | -0.0006 |
| 275 | SLU 54 | 0.17 | -14.9 | 71 | 0.9071 | 0.0019 | -0.0006 |
| 275 | SLU 55 | 0.16 | -14.18 | 68.82 | 0.8665 | 0.0021 | -0.0006 |
| 275 | SLU 56 | 0.17 | -15.75 | 73.72 | 0.955 | 0.0014 | -0.0006 |
| 275 | SLU 57 | 0.17 | -14.93 | 71.32 | 0.9088 | 0.0017 | -0.0006 |
| 275 | SLU 58 | 0.17 | -15.58 | 73.14 | 0.9451 | 0.0013 | -0.0006 |
| 275 | SLU 59 | 0.17 | -14.76 | 70.74 | 0.899 | 0.0016 | -0.0006 |
| 275 | SLU 60 | 0.18 | -16.08 | 75.16 | 0.9773 | 0.0019 | -0.0007 |
| 275 | SLU 61 | 0.17 | -15.26 | 72.77 | 0.9312 | 0.0022 | -0.0006 |
| 275 | SLU 62 | 0.18 | -16.11 | 75.49 | 0.979 | 0.0017 | -0.0007 |
| 275 | SLU 63 | 0.17 | -15.29 | 73.09 | 0.9328 | 0.002 | -0.0006 |
| 275 | SLU 64 | 0.17 | -15.45 | 72.1 | 0.9367 | 0.0016 | -0.0006 |
| 275 | SLU 65 | 0.16 | -14.09 | 68.1 | 0.8597 | 0.0021 | -0.0006 |
| 275 | SLU 66 | 0.17 | -15.65 | 73 | 0.9481 | 0.0014 | -0.0006 |
| 275 | SLU 67 | 0.17 | -14.83 | 70.6 | 0.902 | 0.0017 | -0.0006 |
| 275 | SLU 68 | 0.16 | -14.12 | 68.42 | 0.8613 | 0.0019 | -0.0006 |
| 275 | SLU 69 | 0.17 | -15.68 | 73.32 | 0.9498 | 0.0012 | -0.0006 |
| 275 | SLU 70 | 0.17 | -14.86 | 70.93 | 0.9036 | 0.0015 | -0.0006 |
| 275 | SLU 71 | 0.17 | -15.52 | 72.74 | 0.94 | 0.0012 | -0.0006 |
| 275 | SLU 72 | 0.16 | -14.69 | 70.34 | 0.8938 | 0.0015 | -0.0006 |
| 275 | SLU 73 | 0.17 | -15.38 | 74.34 | 0.9425 | 0.0025 | -0.0007 |
| 275 | SLU 74 | 0.19 | -16.95 | 79.24 | 1.031 | 0.0018 | -0.0007 |
| 275 | SLU 75 | 0.18 | -16.13 | 76.84 | 0.9848 | 0.0021 | -0.0007 |

| Nodo | Cont. | Reazione a traslazione | | | Reazione a rotazione | | |
|---|---|---|---|---|---|---|---|
| Ind. | N.br. | x | y | z | x | y | z |
| 275 | SLU 76 | 0.18 | -15.41 | 74.66 | 0.9442 | 0.0023 | -0.0007 |
| 275 | SLU 77 | 0.19 | -16.98 | 79.56 | 1.0326 | 0.0016 | -0.0007 |
| 275 | SLU 78 | 0.18 | -16.16 | 77.17 | 0.9865 | 0.0019 | -0.0007 |
| 275 | SLU 79 | 0.19 | -16.81 | 78.98 | 1.0228 | 0.0015 | -0.0007 |
| 275 | SLU 80 | 0.18 | -15.99 | 76.58 | 0.9766 | 0.0018 | -0.0007 |
| 275 | SLU 81 | 0.19 | -17.31 | 81.01 | 1.055 | 0.0021 | -0.0007 |
| 275 | SLU 82 | 0.19 | -16.49 | 78.61 | 1.0088 | 0.0024 | -0.0007 |
| 275 | SLU 83 | 0.19 | -17.34 | 81.33 | 1.0567 | 0.0019 | -0.0007 |
| 275 | SLU 84 | 0.19 | -16.52 | 78.94 | 1.0105 | 0.0022 | -0.0007 |
| 275 | SLE RA 1 | 0.13 | -11.62 | 54.17 | 0.7034 | 0.0012 | -0.0005 |
| 275 | SLE RA 2 | 0.12 | -10.71 | 51.51 | 0.6521 | 0.0015 | -0.0005 |
| 275 | SLE RA 3 | 0.13 | -11.75 | 54.78 | 0.7111 | 0.0011 | -0.0005 |
| 275 | SLE RA 4 | 0.12 | -11.2 | 53.18 | 0.6803 | 0.0013 | -0.0005 |
| 275 | SLE RA 5 | 0.12 | -10.73 | 51.72 | 0.6532 | 0.0014 | -0.0005 |
| 275 | SLE RA 6 | 0.13 | -11.77 | 54.99 | 0.7122 | 0.0009 | -0.0005 |
| 275 | SLE RA 7 | 0.12 | -11.22 | 53.39 | 0.6814 | 0.0011 | -0.0005 |
| 275 | SLE RA 8 | 0.13 | -11.66 | 54.6 | 0.7056 | 0.0009 | -0.0005 |
| 275 | SLE RA 9 | 0.12 | -11.11 | 53.01 | 0.6748 | 0.0011 | -0.0005 |
| 275 | SLE RA 10 | 0.13 | -11.57 | 55.67 | 0.7074 | 0.0018 | -0.0005 |
| 275 | SLE RA 11 | 0.14 | -12.61 | 58.94 | 0.7663 | 0.0013 | -0.0005 |
| 275 | SLE RA 12 | 0.13 | -12.07 | 57.34 | 0.7355 | 0.0015 | -0.0005 |
| 275 | SLE RA 13 | 0.13 | -11.59 | 55.88 | 0.7085 | 0.0016 | -0.0005 |
| 275 | SLE RA 14 | 0.14 | -12.63 | 59.15 | 0.7674 | 0.0012 | -0.0005 |
| 275 | SLE RA 15 | 0.14 | -12.09 | 57.55 | 0.7366 | 0.0014 | -0.0005 |
| 275 | SLE RA 16 | 0.14 | -12.52 | 58.76 | 0.7609 | 0.0011 | -0.0005 |
| 275 | SLE RA 17 | 0.13 | -11.98 | 57.17 | 0.7301 | 0.0013 | -0.0005 |
| 275 | SLE RA 18 | 0.14 | -12.85 | 60.12 | 0.7823 | 0.0015 | -0.0005 |
| 275 | SLE RA 19 | 0.14 | -12.31 | 58.52 | 0.7516 | 0.0017 | -0.0005 |
| 275 | SLE RA 20 | 0.14 | -12.87 | 60.33 | 0.7834 | 0.0014 | -0.0005 |
| 275 | SLE RA 21 | 0.14 | -12.33 | 58.73 | 0.7527 | 0.0016 | -0.0005 |
| 275 | SLE FR 1 | 0.13 | -11.62 | 54.17 | 0.7034 | 0.0012 | -0.0005 |
| 275 | SLE FR 2 | 0.12 | -11.44 | 53.64 | 0.6932 | 0.0012 | -0.0005 |
| 275 | SLE FR 3 | 0.13 | -11.63 | 54.26 | 0.7039 | 0.0011 | -0.0005 |
| 275 | SLE FR 4 | 0.13 | -11.81 | 55.42 | 0.7168 | 0.0013 | -0.0005 |
| 275 | SLE FR 5 | 0.13 | -12 | 56.04 | 0.7275 | 0.0012 | -0.0005 |
| 275 | SLE FR 6 | 0.13 | -12.24 | 57.15 | 0.7429 | 0.0013 | -0.0005 |
| 275 | SLE QP 1 | 0.13 | -11.62 | 54.17 | 0.7034 | 0.0012 | -0.0005 |
| 275 | SLE QP 2 | 0.13 | -11.99 | 55.96 | 0.7271 | 0.0013 | -0.0005 |
| 275 | SLD 1 | 0.13 | -13.67 | 67.17 | 0.8263 | 0.0949 | -0.0006 |
| 275 | SLD 2 | 0.13 | -13.67 | 67.17 | 0.8263 | 0.0949 | -0.0006 |
| 275 | SLD 3 | 0.25 | -18.34 | 77.04 | 1.0579 | 0.0435 | -0.0007 |
| 275 | SLD 4 | 0.25 | -18.34 | 77.04 | 1.0579 | 0.0435 | -0.0007 |
| 275 | SLD 5 | -0.05 | -5.41 | 44.35 | 0.4056 | 0.1073 | -0.0004 |
| 275 | SLD 6 | -0.05 | -5.41 | 44.35 | 0.4056 | 0.1073 | -0.0004 |
| 275 | SLD 7 | 0.35 | -20.97 | 77.25 | 1.1776 | -0.064 | -0.0007 |
| 275 | SLD 8 | 0.35 | -20.97 | 77.25 | 1.1776 | -0.064 | -0.0007 |
| 275 | SLD 9 | -0.09 | -3.01 | 34.66 | 0.2766 | 0.0666 | -0.0003 |
| 275 | SLD 10 | -0.09 | -3.01 | 34.66 | 0.2766 | 0.0666 | -0.0003 |
| 275 | SLD 11 | 0.31 | -18.56 | 67.56 | 1.0486 | -0.1048 | -0.0006 |
| 275 | SLD 12 | 0.31 | -18.56 | 67.56 | 1.0486 | -0.1048 | -0.0006 |
| 275 | SLD 13 | 0.01 | -5.64 | 34.88 | 0.3963 | -0.041 | -0.0003 |
| 275 | SLD 14 | 0.01 | -5.64 | 34.88 | 0.3963 | -0.041 | -0.0003 |
| 275 | SLD 15 | 0.13 | -10.31 | 44.75 | 0.628 | -0.0924 | -0.0004 |
| 275 | SLD 16 | 0.13 | -10.31 | 44.75 | 0.628 | -0.0924 | -0.0004 |
| 275 | SLV 1 | 0.13 | -15.96 | 81.82 | 0.961 | 0.2242 | -0.0008 |
| 275 | SLV 2 | 0.13 | -15.96 | 81.82 | 0.961 | 0.2242 | -0.0008 |
| 275 | SLV 3 | 0.43 | -26.81 | 105.17 | 1.5014 | 0.0967 | -0.001 |
| 275 | SLV 4 | 0.43 | -26.81 | 105.17 | 1.5014 | 0.0967 | -0.001 |
| 275 | SLV 5 | -0.32 | 3.27 | 28.31 | -0.0225 | 0.2616 | -0.0002 |
| 275 | SLV 6 | -0.32 | 3.27 | 28.31 | -0.0225 | 0.2616 | -0.0002 |
| 275 | SLV 7 | 0.67 | -32.89 | 106.13 | 1.7791 | -0.1635 | -0.001 |
| 275 | SLV 8 | 0.67 | -32.89 | 106.13 | 1.7791 | -0.1635 | -0.001 |
| 275 | SLV 9 | -0.41 | 8.91 | 5.78 | -0.3249 | 0.1661 | 0.0001 |
| 275 | SLV 10 | -0.41 | 8.91 | 5.78 | -0.3249 | 0.1661 | 0.0001 |
| 275 | SLV 11 | 0.58 | -27.25 | 83.61 | 1.4767 | -0.259 | -0.0008 |
| 275 | SLV 12 | 0.58 | -27.25 | 83.61 | 1.4767 | -0.259 | -0.0008 |
| 275 | SLV 13 | -0.16 | 2.84 | 6.75 | -0.0472 | -0.0941 | 0.0001 |
| 275 | SLV 14 | -0.16 | 2.84 | 6.75 | -0.0472 | -0.0941 | 0.0001 |
| 275 | SLV 15 | 0.13 | -8.01 | 30.09 | 0.4932 | -0.2217 | -0.0002 |
| 275 | SLV 16 | 0.13 | -8.01 | 30.09 | 0.4932 | -0.2217 | -0.0002 |
| 276 | SLU 1 | 0.01 | -0.34 | 66.93 | -0.0138 | 0.0055 | 0.0001 |
| 276 | SLU 2 | 0.01 | -0.24 | 66.35 | -0.0169 | 0.0053 | 0.0001 |
| 276 | SLU 3 | 0.02 | -0.6 | 71.21 | -0.0062 | 0.0059 | 0.0001 |
| 276 | SLU 4 | 0.02 | -0.54 | 70.86 | -0.008 | 0.0058 | 0.0001 |
| 276 | SLU 5 | 0.01 | -0.54 | 70.06 | -0.0078 | 0.0057 | 0.0001 |
| 276 | SLU 6 | 0.02 | -0.9 | 74.91 | 0.0029 | 0.0062 | 0.0001 |
| 276 | SLU 7 | 0.02 | -0.84 | 74.56 | 0.001 | 0.0061 | 0.0001 |
| 276 | SLU 8 | 0.02 | -0.93 | 74.34 | 0.0043 | 0.0062 | 0.0001 |
| 276 | SLU 9 | 0.02 | -0.87 | 74 | 0.0025 | 0.0061 | 0.0001 |
| 276 | SLU 10 | 0.02 | -0.36 | 77.76 | -0.0188 | 0.0062 | 0.0001 |
| 276 | SLU 11 | 0.02 | -0.72 | 82.61 | -0.0082 | 0.0067 | 0.0001 |
| 276 | SLU 12 | 0.02 | -0.66 | 82.26 | -0.01 | 0.0066 | 0.0001 |
| 276 | SLU 13 | 0.02 | -0.66 | 81.46 | -0.0098 | 0.0065 | 0.0001 |
| 276 | SLU 14 | 0.02 | -1.02 | 86.32 | 0.0009 | 0.007 | 0.0001 |
| 276 | SLU 15 | 0.02 | -0.96 | 85.97 | -0.0009 | 0.007 | 0.0001 |
| 276 | SLU 16 | 0.02 | -1.05 | 85.75 | 0.0024 | 0.007 | 0.0001 |
| 276 | SLU 17 | 0.02 | -0.99 | 85.4 | 0.0005 | 0.0069 | 0.0001 |
| 276 | SLU 18 | 0.02 | -0.51 | 83.22 | -0.0166 | 0.0067 | 0.0001 |

| Nodo | Cont. | Reazione a traslazione | | | Reazione a rotazione | | |
|---|---|---|---|---|---|---|---|
| Ind. | N.br. | x | y | z | x | y | z |
| 276 | SLU 19 | 0.02 | -0.45 | 82.88 | -0.0184 | 0.0066 | 0.0001 |
| 276 | SLU 20 | 0.02 | -0.81 | 86.93 | -0.0075 | 0.007 | 0.0001 |
| 276 | SLU 21 | 0.02 | -0.75 | 86.58 | -0.0094 | 0.0069 | 0.0001 |
| 276 | SLU 22 | 0.02 | -0.57 | 78.71 | -0.0113 | 0.0064 | 0.0001 |
| 276 | SLU 23 | 0.02 | -0.48 | 78.13 | -0.0144 | 0.0063 | 0.0001 |
| 276 | SLU 24 | 0.02 | -0.83 | 82.99 | -0.0038 | 0.0068 | 0.0001 |
| 276 | SLU 25 | 0.02 | -0.78 | 82.64 | -0.0056 | 0.0067 | 0.0001 |
| 276 | SLU 26 | 0.02 | -0.77 | 81.84 | -0.0054 | 0.0066 | 0.0001 |
| 276 | SLU 27 | 0.02 | -1.13 | 86.69 | 0.0053 | 0.0071 | 0.0001 |
| 276 | SLU 28 | 0.02 | -1.07 | 86.34 | 0.0035 | 0.007 | 0.0001 |
| 276 | SLU 29 | 0.02 | -1.16 | 86.12 | 0.0068 | 0.0071 | 0.0001 |
| 276 | SLU 30 | 0.02 | -1.1 | 85.78 | 0.0049 | 0.007 | 0.0001 |
| 276 | SLU 31 | 0.02 | -0.6 | 89.54 | -0.0164 | 0.0071 | 0.0001 |
| 276 | SLU 32 | 0.02 | -0.95 | 94.39 | -0.0057 | 0.0076 | 0.0001 |
| 276 | SLU 33 | 0.02 | -0.9 | 94.04 | -0.0076 | 0.0075 | 0.0001 |
| 276 | SLU 34 | 0.02 | -0.89 | 93.24 | -0.0073 | 0.0074 | 0.0001 |
| 276 | SLU 35 | 0.02 | -1.25 | 98.09 | 0.0033 | 0.0079 | 0.0001 |
| 276 | SLU 36 | 0.02 | -1.19 | 97.75 | 0.0015 | 0.0079 | 0.0001 |
| 276 | SLU 37 | 0.02 | -1.28 | 97.53 | 0.0048 | 0.0079 | 0.0001 |
| 276 | SLU 38 | 0.02 | -1.22 | 97.18 | 0.003 | 0.0078 | 0.0001 |
| 276 | SLU 39 | 0.02 | -0.74 | 95 | -0.0142 | 0.0076 | 0.0001 |
| 276 | SLU 40 | 0.02 | -0.69 | 94.66 | -0.016 | 0.0075 | 0.0001 |
| 276 | SLU 41 | 0.02 | -1.04 | 98.71 | -0.0051 | 0.0079 | 0.0001 |
| 276 | SLU 42 | 0.02 | -0.98 | 98.36 | -0.0069 | 0.0078 | 0.0001 |
| 276 | SLU 43 | 0.02 | -0.36 | 82.98 | -0.0188 | 0.0068 | 0.0001 |
| 276 | SLU 44 | 0.02 | -0.27 | 82.4 | -0.0218 | 0.0067 | 0.0001 |
| 276 | SLU 45 | 0.02 | -0.62 | 87.25 | -0.0112 | 0.0072 | 0.0001 |
| 276 | SLU 46 | 0.02 | -0.57 | 86.9 | -0.013 | 0.0071 | 0.0001 |
| 276 | SLU 47 | 0.02 | -0.56 | 86.1 | -0.0128 | 0.007 | 0.0001 |
| 276 | SLU 48 | 0.02 | -0.92 | 90.95 | -0.0021 | 0.0076 | 0.0001 |
| 276 | SLU 49 | 0.02 | -0.86 | 90.61 | -0.0039 | 0.0075 | 0.0001 |
| 276 | SLU 50 | 0.02 | -0.95 | 90.39 | -0.0006 | 0.0075 | 0.0001 |
| 276 | SLU 51 | 0.02 | -0.89 | 90.04 | -0.0025 | 0.0075 | 0.0001 |
| 276 | SLU 52 | 0.02 | -0.39 | 93.8 | -0.0238 | 0.0075 | 0.0001 |
| 276 | SLU 53 | 0.02 | -0.74 | 98.65 | -0.0131 | 0.008 | 0.0001 |
| 276 | SLU 54 | 0.02 | -0.69 | 98.3 | -0.015 | 0.0079 | 0.0001 |
| 276 | SLU 55 | 0.02 | -0.68 | 97.5 | -0.0147 | 0.0079 | 0.0001 |
| 276 | SLU 56 | 0.02 | -1.04 | 102.36 | -0.0041 | 0.0084 | 0.0001 |
| 276 | SLU 57 | 0.02 | -0.98 | 102.01 | -0.0059 | 0.0083 | 0.0001 |
| 276 | SLU 58 | 0.02 | -1.07 | 101.79 | -0.0026 | 0.0084 | 0.0001 |
| 276 | SLU 59 | 0.02 | -1.01 | 101.44 | -0.0044 | 0.0083 | 0.0001 |
| 276 | SLU 60 | 0.02 | -0.53 | 99.27 | -0.0216 | 0.008 | 0.0001 |
| 276 | SLU 61 | 0.02 | -0.48 | 98.92 | -0.0234 | 0.0079 | 0.0001 |
| 276 | SLU 62 | 0.02 | -0.83 | 102.97 | -0.0125 | 0.0083 | 0.0001 |
| 276 | SLU 63 | 0.02 | -0.77 | 102.62 | -0.0143 | 0.0083 | 0.0001 |
| 276 | SLU 64 | 0.02 | -0.6 | 94.76 | -0.0163 | 0.0077 | 0.0001 |
| 276 | SLU 65 | 0.02 | -0.5 | 94.18 | -0.0194 | 0.0076 | 0.0001 |
| 276 | SLU 66 | 0.02 | -0.86 | 99.03 | -0.0087 | 0.0081 | 0.0001 |
| 276 | SLU 67 | 0.02 | -0.8 | 98.68 | -0.0106 | 0.008 | 0.0001 |
| 276 | SLU 68 | 0.02 | -0.79 | 97.88 | -0.0103 | 0.0079 | 0.0001 |
| 276 | SLU 69 | 0.02 | -1.15 | 102.73 | 0.0003 | 0.0085 | 0.0001 |
| 276 | SLU 70 | 0.02 | -1.09 | 102.39 | -0.0015 | 0.0084 | 0.0001 |
| 276 | SLU 71 | 0.02 | -1.18 | 102.17 | 0.0018 | 0.0084 | 0.0001 |
| 276 | SLU 72 | 0.02 | -1.13 | 101.82 | 0 | 0.0084 | 0.0001 |
| 276 | SLU 73 | 0.02 | -0.62 | 105.58 | -0.0214 | 0.0084 | 0.0001 |
| 276 | SLU 74 | 0.02 | -0.98 | 110.43 | -0.0107 | 0.0089 | 0.0001 |
| 276 | SLU 75 | 0.02 | -0.92 | 110.08 | -0.0125 | 0.0088 | 0.0001 |
| 276 | SLU 76 | 0.02 | -0.91 | 109.28 | -0.0123 | 0.0088 | 0.0001 |
| 276 | SLU 77 | 0.02 | -1.27 | 114.14 | -0.0016 | 0.0093 | 0.0001 |
| 276 | SLU 78 | 0.02 | -1.21 | 113.79 | -0.0035 | 0.0092 | 0.0001 |
| 276 | SLU 79 | 0.02 | -1.3 | 113.57 | -0.0002 | 0.0093 | 0.0001 |
| 276 | SLU 80 | 0.02 | -1.25 | 113.22 | -0.002 | 0.0092 | 0.0001 |
| 276 | SLU 81 | 0.02 | -0.77 | 111.05 | -0.0191 | 0.0089 | 0.0001 |
| 276 | SLU 82 | 0.02 | -0.71 | 110.7 | -0.021 | 0.0088 | 0.0001 |
| 276 | SLU 83 | 0.02 | -1.06 | 114.75 | -0.0101 | 0.0093 | 0.0001 |
| 276 | SLU 84 | 0.02 | -1 | 114.4 | -0.0119 | 0.0092 | 0.0001 |
| 276 | SLE RA 1 | 0.02 | -0.41 | 70.3 | -0.0131 | 0.0057 | 0.0001 |
| 276 | SLE RA 2 | 0.01 | -0.34 | 69.91 | -0.0151 | 0.0057 | 0.0001 |
| 276 | SLE RA 3 | 0.02 | -0.58 | 73.15 | -0.008 | 0.006 | 0.0001 |
| 276 | SLE RA 4 | 0.02 | -0.54 | 72.92 | -0.0093 | 0.0059 | 0.0001 |
| 276 | SLE RA 5 | 0.02 | -0.54 | 72.38 | -0.0091 | 0.0059 | 0.0001 |
| 276 | SLE RA 6 | 0.02 | -0.78 | 75.62 | -0.002 | 0.0062 | 0.0001 |
| 276 | SLE RA 7 | 0.02 | -0.74 | 75.39 | -0.0032 | 0.0062 | 0.0001 |
| 276 | SLE RA 8 | 0.02 | -0.8 | 75.24 | -0.001 | 0.0062 | 0.0001 |
| 276 | SLE RA 9 | 0.02 | -0.76 | 75.01 | -0.0022 | 0.0062 | 0.0001 |
| 276 | SLE RA 10 | 0.02 | -0.42 | 77.51 | -0.0164 | 0.0062 | 0.0001 |
| 276 | SLE RA 11 | 0.02 | -0.66 | 80.75 | -0.0093 | 0.0065 | 0.0001 |
| 276 | SLE RA 12 | 0.02 | -0.62 | 80.52 | -0.0106 | 0.0065 | 0.0001 |
| 276 | SLE RA 13 | 0.02 | -0.62 | 79.98 | -0.0104 | 0.0064 | 0.0001 |
| 276 | SLE RA 14 | 0.02 | -0.86 | 83.22 | -0.0033 | 0.0068 | 0.0001 |
| 276 | SLE RA 15 | 0.02 | -0.82 | 82.99 | -0.0045 | 0.0067 | 0.0001 |
| 276 | SLE RA 16 | 0.02 | -0.88 | 82.84 | -0.0023 | 0.0068 | 0.0001 |
| 276 | SLE RA 17 | 0.02 | -0.84 | 82.61 | -0.0035 | 0.0067 | 0.0001 |
| 276 | SLE RA 18 | 0.02 | -0.52 | 81.16 | -0.015 | 0.0065 | 0.0001 |
| 276 | SLE RA 19 | 0.02 | -0.48 | 80.93 | -0.0162 | 0.0065 | 0.0001 |
| 276 | SLE RA 20 | 0.02 | -0.72 | 83.63 | -0.0089 | 0.0068 | 0.0001 |
| 276 | SLE RA 21 | 0.02 | -0.68 | 83.4 | -0.0102 | 0.0067 | 0.0001 |
| 276 | SLE FR 1 | 0.02 | -0.41 | 70.3 | -0.0131 | 0.0057 | 0.0001 |

| Nodo | Cont. | Reazione a traslazione | | | Reazione a rotazione | | |
|---|---|---|---|---|---|---|---|
| Ind. | N.br. | x | y | z | x | y | z |
| 276 | SLE FR 2 | 0.02 | -0.39 | 70.22 | -0.0135 | 0.0057 | 0.0001 |
| 276 | SLE FR 3 | 0.02 | -0.49 | 71.29 | -0.0107 | 0.0058 | 0.0001 |
| 276 | SLE FR 4 | 0.02 | -0.43 | 73.48 | -0.0141 | 0.006 | 0.0001 |
| 276 | SLE FR 5 | 0.02 | -0.52 | 74.55 | -0.0112 | 0.0061 | 0.0001 |
| 276 | SLE FR 6 | 0.02 | -0.46 | 75.73 | -0.014 | 0.0061 | 0.0001 |
| 276 | SLE QP 1 | 0.02 | -0.41 | 70.3 | -0.0131 | 0.0057 | 0.0001 |
| 276 | SLE QP 2 | 0.02 | -0.44 | 73.56 | -0.0137 | 0.006 | 0.0001 |
| 276 | SLD 1 | -0.13 | -0.06 | 73.97 | -0.0269 | 0.1126 | -0.0013 |
| 276 | SLD 2 | -0.13 | -0.06 | 73.97 | -0.0269 | 0.1126 | -0.0013 |
| 276 | SLD 3 | -0.12 | -3.88 | 79.93 | 0.1007 | 0.1246 | -0.0011 |
| 276 | SLD 4 | -0.12 | -3.88 | 79.93 | 0.1007 | 0.1246 | -0.0011 |
| 276 | SLD 5 | -0.05 | 5.47 | 64.63 | -0.2112 | 0.0198 | -0.0005 |
| 276 | SLD 6 | -0.05 | 5.47 | 64.63 | -0.2112 | 0.0198 | -0.0005 |
| 276 | SLD 7 | 0 | -7.27 | 84.52 | 0.2142 | 0.0598 | -0.0001 |
| 276 | SLD 8 | 0 | -7.27 | 84.52 | 0.2142 | 0.0598 | -0.0001 |
| 276 | SLD 9 | 0.03 | 6.39 | 62.59 | -0.2415 | -0.0478 | 0.0003 |
| 276 | SLD 10 | 0.03 | 6.39 | 62.59 | -0.2415 | -0.0478 | 0.0003 |
| 276 | SLD 11 | 0.08 | -6.35 | 82.49 | 0.1839 | -0.0078 | 0.0007 |
| 276 | SLD 12 | 0.08 | -6.35 | 82.49 | 0.1839 | -0.0078 | 0.0007 |
| 276 | SLD 13 | 0.15 | 3 | 67.18 | -0.128 | -0.1127 | 0.0013 |
| 276 | SLD 14 | 0.15 | 3 | 67.18 | -0.128 | -0.1127 | 0.0013 |
| 276 | SLD 15 | 0.17 | -0.82 | 73.15 | -0.0004 | -0.1007 | 0.0014 |
| 276 | SLD 16 | 0.17 | -0.82 | 73.15 | -0.0004 | -0.1007 | 0.0014 |
| 276 | SLV 1 | -0.34 | 0.45 | 74.54 | -0.0448 | 0.2569 | -0.0031 |
| 276 | SLV 2 | -0.34 | 0.45 | 74.54 | -0.0448 | 0.2569 | -0.0031 |
| 276 | SLV 3 | -0.3 | -8.45 | 88.66 | 0.2524 | 0.2867 | -0.0028 |
| 276 | SLV 4 | -0.3 | -8.45 | 88.66 | 0.2524 | 0.2867 | -0.0028 |
| 276 | SLV 5 | -0.14 | 13.33 | 52.43 | -0.4737 | 0.036 | -0.0013 |
| 276 | SLV 6 | -0.14 | 13.33 | 52.43 | -0.4737 | 0.036 | -0.0013 |
| 276 | SLV 7 | -0.03 | -16.35 | 99.51 | 0.5169 | 0.1354 | -0.0004 |
| 276 | SLV 8 | -0.03 | -16.35 | 99.51 | 0.5169 | 0.1354 | -0.0004 |
| 276 | SLV 9 | 0.06 | 15.47 | 47.61 | -0.5442 | -0.1235 | 0.0005 |
| 276 | SLV 10 | 0.06 | 15.47 | 47.61 | -0.5442 | -0.1235 | 0.0005 |
| 276 | SLV 11 | 0.18 | -14.21 | 94.68 | 0.4464 | -0.0241 | 0.0015 |
| 276 | SLV 12 | 0.18 | -14.21 | 94.68 | 0.4464 | -0.0241 | 0.0015 |
| 276 | SLV 13 | 0.33 | 7.57 | 58.45 | -0.2797 | -0.2747 | 0.003 |
| 276 | SLV 14 | 0.33 | 7.57 | 58.45 | -0.2797 | -0.2747 | 0.003 |
| 276 | SLV 15 | 0.37 | -1.33 | 72.57 | 0.0174 | -0.2449 | 0.0032 |
| 276 | SLV 16 | 0.37 | -1.33 | 72.57 | 0.0174 | -0.2449 | 0.0032 |
| 277 | SLU 1 | -0.08 | 3.4 | 24.44 | -0.0301 | -0.0058 | 0.0021 |
| 277 | SLU 2 | -0.08 | 3.42 | 24.49 | -0.0309 | -0.0058 | 0.0021 |
| 277 | SLU 3 | -0.08 | 3.47 | 24.98 | -0.0314 | -0.0058 | 0.0022 |
| 277 | SLU 4 | -0.08 | 3.48 | 25.01 | -0.0319 | -0.0058 | 0.0022 |
| 277 | SLU 5 | -0.08 | 3.45 | 24.71 | -0.0323 | -0.0058 | 0.0021 |
| 277 | SLU 6 | -0.08 | 3.5 | 25.2 | -0.0328 | -0.0058 | 0.0022 |
| 277 | SLU 7 | -0.08 | 3.51 | 25.23 | -0.0333 | -0.0058 | 0.0022 |
| 277 | SLU 8 | -0.08 | 3.46 | 24.88 | -0.0329 | -0.0057 | 0.0021 |
| 277 | SLU 9 | -0.08 | 3.47 | 24.91 | -0.0334 | -0.0057 | 0.0021 |
| 277 | SLU 10 | -0.09 | 3.95 | 28.38 | -0.0349 | -0.0069 | 0.0025 |
| 277 | SLU 11 | -0.09 | 4.01 | 28.87 | -0.0354 | -0.0069 | 0.0025 |
| 277 | SLU 12 | -0.09 | 4.02 | 28.9 | -0.0359 | -0.0069 | 0.0025 |
| 277 | SLU 13 | -0.09 | 3.98 | 28.6 | -0.0364 | -0.0068 | 0.0025 |
| 277 | SLU 14 | -0.09 | 4.04 | 29.1 | -0.0369 | -0.0068 | 0.0025 |
| 277 | SLU 15 | -0.09 | 4.05 | 29.13 | -0.0374 | -0.0069 | 0.0025 |
| 277 | SLU 16 | -0.09 | 3.99 | 28.78 | -0.037 | -0.0067 | 0.0025 |
| 277 | SLU 17 | -0.09 | 4.01 | 28.81 | -0.0375 | -0.0068 | 0.0025 |
| 277 | SLU 18 | -0.1 | 4.16 | 30 | -0.0358 | -0.0073 | 0.0026 |
| 277 | SLU 19 | -0.1 | 4.17 | 30.03 | -0.0363 | -0.0073 | 0.0026 |
| 277 | SLU 20 | -0.1 | 4.19 | 30.22 | -0.0373 | -0.0072 | 0.0026 |
| 277 | SLU 21 | -0.1 | 4.2 | 30.25 | -0.0378 | -0.0073 | 0.0026 |
| 277 | SLU 22 | -0.09 | 3.89 | 28.03 | -0.034 | -0.0067 | 0.0025 |
| 277 | SLU 23 | -0.09 | 3.91 | 28.08 | -0.0348 | -0.0067 | 0.0025 |
| 277 | SLU 24 | -0.09 | 3.96 | 28.58 | -0.0353 | -0.0068 | 0.0025 |
| 277 | SLU 25 | -0.09 | 3.97 | 28.61 | -0.0358 | -0.0068 | 0.0025 |
| 277 | SLU 26 | -0.09 | 3.94 | 28.31 | -0.0363 | -0.0067 | 0.0024 |
| 277 | SLU 27 | -0.09 | 3.99 | 28.8 | -0.0368 | -0.0067 | 0.0025 |
| 277 | SLU 28 | -0.09 | 4 | 28.83 | -0.0373 | -0.0067 | 0.0025 |
| 277 | SLU 29 | -0.09 | 3.95 | 28.48 | -0.0369 | -0.0066 | 0.0024 |
| 277 | SLU 30 | -0.09 | 3.96 | 28.51 | -0.0374 | -0.0066 | 0.0024 |
| 277 | SLU 31 | -0.1 | 4.44 | 31.98 | -0.0389 | -0.0078 | 0.0028 |
| 277 | SLU 32 | -0.1 | 4.5 | 32.47 | -0.0394 | -0.0078 | 0.0028 |
| 277 | SLU 33 | -0.1 | 4.51 | 32.5 | -0.0399 | -0.0078 | 0.0028 |
| 277 | SLU 34 | -0.1 | 4.47 | 32.2 | -0.0403 | -0.0077 | 0.0028 |
| 277 | SLU 35 | -0.1 | 4.53 | 32.69 | -0.0408 | -0.0078 | 0.0028 |
| 277 | SLU 36 | -0.1 | 4.54 | 32.72 | -0.0413 | -0.0078 | 0.0028 |
| 277 | SLU 37 | -0.1 | 4.49 | 32.37 | -0.041 | -0.0077 | 0.0028 |
| 277 | SLU 38 | -0.1 | 4.5 | 32.4 | -0.0414 | -0.0077 | 0.0028 |
| 277 | SLU 39 | -0.11 | 4.66 | 33.6 | -0.0398 | -0.0082 | 0.003 |
| 277 | SLU 40 | -0.11 | 4.67 | 33.63 | -0.0403 | -0.0082 | 0.003 |
| 277 | SLU 41 | -0.11 | 4.69 | 33.82 | -0.0412 | -0.0082 | 0.003 |
| 277 | SLU 42 | -0.11 | 4.7 | 33.85 | -0.0417 | -0.0082 | 0.003 |
| 277 | SLU 43 | -0.1 | 4.25 | 30.53 | -0.0377 | -0.0072 | 0.0027 |
| 277 | SLU 44 | -0.1 | 4.27 | 30.58 | -0.0385 | -0.0072 | 0.0027 |
| 277 | SLU 45 | -0.1 | 4.32 | 31.08 | -0.039 | -0.0072 | 0.0027 |
| 277 | SLU 46 | -0.1 | 4.33 | 31.11 | -0.0395 | -0.0073 | 0.0027 |
| 277 | SLU 47 | -0.1 | 4.3 | 30.81 | -0.04 | -0.0072 | 0.0026 |
| 277 | SLU 48 | -0.1 | 4.35 | 31.3 | -0.0405 | -0.0072 | 0.0027 |
| 277 | SLU 49 | -0.1 | 4.36 | 31.33 | -0.041 | -0.0072 | 0.0027 |

| Nodo | Cont. | Reazione a traslazione | | | Reazione a rotazione | | |
|---|---|---|---|---|---|---|---|
| Ind. | N.br. | x | y | z | x | y | z |
| 277 | SLU 50 | -0.1 | 4.31 | 30.98 | -0.0406 | -0.0071 | 0.0026 |
| 277 | SLU 51 | -0.1 | 4.32 | 31.01 | -0.0411 | -0.0071 | 0.0026 |
| 277 | SLU 52 | -0.11 | 4.8 | 34.48 | -0.0426 | -0.0083 | 0.003 |
| 277 | SLU 53 | -0.11 | 4.86 | 34.97 | -0.0431 | -0.0083 | 0.003 |
| 277 | SLU 54 | -0.11 | 4.87 | 35 | -0.0436 | -0.0083 | 0.003 |
| 277 | SLU 55 | -0.11 | 4.83 | 34.7 | -0.044 | -0.0082 | 0.003 |
| 277 | SLU 56 | -0.11 | 4.89 | 35.19 | -0.0445 | -0.0083 | 0.003 |
| 277 | SLU 57 | -0.11 | 4.9 | 35.22 | -0.045 | -0.0083 | 0.003 |
| 277 | SLU 58 | -0.11 | 4.85 | 34.87 | -0.0446 | -0.0082 | 0.003 |
| 277 | SLU 59 | -0.11 | 4.86 | 34.91 | -0.0451 | -0.0082 | 0.003 |
| 277 | SLU 60 | -0.12 | 5.02 | 36.1 | -0.0435 | -0.0087 | 0.0032 |
| 277 | SLU 61 | -0.12 | 5.03 | 36.13 | -0.044 | -0.0087 | 0.0032 |
| 277 | SLU 62 | -0.12 | 5.05 | 36.32 | -0.0449 | -0.0087 | 0.0032 |
| 277 | SLU 63 | -0.12 | 5.06 | 36.35 | -0.0454 | -0.0087 | 0.0032 |
| 277 | SLU 64 | -0.11 | 4.74 | 34.13 | -0.0417 | -0.0081 | 0.003 |
| 277 | SLU 65 | -0.11 | 4.76 | 34.18 | -0.0425 | -0.0081 | 0.003 |
| 277 | SLU 66 | -0.11 | 4.81 | 34.67 | -0.043 | -0.0082 | 0.003 |
| 277 | SLU 67 | -0.11 | 4.82 | 34.7 | -0.0435 | -0.0082 | 0.003 |
| 277 | SLU 68 | -0.11 | 4.79 | 34.41 | -0.0439 | -0.0081 | 0.003 |
| 277 | SLU 69 | -0.11 | 4.84 | 34.9 | -0.0444 | -0.0081 | 0.003 |
| 277 | SLU 70 | -0.11 | 4.85 | 34.93 | -0.0449 | -0.0081 | 0.003 |
| 277 | SLU 71 | -0.11 | 4.8 | 34.58 | -0.0446 | -0.008 | 0.003 |
| 277 | SLU 72 | -0.11 | 4.81 | 34.61 | -0.0451 | -0.008 | 0.003 |
| 277 | SLU 73 | -0.12 | 5.29 | 38.07 | -0.0465 | -0.0092 | 0.0033 |
| 277 | SLU 74 | -0.12 | 5.35 | 38.57 | -0.047 | -0.0092 | 0.0034 |
| 277 | SLU 75 | -0.12 | 5.36 | 38.6 | -0.0475 | -0.0093 | 0.0034 |
| 277 | SLU 76 | -0.12 | 5.32 | 38.3 | -0.048 | -0.0092 | 0.0033 |
| 277 | SLU 77 | -0.12 | 5.38 | 38.79 | -0.0485 | -0.0092 | 0.0034 |
| 277 | SLU 78 | -0.12 | 5.39 | 38.82 | -0.049 | -0.0092 | 0.0034 |
| 277 | SLU 79 | -0.12 | 5.34 | 38.47 | -0.0486 | -0.0091 | 0.0033 |
| 277 | SLU 80 | -0.12 | 5.35 | 38.5 | -0.0491 | -0.0091 | 0.0033 |
| 277 | SLU 81 | -0.13 | 5.51 | 39.69 | -0.0475 | -0.0096 | 0.0035 |
| 277 | SLU 82 | -0.13 | 5.52 | 39.72 | -0.0479 | -0.0096 | 0.0035 |
| 277 | SLU 83 | -0.13 | 5.54 | 39.92 | -0.0489 | -0.0096 | 0.0035 |
| 277 | SLU 84 | -0.13 | 5.55 | 39.95 | -0.0494 | -0.0096 | 0.0035 |
| 277 | SLE RA 1 | -0.08 | 3.54 | 25.46 | -0.0312 | -0.006 | 0.0022 |
| 277 | SLE RA 2 | -0.08 | 3.55 | 25.5 | -0.0317 | -0.0061 | 0.0022 |
| 277 | SLE RA 3 | -0.08 | 3.59 | 25.83 | -0.0321 | -0.0061 | 0.0022 |
| 277 | SLE RA 4 | -0.08 | 3.59 | 25.85 | -0.0324 | -0.0061 | 0.0022 |
| 277 | SLE RA 5 | -0.08 | 3.57 | 25.65 | -0.0327 | -0.006 | 0.0022 |
| 277 | SLE RA 6 | -0.08 | 3.61 | 25.98 | -0.033 | -0.0061 | 0.0022 |
| 277 | SLE RA 7 | -0.08 | 3.61 | 26 | -0.0334 | -0.0061 | 0.0022 |
| 277 | SLE RA 8 | -0.08 | 3.58 | 25.76 | -0.0331 | -0.006 | 0.0022 |
| 277 | SLE RA 9 | -0.08 | 3.59 | 25.78 | -0.0334 | -0.006 | 0.0022 |
| 277 | SLE RA 10 | -0.09 | 3.91 | 28.09 | -0.0344 | -0.0068 | 0.0025 |
| 277 | SLE RA 11 | -0.09 | 3.94 | 28.42 | -0.0348 | -0.0068 | 0.0025 |
| 277 | SLE RA 12 | -0.09 | 3.95 | 28.44 | -0.0351 | -0.0068 | 0.0025 |
| 277 | SLE RA 13 | -0.09 | 3.93 | 28.24 | -0.0354 | -0.0067 | 0.0025 |
| 277 | SLE RA 14 | -0.09 | 3.96 | 28.57 | -0.0357 | -0.0068 | 0.0025 |
| 277 | SLE RA 15 | -0.09 | 3.97 | 28.59 | -0.0361 | -0.0068 | 0.0025 |
| 277 | SLE RA 16 | -0.09 | 3.94 | 28.36 | -0.0358 | -0.0067 | 0.0025 |
| 277 | SLE RA 17 | -0.09 | 3.94 | 28.38 | -0.0361 | -0.0067 | 0.0025 |
| 277 | SLE RA 18 | -0.09 | 4.05 | 29.17 | -0.035 | -0.0071 | 0.0026 |
| 277 | SLE RA 19 | -0.09 | 4.06 | 29.19 | -0.0354 | -0.0071 | 0.0026 |
| 277 | SLE RA 20 | -0.09 | 4.07 | 29.32 | -0.036 | -0.007 | 0.0026 |
| 277 | SLE RA 21 | -0.09 | 4.08 | 29.34 | -0.0363 | -0.007 | 0.0026 |
| 277 | SLE FR 1 | -0.08 | 3.54 | 25.46 | -0.0312 | -0.006 | 0.0022 |
| 277 | SLE FR 2 | -0.08 | 3.54 | 25.47 | -0.0313 | -0.006 | 0.0022 |
| 277 | SLE FR 3 | -0.08 | 3.55 | 25.52 | -0.0316 | -0.006 | 0.0022 |
| 277 | SLE FR 4 | -0.08 | 3.69 | 26.58 | -0.0324 | -0.0063 | 0.0023 |
| 277 | SLE FR 5 | -0.08 | 3.7 | 26.64 | -0.0327 | -0.0063 | 0.0023 |
| 277 | SLE FR 6 | -0.09 | 3.79 | 27.32 | -0.0331 | -0.0065 | 0.0024 |
| 277 | SLE QP 1 | -0.08 | 3.54 | 25.46 | -0.0312 | -0.006 | 0.0022 |
| 277 | SLE QP 2 | -0.08 | 3.69 | 26.58 | -0.0323 | -0.0063 | 0.0023 |
| 277 | SLD 1 | -0.05 | 3.8 | 26.03 | -0.0462 | -0.0008 | 0.0013 |
| 277 | SLD 2 | -0.05 | 3.8 | 26.03 | -0.0462 | -0.0008 | 0.0013 |
| 277 | SLD 3 | -0.08 | 2.86 | 22.79 | 0.021 | -0.0035 | 0.002 |
| 277 | SLD 4 | -0.08 | 2.86 | 22.79 | 0.021 | -0.0035 | 0.002 |
| 277 | SLD 5 | -0.04 | 5.14 | 31.33 | -0.1384 | -0.0006 | 0.001 |
| 277 | SLD 6 | -0.04 | 5.14 | 31.33 | -0.1384 | -0.0006 | 0.001 |
| 277 | SLD 7 | -0.12 | 2.02 | 20.52 | 0.0856 | -0.0095 | 0.0032 |
| 277 | SLD 8 | -0.12 | 2.02 | 20.52 | 0.0856 | -0.0095 | 0.0032 |
| 277 | SLD 9 | -0.05 | 5.36 | 32.63 | -0.1503 | -0.0032 | 0.0014 |
| 277 | SLD 10 | -0.05 | 5.36 | 32.63 | -0.1503 | -0.0032 | 0.0014 |
| 277 | SLD 11 | -0.13 | 2.24 | 21.82 | 0.0737 | -0.012 | 0.0037 |
| 277 | SLD 12 | -0.13 | 2.24 | 21.82 | 0.0737 | -0.012 | 0.0037 |
| 277 | SLD 13 | -0.09 | 4.52 | 30.37 | -0.0857 | -0.0092 | 0.0027 |
| 277 | SLD 14 | -0.09 | 4.52 | 30.37 | -0.0857 | -0.0092 | 0.0027 |
| 277 | SLD 15 | -0.11 | 3.59 | 27.12 | -0.0184 | -0.0119 | 0.0033 |
| 277 | SLD 16 | -0.11 | 3.59 | 27.12 | -0.0184 | -0.0119 | 0.0033 |
| 277 | SLV 1 | -0.01 | 3.94 | 25.27 | -0.065 | 0.0066 | -0.0001 |
| 277 | SLV 2 | -0.01 | 3.94 | 25.27 | -0.065 | 0.0066 | -0.0001 |
| 277 | SLV 3 | -0.07 | 1.73 | 17.61 | 0.0934 | 0 | 0.0015 |
| 277 | SLV 4 | -0.07 | 1.73 | 17.61 | 0.0934 | 0 | 0.0015 |
| 277 | SLV 5 | 0.03 | 7.12 | 37.81 | -0.2825 | 0.0075 | -0.0009 |
| 277 | SLV 6 | 0.03 | 7.12 | 37.81 | -0.2825 | 0.0075 | -0.0009 |
| 277 | SLV 7 | -0.18 | -0.25 | 12.26 | 0.2457 | -0.0144 | 0.0046 |
| 277 | SLV 8 | -0.18 | -0.25 | 12.26 | 0.2457 | -0.0144 | 0.0046 |

| Nodo | Cont. | Reazione a traslazione | | | Reazione a rotazione | | |
|---|---|---|---|---|---|---|---|
| Ind. | N.br. | x | y | z | x | y | z |
| 277 | SLV 9 | 0.01 | 7.63 | 40.89 | -0.3104 | 0.0017 | 0.0001 |
| 277 | SLV 10 | 0.01 | 7.63 | 40.89 | -0.3104 | 0.0017 | 0.0001 |
| 277 | SLV 11 | -0.2 | 0.27 | 15.34 | 0.2178 | -0.0202 | 0.0056 |
| 277 | SLV 12 | -0.2 | 0.27 | 15.34 | 0.2178 | -0.0202 | 0.0056 |
| 277 | SLV 13 | -0.1 | 5.66 | 35.54 | -0.1581 | -0.0127 | 0.0031 |
| 277 | SLV 14 | -0.1 | 5.66 | 35.54 | -0.1581 | -0.0127 | 0.0031 |
| 277 | SLV 15 | -0.16 | 3.45 | 27.88 | 0.0003 | -0.0193 | 0.0048 |
| 277 | SLV 16 | -0.16 | 3.45 | 27.88 | 0.0003 | -0.0193 | 0.0048 |
| 278 | SLU 1 | -0.08 | -9.67 | 58.55 | 0.4307 | -0.0096 | 0.0004 |
| 278 | SLU 2 | -0.08 | -8.77 | 53.96 | 0.3866 | -0.0096 | 0.0004 |
| 278 | SLU 3 | -0.09 | -9.89 | 59.58 | 0.4404 | -0.0097 | 0.0004 |
| 278 | SLU 4 | -0.08 | -9.34 | 56.83 | 0.4139 | -0.0096 | 0.0004 |
| 278 | SLU 5 | -0.08 | -8.84 | 54.23 | 0.39 | -0.0095 | 0.0004 |
| 278 | SLU 6 | -0.09 | -9.96 | 59.85 | 0.4438 | -0.0096 | 0.0004 |
| 278 | SLU 7 | -0.08 | -9.42 | 57.1 | 0.4173 | -0.0095 | 0.0004 |
| 278 | SLU 8 | -0.09 | -9.82 | 59.09 | 0.4375 | -0.0094 | 0.0004 |
| 278 | SLU 9 | -0.08 | -9.28 | 56.34 | 0.411 | -0.0094 | 0.0004 |
| 278 | SLU 10 | -0.09 | -9.88 | 61.24 | 0.4365 | -0.0113 | 0.0005 |
| 278 | SLU 11 | -0.1 | -11 | 66.86 | 0.4903 | -0.0114 | 0.0005 |
| 278 | SLU 12 | -0.09 | -10.46 | 64.11 | 0.4638 | -0.0113 | 0.0005 |
| 278 | SLU 13 | -0.09 | -9.96 | 61.51 | 0.4399 | -0.0112 | 0.0005 |
| 278 | SLU 14 | -0.1 | -11.08 | 67.13 | 0.4937 | -0.0113 | 0.0005 |
| 278 | SLU 15 | -0.1 | -10.54 | 64.38 | 0.4672 | -0.0112 | 0.0005 |
| 278 | SLU 16 | -0.1 | -10.94 | 66.36 | 0.4874 | -0.0111 | 0.0005 |
| 278 | SLU 17 | -0.09 | -10.4 | 63.61 | 0.4609 | -0.0111 | 0.0005 |
| 278 | SLU 18 | -0.1 | -11.26 | 68.94 | 0.502 | -0.0121 | 0.0005 |
| 278 | SLU 19 | -0.1 | -10.72 | 66.19 | 0.4756 | -0.0121 | 0.0005 |
| 278 | SLU 20 | -0.1 | -11.34 | 69.21 | 0.5054 | -0.012 | 0.0005 |
| 278 | SLU 21 | -0.1 | -10.8 | 66.46 | 0.4789 | -0.0119 | 0.0005 |
| 278 | SLU 22 | -0.1 | -10.76 | 65.19 | 0.4795 | -0.011 | 0.0005 |
| 278 | SLU 23 | -0.09 | -9.86 | 60.61 | 0.4353 | -0.0109 | 0.0005 |
| 278 | SLU 24 | -0.1 | -10.98 | 66.23 | 0.4891 | -0.011 | 0.0005 |
| 278 | SLU 25 | -0.09 | -10.43 | 63.47 | 0.4626 | -0.011 | 0.0005 |
| 278 | SLU 26 | -0.09 | -9.93 | 60.88 | 0.4387 | -0.0108 | 0.0005 |
| 278 | SLU 27 | -0.1 | -11.05 | 66.49 | 0.4925 | -0.0109 | 0.0005 |
| 278 | SLU 28 | -0.09 | -10.51 | 63.74 | 0.466 | -0.0109 | 0.0005 |
| 278 | SLU 29 | -0.1 | -10.92 | 65.73 | 0.4862 | -0.0108 | 0.0005 |
| 278 | SLU 30 | -0.09 | -10.37 | 62.98 | 0.4597 | -0.0107 | 0.0005 |
| 278 | SLU 31 | -0.1 | -10.97 | 67.88 | 0.4852 | -0.0126 | 0.0005 |
| 278 | SLU 32 | -0.11 | -12.09 | 73.5 | 0.539 | -0.0128 | 0.0005 |
| 278 | SLU 33 | -0.11 | -11.55 | 70.75 | 0.5125 | -0.0127 | 0.0005 |
| 278 | SLU 34 | -0.1 | -11.05 | 68.15 | 0.4886 | -0.0125 | 0.0005 |
| 278 | SLU 35 | -0.11 | -12.17 | 73.77 | 0.5424 | -0.0126 | 0.0005 |
| 278 | SLU 36 | -0.11 | -11.63 | 71.02 | 0.5159 | -0.0126 | 0.0005 |
| 278 | SLU 37 | -0.11 | -12.03 | 73.01 | 0.5361 | -0.0125 | 0.0005 |
| 278 | SLU 38 | -0.1 | -11.49 | 70.26 | 0.5096 | -0.0124 | 0.0005 |
| 278 | SLU 39 | -0.11 | -12.35 | 75.59 | 0.5508 | -0.0135 | 0.0006 |
| 278 | SLU 40 | -0.11 | -11.81 | 72.84 | 0.5243 | -0.0134 | 0.0006 |
| 278 | SLU 41 | -0.11 | -12.43 | 75.86 | 0.5541 | -0.0133 | 0.0006 |
| 278 | SLU 42 | -0.11 | -11.89 | 73.11 | 0.5276 | -0.0133 | 0.0006 |
| 278 | SLU 43 | -0.11 | -12.19 | 73.83 | 0.5433 | -0.0121 | 0.0005 |
| 278 | SLU 44 | -0.1 | -11.29 | 69.25 | 0.4991 | -0.012 | 0.0005 |
| 278 | SLU 45 | -0.11 | -12.41 | 74.87 | 0.5529 | -0.0121 | 0.0005 |
| 278 | SLU 46 | -0.1 | -11.87 | 72.12 | 0.5264 | -0.0121 | 0.0005 |
| 278 | SLU 47 | -0.1 | -11.37 | 69.52 | 0.5025 | -0.0119 | 0.0005 |
| 278 | SLU 48 | -0.11 | -12.49 | 75.14 | 0.5563 | -0.012 | 0.0005 |
| 278 | SLU 49 | -0.1 | -11.95 | 72.39 | 0.5298 | -0.0119 | 0.0005 |
| 278 | SLU 50 | -0.11 | -12.35 | 74.37 | 0.55 | -0.0118 | 0.0005 |
| 278 | SLU 51 | -0.1 | -11.81 | 71.62 | 0.5235 | -0.0118 | 0.0005 |
| 278 | SLU 52 | -0.11 | -12.41 | 76.53 | 0.549 | -0.0137 | 0.0006 |
| 278 | SLU 53 | -0.12 | -13.53 | 82.15 | 0.6028 | -0.0138 | 0.0006 |
| 278 | SLU 54 | -0.12 | -12.99 | 79.39 | 0.5763 | -0.0138 | 0.0006 |
| 278 | SLU 55 | -0.11 | -12.49 | 76.8 | 0.5524 | -0.0136 | 0.0006 |
| 278 | SLU 56 | -0.12 | -13.61 | 82.41 | 0.6062 | -0.0137 | 0.0006 |
| 278 | SLU 57 | -0.12 | -13.06 | 79.66 | 0.5797 | -0.0137 | 0.0006 |
| 278 | SLU 58 | -0.12 | -13.47 | 81.65 | 0.5999 | -0.0136 | 0.0006 |
| 278 | SLU 59 | -0.12 | -12.93 | 78.9 | 0.5734 | -0.0135 | 0.0006 |
| 278 | SLU 60 | -0.12 | -13.79 | 84.23 | 0.6146 | -0.0145 | 0.0006 |
| 278 | SLU 61 | -0.12 | -13.25 | 81.48 | 0.5881 | -0.0145 | 0.0006 |
| 278 | SLU 62 | -0.12 | -13.87 | 84.5 | 0.6179 | -0.0144 | 0.0006 |
| 278 | SLU 63 | -0.12 | -13.32 | 81.75 | 0.5915 | -0.0144 | 0.0006 |
| 278 | SLU 64 | -0.12 | -13.28 | 80.48 | 0.592 | -0.0134 | 0.0006 |
| 278 | SLU 65 | -0.11 | -12.38 | 75.89 | 0.5478 | -0.0133 | 0.0006 |
| 278 | SLU 66 | -0.12 | -13.5 | 81.51 | 0.6016 | -0.0135 | 0.0006 |
| 278 | SLU 67 | -0.11 | -12.96 | 78.76 | 0.5751 | -0.0134 | 0.0006 |
| 278 | SLU 68 | -0.11 | -12.46 | 76.16 | 0.5512 | -0.0132 | 0.0006 |
| 278 | SLU 69 | -0.12 | -13.58 | 81.78 | 0.605 | -0.0133 | 0.0006 |
| 278 | SLU 70 | -0.12 | -13.04 | 79.03 | 0.5785 | -0.0133 | 0.0006 |
| 278 | SLU 71 | -0.12 | -13.44 | 81.02 | 0.5987 | -0.0132 | 0.0006 |
| 278 | SLU 72 | -0.11 | -12.9 | 78.27 | 0.5722 | -0.0132 | 0.0006 |
| 278 | SLU 73 | -0.12 | -13.5 | 83.17 | 0.5978 | -0.0151 | 0.0006 |
| 278 | SLU 74 | -0.13 | -14.62 | 88.79 | 0.6515 | -0.0152 | 0.0006 |
| 278 | SLU 75 | -0.13 | -14.08 | 86.04 | 0.6251 | -0.0151 | 0.0006 |
| 278 | SLU 76 | -0.12 | -13.58 | 83.44 | 0.6011 | -0.015 | 0.0006 |
| 278 | SLU 77 | -0.13 | -14.7 | 89.06 | 0.6549 | -0.0151 | 0.0006 |
| 278 | SLU 78 | -0.13 | -14.15 | 86.31 | 0.6284 | -0.015 | 0.0006 |
| 278 | SLU 79 | -0.13 | -14.56 | 88.29 | 0.6486 | -0.0149 | 0.0006 |
| 278 | SLU 80 | -0.13 | -14.02 | 85.54 | 0.6221 | -0.0149 | 0.0006 |

| Nodo | Cont. | Reazione a traslazione | | | Reazione a rotazione | | |
|---|---|---|---|---|---|---|---|
| Ind. | N.br. | x | y | z | x | y | z |
| 278 | SLU 81 | -0.13 | -14.88 | 90.87 | 0.6633 | -0.0159 | 0.0007 |
| 278 | SLU 82 | -0.13 | -14.34 | 88.12 | 0.6368 | -0.0158 | 0.0007 |
| 278 | SLU 83 | -0.13 | -14.96 | 91.14 | 0.6666 | -0.0158 | 0.0007 |
| 278 | SLU 84 | -0.13 | -14.41 | 88.39 | 0.6402 | -0.0157 | 0.0007 |
| 278 | SLE RA 1 | -0.09 | -9.98 | 60.45 | 0.4447 | -0.01 | 0.0004 |
| 278 | SLE RA 2 | -0.08 | -9.38 | 57.39 | 0.4152 | -0.01 | 0.0004 |
| 278 | SLE RA 3 | -0.09 | -10.12 | 61.14 | 0.4511 | -0.0101 | 0.0004 |
| 278 | SLE RA 4 | -0.09 | -9.76 | 59.3 | 0.4334 | -0.01 | 0.0004 |
| 278 | SLE RA 5 | -0.08 | -9.43 | 57.57 | 0.4175 | -0.0099 | 0.0004 |
| 278 | SLE RA 6 | -0.09 | -10.18 | 61.31 | 0.4533 | -0.01 | 0.0004 |
| 278 | SLE RA 7 | -0.09 | -9.82 | 59.48 | 0.4357 | -0.0099 | 0.0004 |
| 278 | SLE RA 8 | -0.09 | -10.08 | 60.81 | 0.4491 | -0.0099 | 0.0004 |
| 278 | SLE RA 9 | -0.09 | -9.72 | 58.97 | 0.4315 | -0.0099 | 0.0004 |
| 278 | SLE RA 10 | -0.09 | -10.12 | 62.24 | 0.4485 | -0.0111 | 0.0005 |
| 278 | SLE RA 11 | -0.1 | -10.87 | 65.99 | 0.4844 | -0.0112 | 0.0005 |
| 278 | SLE RA 12 | -0.09 | -10.51 | 64.15 | 0.4667 | -0.0112 | 0.0005 |
| 278 | SLE RA 13 | -0.09 | -10.17 | 62.42 | 0.4508 | -0.0111 | 0.0005 |
| 278 | SLE RA 14 | -0.1 | -10.92 | 66.17 | 0.4866 | -0.0111 | 0.0005 |
| 278 | SLE RA 15 | -0.09 | -10.56 | 64.33 | 0.469 | -0.0111 | 0.0005 |
| 278 | SLE RA 16 | -0.1 | -10.83 | 65.66 | 0.4824 | -0.011 | 0.0005 |
| 278 | SLE RA 17 | -0.09 | -10.47 | 63.82 | 0.4648 | -0.011 | 0.0005 |
| 278 | SLE RA 18 | -0.1 | -11.04 | 67.38 | 0.4922 | -0.0117 | 0.0005 |
| 278 | SLE RA 19 | -0.1 | -10.68 | 65.54 | 0.4745 | -0.0116 | 0.0005 |
| 278 | SLE RA 20 | -0.1 | -11.09 | 67.56 | 0.4944 | -0.0116 | 0.0005 |
| 278 | SLE RA 21 | -0.1 | -10.73 | 65.72 | 0.4768 | -0.0116 | 0.0005 |
| 278 | SLE FR 1 | -0.09 | -9.98 | 60.45 | 0.4447 | -0.01 | 0.0004 |
| 278 | SLE FR 2 | -0.09 | -9.86 | 59.83 | 0.4388 | -0.01 | 0.0004 |
| 278 | SLE FR 3 | -0.09 | -10 | 60.52 | 0.4456 | -0.01 | 0.0004 |
| 278 | SLE FR 4 | -0.09 | -10.18 | 61.91 | 0.453 | -0.0105 | 0.0004 |
| 278 | SLE FR 5 | -0.09 | -10.32 | 62.6 | 0.4598 | -0.0105 | 0.0004 |
| 278 | SLE FR 6 | -0.09 | -10.51 | 63.91 | 0.4684 | -0.0109 | 0.0005 |
| 278 | SLE QP 1 | -0.09 | -9.98 | 60.45 | 0.4447 | -0.01 | 0.0004 |
| 278 | SLE QP 2 | -0.09 | -10.3 | 62.53 | 0.4589 | -0.0105 | 0.0004 |
| 278 | SLD 1 | 0.02 | -5.99 | 39.18 | 0.2569 | 0.0203 | -0.0001 |
| 278 | SLD 2 | 0.02 | -5.99 | 39.18 | 0.2569 | 0.0203 | -0.0001 |
| 278 | SLD 3 | -0.09 | -9.5 | 51.13 | 0.4294 | 0.0386 | 0.0001 |
| 278 | SLD 4 | -0.09 | -9.5 | 51.13 | 0.4294 | 0.0386 | 0.0001 |
| 278 | SLD 5 | 0.12 | -3.68 | 37.4 | 0.1367 | -0.0289 | -0.0001 |
| 278 | SLD 6 | 0.12 | -3.68 | 37.4 | 0.1367 | -0.0289 | -0.0001 |
| 278 | SLD 7 | -0.26 | -15.39 | 77.23 | 0.7116 | 0.0318 | 0.0007 |
| 278 | SLD 8 | -0.26 | -15.39 | 77.23 | 0.7116 | 0.0318 | 0.0007 |
| 278 | SLD 9 | 0.08 | -5.21 | 47.82 | 0.2062 | -0.0529 | 0.0002 |
| 278 | SLD 10 | 0.08 | -5.21 | 47.82 | 0.2062 | -0.0529 | 0.0002 |
| 278 | SLD 11 | -0.3 | -16.92 | 87.65 | 0.7811 | 0.0079 | 0.001 |
| 278 | SLD 12 | -0.3 | -16.92 | 87.65 | 0.7811 | 0.0079 | 0.001 |
| 278 | SLD 13 | -0.09 | -11.09 | 73.92 | 0.4885 | -0.0596 | 0.0008 |
| 278 | SLD 14 | -0.09 | -11.09 | 73.92 | 0.4885 | -0.0596 | 0.0008 |
| 278 | SLD 15 | -0.2 | -14.61 | 85.87 | 0.6609 | -0.0414 | 0.001 |
| 278 | SLD 16 | -0.2 | -14.61 | 85.87 | 0.6609 | -0.0414 | 0.001 |
| 278 | SLV 1 | 0.18 | -0.24 | 7.98 | -0.0128 | 0.0597 | -0.0009 |
| 278 | SLV 2 | 0.18 | -0.24 | 7.98 | -0.0128 | 0.0597 | -0.0009 |
| 278 | SLV 3 | -0.1 | -8.41 | 36.01 | 0.3883 | 0.1054 | -0.0003 |
| 278 | SLV 4 | -0.1 | -8.41 | 36.01 | 0.3883 | 0.1054 | -0.0003 |
| 278 | SLV 5 | 0.42 | 5.12 | 3.65 | -0.2909 | -0.0589 | -0.0009 |
| 278 | SLV 6 | 0.42 | 5.12 | 3.65 | -0.2909 | -0.0589 | -0.0009 |
| 278 | SLV 7 | -0.52 | -22.13 | 97.08 | 1.0461 | 0.0937 | 0.0011 |
| 278 | SLV 8 | -0.52 | -22.13 | 97.08 | 1.0461 | 0.0937 | 0.0011 |
| 278 | SLV 9 | 0.34 | 1.53 | 27.97 | -0.1282 | -0.1147 | -0.0002 |
| 278 | SLV 10 | 0.34 | 1.53 | 27.97 | -0.1282 | -0.1147 | -0.0002 |
| 278 | SLV 11 | -0.6 | -25.71 | 121.4 | 1.2087 | 0.0378 | 0.0018 |
| 278 | SLV 12 | -0.6 | -25.71 | 121.4 | 1.2087 | 0.0378 | 0.0018 |
| 278 | SLV 13 | -0.08 | -12.19 | 89.04 | 0.5295 | -0.1265 | 0.0012 |
| 278 | SLV 14 | -0.08 | -12.19 | 89.04 | 0.5295 | -0.1265 | 0.0012 |
| 278 | SLV 15 | -0.36 | -20.36 | 117.07 | 0.9306 | -0.0807 | 0.0018 |
| 278 | SLV 16 | -0.36 | -20.36 | 117.07 | 0.9306 | -0.0807 | 0.0018 |
| 279 | SLU 1 | 0 | 5.29 | 19.34 | -0.6113 | -0.0004 | 0 |
| 279 | SLU 2 | 0 | 5.27 | 19.31 | -0.6095 | -0.0004 | 0 |
| 279 | SLU 3 | 0 | 5.57 | 19.73 | -0.6394 | -0.0003 | 0 |
| 279 | SLU 4 | 0 | 5.56 | 19.71 | -0.6384 | -0.0003 | 0 |
| 279 | SLU 5 | 0 | 5.44 | 19.54 | -0.6266 | -0.0003 | 0 |
| 279 | SLU 6 | 0 | 5.74 | 19.96 | -0.6565 | -0.0002 | 0 |
| 279 | SLU 7 | 0 | 5.72 | 19.94 | -0.6554 | -0.0002 | 0 |
| 279 | SLU 8 | 0 | 5.62 | 19.8 | -0.6454 | -0.0002 | 0 |
| 279 | SLU 9 | 0 | 5.61 | 19.78 | -0.6443 | -0.0002 | 0 |
| 279 | SLU 10 | 0 | 6.05 | 23.15 | -0.7171 | -0.0005 | 0 |
| 279 | SLU 11 | 0 | 6.35 | 23.57 | -0.747 | -0.0004 | 0 |
| 279 | SLU 12 | 0 | 6.34 | 23.55 | -0.7459 | -0.0004 | 0 |
| 279 | SLU 13 | 0 | 6.22 | 23.38 | -0.7341 | -0.0004 | 0 |
| 279 | SLU 14 | 0 | 6.52 | 23.8 | -0.7641 | -0.0003 | 0 |
| 279 | SLU 15 | 0 | 6.51 | 23.78 | -0.763 | -0.0003 | 0 |
| 279 | SLU 16 | 0 | 6.41 | 23.63 | -0.753 | -0.0003 | 0 |
| 279 | SLU 17 | 0 | 6.4 | 23.62 | -0.7519 | -0.0003 | 0 |
| 279 | SLU 18 | 0 | 6.41 | 24.82 | -0.765 | -0.0005 | 0 |
| 279 | SLU 19 | 0 | 6.4 | 24.81 | -0.7639 | -0.0005 | 0 |
| 279 | SLU 20 | 0 | 6.57 | 25.05 | -0.782 | -0.0004 | 0 |
| 279 | SLU 21 | 0 | 6.56 | 25.03 | -0.7809 | -0.0004 | 0 |
| 279 | SLU 22 | 0 | 6.13 | 22.54 | -0.7171 | -0.0004 | 0 |
| 279 | SLU 23 | 0 | 6.11 | 22.51 | -0.7153 | -0.0005 | 0 |

| Nodo | Cont. | Reazione a traslazione | | | Reazione a rotazione | | |
|---|---|---|---|---|---|---|---|
| Ind. | N.br. | x | y | z | x | y | z |
| 279 | SLU 24 | 0 | 6.41 | 22.94 | -0.7452 | -0.0004 | 0 |
| 279 | SLU 25 | 0 | 6.4 | 22.92 | -0.7441 | -0.0004 | 0 |
| 279 | SLU 26 | 0 | 6.28 | 22.74 | -0.7323 | -0.0003 | 0 |
| 279 | SLU 27 | 0 | 6.58 | 23.16 | -0.7623 | -0.0002 | 0 |
| 279 | SLU 28 | 0 | 6.57 | 23.15 | -0.7612 | -0.0003 | 0 |
| 279 | SLU 29 | 0 | 6.47 | 23 | -0.7512 | -0.0002 | 0 |
| 279 | SLU 30 | 0 | 6.45 | 22.98 | -0.7501 | -0.0002 | 0 |
| 279 | SLU 31 | 0 | 6.9 | 26.35 | -0.8229 | -0.0005 | 0 |
| 279 | SLU 32 | 0 | 7.19 | 26.77 | -0.8528 | -0.0004 | 0 |
| 279 | SLU 33 | 0 | 7.18 | 26.76 | -0.8517 | -0.0005 | 0 |
| 279 | SLU 34 | 0 | 7.06 | 26.58 | -0.8399 | -0.0004 | 0 |
| 279 | SLU 35 | 0 | 7.36 | 27 | -0.8698 | -0.0003 | 0 |
| 279 | SLU 36 | 0 | 7.35 | 26.99 | -0.8688 | -0.0003 | 0 |
| 279 | SLU 37 | 0 | 7.25 | 26.84 | -0.8588 | -0.0003 | 0 |
| 279 | SLU 38 | 0 | 7.24 | 26.82 | -0.8577 | -0.0003 | 0 |
| 279 | SLU 39 | 0 | 7.25 | 28.03 | -0.8708 | -0.0006 | 0 |
| 279 | SLU 40 | 0 | 7.24 | 28.01 | -0.8697 | -0.0006 | 0 |
| 279 | SLU 41 | 0 | 7.42 | 28.25 | -0.8878 | -0.0005 | 0 |
| 279 | SLU 42 | 0 | 7.4 | 28.24 | -0.8867 | -0.0005 | 0 |
| 279 | SLU 43 | 0 | 6.59 | 24.04 | -0.7584 | -0.0005 | 0 |
| 279 | SLU 44 | 0 | 6.57 | 24.01 | -0.7566 | -0.0005 | 0 |
| 279 | SLU 45 | 0 | 6.87 | 24.44 | -0.7866 | -0.0004 | 0 |
| 279 | SLU 46 | 0 | 6.85 | 24.42 | -0.7855 | -0.0004 | 0 |
| 279 | SLU 47 | 0 | 6.74 | 24.24 | -0.7737 | -0.0004 | 0 |
| 279 | SLU 48 | 0 | 7.03 | 24.66 | -0.8036 | -0.0003 | 0 |
| 279 | SLU 49 | 0 | 7.02 | 24.65 | -0.8025 | -0.0003 | 0 |
| 279 | SLU 50 | 0 | 6.92 | 24.5 | -0.7925 | -0.0003 | 0 |
| 279 | SLU 51 | 0 | 6.91 | 24.48 | -0.7915 | -0.0003 | 0 |
| 279 | SLU 52 | 0 | 7.35 | 27.85 | -0.8642 | -0.0006 | 0 |
| 279 | SLU 53 | 0 | 7.65 | 28.27 | -0.8941 | -0.0005 | 0 |
| 279 | SLU 54 | 0 | 7.64 | 28.26 | -0.8931 | -0.0005 | 0 |
| 279 | SLU 55 | 0 | 7.52 | 28.08 | -0.8812 | -0.0005 | 0 |
| 279 | SLU 56 | 0 | 7.82 | 28.5 | -0.9112 | -0.0004 | 0 |
| 279 | SLU 57 | 0 | 7.8 | 28.49 | -0.9101 | -0.0004 | 0 |
| 279 | SLU 58 | 0 | 7.7 | 28.34 | -0.9001 | -0.0004 | 0 |
| 279 | SLU 59 | 0 | 7.69 | 28.32 | -0.899 | -0.0004 | 0 |
| 279 | SLU 60 | 0 | 7.7 | 29.53 | -0.9121 | -0.0006 | 0 |
| 279 | SLU 61 | 0 | 7.69 | 29.51 | -0.911 | -0.0006 | 0 |
| 279 | SLU 62 | 0 | 7.87 | 29.75 | -0.9292 | -0.0005 | 0 |
| 279 | SLU 63 | 0 | 7.86 | 29.74 | -0.9281 | -0.0005 | 0 |
| 279 | SLU 64 | 0 | 7.43 | 27.25 | -0.8642 | -0.0005 | 0 |
| 279 | SLU 65 | 0 | 7.41 | 27.22 | -0.8624 | -0.0006 | 0 |
| 279 | SLU 66 | 0 | 7.71 | 27.64 | -0.8923 | -0.0005 | 0 |
| 279 | SLU 67 | 0 | 7.7 | 27.62 | -0.8913 | -0.0005 | 0 |
| 279 | SLU 68 | 0 | 7.58 | 27.44 | -0.8795 | -0.0005 | 0 |
| 279 | SLU 69 | 0 | 7.88 | 27.87 | -0.9094 | -0.0004 | 0 |
| 279 | SLU 70 | 0 | 7.86 | 27.85 | -0.9083 | -0.0004 | 0 |
| 279 | SLU 71 | 0 | 7.76 | 27.7 | -0.8983 | -0.0003 | 0 |
| 279 | SLU 72 | 0 | 7.75 | 27.68 | -0.8972 | -0.0003 | 0 |
| 279 | SLU 73 | 0 | 8.19 | 31.05 | -0.97 | -0.0007 | 0 |
| 279 | SLU 74 | 0 | 8.49 | 31.48 | -0.9999 | -0.0006 | 0 |
| 279 | SLU 75 | 0 | 8.48 | 31.46 | -0.9988 | -0.0006 | 0 |
| 279 | SLU 76 | 0 | 8.36 | 31.28 | -0.987 | -0.0005 | 0 |
| 279 | SLU 77 | 0 | 8.66 | 31.71 | -1.017 | -0.0004 | 0 |
| 279 | SLU 78 | 0 | 8.65 | 31.69 | -1.0159 | -0.0005 | 0 |
| 279 | SLU 79 | 0 | 8.55 | 31.54 | -1.0059 | -0.0004 | 0 |
| 279 | SLU 80 | 0 | 8.54 | 31.52 | -1.0048 | -0.0004 | 0 |
| 279 | SLU 81 | 0 | 8.55 | 32.73 | -1.0179 | -0.0007 | 0 |
| 279 | SLU 82 | 0 | 8.54 | 32.71 | -1.0168 | -0.0007 | 0 |
| 279 | SLU 83 | 0 | 8.71 | 32.96 | -1.0349 | -0.0006 | 0 |
| 279 | SLU 84 | 0 | 8.7 | 32.94 | -1.0339 | -0.0006 | 0 |
| 279 | SLE RA 1 | 0 | 5.53 | 20.25 | -0.6415 | -0.0004 | 0 |
| 279 | SLE RA 2 | 0 | 5.52 | 20.23 | -0.6403 | -0.0004 | 0 |
| 279 | SLE RA 3 | 0 | 5.72 | 20.52 | -0.6603 | -0.0004 | 0 |
| 279 | SLE RA 4 | 0 | 5.71 | 20.5 | -0.6596 | -0.0004 | 0 |
| 279 | SLE RA 5 | 0 | 5.63 | 20.39 | -0.6517 | -0.0003 | 0 |
| 279 | SLE RA 6 | 0 | 5.83 | 20.67 | -0.6717 | -0.0003 | 0 |
| 279 | SLE RA 7 | 0 | 5.82 | 20.66 | -0.6709 | -0.0003 | 0 |
| 279 | SLE RA 8 | 0 | 5.75 | 20.56 | -0.6643 | -0.0003 | 0 |
| 279 | SLE RA 9 | 0 | 5.75 | 20.55 | -0.6635 | -0.0003 | 0 |
| 279 | SLE RA 10 | 0 | 6.04 | 22.79 | -0.712 | -0.0005 | 0 |
| 279 | SLE RA 11 | 0 | 6.24 | 23.08 | -0.732 | -0.0004 | 0 |
| 279 | SLE RA 12 | 0 | 6.23 | 23.06 | -0.7313 | -0.0004 | 0 |
| 279 | SLE RA 13 | 0 | 6.15 | 22.95 | -0.7234 | -0.0004 | 0 |
| 279 | SLE RA 14 | 0 | 6.35 | 23.23 | -0.7434 | -0.0003 | 0 |
| 279 | SLE RA 15 | 0 | 6.34 | 23.22 | -0.7426 | -0.0004 | 0 |
| 279 | SLE RA 16 | 0 | 6.27 | 23.12 | -0.736 | -0.0003 | 0 |
| 279 | SLE RA 17 | 0 | 6.27 | 23.11 | -0.7353 | -0.0003 | 0 |
| 279 | SLE RA 18 | 0 | 6.27 | 23.91 | -0.744 | -0.0005 | 0 |
| 279 | SLE RA 19 | 0 | 6.27 | 23.9 | -0.7433 | -0.0005 | 0 |
| 279 | SLE RA 20 | 0 | 6.39 | 24.06 | -0.7553 | -0.0004 | 0 |
| 279 | SLE RA 21 | 0 | 6.38 | 24.05 | -0.7546 | -0.0004 | 0 |
| 279 | SLE FR 1 | 0 | 5.53 | 20.25 | -0.6415 | -0.0004 | 0 |
| 279 | SLE FR 2 | 0 | 5.53 | 20.25 | -0.6413 | -0.0004 | 0 |
| 279 | SLE FR 3 | 0 | 5.57 | 20.31 | -0.6461 | -0.0004 | 0 |
| 279 | SLE FR 4 | 0 | 5.75 | 21.35 | -0.672 | -0.0004 | 0 |
| 279 | SLE FR 5 | 0 | 5.8 | 21.41 | -0.6768 | -0.0004 | 0 |
| 279 | SLE FR 6 | 0 | 5.9 | 22.08 | -0.6928 | -0.0005 | 0 |

| Nodo | Cont. | Reazione a traslazione | | | Reazione a rotazione | | |
|---|---|---|---|---|---|---|---|
| Ind. | N.br. | x | y | z | x | y | z |
| 279 | SLE QP 1 | 0 | 5.53 | 20.25 | -0.6415 | -0.0004 | 0 |
| 279 | SLE QP 2 | 0 | 5.75 | 21.35 | -0.6723 | -0.0004 | 0 |
| 279 | SLD 1 | -0.12 | 1.96 | 20.26 | -0.4965 | 0.0822 | -0.0002 |
| 279 | SLD 2 | -0.12 | 1.96 | 20.26 | -0.4965 | 0.0822 | -0.0002 |
| 279 | SLD 3 | -0.12 | 7.38 | 21.5 | -0.7281 | 0.0857 | -0.0002 |
| 279 | SLD 4 | -0.12 | 7.38 | 21.5 | -0.7281 | 0.0857 | -0.0002 |
| 279 | SLD 5 | -0.04 | -3.59 | 19.13 | -0.2683 | 0.019 | -0.0001 |
| 279 | SLD 6 | -0.04 | -3.59 | 19.13 | -0.2683 | 0.019 | -0.0001 |
| 279 | SLD 7 | -0.03 | 14.45 | 23.28 | -1.0403 | 0.0308 | 0 |
| 279 | SLD 8 | -0.03 | 14.45 | 23.28 | -1.0403 | 0.0308 | 0 |
| 279 | SLD 9 | 0.03 | -2.94 | 19.42 | -0.3043 | -0.0316 | 0 |
| 279 | SLD 10 | 0.03 | -2.94 | 19.42 | -0.3043 | -0.0316 | 0 |
| 279 | SLD 11 | 0.04 | 15.1 | 23.57 | -1.0762 | -0.0199 | 0.0001 |
| 279 | SLD 12 | 0.04 | 15.1 | 23.57 | -1.0762 | -0.0199 | 0.0001 |
| 279 | SLD 13 | 0.12 | 4.13 | 21.2 | -0.6164 | -0.0866 | 0.0002 |
| 279 | SLD 14 | 0.12 | 4.13 | 21.2 | -0.6164 | -0.0866 | 0.0002 |
| 279 | SLD 15 | 0.12 | 9.54 | 22.44 | -0.848 | -0.0831 | 0.0002 |
| 279 | SLD 16 | 0.12 | 9.54 | 22.44 | -0.848 | -0.0831 | 0.0002 |
| 279 | SLV 1 | -0.32 | -3.13 | 18.81 | -0.2598 | 0.2095 | -0.0005 |
| 279 | SLV 2 | -0.32 | -3.13 | 18.81 | -0.2598 | 0.2095 | -0.0005 |
| 279 | SLV 3 | -0.3 | 9.53 | 21.69 | -0.8029 | 0.2184 | -0.0005 |
| 279 | SLV 4 | -0.3 | 9.53 | 21.69 | -0.8029 | 0.2184 | -0.0005 |
| 279 | SLV 5 | -0.11 | -16.11 | 16.21 | 0.2751 | 0.049 | -0.0002 |
| 279 | SLV 6 | -0.11 | -16.11 | 16.21 | 0.2751 | 0.049 | -0.0002 |
| 279 | SLV 7 | -0.08 | 26.09 | 25.84 | -1.5351 | 0.0787 | -0.0001 |
| 279 | SLV 8 | -0.08 | 26.09 | 25.84 | -1.5351 | 0.0787 | -0.0001 |
| 279 | SLV 9 | 0.07 | -14.58 | 16.87 | 0.1906 | -0.0796 | 0.0001 |
| 279 | SLV 10 | 0.07 | -14.58 | 16.87 | 0.1906 | -0.0796 | 0.0001 |
| 279 | SLV 11 | 0.11 | 27.62 | 26.5 | -1.6196 | -0.0499 | 0.0002 |
| 279 | SLV 12 | 0.11 | 27.62 | 26.5 | -1.6196 | -0.0499 | 0.0002 |
| 279 | SLV 13 | 0.3 | 1.97 | 21.01 | -0.5416 | -0.2193 | 0.0005 |
| 279 | SLV 14 | 0.3 | 1.97 | 21.01 | -0.5416 | -0.2193 | 0.0005 |
| 279 | SLV 15 | 0.31 | 14.63 | 23.9 | -1.0847 | -0.2104 | 0.0005 |
| 279 | SLV 16 | 0.31 | 14.63 | 23.9 | -1.0847 | -0.2104 | 0.0005 |
| 280 | SLU 1 | 0 | -3.96 | 40.95 | -0.1359 | 0 | 0 |
| 280 | SLU 2 | 0 | -3.98 | 40.94 | -0.1349 | 0 | 0 |
| 280 | SLU 3 | 0 | -4.33 | 41.92 | -0.1275 | 0 | 0 |
| 280 | SLU 4 | 0 | -4.34 | 41.91 | -0.1269 | 0 | 0 |
| 280 | SLU 5 | 0 | -4.36 | 41.32 | -0.1202 | -0.0001 | 0 |
| 280 | SLU 6 | 0 | -4.71 | 42.3 | -0.1128 | -0.0001 | 0 |
| 280 | SLU 7 | 0 | -4.73 | 42.29 | -0.1122 | -0.0001 | 0 |
| 280 | SLU 8 | 0 | -4.73 | 41.71 | -0.1065 | -0.0002 | 0 |
| 280 | SLU 9 | 0 | -4.74 | 41.7 | -0.1058 | -0.0002 | 0 |
| 280 | SLU 10 | 0 | -4.86 | 48.21 | -0.1544 | 0.0001 | 0 |
| 280 | SLU 11 | 0 | -5.21 | 49.19 | -0.147 | 0 | 0 |
| 280 | SLU 12 | 0 | -5.22 | 49.18 | -0.1464 | 0 | 0 |
| 280 | SLU 13 | 0 | -5.25 | 48.59 | -0.1397 | 0 | 0 |
| 280 | SLU 14 | 0 | -5.6 | 49.57 | -0.1323 | -0.0001 | 0 |
| 280 | SLU 15 | 0 | -5.61 | 49.56 | -0.1317 | -0.0001 | 0 |
| 280 | SLU 16 | 0 | -5.61 | 48.97 | -0.1259 | -0.0001 | 0 |
| 280 | SLU 17 | 0 | -5.62 | 48.97 | -0.1253 | -0.0001 | 0 |
| 280 | SLU 18 | 0 | -5.22 | 51.33 | -0.1638 | 0.0001 | 0 |
| 280 | SLU 19 | 0 | -5.23 | 51.32 | -0.1631 | 0.0001 | 0 |
| 280 | SLU 20 | 0 | -5.6 | 51.71 | -0.149 | 0 | 0 |
| 280 | SLU 21 | 0 | -5.62 | 51.7 | -0.1484 | 0 | 0 |
| 280 | SLU 22 | 0 | -4.85 | 47.48 | -0.15 | 0 | 0 |
| 280 | SLU 23 | 0 | -4.87 | 47.47 | -0.1489 | 0 | 0 |
| 280 | SLU 24 | 0 | -5.22 | 48.45 | -0.1416 | 0 | 0 |
| 280 | SLU 25 | 0 | -5.23 | 48.45 | -0.141 | 0 | 0 |
| 280 | SLU 26 | 0 | -5.26 | 47.85 | -0.1342 | -0.0001 | 0 |
| 280 | SLU 27 | 0 | -5.6 | 48.83 | -0.1268 | -0.0001 | 0 |
| 280 | SLU 28 | 0 | -5.62 | 48.83 | -0.1262 | -0.0001 | 0 |
| 280 | SLU 29 | 0 | -5.62 | 48.24 | -0.1205 | -0.0002 | 0 |
| 280 | SLU 30 | 0 | -5.63 | 48.23 | -0.1199 | -0.0001 | 0 |
| 280 | SLU 31 | 0 | -5.75 | 54.74 | -0.1684 | 0.0001 | 0 |
| 280 | SLU 32 | 0 | -6.1 | 55.72 | -0.1611 | 0 | 0 |
| 280 | SLU 33 | 0 | -6.11 | 55.71 | -0.1604 | 0 | 0 |
| 280 | SLU 34 | 0 | -6.14 | 55.12 | -0.1537 | 0 | 0 |
| 280 | SLU 35 | 0 | -6.49 | 56.1 | -0.1463 | -0.0001 | 0 |
| 280 | SLU 36 | 0 | -6.5 | 56.09 | -0.1457 | -0.0001 | 0 |
| 280 | SLU 37 | 0 | -6.5 | 55.51 | -0.14 | -0.0001 | 0 |
| 280 | SLU 38 | 0 | -6.52 | 55.5 | -0.1394 | -0.0001 | 0 |
| 280 | SLU 39 | 0 | -6.11 | 57.86 | -0.1778 | 0.0001 | 0 |
| 280 | SLU 40 | 0 | -6.12 | 57.86 | -0.1772 | 0.0001 | 0 |
| 280 | SLU 41 | 0 | -6.49 | 58.24 | -0.1631 | 0 | 0 |
| 280 | SLU 42 | 0 | -6.51 | 58.24 | -0.1624 | 0 | 0 |
| 280 | SLU 43 | 0 | -4.84 | 50.99 | -0.1719 | 0 | 0 |
| 280 | SLU 44 | 0 | -4.86 | 50.98 | -0.1709 | 0 | 0 |
| 280 | SLU 45 | 0 | -5.21 | 51.96 | -0.1635 | 0 | 0 |
| 280 | SLU 46 | 0 | -5.22 | 51.96 | -0.1629 | 0 | 0 |
| 280 | SLU 47 | 0 | -5.25 | 51.36 | -0.1561 | -0.0001 | 0 |
| 280 | SLU 48 | 0 | -5.59 | 52.34 | -0.1488 | -0.0001 | 0 |
| 280 | SLU 49 | 0 | -5.61 | 52.34 | -0.1482 | -0.0001 | 0 |
| 280 | SLU 50 | 0 | -5.61 | 51.75 | -0.1424 | -0.0002 | 0 |
| 280 | SLU 51 | 0 | -5.62 | 51.74 | -0.1418 | -0.0002 | 0 |
| 280 | SLU 52 | 0 | -5.74 | 58.25 | -0.1904 | 0.0001 | 0 |
| 280 | SLU 53 | 0 | -6.09 | 59.23 | -0.183 | 0 | 0 |
| 280 | SLU 54 | 0 | -6.1 | 59.23 | -0.1824 | 0 | 0 |

| Nodo | Cont. | Reazione a traslazione | | | Reazione a rotazione | | |
|---|---|---|---|---|---|---|---|
| Ind. | N.br. | x | y | z | x | y | z |
| 280 | SLU 55 | 0 | -6.13 | 58.63 | -0.1756 | 0 | 0 |
| 280 | SLU 56 | 0 | -6.48 | 59.61 | -0.1683 | -0.0001 | 0 |
| 280 | SLU 57 | 0 | -6.49 | 59.61 | -0.1676 | -0.0001 | 0 |
| 280 | SLU 58 | 0 | -6.49 | 59.02 | -0.1619 | -0.0001 | 0 |
| 280 | SLU 59 | 0 | -6.51 | 59.01 | -0.1613 | -0.0001 | 0 |
| 280 | SLU 60 | 0 | -6.1 | 61.37 | -0.1997 | 0.0001 | 0 |
| 280 | SLU 61 | 0 | -6.11 | 61.37 | -0.1991 | 0.0001 | 0 |
| 280 | SLU 62 | 0 | -6.48 | 61.75 | -0.185 | 0 | 0 |
| 280 | SLU 63 | 0 | -6.5 | 61.75 | -0.1844 | 0 | 0 |
| 280 | SLU 64 | 0 | -5.73 | 57.53 | -0.1859 | 0 | 0 |
| 280 | SLU 65 | 0 | -5.75 | 57.52 | -0.1849 | 0 | 0 |
| 280 | SLU 66 | 0 | -6.1 | 58.5 | -0.1775 | 0 | 0 |
| 280 | SLU 67 | 0 | -6.11 | 58.49 | -0.1769 | 0 | 0 |
| 280 | SLU 68 | 0 | -6.14 | 57.89 | -0.1702 | -0.0001 | 0 |
| 280 | SLU 69 | 0 | -6.49 | 58.88 | -0.1628 | -0.0001 | 0 |
| 280 | SLU 70 | 0 | -6.5 | 58.87 | -0.1622 | -0.0001 | 0 |
| 280 | SLU 71 | 0 | -6.5 | 58.28 | -0.1565 | -0.0001 | 0 |
| 280 | SLU 72 | 0 | -6.51 | 58.28 | -0.1558 | -0.0001 | 0 |
| 280 | SLU 73 | 0 | -6.63 | 64.78 | -0.2044 | 0.0001 | 0 |
| 280 | SLU 74 | 0 | -6.98 | 65.77 | -0.197 | 0 | 0 |
| 280 | SLU 75 | 0 | -6.99 | 65.76 | -0.1964 | 0 | 0 |
| 280 | SLU 76 | 0 | -7.02 | 65.16 | -0.1896 | 0 | 0 |
| 280 | SLU 77 | 0 | -7.37 | 66.14 | -0.1823 | -0.0001 | 0 |
| 280 | SLU 78 | 0 | -7.38 | 66.14 | -0.1817 | -0.0001 | 0 |
| 280 | SLU 79 | 0 | -7.38 | 65.55 | -0.1759 | -0.0001 | 0 |
| 280 | SLU 80 | 0 | -7.4 | 65.54 | -0.1753 | -0.0001 | 0 |
| 280 | SLU 81 | 0 | -6.99 | 67.91 | -0.2138 | 0.0001 | 0 |
| 280 | SLU 82 | 0 | -7 | 67.9 | -0.2131 | 0.0001 | 0 |
| 280 | SLU 83 | 0 | -7.37 | 68.29 | -0.199 | 0 | 0 |
| 280 | SLU 84 | 0 | -7.39 | 68.28 | -0.1984 | 0 | 0 |
| 280 | SLE RA 1 | 0 | -4.21 | 42.81 | -0.1399 | 0 | 0 |
| 280 | SLE RA 2 | 0 | -4.22 | 42.81 | -0.1392 | 0 | 0 |
| 280 | SLE RA 3 | 0 | -4.46 | 43.46 | -0.1343 | 0 | 0 |
| 280 | SLE RA 4 | 0 | -4.47 | 43.46 | -0.1339 | 0 | 0 |
| 280 | SLE RA 5 | 0 | -4.48 | 43.06 | -0.1294 | 0 | 0 |
| 280 | SLE RA 6 | 0 | -4.72 | 43.72 | -0.1245 | -0.0001 | 0 |
| 280 | SLE RA 7 | 0 | -4.72 | 43.71 | -0.1241 | -0.0001 | 0 |
| 280 | SLE RA 8 | 0 | -4.73 | 43.32 | -0.1203 | -0.0001 | 0 |
| 280 | SLE RA 9 | 0 | -4.73 | 43.32 | -0.1199 | -0.0001 | 0 |
| 280 | SLE RA 10 | 0 | -4.81 | 47.65 | -0.1522 | 0.0001 | 0 |
| 280 | SLE RA 11 | 0 | -5.05 | 48.31 | -0.1473 | 0 | 0 |
| 280 | SLE RA 12 | 0 | -5.05 | 48.3 | -0.1469 | 0 | 0 |
| 280 | SLE RA 13 | 0 | -5.07 | 47.91 | -0.1424 | 0 | 0 |
| 280 | SLE RA 14 | 0 | -5.3 | 48.56 | -0.1375 | 0 | 0 |
| 280 | SLE RA 15 | 0 | -5.31 | 48.56 | -0.1371 | 0 | 0 |
| 280 | SLE RA 16 | 0 | -5.31 | 48.16 | -0.1333 | 0 | 0 |
| 280 | SLE RA 17 | 0 | -5.32 | 48.16 | -0.1329 | 0 | 0 |
| 280 | SLE RA 18 | 0 | -5.05 | 49.74 | -0.1585 | 0.0001 | 0 |
| 280 | SLE RA 19 | 0 | -5.06 | 49.73 | -0.1581 | 0.0001 | 0 |
| 280 | SLE RA 20 | 0 | -5.31 | 49.99 | -0.1487 | 0 | 0 |
| 280 | SLE RA 21 | 0 | -5.32 | 49.98 | -0.1483 | 0 | 0 |
| 280 | SLE FR 1 | 0 | -4.21 | 42.81 | -0.1399 | 0 | 0 |
| 280 | SLE FR 2 | 0 | -4.21 | 42.81 | -0.1398 | 0 | 0 |
| 280 | SLE FR 3 | 0 | -4.31 | 42.92 | -0.136 | 0 | 0 |
| 280 | SLE FR 4 | 0 | -4.46 | 44.89 | -0.1454 | 0 | 0 |
| 280 | SLE FR 5 | 0 | -4.57 | 44.99 | -0.1416 | 0 | 0 |
| 280 | SLE FR 6 | 0 | -4.63 | 46.28 | -0.1492 | 0.0001 | 0 |
| 280 | SLE QP 1 | 0 | -4.21 | 42.81 | -0.1399 | 0 | 0 |
| 280 | SLE QP 2 | 0 | -4.46 | 44.89 | -0.1455 | 0 | 0 |
| 280 | SLD 1 | -0.09 | -1.21 | 42.71 | -0.2792 | 0.0522 | 0.0001 |
| 280 | SLD 2 | -0.09 | -1.21 | 42.71 | -0.2792 | 0.0522 | 0.0001 |
| 280 | SLD 3 | -0.1 | -6.17 | 45.57 | -0.0778 | 0.0476 | 0.0001 |
| 280 | SLD 4 | -0.1 | -6.17 | 45.57 | -0.0778 | 0.0476 | 0.0001 |
| 280 | SLD 5 | -0.02 | 4.03 | 39.9 | -0.491 | 0.0227 | 0.0001 |
| 280 | SLD 6 | -0.02 | 4.03 | 39.9 | -0.491 | 0.0227 | 0.0001 |
| 280 | SLD 7 | -0.04 | -12.49 | 49.43 | 0.1802 | 0.0073 | 0 |
| 280 | SLD 8 | -0.04 | -12.49 | 49.43 | 0.1802 | 0.0073 | 0 |
| 280 | SLD 9 | 0.04 | 3.56 | 40.35 | -0.4712 | -0.0073 | 0 |
| 280 | SLD 10 | 0.04 | 3.56 | 40.35 | -0.4712 | -0.0073 | 0 |
| 280 | SLD 11 | 0.02 | -12.95 | 49.88 | 0.2 | -0.0226 | -0.0001 |
| 280 | SLD 12 | 0.02 | -12.95 | 49.88 | 0.2 | -0.0226 | -0.0001 |
| 280 | SLD 13 | 0.1 | -2.76 | 44.22 | -0.2132 | -0.0475 | -0.0001 |
| 280 | SLD 14 | 0.1 | -2.76 | 44.22 | -0.2132 | -0.0475 | -0.0001 |
| 280 | SLD 15 | 0.1 | -7.71 | 47.08 | -0.0118 | -0.0521 | -0.0001 |
| 280 | SLD 16 | 0.1 | -7.71 | 47.08 | -0.0118 | -0.0521 | -0.0001 |
| 280 | SLV 1 | -0.28 | 3.23 | 39.61 | -0.4607 | 0.1427 | 0.0004 |
| 280 | SLV 2 | -0.28 | 3.23 | 39.61 | -0.4607 | 0.1427 | 0.0004 |
| 280 | SLV 3 | -0.3 | -8.48 | 46.61 | 0.0129 | 0.1307 | 0.0004 |
| 280 | SLV 4 | -0.3 | -8.48 | 46.61 | 0.0129 | 0.1307 | 0.0004 |
| 280 | SLV 5 | -0.06 | 15.61 | 32.69 | -0.9583 | 0.0609 | 0.0002 |
| 280 | SLV 6 | -0.06 | 15.61 | 32.69 | -0.9583 | 0.0609 | 0.0002 |
| 280 | SLV 7 | -0.11 | -23.43 | 56.03 | 0.6203 | 0.0211 | 0.0001 |
| 280 | SLV 8 | -0.11 | -23.43 | 56.03 | 0.6203 | 0.0211 | 0.0001 |
| 280 | SLV 9 | 0.12 | 14.51 | 33.75 | -0.9113 | -0.0211 | -0.0001 |
| 280 | SLV 10 | 0.12 | 14.51 | 33.75 | -0.9113 | -0.0211 | -0.0001 |
| 280 | SLV 11 | 0.06 | -24.53 | 57.1 | 0.6673 | -0.0608 | -0.0002 |
| 280 | SLV 12 | 0.06 | -24.53 | 57.1 | 0.6673 | -0.0608 | -0.0002 |
| 280 | SLV 13 | 0.3 | -0.44 | 43.17 | -0.3039 | -0.1306 | -0.0004 |

| Nodo | Cont. | Reazione a traslazione | | | Reazione a rotazione | | |
|---|---|---|---|---|---|---|---|
| Ind. | N.br. | x | y | z | x | y | z |
| 280 | SLV 14 | 0.3 | -0.44 | 43.17 | -0.3039 | -0.1306 | -0.0004 |
| 280 | SLV 15 | 0.28 | -12.15 | 50.17 | 0.1697 | -0.1426 | -0.0004 |
| 280 | SLV 16 | 0.28 | -12.15 | 50.17 | 0.1697 | -0.1426 | -0.0004 |
| 281 | SLU 1 | 5.09 | -9.03 | 59.55 | 0.1687 | 0.0693 | -0.0016 |
| 281 | SLU 2 | 4.81 | -8.03 | 54.39 | 0.1418 | 0.0694 | -0.0013 |
| 281 | SLU 3 | 5.18 | -9.18 | 60.51 | 0.1714 | 0.0707 | -0.0017 |
| 281 | SLU 4 | 5.01 | -8.58 | 57.42 | 0.1552 | 0.0708 | -0.0015 |
| 281 | SLU 5 | 4.86 | -8.06 | 54.69 | 0.1421 | 0.0709 | -0.0013 |
| 281 | SLU 6 | 5.23 | -9.22 | 60.81 | 0.1717 | 0.0723 | -0.0017 |
| 281 | SLU 7 | 5.06 | -8.61 | 57.72 | 0.1555 | 0.0723 | -0.0015 |
| 281 | SLU 8 | 5.19 | -9.1 | 60.15 | 0.1693 | 0.0723 | -0.0016 |
| 281 | SLU 9 | 5.02 | -8.5 | 57.05 | 0.1531 | 0.0724 | -0.0014 |
| 281 | SLU 10 | 5.56 | -9.08 | 61.79 | 0.1597 | 0.0824 | -0.0015 |
| 281 | SLU 11 | 5.92 | -10.23 | 67.91 | 0.1893 | 0.0838 | -0.0018 |
| 281 | SLU 12 | 5.76 | -9.63 | 64.82 | 0.1731 | 0.0838 | -0.0016 |
| 281 | SLU 13 | 5.61 | -9.11 | 62.09 | 0.16 | 0.0839 | -0.0015 |
| 281 | SLU 14 | 5.97 | -10.26 | 68.21 | 0.1896 | 0.0853 | -0.0018 |
| 281 | SLU 15 | 5.81 | -9.66 | 65.12 | 0.1734 | 0.0853 | -0.0016 |
| 281 | SLU 16 | 5.93 | -10.15 | 67.55 | 0.1872 | 0.0853 | -0.0018 |
| 281 | SLU 17 | 5.77 | -9.54 | 64.45 | 0.171 | 0.0854 | -0.0016 |
| 281 | SLU 18 | 6.15 | -10.53 | 70.12 | 0.1943 | 0.0879 | -0.0019 |
| 281 | SLU 19 | 5.99 | -9.93 | 67.02 | 0.1782 | 0.0879 | -0.0017 |
| 281 | SLU 20 | 6.2 | -10.56 | 70.42 | 0.1946 | 0.0894 | -0.0018 |
| 281 | SLU 21 | 6.04 | -9.96 | 67.32 | 0.1784 | 0.0894 | -0.0017 |
| 281 | SLU 22 | 5.77 | -10.02 | 66.42 | 0.1857 | 0.0808 | -0.0018 |
| 281 | SLU 23 | 5.49 | -9.01 | 61.26 | 0.1587 | 0.0809 | -0.0015 |
| 281 | SLU 24 | 5.85 | -10.17 | 67.38 | 0.1883 | 0.0823 | -0.0018 |
| 281 | SLU 25 | 5.69 | -9.57 | 64.29 | 0.1722 | 0.0823 | -0.0016 |
| 281 | SLU 26 | 5.54 | -9.05 | 61.56 | 0.159 | 0.0824 | -0.0015 |
| 281 | SLU 27 | 5.91 | -10.2 | 67.68 | 0.1886 | 0.0838 | -0.0018 |
| 281 | SLU 28 | 5.74 | -9.6 | 64.59 | 0.1724 | 0.0838 | -0.0016 |
| 281 | SLU 29 | 5.87 | -10.08 | 67.02 | 0.1862 | 0.0838 | -0.0018 |
| 281 | SLU 30 | 5.7 | -9.48 | 63.92 | 0.1701 | 0.0839 | -0.0016 |
| 281 | SLU 31 | 6.23 | -10.06 | 68.66 | 0.1767 | 0.0939 | -0.0016 |
| 281 | SLU 32 | 6.6 | -11.22 | 74.78 | 0.2063 | 0.0953 | -0.002 |
| 281 | SLU 33 | 6.43 | -10.61 | 71.68 | 0.1901 | 0.0953 | -0.0018 |
| 281 | SLU 34 | 6.29 | -10.09 | 68.96 | 0.1769 | 0.0954 | -0.0016 |
| 281 | SLU 35 | 6.65 | -11.25 | 75.08 | 0.2065 | 0.0968 | -0.0019 |
| 281 | SLU 36 | 6.48 | -10.65 | 71.98 | 0.1903 | 0.0968 | -0.0018 |
| 281 | SLU 37 | 6.61 | -11.13 | 74.41 | 0.2041 | 0.0969 | -0.0019 |
| 281 | SLU 38 | 6.45 | -10.53 | 71.32 | 0.188 | 0.0969 | -0.0017 |
| 281 | SLU 39 | 6.83 | -11.52 | 76.98 | 0.2113 | 0.0994 | -0.002 |
| 281 | SLU 40 | 6.67 | -10.91 | 73.89 | 0.1951 | 0.0995 | -0.0018 |
| 281 | SLU 41 | 6.88 | -11.55 | 77.28 | 0.2116 | 0.1009 | -0.002 |
| 281 | SLU 42 | 6.72 | -10.95 | 74.19 | 0.1954 | 0.101 | -0.0018 |
| 281 | SLU 43 | 6.38 | -11.41 | 75.06 | 0.2136 | 0.0862 | -0.0021 |
| 281 | SLU 44 | 6.1 | -10.4 | 69.9 | 0.1866 | 0.0862 | -0.0018 |
| 281 | SLU 45 | 6.47 | -11.56 | 76.02 | 0.2162 | 0.0876 | -0.0021 |
| 281 | SLU 46 | 6.3 | -10.95 | 72.93 | 0.2 | 0.0876 | -0.0019 |
| 281 | SLU 47 | 6.15 | -10.43 | 70.2 | 0.1869 | 0.0877 | -0.0018 |
| 281 | SLU 48 | 6.52 | -11.59 | 76.32 | 0.2165 | 0.0891 | -0.0021 |
| 281 | SLU 49 | 6.35 | -10.99 | 73.23 | 0.2003 | 0.0891 | -0.0019 |
| 281 | SLU 50 | 6.48 | -11.47 | 75.66 | 0.2141 | 0.0892 | -0.0021 |
| 281 | SLU 51 | 6.32 | -10.87 | 72.56 | 0.1979 | 0.0892 | -0.0019 |
| 281 | SLU 52 | 6.85 | -11.45 | 77.3 | 0.2045 | 0.0992 | -0.0019 |
| 281 | SLU 53 | 7.22 | -12.6 | 83.42 | 0.2341 | 0.1006 | -0.0023 |
| 281 | SLU 54 | 7.05 | -12 | 80.33 | 0.2179 | 0.1006 | -0.0021 |
| 281 | SLU 55 | 6.9 | -11.48 | 77.6 | 0.2048 | 0.1007 | -0.0019 |
| 281 | SLU 56 | 7.27 | -12.64 | 83.72 | 0.2344 | 0.1021 | -0.0022 |
| 281 | SLU 57 | 7.1 | -12.03 | 80.63 | 0.2182 | 0.1021 | -0.0021 |
| 281 | SLU 58 | 7.23 | -12.52 | 83.06 | 0.232 | 0.1022 | -0.0022 |
| 281 | SLU 59 | 7.06 | -11.92 | 79.96 | 0.2158 | 0.1022 | -0.002 |
| 281 | SLU 60 | 7.45 | -12.9 | 85.63 | 0.2392 | 0.1048 | -0.0023 |
| 281 | SLU 61 | 7.28 | -12.3 | 82.53 | 0.223 | 0.1048 | -0.0021 |
| 281 | SLU 62 | 7.5 | -12.94 | 85.93 | 0.2394 | 0.1063 | -0.0023 |
| 281 | SLU 63 | 7.33 | -12.33 | 82.83 | 0.2232 | 0.1063 | -0.0021 |
| 281 | SLU 64 | 7.06 | -12.39 | 81.93 | 0.2305 | 0.0977 | -0.0022 |
| 281 | SLU 65 | 6.78 | -11.39 | 76.77 | 0.2036 | 0.0977 | -0.0019 |
| 281 | SLU 66 | 7.15 | -12.54 | 82.89 | 0.2332 | 0.0991 | -0.0023 |
| 281 | SLU 67 | 6.98 | -11.94 | 79.8 | 0.217 | 0.0991 | -0.0021 |
| 281 | SLU 68 | 6.83 | -11.42 | 77.07 | 0.2038 | 0.0992 | -0.0019 |
| 281 | SLU 69 | 7.2 | -12.57 | 83.19 | 0.2334 | 0.1006 | -0.0022 |
| 281 | SLU 70 | 7.03 | -11.97 | 80.1 | 0.2172 | 0.1006 | -0.0021 |
| 281 | SLU 71 | 7.16 | -12.46 | 82.53 | 0.231 | 0.1007 | -0.0022 |
| 281 | SLU 72 | 6.99 | -11.85 | 79.43 | 0.2149 | 0.1007 | -0.002 |
| 281 | SLU 73 | 7.53 | -12.43 | 84.17 | 0.2215 | 0.1107 | -0.0021 |
| 281 | SLU 74 | 7.89 | -13.59 | 90.29 | 0.2511 | 0.1121 | -0.0024 |
| 281 | SLU 75 | 7.73 | -12.99 | 87.19 | 0.2349 | 0.1121 | -0.0022 |
| 281 | SLU 76 | 7.58 | -12.47 | 84.47 | 0.2217 | 0.1122 | -0.0021 |
| 281 | SLU 77 | 7.94 | -13.62 | 90.59 | 0.2513 | 0.1136 | -0.0024 |
| 281 | SLU 78 | 7.78 | -13.02 | 87.49 | 0.2352 | 0.1136 | -0.0022 |
| 281 | SLU 79 | 7.91 | -13.5 | 89.92 | 0.249 | 0.1137 | -0.0024 |
| 281 | SLU 80 | 7.74 | -12.9 | 86.83 | 0.2328 | 0.1137 | -0.0022 |
| 281 | SLU 81 | 8.13 | -13.89 | 92.49 | 0.2561 | 0.1163 | -0.0024 |
| 281 | SLU 82 | 7.96 | -13.29 | 89.4 | 0.2399 | 0.1163 | -0.0023 |
| 281 | SLU 83 | 8.18 | -13.92 | 92.79 | 0.2564 | 0.1178 | -0.0024 |
| 281 | SLU 84 | 8.01 | -13.32 | 89.7 | 0.2402 | 0.1178 | -0.0022 |
| 281 | SLE RA 1 | 5.28 | -9.32 | 61.51 | 0.1736 | 0.0726 | -0.0017 |

| Nodo | Cont. | Reazione a traslazione | | | Reazione a rotazione | | |
|---|---|---|---|---|---|---|---|
| Ind. | N.br. | x | y | z | x | y | z |
| 281 | SLE RA 2 | 5.1 | -8.65 | 58.07 | 0.1556 | 0.0726 | -0.0015 |
| 281 | SLE RA 3 | 5.34 | -9.42 | 62.15 | 0.1754 | 0.0736 | -0.0017 |
| 281 | SLE RA 4 | 5.23 | -9.01 | 60.09 | 0.1646 | 0.0736 | -0.0016 |
| 281 | SLE RA 5 | 5.13 | -8.67 | 58.27 | 0.1558 | 0.0736 | -0.0015 |
| 281 | SLE RA 6 | 5.37 | -9.44 | 62.35 | 0.1755 | 0.0746 | -0.0017 |
| 281 | SLE RA 7 | 5.26 | -9.03 | 60.29 | 0.1647 | 0.0746 | -0.0016 |
| 281 | SLE RA 8 | 5.35 | -9.36 | 61.91 | 0.1739 | 0.0746 | -0.0017 |
| 281 | SLE RA 9 | 5.24 | -8.96 | 59.85 | 0.1632 | 0.0746 | -0.0016 |
| 281 | SLE RA 10 | 5.59 | -9.34 | 63 | 0.1676 | 0.0813 | -0.0016 |
| 281 | SLE RA 11 | 5.84 | -10.11 | 67.09 | 0.1873 | 0.0822 | -0.0018 |
| 281 | SLE RA 12 | 5.73 | -9.71 | 65.02 | 0.1765 | 0.0823 | -0.0017 |
| 281 | SLE RA 13 | 5.63 | -9.37 | 63.2 | 0.1677 | 0.0823 | -0.0016 |
| 281 | SLE RA 14 | 5.87 | -10.14 | 67.29 | 0.1875 | 0.0832 | -0.0018 |
| 281 | SLE RA 15 | 5.76 | -9.73 | 65.22 | 0.1767 | 0.0833 | -0.0017 |
| 281 | SLE RA 16 | 5.85 | -10.06 | 66.84 | 0.1859 | 0.0833 | -0.0018 |
| 281 | SLE RA 17 | 5.74 | -9.66 | 64.78 | 0.1751 | 0.0833 | -0.0016 |
| 281 | SLE RA 18 | 5.99 | -10.31 | 68.56 | 0.1907 | 0.085 | -0.0018 |
| 281 | SLE RA 19 | 5.88 | -9.91 | 66.49 | 0.1799 | 0.085 | -0.0017 |
| 281 | SLE RA 20 | 6.03 | -10.34 | 68.76 | 0.1908 | 0.086 | -0.0018 |
| 281 | SLE RA 21 | 5.91 | -9.93 | 66.69 | 0.18 | 0.086 | -0.0017 |
| 281 | SLE FR 1 | 5.28 | -9.32 | 61.51 | 0.1736 | 0.0726 | -0.0017 |
| 281 | SLE FR 2 | 5.25 | -9.18 | 60.82 | 0.17 | 0.0726 | -0.0016 |
| 281 | SLE FR 3 | 5.3 | -9.32 | 61.59 | 0.1737 | 0.073 | -0.0017 |
| 281 | SLE FR 4 | 5.46 | -9.48 | 62.94 | 0.1751 | 0.0763 | -0.0017 |
| 281 | SLE FR 5 | 5.51 | -9.62 | 63.71 | 0.1788 | 0.0767 | -0.0017 |
| 281 | SLE FR 6 | 5.64 | -9.81 | 65.03 | 0.1821 | 0.0788 | -0.0018 |
| 281 | SLE QP 1 | 5.28 | -9.32 | 61.51 | 0.1736 | 0.0726 | -0.0017 |
| 281 | SLE QP 2 | 5.5 | -9.61 | 63.63 | 0.1787 | 0.0763 | -0.0017 |
| 281 | SLD 1 | 9.52 | -10.69 | 77.56 | 0.1802 | 0.2465 | 0.0008 |
| 281 | SLD 2 | 9.52 | -10.69 | 77.56 | 0.1802 | 0.2465 | 0.0008 |
| 281 | SLD 3 | 10.52 | -13.87 | 91.21 | 0.2965 | 0.2716 | -0.0003 |
| 281 | SLD 4 | 10.52 | -13.87 | 91.21 | 0.2965 | 0.2716 | -0.0003 |
| 281 | SLD 5 | 5.19 | -5.11 | 47.1 | 0.0028 | 0.0893 | 0.0008 |
| 281 | SLD 6 | 5.19 | -5.11 | 47.1 | 0.0028 | 0.0893 | 0.0008 |
| 281 | SLD 7 | 8.51 | -15.72 | 92.6 | 0.3904 | 0.173 | -0.003 |
| 281 | SLD 8 | 8.51 | -15.72 | 92.6 | 0.3904 | 0.173 | -0.003 |
| 281 | SLD 9 | 2.48 | -3.51 | 34.65 | -0.033 | -0.0203 | -0.0004 |
| 281 | SLD 10 | 2.48 | -3.51 | 34.65 | -0.033 | -0.0203 | -0.0004 |
| 281 | SLD 11 | 5.8 | -14.12 | 80.15 | 0.3546 | 0.0634 | -0.0042 |
| 281 | SLD 12 | 5.8 | -14.12 | 80.15 | 0.3546 | 0.0634 | -0.0042 |
| 281 | SLD 13 | 0.47 | -5.36 | 36.04 | 0.0609 | -0.1189 | -0.0031 |
| 281 | SLD 14 | 0.47 | -5.36 | 36.04 | 0.0609 | -0.1189 | -0.0031 |
| 281 | SLD 15 | 1.47 | -8.54 | 49.69 | 0.1772 | -0.0938 | -0.0043 |
| 281 | SLD 16 | 1.47 | -8.54 | 49.69 | 0.1772 | -0.0938 | -0.0043 |
| 281 | SLV 1 | 14.7 | -12.13 | 95.57 | 0.1842 | 0.4659 | 0.0042 |
| 281 | SLV 2 | 14.7 | -12.13 | 95.57 | 0.1842 | 0.4659 | 0.0042 |
| 281 | SLV 3 | 17.07 | -19.56 | 127.76 | 0.454 | 0.5261 | 0.0015 |
| 281 | SLV 4 | 17.07 | -19.56 | 127.76 | 0.454 | 0.5261 | 0.0015 |
| 281 | SLV 5 | 4.66 | 0.9 | 24.39 | -0.2289 | 0.1019 | 0.0041 |
| 281 | SLV 6 | 4.66 | 0.9 | 24.39 | -0.2289 | 0.1019 | 0.0041 |
| 281 | SLV 7 | 12.56 | -23.86 | 131.69 | 0.6706 | 0.3026 | -0.0048 |
| 281 | SLV 8 | 12.56 | -23.86 | 131.69 | 0.6706 | 0.3026 | -0.0048 |
| 281 | SLV 9 | -1.57 | 4.64 | -4.44 | -0.3131 | -0.1499 | 0.0013 |
| 281 | SLV 10 | -1.57 | 4.64 | -4.44 | -0.3131 | -0.1499 | 0.0013 |
| 281 | SLV 11 | 6.33 | -20.12 | 102.86 | 0.5863 | 0.0508 | -0.0075 |
| 281 | SLV 12 | 6.33 | -20.12 | 102.86 | 0.5863 | 0.0508 | -0.0075 |
| 281 | SLV 13 | -6.08 | 0.33 | -0.51 | -0.0966 | -0.3734 | -0.005 |
| 281 | SLV 14 | -6.08 | 0.33 | -0.51 | -0.0966 | -0.3734 | -0.005 |
| 281 | SLV 15 | -3.71 | -7.1 | 31.68 | 0.1732 | -0.3133 | -0.0076 |
| 281 | SLV 16 | -3.71 | -7.1 | 31.68 | 0.1732 | -0.3133 | -0.0076 |
| 282 | SLU 1 | 1.22 | -0.11 | 45.37 | 0.0008 | 0.1705 | 0.0003 |
| 282 | SLU 2 | 1.45 | -0.1 | 41.77 | -0.0018 | 0.1685 | 0.0003 |
| 282 | SLU 3 | 1.26 | -0.12 | 46.06 | 0.0007 | 0.1742 | 0.0004 |
| 282 | SLU 4 | 1.39 | -0.11 | 43.9 | -0.0008 | 0.173 | 0.0003 |
| 282 | SLU 5 | 1.51 | -0.1 | 41.97 | -0.0018 | 0.1715 | 0.0003 |
| 282 | SLU 6 | 1.31 | -0.12 | 46.26 | 0.0008 | 0.1773 | 0.0004 |
| 282 | SLU 7 | 1.45 | -0.11 | 44.09 | -0.0008 | 0.1761 | 0.0003 |
| 282 | SLU 8 | 1.34 | -0.12 | 45.77 | 0.0009 | 0.1766 | 0.0004 |
| 282 | SLU 9 | 1.47 | -0.11 | 43.61 | -0.0007 | 0.1754 | 0.0003 |
| 282 | SLU 10 | 1.83 | -0.12 | 47.45 | -0.0016 | 0.1999 | 0.0004 |
| 282 | SLU 11 | 1.64 | -0.13 | 51.75 | 0.0009 | 0.2056 | 0.0004 |
| 282 | SLU 12 | 1.77 | -0.12 | 49.58 | -0.0007 | 0.2044 | 0.0004 |
| 282 | SLU 13 | 1.89 | -0.12 | 47.65 | -0.0016 | 0.2029 | 0.0004 |
| 282 | SLU 14 | 1.69 | -0.13 | 51.94 | 0.0009 | 0.2087 | 0.0004 |
| 282 | SLU 15 | 1.83 | -0.13 | 49.78 | -0.0007 | 0.2075 | 0.0004 |
| 282 | SLU 16 | 1.72 | -0.13 | 51.46 | 0.001 | 0.208 | 0.0004 |
| 282 | SLU 17 | 1.85 | -0.12 | 49.29 | -0.0006 | 0.2068 | 0.0004 |
| 282 | SLU 18 | 1.76 | -0.14 | 53.5 | 0.001 | 0.2153 | 0.0004 |
| 282 | SLU 19 | 1.9 | -0.13 | 51.33 | -0.0005 | 0.2141 | 0.0004 |
| 282 | SLU 20 | 1.82 | -0.14 | 53.7 | 0.001 | 0.2184 | 0.0004 |
| 282 | SLU 21 | 1.96 | -0.13 | 51.53 | -0.0005 | 0.2172 | 0.0004 |
| 282 | SLU 22 | 1.55 | -0.13 | 50.64 | 0.0008 | 0.1985 | 0.0004 |
| 282 | SLU 23 | 1.78 | -0.12 | 47.04 | -0.0018 | 0.1965 | 0.0004 |
| 282 | SLU 24 | 1.58 | -0.13 | 51.33 | 0.0007 | 0.2023 | 0.0004 |
| 282 | SLU 25 | 1.72 | -0.12 | 49.16 | -0.0008 | 0.2011 | 0.0004 |
| 282 | SLU 26 | 1.83 | -0.12 | 47.23 | -0.0018 | 0.1996 | 0.0004 |
| 282 | SLU 27 | 1.64 | -0.13 | 51.53 | 0.0007 | 0.2054 | 0.0004 |
| 282 | SLU 28 | 1.78 | -0.12 | 49.36 | -0.0008 | 0.2042 | 0.0004 |

| Nodo | Cont. | Reazione a traslazione | | | Reazione a rotazione | | |
|---|---|---|---|---|---|---|---|
| Ind. | N.br. | x | y | z | x | y | z |
| 282 | SLU 29 | 1.66 | -0.13 | 51.04 | 0.0008 | 0.2046 | 0.0004 |
| 282 | SLU 30 | 1.8 | -0.12 | 48.87 | -0.0007 | 0.2034 | 0.0004 |
| 282 | SLU 31 | 2.16 | -0.13 | 52.72 | -0.0017 | 0.228 | 0.0004 |
| 282 | SLU 32 | 1.96 | -0.15 | 57.01 | 0.0009 | 0.2337 | 0.0004 |
| 282 | SLU 33 | 2.1 | -0.14 | 54.85 | -0.0007 | 0.2325 | 0.0004 |
| 282 | SLU 34 | 2.21 | -0.13 | 52.92 | -0.0016 | 0.231 | 0.0004 |
| 282 | SLU 35 | 2.02 | -0.15 | 57.21 | 0.0009 | 0.2368 | 0.0004 |
| 282 | SLU 36 | 2.16 | -0.14 | 55.05 | -0.0007 | 0.2356 | 0.0004 |
| 282 | SLU 37 | 2.04 | -0.14 | 56.73 | 0.001 | 0.2361 | 0.0004 |
| 282 | SLU 38 | 2.18 | -0.14 | 54.56 | -0.0006 | 0.2349 | 0.0004 |
| 282 | SLU 39 | 2.09 | -0.15 | 58.77 | 0.001 | 0.2434 | 0.0005 |
| 282 | SLU 40 | 2.23 | -0.14 | 56.6 | -0.0006 | 0.2422 | 0.0004 |
| 282 | SLU 41 | 2.15 | -0.15 | 58.96 | 0.001 | 0.2465 | 0.0005 |
| 282 | SLU 42 | 2.28 | -0.14 | 56.8 | -0.0005 | 0.2453 | 0.0004 |
| 282 | SLU 43 | 1.47 | -0.14 | 57.18 | 0.0011 | 0.212 | 0.0004 |
| 282 | SLU 44 | 1.7 | -0.13 | 53.57 | -0.0015 | 0.21 | 0.0004 |
| 282 | SLU 45 | 1.51 | -0.15 | 57.87 | 0.001 | 0.2157 | 0.0004 |
| 282 | SLU 46 | 1.65 | -0.14 | 55.7 | -0.0006 | 0.2145 | 0.0004 |
| 282 | SLU 47 | 1.76 | -0.13 | 53.77 | -0.0015 | 0.213 | 0.0004 |
| 282 | SLU 48 | 1.57 | -0.15 | 58.06 | 0.001 | 0.2188 | 0.0004 |
| 282 | SLU 49 | 1.71 | -0.14 | 55.9 | -0.0005 | 0.2176 | 0.0004 |
| 282 | SLU 50 | 1.59 | -0.15 | 57.58 | 0.0011 | 0.2181 | 0.0004 |
| 282 | SLU 51 | 1.73 | -0.14 | 55.41 | -0.0005 | 0.2169 | 0.0004 |
| 282 | SLU 52 | 2.08 | -0.15 | 59.26 | -0.0014 | 0.2414 | 0.0005 |
| 282 | SLU 53 | 1.89 | -0.16 | 63.55 | 0.0011 | 0.2472 | 0.0005 |
| 282 | SLU 54 | 2.03 | -0.15 | 61.39 | -0.0004 | 0.246 | 0.0005 |
| 282 | SLU 55 | 2.14 | -0.15 | 59.46 | -0.0014 | 0.2444 | 0.0005 |
| 282 | SLU 56 | 1.95 | -0.16 | 63.75 | 0.0011 | 0.2502 | 0.0005 |
| 282 | SLU 57 | 2.09 | -0.16 | 61.59 | -0.0004 | 0.249 | 0.0005 |
| 282 | SLU 58 | 1.97 | -0.16 | 63.26 | 0.0012 | 0.2495 | 0.0005 |
| 282 | SLU 59 | 2.11 | -0.15 | 61.1 | -0.0003 | 0.2483 | 0.0005 |
| 282 | SLU 60 | 2.02 | -0.16 | 65.3 | 0.0013 | 0.2569 | 0.0005 |
| 282 | SLU 61 | 2.16 | -0.16 | 63.14 | -0.0003 | 0.2557 | 0.0005 |
| 282 | SLU 62 | 2.07 | -0.17 | 65.5 | 0.0013 | 0.2599 | 0.0005 |
| 282 | SLU 63 | 2.21 | -0.16 | 63.34 | -0.0003 | 0.2587 | 0.0005 |
| 282 | SLU 64 | 1.8 | -0.16 | 62.45 | 0.0011 | 0.24 | 0.0005 |
| 282 | SLU 65 | 2.03 | -0.15 | 58.84 | -0.0015 | 0.238 | 0.0005 |
| 282 | SLU 66 | 1.84 | -0.16 | 63.13 | 0.001 | 0.2438 | 0.0005 |
| 282 | SLU 67 | 1.97 | -0.15 | 60.97 | -0.0006 | 0.2426 | 0.0005 |
| 282 | SLU 68 | 2.09 | -0.15 | 59.04 | -0.0015 | 0.2411 | 0.0005 |
| 282 | SLU 69 | 1.89 | -0.16 | 63.33 | 0.001 | 0.2469 | 0.0005 |
| 282 | SLU 70 | 2.03 | -0.15 | 61.17 | -0.0006 | 0.2457 | 0.0005 |
| 282 | SLU 71 | 1.92 | -0.16 | 62.85 | 0.0011 | 0.2462 | 0.0005 |
| 282 | SLU 72 | 2.05 | -0.15 | 60.68 | -0.0005 | 0.245 | 0.0005 |
| 282 | SLU 73 | 2.41 | -0.16 | 64.53 | -0.0014 | 0.2695 | 0.0005 |
| 282 | SLU 74 | 2.22 | -0.17 | 68.82 | 0.0011 | 0.2752 | 0.0005 |
| 282 | SLU 75 | 2.35 | -0.17 | 66.66 | -0.0004 | 0.274 | 0.0005 |
| 282 | SLU 76 | 2.47 | -0.16 | 64.73 | -0.0014 | 0.2725 | 0.0005 |
| 282 | SLU 77 | 2.27 | -0.18 | 69.02 | 0.0011 | 0.2783 | 0.0005 |
| 282 | SLU 78 | 2.41 | -0.17 | 66.85 | -0.0004 | 0.2771 | 0.0005 |
| 282 | SLU 79 | 2.3 | -0.17 | 68.53 | 0.0012 | 0.2776 | 0.0005 |
| 282 | SLU 80 | 2.43 | -0.17 | 66.37 | -0.0003 | 0.2764 | 0.0005 |
| 282 | SLU 81 | 2.34 | -0.18 | 70.57 | 0.0013 | 0.2849 | 0.0005 |
| 282 | SLU 82 | 2.48 | -0.17 | 68.41 | -0.0003 | 0.2837 | 0.0005 |
| 282 | SLU 83 | 2.4 | -0.18 | 70.77 | 0.0013 | 0.288 | 0.0005 |
| 282 | SLU 84 | 2.54 | -0.17 | 68.61 | -0.0003 | 0.2868 | 0.0005 |
| 282 | SLE RA 1 | 1.31 | -0.12 | 46.88 | 0.0008 | 0.1785 | 0.0004 |
| 282 | SLE RA 2 | 1.47 | -0.11 | 44.47 | -0.0009 | 0.1771 | 0.0003 |
| 282 | SLE RA 3 | 1.34 | -0.12 | 47.34 | 0.0008 | 0.181 | 0.0004 |
| 282 | SLE RA 4 | 1.43 | -0.12 | 45.89 | -0.0003 | 0.1802 | 0.0004 |
| 282 | SLE RA 5 | 1.5 | -0.11 | 44.61 | -0.0009 | 0.1792 | 0.0003 |
| 282 | SLE RA 6 | 1.38 | -0.12 | 47.47 | 0.0008 | 0.183 | 0.0004 |
| 282 | SLE RA 7 | 1.47 | -0.12 | 46.03 | -0.0003 | 0.1822 | 0.0004 |
| 282 | SLE RA 8 | 1.39 | -0.12 | 47.14 | 0.0008 | 0.1826 | 0.0004 |
| 282 | SLE RA 9 | 1.48 | -0.12 | 45.7 | -0.0002 | 0.1818 | 0.0004 |
| 282 | SLE RA 10 | 1.72 | -0.12 | 48.27 | -0.0008 | 0.1981 | 0.0004 |
| 282 | SLE RA 11 | 1.59 | -0.13 | 51.13 | 0.0009 | 0.2019 | 0.0004 |
| 282 | SLE RA 12 | 1.68 | -0.13 | 49.68 | -0.0002 | 0.2011 | 0.0004 |
| 282 | SLE RA 13 | 1.76 | -0.12 | 48.4 | -0.0008 | 0.2001 | 0.0004 |
| 282 | SLE RA 14 | 1.63 | -0.13 | 51.26 | 0.0009 | 0.204 | 0.0004 |
| 282 | SLE RA 15 | 1.72 | -0.13 | 49.82 | -0.0002 | 0.2032 | 0.0004 |
| 282 | SLE RA 16 | 1.64 | -0.13 | 50.93 | 0.0009 | 0.2035 | 0.0004 |
| 282 | SLE RA 17 | 1.74 | -0.12 | 49.49 | -0.0001 | 0.2027 | 0.0004 |
| 282 | SLE RA 18 | 1.68 | -0.13 | 52.3 | 0.0009 | 0.2084 | 0.0004 |
| 282 | SLE RA 19 | 1.77 | -0.13 | 50.85 | -0.0001 | 0.2076 | 0.0004 |
| 282 | SLE RA 20 | 1.71 | -0.13 | 52.43 | 0.001 | 0.2104 | 0.0004 |
| 282 | SLE RA 21 | 1.81 | -0.13 | 50.98 | -0.0001 | 0.2096 | 0.0004 |
| 282 | SLE FR 1 | 1.31 | -0.12 | 46.88 | 0.0008 | 0.1785 | 0.0004 |
| 282 | SLE FR 2 | 1.34 | -0.12 | 46.4 | 0.0005 | 0.1782 | 0.0004 |
| 282 | SLE FR 3 | 1.33 | -0.12 | 46.93 | 0.0008 | 0.1793 | 0.0004 |
| 282 | SLE FR 4 | 1.45 | -0.12 | 48.02 | 0.0005 | 0.1872 | 0.0004 |
| 282 | SLE FR 5 | 1.44 | -0.12 | 48.56 | 0.0009 | 0.1883 | 0.0004 |
| 282 | SLE FR 6 | 1.49 | -0.13 | 49.59 | 0.0009 | 0.1934 | 0.0004 |
| 282 | SLE QP 1 | 1.31 | -0.12 | 46.88 | 0.0008 | 0.1785 | 0.0004 |
| 282 | SLE QP 2 | 1.42 | -0.12 | 48.5 | 0.0009 | 0.1875 | 0.0004 |
| 282 | SLD 1 | 7.64 | -0.21 | 57.14 | -0.0643 | 0.4786 | 0.0005 |
| 282 | SLD 2 | 7.64 | -0.21 | 57.14 | -0.0643 | 0.4786 | 0.0005 |
| 282 | SLD 3 | 8.78 | -0.26 | 66.16 | -0.0016 | 0.5279 | 0.0006 |

| Nodo | Cont. | Reazione a traslazione | | | Reazione a rotazione | | |
|---|---|---|---|---|---|---|---|
| Ind. | N.br. | x | y | z | x | y | z |
| 282 | SLD 4 | 8.78 | -0.26 | 66.16 | -0.0016 | 0.5279 | 0.0006 |
| 282 | SLD 5 | 1.55 | -0.08 | 37.41 | -0.1139 | 0.1999 | 0.0003 |
| 282 | SLD 6 | 1.55 | -0.08 | 37.41 | -0.1139 | 0.1999 | 0.0003 |
| 282 | SLD 7 | 5.36 | -0.23 | 67.48 | 0.0953 | 0.3645 | 0.0006 |
| 282 | SLD 8 | 5.36 | -0.23 | 67.48 | 0.0953 | 0.3645 | 0.0006 |
| 282 | SLD 9 | -2.52 | -0.01 | 29.52 | -0.0936 | 0.0104 | 0.0002 |
| 282 | SLD 10 | -2.52 | -0.01 | 29.52 | -0.0936 | 0.0104 | 0.0002 |
| 282 | SLD 11 | 1.29 | -0.16 | 59.6 | 0.1156 | 0.175 | 0.0005 |
| 282 | SLD 12 | 1.29 | -0.16 | 59.6 | 0.1156 | 0.175 | 0.0005 |
| 282 | SLD 13 | -5.94 | 0.01 | 30.85 | 0.0033 | -0.153 | 0.0002 |
| 282 | SLD 14 | -5.94 | 0.01 | 30.85 | 0.0033 | -0.153 | 0.0002 |
| 282 | SLD 15 | -4.8 | -0.03 | 39.87 | 0.0661 | -0.1036 | 0.0003 |
| 282 | SLD 16 | -4.8 | -0.03 | 39.87 | 0.0661 | -0.1036 | 0.0003 |
| 282 | SLV 1 | 15.71 | -0.34 | 68.37 | -0.1582 | 0.8547 | 0.0006 |
| 282 | SLV 2 | 15.71 | -0.34 | 68.37 | -0.1582 | 0.8547 | 0.0006 |
| 282 | SLV 3 | 18.36 | -0.44 | 89.64 | -0.0049 | 0.971 | 0.0008 |
| 282 | SLV 4 | 18.36 | -0.44 | 89.64 | -0.0049 | 0.971 | 0.0008 |
| 282 | SLV 5 | 1.68 | -0.02 | 22.2 | -0.2794 | 0.2113 | 0.0002 |
| 282 | SLV 6 | 1.68 | -0.02 | 22.2 | -0.2794 | 0.2113 | 0.0002 |
| 282 | SLV 7 | 10.53 | -0.38 | 93.11 | 0.2317 | 0.5989 | 0.0008 |
| 282 | SLV 8 | 10.53 | -0.38 | 93.11 | 0.2317 | 0.5989 | 0.0008 |
| 282 | SLV 9 | -7.69 | 0.14 | 3.9 | -0.23 | -0.224 | -0.0001 |
| 282 | SLV 10 | -7.69 | 0.14 | 3.9 | -0.23 | -0.224 | -0.0001 |
| 282 | SLV 11 | 1.16 | -0.22 | 74.81 | 0.2811 | 0.1637 | 0.0006 |
| 282 | SLV 12 | 1.16 | -0.22 | 74.81 | 0.2811 | 0.1637 | 0.0006 |
| 282 | SLV 13 | -15.52 | 0.2 | 7.37 | 0.0066 | -0.5961 | -0.0001 |
| 282 | SLV 14 | -15.52 | 0.2 | 7.37 | 0.0066 | -0.5961 | -0.0001 |
| 282 | SLV 15 | -12.86 | 0.09 | 28.64 | 0.1599 | -0.4798 | 0.0001 |
| 282 | SLV 16 | -12.86 | 0.09 | 28.64 | 0.1599 | -0.4798 | 0.0001 |
| 283 | SLU 1 | -1.83 | 0.05 | 38.5 | -0.0573 | -0.1095 | 0.0001 |
| 283 | SLU 2 | -1.44 | 0.05 | 35.86 | -0.0566 | -0.0923 | 0.0001 |
| 283 | SLU 3 | -1.84 | 0.05 | 39.04 | -0.0586 | -0.1103 | 0.0001 |
| 283 | SLU 4 | -1.6 | 0.05 | 37.46 | -0.0582 | -0.1 | 0.0001 |
| 283 | SLU 5 | -1.39 | 0.05 | 36.01 | -0.0569 | -0.0903 | 0.0001 |
| 283 | SLU 6 | -1.79 | 0.05 | 39.2 | -0.0588 | -0.1083 | 0.0001 |
| 283 | SLU 7 | -1.55 | 0.05 | 37.61 | -0.0584 | -0.098 | 0.0001 |
| 283 | SLU 8 | -1.74 | 0.05 | 38.81 | -0.0579 | -0.1055 | 0.0001 |
| 283 | SLU 9 | -1.5 | 0.05 | 37.22 | -0.0575 | -0.0952 | 0.0001 |
| 283 | SLU 10 | -1.46 | 0.05 | 40.77 | -0.0636 | -0.0986 | 0.0001 |
| 283 | SLU 11 | -1.87 | 0.05 | 43.95 | -0.0656 | -0.1166 | 0.0001 |
| 283 | SLU 12 | -1.63 | 0.05 | 42.37 | -0.0652 | -0.1063 | 0.0001 |
| 283 | SLU 13 | -1.42 | 0.05 | 40.92 | -0.0639 | -0.0966 | 0.0001 |
| 283 | SLU 14 | -1.82 | 0.05 | 44.11 | -0.0659 | -0.1146 | 0.0001 |
| 283 | SLU 15 | -1.58 | 0.05 | 42.52 | -0.0655 | -0.1043 | 0.0001 |
| 283 | SLU 16 | -1.76 | 0.05 | 43.72 | -0.0649 | -0.1118 | 0.0001 |
| 283 | SLU 17 | -1.53 | 0.05 | 42.13 | -0.0645 | -0.1015 | 0.0001 |
| 283 | SLU 18 | -1.87 | 0.05 | 45.51 | -0.0673 | -0.1185 | 0.0001 |
| 283 | SLU 19 | -1.64 | 0.05 | 43.93 | -0.0669 | -0.1082 | 0.0001 |
| 283 | SLU 20 | -1.82 | 0.05 | 45.67 | -0.0676 | -0.1165 | 0.0001 |
| 283 | SLU 21 | -1.59 | 0.05 | 44.08 | -0.0672 | -0.1062 | 0.0001 |
| 283 | SLU 22 | -1.88 | 0.05 | 43.03 | -0.0642 | -0.1161 | 0.0001 |
| 283 | SLU 23 | -1.49 | 0.05 | 40.38 | -0.0636 | -0.099 | 0.0001 |
| 283 | SLU 24 | -1.89 | 0.05 | 43.57 | -0.0655 | -0.1169 | 0.0001 |
| 283 | SLU 25 | -1.65 | 0.05 | 41.99 | -0.0651 | -0.1066 | 0.0001 |
| 283 | SLU 26 | -1.44 | 0.05 | 40.54 | -0.0639 | -0.097 | 0.0001 |
| 283 | SLU 27 | -1.84 | 0.05 | 43.73 | -0.0658 | -0.115 | 0.0001 |
| 283 | SLU 28 | -1.6 | 0.05 | 42.14 | -0.0654 | -0.1046 | 0.0001 |
| 283 | SLU 29 | -1.79 | 0.05 | 43.34 | -0.0648 | -0.1122 | 0.0001 |
| 283 | SLU 30 | -1.55 | 0.05 | 41.75 | -0.0644 | -0.1019 | 0.0001 |
| 283 | SLU 31 | -1.51 | 0.06 | 45.3 | -0.0706 | -0.1053 | 0.0001 |
| 283 | SLU 32 | -1.92 | 0.06 | 48.48 | -0.0726 | -0.1232 | 0.0001 |
| 283 | SLU 33 | -1.68 | 0.06 | 46.9 | -0.0721 | -0.1129 | 0.0001 |
| 283 | SLU 34 | -1.47 | 0.06 | 45.45 | -0.0709 | -0.1033 | 0.0001 |
| 283 | SLU 35 | -1.87 | 0.06 | 48.64 | -0.0728 | -0.1212 | 0.0001 |
| 283 | SLU 36 | -1.63 | 0.06 | 47.05 | -0.0724 | -0.1109 | 0.0001 |
| 283 | SLU 37 | -1.81 | 0.06 | 48.25 | -0.0718 | -0.1185 | 0.0001 |
| 283 | SLU 38 | -1.58 | 0.06 | 46.66 | -0.0714 | -0.1082 | 0.0001 |
| 283 | SLU 39 | -1.92 | 0.06 | 50.04 | -0.0743 | -0.1251 | 0.0001 |
| 283 | SLU 40 | -1.68 | 0.06 | 48.46 | -0.0739 | -0.1148 | 0.0001 |
| 283 | SLU 41 | -1.87 | 0.06 | 50.2 | -0.0746 | -0.1231 | 0.0001 |
| 283 | SLU 42 | -1.64 | 0.06 | 48.61 | -0.0742 | -0.1128 | 0.0001 |
| 283 | SLU 43 | -2.37 | 0.06 | 48.49 | -0.0721 | -0.14 | 0.0001 |
| 283 | SLU 44 | -1.97 | 0.06 | 45.85 | -0.0714 | -0.1229 | 0.0001 |
| 283 | SLU 45 | -2.37 | 0.06 | 49.04 | -0.0734 | -0.1408 | 0.0001 |
| 283 | SLU 46 | -2.14 | 0.06 | 47.45 | -0.073 | -0.1305 | 0.0001 |
| 283 | SLU 47 | -1.92 | 0.06 | 46.01 | -0.0717 | -0.1209 | 0.0001 |
| 283 | SLU 48 | -2.32 | 0.06 | 49.19 | -0.0736 | -0.1388 | 0.0001 |
| 283 | SLU 49 | -2.09 | 0.06 | 47.61 | -0.0732 | -0.1285 | 0.0001 |
| 283 | SLU 50 | -2.27 | 0.06 | 48.8 | -0.0727 | -0.136 | 0.0001 |
| 283 | SLU 51 | -2.03 | 0.06 | 47.22 | -0.0723 | -0.1257 | 0.0001 |
| 283 | SLU 52 | -2 | 0.06 | 50.76 | -0.0784 | -0.1291 | 0.0001 |
| 283 | SLU 53 | -2.4 | 0.06 | 53.95 | -0.0804 | -0.1471 | 0.0001 |
| 283 | SLU 54 | -2.16 | 0.06 | 52.36 | -0.08 | -0.1368 | 0.0001 |
| 283 | SLU 55 | -1.95 | 0.06 | 50.92 | -0.0787 | -0.1272 | 0.0001 |
| 283 | SLU 56 | -2.35 | 0.06 | 54.1 | -0.0807 | -0.1451 | 0.0001 |
| 283 | SLU 57 | -2.12 | 0.06 | 52.52 | -0.0803 | -0.1348 | 0.0001 |
| 283 | SLU 58 | -2.3 | 0.06 | 53.71 | -0.0797 | -0.1423 | 0.0001 |
| 283 | SLU 59 | -2.06 | 0.06 | 52.13 | -0.0793 | -0.132 | 0.0001 |

| Nodo | Cont. | Reazione a traslazione | | | Reazione a rotazione | | |
|---|---|---|---|---|---|---|---|
| Ind. | N.br. | x | y | z | x | y | z |
| 283 | SLU 60 | -2.41 | 0.07 | 55.51 | -0.0821 | -0.149 | 0.0001 |
| 283 | SLU 61 | -2.17 | 0.07 | 53.93 | -0.0817 | -0.1387 | 0.0001 |
| 283 | SLU 62 | -2.36 | 0.07 | 55.66 | -0.0824 | -0.147 | 0.0001 |
| 283 | SLU 63 | -2.12 | 0.07 | 54.08 | -0.082 | -0.1367 | 0.0001 |
| 283 | SLU 64 | -2.41 | 0.06 | 53.02 | -0.079 | -0.1467 | 0.0001 |
| 283 | SLU 65 | -2.02 | 0.06 | 50.38 | -0.0784 | -0.1295 | 0.0001 |
| 283 | SLU 66 | -2.42 | 0.06 | 53.57 | -0.0803 | -0.1475 | 0.0001 |
| 283 | SLU 67 | -2.18 | 0.06 | 51.98 | -0.0799 | -0.1372 | 0.0001 |
| 283 | SLU 68 | -1.97 | 0.06 | 50.54 | -0.0787 | -0.1275 | 0.0001 |
| 283 | SLU 69 | -2.37 | 0.06 | 53.72 | -0.0806 | -0.1455 | 0.0001 |
| 283 | SLU 70 | -2.14 | 0.06 | 52.14 | -0.0802 | -0.1352 | 0.0001 |
| 283 | SLU 71 | -2.32 | 0.06 | 53.33 | -0.0796 | -0.1427 | 0.0001 |
| 283 | SLU 72 | -2.08 | 0.06 | 51.75 | -0.0792 | -0.1324 | 0.0001 |
| 283 | SLU 73 | -2.05 | 0.07 | 55.29 | -0.0854 | -0.1358 | 0.0001 |
| 283 | SLU 74 | -2.45 | 0.07 | 58.48 | -0.0874 | -0.1538 | 0.0001 |
| 283 | SLU 75 | -2.21 | 0.07 | 56.89 | -0.0869 | -0.1435 | 0.0001 |
| 283 | SLU 76 | -2 | 0.07 | 55.45 | -0.0857 | -0.1338 | 0.0001 |
| 283 | SLU 77 | -2.4 | 0.07 | 58.63 | -0.0876 | -0.1518 | 0.0001 |
| 283 | SLU 78 | -2.16 | 0.07 | 57.05 | -0.0872 | -0.1415 | 0.0001 |
| 283 | SLU 79 | -2.35 | 0.07 | 58.24 | -0.0866 | -0.149 | 0.0001 |
| 283 | SLU 80 | -2.11 | 0.07 | 56.66 | -0.0862 | -0.1387 | 0.0001 |
| 283 | SLU 81 | -2.45 | 0.07 | 60.04 | -0.0891 | -0.1557 | 0.0001 |
| 283 | SLU 82 | -2.22 | 0.07 | 58.45 | -0.0887 | -0.1454 | 0.0001 |
| 283 | SLU 83 | -2.41 | 0.07 | 60.19 | -0.0894 | -0.1537 | 0.0001 |
| 283 | SLU 84 | -2.17 | 0.07 | 58.61 | -0.089 | -0.1434 | 0.0001 |
| 283 | SLE RA 1 | -1.85 | 0.05 | 39.79 | -0.0593 | -0.1114 | 0.0001 |
| 283 | SLE RA 2 | -1.58 | 0.05 | 38.03 | -0.0588 | -0.0999 | 0.0001 |
| 283 | SLE RA 3 | -1.85 | 0.05 | 40.15 | -0.0601 | -0.1119 | 0.0001 |
| 283 | SLE RA 4 | -1.69 | 0.05 | 39.1 | -0.0599 | -0.105 | 0.0001 |
| 283 | SLE RA 5 | -1.55 | 0.05 | 38.13 | -0.059 | -0.0986 | 0.0001 |
| 283 | SLE RA 6 | -1.82 | 0.05 | 40.26 | -0.0603 | -0.1106 | 0.0001 |
| 283 | SLE RA 7 | -1.66 | 0.05 | 39.2 | -0.06 | -0.1037 | 0.0001 |
| 283 | SLE RA 8 | -1.78 | 0.05 | 40 | -0.0597 | -0.1087 | 0.0001 |
| 283 | SLE RA 9 | -1.62 | 0.05 | 38.94 | -0.0594 | -0.1019 | 0.0001 |
| 283 | SLE RA 10 | -1.6 | 0.05 | 41.3 | -0.0635 | -0.1041 | 0.0001 |
| 283 | SLE RA 11 | -1.87 | 0.05 | 43.43 | -0.0648 | -0.1161 | 0.0001 |
| 283 | SLE RA 12 | -1.71 | 0.05 | 42.37 | -0.0645 | -0.1092 | 0.0001 |
| 283 | SLE RA 13 | -1.57 | 0.05 | 41.41 | -0.0637 | -0.1028 | 0.0001 |
| 283 | SLE RA 14 | -1.84 | 0.05 | 43.53 | -0.065 | -0.1148 | 0.0001 |
| 283 | SLE RA 15 | -1.68 | 0.05 | 42.48 | -0.0647 | -0.1079 | 0.0001 |
| 283 | SLE RA 16 | -1.8 | 0.05 | 43.27 | -0.0643 | -0.1129 | 0.0001 |
| 283 | SLE RA 17 | -1.64 | 0.05 | 42.22 | -0.0641 | -0.1061 | 0.0001 |
| 283 | SLE RA 18 | -1.87 | 0.05 | 44.47 | -0.066 | -0.1174 | 0.0001 |
| 283 | SLE RA 19 | -1.72 | 0.05 | 43.41 | -0.0657 | -0.1105 | 0.0001 |
| 283 | SLE RA 20 | -1.84 | 0.05 | 44.57 | -0.0662 | -0.116 | 0.0001 |
| 283 | SLE RA 21 | -1.68 | 0.05 | 43.52 | -0.0659 | -0.1092 | 0.0001 |
| 283 | SLE FR 1 | -1.85 | 0.05 | 39.79 | -0.0593 | -0.1114 | 0.0001 |
| 283 | SLE FR 2 | -1.79 | 0.05 | 39.44 | -0.0592 | -0.1091 | 0.0001 |
| 283 | SLE FR 3 | -1.83 | 0.05 | 39.83 | -0.0593 | -0.1108 | 0.0001 |
| 283 | SLE FR 4 | -1.8 | 0.05 | 40.84 | -0.0612 | -0.1109 | 0.0001 |
| 283 | SLE FR 5 | -1.84 | 0.05 | 41.24 | -0.0614 | -0.1126 | 0.0001 |
| 283 | SLE FR 6 | -1.86 | 0.05 | 42.13 | -0.0626 | -0.1144 | 0.0001 |
| 283 | SLE QP 1 | -1.85 | 0.05 | 39.79 | -0.0593 | -0.1114 | 0.0001 |
| 283 | SLE QP 2 | -1.85 | 0.05 | 41.19 | -0.0613 | -0.1132 | 0.0001 |
| 283 | SLD 1 | 6.2 | 0.1 | 46.62 | -0.1895 | 0.247 | 0.0004 |
| 283 | SLD 2 | 6.2 | 0.1 | 46.62 | -0.1895 | 0.247 | 0.0004 |
| 283 | SLD 3 | 5.24 | 0.21 | 53.06 | -0.0579 | 0.2108 | 0.0002 |
| 283 | SLD 4 | 5.24 | 0.21 | 53.06 | -0.0579 | 0.2108 | 0.0002 |
| 283 | SLD 5 | 2.02 | -0.11 | 33.06 | -0.2994 | 0.0498 | 0.0004 |
| 283 | SLD 6 | 2.02 | -0.11 | 33.06 | -0.2994 | 0.0498 | 0.0004 |
| 283 | SLD 7 | -1.19 | 0.27 | 54.51 | 0.1394 | -0.0709 | -0.0002 |
| 283 | SLD 8 | -1.19 | 0.27 | 54.51 | 0.1394 | -0.0709 | -0.0002 |
| 283 | SLD 9 | -2.52 | -0.17 | 27.88 | -0.2619 | -0.1554 | 0.0003 |
| 283 | SLD 10 | -2.52 | -0.17 | 27.88 | -0.2619 | -0.1554 | 0.0003 |
| 283 | SLD 11 | -5.73 | 0.21 | 49.32 | 0.1768 | -0.2762 | -0.0003 |
| 283 | SLD 12 | -5.73 | 0.21 | 49.32 | 0.1768 | -0.2762 | -0.0003 |
| 283 | SLD 13 | -8.94 | -0.11 | 29.33 | -0.0647 | -0.4371 | -0.0001 |
| 283 | SLD 14 | -8.94 | -0.11 | 29.33 | -0.0647 | -0.4371 | -0.0001 |
| 283 | SLD 15 | -9.91 | 0 | 35.76 | 0.067 | -0.4734 | -0.0002 |
| 283 | SLD 16 | -9.91 | 0 | 35.76 | 0.067 | -0.4734 | -0.0002 |
| 283 | SLV 1 | 16.68 | 0.17 | 53.74 | -0.3742 | 0.7156 | 0.0008 |
| 283 | SLV 2 | 16.68 | 0.17 | 53.74 | -0.3742 | 0.7156 | 0.0008 |
| 283 | SLV 3 | 14.44 | 0.44 | 68.92 | -0.0512 | 0.6315 | 0.0003 |
| 283 | SLV 4 | 14.44 | 0.44 | 68.92 | -0.0512 | 0.6315 | 0.0003 |
| 283 | SLV 5 | 7.1 | -0.33 | 21.94 | -0.645 | 0.263 | 0.0009 |
| 283 | SLV 6 | 7.1 | -0.33 | 21.94 | -0.645 | 0.263 | 0.0009 |
| 283 | SLV 7 | -0.36 | 0.58 | 72.53 | 0.4316 | -0.0173 | -0.0005 |
| 283 | SLV 8 | -0.36 | 0.58 | 72.53 | 0.4316 | -0.0173 | -0.0005 |
| 283 | SLV 9 | -3.35 | -0.48 | 9.86 | -0.5542 | -0.2091 | 0.0007 |
| 283 | SLV 10 | -3.35 | -0.48 | 9.86 | -0.5542 | -0.2091 | 0.0007 |
| 283 | SLV 11 | -10.81 | 0.43 | 60.45 | 0.5224 | -0.4894 | -0.0008 |
| 283 | SLV 12 | -10.81 | 0.43 | 60.45 | 0.5224 | -0.4894 | -0.0008 |
| 283 | SLV 13 | -18.15 | -0.35 | 13.47 | -0.0714 | -0.8579 | -0.0002 |
| 283 | SLV 14 | -18.15 | -0.35 | 13.47 | -0.0714 | -0.8579 | -0.0002 |
| 283 | SLV 15 | -20.39 | -0.07 | 28.65 | 0.2516 | -0.942 | -0.0006 |
| 283 | SLV 16 | -20.39 | -0.07 | 28.65 | 0.2516 | -0.942 | -0.0006 |
| 284 | SLU 1 | -1.74 | 0.16 | 33.64 | -0.1121 | 0.0019 | 0 |
| 284 | SLU 2 | -1.41 | 0.15 | 31.67 | -0.1086 | 0.0095 | 0 |

| Nodo | Cont. | Reazione a traslazione | | | Reazione a rotazione | | |
|---|---|---|---|---|---|---|---|
| Ind. | N.br. | x | y | z | x | y | z |
| 284 | SLU 3 | -1.73 | 0.16 | 34.09 | -0.1146 | 0.0036 | 0 |
| 284 | SLU 4 | -1.53 | 0.16 | 32.9 | -0.1125 | 0.0081 | 0 |
| 284 | SLU 5 | -1.36 | 0.15 | 31.8 | -0.1092 | 0.012 | 0 |
| 284 | SLU 6 | -1.68 | 0.16 | 34.21 | -0.1152 | 0.0061 | 0 |
| 284 | SLU 7 | -1.48 | 0.16 | 33.03 | -0.1131 | 0.0106 | 0 |
| 284 | SLU 8 | -1.63 | 0.16 | 33.89 | -0.1134 | 0.007 | 0 |
| 284 | SLU 9 | -1.44 | 0.16 | 32.71 | -0.1113 | 0.0115 | 0 |
| 284 | SLU 10 | -1.45 | 0.17 | 36.07 | -0.1226 | 0.0173 | 0 |
| 284 | SLU 11 | -1.78 | 0.18 | 38.49 | -0.1285 | 0.0114 | 0 |
| 284 | SLU 12 | -1.58 | 0.18 | 37.31 | -0.1264 | 0.0159 | 0 |
| 284 | SLU 13 | -1.4 | 0.17 | 36.2 | -0.1232 | 0.0198 | 0 |
| 284 | SLU 14 | -1.73 | 0.18 | 38.62 | -0.1292 | 0.0139 | 0 |
| 284 | SLU 15 | -1.53 | 0.18 | 37.43 | -0.1271 | 0.0185 | 0 |
| 284 | SLU 16 | -1.68 | 0.18 | 38.3 | -0.1273 | 0.0148 | 0 |
| 284 | SLU 17 | -1.48 | 0.18 | 37.11 | -0.1252 | 0.0193 | 0 |
| 284 | SLU 18 | -1.8 | 0.19 | 39.93 | -0.132 | 0.0131 | 0 |
| 284 | SLU 19 | -1.6 | 0.18 | 38.75 | -0.1299 | 0.0177 | 0 |
| 284 | SLU 20 | -1.75 | 0.19 | 40.06 | -0.1326 | 0.0156 | 0 |
| 284 | SLU 21 | -1.55 | 0.18 | 38.87 | -0.1306 | 0.0202 | 0 |
| 284 | SLU 22 | -1.79 | 0.18 | 37.67 | -0.1258 | 0.0089 | 0 |
| 284 | SLU 23 | -1.46 | 0.17 | 35.7 | -0.1223 | 0.0164 | 0 |
| 284 | SLU 24 | -1.78 | 0.18 | 38.12 | -0.1283 | 0.0105 | 0 |
| 284 | SLU 25 | -1.59 | 0.18 | 36.94 | -0.1262 | 0.0151 | 0 |
| 284 | SLU 26 | -1.41 | 0.17 | 35.83 | -0.1229 | 0.0189 | 0 |
| 284 | SLU 27 | -1.73 | 0.18 | 38.25 | -0.1289 | 0.013 | 0 |
| 284 | SLU 28 | -1.53 | 0.18 | 37.07 | -0.1268 | 0.0176 | 0 |
| 284 | SLU 29 | -1.69 | 0.18 | 37.93 | -0.127 | 0.0139 | 0 |
| 284 | SLU 30 | -1.49 | 0.18 | 36.75 | -0.125 | 0.0184 | 0 |
| 284 | SLU 31 | -1.51 | 0.19 | 40.11 | -0.1362 | 0.0242 | 0 |
| 284 | SLU 32 | -1.83 | 0.2 | 42.52 | -0.1422 | 0.0183 | 0 |
| 284 | SLU 33 | -1.63 | 0.2 | 41.34 | -0.1401 | 0.0229 | 0 |
| 284 | SLU 34 | -1.45 | 0.19 | 40.23 | -0.1369 | 0.0268 | 0 |
| 284 | SLU 35 | -1.78 | 0.2 | 42.65 | -0.1428 | 0.0209 | 0 |
| 284 | SLU 36 | -1.58 | 0.2 | 41.47 | -0.1408 | 0.0254 | 0 |
| 284 | SLU 37 | -1.73 | 0.2 | 42.33 | -0.141 | 0.0217 | 0 |
| 284 | SLU 38 | -1.54 | 0.19 | 41.15 | -0.1389 | 0.0263 | 0 |
| 284 | SLU 39 | -1.85 | 0.2 | 43.96 | -0.1457 | 0.0201 | 0 |
| 284 | SLU 40 | -1.66 | 0.2 | 42.78 | -0.1436 | 0.0246 | 0 |
| 284 | SLU 41 | -1.8 | 0.21 | 44.09 | -0.1463 | 0.0226 | 0 |
| 284 | SLU 42 | -1.61 | 0.2 | 42.91 | -0.1443 | 0.0271 | 0 |
| 284 | SLU 43 | -2.24 | 0.2 | 42.35 | -0.141 | 0.0002 | 0 |
| 284 | SLU 44 | -1.91 | 0.19 | 40.38 | -0.1375 | 0.0077 | 0 |
| 284 | SLU 45 | -2.23 | 0.2 | 42.8 | -0.1435 | 0.0018 | 0 |
| 284 | SLU 46 | -2.03 | 0.2 | 41.61 | -0.1414 | 0.0063 | 0 |
| 284 | SLU 47 | -1.86 | 0.19 | 40.51 | -0.1382 | 0.0102 | 0 |
| 284 | SLU 48 | -2.18 | 0.2 | 42.92 | -0.1441 | 0.0043 | 0 |
| 284 | SLU 49 | -1.98 | 0.2 | 41.74 | -0.1421 | 0.0089 | 0 |
| 284 | SLU 50 | -2.14 | 0.2 | 42.6 | -0.1423 | 0.0052 | 0 |
| 284 | SLU 51 | -1.94 | 0.2 | 41.42 | -0.1402 | 0.0097 | 0 |
| 284 | SLU 52 | -1.95 | 0.21 | 44.78 | -0.1515 | 0.0155 | 0 |
| 284 | SLU 53 | -2.28 | 0.22 | 47.2 | -0.1574 | 0.0096 | 0 |
| 284 | SLU 54 | -2.08 | 0.22 | 46.02 | -0.1554 | 0.0142 | 0 |
| 284 | SLU 55 | -1.9 | 0.21 | 44.91 | -0.1521 | 0.018 | 0 |
| 284 | SLU 56 | -2.23 | 0.22 | 47.32 | -0.1581 | 0.0121 | 0 |
| 284 | SLU 57 | -2.03 | 0.22 | 46.14 | -0.156 | 0.0167 | 0 |
| 284 | SLU 58 | -2.18 | 0.22 | 47.01 | -0.1562 | 0.013 | 0 |
| 284 | SLU 59 | -1.98 | 0.22 | 45.82 | -0.1542 | 0.0175 | 0 |
| 284 | SLU 60 | -2.3 | 0.23 | 48.64 | -0.1609 | 0.0113 | 0 |
| 284 | SLU 61 | -2.11 | 0.22 | 47.46 | -0.1589 | 0.0159 | 0 |
| 284 | SLU 62 | -2.25 | 0.23 | 48.76 | -0.1616 | 0.0138 | 0 |
| 284 | SLU 63 | -2.06 | 0.22 | 47.58 | -0.1595 | 0.0184 | 0 |
| 284 | SLU 64 | -2.29 | 0.22 | 46.38 | -0.1547 | 0.0071 | 0 |
| 284 | SLU 65 | -1.96 | 0.21 | 44.41 | -0.1512 | 0.0146 | 0 |
| 284 | SLU 66 | -2.29 | 0.22 | 46.83 | -0.1572 | 0.0087 | 0 |
| 284 | SLU 67 | -2.09 | 0.22 | 45.65 | -0.1551 | 0.0133 | 0 |
| 284 | SLU 68 | -1.91 | 0.21 | 44.54 | -0.1519 | 0.0171 | 0 |
| 284 | SLU 69 | -2.23 | 0.22 | 46.96 | -0.1578 | 0.0113 | 0 |
| 284 | SLU 70 | -2.04 | 0.22 | 45.77 | -0.1557 | 0.0158 | 0 |
| 284 | SLU 71 | -2.19 | 0.22 | 46.64 | -0.156 | 0.0121 | 0 |
| 284 | SLU 72 | -1.99 | 0.22 | 45.46 | -0.1539 | 0.0166 | 0 |
| 284 | SLU 73 | -2.01 | 0.23 | 48.81 | -0.1652 | 0.0225 | 0 |
| 284 | SLU 74 | -2.33 | 0.24 | 51.23 | -0.1711 | 0.0166 | 0 |
| 284 | SLU 75 | -2.13 | 0.24 | 50.05 | -0.1691 | 0.0211 | 0 |
| 284 | SLU 76 | -1.96 | 0.23 | 48.94 | -0.1658 | 0.025 | 0 |
| 284 | SLU 77 | -2.28 | 0.24 | 51.36 | -0.1718 | 0.0191 | 0 |
| 284 | SLU 78 | -2.08 | 0.24 | 50.18 | -0.1697 | 0.0236 | 0 |
| 284 | SLU 79 | -2.24 | 0.24 | 51.04 | -0.1699 | 0.0199 | 0 |
| 284 | SLU 80 | -2.04 | 0.24 | 49.86 | -0.1678 | 0.0245 | 0 |
| 284 | SLU 81 | -2.36 | 0.25 | 52.67 | -0.1746 | 0.0183 | 0 |
| 284 | SLU 82 | -2.16 | 0.24 | 51.49 | -0.1725 | 0.0228 | 0 |
| 284 | SLU 83 | -2.31 | 0.25 | 52.8 | -0.1753 | 0.0208 | 0 |
| 284 | SLU 84 | -2.11 | 0.24 | 51.62 | -0.1732 | 0.0253 | 0 |
| 284 | SLE RA 1 | -1.75 | 0.16 | 34.79 | -0.116 | 0.0039 | 0 |
| 284 | SLE RA 2 | -1.53 | 0.16 | 33.48 | -0.1137 | 0.009 | 0 |
| 284 | SLE RA 3 | -1.75 | 0.17 | 35.09 | -0.1177 | 0.005 | 0 |
| 284 | SLE RA 4 | -1.62 | 0.16 | 34.3 | -0.1163 | 0.008 | 0 |
| 284 | SLE RA 5 | -1.5 | 0.16 | 33.56 | -0.1141 | 0.0106 | 0 |
| 284 | SLE RA 6 | -1.71 | 0.17 | 35.17 | -0.1181 | 0.0067 | 0 |

| Nodo | Cont. | Reazione a traslazione | | | Reazione a rotazione | | |
|---|---|---|---|---|---|---|---|
| Ind. | N.br. | x | y | z | x | y | z |
| 284 | SLE RA 7 | -1.58 | 0.16 | 34.39 | -0.1167 | 0.0097 | 0 |
| 284 | SLE RA 8 | -1.68 | 0.16 | 34.96 | -0.1168 | 0.0073 | 0 |
| 284 | SLE RA 9 | -1.55 | 0.16 | 34.17 | -0.1155 | 0.0103 | 0 |
| 284 | SLE RA 10 | -1.56 | 0.17 | 36.41 | -0.123 | 0.0142 | 0 |
| 284 | SLE RA 11 | -1.78 | 0.18 | 38.02 | -0.127 | 0.0102 | 0 |
| 284 | SLE RA 12 | -1.65 | 0.18 | 37.24 | -0.1256 | 0.0133 | 0 |
| 284 | SLE RA 13 | -1.53 | 0.17 | 36.5 | -0.1234 | 0.0158 | 0 |
| 284 | SLE RA 14 | -1.74 | 0.18 | 38.11 | -0.1274 | 0.0119 | 0 |
| 284 | SLE RA 15 | -1.61 | 0.18 | 37.32 | -0.126 | 0.0149 | 0 |
| 284 | SLE RA 16 | -1.71 | 0.18 | 37.9 | -0.1261 | 0.0125 | 0 |
| 284 | SLE RA 17 | -1.58 | 0.18 | 37.11 | -0.1248 | 0.0155 | 0 |
| 284 | SLE RA 18 | -1.79 | 0.18 | 38.98 | -0.1293 | 0.0114 | 0 |
| 284 | SLE RA 19 | -1.66 | 0.18 | 38.2 | -0.1279 | 0.0144 | 0 |
| 284 | SLE RA 20 | -1.76 | 0.18 | 39.07 | -0.1297 | 0.0131 | 0 |
| 284 | SLE RA 21 | -1.63 | 0.18 | 38.28 | -0.1283 | 0.0161 | 0 |
| 284 | SLE FR 1 | -1.75 | 0.16 | 34.79 | -0.116 | 0.0039 | 0 |
| 284 | SLE FR 2 | -1.71 | 0.16 | 34.53 | -0.1155 | 0.0049 | 0 |
| 284 | SLE FR 3 | -1.74 | 0.16 | 34.83 | -0.1162 | 0.0046 | 0 |
| 284 | SLE FR 4 | -1.72 | 0.17 | 35.79 | -0.1195 | 0.0072 | 0 |
| 284 | SLE FR 5 | -1.75 | 0.17 | 36.08 | -0.1202 | 0.0068 | 0 |
| 284 | SLE FR 6 | -1.77 | 0.17 | 36.89 | -0.1226 | 0.0077 | 0 |
| 284 | SLE QP 1 | -1.75 | 0.16 | 34.79 | -0.116 | 0.0039 | 0 |
| 284 | SLE QP 2 | -1.76 | 0.17 | 36.05 | -0.12 | 0.0062 | 0 |
| 284 | SLD 1 | 6.67 | 0.2 | 39.26 | -0.1097 | 0.3292 | 0.0002 |
| 284 | SLD 2 | 6.67 | 0.2 | 39.26 | -0.1097 | 0.3292 | 0.0002 |
| 284 | SLD 3 | 5.74 | 0.41 | 44.49 | -0.3132 | 0.369 | 0 |
| 284 | SLD 4 | 5.74 | 0.41 | 44.49 | -0.3132 | 0.369 | 0 |
| 284 | SLD 5 | 2.18 | -0.14 | 29.07 | 0.1918 | 0.0427 | 0.0003 |
| 284 | SLD 6 | 2.18 | -0.14 | 29.07 | 0.1918 | 0.0427 | 0.0003 |
| 284 | SLD 7 | -0.93 | 0.56 | 46.52 | -0.4866 | 0.1754 | -0.0002 |
| 284 | SLD 8 | -0.93 | 0.56 | 46.52 | -0.4866 | 0.1754 | -0.0002 |
| 284 | SLD 9 | -2.6 | -0.22 | 25.58 | 0.2466 | -0.163 | 0.0003 |
| 284 | SLD 10 | -2.6 | -0.22 | 25.58 | 0.2466 | -0.163 | 0.0003 |
| 284 | SLD 11 | -5.71 | 0.48 | 43.03 | -0.4317 | -0.0304 | -0.0003 |
| 284 | SLD 12 | -5.71 | 0.48 | 43.03 | -0.4317 | -0.0304 | -0.0003 |
| 284 | SLD 13 | -9.26 | -0.07 | 27.61 | 0.0732 | -0.3567 | 0 |
| 284 | SLD 14 | -9.26 | -0.07 | 27.61 | 0.0732 | -0.3567 | 0 |
| 284 | SLD 15 | -10.2 | 0.14 | 32.84 | -0.1303 | -0.3169 | -0.0001 |
| 284 | SLD 16 | -10.2 | 0.14 | 32.84 | -0.1303 | -0.3169 | -0.0001 |
| 284 | SLV 1 | 17.64 | 0.23 | 43.42 | -0.0886 | 0.7473 | 0.0004 |
| 284 | SLV 2 | 17.64 | 0.23 | 43.42 | -0.0886 | 0.7473 | 0.0004 |
| 284 | SLV 3 | 15.46 | 0.75 | 55.86 | -0.5892 | 0.841 | 0.0001 |
| 284 | SLV 4 | 15.46 | 0.75 | 55.86 | -0.5892 | 0.841 | 0.0001 |
| 284 | SLV 5 | 7.37 | -0.59 | 19.4 | 0.6487 | 0.0864 | 0.0008 |
| 284 | SLV 6 | 7.37 | -0.59 | 19.4 | 0.6487 | 0.0864 | 0.0008 |
| 284 | SLV 7 | 0.09 | 1.12 | 60.86 | -1.0201 | 0.3987 | -0.0006 |
| 284 | SLV 8 | 0.09 | 1.12 | 60.86 | -1.0201 | 0.3987 | -0.0006 |
| 284 | SLV 9 | -3.61 | -0.78 | 11.24 | 0.7801 | -0.3864 | 0.0006 |
| 284 | SLV 10 | -3.61 | -0.78 | 11.24 | 0.7801 | -0.3864 | 0.0006 |
| 284 | SLV 11 | -10.9 | 0.93 | 52.7 | -0.8887 | -0.0741 | -0.0007 |
| 284 | SLV 12 | -10.9 | 0.93 | 52.7 | -0.8887 | -0.0741 | -0.0007 |
| 284 | SLV 13 | -18.98 | -0.41 | 16.24 | 0.3492 | -0.8287 | 0 |
| 284 | SLV 14 | -18.98 | -0.41 | 16.24 | 0.3492 | -0.8287 | 0 |
| 284 | SLV 15 | -21.17 | 0.1 | 28.68 | -0.1514 | -0.735 | -0.0004 |
| 284 | SLV 16 | -21.17 | 0.1 | 28.68 | -0.1514 | -0.735 | -0.0004 |
| 285 | SLU 1 | -2.64 | 0.22 | 29.59 | -0.1521 | -0.1437 | 0.0001 |
| 285 | SLU 2 | -2.3 | 0.21 | 28.16 | -0.1468 | -0.1288 | 0.0001 |
| 285 | SLU 3 | -2.64 | 0.22 | 29.97 | -0.1555 | -0.1442 | 0.0001 |
| 285 | SLU 4 | -2.43 | 0.22 | 29.1 | -0.1523 | -0.1353 | 0.0001 |
| 285 | SLU 5 | -2.25 | 0.21 | 28.27 | -0.1477 | -0.1266 | 0.0001 |
| 285 | SLU 6 | -2.58 | 0.22 | 30.08 | -0.1564 | -0.142 | 0.0001 |
| 285 | SLU 7 | -2.38 | 0.22 | 29.21 | -0.1532 | -0.1331 | 0.0001 |
| 285 | SLU 8 | -2.53 | 0.22 | 29.81 | -0.1539 | -0.1393 | 0.0001 |
| 285 | SLU 9 | -2.33 | 0.21 | 28.95 | -0.1507 | -0.1304 | 0.0001 |
| 285 | SLU 10 | -2.52 | 0.23 | 32.13 | -0.166 | -0.1429 | 0.0001 |
| 285 | SLU 11 | -2.85 | 0.25 | 33.94 | -0.1747 | -0.1584 | 0.0001 |
| 285 | SLU 12 | -2.65 | 0.24 | 33.08 | -0.1715 | -0.1494 | 0.0001 |
| 285 | SLU 13 | -2.46 | 0.24 | 32.24 | -0.1669 | -0.1407 | 0.0001 |
| 285 | SLU 14 | -2.8 | 0.25 | 34.05 | -0.1756 | -0.1562 | 0.0001 |
| 285 | SLU 15 | -2.6 | 0.24 | 33.19 | -0.1724 | -0.1472 | 0.0001 |
| 285 | SLU 16 | -2.75 | 0.25 | 33.79 | -0.1731 | -0.1535 | 0.0001 |
| 285 | SLU 17 | -2.54 | 0.24 | 32.92 | -0.1699 | -0.1445 | 0.0001 |
| 285 | SLU 18 | -2.94 | 0.26 | 35.27 | -0.1795 | -0.1639 | 0.0001 |
| 285 | SLU 19 | -2.74 | 0.25 | 34.4 | -0.1763 | -0.155 | 0.0001 |
| 285 | SLU 20 | -2.89 | 0.26 | 35.38 | -0.1804 | -0.1617 | 0.0001 |
| 285 | SLU 21 | -2.69 | 0.25 | 34.51 | -0.1772 | -0.1528 | 0.0001 |
| 285 | SLU 22 | -2.83 | 0.24 | 33.21 | -0.1709 | -0.1565 | 0.0001 |
| 285 | SLU 23 | -2.49 | 0.23 | 31.78 | -0.1656 | -0.1416 | 0.0001 |
| 285 | SLU 24 | -2.83 | 0.25 | 33.59 | -0.1743 | -0.157 | 0.0001 |
| 285 | SLU 25 | -2.63 | 0.24 | 32.72 | -0.1711 | -0.1481 | 0.0001 |
| 285 | SLU 26 | -2.44 | 0.24 | 31.89 | -0.1665 | -0.1394 | 0.0001 |
| 285 | SLU 27 | -2.78 | 0.25 | 33.7 | -0.1752 | -0.1548 | 0.0001 |
| 285 | SLU 28 | -2.57 | 0.24 | 32.83 | -0.172 | -0.1459 | 0.0001 |
| 285 | SLU 29 | -2.72 | 0.25 | 33.43 | -0.1727 | -0.1521 | 0.0001 |
| 285 | SLU 30 | -2.52 | 0.24 | 32.57 | -0.1695 | -0.1432 | 0.0001 |
| 285 | SLU 31 | -2.71 | 0.26 | 35.75 | -0.1848 | -0.1557 | 0.0001 |
| 285 | SLU 32 | -3.04 | 0.28 | 37.56 | -0.1934 | -0.1712 | 0.0001 |
| 285 | SLU 33 | -2.84 | 0.27 | 36.7 | -0.1903 | -0.1622 | 0.0001 |

| Nodo | Cont. | Reazione a traslazione | | | Reazione a rotazione | | |
|---|---|---|---|---|---|---|---|
| Ind. | N.br. | x | y | z | x | y | z |
| 285 | SLU 34 | -2.66 | 0.26 | 35.86 | -0.1857 | -0.1535 | 0.0001 |
| 285 | SLU 35 | -2.99 | 0.28 | 37.67 | -0.1943 | -0.169 | 0.0001 |
| 285 | SLU 36 | -2.79 | 0.27 | 36.81 | -0.1912 | -0.16 | 0.0001 |
| 285 | SLU 37 | -2.94 | 0.27 | 37.41 | -0.1918 | -0.1663 | 0.0001 |
| 285 | SLU 38 | -2.74 | 0.27 | 36.54 | -0.1887 | -0.1573 | 0.0001 |
| 285 | SLU 39 | -3.14 | 0.28 | 38.89 | -0.1982 | -0.1767 | 0.0001 |
| 285 | SLU 40 | -2.94 | 0.28 | 38.03 | -0.1951 | -0.1678 | 0.0001 |
| 285 | SLU 41 | -3.08 | 0.28 | 39 | -0.1992 | -0.1745 | 0.0001 |
| 285 | SLU 42 | -2.88 | 0.28 | 38.13 | -0.196 | -0.1655 | 0.0001 |
| 285 | SLU 43 | -3.36 | 0.27 | 37.23 | -0.1913 | -0.1825 | 0.0001 |
| 285 | SLU 44 | -3.03 | 0.26 | 35.79 | -0.186 | -0.1675 | 0.0001 |
| 285 | SLU 45 | -3.36 | 0.28 | 37.6 | -0.1947 | -0.183 | 0.0001 |
| 285 | SLU 46 | -3.16 | 0.27 | 36.74 | -0.1915 | -0.174 | 0.0001 |
| 285 | SLU 47 | -2.97 | 0.27 | 35.9 | -0.1869 | -0.1653 | 0.0001 |
| 285 | SLU 48 | -3.31 | 0.28 | 37.71 | -0.1956 | -0.1808 | 0.0001 |
| 285 | SLU 49 | -3.11 | 0.27 | 36.85 | -0.1924 | -0.1718 | 0.0001 |
| 285 | SLU 50 | -3.25 | 0.28 | 37.45 | -0.1931 | -0.1781 | 0.0001 |
| 285 | SLU 51 | -3.05 | 0.27 | 36.59 | -0.1899 | -0.1691 | 0.0001 |
| 285 | SLU 52 | -3.24 | 0.29 | 39.76 | -0.2052 | -0.1817 | 0.0001 |
| 285 | SLU 53 | -3.58 | 0.31 | 41.58 | -0.2138 | -0.1971 | 0.0001 |
| 285 | SLU 54 | -3.37 | 0.3 | 40.71 | -0.2107 | -0.1881 | 0.0001 |
| 285 | SLU 55 | -3.19 | 0.29 | 39.87 | -0.2061 | -0.1795 | 0.0001 |
| 285 | SLU 56 | -3.52 | 0.31 | 41.68 | -0.2147 | -0.1949 | 0.0001 |
| 285 | SLU 57 | -3.32 | 0.3 | 40.82 | -0.2116 | -0.1859 | 0.0001 |
| 285 | SLU 58 | -3.47 | 0.3 | 41.42 | -0.2122 | -0.1922 | 0.0001 |
| 285 | SLU 59 | -3.27 | 0.3 | 40.56 | -0.2091 | -0.1832 | 0.0001 |
| 285 | SLU 60 | -3.67 | 0.31 | 42.9 | -0.2187 | -0.2027 | 0.0001 |
| 285 | SLU 61 | -3.47 | 0.31 | 42.04 | -0.2155 | -0.1937 | 0.0001 |
| 285 | SLU 62 | -3.62 | 0.31 | 43.01 | -0.2196 | -0.2005 | 0.0001 |
| 285 | SLU 63 | -3.41 | 0.31 | 42.15 | -0.2164 | -0.1915 | 0.0001 |
| 285 | SLU 64 | -3.56 | 0.3 | 40.85 | -0.21 | -0.1953 | 0.0001 |
| 285 | SLU 65 | -3.22 | 0.29 | 39.41 | -0.2048 | -0.1803 | 0.0001 |
| 285 | SLU 66 | -3.55 | 0.3 | 41.22 | -0.2134 | -0.1958 | 0.0001 |
| 285 | SLU 67 | -3.35 | 0.3 | 40.36 | -0.2103 | -0.1868 | 0.0001 |
| 285 | SLU 68 | -3.17 | 0.29 | 39.52 | -0.2057 | -0.1781 | 0.0001 |
| 285 | SLU 69 | -3.5 | 0.31 | 41.33 | -0.2143 | -0.1936 | 0.0001 |
| 285 | SLU 70 | -3.3 | 0.3 | 40.47 | -0.2112 | -0.1846 | 0.0001 |
| 285 | SLU 71 | -3.45 | 0.3 | 41.07 | -0.2119 | -0.1909 | 0.0001 |
| 285 | SLU 72 | -3.25 | 0.3 | 40.21 | -0.2087 | -0.1819 | 0.0001 |
| 285 | SLU 73 | -3.43 | 0.32 | 43.38 | -0.224 | -0.1945 | 0.0001 |
| 285 | SLU 74 | -3.77 | 0.33 | 45.2 | -0.2326 | -0.2099 | 0.0001 |
| 285 | SLU 75 | -3.57 | 0.33 | 44.33 | -0.2295 | -0.2009 | 0.0001 |
| 285 | SLU 76 | -3.38 | 0.32 | 43.49 | -0.2249 | -0.1923 | 0.0001 |
| 285 | SLU 77 | -3.72 | 0.33 | 45.31 | -0.2335 | -0.2077 | 0.0001 |
| 285 | SLU 78 | -3.51 | 0.33 | 44.44 | -0.2304 | -0.1987 | 0.0001 |
| 285 | SLU 79 | -3.66 | 0.33 | 45.04 | -0.231 | -0.205 | 0.0001 |
| 285 | SLU 80 | -3.46 | 0.32 | 44.18 | -0.2279 | -0.196 | 0.0001 |
| 285 | SLU 81 | -3.86 | 0.34 | 46.52 | -0.2374 | -0.2155 | 0.0001 |
| 285 | SLU 82 | -3.66 | 0.33 | 45.66 | -0.2343 | -0.2065 | 0.0001 |
| 285 | SLU 83 | -3.81 | 0.34 | 46.63 | -0.2383 | -0.2132 | 0.0001 |
| 285 | SLU 84 | -3.61 | 0.33 | 45.77 | -0.2352 | -0.2043 | 0.0001 |
| 285 | SLE RA 1 | -2.69 | 0.22 | 30.63 | -0.1574 | -0.1474 | 0.0001 |
| 285 | SLE RA 2 | -2.47 | 0.22 | 29.67 | -0.1539 | -0.1374 | 0.0001 |
| 285 | SLE RA 3 | -2.69 | 0.23 | 30.88 | -0.1597 | -0.1477 | 0.0001 |
| 285 | SLE RA 4 | -2.56 | 0.22 | 30.3 | -0.1576 | -0.1418 | 0.0001 |
| 285 | SLE RA 5 | -2.43 | 0.22 | 29.74 | -0.1546 | -0.136 | 0.0001 |
| 285 | SLE RA 6 | -2.66 | 0.23 | 30.95 | -0.1603 | -0.1463 | 0.0001 |
| 285 | SLE RA 7 | -2.52 | 0.23 | 30.38 | -0.1582 | -0.1403 | 0.0001 |
| 285 | SLE RA 8 | -2.62 | 0.23 | 30.78 | -0.1587 | -0.1445 | 0.0001 |
| 285 | SLE RA 9 | -2.49 | 0.22 | 30.2 | -0.1566 | -0.1385 | 0.0001 |
| 285 | SLE RA 10 | -2.61 | 0.24 | 32.32 | -0.1667 | -0.1469 | 0.0001 |
| 285 | SLE RA 11 | -2.83 | 0.25 | 33.52 | -0.1725 | -0.1571 | 0.0001 |
| 285 | SLE RA 12 | -2.7 | 0.24 | 32.95 | -0.1704 | -0.1512 | 0.0001 |
| 285 | SLE RA 13 | -2.58 | 0.24 | 32.39 | -0.1673 | -0.1454 | 0.0001 |
| 285 | SLE RA 14 | -2.8 | 0.25 | 33.6 | -0.1731 | -0.1557 | 0.0001 |
| 285 | SLE RA 15 | -2.66 | 0.24 | 33.02 | -0.171 | -0.1497 | 0.0001 |
| 285 | SLE RA 16 | -2.76 | 0.24 | 33.42 | -0.1714 | -0.1539 | 0.0001 |
| 285 | SLE RA 17 | -2.63 | 0.24 | 32.85 | -0.1693 | -0.1479 | 0.0001 |
| 285 | SLE RA 18 | -2.9 | 0.25 | 34.41 | -0.1757 | -0.1609 | 0.0001 |
| 285 | SLE RA 19 | -2.76 | 0.25 | 33.84 | -0.1736 | -0.1549 | 0.0001 |
| 285 | SLE RA 20 | -2.86 | 0.25 | 34.48 | -0.1763 | -0.1594 | 0.0001 |
| 285 | SLE RA 21 | -2.73 | 0.25 | 33.91 | -0.1742 | -0.1534 | 0.0001 |
| 285 | SLE FR 1 | -2.69 | 0.22 | 30.63 | -0.1574 | -0.1474 | 0.0001 |
| 285 | SLE FR 2 | -2.65 | 0.22 | 30.44 | -0.1567 | -0.1454 | 0.0001 |
| 285 | SLE FR 3 | -2.68 | 0.23 | 30.66 | -0.1577 | -0.1468 | 0.0001 |
| 285 | SLE FR 4 | -2.71 | 0.23 | 31.57 | -0.1622 | -0.1494 | 0.0001 |
| 285 | SLE FR 5 | -2.74 | 0.23 | 31.79 | -0.1632 | -0.1508 | 0.0001 |
| 285 | SLE FR 6 | -2.79 | 0.24 | 32.52 | -0.1666 | -0.1541 | 0.0001 |
| 285 | SLE QP 1 | -2.69 | 0.22 | 30.63 | -0.1574 | -0.1474 | 0.0001 |
| 285 | SLE QP 2 | -2.75 | 0.23 | 31.76 | -0.1629 | -0.1514 | 0.0001 |
| 285 | SLD 1 | 5.46 | 0.25 | 33.24 | -0.145 | 0.2537 | 0.0003 |
| 285 | SLD 2 | 5.46 | 0.25 | 33.24 | -0.145 | 0.2537 | 0.0003 |
| 285 | SLD 3 | 6.38 | 0.54 | 38.03 | -0.4097 | 0.2161 | 0 |
| 285 | SLD 4 | 6.38 | 0.54 | 38.03 | -0.4097 | 0.2161 | 0 |
| 285 | SLD 5 | -1.69 | -0.2 | 24.93 | 0.2439 | 0.0272 | 0.0005 |
| 285 | SLD 6 | -1.69 | -0.2 | 24.93 | 0.2439 | 0.0272 | 0.0005 |
| 285 | SLD 7 | 1.39 | 0.76 | 40.92 | -0.6384 | -0.0983 | -0.0003 |
| 285 | SLD 8 | 1.39 | 0.76 | 40.92 | -0.6384 | -0.0983 | -0.0003 |

| Nodo | Cont. | Reazione a traslazione | | | Reazione a rotazione | | |
|---|---|---|---|---|---|---|---|
| Ind. | N.br. | x | y | z | x | y | z |
| 285 | SLD 9 | -6.9 | -0.3 | 22.61 | 0.3126 | -0.2046 | 0.0004 |
| 285 | SLD 10 | -6.9 | -0.3 | 22.61 | 0.3126 | -0.2046 | 0.0004 |
| 285 | SLD 11 | -3.82 | 0.66 | 38.6 | -0.5697 | -0.3301 | -0.0004 |
| 285 | SLD 12 | -3.82 | 0.66 | 38.6 | -0.5697 | -0.3301 | -0.0004 |
| 285 | SLD 13 | -11.89 | -0.08 | 25.49 | 0.0839 | -0.519 | 0.0001 |
| 285 | SLD 14 | -11.89 | -0.08 | 25.49 | 0.0839 | -0.519 | 0.0001 |
| 285 | SLD 15 | -10.97 | 0.21 | 30.29 | -0.1808 | -0.5566 | -0.0001 |
| 285 | SLD 16 | -10.97 | 0.21 | 30.29 | -0.1808 | -0.5566 | -0.0001 |
| 285 | SLV 1 | 16.1 | 0.27 | 35.02 | -0.1081 | 0.7807 | 0.0005 |
| 285 | SLV 2 | 16.1 | 0.27 | 35.02 | -0.1081 | 0.7807 | 0.0005 |
| 285 | SLV 3 | 18.27 | 0.98 | 46.58 | -0.7606 | 0.6925 | 0 |
| 285 | SLV 4 | 18.27 | 0.98 | 46.58 | -0.7606 | 0.6925 | 0 |
| 285 | SLV 5 | -0.39 | -0.83 | 15.21 | 0.8433 | 0.2619 | 0.0011 |
| 285 | SLV 6 | -0.39 | -0.83 | 15.21 | 0.8433 | 0.2619 | 0.0011 |
| 285 | SLV 7 | 6.85 | 1.53 | 53.74 | -1.332 | -0.0319 | -0.0008 |
| 285 | SLV 8 | 6.85 | 1.53 | 53.74 | -1.332 | -0.0319 | -0.0008 |
| 285 | SLV 9 | -12.35 | -1.06 | 9.78 | 1.0061 | -0.271 | 0.001 |
| 285 | SLV 10 | -12.35 | -1.06 | 9.78 | 1.0061 | -0.271 | 0.001 |
| 285 | SLV 11 | -5.12 | 1.29 | 48.32 | -1.1691 | -0.5647 | -0.001 |
| 285 | SLV 12 | -5.12 | 1.29 | 48.32 | -1.1691 | -0.5647 | -0.001 |
| 285 | SLV 13 | -23.78 | -0.51 | 16.95 | 0.4348 | -0.9954 | 0.0001 |
| 285 | SLV 14 | -23.78 | -0.51 | 16.95 | 0.4348 | -0.9954 | 0.0001 |
| 285 | SLV 15 | -21.61 | 0.19 | 28.51 | -0.2178 | -1.0835 | -0.0004 |
| 285 | SLV 16 | -21.61 | 0.19 | 28.51 | -0.2178 | -1.0835 | -0.0004 |
| 286 | SLU 1 | -0.88 | 0.24 | 26.68 | -0.1778 | 0.0198 | 0.0003 |
| 286 | SLU 2 | -0.68 | 0.23 | 25.66 | -0.1719 | 0.0244 | 0.0003 |
| 286 | SLU 3 | -0.84 | 0.25 | 27.01 | -0.1818 | 0.0229 | 0.0003 |
| 286 | SLU 4 | -0.72 | 0.24 | 26.4 | -0.1783 | 0.0256 | 0.0003 |
| 286 | SLU 5 | -0.62 | 0.23 | 25.77 | -0.173 | 0.0275 | 0.0003 |
| 286 | SLU 6 | -0.77 | 0.25 | 27.11 | -0.1829 | 0.026 | 0.0003 |
| 286 | SLU 7 | -0.65 | 0.24 | 26.5 | -0.1794 | 0.0287 | 0.0003 |
| 286 | SLU 8 | -0.75 | 0.24 | 26.89 | -0.18 | 0.026 | 0.0003 |
| 286 | SLU 9 | -0.63 | 0.24 | 26.28 | -0.1764 | 0.0288 | 0.0003 |
| 286 | SLU 10 | -0.69 | 0.26 | 29.34 | -0.1947 | 0.032 | 0.0003 |
| 286 | SLU 11 | -0.84 | 0.28 | 30.68 | -0.2047 | 0.0305 | 0.0003 |
| 286 | SLU 12 | -0.72 | 0.27 | 30.07 | -0.2011 | 0.0332 | 0.0003 |
| 286 | SLU 13 | -0.62 | 0.26 | 29.44 | -0.1958 | 0.0351 | 0.0003 |
| 286 | SLU 14 | -0.78 | 0.28 | 30.79 | -0.2058 | 0.0336 | 0.0003 |
| 286 | SLU 15 | -0.66 | 0.27 | 30.18 | -0.2022 | 0.0363 | 0.0003 |
| 286 | SLU 16 | -0.76 | 0.27 | 30.56 | -0.2028 | 0.0337 | 0.0003 |
| 286 | SLU 17 | -0.64 | 0.27 | 29.95 | -0.1993 | 0.0364 | 0.0003 |
| 286 | SLU 18 | -0.89 | 0.28 | 31.92 | -0.2105 | 0.0308 | 0.0003 |
| 286 | SLU 19 | -0.77 | 0.28 | 31.32 | -0.2069 | 0.0335 | 0.0003 |
| 286 | SLU 20 | -0.83 | 0.29 | 32.03 | -0.2115 | 0.0339 | 0.0003 |
| 286 | SLU 21 | -0.71 | 0.28 | 31.42 | -0.208 | 0.0366 | 0.0003 |
| 286 | SLU 22 | -0.87 | 0.27 | 30.02 | -0.2001 | 0.0279 | 0.0003 |
| 286 | SLU 23 | -0.67 | 0.26 | 29.01 | -0.1942 | 0.0324 | 0.0003 |
| 286 | SLU 24 | -0.82 | 0.28 | 30.35 | -0.2042 | 0.0309 | 0.0003 |
| 286 | SLU 25 | -0.7 | 0.27 | 29.74 | -0.2006 | 0.0337 | 0.0003 |
| 286 | SLU 26 | -0.6 | 0.26 | 29.11 | -0.1953 | 0.0355 | 0.0003 |
| 286 | SLU 27 | -0.76 | 0.28 | 30.45 | -0.2053 | 0.034 | 0.0003 |
| 286 | SLU 28 | -0.64 | 0.27 | 29.85 | -0.2017 | 0.0367 | 0.0003 |
| 286 | SLU 29 | -0.74 | 0.27 | 30.23 | -0.2023 | 0.0341 | 0.0003 |
| 286 | SLU 30 | -0.61 | 0.27 | 29.62 | -0.1988 | 0.0368 | 0.0003 |
| 286 | SLU 31 | -0.67 | 0.29 | 32.68 | -0.2171 | 0.0401 | 0.0003 |
| 286 | SLU 32 | -0.83 | 0.31 | 34.02 | -0.227 | 0.0386 | 0.0004 |
| 286 | SLU 33 | -0.71 | 0.3 | 33.42 | -0.2235 | 0.0413 | 0.0004 |
| 286 | SLU 34 | -0.61 | 0.29 | 32.79 | -0.2182 | 0.0432 | 0.0003 |
| 286 | SLU 35 | -0.76 | 0.31 | 34.13 | -0.2281 | 0.0417 | 0.0004 |
| 286 | SLU 36 | -0.64 | 0.3 | 33.52 | -0.2246 | 0.0444 | 0.0004 |
| 286 | SLU 37 | -0.74 | 0.3 | 33.9 | -0.2252 | 0.0417 | 0.0004 |
| 286 | SLU 38 | -0.62 | 0.3 | 33.3 | -0.2217 | 0.0445 | 0.0003 |
| 286 | SLU 39 | -0.88 | 0.31 | 35.27 | -0.2328 | 0.0388 | 0.0004 |
| 286 | SLU 40 | -0.76 | 0.31 | 34.66 | -0.2293 | 0.0415 | 0.0004 |
| 286 | SLU 41 | -0.81 | 0.32 | 35.37 | -0.2339 | 0.0419 | 0.0004 |
| 286 | SLU 42 | -0.69 | 0.31 | 34.77 | -0.2304 | 0.0446 | 0.0004 |
| 286 | SLU 43 | -1.16 | 0.3 | 33.53 | -0.2234 | 0.023 | 0.0003 |
| 286 | SLU 44 | -0.95 | 0.29 | 32.52 | -0.2175 | 0.0276 | 0.0003 |
| 286 | SLU 45 | -1.11 | 0.31 | 33.86 | -0.2275 | 0.0261 | 0.0004 |
| 286 | SLU 46 | -0.99 | 0.3 | 33.26 | -0.2239 | 0.0288 | 0.0003 |
| 286 | SLU 47 | -0.89 | 0.29 | 32.63 | -0.2186 | 0.0307 | 0.0003 |
| 286 | SLU 48 | -1.04 | 0.31 | 33.97 | -0.2286 | 0.0292 | 0.0004 |
| 286 | SLU 49 | -0.92 | 0.3 | 33.36 | -0.225 | 0.0319 | 0.0004 |
| 286 | SLU 50 | -1.02 | 0.31 | 33.74 | -0.2256 | 0.0292 | 0.0004 |
| 286 | SLU 51 | -0.9 | 0.3 | 33.14 | -0.2221 | 0.0319 | 0.0003 |
| 286 | SLU 52 | -0.96 | 0.32 | 36.2 | -0.2404 | 0.0352 | 0.0004 |
| 286 | SLU 53 | -1.12 | 0.34 | 37.54 | -0.2503 | 0.0337 | 0.0004 |
| 286 | SLU 54 | -1 | 0.33 | 36.93 | -0.2468 | 0.0364 | 0.0004 |
| 286 | SLU 55 | -0.89 | 0.32 | 36.3 | -0.2415 | 0.0383 | 0.0004 |
| 286 | SLU 56 | -1.05 | 0.34 | 37.64 | -0.2514 | 0.0368 | 0.0004 |
| 286 | SLU 57 | -0.93 | 0.33 | 37.04 | -0.2479 | 0.0395 | 0.0004 |
| 286 | SLU 58 | -1.03 | 0.34 | 37.42 | -0.2485 | 0.0369 | 0.0004 |
| 286 | SLU 59 | -0.91 | 0.33 | 36.81 | -0.245 | 0.0396 | 0.0004 |
| 286 | SLU 60 | -1.16 | 0.35 | 38.78 | -0.2561 | 0.034 | 0.0004 |
| 286 | SLU 61 | -1.04 | 0.34 | 38.17 | -0.2526 | 0.0367 | 0.0004 |
| 286 | SLU 62 | -1.1 | 0.35 | 38.89 | -0.2572 | 0.037 | 0.0004 |
| 286 | SLU 63 | -0.98 | 0.34 | 38.28 | -0.2537 | 0.0398 | 0.0004 |
| 286 | SLU 64 | -1.14 | 0.33 | 36.87 | -0.2458 | 0.0311 | 0.0004 |

| Nodo | Cont. | Reazione a traslazione | | | Reazione a rotazione | | |
|---|---|---|---|---|---|---|---|
| Ind. | N.br. | x | y | z | x | y | z |
| 286 | SLU 65 | -0.94 | 0.32 | 35.86 | -0.2399 | 0.0356 | 0.0004 |
| 286 | SLU 66 | -1.09 | 0.34 | 37.21 | -0.2498 | 0.0341 | 0.0004 |
| 286 | SLU 67 | -0.97 | 0.33 | 36.6 | -0.2463 | 0.0368 | 0.0004 |
| 286 | SLU 68 | -0.87 | 0.32 | 35.97 | -0.241 | 0.0387 | 0.0004 |
| 286 | SLU 69 | -1.03 | 0.34 | 37.31 | -0.2509 | 0.0372 | 0.0004 |
| 286 | SLU 70 | -0.91 | 0.33 | 36.7 | -0.2474 | 0.0399 | 0.0004 |
| 286 | SLU 71 | -1.01 | 0.34 | 37.09 | -0.248 | 0.0373 | 0.0004 |
| 286 | SLU 72 | -0.89 | 0.33 | 36.48 | -0.2445 | 0.04 | 0.0004 |
| 286 | SLU 73 | -0.94 | 0.35 | 39.54 | -0.2628 | 0.0433 | 0.0004 |
| 286 | SLU 74 | -1.1 | 0.37 | 40.88 | -0.2727 | 0.0418 | 0.0004 |
| 286 | SLU 75 | -0.98 | 0.36 | 40.27 | -0.2692 | 0.0445 | 0.0004 |
| 286 | SLU 76 | -0.88 | 0.35 | 39.64 | -0.2639 | 0.0464 | 0.0004 |
| 286 | SLU 77 | -1.03 | 0.37 | 40.99 | -0.2738 | 0.0449 | 0.0004 |
| 286 | SLU 78 | -0.91 | 0.36 | 40.38 | -0.2703 | 0.0476 | 0.0004 |
| 286 | SLU 79 | -1.01 | 0.37 | 40.76 | -0.2709 | 0.0449 | 0.0004 |
| 286 | SLU 80 | -0.89 | 0.36 | 40.15 | -0.2673 | 0.0476 | 0.0004 |
| 286 | SLU 81 | -1.15 | 0.38 | 42.12 | -0.2785 | 0.042 | 0.0004 |
| 286 | SLU 82 | -1.03 | 0.37 | 41.52 | -0.2749 | 0.0447 | 0.0004 |
| 286 | SLU 83 | -1.08 | 0.38 | 42.23 | -0.2796 | 0.0451 | 0.0004 |
| 286 | SLU 84 | -0.96 | 0.37 | 41.62 | -0.276 | 0.0478 | 0.0004 |
| 286 | SLE RA 1 | -0.88 | 0.25 | 27.63 | -0.1842 | 0.0221 | 0.0003 |
| 286 | SLE RA 2 | -0.75 | 0.24 | 26.96 | -0.1802 | 0.0252 | 0.0003 |
| 286 | SLE RA 3 | -0.85 | 0.25 | 27.85 | -0.1869 | 0.0242 | 0.0003 |
| 286 | SLE RA 4 | -0.77 | 0.25 | 27.45 | -0.1845 | 0.026 | 0.0003 |
| 286 | SLE RA 5 | -0.7 | 0.24 | 27.03 | -0.181 | 0.0272 | 0.0003 |
| 286 | SLE RA 6 | -0.8 | 0.25 | 27.92 | -0.1876 | 0.0262 | 0.0003 |
| 286 | SLE RA 7 | -0.72 | 0.25 | 27.52 | -0.1852 | 0.028 | 0.0003 |
| 286 | SLE RA 8 | -0.79 | 0.25 | 27.77 | -0.1856 | 0.0263 | 0.0003 |
| 286 | SLE RA 9 | -0.71 | 0.25 | 27.37 | -0.1833 | 0.0281 | 0.0003 |
| 286 | SLE RA 10 | -0.75 | 0.26 | 29.41 | -0.1955 | 0.0303 | 0.0003 |
| 286 | SLE RA 11 | -0.85 | 0.27 | 30.3 | -0.2021 | 0.0293 | 0.0003 |
| 286 | SLE RA 12 | -0.77 | 0.27 | 29.9 | -0.1997 | 0.0311 | 0.0003 |
| 286 | SLE RA 13 | -0.71 | 0.26 | 29.48 | -0.1962 | 0.0323 | 0.0003 |
| 286 | SLE RA 14 | -0.81 | 0.27 | 30.37 | -0.2028 | 0.0313 | 0.0003 |
| 286 | SLE RA 15 | -0.73 | 0.27 | 29.97 | -0.2005 | 0.0331 | 0.0003 |
| 286 | SLE RA 16 | -0.79 | 0.27 | 30.22 | -0.2009 | 0.0314 | 0.0003 |
| 286 | SLE RA 17 | -0.71 | 0.27 | 29.82 | -0.1985 | 0.0332 | 0.0003 |
| 286 | SLE RA 18 | -0.89 | 0.28 | 31.13 | -0.2059 | 0.0294 | 0.0003 |
| 286 | SLE RA 19 | -0.81 | 0.27 | 30.73 | -0.2036 | 0.0312 | 0.0003 |
| 286 | SLE RA 20 | -0.84 | 0.28 | 31.2 | -0.2067 | 0.0315 | 0.0003 |
| 286 | SLE RA 21 | -0.76 | 0.28 | 30.8 | -0.2043 | 0.0333 | 0.0003 |
| 286 | SLE FR 1 | -0.88 | 0.25 | 27.63 | -0.1842 | 0.0221 | 0.0003 |
| 286 | SLE FR 2 | -0.85 | 0.25 | 27.5 | -0.1834 | 0.0227 | 0.0003 |
| 286 | SLE FR 3 | -0.86 | 0.25 | 27.66 | -0.1845 | 0.023 | 0.0003 |
| 286 | SLE FR 4 | -0.85 | 0.26 | 28.55 | -0.1899 | 0.0249 | 0.0003 |
| 286 | SLE FR 5 | -0.86 | 0.26 | 28.71 | -0.191 | 0.0251 | 0.0003 |
| 286 | SLE FR 6 | -0.88 | 0.26 | 29.38 | -0.1951 | 0.0258 | 0.0003 |
| 286 | SLE QP 1 | -0.88 | 0.25 | 27.63 | -0.1842 | 0.0221 | 0.0003 |
| 286 | SLE QP 2 | -0.88 | 0.26 | 28.68 | -0.1907 | 0.0243 | 0.0003 |
| 286 | SLD 1 | 7.62 | 0.27 | 28.96 | -0.1651 | 0.3866 | 0.0003 |
| 286 | SLD 2 | 7.62 | 0.27 | 28.96 | -0.1651 | 0.3866 | 0.0003 |
| 286 | SLD 3 | 8.63 | 0.61 | 33.69 | -0.4714 | 0.4335 | 0.0008 |
| 286 | SLD 4 | 8.63 | 0.61 | 33.69 | -0.4714 | 0.4335 | 0.0008 |
| 286 | SLD 5 | 0.14 | -0.25 | 21.6 | 0.2815 | 0.0619 | -0.0004 |
| 286 | SLD 6 | 0.14 | -0.25 | 21.6 | 0.2815 | 0.0619 | -0.0004 |
| 286 | SLD 7 | 3.5 | 0.88 | 37.35 | -0.7395 | 0.2182 | 0.0012 |
| 286 | SLD 8 | 3.5 | 0.88 | 37.35 | -0.7395 | 0.2182 | 0.0012 |
| 286 | SLD 9 | -5.26 | -0.36 | 20.01 | 0.3581 | -0.1695 | -0.0006 |
| 286 | SLD 10 | -5.26 | -0.36 | 20.01 | 0.3581 | -0.1695 | -0.0006 |
| 286 | SLD 11 | -1.91 | 0.77 | 35.76 | -0.6629 | -0.0133 | 0.001 |
| 286 | SLD 12 | -1.91 | 0.77 | 35.76 | -0.6629 | -0.0133 | 0.001 |
| 286 | SLD 13 | -10.39 | -0.09 | 23.67 | 0.09 | -0.3848 | -0.0002 |
| 286 | SLD 14 | -10.39 | -0.09 | 23.67 | 0.09 | -0.3848 | -0.0002 |
| 286 | SLD 15 | -9.39 | 0.25 | 28.4 | -0.2163 | -0.338 | 0.0003 |
| 286 | SLD 16 | -9.39 | 0.25 | 28.4 | -0.2163 | -0.338 | 0.0003 |
| 286 | SLV 1 | 18.61 | 0.26 | 29.08 | -0.1137 | 0.8543 | 0.0003 |
| 286 | SLV 2 | 18.61 | 0.26 | 29.08 | -0.1137 | 0.8543 | 0.0003 |
| 286 | SLV 3 | 21.01 | 1.1 | 40.61 | -0.87 | 0.9663 | 0.0015 |
| 286 | SLV 4 | 21.01 | 1.1 | 40.61 | -0.87 | 0.9663 | 0.0015 |
| 286 | SLV 5 | 1.33 | -1.01 | 11.32 | 0.9793 | 0.1034 | -0.0015 |
| 286 | SLV 6 | 1.33 | -1.01 | 11.32 | 0.9793 | 0.1034 | -0.0015 |
| 286 | SLV 7 | 9.32 | 1.78 | 49.74 | -1.5414 | 0.4769 | 0.0025 |
| 286 | SLV 8 | 9.32 | 1.78 | 49.74 | -1.5414 | 0.4769 | 0.0025 |
| 286 | SLV 9 | -11.08 | -1.26 | 7.62 | 1.16 | -0.4282 | -0.0019 |
| 286 | SLV 10 | -11.08 | -1.26 | 7.62 | 1.16 | -0.4282 | -0.0019 |
| 286 | SLV 11 | -3.1 | 1.52 | 46.04 | -1.3607 | -0.0547 | 0.0021 |
| 286 | SLV 12 | -3.1 | 1.52 | 46.04 | -1.3607 | -0.0547 | 0.0021 |
| 286 | SLV 13 | -22.77 | -0.58 | 16.75 | 0.4886 | -0.9177 | -0.0009 |
| 286 | SLV 14 | -22.77 | -0.58 | 16.75 | 0.4886 | -0.9177 | -0.0009 |
| 286 | SLV 15 | -20.38 | 0.25 | 28.28 | -0.2677 | -0.8056 | 0.0003 |
| 286 | SLV 16 | -20.38 | 0.25 | 28.28 | -0.2677 | -0.8056 | 0.0003 |
| 287 | SLU 1 | -0.33 | 0.26 | 25.52 | -0.1953 | -0.0581 | 0.0008 |
| 287 | SLU 2 | -0.19 | 0.25 | 24.8 | -0.1895 | -0.0515 | 0.0007 |
| 287 | SLU 3 | -0.27 | 0.26 | 25.85 | -0.1998 | -0.0564 | 0.0008 |
| 287 | SLU 4 | -0.19 | 0.26 | 25.42 | -0.1963 | -0.0524 | 0.0008 |
| 287 | SLU 5 | -0.12 | 0.25 | 24.92 | -0.1908 | -0.0487 | 0.0007 |
| 287 | SLU 6 | -0.2 | 0.26 | 25.96 | -0.2011 | -0.0535 | 0.0008 |
| 287 | SLU 7 | -0.11 | 0.26 | 25.53 | -0.1976 | -0.0495 | 0.0008 |

| Nodo | Cont. | Reazione a traslazione | | | Reazione a rotazione | | |
|---|---|---|---|---|---|---|---|
| Ind. | N.br. | x | y | z | x | y | z |
| 287 | SLU 8 | -0.19 | 0.26 | 25.75 | -0.1978 | -0.0524 | 0.0008 |
| 287 | SLU 9 | -0.1 | 0.25 | 25.32 | -0.1944 | -0.0485 | 0.0008 |
| 287 | SLU 10 | -0.15 | 0.28 | 28.41 | -0.2154 | -0.0568 | 0.0008 |
| 287 | SLU 11 | -0.23 | 0.29 | 29.46 | -0.2257 | -0.0616 | 0.0009 |
| 287 | SLU 12 | -0.14 | 0.29 | 29.03 | -0.2222 | -0.0577 | 0.0009 |
| 287 | SLU 13 | -0.08 | 0.28 | 28.53 | -0.2167 | -0.0539 | 0.0008 |
| 287 | SLU 14 | -0.15 | 0.3 | 29.58 | -0.227 | -0.0588 | 0.0009 |
| 287 | SLU 15 | -0.07 | 0.29 | 29.15 | -0.2235 | -0.0548 | 0.0009 |
| 287 | SLU 16 | -0.15 | 0.29 | 29.36 | -0.2237 | -0.0577 | 0.0009 |
| 287 | SLU 17 | -0.06 | 0.29 | 28.93 | -0.2203 | -0.0537 | 0.0009 |
| 287 | SLU 18 | -0.27 | 0.3 | 30.68 | -0.2323 | -0.0656 | 0.0009 |
| 287 | SLU 19 | -0.19 | 0.3 | 30.25 | -0.2288 | -0.0617 | 0.0009 |
| 287 | SLU 20 | -0.2 | 0.31 | 30.8 | -0.2335 | -0.0628 | 0.0009 |
| 287 | SLU 21 | -0.12 | 0.3 | 30.37 | -0.2301 | -0.0588 | 0.0009 |
| 287 | SLU 22 | -0.26 | 0.29 | 28.81 | -0.2205 | -0.0617 | 0.0009 |
| 287 | SLU 23 | -0.12 | 0.28 | 28.09 | -0.2148 | -0.0551 | 0.0008 |
| 287 | SLU 24 | -0.2 | 0.29 | 29.13 | -0.225 | -0.0599 | 0.0009 |
| 287 | SLU 25 | -0.11 | 0.29 | 28.7 | -0.2216 | -0.0559 | 0.0009 |
| 287 | SLU 26 | -0.05 | 0.28 | 28.21 | -0.216 | -0.0522 | 0.0008 |
| 287 | SLU 27 | -0.13 | 0.3 | 29.25 | -0.2263 | -0.057 | 0.0009 |
| 287 | SLU 28 | -0.04 | 0.29 | 28.82 | -0.2229 | -0.0531 | 0.0009 |
| 287 | SLU 29 | -0.12 | 0.29 | 29.04 | -0.2231 | -0.056 | 0.0009 |
| 287 | SLU 30 | -0.03 | 0.29 | 28.61 | -0.2196 | -0.052 | 0.0009 |
| 287 | SLU 31 | -0.08 | 0.31 | 31.7 | -0.2407 | -0.0603 | 0.0009 |
| 287 | SLU 32 | -0.16 | 0.33 | 32.75 | -0.2509 | -0.0652 | 0.001 |
| 287 | SLU 33 | -0.07 | 0.32 | 32.32 | -0.2475 | -0.0612 | 0.001 |
| 287 | SLU 34 | 0 | 0.31 | 31.82 | -0.2419 | -0.0575 | 0.0009 |
| 287 | SLU 35 | -0.08 | 0.33 | 32.86 | -0.2522 | -0.0623 | 0.001 |
| 287 | SLU 36 | 0 | 0.32 | 32.43 | -0.2487 | -0.0584 | 0.001 |
| 287 | SLU 37 | -0.07 | 0.33 | 32.65 | -0.2489 | -0.0612 | 0.001 |
| 287 | SLU 38 | 0.01 | 0.32 | 32.22 | -0.2455 | -0.0573 | 0.001 |
| 287 | SLU 39 | -0.2 | 0.34 | 33.97 | -0.2575 | -0.0692 | 0.001 |
| 287 | SLU 40 | -0.12 | 0.33 | 33.54 | -0.2541 | -0.0652 | 0.001 |
| 287 | SLU 41 | -0.13 | 0.34 | 34.08 | -0.2588 | -0.0663 | 0.001 |
| 287 | SLU 42 | -0.04 | 0.33 | 33.65 | -0.2553 | -0.0624 | 0.001 |
| 287 | SLU 43 | -0.46 | 0.32 | 32.05 | -0.2452 | -0.0743 | 0.0009 |
| 287 | SLU 44 | -0.32 | 0.31 | 31.33 | -0.2395 | -0.0677 | 0.0009 |
| 287 | SLU 45 | -0.4 | 0.33 | 32.38 | -0.2497 | -0.0726 | 0.001 |
| 287 | SLU 46 | -0.31 | 0.32 | 31.95 | -0.2463 | -0.0686 | 0.001 |
| 287 | SLU 47 | -0.24 | 0.31 | 31.45 | -0.2407 | -0.0649 | 0.0009 |
| 287 | SLU 48 | -0.32 | 0.33 | 32.49 | -0.251 | -0.0697 | 0.001 |
| 287 | SLU 49 | -0.24 | 0.32 | 32.06 | -0.2475 | -0.0658 | 0.001 |
| 287 | SLU 50 | -0.31 | 0.32 | 32.28 | -0.2477 | -0.0686 | 0.001 |
| 287 | SLU 51 | -0.23 | 0.32 | 31.85 | -0.2443 | -0.0647 | 0.0009 |
| 287 | SLU 52 | -0.27 | 0.35 | 34.94 | -0.2654 | -0.073 | 0.001 |
| 287 | SLU 53 | -0.35 | 0.36 | 35.99 | -0.2756 | -0.0778 | 0.0011 |
| 287 | SLU 54 | -0.27 | 0.35 | 35.56 | -0.2722 | -0.0739 | 0.0011 |
| 287 | SLU 55 | -0.2 | 0.35 | 35.06 | -0.2666 | -0.0701 | 0.001 |
| 287 | SLU 56 | -0.28 | 0.36 | 36.1 | -0.2769 | -0.075 | 0.0011 |
| 287 | SLU 57 | -0.19 | 0.36 | 35.67 | -0.2734 | -0.071 | 0.0011 |
| 287 | SLU 58 | -0.27 | 0.36 | 35.89 | -0.2736 | -0.0739 | 0.0011 |
| 287 | SLU 59 | -0.19 | 0.35 | 35.46 | -0.2702 | -0.0699 | 0.001 |
| 287 | SLU 60 | -0.4 | 0.37 | 37.21 | -0.2822 | -0.0818 | 0.0011 |
| 287 | SLU 61 | -0.31 | 0.36 | 36.78 | -0.2788 | -0.0779 | 0.0011 |
| 287 | SLU 62 | -0.33 | 0.37 | 37.32 | -0.2835 | -0.079 | 0.0011 |
| 287 | SLU 63 | -0.24 | 0.37 | 36.89 | -0.28 | -0.075 | 0.0011 |
| 287 | SLU 64 | -0.39 | 0.35 | 35.33 | -0.2705 | -0.0779 | 0.001 |
| 287 | SLU 65 | -0.25 | 0.34 | 34.62 | -0.2647 | -0.0713 | 0.001 |
| 287 | SLU 66 | -0.32 | 0.36 | 35.66 | -0.275 | -0.0761 | 0.0011 |
| 287 | SLU 67 | -0.24 | 0.35 | 35.23 | -0.2715 | -0.0722 | 0.0011 |
| 287 | SLU 68 | -0.17 | 0.35 | 34.73 | -0.266 | -0.0684 | 0.001 |
| 287 | SLU 69 | -0.25 | 0.36 | 35.78 | -0.2762 | -0.0733 | 0.0011 |
| 287 | SLU 70 | -0.17 | 0.36 | 35.35 | -0.2728 | -0.0693 | 0.0011 |
| 287 | SLU 71 | -0.24 | 0.36 | 35.57 | -0.273 | -0.0722 | 0.0011 |
| 287 | SLU 72 | -0.16 | 0.35 | 35.14 | -0.2695 | -0.0682 | 0.001 |
| 287 | SLU 73 | -0.2 | 0.38 | 38.23 | -0.2906 | -0.0765 | 0.0011 |
| 287 | SLU 74 | -0.28 | 0.39 | 39.28 | -0.3009 | -0.0814 | 0.0012 |
| 287 | SLU 75 | -0.2 | 0.39 | 38.85 | -0.2974 | -0.0774 | 0.0012 |
| 287 | SLU 76 | -0.13 | 0.38 | 38.35 | -0.2919 | -0.0737 | 0.0011 |
| 287 | SLU 77 | -0.21 | 0.4 | 39.39 | -0.3021 | -0.0785 | 0.0012 |
| 287 | SLU 78 | -0.12 | 0.39 | 38.96 | -0.2987 | -0.0746 | 0.0012 |
| 287 | SLU 79 | -0.2 | 0.39 | 39.18 | -0.2989 | -0.0774 | 0.0012 |
| 287 | SLU 80 | -0.11 | 0.39 | 38.75 | -0.2954 | -0.0735 | 0.0011 |
| 287 | SLU 81 | -0.33 | 0.4 | 40.49 | -0.3074 | -0.0854 | 0.0012 |
| 287 | SLU 82 | -0.24 | 0.4 | 40.07 | -0.304 | -0.0814 | 0.0012 |
| 287 | SLU 83 | -0.25 | 0.4 | 40.61 | -0.3087 | -0.0825 | 0.0012 |
| 287 | SLU 84 | -0.17 | 0.4 | 40.18 | -0.3053 | -0.0786 | 0.0012 |
| 287 | SLE RA 1 | -0.31 | 0.26 | 26.46 | -0.2025 | -0.0591 | 0.0008 |
| 287 | SLE RA 2 | -0.22 | 0.26 | 25.98 | -0.1987 | -0.0547 | 0.0008 |
| 287 | SLE RA 3 | -0.27 | 0.27 | 26.68 | -0.2055 | -0.0579 | 0.0008 |
| 287 | SLE RA 4 | -0.21 | 0.27 | 26.39 | -0.2032 | -0.0553 | 0.0008 |
| 287 | SLE RA 5 | -0.17 | 0.26 | 26.06 | -0.1995 | -0.0528 | 0.0008 |
| 287 | SLE RA 6 | -0.22 | 0.27 | 26.75 | -0.2063 | -0.056 | 0.0008 |
| 287 | SLE RA 7 | -0.17 | 0.27 | 26.47 | -0.204 | -0.0534 | 0.0008 |
| 287 | SLE RA 8 | -0.22 | 0.27 | 26.61 | -0.2042 | -0.0553 | 0.0008 |
| 287 | SLE RA 9 | -0.16 | 0.26 | 26.33 | -0.2019 | -0.0527 | 0.0008 |
| 287 | SLE RA 10 | -0.19 | 0.28 | 28.39 | -0.2159 | -0.0582 | 0.0008 |
| 287 | SLE RA 11 | -0.24 | 0.29 | 29.09 | -0.2228 | -0.0615 | 0.0009 |

| Nodo | Cont. | Reazione a traslazione | | | Reazione a rotazione | | |
|---|---|---|---|---|---|---|---|
| Ind. | N.br. | x | y | z | x | y | z |
| 287 | SLE RA 12 | -0.19 | 0.29 | 28.8 | -0.2205 | -0.0588 | 0.0009 |
| 287 | SLE RA 13 | -0.14 | 0.28 | 28.47 | -0.2168 | -0.0563 | 0.0008 |
| 287 | SLE RA 14 | -0.19 | 0.29 | 29.16 | -0.2236 | -0.0596 | 0.0009 |
| 287 | SLE RA 15 | -0.14 | 0.29 | 28.88 | -0.2213 | -0.0569 | 0.0009 |
| 287 | SLE RA 16 | -0.19 | 0.29 | 29.02 | -0.2214 | -0.0588 | 0.0009 |
| 287 | SLE RA 17 | -0.13 | 0.29 | 28.73 | -0.2191 | -0.0562 | 0.0008 |
| 287 | SLE RA 18 | -0.27 | 0.3 | 29.9 | -0.2272 | -0.0641 | 0.0009 |
| 287 | SLE RA 19 | -0.22 | 0.29 | 29.61 | -0.2249 | -0.0615 | 0.0009 |
| 287 | SLE RA 20 | -0.22 | 0.3 | 29.98 | -0.228 | -0.0622 | 0.0009 |
| 287 | SLE RA 21 | -0.17 | 0.29 | 29.69 | -0.2257 | -0.0596 | 0.0009 |
| 287 | SLE FR 1 | -0.31 | 0.26 | 26.46 | -0.2025 | -0.0591 | 0.0008 |
| 287 | SLE FR 2 | -0.29 | 0.26 | 26.36 | -0.2017 | -0.0582 | 0.0008 |
| 287 | SLE FR 3 | -0.29 | 0.27 | 26.49 | -0.2028 | -0.0584 | 0.0008 |
| 287 | SLE FR 4 | -0.28 | 0.27 | 27.39 | -0.2091 | -0.0597 | 0.0008 |
| 287 | SLE FR 5 | -0.28 | 0.27 | 27.52 | -0.2102 | -0.0599 | 0.0008 |
| 287 | SLE FR 6 | -0.29 | 0.28 | 28.18 | -0.2148 | -0.0616 | 0.0008 |
| 287 | SLE QP 1 | -0.31 | 0.26 | 26.46 | -0.2025 | -0.0591 | 0.0008 |
| 287 | SLE QP 2 | -0.3 | 0.27 | 27.49 | -0.2099 | -0.0606 | 0.0008 |
| 287 | SLD 1 | 8.59 | 0.28 | 27.42 | -0.1801 | 0.3325 | 0.0008 |
| 287 | SLD 2 | 8.59 | 0.28 | 27.42 | -0.1801 | 0.3325 | 0.0008 |
| 287 | SLD 3 | 9.65 | 0.64 | 32.07 | -0.5037 | 0.3763 | 0.0018 |
| 287 | SLD 4 | 9.65 | 0.64 | 32.07 | -0.5037 | 0.3763 | 0.0018 |
| 287 | SLD 5 | 0.76 | -0.27 | 20.43 | 0.2898 | -0.0092 | -0.0007 |
| 287 | SLD 6 | 0.76 | -0.27 | 20.43 | 0.2898 | -0.0092 | -0.0007 |
| 287 | SLD 7 | 4.29 | 0.93 | 35.91 | -0.7888 | 0.1369 | 0.0027 |
| 287 | SLD 8 | 4.29 | 0.93 | 35.91 | -0.7888 | 0.1369 | 0.0027 |
| 287 | SLD 9 | -4.9 | -0.38 | 19.07 | 0.369 | -0.2582 | -0.0011 |
| 287 | SLD 10 | -4.9 | -0.38 | 19.07 | 0.369 | -0.2582 | -0.0011 |
| 287 | SLD 11 | -1.36 | 0.82 | 34.55 | -0.7096 | -0.1121 | 0.0024 |
| 287 | SLD 12 | -1.36 | 0.82 | 34.55 | -0.7096 | -0.1121 | 0.0024 |
| 287 | SLD 13 | -10.26 | -0.09 | 22.91 | 0.0839 | -0.4976 | -0.0002 |
| 287 | SLD 14 | -10.26 | -0.09 | 22.91 | 0.0839 | -0.4976 | -0.0002 |
| 287 | SLD 15 | -9.19 | 0.27 | 27.56 | -0.2397 | -0.4538 | 0.0008 |
| 287 | SLD 16 | -9.19 | 0.27 | 27.56 | -0.2397 | -0.4538 | 0.0008 |
| 287 | SLV 1 | 20.07 | 0.26 | 27.01 | -0.1209 | 0.8403 | 0.0007 |
| 287 | SLV 2 | 20.07 | 0.26 | 27.01 | -0.1209 | 0.8403 | 0.0007 |
| 287 | SLV 3 | 22.61 | 1.14 | 38.42 | -0.9203 | 0.9451 | 0.0033 |
| 287 | SLV 4 | 22.61 | 1.14 | 38.42 | -0.9203 | 0.9451 | 0.0033 |
| 287 | SLV 5 | 1.96 | -1.07 | 10.05 | 1.0293 | 0.0507 | -0.003 |
| 287 | SLV 6 | 1.96 | -1.07 | 10.05 | 1.0293 | 0.0507 | -0.003 |
| 287 | SLV 7 | 10.43 | 1.88 | 48.06 | -1.6355 | 0.4 | 0.0054 |
| 287 | SLV 8 | 10.43 | 1.88 | 48.06 | -1.6355 | 0.4 | 0.0054 |
| 287 | SLV 9 | -11.03 | -1.33 | 6.92 | 1.2157 | -0.5213 | -0.0038 |
| 287 | SLV 10 | -11.03 | -1.33 | 6.92 | 1.2157 | -0.5213 | -0.0038 |
| 287 | SLV 11 | -2.56 | 1.62 | 44.93 | -1.449 | -0.172 | 0.0047 |
| 287 | SLV 12 | -2.56 | 1.62 | 44.93 | -1.449 | -0.172 | 0.0047 |
| 287 | SLV 13 | -23.22 | -0.59 | 16.56 | 0.5005 | -1.0663 | -0.0017 |
| 287 | SLV 14 | -23.22 | -0.59 | 16.56 | 0.5005 | -1.0663 | -0.0017 |
| 287 | SLV 15 | -20.67 | 0.29 | 27.97 | -0.2989 | -0.9615 | 0.0009 |
| 287 | SLV 16 | -20.67 | 0.29 | 27.97 | -0.2989 | -0.9615 | 0.0009 |
| 288 | SLU 1 | 2.06 | 0.28 | 26.25 | -0.209 | 0.1272 | 0.0013 |
| 288 | SLU 2 | 2.1 | 0.27 | 25.76 | -0.2038 | 0.1268 | 0.0012 |
| 288 | SLU 3 | 2.18 | 0.29 | 26.62 | -0.2139 | 0.133 | 0.0013 |
| 288 | SLU 4 | 2.2 | 0.28 | 26.32 | -0.2108 | 0.1328 | 0.0013 |
| 288 | SLU 5 | 2.18 | 0.27 | 25.9 | -0.2052 | 0.1306 | 0.0013 |
| 288 | SLU 6 | 2.26 | 0.29 | 26.76 | -0.2154 | 0.1368 | 0.0013 |
| 288 | SLU 7 | 2.29 | 0.28 | 26.46 | -0.2122 | 0.1366 | 0.0013 |
| 288 | SLU 8 | 2.23 | 0.28 | 26.53 | -0.2119 | 0.1348 | 0.0013 |
| 288 | SLU 9 | 2.25 | 0.28 | 26.24 | -0.2087 | 0.1346 | 0.0013 |
| 288 | SLU 10 | 2.48 | 0.31 | 29.59 | -0.2325 | 0.1488 | 0.0014 |
| 288 | SLU 11 | 2.56 | 0.32 | 30.46 | -0.2427 | 0.155 | 0.0015 |
| 288 | SLU 12 | 2.58 | 0.32 | 30.16 | -0.2396 | 0.1547 | 0.0015 |
| 288 | SLU 13 | 2.57 | 0.31 | 29.73 | -0.234 | 0.1526 | 0.0014 |
| 288 | SLU 14 | 2.64 | 0.33 | 30.6 | -0.2441 | 0.1588 | 0.0015 |
| 288 | SLU 15 | 2.67 | 0.32 | 30.3 | -0.241 | 0.1586 | 0.0015 |
| 288 | SLU 16 | 2.61 | 0.32 | 30.37 | -0.2406 | 0.1568 | 0.0015 |
| 288 | SLU 17 | 2.63 | 0.32 | 30.07 | -0.2375 | 0.1566 | 0.0015 |
| 288 | SLU 18 | 2.61 | 0.33 | 31.74 | -0.2501 | 0.1586 | 0.0015 |
| 288 | SLU 19 | 2.63 | 0.33 | 31.44 | -0.2469 | 0.1584 | 0.0015 |
| 288 | SLU 20 | 2.69 | 0.34 | 31.88 | -0.2515 | 0.1624 | 0.0015 |
| 288 | SLU 21 | 2.71 | 0.33 | 31.58 | -0.2484 | 0.1622 | 0.0015 |
| 288 | SLU 22 | 2.46 | 0.32 | 29.75 | -0.2369 | 0.1494 | 0.0015 |
| 288 | SLU 23 | 2.49 | 0.31 | 29.26 | -0.2317 | 0.149 | 0.0014 |
| 288 | SLU 24 | 2.57 | 0.32 | 30.12 | -0.2418 | 0.1552 | 0.0015 |
| 288 | SLU 25 | 2.59 | 0.32 | 29.83 | -0.2387 | 0.1549 | 0.0015 |
| 288 | SLU 26 | 2.58 | 0.31 | 29.4 | -0.2331 | 0.1528 | 0.0014 |
| 288 | SLU 27 | 2.66 | 0.33 | 30.26 | -0.2433 | 0.159 | 0.0015 |
| 288 | SLU 28 | 2.68 | 0.32 | 29.97 | -0.2401 | 0.1587 | 0.0015 |
| 288 | SLU 29 | 2.62 | 0.32 | 30.04 | -0.2397 | 0.157 | 0.0015 |
| 288 | SLU 30 | 2.65 | 0.32 | 29.74 | -0.2366 | 0.1568 | 0.0015 |
| 288 | SLU 31 | 2.88 | 0.35 | 33.09 | -0.2604 | 0.171 | 0.0016 |
| 288 | SLU 32 | 2.95 | 0.36 | 33.96 | -0.2706 | 0.1771 | 0.0017 |
| 288 | SLU 33 | 2.98 | 0.36 | 33.66 | -0.2674 | 0.1769 | 0.0016 |
| 288 | SLU 34 | 2.96 | 0.35 | 33.23 | -0.2618 | 0.1748 | 0.0016 |
| 288 | SLU 35 | 3.04 | 0.36 | 34.1 | -0.272 | 0.181 | 0.0017 |
| 288 | SLU 36 | 3.06 | 0.36 | 33.8 | -0.2689 | 0.1807 | 0.0017 |
| 288 | SLU 37 | 3.01 | 0.36 | 33.87 | -0.2685 | 0.179 | 0.0017 |
| 288 | SLU 38 | 3.03 | 0.36 | 33.57 | -0.2654 | 0.1787 | 0.0016 |

| Nodo | Cont. | Reazione a traslazione | | | Reazione a rotazione | | |
|---|---|---|---|---|---|---|---|
| Ind. | N.br. | x | y | z | x | y | z |
| 288 | SLU 39 | 3 | 0.37 | 35.24 | -0.278 | 0.1808 | 0.0017 |
| 288 | SLU 40 | 3.02 | 0.37 | 34.94 | -0.2748 | 0.1805 | 0.0017 |
| 288 | SLU 41 | 3.09 | 0.37 | 35.38 | -0.2794 | 0.1846 | 0.0017 |
| 288 | SLU 42 | 3.11 | 0.37 | 35.08 | -0.2763 | 0.1843 | 0.0017 |
| 288 | SLU 43 | 2.54 | 0.35 | 32.93 | -0.2622 | 0.1577 | 0.0016 |
| 288 | SLU 44 | 2.58 | 0.34 | 32.43 | -0.2569 | 0.1574 | 0.0016 |
| 288 | SLU 45 | 2.66 | 0.36 | 33.3 | -0.2671 | 0.1635 | 0.0016 |
| 288 | SLU 46 | 2.68 | 0.35 | 33 | -0.264 | 0.1633 | 0.0016 |
| 288 | SLU 47 | 2.67 | 0.35 | 32.57 | -0.2584 | 0.1612 | 0.0016 |
| 288 | SLU 48 | 2.75 | 0.36 | 33.44 | -0.2685 | 0.1674 | 0.0016 |
| 288 | SLU 49 | 2.77 | 0.36 | 33.14 | -0.2654 | 0.1671 | 0.0016 |
| 288 | SLU 50 | 2.71 | 0.36 | 33.21 | -0.265 | 0.1654 | 0.0016 |
| 288 | SLU 51 | 2.74 | 0.35 | 32.91 | -0.2619 | 0.1651 | 0.0016 |
| 288 | SLU 52 | 2.96 | 0.38 | 36.27 | -0.2857 | 0.1793 | 0.0017 |
| 288 | SLU 53 | 3.04 | 0.4 | 37.14 | -0.2958 | 0.1855 | 0.0018 |
| 288 | SLU 54 | 3.07 | 0.39 | 36.84 | -0.2927 | 0.1853 | 0.0018 |
| 288 | SLU 55 | 3.05 | 0.38 | 36.41 | -0.2871 | 0.1832 | 0.0018 |
| 288 | SLU 56 | 3.13 | 0.4 | 37.28 | -0.2973 | 0.1893 | 0.0018 |
| 288 | SLU 57 | 3.15 | 0.39 | 36.98 | -0.2941 | 0.1891 | 0.0018 |
| 288 | SLU 58 | 3.1 | 0.39 | 37.05 | -0.2937 | 0.1873 | 0.0018 |
| 288 | SLU 59 | 3.12 | 0.39 | 36.75 | -0.2906 | 0.1871 | 0.0018 |
| 288 | SLU 60 | 3.09 | 0.41 | 38.41 | -0.3032 | 0.1891 | 0.0019 |
| 288 | SLU 61 | 3.11 | 0.4 | 38.11 | -0.3001 | 0.1889 | 0.0018 |
| 288 | SLU 62 | 3.17 | 0.41 | 38.55 | -0.3046 | 0.1929 | 0.0019 |
| 288 | SLU 63 | 3.2 | 0.4 | 38.25 | -0.3015 | 0.1927 | 0.0018 |
| 288 | SLU 64 | 2.94 | 0.39 | 36.43 | -0.2901 | 0.1799 | 0.0018 |
| 288 | SLU 65 | 2.98 | 0.38 | 35.93 | -0.2848 | 0.1795 | 0.0017 |
| 288 | SLU 66 | 3.06 | 0.39 | 36.8 | -0.295 | 0.1857 | 0.0018 |
| 288 | SLU 67 | 3.08 | 0.39 | 36.5 | -0.2918 | 0.1855 | 0.0018 |
| 288 | SLU 68 | 3.06 | 0.38 | 36.07 | -0.2863 | 0.1834 | 0.0018 |
| 288 | SLU 69 | 3.14 | 0.4 | 36.94 | -0.2964 | 0.1895 | 0.0018 |
| 288 | SLU 70 | 3.16 | 0.39 | 36.64 | -0.2933 | 0.1893 | 0.0018 |
| 288 | SLU 71 | 3.11 | 0.39 | 36.71 | -0.2929 | 0.1875 | 0.0018 |
| 288 | SLU 72 | 3.13 | 0.39 | 36.41 | -0.2898 | 0.1873 | 0.0018 |
| 288 | SLU 73 | 3.36 | 0.42 | 39.77 | -0.3136 | 0.2015 | 0.0019 |
| 288 | SLU 74 | 3.44 | 0.43 | 40.64 | -0.3237 | 0.2077 | 0.002 |
| 288 | SLU 75 | 3.46 | 0.43 | 40.34 | -0.3206 | 0.2075 | 0.002 |
| 288 | SLU 76 | 3.44 | 0.42 | 39.91 | -0.315 | 0.2053 | 0.0019 |
| 288 | SLU 77 | 3.52 | 0.44 | 40.78 | -0.3251 | 0.2115 | 0.002 |
| 288 | SLU 78 | 3.54 | 0.43 | 40.48 | -0.322 | 0.2113 | 0.002 |
| 288 | SLU 79 | 3.49 | 0.43 | 40.55 | -0.3216 | 0.2095 | 0.002 |
| 288 | SLU 80 | 3.51 | 0.43 | 40.25 | -0.3185 | 0.2093 | 0.002 |
| 288 | SLU 81 | 3.48 | 0.44 | 41.91 | -0.3311 | 0.2113 | 0.002 |
| 288 | SLU 82 | 3.51 | 0.44 | 41.61 | -0.328 | 0.2111 | 0.002 |
| 288 | SLU 83 | 3.57 | 0.45 | 42.05 | -0.3325 | 0.2151 | 0.002 |
| 288 | SLU 84 | 3.59 | 0.44 | 41.75 | -0.3294 | 0.2149 | 0.002 |
| 288 | SLE RA 1 | 2.17 | 0.29 | 27.25 | -0.217 | 0.1335 | 0.0013 |
| 288 | SLE RA 2 | 2.2 | 0.29 | 26.92 | -0.2135 | 0.1333 | 0.0013 |
| 288 | SLE RA 3 | 2.25 | 0.29 | 27.5 | -0.2203 | 0.1374 | 0.0013 |
| 288 | SLE RA 4 | 2.27 | 0.29 | 27.3 | -0.2182 | 0.1372 | 0.0013 |
| 288 | SLE RA 5 | 2.26 | 0.29 | 27.02 | -0.2145 | 0.1358 | 0.0013 |
| 288 | SLE RA 6 | 2.31 | 0.3 | 27.59 | -0.2212 | 0.1399 | 0.0014 |
| 288 | SLE RA 7 | 2.32 | 0.29 | 27.39 | -0.2191 | 0.1398 | 0.0013 |
| 288 | SLE RA 8 | 2.29 | 0.29 | 27.44 | -0.2189 | 0.1386 | 0.0013 |
| 288 | SLE RA 9 | 2.3 | 0.29 | 27.24 | -0.2168 | 0.1385 | 0.0013 |
| 288 | SLE RA 10 | 2.45 | 0.31 | 29.48 | -0.2327 | 0.1479 | 0.0014 |
| 288 | SLE RA 11 | 2.51 | 0.32 | 30.06 | -0.2394 | 0.152 | 0.0015 |
| 288 | SLE RA 12 | 2.52 | 0.32 | 29.86 | -0.2373 | 0.1519 | 0.0015 |
| 288 | SLE RA 13 | 2.51 | 0.31 | 29.57 | -0.2336 | 0.1505 | 0.0014 |
| 288 | SLE RA 14 | 2.56 | 0.32 | 30.15 | -0.2404 | 0.1546 | 0.0015 |
| 288 | SLE RA 15 | 2.58 | 0.32 | 29.95 | -0.2383 | 0.1544 | 0.0015 |
| 288 | SLE RA 16 | 2.54 | 0.32 | 30 | -0.238 | 0.1533 | 0.0015 |
| 288 | SLE RA 17 | 2.56 | 0.32 | 29.8 | -0.236 | 0.1531 | 0.0014 |
| 288 | SLE RA 18 | 2.54 | 0.33 | 30.91 | -0.2444 | 0.1545 | 0.0015 |
| 288 | SLE RA 19 | 2.55 | 0.32 | 30.71 | -0.2423 | 0.1543 | 0.0015 |
| 288 | SLE RA 20 | 2.59 | 0.33 | 31 | -0.2453 | 0.157 | 0.0015 |
| 288 | SLE RA 21 | 2.61 | 0.33 | 30.8 | -0.2432 | 0.1568 | 0.0015 |
| 288 | SLE FR 1 | 2.17 | 0.29 | 27.25 | -0.217 | 0.1335 | 0.0013 |
| 288 | SLE FR 2 | 2.18 | 0.29 | 27.19 | -0.2163 | 0.1335 | 0.0013 |
| 288 | SLE FR 3 | 2.2 | 0.29 | 27.29 | -0.2174 | 0.1345 | 0.0013 |
| 288 | SLE FR 4 | 2.29 | 0.3 | 28.28 | -0.2245 | 0.1398 | 0.0014 |
| 288 | SLE FR 5 | 2.31 | 0.3 | 28.39 | -0.2256 | 0.1408 | 0.0014 |
| 288 | SLE FR 6 | 2.36 | 0.31 | 29.08 | -0.2307 | 0.144 | 0.0014 |
| 288 | SLE QP 1 | 2.17 | 0.29 | 27.25 | -0.217 | 0.1335 | 0.0013 |
| 288 | SLE QP 2 | 2.28 | 0.3 | 28.35 | -0.2252 | 0.1398 | 0.0014 |
| 288 | SLD 1 | 10.94 | 0.31 | 28.6 | -0.1974 | 0.509 | 0.0014 |
| 288 | SLD 2 | 10.94 | 0.31 | 28.6 | -0.1974 | 0.509 | 0.0014 |
| 288 | SLD 3 | 12.15 | 0.65 | 32.9 | -0.5123 | 0.5667 | 0.0028 |
| 288 | SLD 4 | 12.15 | 0.65 | 32.9 | -0.5123 | 0.5667 | 0.0028 |
| 288 | SLD 5 | 3.04 | -0.22 | 21.9 | 0.2608 | 0.163 | -0.0008 |
| 288 | SLD 6 | 3.04 | -0.22 | 21.9 | 0.2608 | 0.163 | -0.0008 |
| 288 | SLD 7 | 7.08 | 0.93 | 36.24 | -0.7889 | 0.3554 | 0.004 |
| 288 | SLD 8 | 7.08 | 0.93 | 36.24 | -0.7889 | 0.3554 | 0.004 |
| 288 | SLD 9 | -2.52 | -0.33 | 20.46 | 0.3385 | -0.0758 | -0.0012 |
| 288 | SLD 10 | -2.52 | -0.33 | 20.46 | 0.3385 | -0.0758 | -0.0012 |
| 288 | SLD 11 | 1.52 | 0.83 | 34.81 | -0.7112 | 0.1166 | 0.0035 |
| 288 | SLD 12 | 1.52 | 0.83 | 34.81 | -0.7112 | 0.1166 | 0.0035 |
| 288 | SLD 13 | -7.59 | -0.05 | 23.8 | 0.0619 | -0.2871 | -0.0001 |

| Nodo | Cont. | Reazione a traslazione | | | Reazione a rotazione | | |
|---|---|---|---|---|---|---|---|
| Ind. | N.br. | x | y | z | x | y | z |
| 288 | SLD 14 | -7.59 | -0.05 | 23.8 | 0.0619 | -0.2871 | -0.0001 |
| 288 | SLD 15 | -6.37 | 0.3 | 28.11 | -0.253 | -0.2294 | 0.0014 |
| 288 | SLD 16 | -6.37 | 0.3 | 28.11 | -0.253 | -0.2294 | 0.0014 |
| 288 | SLV 1 | 22.09 | 0.29 | 28.57 | -0.1408 | 0.984 | 0.0013 |
| 288 | SLV 2 | 22.09 | 0.29 | 28.57 | -0.1408 | 0.984 | 0.0013 |
| 288 | SLV 3 | 25.01 | 1.14 | 39.17 | -0.9186 | 1.1235 | 0.0049 |
| 288 | SLV 4 | 25.01 | 1.14 | 39.17 | -0.9186 | 1.1235 | 0.0049 |
| 288 | SLV 5 | 3.79 | -1 | 12.35 | 0.9798 | 0.1815 | -0.004 |
| 288 | SLV 6 | 3.79 | -1 | 12.35 | 0.9798 | 0.1815 | -0.004 |
| 288 | SLV 7 | 13.53 | 1.85 | 47.67 | -1.6129 | 0.6465 | 0.0078 |
| 288 | SLV 8 | 13.53 | 1.85 | 47.67 | -1.6129 | 0.6465 | 0.0078 |
| 288 | SLV 9 | -8.97 | -1.25 | 9.04 | 1.1624 | -0.3669 | -0.005 |
| 288 | SLV 10 | -8.97 | -1.25 | 9.04 | 1.1624 | -0.3669 | -0.005 |
| 288 | SLV 11 | 0.77 | 1.6 | 44.35 | -1.4302 | 0.0981 | 0.0067 |
| 288 | SLV 12 | 0.77 | 1.6 | 44.35 | -1.4302 | 0.0981 | 0.0067 |
| 288 | SLV 13 | -20.44 | -0.54 | 17.54 | 0.4682 | -0.8439 | -0.0021 |
| 288 | SLV 14 | -20.44 | -0.54 | 17.54 | 0.4682 | -0.8439 | -0.0021 |
| 288 | SLV 15 | -17.52 | 0.31 | 28.13 | -0.3096 | -0.7044 | 0.0014 |
| 288 | SLV 16 | -17.52 | 0.31 | 28.13 | -0.3096 | -0.7044 | 0.0014 |
| 289 | SLU 1 | 2.49 | 0.31 | 28.89 | -0.2167 | 0.0398 | 0.0015 |
| 289 | SLU 2 | 2.48 | 0.3 | 28.53 | -0.2121 | 0.0397 | 0.0015 |
| 289 | SLU 3 | 2.61 | 0.32 | 29.34 | -0.2218 | 0.0435 | 0.0016 |
| 289 | SLU 4 | 2.61 | 0.31 | 29.12 | -0.2191 | 0.0435 | 0.0016 |
| 289 | SLU 5 | 2.56 | 0.3 | 28.7 | -0.2136 | 0.0427 | 0.0015 |
| 289 | SLU 6 | 2.69 | 0.32 | 29.51 | -0.2234 | 0.0465 | 0.0016 |
| 289 | SLU 7 | 2.69 | 0.31 | 29.29 | -0.2206 | 0.0465 | 0.0016 |
| 289 | SLU 8 | 2.65 | 0.31 | 29.24 | -0.2197 | 0.0458 | 0.0016 |
| 289 | SLU 9 | 2.64 | 0.31 | 29.02 | -0.217 | 0.0457 | 0.0016 |
| 289 | SLU 10 | 2.89 | 0.35 | 32.88 | -0.243 | 0.046 | 0.0017 |
| 289 | SLU 11 | 3.02 | 0.36 | 33.68 | -0.2527 | 0.0499 | 0.0018 |
| 289 | SLU 12 | 3.02 | 0.36 | 33.47 | -0.25 | 0.0498 | 0.0018 |
| 289 | SLU 13 | 2.97 | 0.35 | 33.05 | -0.2445 | 0.049 | 0.0017 |
| 289 | SLU 14 | 3.1 | 0.36 | 33.86 | -0.2542 | 0.0529 | 0.0018 |
| 289 | SLU 15 | 3.1 | 0.36 | 33.64 | -0.2515 | 0.0528 | 0.0018 |
| 289 | SLU 16 | 3.06 | 0.36 | 33.58 | -0.2506 | 0.0521 | 0.0018 |
| 289 | SLU 17 | 3.05 | 0.35 | 33.37 | -0.2479 | 0.0521 | 0.0018 |
| 289 | SLU 18 | 3.07 | 0.37 | 35.1 | -0.2608 | 0.0488 | 0.0019 |
| 289 | SLU 19 | 3.07 | 0.37 | 34.88 | -0.2581 | 0.0488 | 0.0018 |
| 289 | SLU 20 | 3.15 | 0.37 | 35.27 | -0.2623 | 0.0518 | 0.0019 |
| 289 | SLU 21 | 3.15 | 0.37 | 35.06 | -0.2596 | 0.0518 | 0.0019 |
| 289 | SLU 22 | 2.91 | 0.35 | 32.87 | -0.2465 | 0.0475 | 0.0018 |
| 289 | SLU 23 | 2.91 | 0.34 | 32.5 | -0.2419 | 0.0474 | 0.0017 |
| 289 | SLU 24 | 3.04 | 0.36 | 33.31 | -0.2516 | 0.0513 | 0.0018 |
| 289 | SLU 25 | 3.03 | 0.36 | 33.1 | -0.2489 | 0.0513 | 0.0018 |
| 289 | SLU 26 | 2.99 | 0.35 | 32.68 | -0.2434 | 0.0505 | 0.0017 |
| 289 | SLU 27 | 3.12 | 0.36 | 33.49 | -0.2531 | 0.0543 | 0.0018 |
| 289 | SLU 28 | 3.11 | 0.36 | 33.27 | -0.2504 | 0.0543 | 0.0018 |
| 289 | SLU 29 | 3.07 | 0.36 | 33.21 | -0.2495 | 0.0536 | 0.0018 |
| 289 | SLU 30 | 3.07 | 0.35 | 32.99 | -0.2468 | 0.0535 | 0.0018 |
| 289 | SLU 31 | 3.32 | 0.39 | 36.85 | -0.2728 | 0.0538 | 0.002 |
| 289 | SLU 32 | 3.45 | 0.4 | 37.66 | -0.2825 | 0.0576 | 0.002 |
| 289 | SLU 33 | 3.44 | 0.4 | 37.44 | -0.2798 | 0.0576 | 0.002 |
| 289 | SLU 34 | 3.4 | 0.39 | 37.02 | -0.2743 | 0.0568 | 0.002 |
| 289 | SLU 35 | 3.53 | 0.41 | 37.83 | -0.284 | 0.0607 | 0.002 |
| 289 | SLU 36 | 3.52 | 0.4 | 37.62 | -0.2813 | 0.0606 | 0.002 |
| 289 | SLU 37 | 3.48 | 0.4 | 37.56 | -0.2804 | 0.0599 | 0.002 |
| 289 | SLU 38 | 3.48 | 0.4 | 37.34 | -0.2777 | 0.0599 | 0.002 |
| 289 | SLU 39 | 3.5 | 0.42 | 39.07 | -0.2906 | 0.0566 | 0.0021 |
| 289 | SLU 40 | 3.49 | 0.41 | 38.86 | -0.2879 | 0.0565 | 0.0021 |
| 289 | SLU 41 | 3.58 | 0.42 | 39.25 | -0.2921 | 0.0596 | 0.0021 |
| 289 | SLU 42 | 3.57 | 0.41 | 39.03 | -0.2894 | 0.0596 | 0.0021 |
| 289 | SLU 43 | 3.09 | 0.39 | 36.19 | -0.2715 | 0.049 | 0.0019 |
| 289 | SLU 44 | 3.08 | 0.38 | 35.83 | -0.2669 | 0.0489 | 0.0019 |
| 289 | SLU 45 | 3.21 | 0.39 | 36.64 | -0.2766 | 0.0528 | 0.002 |
| 289 | SLU 46 | 3.21 | 0.39 | 36.43 | -0.2739 | 0.0527 | 0.002 |
| 289 | SLU 47 | 3.16 | 0.38 | 36.01 | -0.2684 | 0.0519 | 0.0019 |
| 289 | SLU 48 | 3.29 | 0.4 | 36.82 | -0.2781 | 0.0558 | 0.002 |
| 289 | SLU 49 | 3.29 | 0.39 | 36.6 | -0.2754 | 0.0557 | 0.002 |
| 289 | SLU 50 | 3.25 | 0.39 | 36.54 | -0.2745 | 0.055 | 0.002 |
| 289 | SLU 51 | 3.24 | 0.39 | 36.32 | -0.2718 | 0.055 | 0.0019 |
| 289 | SLU 52 | 3.49 | 0.42 | 40.18 | -0.2978 | 0.0553 | 0.0021 |
| 289 | SLU 53 | 3.62 | 0.44 | 40.99 | -0.3075 | 0.0591 | 0.0022 |
| 289 | SLU 54 | 3.62 | 0.43 | 40.77 | -0.3048 | 0.0591 | 0.0022 |
| 289 | SLU 55 | 3.57 | 0.43 | 40.35 | -0.2993 | 0.0583 | 0.0021 |
| 289 | SLU 56 | 3.7 | 0.44 | 41.16 | -0.309 | 0.0621 | 0.0022 |
| 289 | SLU 57 | 3.7 | 0.44 | 40.95 | -0.3063 | 0.0621 | 0.0022 |
| 289 | SLU 58 | 3.66 | 0.44 | 40.89 | -0.3054 | 0.0614 | 0.0022 |
| 289 | SLU 59 | 3.65 | 0.43 | 40.67 | -0.3027 | 0.0613 | 0.0022 |
| 289 | SLU 60 | 3.67 | 0.45 | 42.4 | -0.3156 | 0.0581 | 0.0023 |
| 289 | SLU 61 | 3.67 | 0.45 | 42.19 | -0.3129 | 0.058 | 0.0022 |
| 289 | SLU 62 | 3.75 | 0.45 | 42.58 | -0.3171 | 0.0611 | 0.0023 |
| 289 | SLU 63 | 3.75 | 0.45 | 42.36 | -0.3144 | 0.061 | 0.0022 |
| 289 | SLU 64 | 3.51 | 0.43 | 40.17 | -0.3013 | 0.0568 | 0.0021 |
| 289 | SLU 65 | 3.51 | 0.42 | 39.81 | -0.2967 | 0.0567 | 0.0021 |
| 289 | SLU 66 | 3.64 | 0.44 | 40.62 | -0.3064 | 0.0606 | 0.0022 |
| 289 | SLU 67 | 3.63 | 0.43 | 40.4 | -0.3037 | 0.0605 | 0.0022 |
| 289 | SLU 68 | 3.59 | 0.43 | 39.98 | -0.2982 | 0.0597 | 0.0021 |
| 289 | SLU 69 | 3.72 | 0.44 | 40.79 | -0.3079 | 0.0636 | 0.0022 |

| Nodo | Cont. | Reazione a traslazione | | | Reazione a rotazione | | |
|---|---|---|---|---|---|---|---|
| Ind. | N.br. | x | y | z | x | y | z |
| 289 | SLU 70 | 3.71 | 0.44 | 40.57 | -0.3052 | 0.0635 | 0.0022 |
| 289 | SLU 71 | 3.67 | 0.43 | 40.51 | -0.3043 | 0.0628 | 0.0022 |
| 289 | SLU 72 | 3.67 | 0.43 | 40.3 | -0.3016 | 0.0628 | 0.0022 |
| 289 | SLU 73 | 3.92 | 0.47 | 44.16 | -0.3276 | 0.063 | 0.0023 |
| 289 | SLU 74 | 4.05 | 0.48 | 44.96 | -0.3373 | 0.0669 | 0.0024 |
| 289 | SLU 75 | 4.04 | 0.48 | 44.75 | -0.3346 | 0.0669 | 0.0024 |
| 289 | SLU 76 | 4 | 0.47 | 44.33 | -0.3291 | 0.0661 | 0.0024 |
| 289 | SLU 77 | 4.13 | 0.48 | 45.14 | -0.3388 | 0.0699 | 0.0024 |
| 289 | SLU 78 | 4.12 | 0.48 | 44.92 | -0.3361 | 0.0699 | 0.0024 |
| 289 | SLU 79 | 4.08 | 0.48 | 44.86 | -0.3352 | 0.0692 | 0.0024 |
| 289 | SLU 80 | 4.08 | 0.48 | 44.64 | -0.3324 | 0.0691 | 0.0024 |
| 289 | SLU 81 | 4.1 | 0.49 | 46.38 | -0.3454 | 0.0659 | 0.0025 |
| 289 | SLU 82 | 4.09 | 0.49 | 46.16 | -0.3427 | 0.0658 | 0.0024 |
| 289 | SLU 83 | 4.18 | 0.5 | 46.55 | -0.3469 | 0.0689 | 0.0025 |
| 289 | SLU 84 | 4.18 | 0.49 | 46.33 | -0.3442 | 0.0688 | 0.0025 |
| 289 | SLE RA 1 | 2.61 | 0.32 | 30.03 | -0.2252 | 0.042 | 0.0016 |
| 289 | SLE RA 2 | 2.6 | 0.32 | 29.79 | -0.2222 | 0.0419 | 0.0016 |
| 289 | SLE RA 3 | 2.69 | 0.33 | 30.32 | -0.2286 | 0.0445 | 0.0016 |
| 289 | SLE RA 4 | 2.69 | 0.32 | 30.18 | -0.2268 | 0.0445 | 0.0016 |
| 289 | SLE RA 5 | 2.66 | 0.32 | 29.9 | -0.2232 | 0.0439 | 0.0016 |
| 289 | SLE RA 6 | 2.74 | 0.33 | 30.44 | -0.2296 | 0.0465 | 0.0016 |
| 289 | SLE RA 7 | 2.74 | 0.33 | 30.3 | -0.2278 | 0.0465 | 0.0016 |
| 289 | SLE RA 8 | 2.72 | 0.32 | 30.26 | -0.2272 | 0.046 | 0.0016 |
| 289 | SLE RA 9 | 2.71 | 0.32 | 30.11 | -0.2254 | 0.046 | 0.0016 |
| 289 | SLE RA 10 | 2.88 | 0.35 | 32.68 | -0.2427 | 0.0461 | 0.0017 |
| 289 | SLE RA 11 | 2.96 | 0.36 | 33.22 | -0.2492 | 0.0487 | 0.0018 |
| 289 | SLE RA 12 | 2.96 | 0.35 | 33.08 | -0.2474 | 0.0487 | 0.0018 |
| 289 | SLE RA 13 | 2.93 | 0.35 | 32.8 | -0.2438 | 0.0482 | 0.0017 |
| 289 | SLE RA 14 | 3.02 | 0.36 | 33.34 | -0.2502 | 0.0507 | 0.0018 |
| 289 | SLE RA 15 | 3.02 | 0.35 | 33.19 | -0.2484 | 0.0507 | 0.0018 |
| 289 | SLE RA 16 | 2.99 | 0.35 | 33.15 | -0.2478 | 0.0502 | 0.0018 |
| 289 | SLE RA 17 | 2.99 | 0.35 | 33.01 | -0.246 | 0.0502 | 0.0018 |
| 289 | SLE RA 18 | 3 | 0.36 | 34.17 | -0.2546 | 0.048 | 0.0018 |
| 289 | SLE RA 19 | 3 | 0.36 | 34.02 | -0.2528 | 0.048 | 0.0018 |
| 289 | SLE RA 20 | 3.05 | 0.36 | 34.28 | -0.2556 | 0.05 | 0.0018 |
| 289 | SLE RA 21 | 3.05 | 0.36 | 34.14 | -0.2538 | 0.05 | 0.0018 |
| 289 | SLE FR 1 | 2.61 | 0.32 | 30.03 | -0.2252 | 0.042 | 0.0016 |
| 289 | SLE FR 2 | 2.61 | 0.32 | 29.98 | -0.2246 | 0.042 | 0.0016 |
| 289 | SLE FR 3 | 2.63 | 0.32 | 30.07 | -0.2256 | 0.0428 | 0.0016 |
| 289 | SLE FR 4 | 2.72 | 0.33 | 31.22 | -0.2334 | 0.0438 | 0.0017 |
| 289 | SLE FR 5 | 2.75 | 0.33 | 31.31 | -0.2344 | 0.0446 | 0.0017 |
| 289 | SLE FR 6 | 2.8 | 0.34 | 32.1 | -0.2399 | 0.045 | 0.0017 |
| 289 | SLE QP 1 | 2.61 | 0.32 | 30.03 | -0.2252 | 0.042 | 0.0016 |
| 289 | SLE QP 2 | 2.73 | 0.33 | 31.27 | -0.234 | 0.0438 | 0.0017 |
| 289 | SLD 1 | 11.19 | 0.35 | 32 | -0.2141 | 0.4224 | 0.0018 |
| 289 | SLD 2 | 11.19 | 0.35 | 32 | -0.2141 | 0.4224 | 0.0018 |
| 289 | SLD 3 | 12.39 | 0.65 | 35.64 | -0.4951 | 0.4724 | 0.0031 |
| 289 | SLD 4 | 12.39 | 0.65 | 35.64 | -0.4951 | 0.4724 | 0.0031 |
| 289 | SLD 5 | 3.43 | -0.12 | 25.98 | 0.1981 | 0.0816 | -0.0003 |
| 289 | SLD 6 | 3.43 | -0.12 | 25.98 | 0.1981 | 0.0816 | -0.0003 |
| 289 | SLD 7 | 7.46 | 0.89 | 38.09 | -0.7385 | 0.2482 | 0.0041 |
| 289 | SLD 8 | 7.46 | 0.89 | 38.09 | -0.7385 | 0.2482 | 0.0041 |
| 289 | SLD 9 | -2.01 | -0.22 | 24.45 | 0.2705 | -0.1606 | -0.0008 |
| 289 | SLD 10 | -2.01 | -0.22 | 24.45 | 0.2705 | -0.1606 | -0.0008 |
| 289 | SLD 11 | 2.02 | 0.79 | 36.56 | -0.6662 | 0.006 | 0.0036 |
| 289 | SLD 12 | 2.02 | 0.79 | 36.56 | -0.6662 | 0.006 | 0.0036 |
| 289 | SLD 13 | -6.94 | 0.01 | 26.9 | 0.0271 | -0.3848 | 0.0002 |
| 289 | SLD 14 | -6.94 | 0.01 | 26.9 | 0.0271 | -0.3848 | 0.0002 |
| 289 | SLD 15 | -5.74 | 0.32 | 30.53 | -0.2539 | -0.3348 | 0.0015 |
| 289 | SLD 16 | -5.74 | 0.32 | 30.53 | -0.2539 | -0.3348 | 0.0015 |
| 289 | SLV 1 | 22.08 | 0.36 | 32.66 | -0.1704 | 0.9101 | 0.0019 |
| 289 | SLV 2 | 22.08 | 0.36 | 32.66 | -0.1704 | 0.9101 | 0.0019 |
| 289 | SLV 3 | 24.99 | 1.1 | 41.6 | -0.8636 | 1.0308 | 0.0051 |
| 289 | SLV 4 | 24.99 | 1.1 | 41.6 | -0.8636 | 1.0308 | 0.0051 |
| 289 | SLV 5 | 4.1 | -0.79 | 18.12 | 0.8364 | 0.1207 | -0.0031 |
| 289 | SLV 6 | 4.1 | -0.79 | 18.12 | 0.8364 | 0.1207 | -0.0031 |
| 289 | SLV 7 | 13.83 | 1.69 | 47.93 | -1.4742 | 0.5229 | 0.0076 |
| 289 | SLV 8 | 13.83 | 1.69 | 47.93 | -1.4742 | 0.5229 | 0.0076 |
| 289 | SLV 9 | -8.38 | -1.02 | 14.6 | 1.0062 | -0.4353 | -0.0042 |
| 289 | SLV 10 | -8.38 | -1.02 | 14.6 | 1.0062 | -0.4353 | -0.0042 |
| 289 | SLV 11 | 1.35 | 1.45 | 44.42 | -1.3045 | -0.0331 | 0.0065 |
| 289 | SLV 12 | 1.35 | 1.45 | 44.42 | -1.3045 | -0.0331 | 0.0065 |
| 289 | SLV 13 | -19.54 | -0.43 | 20.93 | 0.3955 | -0.9432 | -0.0018 |
| 289 | SLV 14 | -19.54 | -0.43 | 20.93 | 0.3955 | -0.9432 | -0.0018 |
| 289 | SLV 15 | -16.62 | 0.31 | 29.88 | -0.2977 | -0.8225 | 0.0014 |
| 289 | SLV 16 | -16.62 | 0.31 | 29.88 | -0.2977 | -0.8225 | 0.0014 |
| 290 | SLU 1 | 4.37 | 0.32 | 33.23 | -0.21 | 0.2202 | 0.0014 |
| 290 | SLU 2 | 4.32 | 0.31 | 32.98 | -0.2063 | 0.2169 | 0.0014 |
| 290 | SLU 3 | 4.54 | 0.33 | 33.79 | -0.215 | 0.228 | 0.0015 |
| 290 | SLU 4 | 4.51 | 0.32 | 33.64 | -0.2128 | 0.2261 | 0.0015 |
| 290 | SLU 5 | 4.41 | 0.32 | 33.19 | -0.2077 | 0.2208 | 0.0014 |
| 290 | SLU 6 | 4.62 | 0.33 | 34 | -0.2165 | 0.2318 | 0.0015 |
| 290 | SLU 7 | 4.59 | 0.33 | 33.85 | -0.2142 | 0.2299 | 0.0015 |
| 290 | SLU 8 | 4.54 | 0.32 | 33.65 | -0.2129 | 0.2278 | 0.0015 |
| 290 | SLU 9 | 4.51 | 0.32 | 33.5 | -0.2107 | 0.2259 | 0.0015 |
| 290 | SLU 10 | 5 | 0.36 | 38.1 | -0.2372 | 0.2513 | 0.0016 |
| 290 | SLU 11 | 5.22 | 0.37 | 38.91 | -0.246 | 0.2624 | 0.0017 |
| 290 | SLU 12 | 5.19 | 0.37 | 38.76 | -0.2437 | 0.2604 | 0.0017 |

| Nodo | Cont. | Reazione a traslazione | | | Reazione a rotazione | | |
|---|---|---|---|---|---|---|---|
| Ind. | N.br. | x | y | z | x | y | z |
| 290 | SLU 13 | 5.09 | 0.36 | 38.31 | -0.2387 | 0.2552 | 0.0016 |
| 290 | SLU 14 | 5.3 | 0.38 | 39.12 | -0.2474 | 0.2662 | 0.0017 |
| 290 | SLU 15 | 5.27 | 0.37 | 38.97 | -0.2452 | 0.2643 | 0.0017 |
| 290 | SLU 16 | 5.22 | 0.37 | 38.77 | -0.2439 | 0.2622 | 0.0017 |
| 290 | SLU 17 | 5.19 | 0.37 | 38.62 | -0.2416 | 0.2603 | 0.0017 |
| 290 | SLU 18 | 5.34 | 0.39 | 40.54 | -0.2542 | 0.2693 | 0.0018 |
| 290 | SLU 19 | 5.31 | 0.38 | 40.39 | -0.252 | 0.2673 | 0.0017 |
| 290 | SLU 20 | 5.43 | 0.39 | 40.75 | -0.2557 | 0.2731 | 0.0018 |
| 290 | SLU 21 | 5.4 | 0.39 | 40.6 | -0.2534 | 0.2712 | 0.0018 |
| 290 | SLU 22 | 5.06 | 0.36 | 37.92 | -0.2397 | 0.2544 | 0.0017 |
| 290 | SLU 23 | 5.01 | 0.36 | 37.67 | -0.2359 | 0.2512 | 0.0016 |
| 290 | SLU 24 | 5.22 | 0.37 | 38.49 | -0.2447 | 0.2623 | 0.0017 |
| 290 | SLU 25 | 5.19 | 0.37 | 38.33 | -0.2424 | 0.2603 | 0.0017 |
| 290 | SLU 26 | 5.09 | 0.36 | 37.88 | -0.2374 | 0.255 | 0.0016 |
| 290 | SLU 27 | 5.31 | 0.37 | 38.7 | -0.2461 | 0.2661 | 0.0017 |
| 290 | SLU 28 | 5.28 | 0.37 | 38.54 | -0.2439 | 0.2642 | 0.0017 |
| 290 | SLU 29 | 5.22 | 0.37 | 38.34 | -0.2426 | 0.2621 | 0.0017 |
| 290 | SLU 30 | 5.19 | 0.37 | 38.19 | -0.2403 | 0.2602 | 0.0017 |
| 290 | SLU 31 | 5.69 | 0.41 | 42.79 | -0.2669 | 0.2856 | 0.0018 |
| 290 | SLU 32 | 5.9 | 0.42 | 43.6 | -0.2756 | 0.2966 | 0.0019 |
| 290 | SLU 33 | 5.87 | 0.42 | 43.45 | -0.2734 | 0.2947 | 0.0019 |
| 290 | SLU 34 | 5.77 | 0.41 | 43 | -0.2683 | 0.2894 | 0.0019 |
| 290 | SLU 35 | 5.99 | 0.42 | 43.81 | -0.2771 | 0.3005 | 0.0019 |
| 290 | SLU 36 | 5.96 | 0.42 | 43.66 | -0.2748 | 0.2986 | 0.0019 |
| 290 | SLU 37 | 5.9 | 0.42 | 43.46 | -0.2735 | 0.2965 | 0.0019 |
| 290 | SLU 38 | 5.87 | 0.41 | 43.31 | -0.2713 | 0.2946 | 0.0019 |
| 290 | SLU 39 | 6.03 | 0.43 | 45.23 | -0.2839 | 0.3035 | 0.002 |
| 290 | SLU 40 | 6 | 0.43 | 45.08 | -0.2816 | 0.3016 | 0.0019 |
| 290 | SLU 41 | 6.11 | 0.43 | 45.44 | -0.2853 | 0.3074 | 0.002 |
| 290 | SLU 42 | 6.08 | 0.43 | 45.29 | -0.2831 | 0.3054 | 0.002 |
| 290 | SLU 43 | 5.45 | 0.4 | 41.59 | -0.2629 | 0.2745 | 0.0018 |
| 290 | SLU 44 | 5.4 | 0.39 | 41.34 | -0.2591 | 0.2712 | 0.0018 |
| 290 | SLU 45 | 5.61 | 0.41 | 42.15 | -0.2679 | 0.2823 | 0.0018 |
| 290 | SLU 46 | 5.58 | 0.4 | 42 | -0.2656 | 0.2804 | 0.0018 |
| 290 | SLU 47 | 5.48 | 0.4 | 41.55 | -0.2606 | 0.2751 | 0.0018 |
| 290 | SLU 48 | 5.7 | 0.41 | 42.36 | -0.2693 | 0.2861 | 0.0019 |
| 290 | SLU 49 | 5.67 | 0.41 | 42.21 | -0.2671 | 0.2842 | 0.0018 |
| 290 | SLU 50 | 5.62 | 0.4 | 42.01 | -0.2658 | 0.2821 | 0.0018 |
| 290 | SLU 51 | 5.59 | 0.4 | 41.86 | -0.2635 | 0.2802 | 0.0018 |
| 290 | SLU 52 | 6.08 | 0.44 | 46.46 | -0.2901 | 0.3056 | 0.002 |
| 290 | SLU 53 | 6.29 | 0.45 | 47.27 | -0.2988 | 0.3167 | 0.0021 |
| 290 | SLU 54 | 6.26 | 0.45 | 47.12 | -0.2966 | 0.3147 | 0.002 |
| 290 | SLU 55 | 6.16 | 0.44 | 46.67 | -0.2915 | 0.3095 | 0.002 |
| 290 | SLU 56 | 6.38 | 0.46 | 47.48 | -0.3003 | 0.3205 | 0.0021 |
| 290 | SLU 57 | 6.35 | 0.45 | 47.33 | -0.298 | 0.3186 | 0.0021 |
| 290 | SLU 58 | 6.3 | 0.45 | 47.13 | -0.2967 | 0.3165 | 0.002 |
| 290 | SLU 59 | 6.27 | 0.45 | 46.98 | -0.2945 | 0.3146 | 0.002 |
| 290 | SLU 60 | 6.42 | 0.47 | 48.9 | -0.3071 | 0.3236 | 0.0021 |
| 290 | SLU 61 | 6.39 | 0.46 | 48.75 | -0.3048 | 0.3216 | 0.0021 |
| 290 | SLU 62 | 6.51 | 0.47 | 49.11 | -0.3085 | 0.3274 | 0.0021 |
| 290 | SLU 63 | 6.48 | 0.47 | 48.96 | -0.3063 | 0.3255 | 0.0021 |
| 290 | SLU 64 | 6.13 | 0.44 | 46.29 | -0.2925 | 0.3087 | 0.002 |
| 290 | SLU 65 | 6.08 | 0.44 | 46.03 | -0.2888 | 0.3055 | 0.002 |
| 290 | SLU 66 | 6.3 | 0.45 | 46.85 | -0.2975 | 0.3166 | 0.0021 |
| 290 | SLU 67 | 6.27 | 0.45 | 46.69 | -0.2953 | 0.3146 | 0.002 |
| 290 | SLU 68 | 6.17 | 0.44 | 46.24 | -0.2902 | 0.3093 | 0.002 |
| 290 | SLU 69 | 6.38 | 0.45 | 47.06 | -0.299 | 0.3204 | 0.0021 |
| 290 | SLU 70 | 6.35 | 0.45 | 46.9 | -0.2967 | 0.3185 | 0.002 |
| 290 | SLU 71 | 6.3 | 0.45 | 46.71 | -0.2954 | 0.3164 | 0.002 |
| 290 | SLU 72 | 6.27 | 0.45 | 46.55 | -0.2932 | 0.3145 | 0.002 |
| 290 | SLU 73 | 6.76 | 0.49 | 51.15 | -0.3197 | 0.3399 | 0.0022 |
| 290 | SLU 74 | 6.98 | 0.5 | 51.96 | -0.3285 | 0.3509 | 0.0023 |
| 290 | SLU 75 | 6.95 | 0.5 | 51.81 | -0.3262 | 0.349 | 0.0023 |
| 290 | SLU 76 | 6.85 | 0.49 | 51.36 | -0.3212 | 0.3437 | 0.0022 |
| 290 | SLU 77 | 7.06 | 0.5 | 52.17 | -0.3299 | 0.3548 | 0.0023 |
| 290 | SLU 78 | 7.03 | 0.5 | 52.02 | -0.3277 | 0.3529 | 0.0023 |
| 290 | SLU 79 | 6.98 | 0.5 | 51.82 | -0.3264 | 0.3508 | 0.0023 |
| 290 | SLU 80 | 6.95 | 0.49 | 51.67 | -0.3241 | 0.3489 | 0.0022 |
| 290 | SLU 81 | 7.11 | 0.51 | 53.6 | -0.3367 | 0.3578 | 0.0023 |
| 290 | SLU 82 | 7.08 | 0.51 | 53.44 | -0.3345 | 0.3559 | 0.0023 |
| 290 | SLU 83 | 7.19 | 0.51 | 53.81 | -0.3382 | 0.3617 | 0.0023 |
| 290 | SLU 84 | 7.16 | 0.51 | 53.65 | -0.3359 | 0.3597 | 0.0023 |
| 290 | SLE RA 1 | 4.57 | 0.33 | 34.57 | -0.2185 | 0.2299 | 0.0015 |
| 290 | SLE RA 2 | 4.53 | 0.33 | 34.4 | -0.216 | 0.2278 | 0.0015 |
| 290 | SLE RA 3 | 4.68 | 0.34 | 34.95 | -0.2218 | 0.2352 | 0.0015 |
| 290 | SLE RA 4 | 4.66 | 0.33 | 34.85 | -0.2203 | 0.2339 | 0.0015 |
| 290 | SLE RA 5 | 4.59 | 0.33 | 34.54 | -0.217 | 0.2304 | 0.0015 |
| 290 | SLE RA 6 | 4.73 | 0.34 | 35.09 | -0.2228 | 0.2377 | 0.0015 |
| 290 | SLE RA 7 | 4.71 | 0.34 | 34.99 | -0.2213 | 0.2364 | 0.0015 |
| 290 | SLE RA 8 | 4.68 | 0.33 | 34.85 | -0.2204 | 0.2351 | 0.0015 |
| 290 | SLE RA 9 | 4.66 | 0.33 | 34.75 | -0.2189 | 0.2338 | 0.0015 |
| 290 | SLE RA 10 | 4.99 | 0.36 | 37.82 | -0.2366 | 0.2507 | 0.0016 |
| 290 | SLE RA 11 | 5.13 | 0.37 | 38.36 | -0.2425 | 0.2581 | 0.0017 |
| 290 | SLE RA 12 | 5.11 | 0.37 | 38.26 | -0.241 | 0.2568 | 0.0017 |
| 290 | SLE RA 13 | 5.04 | 0.36 | 37.96 | -0.2376 | 0.2533 | 0.0016 |
| 290 | SLE RA 14 | 5.19 | 0.37 | 38.5 | -0.2434 | 0.2607 | 0.0017 |
| 290 | SLE RA 15 | 5.17 | 0.37 | 38.4 | -0.2419 | 0.2594 | 0.0017 |
| 290 | SLE RA 16 | 5.13 | 0.37 | 38.26 | -0.2411 | 0.258 | 0.0017 |

| Nodo | Cont. | Reazione a traslazione | | | Reazione a rotazione | | |
|---|---|---|---|---|---|---|---|
| Ind. | N.br. | x | y | z | x | y | z |
| 290 | SLE RA 17 | 5.11 | 0.36 | 38.16 | -0.2396 | 0.2567 | 0.0017 |
| 290 | SLE RA 18 | 5.22 | 0.38 | 39.45 | -0.248 | 0.2627 | 0.0017 |
| 290 | SLE RA 19 | 5.2 | 0.37 | 39.35 | -0.2465 | 0.2614 | 0.0017 |
| 290 | SLE RA 20 | 5.27 | 0.38 | 39.59 | -0.2489 | 0.2652 | 0.0017 |
| 290 | SLE RA 21 | 5.25 | 0.38 | 39.48 | -0.2474 | 0.264 | 0.0017 |
| 290 | SLE FR 1 | 4.57 | 0.33 | 34.57 | -0.2185 | 0.2299 | 0.0015 |
| 290 | SLE FR 2 | 4.56 | 0.33 | 34.54 | -0.218 | 0.2295 | 0.0015 |
| 290 | SLE FR 3 | 4.59 | 0.33 | 34.63 | -0.2189 | 0.231 | 0.0015 |
| 290 | SLE FR 4 | 4.76 | 0.34 | 36 | -0.2268 | 0.2393 | 0.0016 |
| 290 | SLE FR 5 | 4.78 | 0.35 | 36.09 | -0.2277 | 0.2408 | 0.0016 |
| 290 | SLE FR 6 | 4.89 | 0.35 | 37.01 | -0.2332 | 0.2463 | 0.0016 |
| 290 | SLE QP 1 | 4.57 | 0.33 | 34.57 | -0.2185 | 0.2299 | 0.0015 |
| 290 | SLE QP 2 | 4.76 | 0.34 | 36.04 | -0.2273 | 0.2398 | 0.0016 |
| 290 | SLD 1 | 12.59 | 0.38 | 37.05 | -0.2184 | 0.5779 | 0.0018 |
| 290 | SLD 2 | 12.59 | 0.38 | 37.05 | -0.2184 | 0.5779 | 0.0018 |
| 290 | SLD 3 | 13.9 | 0.61 | 39.79 | -0.4441 | 0.6424 | 0.0027 |
| 290 | SLD 4 | 13.9 | 0.61 | 39.79 | -0.4441 | 0.6424 | 0.0027 |
| 290 | SLD 5 | 5.13 | 0.01 | 32.19 | 0.1177 | 0.2434 | 0.0003 |
| 290 | SLD 6 | 5.13 | 0.01 | 32.19 | 0.1177 | 0.2434 | 0.0003 |
| 290 | SLD 7 | 9.49 | 0.77 | 41.31 | -0.6348 | 0.4583 | 0.0033 |
| 290 | SLD 8 | 9.49 | 0.77 | 41.31 | -0.6348 | 0.4583 | 0.0033 |
| 290 | SLD 9 | 0.04 | -0.08 | 30.76 | 0.1801 | 0.0212 | -0.0001 |
| 290 | SLD 10 | 0.04 | -0.08 | 30.76 | 0.1801 | 0.0212 | -0.0001 |
| 290 | SLD 11 | 4.4 | 0.68 | 39.88 | -0.5724 | 0.2361 | 0.0029 |
| 290 | SLD 12 | 4.4 | 0.68 | 39.88 | -0.5724 | 0.2361 | 0.0029 |
| 290 | SLD 13 | -4.37 | 0.08 | 32.28 | -0.0106 | -0.1629 | 0.0005 |
| 290 | SLD 14 | -4.37 | 0.08 | 32.28 | -0.0106 | -0.1629 | 0.0005 |
| 290 | SLD 15 | -3.07 | 0.31 | 35.02 | -0.2363 | -0.0984 | 0.0014 |
| 290 | SLD 16 | -3.07 | 0.31 | 35.02 | -0.2363 | -0.0984 | 0.0014 |
| 290 | SLV 1 | 22.64 | 0.41 | 38.15 | -0.1931 | 1.0112 | 0.002 |
| 290 | SLV 2 | 22.64 | 0.41 | 38.15 | -0.1931 | 1.0112 | 0.002 |
| 290 | SLV 3 | 25.81 | 0.97 | 44.87 | -0.7485 | 1.1681 | 0.0042 |
| 290 | SLV 4 | 25.81 | 0.97 | 44.87 | -0.7485 | 1.1681 | 0.0042 |
| 290 | SLV 5 | 5.31 | -0.48 | 26.47 | 0.6253 | 0.2332 | -0.0016 |
| 290 | SLV 6 | 5.31 | -0.48 | 26.47 | 0.6253 | 0.2332 | -0.0016 |
| 290 | SLV 7 | 15.89 | 1.38 | 48.89 | -1.2261 | 0.7563 | 0.0056 |
| 290 | SLV 8 | 15.89 | 1.38 | 48.89 | -1.2261 | 0.7563 | 0.0056 |
| 290 | SLV 9 | -6.37 | -0.69 | 23.18 | 0.7714 | -0.2768 | -0.0025 |
| 290 | SLV 10 | -6.37 | -0.69 | 23.18 | 0.7714 | -0.2768 | -0.0025 |
| 290 | SLV 11 | 4.21 | 1.17 | 45.6 | -1.08 | 0.2463 | 0.0047 |
| 290 | SLV 12 | 4.21 | 1.17 | 45.6 | -1.08 | 0.2463 | 0.0047 |
| 290 | SLV 13 | -16.29 | -0.28 | 27.2 | 0.2938 | -0.6886 | -0.001 |
| 290 | SLV 14 | -16.29 | -0.28 | 27.2 | 0.2938 | -0.6886 | -0.001 |
| 290 | SLV 15 | -13.12 | 0.28 | 33.92 | -0.2616 | -0.5317 | 0.0011 |
| 290 | SLV 16 | -13.12 | 0.28 | 33.92 | -0.2616 | -0.5317 | 0.0011 |
| 291 | SLU 1 | 3.26 | 0.28 | 38.85 | -0.1812 | 0.0505 | 0.001 |
| 291 | SLU 2 | 3.2 | 0.28 | 38.68 | -0.1785 | 0.0479 | 0.001 |
| 291 | SLU 3 | 3.4 | 0.29 | 39.55 | -0.1854 | 0.0544 | 0.001 |
| 291 | SLU 4 | 3.36 | 0.29 | 39.45 | -0.1838 | 0.0528 | 0.001 |
| 291 | SLU 5 | 3.27 | 0.28 | 38.93 | -0.1796 | 0.0503 | 0.001 |
| 291 | SLU 6 | 3.47 | 0.29 | 39.79 | -0.1866 | 0.0568 | 0.001 |
| 291 | SLU 7 | 3.43 | 0.29 | 39.69 | -0.185 | 0.0552 | 0.001 |
| 291 | SLU 8 | 3.4 | 0.28 | 39.34 | -0.1835 | 0.0553 | 0.001 |
| 291 | SLU 9 | 3.36 | 0.28 | 39.24 | -0.1819 | 0.0537 | 0.001 |
| 291 | SLU 10 | 3.66 | 0.32 | 44.76 | -0.206 | 0.0526 | 0.0011 |
| 291 | SLU 11 | 3.86 | 0.33 | 45.62 | -0.2129 | 0.0591 | 0.0011 |
| 291 | SLU 12 | 3.82 | 0.33 | 45.52 | -0.2113 | 0.0575 | 0.0011 |
| 291 | SLU 13 | 3.73 | 0.32 | 45 | -0.2071 | 0.055 | 0.0011 |
| 291 | SLU 14 | 3.93 | 0.33 | 45.87 | -0.2141 | 0.0615 | 0.0011 |
| 291 | SLU 15 | 3.89 | 0.33 | 45.77 | -0.2125 | 0.0599 | 0.0011 |
| 291 | SLU 16 | 3.86 | 0.33 | 45.42 | -0.211 | 0.06 | 0.0011 |
| 291 | SLU 17 | 3.82 | 0.33 | 45.32 | -0.2094 | 0.0584 | 0.0011 |
| 291 | SLU 18 | 3.92 | 0.34 | 47.53 | -0.2205 | 0.0572 | 0.0012 |
| 291 | SLU 19 | 3.88 | 0.34 | 47.43 | -0.2188 | 0.0556 | 0.0012 |
| 291 | SLU 20 | 3.99 | 0.35 | 47.77 | -0.2217 | 0.0596 | 0.0012 |
| 291 | SLU 21 | 3.95 | 0.34 | 47.67 | -0.22 | 0.058 | 0.0012 |
| 291 | SLU 22 | 3.74 | 0.32 | 44.43 | -0.2073 | 0.0573 | 0.0011 |
| 291 | SLU 23 | 3.69 | 0.32 | 44.27 | -0.2046 | 0.0546 | 0.0011 |
| 291 | SLU 24 | 3.88 | 0.33 | 45.13 | -0.2116 | 0.0611 | 0.0011 |
| 291 | SLU 25 | 3.85 | 0.33 | 45.03 | -0.2099 | 0.0596 | 0.0011 |
| 291 | SLU 26 | 3.75 | 0.32 | 44.51 | -0.2058 | 0.057 | 0.0011 |
| 291 | SLU 27 | 3.95 | 0.33 | 45.38 | -0.2128 | 0.0635 | 0.0011 |
| 291 | SLU 28 | 3.92 | 0.33 | 45.28 | -0.2111 | 0.062 | 0.0011 |
| 291 | SLU 29 | 3.88 | 0.33 | 44.93 | -0.2097 | 0.062 | 0.0011 |
| 291 | SLU 30 | 3.85 | 0.32 | 44.83 | -0.208 | 0.0605 | 0.0011 |
| 291 | SLU 31 | 4.15 | 0.36 | 50.34 | -0.2321 | 0.0593 | 0.0012 |
| 291 | SLU 32 | 4.34 | 0.37 | 51.2 | -0.2391 | 0.0658 | 0.0013 |
| 291 | SLU 33 | 4.31 | 0.37 | 51.1 | -0.2374 | 0.0642 | 0.0013 |
| 291 | SLU 34 | 4.21 | 0.36 | 50.59 | -0.2333 | 0.0617 | 0.0013 |
| 291 | SLU 35 | 4.41 | 0.37 | 51.45 | -0.2403 | 0.0682 | 0.0013 |
| 291 | SLU 36 | 4.38 | 0.37 | 51.35 | -0.2386 | 0.0666 | 0.0013 |
| 291 | SLU 37 | 4.34 | 0.37 | 51 | -0.2372 | 0.0667 | 0.0013 |
| 291 | SLU 38 | 4.31 | 0.37 | 50.9 | -0.2355 | 0.0651 | 0.0013 |
| 291 | SLU 39 | 4.4 | 0.39 | 53.11 | -0.2466 | 0.0639 | 0.0013 |
| 291 | SLU 40 | 4.37 | 0.38 | 53.01 | -0.245 | 0.0624 | 0.0013 |
| 291 | SLU 41 | 4.47 | 0.39 | 53.35 | -0.2478 | 0.0663 | 0.0013 |
| 291 | SLU 42 | 4.43 | 0.38 | 53.26 | -0.2462 | 0.0648 | 0.0013 |
| 291 | SLU 43 | 4.07 | 0.35 | 48.59 | -0.2266 | 0.0634 | 0.0012 |

| Nodo | Cont. | Reazione a traslazione | | | Reazione a rotazione | | |
|---|---|---|---|---|---|---|---|
| Ind. | N.br. | x | y | z | x | y | z |
| 291 | SLU 44 | 4.01 | 0.35 | 48.43 | -0.2239 | 0.0608 | 0.0012 |
| 291 | SLU 45 | 4.21 | 0.36 | 49.29 | -0.2308 | 0.0672 | 0.0012 |
| 291 | SLU 46 | 4.18 | 0.36 | 49.19 | -0.2292 | 0.0657 | 0.0012 |
| 291 | SLU 47 | 4.08 | 0.35 | 48.67 | -0.225 | 0.0631 | 0.0012 |
| 291 | SLU 48 | 4.28 | 0.36 | 49.54 | -0.232 | 0.0696 | 0.0012 |
| 291 | SLU 49 | 4.24 | 0.36 | 49.44 | -0.2304 | 0.0681 | 0.0012 |
| 291 | SLU 50 | 4.21 | 0.35 | 49.08 | -0.2289 | 0.0681 | 0.0012 |
| 291 | SLU 51 | 4.17 | 0.35 | 48.99 | -0.2273 | 0.0666 | 0.0012 |
| 291 | SLU 52 | 4.47 | 0.39 | 54.5 | -0.2514 | 0.0654 | 0.0013 |
| 291 | SLU 53 | 4.67 | 0.4 | 55.36 | -0.2583 | 0.0719 | 0.0014 |
| 291 | SLU 54 | 4.64 | 0.4 | 55.26 | -0.2567 | 0.0703 | 0.0014 |
| 291 | SLU 55 | 4.54 | 0.39 | 54.75 | -0.2525 | 0.0678 | 0.0013 |
| 291 | SLU 56 | 4.74 | 0.4 | 55.61 | -0.2595 | 0.0743 | 0.0014 |
| 291 | SLU 57 | 4.7 | 0.4 | 55.51 | -0.2579 | 0.0727 | 0.0014 |
| 291 | SLU 58 | 4.67 | 0.4 | 55.16 | -0.2564 | 0.0728 | 0.0014 |
| 291 | SLU 59 | 4.63 | 0.4 | 55.06 | -0.2548 | 0.0712 | 0.0014 |
| 291 | SLU 60 | 4.73 | 0.41 | 57.27 | -0.2659 | 0.07 | 0.0014 |
| 291 | SLU 61 | 4.69 | 0.41 | 57.17 | -0.2642 | 0.0685 | 0.0014 |
| 291 | SLU 62 | 4.8 | 0.42 | 57.51 | -0.267 | 0.0724 | 0.0014 |
| 291 | SLU 63 | 4.76 | 0.41 | 57.41 | -0.2654 | 0.0709 | 0.0014 |
| 291 | SLU 64 | 4.56 | 0.39 | 54.17 | -0.2527 | 0.0701 | 0.0013 |
| 291 | SLU 65 | 4.5 | 0.39 | 54.01 | -0.25 | 0.0675 | 0.0013 |
| 291 | SLU 66 | 4.7 | 0.4 | 54.87 | -0.257 | 0.074 | 0.0014 |
| 291 | SLU 67 | 4.66 | 0.4 | 54.77 | -0.2553 | 0.0724 | 0.0014 |
| 291 | SLU 68 | 4.57 | 0.39 | 54.25 | -0.2512 | 0.0699 | 0.0013 |
| 291 | SLU 69 | 4.76 | 0.4 | 55.12 | -0.2582 | 0.0764 | 0.0014 |
| 291 | SLU 70 | 4.73 | 0.4 | 55.02 | -0.2565 | 0.0748 | 0.0014 |
| 291 | SLU 71 | 4.69 | 0.4 | 54.67 | -0.2551 | 0.0749 | 0.0014 |
| 291 | SLU 72 | 4.66 | 0.39 | 54.57 | -0.2534 | 0.0733 | 0.0014 |
| 291 | SLU 73 | 4.96 | 0.43 | 60.08 | -0.2775 | 0.0722 | 0.0015 |
| 291 | SLU 74 | 5.16 | 0.44 | 60.94 | -0.2845 | 0.0786 | 0.0015 |
| 291 | SLU 75 | 5.12 | 0.44 | 60.84 | -0.2828 | 0.0771 | 0.0015 |
| 291 | SLU 76 | 5.03 | 0.43 | 60.33 | -0.2787 | 0.0746 | 0.0015 |
| 291 | SLU 77 | 5.22 | 0.45 | 61.19 | -0.2857 | 0.081 | 0.0015 |
| 291 | SLU 78 | 5.19 | 0.44 | 61.09 | -0.284 | 0.0795 | 0.0015 |
| 291 | SLU 79 | 5.15 | 0.44 | 60.74 | -0.2826 | 0.0796 | 0.0015 |
| 291 | SLU 80 | 5.12 | 0.44 | 60.64 | -0.2809 | 0.078 | 0.0015 |
| 291 | SLU 81 | 5.21 | 0.46 | 62.85 | -0.292 | 0.0768 | 0.0016 |
| 291 | SLU 82 | 5.18 | 0.45 | 62.75 | -0.2904 | 0.0752 | 0.0016 |
| 291 | SLU 83 | 5.28 | 0.46 | 63.1 | -0.2932 | 0.0792 | 0.0016 |
| 291 | SLU 84 | 5.25 | 0.45 | 63 | -0.2916 | 0.0776 | 0.0016 |
| 291 | SLE RA 1 | 3.4 | 0.29 | 40.44 | -0.1887 | 0.0524 | 0.001 |
| 291 | SLE RA 2 | 3.36 | 0.29 | 40.33 | -0.1868 | 0.0507 | 0.001 |
| 291 | SLE RA 3 | 3.49 | 0.3 | 40.91 | -0.1915 | 0.055 | 0.001 |
| 291 | SLE RA 4 | 3.47 | 0.3 | 40.84 | -0.1904 | 0.054 | 0.001 |
| 291 | SLE RA 5 | 3.41 | 0.29 | 40.5 | -0.1876 | 0.0523 | 0.001 |
| 291 | SLE RA 6 | 3.54 | 0.3 | 41.07 | -0.1923 | 0.0566 | 0.001 |
| 291 | SLE RA 7 | 3.51 | 0.3 | 41.01 | -0.1912 | 0.0556 | 0.001 |
| 291 | SLE RA 8 | 3.49 | 0.3 | 40.77 | -0.1902 | 0.0556 | 0.001 |
| 291 | SLE RA 9 | 3.47 | 0.29 | 40.71 | -0.1891 | 0.0546 | 0.001 |
| 291 | SLE RA 10 | 3.67 | 0.32 | 44.38 | -0.2052 | 0.0538 | 0.0011 |
| 291 | SLE RA 11 | 3.8 | 0.33 | 44.96 | -0.2098 | 0.0581 | 0.0011 |
| 291 | SLE RA 12 | 3.77 | 0.33 | 44.89 | -0.2087 | 0.0571 | 0.0011 |
| 291 | SLE RA 13 | 3.71 | 0.32 | 44.55 | -0.206 | 0.0554 | 0.0011 |
| 291 | SLE RA 14 | 3.84 | 0.33 | 45.12 | -0.2106 | 0.0597 | 0.0011 |
| 291 | SLE RA 15 | 3.82 | 0.33 | 45.06 | -0.2095 | 0.0587 | 0.0011 |
| 291 | SLE RA 16 | 3.8 | 0.32 | 44.82 | -0.2086 | 0.0587 | 0.0011 |
| 291 | SLE RA 17 | 3.77 | 0.32 | 44.76 | -0.2075 | 0.0577 | 0.0011 |
| 291 | SLE RA 18 | 3.84 | 0.33 | 46.23 | -0.2149 | 0.0569 | 0.0012 |
| 291 | SLE RA 19 | 3.81 | 0.33 | 46.16 | -0.2138 | 0.0559 | 0.0011 |
| 291 | SLE RA 20 | 3.88 | 0.34 | 46.39 | -0.2156 | 0.0585 | 0.0012 |
| 291 | SLE RA 21 | 3.86 | 0.33 | 46.33 | -0.2145 | 0.0574 | 0.0011 |
| 291 | SLE FR 1 | 3.4 | 0.29 | 40.44 | -0.1887 | 0.0524 | 0.001 |
| 291 | SLE FR 2 | 3.39 | 0.29 | 40.42 | -0.1883 | 0.0521 | 0.001 |
| 291 | SLE FR 3 | 3.42 | 0.29 | 40.51 | -0.189 | 0.0531 | 0.001 |
| 291 | SLE FR 4 | 3.52 | 0.3 | 42.16 | -0.1962 | 0.0534 | 0.001 |
| 291 | SLE FR 5 | 3.55 | 0.31 | 42.25 | -0.1968 | 0.0544 | 0.0011 |
| 291 | SLE FR 6 | 3.62 | 0.31 | 43.34 | -0.2018 | 0.0547 | 0.0011 |
| 291 | SLE QP 1 | 3.4 | 0.29 | 40.44 | -0.1887 | 0.0524 | 0.001 |
| 291 | SLE QP 2 | 3.53 | 0.31 | 42.18 | -0.1965 | 0.0538 | 0.0011 |
| 291 | SLD 1 | 10.96 | 0.34 | 39.29 | -0.1966 | 0.3912 | 0.0012 |
| 291 | SLD 2 | 10.96 | 0.34 | 39.29 | -0.1966 | 0.3912 | 0.0012 |
| 291 | SLD 3 | 12.19 | 0.49 | 41.2 | -0.3539 | 0.4426 | 0.0016 |
| 291 | SLD 4 | 12.19 | 0.49 | 41.2 | -0.3539 | 0.4426 | 0.0016 |
| 291 | SLD 5 | 3.9 | 0.1 | 38.42 | 0.042 | 0.0772 | 0.0005 |
| 291 | SLD 6 | 3.9 | 0.1 | 38.42 | 0.042 | 0.0772 | 0.0005 |
| 291 | SLD 7 | 7.99 | 0.57 | 44.78 | -0.4823 | 0.2482 | 0.0019 |
| 291 | SLD 8 | 7.99 | 0.57 | 44.78 | -0.4823 | 0.2482 | 0.0019 |
| 291 | SLD 9 | -0.93 | 0.04 | 39.58 | 0.0893 | -0.1407 | 0.0002 |
| 291 | SLD 10 | -0.93 | 0.04 | 39.58 | 0.0893 | -0.1407 | 0.0002 |
| 291 | SLD 11 | 3.16 | 0.51 | 45.94 | -0.4351 | 0.0304 | 0.0017 |
| 291 | SLD 12 | 3.16 | 0.51 | 45.94 | -0.4351 | 0.0304 | 0.0017 |
| 291 | SLD 13 | -5.13 | 0.12 | 43.16 | -0.0391 | -0.335 | 0.0005 |
| 291 | SLD 14 | -5.13 | 0.12 | 43.16 | -0.0391 | -0.335 | 0.0005 |
| 291 | SLD 15 | -3.9 | 0.27 | 45.07 | -0.1964 | -0.2837 | 0.0009 |
| 291 | SLD 16 | -3.9 | 0.27 | 45.07 | -0.1964 | -0.2837 | 0.0009 |
| 291 | SLV 1 | 20.5 | 0.39 | 35.35 | -0.1884 | 0.8254 | 0.0014 |
| 291 | SLV 2 | 20.5 | 0.39 | 35.35 | -0.1884 | 0.8254 | 0.0014 |

| Nodo | Cont. | Reazione a traslazione | | | Reazione a rotazione | | |
|---|---|---|---|---|---|---|---|
| Ind. | N.br. | x | y | z | x | y | z |
| 291 | SLV 3 | 23.47 | 0.73 | 40 | -0.5735 | 0.9489 | 0.0024 |
| 291 | SLV 4 | 23.47 | 0.73 | 40 | -0.5735 | 0.9489 | 0.0024 |
| 291 | SLV 5 | 4.13 | -0.18 | 33.08 | 0.3899 | 0.098 | -0.0003 |
| 291 | SLV 6 | 4.13 | -0.18 | 33.08 | 0.3899 | 0.098 | -0.0003 |
| 291 | SLV 7 | 14.01 | 0.94 | 48.58 | -0.8936 | 0.5096 | 0.003 |
| 291 | SLV 8 | 14.01 | 0.94 | 48.58 | -0.8936 | 0.5096 | 0.003 |
| 291 | SLV 9 | -6.95 | -0.33 | 35.78 | 0.5006 | -0.402 | -0.0009 |
| 291 | SLV 10 | -6.95 | -0.33 | 35.78 | 0.5006 | -0.402 | -0.0009 |
| 291 | SLV 11 | 2.93 | 0.79 | 51.28 | -0.783 | 0.0096 | 0.0024 |
| 291 | SLV 12 | 2.93 | 0.79 | 51.28 | -0.783 | 0.0096 | 0.0024 |
| 291 | SLV 13 | -16.41 | -0.12 | 44.36 | 0.1804 | -0.8414 | -0.0003 |
| 291 | SLV 14 | -16.41 | -0.12 | 44.36 | 0.1804 | -0.8414 | -0.0003 |
| 291 | SLV 15 | -13.44 | 0.22 | 49.01 | -0.2046 | -0.7179 | 0.0007 |
| 291 | SLV 16 | -13.44 | 0.22 | 49.01 | -0.2046 | -0.7179 | 0.0007 |
| 292 | SLU 1 | 3.24 | 0.2 | 45.15 | -0.1314 | 0.1694 | 0.0004 |
| 292 | SLU 2 | 3.18 | 0.2 | 45.07 | -0.1298 | 0.1657 | 0.0004 |
| 292 | SLU 3 | 3.39 | 0.21 | 46 | -0.1344 | 0.1763 | 0.0004 |
| 292 | SLU 4 | 3.35 | 0.2 | 45.95 | -0.1334 | 0.174 | 0.0004 |
| 292 | SLU 5 | 3.24 | 0.2 | 45.36 | -0.1306 | 0.1686 | 0.0004 |
| 292 | SLU 6 | 3.45 | 0.21 | 46.28 | -0.1352 | 0.1792 | 0.0004 |
| 292 | SLU 7 | 3.41 | 0.21 | 46.24 | -0.1342 | 0.177 | 0.0004 |
| 292 | SLU 8 | 3.37 | 0.2 | 45.72 | -0.1329 | 0.1753 | 0.0004 |
| 292 | SLU 9 | 3.33 | 0.2 | 45.67 | -0.132 | 0.173 | 0.0004 |
| 292 | SLU 10 | 3.62 | 0.23 | 52.2 | -0.1503 | 0.1897 | 0.0005 |
| 292 | SLU 11 | 3.83 | 0.24 | 53.12 | -0.1549 | 0.2002 | 0.0005 |
| 292 | SLU 12 | 3.79 | 0.24 | 53.08 | -0.154 | 0.198 | 0.0005 |
| 292 | SLU 13 | 3.68 | 0.23 | 52.49 | -0.1511 | 0.1926 | 0.0005 |
| 292 | SLU 14 | 3.89 | 0.24 | 53.41 | -0.1557 | 0.2032 | 0.0005 |
| 292 | SLU 15 | 3.85 | 0.24 | 53.37 | -0.1547 | 0.2009 | 0.0005 |
| 292 | SLU 16 | 3.81 | 0.24 | 52.85 | -0.1534 | 0.1993 | 0.0005 |
| 292 | SLU 17 | 3.77 | 0.24 | 52.8 | -0.1525 | 0.197 | 0.0005 |
| 292 | SLU 18 | 3.87 | 0.25 | 55.33 | -0.1607 | 0.2037 | 0.0005 |
| 292 | SLU 19 | 3.83 | 0.25 | 55.29 | -0.1598 | 0.2014 | 0.0005 |
| 292 | SLU 20 | 3.94 | 0.25 | 55.62 | -0.1615 | 0.2066 | 0.0005 |
| 292 | SLU 21 | 3.9 | 0.25 | 55.57 | -0.1605 | 0.2044 | 0.0005 |
| 292 | SLU 22 | 3.72 | 0.23 | 51.71 | -0.1507 | 0.1946 | 0.0005 |
| 292 | SLU 23 | 3.65 | 0.23 | 51.64 | -0.1491 | 0.1908 | 0.0005 |
| 292 | SLU 24 | 3.86 | 0.24 | 52.56 | -0.1537 | 0.2014 | 0.0005 |
| 292 | SLU 25 | 3.82 | 0.24 | 52.51 | -0.1528 | 0.1992 | 0.0005 |
| 292 | SLU 26 | 3.71 | 0.23 | 51.92 | -0.1499 | 0.1937 | 0.0005 |
| 292 | SLU 27 | 3.92 | 0.24 | 52.84 | -0.1545 | 0.2043 | 0.0005 |
| 292 | SLU 28 | 3.88 | 0.24 | 52.8 | -0.1535 | 0.2021 | 0.0005 |
| 292 | SLU 29 | 3.84 | 0.23 | 52.28 | -0.1522 | 0.2004 | 0.0005 |
| 292 | SLU 30 | 3.8 | 0.23 | 52.24 | -0.1513 | 0.1982 | 0.0005 |
| 292 | SLU 31 | 4.09 | 0.26 | 58.76 | -0.1697 | 0.2148 | 0.0005 |
| 292 | SLU 32 | 4.3 | 0.27 | 59.69 | -0.1742 | 0.2254 | 0.0006 |
| 292 | SLU 33 | 4.26 | 0.27 | 59.64 | -0.1733 | 0.2231 | 0.0006 |
| 292 | SLU 34 | 4.15 | 0.26 | 59.05 | -0.1704 | 0.2177 | 0.0005 |
| 292 | SLU 35 | 4.36 | 0.27 | 59.97 | -0.175 | 0.2283 | 0.0006 |
| 292 | SLU 36 | 4.32 | 0.27 | 59.93 | -0.1741 | 0.2261 | 0.0006 |
| 292 | SLU 37 | 4.28 | 0.27 | 59.41 | -0.1728 | 0.2244 | 0.0005 |
| 292 | SLU 38 | 4.24 | 0.27 | 59.36 | -0.1718 | 0.2221 | 0.0005 |
| 292 | SLU 39 | 4.35 | 0.28 | 61.89 | -0.18 | 0.2288 | 0.0006 |
| 292 | SLU 40 | 4.3 | 0.28 | 61.85 | -0.1791 | 0.2266 | 0.0006 |
| 292 | SLU 41 | 4.41 | 0.28 | 62.18 | -0.1808 | 0.2317 | 0.0006 |
| 292 | SLU 42 | 4.37 | 0.28 | 62.13 | -0.1799 | 0.2295 | 0.0006 |
| 292 | SLU 43 | 4.06 | 0.25 | 56.44 | -0.1642 | 0.2116 | 0.0005 |
| 292 | SLU 44 | 3.99 | 0.25 | 56.37 | -0.1626 | 0.2079 | 0.0005 |
| 292 | SLU 45 | 4.2 | 0.26 | 57.29 | -0.1672 | 0.2185 | 0.0005 |
| 292 | SLU 46 | 4.16 | 0.25 | 57.25 | -0.1662 | 0.2162 | 0.0005 |
| 292 | SLU 47 | 4.05 | 0.25 | 56.65 | -0.1634 | 0.2108 | 0.0005 |
| 292 | SLU 48 | 4.26 | 0.26 | 57.58 | -0.1679 | 0.2214 | 0.0005 |
| 292 | SLU 49 | 4.22 | 0.26 | 57.53 | -0.167 | 0.2192 | 0.0005 |
| 292 | SLU 50 | 4.18 | 0.25 | 57.01 | -0.1657 | 0.2175 | 0.0005 |
| 292 | SLU 51 | 4.14 | 0.25 | 56.97 | -0.1648 | 0.2153 | 0.0005 |
| 292 | SLU 52 | 4.43 | 0.28 | 63.5 | -0.1831 | 0.2319 | 0.0006 |
| 292 | SLU 53 | 4.64 | 0.29 | 64.42 | -0.1877 | 0.2425 | 0.0006 |
| 292 | SLU 54 | 4.6 | 0.29 | 64.37 | -0.1868 | 0.2402 | 0.0006 |
| 292 | SLU 55 | 4.49 | 0.28 | 63.78 | -0.1839 | 0.2348 | 0.0006 |
| 292 | SLU 56 | 4.7 | 0.29 | 64.7 | -0.1885 | 0.2454 | 0.0006 |
| 292 | SLU 57 | 4.66 | 0.29 | 64.66 | -0.1875 | 0.2431 | 0.0006 |
| 292 | SLU 58 | 4.62 | 0.29 | 64.14 | -0.1862 | 0.2415 | 0.0006 |
| 292 | SLU 59 | 4.58 | 0.28 | 64.1 | -0.1853 | 0.2392 | 0.0006 |
| 292 | SLU 60 | 4.68 | 0.3 | 66.62 | -0.1935 | 0.2459 | 0.0006 |
| 292 | SLU 61 | 4.64 | 0.3 | 66.58 | -0.1925 | 0.2436 | 0.0006 |
| 292 | SLU 62 | 4.75 | 0.3 | 66.91 | -0.1943 | 0.2488 | 0.0006 |
| 292 | SLU 63 | 4.71 | 0.3 | 66.87 | -0.1933 | 0.2466 | 0.0006 |
| 292 | SLU 64 | 4.53 | 0.28 | 63 | -0.1835 | 0.2368 | 0.0006 |
| 292 | SLU 65 | 4.46 | 0.28 | 62.93 | -0.1819 | 0.233 | 0.0006 |
| 292 | SLU 66 | 4.67 | 0.29 | 63.85 | -0.1865 | 0.2436 | 0.0006 |
| 292 | SLU 67 | 4.63 | 0.29 | 63.81 | -0.1856 | 0.2414 | 0.0006 |
| 292 | SLU 68 | 4.52 | 0.28 | 63.22 | -0.1827 | 0.236 | 0.0006 |
| 292 | SLU 69 | 4.74 | 0.29 | 64.14 | -0.1873 | 0.2466 | 0.0006 |
| 292 | SLU 70 | 4.69 | 0.29 | 64.09 | -0.1863 | 0.2443 | 0.0006 |
| 292 | SLU 71 | 4.66 | 0.28 | 63.57 | -0.185 | 0.2426 | 0.0006 |
| 292 | SLU 72 | 4.62 | 0.28 | 63.53 | -0.1841 | 0.2404 | 0.0006 |
| 292 | SLU 73 | 4.9 | 0.31 | 70.06 | -0.2025 | 0.257 | 0.0006 |
| 292 | SLU 74 | 5.11 | 0.32 | 70.98 | -0.207 | 0.2676 | 0.0007 |

| Nodo | Cont. | Reazione a traslazione | | | Reazione a rotazione | | |
|---|---|---|---|---|---|---|---|
| Ind. | N.br. | x | y | z | x | y | z |
| 292 | SLU 75 | 5.07 | 0.32 | 70.94 | -0.2061 | 0.2653 | 0.0007 |
| 292 | SLU 76 | 4.96 | 0.31 | 70.34 | -0.2032 | 0.2599 | 0.0006 |
| 292 | SLU 77 | 5.18 | 0.32 | 71.27 | -0.2078 | 0.2705 | 0.0007 |
| 292 | SLU 78 | 5.13 | 0.32 | 71.22 | -0.2068 | 0.2683 | 0.0007 |
| 292 | SLU 79 | 5.1 | 0.32 | 70.7 | -0.2056 | 0.2666 | 0.0006 |
| 292 | SLU 80 | 5.06 | 0.32 | 70.66 | -0.2046 | 0.2644 | 0.0006 |
| 292 | SLU 81 | 5.16 | 0.33 | 73.19 | -0.2128 | 0.271 | 0.0007 |
| 292 | SLU 82 | 5.12 | 0.33 | 73.14 | -0.2119 | 0.2688 | 0.0007 |
| 292 | SLU 83 | 5.22 | 0.33 | 73.47 | -0.2136 | 0.2739 | 0.0007 |
| 292 | SLU 84 | 5.18 | 0.33 | 73.43 | -0.2126 | 0.2717 | 0.0007 |
| 292 | SLE RA 1 | 3.38 | 0.21 | 47.02 | -0.1369 | 0.1766 | 0.0004 |
| 292 | SLE RA 2 | 3.33 | 0.21 | 46.97 | -0.1359 | 0.1741 | 0.0004 |
| 292 | SLE RA 3 | 3.47 | 0.21 | 47.59 | -0.1389 | 0.1812 | 0.0004 |
| 292 | SLE RA 4 | 3.45 | 0.21 | 47.56 | -0.1383 | 0.1797 | 0.0004 |
| 292 | SLE RA 5 | 3.38 | 0.21 | 47.16 | -0.1364 | 0.1761 | 0.0004 |
| 292 | SLE RA 6 | 3.52 | 0.21 | 47.78 | -0.1394 | 0.1831 | 0.0004 |
| 292 | SLE RA 7 | 3.49 | 0.21 | 47.75 | -0.1388 | 0.1816 | 0.0004 |
| 292 | SLE RA 8 | 3.46 | 0.21 | 47.4 | -0.1379 | 0.1805 | 0.0004 |
| 292 | SLE RA 9 | 3.44 | 0.21 | 47.37 | -0.1373 | 0.179 | 0.0004 |
| 292 | SLE RA 10 | 3.63 | 0.23 | 51.73 | -0.1495 | 0.1901 | 0.0005 |
| 292 | SLE RA 11 | 3.77 | 0.24 | 52.34 | -0.1526 | 0.1972 | 0.0005 |
| 292 | SLE RA 12 | 3.74 | 0.23 | 52.31 | -0.152 | 0.1957 | 0.0005 |
| 292 | SLE RA 13 | 3.67 | 0.23 | 51.92 | -0.1501 | 0.192 | 0.0005 |
| 292 | SLE RA 14 | 3.81 | 0.24 | 52.53 | -0.1531 | 0.1991 | 0.0005 |
| 292 | SLE RA 15 | 3.78 | 0.23 | 52.5 | -0.1525 | 0.1976 | 0.0005 |
| 292 | SLE RA 16 | 3.76 | 0.23 | 52.15 | -0.1516 | 0.1965 | 0.0005 |
| 292 | SLE RA 17 | 3.73 | 0.23 | 52.13 | -0.151 | 0.195 | 0.0005 |
| 292 | SLE RA 18 | 3.8 | 0.24 | 53.81 | -0.1564 | 0.1994 | 0.0005 |
| 292 | SLE RA 19 | 3.77 | 0.24 | 53.78 | -0.1558 | 0.1979 | 0.0005 |
| 292 | SLE RA 20 | 3.84 | 0.24 | 54 | -0.157 | 0.2014 | 0.0005 |
| 292 | SLE RA 21 | 3.81 | 0.24 | 53.97 | -0.1563 | 0.1999 | 0.0005 |
| 292 | SLE FR 1 | 3.38 | 0.21 | 47.02 | -0.1369 | 0.1766 | 0.0004 |
| 292 | SLE FR 2 | 3.37 | 0.21 | 47.01 | -0.1367 | 0.1761 | 0.0004 |
| 292 | SLE FR 3 | 3.4 | 0.21 | 47.1 | -0.1371 | 0.1774 | 0.0004 |
| 292 | SLE FR 4 | 3.5 | 0.22 | 49.05 | -0.1426 | 0.183 | 0.0004 |
| 292 | SLE FR 5 | 3.52 | 0.22 | 49.14 | -0.143 | 0.1842 | 0.0004 |
| 292 | SLE FR 6 | 3.59 | 0.23 | 50.42 | -0.1467 | 0.188 | 0.0005 |
| 292 | SLE QP 1 | 3.38 | 0.21 | 47.02 | -0.1369 | 0.1766 | 0.0004 |
| 292 | SLE QP 2 | 3.51 | 0.22 | 49.06 | -0.1428 | 0.1835 | 0.0004 |
| 292 | SLD 1 | 10.4 | 0.24 | 45.68 | -0.1458 | 0.4872 | 0.0004 |
| 292 | SLD 2 | 10.4 | 0.24 | 45.68 | -0.1458 | 0.4872 | 0.0004 |
| 292 | SLD 3 | 11.79 | 0.31 | 47.82 | -0.2352 | 0.5573 | 0.0007 |
| 292 | SLD 4 | 11.79 | 0.31 | 47.82 | -0.2352 | 0.5573 | 0.0007 |
| 292 | SLD 5 | 3.47 | 0.11 | 44.8 | -0.0082 | 0.1682 | 0 |
| 292 | SLD 6 | 3.47 | 0.11 | 44.8 | -0.0082 | 0.1682 | 0 |
| 292 | SLD 7 | 8.09 | 0.36 | 51.93 | -0.306 | 0.4019 | 0.0009 |
| 292 | SLD 8 | 8.09 | 0.36 | 51.93 | -0.306 | 0.4019 | 0.0009 |
| 292 | SLD 9 | -1.08 | 0.08 | 46.19 | 0.0204 | -0.035 | 0 |
| 292 | SLD 10 | -1.08 | 0.08 | 46.19 | 0.0204 | -0.035 | 0 |
| 292 | SLD 11 | 3.54 | 0.33 | 53.31 | -0.2773 | 0.1987 | 0.0008 |
| 292 | SLD 12 | 3.54 | 0.33 | 53.31 | -0.2773 | 0.1987 | 0.0008 |
| 292 | SLD 13 | -4.78 | 0.13 | 50.3 | -0.0504 | -0.1904 | 0.0002 |
| 292 | SLD 14 | -4.78 | 0.13 | 50.3 | -0.0504 | -0.1904 | 0.0002 |
| 292 | SLD 15 | -3.39 | 0.2 | 52.44 | -0.1397 | -0.1203 | 0.0005 |
| 292 | SLD 16 | -3.39 | 0.2 | 52.44 | -0.1397 | -0.1203 | 0.0005 |
| 292 | SLV 1 | 19.25 | 0.26 | 40.97 | -0.1464 | 0.875 | 0.0004 |
| 292 | SLV 2 | 19.25 | 0.26 | 40.97 | -0.1464 | 0.875 | 0.0004 |
| 292 | SLV 3 | 22.57 | 0.44 | 46.15 | -0.3631 | 1.0463 | 0.001 |
| 292 | SLV 4 | 22.57 | 0.44 | 46.15 | -0.3631 | 1.0463 | 0.001 |
| 292 | SLV 5 | 3.19 | -0.03 | 38.79 | 0.1848 | 0.1312 | -0.0005 |
| 292 | SLV 6 | 3.19 | -0.03 | 38.79 | 0.1848 | 0.1312 | -0.0005 |
| 292 | SLV 7 | 14.27 | 0.55 | 56.03 | -0.5375 | 0.702 | 0.0016 |
| 292 | SLV 8 | 14.27 | 0.55 | 56.03 | -0.5375 | 0.702 | 0.0016 |
| 292 | SLV 9 | -7.26 | -0.11 | 42.09 | 0.252 | -0.3351 | -0.0007 |
| 292 | SLV 10 | -7.26 | -0.11 | 42.09 | 0.252 | -0.3351 | -0.0007 |
| 292 | SLV 11 | 3.82 | 0.47 | 59.33 | -0.4703 | 0.2357 | 0.0014 |
| 292 | SLV 12 | 3.82 | 0.47 | 59.33 | -0.4703 | 0.2357 | 0.0014 |
| 292 | SLV 13 | -15.56 | 0 | 51.97 | 0.0776 | -0.6794 | -0.0001 |
| 292 | SLV 14 | -15.56 | 0 | 51.97 | 0.0776 | -0.6794 | -0.0001 |
| 292 | SLV 15 | -12.24 | 0.18 | 57.14 | -0.1391 | -0.5081 | 0.0005 |
| 292 | SLV 16 | -12.24 | 0.18 | 57.14 | -0.1391 | -0.5081 | 0.0005 |
| 293 | SLU 1 | -0.92 | 0.17 | 52.59 | -0.067 | -0.1518 | 0.0012 |
| 293 | SLU 2 | -0.98 | 0.17 | 52.63 | -0.0665 | -0.1549 | 0.0012 |
| 293 | SLU 3 | -0.87 | 0.18 | 53.61 | -0.0685 | -0.1519 | 0.0012 |
| 293 | SLU 4 | -0.91 | 0.18 | 53.64 | -0.0682 | -0.1538 | 0.0012 |
| 293 | SLU 5 | -0.95 | 0.17 | 52.96 | -0.0669 | -0.1539 | 0.0012 |
| 293 | SLU 6 | -0.84 | 0.18 | 53.94 | -0.069 | -0.1509 | 0.0013 |
| 293 | SLU 7 | -0.87 | 0.18 | 53.97 | -0.0687 | -0.1528 | 0.0013 |
| 293 | SLU 8 | -0.85 | 0.17 | 53.25 | -0.0679 | -0.1498 | 0.0012 |
| 293 | SLU 9 | -0.89 | 0.17 | 53.28 | -0.0676 | -0.1516 | 0.0012 |
| 293 | SLU 10 | -1.23 | 0.2 | 61.01 | -0.0771 | -0.1848 | 0.0014 |
| 293 | SLU 11 | -1.12 | 0.21 | 61.99 | -0.0791 | -0.1818 | 0.0014 |
| 293 | SLU 12 | -1.15 | 0.21 | 62.02 | -0.0788 | -0.1837 | 0.0014 |
| 293 | SLU 13 | -1.19 | 0.2 | 61.34 | -0.0775 | -0.1838 | 0.0014 |
| 293 | SLU 14 | -1.09 | 0.21 | 62.32 | -0.0796 | -0.1808 | 0.0014 |
| 293 | SLU 15 | -1.12 | 0.21 | 62.35 | -0.0793 | -0.1827 | 0.0014 |
| 293 | SLU 16 | -1.1 | 0.2 | 61.63 | -0.0785 | -0.1796 | 0.0014 |
| 293 | SLU 17 | -1.14 | 0.2 | 61.66 | -0.0782 | -0.1815 | 0.0014 |

| Nodo | Cont. | Reazione a traslazione | | | Reazione a rotazione | | |
|---|---|---|---|---|---|---|---|
| Ind. | N.br. | x | y | z | x | y | z |
| 293 | SLU 18 | -1.27 | 0.21 | 64.56 | -0.0822 | -0.1945 | 0.0015 |
| 293 | SLU 19 | -1.31 | 0.21 | 64.59 | -0.0818 | -0.1963 | 0.0015 |
| 293 | SLU 20 | -1.24 | 0.21 | 64.9 | -0.0826 | -0.1935 | 0.0015 |
| 293 | SLU 21 | -1.28 | 0.22 | 64.92 | -0.0823 | -0.1953 | 0.0015 |
| 293 | SLU 22 | -1.09 | 0.2 | 60.3 | -0.0769 | -0.1768 | 0.0014 |
| 293 | SLU 23 | -1.15 | 0.2 | 60.34 | -0.0764 | -0.1799 | 0.0014 |
| 293 | SLU 24 | -1.04 | 0.2 | 61.32 | -0.0785 | -0.1769 | 0.0014 |
| 293 | SLU 25 | -1.08 | 0.2 | 61.34 | -0.0781 | -0.1788 | 0.0014 |
| 293 | SLU 26 | -1.12 | 0.2 | 60.67 | -0.0768 | -0.1789 | 0.0014 |
| 293 | SLU 27 | -1.01 | 0.2 | 61.65 | -0.0789 | -0.1759 | 0.0014 |
| 293 | SLU 28 | -1.04 | 0.2 | 61.68 | -0.0786 | -0.1778 | 0.0014 |
| 293 | SLU 29 | -1.03 | 0.2 | 60.96 | -0.0778 | -0.1748 | 0.0014 |
| 293 | SLU 30 | -1.06 | 0.2 | 60.99 | -0.0775 | -0.1766 | 0.0014 |
| 293 | SLU 31 | -1.4 | 0.23 | 68.72 | -0.087 | -0.2098 | 0.0016 |
| 293 | SLU 32 | -1.29 | 0.23 | 69.7 | -0.0891 | -0.2068 | 0.0016 |
| 293 | SLU 33 | -1.32 | 0.23 | 69.72 | -0.0888 | -0.2087 | 0.0016 |
| 293 | SLU 34 | -1.36 | 0.23 | 69.05 | -0.0875 | -0.2088 | 0.0016 |
| 293 | SLU 35 | -1.26 | 0.23 | 70.03 | -0.0895 | -0.2058 | 0.0016 |
| 293 | SLU 36 | -1.29 | 0.23 | 70.06 | -0.0892 | -0.2077 | 0.0016 |
| 293 | SLU 37 | -1.27 | 0.23 | 69.34 | -0.0884 | -0.2046 | 0.0016 |
| 293 | SLU 38 | -1.31 | 0.23 | 69.37 | -0.0881 | -0.2065 | 0.0016 |
| 293 | SLU 39 | -1.45 | 0.24 | 72.27 | -0.0921 | -0.2195 | 0.0017 |
| 293 | SLU 40 | -1.48 | 0.24 | 72.3 | -0.0918 | -0.2213 | 0.0017 |
| 293 | SLU 41 | -1.41 | 0.24 | 72.6 | -0.0925 | -0.2184 | 0.0017 |
| 293 | SLU 42 | -1.45 | 0.24 | 72.63 | -0.0922 | -0.2203 | 0.0017 |
| 293 | SLU 43 | -1.14 | 0.22 | 65.73 | -0.0837 | -0.1887 | 0.0015 |
| 293 | SLU 44 | -1.2 | 0.22 | 65.77 | -0.0831 | -0.1919 | 0.0015 |
| 293 | SLU 45 | -1.09 | 0.22 | 66.75 | -0.0852 | -0.1889 | 0.0016 |
| 293 | SLU 46 | -1.13 | 0.22 | 66.77 | -0.0849 | -0.1908 | 0.0016 |
| 293 | SLU 47 | -1.17 | 0.22 | 66.1 | -0.0836 | -0.1909 | 0.0015 |
| 293 | SLU 48 | -1.06 | 0.22 | 67.08 | -0.0856 | -0.1879 | 0.0016 |
| 293 | SLU 49 | -1.09 | 0.22 | 67.1 | -0.0853 | -0.1898 | 0.0016 |
| 293 | SLU 50 | -1.07 | 0.22 | 66.39 | -0.0845 | -0.1867 | 0.0015 |
| 293 | SLU 51 | -1.11 | 0.22 | 66.41 | -0.0842 | -0.1886 | 0.0015 |
| 293 | SLU 52 | -1.45 | 0.25 | 74.15 | -0.0938 | -0.2217 | 0.0017 |
| 293 | SLU 53 | -1.34 | 0.25 | 75.13 | -0.0958 | -0.2188 | 0.0017 |
| 293 | SLU 54 | -1.37 | 0.25 | 75.15 | -0.0955 | -0.2206 | 0.0017 |
| 293 | SLU 55 | -1.41 | 0.25 | 74.48 | -0.0942 | -0.2207 | 0.0017 |
| 293 | SLU 56 | -1.3 | 0.25 | 75.46 | -0.0963 | -0.2178 | 0.0017 |
| 293 | SLU 57 | -1.34 | 0.25 | 75.48 | -0.096 | -0.2196 | 0.0017 |
| 293 | SLU 58 | -1.32 | 0.25 | 74.77 | -0.0952 | -0.2166 | 0.0017 |
| 293 | SLU 59 | -1.35 | 0.25 | 74.79 | -0.0949 | -0.2185 | 0.0017 |
| 293 | SLU 60 | -1.49 | 0.26 | 77.7 | -0.0988 | -0.2314 | 0.0018 |
| 293 | SLU 61 | -1.53 | 0.26 | 77.72 | -0.0985 | -0.2333 | 0.0018 |
| 293 | SLU 62 | -1.46 | 0.26 | 78.03 | -0.0993 | -0.2304 | 0.0018 |
| 293 | SLU 63 | -1.49 | 0.26 | 78.05 | -0.099 | -0.2323 | 0.0018 |
| 293 | SLU 64 | -1.31 | 0.24 | 73.44 | -0.0936 | -0.2137 | 0.0017 |
| 293 | SLU 65 | -1.37 | 0.24 | 73.48 | -0.0931 | -0.2169 | 0.0017 |
| 293 | SLU 66 | -1.26 | 0.25 | 74.46 | -0.0951 | -0.2139 | 0.0017 |
| 293 | SLU 67 | -1.3 | 0.25 | 74.48 | -0.0948 | -0.2158 | 0.0017 |
| 293 | SLU 68 | -1.34 | 0.24 | 73.81 | -0.0935 | -0.2159 | 0.0017 |
| 293 | SLU 69 | -1.23 | 0.25 | 74.79 | -0.0956 | -0.2129 | 0.0017 |
| 293 | SLU 70 | -1.26 | 0.25 | 74.81 | -0.0953 | -0.2147 | 0.0017 |
| 293 | SLU 71 | -1.24 | 0.24 | 74.1 | -0.0945 | -0.2117 | 0.0017 |
| 293 | SLU 72 | -1.28 | 0.24 | 74.12 | -0.0942 | -0.2136 | 0.0017 |
| 293 | SLU 73 | -1.62 | 0.27 | 81.86 | -0.1037 | -0.2467 | 0.0019 |
| 293 | SLU 74 | -1.51 | 0.27 | 82.84 | -0.1058 | -0.2438 | 0.0019 |
| 293 | SLU 75 | -1.54 | 0.27 | 82.86 | -0.1055 | -0.2456 | 0.0019 |
| 293 | SLU 76 | -1.58 | 0.27 | 82.19 | -0.1042 | -0.2457 | 0.0019 |
| 293 | SLU 77 | -1.47 | 0.27 | 83.17 | -0.1062 | -0.2427 | 0.0019 |
| 293 | SLU 78 | -1.51 | 0.27 | 83.19 | -0.1059 | -0.2446 | 0.0019 |
| 293 | SLU 79 | -1.49 | 0.27 | 82.48 | -0.1051 | -0.2416 | 0.0019 |
| 293 | SLU 80 | -1.52 | 0.27 | 82.5 | -0.1048 | -0.2435 | 0.0019 |
| 293 | SLU 81 | -1.66 | 0.28 | 85.41 | -0.1088 | -0.2564 | 0.002 |
| 293 | SLU 82 | -1.7 | 0.28 | 85.43 | -0.1085 | -0.2583 | 0.002 |
| 293 | SLU 83 | -1.63 | 0.28 | 85.74 | -0.1092 | -0.2554 | 0.002 |
| 293 | SLU 84 | -1.66 | 0.28 | 85.76 | -0.1089 | -0.2573 | 0.002 |
| 293 | SLE RA 1 | -0.97 | 0.18 | 54.79 | -0.0698 | -0.1589 | 0.0013 |
| 293 | SLE RA 2 | -1.01 | 0.18 | 54.82 | -0.0695 | -0.161 | 0.0013 |
| 293 | SLE RA 3 | -0.94 | 0.18 | 55.47 | -0.0708 | -0.159 | 0.0013 |
| 293 | SLE RA 4 | -0.96 | 0.18 | 55.49 | -0.0706 | -0.1603 | 0.0013 |
| 293 | SLE RA 5 | -0.99 | 0.18 | 55.04 | -0.0698 | -0.1603 | 0.0013 |
| 293 | SLE RA 6 | -0.92 | 0.18 | 55.7 | -0.0711 | -0.1583 | 0.0013 |
| 293 | SLE RA 7 | -0.94 | 0.18 | 55.71 | -0.0709 | -0.1596 | 0.0013 |
| 293 | SLE RA 8 | -0.93 | 0.18 | 55.24 | -0.0704 | -0.1576 | 0.0013 |
| 293 | SLE RA 9 | -0.95 | 0.18 | 55.25 | -0.0702 | -0.1588 | 0.0013 |
| 293 | SLE RA 10 | -1.17 | 0.2 | 60.41 | -0.0766 | -0.1809 | 0.0014 |
| 293 | SLE RA 11 | -1.1 | 0.2 | 61.06 | -0.0779 | -0.1789 | 0.0014 |
| 293 | SLE RA 12 | -1.13 | 0.2 | 61.08 | -0.0777 | -0.1802 | 0.0014 |
| 293 | SLE RA 13 | -1.15 | 0.2 | 60.63 | -0.0768 | -0.1803 | 0.0014 |
| 293 | SLE RA 14 | -1.08 | 0.2 | 61.28 | -0.0782 | -0.1783 | 0.0014 |
| 293 | SLE RA 15 | -1.1 | 0.2 | 61.3 | -0.078 | -0.1795 | 0.0014 |
| 293 | SLE RA 16 | -1.09 | 0.2 | 60.82 | -0.0775 | -0.1775 | 0.0014 |
| 293 | SLE RA 17 | -1.11 | 0.2 | 60.84 | -0.0773 | -0.1787 | 0.0014 |
| 293 | SLE RA 18 | -1.21 | 0.21 | 62.78 | -0.0799 | -0.1874 | 0.0015 |
| 293 | SLE RA 19 | -1.23 | 0.21 | 62.79 | -0.0797 | -0.1886 | 0.0015 |
| 293 | SLE RA 20 | -1.18 | 0.21 | 63 | -0.0802 | -0.1867 | 0.0015 |
| 293 | SLE RA 21 | -1.21 | 0.21 | 63.01 | -0.08 | -0.188 | 0.0015 |

| Nodo | Cont. | Reazione a traslazione | | | Reazione a rotazione | | |
|---|---|---|---|---|---|---|---|
| Ind. | N.br. | x | y | z | x | y | z |
| 293 | SLE FR 1 | -0.97 | 0.18 | 54.79 | -0.0698 | -0.1589 | 0.0013 |
| 293 | SLE FR 2 | -0.98 | 0.18 | 54.8 | -0.0697 | -0.1593 | 0.0013 |
| 293 | SLE FR 3 | -0.96 | 0.18 | 54.88 | -0.0699 | -0.1586 | 0.0013 |
| 293 | SLE FR 4 | -1.05 | 0.19 | 57.19 | -0.0728 | -0.1679 | 0.0013 |
| 293 | SLE FR 5 | -1.03 | 0.19 | 57.28 | -0.073 | -0.1672 | 0.0013 |
| 293 | SLE FR 6 | -1.09 | 0.19 | 58.79 | -0.0749 | -0.1731 | 0.0014 |
| 293 | SLE QP 1 | -0.97 | 0.18 | 54.79 | -0.0698 | -0.1589 | 0.0013 |
| 293 | SLE QP 2 | -1.04 | 0.19 | 57.19 | -0.0728 | -0.1675 | 0.0013 |
| 293 | SLD 1 | 5.03 | 0.27 | 54.55 | -0.1113 | 0.1406 | 0.0017 |
| 293 | SLD 2 | 5.03 | 0.27 | 54.55 | -0.1113 | 0.1406 | 0.0017 |
| 293 | SLD 3 | 6.49 | 0.2 | 49.8 | -0.0723 | 0.2084 | 0.0014 |
| 293 | SLD 4 | 6.49 | 0.2 | 49.8 | -0.0723 | 0.2084 | 0.0014 |
| 293 | SLD 5 | -1.43 | 0.32 | 63.6 | -0.1436 | -0.1779 | 0.002 |
| 293 | SLD 6 | -1.43 | 0.32 | 63.6 | -0.1436 | -0.1779 | 0.002 |
| 293 | SLD 7 | 3.42 | 0.09 | 47.76 | -0.0135 | 0.0481 | 0.0008 |
| 293 | SLD 8 | 3.42 | 0.09 | 47.76 | -0.0135 | 0.0481 | 0.0008 |
| 293 | SLD 9 | -5.51 | 0.29 | 66.61 | -0.1322 | -0.383 | 0.0018 |
| 293 | SLD 10 | -5.51 | 0.29 | 66.61 | -0.1322 | -0.383 | 0.0018 |
| 293 | SLD 11 | -0.66 | 0.06 | 50.77 | -0.0021 | -0.157 | 0.0007 |
| 293 | SLD 12 | -0.66 | 0.06 | 50.77 | -0.0021 | -0.157 | 0.0007 |
| 293 | SLD 13 | -8.57 | 0.18 | 64.58 | -0.0734 | -0.5433 | 0.0013 |
| 293 | SLD 14 | -8.57 | 0.18 | 64.58 | -0.0734 | -0.5433 | 0.0013 |
| 293 | SLD 15 | -7.11 | 0.11 | 59.83 | -0.0344 | -0.4755 | 0.0009 |
| 293 | SLD 16 | -7.11 | 0.11 | 59.83 | -0.0344 | -0.4755 | 0.0009 |
| 293 | SLV 1 | 12.86 | 0.37 | 51.1 | -0.1639 | 0.5377 | 0.0023 |
| 293 | SLV 2 | 12.86 | 0.37 | 51.1 | -0.1639 | 0.5377 | 0.0023 |
| 293 | SLV 3 | 16.26 | 0.21 | 39.67 | -0.071 | 0.6972 | 0.0014 |
| 293 | SLV 4 | 16.26 | 0.21 | 39.67 | -0.071 | 0.6972 | 0.0014 |
| 293 | SLV 5 | -2.04 | 0.49 | 72.7 | -0.2411 | -0.1978 | 0.0029 |
| 293 | SLV 6 | -2.04 | 0.49 | 72.7 | -0.2411 | -0.1978 | 0.0029 |
| 293 | SLV 7 | 9.31 | -0.05 | 34.59 | 0.0687 | 0.3338 | 0.0001 |
| 293 | SLV 8 | 9.31 | -0.05 | 34.59 | 0.0687 | 0.3338 | 0.0001 |
| 293 | SLV 9 | -11.4 | 0.43 | 79.78 | -0.2144 | -0.6687 | 0.0026 |
| 293 | SLV 10 | -11.4 | 0.43 | 79.78 | -0.2144 | -0.6687 | 0.0026 |
| 293 | SLV 11 | -0.05 | -0.12 | 41.68 | 0.0954 | -0.1372 | -0.0002 |
| 293 | SLV 12 | -0.05 | -0.12 | 41.68 | 0.0954 | -0.1372 | -0.0002 |
| 293 | SLV 13 | -18.35 | 0.17 | 74.71 | -0.0747 | -1.0321 | 0.0012 |
| 293 | SLV 14 | -18.35 | 0.17 | 74.71 | -0.0747 | -1.0321 | 0.0012 |
| 293 | SLV 15 | -14.94 | 0.01 | 63.28 | 0.0183 | -0.8726 | 0.0004 |
| 293 | SLV 16 | -14.94 | 0.01 | 63.28 | 0.0183 | -0.8726 | 0.0004 |
| 295 | SLU 1 | -6.08 | 1.95 | 76.35 | 5.9374 | 1.3237 | -0.469 |
| 295 | SLU 2 | -6.12 | 1.96 | 76.5 | 5.9426 | 1.3245 | -0.4695 |
| 295 | SLU 3 | -6.17 | 1.99 | 77.8 | 6.0483 | 1.3501 | -0.4782 |
| 295 | SLU 4 | -6.19 | 2 | 77.89 | 6.0514 | 1.3507 | -0.4785 |
| 295 | SLU 5 | -6.15 | 1.98 | 76.89 | 5.9658 | 1.3316 | -0.4716 |
| 295 | SLU 6 | -6.19 | 2 | 78.19 | 6.0715 | 1.3572 | -0.4804 |
| 295 | SLU 7 | -6.22 | 2.01 | 78.28 | 6.0746 | 1.3577 | -0.4807 |
| 295 | SLU 8 | -6.12 | 1.98 | 77.13 | 5.9839 | 1.3377 | -0.4734 |
| 295 | SLU 9 | -6.15 | 1.98 | 77.22 | 5.987 | 1.3382 | -0.4737 |
| 295 | SLU 10 | -7.15 | 2.23 | 88.76 | 6.9048 | 1.5317 | -0.5424 |
| 295 | SLU 11 | -7.19 | 2.25 | 90.06 | 7.0105 | 1.5573 | -0.5512 |
| 295 | SLU 12 | -7.22 | 2.26 | 90.15 | 7.0136 | 1.5578 | -0.5515 |
| 295 | SLU 13 | -7.17 | 2.24 | 89.15 | 6.928 | 1.5387 | -0.5446 |
| 295 | SLU 14 | -7.21 | 2.27 | 90.45 | 7.0337 | 1.5643 | -0.5534 |
| 295 | SLU 15 | -7.24 | 2.27 | 90.54 | 7.0368 | 1.5648 | -0.5536 |
| 295 | SLU 16 | -7.15 | 2.24 | 89.39 | 6.9461 | 1.5448 | -0.5463 |
| 295 | SLU 17 | -7.17 | 2.24 | 89.48 | 6.9492 | 1.5454 | -0.5466 |
| 295 | SLU 18 | -7.54 | 2.33 | 93.86 | 7.3119 | 1.6196 | -0.5732 |
| 295 | SLU 19 | -7.57 | 2.33 | 93.95 | 7.3151 | 1.6201 | -0.5735 |
| 295 | SLU 20 | -7.56 | 2.34 | 94.26 | 7.3352 | 1.6266 | -0.5754 |
| 295 | SLU 21 | -7.59 | 2.35 | 94.35 | 7.3383 | 1.6271 | -0.5757 |
| 295 | SLU 22 | -6.99 | 2.19 | 87.56 | 6.8168 | 1.5143 | -0.5359 |
| 295 | SLU 23 | -7.03 | 2.2 | 87.71 | 6.822 | 1.5152 | -0.5363 |
| 295 | SLU 24 | -7.08 | 2.23 | 89.01 | 6.9277 | 1.5408 | -0.5451 |
| 295 | SLU 25 | -7.11 | 2.24 | 89.11 | 6.9308 | 1.5414 | -0.5454 |
| 295 | SLU 26 | -7.06 | 2.22 | 88.1 | 6.8453 | 1.5222 | -0.5385 |
| 295 | SLU 27 | -7.1 | 2.24 | 89.41 | 6.951 | 1.5479 | -0.5473 |
| 295 | SLU 28 | -7.13 | 2.25 | 89.5 | 6.9541 | 1.5484 | -0.5476 |
| 295 | SLU 29 | -7.04 | 2.22 | 88.35 | 6.8633 | 1.5284 | -0.5403 |
| 295 | SLU 30 | -7.06 | 2.22 | 88.44 | 6.8664 | 1.5289 | -0.5405 |
| 295 | SLU 31 | -8.06 | 2.47 | 99.97 | 7.7842 | 1.7223 | -0.6093 |
| 295 | SLU 32 | -8.1 | 2.49 | 101.28 | 7.8899 | 1.748 | -0.6181 |
| 295 | SLU 33 | -8.13 | 2.5 | 101.37 | 7.893 | 1.7485 | -0.6183 |
| 295 | SLU 34 | -8.08 | 2.48 | 100.37 | 7.8075 | 1.7294 | -0.6115 |
| 295 | SLU 35 | -8.12 | 2.5 | 101.67 | 7.9131 | 1.755 | -0.6203 |
| 295 | SLU 36 | -8.15 | 2.51 | 101.76 | 7.9163 | 1.7555 | -0.6205 |
| 295 | SLU 37 | -8.06 | 2.48 | 100.61 | 7.8255 | 1.7355 | -0.6132 |
| 295 | SLU 38 | -8.08 | 2.48 | 100.7 | 7.8286 | 1.736 | -0.6135 |
| 295 | SLU 39 | -8.45 | 2.57 | 105.08 | 8.1914 | 1.8102 | -0.6401 |
| 295 | SLU 40 | -8.48 | 2.57 | 105.17 | 8.1945 | 1.8108 | -0.6403 |
| 295 | SLU 41 | -8.47 | 2.58 | 105.47 | 8.2146 | 1.8173 | -0.6423 |
| 295 | SLU 42 | -8.5 | 2.58 | 105.56 | 8.2177 | 1.8178 | -0.6425 |
| 295 | SLU 43 | -7.59 | 2.46 | 95.41 | 7.4171 | 1.6554 | -0.5868 |
| 295 | SLU 44 | -7.63 | 2.47 | 95.56 | 7.4223 | 1.6562 | -0.5872 |
| 295 | SLU 45 | -7.68 | 2.5 | 96.86 | 7.528 | 1.6819 | -0.596 |
| 295 | SLU 46 | -7.71 | 2.5 | 96.95 | 7.5311 | 1.6824 | -0.5963 |
| 295 | SLU 47 | -7.66 | 2.48 | 95.95 | 7.4455 | 1.6633 | -0.5894 |
| 295 | SLU 48 | -7.7 | 2.51 | 97.25 | 7.5512 | 1.6889 | -0.5982 |

| Nodo | Cont. | Reazione a traslazione | | | Reazione a rotazione | | |
|---|---|---|---|---|---|---|---|
| Ind. | N.br. | x | y | z | x | y | z |
| 295 | SLU 49 | -7.73 | 2.51 | 97.34 | 7.5543 | 1.6894 | -0.5985 |
| 295 | SLU 50 | -7.64 | 2.48 | 96.19 | 7.4636 | 1.6694 | -0.5912 |
| 295 | SLU 51 | -7.66 | 2.49 | 96.28 | 7.4667 | 1.6699 | -0.5914 |
| 295 | SLU 52 | -8.66 | 2.73 | 107.82 | 8.3845 | 1.8634 | -0.6602 |
| 295 | SLU 53 | -8.7 | 2.76 | 109.12 | 8.4901 | 1.889 | -0.669 |
| 295 | SLU 54 | -8.73 | 2.76 | 109.21 | 8.4933 | 1.8895 | -0.6692 |
| 295 | SLU 55 | -8.68 | 2.74 | 108.21 | 8.4077 | 1.8704 | -0.6624 |
| 295 | SLU 56 | -8.72 | 2.77 | 109.51 | 8.5134 | 1.896 | -0.6712 |
| 295 | SLU 57 | -8.75 | 2.78 | 109.6 | 8.5165 | 1.8965 | -0.6714 |
| 295 | SLU 58 | -8.66 | 2.74 | 108.45 | 8.4258 | 1.8766 | -0.6641 |
| 295 | SLU 59 | -8.68 | 2.75 | 108.54 | 8.4289 | 1.8771 | -0.6644 |
| 295 | SLU 60 | -9.05 | 2.83 | 112.92 | 8.7916 | 1.9513 | -0.691 |
| 295 | SLU 61 | -9.08 | 2.84 | 113.01 | 8.7948 | 1.9518 | -0.6912 |
| 295 | SLU 62 | -9.07 | 2.84 | 113.32 | 8.8149 | 1.9583 | -0.6932 |
| 295 | SLU 63 | -9.1 | 2.85 | 113.41 | 8.818 | 1.9588 | -0.6934 |
| 295 | SLU 64 | -8.5 | 2.7 | 106.62 | 8.2965 | 1.8461 | -0.6537 |
| 295 | SLU 65 | -8.55 | 2.71 | 106.77 | 8.3017 | 1.8469 | -0.6541 |
| 295 | SLU 66 | -8.59 | 2.73 | 108.07 | 8.4074 | 1.8725 | -0.6629 |
| 295 | SLU 67 | -8.62 | 2.74 | 108.17 | 8.4105 | 1.8731 | -0.6632 |
| 295 | SLU 68 | -8.57 | 2.72 | 107.16 | 8.325 | 1.854 | -0.6563 |
| 295 | SLU 69 | -8.61 | 2.75 | 108.47 | 8.4306 | 1.8796 | -0.6651 |
| 295 | SLU 70 | -8.64 | 2.75 | 108.56 | 8.4338 | 1.8801 | -0.6654 |
| 295 | SLU 71 | -8.55 | 2.72 | 107.41 | 8.343 | 1.8601 | -0.658 |
| 295 | SLU 72 | -8.57 | 2.73 | 107.5 | 8.3461 | 1.8606 | -0.6583 |
| 295 | SLU 73 | -9.57 | 2.97 | 119.03 | 9.2639 | 2.0541 | -0.727 |
| 295 | SLU 74 | -9.61 | 3 | 120.34 | 9.3696 | 2.0797 | -0.7358 |
| 295 | SLU 75 | -9.64 | 3 | 120.43 | 9.3727 | 2.0802 | -0.7361 |
| 295 | SLU 76 | -9.59 | 2.98 | 119.43 | 9.2871 | 2.0611 | -0.7292 |
| 295 | SLU 77 | -9.64 | 3.01 | 120.73 | 9.3928 | 2.0867 | -0.738 |
| 295 | SLU 78 | -9.66 | 3.02 | 120.82 | 9.3959 | 2.0872 | -0.7383 |
| 295 | SLU 79 | -9.57 | 2.98 | 119.67 | 9.3052 | 2.0672 | -0.731 |
| 295 | SLU 80 | -9.6 | 2.99 | 119.76 | 9.3083 | 2.0678 | -0.7313 |
| 295 | SLU 81 | -9.96 | 3.07 | 124.14 | 9.6711 | 2.142 | -0.7579 |
| 295 | SLU 82 | -9.99 | 3.08 | 124.23 | 9.6742 | 2.1425 | -0.7581 |
| 295 | SLU 83 | -9.99 | 3.08 | 124.53 | 9.6943 | 2.149 | -0.76 |
| 295 | SLU 84 | -10.01 | 3.09 | 124.62 | 9.6974 | 2.1495 | -0.7603 |
| 295 | SLE RA 1 | -6.34 | 2.02 | 79.55 | 6.1887 | 1.3781 | -0.4881 |
| 295 | SLE RA 2 | -6.37 | 2.03 | 79.65 | 6.1921 | 1.3787 | -0.4884 |
| 295 | SLE RA 3 | -6.4 | 2.05 | 80.52 | 6.2626 | 1.3958 | -0.4943 |
| 295 | SLE RA 4 | -6.42 | 2.05 | 80.58 | 6.2647 | 1.3961 | -0.4945 |
| 295 | SLE RA 5 | -6.38 | 2.04 | 79.91 | 6.2076 | 1.3834 | -0.4899 |
| 295 | SLE RA 6 | -6.41 | 2.05 | 80.78 | 6.2781 | 1.4005 | -0.4957 |
| 295 | SLE RA 7 | -6.43 | 2.06 | 80.84 | 6.2801 | 1.4008 | -0.4959 |
| 295 | SLE RA 8 | -6.37 | 2.04 | 80.07 | 6.2197 | 1.3875 | -0.491 |
| 295 | SLE RA 9 | -6.39 | 2.04 | 80.13 | 6.2217 | 1.3878 | -0.4912 |
| 295 | SLE RA 10 | -7.05 | 2.2 | 87.83 | 6.8336 | 1.5168 | -0.537 |
| 295 | SLE RA 11 | -7.08 | 2.22 | 88.69 | 6.904 | 1.5339 | -0.5429 |
| 295 | SLE RA 12 | -7.1 | 2.23 | 88.75 | 6.9061 | 1.5342 | -0.5431 |
| 295 | SLE RA 13 | -7.07 | 2.21 | 88.09 | 6.8491 | 1.5215 | -0.5385 |
| 295 | SLE RA 14 | -7.1 | 2.23 | 88.96 | 6.9195 | 1.5386 | -0.5444 |
| 295 | SLE RA 15 | -7.11 | 2.23 | 89.02 | 6.9216 | 1.5389 | -0.5445 |
| 295 | SLE RA 16 | -7.05 | 2.21 | 88.25 | 6.8611 | 1.5256 | -0.5397 |
| 295 | SLE RA 17 | -7.07 | 2.22 | 88.31 | 6.8632 | 1.5259 | -0.5398 |
| 295 | SLE RA 18 | -7.31 | 2.27 | 91.23 | 7.105 | 1.5754 | -0.5576 |
| 295 | SLE RA 19 | -7.33 | 2.28 | 91.29 | 7.1071 | 1.5758 | -0.5578 |
| 295 | SLE RA 20 | -7.33 | 2.28 | 91.49 | 7.1205 | 1.5801 | -0.559 |
| 295 | SLE RA 21 | -7.35 | 2.28 | 91.55 | 7.1226 | 1.5804 | -0.5592 |
| 295 | SLE FR 1 | -6.34 | 2.02 | 79.55 | 6.1887 | 1.3781 | -0.4881 |
| 295 | SLE FR 2 | -6.35 | 2.02 | 79.57 | 6.1894 | 1.3783 | -0.4882 |
| 295 | SLE FR 3 | -6.35 | 2.02 | 79.66 | 6.1949 | 1.38 | -0.4887 |
| 295 | SLE FR 4 | -6.64 | 2.1 | 83.08 | 6.4643 | 1.4374 | -0.509 |
| 295 | SLE FR 5 | -6.64 | 2.1 | 83.16 | 6.4698 | 1.4392 | -0.5095 |
| 295 | SLE FR 6 | -6.83 | 2.15 | 85.39 | 6.6468 | 1.4768 | -0.5228 |
| 295 | SLE QP 1 | -6.34 | 2.02 | 79.55 | 6.1887 | 1.3781 | -0.4881 |
| 295 | SLE QP 2 | -6.63 | 2.1 | 83.06 | 6.4636 | 1.4373 | -0.509 |
| 295 | SLD 1 | -3.42 | 5.24 | 77.15 | 5.417 | 1.7246 | -0.6855 |
| 295 | SLD 2 | -3.42 | 5.24 | 77.15 | 5.417 | 1.7246 | -0.6855 |
| 295 | SLD 3 | -2.35 | 2.85 | 69.2 | 5.9595 | 1.5039 | -0.5344 |
| 295 | SLD 4 | -2.35 | 2.85 | 69.2 | 5.9595 | 1.5039 | -0.5344 |
| 295 | SLD 5 | -7.29 | 6.65 | 93.34 | 5.3267 | 1.8583 | -0.7911 |
| 295 | SLD 6 | -7.29 | 6.65 | 93.34 | 5.3267 | 1.8583 | -0.7911 |
| 295 | SLD 7 | -3.73 | -1.29 | 66.84 | 7.1353 | 1.1225 | -0.2874 |
| 295 | SLD 8 | -3.73 | -1.29 | 66.84 | 7.1353 | 1.1225 | -0.2874 |
| 295 | SLD 9 | -9.54 | 5.48 | 99.27 | 5.7919 | 1.7521 | -0.7305 |
| 295 | SLD 10 | -9.54 | 5.48 | 99.27 | 5.7919 | 1.7521 | -0.7305 |
| 295 | SLD 11 | -5.97 | -2.46 | 72.77 | 7.6004 | 1.0163 | -0.2269 |
| 295 | SLD 12 | -5.97 | -2.46 | 72.77 | 7.6004 | 1.0163 | -0.2269 |
| 295 | SLD 13 | -10.91 | 1.34 | 96.91 | 6.9676 | 1.3707 | -0.4835 |
| 295 | SLD 14 | -10.91 | 1.34 | 96.91 | 6.9676 | 1.3707 | -0.4835 |
| 295 | SLD 15 | -9.85 | -1.05 | 88.96 | 7.5102 | 1.15 | -0.3324 |
| 295 | SLD 16 | -9.85 | -1.05 | 88.96 | 7.5102 | 1.15 | -0.3324 |
| 295 | SLV 1 | 0.68 | 9.35 | 69.51 | 4.007 | 2.1046 | -0.9182 |
| 295 | SLV 2 | 0.68 | 9.35 | 69.51 | 4.007 | 2.1046 | -0.9182 |
| 295 | SLV 3 | 3.31 | 3.78 | 50.33 | 5.3081 | 1.5865 | -0.5647 |
| 295 | SLV 4 | 3.31 | 3.78 | 50.33 | 5.3081 | 1.5865 | -0.5647 |
| 295 | SLV 5 | -8.43 | 12.71 | 108.08 | 3.7532 | 2.4233 | -1.1678 |
| 295 | SLV 6 | -8.43 | 12.71 | 108.08 | 3.7532 | 2.4233 | -1.1678 |
| 295 | SLV 7 | 0.34 | -5.84 | 44.15 | 8.0903 | 0.6962 | 0.0104 |

| Nodo | Cont. | Reazione a traslazione | | | Reazione a rotazione | | |
|---|---|---|---|---|---|---|---|
| Ind. | N.br. | x | y | z | x | y | z |
| 295 | SLV 8 | 0.34 | -5.84 | 44.15 | 8.0903 | 0.6962 | 0.0104 |
| 295 | SLV 9 | -13.61 | 10.03 | 121.96 | 4.8369 | 2.1784 | -1.0283 |
| 295 | SLV 10 | -13.61 | 10.03 | 121.96 | 4.8369 | 2.1784 | -1.0283 |
| 295 | SLV 11 | -4.83 | -8.52 | 58.03 | 9.1739 | 0.4513 | 0.1499 |
| 295 | SLV 12 | -4.83 | -8.52 | 58.03 | 9.1739 | 0.4513 | 0.1499 |
| 295 | SLV 13 | -16.57 | 0.41 | 115.79 | 7.6191 | 1.2882 | -0.4532 |
| 295 | SLV 14 | -16.57 | 0.41 | 115.79 | 7.6191 | 1.2882 | -0.4532 |
| 295 | SLV 15 | -13.94 | -5.16 | 96.61 | 8.9202 | 0.77 | -0.0997 |
| 295 | SLV 16 | -13.94 | -5.16 | 96.61 | 8.9202 | 0.77 | -0.0997 |
| 296 | SLU 1 | 3.63 | 0.4 | 14.1 | -0.2355 | 0.086 | 0.0381 |
| 296 | SLU 2 | 3.65 | 0.39 | 14.22 | -0.2312 | 0.0868 | 0.0374 |
| 296 | SLU 3 | 3.79 | 0.43 | 14.75 | -0.2506 | 0.0897 | 0.0405 |
| 296 | SLU 4 | 3.8 | 0.42 | 14.82 | -0.248 | 0.0902 | 0.0401 |
| 296 | SLU 5 | 3.82 | 0.41 | 14.88 | -0.2439 | 0.0908 | 0.0394 |
| 296 | SLU 6 | 3.96 | 0.45 | 15.41 | -0.2632 | 0.0936 | 0.0426 |
| 296 | SLU 7 | 3.97 | 0.44 | 15.48 | -0.2607 | 0.0941 | 0.0422 |
| 296 | SLU 8 | 3.96 | 0.44 | 15.42 | -0.2609 | 0.0939 | 0.0422 |
| 296 | SLU 9 | 3.98 | 0.44 | 15.49 | -0.2583 | 0.0944 | 0.0418 |
| 296 | SLU 10 | 4.29 | 0.46 | 16.62 | -0.2697 | 0.1025 | 0.0436 |
| 296 | SLU 11 | 4.43 | 0.49 | 17.16 | -0.2891 | 0.1054 | 0.0468 |
| 296 | SLU 12 | 4.44 | 0.49 | 17.23 | -0.2865 | 0.1059 | 0.0463 |
| 296 | SLU 13 | 4.46 | 0.48 | 17.28 | -0.2824 | 0.1064 | 0.0457 |
| 296 | SLU 14 | 4.6 | 0.51 | 17.82 | -0.3018 | 0.1093 | 0.0488 |
| 296 | SLU 15 | 4.61 | 0.51 | 17.89 | -0.2992 | 0.1098 | 0.0484 |
| 296 | SLU 16 | 4.6 | 0.51 | 17.83 | -0.2994 | 0.1096 | 0.0484 |
| 296 | SLU 17 | 4.62 | 0.51 | 17.9 | -0.2968 | 0.11 | 0.048 |
| 296 | SLU 18 | 4.54 | 0.49 | 17.54 | -0.2905 | 0.1084 | 0.047 |
| 296 | SLU 19 | 4.56 | 0.49 | 17.61 | -0.2879 | 0.1089 | 0.0466 |
| 296 | SLU 20 | 4.71 | 0.52 | 18.2 | -0.3032 | 0.1123 | 0.049 |
| 296 | SLU 21 | 4.72 | 0.51 | 18.27 | -0.3006 | 0.1128 | 0.0486 |
| 296 | SLU 22 | 4.21 | 0.47 | 16.35 | -0.2762 | 0.1002 | 0.0447 |
| 296 | SLU 23 | 4.24 | 0.46 | 16.46 | -0.2719 | 0.101 | 0.044 |
| 296 | SLU 24 | 4.38 | 0.5 | 17 | -0.2913 | 0.1039 | 0.0471 |
| 296 | SLU 25 | 4.39 | 0.49 | 17.07 | -0.2887 | 0.1044 | 0.0467 |
| 296 | SLU 26 | 4.41 | 0.48 | 17.12 | -0.2846 | 0.105 | 0.046 |
| 296 | SLU 27 | 4.54 | 0.52 | 17.66 | -0.304 | 0.1079 | 0.0492 |
| 296 | SLU 28 | 4.56 | 0.51 | 17.73 | -0.3014 | 0.1083 | 0.0488 |
| 296 | SLU 29 | 4.55 | 0.51 | 17.67 | -0.3016 | 0.1081 | 0.0488 |
| 296 | SLU 30 | 4.57 | 0.51 | 17.74 | -0.299 | 0.1086 | 0.0484 |
| 296 | SLU 31 | 4.88 | 0.53 | 18.87 | -0.3104 | 0.1167 | 0.0502 |
| 296 | SLU 32 | 5.02 | 0.56 | 19.41 | -0.3298 | 0.1196 | 0.0534 |
| 296 | SLU 33 | 5.03 | 0.56 | 19.47 | -0.3272 | 0.1201 | 0.0529 |
| 296 | SLU 34 | 5.05 | 0.55 | 19.53 | -0.3231 | 0.1206 | 0.0523 |
| 296 | SLU 35 | 5.18 | 0.58 | 20.07 | -0.3425 | 0.1235 | 0.0554 |
| 296 | SLU 36 | 5.2 | 0.58 | 20.13 | -0.3399 | 0.124 | 0.055 |
| 296 | SLU 37 | 5.19 | 0.58 | 20.08 | -0.3401 | 0.1238 | 0.055 |
| 296 | SLU 38 | 5.21 | 0.58 | 20.14 | -0.3375 | 0.1243 | 0.0546 |
| 296 | SLU 39 | 5.13 | 0.56 | 19.79 | -0.3312 | 0.1226 | 0.0536 |
| 296 | SLU 40 | 5.14 | 0.56 | 19.86 | -0.3287 | 0.1231 | 0.0532 |
| 296 | SLU 41 | 5.3 | 0.59 | 20.45 | -0.3439 | 0.1265 | 0.0556 |
| 296 | SLU 42 | 5.31 | 0.58 | 20.52 | -0.3414 | 0.127 | 0.0552 |
| 296 | SLU 43 | 4.51 | 0.5 | 17.56 | -0.2921 | 0.1069 | 0.0472 |
| 296 | SLU 44 | 4.54 | 0.49 | 17.68 | -0.2878 | 0.1077 | 0.0465 |
| 296 | SLU 45 | 4.67 | 0.52 | 18.21 | -0.3072 | 0.1106 | 0.0497 |
| 296 | SLU 46 | 4.69 | 0.52 | 18.28 | -0.3046 | 0.1111 | 0.0493 |
| 296 | SLU 47 | 4.71 | 0.51 | 18.34 | -0.3005 | 0.1117 | 0.0486 |
| 296 | SLU 48 | 4.84 | 0.54 | 18.87 | -0.3199 | 0.1146 | 0.0517 |
| 296 | SLU 49 | 4.86 | 0.54 | 18.94 | -0.3173 | 0.1151 | 0.0513 |
| 296 | SLU 50 | 4.85 | 0.54 | 18.88 | -0.3175 | 0.1148 | 0.0513 |
| 296 | SLU 51 | 4.86 | 0.53 | 18.95 | -0.3149 | 0.1153 | 0.0509 |
| 296 | SLU 52 | 5.18 | 0.55 | 20.08 | -0.3264 | 0.1234 | 0.0528 |
| 296 | SLU 53 | 5.31 | 0.59 | 20.62 | -0.3457 | 0.1263 | 0.0559 |
| 296 | SLU 54 | 5.33 | 0.58 | 20.69 | -0.3432 | 0.1268 | 0.0555 |
| 296 | SLU 55 | 5.35 | 0.58 | 20.74 | -0.339 | 0.1273 | 0.0548 |
| 296 | SLU 56 | 5.48 | 0.61 | 21.28 | -0.3584 | 0.1302 | 0.058 |
| 296 | SLU 57 | 5.5 | 0.61 | 21.35 | -0.3558 | 0.1307 | 0.0576 |
| 296 | SLU 58 | 5.49 | 0.61 | 21.29 | -0.356 | 0.1305 | 0.0576 |
| 296 | SLU 59 | 5.5 | 0.6 | 21.36 | -0.3535 | 0.131 | 0.0572 |
| 296 | SLU 60 | 5.43 | 0.59 | 21 | -0.3472 | 0.1293 | 0.0562 |
| 296 | SLU 61 | 5.44 | 0.59 | 21.07 | -0.3446 | 0.1298 | 0.0557 |
| 296 | SLU 62 | 5.59 | 0.61 | 21.66 | -0.3599 | 0.1332 | 0.0582 |
| 296 | SLU 63 | 5.61 | 0.61 | 21.73 | -0.3573 | 0.1337 | 0.0578 |
| 296 | SLU 64 | 5.1 | 0.57 | 19.81 | -0.3329 | 0.1211 | 0.0538 |
| 296 | SLU 65 | 5.13 | 0.56 | 19.92 | -0.3286 | 0.1219 | 0.0531 |
| 296 | SLU 66 | 5.26 | 0.59 | 20.46 | -0.348 | 0.1248 | 0.0563 |
| 296 | SLU 67 | 5.28 | 0.59 | 20.53 | -0.3454 | 0.1253 | 0.0559 |
| 296 | SLU 68 | 5.3 | 0.58 | 20.58 | -0.3413 | 0.1259 | 0.0552 |
| 296 | SLU 69 | 5.43 | 0.61 | 21.12 | -0.3607 | 0.1288 | 0.0583 |
| 296 | SLU 70 | 5.45 | 0.61 | 21.19 | -0.3581 | 0.1293 | 0.0579 |
| 296 | SLU 71 | 5.44 | 0.61 | 21.13 | -0.3583 | 0.129 | 0.0579 |
| 296 | SLU 72 | 5.45 | 0.61 | 21.2 | -0.3557 | 0.1295 | 0.0575 |
| 296 | SLU 73 | 5.77 | 0.62 | 22.33 | -0.3671 | 0.1376 | 0.0594 |
| 296 | SLU 74 | 5.9 | 0.66 | 22.87 | -0.3865 | 0.1405 | 0.0625 |
| 296 | SLU 75 | 5.92 | 0.65 | 22.93 | -0.3839 | 0.141 | 0.0621 |
| 296 | SLU 76 | 5.94 | 0.65 | 22.99 | -0.3798 | 0.1416 | 0.0614 |
| 296 | SLU 77 | 6.07 | 0.68 | 23.53 | -0.3992 | 0.1444 | 0.0646 |
| 296 | SLU 78 | 6.09 | 0.68 | 23.59 | -0.3966 | 0.1449 | 0.0642 |
| 296 | SLU 79 | 6.08 | 0.68 | 23.54 | -0.3968 | 0.1447 | 0.0642 |

| Nodo | Cont. | Reazione a traslazione | | | Reazione a rotazione | | |
|---|---|---|---|---|---|---|---|
| Ind. | N.br. | x | y | z | x | y | z |
| 296 | SLU 80 | 6.09 | 0.67 | 23.6 | -0.3942 | 0.1452 | 0.0638 |
| 296 | SLU 81 | 6.01 | 0.66 | 23.25 | -0.3879 | 0.1435 | 0.0627 |
| 296 | SLU 82 | 6.03 | 0.66 | 23.32 | -0.3853 | 0.144 | 0.0623 |
| 296 | SLU 83 | 6.18 | 0.68 | 23.91 | -0.4006 | 0.1475 | 0.0648 |
| 296 | SLU 84 | 6.2 | 0.68 | 23.98 | -0.398 | 0.148 | 0.0644 |
| 296 | SLE RA 1 | 3.79 | 0.42 | 14.74 | -0.2471 | 0.09 | 0.04 |
| 296 | SLE RA 2 | 3.81 | 0.41 | 14.82 | -0.2442 | 0.0906 | 0.0395 |
| 296 | SLE RA 3 | 3.9 | 0.44 | 15.18 | -0.2572 | 0.0925 | 0.0416 |
| 296 | SLE RA 4 | 3.91 | 0.43 | 15.22 | -0.2554 | 0.0928 | 0.0413 |
| 296 | SLE RA 5 | 3.92 | 0.43 | 15.26 | -0.2527 | 0.0932 | 0.0409 |
| 296 | SLE RA 6 | 4.01 | 0.45 | 15.62 | -0.2656 | 0.0951 | 0.043 |
| 296 | SLE RA 7 | 4.02 | 0.45 | 15.66 | -0.2639 | 0.0955 | 0.0427 |
| 296 | SLE RA 8 | 4.02 | 0.45 | 15.62 | -0.264 | 0.0953 | 0.0427 |
| 296 | SLE RA 9 | 4.03 | 0.45 | 15.67 | -0.2623 | 0.0956 | 0.0424 |
| 296 | SLE RA 10 | 4.24 | 0.46 | 16.43 | -0.2699 | 0.101 | 0.0437 |
| 296 | SLE RA 11 | 4.33 | 0.48 | 16.78 | -0.2828 | 0.103 | 0.0457 |
| 296 | SLE RA 12 | 4.34 | 0.48 | 16.83 | -0.2811 | 0.1033 | 0.0455 |
| 296 | SLE RA 13 | 4.35 | 0.47 | 16.86 | -0.2784 | 0.1037 | 0.045 |
| 296 | SLE RA 14 | 4.44 | 0.5 | 17.22 | -0.2913 | 0.1056 | 0.0471 |
| 296 | SLE RA 15 | 4.45 | 0.49 | 17.27 | -0.2896 | 0.1059 | 0.0468 |
| 296 | SLE RA 16 | 4.44 | 0.49 | 17.23 | -0.2897 | 0.1058 | 0.0469 |
| 296 | SLE RA 17 | 4.46 | 0.49 | 17.27 | -0.288 | 0.1061 | 0.0466 |
| 296 | SLE RA 18 | 4.4 | 0.48 | 17.04 | -0.2838 | 0.105 | 0.0459 |
| 296 | SLE RA 19 | 4.41 | 0.48 | 17.08 | -0.2821 | 0.1053 | 0.0456 |
| 296 | SLE RA 20 | 4.52 | 0.5 | 17.48 | -0.2923 | 0.1076 | 0.0473 |
| 296 | SLE RA 21 | 4.53 | 0.49 | 17.52 | -0.2905 | 0.1079 | 0.047 |
| 296 | SLE FR 1 | 3.79 | 0.42 | 14.74 | -0.2471 | 0.09 | 0.04 |
| 296 | SLE FR 2 | 3.8 | 0.42 | 14.76 | -0.2465 | 0.0902 | 0.0399 |
| 296 | SLE FR 3 | 3.84 | 0.43 | 14.92 | -0.2505 | 0.0911 | 0.0405 |
| 296 | SLE FR 4 | 3.98 | 0.44 | 15.45 | -0.2576 | 0.0946 | 0.0417 |
| 296 | SLE FR 5 | 4.02 | 0.44 | 15.61 | -0.2615 | 0.0956 | 0.0423 |
| 296 | SLE FR 6 | 4.1 | 0.45 | 15.89 | -0.2655 | 0.0975 | 0.0429 |
| 296 | SLE QP 1 | 3.79 | 0.42 | 14.74 | -0.2471 | 0.09 | 0.04 |
| 296 | SLE QP 2 | 3.98 | 0.44 | 15.43 | -0.2581 | 0.0945 | 0.0417 |
| 296 | SLD 1 | 8.91 | 0.1 | 31.92 | -0.1559 | 0.2414 | 0.0248 |
| 296 | SLD 2 | 8.91 | 0.1 | 31.92 | -0.1559 | 0.2414 | 0.0248 |
| 296 | SLD 3 | 7.81 | 0.51 | 26.84 | -0.2091 | 0.2145 | 0.0348 |
| 296 | SLD 4 | 7.81 | 0.51 | 26.84 | -0.2091 | 0.2145 | 0.0348 |
| 296 | SLD 5 | 7.12 | -0.28 | 28.08 | -0.1468 | 0.1793 | 0.0215 |
| 296 | SLD 6 | 7.12 | -0.28 | 28.08 | -0.1468 | 0.1793 | 0.0215 |
| 296 | SLD 7 | 3.46 | 1.08 | 11.15 | -0.3241 | 0.0898 | 0.0548 |
| 296 | SLD 8 | 3.46 | 1.08 | 11.15 | -0.3241 | 0.0898 | 0.0548 |
| 296 | SLD 9 | 4.49 | -0.2 | 19.71 | -0.1922 | 0.0993 | 0.0287 |
| 296 | SLD 10 | 4.49 | -0.2 | 19.71 | -0.1922 | 0.0993 | 0.0287 |
| 296 | SLD 11 | 0.83 | 1.16 | 2.78 | -0.3694 | 0.0097 | 0.062 |
| 296 | SLD 12 | 0.83 | 1.16 | 2.78 | -0.3694 | 0.0097 | 0.062 |
| 296 | SLD 13 | 0.14 | 0.37 | 4.02 | -0.3072 | -0.0255 | 0.0487 |
| 296 | SLD 14 | 0.14 | 0.37 | 4.02 | -0.3072 | -0.0255 | 0.0487 |
| 296 | SLD 15 | -0.95 | 0.78 | -1.06 | -0.3604 | -0.0524 | 0.0587 |
| 296 | SLD 16 | -0.95 | 0.78 | -1.06 | -0.3604 | -0.0524 | 0.0587 |
| 296 | SLV 1 | 15.41 | -0.39 | 53.87 | -0.0182 | 0.434 | 0.0017 |
| 296 | SLV 2 | 15.41 | -0.39 | 53.87 | -0.0182 | 0.434 | 0.0017 |
| 296 | SLV 3 | 12.7 | 0.63 | 41.23 | -0.1441 | 0.3682 | 0.0258 |
| 296 | SLV 4 | 12.7 | 0.63 | 41.23 | -0.1441 | 0.3682 | 0.0258 |
| 296 | SLV 5 | 11.52 | -1.36 | 46.14 | 0.0048 | 0.2962 | -0.0067 |
| 296 | SLV 6 | 11.52 | -1.36 | 46.14 | 0.0048 | 0.2962 | -0.0067 |
| 296 | SLV 7 | 2.48 | 2.04 | 4 | -0.4149 | 0.0768 | 0.0734 |
| 296 | SLV 8 | 2.48 | 2.04 | 4 | -0.4149 | 0.0768 | 0.0734 |
| 296 | SLV 9 | 5.47 | -1.16 | 26.87 | -0.1014 | 0.1123 | 0.0101 |
| 296 | SLV 10 | 5.47 | -1.16 | 26.87 | -0.1014 | 0.1123 | 0.0101 |
| 296 | SLV 11 | -3.56 | 2.23 | -15.27 | -0.521 | -0.1072 | 0.0902 |
| 296 | SLV 12 | -3.56 | 2.23 | -15.27 | -0.521 | -0.1072 | 0.0902 |
| 296 | SLV 13 | -4.75 | 0.25 | -10.37 | -0.3721 | -0.1791 | 0.0577 |
| 296 | SLV 14 | -4.75 | 0.25 | -10.37 | -0.3721 | -0.1791 | 0.0577 |
| 296 | SLV 15 | -7.46 | 1.27 | -23.01 | -0.498 | -0.245 | 0.0818 |
| 296 | SLV 16 | -7.46 | 1.27 | -23.01 | -0.498 | -0.245 | 0.0818 |
| 297 | SLU 1 | 2.29 | 0.65 | 24.4 | -0.4252 | 0.1089 | -0.0014 |
| 297 | SLU 2 | 2.3 | 0.63 | 24.5 | -0.4175 | 0.11 | -0.0014 |
| 297 | SLU 3 | 2.39 | 0.69 | 25.46 | -0.4523 | 0.1141 | -0.0015 |
| 297 | SLU 4 | 2.39 | 0.68 | 25.52 | -0.4477 | 0.1148 | -0.0015 |
| 297 | SLU 5 | 2.41 | 0.67 | 25.54 | -0.4403 | 0.1163 | -0.0015 |
| 297 | SLU 6 | 2.49 | 0.72 | 26.51 | -0.4751 | 0.1204 | -0.0016 |
| 297 | SLU 7 | 2.5 | 0.72 | 26.57 | -0.4705 | 0.1211 | -0.0016 |
| 297 | SLU 8 | 2.51 | 0.72 | 26.48 | -0.4708 | 0.1215 | -0.0016 |
| 297 | SLU 9 | 2.51 | 0.71 | 26.54 | -0.4662 | 0.1221 | -0.0016 |
| 297 | SLU 10 | 2.73 | 0.74 | 28.54 | -0.4867 | 0.131 | -0.0016 |
| 297 | SLU 11 | 2.81 | 0.79 | 29.5 | -0.5215 | 0.1351 | -0.0017 |
| 297 | SLU 12 | 2.82 | 0.79 | 29.56 | -0.5169 | 0.1358 | -0.0017 |
| 297 | SLU 13 | 2.84 | 0.77 | 29.58 | -0.5095 | 0.1373 | -0.0017 |
| 297 | SLU 14 | 2.92 | 0.83 | 30.54 | -0.5443 | 0.1414 | -0.0018 |
| 297 | SLU 15 | 2.92 | 0.82 | 30.6 | -0.5397 | 0.142 | -0.0018 |
| 297 | SLU 16 | 2.93 | 0.82 | 30.52 | -0.5399 | 0.1424 | -0.0018 |
| 297 | SLU 17 | 2.94 | 0.81 | 30.58 | -0.5353 | 0.1431 | -0.0018 |
| 297 | SLU 18 | 2.9 | 0.8 | 30.17 | -0.524 | 0.1389 | -0.0018 |
| 297 | SLU 19 | 2.91 | 0.79 | 30.23 | -0.5194 | 0.1395 | -0.0017 |
| 297 | SLU 20 | 3.01 | 0.83 | 31.21 | -0.5468 | 0.1452 | -0.0018 |
| 297 | SLU 21 | 3.02 | 0.82 | 31.27 | -0.5422 | 0.1458 | -0.0018 |
| 297 | SLU 22 | 2.67 | 0.76 | 28.17 | -0.4984 | 0.1277 | -0.0017 |

| Nodo | Cont. | Reazione a traslazione | | | Reazione a rotazione | | |
|---|---|---|---|---|---|---|---|
| Ind. | N.br. | x | y | z | x | y | z |
| 297 | SLU 23 | 2.68 | 0.75 | 28.27 | -0.4908 | 0.1288 | -0.0016 |
| 297 | SLU 24 | 2.76 | 0.8 | 29.24 | -0.5256 | 0.1329 | -0.0018 |
| 297 | SLU 25 | 2.77 | 0.79 | 29.3 | -0.521 | 0.1336 | -0.0017 |
| 297 | SLU 26 | 2.78 | 0.78 | 29.31 | -0.5136 | 0.1351 | -0.0017 |
| 297 | SLU 27 | 2.87 | 0.83 | 30.28 | -0.5484 | 0.1392 | -0.0018 |
| 297 | SLU 28 | 2.87 | 0.83 | 30.34 | -0.5438 | 0.1398 | -0.0018 |
| 297 | SLU 29 | 2.88 | 0.83 | 30.26 | -0.544 | 0.1402 | -0.0018 |
| 297 | SLU 30 | 2.89 | 0.82 | 30.32 | -0.5394 | 0.1409 | -0.0018 |
| 297 | SLU 31 | 3.11 | 0.85 | 32.31 | -0.5599 | 0.1498 | -0.0019 |
| 297 | SLU 32 | 3.19 | 0.9 | 33.28 | -0.5947 | 0.1539 | -0.002 |
| 297 | SLU 33 | 3.2 | 0.9 | 33.34 | -0.5902 | 0.1545 | -0.002 |
| 297 | SLU 34 | 3.21 | 0.89 | 33.35 | -0.5827 | 0.156 | -0.0019 |
| 297 | SLU 35 | 3.3 | 0.94 | 34.32 | -0.6176 | 0.1601 | -0.0021 |
| 297 | SLU 36 | 3.3 | 0.93 | 34.38 | -0.613 | 0.1608 | -0.002 |
| 297 | SLU 37 | 3.31 | 0.93 | 34.29 | -0.6132 | 0.1612 | -0.002 |
| 297 | SLU 38 | 3.32 | 0.93 | 34.35 | -0.6086 | 0.1619 | -0.002 |
| 297 | SLU 39 | 3.28 | 0.91 | 33.94 | -0.5972 | 0.1577 | -0.002 |
| 297 | SLU 40 | 3.29 | 0.9 | 34 | -0.5926 | 0.1583 | -0.002 |
| 297 | SLU 41 | 3.39 | 0.94 | 34.98 | -0.62 | 0.1639 | -0.0021 |
| 297 | SLU 42 | 3.39 | 0.94 | 35.04 | -0.6154 | 0.1646 | -0.0021 |
| 297 | SLU 43 | 2.85 | 0.8 | 30.42 | -0.5276 | 0.1352 | -0.0018 |
| 297 | SLU 44 | 2.86 | 0.79 | 30.52 | -0.5199 | 0.1363 | -0.0017 |
| 297 | SLU 45 | 2.94 | 0.84 | 31.49 | -0.5548 | 0.1404 | -0.0019 |
| 297 | SLU 46 | 2.95 | 0.84 | 31.55 | -0.5502 | 0.141 | -0.0018 |
| 297 | SLU 47 | 2.97 | 0.83 | 31.56 | -0.5427 | 0.1425 | -0.0018 |
| 297 | SLU 48 | 3.05 | 0.88 | 32.53 | -0.5776 | 0.1466 | -0.0019 |
| 297 | SLU 49 | 3.05 | 0.87 | 32.59 | -0.573 | 0.1473 | -0.0019 |
| 297 | SLU 50 | 3.06 | 0.87 | 32.5 | -0.5732 | 0.1477 | -0.0019 |
| 297 | SLU 51 | 3.07 | 0.86 | 32.56 | -0.5686 | 0.1484 | -0.0019 |
| 297 | SLU 52 | 3.29 | 0.9 | 34.56 | -0.5891 | 0.1572 | -0.002 |
| 297 | SLU 53 | 3.37 | 0.95 | 35.53 | -0.6239 | 0.1614 | -0.0021 |
| 297 | SLU 54 | 3.38 | 0.94 | 35.59 | -0.6193 | 0.162 | -0.0021 |
| 297 | SLU 55 | 3.39 | 0.93 | 35.6 | -0.6119 | 0.1635 | -0.002 |
| 297 | SLU 56 | 3.48 | 0.98 | 36.57 | -0.6467 | 0.1676 | -0.0022 |
| 297 | SLU 57 | 3.48 | 0.98 | 36.63 | -0.6421 | 0.1683 | -0.0021 |
| 297 | SLU 58 | 3.49 | 0.98 | 36.54 | -0.6424 | 0.1687 | -0.0021 |
| 297 | SLU 59 | 3.5 | 0.97 | 36.6 | -0.6378 | 0.1693 | -0.0021 |
| 297 | SLU 60 | 3.46 | 0.95 | 36.19 | -0.6264 | 0.1651 | -0.0021 |
| 297 | SLU 61 | 3.47 | 0.95 | 36.25 | -0.6218 | 0.1658 | -0.0021 |
| 297 | SLU 62 | 3.57 | 0.99 | 37.23 | -0.6492 | 0.1714 | -0.0022 |
| 297 | SLU 63 | 3.57 | 0.98 | 37.29 | -0.6446 | 0.172 | -0.0022 |
| 297 | SLU 64 | 3.23 | 0.91 | 34.2 | -0.6008 | 0.1539 | -0.002 |
| 297 | SLU 65 | 3.24 | 0.9 | 34.3 | -0.5932 | 0.155 | -0.002 |
| 297 | SLU 66 | 3.32 | 0.96 | 35.26 | -0.628 | 0.1592 | -0.0021 |
| 297 | SLU 67 | 3.33 | 0.95 | 35.32 | -0.6234 | 0.1598 | -0.0021 |
| 297 | SLU 68 | 3.34 | 0.94 | 35.34 | -0.616 | 0.1613 | -0.0021 |
| 297 | SLU 69 | 3.43 | 0.99 | 36.31 | -0.6508 | 0.1654 | -0.0022 |
| 297 | SLU 70 | 3.43 | 0.98 | 36.37 | -0.6462 | 0.1661 | -0.0022 |
| 297 | SLU 71 | 3.44 | 0.98 | 36.28 | -0.6465 | 0.1665 | -0.0022 |
| 297 | SLU 72 | 3.45 | 0.98 | 36.34 | -0.6419 | 0.1671 | -0.0021 |
| 297 | SLU 73 | 3.66 | 1.01 | 38.34 | -0.6624 | 0.176 | -0.0022 |
| 297 | SLU 74 | 3.75 | 1.06 | 39.3 | -0.6972 | 0.1801 | -0.0023 |
| 297 | SLU 75 | 3.75 | 1.05 | 39.36 | -0.6926 | 0.1808 | -0.0023 |
| 297 | SLU 76 | 3.77 | 1.04 | 39.38 | -0.6852 | 0.1823 | -0.0023 |
| 297 | SLU 77 | 3.86 | 1.1 | 40.34 | -0.72 | 0.1864 | -0.0024 |
| 297 | SLU 78 | 3.86 | 1.09 | 40.4 | -0.7154 | 0.187 | -0.0024 |
| 297 | SLU 79 | 3.87 | 1.09 | 40.32 | -0.7156 | 0.1874 | -0.0024 |
| 297 | SLU 80 | 3.87 | 1.08 | 40.38 | -0.711 | 0.1881 | -0.0024 |
| 297 | SLU 81 | 3.84 | 1.06 | 39.97 | -0.6996 | 0.1839 | -0.0023 |
| 297 | SLU 82 | 3.84 | 1.06 | 40.03 | -0.6951 | 0.1846 | -0.0023 |
| 297 | SLU 83 | 3.95 | 1.1 | 41.01 | -0.7225 | 0.1902 | -0.0024 |
| 297 | SLU 84 | 3.95 | 1.09 | 41.07 | -0.7179 | 0.1908 | -0.0024 |
| 297 | SLE RA 1 | 2.4 | 0.68 | 25.47 | -0.4461 | 0.1143 | -0.0015 |
| 297 | SLE RA 2 | 2.41 | 0.67 | 25.54 | -0.441 | 0.115 | -0.0015 |
| 297 | SLE RA 3 | 2.46 | 0.71 | 26.19 | -0.4642 | 0.1178 | -0.0015 |
| 297 | SLE RA 4 | 2.47 | 0.7 | 26.23 | -0.4611 | 0.1182 | -0.0015 |
| 297 | SLE RA 5 | 2.48 | 0.69 | 26.24 | -0.4562 | 0.1192 | -0.0015 |
| 297 | SLE RA 6 | 2.53 | 0.73 | 26.88 | -0.4794 | 0.1219 | -0.0016 |
| 297 | SLE RA 7 | 2.54 | 0.72 | 26.92 | -0.4763 | 0.1224 | -0.0016 |
| 297 | SLE RA 8 | 2.54 | 0.72 | 26.86 | -0.4765 | 0.1226 | -0.0016 |
| 297 | SLE RA 9 | 2.55 | 0.72 | 26.9 | -0.4734 | 0.1231 | -0.0016 |
| 297 | SLE RA 10 | 2.69 | 0.74 | 28.23 | -0.4871 | 0.129 | -0.0016 |
| 297 | SLE RA 11 | 2.75 | 0.78 | 28.88 | -0.5103 | 0.1317 | -0.0017 |
| 297 | SLE RA 12 | 2.75 | 0.77 | 28.92 | -0.5072 | 0.1322 | -0.0017 |
| 297 | SLE RA 13 | 2.76 | 0.76 | 28.93 | -0.5023 | 0.1332 | -0.0017 |
| 297 | SLE RA 14 | 2.82 | 0.8 | 29.57 | -0.5255 | 0.1359 | -0.0018 |
| 297 | SLE RA 15 | 2.82 | 0.79 | 29.61 | -0.5225 | 0.1364 | -0.0017 |
| 297 | SLE RA 16 | 2.83 | 0.79 | 29.56 | -0.5226 | 0.1366 | -0.0017 |
| 297 | SLE RA 17 | 2.83 | 0.79 | 29.6 | -0.5195 | 0.1371 | -0.0017 |
| 297 | SLE RA 18 | 2.81 | 0.78 | 29.32 | -0.512 | 0.1343 | -0.0017 |
| 297 | SLE RA 19 | 2.81 | 0.77 | 29.36 | -0.5089 | 0.1347 | -0.0017 |
| 297 | SLE RA 20 | 2.88 | 0.8 | 30.02 | -0.5272 | 0.1384 | -0.0018 |
| 297 | SLE RA 21 | 2.88 | 0.8 | 30.06 | -0.5241 | 0.1389 | -0.0018 |
| 297 | SLE FR 1 | 2.4 | 0.68 | 25.47 | -0.4461 | 0.1143 | -0.0015 |
| 297 | SLE FR 2 | 2.4 | 0.68 | 25.49 | -0.4451 | 0.1144 | -0.0015 |
| 297 | SLE FR 3 | 2.43 | 0.69 | 25.75 | -0.4522 | 0.116 | -0.0015 |
| 297 | SLE FR 4 | 2.52 | 0.71 | 26.64 | -0.4648 | 0.1204 | -0.0016 |
| 297 | SLE FR 5 | 2.55 | 0.72 | 26.91 | -0.4719 | 0.122 | -0.0016 |

| Nodo | Cont. | Reazione a traslazione | | | Reazione a rotazione | | |
|---|---|---|---|---|---|---|---|
| Ind. | N.br. | x | y | z | x | y | z |
| 297 | SLE FR 6 | 2.6 | 0.73 | 27.4 | -0.479 | 0.1243 | -0.0016 |
| 297 | SLE QP 1 | 2.4 | 0.68 | 25.47 | -0.4461 | 0.1143 | -0.0015 |
| 297 | SLE QP 2 | 2.52 | 0.71 | 26.63 | -0.4658 | 0.1203 | -0.0016 |
| 297 | SLD 1 | 7.5 | 0.4 | 46.59 | -0.2653 | 0.4095 | -0.001 |
| 297 | SLD 2 | 7.5 | 0.4 | 46.59 | -0.2653 | 0.4095 | -0.001 |
| 297 | SLD 3 | 6.79 | 0.54 | 39.55 | -0.3699 | 0.3691 | -0.0013 |
| 297 | SLD 4 | 6.79 | 0.54 | 39.55 | -0.3699 | 0.3691 | -0.0013 |
| 297 | SLD 5 | 5.1 | 0.39 | 43.29 | -0.247 | 0.2682 | -0.001 |
| 297 | SLD 6 | 5.1 | 0.39 | 43.29 | -0.247 | 0.2682 | -0.001 |
| 297 | SLD 7 | 2.71 | 0.88 | 19.83 | -0.5958 | 0.1337 | -0.0019 |
| 297 | SLD 8 | 2.71 | 0.88 | 19.83 | -0.5958 | 0.1337 | -0.0019 |
| 297 | SLD 9 | 2.33 | 0.54 | 33.42 | -0.3359 | 0.1068 | -0.0012 |
| 297 | SLD 10 | 2.33 | 0.54 | 33.42 | -0.3359 | 0.1068 | -0.0012 |
| 297 | SLD 11 | -0.06 | 1.02 | 9.97 | -0.6847 | -0.0277 | -0.0021 |
| 297 | SLD 12 | -0.06 | 1.02 | 9.97 | -0.6847 | -0.0277 | -0.0021 |
| 297 | SLD 13 | -1.74 | 0.87 | 13.7 | -0.5617 | -0.1286 | -0.0018 |
| 297 | SLD 14 | -1.74 | 0.87 | 13.7 | -0.5617 | -0.1286 | -0.0018 |
| 297 | SLD 15 | -2.46 | 1.02 | 6.67 | -0.6664 | -0.1689 | -0.0021 |
| 297 | SLD 16 | -2.46 | 1.02 | 6.67 | -0.6664 | -0.1689 | -0.0021 |
| 297 | SLV 1 | 14.02 | -0.02 | 73.28 | 0.0042 | 0.7884 | -0.0003 |
| 297 | SLV 2 | 14.02 | -0.02 | 73.28 | 0.0042 | 0.7884 | -0.0003 |
| 297 | SLV 3 | 12.3 | 0.32 | 55.76 | -0.2432 | 0.6912 | -0.0009 |
| 297 | SLV 4 | 12.3 | 0.32 | 55.76 | -0.2432 | 0.6912 | -0.0009 |
| 297 | SLV 5 | 8.58 | -0.03 | 67.2 | 0.0504 | 0.4681 | -0.0002 |
| 297 | SLV 6 | 8.58 | -0.03 | 67.2 | 0.0504 | 0.4681 | -0.0002 |
| 297 | SLV 7 | 2.85 | 1.11 | 8.79 | -0.7742 | 0.1442 | -0.0023 |
| 297 | SLV 8 | 2.85 | 1.11 | 8.79 | -0.7742 | 0.1442 | -0.0023 |
| 297 | SLV 9 | 2.2 | 0.31 | 44.47 | -0.1575 | 0.0964 | -0.0008 |
| 297 | SLV 10 | 2.2 | 0.31 | 44.47 | -0.1575 | 0.0964 | -0.0008 |
| 297 | SLV 11 | -3.53 | 1.44 | -13.95 | -0.9821 | -0.2275 | -0.0029 |
| 297 | SLV 12 | -3.53 | 1.44 | -13.95 | -0.9821 | -0.2275 | -0.0029 |
| 297 | SLV 13 | -7.25 | 1.09 | -2.5 | -0.6885 | -0.4506 | -0.0022 |
| 297 | SLV 14 | -7.25 | 1.09 | -2.5 | -0.6885 | -0.4506 | -0.0022 |
| 297 | SLV 15 | -8.97 | 1.43 | -20.03 | -0.9359 | -0.5478 | -0.0028 |
| 297 | SLV 16 | -8.97 | 1.43 | -20.03 | -0.9359 | -0.5478 | -0.0028 |
| 298 | SLU 1 | 0.93 | 0.39 | 24 | -0.3444 | 0.0396 | 0.0007 |
| 298 | SLU 2 | 0.94 | 0.39 | 23.97 | -0.3382 | 0.0407 | 0.0007 |
| 298 | SLU 3 | 0.95 | 0.42 | 24.97 | -0.3663 | 0.0408 | 0.0007 |
| 298 | SLU 4 | 0.96 | 0.41 | 24.94 | -0.3626 | 0.0414 | 0.0007 |
| 298 | SLU 5 | 0.99 | 0.41 | 24.86 | -0.3565 | 0.0429 | 0.0007 |
| 298 | SLU 6 | 1 | 0.44 | 25.86 | -0.3846 | 0.0429 | 0.0008 |
| 298 | SLU 7 | 1.01 | 0.44 | 25.84 | -0.3809 | 0.0436 | 0.0008 |
| 298 | SLU 8 | 1.02 | 0.44 | 25.79 | -0.381 | 0.0439 | 0.0008 |
| 298 | SLU 9 | 1.03 | 0.43 | 25.77 | -0.3773 | 0.0446 | 0.0008 |
| 298 | SLU 10 | 1.14 | 0.45 | 27.85 | -0.3937 | 0.0496 | 0.0008 |
| 298 | SLU 11 | 1.16 | 0.48 | 28.85 | -0.4217 | 0.0496 | 0.0009 |
| 298 | SLU 12 | 1.16 | 0.48 | 28.83 | -0.418 | 0.0503 | 0.0008 |
| 298 | SLU 13 | 1.19 | 0.47 | 28.74 | -0.412 | 0.0518 | 0.0008 |
| 298 | SLU 14 | 1.2 | 0.5 | 29.74 | -0.4401 | 0.0518 | 0.0009 |
| 298 | SLU 15 | 1.21 | 0.5 | 29.72 | -0.4364 | 0.0525 | 0.0009 |
| 298 | SLU 16 | 1.23 | 0.5 | 29.68 | -0.4365 | 0.0528 | 0.0009 |
| 298 | SLU 17 | 1.23 | 0.49 | 29.66 | -0.4328 | 0.0535 | 0.0009 |
| 298 | SLU 18 | 1.22 | 0.48 | 29.55 | -0.4236 | 0.0523 | 0.0009 |
| 298 | SLU 19 | 1.22 | 0.48 | 29.53 | -0.4199 | 0.053 | 0.0009 |
| 298 | SLU 20 | 1.26 | 0.51 | 30.44 | -0.4419 | 0.0545 | 0.0009 |
| 298 | SLU 21 | 1.27 | 0.5 | 30.42 | -0.4382 | 0.0551 | 0.0009 |
| 298 | SLU 22 | 1.09 | 0.46 | 27.61 | -0.4032 | 0.0466 | 0.0008 |
| 298 | SLU 23 | 1.1 | 0.45 | 27.57 | -0.3971 | 0.0478 | 0.0008 |
| 298 | SLU 24 | 1.11 | 0.49 | 28.57 | -0.4251 | 0.0478 | 0.0009 |
| 298 | SLU 25 | 1.12 | 0.48 | 28.55 | -0.4214 | 0.0484 | 0.0009 |
| 298 | SLU 26 | 1.14 | 0.47 | 28.47 | -0.4154 | 0.0499 | 0.0008 |
| 298 | SLU 27 | 1.16 | 0.51 | 29.47 | -0.4435 | 0.0499 | 0.0009 |
| 298 | SLU 28 | 1.16 | 0.5 | 29.45 | -0.4397 | 0.0506 | 0.0009 |
| 298 | SLU 29 | 1.18 | 0.5 | 29.4 | -0.4399 | 0.0509 | 0.0009 |
| 298 | SLU 30 | 1.19 | 0.5 | 29.38 | -0.4361 | 0.0516 | 0.0009 |
| 298 | SLU 31 | 1.3 | 0.52 | 31.45 | -0.4525 | 0.0567 | 0.0009 |
| 298 | SLU 32 | 1.31 | 0.55 | 32.45 | -0.4806 | 0.0567 | 0.001 |
| 298 | SLU 33 | 1.32 | 0.54 | 32.43 | -0.4769 | 0.0573 | 0.001 |
| 298 | SLU 34 | 1.35 | 0.54 | 32.35 | -0.4708 | 0.0588 | 0.001 |
| 298 | SLU 35 | 1.36 | 0.57 | 33.35 | -0.4989 | 0.0588 | 0.001 |
| 298 | SLU 36 | 1.37 | 0.57 | 33.33 | -0.4952 | 0.0595 | 0.001 |
| 298 | SLU 37 | 1.38 | 0.57 | 33.28 | -0.4953 | 0.0598 | 0.001 |
| 298 | SLU 38 | 1.39 | 0.56 | 33.26 | -0.4916 | 0.0605 | 0.001 |
| 298 | SLU 39 | 1.38 | 0.55 | 33.15 | -0.4824 | 0.0594 | 0.001 |
| 298 | SLU 40 | 1.38 | 0.55 | 33.13 | -0.4787 | 0.06 | 0.001 |
| 298 | SLU 41 | 1.42 | 0.57 | 34.05 | -0.5007 | 0.0615 | 0.001 |
| 298 | SLU 42 | 1.43 | 0.57 | 34.03 | -0.497 | 0.0622 | 0.001 |
| 298 | SLU 43 | 1.15 | 0.49 | 29.96 | -0.4275 | 0.0491 | 0.0009 |
| 298 | SLU 44 | 1.16 | 0.48 | 29.93 | -0.4214 | 0.0502 | 0.0009 |
| 298 | SLU 45 | 1.18 | 0.51 | 30.93 | -0.4494 | 0.0502 | 0.0009 |
| 298 | SLU 46 | 1.18 | 0.51 | 30.91 | -0.4457 | 0.0509 | 0.0009 |
| 298 | SLU 47 | 1.21 | 0.5 | 30.83 | -0.4397 | 0.0524 | 0.0009 |
| 298 | SLU 48 | 1.23 | 0.54 | 31.83 | -0.4678 | 0.0524 | 0.0009 |
| 298 | SLU 49 | 1.23 | 0.53 | 31.81 | -0.4641 | 0.053 | 0.0009 |
| 298 | SLU 50 | 1.25 | 0.53 | 31.76 | -0.4642 | 0.0534 | 0.0009 |
| 298 | SLU 51 | 1.25 | 0.53 | 31.74 | -0.4605 | 0.0541 | 0.0009 |
| 298 | SLU 52 | 1.37 | 0.54 | 33.81 | -0.4768 | 0.0591 | 0.001 |
| 298 | SLU 53 | 1.38 | 0.58 | 34.81 | -0.5049 | 0.0591 | 0.001 |

| Nodo | Cont. | Reazione a traslazione | | | Reazione a rotazione | | |
|---|---|---|---|---|---|---|---|
| Ind. | N.br. | x | y | z | x | y | z |
| 298 | SLU 54 | 1.39 | 0.57 | 34.79 | -0.5012 | 0.0598 | 0.001 |
| 298 | SLU 55 | 1.41 | 0.57 | 34.71 | -0.4951 | 0.0613 | 0.001 |
| 298 | SLU 56 | 1.43 | 0.6 | 35.71 | -0.5232 | 0.0613 | 0.0011 |
| 298 | SLU 57 | 1.43 | 0.59 | 35.69 | -0.5195 | 0.0619 | 0.0011 |
| 298 | SLU 58 | 1.45 | 0.59 | 35.64 | -0.5196 | 0.0623 | 0.0011 |
| 298 | SLU 59 | 1.46 | 0.59 | 35.62 | -0.5159 | 0.063 | 0.001 |
| 298 | SLU 60 | 1.44 | 0.58 | 35.51 | -0.5067 | 0.0618 | 0.001 |
| 298 | SLU 61 | 1.45 | 0.57 | 35.49 | -0.503 | 0.0625 | 0.001 |
| 298 | SLU 62 | 1.49 | 0.6 | 36.41 | -0.525 | 0.064 | 0.0011 |
| 298 | SLU 63 | 1.5 | 0.6 | 36.39 | -0.5213 | 0.0646 | 0.0011 |
| 298 | SLU 64 | 1.31 | 0.56 | 33.57 | -0.4864 | 0.0561 | 0.001 |
| 298 | SLU 65 | 1.32 | 0.55 | 33.53 | -0.4802 | 0.0572 | 0.001 |
| 298 | SLU 66 | 1.34 | 0.58 | 34.53 | -0.5083 | 0.0573 | 0.001 |
| 298 | SLU 67 | 1.34 | 0.58 | 34.51 | -0.5046 | 0.0579 | 0.001 |
| 298 | SLU 68 | 1.37 | 0.57 | 34.43 | -0.4985 | 0.0594 | 0.001 |
| 298 | SLU 69 | 1.38 | 0.6 | 35.43 | -0.5266 | 0.0594 | 0.0011 |
| 298 | SLU 70 | 1.39 | 0.6 | 35.41 | -0.5229 | 0.0601 | 0.0011 |
| 298 | SLU 71 | 1.41 | 0.6 | 35.36 | -0.523 | 0.0604 | 0.0011 |
| 298 | SLU 72 | 1.41 | 0.59 | 35.34 | -0.5193 | 0.0611 | 0.0011 |
| 298 | SLU 73 | 1.52 | 0.61 | 37.42 | -0.5356 | 0.0661 | 0.0011 |
| 298 | SLU 74 | 1.54 | 0.64 | 38.42 | -0.5637 | 0.0662 | 0.0011 |
| 298 | SLU 75 | 1.54 | 0.64 | 38.4 | -0.56 | 0.0668 | 0.0011 |
| 298 | SLU 76 | 1.57 | 0.63 | 38.31 | -0.554 | 0.0683 | 0.0011 |
| 298 | SLU 77 | 1.59 | 0.67 | 39.31 | -0.582 | 0.0683 | 0.0012 |
| 298 | SLU 78 | 1.59 | 0.66 | 39.29 | -0.5783 | 0.069 | 0.0012 |
| 298 | SLU 79 | 1.61 | 0.66 | 39.25 | -0.5784 | 0.0693 | 0.0012 |
| 298 | SLU 80 | 1.61 | 0.66 | 39.22 | -0.5747 | 0.07 | 0.0012 |
| 298 | SLU 81 | 1.6 | 0.65 | 39.12 | -0.5656 | 0.0688 | 0.0011 |
| 298 | SLU 82 | 1.61 | 0.64 | 39.09 | -0.5619 | 0.0695 | 0.0011 |
| 298 | SLU 83 | 1.65 | 0.67 | 40.01 | -0.5839 | 0.071 | 0.0012 |
| 298 | SLU 84 | 1.65 | 0.66 | 39.99 | -0.5802 | 0.0716 | 0.0012 |
| 298 | SLE RA 1 | 0.97 | 0.41 | 25.03 | -0.3612 | 0.0416 | 0.0007 |
| 298 | SLE RA 2 | 0.98 | 0.41 | 25.01 | -0.3571 | 0.0424 | 0.0007 |
| 298 | SLE RA 3 | 0.99 | 0.43 | 25.67 | -0.3758 | 0.0424 | 0.0008 |
| 298 | SLE RA 4 | 0.99 | 0.43 | 25.66 | -0.3733 | 0.0428 | 0.0008 |
| 298 | SLE RA 5 | 1.01 | 0.42 | 25.6 | -0.3693 | 0.0438 | 0.0007 |
| 298 | SLE RA 6 | 1.02 | 0.44 | 26.27 | -0.388 | 0.0438 | 0.0008 |
| 298 | SLE RA 7 | 1.03 | 0.44 | 26.26 | -0.3855 | 0.0443 | 0.0008 |
| 298 | SLE RA 8 | 1.04 | 0.44 | 26.23 | -0.3856 | 0.0445 | 0.0008 |
| 298 | SLE RA 9 | 1.04 | 0.44 | 26.21 | -0.3831 | 0.0449 | 0.0008 |
| 298 | SLE RA 10 | 1.12 | 0.45 | 27.6 | -0.394 | 0.0483 | 0.0008 |
| 298 | SLE RA 11 | 1.13 | 0.47 | 28.26 | -0.4128 | 0.0483 | 0.0008 |
| 298 | SLE RA 12 | 1.13 | 0.47 | 28.25 | -0.4103 | 0.0488 | 0.0008 |
| 298 | SLE RA 13 | 1.15 | 0.46 | 28.19 | -0.4063 | 0.0497 | 0.0008 |
| 298 | SLE RA 14 | 1.16 | 0.49 | 28.86 | -0.425 | 0.0497 | 0.0009 |
| 298 | SLE RA 15 | 1.16 | 0.48 | 28.85 | -0.4225 | 0.0502 | 0.0009 |
| 298 | SLE RA 16 | 1.17 | 0.48 | 28.81 | -0.4226 | 0.0504 | 0.0009 |
| 298 | SLE RA 17 | 1.18 | 0.48 | 28.8 | -0.4201 | 0.0509 | 0.0009 |
| 298 | SLE RA 18 | 1.17 | 0.47 | 28.73 | -0.414 | 0.0501 | 0.0008 |
| 298 | SLE RA 19 | 1.17 | 0.47 | 28.71 | -0.4115 | 0.0506 | 0.0008 |
| 298 | SLE RA 20 | 1.2 | 0.49 | 29.33 | -0.4262 | 0.0515 | 0.0009 |
| 298 | SLE RA 21 | 1.2 | 0.48 | 29.31 | -0.4237 | 0.052 | 0.0009 |
| 298 | SLE FR 1 | 0.97 | 0.41 | 25.03 | -0.3612 | 0.0416 | 0.0007 |
| 298 | SLE FR 2 | 0.98 | 0.41 | 25.03 | -0.3604 | 0.0418 | 0.0007 |
| 298 | SLE FR 3 | 0.99 | 0.42 | 25.27 | -0.3661 | 0.0422 | 0.0007 |
| 298 | SLE FR 4 | 1.03 | 0.43 | 26.13 | -0.3762 | 0.0443 | 0.0008 |
| 298 | SLE FR 5 | 1.04 | 0.44 | 26.38 | -0.3819 | 0.0447 | 0.0008 |
| 298 | SLE FR 6 | 1.07 | 0.44 | 26.88 | -0.3876 | 0.0459 | 0.0008 |
| 298 | SLE QP 1 | 0.97 | 0.41 | 25.03 | -0.3612 | 0.0416 | 0.0007 |
| 298 | SLE QP 2 | 1.03 | 0.43 | 26.14 | -0.377 | 0.0442 | 0.0008 |
| 298 | SLD 1 | 6.84 | 0.14 | 32.98 | -0.1484 | 0.3129 | 0.0009 |
| 298 | SLD 2 | 6.84 | 0.14 | 32.98 | -0.1484 | 0.3129 | 0.0009 |
| 298 | SLD 3 | 5.87 | 0.36 | 36.99 | -0.3288 | 0.2753 | 0.0012 |
| 298 | SLD 4 | 5.87 | 0.36 | 36.99 | -0.3288 | 0.2753 | 0.0012 |
| 298 | SLD 5 | 4.23 | 0.02 | 22.11 | -0.0348 | 0.1817 | 0.0005 |
| 298 | SLD 6 | 4.23 | 0.02 | 22.11 | -0.0348 | 0.1817 | 0.0005 |
| 298 | SLD 7 | 1.02 | 0.74 | 35.47 | -0.6362 | 0.0566 | 0.0012 |
| 298 | SLD 8 | 1.02 | 0.74 | 35.47 | -0.6362 | 0.0566 | 0.0012 |
| 298 | SLD 9 | 1.04 | 0.12 | 16.81 | -0.1179 | 0.0318 | 0.0003 |
| 298 | SLD 10 | 1.04 | 0.12 | 16.81 | -0.1179 | 0.0318 | 0.0003 |
| 298 | SLD 11 | -2.17 | 0.85 | 30.17 | -0.7193 | -0.0934 | 0.0011 |
| 298 | SLD 12 | -2.17 | 0.85 | 30.17 | -0.7193 | -0.0934 | 0.0011 |
| 298 | SLD 13 | -3.81 | 0.5 | 15.29 | -0.4253 | -0.187 | 0.0004 |
| 298 | SLD 14 | -3.81 | 0.5 | 15.29 | -0.4253 | -0.187 | 0.0004 |
| 298 | SLD 15 | -4.77 | 0.72 | 19.3 | -0.6057 | -0.2245 | 0.0006 |
| 298 | SLD 16 | -4.77 | 0.72 | 19.3 | -0.6057 | -0.2245 | 0.0006 |
| 298 | SLV 1 | 14.43 | -0.26 | 41.61 | 0.1691 | 0.663 | 0.0012 |
| 298 | SLV 2 | 14.43 | -0.26 | 41.61 | 0.1691 | 0.663 | 0.0012 |
| 298 | SLV 3 | 12.1 | 0.27 | 51.53 | -0.2752 | 0.5732 | 0.0017 |
| 298 | SLV 4 | 12.1 | 0.27 | 51.53 | -0.2752 | 0.5732 | 0.0017 |
| 298 | SLV 5 | 8.59 | -0.58 | 15.75 | 0.4607 | 0.366 | 0.0001 |
| 298 | SLV 6 | 8.59 | -0.58 | 15.75 | 0.4607 | 0.366 | 0.0001 |
| 298 | SLV 7 | 0.82 | 1.19 | 48.79 | -1.0204 | 0.0667 | 0.0018 |
| 298 | SLV 8 | 0.82 | 1.19 | 48.79 | -1.0204 | 0.0667 | 0.0018 |
| 298 | SLV 9 | 1.25 | -0.33 | 3.49 | 0.2663 | 0.0216 | -0.0003 |
| 298 | SLV 10 | 1.25 | -0.33 | 3.49 | 0.2663 | 0.0216 | -0.0003 |
| 298 | SLV 11 | -6.52 | 1.44 | 36.53 | -1.2148 | -0.2776 | 0.0015 |
| 298 | SLV 12 | -6.52 | 1.44 | 36.53 | -1.2148 | -0.2776 | 0.0015 |

| Nodo | Cont. | Reazione a traslazione | | | Reazione a rotazione | | |
|---|---|---|---|---|---|---|---|
| Ind. | N.br. | x | y | z | x | y | z |
| 298 | SLV 13 | -10.03 | 0.59 | 0.75 | -0.4789 | -0.4848 | -0.0002 |
| 298 | SLV 14 | -10.03 | 0.59 | 0.75 | -0.4789 | -0.4848 | -0.0002 |
| 298 | SLV 15 | -12.37 | 1.12 | 10.66 | -0.9232 | -0.5746 | 0.0004 |
| 298 | SLV 16 | -12.37 | 1.12 | 10.66 | -0.9232 | -0.5746 | 0.0004 |
| 299 | SLU 1 | -0.37 | 0.32 | 24.04 | -0.2795 | -0.0151 | 0.0008 |
| 299 | SLU 2 | -0.36 | 0.31 | 23.89 | -0.2744 | -0.0141 | 0.0007 |
| 299 | SLU 3 | -0.39 | 0.34 | 24.93 | -0.2972 | -0.0154 | 0.0008 |
| 299 | SLU 4 | -0.39 | 0.33 | 24.84 | -0.294 | -0.0148 | 0.0008 |
| 299 | SLU 5 | -0.35 | 0.33 | 24.69 | -0.289 | -0.0126 | 0.0008 |
| 299 | SLU 6 | -0.38 | 0.35 | 25.72 | -0.3118 | -0.0139 | 0.0009 |
| 299 | SLU 7 | -0.37 | 0.35 | 25.64 | -0.3087 | -0.0133 | 0.0008 |
| 299 | SLU 8 | -0.35 | 0.35 | 25.63 | -0.3088 | -0.012 | 0.0008 |
| 299 | SLU 9 | -0.34 | 0.35 | 25.54 | -0.3057 | -0.0115 | 0.0008 |
| 299 | SLU 10 | -0.39 | 0.36 | 27.73 | -0.3186 | -0.0153 | 0.0009 |
| 299 | SLU 11 | -0.43 | 0.39 | 28.77 | -0.3414 | -0.0165 | 0.0009 |
| 299 | SLU 12 | -0.42 | 0.38 | 28.68 | -0.3383 | -0.0159 | 0.0009 |
| 299 | SLU 13 | -0.38 | 0.38 | 28.53 | -0.3332 | -0.0137 | 0.0009 |
| 299 | SLU 14 | -0.42 | 0.4 | 29.56 | -0.356 | -0.015 | 0.001 |
| 299 | SLU 15 | -0.41 | 0.4 | 29.48 | -0.3529 | -0.0144 | 0.001 |
| 299 | SLU 16 | -0.38 | 0.4 | 29.47 | -0.353 | -0.0131 | 0.001 |
| 299 | SLU 17 | -0.37 | 0.4 | 29.38 | -0.3499 | -0.0126 | 0.001 |
| 299 | SLU 18 | -0.42 | 0.39 | 29.52 | -0.3428 | -0.0167 | 0.0009 |
| 299 | SLU 19 | -0.41 | 0.38 | 29.43 | -0.3396 | -0.0161 | 0.0009 |
| 299 | SLU 20 | -0.41 | 0.4 | 30.32 | -0.3574 | -0.0151 | 0.001 |
| 299 | SLU 21 | -0.4 | 0.4 | 30.23 | -0.3543 | -0.0146 | 0.001 |
| 299 | SLU 22 | -0.43 | 0.37 | 27.57 | -0.3266 | -0.0169 | 0.0009 |
| 299 | SLU 23 | -0.42 | 0.36 | 27.42 | -0.3215 | -0.016 | 0.0009 |
| 299 | SLU 24 | -0.45 | 0.39 | 28.46 | -0.3443 | -0.0172 | 0.0009 |
| 299 | SLU 25 | -0.45 | 0.39 | 28.37 | -0.3411 | -0.0167 | 0.0009 |
| 299 | SLU 26 | -0.4 | 0.38 | 28.22 | -0.3361 | -0.0145 | 0.0009 |
| 299 | SLU 27 | -0.44 | 0.41 | 29.26 | -0.3589 | -0.0157 | 0.001 |
| 299 | SLU 28 | -0.43 | 0.4 | 29.17 | -0.3558 | -0.0152 | 0.001 |
| 299 | SLU 29 | -0.4 | 0.4 | 29.16 | -0.3559 | -0.0139 | 0.001 |
| 299 | SLU 30 | -0.4 | 0.4 | 29.07 | -0.3528 | -0.0134 | 0.001 |
| 299 | SLU 31 | -0.45 | 0.41 | 31.26 | -0.3657 | -0.0171 | 0.001 |
| 299 | SLU 32 | -0.49 | 0.44 | 32.3 | -0.3885 | -0.0183 | 0.0011 |
| 299 | SLU 33 | -0.48 | 0.44 | 32.21 | -0.3854 | -0.0178 | 0.0011 |
| 299 | SLU 34 | -0.44 | 0.43 | 32.06 | -0.3803 | -0.0156 | 0.001 |
| 299 | SLU 35 | -0.47 | 0.46 | 33.1 | -0.4031 | -0.0168 | 0.0011 |
| 299 | SLU 36 | -0.47 | 0.45 | 33.01 | -0.4 | -0.0163 | 0.0011 |
| 299 | SLU 37 | -0.44 | 0.45 | 33 | -0.4001 | -0.015 | 0.0011 |
| 299 | SLU 38 | -0.43 | 0.45 | 32.91 | -0.397 | -0.0145 | 0.0011 |
| 299 | SLU 39 | -0.48 | 0.44 | 33.05 | -0.3898 | -0.0185 | 0.0011 |
| 299 | SLU 40 | -0.47 | 0.44 | 32.97 | -0.3867 | -0.018 | 0.0011 |
| 299 | SLU 41 | -0.46 | 0.46 | 33.85 | -0.4045 | -0.017 | 0.0011 |
| 299 | SLU 42 | -0.46 | 0.45 | 33.76 | -0.4014 | -0.0165 | 0.0011 |
| 299 | SLU 43 | -0.46 | 0.39 | 30.04 | -0.3472 | -0.019 | 0.0009 |
| 299 | SLU 44 | -0.45 | 0.39 | 29.89 | -0.3421 | -0.018 | 0.0009 |
| 299 | SLU 45 | -0.48 | 0.41 | 30.93 | -0.3649 | -0.0193 | 0.001 |
| 299 | SLU 46 | -0.48 | 0.41 | 30.84 | -0.3618 | -0.0187 | 0.001 |
| 299 | SLU 47 | -0.44 | 0.4 | 30.69 | -0.3567 | -0.0165 | 0.001 |
| 299 | SLU 48 | -0.47 | 0.43 | 31.72 | -0.3795 | -0.0177 | 0.001 |
| 299 | SLU 49 | -0.47 | 0.43 | 31.64 | -0.3764 | -0.0172 | 0.001 |
| 299 | SLU 50 | -0.44 | 0.43 | 31.63 | -0.3765 | -0.0159 | 0.001 |
| 299 | SLU 51 | -0.43 | 0.42 | 31.54 | -0.3734 | -0.0154 | 0.001 |
| 299 | SLU 52 | -0.48 | 0.44 | 33.73 | -0.3863 | -0.0191 | 0.0011 |
| 299 | SLU 53 | -0.52 | 0.46 | 34.77 | -0.4091 | -0.0204 | 0.0011 |
| 299 | SLU 54 | -0.51 | 0.46 | 34.68 | -0.406 | -0.0198 | 0.0011 |
| 299 | SLU 55 | -0.47 | 0.45 | 34.52 | -0.401 | -0.0176 | 0.0011 |
| 299 | SLU 56 | -0.51 | 0.48 | 35.56 | -0.4237 | -0.0188 | 0.0012 |
| 299 | SLU 57 | -0.5 | 0.48 | 35.47 | -0.4206 | -0.0183 | 0.0011 |
| 299 | SLU 58 | -0.47 | 0.48 | 35.47 | -0.4208 | -0.017 | 0.0011 |
| 299 | SLU 59 | -0.46 | 0.47 | 35.38 | -0.4177 | -0.0165 | 0.0011 |
| 299 | SLU 60 | -0.51 | 0.46 | 35.52 | -0.4105 | -0.0205 | 0.0011 |
| 299 | SLU 61 | -0.5 | 0.46 | 35.43 | -0.4074 | -0.02 | 0.0011 |
| 299 | SLU 62 | -0.5 | 0.48 | 36.32 | -0.4251 | -0.019 | 0.0012 |
| 299 | SLU 63 | -0.49 | 0.48 | 36.23 | -0.422 | -0.0185 | 0.0012 |
| 299 | SLU 64 | -0.52 | 0.45 | 33.57 | -0.3943 | -0.0208 | 0.0011 |
| 299 | SLU 65 | -0.51 | 0.44 | 33.42 | -0.3892 | -0.0199 | 0.0011 |
| 299 | SLU 66 | -0.54 | 0.47 | 34.46 | -0.412 | -0.0211 | 0.0011 |
| 299 | SLU 67 | -0.54 | 0.46 | 34.37 | -0.4089 | -0.0206 | 0.0011 |
| 299 | SLU 68 | -0.5 | 0.46 | 34.22 | -0.4038 | -0.0184 | 0.0011 |
| 299 | SLU 69 | -0.53 | 0.48 | 35.26 | -0.4266 | -0.0196 | 0.0012 |
| 299 | SLU 70 | -0.52 | 0.48 | 35.17 | -0.4235 | -0.019 | 0.0012 |
| 299 | SLU 71 | -0.49 | 0.48 | 35.16 | -0.4236 | -0.0178 | 0.0012 |
| 299 | SLU 72 | -0.49 | 0.48 | 35.07 | -0.4205 | -0.0172 | 0.0011 |
| 299 | SLU 73 | -0.54 | 0.49 | 37.26 | -0.4334 | -0.021 | 0.0012 |
| 299 | SLU 74 | -0.58 | 0.52 | 38.3 | -0.4562 | -0.0222 | 0.0012 |
| 299 | SLU 75 | -0.57 | 0.51 | 38.21 | -0.4531 | -0.0217 | 0.0012 |
| 299 | SLU 76 | -0.53 | 0.51 | 38.06 | -0.4481 | -0.0195 | 0.0012 |
| 299 | SLU 77 | -0.57 | 0.53 | 39.1 | -0.4708 | -0.0207 | 0.0013 |
| 299 | SLU 78 | -0.56 | 0.53 | 39.01 | -0.4677 | -0.0201 | 0.0013 |
| 299 | SLU 79 | -0.53 | 0.53 | 39 | -0.4679 | -0.0189 | 0.0013 |
| 299 | SLU 80 | -0.52 | 0.53 | 38.91 | -0.4648 | -0.0183 | 0.0013 |
| 299 | SLU 81 | -0.57 | 0.52 | 39.05 | -0.4576 | -0.0224 | 0.0012 |
| 299 | SLU 82 | -0.56 | 0.51 | 38.97 | -0.4545 | -0.0219 | 0.0012 |
| 299 | SLU 83 | -0.56 | 0.53 | 39.85 | -0.4722 | -0.0209 | 0.0013 |
| 299 | SLU 84 | -0.55 | 0.53 | 39.76 | -0.4691 | -0.0203 | 0.0013 |

| Nodo | Cont. | Reazione a traslazione | | | Reazione a rotazione | | |
|---|---|---|---|---|---|---|---|
| Ind. | N.br. | x | y | z | x | y | z |
| 299 | SLE RA 1 | -0.39 | 0.33 | 25.05 | -0.293 | -0.0156 | 0.0008 |
| 299 | SLE RA 2 | -0.38 | 0.33 | 24.95 | -0.2895 | -0.015 | 0.0008 |
| 299 | SLE RA 3 | -0.4 | 0.35 | 25.64 | -0.3047 | -0.0158 | 0.0008 |
| 299 | SLE RA 4 | -0.4 | 0.34 | 25.58 | -0.3027 | -0.0154 | 0.0008 |
| 299 | SLE RA 5 | -0.37 | 0.34 | 25.48 | -0.2993 | -0.014 | 0.0008 |
| 299 | SLE RA 6 | -0.39 | 0.36 | 26.17 | -0.3145 | -0.0148 | 0.0009 |
| 299 | SLE RA 7 | -0.39 | 0.35 | 26.11 | -0.3124 | -0.0144 | 0.0009 |
| 299 | SLE RA 8 | -0.37 | 0.35 | 26.11 | -0.3125 | -0.0136 | 0.0009 |
| 299 | SLE RA 9 | -0.37 | 0.35 | 26.05 | -0.3104 | -0.0132 | 0.0008 |
| 299 | SLE RA 10 | -0.4 | 0.36 | 27.51 | -0.319 | -0.0157 | 0.0009 |
| 299 | SLE RA 11 | -0.43 | 0.38 | 28.2 | -0.3342 | -0.0165 | 0.0009 |
| 299 | SLE RA 12 | -0.42 | 0.38 | 28.14 | -0.3322 | -0.0162 | 0.0009 |
| 299 | SLE RA 13 | -0.39 | 0.37 | 28.04 | -0.3288 | -0.0147 | 0.0009 |
| 299 | SLE RA 14 | -0.42 | 0.39 | 28.73 | -0.344 | -0.0155 | 0.0009 |
| 299 | SLE RA 15 | -0.41 | 0.39 | 28.67 | -0.3419 | -0.0152 | 0.0009 |
| 299 | SLE RA 16 | -0.39 | 0.39 | 28.67 | -0.342 | -0.0143 | 0.0009 |
| 299 | SLE RA 17 | -0.39 | 0.38 | 28.61 | -0.3399 | -0.014 | 0.0009 |
| 299 | SLE RA 18 | -0.42 | 0.38 | 28.7 | -0.3351 | -0.0167 | 0.0009 |
| 299 | SLE RA 19 | -0.41 | 0.38 | 28.64 | -0.3331 | -0.0163 | 0.0009 |
| 299 | SLE RA 20 | -0.41 | 0.39 | 29.23 | -0.3449 | -0.0157 | 0.0009 |
| 299 | SLE RA 21 | -0.41 | 0.39 | 29.17 | -0.3428 | -0.0153 | 0.0009 |
| 299 | SLE FR 1 | -0.39 | 0.33 | 25.05 | -0.293 | -0.0156 | 0.0008 |
| 299 | SLE FR 2 | -0.38 | 0.33 | 25.03 | -0.2923 | -0.0155 | 0.0008 |
| 299 | SLE FR 3 | -0.38 | 0.34 | 25.26 | -0.2969 | -0.0152 | 0.0008 |
| 299 | SLE FR 4 | -0.39 | 0.35 | 26.12 | -0.3049 | -0.0158 | 0.0008 |
| 299 | SLE FR 5 | -0.39 | 0.35 | 26.35 | -0.3095 | -0.0155 | 0.0008 |
| 299 | SLE FR 6 | -0.4 | 0.36 | 26.87 | -0.3141 | -0.0161 | 0.0009 |
| 299 | SLE QP 1 | -0.39 | 0.33 | 25.05 | -0.293 | -0.0156 | 0.0008 |
| 299 | SLE QP 2 | -0.4 | 0.35 | 26.14 | -0.3056 | -0.0159 | 0.0008 |
| 299 | SLD 1 | 6.44 | 0.04 | 29.74 | -0.0513 | 0.3048 | 0.0009 |
| 299 | SLD 2 | 6.44 | 0.04 | 29.74 | -0.0513 | 0.3048 | 0.0009 |
| 299 | SLD 3 | 5.35 | 0.32 | 31.71 | -0.2974 | 0.2601 | 0.0015 |
| 299 | SLD 4 | 5.35 | 0.32 | 31.71 | -0.2974 | 0.2601 | 0.0015 |
| 299 | SLD 5 | 3.3 | -0.16 | 24.23 | 0.1438 | 0.1481 | -0.0001 |
| 299 | SLD 6 | 3.3 | -0.16 | 24.23 | 0.1438 | 0.1481 | -0.0001 |
| 299 | SLD 7 | -0.32 | 0.75 | 30.8 | -0.6763 | -0.0009 | 0.002 |
| 299 | SLD 8 | -0.32 | 0.75 | 30.8 | -0.6763 | -0.0009 | 0.002 |
| 299 | SLD 9 | -0.47 | -0.06 | 21.48 | 0.065 | -0.031 | -0.0003 |
| 299 | SLD 10 | -0.47 | -0.06 | 21.48 | 0.065 | -0.031 | -0.0003 |
| 299 | SLD 11 | -4.09 | 0.85 | 28.05 | -0.7551 | -0.1799 | 0.0018 |
| 299 | SLD 12 | -4.09 | 0.85 | 28.05 | -0.7551 | -0.1799 | 0.0018 |
| 299 | SLD 13 | -6.14 | 0.38 | 20.57 | -0.3139 | -0.292 | 0.0001 |
| 299 | SLD 14 | -6.14 | 0.38 | 20.57 | -0.3139 | -0.292 | 0.0001 |
| 299 | SLD 15 | -7.23 | 0.65 | 22.54 | -0.5599 | -0.3367 | 0.0008 |
| 299 | SLD 16 | -7.23 | 0.65 | 22.54 | -0.5599 | -0.3367 | 0.0008 |
| 299 | SLV 1 | 15.38 | -0.38 | 34.42 | 0.308 | 0.7242 | 0.0009 |
| 299 | SLV 2 | 15.38 | -0.38 | 34.42 | 0.308 | 0.7242 | 0.0009 |
| 299 | SLV 3 | 12.76 | 0.29 | 39.12 | -0.303 | 0.6172 | 0.0025 |
| 299 | SLV 4 | 12.76 | 0.29 | 39.12 | -0.303 | 0.6172 | 0.0025 |
| 299 | SLV 5 | 8.31 | -0.9 | 21.51 | 0.8051 | 0.3683 | -0.0015 |
| 299 | SLV 6 | 8.31 | -0.9 | 21.51 | 0.8051 | 0.3683 | -0.0015 |
| 299 | SLV 7 | -0.42 | 1.35 | 37.15 | -1.2315 | 0.0118 | 0.0037 |
| 299 | SLV 8 | -0.42 | 1.35 | 37.15 | -1.2315 | 0.0118 | 0.0037 |
| 299 | SLV 9 | -0.37 | -0.66 | 15.13 | 0.6202 | -0.0437 | -0.002 |
| 299 | SLV 10 | -0.37 | -0.66 | 15.13 | 0.6202 | -0.0437 | -0.002 |
| 299 | SLV 11 | -9.1 | 1.59 | 30.78 | -1.4164 | -0.4002 | 0.0032 |
| 299 | SLV 12 | -9.1 | 1.59 | 30.78 | -1.4164 | -0.4002 | 0.0032 |
| 299 | SLV 13 | -13.55 | 0.4 | 13.17 | -0.3083 | -0.6491 | -0.0008 |
| 299 | SLV 14 | -13.55 | 0.4 | 13.17 | -0.3083 | -0.6491 | -0.0008 |
| 299 | SLV 15 | -16.17 | 1.07 | 17.86 | -0.9193 | -0.756 | 0.0007 |
| 299 | SLV 16 | -16.17 | 1.07 | 17.86 | -0.9193 | -0.756 | 0.0007 |
| 300 | SLU 1 | -1.31 | 0.27 | 23.62 | -0.2294 | -0.0546 | 0.0007 |
| 300 | SLU 2 | -1.3 | 0.26 | 23.37 | -0.2248 | -0.0535 | 0.0007 |
| 300 | SLU 3 | -1.38 | 0.28 | 24.42 | -0.2436 | -0.0574 | 0.0008 |
| 300 | SLU 4 | -1.38 | 0.28 | 24.27 | -0.2409 | -0.0568 | 0.0008 |
| 300 | SLU 5 | -1.33 | 0.28 | 24.06 | -0.2365 | -0.0546 | 0.0007 |
| 300 | SLU 6 | -1.41 | 0.3 | 25.11 | -0.2553 | -0.0585 | 0.0008 |
| 300 | SLU 7 | -1.4 | 0.29 | 24.96 | -0.2525 | -0.0579 | 0.0008 |
| 300 | SLU 8 | -1.37 | 0.3 | 25 | -0.2527 | -0.0567 | 0.0008 |
| 300 | SLU 9 | -1.36 | 0.29 | 24.85 | -0.25 | -0.0561 | 0.0008 |
| 300 | SLU 10 | -1.53 | 0.3 | 27.09 | -0.2602 | -0.0624 | 0.0008 |
| 300 | SLU 11 | -1.61 | 0.33 | 28.14 | -0.279 | -0.0664 | 0.0009 |
| 300 | SLU 12 | -1.6 | 0.32 | 27.99 | -0.2763 | -0.0657 | 0.0009 |
| 300 | SLU 13 | -1.55 | 0.32 | 27.78 | -0.2719 | -0.0635 | 0.0008 |
| 300 | SLU 14 | -1.63 | 0.34 | 28.83 | -0.2907 | -0.0675 | 0.0009 |
| 300 | SLU 15 | -1.63 | 0.34 | 28.68 | -0.2879 | -0.0668 | 0.0009 |
| 300 | SLU 16 | -1.59 | 0.34 | 28.72 | -0.2882 | -0.0657 | 0.0009 |
| 300 | SLU 17 | -1.58 | 0.33 | 28.57 | -0.2854 | -0.065 | 0.0009 |
| 300 | SLU 18 | -1.63 | 0.33 | 28.93 | -0.28 | -0.0673 | 0.0009 |
| 300 | SLU 19 | -1.63 | 0.32 | 28.78 | -0.2772 | -0.0667 | 0.0009 |
| 300 | SLU 20 | -1.66 | 0.34 | 29.62 | -0.2917 | -0.0684 | 0.0009 |
| 300 | SLU 21 | -1.65 | 0.34 | 29.47 | -0.2889 | -0.0678 | 0.0009 |
| 300 | SLU 22 | -1.55 | 0.31 | 27.01 | -0.2672 | -0.064 | 0.0008 |
| 300 | SLU 23 | -1.54 | 0.31 | 26.76 | -0.2626 | -0.0629 | 0.0008 |
| 300 | SLU 24 | -1.61 | 0.33 | 27.81 | -0.2814 | -0.0668 | 0.0009 |
| 300 | SLU 25 | -1.61 | 0.33 | 27.66 | -0.2787 | -0.0662 | 0.0009 |
| 300 | SLU 26 | -1.56 | 0.32 | 27.45 | -0.2743 | -0.064 | 0.0009 |
| 300 | SLU 27 | -1.64 | 0.34 | 28.5 | -0.2931 | -0.0679 | 0.0009 |

| Nodo | Cont. | Reazione a traslazione | | | Reazione a rotazione | | |
|---|---|---|---|---|---|---|---|
| Ind. | N.br. | x | y | z | x | y | z |
| 300 | SLU 28 | -1.64 | 0.34 | 28.35 | -0.2903 | -0.0673 | 0.0009 |
| 300 | SLU 29 | -1.6 | 0.34 | 28.39 | -0.2906 | -0.0661 | 0.0009 |
| 300 | SLU 30 | -1.59 | 0.34 | 28.24 | -0.2878 | -0.0655 | 0.0009 |
| 300 | SLU 31 | -1.76 | 0.35 | 30.48 | -0.298 | -0.0718 | 0.0009 |
| 300 | SLU 32 | -1.84 | 0.37 | 31.53 | -0.3168 | -0.0758 | 0.001 |
| 300 | SLU 33 | -1.83 | 0.37 | 31.38 | -0.3141 | -0.0751 | 0.001 |
| 300 | SLU 34 | -1.79 | 0.36 | 31.17 | -0.3097 | -0.0729 | 0.001 |
| 300 | SLU 35 | -1.86 | 0.38 | 32.22 | -0.3285 | -0.0769 | 0.001 |
| 300 | SLU 36 | -1.86 | 0.38 | 32.07 | -0.3258 | -0.0762 | 0.001 |
| 300 | SLU 37 | -1.82 | 0.38 | 32.11 | -0.326 | -0.0751 | 0.001 |
| 300 | SLU 38 | -1.82 | 0.38 | 31.96 | -0.3232 | -0.0744 | 0.001 |
| 300 | SLU 39 | -1.86 | 0.37 | 32.32 | -0.3178 | -0.0767 | 0.001 |
| 300 | SLU 40 | -1.86 | 0.37 | 32.17 | -0.3151 | -0.0761 | 0.001 |
| 300 | SLU 41 | -1.89 | 0.38 | 33.01 | -0.3295 | -0.0778 | 0.001 |
| 300 | SLU 42 | -1.89 | 0.38 | 32.86 | -0.3267 | -0.0772 | 0.001 |
| 300 | SLU 43 | -1.63 | 0.33 | 29.54 | -0.2853 | -0.0677 | 0.0009 |
| 300 | SLU 44 | -1.62 | 0.33 | 29.29 | -0.2807 | -0.0666 | 0.0009 |
| 300 | SLU 45 | -1.7 | 0.35 | 30.34 | -0.2995 | -0.0706 | 0.0009 |
| 300 | SLU 46 | -1.69 | 0.35 | 30.2 | -0.2967 | -0.07 | 0.0009 |
| 300 | SLU 47 | -1.64 | 0.34 | 29.98 | -0.2923 | -0.0677 | 0.0009 |
| 300 | SLU 48 | -1.72 | 0.36 | 31.03 | -0.3111 | -0.0717 | 0.001 |
| 300 | SLU 49 | -1.72 | 0.36 | 30.89 | -0.3084 | -0.071 | 0.001 |
| 300 | SLU 50 | -1.68 | 0.36 | 30.92 | -0.3086 | -0.0699 | 0.001 |
| 300 | SLU 51 | -1.68 | 0.36 | 30.77 | -0.3058 | -0.0692 | 0.001 |
| 300 | SLU 52 | -1.84 | 0.37 | 33.01 | -0.3161 | -0.0756 | 0.001 |
| 300 | SLU 53 | -1.92 | 0.39 | 34.06 | -0.3349 | -0.0795 | 0.001 |
| 300 | SLU 54 | -1.91 | 0.39 | 33.91 | -0.3321 | -0.0789 | 0.001 |
| 300 | SLU 55 | -1.87 | 0.38 | 33.7 | -0.3278 | -0.0767 | 0.001 |
| 300 | SLU 56 | -1.95 | 0.4 | 34.75 | -0.3465 | -0.0806 | 0.0011 |
| 300 | SLU 57 | -1.94 | 0.4 | 34.61 | -0.3438 | -0.08 | 0.0011 |
| 300 | SLU 58 | -1.9 | 0.4 | 34.64 | -0.344 | -0.0788 | 0.0011 |
| 300 | SLU 59 | -1.9 | 0.4 | 34.49 | -0.3413 | -0.0782 | 0.0011 |
| 300 | SLU 60 | -1.95 | 0.39 | 34.85 | -0.3358 | -0.0805 | 0.001 |
| 300 | SLU 61 | -1.94 | 0.39 | 34.71 | -0.3331 | -0.0798 | 0.001 |
| 300 | SLU 62 | -1.97 | 0.41 | 35.55 | -0.3475 | -0.0815 | 0.0011 |
| 300 | SLU 63 | -1.97 | 0.4 | 35.4 | -0.3448 | -0.0809 | 0.0011 |
| 300 | SLU 64 | -1.86 | 0.38 | 32.93 | -0.3231 | -0.0771 | 0.001 |
| 300 | SLU 65 | -1.85 | 0.37 | 32.68 | -0.3185 | -0.076 | 0.001 |
| 300 | SLU 66 | -1.93 | 0.39 | 33.73 | -0.3373 | -0.08 | 0.0011 |
| 300 | SLU 67 | -1.92 | 0.39 | 33.58 | -0.3345 | -0.0794 | 0.001 |
| 300 | SLU 68 | -1.88 | 0.39 | 33.37 | -0.3302 | -0.0771 | 0.001 |
| 300 | SLU 69 | -1.96 | 0.41 | 34.42 | -0.349 | -0.0811 | 0.0011 |
| 300 | SLU 70 | -1.95 | 0.4 | 34.27 | -0.3462 | -0.0804 | 0.0011 |
| 300 | SLU 71 | -1.91 | 0.4 | 34.31 | -0.3464 | -0.0793 | 0.0011 |
| 300 | SLU 72 | -1.91 | 0.4 | 34.16 | -0.3437 | -0.0786 | 0.0011 |
| 300 | SLU 73 | -2.07 | 0.41 | 36.4 | -0.3539 | -0.085 | 0.0011 |
| 300 | SLU 74 | -2.15 | 0.44 | 37.45 | -0.3727 | -0.0889 | 0.0012 |
| 300 | SLU 75 | -2.15 | 0.43 | 37.3 | -0.3699 | -0.0883 | 0.0012 |
| 300 | SLU 76 | -2.1 | 0.43 | 37.09 | -0.3656 | -0.0861 | 0.0011 |
| 300 | SLU 77 | -2.18 | 0.45 | 38.14 | -0.3844 | -0.09 | 0.0012 |
| 300 | SLU 78 | -2.17 | 0.45 | 37.99 | -0.3816 | -0.0894 | 0.0012 |
| 300 | SLU 79 | -2.14 | 0.45 | 38.03 | -0.3818 | -0.0882 | 0.0012 |
| 300 | SLU 80 | -2.13 | 0.44 | 37.88 | -0.3791 | -0.0876 | 0.0012 |
| 300 | SLU 81 | -2.18 | 0.44 | 38.24 | -0.3737 | -0.0899 | 0.0012 |
| 300 | SLU 82 | -2.17 | 0.43 | 38.09 | -0.3709 | -0.0892 | 0.0012 |
| 300 | SLU 83 | -2.21 | 0.45 | 38.93 | -0.3853 | -0.0909 | 0.0012 |
| 300 | SLU 84 | -2.2 | 0.45 | 38.79 | -0.3826 | -0.0903 | 0.0012 |
| 300 | SLE RA 1 | -1.38 | 0.28 | 24.58 | -0.2402 | -0.0572 | 0.0007 |
| 300 | SLE RA 2 | -1.37 | 0.28 | 24.42 | -0.2372 | -0.0565 | 0.0007 |
| 300 | SLE RA 3 | -1.43 | 0.29 | 25.12 | -0.2497 | -0.0592 | 0.0008 |
| 300 | SLE RA 4 | -1.42 | 0.29 | 25.02 | -0.2478 | -0.0587 | 0.0008 |
| 300 | SLE RA 5 | -1.39 | 0.29 | 24.88 | -0.2449 | -0.0573 | 0.0008 |
| 300 | SLE RA 6 | -1.44 | 0.3 | 25.58 | -0.2575 | -0.0599 | 0.0008 |
| 300 | SLE RA 7 | -1.44 | 0.3 | 25.48 | -0.2556 | -0.0595 | 0.0008 |
| 300 | SLE RA 8 | -1.42 | 0.3 | 25.51 | -0.2558 | -0.0587 | 0.0008 |
| 300 | SLE RA 9 | -1.41 | 0.3 | 25.41 | -0.2539 | -0.0583 | 0.0008 |
| 300 | SLE RA 10 | -1.52 | 0.3 | 26.9 | -0.2608 | -0.0625 | 0.0008 |
| 300 | SLE RA 11 | -1.57 | 0.32 | 27.6 | -0.2733 | -0.0651 | 0.0009 |
| 300 | SLE RA 12 | -1.57 | 0.32 | 27.5 | -0.2715 | -0.0647 | 0.0008 |
| 300 | SLE RA 13 | -1.54 | 0.31 | 27.36 | -0.2685 | -0.0632 | 0.0008 |
| 300 | SLE RA 14 | -1.59 | 0.33 | 28.06 | -0.2811 | -0.0658 | 0.0009 |
| 300 | SLE RA 15 | -1.59 | 0.33 | 27.96 | -0.2792 | -0.0654 | 0.0009 |
| 300 | SLE RA 16 | -1.56 | 0.33 | 27.99 | -0.2794 | -0.0646 | 0.0009 |
| 300 | SLE RA 17 | -1.56 | 0.32 | 27.89 | -0.2775 | -0.0642 | 0.0009 |
| 300 | SLE RA 18 | -1.59 | 0.32 | 28.13 | -0.2739 | -0.0657 | 0.0009 |
| 300 | SLE RA 19 | -1.59 | 0.32 | 28.03 | -0.2721 | -0.0653 | 0.0008 |
| 300 | SLE RA 20 | -1.61 | 0.33 | 28.59 | -0.2817 | -0.0665 | 0.0009 |
| 300 | SLE RA 21 | -1.61 | 0.33 | 28.49 | -0.2799 | -0.066 | 0.0009 |
| 300 | SLE FR 1 | -1.38 | 0.28 | 24.58 | -0.2402 | -0.0572 | 0.0007 |
| 300 | SLE FR 2 | -1.38 | 0.28 | 24.55 | -0.2396 | -0.0571 | 0.0007 |
| 300 | SLE FR 3 | -1.39 | 0.28 | 24.77 | -0.2433 | -0.0575 | 0.0008 |
| 300 | SLE FR 4 | -1.44 | 0.29 | 25.61 | -0.2497 | -0.0597 | 0.0008 |
| 300 | SLE FR 5 | -1.45 | 0.3 | 25.83 | -0.2534 | -0.0601 | 0.0008 |
| 300 | SLE FR 6 | -1.49 | 0.3 | 26.36 | -0.2571 | -0.0615 | 0.0008 |
| 300 | SLE QP 1 | -1.38 | 0.28 | 24.58 | -0.2402 | -0.0572 | 0.0007 |
| 300 | SLE QP 2 | -1.44 | 0.29 | 25.65 | -0.2503 | -0.0598 | 0.0008 |
| 300 | SLD 1 | 6.22 | -0.02 | 26.5 | 0.0238 | 0.2801 | -0.0001 |
| 300 | SLD 2 | 6.22 | -0.02 | 26.5 | 0.0238 | 0.2801 | -0.0001 |

| Nodo | Cont. | Reazione a traslazione | | | Reazione a rotazione | | |
|---|---|---|---|---|---|---|---|
| Ind. | N.br. | x | y | z | x | y | z |
| 300 | SLD 3 | 5.15 | 0.29 | 28.66 | -0.2715 | 0.2346 | 0.0008 |
| 300 | SLD 4 | 5.15 | 0.29 | 28.66 | -0.2715 | 0.2346 | 0.0008 |
| 300 | SLD 5 | 2.49 | -0.28 | 22.62 | 0.2798 | 0.1111 | -0.0008 |
| 300 | SLD 6 | 2.49 | -0.28 | 22.62 | 0.2798 | 0.1111 | -0.0008 |
| 300 | SLD 7 | -1.1 | 0.77 | 29.84 | -0.7046 | -0.0404 | 0.0021 |
| 300 | SLD 8 | -1.1 | 0.77 | 29.84 | -0.7046 | -0.0404 | 0.0021 |
| 300 | SLD 9 | -1.79 | -0.19 | 21.46 | 0.2039 | -0.0792 | -0.0005 |
| 300 | SLD 10 | -1.79 | -0.19 | 21.46 | 0.2039 | -0.0792 | -0.0005 |
| 300 | SLD 11 | -5.38 | 0.87 | 28.68 | -0.7804 | -0.2307 | 0.0023 |
| 300 | SLD 12 | -5.38 | 0.87 | 28.68 | -0.7804 | -0.2307 | 0.0023 |
| 300 | SLD 13 | -8.03 | 0.29 | 22.63 | -0.2291 | -0.3542 | 0.0008 |
| 300 | SLD 14 | -8.03 | 0.29 | 22.63 | -0.2291 | -0.3542 | 0.0008 |
| 300 | SLD 15 | -9.11 | 0.61 | 24.8 | -0.5244 | -0.3997 | 0.0016 |
| 300 | SLD 16 | -9.11 | 0.61 | 24.8 | -0.5244 | -0.3997 | 0.0016 |
| 300 | SLV 1 | 16.22 | -0.47 | 27.59 | 0.4152 | 0.7224 | -0.0012 |
| 300 | SLV 2 | 16.22 | -0.47 | 27.59 | 0.4152 | 0.7224 | -0.0012 |
| 300 | SLV 3 | 13.65 | 0.32 | 32.79 | -0.32 | 0.6145 | 0.0009 |
| 300 | SLV 4 | 13.65 | 0.32 | 32.79 | -0.32 | 0.6145 | 0.0009 |
| 300 | SLV 5 | 7.75 | -1.13 | 18.34 | 1.0645 | 0.3386 | -0.0031 |
| 300 | SLV 6 | 7.75 | -1.13 | 18.34 | 1.0645 | 0.3386 | -0.0031 |
| 300 | SLV 7 | -0.81 | 1.49 | 35.68 | -1.3864 | -0.0212 | 0.0041 |
| 300 | SLV 8 | -0.81 | 1.49 | 35.68 | -1.3864 | -0.0212 | 0.0041 |
| 300 | SLV 9 | -2.08 | -0.91 | 15.61 | 0.8858 | -0.0983 | -0.0025 |
| 300 | SLV 10 | -2.08 | -0.91 | 15.61 | 0.8858 | -0.0983 | -0.0025 |
| 300 | SLV 11 | -10.64 | 1.71 | 32.96 | -1.5652 | -0.4582 | 0.0046 |
| 300 | SLV 12 | -10.64 | 1.71 | 32.96 | -1.5652 | -0.4582 | 0.0046 |
| 300 | SLV 13 | -16.54 | 0.27 | 18.5 | -0.1806 | -0.734 | 0.0007 |
| 300 | SLV 14 | -16.54 | 0.27 | 18.5 | -0.1806 | -0.734 | 0.0007 |
| 300 | SLV 15 | -19.1 | 1.05 | 23.71 | -0.9159 | -0.842 | 0.0028 |
| 300 | SLV 16 | -19.1 | 1.05 | 23.71 | -0.9159 | -0.842 | 0.0028 |
| 301 | SLU 1 | -1.79 | 0.22 | 23 | -0.188 | -0.0745 | 0.0006 |
| 301 | SLU 2 | -1.8 | 0.22 | 22.65 | -0.1837 | -0.0747 | 0.0006 |
| 301 | SLU 3 | -1.87 | 0.24 | 23.71 | -0.1992 | -0.0772 | 0.0006 |
| 301 | SLU 4 | -1.88 | 0.23 | 23.49 | -0.1966 | -0.0773 | 0.0006 |
| 301 | SLU 5 | -1.83 | 0.23 | 23.23 | -0.1927 | -0.075 | 0.0006 |
| 301 | SLU 6 | -1.9 | 0.25 | 24.29 | -0.2083 | -0.0776 | 0.0007 |
| 301 | SLU 7 | -1.91 | 0.24 | 24.08 | -0.2057 | -0.0777 | 0.0006 |
| 301 | SLU 8 | -1.85 | 0.24 | 24.17 | -0.2061 | -0.0753 | 0.0007 |
| 301 | SLU 9 | -1.86 | 0.24 | 23.96 | -0.2035 | -0.0754 | 0.0006 |
| 301 | SLU 10 | -2.14 | 0.25 | 26.2 | -0.2116 | -0.0888 | 0.0007 |
| 301 | SLU 11 | -2.21 | 0.27 | 27.26 | -0.2272 | -0.0913 | 0.0007 |
| 301 | SLU 12 | -2.22 | 0.26 | 27.05 | -0.2246 | -0.0914 | 0.0007 |
| 301 | SLU 13 | -2.17 | 0.26 | 26.78 | -0.2207 | -0.0891 | 0.0007 |
| 301 | SLU 14 | -2.24 | 0.28 | 27.84 | -0.2363 | -0.0917 | 0.0007 |
| 301 | SLU 15 | -2.25 | 0.27 | 27.63 | -0.2337 | -0.0917 | 0.0007 |
| 301 | SLU 16 | -2.19 | 0.28 | 27.72 | -0.2341 | -0.0893 | 0.0007 |
| 301 | SLU 17 | -2.2 | 0.27 | 27.51 | -0.2315 | -0.0894 | 0.0007 |
| 301 | SLU 18 | -2.27 | 0.27 | 28.07 | -0.2279 | -0.0946 | 0.0007 |
| 301 | SLU 19 | -2.28 | 0.26 | 27.86 | -0.2253 | -0.0947 | 0.0007 |
| 301 | SLU 20 | -2.31 | 0.28 | 28.66 | -0.237 | -0.095 | 0.0007 |
| 301 | SLU 21 | -2.31 | 0.28 | 28.45 | -0.2344 | -0.0951 | 0.0007 |
| 301 | SLU 22 | -2.12 | 0.26 | 26.2 | -0.218 | -0.0879 | 0.0007 |
| 301 | SLU 23 | -2.13 | 0.25 | 25.85 | -0.2136 | -0.088 | 0.0007 |
| 301 | SLU 24 | -2.2 | 0.27 | 26.91 | -0.2292 | -0.0906 | 0.0007 |
| 301 | SLU 25 | -2.21 | 0.27 | 26.7 | -0.2266 | -0.0907 | 0.0007 |
| 301 | SLU 26 | -2.16 | 0.26 | 26.43 | -0.2227 | -0.0884 | 0.0007 |
| 301 | SLU 27 | -2.23 | 0.28 | 27.49 | -0.2383 | -0.0909 | 0.0008 |
| 301 | SLU 28 | -2.24 | 0.28 | 27.28 | -0.2357 | -0.091 | 0.0007 |
| 301 | SLU 29 | -2.18 | 0.28 | 27.37 | -0.2361 | -0.0886 | 0.0007 |
| 301 | SLU 30 | -2.19 | 0.28 | 27.16 | -0.2335 | -0.0887 | 0.0007 |
| 301 | SLU 31 | -2.47 | 0.28 | 29.4 | -0.2416 | -0.1021 | 0.0008 |
| 301 | SLU 32 | -2.54 | 0.3 | 30.46 | -0.2572 | -0.1046 | 0.0008 |
| 301 | SLU 33 | -2.55 | 0.3 | 30.25 | -0.2546 | -0.1047 | 0.0008 |
| 301 | SLU 34 | -2.51 | 0.29 | 29.99 | -0.2507 | -0.1025 | 0.0008 |
| 301 | SLU 35 | -2.57 | 0.31 | 31.05 | -0.2662 | -0.105 | 0.0008 |
| 301 | SLU 36 | -2.58 | 0.31 | 30.84 | -0.2637 | -0.1051 | 0.0008 |
| 301 | SLU 37 | -2.52 | 0.31 | 30.92 | -0.2641 | -0.1027 | 0.0008 |
| 301 | SLU 38 | -2.53 | 0.31 | 30.71 | -0.2615 | -0.1028 | 0.0008 |
| 301 | SLU 39 | -2.61 | 0.3 | 31.27 | -0.2579 | -0.108 | 0.0008 |
| 301 | SLU 40 | -2.61 | 0.3 | 31.06 | -0.2553 | -0.1081 | 0.0008 |
| 301 | SLU 41 | -2.64 | 0.31 | 31.86 | -0.267 | -0.1084 | 0.0008 |
| 301 | SLU 42 | -2.65 | 0.31 | 31.65 | -0.2644 | -0.1084 | 0.0008 |
| 301 | SLU 43 | -2.21 | 0.28 | 28.8 | -0.2341 | -0.0923 | 0.0007 |
| 301 | SLU 44 | -2.22 | 0.27 | 28.45 | -0.2298 | -0.0925 | 0.0007 |
| 301 | SLU 45 | -2.29 | 0.29 | 29.51 | -0.2453 | -0.095 | 0.0008 |
| 301 | SLU 46 | -2.3 | 0.29 | 29.3 | -0.2427 | -0.0951 | 0.0008 |
| 301 | SLU 47 | -2.26 | 0.28 | 29.03 | -0.2388 | -0.0928 | 0.0008 |
| 301 | SLU 48 | -2.32 | 0.3 | 30.09 | -0.2544 | -0.0954 | 0.0008 |
| 301 | SLU 49 | -2.33 | 0.3 | 29.88 | -0.2518 | -0.0955 | 0.0008 |
| 301 | SLU 50 | -2.28 | 0.3 | 29.97 | -0.2522 | -0.0931 | 0.0008 |
| 301 | SLU 51 | -2.28 | 0.29 | 29.76 | -0.2496 | -0.0931 | 0.0008 |
| 301 | SLU 52 | -2.56 | 0.3 | 32 | -0.2577 | -0.1065 | 0.0008 |
| 301 | SLU 53 | -2.63 | 0.32 | 33.06 | -0.2733 | -0.1091 | 0.0009 |
| 301 | SLU 54 | -2.64 | 0.32 | 32.85 | -0.2707 | -0.1092 | 0.0009 |
| 301 | SLU 55 | -2.6 | 0.31 | 32.59 | -0.2668 | -0.1069 | 0.0008 |
| 301 | SLU 56 | -2.67 | 0.33 | 33.65 | -0.2824 | -0.1094 | 0.0009 |
| 301 | SLU 57 | -2.67 | 0.33 | 33.43 | -0.2798 | -0.1095 | 0.0009 |
| 301 | SLU 58 | -2.62 | 0.33 | 33.52 | -0.2802 | -0.1071 | 0.0009 |

| Nodo | Cont. | Reazione a traslazione | | | Reazione a rotazione | | |
|---|---|---|---|---|---|---|---|
| Ind. | N.br. | x | y | z | x | y | z |
| 301 | SLU 59 | -2.62 | 0.33 | 33.31 | -0.2776 | -0.1072 | 0.0009 |
| 301 | SLU 60 | -2.7 | 0.32 | 33.87 | -0.274 | -0.1124 | 0.0009 |
| 301 | SLU 61 | -2.71 | 0.32 | 33.66 | -0.2714 | -0.1125 | 0.0009 |
| 301 | SLU 62 | -2.73 | 0.33 | 34.46 | -0.2831 | -0.1128 | 0.0009 |
| 301 | SLU 63 | -2.74 | 0.33 | 34.25 | -0.2805 | -0.1129 | 0.0009 |
| 301 | SLU 64 | -2.54 | 0.31 | 32 | -0.2641 | -0.1057 | 0.0008 |
| 301 | SLU 65 | -2.56 | 0.31 | 31.65 | -0.2598 | -0.1058 | 0.0008 |
| 301 | SLU 66 | -2.62 | 0.32 | 32.71 | -0.2753 | -0.1084 | 0.0009 |
| 301 | SLU 67 | -2.63 | 0.32 | 32.5 | -0.2727 | -0.1084 | 0.0009 |
| 301 | SLU 68 | -2.59 | 0.32 | 32.24 | -0.2688 | -0.1062 | 0.0008 |
| 301 | SLU 69 | -2.66 | 0.34 | 33.3 | -0.2844 | -0.1087 | 0.0009 |
| 301 | SLU 70 | -2.66 | 0.33 | 33.09 | -0.2818 | -0.1088 | 0.0009 |
| 301 | SLU 71 | -2.61 | 0.33 | 33.17 | -0.2822 | -0.1064 | 0.0009 |
| 301 | SLU 72 | -2.61 | 0.33 | 32.96 | -0.2796 | -0.1065 | 0.0009 |
| 301 | SLU 73 | -2.9 | 0.34 | 35.2 | -0.2877 | -0.1199 | 0.0009 |
| 301 | SLU 74 | -2.96 | 0.36 | 36.26 | -0.3033 | -0.1224 | 0.001 |
| 301 | SLU 75 | -2.97 | 0.35 | 36.05 | -0.3007 | -0.1225 | 0.0009 |
| 301 | SLU 76 | -2.93 | 0.35 | 35.79 | -0.2968 | -0.1203 | 0.0009 |
| 301 | SLU 77 | -3 | 0.37 | 36.85 | -0.3123 | -0.1228 | 0.001 |
| 301 | SLU 78 | -3 | 0.36 | 36.64 | -0.3098 | -0.1229 | 0.001 |
| 301 | SLU 79 | -2.95 | 0.37 | 36.73 | -0.3102 | -0.1205 | 0.001 |
| 301 | SLU 80 | -2.96 | 0.36 | 36.51 | -0.3076 | -0.1206 | 0.001 |
| 301 | SLU 81 | -3.03 | 0.36 | 37.07 | -0.304 | -0.1258 | 0.001 |
| 301 | SLU 82 | -3.04 | 0.35 | 36.86 | -0.3014 | -0.1259 | 0.0009 |
| 301 | SLU 83 | -3.06 | 0.37 | 37.66 | -0.3131 | -0.1261 | 0.001 |
| 301 | SLU 84 | -3.07 | 0.37 | 37.45 | -0.3105 | -0.1262 | 0.001 |
| 301 | SLE RA 1 | -1.88 | 0.23 | 23.91 | -0.1965 | -0.0784 | 0.0006 |
| 301 | SLE RA 2 | -1.89 | 0.23 | 23.68 | -0.1937 | -0.0785 | 0.0006 |
| 301 | SLE RA 3 | -1.94 | 0.24 | 24.38 | -0.204 | -0.0801 | 0.0006 |
| 301 | SLE RA 4 | -1.94 | 0.24 | 24.24 | -0.2023 | -0.0802 | 0.0006 |
| 301 | SLE RA 5 | -1.91 | 0.24 | 24.07 | -0.1997 | -0.0787 | 0.0006 |
| 301 | SLE RA 6 | -1.96 | 0.25 | 24.78 | -0.2101 | -0.0804 | 0.0007 |
| 301 | SLE RA 7 | -1.96 | 0.25 | 24.64 | -0.2084 | -0.0804 | 0.0007 |
| 301 | SLE RA 8 | -1.93 | 0.25 | 24.69 | -0.2086 | -0.0788 | 0.0007 |
| 301 | SLE RA 9 | -1.93 | 0.24 | 24.55 | -0.2069 | -0.0789 | 0.0007 |
| 301 | SLE RA 10 | -2.12 | 0.25 | 26.04 | -0.2123 | -0.0878 | 0.0007 |
| 301 | SLE RA 11 | -2.16 | 0.26 | 26.75 | -0.2227 | -0.0895 | 0.0007 |
| 301 | SLE RA 12 | -2.17 | 0.26 | 26.61 | -0.221 | -0.0896 | 0.0007 |
| 301 | SLE RA 13 | -2.14 | 0.26 | 26.44 | -0.2184 | -0.0881 | 0.0007 |
| 301 | SLE RA 14 | -2.19 | 0.27 | 27.14 | -0.2287 | -0.0898 | 0.0007 |
| 301 | SLE RA 15 | -2.19 | 0.27 | 27 | -0.227 | -0.0898 | 0.0007 |
| 301 | SLE RA 16 | -2.15 | 0.27 | 27.06 | -0.2273 | -0.0882 | 0.0007 |
| 301 | SLE RA 17 | -2.16 | 0.27 | 26.92 | -0.2256 | -0.0883 | 0.0007 |
| 301 | SLE RA 18 | -2.21 | 0.26 | 27.29 | -0.2232 | -0.0918 | 0.0007 |
| 301 | SLE RA 19 | -2.21 | 0.26 | 27.15 | -0.2215 | -0.0918 | 0.0007 |
| 301 | SLE RA 20 | -2.23 | 0.27 | 27.68 | -0.2292 | -0.092 | 0.0007 |
| 301 | SLE RA 21 | -2.23 | 0.27 | 27.54 | -0.2275 | -0.0921 | 0.0007 |
| 301 | SLE FR 1 | -1.88 | 0.23 | 23.91 | -0.1965 | -0.0784 | 0.0006 |
| 301 | SLE FR 2 | -1.88 | 0.23 | 23.86 | -0.196 | -0.0784 | 0.0006 |
| 301 | SLE FR 3 | -1.89 | 0.23 | 24.07 | -0.199 | -0.0785 | 0.0006 |
| 301 | SLE FR 4 | -1.98 | 0.24 | 24.88 | -0.204 | -0.0824 | 0.0006 |
| 301 | SLE FR 5 | -1.99 | 0.24 | 25.08 | -0.2069 | -0.0825 | 0.0007 |
| 301 | SLE FR 6 | -2.04 | 0.25 | 25.6 | -0.2099 | -0.0851 | 0.0007 |
| 301 | SLE QP 1 | -1.88 | 0.23 | 23.91 | -0.1965 | -0.0784 | 0.0006 |
| 301 | SLE QP 2 | -1.98 | 0.24 | 24.93 | -0.2045 | -0.0824 | 0.0006 |
| 301 | SLD 1 | 6.69 | -0.08 | 24.23 | -0.2462 | 0.31 | -0.0002 |
| 301 | SLD 2 | 6.69 | -0.08 | 24.23 | -0.2462 | 0.31 | -0.0002 |
| 301 | SLD 3 | 5.57 | 0.27 | 27.55 | 0.0809 | 0.2597 | 0.0007 |
| 301 | SLD 4 | 5.57 | 0.27 | 27.55 | 0.0809 | 0.2597 | 0.0007 |
| 301 | SLD 5 | 2.32 | -0.38 | 19.68 | -0.7132 | 0.1116 | -0.001 |
| 301 | SLD 6 | 2.32 | -0.38 | 19.68 | -0.7132 | 0.1116 | -0.001 |
| 301 | SLD 7 | -1.41 | 0.77 | 30.75 | 0.3773 | -0.056 | 0.002 |
| 301 | SLD 8 | -1.41 | 0.77 | 30.75 | 0.3773 | -0.056 | 0.002 |
| 301 | SLD 9 | -2.55 | -0.29 | 19.1 | -0.7863 | -0.1087 | -0.0007 |
| 301 | SLD 10 | -2.55 | -0.29 | 19.1 | -0.7863 | -0.1087 | -0.0007 |
| 301 | SLD 11 | -6.28 | 0.86 | 30.17 | 0.3042 | -0.2764 | 0.0023 |
| 301 | SLD 12 | -6.28 | 0.86 | 30.17 | 0.3042 | -0.2764 | 0.0023 |
| 301 | SLD 13 | -9.53 | 0.21 | 22.3 | -0.49 | -0.4245 | 0.0006 |
| 301 | SLD 14 | -9.53 | 0.21 | 22.3 | -0.49 | -0.4245 | 0.0006 |
| 301 | SLD 15 | -10.65 | 0.56 | 25.62 | -0.1628 | -0.4748 | 0.0015 |
| 301 | SLD 16 | -10.65 | 0.56 | 25.62 | -0.1628 | -0.4748 | 0.0015 |
| 301 | SLV 1 | 18 | -0.53 | 23.18 | -0.3238 | 0.8219 | -0.0014 |
| 301 | SLV 2 | 18 | -0.53 | 23.18 | -0.3238 | 0.8219 | -0.0014 |
| 301 | SLV 3 | 15.34 | 0.33 | 31.35 | 0.4916 | 0.7025 | 0.0008 |
| 301 | SLV 4 | 15.34 | 0.33 | 31.35 | 0.4916 | 0.7025 | 0.0008 |
| 301 | SLV 5 | 8.04 | -1.3 | 12.01 | -1.4771 | 0.3699 | -0.0034 |
| 301 | SLV 6 | 8.04 | -1.3 | 12.01 | -1.4771 | 0.3699 | -0.0034 |
| 301 | SLV 7 | -0.81 | 1.57 | 39.25 | 1.2411 | -0.0279 | 0.0041 |
| 301 | SLV 8 | -0.81 | 1.57 | 39.25 | 1.2411 | -0.0279 | 0.0041 |
| 301 | SLV 9 | -3.15 | -1.09 | 10.6 | -1.6502 | -0.1369 | -0.0028 |
| 301 | SLV 10 | -3.15 | -1.09 | 10.6 | -1.6502 | -0.1369 | -0.0028 |
| 301 | SLV 11 | -12 | 1.78 | 37.85 | 1.0681 | -0.5346 | 0.0047 |
| 301 | SLV 12 | -12 | 1.78 | 37.85 | 1.0681 | -0.5346 | 0.0047 |
| 301 | SLV 13 | -19.3 | 0.15 | 18.5 | -0.9007 | -0.8673 | 0.0005 |
| 301 | SLV 14 | -19.3 | 0.15 | 18.5 | -0.9007 | -0.8673 | 0.0005 |
| 301 | SLV 15 | -21.96 | 1.02 | 26.68 | -0.0852 | -0.9866 | 0.0027 |
| 301 | SLV 16 | -21.96 | 1.02 | 26.68 | -0.0852 | -0.9866 | 0.0027 |
| 302 | SLU 1 | -1.74 | 0.18 | 22.59 | -0.1552 | -0.0754 | 0.0005 |

| Nodo | Cont. | Reazione a traslazione | | | Reazione a rotazione | | |
|---|---|---|---|---|---|---|---|
| Ind. | N.br. | x | y | z | x | y | z |
| 302 | SLU 2 | -1.79 | 0.18 | 22.11 | -0.1509 | -0.0767 | 0.0005 |
| 302 | SLU 3 | -1.83 | 0.19 | 23.21 | -0.1639 | -0.0792 | 0.0005 |
| 302 | SLU 4 | -1.86 | 0.19 | 22.92 | -0.1613 | -0.0801 | 0.0005 |
| 302 | SLU 5 | -1.83 | 0.19 | 22.6 | -0.1577 | -0.0787 | 0.0005 |
| 302 | SLU 6 | -1.87 | 0.2 | 23.7 | -0.1707 | -0.0812 | 0.0006 |
| 302 | SLU 7 | -1.9 | 0.2 | 23.41 | -0.1682 | -0.082 | 0.0005 |
| 302 | SLU 8 | -1.82 | 0.2 | 23.57 | -0.1688 | -0.0793 | 0.0005 |
| 302 | SLU 9 | -1.86 | 0.2 | 23.28 | -0.1663 | -0.0801 | 0.0005 |
| 302 | SLU 10 | -2.15 | 0.2 | 25.52 | -0.1729 | -0.0919 | 0.0006 |
| 302 | SLU 11 | -2.19 | 0.22 | 26.62 | -0.1859 | -0.0944 | 0.0006 |
| 302 | SLU 12 | -2.22 | 0.22 | 26.33 | -0.1833 | -0.0952 | 0.0006 |
| 302 | SLU 13 | -2.2 | 0.21 | 26.01 | -0.1797 | -0.0938 | 0.0006 |
| 302 | SLU 14 | -2.23 | 0.23 | 27.11 | -0.1927 | -0.0963 | 0.0006 |
| 302 | SLU 15 | -2.26 | 0.22 | 26.82 | -0.1902 | -0.0972 | 0.0006 |
| 302 | SLU 16 | -2.19 | 0.23 | 26.98 | -0.1909 | -0.0944 | 0.0006 |
| 302 | SLU 17 | -2.22 | 0.22 | 26.69 | -0.1883 | -0.0952 | 0.0006 |
| 302 | SLU 18 | -2.26 | 0.22 | 27.46 | -0.1866 | -0.097 | 0.0006 |
| 302 | SLU 19 | -2.29 | 0.22 | 27.17 | -0.184 | -0.0978 | 0.0006 |
| 302 | SLU 20 | -2.3 | 0.23 | 27.95 | -0.1934 | -0.0989 | 0.0006 |
| 302 | SLU 21 | -2.33 | 0.23 | 27.66 | -0.1909 | -0.0998 | 0.0006 |
| 302 | SLU 22 | -2.09 | 0.21 | 25.63 | -0.1788 | -0.09 | 0.0006 |
| 302 | SLU 23 | -2.14 | 0.21 | 25.15 | -0.1745 | -0.0914 | 0.0006 |
| 302 | SLU 24 | -2.17 | 0.22 | 26.25 | -0.1875 | -0.0939 | 0.0006 |
| 302 | SLU 25 | -2.21 | 0.22 | 25.96 | -0.185 | -0.0947 | 0.0006 |
| 302 | SLU 26 | -2.18 | 0.21 | 25.64 | -0.1813 | -0.0934 | 0.0006 |
| 302 | SLU 27 | -2.22 | 0.23 | 26.74 | -0.1944 | -0.0959 | 0.0006 |
| 302 | SLU 28 | -2.25 | 0.23 | 26.45 | -0.1918 | -0.0967 | 0.0006 |
| 302 | SLU 29 | -2.17 | 0.23 | 26.61 | -0.1925 | -0.0939 | 0.0006 |
| 302 | SLU 30 | -2.21 | 0.22 | 26.32 | -0.1899 | -0.0948 | 0.0006 |
| 302 | SLU 31 | -2.5 | 0.23 | 28.55 | -0.1965 | -0.1065 | 0.0006 |
| 302 | SLU 32 | -2.54 | 0.25 | 29.66 | -0.2095 | -0.109 | 0.0007 |
| 302 | SLU 33 | -2.57 | 0.24 | 29.37 | -0.207 | -0.1099 | 0.0007 |
| 302 | SLU 34 | -2.55 | 0.24 | 29.05 | -0.2034 | -0.1085 | 0.0007 |
| 302 | SLU 35 | -2.58 | 0.26 | 30.15 | -0.2164 | -0.111 | 0.0007 |
| 302 | SLU 36 | -2.61 | 0.25 | 29.86 | -0.2138 | -0.1118 | 0.0007 |
| 302 | SLU 37 | -2.54 | 0.25 | 30.01 | -0.2145 | -0.1091 | 0.0007 |
| 302 | SLU 38 | -2.57 | 0.25 | 29.73 | -0.2119 | -0.1099 | 0.0007 |
| 302 | SLU 39 | -2.6 | 0.25 | 30.49 | -0.2102 | -0.1116 | 0.0007 |
| 302 | SLU 40 | -2.64 | 0.24 | 30.21 | -0.2077 | -0.1125 | 0.0007 |
| 302 | SLU 41 | -2.65 | 0.26 | 30.98 | -0.2171 | -0.1136 | 0.0007 |
| 302 | SLU 42 | -2.68 | 0.25 | 30.7 | -0.2145 | -0.1144 | 0.0007 |
| 302 | SLU 43 | -2.14 | 0.23 | 28.32 | -0.1936 | -0.0929 | 0.0006 |
| 302 | SLU 44 | -2.19 | 0.22 | 27.85 | -0.1893 | -0.0943 | 0.0006 |
| 302 | SLU 45 | -2.23 | 0.24 | 28.95 | -0.2023 | -0.0968 | 0.0007 |
| 302 | SLU 46 | -2.26 | 0.24 | 28.66 | -0.1998 | -0.0977 | 0.0006 |
| 302 | SLU 47 | -2.23 | 0.23 | 28.34 | -0.1962 | -0.0963 | 0.0006 |
| 302 | SLU 48 | -2.27 | 0.25 | 29.44 | -0.2092 | -0.0988 | 0.0007 |
| 302 | SLU 49 | -2.3 | 0.24 | 29.15 | -0.2066 | -0.0996 | 0.0007 |
| 302 | SLU 50 | -2.23 | 0.25 | 29.31 | -0.2073 | -0.0969 | 0.0007 |
| 302 | SLU 51 | -2.26 | 0.24 | 29.02 | -0.2047 | -0.0977 | 0.0007 |
| 302 | SLU 52 | -2.55 | 0.25 | 31.25 | -0.2113 | -0.1095 | 0.0007 |
| 302 | SLU 53 | -2.59 | 0.27 | 32.35 | -0.2244 | -0.112 | 0.0007 |
| 302 | SLU 54 | -2.62 | 0.26 | 32.06 | -0.2218 | -0.1128 | 0.0007 |
| 302 | SLU 55 | -2.6 | 0.26 | 31.74 | -0.2182 | -0.1114 | 0.0007 |
| 302 | SLU 56 | -2.63 | 0.27 | 32.84 | -0.2312 | -0.1139 | 0.0007 |
| 302 | SLU 57 | -2.67 | 0.27 | 32.55 | -0.2286 | -0.1148 | 0.0007 |
| 302 | SLU 58 | -2.59 | 0.27 | 32.71 | -0.2293 | -0.112 | 0.0007 |
| 302 | SLU 59 | -2.62 | 0.27 | 32.42 | -0.2267 | -0.1128 | 0.0007 |
| 302 | SLU 60 | -2.66 | 0.27 | 33.19 | -0.225 | -0.1146 | 0.0007 |
| 302 | SLU 61 | -2.69 | 0.26 | 32.9 | -0.2225 | -0.1154 | 0.0007 |
| 302 | SLU 62 | -2.7 | 0.27 | 33.68 | -0.2319 | -0.1165 | 0.0007 |
| 302 | SLU 63 | -2.73 | 0.27 | 33.39 | -0.2293 | -0.1174 | 0.0007 |
| 302 | SLU 64 | -2.49 | 0.26 | 31.36 | -0.2172 | -0.1076 | 0.0007 |
| 302 | SLU 65 | -2.54 | 0.25 | 30.88 | -0.2129 | -0.109 | 0.0007 |
| 302 | SLU 66 | -2.58 | 0.27 | 31.98 | -0.226 | -0.1115 | 0.0007 |
| 302 | SLU 67 | -2.61 | 0.26 | 31.7 | -0.2234 | -0.1123 | 0.0007 |
| 302 | SLU 68 | -2.58 | 0.26 | 31.37 | -0.2198 | -0.111 | 0.0007 |
| 302 | SLU 69 | -2.62 | 0.28 | 32.47 | -0.2328 | -0.1135 | 0.0008 |
| 302 | SLU 70 | -2.65 | 0.27 | 32.19 | -0.2302 | -0.1143 | 0.0007 |
| 302 | SLU 71 | -2.57 | 0.27 | 32.34 | -0.2309 | -0.1115 | 0.0007 |
| 302 | SLU 72 | -2.61 | 0.27 | 32.06 | -0.2283 | -0.1124 | 0.0007 |
| 302 | SLU 73 | -2.9 | 0.28 | 34.29 | -0.235 | -0.1241 | 0.0008 |
| 302 | SLU 74 | -2.94 | 0.29 | 35.39 | -0.248 | -0.1266 | 0.0008 |
| 302 | SLU 75 | -2.97 | 0.29 | 35.1 | -0.2454 | -0.1275 | 0.0008 |
| 302 | SLU 76 | -2.95 | 0.29 | 34.78 | -0.2418 | -0.1261 | 0.0008 |
| 302 | SLU 77 | -2.98 | 0.3 | 35.88 | -0.2548 | -0.1286 | 0.0008 |
| 302 | SLU 78 | -3.01 | 0.3 | 35.59 | -0.2523 | -0.1294 | 0.0008 |
| 302 | SLU 79 | -2.94 | 0.3 | 35.75 | -0.2529 | -0.1267 | 0.0008 |
| 302 | SLU 80 | -2.97 | 0.3 | 35.46 | -0.2504 | -0.1275 | 0.0008 |
| 302 | SLU 81 | -3.01 | 0.29 | 36.23 | -0.2487 | -0.1292 | 0.0008 |
| 302 | SLU 82 | -3.04 | 0.29 | 35.94 | -0.2461 | -0.1301 | 0.0008 |
| 302 | SLU 83 | -3.05 | 0.3 | 36.72 | -0.2555 | -0.1312 | 0.0008 |
| 302 | SLU 84 | -3.08 | 0.3 | 36.43 | -0.2529 | -0.132 | 0.0008 |
| 302 | SLE RA 1 | -1.84 | 0.19 | 23.46 | -0.1619 | -0.0796 | 0.0005 |
| 302 | SLE RA 2 | -1.87 | 0.19 | 23.14 | -0.1591 | -0.0805 | 0.0005 |
| 302 | SLE RA 3 | -1.9 | 0.2 | 23.87 | -0.1677 | -0.0821 | 0.0005 |
| 302 | SLE RA 4 | -1.92 | 0.2 | 23.68 | -0.166 | -0.0827 | 0.0005 |
| 302 | SLE RA 5 | -1.9 | 0.19 | 23.46 | -0.1636 | -0.0818 | 0.0005 |

| Nodo | Cont. | Reazione a traslazione | | | Reazione a rotazione | | |
|---|---|---|---|---|---|---|---|
| Ind. | N.br. | x | y | z | x | y | z |
| 302 | SLE RA 6 | -1.92 | 0.2 | 24.2 | -0.1723 | -0.0834 | 0.0006 |
| 302 | SLE RA 7 | -1.95 | 0.2 | 24.01 | -0.1706 | -0.084 | 0.0005 |
| 302 | SLE RA 8 | -1.89 | 0.2 | 24.11 | -0.171 | -0.0822 | 0.0006 |
| 302 | SLE RA 9 | -1.92 | 0.2 | 23.92 | -0.1693 | -0.0827 | 0.0005 |
| 302 | SLE RA 10 | -2.11 | 0.21 | 25.41 | -0.1737 | -0.0906 | 0.0006 |
| 302 | SLE RA 11 | -2.14 | 0.22 | 26.14 | -0.1824 | -0.0922 | 0.0006 |
| 302 | SLE RA 12 | -2.16 | 0.21 | 25.95 | -0.1807 | -0.0928 | 0.0006 |
| 302 | SLE RA 13 | -2.14 | 0.21 | 25.74 | -0.1783 | -0.0919 | 0.0006 |
| 302 | SLE RA 14 | -2.17 | 0.22 | 26.47 | -0.187 | -0.0935 | 0.0006 |
| 302 | SLE RA 15 | -2.19 | 0.22 | 26.28 | -0.1853 | -0.0941 | 0.0006 |
| 302 | SLE RA 16 | -2.14 | 0.22 | 26.38 | -0.1857 | -0.0923 | 0.0006 |
| 302 | SLE RA 17 | -2.16 | 0.22 | 26.19 | -0.184 | -0.0928 | 0.0006 |
| 302 | SLE RA 18 | -2.18 | 0.22 | 26.7 | -0.1829 | -0.094 | 0.0006 |
| 302 | SLE RA 19 | -2.2 | 0.21 | 26.51 | -0.1812 | -0.0945 | 0.0006 |
| 302 | SLE RA 20 | -2.21 | 0.22 | 27.03 | -0.1874 | -0.0953 | 0.0006 |
| 302 | SLE RA 21 | -2.23 | 0.22 | 26.84 | -0.1857 | -0.0958 | 0.0006 |
| 302 | SLE FR 1 | -1.84 | 0.19 | 23.46 | -0.1619 | -0.0796 | 0.0005 |
| 302 | SLE FR 2 | -1.84 | 0.19 | 23.39 | -0.1613 | -0.0797 | 0.0005 |
| 302 | SLE FR 3 | -1.85 | 0.19 | 23.59 | -0.1637 | -0.0801 | 0.0005 |
| 302 | SLE FR 4 | -1.95 | 0.2 | 24.37 | -0.1676 | -0.0841 | 0.0005 |
| 302 | SLE FR 5 | -1.95 | 0.2 | 24.56 | -0.17 | -0.0844 | 0.0005 |
| 302 | SLE FR 6 | -2.01 | 0.2 | 25.08 | -0.1724 | -0.0868 | 0.0006 |
| 302 | SLE QP 1 | -1.84 | 0.19 | 23.46 | -0.1619 | -0.0796 | 0.0005 |
| 302 | SLE QP 2 | -1.94 | 0.2 | 24.43 | -0.1682 | -0.0839 | 0.0005 |
| 302 | SLD 1 | 7.3 | 0.24 | 21.13 | -0.2214 | 0.3204 | -0.0003 |
| 302 | SLD 2 | 7.3 | 0.24 | 21.13 | -0.2214 | 0.3204 | -0.0003 |
| 302 | SLD 3 | 6.14 | -0.12 | 25.23 | 0.1185 | 0.2677 | 0.0006 |
| 302 | SLD 4 | 6.14 | -0.12 | 25.23 | 0.1185 | 0.2677 | 0.0006 |
| 302 | SLD 5 | 2.59 | 0.75 | 17.21 | -0.6998 | 0.1173 | -0.001 |
| 302 | SLD 6 | 2.59 | 0.75 | 17.21 | -0.6998 | 0.1173 | -0.001 |
| 302 | SLD 7 | -1.28 | -0.44 | 30.9 | 0.4334 | -0.0583 | 0.0019 |
| 302 | SLD 8 | -1.28 | -0.44 | 30.9 | 0.4334 | -0.0583 | 0.0019 |
| 302 | SLD 9 | -2.6 | 0.84 | 17.96 | -0.7698 | -0.1095 | -0.0008 |
| 302 | SLD 10 | -2.6 | 0.84 | 17.96 | -0.7698 | -0.1095 | -0.0008 |
| 302 | SLD 11 | -6.47 | -0.36 | 31.65 | 0.3634 | -0.285 | 0.0021 |
| 302 | SLD 12 | -6.47 | -0.36 | 31.65 | 0.3634 | -0.285 | 0.0021 |
| 302 | SLD 13 | -10.02 | 0.52 | 23.63 | -0.4549 | -0.4354 | 0.0005 |
| 302 | SLD 14 | -10.02 | 0.52 | 23.63 | -0.4549 | -0.4354 | 0.0005 |
| 302 | SLD 15 | -11.18 | 0.16 | 27.73 | -0.115 | -0.4881 | 0.0013 |
| 302 | SLD 16 | -11.18 | 0.16 | 27.73 | -0.115 | -0.4881 | 0.0013 |
| 302 | SLV 1 | 19.33 | 0.32 | 16.38 | -0.3144 | 0.8466 | -0.0014 |
| 302 | SLV 2 | 19.33 | 0.32 | 16.38 | -0.3144 | 0.8466 | -0.0014 |
| 302 | SLV 3 | 16.57 | -0.57 | 26.54 | 0.5332 | 0.7212 | 0.0008 |
| 302 | SLV 4 | 16.57 | -0.57 | 26.54 | 0.5332 | 0.7212 | 0.0008 |
| 302 | SLV 5 | 8.62 | 1.59 | 6.61 | -1.4977 | 0.3854 | -0.0034 |
| 302 | SLV 6 | 8.62 | 1.59 | 6.61 | -1.4977 | 0.3854 | -0.0034 |
| 302 | SLV 7 | -0.56 | -1.38 | 40.47 | 1.3278 | -0.0325 | 0.0039 |
| 302 | SLV 8 | -0.56 | -1.38 | 40.47 | 1.3278 | -0.0325 | 0.0039 |
| 302 | SLV 9 | -3.32 | 1.78 | 8.39 | -1.6642 | -0.1353 | -0.0029 |
| 302 | SLV 10 | -3.32 | 1.78 | 8.39 | -1.6642 | -0.1353 | -0.0029 |
| 302 | SLV 11 | -12.49 | -1.19 | 42.25 | 1.1613 | -0.5532 | 0.0045 |
| 302 | SLV 12 | -12.49 | -1.19 | 42.25 | 1.1613 | -0.5532 | 0.0045 |
| 302 | SLV 13 | -20.45 | 0.97 | 22.32 | -0.8696 | -0.889 | 0.0003 |
| 302 | SLV 14 | -20.45 | 0.97 | 22.32 | -0.8696 | -0.889 | 0.0003 |
| 302 | SLV 15 | -23.2 | 0.08 | 32.48 | -0.022 | -1.0143 | 0.0025 |
| 302 | SLV 16 | -23.2 | 0.08 | 32.48 | -0.022 | -1.0143 | 0.0025 |
| 303 | SLU 1 | -1.19 | 0.16 | 22.93 | -0.1317 | -0.0557 | 0.0004 |
| 303 | SLU 2 | -1.31 | 0.16 | 22.27 | -0.1272 | -0.0599 | 0.0004 |
| 303 | SLU 3 | -1.26 | 0.17 | 23.48 | -0.1385 | -0.0578 | 0.0004 |
| 303 | SLU 4 | -1.33 | 0.17 | 23.09 | -0.1358 | -0.0603 | 0.0004 |
| 303 | SLU 5 | -1.34 | 0.16 | 22.68 | -0.1323 | -0.0601 | 0.0004 |
| 303 | SLU 6 | -1.28 | 0.18 | 23.89 | -0.1435 | -0.0579 | 0.0004 |
| 303 | SLU 7 | -1.35 | 0.17 | 23.5 | -0.1409 | -0.0605 | 0.0004 |
| 303 | SLU 8 | -1.25 | 0.18 | 23.75 | -0.1418 | -0.0561 | 0.0004 |
| 303 | SLU 9 | -1.32 | 0.17 | 23.35 | -0.1392 | -0.0586 | 0.0004 |
| 303 | SLU 10 | -1.62 | 0.18 | 25.64 | -0.145 | -0.0739 | 0.0004 |
| 303 | SLU 11 | -1.57 | 0.19 | 26.86 | -0.1562 | -0.0717 | 0.0005 |
| 303 | SLU 12 | -1.64 | 0.19 | 26.46 | -0.1535 | -0.0743 | 0.0005 |
| 303 | SLU 13 | -1.65 | 0.18 | 26.05 | -0.15 | -0.0741 | 0.0004 |
| 303 | SLU 14 | -1.6 | 0.2 | 27.27 | -0.1613 | -0.0719 | 0.0005 |
| 303 | SLU 15 | -1.67 | 0.2 | 26.87 | -0.1586 | -0.0745 | 0.0005 |
| 303 | SLU 16 | -1.56 | 0.2 | 27.12 | -0.1596 | -0.07 | 0.0005 |
| 303 | SLU 17 | -1.63 | 0.19 | 26.72 | -0.1569 | -0.0726 | 0.0005 |
| 303 | SLU 18 | -1.64 | 0.2 | 27.75 | -0.157 | -0.0757 | 0.0005 |
| 303 | SLU 19 | -1.71 | 0.19 | 27.35 | -0.1543 | -0.0782 | 0.0005 |
| 303 | SLU 20 | -1.67 | 0.2 | 28.16 | -0.1621 | -0.0758 | 0.0005 |
| 303 | SLU 21 | -1.74 | 0.2 | 27.76 | -0.1594 | -0.0784 | 0.0005 |
| 303 | SLU 22 | -1.48 | 0.19 | 25.91 | -0.1506 | -0.0682 | 0.0005 |
| 303 | SLU 23 | -1.6 | 0.18 | 25.25 | -0.1462 | -0.0724 | 0.0004 |
| 303 | SLU 24 | -1.55 | 0.2 | 26.46 | -0.1574 | -0.0703 | 0.0005 |
| 303 | SLU 25 | -1.62 | 0.19 | 26.07 | -0.1548 | -0.0728 | 0.0005 |
| 303 | SLU 26 | -1.63 | 0.19 | 25.66 | -0.1513 | -0.0726 | 0.0005 |
| 303 | SLU 27 | -1.57 | 0.2 | 26.87 | -0.1625 | -0.0704 | 0.0005 |
| 303 | SLU 28 | -1.64 | 0.2 | 26.48 | -0.1598 | -0.073 | 0.0005 |
| 303 | SLU 29 | -1.53 | 0.2 | 26.72 | -0.1608 | -0.0686 | 0.0005 |
| 303 | SLU 30 | -1.6 | 0.2 | 26.33 | -0.1581 | -0.0711 | 0.0005 |
| 303 | SLU 31 | -1.91 | 0.2 | 28.62 | -0.1639 | -0.0864 | 0.0005 |
| 303 | SLU 32 | -1.86 | 0.22 | 29.84 | -0.1752 | -0.0842 | 0.0005 |

| Nodo | Cont. | Reazione a traslazione | | | Reazione a rotazione | | |
|---|---|---|---|---|---|---|---|
| Ind. | N.br. | x | y | z | x | y | z |
| 303 | SLU 33 | -1.93 | 0.21 | 29.44 | -0.1725 | -0.0868 | 0.0005 |
| 303 | SLU 34 | -1.94 | 0.21 | 29.03 | -0.169 | -0.0866 | 0.0005 |
| 303 | SLU 35 | -1.88 | 0.22 | 30.24 | -0.1802 | -0.0844 | 0.0005 |
| 303 | SLU 36 | -1.96 | 0.22 | 29.85 | -0.1776 | -0.087 | 0.0005 |
| 303 | SLU 37 | -1.85 | 0.22 | 30.1 | -0.1785 | -0.0825 | 0.0005 |
| 303 | SLU 38 | -1.92 | 0.22 | 29.7 | -0.1759 | -0.0851 | 0.0005 |
| 303 | SLU 39 | -1.93 | 0.22 | 30.73 | -0.176 | -0.0882 | 0.0005 |
| 303 | SLU 40 | -2 | 0.21 | 30.33 | -0.1733 | -0.0907 | 0.0005 |
| 303 | SLU 41 | -1.95 | 0.22 | 31.13 | -0.181 | -0.0884 | 0.0005 |
| 303 | SLU 42 | -2.03 | 0.22 | 30.74 | -0.1784 | -0.0909 | 0.0005 |
| 303 | SLU 43 | -1.45 | 0.21 | 28.79 | -0.1647 | -0.0681 | 0.0005 |
| 303 | SLU 44 | -1.57 | 0.2 | 28.13 | -0.1602 | -0.0723 | 0.0005 |
| 303 | SLU 45 | -1.52 | 0.21 | 29.34 | -0.1715 | -0.0702 | 0.0005 |
| 303 | SLU 46 | -1.59 | 0.21 | 28.95 | -0.1688 | -0.0727 | 0.0005 |
| 303 | SLU 47 | -1.6 | 0.21 | 28.54 | -0.1653 | -0.0725 | 0.0005 |
| 303 | SLU 48 | -1.54 | 0.22 | 29.75 | -0.1765 | -0.0704 | 0.0005 |
| 303 | SLU 49 | -1.61 | 0.22 | 29.36 | -0.1739 | -0.0729 | 0.0005 |
| 303 | SLU 50 | -1.5 | 0.22 | 29.6 | -0.1748 | -0.0685 | 0.0005 |
| 303 | SLU 51 | -1.58 | 0.21 | 29.21 | -0.1722 | -0.071 | 0.0005 |
| 303 | SLU 52 | -1.88 | 0.22 | 31.5 | -0.178 | -0.0863 | 0.0005 |
| 303 | SLU 53 | -1.83 | 0.24 | 32.71 | -0.1892 | -0.0842 | 0.0006 |
| 303 | SLU 54 | -1.9 | 0.23 | 32.32 | -0.1865 | -0.0867 | 0.0006 |
| 303 | SLU 55 | -1.91 | 0.23 | 31.91 | -0.183 | -0.0865 | 0.0006 |
| 303 | SLU 56 | -1.86 | 0.24 | 33.12 | -0.1943 | -0.0843 | 0.0006 |
| 303 | SLU 57 | -1.93 | 0.24 | 32.73 | -0.1916 | -0.0869 | 0.0006 |
| 303 | SLU 58 | -1.82 | 0.24 | 32.98 | -0.1926 | -0.0825 | 0.0006 |
| 303 | SLU 59 | -1.89 | 0.24 | 32.58 | -0.1899 | -0.085 | 0.0006 |
| 303 | SLU 60 | -1.9 | 0.24 | 33.6 | -0.19 | -0.0881 | 0.0006 |
| 303 | SLU 61 | -1.97 | 0.23 | 33.21 | -0.1873 | -0.0906 | 0.0006 |
| 303 | SLU 62 | -1.93 | 0.24 | 34.01 | -0.1951 | -0.0883 | 0.0006 |
| 303 | SLU 63 | -2 | 0.24 | 33.62 | -0.1924 | -0.0908 | 0.0006 |
| 303 | SLU 64 | -1.74 | 0.23 | 31.76 | -0.1837 | -0.0806 | 0.0006 |
| 303 | SLU 65 | -1.86 | 0.22 | 31.11 | -0.1792 | -0.0848 | 0.0005 |
| 303 | SLU 66 | -1.81 | 0.24 | 32.32 | -0.1904 | -0.0827 | 0.0006 |
| 303 | SLU 67 | -1.88 | 0.23 | 31.93 | -0.1878 | -0.0852 | 0.0006 |
| 303 | SLU 68 | -1.89 | 0.23 | 31.52 | -0.1843 | -0.085 | 0.0006 |
| 303 | SLU 69 | -1.83 | 0.24 | 32.73 | -0.1955 | -0.0829 | 0.0006 |
| 303 | SLU 70 | -1.9 | 0.24 | 32.33 | -0.1928 | -0.0854 | 0.0006 |
| 303 | SLU 71 | -1.79 | 0.24 | 32.58 | -0.1938 | -0.081 | 0.0006 |
| 303 | SLU 72 | -1.86 | 0.24 | 32.19 | -0.1911 | -0.0835 | 0.0006 |
| 303 | SLU 73 | -2.17 | 0.24 | 34.48 | -0.1969 | -0.0988 | 0.0006 |
| 303 | SLU 74 | -2.12 | 0.26 | 35.69 | -0.2082 | -0.0967 | 0.0006 |
| 303 | SLU 75 | -2.19 | 0.25 | 35.3 | -0.2055 | -0.0992 | 0.0006 |
| 303 | SLU 76 | -2.2 | 0.25 | 34.89 | -0.202 | -0.099 | 0.0006 |
| 303 | SLU 77 | -2.14 | 0.26 | 36.1 | -0.2132 | -0.0968 | 0.0006 |
| 303 | SLU 78 | -2.21 | 0.26 | 35.71 | -0.2106 | -0.0994 | 0.0006 |
| 303 | SLU 79 | -2.11 | 0.26 | 35.95 | -0.2115 | -0.095 | 0.0006 |
| 303 | SLU 80 | -2.18 | 0.26 | 35.56 | -0.2089 | -0.0975 | 0.0006 |
| 303 | SLU 81 | -2.19 | 0.26 | 36.58 | -0.209 | -0.1006 | 0.0006 |
| 303 | SLU 82 | -2.26 | 0.26 | 36.19 | -0.2063 | -0.1031 | 0.0006 |
| 303 | SLU 83 | -2.21 | 0.27 | 36.99 | -0.214 | -0.1008 | 0.0006 |
| 303 | SLU 84 | -2.28 | 0.26 | 36.6 | -0.2114 | -0.1033 | 0.0006 |
| 303 | SLE RA 1 | -1.28 | 0.17 | 23.78 | -0.1371 | -0.0593 | 0.0004 |
| 303 | SLE RA 2 | -1.35 | 0.17 | 23.34 | -0.1341 | -0.0621 | 0.0004 |
| 303 | SLE RA 3 | -1.32 | 0.18 | 24.15 | -0.1416 | -0.0606 | 0.0004 |
| 303 | SLE RA 4 | -1.37 | 0.17 | 23.89 | -0.1398 | -0.0623 | 0.0004 |
| 303 | SLE RA 5 | -1.37 | 0.17 | 23.61 | -0.1375 | -0.0622 | 0.0004 |
| 303 | SLE RA 6 | -1.34 | 0.18 | 24.42 | -0.145 | -0.0608 | 0.0004 |
| 303 | SLE RA 7 | -1.38 | 0.18 | 24.16 | -0.1432 | -0.0624 | 0.0004 |
| 303 | SLE RA 8 | -1.31 | 0.18 | 24.32 | -0.1439 | -0.0595 | 0.0004 |
| 303 | SLE RA 9 | -1.36 | 0.18 | 24.06 | -0.1421 | -0.0612 | 0.0004 |
| 303 | SLE RA 10 | -1.56 | 0.18 | 25.59 | -0.146 | -0.0714 | 0.0004 |
| 303 | SLE RA 11 | -1.53 | 0.19 | 26.4 | -0.1534 | -0.07 | 0.0005 |
| 303 | SLE RA 12 | -1.57 | 0.19 | 26.14 | -0.1517 | -0.0716 | 0.0005 |
| 303 | SLE RA 13 | -1.58 | 0.18 | 25.86 | -0.1493 | -0.0715 | 0.0004 |
| 303 | SLE RA 14 | -1.54 | 0.19 | 26.67 | -0.1568 | -0.0701 | 0.0005 |
| 303 | SLE RA 15 | -1.59 | 0.19 | 26.41 | -0.155 | -0.0718 | 0.0005 |
| 303 | SLE RA 16 | -1.52 | 0.19 | 26.57 | -0.1557 | -0.0688 | 0.0005 |
| 303 | SLE RA 17 | -1.57 | 0.19 | 26.31 | -0.1539 | -0.0705 | 0.0005 |
| 303 | SLE RA 18 | -1.57 | 0.19 | 26.99 | -0.154 | -0.0726 | 0.0005 |
| 303 | SLE RA 19 | -1.62 | 0.19 | 26.73 | -0.1522 | -0.0743 | 0.0005 |
| 303 | SLE RA 20 | -1.59 | 0.2 | 27.26 | -0.1574 | -0.0727 | 0.0005 |
| 303 | SLE RA 21 | -1.64 | 0.19 | 27 | -0.1556 | -0.0744 | 0.0005 |
| 303 | SLE FR 1 | -1.28 | 0.17 | 23.78 | -0.1371 | -0.0593 | 0.0004 |
| 303 | SLE FR 2 | -1.29 | 0.17 | 23.69 | -0.1365 | -0.0598 | 0.0004 |
| 303 | SLE FR 3 | -1.28 | 0.17 | 23.89 | -0.1385 | -0.0593 | 0.0004 |
| 303 | SLE FR 4 | -1.38 | 0.18 | 24.66 | -0.1416 | -0.0638 | 0.0004 |
| 303 | SLE FR 5 | -1.37 | 0.18 | 24.85 | -0.1435 | -0.0633 | 0.0004 |
| 303 | SLE FR 6 | -1.42 | 0.18 | 25.39 | -0.1455 | -0.0659 | 0.0004 |
| 303 | SLE QP 1 | -1.28 | 0.17 | 23.78 | -0.1371 | -0.0593 | 0.0004 |
| 303 | SLE QP 2 | -1.37 | 0.18 | 24.74 | -0.1422 | -0.0632 | 0.0004 |
| 303 | SLD 1 | 8.17 | 0.22 | 20.92 | -0.198 | 0.3607 | -0.0002 |
| 303 | SLD 2 | 8.17 | 0.22 | 20.92 | -0.198 | 0.3607 | -0.0002 |
| 303 | SLD 3 | 6.99 | -0.13 | 25.31 | 0.1347 | 0.3087 | 0.0005 |
| 303 | SLD 4 | 6.99 | -0.13 | 25.31 | 0.1347 | 0.3087 | 0.0005 |
| 303 | SLD 5 | 3.29 | 0.72 | 16.94 | -0.6635 | 0.1428 | -0.0008 |
| 303 | SLD 6 | 3.29 | 0.72 | 16.94 | -0.6635 | 0.1428 | -0.0008 |
| 303 | SLD 7 | -0.65 | -0.44 | 31.57 | 0.4455 | -0.0305 | 0.0015 |

| Nodo | Cont. | Reazione a traslazione | | | Reazione a rotazione | | |
|---|---|---|---|---|---|---|---|
| Ind. | N.br. | x | y | z | x | y | z |
| 303 | SLD 8 | -0.65 | -0.44 | 31.57 | 0.4455 | -0.0305 | 0.0015 |
| 303 | SLD 9 | -2.08 | 0.8 | 17.92 | -0.7299 | -0.096 | -0.0007 |
| 303 | SLD 10 | -2.08 | 0.8 | 17.92 | -0.7299 | -0.096 | -0.0007 |
| 303 | SLD 11 | -6.02 | -0.37 | 32.54 | 0.3792 | -0.2693 | 0.0017 |
| 303 | SLD 12 | -6.02 | -0.37 | 32.54 | 0.3792 | -0.2693 | 0.0017 |
| 303 | SLD 13 | -9.72 | 0.48 | 24.17 | -0.4191 | -0.4352 | 0.0004 |
| 303 | SLD 14 | -9.72 | 0.48 | 24.17 | -0.4191 | -0.4352 | 0.0004 |
| 303 | SLD 15 | -10.9 | 0.13 | 28.56 | -0.0863 | -0.4872 | 0.0011 |
| 303 | SLD 16 | -10.9 | 0.13 | 28.56 | -0.0863 | -0.4872 | 0.0011 |
| 303 | SLV 1 | 20.6 | 0.31 | 15.49 | -0.2929 | 0.9133 | -0.0011 |
| 303 | SLV 2 | 20.6 | 0.31 | 15.49 | -0.2929 | 0.9133 | -0.0011 |
| 303 | SLV 3 | 17.79 | -0.56 | 26.33 | 0.5366 | 0.7898 | 0.0007 |
| 303 | SLV 4 | 17.79 | -0.56 | 26.33 | 0.5366 | 0.7898 | 0.0007 |
| 303 | SLV 5 | 9.48 | 1.53 | 5.52 | -1.4455 | 0.4171 | -0.0027 |
| 303 | SLV 6 | 9.48 | 1.53 | 5.52 | -1.4455 | 0.4171 | -0.0027 |
| 303 | SLV 7 | 0.12 | -1.36 | 41.67 | 1.3196 | 0.0053 | 0.0032 |
| 303 | SLV 8 | 0.12 | -1.36 | 41.67 | 1.3196 | 0.0053 | 0.0032 |
| 303 | SLV 9 | -2.85 | 1.72 | 7.82 | -1.6039 | -0.1318 | -0.0023 |
| 303 | SLV 10 | -2.85 | 1.72 | 7.82 | -1.6039 | -0.1318 | -0.0023 |
| 303 | SLV 11 | -12.21 | -1.18 | 43.97 | 1.1612 | -0.5436 | 0.0036 |
| 303 | SLV 12 | -12.21 | -1.18 | 43.97 | 1.1612 | -0.5436 | 0.0036 |
| 303 | SLV 13 | -20.52 | 0.92 | 23.15 | -0.8209 | -0.9163 | 0.0002 |
| 303 | SLV 14 | -20.52 | 0.92 | 23.15 | -0.8209 | -0.9163 | 0.0002 |
| 303 | SLV 15 | -23.33 | 0.05 | 34 | 0.0086 | -1.0398 | 0.002 |
| 303 | SLV 16 | -23.33 | 0.05 | 34 | 0.0086 | -1.0398 | 0.002 |
| 304 | SLU 1 | -0.55 | 0.16 | 24.34 | -0.115 | -0.0379 | 0.0003 |
| 304 | SLU 2 | -0.74 | 0.15 | 23.43 | -0.1105 | -0.0443 | 0.0003 |
| 304 | SLU 3 | -0.6 | 0.17 | 24.86 | -0.1203 | -0.0405 | 0.0004 |
| 304 | SLU 4 | -0.71 | 0.16 | 24.32 | -0.1176 | -0.0444 | 0.0004 |
| 304 | SLU 5 | -0.76 | 0.16 | 23.78 | -0.1142 | -0.0458 | 0.0003 |
| 304 | SLU 6 | -0.63 | 0.17 | 25.21 | -0.1241 | -0.042 | 0.0004 |
| 304 | SLU 7 | -0.74 | 0.17 | 24.66 | -0.1214 | -0.0459 | 0.0004 |
| 304 | SLU 8 | -0.6 | 0.17 | 25.03 | -0.1225 | -0.0409 | 0.0004 |
| 304 | SLU 9 | -0.72 | 0.16 | 24.48 | -0.1198 | -0.0448 | 0.0004 |
| 304 | SLU 10 | -0.98 | 0.17 | 26.93 | -0.1253 | -0.0564 | 0.0004 |
| 304 | SLU 11 | -0.84 | 0.19 | 28.36 | -0.1351 | -0.0527 | 0.0004 |
| 304 | SLU 12 | -0.96 | 0.18 | 27.82 | -0.1324 | -0.0565 | 0.0004 |
| 304 | SLU 13 | -1.01 | 0.18 | 27.28 | -0.1291 | -0.058 | 0.0004 |
| 304 | SLU 14 | -0.87 | 0.19 | 28.71 | -0.1389 | -0.0542 | 0.0004 |
| 304 | SLU 15 | -0.98 | 0.19 | 28.16 | -0.1362 | -0.058 | 0.0004 |
| 304 | SLU 16 | -0.85 | 0.19 | 28.53 | -0.1373 | -0.0531 | 0.0004 |
| 304 | SLU 17 | -0.96 | 0.19 | 27.98 | -0.1346 | -0.0569 | 0.0004 |
| 304 | SLU 18 | -0.9 | 0.19 | 29.34 | -0.1361 | -0.0552 | 0.0004 |
| 304 | SLU 19 | -1.01 | 0.18 | 28.79 | -0.1334 | -0.0591 | 0.0004 |
| 304 | SLU 20 | -0.93 | 0.19 | 29.68 | -0.1399 | -0.0567 | 0.0004 |
| 304 | SLU 21 | -1.04 | 0.19 | 29.14 | -0.1372 | -0.0606 | 0.0004 |
| 304 | SLU 22 | -0.77 | 0.18 | 27.41 | -0.1307 | -0.0489 | 0.0004 |
| 304 | SLU 23 | -0.96 | 0.17 | 26.5 | -0.1262 | -0.0553 | 0.0004 |
| 304 | SLU 24 | -0.82 | 0.19 | 27.93 | -0.136 | -0.0516 | 0.0004 |
| 304 | SLU 25 | -0.93 | 0.18 | 27.39 | -0.1333 | -0.0554 | 0.0004 |
| 304 | SLU 26 | -0.98 | 0.18 | 26.85 | -0.1299 | -0.0568 | 0.0004 |
| 304 | SLU 27 | -0.84 | 0.19 | 28.28 | -0.1398 | -0.0531 | 0.0004 |
| 304 | SLU 28 | -0.96 | 0.19 | 27.73 | -0.1371 | -0.0569 | 0.0004 |
| 304 | SLU 29 | -0.82 | 0.19 | 28.1 | -0.1382 | -0.0519 | 0.0004 |
| 304 | SLU 30 | -0.93 | 0.19 | 27.55 | -0.1355 | -0.0558 | 0.0004 |
| 304 | SLU 31 | -1.2 | 0.19 | 30 | -0.141 | -0.0675 | 0.0004 |
| 304 | SLU 32 | -1.06 | 0.21 | 31.43 | -0.1508 | -0.0637 | 0.0005 |
| 304 | SLU 33 | -1.17 | 0.2 | 30.89 | -0.1481 | -0.0676 | 0.0004 |
| 304 | SLU 34 | -1.23 | 0.2 | 30.35 | -0.1448 | -0.069 | 0.0004 |
| 304 | SLU 35 | -1.09 | 0.21 | 31.78 | -0.1546 | -0.0652 | 0.0005 |
| 304 | SLU 36 | -1.2 | 0.21 | 31.23 | -0.1519 | -0.0691 | 0.0005 |
| 304 | SLU 37 | -1.07 | 0.21 | 31.6 | -0.153 | -0.0641 | 0.0005 |
| 304 | SLU 38 | -1.18 | 0.21 | 31.05 | -0.1503 | -0.068 | 0.0005 |
| 304 | SLU 39 | -1.12 | 0.21 | 32.41 | -0.1518 | -0.0663 | 0.0005 |
| 304 | SLU 40 | -1.23 | 0.21 | 31.86 | -0.1491 | -0.0701 | 0.0004 |
| 304 | SLU 41 | -1.14 | 0.22 | 32.75 | -0.1556 | -0.0678 | 0.0005 |
| 304 | SLU 42 | -1.26 | 0.21 | 32.21 | -0.1529 | -0.0716 | 0.0005 |
| 304 | SLU 43 | -0.64 | 0.2 | 30.59 | -0.1441 | -0.0454 | 0.0004 |
| 304 | SLU 44 | -0.83 | 0.19 | 29.68 | -0.1396 | -0.0518 | 0.0004 |
| 304 | SLU 45 | -0.69 | 0.21 | 31.11 | -0.1494 | -0.0481 | 0.0005 |
| 304 | SLU 46 | -0.8 | 0.2 | 30.56 | -0.1467 | -0.0519 | 0.0004 |
| 304 | SLU 47 | -0.85 | 0.2 | 30.02 | -0.1433 | -0.0534 | 0.0004 |
| 304 | SLU 48 | -0.72 | 0.21 | 31.46 | -0.1532 | -0.0496 | 0.0005 |
| 304 | SLU 49 | -0.83 | 0.21 | 30.91 | -0.1505 | -0.0535 | 0.0005 |
| 304 | SLU 50 | -0.69 | 0.21 | 31.28 | -0.1516 | -0.0485 | 0.0005 |
| 304 | SLU 51 | -0.81 | 0.21 | 30.73 | -0.1489 | -0.0523 | 0.0004 |
| 304 | SLU 52 | -1.07 | 0.21 | 33.18 | -0.1544 | -0.064 | 0.0005 |
| 304 | SLU 53 | -0.93 | 0.23 | 34.61 | -0.1642 | -0.0602 | 0.0005 |
| 304 | SLU 54 | -1.05 | 0.22 | 34.06 | -0.1615 | -0.0641 | 0.0005 |
| 304 | SLU 55 | -1.1 | 0.22 | 33.52 | -0.1582 | -0.0655 | 0.0005 |
| 304 | SLU 56 | -0.96 | 0.23 | 34.96 | -0.168 | -0.0618 | 0.0005 |
| 304 | SLU 57 | -1.07 | 0.23 | 34.41 | -0.1653 | -0.0656 | 0.0005 |
| 304 | SLU 58 | -0.94 | 0.23 | 34.78 | -0.1664 | -0.0606 | 0.0005 |
| 304 | SLU 59 | -1.05 | 0.23 | 34.23 | -0.1637 | -0.0645 | 0.0005 |
| 304 | SLU 60 | -0.99 | 0.23 | 35.59 | -0.1652 | -0.0628 | 0.0005 |
| 304 | SLU 61 | -1.1 | 0.23 | 35.04 | -0.1625 | -0.0666 | 0.0005 |
| 304 | SLU 62 | -1.02 | 0.23 | 35.93 | -0.169 | -0.0643 | 0.0005 |
| 304 | SLU 63 | -1.13 | 0.23 | 35.39 | -0.1663 | -0.0682 | 0.0005 |

| Nodo | Cont. | Reazione a traslazione | | | Reazione a rotazione | | |
|---|---|---|---|---|---|---|---|
| Ind. | N.br. | x | y | z | x | y | z |
| 304 | SLU 64 | -0.86 | 0.22 | 33.66 | -0.1598 | -0.0565 | 0.0005 |
| 304 | SLU 65 | -1.05 | 0.21 | 32.75 | -0.1553 | -0.0629 | 0.0005 |
| 304 | SLU 66 | -0.91 | 0.23 | 34.18 | -0.1651 | -0.0591 | 0.0005 |
| 304 | SLU 67 | -1.02 | 0.22 | 33.63 | -0.1624 | -0.063 | 0.0005 |
| 304 | SLU 68 | -1.07 | 0.22 | 33.09 | -0.1591 | -0.0644 | 0.0005 |
| 304 | SLU 69 | -0.94 | 0.23 | 34.53 | -0.1689 | -0.0606 | 0.0005 |
| 304 | SLU 70 | -1.05 | 0.23 | 33.98 | -0.1662 | -0.0645 | 0.0005 |
| 304 | SLU 71 | -0.91 | 0.23 | 34.35 | -0.1673 | -0.0595 | 0.0005 |
| 304 | SLU 72 | -1.02 | 0.23 | 33.8 | -0.1646 | -0.0634 | 0.0005 |
| 304 | SLU 73 | -1.29 | 0.23 | 36.25 | -0.1701 | -0.075 | 0.0005 |
| 304 | SLU 74 | -1.15 | 0.25 | 37.68 | -0.1799 | -0.0713 | 0.0005 |
| 304 | SLU 75 | -1.26 | 0.24 | 37.13 | -0.1772 | -0.0751 | 0.0005 |
| 304 | SLU 76 | -1.32 | 0.24 | 36.59 | -0.1739 | -0.0766 | 0.0005 |
| 304 | SLU 77 | -1.18 | 0.25 | 38.03 | -0.1837 | -0.0728 | 0.0006 |
| 304 | SLU 78 | -1.29 | 0.25 | 37.48 | -0.181 | -0.0767 | 0.0005 |
| 304 | SLU 79 | -1.16 | 0.25 | 37.85 | -0.1821 | -0.0717 | 0.0006 |
| 304 | SLU 80 | -1.27 | 0.25 | 37.3 | -0.1794 | -0.0755 | 0.0005 |
| 304 | SLU 81 | -1.21 | 0.25 | 38.66 | -0.181 | -0.0738 | 0.0005 |
| 304 | SLU 82 | -1.32 | 0.25 | 38.11 | -0.1783 | -0.0777 | 0.0005 |
| 304 | SLU 83 | -1.23 | 0.26 | 39 | -0.1847 | -0.0754 | 0.0006 |
| 304 | SLU 84 | -1.35 | 0.25 | 38.46 | -0.182 | -0.0792 | 0.0005 |
| 304 | SLE RA 1 | -0.61 | 0.17 | 25.22 | -0.1195 | -0.041 | 0.0004 |
| 304 | SLE RA 2 | -0.74 | 0.16 | 24.61 | -0.1165 | -0.0453 | 0.0004 |
| 304 | SLE RA 3 | -0.65 | 0.17 | 25.56 | -0.123 | -0.0428 | 0.0004 |
| 304 | SLE RA 4 | -0.72 | 0.17 | 25.2 | -0.1212 | -0.0453 | 0.0004 |
| 304 | SLE RA 5 | -0.76 | 0.16 | 24.84 | -0.119 | -0.0463 | 0.0004 |
| 304 | SLE RA 6 | -0.66 | 0.17 | 25.79 | -0.1255 | -0.0438 | 0.0004 |
| 304 | SLE RA 7 | -0.74 | 0.17 | 25.43 | -0.1237 | -0.0464 | 0.0004 |
| 304 | SLE RA 8 | -0.65 | 0.17 | 25.68 | -0.1245 | -0.043 | 0.0004 |
| 304 | SLE RA 9 | -0.72 | 0.17 | 25.31 | -0.1227 | -0.0456 | 0.0004 |
| 304 | SLE RA 10 | -0.9 | 0.17 | 26.94 | -0.1263 | -0.0534 | 0.0004 |
| 304 | SLE RA 11 | -0.81 | 0.18 | 27.9 | -0.1329 | -0.0509 | 0.0004 |
| 304 | SLE RA 12 | -0.88 | 0.18 | 27.53 | -0.1311 | -0.0535 | 0.0004 |
| 304 | SLE RA 13 | -0.92 | 0.18 | 27.17 | -0.1288 | -0.0544 | 0.0004 |
| 304 | SLE RA 14 | -0.83 | 0.19 | 28.13 | -0.1354 | -0.0519 | 0.0004 |
| 304 | SLE RA 15 | -0.9 | 0.18 | 27.76 | -0.1336 | -0.0545 | 0.0004 |
| 304 | SLE RA 16 | -0.81 | 0.19 | 28.01 | -0.1344 | -0.0511 | 0.0004 |
| 304 | SLE RA 17 | -0.89 | 0.18 | 27.65 | -0.1326 | -0.0537 | 0.0004 |
| 304 | SLE RA 18 | -0.84 | 0.19 | 28.55 | -0.1336 | -0.0526 | 0.0004 |
| 304 | SLE RA 19 | -0.92 | 0.18 | 28.19 | -0.1318 | -0.0552 | 0.0004 |
| 304 | SLE RA 20 | -0.86 | 0.19 | 28.78 | -0.1361 | -0.0536 | 0.0004 |
| 304 | SLE RA 21 | -0.94 | 0.19 | 28.42 | -0.1343 | -0.0562 | 0.0004 |
| 304 | SLE FR 1 | -0.61 | 0.17 | 25.22 | -0.1195 | -0.041 | 0.0004 |
| 304 | SLE FR 2 | -0.64 | 0.17 | 25.09 | -0.1189 | -0.0419 | 0.0004 |
| 304 | SLE FR 3 | -0.62 | 0.17 | 25.31 | -0.1205 | -0.0414 | 0.0004 |
| 304 | SLE FR 4 | -0.71 | 0.17 | 26.09 | -0.1231 | -0.0453 | 0.0004 |
| 304 | SLE FR 5 | -0.69 | 0.17 | 26.31 | -0.1247 | -0.0449 | 0.0004 |
| 304 | SLE FR 6 | -0.73 | 0.18 | 26.88 | -0.1265 | -0.0468 | 0.0004 |
| 304 | SLE QP 1 | -0.61 | 0.17 | 25.22 | -0.1195 | -0.041 | 0.0004 |
| 304 | SLE QP 2 | -0.68 | 0.17 | 26.22 | -0.1237 | -0.0445 | 0.0004 |
| 304 | SLD 1 | 7.4 | -0.11 | 21.82 | -0.1738 | 0.3087 | -0.0001 |
| 304 | SLD 2 | 7.4 | -0.11 | 21.82 | -0.1738 | 0.3087 | -0.0001 |
| 304 | SLD 3 | 8.6 | 0.21 | 26.11 | 0.1319 | 0.3615 | 0.0004 |
| 304 | SLD 4 | 8.6 | 0.21 | 26.11 | 0.1319 | 0.3615 | 0.0004 |
| 304 | SLD 5 | -0.07 | -0.4 | 18.4 | -0.6024 | -0.0185 | -0.0005 |
| 304 | SLD 6 | -0.07 | -0.4 | 18.4 | -0.6024 | -0.0185 | -0.0005 |
| 304 | SLD 7 | 3.92 | 0.67 | 32.68 | 0.4166 | 0.1573 | 0.0012 |
| 304 | SLD 8 | 3.92 | 0.67 | 32.68 | 0.4166 | 0.1573 | 0.0012 |
| 304 | SLD 9 | -5.28 | -0.33 | 19.75 | -0.664 | -0.2462 | -0.0004 |
| 304 | SLD 10 | -5.28 | -0.33 | 19.75 | -0.664 | -0.2462 | -0.0004 |
| 304 | SLD 11 | -1.29 | 0.74 | 34.03 | 0.355 | -0.0705 | 0.0013 |
| 304 | SLD 12 | -1.29 | 0.74 | 34.03 | 0.355 | -0.0705 | 0.0013 |
| 304 | SLD 13 | -9.97 | 0.14 | 26.33 | -0.3792 | -0.4504 | 0.0003 |
| 304 | SLD 14 | -9.97 | 0.14 | 26.33 | -0.3792 | -0.4504 | 0.0003 |
| 304 | SLD 15 | -8.77 | 0.46 | 30.61 | -0.0735 | -0.3977 | 0.0008 |
| 304 | SLD 16 | -8.77 | 0.46 | 30.61 | -0.0735 | -0.3977 | 0.0008 |
| 304 | SLV 1 | 17.83 | -0.52 | 15.68 | -0.2581 | 0.7639 | -0.0007 |
| 304 | SLV 2 | 17.83 | -0.52 | 15.68 | -0.2581 | 0.7639 | -0.0007 |
| 304 | SLV 3 | 20.7 | 0.28 | 26.19 | 0.5036 | 0.8904 | 0.0005 |
| 304 | SLV 4 | 20.7 | 0.28 | 26.19 | 0.5036 | 0.8904 | 0.0005 |
| 304 | SLV 5 | 0.51 | -1.24 | 7.1 | -1.3194 | 0.0062 | -0.0018 |
| 304 | SLV 6 | 0.51 | -1.24 | 7.1 | -1.3194 | 0.0062 | -0.0018 |
| 304 | SLV 7 | 10.09 | 1.41 | 42.16 | 1.2199 | 0.4278 | 0.0023 |
| 304 | SLV 8 | 10.09 | 1.41 | 42.16 | 1.2199 | 0.4278 | 0.0023 |
| 304 | SLV 9 | -11.46 | -1.06 | 10.27 | -1.4673 | -0.5168 | -0.0015 |
| 304 | SLV 10 | -11.46 | -1.06 | 10.27 | -1.4673 | -0.5168 | -0.0015 |
| 304 | SLV 11 | -1.87 | 1.58 | 45.33 | 1.072 | -0.0951 | 0.0026 |
| 304 | SLV 12 | -1.87 | 1.58 | 45.33 | 1.072 | -0.0951 | 0.0026 |
| 304 | SLV 13 | -22.06 | 0.07 | 26.24 | -0.751 | -0.9793 | 0.0002 |
| 304 | SLV 14 | -22.06 | 0.07 | 26.24 | -0.751 | -0.9793 | 0.0002 |
| 304 | SLV 15 | -19.19 | 0.86 | 36.76 | 0.0108 | -0.8529 | 0.0015 |
| 304 | SLV 16 | -19.19 | 0.86 | 36.76 | 0.0108 | -0.8529 | 0.0015 |
| 305 | SLU 1 | 0.01 | 0.15 | 26.93 | -0.0985 | -0.0132 | 0.0002 |
| 305 | SLU 2 | -0.24 | 0.15 | 25.68 | -0.0945 | -0.0226 | 0.0002 |
| 305 | SLU 3 | 0 | 0.16 | 27.45 | -0.1027 | -0.0136 | 0.0002 |
| 305 | SLU 4 | -0.16 | 0.16 | 26.71 | -0.1003 | -0.0192 | 0.0002 |
| 305 | SLU 5 | -0.25 | 0.15 | 25.98 | -0.0973 | -0.022 | 0.0002 |
| 305 | SLU 6 | -0.01 | 0.16 | 27.75 | -0.1055 | -0.0131 | 0.0002 |

| Nodo | Cont. | Reazione a traslazione | | | Reazione a rotazione | | |
|---|---|---|---|---|---|---|---|
| Ind. | N.br. | x | y | z | x | y | z |
| 305 | SLU 7 | -0.16 | 0.16 | 27 | -0.103 | -0.0187 | 0.0002 |
| 305 | SLU 8 | 0 | 0.16 | 27.53 | -0.1041 | -0.0122 | 0.0002 |
| 305 | SLU 9 | -0.15 | 0.16 | 26.78 | -0.1017 | -0.0178 | 0.0002 |
| 305 | SLU 10 | -0.44 | 0.17 | 29.48 | -0.1068 | -0.0328 | 0.0002 |
| 305 | SLU 11 | -0.2 | 0.18 | 31.25 | -0.1151 | -0.0238 | 0.0003 |
| 305 | SLU 12 | -0.36 | 0.18 | 30.5 | -0.1126 | -0.0294 | 0.0003 |
| 305 | SLU 13 | -0.45 | 0.17 | 29.78 | -0.1096 | -0.0323 | 0.0002 |
| 305 | SLU 14 | -0.21 | 0.18 | 31.55 | -0.1178 | -0.0233 | 0.0003 |
| 305 | SLU 15 | -0.36 | 0.18 | 30.8 | -0.1154 | -0.0289 | 0.0003 |
| 305 | SLU 16 | -0.2 | 0.18 | 31.32 | -0.1165 | -0.0224 | 0.0003 |
| 305 | SLU 17 | -0.35 | 0.18 | 30.57 | -0.114 | -0.028 | 0.0003 |
| 305 | SLU 18 | -0.27 | 0.18 | 32.35 | -0.1162 | -0.0278 | 0.0003 |
| 305 | SLU 19 | -0.42 | 0.18 | 31.6 | -0.1138 | -0.0334 | 0.0003 |
| 305 | SLU 20 | -0.28 | 0.19 | 32.65 | -0.119 | -0.0273 | 0.0003 |
| 305 | SLU 21 | -0.43 | 0.18 | 31.9 | -0.1165 | -0.0329 | 0.0003 |
| 305 | SLU 22 | -0.14 | 0.17 | 30.25 | -0.1115 | -0.0211 | 0.0003 |
| 305 | SLU 23 | -0.4 | 0.17 | 29.01 | -0.1074 | -0.0304 | 0.0002 |
| 305 | SLU 24 | -0.16 | 0.18 | 30.77 | -0.1157 | -0.0214 | 0.0003 |
| 305 | SLU 25 | -0.31 | 0.18 | 30.03 | -0.1132 | -0.0271 | 0.0003 |
| 305 | SLU 26 | -0.4 | 0.17 | 29.3 | -0.1102 | -0.0299 | 0.0002 |
| 305 | SLU 27 | -0.17 | 0.18 | 31.07 | -0.1184 | -0.0209 | 0.0003 |
| 305 | SLU 28 | -0.32 | 0.18 | 30.32 | -0.116 | -0.0265 | 0.0003 |
| 305 | SLU 29 | -0.16 | 0.18 | 30.85 | -0.1171 | -0.02 | 0.0003 |
| 305 | SLU 30 | -0.31 | 0.18 | 30.1 | -0.1146 | -0.0257 | 0.0003 |
| 305 | SLU 31 | -0.6 | 0.19 | 32.8 | -0.1198 | -0.0407 | 0.0003 |
| 305 | SLU 32 | -0.36 | 0.2 | 34.57 | -0.128 | -0.0317 | 0.0003 |
| 305 | SLU 33 | -0.51 | 0.2 | 33.82 | -0.1256 | -0.0373 | 0.0003 |
| 305 | SLU 34 | -0.6 | 0.19 | 33.1 | -0.1226 | -0.0402 | 0.0003 |
| 305 | SLU 35 | -0.37 | 0.2 | 34.87 | -0.1308 | -0.0312 | 0.0003 |
| 305 | SLU 36 | -0.52 | 0.2 | 34.12 | -0.1284 | -0.0368 | 0.0003 |
| 305 | SLU 37 | -0.35 | 0.2 | 34.64 | -0.1294 | -0.0303 | 0.0003 |
| 305 | SLU 38 | -0.51 | 0.2 | 33.89 | -0.127 | -0.0359 | 0.0003 |
| 305 | SLU 39 | -0.43 | 0.2 | 35.67 | -0.1292 | -0.0357 | 0.0003 |
| 305 | SLU 40 | -0.58 | 0.2 | 34.92 | -0.1267 | -0.0413 | 0.0003 |
| 305 | SLU 41 | -0.43 | 0.21 | 35.97 | -0.1319 | -0.0352 | 0.0003 |
| 305 | SLU 42 | -0.59 | 0.2 | 35.22 | -0.1295 | -0.0408 | 0.0003 |
| 305 | SLU 43 | 0.07 | 0.19 | 33.87 | -0.1236 | -0.0145 | 0.0003 |
| 305 | SLU 44 | -0.18 | 0.19 | 32.63 | -0.1196 | -0.0238 | 0.0003 |
| 305 | SLU 45 | 0.05 | 0.2 | 34.39 | -0.1278 | -0.0148 | 0.0003 |
| 305 | SLU 46 | -0.1 | 0.2 | 33.65 | -0.1254 | -0.0204 | 0.0003 |
| 305 | SLU 47 | -0.19 | 0.19 | 32.92 | -0.1224 | -0.0233 | 0.0003 |
| 305 | SLU 48 | 0.05 | 0.2 | 34.69 | -0.1306 | -0.0143 | 0.0003 |
| 305 | SLU 49 | -0.11 | 0.2 | 33.94 | -0.1282 | -0.0199 | 0.0003 |
| 305 | SLU 50 | 0.06 | 0.2 | 34.47 | -0.1292 | -0.0134 | 0.0003 |
| 305 | SLU 51 | -0.1 | 0.2 | 33.72 | -0.1268 | -0.0191 | 0.0003 |
| 305 | SLU 52 | -0.38 | 0.21 | 36.42 | -0.132 | -0.0341 | 0.0003 |
| 305 | SLU 53 | -0.15 | 0.22 | 38.19 | -0.1402 | -0.0251 | 0.0003 |
| 305 | SLU 54 | -0.3 | 0.21 | 37.44 | -0.1377 | -0.0307 | 0.0003 |
| 305 | SLU 55 | -0.39 | 0.21 | 36.72 | -0.1347 | -0.0335 | 0.0003 |
| 305 | SLU 56 | -0.15 | 0.22 | 38.49 | -0.143 | -0.0245 | 0.0003 |
| 305 | SLU 57 | -0.31 | 0.22 | 37.74 | -0.1405 | -0.0302 | 0.0003 |
| 305 | SLU 58 | -0.14 | 0.22 | 38.26 | -0.1416 | -0.0237 | 0.0003 |
| 305 | SLU 59 | -0.29 | 0.22 | 37.51 | -0.1391 | -0.0293 | 0.0003 |
| 305 | SLU 60 | -0.21 | 0.22 | 39.29 | -0.1413 | -0.0291 | 0.0003 |
| 305 | SLU 61 | -0.37 | 0.22 | 38.54 | -0.1389 | -0.0347 | 0.0003 |
| 305 | SLU 62 | -0.22 | 0.23 | 39.59 | -0.1441 | -0.0286 | 0.0003 |
| 305 | SLU 63 | -0.37 | 0.22 | 38.84 | -0.1417 | -0.0342 | 0.0003 |
| 305 | SLU 64 | -0.08 | 0.21 | 37.19 | -0.1366 | -0.0223 | 0.0003 |
| 305 | SLU 65 | -0.34 | 0.21 | 35.95 | -0.1326 | -0.0317 | 0.0003 |
| 305 | SLU 66 | -0.1 | 0.22 | 37.71 | -0.1408 | -0.0227 | 0.0003 |
| 305 | SLU 67 | -0.26 | 0.22 | 36.97 | -0.1383 | -0.0283 | 0.0003 |
| 305 | SLU 68 | -0.35 | 0.21 | 36.24 | -0.1353 | -0.0312 | 0.0003 |
| 305 | SLU 69 | -0.11 | 0.22 | 38.01 | -0.1436 | -0.0222 | 0.0003 |
| 305 | SLU 70 | -0.26 | 0.22 | 37.27 | -0.1411 | -0.0278 | 0.0003 |
| 305 | SLU 71 | -0.1 | 0.22 | 37.79 | -0.1422 | -0.0213 | 0.0003 |
| 305 | SLU 72 | -0.25 | 0.22 | 37.04 | -0.1397 | -0.0269 | 0.0003 |
| 305 | SLU 73 | -0.54 | 0.23 | 39.74 | -0.1449 | -0.0419 | 0.0003 |
| 305 | SLU 74 | -0.3 | 0.24 | 41.51 | -0.1531 | -0.0329 | 0.0003 |
| 305 | SLU 75 | -0.45 | 0.23 | 40.76 | -0.1507 | -0.0385 | 0.0003 |
| 305 | SLU 76 | -0.55 | 0.23 | 40.04 | -0.1477 | -0.0414 | 0.0003 |
| 305 | SLU 77 | -0.31 | 0.24 | 41.81 | -0.1559 | -0.0324 | 0.0004 |
| 305 | SLU 78 | -0.46 | 0.24 | 41.06 | -0.1535 | -0.038 | 0.0003 |
| 305 | SLU 79 | -0.3 | 0.24 | 41.58 | -0.1545 | -0.0315 | 0.0004 |
| 305 | SLU 80 | -0.45 | 0.24 | 40.84 | -0.1521 | -0.0372 | 0.0003 |
| 305 | SLU 81 | -0.37 | 0.24 | 42.61 | -0.1543 | -0.037 | 0.0004 |
| 305 | SLU 82 | -0.52 | 0.24 | 41.87 | -0.1518 | -0.0426 | 0.0003 |
| 305 | SLU 83 | -0.37 | 0.25 | 42.91 | -0.1571 | -0.0364 | 0.0004 |
| 305 | SLU 84 | -0.53 | 0.24 | 42.16 | -0.1546 | -0.0421 | 0.0004 |
| 305 | SLE RA 1 | -0.03 | 0.16 | 27.88 | -0.1022 | -0.0155 | 0.0002 |
| 305 | SLE RA 2 | -0.2 | 0.15 | 27.05 | -0.0995 | -0.0217 | 0.0002 |
| 305 | SLE RA 3 | -0.04 | 0.16 | 28.23 | -0.105 | -0.0157 | 0.0002 |
| 305 | SLE RA 4 | -0.14 | 0.16 | 27.73 | -0.1034 | -0.0194 | 0.0002 |
| 305 | SLE RA 5 | -0.21 | 0.16 | 27.25 | -0.1014 | -0.0213 | 0.0002 |
| 305 | SLE RA 6 | -0.05 | 0.17 | 28.43 | -0.1069 | -0.0154 | 0.0002 |
| 305 | SLE RA 7 | -0.15 | 0.16 | 27.93 | -0.1052 | -0.0191 | 0.0002 |
| 305 | SLE RA 8 | -0.04 | 0.17 | 28.28 | -0.1059 | -0.0148 | 0.0002 |
| 305 | SLE RA 9 | -0.14 | 0.16 | 27.78 | -0.1043 | -0.0185 | 0.0002 |
| 305 | SLE RA 10 | -0.33 | 0.17 | 29.58 | -0.1078 | -0.0285 | 0.0002 |

| Nodo | Cont. | Reazione a traslazione | | | Reazione a rotazione | | |
|---|---|---|---|---|---|---|---|
| Ind. | N.br. | x | y | z | x | y | z |
| 305 | SLE RA 11 | -0.18 | 0.18 | 30.76 | -0.1133 | -0.0225 | 0.0003 |
| 305 | SLE RA 12 | -0.28 | 0.17 | 30.26 | -0.1116 | -0.0263 | 0.0003 |
| 305 | SLE RA 13 | -0.34 | 0.17 | 29.78 | -0.1096 | -0.0282 | 0.0002 |
| 305 | SLE RA 14 | -0.18 | 0.18 | 30.96 | -0.1151 | -0.0222 | 0.0003 |
| 305 | SLE RA 15 | -0.28 | 0.18 | 30.46 | -0.1135 | -0.0259 | 0.0003 |
| 305 | SLE RA 16 | -0.17 | 0.18 | 30.81 | -0.1142 | -0.0216 | 0.0003 |
| 305 | SLE RA 17 | -0.27 | 0.18 | 30.31 | -0.1126 | -0.0253 | 0.0003 |
| 305 | SLE RA 18 | -0.22 | 0.18 | 31.49 | -0.114 | -0.0252 | 0.0003 |
| 305 | SLE RA 19 | -0.32 | 0.18 | 30.99 | -0.1124 | -0.0289 | 0.0003 |
| 305 | SLE RA 20 | -0.22 | 0.18 | 31.69 | -0.1159 | -0.0249 | 0.0003 |
| 305 | SLE RA 21 | -0.33 | 0.18 | 31.19 | -0.1142 | -0.0286 | 0.0003 |
| 305 | SLE FR 1 | -0.03 | 0.16 | 27.88 | -0.1022 | -0.0155 | 0.0002 |
| 305 | SLE FR 2 | -0.06 | 0.16 | 27.71 | -0.1017 | -0.0167 | 0.0002 |
| 305 | SLE FR 3 | -0.03 | 0.16 | 27.96 | -0.103 | -0.0153 | 0.0002 |
| 305 | SLE FR 4 | -0.12 | 0.16 | 28.8 | -0.1052 | -0.0196 | 0.0002 |
| 305 | SLE FR 5 | -0.09 | 0.17 | 29.04 | -0.1065 | -0.0182 | 0.0002 |
| 305 | SLE FR 6 | -0.12 | 0.17 | 29.69 | -0.1081 | -0.0203 | 0.0002 |
| 305 | SLE QP 1 | -0.03 | 0.16 | 27.88 | -0.1022 | -0.0155 | 0.0002 |
| 305 | SLE QP 2 | -0.09 | 0.17 | 28.96 | -0.1058 | -0.0184 | 0.0002 |
| 305 | SLD 1 | 7.62 | -0.09 | 23.39 | -0.1432 | 0.329 | 0 |
| 305 | SLD 2 | 7.62 | -0.09 | 23.39 | -0.1432 | 0.329 | 0 |
| 305 | SLD 3 | 8.75 | 0.18 | 27.52 | 0.1175 | 0.3754 | 0.0002 |
| 305 | SLD 4 | 8.75 | 0.18 | 27.52 | 0.1175 | 0.3754 | 0.0002 |
| 305 | SLD 5 | 0.51 | -0.32 | 21.04 | -0.5125 | 0.0154 | -0.0002 |
| 305 | SLD 6 | 0.51 | -0.32 | 21.04 | -0.5125 | 0.0154 | -0.0002 |
| 305 | SLD 7 | 4.28 | 0.58 | 34.79 | 0.3567 | 0.1702 | 0.0006 |
| 305 | SLD 8 | 4.28 | 0.58 | 34.79 | 0.3567 | 0.1702 | 0.0006 |
| 305 | SLD 9 | -4.46 | -0.25 | 23.14 | -0.5682 | -0.2069 | -0.0001 |
| 305 | SLD 10 | -4.46 | -0.25 | 23.14 | -0.5682 | -0.2069 | -0.0001 |
| 305 | SLD 11 | -0.68 | 0.65 | 36.89 | 0.3009 | -0.0521 | 0.0006 |
| 305 | SLD 12 | -0.68 | 0.65 | 36.89 | 0.3009 | -0.0521 | 0.0006 |
| 305 | SLD 13 | -8.93 | 0.15 | 30.41 | -0.3291 | -0.4121 | 0.0003 |
| 305 | SLD 14 | -8.93 | 0.15 | 30.41 | -0.3291 | -0.4121 | 0.0003 |
| 305 | SLD 15 | -7.8 | 0.42 | 34.54 | -0.0683 | -0.3657 | 0.0005 |
| 305 | SLD 16 | -7.8 | 0.42 | 34.54 | -0.0683 | -0.3657 | 0.0005 |
| 305 | SLV 1 | 17.57 | -0.45 | 15.79 | -0.2063 | 0.7779 | -0.0003 |
| 305 | SLV 2 | 17.57 | -0.45 | 15.79 | -0.2063 | 0.7779 | -0.0003 |
| 305 | SLV 3 | 20.28 | 0.22 | 25.75 | 0.4429 | 0.8883 | 0.0002 |
| 305 | SLV 4 | 20.28 | 0.22 | 25.75 | 0.4429 | 0.8883 | 0.0002 |
| 305 | SLV 5 | 1.09 | -1.04 | 9.91 | -1.1205 | 0.053 | -0.0007 |
| 305 | SLV 6 | 1.09 | -1.04 | 9.91 | -1.1205 | 0.053 | -0.0007 |
| 305 | SLV 7 | 10.14 | 1.2 | 43.1 | 1.0434 | 0.4211 | 0.001 |
| 305 | SLV 8 | 10.14 | 1.2 | 43.1 | 1.0434 | 0.4211 | 0.001 |
| 305 | SLV 9 | -10.31 | -0.87 | 14.83 | -1.2549 | -0.4579 | -0.0005 |
| 305 | SLV 10 | -10.31 | -0.87 | 14.83 | -1.2549 | -0.4579 | -0.0005 |
| 305 | SLV 11 | -1.27 | 1.37 | 48.01 | 0.9089 | -0.0897 | 0.0012 |
| 305 | SLV 12 | -1.27 | 1.37 | 48.01 | 0.9089 | -0.0897 | 0.0012 |
| 305 | SLV 13 | -20.45 | 0.11 | 32.18 | -0.6544 | -0.9251 | 0.0003 |
| 305 | SLV 14 | -20.45 | 0.11 | 32.18 | -0.6544 | -0.9251 | 0.0003 |
| 305 | SLV 15 | -17.74 | 0.78 | 42.13 | -0.0053 | -0.8146 | 0.0008 |
| 305 | SLV 16 | -17.74 | 0.78 | 42.13 | -0.0053 | -0.8146 | 0.0008 |
| 306 | SLU 1 | -0.05 | 0.13 | 30.51 | -0.0753 | -0.0281 | 0.0001 |
| 306 | SLU 2 | -0.34 | 0.12 | 28.84 | -0.0725 | -0.0376 | 0.0001 |
| 306 | SLU 3 | -0.07 | 0.13 | 31.06 | -0.0783 | -0.0297 | 0.0001 |
| 306 | SLU 4 | -0.24 | 0.13 | 30.06 | -0.0766 | -0.0354 | 0.0001 |
| 306 | SLU 5 | -0.35 | 0.12 | 29.1 | -0.0744 | -0.0388 | 0.0001 |
| 306 | SLU 6 | -0.09 | 0.13 | 31.32 | -0.0802 | -0.031 | 0.0001 |
| 306 | SLU 7 | -0.26 | 0.13 | 30.32 | -0.0785 | -0.0367 | 0.0001 |
| 306 | SLU 8 | -0.09 | 0.13 | 31.03 | -0.0791 | -0.0306 | 0.0001 |
| 306 | SLU 9 | -0.26 | 0.13 | 30.03 | -0.0774 | -0.0363 | 0.0001 |
| 306 | SLU 10 | -0.59 | 0.14 | 33.05 | -0.0818 | -0.0515 | 0.0001 |
| 306 | SLU 11 | -0.32 | 0.15 | 35.27 | -0.0876 | -0.0436 | 0.0001 |
| 306 | SLU 12 | -0.49 | 0.14 | 34.27 | -0.0859 | -0.0493 | 0.0001 |
| 306 | SLU 13 | -0.6 | 0.14 | 33.31 | -0.0837 | -0.0527 | 0.0001 |
| 306 | SLU 14 | -0.34 | 0.15 | 35.53 | -0.0895 | -0.0449 | 0.0001 |
| 306 | SLU 15 | -0.51 | 0.15 | 34.53 | -0.0878 | -0.0506 | 0.0001 |
| 306 | SLU 16 | -0.34 | 0.15 | 35.24 | -0.0884 | -0.0444 | 0.0001 |
| 306 | SLU 17 | -0.51 | 0.14 | 34.24 | -0.0867 | -0.0502 | 0.0001 |
| 306 | SLU 18 | -0.41 | 0.15 | 36.53 | -0.0886 | -0.0479 | 0.0001 |
| 306 | SLU 19 | -0.58 | 0.14 | 35.52 | -0.0869 | -0.0536 | 0.0001 |
| 306 | SLU 20 | -0.43 | 0.15 | 36.79 | -0.0905 | -0.0492 | 0.0001 |
| 306 | SLU 21 | -0.6 | 0.15 | 35.78 | -0.0888 | -0.0549 | 0.0001 |
| 306 | SLU 22 | -0.24 | 0.14 | 34.2 | -0.085 | -0.0392 | 0.0001 |
| 306 | SLU 23 | -0.52 | 0.14 | 32.54 | -0.0822 | -0.0488 | 0.0001 |
| 306 | SLU 24 | -0.26 | 0.15 | 34.75 | -0.0879 | -0.0409 | 0.0001 |
| 306 | SLU 25 | -0.43 | 0.14 | 33.75 | -0.0863 | -0.0466 | 0.0001 |
| 306 | SLU 26 | -0.54 | 0.14 | 32.8 | -0.0841 | -0.05 | 0.0001 |
| 306 | SLU 27 | -0.28 | 0.15 | 35.01 | -0.0898 | -0.0422 | 0.0001 |
| 306 | SLU 28 | -0.45 | 0.15 | 34.01 | -0.0882 | -0.0479 | 0.0001 |
| 306 | SLU 29 | -0.28 | 0.15 | 34.72 | -0.0887 | -0.0417 | 0.0001 |
| 306 | SLU 30 | -0.45 | 0.14 | 33.72 | -0.0871 | -0.0475 | 0.0001 |
| 306 | SLU 31 | -0.77 | 0.15 | 36.75 | -0.0915 | -0.0627 | 0.0001 |
| 306 | SLU 32 | -0.51 | 0.16 | 38.96 | -0.0972 | -0.0548 | 0.0001 |
| 306 | SLU 33 | -0.68 | 0.16 | 37.96 | -0.0956 | -0.0605 | 0.0001 |
| 306 | SLU 34 | -0.79 | 0.15 | 37.01 | -0.0934 | -0.0639 | 0.0001 |
| 306 | SLU 35 | -0.53 | 0.17 | 39.22 | -0.0991 | -0.0561 | 0.0001 |
| 306 | SLU 36 | -0.7 | 0.16 | 38.22 | -0.0975 | -0.0618 | 0.0001 |
| 306 | SLU 37 | -0.52 | 0.16 | 38.93 | -0.098 | -0.0556 | 0.0001 |

| Nodo | Cont. | Reazione a traslazione | | | Reazione a rotazione | | |
|---|---|---|---|---|---|---|---|
| Ind. | N.br. | x | y | z | x | y | z |
| 306 | SLU 38 | -0.69 | 0.16 | 37.93 | -0.0964 | -0.0613 | 0.0001 |
| 306 | SLU 39 | -0.59 | 0.16 | 40.22 | -0.0982 | -0.0591 | 0.0001 |
| 306 | SLU 40 | -0.76 | 0.16 | 39.22 | -0.0966 | -0.0648 | 0.0001 |
| 306 | SLU 41 | -0.61 | 0.17 | 40.48 | -0.1001 | -0.0603 | 0.0001 |
| 306 | SLU 42 | -0.78 | 0.16 | 39.48 | -0.0985 | -0.066 | 0.0001 |
| 306 | SLU 43 | -0.01 | 0.16 | 38.4 | -0.0946 | -0.0326 | 0.0001 |
| 306 | SLU 44 | -0.29 | 0.15 | 36.73 | -0.0918 | -0.0422 | 0.0001 |
| 306 | SLU 45 | -0.02 | 0.16 | 38.95 | -0.0975 | -0.0343 | 0.0001 |
| 306 | SLU 46 | -0.2 | 0.16 | 37.95 | -0.0959 | -0.04 | 0.0001 |
| 306 | SLU 47 | -0.31 | 0.16 | 36.99 | -0.0937 | -0.0434 | 0.0001 |
| 306 | SLU 48 | -0.04 | 0.17 | 39.21 | -0.0994 | -0.0356 | 0.0001 |
| 306 | SLU 49 | -0.21 | 0.16 | 38.21 | -0.0978 | -0.0413 | 0.0001 |
| 306 | SLU 50 | -0.04 | 0.16 | 38.92 | -0.0984 | -0.0351 | 0.0001 |
| 306 | SLU 51 | -0.21 | 0.16 | 37.92 | -0.0967 | -0.0409 | 0.0001 |
| 306 | SLU 52 | -0.54 | 0.17 | 40.94 | -0.1011 | -0.0561 | 0.0001 |
| 306 | SLU 53 | -0.27 | 0.18 | 43.16 | -0.1068 | -0.0482 | 0.0001 |
| 306 | SLU 54 | -0.44 | 0.18 | 42.16 | -0.1052 | -0.0539 | 0.0001 |
| 306 | SLU 55 | -0.56 | 0.17 | 41.2 | -0.103 | -0.0573 | 0.0001 |
| 306 | SLU 56 | -0.29 | 0.18 | 43.42 | -0.1087 | -0.0495 | 0.0001 |
| 306 | SLU 57 | -0.46 | 0.18 | 42.42 | -0.1071 | -0.0552 | 0.0001 |
| 306 | SLU 58 | -0.29 | 0.18 | 43.13 | -0.1077 | -0.049 | 0.0001 |
| 306 | SLU 59 | -0.46 | 0.18 | 42.13 | -0.106 | -0.0547 | 0.0001 |
| 306 | SLU 60 | -0.36 | 0.18 | 44.41 | -0.1078 | -0.0525 | 0.0001 |
| 306 | SLU 61 | -0.53 | 0.18 | 43.41 | -0.1062 | -0.0582 | 0.0001 |
| 306 | SLU 62 | -0.38 | 0.18 | 44.67 | -0.1097 | -0.0537 | 0.0001 |
| 306 | SLU 63 | -0.55 | 0.18 | 43.67 | -0.1081 | -0.0595 | 0.0001 |
| 306 | SLU 64 | -0.19 | 0.17 | 42.09 | -0.1042 | -0.0438 | 0.0001 |
| 306 | SLU 65 | -0.48 | 0.17 | 40.42 | -0.1014 | -0.0533 | 0.0001 |
| 306 | SLU 66 | -0.21 | 0.18 | 42.64 | -0.1072 | -0.0455 | 0.0001 |
| 306 | SLU 67 | -0.38 | 0.18 | 41.64 | -0.1055 | -0.0512 | 0.0001 |
| 306 | SLU 68 | -0.49 | 0.17 | 40.68 | -0.1033 | -0.0546 | 0.0001 |
| 306 | SLU 69 | -0.23 | 0.18 | 42.9 | -0.1091 | -0.0467 | 0.0001 |
| 306 | SLU 70 | -0.4 | 0.18 | 41.9 | -0.1074 | -0.0525 | 0.0001 |
| 306 | SLU 71 | -0.23 | 0.18 | 42.61 | -0.108 | -0.0463 | 0.0001 |
| 306 | SLU 72 | -0.4 | 0.18 | 41.61 | -0.1063 | -0.052 | 0.0001 |
| 306 | SLU 73 | -0.72 | 0.18 | 44.63 | -0.1107 | -0.0672 | 0.0001 |
| 306 | SLU 74 | -0.46 | 0.19 | 46.85 | -0.1165 | -0.0594 | 0.0001 |
| 306 | SLU 75 | -0.63 | 0.19 | 45.85 | -0.1148 | -0.0651 | 0.0001 |
| 306 | SLU 76 | -0.74 | 0.19 | 44.89 | -0.1126 | -0.0685 | 0.0001 |
| 306 | SLU 77 | -0.48 | 0.2 | 47.11 | -0.1184 | -0.0606 | 0.0001 |
| 306 | SLU 78 | -0.65 | 0.19 | 46.11 | -0.1167 | -0.0663 | 0.0001 |
| 306 | SLU 79 | -0.48 | 0.2 | 46.82 | -0.1173 | -0.0602 | 0.0001 |
| 306 | SLU 80 | -0.65 | 0.19 | 45.82 | -0.1156 | -0.0659 | 0.0001 |
| 306 | SLU 81 | -0.55 | 0.2 | 48.11 | -0.1175 | -0.0637 | 0.0001 |
| 306 | SLU 82 | -0.72 | 0.19 | 47.1 | -0.1158 | -0.0694 | 0.0001 |
| 306 | SLU 83 | -0.56 | 0.2 | 48.37 | -0.1194 | -0.0649 | 0.0001 |
| 306 | SLU 84 | -0.73 | 0.2 | 47.36 | -0.1177 | -0.0706 | 0.0001 |
| 306 | SLE RA 1 | -0.11 | 0.13 | 31.57 | -0.0781 | -0.0313 | 0.0001 |
| 306 | SLE RA 2 | -0.3 | 0.13 | 30.45 | -0.0762 | -0.0376 | 0.0001 |
| 306 | SLE RA 3 | -0.12 | 0.13 | 31.93 | -0.08 | -0.0324 | 0.0001 |
| 306 | SLE RA 4 | -0.23 | 0.13 | 31.27 | -0.0789 | -0.0362 | 0.0001 |
| 306 | SLE RA 5 | -0.31 | 0.13 | 30.63 | -0.0775 | -0.0384 | 0.0001 |
| 306 | SLE RA 6 | -0.13 | 0.14 | 32.11 | -0.0813 | -0.0332 | 0.0001 |
| 306 | SLE RA 7 | -0.25 | 0.13 | 31.44 | -0.0802 | -0.037 | 0.0001 |
| 306 | SLE RA 8 | -0.13 | 0.13 | 31.91 | -0.0806 | -0.0329 | 0.0001 |
| 306 | SLE RA 9 | -0.24 | 0.13 | 31.24 | -0.0795 | -0.0367 | 0.0001 |
| 306 | SLE RA 10 | -0.46 | 0.14 | 33.26 | -0.0824 | -0.0469 | 0.0001 |
| 306 | SLE RA 11 | -0.29 | 0.14 | 34.74 | -0.0862 | -0.0416 | 0.0001 |
| 306 | SLE RA 12 | -0.4 | 0.14 | 34.07 | -0.0851 | -0.0454 | 0.0001 |
| 306 | SLE RA 13 | -0.47 | 0.14 | 33.43 | -0.0837 | -0.0477 | 0.0001 |
| 306 | SLE RA 14 | -0.3 | 0.15 | 34.91 | -0.0875 | -0.0425 | 0.0001 |
| 306 | SLE RA 15 | -0.41 | 0.14 | 34.25 | -0.0864 | -0.0463 | 0.0001 |
| 306 | SLE RA 16 | -0.3 | 0.14 | 34.72 | -0.0868 | -0.0422 | 0.0001 |
| 306 | SLE RA 17 | -0.41 | 0.14 | 34.05 | -0.0857 | -0.046 | 0.0001 |
| 306 | SLE RA 18 | -0.34 | 0.15 | 35.58 | -0.0869 | -0.0445 | 0.0001 |
| 306 | SLE RA 19 | -0.46 | 0.14 | 34.91 | -0.0858 | -0.0483 | 0.0001 |
| 306 | SLE RA 20 | -0.35 | 0.15 | 35.75 | -0.0882 | -0.0453 | 0.0001 |
| 306 | SLE RA 21 | -0.47 | 0.15 | 35.08 | -0.0871 | -0.0491 | 0.0001 |
| 306 | SLE FR 1 | -0.11 | 0.13 | 31.57 | -0.0781 | -0.0313 | 0.0001 |
| 306 | SLE FR 2 | -0.14 | 0.13 | 31.34 | -0.0777 | -0.0325 | 0.0001 |
| 306 | SLE FR 3 | -0.11 | 0.13 | 31.63 | -0.0786 | -0.0316 | 0.0001 |
| 306 | SLE FR 4 | -0.22 | 0.13 | 32.55 | -0.0803 | -0.0365 | 0.0001 |
| 306 | SLE FR 5 | -0.18 | 0.14 | 32.84 | -0.0812 | -0.0356 | 0.0001 |
| 306 | SLE FR 6 | -0.22 | 0.14 | 33.57 | -0.0825 | -0.0379 | 0.0001 |
| 306 | SLE QP 1 | -0.11 | 0.13 | 31.57 | -0.0781 | -0.0313 | 0.0001 |
| 306 | SLE QP 2 | -0.18 | 0.14 | 32.77 | -0.0807 | -0.0352 | 0.0001 |
| 306 | SLD 1 | 6.95 | -0.09 | 24.94 | -0.1007 | 0.2824 | 0.0002 |
| 306 | SLD 2 | 6.95 | -0.09 | 24.94 | -0.1007 | 0.2824 | 0.0002 |
| 306 | SLD 3 | 8.03 | 0.12 | 29.35 | 0.1012 | 0.3274 | 0.0003 |
| 306 | SLD 4 | 8.03 | 0.12 | 29.35 | 0.1012 | 0.3274 | 0.0003 |
| 306 | SLD 5 | 0.32 | -0.24 | 23.73 | -0.393 | -0.0082 | 0 |
| 306 | SLD 6 | 0.32 | -0.24 | 23.73 | -0.393 | -0.0082 | 0 |
| 306 | SLD 7 | 3.93 | 0.44 | 38.44 | 0.2801 | 0.1418 | 0.0003 |
| 306 | SLD 8 | 3.93 | 0.44 | 38.44 | 0.2801 | 0.1418 | 0.0003 |
| 306 | SLD 9 | -4.29 | -0.17 | 27.1 | -0.4415 | -0.2123 | -0.0001 |
| 306 | SLD 10 | -4.29 | -0.17 | 27.1 | -0.4415 | -0.2123 | -0.0001 |
| 306 | SLD 11 | -0.67 | 0.51 | 41.81 | 0.2316 | -0.0622 | 0.0002 |
| 306 | SLD 12 | -0.67 | 0.51 | 41.81 | 0.2316 | -0.0622 | 0.0002 |

| Nodo | Cont. | Reazione a traslazione | | | Reazione a rotazione | | |
|---|---|---|---|---|---|---|---|
| Ind. | N.br. | x | y | z | x | y | z |
| 306 | SLD 13 | -8.39 | 0.15 | 36.18 | -0.2626 | -0.3978 | -0.0001 |
| 306 | SLD 14 | -8.39 | 0.15 | 36.18 | -0.2626 | -0.3978 | -0.0001 |
| 306 | SLD 15 | -7.3 | 0.36 | 40.6 | -0.0607 | -0.3528 | 0 |
| 306 | SLD 16 | -7.3 | 0.36 | 40.6 | -0.0607 | -0.3528 | 0 |
| 306 | SLV 1 | 16.13 | -0.4 | 14.46 | -0.1355 | 0.6917 | 0.0003 |
| 306 | SLV 2 | 16.13 | -0.4 | 14.46 | -0.1355 | 0.6917 | 0.0003 |
| 306 | SLV 3 | 18.74 | 0.1 | 24.89 | 0.3666 | 0.7995 | 0.0005 |
| 306 | SLV 4 | 18.74 | 0.1 | 24.89 | 0.3666 | 0.7995 | 0.0005 |
| 306 | SLV 5 | 0.76 | -0.79 | 11.45 | -0.8587 | 0.0193 | -0.0002 |
| 306 | SLV 6 | 0.76 | -0.79 | 11.45 | -0.8587 | 0.0193 | -0.0002 |
| 306 | SLV 7 | 9.45 | 0.89 | 46.23 | 0.8151 | 0.3787 | 0.0005 |
| 306 | SLV 8 | 9.45 | 0.89 | 46.23 | 0.8151 | 0.3787 | 0.0005 |
| 306 | SLV 9 | -9.8 | -0.62 | 19.31 | -0.9765 | -0.4492 | -0.0003 |
| 306 | SLV 10 | -9.8 | -0.62 | 19.31 | -0.9765 | -0.4492 | -0.0003 |
| 306 | SLV 11 | -1.12 | 1.06 | 54.09 | 0.6973 | -0.0898 | 0.0004 |
| 306 | SLV 12 | -1.12 | 1.06 | 54.09 | 0.6973 | -0.0898 | 0.0004 |
| 306 | SLV 13 | -19.09 | 0.17 | 40.64 | -0.528 | -0.87 | -0.0003 |
| 306 | SLV 14 | -19.09 | 0.17 | 40.64 | -0.528 | -0.87 | -0.0003 |
| 306 | SLV 15 | -16.49 | 0.67 | 51.08 | -0.0259 | -0.7622 | -0.0001 |
| 306 | SLV 16 | -16.49 | 0.67 | 51.08 | -0.0259 | -0.7622 | -0.0001 |
| 307 | SLU 1 | -0.76 | 0.07 | 34.83 | -0.0423 | -0.0531 | 0 |
| 307 | SLU 2 | -1.02 | 0.06 | 32.66 | -0.0416 | -0.0618 | 0 |
| 307 | SLU 3 | -0.78 | 0.07 | 35.43 | -0.044 | -0.0535 | 0 |
| 307 | SLU 4 | -0.93 | 0.07 | 34.13 | -0.0436 | -0.0587 | 0 |
| 307 | SLU 5 | -1.03 | 0.07 | 32.89 | -0.0427 | -0.0615 | 0 |
| 307 | SLU 6 | -0.79 | 0.07 | 35.65 | -0.045 | -0.0531 | 0 |
| 307 | SLU 7 | -0.94 | 0.07 | 34.35 | -0.0446 | -0.0584 | 0 |
| 307 | SLU 8 | -0.78 | 0.07 | 35.28 | -0.0444 | -0.0523 | 0 |
| 307 | SLU 9 | -0.94 | 0.07 | 33.98 | -0.0439 | -0.0576 | 0 |
| 307 | SLU 10 | -1.4 | 0.07 | 37.38 | -0.0468 | -0.0802 | 0 |
| 307 | SLU 11 | -1.15 | 0.08 | 40.14 | -0.0491 | -0.0718 | 0 |
| 307 | SLU 12 | -1.31 | 0.07 | 38.84 | -0.0487 | -0.0771 | 0 |
| 307 | SLU 13 | -1.41 | 0.07 | 37.6 | -0.0478 | -0.0798 | 0 |
| 307 | SLU 14 | -1.16 | 0.08 | 40.37 | -0.0501 | -0.0714 | 0 |
| 307 | SLU 15 | -1.32 | 0.08 | 39.07 | -0.0497 | -0.0767 | 0 |
| 307 | SLU 16 | -1.16 | 0.08 | 39.99 | -0.0495 | -0.0707 | 0 |
| 307 | SLU 17 | -1.31 | 0.07 | 38.69 | -0.0491 | -0.0759 | 0 |
| 307 | SLU 18 | -1.3 | 0.08 | 41.56 | -0.0497 | -0.0792 | 0 |
| 307 | SLU 19 | -1.45 | 0.08 | 40.26 | -0.0492 | -0.0845 | 0 |
| 307 | SLU 20 | -1.31 | 0.08 | 41.79 | -0.0507 | -0.0789 | 0 |
| 307 | SLU 21 | -1.46 | 0.08 | 40.49 | -0.0502 | -0.0841 | 0 |
| 307 | SLU 22 | -1.04 | 0.07 | 38.98 | -0.0477 | -0.0669 | 0 |
| 307 | SLU 23 | -1.3 | 0.07 | 36.82 | -0.047 | -0.0757 | 0 |
| 307 | SLU 24 | -1.06 | 0.08 | 39.58 | -0.0493 | -0.0673 | 0 |
| 307 | SLU 25 | -1.21 | 0.07 | 38.28 | -0.0489 | -0.0726 | 0 |
| 307 | SLU 26 | -1.31 | 0.07 | 37.04 | -0.048 | -0.0753 | 0 |
| 307 | SLU 27 | -1.07 | 0.08 | 39.81 | -0.0503 | -0.067 | 0 |
| 307 | SLU 28 | -1.22 | 0.08 | 38.51 | -0.0499 | -0.0722 | 0 |
| 307 | SLU 29 | -1.06 | 0.08 | 39.43 | -0.0497 | -0.0662 | 0 |
| 307 | SLU 30 | -1.22 | 0.07 | 38.13 | -0.0493 | -0.0715 | 0 |
| 307 | SLU 31 | -1.68 | 0.08 | 41.53 | -0.0521 | -0.094 | 0 |
| 307 | SLU 32 | -1.43 | 0.08 | 44.3 | -0.0544 | -0.0857 | 0 |
| 307 | SLU 33 | -1.59 | 0.08 | 43 | -0.054 | -0.0909 | 0 |
| 307 | SLU 34 | -1.68 | 0.08 | 41.76 | -0.0531 | -0.0937 | 0 |
| 307 | SLU 35 | -1.44 | 0.08 | 44.52 | -0.0554 | -0.0853 | 0 |
| 307 | SLU 36 | -1.6 | 0.08 | 43.22 | -0.055 | -0.0906 | 0 |
| 307 | SLU 37 | -1.44 | 0.08 | 44.15 | -0.0548 | -0.0845 | 0 |
| 307 | SLU 38 | -1.59 | 0.08 | 42.85 | -0.0544 | -0.0898 | 0 |
| 307 | SLU 39 | -1.58 | 0.08 | 45.72 | -0.055 | -0.0931 | 0.0001 |
| 307 | SLU 40 | -1.73 | 0.08 | 44.42 | -0.0546 | -0.0984 | 0 |
| 307 | SLU 41 | -1.59 | 0.09 | 45.94 | -0.056 | -0.0927 | 0.0001 |
| 307 | SLU 42 | -1.74 | 0.09 | 44.64 | -0.0556 | -0.098 | 0 |
| 307 | SLU 43 | -0.9 | 0.08 | 43.85 | -0.0532 | -0.0642 | 0.0001 |
| 307 | SLU 44 | -1.16 | 0.08 | 41.69 | -0.0525 | -0.073 | 0.0001 |
| 307 | SLU 45 | -0.91 | 0.08 | 44.45 | -0.0549 | -0.0646 | 0.0001 |
| 307 | SLU 46 | -1.07 | 0.08 | 43.15 | -0.0544 | -0.0699 | 0.0001 |
| 307 | SLU 47 | -1.17 | 0.08 | 41.91 | -0.0535 | -0.0726 | 0.0001 |
| 307 | SLU 48 | -0.92 | 0.09 | 44.68 | -0.0559 | -0.0643 | 0.0001 |
| 307 | SLU 49 | -1.08 | 0.08 | 43.38 | -0.0554 | -0.0695 | 0.0001 |
| 307 | SLU 50 | -0.92 | 0.08 | 44.3 | -0.0552 | -0.0635 | 0.0001 |
| 307 | SLU 51 | -1.07 | 0.08 | 43 | -0.0548 | -0.0688 | 0.0001 |
| 307 | SLU 52 | -1.53 | 0.09 | 46.4 | -0.0576 | -0.0913 | 0.0001 |
| 307 | SLU 53 | -1.29 | 0.09 | 49.17 | -0.06 | -0.083 | 0.0001 |
| 307 | SLU 54 | -1.44 | 0.09 | 47.87 | -0.0596 | -0.0882 | 0.0001 |
| 307 | SLU 55 | -1.54 | 0.09 | 46.63 | -0.0586 | -0.091 | 0.0001 |
| 307 | SLU 56 | -1.3 | 0.09 | 49.39 | -0.061 | -0.0826 | 0.0001 |
| 307 | SLU 57 | -1.45 | 0.09 | 48.09 | -0.0606 | -0.0879 | 0.0001 |
| 307 | SLU 58 | -1.29 | 0.09 | 49.02 | -0.0604 | -0.0818 | 0.0001 |
| 307 | SLU 59 | -1.44 | 0.09 | 47.72 | -0.0599 | -0.0871 | 0.0001 |
| 307 | SLU 60 | -1.43 | 0.09 | 50.59 | -0.0605 | -0.0904 | 0.0001 |
| 307 | SLU 61 | -1.59 | 0.09 | 49.29 | -0.0601 | -0.0957 | 0.0001 |
| 307 | SLU 62 | -1.44 | 0.09 | 50.81 | -0.0615 | -0.0901 | 0.0001 |
| 307 | SLU 63 | -1.6 | 0.09 | 49.51 | -0.0611 | -0.0953 | 0.0001 |
| 307 | SLU 64 | -1.18 | 0.09 | 48.01 | -0.0585 | -0.0781 | 0.0001 |
| 307 | SLU 65 | -1.43 | 0.09 | 45.84 | -0.0578 | -0.0869 | 0.0001 |
| 307 | SLU 66 | -1.19 | 0.09 | 48.61 | -0.0602 | -0.0785 | 0.0001 |
| 307 | SLU 67 | -1.35 | 0.09 | 47.31 | -0.0598 | -0.0838 | 0.0001 |
| 307 | SLU 68 | -1.44 | 0.09 | 46.07 | -0.0589 | -0.0865 | 0.0001 |

| Nodo | Cont. | Reazione a traslazione | | | Reazione a rotazione | | |
|---|---|---|---|---|---|---|---|
| Ind. | N.br. | x | y | z | x | y | z |
| 307 | SLU 69 | -1.2 | 0.09 | 48.83 | -0.0612 | -0.0781 | 0.0001 |
| 307 | SLU 70 | -1.36 | 0.09 | 47.53 | -0.0608 | -0.0834 | 0.0001 |
| 307 | SLU 71 | -1.19 | 0.09 | 48.46 | -0.0606 | -0.0774 | 0.0001 |
| 307 | SLU 72 | -1.35 | 0.09 | 47.16 | -0.0601 | -0.0826 | 0.0001 |
| 307 | SLU 73 | -1.81 | 0.1 | 50.56 | -0.063 | -0.1052 | 0.0001 |
| 307 | SLU 74 | -1.56 | 0.1 | 53.32 | -0.0653 | -0.0968 | 0.0001 |
| 307 | SLU 75 | -1.72 | 0.1 | 52.02 | -0.0649 | -0.1021 | 0.0001 |
| 307 | SLU 76 | -1.82 | 0.1 | 50.78 | -0.064 | -0.1048 | 0.0001 |
| 307 | SLU 77 | -1.57 | 0.1 | 53.54 | -0.0663 | -0.0965 | 0.0001 |
| 307 | SLU 78 | -1.73 | 0.1 | 52.25 | -0.0659 | -0.1017 | 0.0001 |
| 307 | SLU 79 | -1.57 | 0.1 | 53.17 | -0.0657 | -0.0957 | 0.0001 |
| 307 | SLU 80 | -1.72 | 0.1 | 51.87 | -0.0653 | -0.101 | 0.0001 |
| 307 | SLU 81 | -1.71 | 0.1 | 54.74 | -0.0659 | -0.1043 | 0.0001 |
| 307 | SLU 82 | -1.87 | 0.1 | 53.44 | -0.0654 | -0.1095 | 0.0001 |
| 307 | SLU 83 | -1.72 | 0.1 | 54.97 | -0.0669 | -0.1039 | 0.0001 |
| 307 | SLU 84 | -1.87 | 0.1 | 53.67 | -0.0664 | -0.1092 | 0.0001 |
| 307 | SLE RA 1 | -0.84 | 0.07 | 36.01 | -0.0439 | -0.057 | 0 |
| 307 | SLE RA 2 | -1.02 | 0.07 | 34.57 | -0.0434 | -0.0629 | 0 |
| 307 | SLE RA 3 | -0.85 | 0.07 | 36.41 | -0.045 | -0.0573 | 0 |
| 307 | SLE RA 4 | -0.96 | 0.07 | 35.55 | -0.0447 | -0.0608 | 0 |
| 307 | SLE RA 5 | -1.02 | 0.07 | 34.72 | -0.0441 | -0.0626 | 0 |
| 307 | SLE RA 6 | -0.86 | 0.07 | 36.56 | -0.0456 | -0.0571 | 0 |
| 307 | SLE RA 7 | -0.96 | 0.07 | 35.7 | -0.0453 | -0.0606 | 0 |
| 307 | SLE RA 8 | -0.86 | 0.07 | 36.32 | -0.0452 | -0.0565 | 0 |
| 307 | SLE RA 9 | -0.96 | 0.07 | 35.45 | -0.0449 | -0.06 | 0 |
| 307 | SLE RA 10 | -1.27 | 0.07 | 37.71 | -0.0468 | -0.0751 | 0 |
| 307 | SLE RA 11 | -1.1 | 0.07 | 39.56 | -0.0484 | -0.0695 | 0 |
| 307 | SLE RA 12 | -1.21 | 0.07 | 38.69 | -0.0481 | -0.073 | 0 |
| 307 | SLE RA 13 | -1.27 | 0.07 | 37.86 | -0.0475 | -0.0748 | 0 |
| 307 | SLE RA 14 | -1.11 | 0.08 | 39.71 | -0.049 | -0.0693 | 0 |
| 307 | SLE RA 15 | -1.21 | 0.07 | 38.84 | -0.0488 | -0.0728 | 0 |
| 307 | SLE RA 16 | -1.11 | 0.07 | 39.46 | -0.0486 | -0.0688 | 0 |
| 307 | SLE RA 17 | -1.21 | 0.07 | 38.59 | -0.0483 | -0.0723 | 0 |
| 307 | SLE RA 18 | -1.2 | 0.08 | 40.51 | -0.0487 | -0.0745 | 0 |
| 307 | SLE RA 19 | -1.3 | 0.07 | 39.64 | -0.0485 | -0.078 | 0 |
| 307 | SLE RA 20 | -1.21 | 0.08 | 40.66 | -0.0494 | -0.0742 | 0 |
| 307 | SLE RA 21 | -1.31 | 0.08 | 39.79 | -0.0491 | -0.0777 | 0 |
| 307 | SLE FR 1 | -0.84 | 0.07 | 36.01 | -0.0439 | -0.057 | 0 |
| 307 | SLE FR 2 | -0.88 | 0.07 | 35.73 | -0.0438 | -0.0582 | 0 |
| 307 | SLE FR 3 | -0.85 | 0.07 | 36.07 | -0.0441 | -0.0569 | 0 |
| 307 | SLE FR 4 | -0.98 | 0.07 | 37.07 | -0.0452 | -0.0634 | 0 |
| 307 | SLE FR 5 | -0.95 | 0.07 | 37.42 | -0.0456 | -0.0622 | 0 |
| 307 | SLE FR 6 | -1.02 | 0.07 | 38.26 | -0.0463 | -0.0658 | 0 |
| 307 | SLE QP 1 | -0.84 | 0.07 | 36.01 | -0.0439 | -0.057 | 0 |
| 307 | SLE QP 2 | -0.95 | 0.07 | 37.36 | -0.0453 | -0.0623 | 0 |
| 307 | SLD 1 | 5.77 | -0.12 | 25.9 | -0.048 | 0.248 | -0.0001 |
| 307 | SLD 2 | 5.77 | -0.12 | 25.9 | -0.048 | 0.248 | -0.0001 |
| 307 | SLD 3 | 6.72 | 0.01 | 31.36 | 0.089 | 0.2862 | 0 |
| 307 | SLD 4 | 6.72 | 0.01 | 31.36 | 0.089 | 0.2862 | 0 |
| 307 | SLD 5 | -0.39 | -0.19 | 25.64 | -0.2539 | -0.0272 | -0.0002 |
| 307 | SLD 6 | -0.39 | -0.19 | 25.64 | -0.2539 | -0.0272 | -0.0002 |
| 307 | SLD 7 | 2.8 | 0.25 | 43.85 | 0.2027 | 0.1003 | 0.0002 |
| 307 | SLD 8 | 2.8 | 0.25 | 43.85 | 0.2027 | 0.1003 | 0.0002 |
| 307 | SLD 9 | -4.7 | -0.11 | 30.87 | -0.2934 | -0.2248 | -0.0001 |
| 307 | SLD 10 | -4.7 | -0.11 | 30.87 | -0.2934 | -0.2248 | -0.0001 |
| 307 | SLD 11 | -1.51 | 0.33 | 49.09 | 0.1632 | -0.0974 | 0.0003 |
| 307 | SLD 12 | -1.51 | 0.33 | 49.09 | 0.1632 | -0.0974 | 0.0003 |
| 307 | SLD 13 | -8.62 | 0.13 | 43.36 | -0.1797 | -0.4108 | 0.0001 |
| 307 | SLD 14 | -8.62 | 0.13 | 43.36 | -0.1797 | -0.4108 | 0.0001 |
| 307 | SLD 15 | -7.67 | 0.26 | 48.83 | -0.0427 | -0.3725 | 0.0002 |
| 307 | SLD 16 | -7.67 | 0.26 | 48.83 | -0.0427 | -0.3725 | 0.0002 |
| 307 | SLV 1 | 14.43 | -0.39 | 10.65 | -0.0549 | 0.6497 | -0.0004 |
| 307 | SLV 2 | 14.43 | -0.39 | 10.65 | -0.0549 | 0.6497 | -0.0004 |
| 307 | SLV 3 | 16.71 | -0.07 | 23.47 | 0.2856 | 0.7394 | -0.0001 |
| 307 | SLV 4 | 16.71 | -0.07 | 23.47 | 0.2856 | 0.7394 | -0.0001 |
| 307 | SLV 5 | 0.21 | -0.56 | 9.91 | -0.5645 | 0.0153 | -0.0006 |
| 307 | SLV 6 | 0.21 | -0.56 | 9.91 | -0.5645 | 0.0153 | -0.0006 |
| 307 | SLV 7 | 7.8 | 0.52 | 52.63 | 0.5702 | 0.3143 | 0.0005 |
| 307 | SLV 8 | 7.8 | 0.52 | 52.63 | 0.5702 | 0.3143 | 0.0005 |
| 307 | SLV 9 | -9.7 | -0.38 | 22.1 | -0.6609 | -0.4388 | -0.0004 |
| 307 | SLV 10 | -9.7 | -0.38 | 22.1 | -0.6609 | -0.4388 | -0.0004 |
| 307 | SLV 11 | -2.11 | 0.7 | 64.81 | 0.4738 | -0.1398 | 0.0006 |
| 307 | SLV 12 | -2.11 | 0.7 | 64.81 | 0.4738 | -0.1398 | 0.0006 |
| 307 | SLV 13 | -18.61 | 0.21 | 51.26 | -0.3762 | -0.8639 | 0.0002 |
| 307 | SLV 14 | -18.61 | 0.21 | 51.26 | -0.3762 | -0.8639 | 0.0002 |
| 307 | SLV 15 | -16.33 | 0.53 | 64.07 | -0.0358 | -0.7742 | 0.0005 |
| 307 | SLV 16 | -16.33 | 0.53 | 64.07 | -0.0358 | -0.7742 | 0.0005 |
| 308 | SLU 1 | -2.82 | -0.04 | 40.49 | 0 | -0.1664 | 0 |
| 308 | SLU 2 | -2.91 | -0.03 | 37.77 | -0.0019 | -0.1667 | 0 |
| 308 | SLU 3 | -2.87 | -0.04 | 41.17 | -0.0002 | -0.1699 | 0 |
| 308 | SLU 4 | -2.93 | -0.04 | 39.54 | -0.0014 | -0.1701 | 0 |
| 308 | SLU 5 | -2.94 | -0.03 | 37.97 | -0.0021 | -0.1685 | 0 |
| 308 | SLU 6 | -2.9 | -0.04 | 41.37 | -0.0004 | -0.1717 | 0 |
| 308 | SLU 7 | -2.96 | -0.04 | 39.73 | -0.0016 | -0.1718 | 0 |
| 308 | SLU 8 | -2.88 | -0.04 | 40.89 | -0.0004 | -0.1699 | 0 |
| 308 | SLU 9 | -2.93 | -0.04 | 39.26 | -0.0016 | -0.1701 | 0 |
| 308 | SLU 10 | -3.55 | -0.04 | 43.23 | -0.0018 | -0.2008 | 0 |
| 308 | SLU 11 | -3.51 | -0.05 | 46.63 | 0 | -0.204 | 0 |

| Nodo | Cont. | Reazione a traslazione | | | Reazione a rotazione | | |
|---|---|---|---|---|---|---|---|
| Ind. | N.br. | x | y | z | x | y | z |
| 308 | SLU 12 | -3.56 | -0.04 | 45 | -0.0012 | -0.2042 | 0 |
| 308 | SLU 13 | -3.58 | -0.04 | 43.43 | -0.002 | -0.2025 | 0 |
| 308 | SLU 14 | -3.54 | -0.05 | 46.83 | -0.0003 | -0.2057 | 0 |
| 308 | SLU 15 | -3.59 | -0.04 | 45.19 | -0.0014 | -0.2059 | 0 |
| 308 | SLU 16 | -3.51 | -0.05 | 46.35 | -0.0002 | -0.204 | 0 |
| 308 | SLU 17 | -3.57 | -0.04 | 44.71 | -0.0014 | -0.2042 | 0 |
| 308 | SLU 18 | -3.73 | -0.05 | 48.29 | 0.0003 | -0.2151 | 0 |
| 308 | SLU 19 | -3.78 | -0.04 | 46.66 | -0.0009 | -0.2153 | 0 |
| 308 | SLU 20 | -3.76 | -0.05 | 48.49 | 0.0001 | -0.2168 | 0 |
| 308 | SLU 21 | -3.81 | -0.04 | 46.86 | -0.0011 | -0.217 | 0 |
| 308 | SLU 22 | -3.33 | -0.05 | 45.32 | 0 | -0.1947 | 0 |
| 308 | SLU 23 | -3.43 | -0.04 | 42.6 | -0.002 | -0.195 | 0 |
| 308 | SLU 24 | -3.39 | -0.05 | 46 | -0.0002 | -0.1982 | 0 |
| 308 | SLU 25 | -3.44 | -0.04 | 44.36 | -0.0014 | -0.1984 | 0 |
| 308 | SLU 26 | -3.46 | -0.04 | 42.8 | -0.0022 | -0.1968 | 0 |
| 308 | SLU 27 | -3.42 | -0.05 | 46.19 | -0.0005 | -0.2 | 0 |
| 308 | SLU 28 | -3.47 | -0.04 | 44.56 | -0.0016 | -0.2001 | 0 |
| 308 | SLU 29 | -3.39 | -0.05 | 45.72 | -0.0004 | -0.1982 | 0 |
| 308 | SLU 30 | -3.45 | -0.04 | 44.08 | -0.0016 | -0.1984 | 0 |
| 308 | SLU 31 | -4.06 | -0.04 | 48.06 | -0.0018 | -0.2291 | 0 |
| 308 | SLU 32 | -4.02 | -0.05 | 51.46 | -0.0001 | -0.2323 | 0 |
| 308 | SLU 33 | -4.08 | -0.05 | 49.82 | -0.0012 | -0.2325 | 0 |
| 308 | SLU 34 | -4.09 | -0.04 | 48.25 | -0.002 | -0.2308 | 0 |
| 308 | SLU 35 | -4.05 | -0.05 | 51.65 | -0.0003 | -0.234 | 0 |
| 308 | SLU 36 | -4.11 | -0.05 | 50.02 | -0.0015 | -0.2342 | 0 |
| 308 | SLU 37 | -4.03 | -0.05 | 51.17 | -0.0003 | -0.2323 | 0 |
| 308 | SLU 38 | -4.08 | -0.05 | 49.54 | -0.0014 | -0.2325 | 0 |
| 308 | SLU 39 | -4.24 | -0.05 | 53.12 | 0.0003 | -0.2434 | 0 |
| 308 | SLU 40 | -4.3 | -0.05 | 51.48 | -0.0009 | -0.2436 | 0 |
| 308 | SLU 41 | -4.27 | -0.06 | 53.32 | 0 | -0.2452 | 0 |
| 308 | SLU 42 | -4.33 | -0.05 | 51.68 | -0.0011 | -0.2453 | 0 |
| 308 | SLU 43 | -3.49 | -0.05 | 50.99 | 0 | -0.2067 | 0 |
| 308 | SLU 44 | -3.58 | -0.04 | 48.26 | -0.0019 | -0.2069 | 0 |
| 308 | SLU 45 | -3.54 | -0.05 | 51.66 | -0.0002 | -0.2101 | 0 |
| 308 | SLU 46 | -3.6 | -0.05 | 50.03 | -0.0014 | -0.2103 | 0 |
| 308 | SLU 47 | -3.61 | -0.04 | 48.46 | -0.0021 | -0.2087 | 0 |
| 308 | SLU 48 | -3.57 | -0.05 | 51.86 | -0.0004 | -0.2119 | 0 |
| 308 | SLU 49 | -3.63 | -0.05 | 50.23 | -0.0016 | -0.2121 | 0 |
| 308 | SLU 50 | -3.54 | -0.05 | 51.38 | -0.0004 | -0.2101 | 0 |
| 308 | SLU 51 | -3.6 | -0.05 | 49.75 | -0.0016 | -0.2103 | 0 |
| 308 | SLU 52 | -4.22 | -0.05 | 53.72 | -0.0017 | -0.241 | 0 |
| 308 | SLU 53 | -4.18 | -0.06 | 57.12 | 0 | -0.2442 | 0 |
| 308 | SLU 54 | -4.23 | -0.05 | 55.49 | -0.0012 | -0.2444 | 0 |
| 308 | SLU 55 | -4.25 | -0.05 | 53.92 | -0.002 | -0.2428 | 0 |
| 308 | SLU 56 | -4.21 | -0.06 | 57.32 | -0.0002 | -0.246 | 0 |
| 308 | SLU 57 | -4.26 | -0.05 | 55.69 | -0.0014 | -0.2461 | 0 |
| 308 | SLU 58 | -4.18 | -0.06 | 56.84 | -0.0002 | -0.2442 | 0 |
| 308 | SLU 59 | -4.24 | -0.05 | 55.21 | -0.0014 | -0.2444 | 0 |
| 308 | SLU 60 | -4.4 | -0.06 | 58.79 | 0.0003 | -0.2553 | 0 |
| 308 | SLU 61 | -4.45 | -0.05 | 57.15 | -0.0009 | -0.2555 | 0 |
| 308 | SLU 62 | -4.43 | -0.06 | 58.98 | 0.0001 | -0.2571 | 0 |
| 308 | SLU 63 | -4.48 | -0.06 | 57.35 | -0.0011 | -0.2572 | 0 |
| 308 | SLU 64 | -4 | -0.06 | 55.81 | 0 | -0.235 | 0 |
| 308 | SLU 65 | -4.1 | -0.05 | 53.09 | -0.0019 | -0.2353 | 0 |
| 308 | SLU 66 | -4.06 | -0.06 | 56.49 | -0.0002 | -0.2385 | 0 |
| 308 | SLU 67 | -4.11 | -0.05 | 54.86 | -0.0014 | -0.2386 | 0 |
| 308 | SLU 68 | -4.12 | -0.05 | 53.29 | -0.0022 | -0.237 | 0 |
| 308 | SLU 69 | -4.09 | -0.06 | 56.69 | -0.0004 | -0.2402 | 0 |
| 308 | SLU 70 | -4.14 | -0.05 | 55.05 | -0.0016 | -0.2404 | 0 |
| 308 | SLU 71 | -4.06 | -0.06 | 56.21 | -0.0004 | -0.2385 | 0 |
| 308 | SLU 72 | -4.12 | -0.05 | 54.58 | -0.0016 | -0.2386 | 0 |
| 308 | SLU 73 | -4.73 | -0.05 | 58.55 | -0.0018 | -0.2693 | 0 |
| 308 | SLU 74 | -4.69 | -0.06 | 61.95 | -0.0001 | -0.2725 | 0 |
| 308 | SLU 75 | -4.75 | -0.06 | 60.32 | -0.0012 | -0.2727 | 0 |
| 308 | SLU 76 | -4.76 | -0.06 | 58.75 | -0.002 | -0.2711 | 0 |
| 308 | SLU 77 | -4.72 | -0.06 | 62.15 | -0.0003 | -0.2743 | 0 |
| 308 | SLU 78 | -4.78 | -0.06 | 60.51 | -0.0014 | -0.2744 | 0 |
| 308 | SLU 79 | -4.7 | -0.06 | 61.67 | -0.0002 | -0.2725 | 0 |
| 308 | SLU 80 | -4.75 | -0.06 | 60.03 | -0.0014 | -0.2727 | 0 |
| 308 | SLU 81 | -4.91 | -0.06 | 63.61 | 0.0003 | -0.2836 | 0 |
| 308 | SLU 82 | -4.97 | -0.06 | 61.98 | -0.0009 | -0.2838 | 0 |
| 308 | SLU 83 | -4.94 | -0.07 | 63.81 | 0.0001 | -0.2854 | 0 |
| 308 | SLU 84 | -5 | -0.06 | 62.18 | -0.0011 | -0.2855 | 0 |
| 308 | SLE RA 1 | -2.97 | -0.04 | 41.87 | 0 | -0.1745 | 0 |
| 308 | SLE RA 2 | -3.03 | -0.04 | 40.06 | -0.0013 | -0.1747 | 0 |
| 308 | SLE RA 3 | -3 | -0.04 | 42.32 | -0.0001 | -0.1768 | 0 |
| 308 | SLE RA 4 | -3.04 | -0.04 | 41.23 | -0.0009 | -0.177 | 0 |
| 308 | SLE RA 5 | -3.05 | -0.04 | 40.19 | -0.0014 | -0.1759 | 0 |
| 308 | SLE RA 6 | -3.02 | -0.04 | 42.46 | -0.0003 | -0.178 | 0 |
| 308 | SLE RA 7 | -3.06 | -0.04 | 41.37 | -0.0011 | -0.1781 | 0 |
| 308 | SLE RA 8 | -3 | -0.04 | 42.14 | -0.0003 | -0.1768 | 0 |
| 308 | SLE RA 9 | -3.04 | -0.04 | 41.05 | -0.001 | -0.177 | 0 |
| 308 | SLE RA 10 | -3.45 | -0.04 | 43.7 | -0.0012 | -0.1974 | 0 |
| 308 | SLE RA 11 | -3.43 | -0.05 | 45.96 | 0 | -0.1996 | 0 |
| 308 | SLE RA 12 | -3.46 | -0.04 | 44.87 | -0.0008 | -0.1997 | 0 |
| 308 | SLE RA 13 | -3.47 | -0.04 | 43.83 | -0.0013 | -0.1986 | 0 |
| 308 | SLE RA 14 | -3.45 | -0.05 | 46.09 | -0.0002 | -0.2007 | 0 |
| 308 | SLE RA 15 | -3.48 | -0.04 | 45.01 | -0.001 | -0.2008 | 0 |

| Nodo | Cont. | Reazione a traslazione | | | Reazione a rotazione | | |
|---|---|---|---|---|---|---|---|
| Ind. | N.br. | x | y | z | x | y | z |
| 308 | SLE RA 16 | -3.43 | -0.05 | 45.78 | -0.0002 | -0.1996 | 0 |
| 308 | SLE RA 17 | -3.47 | -0.04 | 44.69 | -0.0009 | -0.1997 | 0 |
| 308 | SLE RA 18 | -3.57 | -0.05 | 47.07 | 0.0002 | -0.207 | 0 |
| 308 | SLE RA 19 | -3.61 | -0.04 | 45.98 | -0.0006 | -0.2071 | 0 |
| 308 | SLE RA 20 | -3.59 | -0.05 | 47.2 | 0 | -0.2081 | 0 |
| 308 | SLE RA 21 | -3.63 | -0.05 | 46.11 | -0.0007 | -0.2082 | 0 |
| 308 | SLE FR 1 | -2.97 | -0.04 | 41.87 | 0 | -0.1745 | 0 |
| 308 | SLE FR 2 | -2.98 | -0.04 | 41.51 | -0.0002 | -0.1746 | 0 |
| 308 | SLE FR 3 | -2.97 | -0.04 | 41.93 | 0 | -0.175 | 0 |
| 308 | SLE FR 4 | -3.16 | -0.04 | 43.07 | -0.0002 | -0.1843 | 0 |
| 308 | SLE FR 5 | -3.16 | -0.04 | 43.49 | 0 | -0.1847 | 0 |
| 308 | SLE FR 6 | -3.27 | -0.05 | 44.47 | 0.0001 | -0.1907 | 0 |
| 308 | SLE QP 1 | -2.97 | -0.04 | 41.87 | 0 | -0.1745 | 0 |
| 308 | SLE QP 2 | -3.15 | -0.04 | 43.43 | 0.0001 | -0.1843 | 0 |
| 308 | SLD 1 | 2.79 | -0.14 | 25.8 | 0.0053 | 0.1511 | -0.0002 |
| 308 | SLD 2 | 2.79 | -0.14 | 25.8 | 0.0053 | 0.1511 | -0.0002 |
| 308 | SLD 3 | 3.6 | -0.26 | 33.07 | 0.0788 | 0.1097 | -0.0008 |
| 308 | SLD 4 | 3.6 | -0.26 | 33.07 | 0.0788 | 0.1097 | -0.0008 |
| 308 | SLD 5 | -2.6 | 0.11 | 27.11 | -0.1097 | -0.0209 | 0.0008 |
| 308 | SLD 6 | -2.6 | 0.11 | 27.11 | -0.1097 | -0.0209 | 0.0008 |
| 308 | SLD 7 | 0.11 | -0.29 | 51.35 | 0.135 | -0.1588 | -0.0012 |
| 308 | SLD 8 | 0.11 | -0.29 | 51.35 | 0.135 | -0.1588 | -0.0012 |
| 308 | SLD 9 | -6.4 | 0.2 | 35.51 | -0.1349 | -0.2097 | 0.0011 |
| 308 | SLD 10 | -6.4 | 0.2 | 35.51 | -0.1349 | -0.2097 | 0.0011 |
| 308 | SLD 11 | -3.7 | -0.19 | 59.75 | 0.1099 | -0.3476 | -0.0008 |
| 308 | SLD 12 | -3.7 | -0.19 | 59.75 | 0.1099 | -0.3476 | -0.0008 |
| 308 | SLD 13 | -9.9 | 0.17 | 53.8 | -0.0786 | -0.4782 | 0.0008 |
| 308 | SLD 14 | -9.9 | 0.17 | 53.8 | -0.0786 | -0.4782 | 0.0008 |
| 308 | SLD 15 | -9.09 | 0.05 | 61.07 | -0.0052 | -0.5196 | 0.0002 |
| 308 | SLD 16 | -9.09 | 0.05 | 61.07 | -0.0052 | -0.5196 | 0.0002 |
| 308 | SLV 1 | 10.46 | -0.27 | 2.44 | 0.012 | 0.587 | -0.0005 |
| 308 | SLV 2 | 10.46 | -0.27 | 2.44 | 0.012 | 0.587 | -0.0005 |
| 308 | SLV 3 | 12.37 | -0.56 | 19.53 | 0.1944 | 0.4889 | -0.002 |
| 308 | SLV 4 | 12.37 | -0.56 | 19.53 | 0.1944 | 0.4889 | -0.002 |
| 308 | SLV 5 | -1.96 | 0.33 | 5.21 | -0.273 | 0.1958 | 0.002 |
| 308 | SLV 6 | -1.96 | 0.33 | 5.21 | -0.273 | 0.1958 | 0.002 |
| 308 | SLV 7 | 4.41 | -0.64 | 62.19 | 0.335 | -0.131 | -0.0028 |
| 308 | SLV 8 | 4.41 | -0.64 | 62.19 | 0.335 | -0.131 | -0.0028 |
| 308 | SLV 9 | -10.7 | 0.56 | 24.68 | -0.3349 | -0.2375 | 0.0028 |
| 308 | SLV 10 | -10.7 | 0.56 | 24.68 | -0.3349 | -0.2375 | 0.0028 |
| 308 | SLV 11 | -4.33 | -0.42 | 81.66 | 0.2732 | -0.5643 | -0.0021 |
| 308 | SLV 12 | -4.33 | -0.42 | 81.66 | 0.2732 | -0.5643 | -0.0021 |
| 308 | SLV 13 | -18.67 | 0.47 | 67.33 | -0.1942 | -0.8574 | 0.002 |
| 308 | SLV 14 | -18.67 | 0.47 | 67.33 | -0.1942 | -0.8574 | 0.002 |
| 308 | SLV 15 | -16.76 | 0.18 | 84.43 | -0.0118 | -0.9555 | 0.0005 |
| 308 | SLV 16 | -16.76 | 0.18 | 84.43 | -0.0118 | -0.9555 | 0.0005 |
| 310 | SLU 1 | 0.01 | -4.54 | 72.25 | 0.2234 | 0.0023 | 0.0001 |
| 310 | SLU 2 | 0.01 | -4.43 | 71.62 | 0.2188 | 0.0021 | 0.0001 |
| 310 | SLU 3 | 0.01 | -5.04 | 77.08 | 0.246 | 0.0025 | 0.0001 |
| 310 | SLU 4 | 0.01 | -4.97 | 76.7 | 0.2433 | 0.0024 | 0.0001 |
| 310 | SLU 5 | 0.01 | -4.92 | 75.85 | 0.2405 | 0.0023 | 0.0001 |
| 310 | SLU 6 | 0.01 | -5.54 | 81.31 | 0.2677 | 0.0027 | 0.0001 |
| 310 | SLU 7 | 0.01 | -5.47 | 80.93 | 0.265 | 0.0026 | 0.0001 |
| 310 | SLU 8 | 0.01 | -5.53 | 80.71 | 0.2668 | 0.0027 | 0.0001 |
| 310 | SLU 9 | 0.01 | -5.46 | 80.33 | 0.264 | 0.0026 | 0.0001 |
| 310 | SLU 10 | 0.01 | -5.3 | 83.89 | 0.2622 | 0.0023 | 0.0001 |
| 310 | SLU 11 | 0.01 | -5.92 | 89.35 | 0.2895 | 0.0027 | 0.0001 |
| 310 | SLU 12 | 0.01 | -5.85 | 88.97 | 0.2867 | 0.0026 | 0.0001 |
| 310 | SLU 13 | 0.01 | -5.79 | 88.12 | 0.2839 | 0.0026 | 0.0001 |
| 310 | SLU 14 | 0.01 | -6.41 | 93.58 | 0.3112 | 0.003 | 0.0001 |
| 310 | SLU 15 | 0.01 | -6.34 | 93.2 | 0.3084 | 0.0028 | 0.0001 |
| 310 | SLU 16 | 0.01 | -6.4 | 92.98 | 0.3102 | 0.003 | 0.0001 |
| 310 | SLU 17 | 0.01 | -6.33 | 92.6 | 0.3074 | 0.0029 | 0.0001 |
| 310 | SLU 18 | 0.01 | -5.79 | 89.78 | 0.2854 | 0.0026 | 0.0001 |
| 310 | SLU 19 | 0.01 | -5.72 | 89.4 | 0.2827 | 0.0025 | 0.0001 |
| 310 | SLU 20 | 0.01 | -6.28 | 94.01 | 0.3071 | 0.0029 | 0.0001 |
| 310 | SLU 21 | 0.01 | -6.21 | 93.63 | 0.3044 | 0.0028 | 0.0001 |
| 310 | SLU 22 | 0.01 | -5.52 | 85.04 | 0.2709 | 0.0026 | 0.0001 |
| 310 | SLU 23 | 0.01 | -5.41 | 84.41 | 0.2663 | 0.0024 | 0.0001 |
| 310 | SLU 24 | 0.01 | -6.03 | 89.87 | 0.2936 | 0.0028 | 0.0001 |
| 310 | SLU 25 | 0.01 | -5.96 | 89.49 | 0.2908 | 0.0027 | 0.0001 |
| 310 | SLU 26 | 0.01 | -5.9 | 88.64 | 0.288 | 0.0027 | 0.0001 |
| 310 | SLU 27 | 0.01 | -6.52 | 94.1 | 0.3153 | 0.003 | 0.0001 |
| 310 | SLU 28 | 0.01 | -6.45 | 93.73 | 0.3125 | 0.0029 | 0.0001 |
| 310 | SLU 29 | 0.01 | -6.51 | 93.5 | 0.3143 | 0.0031 | 0.0001 |
| 310 | SLU 30 | 0.01 | -6.44 | 93.12 | 0.3116 | 0.003 | 0.0001 |
| 310 | SLU 31 | 0.01 | -6.28 | 96.69 | 0.3098 | 0.0027 | 0.0001 |
| 310 | SLU 32 | 0.02 | -6.9 | 102.15 | 0.337 | 0.0031 | 0.0001 |
| 310 | SLU 33 | 0.01 | -6.83 | 101.77 | 0.3343 | 0.003 | 0.0001 |
| 310 | SLU 34 | 0.01 | -6.77 | 100.92 | 0.3315 | 0.0029 | 0.0001 |
| 310 | SLU 35 | 0.02 | -7.39 | 106.38 | 0.3587 | 0.0033 | 0.0001 |
| 310 | SLU 36 | 0.02 | -7.32 | 106 | 0.356 | 0.0032 | 0.0001 |
| 310 | SLU 37 | 0.02 | -7.38 | 105.78 | 0.3577 | 0.0033 | 0.0001 |
| 310 | SLU 38 | 0.02 | -7.31 | 105.4 | 0.355 | 0.0032 | 0.0001 |
| 310 | SLU 39 | 0.02 | -6.77 | 102.58 | 0.3329 | 0.003 | 0.0001 |
| 310 | SLU 40 | 0.01 | -6.7 | 102.2 | 0.3302 | 0.0029 | 0.0001 |
| 310 | SLU 41 | 0.02 | -7.26 | 106.81 | 0.3546 | 0.0032 | 0.0001 |
| 310 | SLU 42 | 0.02 | -7.19 | 106.43 | 0.3519 | 0.0031 | 0.0001 |

| Nodo | Cont. | Reazione a traslazione | | | Reazione a rotazione | | |
|---|---|---|---|---|---|---|---|
| Ind. | N.br. | x | y | z | x | y | z |
| 310 | SLU 43 | 0.01 | -5.57 | 89.53 | 0.2741 | 0.0029 | 0.0001 |
| 310 | SLU 44 | 0.01 | -5.45 | 88.9 | 0.2695 | 0.0027 | 0.0001 |
| 310 | SLU 45 | 0.01 | -6.07 | 94.36 | 0.2968 | 0.0031 | 0.0001 |
| 310 | SLU 46 | 0.01 | -6 | 93.98 | 0.294 | 0.0029 | 0.0001 |
| 310 | SLU 47 | 0.01 | -5.94 | 93.13 | 0.2912 | 0.0029 | 0.0001 |
| 310 | SLU 48 | 0.01 | -6.56 | 98.59 | 0.3185 | 0.0033 | 0.0001 |
| 310 | SLU 49 | 0.01 | -6.49 | 98.21 | 0.3157 | 0.0032 | 0.0001 |
| 310 | SLU 50 | 0.01 | -6.55 | 97.99 | 0.3175 | 0.0033 | 0.0001 |
| 310 | SLU 51 | 0.01 | -6.48 | 97.61 | 0.3147 | 0.0032 | 0.0001 |
| 310 | SLU 52 | 0.01 | -6.32 | 101.17 | 0.313 | 0.0029 | 0.0001 |
| 310 | SLU 53 | 0.02 | -6.94 | 106.63 | 0.3402 | 0.0033 | 0.0001 |
| 310 | SLU 54 | 0.02 | -6.87 | 106.26 | 0.3374 | 0.0032 | 0.0001 |
| 310 | SLU 55 | 0.02 | -6.82 | 105.4 | 0.3346 | 0.0031 | 0.0001 |
| 310 | SLU 56 | 0.02 | -7.43 | 110.86 | 0.3619 | 0.0035 | 0.0002 |
| 310 | SLU 57 | 0.02 | -7.36 | 110.49 | 0.3591 | 0.0034 | 0.0002 |
| 310 | SLU 58 | 0.02 | -7.42 | 110.26 | 0.3609 | 0.0036 | 0.0002 |
| 310 | SLU 59 | 0.02 | -7.35 | 109.89 | 0.3582 | 0.0034 | 0.0002 |
| 310 | SLU 60 | 0.02 | -6.81 | 107.06 | 0.3361 | 0.0032 | 0.0001 |
| 310 | SLU 61 | 0.02 | -6.74 | 106.69 | 0.3334 | 0.0031 | 0.0001 |
| 310 | SLU 62 | 0.02 | -7.31 | 111.29 | 0.3578 | 0.0034 | 0.0002 |
| 310 | SLU 63 | 0.02 | -7.24 | 110.92 | 0.3551 | 0.0033 | 0.0002 |
| 310 | SLU 64 | 0.02 | -6.55 | 102.33 | 0.3216 | 0.0032 | 0.0001 |
| 310 | SLU 65 | 0.01 | -6.43 | 101.7 | 0.3171 | 0.003 | 0.0001 |
| 310 | SLU 66 | 0.02 | -7.05 | 107.16 | 0.3443 | 0.0034 | 0.0002 |
| 310 | SLU 67 | 0.02 | -6.98 | 106.78 | 0.3416 | 0.0033 | 0.0001 |
| 310 | SLU 68 | 0.02 | -6.93 | 105.93 | 0.3388 | 0.0032 | 0.0001 |
| 310 | SLU 69 | 0.02 | -7.54 | 111.39 | 0.366 | 0.0036 | 0.0002 |
| 310 | SLU 70 | 0.02 | -7.47 | 111.01 | 0.3632 | 0.0035 | 0.0002 |
| 310 | SLU 71 | 0.02 | -7.53 | 110.79 | 0.365 | 0.0036 | 0.0002 |
| 310 | SLU 72 | 0.02 | -7.46 | 110.41 | 0.3623 | 0.0035 | 0.0002 |
| 310 | SLU 73 | 0.02 | -7.31 | 113.97 | 0.3605 | 0.0033 | 0.0002 |
| 310 | SLU 74 | 0.02 | -7.92 | 119.43 | 0.3877 | 0.0036 | 0.0002 |
| 310 | SLU 75 | 0.02 | -7.85 | 119.05 | 0.385 | 0.0035 | 0.0002 |
| 310 | SLU 76 | 0.02 | -7.8 | 118.2 | 0.3822 | 0.0035 | 0.0002 |
| 310 | SLU 77 | 0.02 | -8.42 | 123.66 | 0.4094 | 0.0039 | 0.0002 |
| 310 | SLU 78 | 0.02 | -8.35 | 123.28 | 0.4067 | 0.0037 | 0.0002 |
| 310 | SLU 79 | 0.02 | -8.41 | 123.06 | 0.4084 | 0.0039 | 0.0002 |
| 310 | SLU 80 | 0.02 | -8.34 | 122.68 | 0.4057 | 0.0038 | 0.0002 |
| 310 | SLU 81 | 0.02 | -7.79 | 119.86 | 0.3837 | 0.0036 | 0.0002 |
| 310 | SLU 82 | 0.02 | -7.73 | 119.48 | 0.3809 | 0.0034 | 0.0002 |
| 310 | SLU 83 | 0.02 | -8.29 | 124.09 | 0.4053 | 0.0038 | 0.0002 |
| 310 | SLU 84 | 0.02 | -8.22 | 123.71 | 0.4026 | 0.0037 | 0.0002 |
| 310 | SLE RA 1 | 0.01 | -4.82 | 75.9 | 0.237 | 0.0024 | 0.0001 |
| 310 | SLE RA 2 | 0.01 | -4.74 | 75.48 | 0.2339 | 0.0023 | 0.0001 |
| 310 | SLE RA 3 | 0.01 | -5.16 | 79.12 | 0.2521 | 0.0025 | 0.0001 |
| 310 | SLE RA 4 | 0.01 | -5.11 | 78.87 | 0.2502 | 0.0024 | 0.0001 |
| 310 | SLE RA 5 | 0.01 | -5.07 | 78.3 | 0.2484 | 0.0024 | 0.0001 |
| 310 | SLE RA 6 | 0.01 | -5.48 | 81.94 | 0.2665 | 0.0027 | 0.0001 |
| 310 | SLE RA 7 | 0.01 | -5.44 | 81.69 | 0.2647 | 0.0026 | 0.0001 |
| 310 | SLE RA 8 | 0.01 | -5.48 | 81.54 | 0.2659 | 0.0027 | 0.0001 |
| 310 | SLE RA 9 | 0.01 | -5.43 | 81.29 | 0.2641 | 0.0026 | 0.0001 |
| 310 | SLE RA 10 | 0.01 | -5.33 | 83.66 | 0.2629 | 0.0024 | 0.0001 |
| 310 | SLE RA 11 | 0.01 | -5.74 | 87.3 | 0.281 | 0.0027 | 0.0001 |
| 310 | SLE RA 12 | 0.01 | -5.69 | 87.05 | 0.2792 | 0.0026 | 0.0001 |
| 310 | SLE RA 13 | 0.01 | -5.65 | 86.48 | 0.2773 | 0.0026 | 0.0001 |
| 310 | SLE RA 14 | 0.01 | -6.07 | 90.12 | 0.2955 | 0.0028 | 0.0001 |
| 310 | SLE RA 15 | 0.01 | -6.02 | 89.87 | 0.2937 | 0.0028 | 0.0001 |
| 310 | SLE RA 16 | 0.01 | -6.06 | 89.72 | 0.2948 | 0.0028 | 0.0001 |
| 310 | SLE RA 17 | 0.01 | -6.01 | 89.47 | 0.293 | 0.0028 | 0.0001 |
| 310 | SLE RA 18 | 0.01 | -5.65 | 87.59 | 0.2783 | 0.0026 | 0.0001 |
| 310 | SLE RA 19 | 0.01 | -5.61 | 87.34 | 0.2765 | 0.0025 | 0.0001 |
| 310 | SLE RA 20 | 0.01 | -5.98 | 90.41 | 0.2928 | 0.0028 | 0.0001 |
| 310 | SLE RA 21 | 0.01 | -5.93 | 90.16 | 0.2909 | 0.0027 | 0.0001 |
| 310 | SLE FR 1 | 0.01 | -4.82 | 75.9 | 0.237 | 0.0024 | 0.0001 |
| 310 | SLE FR 2 | 0.01 | -4.81 | 75.82 | 0.2363 | 0.0024 | 0.0001 |
| 310 | SLE FR 3 | 0.01 | -4.95 | 77.03 | 0.2427 | 0.0024 | 0.0001 |
| 310 | SLE FR 4 | 0.01 | -5.06 | 79.32 | 0.2488 | 0.0024 | 0.0001 |
| 310 | SLE FR 5 | 0.01 | -5.2 | 80.54 | 0.2551 | 0.0025 | 0.0001 |
| 310 | SLE FR 6 | 0.01 | -5.24 | 81.75 | 0.2576 | 0.0025 | 0.0001 |
| 310 | SLE QP 1 | 0.01 | -4.82 | 75.9 | 0.237 | 0.0024 | 0.0001 |
| 310 | SLE QP 2 | 0.01 | -5.07 | 79.41 | 0.2494 | 0.0025 | 0.0001 |
| 310 | SLD 1 | -0.18 | -4.73 | 79.57 | 0.2386 | 0.1186 | -0.0033 |
| 310 | SLD 2 | -0.18 | -4.73 | 79.57 | 0.2386 | 0.1186 | -0.0033 |
| 310 | SLD 3 | -0.16 | -8.35 | 87.49 | 0.379 | 0.1265 | -0.003 |
| 310 | SLD 4 | -0.16 | -8.35 | 87.49 | 0.379 | 0.1265 | -0.003 |
| 310 | SLD 5 | -0.07 | 0.52 | 67.44 | 0.0332 | 0.0253 | -0.0014 |
| 310 | SLD 6 | -0.07 | 0.52 | 67.44 | 0.0332 | 0.0253 | -0.0014 |
| 310 | SLD 7 | -0.01 | -11.54 | 93.85 | 0.5012 | 0.0517 | -0.0004 |
| 310 | SLD 8 | -0.01 | -11.54 | 93.85 | 0.5012 | 0.0517 | -0.0004 |
| 310 | SLD 9 | 0.04 | 1.4 | 64.97 | -0.0025 | -0.0468 | 0.0006 |
| 310 | SLD 10 | 0.04 | 1.4 | 64.97 | -0.0025 | -0.0468 | 0.0006 |
| 310 | SLD 11 | 0.1 | -10.66 | 91.38 | 0.4655 | -0.0203 | 0.0016 |
| 310 | SLD 12 | 0.1 | -10.66 | 91.38 | 0.4655 | -0.0203 | 0.0016 |
| 310 | SLD 13 | 0.18 | -1.79 | 71.33 | 0.1197 | -0.1216 | 0.0033 |
| 310 | SLD 14 | 0.18 | -1.79 | 71.33 | 0.1197 | -0.1216 | 0.0033 |
| 310 | SLD 15 | 0.2 | -5.42 | 79.25 | 0.2601 | -0.1137 | 0.0036 |
| 310 | SLD 16 | 0.2 | -5.42 | 79.25 | 0.2601 | -0.1137 | 0.0036 |
| 310 | SLV 1 | -0.44 | -4.27 | 79.83 | 0.2247 | 0.2739 | -0.0081 |

| Nodo | Cont. | Reazione a traslazione | | | Reazione a rotazione | | |
|---|---|---|---|---|---|---|---|
| Ind. | N.br. | x | y | z | x | y | z |
| 310 | SLV 2 | -0.44 | -4.27 | 79.83 | 0.2247 | 0.2739 | -0.0081 |
| 310 | SLV 3 | -0.39 | -12.71 | 98.51 | 0.5523 | 0.2932 | -0.0073 |
| 310 | SLV 4 | -0.39 | -12.71 | 98.51 | 0.5523 | 0.2932 | -0.0073 |
| 310 | SLV 5 | -0.19 | 7.97 | 51.19 | -0.2549 | 0.0547 | -0.0035 |
| 310 | SLV 6 | -0.19 | 7.97 | 51.19 | -0.2549 | 0.0547 | -0.0035 |
| 310 | SLV 7 | -0.04 | -20.17 | 113.48 | 0.837 | 0.1189 | -0.001 |
| 310 | SLV 8 | -0.04 | -20.17 | 113.48 | 0.837 | 0.1189 | -0.001 |
| 310 | SLV 9 | 0.07 | 10.03 | 45.33 | -0.3383 | -0.114 | 0.0012 |
| 310 | SLV 10 | 0.07 | 10.03 | 45.33 | -0.3383 | -0.114 | 0.0012 |
| 310 | SLV 11 | 0.21 | -18.11 | 107.63 | 0.7536 | -0.0498 | 0.0037 |
| 310 | SLV 12 | 0.21 | -18.11 | 107.63 | 0.7536 | -0.0498 | 0.0037 |
| 310 | SLV 13 | 0.42 | 2.57 | 60.3 | -0.0535 | -0.2883 | 0.0075 |
| 310 | SLV 14 | 0.42 | 2.57 | 60.3 | -0.0535 | -0.2883 | 0.0075 |
| 310 | SLV 15 | 0.46 | -5.87 | 78.99 | 0.274 | -0.269 | 0.0083 |
| 310 | SLV 16 | 0.46 | -5.87 | 78.99 | 0.274 | -0.269 | 0.0083 |
| 312 | SLU 1 | -5.91 | -11.13 | 62.15 | -5.2072 | -0.1368 | -1.3359 |
| 312 | SLU 2 | -5.62 | -10.16 | 57.27 | -4.87 | -0.1327 | -1.2731 |
| 312 | SLU 3 | -6 | -11.35 | 63.24 | -5.2919 | -0.1387 | -1.3577 |
| 312 | SLU 4 | -5.83 | -10.77 | 60.31 | -5.0896 | -0.1363 | -1.32 |
| 312 | SLU 5 | -5.65 | -10.23 | 57.55 | -4.8908 | -0.133 | -1.2789 |
| 312 | SLU 6 | -6.03 | -11.41 | 63.51 | -5.3128 | -0.139 | -1.3635 |
| 312 | SLU 7 | -5.86 | -10.83 | 60.58 | -5.1105 | -0.1366 | -1.3258 |
| 312 | SLU 8 | -5.96 | -11.26 | 62.71 | -5.2489 | -0.1374 | -1.3474 |
| 312 | SLU 9 | -5.79 | -10.68 | 59.78 | -5.0466 | -0.1349 | -1.3097 |
| 312 | SLU 10 | -6.55 | -11.56 | 65.42 | -5.5956 | -0.1569 | -1.4821 |
| 312 | SLU 11 | -6.93 | -12.74 | 71.38 | -6.0176 | -0.1629 | -1.5667 |
| 312 | SLU 12 | -6.76 | -12.16 | 68.45 | -5.8152 | -0.1605 | -1.529 |
| 312 | SLU 13 | -6.58 | -11.62 | 65.7 | -5.6165 | -0.1572 | -1.4879 |
| 312 | SLU 14 | -6.96 | -12.81 | 71.66 | -6.0384 | -0.1632 | -1.5725 |
| 312 | SLU 15 | -6.79 | -12.22 | 68.73 | -5.8361 | -0.1608 | -1.5348 |
| 312 | SLU 16 | -6.89 | -12.65 | 70.85 | -5.9745 | -0.1616 | -1.5565 |
| 312 | SLU 17 | -6.72 | -12.07 | 67.92 | -5.7722 | -0.1591 | -1.5188 |
| 312 | SLU 18 | -7.23 | -13.12 | 73.79 | -6.2438 | -0.1714 | -1.6345 |
| 312 | SLU 19 | -7.06 | -12.54 | 70.86 | -6.0415 | -0.1689 | -1.5969 |
| 312 | SLU 20 | -7.26 | -13.18 | 74.07 | -6.2647 | -0.1716 | -1.6403 |
| 312 | SLU 21 | -7.09 | -12.6 | 71.14 | -6.0623 | -0.1692 | -1.6026 |
| 312 | SLU 22 | -6.7 | -12.43 | 69.49 | -5.844 | -0.1569 | -1.5152 |
| 312 | SLU 23 | -6.42 | -11.46 | 64.61 | -5.5067 | -0.1528 | -1.4524 |
| 312 | SLU 24 | -6.8 | -12.64 | 70.57 | -5.9287 | -0.1589 | -1.537 |
| 312 | SLU 25 | -6.63 | -12.06 | 67.64 | -5.7264 | -0.1564 | -1.4993 |
| 312 | SLU 26 | -6.45 | -11.52 | 64.88 | -5.5276 | -0.1531 | -1.4582 |
| 312 | SLU 27 | -6.82 | -12.71 | 70.84 | -5.9495 | -0.1592 | -1.5428 |
| 312 | SLU 28 | -6.65 | -12.13 | 67.92 | -5.7472 | -0.1567 | -1.5051 |
| 312 | SLU 29 | -6.75 | -12.55 | 70.04 | -5.8857 | -0.1575 | -1.5267 |
| 312 | SLU 30 | -6.58 | -11.97 | 67.11 | -5.6833 | -0.155 | -1.4891 |
| 312 | SLU 31 | -7.35 | -12.85 | 72.75 | -6.2324 | -0.177 | -1.6614 |
| 312 | SLU 32 | -7.73 | -14.03 | 78.71 | -6.6543 | -0.1831 | -1.746 |
| 312 | SLU 33 | -7.56 | -13.45 | 75.79 | -6.452 | -0.1806 | -1.7084 |
| 312 | SLU 34 | -7.37 | -12.91 | 73.03 | -6.2532 | -0.1773 | -1.6672 |
| 312 | SLU 35 | -7.75 | -14.1 | 78.99 | -6.6752 | -0.1834 | -1.7518 |
| 312 | SLU 36 | -7.58 | -13.52 | 76.06 | -6.4728 | -0.1809 | -1.7141 |
| 312 | SLU 37 | -7.68 | -13.95 | 78.18 | -6.6113 | -0.1817 | -1.7358 |
| 312 | SLU 38 | -7.51 | -13.36 | 75.26 | -6.409 | -0.1792 | -1.6981 |
| 312 | SLU 39 | -8.03 | -14.41 | 81.12 | -6.8806 | -0.1915 | -1.8138 |
| 312 | SLU 40 | -7.86 | -13.83 | 78.19 | -6.6783 | -0.189 | -1.7762 |
| 312 | SLU 41 | -8.05 | -14.48 | 81.4 | -6.9014 | -0.1918 | -1.8196 |
| 312 | SLU 42 | -7.89 | -13.9 | 78.47 | -6.6991 | -0.1893 | -1.7819 |
| 312 | SLU 43 | -7.41 | -14.03 | 78.29 | -6.5511 | -0.1709 | -1.6752 |
| 312 | SLU 44 | -7.12 | -13.06 | 73.41 | -6.2138 | -0.1668 | -1.6124 |
| 312 | SLU 45 | -7.5 | -14.25 | 79.37 | -6.6358 | -0.1729 | -1.697 |
| 312 | SLU 46 | -7.33 | -13.66 | 76.44 | -6.4335 | -0.1704 | -1.6593 |
| 312 | SLU 47 | -7.15 | -13.12 | 73.68 | -6.2347 | -0.1671 | -1.6182 |
| 312 | SLU 48 | -7.53 | -14.31 | 79.64 | -6.6566 | -0.1732 | -1.7028 |
| 312 | SLU 49 | -7.36 | -13.73 | 76.72 | -6.4543 | -0.1707 | -1.6651 |
| 312 | SLU 50 | -7.46 | -14.16 | 78.84 | -6.5928 | -0.1715 | -1.6867 |
| 312 | SLU 51 | -7.29 | -13.58 | 75.91 | -6.3904 | -0.169 | -1.6491 |
| 312 | SLU 52 | -8.05 | -14.45 | 81.55 | -6.9395 | -0.191 | -1.8214 |
| 312 | SLU 53 | -8.43 | -15.64 | 87.51 | -7.3614 | -0.1971 | -1.906 |
| 312 | SLU 54 | -8.26 | -15.06 | 84.59 | -7.1591 | -0.1946 | -1.8684 |
| 312 | SLU 55 | -8.08 | -14.52 | 81.83 | -6.9603 | -0.1913 | -1.8272 |
| 312 | SLU 56 | -8.46 | -15.7 | 87.79 | -7.3823 | -0.1974 | -1.9118 |
| 312 | SLU 57 | -8.29 | -15.12 | 84.86 | -7.1799 | -0.1949 | -1.8741 |
| 312 | SLU 58 | -8.39 | -15.55 | 86.98 | -7.3184 | -0.1957 | -1.8958 |
| 312 | SLU 59 | -8.22 | -14.97 | 84.06 | -7.1161 | -0.1932 | -1.8581 |
| 312 | SLU 60 | -8.73 | -16.02 | 89.92 | -7.5877 | -0.2055 | -1.9738 |
| 312 | SLU 61 | -8.56 | -15.44 | 86.99 | -7.3853 | -0.203 | -1.9362 |
| 312 | SLU 62 | -8.76 | -16.08 | 90.2 | -7.6085 | -0.2058 | -1.9796 |
| 312 | SLU 63 | -8.59 | -15.5 | 87.27 | -7.4062 | -0.2033 | -1.9419 |
| 312 | SLU 64 | -8.2 | -15.32 | 85.62 | -7.1878 | -0.1911 | -1.8545 |
| 312 | SLU 65 | -7.92 | -14.35 | 80.74 | -6.8506 | -0.187 | -1.7917 |
| 312 | SLU 66 | -8.3 | -15.54 | 86.7 | -7.2725 | -0.193 | -1.8763 |
| 312 | SLU 67 | -8.13 | -14.96 | 83.77 | -7.0702 | -0.1906 | -1.8386 |
| 312 | SLU 68 | -7.95 | -14.42 | 81.01 | -6.8714 | -0.1873 | -1.7975 |
| 312 | SLU 69 | -8.32 | -15.6 | 86.98 | -7.2934 | -0.1933 | -1.8821 |
| 312 | SLU 70 | -8.15 | -15.02 | 84.05 | -7.0911 | -0.1908 | -1.8444 |
| 312 | SLU 71 | -8.25 | -15.45 | 86.17 | -7.2295 | -0.1916 | -1.866 |
| 312 | SLU 72 | -8.08 | -14.87 | 83.24 | -7.0272 | -0.1892 | -1.8284 |
| 312 | SLU 73 | -8.85 | -15.74 | 88.88 | -7.5762 | -0.2112 | -2.0007 |

| Nodo | Cont. | Reazione a traslazione | | | Reazione a rotazione | | |
|---|---|---|---|---|---|---|---|
| Ind. | N.br. | x | y | z | x | y | z |
| 312 | SLU 74 | -9.23 | -16.93 | 94.85 | -7.9982 | -0.2172 | -2.0853 |
| 312 | SLU 75 | -9.06 | -16.35 | 91.92 | -7.7958 | -0.2148 | -2.0477 |
| 312 | SLU 76 | -8.87 | -15.81 | 89.16 | -7.5971 | -0.2114 | -2.0065 |
| 312 | SLU 77 | -9.25 | -16.99 | 95.12 | -8.019 | -0.2175 | -2.0911 |
| 312 | SLU 78 | -9.08 | -16.41 | 92.19 | -7.8167 | -0.215 | -2.0534 |
| 312 | SLU 79 | -9.18 | -16.84 | 94.32 | -7.9551 | -0.2158 | -2.0751 |
| 312 | SLU 80 | -9.01 | -16.26 | 91.39 | -7.7528 | -0.2134 | -2.0374 |
| 312 | SLU 81 | -9.53 | -17.31 | 97.25 | -8.2244 | -0.2256 | -2.1532 |
| 312 | SLU 82 | -9.36 | -16.73 | 94.33 | -8.0221 | -0.2232 | -2.1155 |
| 312 | SLU 83 | -9.55 | -17.37 | 97.53 | -8.2453 | -0.2259 | -2.1589 |
| 312 | SLU 84 | -9.38 | -16.79 | 94.6 | -8.0429 | -0.2235 | -2.1212 |
| 312 | SLE RA 1 | -6.13 | -11.5 | 64.25 | -5.3891 | -0.1426 | -1.3872 |
| 312 | SLE RA 2 | -5.95 | -10.86 | 61 | -5.1643 | -0.1398 | -1.3453 |
| 312 | SLE RA 3 | -6.2 | -11.65 | 64.97 | -5.4456 | -0.1439 | -1.4017 |
| 312 | SLE RA 4 | -6.09 | -11.26 | 63.02 | -5.3107 | -0.1422 | -1.3766 |
| 312 | SLE RA 5 | -5.96 | -10.9 | 61.18 | -5.1782 | -0.14 | -1.3491 |
| 312 | SLE RA 6 | -6.21 | -11.69 | 65.15 | -5.4595 | -0.144 | -1.4055 |
| 312 | SLE RA 7 | -6.1 | -11.3 | 63.2 | -5.3246 | -0.1424 | -1.3804 |
| 312 | SLE RA 8 | -6.17 | -11.59 | 64.62 | -5.4169 | -0.1429 | -1.3948 |
| 312 | SLE RA 9 | -6.06 | -11.2 | 62.66 | -5.282 | -0.1413 | -1.3697 |
| 312 | SLE RA 10 | -6.56 | -11.78 | 66.43 | -5.6481 | -0.1559 | -1.4846 |
| 312 | SLE RA 11 | -6.82 | -12.57 | 70.4 | -5.9294 | -0.16 | -1.541 |
| 312 | SLE RA 12 | -6.7 | -12.19 | 68.45 | -5.7945 | -0.1583 | -1.5159 |
| 312 | SLE RA 13 | -6.58 | -11.83 | 66.61 | -5.662 | -0.1561 | -1.4885 |
| 312 | SLE RA 14 | -6.83 | -12.62 | 70.58 | -5.9433 | -0.1602 | -1.5449 |
| 312 | SLE RA 15 | -6.72 | -12.23 | 68.63 | -5.8084 | -0.1585 | -1.5197 |
| 312 | SLE RA 16 | -6.79 | -12.52 | 70.05 | -5.9007 | -0.1591 | -1.5342 |
| 312 | SLE RA 17 | -6.67 | -12.13 | 68.1 | -5.7658 | -0.1574 | -1.5091 |
| 312 | SLE RA 18 | -7.02 | -12.83 | 72.01 | -6.0802 | -0.1656 | -1.5862 |
| 312 | SLE RA 19 | -6.91 | -12.44 | 70.05 | -5.9453 | -0.164 | -1.5611 |
| 312 | SLE RA 20 | -7.04 | -12.87 | 72.19 | -6.0941 | -0.1658 | -1.5901 |
| 312 | SLE RA 21 | -6.92 | -12.48 | 70.24 | -5.9592 | -0.1641 | -1.5649 |
| 312 | SLE FR 1 | -6.13 | -11.5 | 64.25 | -5.3891 | -0.1426 | -1.3872 |
| 312 | SLE FR 2 | -6.1 | -11.37 | 63.6 | -5.3442 | -0.142 | -1.3788 |
| 312 | SLE FR 3 | -6.14 | -11.52 | 64.32 | -5.3947 | -0.1426 | -1.3887 |
| 312 | SLE FR 4 | -6.36 | -11.77 | 65.93 | -5.5515 | -0.1489 | -1.4385 |
| 312 | SLE FR 5 | -6.41 | -11.92 | 66.65 | -5.602 | -0.1495 | -1.4484 |
| 312 | SLE FR 6 | -6.58 | -12.16 | 68.13 | -5.7347 | -0.1541 | -1.4867 |
| 312 | SLE QP 1 | -6.13 | -11.5 | 64.25 | -5.3891 | -0.1426 | -1.3872 |
| 312 | SLE QP 2 | -6.4 | -11.9 | 66.58 | -5.5965 | -0.1495 | -1.4469 |
| 312 | SLD 1 | -1.15 | -7.37 | 37.92 | -2.5776 | 0.0399 | -0.2515 |
| 312 | SLD 2 | -1.15 | -7.37 | 37.92 | -2.5776 | 0.0399 | -0.2515 |
| 312 | SLD 3 | -2.22 | -10.36 | 51.45 | -3.5615 | 0.0112 | -0.5008 |
| 312 | SLD 4 | -2.22 | -10.36 | 51.45 | -3.5615 | 0.0112 | -0.5008 |
| 312 | SLD 5 | -3.21 | -6 | 37.45 | -3.1985 | -0.0492 | -0.7101 |
| 312 | SLD 6 | -3.21 | -6 | 37.45 | -3.1985 | -0.0492 | -0.7101 |
| 312 | SLD 7 | -6.76 | -15.98 | 82.56 | -6.4783 | -0.1447 | -1.5412 |
| 312 | SLD 8 | -6.76 | -15.98 | 82.56 | -6.4783 | -0.1447 | -1.5412 |
| 312 | SLD 9 | -6.03 | -7.82 | 50.59 | -4.7147 | -0.1542 | -1.3526 |
| 312 | SLD 10 | -6.03 | -7.82 | 50.59 | -4.7147 | -0.1542 | -1.3526 |
| 312 | SLD 11 | -9.59 | -17.8 | 95.7 | -7.9944 | -0.2497 | -2.1836 |
| 312 | SLD 12 | -9.59 | -17.8 | 95.7 | -7.9944 | -0.2497 | -2.1836 |
| 312 | SLD 13 | -10.58 | -13.44 | 81.7 | -7.6314 | -0.3101 | -2.393 |
| 312 | SLD 14 | -10.58 | -13.44 | 81.7 | -7.6314 | -0.3101 | -2.393 |
| 312 | SLD 15 | -11.65 | -16.43 | 95.23 | -8.6153 | -0.3388 | -2.6423 |
| 312 | SLD 16 | -11.65 | -16.43 | 95.23 | -8.6153 | -0.3388 | -2.6423 |
| 312 | SLV 1 | 5.7 | -1.31 | -0.09 | 1.3965 | 0.2866 | 1.3104 |
| 312 | SLV 2 | 5.7 | -1.31 | -0.09 | 1.3965 | 0.2866 | 1.3104 |
| 312 | SLV 3 | 3.18 | -8.3 | 31.65 | -0.924 | 0.218 | 0.722 |
| 312 | SLV 4 | 3.18 | -8.3 | 31.65 | -0.924 | 0.218 | 0.722 |
| 312 | SLV 5 | 1.05 | 1.87 | -1.56 | 0.0209 | 0.0854 | 0.2727 |
| 312 | SLV 6 | 1.05 | 1.87 | -1.56 | 0.0209 | 0.0854 | 0.2727 |
| 312 | SLV 7 | -7.35 | -21.41 | 104.23 | -7.7142 | -0.1432 | -1.6886 |
| 312 | SLV 8 | -7.35 | -21.41 | 104.23 | -7.7142 | -0.1432 | -1.6886 |
| 312 | SLV 9 | -5.45 | -2.39 | 28.92 | -3.4788 | -0.1557 | -1.2051 |
| 312 | SLV 10 | -5.45 | -2.39 | 28.92 | -3.4788 | -0.1557 | -1.2051 |
| 312 | SLV 11 | -13.85 | -25.67 | 134.71 | -11.2138 | -0.3843 | -3.1665 |
| 312 | SLV 12 | -13.85 | -25.67 | 134.71 | -11.2138 | -0.3843 | -3.1665 |
| 312 | SLV 13 | -15.97 | -15.5 | 101.51 | -10.269 | -0.517 | -3.6158 |
| 312 | SLV 14 | -15.97 | -15.5 | 101.51 | -10.269 | -0.517 | -3.6158 |
| 312 | SLV 15 | -18.49 | -22.48 | 133.24 | -12.5895 | -0.5855 | -4.2042 |
| 312 | SLV 16 | -18.49 | -22.48 | 133.24 | -12.5895 | -0.5855 | -4.2042 |
| 313 | SLU 1 | 0.21 | 0.46 | 35.35 | -0.0538 | 0.0212 | 0.0002 |
| 313 | SLU 2 | 0.21 | 0.45 | 35.41 | -0.054 | 0.0211 | 0.0002 |
| 313 | SLU 3 | 0.22 | 0.46 | 35.92 | -0.0558 | 0.0217 | 0.0002 |
| 313 | SLU 4 | 0.22 | 0.46 | 35.96 | -0.056 | 0.0215 | 0.0002 |
| 313 | SLU 5 | 0.21 | 0.45 | 35.44 | -0.0554 | 0.021 | 0.0002 |
| 313 | SLU 6 | 0.22 | 0.46 | 35.96 | -0.0572 | 0.0216 | 0.0003 |
| 313 | SLU 7 | 0.22 | 0.46 | 36 | -0.0574 | 0.0215 | 0.0003 |
| 313 | SLU 8 | 0.21 | 0.45 | 35.43 | -0.0566 | 0.0212 | 0.0002 |
| 313 | SLU 9 | 0.21 | 0.44 | 35.46 | -0.0567 | 0.0211 | 0.0002 |
| 313 | SLU 10 | 0.24 | 0.46 | 41.01 | -0.0599 | 0.0244 | 0.0003 |
| 313 | SLU 11 | 0.25 | 0.47 | 41.53 | -0.0617 | 0.025 | 0.0003 |
| 313 | SLU 12 | 0.25 | 0.47 | 41.56 | -0.0619 | 0.0249 | 0.0003 |
| 313 | SLU 13 | 0.24 | 0.46 | 41.05 | -0.0613 | 0.0244 | 0.0003 |
| 313 | SLU 14 | 0.25 | 0.47 | 41.57 | -0.0631 | 0.025 | 0.0003 |
| 313 | SLU 15 | 0.25 | 0.47 | 41.6 | -0.0633 | 0.0249 | 0.0003 |
| 313 | SLU 16 | 0.25 | 0.45 | 41.03 | -0.0625 | 0.0245 | 0.0003 |

| Nodo | Cont. | Reazione a traslazione | | | Reazione a rotazione | | |
|---|---|---|---|---|---|---|---|
| Ind. | N.br. | x | y | z | x | y | z |
| 313 | SLU 17 | 0.25 | 0.45 | 41.06 | -0.0626 | 0.0244 | 0.0003 |
| 313 | SLU 18 | 0.26 | 0.47 | 43.35 | -0.0622 | 0.026 | 0.0003 |
| 313 | SLU 19 | 0.26 | 0.47 | 43.39 | -0.0623 | 0.0259 | 0.0003 |
| 313 | SLU 20 | 0.26 | 0.46 | 43.39 | -0.0636 | 0.026 | 0.0003 |
| 313 | SLU 21 | 0.26 | 0.46 | 43.43 | -0.0637 | 0.0259 | 0.0003 |
| 313 | SLU 22 | 0.24 | 0.46 | 40.43 | -0.0597 | 0.0243 | 0.0003 |
| 313 | SLU 23 | 0.24 | 0.46 | 40.49 | -0.0599 | 0.0242 | 0.0003 |
| 313 | SLU 24 | 0.25 | 0.47 | 41 | -0.0617 | 0.0248 | 0.0003 |
| 313 | SLU 25 | 0.25 | 0.47 | 41.04 | -0.0619 | 0.0246 | 0.0003 |
| 313 | SLU 26 | 0.24 | 0.45 | 40.52 | -0.0613 | 0.0241 | 0.0003 |
| 313 | SLU 27 | 0.25 | 0.46 | 41.04 | -0.0632 | 0.0247 | 0.0003 |
| 313 | SLU 28 | 0.25 | 0.46 | 41.08 | -0.0633 | 0.0246 | 0.0003 |
| 313 | SLU 29 | 0.24 | 0.45 | 40.51 | -0.0625 | 0.0243 | 0.0003 |
| 313 | SLU 30 | 0.24 | 0.45 | 40.54 | -0.0626 | 0.0242 | 0.0003 |
| 313 | SLU 31 | 0.28 | 0.47 | 46.09 | -0.0658 | 0.0275 | 0.0003 |
| 313 | SLU 32 | 0.28 | 0.48 | 46.61 | -0.0676 | 0.0281 | 0.0003 |
| 313 | SLU 33 | 0.28 | 0.48 | 46.64 | -0.0678 | 0.028 | 0.0003 |
| 313 | SLU 34 | 0.28 | 0.46 | 46.13 | -0.0672 | 0.0275 | 0.0003 |
| 313 | SLU 35 | 0.28 | 0.47 | 46.65 | -0.0691 | 0.0281 | 0.0003 |
| 313 | SLU 36 | 0.28 | 0.47 | 46.68 | -0.0692 | 0.028 | 0.0003 |
| 313 | SLU 37 | 0.28 | 0.46 | 46.11 | -0.0684 | 0.0276 | 0.0003 |
| 313 | SLU 38 | 0.28 | 0.46 | 46.14 | -0.0685 | 0.0275 | 0.0003 |
| 313 | SLU 39 | 0.29 | 0.47 | 48.43 | -0.0681 | 0.0291 | 0.0003 |
| 313 | SLU 40 | 0.29 | 0.47 | 48.47 | -0.0682 | 0.029 | 0.0003 |
| 313 | SLU 41 | 0.29 | 0.47 | 48.47 | -0.0695 | 0.0291 | 0.0003 |
| 313 | SLU 42 | 0.29 | 0.47 | 48.51 | -0.0696 | 0.029 | 0.0003 |
| 313 | SLU 43 | 0.26 | 0.59 | 44.21 | -0.0679 | 0.0266 | 0.0003 |
| 313 | SLU 44 | 0.26 | 0.59 | 44.27 | -0.0681 | 0.0264 | 0.0003 |
| 313 | SLU 45 | 0.27 | 0.6 | 44.79 | -0.0699 | 0.027 | 0.0003 |
| 313 | SLU 46 | 0.27 | 0.6 | 44.82 | -0.0701 | 0.0269 | 0.0003 |
| 313 | SLU 47 | 0.26 | 0.58 | 44.31 | -0.0695 | 0.0263 | 0.0003 |
| 313 | SLU 48 | 0.27 | 0.59 | 44.83 | -0.0713 | 0.0269 | 0.0003 |
| 313 | SLU 49 | 0.27 | 0.59 | 44.86 | -0.0715 | 0.0268 | 0.0003 |
| 313 | SLU 50 | 0.27 | 0.58 | 44.29 | -0.0707 | 0.0265 | 0.0003 |
| 313 | SLU 51 | 0.27 | 0.58 | 44.32 | -0.0708 | 0.0264 | 0.0003 |
| 313 | SLU 52 | 0.3 | 0.6 | 49.87 | -0.074 | 0.0297 | 0.0003 |
| 313 | SLU 53 | 0.3 | 0.61 | 50.39 | -0.0758 | 0.0303 | 0.0003 |
| 313 | SLU 54 | 0.3 | 0.61 | 50.42 | -0.076 | 0.0302 | 0.0003 |
| 313 | SLU 55 | 0.3 | 0.59 | 49.91 | -0.0754 | 0.0297 | 0.0003 |
| 313 | SLU 56 | 0.3 | 0.6 | 50.43 | -0.0772 | 0.0303 | 0.0003 |
| 313 | SLU 57 | 0.3 | 0.6 | 50.46 | -0.0774 | 0.0302 | 0.0003 |
| 313 | SLU 58 | 0.3 | 0.59 | 49.89 | -0.0766 | 0.0298 | 0.0003 |
| 313 | SLU 59 | 0.3 | 0.59 | 49.93 | -0.0767 | 0.0297 | 0.0003 |
| 313 | SLU 60 | 0.31 | 0.6 | 52.22 | -0.0763 | 0.0313 | 0.0004 |
| 313 | SLU 61 | 0.31 | 0.6 | 52.25 | -0.0764 | 0.0312 | 0.0004 |
| 313 | SLU 62 | 0.31 | 0.6 | 52.26 | -0.0777 | 0.0313 | 0.0004 |
| 313 | SLU 63 | 0.31 | 0.6 | 52.29 | -0.0778 | 0.0312 | 0.0004 |
| 313 | SLU 64 | 0.3 | 0.6 | 49.29 | -0.0738 | 0.0297 | 0.0003 |
| 313 | SLU 65 | 0.29 | 0.6 | 49.35 | -0.074 | 0.0295 | 0.0003 |
| 313 | SLU 66 | 0.3 | 0.6 | 49.87 | -0.0759 | 0.0301 | 0.0003 |
| 313 | SLU 67 | 0.3 | 0.6 | 49.9 | -0.076 | 0.03 | 0.0003 |
| 313 | SLU 68 | 0.3 | 0.59 | 49.39 | -0.0754 | 0.0294 | 0.0003 |
| 313 | SLU 69 | 0.3 | 0.6 | 49.91 | -0.0773 | 0.03 | 0.0003 |
| 313 | SLU 70 | 0.3 | 0.6 | 49.94 | -0.0774 | 0.0299 | 0.0003 |
| 313 | SLU 71 | 0.3 | 0.59 | 49.37 | -0.0766 | 0.0296 | 0.0003 |
| 313 | SLU 72 | 0.3 | 0.59 | 49.4 | -0.0767 | 0.0295 | 0.0003 |
| 313 | SLU 73 | 0.33 | 0.6 | 54.95 | -0.0799 | 0.0328 | 0.0004 |
| 313 | SLU 74 | 0.33 | 0.61 | 55.47 | -0.0818 | 0.0334 | 0.0004 |
| 313 | SLU 75 | 0.33 | 0.61 | 55.5 | -0.0819 | 0.0333 | 0.0004 |
| 313 | SLU 76 | 0.33 | 0.6 | 54.99 | -0.0813 | 0.0328 | 0.0004 |
| 313 | SLU 77 | 0.33 | 0.61 | 55.51 | -0.0832 | 0.0334 | 0.0004 |
| 313 | SLU 78 | 0.33 | 0.61 | 55.54 | -0.0833 | 0.0333 | 0.0004 |
| 313 | SLU 79 | 0.33 | 0.59 | 54.97 | -0.0825 | 0.0329 | 0.0004 |
| 313 | SLU 80 | 0.33 | 0.59 | 55.01 | -0.0826 | 0.0328 | 0.0004 |
| 313 | SLU 81 | 0.34 | 0.61 | 57.3 | -0.0822 | 0.0344 | 0.0004 |
| 313 | SLU 82 | 0.34 | 0.61 | 57.33 | -0.0823 | 0.0343 | 0.0004 |
| 313 | SLU 83 | 0.34 | 0.6 | 57.34 | -0.0836 | 0.0344 | 0.0004 |
| 313 | SLU 84 | 0.34 | 0.6 | 57.37 | -0.0837 | 0.0343 | 0.0004 |
| 313 | SLE RA 1 | 0.22 | 0.46 | 36.8 | -0.0554 | 0.0221 | 0.0003 |
| 313 | SLE RA 2 | 0.22 | 0.46 | 36.84 | -0.0556 | 0.022 | 0.0003 |
| 313 | SLE RA 3 | 0.22 | 0.46 | 37.18 | -0.0568 | 0.0224 | 0.0003 |
| 313 | SLE RA 4 | 0.22 | 0.46 | 37.21 | -0.0569 | 0.0223 | 0.0003 |
| 313 | SLE RA 5 | 0.22 | 0.45 | 36.86 | -0.0565 | 0.022 | 0.0003 |
| 313 | SLE RA 6 | 0.22 | 0.46 | 37.21 | -0.0578 | 0.0224 | 0.0003 |
| 313 | SLE RA 7 | 0.22 | 0.46 | 37.23 | -0.0579 | 0.0223 | 0.0003 |
| 313 | SLE RA 8 | 0.22 | 0.45 | 36.85 | -0.0573 | 0.0221 | 0.0003 |
| 313 | SLE RA 9 | 0.22 | 0.45 | 36.87 | -0.0574 | 0.022 | 0.0003 |
| 313 | SLE RA 10 | 0.24 | 0.46 | 40.57 | -0.0595 | 0.0242 | 0.0003 |
| 313 | SLE RA 11 | 0.25 | 0.47 | 40.92 | -0.0608 | 0.0246 | 0.0003 |
| 313 | SLE RA 12 | 0.25 | 0.47 | 40.94 | -0.0609 | 0.0246 | 0.0003 |
| 313 | SLE RA 13 | 0.24 | 0.46 | 40.6 | -0.0605 | 0.0242 | 0.0003 |
| 313 | SLE RA 14 | 0.25 | 0.46 | 40.95 | -0.0617 | 0.0246 | 0.0003 |
| 313 | SLE RA 15 | 0.25 | 0.46 | 40.97 | -0.0618 | 0.0245 | 0.0003 |
| 313 | SLE RA 16 | 0.24 | 0.46 | 40.59 | -0.0612 | 0.0243 | 0.0003 |
| 313 | SLE RA 17 | 0.24 | 0.46 | 40.61 | -0.0613 | 0.0243 | 0.0003 |
| 313 | SLE RA 18 | 0.25 | 0.47 | 42.14 | -0.0611 | 0.0253 | 0.0003 |
| 313 | SLE RA 19 | 0.25 | 0.47 | 42.16 | -0.0612 | 0.0253 | 0.0003 |
| 313 | SLE RA 20 | 0.25 | 0.46 | 42.16 | -0.062 | 0.0253 | 0.0003 |

| Nodo | Cont. | Reazione a traslazione | | | Reazione a rotazione | | |
|---|---|---|---|---|---|---|---|
| Ind. | N.br. | x | y | z | x | y | z |
| 313 | SLE RA 21 | 0.25 | 0.46 | 42.19 | -0.0621 | 0.0252 | 0.0003 |
| 313 | SLE FR 1 | 0.22 | 0.46 | 36.8 | -0.0554 | 0.0221 | 0.0003 |
| 313 | SLE FR 2 | 0.22 | 0.46 | 36.81 | -0.0555 | 0.0221 | 0.0003 |
| 313 | SLE FR 3 | 0.22 | 0.46 | 36.81 | -0.0558 | 0.0221 | 0.0003 |
| 313 | SLE FR 4 | 0.23 | 0.46 | 38.41 | -0.0572 | 0.0231 | 0.0003 |
| 313 | SLE FR 5 | 0.23 | 0.46 | 38.41 | -0.0575 | 0.0231 | 0.0003 |
| 313 | SLE FR 6 | 0.24 | 0.46 | 39.47 | -0.0582 | 0.0237 | 0.0003 |
| 313 | SLE QP 1 | 0.22 | 0.46 | 36.8 | -0.0554 | 0.0221 | 0.0003 |
| 313 | SLE QP 2 | 0.23 | 0.46 | 38.4 | -0.0571 | 0.0231 | 0.0003 |
| 313 | SLD 1 | 0.25 | 4.52 | 34.61 | -0.2549 | 0.0325 | 0.0004 |
| 313 | SLD 2 | 0.25 | 4.52 | 34.61 | -0.2549 | 0.0325 | 0.0004 |
| 313 | SLD 3 | 0.32 | 1.83 | 36.97 | -0.0859 | 0.0387 | 0.0003 |
| 313 | SLD 4 | 0.32 | 1.83 | 36.97 | -0.0859 | 0.0387 | 0.0003 |
| 313 | SLD 5 | 0.13 | 5.75 | 33.69 | -0.3729 | 0.0166 | 0.0005 |
| 313 | SLD 6 | 0.13 | 5.75 | 33.69 | -0.3729 | 0.0166 | 0.0005 |
| 313 | SLD 7 | 0.36 | -3.2 | 41.55 | 0.1907 | 0.0371 | 0.0001 |
| 313 | SLD 8 | 0.36 | -3.2 | 41.55 | 0.1907 | 0.0371 | 0.0001 |
| 313 | SLD 9 | 0.1 | 4.12 | 35.26 | -0.3049 | 0.0091 | 0.0004 |
| 313 | SLD 10 | 0.1 | 4.12 | 35.26 | -0.3049 | 0.0091 | 0.0004 |
| 313 | SLD 11 | 0.33 | -4.83 | 43.12 | 0.2587 | 0.0295 | 0 |
| 313 | SLD 12 | 0.33 | -4.83 | 43.12 | 0.2587 | 0.0295 | 0 |
| 313 | SLD 13 | 0.14 | -0.91 | 39.83 | -0.0284 | 0.0075 | 0.0002 |
| 313 | SLD 14 | 0.14 | -0.91 | 39.83 | -0.0284 | 0.0075 | 0.0002 |
| 313 | SLD 15 | 0.21 | -3.6 | 42.19 | 0.1407 | 0.0136 | 0.0001 |
| 313 | SLD 16 | 0.21 | -3.6 | 42.19 | 0.1407 | 0.0136 | 0.0001 |
| 313 | SLV 1 | 0.28 | 9.8 | 29.31 | -0.5143 | 0.0446 | 0.0006 |
| 313 | SLV 2 | 0.28 | 9.8 | 29.31 | -0.5143 | 0.0446 | 0.0006 |
| 313 | SLV 3 | 0.45 | 3.55 | 35.04 | -0.1196 | 0.0591 | 0.0004 |
| 313 | SLV 4 | 0.45 | 3.55 | 35.04 | -0.1196 | 0.0591 | 0.0004 |
| 313 | SLV 5 | 0 | 12.74 | 26.99 | -0.7929 | 0.0075 | 0.0008 |
| 313 | SLV 6 | 0 | 12.74 | 26.99 | -0.7929 | 0.0075 | 0.0008 |
| 313 | SLV 7 | 0.54 | -8.09 | 46.07 | 0.5228 | 0.0559 | -0.0001 |
| 313 | SLV 8 | 0.54 | -8.09 | 46.07 | 0.5228 | 0.0559 | -0.0001 |
| 313 | SLV 9 | -0.08 | 9.01 | 30.73 | -0.637 | -0.0097 | 0.0007 |
| 313 | SLV 10 | -0.08 | 9.01 | 30.73 | -0.637 | -0.0097 | 0.0007 |
| 313 | SLV 11 | 0.46 | -11.82 | 49.81 | 0.6786 | 0.0386 | -0.0003 |
| 313 | SLV 12 | 0.46 | -11.82 | 49.81 | 0.6786 | 0.0386 | -0.0003 |
| 313 | SLV 13 | 0.01 | -2.63 | 41.77 | 0.0053 | -0.0129 | 0.0002 |
| 313 | SLV 14 | 0.01 | -2.63 | 41.77 | 0.0053 | -0.0129 | 0.0002 |
| 313 | SLV 15 | 0.18 | -8.88 | 47.49 | 0.4 | 0.0016 | -0.0001 |
| 313 | SLV 16 | 0.18 | -8.88 | 47.49 | 0.4 | 0.0016 | -0.0001 |
| 314 | SLU 1 | 0 | -4.88 | 21.48 | 0.6191 | -0.0012 | 0 |
| 314 | SLU 2 | 0 | -4.87 | 21.44 | 0.6176 | -0.0012 | 0 |
| 314 | SLU 3 | 0 | -5.01 | 22.02 | 0.6429 | -0.0012 | 0 |
| 314 | SLU 4 | 0 | -5.01 | 21.99 | 0.642 | -0.0012 | 0 |
| 314 | SLU 5 | 0 | -4.95 | 21.75 | 0.6321 | -0.0012 | 0 |
| 314 | SLU 6 | 0 | -5.1 | 22.33 | 0.6575 | -0.0011 | 0 |
| 314 | SLU 7 | 0 | -5.09 | 22.31 | 0.6566 | -0.0011 | 0 |
| 314 | SLU 8 | 0 | -5.05 | 22.11 | 0.6482 | -0.0011 | 0 |
| 314 | SLU 9 | 0 | -5.04 | 22.08 | 0.6473 | -0.0011 | 0 |
| 314 | SLU 10 | -0.01 | -6 | 25.26 | 0.7401 | -0.0015 | 0 |
| 314 | SLU 11 | -0.01 | -6.15 | 25.84 | 0.7655 | -0.0015 | 0 |
| 314 | SLU 12 | -0.01 | -6.14 | 25.81 | 0.7646 | -0.0015 | 0 |
| 314 | SLU 13 | -0.01 | -6.09 | 25.57 | 0.7546 | -0.0014 | 0 |
| 314 | SLU 14 | -0.01 | -6.23 | 26.15 | 0.78 | -0.0014 | 0 |
| 314 | SLU 15 | -0.01 | -6.23 | 26.13 | 0.7791 | -0.0014 | 0 |
| 314 | SLU 16 | -0.01 | -6.18 | 25.93 | 0.7707 | -0.0014 | 0 |
| 314 | SLU 17 | -0.01 | -6.17 | 25.9 | 0.7698 | -0.0014 | 0 |
| 314 | SLU 18 | -0.01 | -6.5 | 26.93 | 0.7942 | -0.0016 | 0 |
| 314 | SLU 19 | -0.01 | -6.49 | 26.91 | 0.7932 | -0.0016 | 0 |
| 314 | SLU 20 | -0.01 | -6.58 | 27.25 | 0.8087 | -0.0015 | 0 |
| 314 | SLU 21 | -0.01 | -6.58 | 27.22 | 0.8078 | -0.0015 | 0 |
| 314 | SLU 22 | -0.01 | -5.84 | 24.81 | 0.7316 | -0.0014 | 0 |
| 314 | SLU 23 | -0.01 | -5.83 | 24.77 | 0.7301 | -0.0014 | 0 |
| 314 | SLU 24 | -0.01 | -5.97 | 25.35 | 0.7555 | -0.0014 | 0 |
| 314 | SLU 25 | -0.01 | -5.97 | 25.33 | 0.7545 | -0.0014 | 0 |
| 314 | SLU 26 | -0.01 | -5.91 | 25.09 | 0.7446 | -0.0014 | 0 |
| 314 | SLU 27 | 0 | -6.06 | 25.67 | 0.77 | -0.0013 | 0 |
| 314 | SLU 28 | -0.01 | -6.05 | 25.64 | 0.7691 | -0.0013 | 0 |
| 314 | SLU 29 | 0 | -6 | 25.44 | 0.7607 | -0.0013 | 0 |
| 314 | SLU 30 | 0 | -6 | 25.42 | 0.7598 | -0.0013 | 0 |
| 314 | SLU 31 | -0.01 | -6.96 | 28.59 | 0.8526 | -0.0017 | 0 |
| 314 | SLU 32 | -0.01 | -7.1 | 29.17 | 0.878 | -0.0016 | 0 |
| 314 | SLU 33 | -0.01 | -7.1 | 29.15 | 0.8771 | -0.0017 | 0 |
| 314 | SLU 34 | -0.01 | -7.04 | 28.91 | 0.8671 | -0.0016 | 0 |
| 314 | SLU 35 | -0.01 | -7.19 | 29.49 | 0.8925 | -0.0016 | 0 |
| 314 | SLU 36 | -0.01 | -7.18 | 29.46 | 0.8916 | -0.0016 | 0 |
| 314 | SLU 37 | -0.01 | -7.14 | 29.26 | 0.8832 | -0.0016 | 0 |
| 314 | SLU 38 | -0.01 | -7.13 | 29.24 | 0.8823 | -0.0016 | 0 |
| 314 | SLU 39 | -0.01 | -7.45 | 30.27 | 0.9067 | -0.0018 | 0 |
| 314 | SLU 40 | -0.01 | -7.45 | 30.24 | 0.9057 | -0.0018 | 0 |
| 314 | SLU 41 | -0.01 | -7.54 | 30.58 | 0.9212 | -0.0017 | 0 |
| 314 | SLU 42 | -0.01 | -7.53 | 30.56 | 0.9203 | -0.0017 | 0 |
| 314 | SLU 43 | -0.01 | -6.01 | 26.78 | 0.7663 | -0.0015 | 0 |
| 314 | SLU 44 | -0.01 | -6.01 | 26.74 | 0.7647 | -0.0015 | 0 |
| 314 | SLU 45 | -0.01 | -6.15 | 27.32 | 0.7901 | -0.0015 | 0 |
| 314 | SLU 46 | -0.01 | -6.14 | 27.29 | 0.7892 | -0.0015 | 0 |
| 314 | SLU 47 | -0.01 | -6.09 | 27.05 | 0.7793 | -0.0015 | 0 |

| Nodo | Cont. | Reazione a traslazione | | | Reazione a rotazione | | |
|---|---|---|---|---|---|---|---|
| Ind. | N.br. | x | y | z | x | y | z |
| 314 | SLU 48 | -0.01 | -6.23 | 27.63 | 0.8046 | -0.0014 | 0 |
| 314 | SLU 49 | -0.01 | -6.23 | 27.61 | 0.8037 | -0.0014 | 0 |
| 314 | SLU 50 | -0.01 | -6.18 | 27.41 | 0.7954 | -0.0014 | 0 |
| 314 | SLU 51 | -0.01 | -6.18 | 27.38 | 0.7944 | -0.0014 | 0 |
| 314 | SLU 52 | -0.01 | -7.14 | 30.56 | 0.8873 | -0.0018 | 0 |
| 314 | SLU 53 | -0.01 | -7.28 | 31.14 | 0.9126 | -0.0017 | 0 |
| 314 | SLU 54 | -0.01 | -7.28 | 31.11 | 0.9117 | -0.0018 | 0 |
| 314 | SLU 55 | -0.01 | -7.22 | 30.87 | 0.9018 | -0.0017 | 0 |
| 314 | SLU 56 | -0.01 | -7.37 | 31.45 | 0.9272 | -0.0017 | 0 |
| 314 | SLU 57 | -0.01 | -7.36 | 31.43 | 0.9263 | -0.0017 | 0 |
| 314 | SLU 58 | -0.01 | -7.31 | 31.23 | 0.9179 | -0.0017 | 0 |
| 314 | SLU 59 | -0.01 | -7.31 | 31.2 | 0.917 | -0.0017 | 0 |
| 314 | SLU 60 | -0.01 | -7.63 | 32.23 | 0.9413 | -0.0019 | 0 |
| 314 | SLU 61 | -0.01 | -7.63 | 32.21 | 0.9404 | -0.0019 | 0 |
| 314 | SLU 62 | -0.01 | -7.72 | 32.55 | 0.9559 | -0.0018 | 0 |
| 314 | SLU 63 | -0.01 | -7.71 | 32.52 | 0.9549 | -0.0018 | 0 |
| 314 | SLU 64 | -0.01 | -6.97 | 30.11 | 0.8788 | -0.0017 | 0 |
| 314 | SLU 65 | -0.01 | -6.96 | 30.07 | 0.8772 | -0.0017 | 0 |
| 314 | SLU 66 | -0.01 | -7.11 | 30.65 | 0.9026 | -0.0017 | 0 |
| 314 | SLU 67 | -0.01 | -7.1 | 30.63 | 0.9017 | -0.0017 | 0 |
| 314 | SLU 68 | -0.01 | -7.05 | 30.39 | 0.8918 | -0.0017 | 0 |
| 314 | SLU 69 | -0.01 | -7.19 | 30.97 | 0.9171 | -0.0016 | 0 |
| 314 | SLU 70 | -0.01 | -7.19 | 30.94 | 0.9162 | -0.0016 | 0 |
| 314 | SLU 71 | -0.01 | -7.14 | 30.74 | 0.9079 | -0.0016 | 0 |
| 314 | SLU 72 | -0.01 | -7.13 | 30.72 | 0.9069 | -0.0016 | 0 |
| 314 | SLU 73 | -0.01 | -8.1 | 33.89 | 0.9998 | -0.002 | 0 |
| 314 | SLU 74 | -0.01 | -8.24 | 34.47 | 1.0251 | -0.0019 | 0 |
| 314 | SLU 75 | -0.01 | -8.23 | 34.45 | 1.0242 | -0.002 | 0 |
| 314 | SLU 76 | -0.01 | -8.18 | 34.21 | 1.0143 | -0.0019 | 0 |
| 314 | SLU 77 | -0.01 | -8.32 | 34.79 | 1.0397 | -0.0019 | 0 |
| 314 | SLU 78 | -0.01 | -8.32 | 34.76 | 1.0388 | -0.0019 | 0 |
| 314 | SLU 79 | -0.01 | -8.27 | 34.56 | 1.0304 | -0.0019 | 0 |
| 314 | SLU 80 | -0.01 | -8.27 | 34.54 | 1.0295 | -0.0019 | 0 |
| 314 | SLU 81 | -0.01 | -8.59 | 35.57 | 1.0538 | -0.0021 | 0 |
| 314 | SLU 82 | -0.01 | -8.58 | 35.54 | 1.0529 | -0.0021 | 0 |
| 314 | SLU 83 | -0.01 | -8.67 | 35.88 | 1.0684 | -0.002 | 0 |
| 314 | SLU 84 | -0.01 | -8.67 | 35.86 | 1.0674 | -0.002 | 0 |
| 314 | SLE RA 1 | 0 | -5.15 | 22.43 | 0.6513 | -0.0013 | 0 |
| 314 | SLE RA 2 | 0 | -5.15 | 22.4 | 0.6502 | -0.0013 | 0 |
| 314 | SLE RA 3 | 0 | -5.24 | 22.79 | 0.6671 | -0.0013 | 0 |
| 314 | SLE RA 4 | 0 | -5.24 | 22.77 | 0.6665 | -0.0013 | 0 |
| 314 | SLE RA 5 | 0 | -5.2 | 22.61 | 0.6599 | -0.0012 | 0 |
| 314 | SLE RA 6 | 0 | -5.3 | 23 | 0.6768 | -0.0012 | 0 |
| 314 | SLE RA 7 | 0 | -5.3 | 22.99 | 0.6762 | -0.0012 | 0 |
| 314 | SLE RA 8 | 0 | -5.26 | 22.85 | 0.6706 | -0.0012 | 0 |
| 314 | SLE RA 9 | 0 | -5.26 | 22.83 | 0.67 | -0.0012 | 0 |
| 314 | SLE RA 10 | -0.01 | -5.9 | 24.95 | 0.7319 | -0.0014 | 0 |
| 314 | SLE RA 11 | -0.01 | -6 | 25.34 | 0.7488 | -0.0014 | 0 |
| 314 | SLE RA 12 | -0.01 | -5.99 | 25.32 | 0.7482 | -0.0014 | 0 |
| 314 | SLE RA 13 | -0.01 | -5.96 | 25.16 | 0.7416 | -0.0014 | 0 |
| 314 | SLE RA 14 | -0.01 | -6.05 | 25.55 | 0.7585 | -0.0014 | 0 |
| 314 | SLE RA 15 | -0.01 | -6.05 | 25.53 | 0.7579 | -0.0014 | 0 |
| 314 | SLE RA 16 | -0.01 | -6.02 | 25.4 | 0.7523 | -0.0014 | 0 |
| 314 | SLE RA 17 | -0.01 | -6.02 | 25.38 | 0.7517 | -0.0014 | 0 |
| 314 | SLE RA 18 | -0.01 | -6.23 | 26.07 | 0.768 | -0.0015 | 0 |
| 314 | SLE RA 19 | -0.01 | -6.23 | 26.05 | 0.7673 | -0.0015 | 0 |
| 314 | SLE RA 20 | -0.01 | -6.29 | 26.28 | 0.7776 | -0.0015 | 0 |
| 314 | SLE RA 21 | -0.01 | -6.28 | 26.26 | 0.777 | -0.0015 | 0 |
| 314 | SLE FR 1 | 0 | -5.15 | 22.43 | 0.6513 | -0.0013 | 0 |
| 314 | SLE FR 2 | 0 | -5.15 | 22.42 | 0.6511 | -0.0013 | 0 |
| 314 | SLE FR 3 | 0 | -5.18 | 22.51 | 0.6551 | -0.0013 | 0 |
| 314 | SLE FR 4 | -0.01 | -5.48 | 23.52 | 0.6861 | -0.0013 | 0 |
| 314 | SLE FR 5 | -0.01 | -5.5 | 23.6 | 0.6901 | -0.0013 | 0 |
| 314 | SLE FR 6 | -0.01 | -5.69 | 24.25 | 0.7096 | -0.0014 | 0 |
| 314 | SLE QP 1 | 0 | -5.15 | 22.43 | 0.6513 | -0.0013 | 0 |
| 314 | SLE QP 2 | -0.01 | -5.48 | 23.52 | 0.6863 | -0.0013 | 0 |
| 314 | SLD 1 | -0.14 | -2.13 | 21.79 | 0.542 | 0.0213 | -0.0002 |
| 314 | SLD 2 | -0.14 | -2.13 | 21.79 | 0.542 | 0.0213 | -0.0002 |
| 314 | SLD 3 | -0.14 | -7.19 | 24 | 0.755 | 0.0228 | -0.0002 |
| 314 | SLD 4 | -0.14 | -7.19 | 24 | 0.755 | 0.0228 | -0.0002 |
| 314 | SLD 5 | -0.05 | 3.19 | 19.65 | 0.32 | 0.0031 | -0.0001 |
| 314 | SLD 6 | -0.05 | 3.19 | 19.65 | 0.32 | 0.0031 | -0.0001 |
| 314 | SLD 7 | -0.04 | -13.66 | 27.02 | 1.0299 | 0.0082 | 0 |
| 314 | SLD 8 | -0.04 | -13.66 | 27.02 | 1.0299 | 0.0082 | 0 |
| 314 | SLD 9 | 0.03 | 2.7 | 20.02 | 0.3427 | -0.0109 | 0.0001 |
| 314 | SLD 10 | 0.03 | 2.7 | 20.02 | 0.3427 | -0.0109 | 0.0001 |
| 314 | SLD 11 | 0.04 | -14.15 | 27.39 | 1.0525 | -0.0058 | 0.0001 |
| 314 | SLD 12 | 0.04 | -14.15 | 27.39 | 1.0525 | -0.0058 | 0.0001 |
| 314 | SLD 13 | 0.13 | -3.77 | 23.04 | 0.6175 | -0.0255 | 0.0003 |
| 314 | SLD 14 | 0.13 | -3.77 | 23.04 | 0.6175 | -0.0255 | 0.0003 |
| 314 | SLD 15 | 0.13 | -8.82 | 25.25 | 0.8305 | -0.024 | 0.0003 |
| 314 | SLD 16 | 0.13 | -8.82 | 25.25 | 0.8305 | -0.024 | 0.0003 |
| 314 | SLV 1 | -0.36 | 2.36 | 19.49 | 0.3473 | 0.055 | -0.0006 |
| 314 | SLV 2 | -0.36 | 2.36 | 19.49 | 0.3473 | 0.055 | -0.0006 |
| 314 | SLV 3 | -0.35 | -9.45 | 24.63 | 0.8461 | 0.0589 | -0.0006 |
| 314 | SLV 4 | -0.35 | -9.45 | 24.63 | 0.8461 | 0.0589 | -0.0006 |
| 314 | SLV 5 | -0.12 | 14.8 | 14.52 | -0.1719 | 0.0097 | -0.0002 |
| 314 | SLV 6 | -0.12 | 14.8 | 14.52 | -0.1719 | 0.0097 | -0.0002 |

| Nodo | Cont. | Reazione a traslazione | | | Reazione a rotazione | | |
|---|---|---|---|---|---|---|---|
| Ind. | N.br. | x | y | z | x | y | z |
| 314 | SLV 7 | -0.09 | -24.59 | 31.65 | 1.4907 | 0.0226 | -0.0001 |
| 314 | SLV 8 | -0.09 | -24.59 | 31.65 | 1.4907 | 0.0226 | -0.0001 |
| 314 | SLV 9 | 0.08 | 13.64 | 15.39 | -0.1181 | -0.0253 | 0.0002 |
| 314 | SLV 10 | 0.08 | 13.64 | 15.39 | -0.1181 | -0.0253 | 0.0002 |
| 314 | SLV 11 | 0.11 | -25.75 | 32.52 | 1.5444 | -0.0124 | 0.0002 |
| 314 | SLV 12 | 0.11 | -25.75 | 32.52 | 1.5444 | -0.0124 | 0.0002 |
| 314 | SLV 13 | 0.34 | -1.5 | 22.41 | 0.5264 | -0.0616 | 0.0006 |
| 314 | SLV 14 | 0.34 | -1.5 | 22.41 | 0.5264 | -0.0616 | 0.0006 |
| 314 | SLV 15 | 0.35 | -13.32 | 27.55 | 1.0252 | -0.0577 | 0.0006 |
| 314 | SLV 16 | 0.35 | -13.32 | 27.55 | 1.0252 | -0.0577 | 0.0006 |
| 315 | SLU 1 | 0.01 | -13.42 | 37.86 | 0.8426 | 0.0014 | 0 |
| 315 | SLU 2 | 0.01 | -13.44 | 37.86 | 0.8437 | 0.0014 | 0 |
| 315 | SLU 3 | 0.01 | -14.01 | 38.83 | 0.8753 | 0.0014 | 0 |
| 315 | SLU 4 | 0.01 | -14.03 | 38.84 | 0.876 | 0.0014 | 0 |
| 315 | SLU 5 | 0.01 | -13.88 | 38.31 | 0.8647 | 0.0014 | 0 |
| 315 | SLU 6 | 0.01 | -14.46 | 39.28 | 0.8963 | 0.0013 | 0 |
| 315 | SLU 7 | 0.01 | -14.47 | 39.28 | 0.8969 | 0.0013 | 0 |
| 315 | SLU 8 | 0.01 | -14.3 | 38.74 | 0.8846 | 0.0013 | 0 |
| 315 | SLU 9 | 0.01 | -14.31 | 38.75 | 0.8852 | 0.0013 | 0 |
| 315 | SLU 10 | 0.01 | -16.05 | 44.31 | 1.0033 | 0.0018 | 0 |
| 315 | SLU 11 | 0.01 | -16.63 | 45.28 | 1.0349 | 0.0017 | 0 |
| 315 | SLU 12 | 0.01 | -16.64 | 45.28 | 1.0355 | 0.0017 | 0 |
| 315 | SLU 13 | 0.01 | -16.49 | 44.75 | 1.0243 | 0.0017 | 0 |
| 315 | SLU 14 | 0.01 | -17.07 | 45.72 | 1.0558 | 0.0017 | 0 |
| 315 | SLU 15 | 0.01 | -17.08 | 45.73 | 1.0565 | 0.0017 | 0 |
| 315 | SLU 16 | 0.01 | -16.91 | 45.19 | 1.0441 | 0.0016 | 0 |
| 315 | SLU 17 | 0.01 | -16.92 | 45.19 | 1.0448 | 0.0016 | 0 |
| 315 | SLU 18 | 0.01 | -17.15 | 47.07 | 1.0706 | 0.0019 | 0 |
| 315 | SLU 19 | 0.01 | -17.16 | 47.07 | 1.0712 | 0.0019 | 0 |
| 315 | SLU 20 | 0.01 | -17.59 | 47.51 | 1.0915 | 0.0018 | 0 |
| 315 | SLU 21 | 0.01 | -17.6 | 47.51 | 1.0922 | 0.0018 | 0 |
| 315 | SLU 22 | 0.01 | -15.88 | 43.74 | 0.9925 | 0.0017 | 0 |
| 315 | SLU 23 | 0.01 | -15.91 | 43.74 | 0.9936 | 0.0017 | 0 |
| 315 | SLU 24 | 0.01 | -16.48 | 44.71 | 1.0251 | 0.0017 | 0 |
| 315 | SLU 25 | 0.01 | -16.49 | 44.72 | 1.0258 | 0.0017 | 0 |
| 315 | SLU 26 | 0.01 | -16.35 | 44.19 | 1.0145 | 0.0016 | 0 |
| 315 | SLU 27 | 0.01 | -16.92 | 45.16 | 1.0461 | 0.0016 | 0 |
| 315 | SLU 28 | 0.01 | -16.93 | 45.16 | 1.0468 | 0.0016 | 0 |
| 315 | SLU 29 | 0.01 | -16.76 | 44.62 | 1.0344 | 0.0015 | 0 |
| 315 | SLU 30 | 0.01 | -16.78 | 44.63 | 1.0351 | 0.0015 | 0 |
| 315 | SLU 31 | 0.01 | -18.52 | 50.19 | 1.1531 | 0.002 | 0 |
| 315 | SLU 32 | 0.01 | -19.09 | 51.16 | 1.1847 | 0.002 | 0 |
| 315 | SLU 33 | 0.01 | -19.1 | 51.16 | 1.1854 | 0.002 | 0 |
| 315 | SLU 34 | 0.01 | -18.96 | 50.63 | 1.1741 | 0.0019 | 0 |
| 315 | SLU 35 | 0.01 | -19.53 | 51.6 | 1.2057 | 0.0019 | 0 |
| 315 | SLU 36 | 0.01 | -19.54 | 51.61 | 1.2063 | 0.0019 | 0 |
| 315 | SLU 37 | 0.01 | -19.37 | 51.07 | 1.194 | 0.0019 | 0 |
| 315 | SLU 38 | 0.01 | -19.39 | 51.07 | 1.1946 | 0.0019 | 0 |
| 315 | SLU 39 | 0.01 | -19.61 | 52.95 | 1.2204 | 0.0022 | 0 |
| 315 | SLU 40 | 0.01 | -19.63 | 52.95 | 1.2211 | 0.0022 | 0 |
| 315 | SLU 41 | 0.01 | -20.05 | 53.39 | 1.2414 | 0.0021 | 0 |
| 315 | SLU 42 | 0.01 | -20.07 | 53.39 | 1.242 | 0.0021 | 0 |
| 315 | SLU 43 | 0.01 | -16.6 | 47.2 | 1.0441 | 0.0018 | 0 |
| 315 | SLU 44 | 0.01 | -16.62 | 47.21 | 1.0452 | 0.0018 | 0 |
| 315 | SLU 45 | 0.01 | -17.2 | 48.18 | 1.0767 | 0.0017 | 0 |
| 315 | SLU 46 | 0.01 | -17.21 | 48.18 | 1.0774 | 0.0017 | 0 |
| 315 | SLU 47 | 0.01 | -17.06 | 47.65 | 1.0661 | 0.0017 | 0 |
| 315 | SLU 48 | 0.01 | -17.64 | 48.62 | 1.0977 | 0.0017 | 0 |
| 315 | SLU 49 | 0.01 | -17.65 | 48.62 | 1.0984 | 0.0017 | 0 |
| 315 | SLU 50 | 0.01 | -17.48 | 48.08 | 1.086 | 0.0016 | 0 |
| 315 | SLU 51 | 0.01 | -17.49 | 48.09 | 1.0867 | 0.0016 | 0 |
| 315 | SLU 52 | 0.01 | -19.23 | 53.65 | 1.2047 | 0.0021 | 0 |
| 315 | SLU 53 | 0.01 | -19.81 | 54.62 | 1.2363 | 0.0021 | 0 |
| 315 | SLU 54 | 0.01 | -19.82 | 54.63 | 1.237 | 0.0021 | 0 |
| 315 | SLU 55 | 0.01 | -19.68 | 54.09 | 1.2257 | 0.002 | 0 |
| 315 | SLU 56 | 0.01 | -20.25 | 55.06 | 1.2573 | 0.002 | 0 |
| 315 | SLU 57 | 0.01 | -20.26 | 55.07 | 1.2579 | 0.002 | 0 |
| 315 | SLU 58 | 0.01 | -20.09 | 54.53 | 1.2456 | 0.0019 | 0 |
| 315 | SLU 59 | 0.01 | -20.11 | 54.53 | 1.2462 | 0.0019 | 0 |
| 315 | SLU 60 | 0.01 | -20.33 | 56.41 | 1.272 | 0.0023 | 0 |
| 315 | SLU 61 | 0.01 | -20.34 | 56.41 | 1.2727 | 0.0023 | 0 |
| 315 | SLU 62 | 0.01 | -20.77 | 56.85 | 1.293 | 0.0022 | 0 |
| 315 | SLU 63 | 0.01 | -20.78 | 56.85 | 1.2936 | 0.0022 | 0 |
| 315 | SLU 64 | 0.01 | -19.06 | 53.08 | 1.1939 | 0.002 | 0 |
| 315 | SLU 65 | 0.01 | -19.09 | 53.09 | 1.195 | 0.002 | 0 |
| 315 | SLU 66 | 0.01 | -19.66 | 54.05 | 1.2266 | 0.002 | 0 |
| 315 | SLU 67 | 0.01 | -19.67 | 54.06 | 1.2272 | 0.002 | 0 |
| 315 | SLU 68 | 0.01 | -19.53 | 53.53 | 1.216 | 0.0019 | 0 |
| 315 | SLU 69 | 0.01 | -20.1 | 54.5 | 1.2475 | 0.0019 | 0 |
| 315 | SLU 70 | 0.01 | -20.11 | 54.5 | 1.2482 | 0.0019 | 0 |
| 315 | SLU 71 | 0.01 | -19.94 | 53.96 | 1.2358 | 0.0019 | 0 |
| 315 | SLU 72 | 0.01 | -19.96 | 53.97 | 1.2365 | 0.0019 | 0 |
| 315 | SLU 73 | 0.01 | -21.7 | 59.53 | 1.3546 | 0.0024 | 0 |
| 315 | SLU 74 | 0.01 | -22.27 | 60.5 | 1.3861 | 0.0023 | 0 |
| 315 | SLU 75 | 0.01 | -22.28 | 60.51 | 1.3868 | 0.0023 | 0 |
| 315 | SLU 76 | 0.01 | -22.14 | 59.97 | 1.3755 | 0.0023 | 0 |
| 315 | SLU 77 | 0.01 | -22.71 | 60.94 | 1.4071 | 0.0022 | 0 |
| 315 | SLU 78 | 0.01 | -22.72 | 60.95 | 1.4077 | 0.0023 | 0 |

| Nodo | Cont. | Reazione a traslazione | | | Reazione a rotazione | | |
|---|---|---|---|---|---|---|---|
| Ind. | N.br. | x | y | z | x | y | z |
| 315 | SLU 79 | 0.01 | -22.56 | 60.41 | 1.3954 | 0.0022 | 0 |
| 315 | SLU 80 | 0.01 | -22.57 | 60.41 | 1.396 | 0.0022 | 0 |
| 315 | SLU 81 | 0.01 | -22.79 | 62.29 | 1.4218 | 0.0025 | 0 |
| 315 | SLU 82 | 0.01 | -22.81 | 62.29 | 1.4225 | 0.0025 | 0 |
| 315 | SLU 83 | 0.01 | -23.23 | 62.73 | 1.4428 | 0.0024 | 0 |
| 315 | SLU 84 | 0.01 | -23.25 | 62.73 | 1.4435 | 0.0024 | 0 |
| 315 | SLE RA 1 | 0.01 | -14.12 | 39.54 | 0.8854 | 0.0015 | 0 |
| 315 | SLE RA 2 | 0.01 | -14.14 | 39.54 | 0.8862 | 0.0015 | 0 |
| 315 | SLE RA 3 | 0.01 | -14.52 | 40.19 | 0.9072 | 0.0015 | 0 |
| 315 | SLE RA 4 | 0.01 | -14.53 | 40.19 | 0.9077 | 0.0015 | 0 |
| 315 | SLE RA 5 | 0.01 | -14.43 | 39.84 | 0.9002 | 0.0015 | 0 |
| 315 | SLE RA 6 | 0.01 | -14.81 | 40.48 | 0.9212 | 0.0014 | 0 |
| 315 | SLE RA 7 | 0.01 | -14.82 | 40.49 | 0.9216 | 0.0014 | 0 |
| 315 | SLE RA 8 | 0.01 | -14.71 | 40.13 | 0.9134 | 0.0014 | 0 |
| 315 | SLE RA 9 | 0.01 | -14.72 | 40.13 | 0.9138 | 0.0014 | 0 |
| 315 | SLE RA 10 | 0.01 | -15.88 | 43.84 | 0.9926 | 0.0017 | 0 |
| 315 | SLE RA 11 | 0.01 | -16.26 | 44.49 | 1.0136 | 0.0017 | 0 |
| 315 | SLE RA 12 | 0.01 | -16.27 | 44.49 | 1.014 | 0.0017 | 0 |
| 315 | SLE RA 13 | 0.01 | -16.17 | 44.13 | 1.0065 | 0.0017 | 0 |
| 315 | SLE RA 14 | 0.01 | -16.55 | 44.78 | 1.0276 | 0.0017 | 0 |
| 315 | SLE RA 15 | 0.01 | -16.56 | 44.78 | 1.028 | 0.0017 | 0 |
| 315 | SLE RA 16 | 0.01 | -16.45 | 44.42 | 1.0198 | 0.0016 | 0 |
| 315 | SLE RA 17 | 0.01 | -16.46 | 44.43 | 1.0202 | 0.0016 | 0 |
| 315 | SLE RA 18 | 0.01 | -16.61 | 45.68 | 1.0374 | 0.0018 | 0 |
| 315 | SLE RA 19 | 0.01 | -16.62 | 45.68 | 1.0379 | 0.0018 | 0 |
| 315 | SLE RA 20 | 0.01 | -16.9 | 45.97 | 1.0514 | 0.0018 | 0 |
| 315 | SLE RA 21 | 0.01 | -16.91 | 45.97 | 1.0518 | 0.0018 | 0 |
| 315 | SLE FR 1 | 0.01 | -14.12 | 39.54 | 0.8854 | 0.0015 | 0 |
| 315 | SLE FR 2 | 0.01 | -14.13 | 39.54 | 0.8856 | 0.0015 | 0 |
| 315 | SLE FR 3 | 0.01 | -14.24 | 39.66 | 0.891 | 0.0015 | 0 |
| 315 | SLE FR 4 | 0.01 | -14.87 | 41.38 | 0.9312 | 0.0016 | 0 |
| 315 | SLE FR 5 | 0.01 | -14.99 | 41.5 | 0.9366 | 0.0016 | 0 |
| 315 | SLE FR 6 | 0.01 | -15.37 | 42.61 | 0.9614 | 0.0017 | 0 |
| 315 | SLE QP 1 | 0.01 | -14.12 | 39.54 | 0.8854 | 0.0015 | 0 |
| 315 | SLE QP 2 | 0.01 | -14.87 | 41.38 | 0.931 | 0.0016 | 0 |
| 315 | SLD 1 | -0.07 | -11.38 | 38.42 | 0.763 | 0.019 | -0.0002 |
| 315 | SLD 2 | -0.07 | -11.38 | 38.42 | 0.763 | 0.019 | -0.0002 |
| 315 | SLD 3 | -0.08 | -16.67 | 42.45 | 1.0144 | 0.0171 | -0.0002 |
| 315 | SLD 4 | -0.08 | -16.67 | 42.45 | 1.0144 | 0.0171 | -0.0002 |
| 315 | SLD 5 | -0.01 | -5.79 | 34.38 | 0.4993 | 0.0098 | -0.0001 |
| 315 | SLD 6 | -0.01 | -5.79 | 34.38 | 0.4993 | 0.0098 | -0.0001 |
| 315 | SLD 7 | -0.03 | -23.44 | 47.81 | 1.3374 | 0.0033 | -0.0001 |
| 315 | SLD 8 | -0.03 | -23.44 | 47.81 | 1.3374 | 0.0033 | -0.0001 |
| 315 | SLD 9 | 0.04 | -6.3 | 34.94 | 0.5247 | -0.0001 | 0 |
| 315 | SLD 10 | 0.04 | -6.3 | 34.94 | 0.5247 | -0.0001 | 0 |
| 315 | SLD 11 | 0.02 | -23.95 | 48.38 | 1.3628 | -0.0066 | 0.0001 |
| 315 | SLD 12 | 0.02 | -23.95 | 48.38 | 1.3628 | -0.0066 | 0.0001 |
| 315 | SLD 13 | 0.09 | -13.07 | 40.31 | 0.8476 | -0.0139 | 0.0002 |
| 315 | SLD 14 | 0.09 | -13.07 | 40.31 | 0.8476 | -0.0139 | 0.0002 |
| 315 | SLD 15 | 0.08 | -18.36 | 44.34 | 1.0991 | -0.0158 | 0.0002 |
| 315 | SLD 16 | 0.08 | -18.36 | 44.34 | 1.0991 | -0.0158 | 0.0002 |
| 315 | SLV 1 | -0.23 | -6.55 | 34.25 | 0.5296 | 0.0455 | -0.0006 |
| 315 | SLV 2 | -0.23 | -6.55 | 34.25 | 0.5296 | 0.0455 | -0.0006 |
| 315 | SLV 3 | -0.24 | -19.16 | 44.05 | 1.131 | 0.0406 | -0.0005 |
| 315 | SLV 4 | -0.24 | -19.16 | 44.05 | 1.131 | 0.0406 | -0.0005 |
| 315 | SLV 5 | -0.04 | 6.75 | 24.37 | -0.1016 | 0.0222 | -0.0002 |
| 315 | SLV 6 | -0.04 | 6.75 | 24.37 | -0.1016 | 0.0222 | -0.0002 |
| 315 | SLV 7 | -0.09 | -35.28 | 57.04 | 1.9032 | 0.0059 | -0.0001 |
| 315 | SLV 8 | -0.09 | -35.28 | 57.04 | 1.9032 | 0.0059 | -0.0001 |
| 315 | SLV 9 | 0.1 | 5.54 | 25.71 | -0.0411 | -0.0027 | 0.0001 |
| 315 | SLV 10 | 0.1 | 5.54 | 25.71 | -0.0411 | -0.0027 | 0.0001 |
| 315 | SLV 11 | 0.05 | -36.49 | 58.38 | 1.9636 | -0.019 | 0.0002 |
| 315 | SLV 12 | 0.05 | -36.49 | 58.38 | 1.9636 | -0.019 | 0.0002 |
| 315 | SLV 13 | 0.26 | -10.58 | 38.71 | 0.7311 | -0.0374 | 0.0005 |
| 315 | SLV 14 | 0.26 | -10.58 | 38.71 | 0.7311 | -0.0374 | 0.0005 |
| 315 | SLV 15 | 0.24 | -23.19 | 48.51 | 1.3325 | -0.0423 | 0.0005 |
| 315 | SLV 16 | 0.24 | -23.19 | 48.51 | 1.3325 | -0.0423 | 0.0005 |
| 316 | SLU 1 | 0.19 | -2.58 | 36.31 | 0.198 | 0.0309 | -0.0001 |
| 316 | SLU 2 | 0.19 | -2.58 | 36.35 | 0.1979 | 0.0308 | -0.0001 |
| 316 | SLU 3 | 0.19 | -2.63 | 36.74 | 0.2005 | 0.0313 | -0.0001 |
| 316 | SLU 4 | 0.19 | -2.63 | 36.77 | 0.2004 | 0.0313 | -0.0001 |
| 316 | SLU 5 | 0.19 | -2.59 | 36.17 | 0.1967 | 0.0307 | -0.0001 |
| 316 | SLU 6 | 0.19 | -2.64 | 36.56 | 0.1992 | 0.0312 | -0.0001 |
| 316 | SLU 7 | 0.19 | -2.64 | 36.58 | 0.1992 | 0.0311 | -0.0001 |
| 316 | SLU 8 | 0.19 | -2.6 | 35.95 | 0.1956 | 0.0306 | 0 |
| 316 | SLU 9 | 0.19 | -2.6 | 35.97 | 0.1955 | 0.0305 | 0 |
| 316 | SLU 10 | 0.22 | -3.06 | 42.09 | 0.2332 | 0.0358 | -0.0001 |
| 316 | SLU 11 | 0.22 | -3.11 | 42.49 | 0.2357 | 0.0363 | -0.0001 |
| 316 | SLU 12 | 0.22 | -3.11 | 42.51 | 0.2357 | 0.0363 | -0.0001 |
| 316 | SLU 13 | 0.22 | -3.07 | 41.91 | 0.232 | 0.0357 | -0.0001 |
| 316 | SLU 14 | 0.22 | -3.12 | 42.3 | 0.2345 | 0.0362 | -0.0001 |
| 316 | SLU 15 | 0.22 | -3.12 | 42.33 | 0.2344 | 0.0361 | -0.0001 |
| 316 | SLU 16 | 0.22 | -3.09 | 41.69 | 0.2308 | 0.0356 | -0.0001 |
| 316 | SLU 17 | 0.22 | -3.08 | 41.71 | 0.2308 | 0.0355 | -0.0001 |
| 316 | SLU 18 | 0.23 | -3.27 | 44.52 | 0.2484 | 0.0381 | -0.0001 |
| 316 | SLU 19 | 0.23 | -3.27 | 44.54 | 0.2483 | 0.038 | -0.0001 |
| 316 | SLU 20 | 0.23 | -3.28 | 44.33 | 0.2472 | 0.0379 | -0.0001 |
| 316 | SLU 21 | 0.23 | -3.28 | 44.36 | 0.2471 | 0.0378 | -0.0001 |

| Nodo | Cont. | Reazione a traslazione | | | Reazione a rotazione | | |
|---|---|---|---|---|---|---|---|
| Ind. | N.br. | x | y | z | x | y | z |
| 316 | SLU 22 | 0.21 | -3.03 | 41.44 | 0.23 | 0.0354 | -0.0001 |
| 316 | SLU 23 | 0.21 | -3.02 | 41.48 | 0.2299 | 0.0353 | -0.0001 |
| 316 | SLU 24 | 0.22 | -3.08 | 41.87 | 0.2324 | 0.0358 | -0.0001 |
| 316 | SLU 25 | 0.22 | -3.08 | 41.9 | 0.2324 | 0.0358 | -0.0001 |
| 316 | SLU 26 | 0.21 | -3.04 | 41.3 | 0.2287 | 0.0352 | -0.0001 |
| 316 | SLU 27 | 0.22 | -3.09 | 41.69 | 0.2312 | 0.0356 | -0.0001 |
| 316 | SLU 28 | 0.22 | -3.09 | 41.71 | 0.2311 | 0.0356 | -0.0001 |
| 316 | SLU 29 | 0.21 | -3.05 | 41.08 | 0.2275 | 0.035 | -0.0001 |
| 316 | SLU 30 | 0.21 | -3.05 | 41.1 | 0.2275 | 0.035 | -0.0001 |
| 316 | SLU 31 | 0.24 | -3.51 | 47.22 | 0.2651 | 0.0403 | -0.0001 |
| 316 | SLU 32 | 0.25 | -3.56 | 47.62 | 0.2677 | 0.0408 | -0.0001 |
| 316 | SLU 33 | 0.25 | -3.56 | 47.64 | 0.2676 | 0.0408 | -0.0001 |
| 316 | SLU 34 | 0.24 | -3.52 | 47.04 | 0.2639 | 0.0401 | -0.0001 |
| 316 | SLU 35 | 0.25 | -3.57 | 47.43 | 0.2665 | 0.0406 | -0.0001 |
| 316 | SLU 36 | 0.25 | -3.57 | 47.46 | 0.2664 | 0.0406 | -0.0001 |
| 316 | SLU 37 | 0.24 | -3.53 | 46.82 | 0.2628 | 0.04 | -0.0001 |
| 316 | SLU 38 | 0.24 | -3.53 | 46.84 | 0.2627 | 0.04 | -0.0001 |
| 316 | SLU 39 | 0.26 | -3.71 | 49.65 | 0.2803 | 0.0425 | -0.0001 |
| 316 | SLU 40 | 0.26 | -3.71 | 49.67 | 0.2803 | 0.0425 | -0.0001 |
| 316 | SLU 41 | 0.26 | -3.73 | 49.46 | 0.2791 | 0.0424 | -0.0001 |
| 316 | SLU 42 | 0.26 | -3.73 | 49.49 | 0.2791 | 0.0423 | -0.0001 |
| 316 | SLU 43 | 0.23 | -3.2 | 45.44 | 0.2465 | 0.0387 | -0.0001 |
| 316 | SLU 44 | 0.23 | -3.2 | 45.48 | 0.2464 | 0.0386 | -0.0001 |
| 316 | SLU 45 | 0.24 | -3.25 | 45.88 | 0.2489 | 0.0391 | -0.0001 |
| 316 | SLU 46 | 0.24 | -3.25 | 45.9 | 0.2489 | 0.039 | -0.0001 |
| 316 | SLU 47 | 0.23 | -3.21 | 45.3 | 0.2451 | 0.0384 | -0.0001 |
| 316 | SLU 48 | 0.24 | -3.26 | 45.69 | 0.2477 | 0.0389 | -0.0001 |
| 316 | SLU 49 | 0.24 | -3.26 | 45.72 | 0.2476 | 0.0389 | -0.0001 |
| 316 | SLU 50 | 0.23 | -3.23 | 45.08 | 0.244 | 0.0383 | -0.0001 |
| 316 | SLU 51 | 0.23 | -3.22 | 45.1 | 0.244 | 0.0383 | -0.0001 |
| 316 | SLU 52 | 0.26 | -3.68 | 51.23 | 0.2816 | 0.0436 | -0.0001 |
| 316 | SLU 53 | 0.27 | -3.73 | 51.62 | 0.2842 | 0.0441 | -0.0001 |
| 316 | SLU 54 | 0.27 | -3.73 | 51.64 | 0.2841 | 0.044 | -0.0001 |
| 316 | SLU 55 | 0.26 | -3.69 | 51.05 | 0.2804 | 0.0434 | -0.0001 |
| 316 | SLU 56 | 0.27 | -3.75 | 51.44 | 0.283 | 0.0439 | -0.0001 |
| 316 | SLU 57 | 0.27 | -3.74 | 51.46 | 0.2829 | 0.0439 | -0.0001 |
| 316 | SLU 58 | 0.26 | -3.71 | 50.82 | 0.2793 | 0.0433 | -0.0001 |
| 316 | SLU 59 | 0.26 | -3.71 | 50.85 | 0.2792 | 0.0433 | -0.0001 |
| 316 | SLU 60 | 0.28 | -3.89 | 53.65 | 0.2968 | 0.0458 | -0.0001 |
| 316 | SLU 61 | 0.28 | -3.89 | 53.67 | 0.2968 | 0.0458 | -0.0001 |
| 316 | SLU 62 | 0.28 | -3.9 | 53.47 | 0.2956 | 0.0456 | -0.0001 |
| 316 | SLU 63 | 0.28 | -3.9 | 53.49 | 0.2955 | 0.0456 | -0.0001 |
| 316 | SLU 64 | 0.26 | -3.65 | 50.57 | 0.2784 | 0.0431 | -0.0001 |
| 316 | SLU 65 | 0.26 | -3.64 | 50.61 | 0.2783 | 0.0431 | -0.0001 |
| 316 | SLU 66 | 0.26 | -3.7 | 51.01 | 0.2809 | 0.0436 | -0.0001 |
| 316 | SLU 67 | 0.26 | -3.7 | 51.03 | 0.2808 | 0.0435 | -0.0001 |
| 316 | SLU 68 | 0.26 | -3.66 | 50.43 | 0.2771 | 0.0429 | -0.0001 |
| 316 | SLU 69 | 0.26 | -3.71 | 50.82 | 0.2797 | 0.0434 | -0.0001 |
| 316 | SLU 70 | 0.26 | -3.71 | 50.85 | 0.2796 | 0.0433 | -0.0001 |
| 316 | SLU 71 | 0.26 | -3.67 | 50.21 | 0.276 | 0.0428 | -0.0001 |
| 316 | SLU 72 | 0.26 | -3.67 | 50.23 | 0.2759 | 0.0427 | -0.0001 |
| 316 | SLU 73 | 0.29 | -4.13 | 56.36 | 0.3136 | 0.0481 | -0.0001 |
| 316 | SLU 74 | 0.29 | -4.18 | 56.75 | 0.3161 | 0.0486 | -0.0001 |
| 316 | SLU 75 | 0.29 | -4.18 | 56.77 | 0.3161 | 0.0485 | -0.0001 |
| 316 | SLU 76 | 0.29 | -4.14 | 56.18 | 0.3124 | 0.0479 | -0.0001 |
| 316 | SLU 77 | 0.29 | -4.19 | 56.57 | 0.3149 | 0.0484 | -0.0001 |
| 316 | SLU 78 | 0.29 | -4.19 | 56.59 | 0.3149 | 0.0483 | -0.0001 |
| 316 | SLU 79 | 0.29 | -4.15 | 55.95 | 0.3112 | 0.0478 | -0.0001 |
| 316 | SLU 80 | 0.29 | -4.15 | 55.98 | 0.3112 | 0.0477 | -0.0001 |
| 316 | SLU 81 | 0.3 | -4.33 | 58.78 | 0.3288 | 0.0503 | -0.0001 |
| 316 | SLU 82 | 0.3 | -4.33 | 58.8 | 0.3287 | 0.0502 | -0.0001 |
| 316 | SLU 83 | 0.3 | -4.35 | 58.6 | 0.3276 | 0.0501 | -0.0001 |
| 316 | SLU 84 | 0.3 | -4.35 | 58.62 | 0.3275 | 0.0501 | -0.0001 |
| 316 | SLE RA 1 | 0.19 | -2.71 | 37.78 | 0.2071 | 0.0322 | -0.0001 |
| 316 | SLE RA 2 | 0.19 | -2.71 | 37.8 | 0.2071 | 0.0322 | -0.0001 |
| 316 | SLE RA 3 | 0.2 | -2.74 | 38.06 | 0.2088 | 0.0325 | -0.0001 |
| 316 | SLE RA 4 | 0.2 | -2.74 | 38.08 | 0.2087 | 0.0325 | -0.0001 |
| 316 | SLE RA 5 | 0.19 | -2.71 | 37.68 | 0.2063 | 0.032 | -0.0001 |
| 316 | SLE RA 6 | 0.2 | -2.75 | 37.94 | 0.208 | 0.0324 | -0.0001 |
| 316 | SLE RA 7 | 0.2 | -2.75 | 37.96 | 0.2079 | 0.0323 | -0.0001 |
| 316 | SLE RA 8 | 0.19 | -2.72 | 37.53 | 0.2055 | 0.032 | -0.0001 |
| 316 | SLE RA 9 | 0.19 | -2.72 | 37.55 | 0.2055 | 0.0319 | -0.0001 |
| 316 | SLE RA 10 | 0.21 | -3.03 | 41.63 | 0.2306 | 0.0355 | -0.0001 |
| 316 | SLE RA 11 | 0.22 | -3.06 | 41.89 | 0.2323 | 0.0358 | -0.0001 |
| 316 | SLE RA 12 | 0.22 | -3.06 | 41.91 | 0.2322 | 0.0358 | -0.0001 |
| 316 | SLE RA 13 | 0.21 | -3.04 | 41.51 | 0.2298 | 0.0354 | -0.0001 |
| 316 | SLE RA 14 | 0.22 | -3.07 | 41.77 | 0.2315 | 0.0357 | -0.0001 |
| 316 | SLE RA 15 | 0.22 | -3.07 | 41.79 | 0.2314 | 0.0357 | -0.0001 |
| 316 | SLE RA 16 | 0.21 | -3.05 | 41.36 | 0.229 | 0.0353 | -0.0001 |
| 316 | SLE RA 17 | 0.21 | -3.04 | 41.38 | 0.229 | 0.0353 | -0.0001 |
| 316 | SLE RA 18 | 0.22 | -3.17 | 43.25 | 0.2407 | 0.037 | -0.0001 |
| 316 | SLE RA 19 | 0.22 | -3.16 | 43.26 | 0.2407 | 0.0369 | -0.0001 |
| 316 | SLE RA 20 | 0.22 | -3.17 | 43.12 | 0.2399 | 0.0368 | -0.0001 |
| 316 | SLE RA 21 | 0.22 | -3.17 | 43.14 | 0.2399 | 0.0368 | -0.0001 |
| 316 | SLE FR 1 | 0.19 | -2.71 | 37.78 | 0.2071 | 0.0322 | -0.0001 |
| 316 | SLE FR 2 | 0.19 | -2.71 | 37.78 | 0.2071 | 0.0322 | -0.0001 |
| 316 | SLE FR 3 | 0.19 | -2.71 | 37.73 | 0.2068 | 0.0322 | -0.0001 |
| 316 | SLE FR 4 | 0.2 | -2.84 | 39.42 | 0.2172 | 0.0336 | -0.0001 |

| Nodo | Cont. | Reazione a traslazione | | | Reazione a rotazione | | |
|---|---|---|---|---|---|---|---|
| Ind. | N.br. | x | y | z | x | y | z |
| 316 | SLE FR 5 | 0.2 | -2.85 | 39.37 | 0.2169 | 0.0336 | -0.0001 |
| 316 | SLE FR 6 | 0.21 | -2.94 | 40.51 | 0.2239 | 0.0346 | -0.0001 |
| 316 | SLE QP 1 | 0.19 | -2.71 | 37.78 | 0.2071 | 0.0322 | -0.0001 |
| 316 | SLE QP 2 | 0.2 | -2.84 | 39.42 | 0.2172 | 0.0336 | -0.0001 |
| 316 | SLD 1 | 0.22 | 1.5 | 33.47 | 0.0055 | 0.0427 | 0 |
| 316 | SLD 2 | 0.22 | 1.5 | 33.47 | 0.0055 | 0.0427 | 0 |
| 316 | SLD 3 | 0.26 | -1.53 | 38.75 | 0.1935 | 0.0483 | -0.0002 |
| 316 | SLD 4 | 0.26 | -1.53 | 38.75 | 0.1935 | 0.0483 | -0.0002 |
| 316 | SLD 5 | 0.16 | 3.05 | 29.63 | -0.1314 | 0.028 | 0.0001 |
| 316 | SLD 6 | 0.16 | 3.05 | 29.63 | -0.1314 | 0.028 | 0.0001 |
| 316 | SLD 7 | 0.27 | -7.04 | 47.22 | 0.4952 | 0.0464 | -0.0003 |
| 316 | SLD 8 | 0.27 | -7.04 | 47.22 | 0.4952 | 0.0464 | -0.0003 |
| 316 | SLD 9 | 0.14 | 1.35 | 31.61 | -0.0608 | 0.0208 | 0.0002 |
| 316 | SLD 10 | 0.14 | 1.35 | 31.61 | -0.0608 | 0.0208 | 0.0002 |
| 316 | SLD 11 | 0.25 | -8.74 | 49.2 | 0.5658 | 0.0393 | -0.0002 |
| 316 | SLD 12 | 0.25 | -8.74 | 49.2 | 0.5658 | 0.0393 | -0.0002 |
| 316 | SLD 13 | 0.15 | -4.16 | 40.08 | 0.2409 | 0.019 | 0 |
| 316 | SLD 14 | 0.15 | -4.16 | 40.08 | 0.2409 | 0.019 | 0 |
| 316 | SLD 15 | 0.18 | -7.19 | 45.36 | 0.4289 | 0.0245 | -0.0001 |
| 316 | SLD 16 | 0.18 | -7.19 | 45.36 | 0.4289 | 0.0245 | -0.0001 |
| 316 | SLV 1 | 0.25 | 7.18 | 25.45 | -0.2735 | 0.0543 | 0 |
| 316 | SLV 2 | 0.25 | 7.18 | 25.45 | -0.2735 | 0.0543 | 0 |
| 316 | SLV 3 | 0.33 | 0.11 | 37.98 | 0.167 | 0.0675 | -0.0003 |
| 316 | SLV 4 | 0.33 | 0.11 | 37.98 | 0.167 | 0.0675 | -0.0003 |
| 316 | SLV 5 | 0.09 | 10.89 | 16.22 | -0.598 | 0.0198 | 0.0004 |
| 316 | SLV 6 | 0.09 | 10.89 | 16.22 | -0.598 | 0.0198 | 0.0004 |
| 316 | SLV 7 | 0.36 | -12.68 | 57.99 | 0.8702 | 0.0638 | -0.0006 |
| 316 | SLV 8 | 0.36 | -12.68 | 57.99 | 0.8702 | 0.0638 | -0.0006 |
| 316 | SLV 9 | 0.04 | 6.99 | 20.84 | -0.4358 | 0.0034 | 0.0005 |
| 316 | SLV 10 | 0.04 | 6.99 | 20.84 | -0.4358 | 0.0034 | 0.0005 |
| 316 | SLV 11 | 0.31 | -16.58 | 62.61 | 1.0325 | 0.0475 | -0.0005 |
| 316 | SLV 12 | 0.31 | -16.58 | 62.61 | 1.0325 | 0.0475 | -0.0005 |
| 316 | SLV 13 | 0.08 | -5.8 | 40.85 | 0.2675 | -0.0003 | 0.0002 |
| 316 | SLV 14 | 0.08 | -5.8 | 40.85 | 0.2675 | -0.0003 | 0.0002 |
| 316 | SLV 15 | 0.16 | -12.87 | 53.38 | 0.7079 | 0.0129 | -0.0001 |
| 316 | SLV 16 | 0.16 | -12.87 | 53.38 | 0.7079 | 0.0129 | -0.0001 |
| 317 | SLU 1 | 0 | -6.74 | 81.33 | 0.2892 | -0.0036 | -0.0001 |
| 317 | SLU 2 | 0 | -6.62 | 80.58 | 0.2831 | -0.0038 | -0.0001 |
| 317 | SLU 3 | 0 | -7.33 | 87.1 | 0.3199 | -0.0038 | -0.0001 |
| 317 | SLU 4 | 0 | -7.26 | 86.65 | 0.3162 | -0.0039 | -0.0001 |
| 317 | SLU 5 | 0 | -7.18 | 85.7 | 0.3132 | -0.0039 | -0.0001 |
| 317 | SLU 6 | 0 | -7.89 | 92.22 | 0.35 | -0.0038 | -0.0001 |
| 317 | SLU 7 | 0 | -7.82 | 91.77 | 0.3464 | -0.0039 | -0.0001 |
| 317 | SLU 8 | 0 | -7.86 | 91.57 | 0.3495 | -0.0037 | -0.0001 |
| 317 | SLU 9 | 0 | -7.79 | 91.12 | 0.3458 | -0.0038 | -0.0001 |
| 317 | SLU 10 | 0 | -7.8 | 94.42 | 0.3303 | -0.0046 | -0.0001 |
| 317 | SLU 11 | 0 | -8.51 | 100.94 | 0.3671 | -0.0045 | -0.0001 |
| 317 | SLU 12 | 0 | -8.44 | 100.49 | 0.3634 | -0.0046 | -0.0001 |
| 317 | SLU 13 | 0 | -8.36 | 99.54 | 0.3604 | -0.0046 | -0.0001 |
| 317 | SLU 14 | 0 | -9.07 | 106.06 | 0.3972 | -0.0046 | -0.0001 |
| 317 | SLU 15 | 0 | -9 | 105.61 | 0.3935 | -0.0047 | -0.0001 |
| 317 | SLU 16 | 0 | -9.03 | 105.41 | 0.3967 | -0.0044 | -0.0001 |
| 317 | SLU 17 | 0 | -8.96 | 104.96 | 0.393 | -0.0046 | -0.0001 |
| 317 | SLU 18 | 0 | -8.42 | 101.1 | 0.3566 | -0.0047 | -0.0001 |
| 317 | SLU 19 | 0 | -8.35 | 100.65 | 0.3529 | -0.0048 | -0.0001 |
| 317 | SLU 20 | 0 | -8.98 | 106.22 | 0.3868 | -0.0047 | -0.0001 |
| 317 | SLU 21 | 0 | -8.91 | 105.77 | 0.3831 | -0.0048 | -0.0001 |
| 317 | SLU 22 | 0 | -8.03 | 95.92 | 0.3452 | -0.0043 | -0.0001 |
| 317 | SLU 23 | 0 | -7.92 | 95.17 | 0.3391 | -0.0045 | -0.0001 |
| 317 | SLU 24 | 0 | -8.62 | 101.69 | 0.3759 | -0.0044 | -0.0001 |
| 317 | SLU 25 | 0 | -8.55 | 101.24 | 0.3722 | -0.0046 | -0.0001 |
| 317 | SLU 26 | 0 | -8.48 | 100.29 | 0.3692 | -0.0045 | -0.0001 |
| 317 | SLU 27 | 0 | -9.18 | 106.81 | 0.406 | -0.0045 | -0.0001 |
| 317 | SLU 28 | 0 | -9.11 | 106.36 | 0.4023 | -0.0046 | -0.0001 |
| 317 | SLU 29 | 0 | -9.15 | 106.16 | 0.4055 | -0.0044 | -0.0001 |
| 317 | SLU 30 | 0 | -9.08 | 105.71 | 0.4018 | -0.0045 | -0.0001 |
| 317 | SLU 31 | 0 | -9.09 | 109.01 | 0.3862 | -0.0052 | -0.0001 |
| 317 | SLU 32 | 0 | -9.8 | 115.53 | 0.423 | -0.0052 | -0.0001 |
| 317 | SLU 33 | 0 | -9.73 | 115.08 | 0.4193 | -0.0053 | -0.0001 |
| 317 | SLU 34 | 0 | -9.65 | 114.13 | 0.4164 | -0.0053 | -0.0001 |
| 317 | SLU 35 | 0 | -10.36 | 120.65 | 0.4532 | -0.0052 | -0.0001 |
| 317 | SLU 36 | 0 | -10.29 | 120.2 | 0.4495 | -0.0054 | -0.0001 |
| 317 | SLU 37 | 0 | -10.33 | 120 | 0.4527 | -0.0051 | -0.0001 |
| 317 | SLU 38 | 0 | -10.26 | 119.55 | 0.449 | -0.0053 | -0.0001 |
| 317 | SLU 39 | 0 | -9.71 | 115.69 | 0.4126 | -0.0054 | -0.0001 |
| 317 | SLU 40 | 0 | -9.64 | 115.24 | 0.4089 | -0.0055 | -0.0001 |
| 317 | SLU 41 | 0 | -10.27 | 120.81 | 0.4427 | -0.0054 | -0.0001 |
| 317 | SLU 42 | 0 | -10.2 | 120.36 | 0.439 | -0.0055 | -0.0001 |
| 317 | SLU 43 | 0 | -8.31 | 100.72 | 0.3568 | -0.0044 | -0.0001 |
| 317 | SLU 44 | 0 | -8.2 | 99.97 | 0.3507 | -0.0047 | -0.0001 |
| 317 | SLU 45 | 0 | -8.91 | 106.49 | 0.3875 | -0.0046 | -0.0001 |
| 317 | SLU 46 | 0 | -8.84 | 106.04 | 0.3838 | -0.0047 | -0.0001 |
| 317 | SLU 47 | 0 | -8.76 | 105.09 | 0.3808 | -0.0047 | -0.0001 |
| 317 | SLU 48 | 0 | -9.47 | 111.61 | 0.4176 | -0.0047 | -0.0001 |
| 317 | SLU 49 | 0 | -9.4 | 111.16 | 0.4139 | -0.0048 | -0.0001 |
| 317 | SLU 50 | 0 | -9.43 | 110.96 | 0.4171 | -0.0045 | -0.0001 |
| 317 | SLU 51 | 0 | -9.36 | 110.51 | 0.4134 | -0.0047 | -0.0001 |
| 317 | SLU 52 | 0 | -9.38 | 113.81 | 0.3978 | -0.0054 | -0.0001 |

| Nodo | Cont. | Reazione a traslazione | | | Reazione a rotazione | | |
|---|---|---|---|---|---|---|---|
| Ind. | N.br. | x | y | z | x | y | z |
| 317 | SLU 53 | 0 | -10.08 | 120.33 | 0.4346 | -0.0054 | -0.0001 |
| 317 | SLU 54 | 0 | -10.01 | 119.88 | 0.431 | -0.0055 | -0.0001 |
| 317 | SLU 55 | 0 | -9.94 | 118.93 | 0.428 | -0.0054 | -0.0001 |
| 317 | SLU 56 | 0 | -10.64 | 125.45 | 0.4648 | -0.0054 | -0.0001 |
| 317 | SLU 57 | 0 | -10.57 | 125 | 0.4611 | -0.0055 | -0.0001 |
| 317 | SLU 58 | 0 | -10.61 | 124.8 | 0.4643 | -0.0053 | -0.0001 |
| 317 | SLU 59 | 0 | -10.54 | 124.35 | 0.4606 | -0.0054 | -0.0001 |
| 317 | SLU 60 | 0 | -9.99 | 120.49 | 0.4242 | -0.0055 | -0.0001 |
| 317 | SLU 61 | 0 | -9.93 | 120.04 | 0.4205 | -0.0056 | -0.0001 |
| 317 | SLU 62 | 0 | -10.55 | 125.61 | 0.4543 | -0.0056 | -0.0001 |
| 317 | SLU 63 | 0 | -10.49 | 125.16 | 0.4507 | -0.0057 | -0.0001 |
| 317 | SLU 64 | 0 | -9.61 | 115.32 | 0.4128 | -0.0051 | -0.0001 |
| 317 | SLU 65 | 0 | -9.49 | 114.57 | 0.4066 | -0.0053 | -0.0001 |
| 317 | SLU 66 | 0 | -10.2 | 121.09 | 0.4434 | -0.0053 | -0.0001 |
| 317 | SLU 67 | 0 | -10.13 | 120.64 | 0.4398 | -0.0054 | -0.0001 |
| 317 | SLU 68 | 0 | -10.05 | 119.69 | 0.4368 | -0.0054 | -0.0001 |
| 317 | SLU 69 | 0 | -10.76 | 126.21 | 0.4736 | -0.0053 | -0.0001 |
| 317 | SLU 70 | 0 | -10.69 | 125.76 | 0.4699 | -0.0055 | -0.0001 |
| 317 | SLU 71 | 0 | -10.73 | 125.56 | 0.4731 | -0.0052 | -0.0001 |
| 317 | SLU 72 | 0 | -10.66 | 125.11 | 0.4694 | -0.0054 | -0.0001 |
| 317 | SLU 73 | 0 | -10.67 | 128.41 | 0.4538 | -0.0061 | -0.0001 |
| 317 | SLU 74 | 0 | -11.38 | 134.93 | 0.4906 | -0.006 | -0.0001 |
| 317 | SLU 75 | 0 | -11.31 | 134.48 | 0.4869 | -0.0062 | -0.0001 |
| 317 | SLU 76 | 0 | -11.23 | 133.53 | 0.4839 | -0.0061 | -0.0001 |
| 317 | SLU 77 | 0 | -11.94 | 140.05 | 0.5207 | -0.0061 | -0.0001 |
| 317 | SLU 78 | 0 | -11.87 | 139.6 | 0.5171 | -0.0062 | -0.0001 |
| 317 | SLU 79 | 0 | -11.9 | 139.4 | 0.5202 | -0.006 | -0.0001 |
| 317 | SLU 80 | 0 | -11.84 | 138.95 | 0.5165 | -0.0061 | -0.0001 |
| 317 | SLU 81 | 0 | -11.29 | 135.09 | 0.4802 | -0.0062 | -0.0001 |
| 317 | SLU 82 | 0 | -11.22 | 134.64 | 0.4765 | -0.0063 | -0.0001 |
| 317 | SLU 83 | 0 | -11.85 | 140.21 | 0.5103 | -0.0063 | -0.0001 |
| 317 | SLU 84 | 0 | -11.78 | 139.76 | 0.5066 | -0.0064 | -0.0001 |
| 317 | SLE RA 1 | 0 | -7.11 | 85.5 | 0.3052 | -0.0038 | -0.0001 |
| 317 | SLE RA 2 | 0 | -7.03 | 85 | 0.3011 | -0.0039 | -0.0001 |
| 317 | SLE RA 3 | 0 | -7.5 | 89.34 | 0.3257 | -0.0039 | -0.0001 |
| 317 | SLE RA 4 | 0 | -7.46 | 89.04 | 0.3232 | -0.004 | -0.0001 |
| 317 | SLE RA 5 | 0 | -7.4 | 88.41 | 0.3212 | -0.004 | -0.0001 |
| 317 | SLE RA 6 | 0 | -7.87 | 92.76 | 0.3458 | -0.0039 | -0.0001 |
| 317 | SLE RA 7 | 0 | -7.83 | 92.46 | 0.3433 | -0.004 | -0.0001 |
| 317 | SLE RA 8 | 0 | -7.85 | 92.33 | 0.3454 | -0.0039 | -0.0001 |
| 317 | SLE RA 9 | 0 | -7.81 | 92.03 | 0.343 | -0.0039 | -0.0001 |
| 317 | SLE RA 10 | 0 | -7.81 | 94.22 | 0.3326 | -0.0044 | -0.0001 |
| 317 | SLE RA 11 | 0 | -8.29 | 98.57 | 0.3571 | -0.0044 | -0.0001 |
| 317 | SLE RA 12 | 0 | -8.24 | 98.27 | 0.3546 | -0.0045 | -0.0001 |
| 317 | SLE RA 13 | 0 | -8.19 | 97.64 | 0.3527 | -0.0045 | -0.0001 |
| 317 | SLE RA 14 | 0 | -8.66 | 101.98 | 0.3772 | -0.0044 | -0.0001 |
| 317 | SLE RA 15 | 0 | -8.61 | 101.68 | 0.3747 | -0.0045 | -0.0001 |
| 317 | SLE RA 16 | 0 | -8.64 | 101.55 | 0.3769 | -0.0044 | -0.0001 |
| 317 | SLE RA 17 | 0 | -8.59 | 101.25 | 0.3744 | -0.0044 | -0.0001 |
| 317 | SLE RA 18 | 0 | -8.23 | 98.68 | 0.3501 | -0.0045 | -0.0001 |
| 317 | SLE RA 19 | 0 | -8.18 | 98.38 | 0.3477 | -0.0046 | -0.0001 |
| 317 | SLE RA 20 | 0 | -8.6 | 102.09 | 0.3702 | -0.0045 | -0.0001 |
| 317 | SLE RA 21 | 0 | -8.55 | 101.79 | 0.3678 | -0.0046 | -0.0001 |
| 317 | SLE FR 1 | 0 | -7.11 | 85.5 | 0.3052 | -0.0038 | -0.0001 |
| 317 | SLE FR 2 | 0 | -7.09 | 85.4 | 0.3044 | -0.0038 | -0.0001 |
| 317 | SLE FR 3 | 0 | -7.26 | 86.86 | 0.3133 | -0.0038 | -0.0001 |
| 317 | SLE FR 4 | 0 | -7.43 | 89.35 | 0.3179 | -0.004 | -0.0001 |
| 317 | SLE FR 5 | 0 | -7.59 | 90.82 | 0.3267 | -0.004 | -0.0001 |
| 317 | SLE FR 6 | 0 | -7.67 | 92.09 | 0.3277 | -0.0042 | -0.0001 |
| 317 | SLE QP 1 | 0 | -7.11 | 85.5 | 0.3052 | -0.0038 | -0.0001 |
| 317 | SLE QP 2 | 0 | -7.44 | 89.45 | 0.3187 | -0.004 | -0.0001 |
| 317 | SLD 1 | -0.25 | -7.11 | 89.05 | 0.2952 | -0.1475 | -0.0018 |
| 317 | SLD 2 | -0.25 | -7.11 | 89.05 | 0.2952 | -0.1475 | -0.0018 |
| 317 | SLD 3 | -0.23 | -10.02 | 100.97 | 0.4798 | -0.1368 | -0.0015 |
| 317 | SLD 4 | -0.23 | -10.02 | 100.97 | 0.4798 | -0.1368 | -0.0015 |
| 317 | SLD 5 | -0.11 | -2.93 | 71.27 | 0.0315 | -0.0634 | -0.0009 |
| 317 | SLD 6 | -0.11 | -2.93 | 71.27 | 0.0315 | -0.0634 | -0.0009 |
| 317 | SLD 7 | -0.03 | -12.63 | 110.97 | 0.6471 | -0.0275 | -0.0002 |
| 317 | SLD 8 | -0.03 | -12.63 | 110.97 | 0.6471 | -0.0275 | -0.0002 |
| 317 | SLD 9 | 0.03 | -2.25 | 67.93 | -0.0097 | 0.0195 | 0 |
| 317 | SLD 10 | 0.03 | -2.25 | 67.93 | -0.0097 | 0.0195 | 0 |
| 317 | SLD 11 | 0.11 | -11.96 | 107.64 | 0.6059 | 0.0553 | 0.0008 |
| 317 | SLD 12 | 0.11 | -11.96 | 107.64 | 0.6059 | 0.0553 | 0.0008 |
| 317 | SLD 13 | 0.22 | -4.87 | 77.94 | 0.1576 | 0.1288 | 0.0014 |
| 317 | SLD 14 | 0.22 | -4.87 | 77.94 | 0.1576 | 0.1288 | 0.0014 |
| 317 | SLD 15 | 0.25 | -7.78 | 89.85 | 0.3422 | 0.1395 | 0.0016 |
| 317 | SLD 16 | 0.25 | -7.78 | 89.85 | 0.3422 | 0.1395 | 0.0016 |
| 317 | SLV 1 | -0.59 | -6.67 | 88.6 | 0.2635 | -0.3432 | -0.0042 |
| 317 | SLV 2 | -0.59 | -6.67 | 88.6 | 0.2635 | -0.3432 | -0.0042 |
| 317 | SLV 3 | -0.53 | -13.46 | 116.6 | 0.6941 | -0.3163 | -0.0036 |
| 317 | SLV 4 | -0.53 | -13.46 | 116.6 | 0.6941 | -0.3163 | -0.0036 |
| 317 | SLV 5 | -0.27 | 3.09 | 46.74 | -0.3508 | -0.1466 | -0.0022 |
| 317 | SLV 6 | -0.27 | 3.09 | 46.74 | -0.3508 | -0.1466 | -0.0022 |
| 317 | SLV 7 | -0.07 | -19.55 | 140.06 | 1.0843 | -0.0568 | -0.0002 |
| 317 | SLV 8 | -0.07 | -19.55 | 140.06 | 1.0843 | -0.0568 | -0.0002 |
| 317 | SLV 9 | 0.07 | 4.66 | 38.85 | -0.4469 | 0.0488 | 0.0001 |
| 317 | SLV 10 | 0.07 | 4.66 | 38.85 | -0.4469 | 0.0488 | 0.0001 |
| 317 | SLV 11 | 0.27 | -17.98 | 132.17 | 0.9882 | 0.1386 | 0.0021 |

| Nodo | Cont. | Reazione a traslazione | | | Reazione a rotazione | | |
|---|---|---|---|---|---|---|---|
| Ind. | N.br. | x | y | z | x | y | z |
| 317 | SLV 12 | 0.27 | -17.98 | 132.17 | 0.9882 | 0.1386 | 0.0021 |
| 317 | SLV 13 | 0.53 | -1.43 | 62.31 | -0.0567 | 0.3083 | 0.0035 |
| 317 | SLV 14 | 0.53 | -1.43 | 62.31 | -0.0567 | 0.3083 | 0.0035 |
| 317 | SLV 15 | 0.59 | -8.22 | 90.3 | 0.3738 | 0.3352 | 0.0041 |
| 317 | SLV 16 | 0.59 | -8.22 | 90.3 | 0.3738 | 0.3352 | 0.0041 |
| 318 | SLU 1 | 8.3 | -6.07 | 52.63 | 0.0459 | 0.2614 | 0.0003 |
| 318 | SLU 2 | 8.32 | -6.08 | 52.67 | 0.0458 | 0.262 | 0.0003 |
| 318 | SLU 3 | 8.35 | -6.13 | 53.06 | 0.0457 | 0.2631 | 0.0003 |
| 318 | SLU 4 | 8.36 | -6.13 | 53.09 | 0.0457 | 0.2635 | 0.0003 |
| 318 | SLU 5 | 8.21 | -6.03 | 52.16 | 0.0449 | 0.2585 | 0.0003 |
| 318 | SLU 6 | 8.25 | -6.08 | 52.55 | 0.0448 | 0.2596 | 0.0003 |
| 318 | SLU 7 | 8.26 | -6.09 | 52.58 | 0.0448 | 0.26 | 0.0003 |
| 318 | SLU 8 | 8.09 | -5.98 | 51.59 | 0.044 | 0.2544 | 0.0003 |
| 318 | SLU 9 | 8.1 | -5.98 | 51.62 | 0.044 | 0.2548 | 0.0003 |
| 318 | SLU 10 | 9.61 | -7.07 | 60.95 | 0.0543 | 0.3033 | 0.0003 |
| 318 | SLU 11 | 9.64 | -7.13 | 61.34 | 0.0542 | 0.3043 | 0.0003 |
| 318 | SLU 12 | 9.65 | -7.13 | 61.37 | 0.0542 | 0.3047 | 0.0003 |
| 318 | SLU 13 | 9.5 | -7.03 | 60.43 | 0.0534 | 0.2998 | 0.0003 |
| 318 | SLU 14 | 9.53 | -7.08 | 60.82 | 0.0533 | 0.3008 | 0.0003 |
| 318 | SLU 15 | 9.54 | -7.08 | 60.85 | 0.0533 | 0.3012 | 0.0003 |
| 318 | SLU 16 | 9.37 | -6.97 | 59.86 | 0.0525 | 0.2957 | 0.0003 |
| 318 | SLU 17 | 9.38 | -6.98 | 59.89 | 0.0525 | 0.296 | 0.0003 |
| 318 | SLU 18 | 10.14 | -7.5 | 64.44 | 0.058 | 0.3203 | 0.0003 |
| 318 | SLU 19 | 10.15 | -7.5 | 64.47 | 0.0579 | 0.3207 | 0.0003 |
| 318 | SLU 20 | 10.03 | -7.45 | 63.93 | 0.0571 | 0.3168 | 0.0003 |
| 318 | SLU 21 | 10.04 | -7.45 | 63.95 | 0.057 | 0.3172 | 0.0003 |
| 318 | SLU 22 | 9.42 | -6.96 | 59.92 | 0.0532 | 0.2972 | 0.0003 |
| 318 | SLU 23 | 9.44 | -6.96 | 59.97 | 0.0531 | 0.2978 | 0.0003 |
| 318 | SLU 24 | 9.47 | -7.02 | 60.36 | 0.053 | 0.2989 | 0.0003 |
| 318 | SLU 25 | 9.48 | -7.02 | 60.39 | 0.053 | 0.2993 | 0.0003 |
| 318 | SLU 26 | 9.33 | -6.91 | 59.45 | 0.0522 | 0.2943 | 0.0003 |
| 318 | SLU 27 | 9.36 | -6.97 | 59.84 | 0.0521 | 0.2954 | 0.0003 |
| 318 | SLU 28 | 9.37 | -6.97 | 59.87 | 0.0521 | 0.2958 | 0.0003 |
| 318 | SLU 29 | 9.2 | -6.86 | 58.89 | 0.0513 | 0.2902 | 0.0003 |
| 318 | SLU 30 | 9.21 | -6.86 | 58.91 | 0.0513 | 0.2906 | 0.0003 |
| 318 | SLU 31 | 10.72 | -7.96 | 68.24 | 0.0616 | 0.3391 | 0.0003 |
| 318 | SLU 32 | 10.76 | -8.02 | 68.63 | 0.0615 | 0.3401 | 0.0003 |
| 318 | SLU 33 | 10.77 | -8.02 | 68.66 | 0.0615 | 0.3405 | 0.0003 |
| 318 | SLU 34 | 10.61 | -7.91 | 67.72 | 0.0607 | 0.3356 | 0.0003 |
| 318 | SLU 35 | 10.65 | -7.97 | 68.11 | 0.0606 | 0.3367 | 0.0003 |
| 318 | SLU 36 | 10.66 | -7.97 | 68.14 | 0.0606 | 0.337 | 0.0003 |
| 318 | SLU 37 | 10.49 | -7.86 | 67.16 | 0.0598 | 0.3315 | 0.0003 |
| 318 | SLU 38 | 10.5 | -7.86 | 67.19 | 0.0598 | 0.3319 | 0.0003 |
| 318 | SLU 39 | 11.26 | -8.38 | 71.74 | 0.0653 | 0.3561 | 0.0004 |
| 318 | SLU 40 | 11.27 | -8.39 | 71.77 | 0.0653 | 0.3565 | 0.0004 |
| 318 | SLU 41 | 11.15 | -8.34 | 71.22 | 0.0644 | 0.3526 | 0.0003 |
| 318 | SLU 42 | 11.16 | -8.34 | 71.25 | 0.0643 | 0.353 | 0.0003 |
| 318 | SLU 43 | 10.41 | -7.59 | 65.91 | 0.0571 | 0.3275 | 0.0004 |
| 318 | SLU 44 | 10.43 | -7.6 | 65.96 | 0.057 | 0.3281 | 0.0004 |
| 318 | SLU 45 | 10.46 | -7.65 | 66.35 | 0.057 | 0.3292 | 0.0004 |
| 318 | SLU 46 | 10.47 | -7.65 | 66.38 | 0.0569 | 0.3296 | 0.0004 |
| 318 | SLU 47 | 10.32 | -7.55 | 65.44 | 0.0561 | 0.3247 | 0.0004 |
| 318 | SLU 48 | 10.35 | -7.6 | 65.83 | 0.0561 | 0.3257 | 0.0004 |
| 318 | SLU 49 | 10.37 | -7.6 | 65.86 | 0.056 | 0.3261 | 0.0004 |
| 318 | SLU 50 | 10.2 | -7.5 | 64.88 | 0.0553 | 0.3205 | 0.0004 |
| 318 | SLU 51 | 10.21 | -7.5 | 64.91 | 0.0552 | 0.3209 | 0.0004 |
| 318 | SLU 52 | 11.72 | -8.59 | 74.23 | 0.0655 | 0.3694 | 0.0004 |
| 318 | SLU 53 | 11.75 | -8.65 | 74.62 | 0.0655 | 0.3705 | 0.0004 |
| 318 | SLU 54 | 11.76 | -8.65 | 74.65 | 0.0654 | 0.3708 | 0.0004 |
| 318 | SLU 55 | 11.61 | -8.54 | 73.72 | 0.0646 | 0.3659 | 0.0004 |
| 318 | SLU 56 | 11.64 | -8.6 | 74.11 | 0.0646 | 0.367 | 0.0004 |
| 318 | SLU 57 | 11.65 | -8.6 | 74.13 | 0.0645 | 0.3674 | 0.0004 |
| 318 | SLU 58 | 11.48 | -8.49 | 73.15 | 0.0638 | 0.3618 | 0.0004 |
| 318 | SLU 59 | 11.49 | -8.49 | 73.18 | 0.0637 | 0.3622 | 0.0004 |
| 318 | SLU 60 | 12.25 | -9.02 | 77.73 | 0.0692 | 0.3864 | 0.0004 |
| 318 | SLU 61 | 12.26 | -9.02 | 77.76 | 0.0692 | 0.3868 | 0.0004 |
| 318 | SLU 62 | 12.14 | -8.97 | 77.21 | 0.0683 | 0.383 | 0.0004 |
| 318 | SLU 63 | 12.15 | -8.97 | 77.24 | 0.0683 | 0.3833 | 0.0004 |
| 318 | SLU 64 | 11.53 | -8.48 | 73.21 | 0.0644 | 0.3633 | 0.0004 |
| 318 | SLU 65 | 11.55 | -8.48 | 73.26 | 0.0643 | 0.364 | 0.0004 |
| 318 | SLU 66 | 11.58 | -8.54 | 73.65 | 0.0643 | 0.365 | 0.0004 |
| 318 | SLU 67 | 11.59 | -8.54 | 73.67 | 0.0642 | 0.3654 | 0.0004 |
| 318 | SLU 68 | 11.44 | -8.43 | 72.74 | 0.0634 | 0.3605 | 0.0004 |
| 318 | SLU 69 | 11.47 | -8.49 | 73.13 | 0.0634 | 0.3615 | 0.0004 |
| 318 | SLU 70 | 11.48 | -8.49 | 73.16 | 0.0633 | 0.3619 | 0.0004 |
| 318 | SLU 71 | 11.31 | -8.38 | 72.17 | 0.0626 | 0.3564 | 0.0004 |
| 318 | SLU 72 | 11.32 | -8.38 | 72.2 | 0.0625 | 0.3567 | 0.0004 |
| 318 | SLU 73 | 12.83 | -9.48 | 81.53 | 0.0728 | 0.4052 | 0.0004 |
| 318 | SLU 74 | 12.86 | -9.53 | 81.92 | 0.0728 | 0.4063 | 0.0004 |
| 318 | SLU 75 | 12.87 | -9.54 | 81.95 | 0.0727 | 0.4067 | 0.0004 |
| 318 | SLU 76 | 12.72 | -9.43 | 81.01 | 0.0719 | 0.4017 | 0.0004 |
| 318 | SLU 77 | 12.76 | -9.49 | 81.4 | 0.0719 | 0.4028 | 0.0004 |
| 318 | SLU 78 | 12.77 | -9.49 | 81.43 | 0.0718 | 0.4032 | 0.0004 |
| 318 | SLU 79 | 12.6 | -9.38 | 80.44 | 0.0711 | 0.3976 | 0.0004 |
| 318 | SLU 80 | 12.61 | -9.38 | 80.47 | 0.071 | 0.398 | 0.0004 |
| 318 | SLU 81 | 13.37 | -9.9 | 85.03 | 0.0765 | 0.4222 | 0.0004 |
| 318 | SLU 82 | 13.38 | -9.91 | 85.05 | 0.0765 | 0.4226 | 0.0004 |
| 318 | SLU 83 | 13.26 | -9.85 | 84.51 | 0.0756 | 0.4188 | 0.0004 |

| Nodo | Cont. | Reazione a traslazione | | | Reazione a rotazione | | |
|---|---|---|---|---|---|---|---|
| Ind. | N.br. | x | y | z | x | y | z |
| 318 | SLU 84 | 13.27 | -9.86 | 84.54 | 0.0756 | 0.4192 | 0.0004 |
| 318 | SLE RA 1 | 8.62 | -6.33 | 54.71 | 0.0479 | 0.2716 | 0.0003 |
| 318 | SLE RA 2 | 8.63 | -6.33 | 54.74 | 0.0479 | 0.272 | 0.0003 |
| 318 | SLE RA 3 | 8.66 | -6.37 | 55 | 0.0479 | 0.2727 | 0.0003 |
| 318 | SLE RA 4 | 8.66 | -6.37 | 55.02 | 0.0478 | 0.273 | 0.0003 |
| 318 | SLE RA 5 | 8.56 | -6.3 | 54.4 | 0.0473 | 0.2697 | 0.0003 |
| 318 | SLE RA 6 | 8.58 | -6.33 | 54.66 | 0.0472 | 0.2704 | 0.0003 |
| 318 | SLE RA 7 | 8.59 | -6.34 | 54.68 | 0.0472 | 0.2707 | 0.0003 |
| 318 | SLE RA 8 | 8.48 | -6.26 | 54.02 | 0.0467 | 0.267 | 0.0003 |
| 318 | SLE RA 9 | 8.49 | -6.26 | 54.04 | 0.0467 | 0.2672 | 0.0003 |
| 318 | SLE RA 10 | 9.49 | -6.99 | 60.26 | 0.0536 | 0.2995 | 0.0003 |
| 318 | SLE RA 11 | 9.51 | -7.03 | 60.52 | 0.0535 | 0.3002 | 0.0003 |
| 318 | SLE RA 12 | 9.52 | -7.03 | 60.54 | 0.0535 | 0.3005 | 0.0003 |
| 318 | SLE RA 13 | 9.42 | -6.96 | 59.91 | 0.0529 | 0.2972 | 0.0003 |
| 318 | SLE RA 14 | 9.44 | -7 | 60.17 | 0.0529 | 0.2979 | 0.0003 |
| 318 | SLE RA 15 | 9.45 | -7 | 60.19 | 0.0529 | 0.2982 | 0.0003 |
| 318 | SLE RA 16 | 9.34 | -6.93 | 59.53 | 0.0524 | 0.2945 | 0.0003 |
| 318 | SLE RA 17 | 9.34 | -6.93 | 59.55 | 0.0523 | 0.2947 | 0.0003 |
| 318 | SLE RA 18 | 9.85 | -7.28 | 62.59 | 0.056 | 0.3109 | 0.0003 |
| 318 | SLE RA 19 | 9.85 | -7.28 | 62.61 | 0.056 | 0.3111 | 0.0003 |
| 318 | SLE RA 20 | 9.78 | -7.24 | 62.24 | 0.0554 | 0.3086 | 0.0003 |
| 318 | SLE RA 21 | 9.78 | -7.25 | 62.26 | 0.0554 | 0.3088 | 0.0003 |
| 318 | SLE FR 1 | 8.62 | -6.33 | 54.71 | 0.0479 | 0.2716 | 0.0003 |
| 318 | SLE FR 2 | 8.63 | -6.33 | 54.72 | 0.0479 | 0.2717 | 0.0003 |
| 318 | SLE FR 3 | 8.59 | -6.31 | 54.57 | 0.0477 | 0.2707 | 0.0003 |
| 318 | SLE FR 4 | 8.99 | -6.61 | 57.08 | 0.0504 | 0.2835 | 0.0003 |
| 318 | SLE FR 5 | 8.96 | -6.6 | 56.94 | 0.0501 | 0.2825 | 0.0003 |
| 318 | SLE FR 6 | 9.24 | -6.8 | 58.65 | 0.052 | 0.2912 | 0.0003 |
| 318 | SLE QP 1 | 8.62 | -6.33 | 54.71 | 0.0479 | 0.2716 | 0.0003 |
| 318 | SLE QP 2 | 8.99 | -6.61 | 57.07 | 0.0504 | 0.2834 | 0.0003 |
| 318 | SLD 1 | 12.26 | -4.17 | 57.52 | -0.061 | 0.4176 | 0.0033 |
| 318 | SLD 2 | 12.26 | -4.17 | 57.52 | -0.061 | 0.4176 | 0.0033 |
| 318 | SLD 3 | 12.98 | -7 | 70.48 | 0.0399 | 0.4398 | 0.0015 |
| 318 | SLD 4 | 12.98 | -7 | 70.48 | 0.0399 | 0.4398 | 0.0015 |
| 318 | SLD 5 | 8.88 | -1.6 | 37.55 | -0.1361 | 0.2899 | 0.0039 |
| 318 | SLD 6 | 8.88 | -1.6 | 37.55 | -0.1361 | 0.2899 | 0.0039 |
| 318 | SLD 7 | 11.28 | -11.01 | 80.75 | 0.2003 | 0.364 | -0.002 |
| 318 | SLD 8 | 11.28 | -11.01 | 80.75 | 0.2003 | 0.364 | -0.002 |
| 318 | SLD 9 | 6.7 | -2.21 | 33.4 | -0.0996 | 0.2027 | 0.0027 |
| 318 | SLD 10 | 6.7 | -2.21 | 33.4 | -0.0996 | 0.2027 | 0.0027 |
| 318 | SLD 11 | 9.11 | -11.63 | 76.59 | 0.2368 | 0.2768 | -0.0033 |
| 318 | SLD 12 | 9.11 | -11.63 | 76.59 | 0.2368 | 0.2768 | -0.0033 |
| 318 | SLD 13 | 5 | -6.23 | 43.67 | 0.0608 | 0.127 | -0.0009 |
| 318 | SLD 14 | 5 | -6.23 | 43.67 | 0.0608 | 0.127 | -0.0009 |
| 318 | SLD 15 | 5.72 | -9.05 | 56.63 | 0.1617 | 0.1492 | -0.0027 |
| 318 | SLD 16 | 5.72 | -9.05 | 56.63 | 0.1617 | 0.1492 | -0.0027 |
| 318 | SLV 1 | 16.41 | -0.91 | 57.71 | -0.2073 | 0.589 | 0.0073 |
| 318 | SLV 2 | 16.41 | -0.91 | 57.71 | -0.2073 | 0.589 | 0.0073 |
| 318 | SLV 3 | 18.16 | -7.54 | 88.37 | 0.0285 | 0.6422 | 0.003 |
| 318 | SLV 4 | 18.16 | -7.54 | 88.37 | 0.0285 | 0.6422 | 0.003 |
| 318 | SLV 5 | 8.56 | 5.16 | 10.76 | -0.3845 | 0.2943 | 0.0088 |
| 318 | SLV 6 | 8.56 | 5.16 | 10.76 | -0.3845 | 0.2943 | 0.0088 |
| 318 | SLV 7 | 14.4 | -16.95 | 112.97 | 0.4014 | 0.4717 | -0.0052 |
| 318 | SLV 8 | 14.4 | -16.95 | 112.97 | 0.4014 | 0.4717 | -0.0052 |
| 318 | SLV 9 | 3.58 | 3.72 | 1.18 | -0.3007 | 0.095 | 0.0059 |
| 318 | SLV 10 | 3.58 | 3.72 | 1.18 | -0.3007 | 0.095 | 0.0059 |
| 318 | SLV 11 | 9.42 | -18.38 | 103.39 | 0.4853 | 0.2724 | -0.0081 |
| 318 | SLV 12 | 9.42 | -18.38 | 103.39 | 0.4853 | 0.2724 | -0.0081 |
| 318 | SLV 13 | -0.18 | -5.69 | 25.78 | 0.0723 | -0.0754 | -0.0024 |
| 318 | SLV 14 | -0.18 | -5.69 | 25.78 | 0.0723 | -0.0754 | -0.0024 |
| 318 | SLV 15 | 1.58 | -12.32 | 56.44 | 0.3081 | -0.0222 | -0.0066 |
| 318 | SLV 16 | 1.58 | -12.32 | 56.44 | 0.3081 | -0.0222 | -0.0066 |
| 319 | SLU 1 | 3.47 | -0.04 | 50.44 | -0.0442 | 0.1325 | 0.0003 |
| 319 | SLU 2 | 3.49 | -0.04 | 50.47 | -0.0441 | 0.1336 | 0.0003 |
| 319 | SLU 3 | 3.43 | -0.04 | 50.93 | -0.0455 | 0.1293 | 0.0002 |
| 319 | SLU 4 | 3.45 | -0.04 | 50.95 | -0.0454 | 0.13 | 0.0003 |
| 319 | SLU 5 | 3.38 | -0.04 | 50.09 | -0.0446 | 0.1271 | 0.0002 |
| 319 | SLU 6 | 3.32 | -0.04 | 50.55 | -0.0461 | 0.1228 | 0.0002 |
| 319 | SLU 7 | 3.33 | -0.04 | 50.57 | -0.046 | 0.1234 | 0.0002 |
| 319 | SLU 8 | 3.24 | -0.04 | 49.68 | -0.0453 | 0.1195 | 0.0002 |
| 319 | SLU 9 | 3.26 | -0.04 | 49.7 | -0.0452 | 0.1201 | 0.0002 |
| 319 | SLU 10 | 3.99 | -0.04 | 58.09 | -0.0516 | 0.1538 | 0.0003 |
| 319 | SLU 11 | 3.93 | -0.04 | 58.55 | -0.053 | 0.1495 | 0.0003 |
| 319 | SLU 12 | 3.95 | -0.04 | 58.57 | -0.0529 | 0.1501 | 0.0003 |
| 319 | SLU 13 | 3.88 | -0.04 | 57.71 | -0.0521 | 0.1473 | 0.0003 |
| 319 | SLU 14 | 3.82 | -0.04 | 58.17 | -0.0536 | 0.1429 | 0.0003 |
| 319 | SLU 15 | 3.83 | -0.04 | 58.19 | -0.0535 | 0.1436 | 0.0003 |
| 319 | SLU 16 | 3.74 | -0.04 | 57.29 | -0.0528 | 0.1396 | 0.0003 |
| 319 | SLU 17 | 3.76 | -0.04 | 57.31 | -0.0527 | 0.1403 | 0.0003 |
| 319 | SLU 18 | 4.18 | -0.05 | 61.32 | -0.0549 | 0.1613 | 0.0003 |
| 319 | SLU 19 | 4.2 | -0.05 | 61.34 | -0.0548 | 0.162 | 0.0003 |
| 319 | SLU 20 | 4.07 | -0.05 | 60.94 | -0.0555 | 0.1548 | 0.0003 |
| 319 | SLU 21 | 4.08 | -0.05 | 60.96 | -0.0554 | 0.1554 | 0.0003 |
| 319 | SLU 22 | 3.85 | -0.04 | 57.22 | -0.0513 | 0.1467 | 0.0003 |
| 319 | SLU 23 | 3.87 | -0.04 | 57.25 | -0.0512 | 0.1478 | 0.0003 |
| 319 | SLU 24 | 3.82 | -0.04 | 57.71 | -0.0527 | 0.1435 | 0.0003 |
| 319 | SLU 25 | 3.83 | -0.04 | 57.73 | -0.0526 | 0.1442 | 0.0003 |
| 319 | SLU 26 | 3.76 | -0.04 | 56.87 | -0.0518 | 0.1413 | 0.0003 |

| Nodo | Cont. | Reazione a traslazione | | | Reazione a rotazione | | |
|---|---|---|---|---|---|---|---|
| Ind. | N.br. | x | y | z | x | y | z |
| 319 | SLU 27 | 3.7 | -0.04 | 57.33 | -0.0532 | 0.137 | 0.0003 |
| 319 | SLU 28 | 3.72 | -0.04 | 57.35 | -0.0531 | 0.1376 | 0.0003 |
| 319 | SLU 29 | 3.63 | -0.04 | 56.45 | -0.0524 | 0.1337 | 0.0003 |
| 319 | SLU 30 | 3.64 | -0.04 | 56.47 | -0.0524 | 0.1343 | 0.0003 |
| 319 | SLU 31 | 4.38 | -0.05 | 64.87 | -0.0587 | 0.168 | 0.0003 |
| 319 | SLU 32 | 4.32 | -0.05 | 65.33 | -0.0602 | 0.1637 | 0.0003 |
| 319 | SLU 33 | 4.33 | -0.05 | 65.35 | -0.0601 | 0.1643 | 0.0003 |
| 319 | SLU 34 | 4.26 | -0.05 | 64.49 | -0.0593 | 0.1614 | 0.0003 |
| 319 | SLU 35 | 4.2 | -0.05 | 64.94 | -0.0607 | 0.1571 | 0.0003 |
| 319 | SLU 36 | 4.22 | -0.05 | 64.96 | -0.0606 | 0.1578 | 0.0003 |
| 319 | SLU 37 | 4.13 | -0.05 | 64.07 | -0.0599 | 0.1538 | 0.0003 |
| 319 | SLU 38 | 4.14 | -0.05 | 64.09 | -0.0599 | 0.1545 | 0.0003 |
| 319 | SLU 39 | 4.57 | -0.05 | 68.1 | -0.062 | 0.1755 | 0.0003 |
| 319 | SLU 40 | 4.58 | -0.05 | 68.12 | -0.062 | 0.1762 | 0.0003 |
| 319 | SLU 41 | 4.45 | -0.05 | 67.72 | -0.0626 | 0.169 | 0.0003 |
| 319 | SLU 42 | 4.47 | -0.05 | 67.74 | -0.0625 | 0.1696 | 0.0003 |
| 319 | SLU 43 | 4.37 | -0.05 | 63.25 | -0.055 | 0.1674 | 0.0003 |
| 319 | SLU 44 | 4.4 | -0.05 | 63.28 | -0.0549 | 0.1685 | 0.0003 |
| 319 | SLU 45 | 4.34 | -0.05 | 63.74 | -0.0563 | 0.1642 | 0.0003 |
| 319 | SLU 46 | 4.35 | -0.05 | 63.76 | -0.0563 | 0.1649 | 0.0003 |
| 319 | SLU 47 | 4.29 | -0.05 | 62.9 | -0.0554 | 0.162 | 0.0003 |
| 319 | SLU 48 | 4.23 | -0.04 | 63.36 | -0.0569 | 0.1577 | 0.0003 |
| 319 | SLU 49 | 4.24 | -0.05 | 63.38 | -0.0568 | 0.1583 | 0.0003 |
| 319 | SLU 50 | 4.15 | -0.04 | 62.49 | -0.0561 | 0.1544 | 0.0003 |
| 319 | SLU 51 | 4.16 | -0.04 | 62.51 | -0.056 | 0.155 | 0.0003 |
| 319 | SLU 52 | 4.9 | -0.05 | 70.9 | -0.0624 | 0.1887 | 0.0004 |
| 319 | SLU 53 | 4.84 | -0.05 | 71.36 | -0.0638 | 0.1843 | 0.0004 |
| 319 | SLU 54 | 4.85 | -0.05 | 71.38 | -0.0638 | 0.185 | 0.0004 |
| 319 | SLU 55 | 4.79 | -0.05 | 70.52 | -0.0629 | 0.1821 | 0.0004 |
| 319 | SLU 56 | 4.73 | -0.05 | 70.98 | -0.0644 | 0.1778 | 0.0003 |
| 319 | SLU 57 | 4.74 | -0.05 | 71 | -0.0643 | 0.1785 | 0.0003 |
| 319 | SLU 58 | 4.65 | -0.05 | 70.1 | -0.0636 | 0.1745 | 0.0003 |
| 319 | SLU 59 | 4.66 | -0.05 | 70.12 | -0.0635 | 0.1752 | 0.0003 |
| 319 | SLU 60 | 5.09 | -0.06 | 74.13 | -0.0657 | 0.1962 | 0.0004 |
| 319 | SLU 61 | 5.1 | -0.06 | 74.15 | -0.0656 | 0.1968 | 0.0004 |
| 319 | SLU 62 | 4.98 | -0.05 | 73.75 | -0.0663 | 0.1897 | 0.0004 |
| 319 | SLU 63 | 4.99 | -0.05 | 73.77 | -0.0662 | 0.1903 | 0.0004 |
| 319 | SLU 64 | 4.76 | -0.05 | 70.03 | -0.0621 | 0.1816 | 0.0003 |
| 319 | SLU 65 | 4.78 | -0.05 | 70.06 | -0.062 | 0.1827 | 0.0004 |
| 319 | SLU 66 | 4.72 | -0.05 | 70.52 | -0.0635 | 0.1784 | 0.0003 |
| 319 | SLU 67 | 4.74 | -0.05 | 70.54 | -0.0634 | 0.179 | 0.0003 |
| 319 | SLU 68 | 4.67 | -0.05 | 69.68 | -0.0626 | 0.1762 | 0.0003 |
| 319 | SLU 69 | 4.61 | -0.05 | 70.14 | -0.064 | 0.1719 | 0.0003 |
| 319 | SLU 70 | 4.63 | -0.05 | 70.16 | -0.0639 | 0.1725 | 0.0003 |
| 319 | SLU 71 | 4.53 | -0.05 | 69.26 | -0.0632 | 0.1686 | 0.0003 |
| 319 | SLU 72 | 4.55 | -0.05 | 69.28 | -0.0632 | 0.1692 | 0.0003 |
| 319 | SLU 73 | 5.28 | -0.06 | 77.68 | -0.0695 | 0.2028 | 0.0004 |
| 319 | SLU 74 | 5.22 | -0.06 | 78.14 | -0.071 | 0.1985 | 0.0004 |
| 319 | SLU 75 | 5.24 | -0.06 | 78.16 | -0.0709 | 0.1992 | 0.0004 |
| 319 | SLU 76 | 5.17 | -0.06 | 77.3 | -0.0701 | 0.1963 | 0.0004 |
| 319 | SLU 77 | 5.11 | -0.06 | 77.75 | -0.0715 | 0.192 | 0.0004 |
| 319 | SLU 78 | 5.13 | -0.06 | 77.77 | -0.0714 | 0.1927 | 0.0004 |
| 319 | SLU 79 | 5.03 | -0.06 | 76.88 | -0.0707 | 0.1887 | 0.0004 |
| 319 | SLU 80 | 5.05 | -0.06 | 76.9 | -0.0707 | 0.1894 | 0.0004 |
| 319 | SLU 81 | 5.47 | -0.06 | 80.91 | -0.0729 | 0.2104 | 0.0004 |
| 319 | SLU 82 | 5.49 | -0.06 | 80.93 | -0.0728 | 0.211 | 0.0004 |
| 319 | SLU 83 | 5.36 | -0.06 | 80.53 | -0.0734 | 0.2039 | 0.0004 |
| 319 | SLU 84 | 5.38 | -0.06 | 80.55 | -0.0733 | 0.2045 | 0.0004 |
| 319 | SLE RA 1 | 3.58 | -0.04 | 52.38 | -0.0462 | 0.1366 | 0.0003 |
| 319 | SLE RA 2 | 3.59 | -0.04 | 52.4 | -0.0462 | 0.1373 | 0.0003 |
| 319 | SLE RA 3 | 3.55 | -0.04 | 52.71 | -0.0471 | 0.1344 | 0.0003 |
| 319 | SLE RA 4 | 3.56 | -0.04 | 52.72 | -0.0471 | 0.1349 | 0.0003 |
| 319 | SLE RA 5 | 3.52 | -0.04 | 52.14 | -0.0465 | 0.133 | 0.0003 |
| 319 | SLE RA 6 | 3.48 | -0.04 | 52.45 | -0.0475 | 0.1301 | 0.0003 |
| 319 | SLE RA 7 | 3.49 | -0.04 | 52.46 | -0.0474 | 0.1305 | 0.0003 |
| 319 | SLE RA 8 | 3.43 | -0.04 | 51.87 | -0.047 | 0.1279 | 0.0003 |
| 319 | SLE RA 9 | 3.44 | -0.04 | 51.88 | -0.0469 | 0.1283 | 0.0003 |
| 319 | SLE RA 10 | 3.93 | -0.04 | 57.48 | -0.0512 | 0.1507 | 0.0003 |
| 319 | SLE RA 11 | 3.89 | -0.04 | 57.78 | -0.0521 | 0.1479 | 0.0003 |
| 319 | SLE RA 12 | 3.9 | -0.04 | 57.8 | -0.0521 | 0.1483 | 0.0003 |
| 319 | SLE RA 13 | 3.85 | -0.04 | 57.22 | -0.0515 | 0.1464 | 0.0003 |
| 319 | SLE RA 14 | 3.81 | -0.04 | 57.53 | -0.0525 | 0.1435 | 0.0003 |
| 319 | SLE RA 15 | 3.82 | -0.04 | 57.54 | -0.0524 | 0.144 | 0.0003 |
| 319 | SLE RA 16 | 3.76 | -0.04 | 56.95 | -0.052 | 0.1413 | 0.0003 |
| 319 | SLE RA 17 | 3.77 | -0.04 | 56.96 | -0.0519 | 0.1418 | 0.0003 |
| 319 | SLE RA 18 | 4.05 | -0.04 | 59.63 | -0.0534 | 0.1558 | 0.0003 |
| 319 | SLE RA 19 | 4.06 | -0.04 | 59.65 | -0.0533 | 0.1562 | 0.0003 |
| 319 | SLE RA 20 | 3.98 | -0.04 | 59.38 | -0.0537 | 0.1514 | 0.0003 |
| 319 | SLE RA 21 | 3.99 | -0.04 | 59.39 | -0.0537 | 0.1519 | 0.0003 |
| 319 | SLE FR 1 | 3.58 | -0.04 | 52.38 | -0.0462 | 0.1366 | 0.0003 |
| 319 | SLE FR 2 | 3.58 | -0.04 | 52.38 | -0.0462 | 0.1367 | 0.0003 |
| 319 | SLE FR 3 | 3.55 | -0.04 | 52.28 | -0.0464 | 0.1348 | 0.0003 |
| 319 | SLE FR 4 | 3.72 | -0.04 | 54.56 | -0.0484 | 0.1425 | 0.0003 |
| 319 | SLE FR 5 | 3.69 | -0.04 | 54.45 | -0.0485 | 0.1406 | 0.0003 |
| 319 | SLE FR 6 | 3.81 | -0.04 | 56.01 | -0.0498 | 0.1462 | 0.0003 |
| 319 | SLE QP 1 | 3.58 | -0.04 | 52.38 | -0.0462 | 0.1366 | 0.0003 |
| 319 | SLE QP 2 | 3.72 | -0.04 | 54.56 | -0.0484 | 0.1423 | 0.0003 |
| 319 | SLD 1 | 10.6 | 0.01 | 54.81 | -0.0787 | 0.438 | 0.0003 |

| Nodo | Cont. | Reazione a traslazione | | | Reazione a rotazione | | |
|---|---|---|---|---|---|---|---|
| Ind. | N.br. | x | y | z | x | y | z |
| 319 | SLD 2 | 10.6 | 0.01 | 54.81 | -0.0787 | 0.438 | 0.0003 |
| 319 | SLD 3 | 8.88 | -0.05 | 65.08 | -0.046 | 0.392 | 0.0004 |
| 319 | SLD 4 | 8.88 | -0.05 | 65.08 | -0.046 | 0.392 | 0.0004 |
| 319 | SLD 5 | 8.39 | 0.06 | 39.06 | -0.107 | 0.3007 | 0.0001 |
| 319 | SLD 6 | 8.39 | 0.06 | 39.06 | -0.107 | 0.3007 | 0.0001 |
| 319 | SLD 7 | 2.66 | -0.13 | 73.29 | 0.0018 | 0.1476 | 0.0004 |
| 319 | SLD 8 | 2.66 | -0.13 | 73.29 | 0.0018 | 0.1476 | 0.0004 |
| 319 | SLD 9 | 4.77 | 0.05 | 35.82 | -0.0986 | 0.1371 | 0.0001 |
| 319 | SLD 10 | 4.77 | 0.05 | 35.82 | -0.0986 | 0.1371 | 0.0001 |
| 319 | SLD 11 | -0.95 | -0.14 | 70.05 | 0.0102 | -0.0161 | 0.0004 |
| 319 | SLD 12 | -0.95 | -0.14 | 70.05 | 0.0102 | -0.0161 | 0.0004 |
| 319 | SLD 13 | -1.44 | -0.03 | 44.03 | -0.0507 | -0.1074 | 0.0002 |
| 319 | SLD 14 | -1.44 | -0.03 | 44.03 | -0.0507 | -0.1074 | 0.0002 |
| 319 | SLD 15 | -3.16 | -0.09 | 54.3 | -0.0181 | -0.1533 | 0.0003 |
| 319 | SLD 16 | -3.16 | -0.09 | 54.3 | -0.0181 | -0.1533 | 0.0003 |
| 319 | SLV 1 | 19.51 | 0.07 | 54.83 | -0.1191 | 0.8203 | 0.0002 |
| 319 | SLV 2 | 19.51 | 0.07 | 54.83 | -0.1191 | 0.8203 | 0.0002 |
| 319 | SLV 3 | 15.48 | -0.06 | 79.23 | -0.0435 | 0.7116 | 0.0005 |
| 319 | SLV 4 | 15.48 | -0.06 | 79.23 | -0.0435 | 0.7116 | 0.0005 |
| 319 | SLV 5 | 14.58 | 0.19 | 17.63 | -0.1842 | 0.5106 | -0.0001 |
| 319 | SLV 6 | 14.58 | 0.19 | 17.63 | -0.1842 | 0.5106 | -0.0001 |
| 319 | SLV 7 | 1.12 | -0.25 | 98.96 | 0.0677 | 0.1482 | 0.0007 |
| 319 | SLV 8 | 1.12 | -0.25 | 98.96 | 0.0677 | 0.1482 | 0.0007 |
| 319 | SLV 9 | 6.31 | 0.17 | 10.15 | -0.1644 | 0.1365 | -0.0001 |
| 319 | SLV 10 | 6.31 | 0.17 | 10.15 | -0.1644 | 0.1365 | -0.0001 |
| 319 | SLV 11 | -7.14 | -0.27 | 91.48 | 0.0874 | -0.226 | 0.0006 |
| 319 | SLV 12 | -7.14 | -0.27 | 91.48 | 0.0874 | -0.226 | 0.0006 |
| 319 | SLV 13 | -8.04 | -0.02 | 29.88 | -0.0532 | -0.4269 | 0.0001 |
| 319 | SLV 14 | -8.04 | -0.02 | 29.88 | -0.0532 | -0.4269 | 0.0001 |
| 319 | SLV 15 | -12.07 | -0.15 | 54.28 | 0.0223 | -0.5357 | 0.0003 |
| 319 | SLV 16 | -12.07 | -0.15 | 54.28 | 0.0223 | -0.5357 | 0.0003 |
| 320 | SLU 1 | 3.16 | 0.14 | 41.8 | -0.1261 | 0.2473 | 0 |
| 320 | SLU 2 | 3.18 | 0.14 | 41.81 | -0.126 | 0.2485 | 0 |
| 320 | SLU 3 | 3.12 | 0.15 | 42.29 | -0.1291 | 0.2473 | 0 |
| 320 | SLU 4 | 3.13 | 0.15 | 42.3 | -0.129 | 0.248 | 0 |
| 320 | SLU 5 | 3.06 | 0.14 | 41.64 | -0.1267 | 0.2427 | 0 |
| 320 | SLU 6 | 3 | 0.15 | 42.12 | -0.1298 | 0.2415 | 0 |
| 320 | SLU 7 | 3.01 | 0.15 | 42.13 | -0.1297 | 0.2422 | 0 |
| 320 | SLU 8 | 2.92 | 0.14 | 41.45 | -0.1275 | 0.2358 | 0 |
| 320 | SLU 9 | 2.93 | 0.14 | 41.46 | -0.1274 | 0.2365 | 0 |
| 320 | SLU 10 | 3.7 | 0.17 | 47.8 | -0.1476 | 0.2901 | 0 |
| 320 | SLU 11 | 3.64 | 0.17 | 48.28 | -0.1507 | 0.2889 | 0 |
| 320 | SLU 12 | 3.66 | 0.17 | 48.29 | -0.1506 | 0.2896 | 0 |
| 320 | SLU 13 | 3.58 | 0.17 | 47.62 | -0.1483 | 0.2843 | 0 |
| 320 | SLU 14 | 3.52 | 0.17 | 48.1 | -0.1514 | 0.2831 | 0 |
| 320 | SLU 15 | 3.53 | 0.17 | 48.11 | -0.1513 | 0.2838 | 0 |
| 320 | SLU 16 | 3.44 | 0.17 | 47.44 | -0.1491 | 0.2774 | 0 |
| 320 | SLU 17 | 3.45 | 0.17 | 47.45 | -0.149 | 0.2781 | 0 |
| 320 | SLU 18 | 3.9 | 0.18 | 50.34 | -0.1569 | 0.3068 | 0 |
| 320 | SLU 19 | 3.92 | 0.18 | 50.35 | -0.1569 | 0.3075 | 0 |
| 320 | SLU 20 | 3.78 | 0.18 | 50.17 | -0.1576 | 0.301 | 0 |
| 320 | SLU 21 | 3.8 | 0.18 | 50.18 | -0.1576 | 0.3017 | 0 |
| 320 | SLU 22 | 3.56 | 0.17 | 47.19 | -0.1462 | 0.282 | 0 |
| 320 | SLU 23 | 3.58 | 0.16 | 47.2 | -0.1461 | 0.2832 | 0 |
| 320 | SLU 24 | 3.52 | 0.17 | 47.68 | -0.1492 | 0.282 | 0 |
| 320 | SLU 25 | 3.53 | 0.17 | 47.69 | -0.1491 | 0.2827 | 0 |
| 320 | SLU 26 | 3.46 | 0.17 | 47.03 | -0.1468 | 0.2774 | 0 |
| 320 | SLU 27 | 3.4 | 0.17 | 47.51 | -0.1499 | 0.2762 | 0 |
| 320 | SLU 28 | 3.41 | 0.17 | 47.52 | -0.1499 | 0.2769 | 0 |
| 320 | SLU 29 | 3.32 | 0.17 | 46.84 | -0.1476 | 0.2704 | 0 |
| 320 | SLU 30 | 3.33 | 0.17 | 46.85 | -0.1476 | 0.2711 | 0 |
| 320 | SLU 31 | 4.1 | 0.19 | 53.19 | -0.1677 | 0.3248 | 0 |
| 320 | SLU 32 | 4.04 | 0.19 | 53.67 | -0.1708 | 0.3236 | 0 |
| 320 | SLU 33 | 4.06 | 0.19 | 53.68 | -0.1707 | 0.3243 | 0 |
| 320 | SLU 34 | 3.98 | 0.19 | 53.01 | -0.1684 | 0.319 | 0 |
| 320 | SLU 35 | 3.92 | 0.19 | 53.49 | -0.1715 | 0.3178 | 0 |
| 320 | SLU 36 | 3.93 | 0.19 | 53.5 | -0.1715 | 0.3185 | 0 |
| 320 | SLU 37 | 3.84 | 0.19 | 52.83 | -0.1692 | 0.312 | 0 |
| 320 | SLU 38 | 3.85 | 0.19 | 52.84 | -0.1692 | 0.3127 | 0 |
| 320 | SLU 39 | 4.3 | 0.2 | 55.73 | -0.177 | 0.3414 | 0 |
| 320 | SLU 40 | 4.32 | 0.2 | 55.74 | -0.177 | 0.3421 | 0 |
| 320 | SLU 41 | 4.18 | 0.2 | 55.56 | -0.1778 | 0.3357 | 0 |
| 320 | SLU 42 | 4.2 | 0.2 | 55.57 | -0.1777 | 0.3364 | 0 |
| 320 | SLU 43 | 3.97 | 0.18 | 52.49 | -0.157 | 0.3096 | 0 |
| 320 | SLU 44 | 3.99 | 0.18 | 52.5 | -0.1569 | 0.3108 | 0 |
| 320 | SLU 45 | 3.93 | 0.18 | 52.98 | -0.16 | 0.3096 | 0 |
| 320 | SLU 46 | 3.94 | 0.18 | 52.99 | -0.1599 | 0.3103 | 0 |
| 320 | SLU 47 | 3.87 | 0.18 | 52.33 | -0.1576 | 0.305 | 0 |
| 320 | SLU 48 | 3.81 | 0.18 | 52.81 | -0.1607 | 0.3038 | 0 |
| 320 | SLU 49 | 3.82 | 0.18 | 52.82 | -0.1607 | 0.3045 | 0 |
| 320 | SLU 50 | 3.73 | 0.18 | 52.14 | -0.1584 | 0.2981 | 0 |
| 320 | SLU 51 | 3.74 | 0.18 | 52.15 | -0.1584 | 0.2988 | 0 |
| 320 | SLU 52 | 4.52 | 0.2 | 58.49 | -0.1785 | 0.3524 | 0 |
| 320 | SLU 53 | 4.45 | 0.2 | 58.97 | -0.1816 | 0.3512 | 0 |
| 320 | SLU 54 | 4.47 | 0.2 | 58.98 | -0.1815 | 0.3519 | 0 |
| 320 | SLU 55 | 4.39 | 0.2 | 58.32 | -0.1792 | 0.3466 | 0 |
| 320 | SLU 56 | 4.33 | 0.21 | 58.79 | -0.1823 | 0.3454 | 0 |
| 320 | SLU 57 | 4.34 | 0.21 | 58.8 | -0.1822 | 0.3461 | 0 |

| Nodo | Cont. | Reazione a traslazione | | | Reazione a rotazione | | |
|---|---|---|---|---|---|---|---|
| Ind. | N.br. | x | y | z | x | y | z |
| 320 | SLU 58 | 4.25 | 0.2 | 58.13 | -0.18 | 0.3397 | 0 |
| 320 | SLU 59 | 4.26 | 0.2 | 58.14 | -0.18 | 0.3404 | 0 |
| 320 | SLU 60 | 4.71 | 0.21 | 61.04 | -0.1878 | 0.3691 | 0 |
| 320 | SLU 61 | 4.73 | 0.21 | 61.05 | -0.1878 | 0.3698 | 0 |
| 320 | SLU 62 | 4.59 | 0.21 | 60.86 | -0.1886 | 0.3633 | 0 |
| 320 | SLU 63 | 4.61 | 0.21 | 60.87 | -0.1885 | 0.364 | 0 |
| 320 | SLU 64 | 4.37 | 0.2 | 57.88 | -0.1771 | 0.3443 | 0 |
| 320 | SLU 65 | 4.39 | 0.2 | 57.89 | -0.177 | 0.3455 | 0 |
| 320 | SLU 66 | 4.33 | 0.2 | 58.37 | -0.1801 | 0.3443 | 0 |
| 320 | SLU 67 | 4.34 | 0.2 | 58.38 | -0.1801 | 0.345 | 0 |
| 320 | SLU 68 | 4.27 | 0.2 | 57.72 | -0.1777 | 0.3397 | 0 |
| 320 | SLU 69 | 4.21 | 0.2 | 58.2 | -0.1808 | 0.3385 | 0 |
| 320 | SLU 70 | 4.22 | 0.2 | 58.21 | -0.1808 | 0.3392 | 0 |
| 320 | SLU 71 | 4.13 | 0.2 | 57.53 | -0.1785 | 0.3327 | 0 |
| 320 | SLU 72 | 4.14 | 0.2 | 57.54 | -0.1785 | 0.3334 | 0 |
| 320 | SLU 73 | 4.92 | 0.22 | 63.88 | -0.1986 | 0.3871 | 0 |
| 320 | SLU 74 | 4.85 | 0.23 | 64.36 | -0.2017 | 0.3859 | 0 |
| 320 | SLU 75 | 4.87 | 0.23 | 64.37 | -0.2017 | 0.3866 | 0 |
| 320 | SLU 76 | 4.79 | 0.22 | 63.71 | -0.1993 | 0.3813 | 0 |
| 320 | SLU 77 | 4.73 | 0.23 | 64.18 | -0.2024 | 0.3801 | 0 |
| 320 | SLU 78 | 4.74 | 0.23 | 64.19 | -0.2024 | 0.3808 | 0 |
| 320 | SLU 79 | 4.65 | 0.22 | 63.52 | -0.2001 | 0.3744 | 0 |
| 320 | SLU 80 | 4.66 | 0.22 | 63.53 | -0.2001 | 0.3751 | 0 |
| 320 | SLU 81 | 5.11 | 0.23 | 66.43 | -0.208 | 0.4037 | 0 |
| 320 | SLU 82 | 5.13 | 0.23 | 66.44 | -0.2079 | 0.4044 | 0 |
| 320 | SLU 83 | 4.99 | 0.23 | 66.25 | -0.2087 | 0.398 | 0 |
| 320 | SLU 84 | 5.01 | 0.23 | 66.26 | -0.2086 | 0.3987 | 0 |
| 320 | SLE RA 1 | 3.27 | 0.15 | 43.34 | -0.1318 | 0.2572 | 0 |
| 320 | SLE RA 2 | 3.29 | 0.15 | 43.35 | -0.1317 | 0.258 | 0 |
| 320 | SLE RA 3 | 3.25 | 0.15 | 43.67 | -0.1338 | 0.2572 | 0 |
| 320 | SLE RA 4 | 3.26 | 0.15 | 43.67 | -0.1338 | 0.2577 | 0 |
| 320 | SLE RA 5 | 3.21 | 0.15 | 43.23 | -0.1322 | 0.2541 | 0 |
| 320 | SLE RA 6 | 3.17 | 0.15 | 43.55 | -0.1343 | 0.2533 | 0 |
| 320 | SLE RA 7 | 3.18 | 0.15 | 43.56 | -0.1343 | 0.2538 | 0 |
| 320 | SLE RA 8 | 3.11 | 0.15 | 43.11 | -0.1328 | 0.2495 | 0 |
| 320 | SLE RA 9 | 3.12 | 0.15 | 43.11 | -0.1327 | 0.25 | 0 |
| 320 | SLE RA 10 | 3.64 | 0.16 | 47.34 | -0.1461 | 0.2857 | 0 |
| 320 | SLE RA 11 | 3.59 | 0.17 | 47.66 | -0.1482 | 0.2849 | 0 |
| 320 | SLE RA 12 | 3.6 | 0.17 | 47.66 | -0.1482 | 0.2854 | 0 |
| 320 | SLE RA 13 | 3.56 | 0.17 | 47.22 | -0.1466 | 0.2819 | 0 |
| 320 | SLE RA 14 | 3.51 | 0.17 | 47.54 | -0.1487 | 0.2811 | 0 |
| 320 | SLE RA 15 | 3.52 | 0.17 | 47.55 | -0.1487 | 0.2816 | 0 |
| 320 | SLE RA 16 | 3.46 | 0.17 | 47.1 | -0.1472 | 0.2773 | 0 |
| 320 | SLE RA 17 | 3.47 | 0.17 | 47.1 | -0.1471 | 0.2777 | 0 |
| 320 | SLE RA 18 | 3.77 | 0.17 | 49.04 | -0.1524 | 0.2969 | 0 |
| 320 | SLE RA 19 | 3.78 | 0.17 | 49.04 | -0.1523 | 0.2973 | 0 |
| 320 | SLE RA 20 | 3.69 | 0.17 | 48.92 | -0.1529 | 0.293 | 0 |
| 320 | SLE RA 21 | 3.7 | 0.17 | 48.93 | -0.1528 | 0.2935 | 0 |
| 320 | SLE FR 1 | 3.27 | 0.15 | 43.34 | -0.1318 | 0.2572 | 0 |
| 320 | SLE FR 2 | 3.28 | 0.15 | 43.34 | -0.1318 | 0.2574 | 0 |
| 320 | SLE FR 3 | 3.24 | 0.15 | 43.29 | -0.132 | 0.2557 | 0 |
| 320 | SLE FR 4 | 3.43 | 0.16 | 45.05 | -0.138 | 0.2693 | 0 |
| 320 | SLE FR 5 | 3.39 | 0.16 | 45 | -0.1382 | 0.2676 | 0 |
| 320 | SLE FR 6 | 3.52 | 0.16 | 46.19 | -0.1421 | 0.277 | 0 |
| 320 | SLE QP 1 | 3.27 | 0.15 | 43.34 | -0.1318 | 0.2572 | 0 |
| 320 | SLE QP 2 | 3.42 | 0.16 | 45.05 | -0.138 | 0.2691 | 0 |
| 320 | SLD 1 | 10.26 | 0.16 | 44.84 | -0.0799 | 0.564 | 0.0001 |
| 320 | SLD 2 | 10.26 | 0.16 | 44.84 | -0.0799 | 0.564 | 0.0001 |
| 320 | SLD 3 | 9.11 | 0.23 | 51.47 | -0.1272 | 0.5263 | 0 |
| 320 | SLD 4 | 9.11 | 0.23 | 51.47 | -0.1272 | 0.5263 | 0 |
| 320 | SLD 5 | 7.23 | 0.05 | 34.93 | -0.0488 | 0.4148 | 0.0002 |
| 320 | SLD 6 | 7.23 | 0.05 | 34.93 | -0.0488 | 0.4148 | 0.0002 |
| 320 | SLD 7 | 3.38 | 0.28 | 57.03 | -0.2065 | 0.289 | -0.0001 |
| 320 | SLD 8 | 3.38 | 0.28 | 57.03 | -0.2065 | 0.289 | -0.0001 |
| 320 | SLD 9 | 3.47 | 0.03 | 33.06 | -0.0695 | 0.2492 | 0.0002 |
| 320 | SLD 10 | 3.47 | 0.03 | 33.06 | -0.0695 | 0.2492 | 0.0002 |
| 320 | SLD 11 | -0.38 | 0.26 | 55.17 | -0.2272 | 0.1234 | -0.0002 |
| 320 | SLD 12 | -0.38 | 0.26 | 55.17 | -0.2272 | 0.1234 | -0.0002 |
| 320 | SLD 13 | -2.26 | 0.08 | 38.62 | -0.1488 | 0.0119 | 0 |
| 320 | SLD 14 | -2.26 | 0.08 | 38.62 | -0.1488 | 0.0119 | 0 |
| 320 | SLD 15 | -3.42 | 0.15 | 45.25 | -0.1961 | -0.0258 | -0.0001 |
| 320 | SLD 16 | -3.42 | 0.15 | 45.25 | -0.1961 | -0.0258 | -0.0001 |
| 320 | SLV 1 | 19.11 | 0.16 | 44.39 | -0.0025 | 0.945 | 0.0003 |
| 320 | SLV 2 | 19.11 | 0.16 | 44.39 | -0.0025 | 0.945 | 0.0003 |
| 320 | SLV 3 | 16.38 | 0.32 | 60.21 | -0.1119 | 0.8557 | 0.0001 |
| 320 | SLV 4 | 16.38 | 0.32 | 60.21 | -0.1119 | 0.8557 | 0.0001 |
| 320 | SLV 5 | 12.26 | -0.08 | 20.86 | 0.0687 | 0.6072 | 0.0005 |
| 320 | SLV 6 | 12.26 | -0.08 | 20.86 | 0.0687 | 0.6072 | 0.0005 |
| 320 | SLV 7 | 3.17 | 0.45 | 73.58 | -0.2962 | 0.3097 | -0.0003 |
| 320 | SLV 8 | 3.17 | 0.45 | 73.58 | -0.2962 | 0.3097 | -0.0003 |
| 320 | SLV 9 | 3.67 | -0.13 | 16.51 | 0.0202 | 0.2285 | 0.0004 |
| 320 | SLV 10 | 3.67 | -0.13 | 16.51 | 0.0202 | 0.2285 | 0.0004 |
| 320 | SLV 11 | -5.42 | 0.39 | 69.23 | -0.3446 | -0.069 | -0.0004 |
| 320 | SLV 12 | -5.42 | 0.39 | 69.23 | -0.3446 | -0.069 | -0.0004 |
| 320 | SLV 13 | -9.54 | -0.01 | 29.88 | -0.164 | -0.3175 | 0 |
| 320 | SLV 14 | -9.54 | -0.01 | 29.88 | -0.164 | -0.3175 | 0 |
| 320 | SLV 15 | -12.27 | 0.15 | 45.7 | -0.2735 | -0.4067 | -0.0003 |
| 320 | SLV 16 | -12.27 | 0.15 | 45.7 | -0.2735 | -0.4067 | -0.0003 |

| Nodo | Cont. | Reazione a traslazione | | | Reazione a rotazione | | |
|---|---|---|---|---|---|---|---|
| Ind. | N.br. | x | y | z | x | y | z |
| 321 | SLU 1 | 1.06 | 0.28 | 35.64 | -0.1988 | 0.0053 | -0.0003 |
| 321 | SLU 2 | 1.09 | 0.28 | 35.64 | -0.1987 | 0.0064 | -0.0003 |
| 321 | SLU 3 | 0.97 | 0.28 | 36.12 | -0.2034 | 0 | -0.0003 |
| 321 | SLU 4 | 0.99 | 0.28 | 36.13 | -0.2034 | 0.0006 | -0.0003 |
| 321 | SLU 5 | 0.94 | 0.28 | 35.6 | -0.1997 | -0.0006 | -0.0003 |
| 321 | SLU 6 | 0.83 | 0.29 | 36.09 | -0.2044 | -0.007 | -0.0003 |
| 321 | SLU 7 | 0.84 | 0.29 | 36.09 | -0.2044 | -0.0063 | -0.0003 |
| 321 | SLU 8 | 0.77 | 0.28 | 35.56 | -0.2008 | -0.0087 | -0.0003 |
| 321 | SLU 9 | 0.79 | 0.28 | 35.56 | -0.2007 | -0.008 | -0.0003 |
| 321 | SLU 10 | 1.34 | 0.33 | 40.48 | -0.233 | 0.011 | -0.0003 |
| 321 | SLU 11 | 1.22 | 0.33 | 40.96 | -0.2377 | 0.0045 | -0.0003 |
| 321 | SLU 12 | 1.23 | 0.33 | 40.96 | -0.2376 | 0.0052 | -0.0003 |
| 321 | SLU 13 | 1.19 | 0.33 | 40.44 | -0.234 | 0.004 | -0.0003 |
| 321 | SLU 14 | 1.07 | 0.33 | 40.92 | -0.2387 | -0.0025 | -0.0003 |
| 321 | SLU 15 | 1.09 | 0.33 | 40.92 | -0.2386 | -0.0018 | -0.0003 |
| 321 | SLU 16 | 1.02 | 0.33 | 40.39 | -0.235 | -0.0041 | -0.0003 |
| 321 | SLU 17 | 1.04 | 0.33 | 40.4 | -0.235 | -0.0034 | -0.0003 |
| 321 | SLU 18 | 1.42 | 0.35 | 42.54 | -0.2477 | 0.0118 | -0.0004 |
| 321 | SLU 19 | 1.43 | 0.35 | 42.55 | -0.2477 | 0.0125 | -0.0004 |
| 321 | SLU 20 | 1.27 | 0.35 | 42.5 | -0.2487 | 0.0048 | -0.0004 |
| 321 | SLU 21 | 1.29 | 0.35 | 42.51 | -0.2487 | 0.0055 | -0.0004 |
| 321 | SLU 22 | 1.19 | 0.32 | 40.04 | -0.2306 | 0.0048 | -0.0003 |
| 321 | SLU 23 | 1.22 | 0.32 | 40.05 | -0.2305 | 0.0059 | -0.0003 |
| 321 | SLU 24 | 1.1 | 0.33 | 40.53 | -0.2352 | -0.0005 | -0.0003 |
| 321 | SLU 25 | 1.12 | 0.33 | 40.53 | -0.2352 | 0.0001 | -0.0003 |
| 321 | SLU 26 | 1.08 | 0.32 | 40.01 | -0.2315 | -0.0011 | -0.0003 |
| 321 | SLU 27 | 0.96 | 0.33 | 40.49 | -0.2362 | -0.0075 | -0.0003 |
| 321 | SLU 28 | 0.97 | 0.33 | 40.49 | -0.2362 | -0.0068 | -0.0003 |
| 321 | SLU 29 | 0.9 | 0.32 | 39.96 | -0.2326 | -0.0092 | -0.0003 |
| 321 | SLU 30 | 0.92 | 0.32 | 39.97 | -0.2326 | -0.0085 | -0.0003 |
| 321 | SLU 31 | 1.47 | 0.37 | 44.88 | -0.2648 | 0.0105 | -0.0004 |
| 321 | SLU 32 | 1.35 | 0.38 | 45.36 | -0.2695 | 0.004 | -0.0004 |
| 321 | SLU 33 | 1.37 | 0.38 | 45.36 | -0.2695 | 0.0047 | -0.0004 |
| 321 | SLU 34 | 1.32 | 0.37 | 44.84 | -0.2658 | 0.0035 | -0.0004 |
| 321 | SLU 35 | 1.21 | 0.38 | 45.32 | -0.2705 | -0.003 | -0.0004 |
| 321 | SLU 36 | 1.22 | 0.38 | 45.33 | -0.2704 | -0.0023 | -0.0004 |
| 321 | SLU 37 | 1.15 | 0.37 | 44.8 | -0.2668 | -0.0046 | -0.0004 |
| 321 | SLU 38 | 1.17 | 0.37 | 44.8 | -0.2668 | -0.0039 | -0.0004 |
| 321 | SLU 39 | 1.55 | 0.39 | 46.95 | -0.2795 | 0.0113 | -0.0004 |
| 321 | SLU 40 | 1.56 | 0.39 | 46.95 | -0.2795 | 0.012 | -0.0004 |
| 321 | SLU 41 | 1.4 | 0.39 | 46.91 | -0.2805 | 0.0043 | -0.0004 |
| 321 | SLU 42 | 1.42 | 0.39 | 46.91 | -0.2805 | 0.005 | -0.0004 |
| 321 | SLU 43 | 1.34 | 0.35 | 44.82 | -0.2475 | 0.007 | -0.0004 |
| 321 | SLU 44 | 1.36 | 0.35 | 44.82 | -0.2475 | 0.0082 | -0.0004 |
| 321 | SLU 45 | 1.25 | 0.35 | 45.3 | -0.2522 | 0.0017 | -0.0004 |
| 321 | SLU 46 | 1.26 | 0.35 | 45.31 | -0.2521 | 0.0024 | -0.0004 |
| 321 | SLU 47 | 1.22 | 0.35 | 44.79 | -0.2485 | 0.0012 | -0.0004 |
| 321 | SLU 48 | 1.1 | 0.35 | 45.27 | -0.2532 | -0.0053 | -0.0004 |
| 321 | SLU 49 | 1.12 | 0.35 | 45.27 | -0.2531 | -0.0046 | -0.0004 |
| 321 | SLU 50 | 1.05 | 0.35 | 44.74 | -0.2495 | -0.0069 | -0.0004 |
| 321 | SLU 51 | 1.06 | 0.35 | 44.74 | -0.2495 | -0.0062 | -0.0004 |
| 321 | SLU 52 | 1.61 | 0.39 | 49.66 | -0.2817 | 0.0127 | -0.0004 |
| 321 | SLU 53 | 1.49 | 0.4 | 50.14 | -0.2864 | 0.0063 | -0.0004 |
| 321 | SLU 54 | 1.51 | 0.4 | 50.14 | -0.2864 | 0.007 | -0.0004 |
| 321 | SLU 55 | 1.47 | 0.4 | 49.62 | -0.2827 | 0.0057 | -0.0004 |
| 321 | SLU 56 | 1.35 | 0.4 | 50.1 | -0.2874 | -0.0007 | -0.0004 |
| 321 | SLU 57 | 1.36 | 0.4 | 50.1 | -0.2874 | 0 | -0.0004 |
| 321 | SLU 58 | 1.3 | 0.4 | 49.57 | -0.2838 | -0.0024 | -0.0004 |
| 321 | SLU 59 | 1.31 | 0.4 | 49.58 | -0.2837 | -0.0017 | -0.0004 |
| 321 | SLU 60 | 1.69 | 0.42 | 51.72 | -0.2965 | 0.0135 | -0.0004 |
| 321 | SLU 61 | 1.71 | 0.41 | 51.73 | -0.2964 | 0.0142 | -0.0004 |
| 321 | SLU 62 | 1.55 | 0.42 | 51.68 | -0.2974 | 0.0066 | -0.0004 |
| 321 | SLU 63 | 1.56 | 0.42 | 51.69 | -0.2974 | 0.0072 | -0.0004 |
| 321 | SLU 64 | 1.47 | 0.39 | 49.22 | -0.2793 | 0.0065 | -0.0004 |
| 321 | SLU 65 | 1.49 | 0.39 | 49.23 | -0.2793 | 0.0077 | -0.0004 |
| 321 | SLU 66 | 1.38 | 0.4 | 49.71 | -0.284 | 0.0012 | -0.0004 |
| 321 | SLU 67 | 1.39 | 0.4 | 49.71 | -0.2839 | 0.0019 | -0.0004 |
| 321 | SLU 68 | 1.35 | 0.39 | 49.19 | -0.2803 | 0.0007 | -0.0004 |
| 321 | SLU 69 | 1.23 | 0.4 | 49.67 | -0.285 | -0.0058 | -0.0004 |
| 321 | SLU 70 | 1.25 | 0.4 | 49.67 | -0.2849 | -0.0051 | -0.0004 |
| 321 | SLU 71 | 1.18 | 0.39 | 49.14 | -0.2813 | -0.0074 | -0.0004 |
| 321 | SLU 72 | 1.19 | 0.39 | 49.15 | -0.2813 | -0.0067 | -0.0004 |
| 321 | SLU 73 | 1.74 | 0.44 | 54.06 | -0.3135 | 0.0122 | -0.0004 |
| 321 | SLU 74 | 1.62 | 0.44 | 54.54 | -0.3182 | 0.0058 | -0.0005 |
| 321 | SLU 75 | 1.64 | 0.44 | 54.55 | -0.3182 | 0.0065 | -0.0005 |
| 321 | SLU 76 | 1.6 | 0.44 | 54.02 | -0.3145 | 0.0053 | -0.0004 |
| 321 | SLU 77 | 1.48 | 0.45 | 54.5 | -0.3192 | -0.0012 | -0.0005 |
| 321 | SLU 78 | 1.5 | 0.45 | 54.51 | -0.3192 | -0.0005 | -0.0005 |
| 321 | SLU 79 | 1.43 | 0.44 | 53.98 | -0.3156 | -0.0029 | -0.0005 |
| 321 | SLU 80 | 1.44 | 0.44 | 53.98 | -0.3155 | -0.0022 | -0.0005 |
| 321 | SLU 81 | 1.82 | 0.46 | 56.13 | -0.3283 | 0.013 | -0.0005 |
| 321 | SLU 82 | 1.84 | 0.46 | 56.13 | -0.3282 | 0.0137 | -0.0005 |
| 321 | SLU 83 | 1.68 | 0.46 | 56.09 | -0.3293 | 0.0061 | -0.0005 |
| 321 | SLU 84 | 1.69 | 0.46 | 56.09 | -0.3292 | 0.0067 | -0.0005 |
| 321 | SLE RA 1 | 1.1 | 0.29 | 36.89 | -0.2079 | 0.0051 | -0.0003 |
| 321 | SLE RA 2 | 1.12 | 0.29 | 36.9 | -0.2078 | 0.0059 | -0.0003 |
| 321 | SLE RA 3 | 1.04 | 0.3 | 37.22 | -0.211 | 0.0016 | -0.0003 |
| 321 | SLE RA 4 | 1.05 | 0.3 | 37.22 | -0.2109 | 0.002 | -0.0003 |

| Nodo | Cont. | Reazione a traslazione | | | Reazione a rotazione | | |
|---|---|---|---|---|---|---|---|
| Ind. | N.br. | x | y | z | x | y | z |
| 321 | SLE RA 5 | 1.02 | 0.29 | 36.87 | -0.2085 | 0.0012 | -0.0003 |
| 321 | SLE RA 6 | 0.94 | 0.3 | 37.19 | -0.2116 | -0.0031 | -0.0003 |
| 321 | SLE RA 7 | 0.95 | 0.3 | 37.2 | -0.2116 | -0.0026 | -0.0003 |
| 321 | SLE RA 8 | 0.91 | 0.29 | 36.84 | -0.2092 | -0.0042 | -0.0003 |
| 321 | SLE RA 9 | 0.92 | 0.29 | 36.85 | -0.2092 | -0.0037 | -0.0003 |
| 321 | SLE RA 10 | 1.28 | 0.32 | 40.12 | -0.2307 | 0.0089 | -0.0003 |
| 321 | SLE RA 11 | 1.2 | 0.33 | 40.44 | -0.2338 | 0.0046 | -0.0003 |
| 321 | SLE RA 12 | 1.21 | 0.33 | 40.44 | -0.2338 | 0.0051 | -0.0003 |
| 321 | SLE RA 13 | 1.19 | 0.32 | 40.1 | -0.2313 | 0.0043 | -0.0003 |
| 321 | SLE RA 14 | 1.11 | 0.33 | 40.42 | -0.2345 | 0 | -0.0003 |
| 321 | SLE RA 15 | 1.12 | 0.33 | 40.42 | -0.2344 | 0.0004 | -0.0003 |
| 321 | SLE RA 16 | 1.07 | 0.32 | 40.07 | -0.232 | -0.0011 | -0.0003 |
| 321 | SLE RA 17 | 1.08 | 0.32 | 40.07 | -0.232 | -0.0007 | -0.0003 |
| 321 | SLE RA 18 | 1.34 | 0.34 | 41.5 | -0.2405 | 0.0095 | -0.0003 |
| 321 | SLE RA 19 | 1.35 | 0.34 | 41.5 | -0.2405 | 0.0099 | -0.0003 |
| 321 | SLE RA 20 | 1.24 | 0.34 | 41.47 | -0.2412 | 0.0048 | -0.0003 |
| 321 | SLE RA 21 | 1.25 | 0.34 | 41.48 | -0.2411 | 0.0053 | -0.0003 |
| 321 | SLE FR 1 | 1.1 | 0.29 | 36.89 | -0.2079 | 0.0051 | -0.0003 |
| 321 | SLE FR 2 | 1.1 | 0.29 | 36.9 | -0.2079 | 0.0053 | -0.0003 |
| 321 | SLE FR 3 | 1.06 | 0.29 | 36.88 | -0.2081 | 0.0033 | -0.0003 |
| 321 | SLE FR 4 | 1.17 | 0.3 | 38.28 | -0.2177 | 0.0066 | -0.0003 |
| 321 | SLE FR 5 | 1.13 | 0.3 | 38.27 | -0.2179 | 0.0046 | -0.0003 |
| 321 | SLE FR 6 | 1.22 | 0.31 | 39.2 | -0.2242 | 0.0073 | -0.0003 |
| 321 | SLE QP 1 | 1.1 | 0.29 | 36.89 | -0.2079 | 0.0051 | -0.0003 |
| 321 | SLE QP 2 | 1.17 | 0.3 | 38.28 | -0.2177 | 0.0064 | -0.0003 |
| 321 | SLD 1 | 8.19 | 0.18 | 34.04 | -0.1286 | 0.3117 | -0.0002 |
| 321 | SLD 2 | 8.19 | 0.18 | 34.04 | -0.1286 | 0.3117 | -0.0002 |
| 321 | SLD 3 | 7.33 | 0.27 | 38.96 | -0.1944 | 0.2774 | -0.0003 |
| 321 | SLD 4 | 7.33 | 0.27 | 38.96 | -0.1944 | 0.2774 | -0.0003 |
| 321 | SLD 5 | 4.58 | 0.13 | 29.53 | -0.091 | 0.15 | -0.0001 |
| 321 | SLD 6 | 4.58 | 0.13 | 29.53 | -0.091 | 0.15 | -0.0001 |
| 321 | SLD 7 | 1.71 | 0.43 | 45.96 | -0.3106 | 0.0357 | -0.0005 |
| 321 | SLD 8 | 1.71 | 0.43 | 45.96 | -0.3106 | 0.0357 | -0.0005 |
| 321 | SLD 9 | 0.63 | 0.18 | 30.59 | -0.1247 | -0.0228 | -0.0001 |
| 321 | SLD 10 | 0.63 | 0.18 | 30.59 | -0.1247 | -0.0228 | -0.0001 |
| 321 | SLD 11 | -2.24 | 0.48 | 47.02 | -0.3443 | -0.1372 | -0.0006 |
| 321 | SLD 12 | -2.24 | 0.48 | 47.02 | -0.3443 | -0.1372 | -0.0006 |
| 321 | SLD 13 | -4.98 | 0.34 | 37.59 | -0.2409 | -0.2646 | -0.0003 |
| 321 | SLD 14 | -4.98 | 0.34 | 37.59 | -0.2409 | -0.2646 | -0.0003 |
| 321 | SLD 15 | -5.85 | 0.43 | 42.52 | -0.3068 | -0.2989 | -0.0004 |
| 321 | SLD 16 | -5.85 | 0.43 | 42.52 | -0.3068 | -0.2989 | -0.0004 |
| 321 | SLV 1 | 17.26 | 0.01 | 28.21 | -0.0094 | 0.7067 | 0 |
| 321 | SLV 2 | 17.26 | 0.01 | 28.21 | -0.0094 | 0.7067 | 0 |
| 321 | SLV 3 | 15.21 | 0.22 | 39.96 | -0.1624 | 0.6246 | -0.0003 |
| 321 | SLV 4 | 15.21 | 0.22 | 39.96 | -0.1624 | 0.6246 | -0.0003 |
| 321 | SLV 5 | 9.12 | -0.1 | 17.42 | 0.0768 | 0.3409 | 0.0002 |
| 321 | SLV 6 | 9.12 | -0.1 | 17.42 | 0.0768 | 0.3409 | 0.0002 |
| 321 | SLV 7 | 2.27 | 0.59 | 56.61 | -0.4331 | 0.0675 | -0.0008 |
| 321 | SLV 8 | 2.27 | 0.59 | 56.61 | -0.4331 | 0.0675 | -0.0008 |
| 321 | SLV 9 | 0.08 | 0.02 | 19.94 | -0.0022 | -0.0546 | 0.0002 |
| 321 | SLV 10 | 0.08 | 0.02 | 19.94 | -0.0022 | -0.0546 | 0.0002 |
| 321 | SLV 11 | -6.77 | 0.71 | 59.13 | -0.5121 | -0.328 | -0.0009 |
| 321 | SLV 12 | -6.77 | 0.71 | 59.13 | -0.5121 | -0.328 | -0.0009 |
| 321 | SLV 13 | -12.87 | 0.39 | 36.59 | -0.273 | -0.6117 | -0.0003 |
| 321 | SLV 14 | -12.87 | 0.39 | 36.59 | -0.273 | -0.6117 | -0.0003 |
| 321 | SLV 15 | -14.92 | 0.6 | 48.35 | -0.4259 | -0.6938 | -0.0006 |
| 321 | SLV 16 | -14.92 | 0.6 | 48.35 | -0.4259 | -0.6938 | -0.0006 |
| 322 | SLU 1 | 3.22 | 0.35 | 30.6 | -0.2466 | 0.2226 | -0.0007 |
| 322 | SLU 2 | 3.25 | 0.35 | 30.6 | -0.2466 | 0.2239 | -0.0007 |
| 322 | SLU 3 | 3.16 | 0.35 | 31.07 | -0.2524 | 0.2212 | -0.0007 |
| 322 | SLU 4 | 3.18 | 0.35 | 31.07 | -0.2524 | 0.222 | -0.0007 |
| 322 | SLU 5 | 3.09 | 0.35 | 30.66 | -0.2479 | 0.2165 | -0.0007 |
| 322 | SLU 6 | 3 | 0.35 | 31.12 | -0.2537 | 0.2139 | -0.0007 |
| 322 | SLU 7 | 3.01 | 0.35 | 31.12 | -0.2537 | 0.2147 | -0.0007 |
| 322 | SLU 8 | 2.89 | 0.35 | 30.71 | -0.2492 | 0.2079 | -0.0007 |
| 322 | SLU 9 | 2.91 | 0.35 | 30.71 | -0.2492 | 0.2086 | -0.0007 |
| 322 | SLU 10 | 3.93 | 0.41 | 34.54 | -0.2893 | 0.267 | -0.0008 |
| 322 | SLU 11 | 3.83 | 0.41 | 35.01 | -0.2951 | 0.2643 | -0.0008 |
| 322 | SLU 12 | 3.85 | 0.41 | 35.01 | -0.2951 | 0.2651 | -0.0008 |
| 322 | SLU 13 | 3.76 | 0.41 | 34.59 | -0.2906 | 0.2596 | -0.0008 |
| 322 | SLU 14 | 3.67 | 0.41 | 35.06 | -0.2964 | 0.257 | -0.0008 |
| 322 | SLU 15 | 3.69 | 0.41 | 35.06 | -0.2964 | 0.2578 | -0.0008 |
| 322 | SLU 16 | 3.57 | 0.41 | 34.64 | -0.2919 | 0.251 | -0.0008 |
| 322 | SLU 17 | 3.59 | 0.41 | 34.64 | -0.2919 | 0.2518 | -0.0008 |
| 322 | SLU 18 | 4.19 | 0.43 | 36.23 | -0.3076 | 0.2841 | -0.0008 |
| 322 | SLU 19 | 4.2 | 0.43 | 36.23 | -0.3076 | 0.2849 | -0.0008 |
| 322 | SLU 20 | 4.02 | 0.43 | 36.28 | -0.3089 | 0.2768 | -0.0008 |
| 322 | SLU 21 | 4.04 | 0.43 | 36.28 | -0.3089 | 0.2776 | -0.0008 |
| 322 | SLU 22 | 3.73 | 0.4 | 34.23 | -0.2862 | 0.2574 | -0.0008 |
| 322 | SLU 23 | 3.76 | 0.4 | 34.23 | -0.2862 | 0.2587 | -0.0008 |
| 322 | SLU 24 | 3.67 | 0.41 | 34.69 | -0.2921 | 0.256 | -0.0008 |
| 322 | SLU 25 | 3.69 | 0.41 | 34.69 | -0.292 | 0.2568 | -0.0008 |
| 322 | SLU 26 | 3.6 | 0.4 | 34.28 | -0.2875 | 0.2514 | -0.0008 |
| 322 | SLU 27 | 3.51 | 0.41 | 34.75 | -0.2934 | 0.2487 | -0.0008 |
| 322 | SLU 28 | 3.52 | 0.41 | 34.75 | -0.2934 | 0.2495 | -0.0008 |
| 322 | SLU 29 | 3.4 | 0.4 | 34.33 | -0.2889 | 0.2427 | -0.0008 |
| 322 | SLU 30 | 3.42 | 0.4 | 34.33 | -0.2888 | 0.2435 | -0.0008 |
| 322 | SLU 31 | 4.44 | 0.46 | 38.16 | -0.3289 | 0.3018 | -0.0009 |

| Nodo | Cont. | Reazione a traslazione | | | Reazione a rotazione | | |
|---|---|---|---|---|---|---|---|
| Ind. | N.br. | x | y | z | x | y | z |
| 322 | SLU 32 | 4.34 | 0.47 | 38.63 | -0.3348 | 0.2992 | -0.0009 |
| 322 | SLU 33 | 4.36 | 0.47 | 38.63 | -0.3347 | 0.2999 | -0.0009 |
| 322 | SLU 34 | 4.27 | 0.46 | 38.22 | -0.3302 | 0.2945 | -0.0009 |
| 322 | SLU 35 | 4.18 | 0.47 | 38.68 | -0.3361 | 0.2918 | -0.0009 |
| 322 | SLU 36 | 4.2 | 0.47 | 38.68 | -0.3361 | 0.2926 | -0.0009 |
| 322 | SLU 37 | 4.08 | 0.46 | 38.27 | -0.3316 | 0.2858 | -0.0009 |
| 322 | SLU 38 | 4.1 | 0.46 | 38.27 | -0.3316 | 0.2866 | -0.0009 |
| 322 | SLU 39 | 4.69 | 0.49 | 39.85 | -0.3472 | 0.319 | -0.0009 |
| 322 | SLU 40 | 4.71 | 0.49 | 39.85 | -0.3472 | 0.3198 | -0.0009 |
| 322 | SLU 41 | 4.53 | 0.49 | 39.9 | -0.3485 | 0.3116 | -0.0009 |
| 322 | SLU 42 | 4.55 | 0.49 | 39.9 | -0.3485 | 0.3124 | -0.0009 |
| 322 | SLU 43 | 4.01 | 0.43 | 38.54 | -0.307 | 0.2774 | -0.0008 |
| 322 | SLU 44 | 4.04 | 0.43 | 38.54 | -0.307 | 0.2787 | -0.0008 |
| 322 | SLU 45 | 3.95 | 0.44 | 39.01 | -0.3128 | 0.276 | -0.0009 |
| 322 | SLU 46 | 3.97 | 0.44 | 39.01 | -0.3128 | 0.2768 | -0.0009 |
| 322 | SLU 47 | 3.88 | 0.43 | 38.6 | -0.3083 | 0.2714 | -0.0008 |
| 322 | SLU 48 | 3.79 | 0.44 | 39.06 | -0.3141 | 0.2687 | -0.0009 |
| 322 | SLU 49 | 3.81 | 0.44 | 39.06 | -0.3141 | 0.2695 | -0.0009 |
| 322 | SLU 50 | 3.69 | 0.43 | 38.65 | -0.3096 | 0.2627 | -0.0008 |
| 322 | SLU 51 | 3.7 | 0.43 | 38.65 | -0.3096 | 0.2635 | -0.0008 |
| 322 | SLU 52 | 4.72 | 0.49 | 42.48 | -0.3497 | 0.3218 | -0.001 |
| 322 | SLU 53 | 4.63 | 0.5 | 42.95 | -0.3555 | 0.3191 | -0.001 |
| 322 | SLU 54 | 4.64 | 0.5 | 42.95 | -0.3555 | 0.3199 | -0.001 |
| 322 | SLU 55 | 4.55 | 0.49 | 42.53 | -0.351 | 0.3145 | -0.001 |
| 322 | SLU 56 | 4.46 | 0.5 | 43 | -0.3568 | 0.3118 | -0.001 |
| 322 | SLU 57 | 4.48 | 0.5 | 43 | -0.3568 | 0.3126 | -0.001 |
| 322 | SLU 58 | 4.36 | 0.49 | 42.58 | -0.3523 | 0.3058 | -0.001 |
| 322 | SLU 59 | 4.38 | 0.49 | 42.58 | -0.3523 | 0.3066 | -0.001 |
| 322 | SLU 60 | 4.98 | 0.52 | 44.17 | -0.368 | 0.339 | -0.001 |
| 322 | SLU 61 | 4.99 | 0.52 | 44.17 | -0.368 | 0.3398 | -0.001 |
| 322 | SLU 62 | 4.81 | 0.52 | 44.22 | -0.3693 | 0.3316 | -0.001 |
| 322 | SLU 63 | 4.83 | 0.52 | 44.22 | -0.3693 | 0.3324 | -0.001 |
| 322 | SLU 64 | 4.52 | 0.49 | 42.17 | -0.3466 | 0.3122 | -0.0009 |
| 322 | SLU 65 | 4.55 | 0.49 | 42.17 | -0.3466 | 0.3135 | -0.0009 |
| 322 | SLU 66 | 4.46 | 0.49 | 42.63 | -0.3524 | 0.3109 | -0.001 |
| 322 | SLU 67 | 4.48 | 0.49 | 42.63 | -0.3524 | 0.3117 | -0.001 |
| 322 | SLU 68 | 4.39 | 0.49 | 42.22 | -0.3479 | 0.3062 | -0.0009 |
| 322 | SLU 69 | 4.3 | 0.5 | 42.69 | -0.3538 | 0.3035 | -0.001 |
| 322 | SLU 70 | 4.31 | 0.5 | 42.69 | -0.3537 | 0.3043 | -0.001 |
| 322 | SLU 71 | 4.2 | 0.49 | 42.27 | -0.3492 | 0.2975 | -0.0009 |
| 322 | SLU 72 | 4.21 | 0.49 | 42.27 | -0.3492 | 0.2983 | -0.0009 |
| 322 | SLU 73 | 5.23 | 0.55 | 46.1 | -0.3893 | 0.3566 | -0.0011 |
| 322 | SLU 74 | 5.14 | 0.55 | 46.57 | -0.3951 | 0.354 | -0.0011 |
| 322 | SLU 75 | 5.15 | 0.55 | 46.57 | -0.3951 | 0.3548 | -0.0011 |
| 322 | SLU 76 | 5.06 | 0.55 | 46.15 | -0.3906 | 0.3493 | -0.0011 |
| 322 | SLU 77 | 4.97 | 0.55 | 46.62 | -0.3965 | 0.3466 | -0.0011 |
| 322 | SLU 78 | 4.99 | 0.55 | 46.62 | -0.3964 | 0.3474 | -0.0011 |
| 322 | SLU 79 | 4.87 | 0.55 | 46.21 | -0.3919 | 0.3406 | -0.0011 |
| 322 | SLU 80 | 4.89 | 0.55 | 46.21 | -0.3919 | 0.3414 | -0.0011 |
| 322 | SLU 81 | 5.49 | 0.57 | 47.79 | -0.4076 | 0.3738 | -0.0011 |
| 322 | SLU 82 | 5.5 | 0.57 | 47.79 | -0.4076 | 0.3746 | -0.0011 |
| 322 | SLU 83 | 5.32 | 0.57 | 47.84 | -0.4089 | 0.3664 | -0.0011 |
| 322 | SLU 84 | 5.34 | 0.57 | 47.84 | -0.4089 | 0.3672 | -0.0011 |
| 322 | SLE RA 1 | 3.37 | 0.36 | 31.64 | -0.2579 | 0.2325 | -0.0007 |
| 322 | SLE RA 2 | 3.39 | 0.36 | 31.64 | -0.2579 | 0.2334 | -0.0007 |
| 322 | SLE RA 3 | 3.33 | 0.37 | 31.95 | -0.2618 | 0.2316 | -0.0007 |
| 322 | SLE RA 4 | 3.34 | 0.37 | 31.95 | -0.2618 | 0.2321 | -0.0007 |
| 322 | SLE RA 5 | 3.28 | 0.36 | 31.67 | -0.2588 | 0.2285 | -0.0007 |
| 322 | SLE RA 6 | 3.22 | 0.37 | 31.99 | -0.2627 | 0.2267 | -0.0007 |
| 322 | SLE RA 7 | 3.23 | 0.37 | 31.99 | -0.2627 | 0.2272 | -0.0007 |
| 322 | SLE RA 8 | 3.15 | 0.36 | 31.71 | -0.2597 | 0.2227 | -0.0007 |
| 322 | SLE RA 9 | 3.16 | 0.36 | 31.71 | -0.2597 | 0.2232 | -0.0007 |
| 322 | SLE RA 10 | 3.84 | 0.4 | 34.26 | -0.2864 | 0.2621 | -0.0008 |
| 322 | SLE RA 11 | 3.78 | 0.41 | 34.57 | -0.2903 | 0.2604 | -0.0008 |
| 322 | SLE RA 12 | 3.79 | 0.41 | 34.57 | -0.2903 | 0.2609 | -0.0008 |
| 322 | SLE RA 13 | 3.73 | 0.4 | 34.3 | -0.2872 | 0.2572 | -0.0008 |
| 322 | SLE RA 14 | 3.67 | 0.41 | 34.61 | -0.2911 | 0.2555 | -0.0008 |
| 322 | SLE RA 15 | 3.68 | 0.41 | 34.61 | -0.2911 | 0.256 | -0.0008 |
| 322 | SLE RA 16 | 3.6 | 0.4 | 34.33 | -0.2881 | 0.2514 | -0.0008 |
| 322 | SLE RA 17 | 3.61 | 0.4 | 34.33 | -0.2881 | 0.252 | -0.0008 |
| 322 | SLE RA 18 | 4.01 | 0.42 | 35.39 | -0.2986 | 0.2736 | -0.0008 |
| 322 | SLE RA 19 | 4.02 | 0.42 | 35.39 | -0.2986 | 0.2741 | -0.0008 |
| 322 | SLE RA 20 | 3.9 | 0.42 | 35.42 | -0.2995 | 0.2687 | -0.0008 |
| 322 | SLE RA 21 | 3.91 | 0.42 | 35.42 | -0.2995 | 0.2692 | -0.0008 |
| 322 | SLE FR 1 | 3.37 | 0.36 | 31.64 | -0.2579 | 0.2325 | -0.0007 |
| 322 | SLE FR 2 | 3.37 | 0.36 | 31.64 | -0.2579 | 0.2327 | -0.0007 |
| 322 | SLE FR 3 | 3.32 | 0.36 | 31.65 | -0.2583 | 0.2305 | -0.0007 |
| 322 | SLE FR 4 | 3.56 | 0.38 | 32.76 | -0.2701 | 0.245 | -0.0007 |
| 322 | SLE FR 5 | 3.52 | 0.38 | 32.78 | -0.2705 | 0.2429 | -0.0007 |
| 322 | SLE FR 6 | 3.69 | 0.39 | 33.51 | -0.2782 | 0.253 | -0.0008 |
| 322 | SLE QP 1 | 3.37 | 0.36 | 31.64 | -0.2579 | 0.2325 | -0.0007 |
| 322 | SLE QP 2 | 3.56 | 0.38 | 32.76 | -0.2701 | 0.2448 | -0.0007 |
| 322 | SLD 1 | 10.87 | 0.22 | 29.72 | -0.1565 | 0.5399 | -0.0004 |
| 322 | SLD 2 | 10.87 | 0.22 | 29.72 | -0.1565 | 0.5399 | -0.0004 |
| 322 | SLD 3 | 10.29 | 0.32 | 33.61 | -0.2398 | 0.564 | -0.0006 |
| 322 | SLD 4 | 10.29 | 0.32 | 33.61 | -0.2398 | 0.564 | -0.0006 |
| 322 | SLD 5 | 6.63 | 0.17 | 25.95 | -0.1097 | 0.2968 | -0.0003 |
| 322 | SLD 6 | 6.63 | 0.17 | 25.95 | -0.1097 | 0.2968 | -0.0003 |

| Nodo | Cont. | Reazione a traslazione | | | Reazione a rotazione | | |
|---|---|---|---|---|---|---|---|
| Ind. | N.br. | x | y | z | x | y | z |
| 322 | SLD 7 | 4.7 | 0.53 | 38.92 | -0.3874 | 0.3772 | -0.001 |
| 322 | SLD 8 | 4.7 | 0.53 | 38.92 | -0.3874 | 0.3772 | -0.001 |
| 322 | SLD 9 | 2.42 | 0.23 | 26.61 | -0.1529 | 0.1125 | -0.0005 |
| 322 | SLD 10 | 2.42 | 0.23 | 26.61 | -0.1529 | 0.1125 | -0.0005 |
| 322 | SLD 11 | 0.49 | 0.59 | 39.58 | -0.4305 | 0.1929 | -0.0011 |
| 322 | SLD 12 | 0.49 | 0.59 | 39.58 | -0.4305 | 0.1929 | -0.0011 |
| 322 | SLD 13 | -3.17 | 0.43 | 31.91 | -0.3004 | -0.0744 | -0.0008 |
| 322 | SLD 14 | -3.17 | 0.43 | 31.91 | -0.3004 | -0.0744 | -0.0008 |
| 322 | SLD 15 | -3.75 | 0.54 | 35.81 | -0.3837 | -0.0503 | -0.001 |
| 322 | SLD 16 | -3.75 | 0.54 | 35.81 | -0.3837 | -0.0503 | -0.001 |
| 322 | SLV 1 | 20.31 | 0 | 25.51 | -0.0039 | 0.9178 | -0.0001 |
| 322 | SLV 2 | 20.31 | 0 | 25.51 | -0.0039 | 0.9178 | -0.0001 |
| 322 | SLV 3 | 18.91 | 0.25 | 34.78 | -0.198 | 0.9766 | -0.0005 |
| 322 | SLV 4 | 18.91 | 0.25 | 34.78 | -0.198 | 0.9766 | -0.0005 |
| 322 | SLV 5 | 10.71 | -0.12 | 16.52 | 0.1041 | 0.3574 | 0.0002 |
| 322 | SLV 6 | 10.71 | -0.12 | 16.52 | 0.1041 | 0.3574 | 0.0002 |
| 322 | SLV 7 | 6.05 | 0.72 | 47.43 | -0.5428 | 0.5536 | -0.0014 |
| 322 | SLV 8 | 6.05 | 0.72 | 47.43 | -0.5428 | 0.5536 | -0.0014 |
| 322 | SLV 9 | 1.07 | 0.04 | 18.09 | 0.0026 | -0.064 | -0.0001 |
| 322 | SLV 10 | 1.07 | 0.04 | 18.09 | 0.0026 | -0.064 | -0.0001 |
| 322 | SLV 11 | -3.59 | 0.87 | 49.01 | -0.6443 | 0.1322 | -0.0016 |
| 322 | SLV 12 | -3.59 | 0.87 | 49.01 | -0.6443 | 0.1322 | -0.0016 |
| 322 | SLV 13 | -11.79 | 0.51 | 30.75 | -0.3422 | -0.487 | -0.001 |
| 322 | SLV 14 | -11.79 | 0.51 | 30.75 | -0.3422 | -0.487 | -0.001 |
| 322 | SLV 15 | -13.19 | 0.76 | 40.02 | -0.5363 | -0.4281 | -0.0014 |
| 322 | SLV 16 | -13.19 | 0.76 | 40.02 | -0.5363 | -0.4281 | -0.0014 |
| 323 | SLU 1 | 3.78 | 0.36 | 27.78 | -0.2685 | 0.1229 | -0.001 |
| 323 | SLU 2 | 3.81 | 0.36 | 27.78 | -0.2685 | 0.1243 | -0.001 |
| 323 | SLU 3 | 3.71 | 0.37 | 28.25 | -0.275 | 0.1191 | -0.0011 |
| 323 | SLU 4 | 3.73 | 0.37 | 28.25 | -0.275 | 0.1199 | -0.0011 |
| 323 | SLU 5 | 3.63 | 0.36 | 27.89 | -0.2701 | 0.116 | -0.001 |
| 323 | SLU 6 | 3.53 | 0.37 | 28.36 | -0.2766 | 0.1108 | -0.0011 |
| 323 | SLU 7 | 3.55 | 0.37 | 28.36 | -0.2766 | 0.1116 | -0.0011 |
| 323 | SLU 8 | 3.41 | 0.37 | 28 | -0.2717 | 0.1064 | -0.001 |
| 323 | SLU 9 | 3.43 | 0.37 | 28 | -0.2717 | 0.1072 | -0.001 |
| 323 | SLU 10 | 4.64 | 0.42 | 31.25 | -0.3152 | 0.1534 | -0.0012 |
| 323 | SLU 11 | 4.54 | 0.43 | 31.71 | -0.3217 | 0.1482 | -0.0012 |
| 323 | SLU 12 | 4.56 | 0.43 | 31.71 | -0.3217 | 0.149 | -0.0012 |
| 323 | SLU 13 | 4.46 | 0.43 | 31.36 | -0.3168 | 0.1452 | -0.0012 |
| 323 | SLU 14 | 4.36 | 0.43 | 31.82 | -0.3233 | 0.1399 | -0.0012 |
| 323 | SLU 15 | 4.38 | 0.43 | 31.82 | -0.3233 | 0.1408 | -0.0012 |
| 323 | SLU 16 | 4.24 | 0.43 | 31.47 | -0.3184 | 0.1355 | -0.0012 |
| 323 | SLU 17 | 4.26 | 0.43 | 31.47 | -0.3184 | 0.1364 | -0.0012 |
| 323 | SLU 18 | 4.96 | 0.45 | 32.73 | -0.3353 | 0.1646 | -0.0013 |
| 323 | SLU 19 | 4.98 | 0.45 | 32.73 | -0.3353 | 0.1654 | -0.0013 |
| 323 | SLU 20 | 4.78 | 0.45 | 32.84 | -0.3369 | 0.1563 | -0.0013 |
| 323 | SLU 21 | 4.8 | 0.45 | 32.84 | -0.3369 | 0.1571 | -0.0013 |
| 323 | SLU 22 | 4.41 | 0.42 | 31 | -0.3119 | 0.1439 | -0.0012 |
| 323 | SLU 23 | 4.45 | 0.42 | 30.99 | -0.3119 | 0.1453 | -0.0012 |
| 323 | SLU 24 | 4.35 | 0.43 | 31.46 | -0.3184 | 0.1401 | -0.0012 |
| 323 | SLU 25 | 4.37 | 0.43 | 31.46 | -0.3184 | 0.1409 | -0.0012 |
| 323 | SLU 26 | 4.26 | 0.42 | 31.1 | -0.3135 | 0.137 | -0.0012 |
| 323 | SLU 27 | 4.17 | 0.43 | 31.57 | -0.32 | 0.1318 | -0.0012 |
| 323 | SLU 28 | 4.19 | 0.43 | 31.57 | -0.32 | 0.1326 | -0.0012 |
| 323 | SLU 29 | 4.05 | 0.42 | 31.21 | -0.3151 | 0.1274 | -0.0012 |
| 323 | SLU 30 | 4.07 | 0.42 | 31.21 | -0.3151 | 0.1282 | -0.0012 |
| 323 | SLU 31 | 5.28 | 0.48 | 34.46 | -0.3586 | 0.1744 | -0.0014 |
| 323 | SLU 32 | 5.18 | 0.49 | 34.92 | -0.3651 | 0.1692 | -0.0014 |
| 323 | SLU 33 | 5.2 | 0.49 | 34.92 | -0.3651 | 0.17 | -0.0014 |
| 323 | SLU 34 | 5.09 | 0.48 | 34.57 | -0.3602 | 0.1662 | -0.0014 |
| 323 | SLU 35 | 5 | 0.49 | 35.03 | -0.3667 | 0.1609 | -0.0014 |
| 323 | SLU 36 | 5.02 | 0.49 | 35.03 | -0.3667 | 0.1618 | -0.0014 |
| 323 | SLU 37 | 4.88 | 0.49 | 34.68 | -0.3618 | 0.1565 | -0.0014 |
| 323 | SLU 38 | 4.9 | 0.49 | 34.68 | -0.3618 | 0.1574 | -0.0014 |
| 323 | SLU 39 | 5.6 | 0.51 | 35.94 | -0.3787 | 0.1856 | -0.0015 |
| 323 | SLU 40 | 5.62 | 0.51 | 35.94 | -0.3787 | 0.1864 | -0.0015 |
| 323 | SLU 41 | 5.42 | 0.51 | 36.05 | -0.3803 | 0.1773 | -0.0015 |
| 323 | SLU 42 | 5.44 | 0.51 | 36.05 | -0.3803 | 0.1781 | -0.0015 |
| 323 | SLU 43 | 4.69 | 0.45 | 35.02 | -0.3341 | 0.1526 | -0.0013 |
| 323 | SLU 44 | 4.73 | 0.45 | 35.02 | -0.3341 | 0.154 | -0.0013 |
| 323 | SLU 45 | 4.63 | 0.46 | 35.48 | -0.3406 | 0.1487 | -0.0013 |
| 323 | SLU 46 | 4.65 | 0.46 | 35.48 | -0.3406 | 0.1496 | -0.0013 |
| 323 | SLU 47 | 4.54 | 0.45 | 35.13 | -0.3357 | 0.1457 | -0.0013 |
| 323 | SLU 48 | 4.45 | 0.46 | 35.59 | -0.3422 | 0.1405 | -0.0013 |
| 323 | SLU 49 | 4.47 | 0.46 | 35.59 | -0.3422 | 0.1413 | -0.0013 |
| 323 | SLU 50 | 4.33 | 0.45 | 35.24 | -0.3373 | 0.1361 | -0.0013 |
| 323 | SLU 51 | 4.35 | 0.45 | 35.24 | -0.3373 | 0.1369 | -0.0013 |
| 323 | SLU 52 | 5.56 | 0.51 | 38.48 | -0.3809 | 0.1831 | -0.0015 |
| 323 | SLU 53 | 5.46 | 0.52 | 38.95 | -0.3874 | 0.1779 | -0.0015 |
| 323 | SLU 54 | 5.48 | 0.52 | 38.95 | -0.3874 | 0.1787 | -0.0015 |
| 323 | SLU 55 | 5.37 | 0.52 | 38.59 | -0.3825 | 0.1749 | -0.0015 |
| 323 | SLU 56 | 5.28 | 0.52 | 39.06 | -0.389 | 0.1696 | -0.0015 |
| 323 | SLU 57 | 5.3 | 0.52 | 39.06 | -0.389 | 0.1704 | -0.0015 |
| 323 | SLU 58 | 5.16 | 0.52 | 38.7 | -0.3841 | 0.1652 | -0.0015 |
| 323 | SLU 59 | 5.18 | 0.52 | 38.7 | -0.3841 | 0.166 | -0.0015 |
| 323 | SLU 60 | 5.88 | 0.54 | 39.97 | -0.4009 | 0.1942 | -0.0015 |
| 323 | SLU 61 | 5.9 | 0.54 | 39.97 | -0.4009 | 0.1951 | -0.0015 |
| 323 | SLU 62 | 5.7 | 0.54 | 40.08 | -0.4025 | 0.186 | -0.0015 |

| Nodo | Cont. | Reazione a traslazione | | | Reazione a rotazione | | |
|---|---|---|---|---|---|---|---|
| Ind. | N.br. | x | y | z | x | y | z |
| 323 | SLU 63 | 5.72 | 0.54 | 40.08 | -0.4025 | 0.1868 | -0.0015 |
| 323 | SLU 64 | 5.33 | 0.51 | 38.23 | -0.3775 | 0.1736 | -0.0015 |
| 323 | SLU 65 | 5.36 | 0.51 | 38.23 | -0.3775 | 0.175 | -0.0015 |
| 323 | SLU 66 | 5.27 | 0.52 | 38.69 | -0.384 | 0.1697 | -0.0015 |
| 323 | SLU 67 | 5.28 | 0.52 | 38.69 | -0.384 | 0.1706 | -0.0015 |
| 323 | SLU 68 | 5.18 | 0.51 | 38.34 | -0.3791 | 0.1667 | -0.0015 |
| 323 | SLU 69 | 5.08 | 0.52 | 38.8 | -0.3856 | 0.1615 | -0.0015 |
| 323 | SLU 70 | 5.1 | 0.52 | 38.8 | -0.3856 | 0.1623 | -0.0015 |
| 323 | SLU 71 | 4.96 | 0.51 | 38.45 | -0.3807 | 0.1571 | -0.0015 |
| 323 | SLU 72 | 4.98 | 0.51 | 38.45 | -0.3807 | 0.1579 | -0.0015 |
| 323 | SLU 73 | 6.19 | 0.57 | 41.69 | -0.4243 | 0.2041 | -0.0016 |
| 323 | SLU 74 | 6.1 | 0.58 | 42.16 | -0.4308 | 0.1989 | -0.0017 |
| 323 | SLU 75 | 6.11 | 0.58 | 42.16 | -0.4308 | 0.1997 | -0.0017 |
| 323 | SLU 76 | 6.01 | 0.57 | 41.8 | -0.4259 | 0.1959 | -0.0016 |
| 323 | SLU 77 | 5.91 | 0.58 | 42.27 | -0.4324 | 0.1906 | -0.0017 |
| 323 | SLU 78 | 5.93 | 0.58 | 42.27 | -0.4324 | 0.1914 | -0.0017 |
| 323 | SLU 79 | 5.79 | 0.57 | 41.91 | -0.4275 | 0.1862 | -0.0016 |
| 323 | SLU 80 | 5.81 | 0.57 | 41.91 | -0.4275 | 0.187 | -0.0016 |
| 323 | SLU 81 | 6.52 | 0.6 | 43.18 | -0.4443 | 0.2152 | -0.0017 |
| 323 | SLU 82 | 6.53 | 0.6 | 43.18 | -0.4443 | 0.2161 | -0.0017 |
| 323 | SLU 83 | 6.33 | 0.6 | 43.29 | -0.4459 | 0.207 | -0.0017 |
| 323 | SLU 84 | 6.35 | 0.6 | 43.29 | -0.4459 | 0.2078 | -0.0017 |
| 323 | SLE RA 1 | 3.96 | 0.38 | 28.7 | -0.2809 | 0.1289 | -0.0011 |
| 323 | SLE RA 2 | 3.98 | 0.38 | 28.7 | -0.2809 | 0.1298 | -0.0011 |
| 323 | SLE RA 3 | 3.92 | 0.38 | 29.01 | -0.2852 | 0.1264 | -0.0011 |
| 323 | SLE RA 4 | 3.93 | 0.38 | 29.01 | -0.2852 | 0.1269 | -0.0011 |
| 323 | SLE RA 5 | 3.86 | 0.38 | 28.77 | -0.2819 | 0.1243 | -0.0011 |
| 323 | SLE RA 6 | 3.8 | 0.39 | 29.08 | -0.2863 | 0.1208 | -0.0011 |
| 323 | SLE RA 7 | 3.81 | 0.39 | 29.08 | -0.2863 | 0.1214 | -0.0011 |
| 323 | SLE RA 8 | 3.72 | 0.38 | 28.85 | -0.283 | 0.1179 | -0.0011 |
| 323 | SLE RA 9 | 3.73 | 0.38 | 28.85 | -0.283 | 0.1185 | -0.0011 |
| 323 | SLE RA 10 | 4.53 | 0.42 | 31.01 | -0.312 | 0.1493 | -0.0012 |
| 323 | SLE RA 11 | 4.47 | 0.43 | 31.32 | -0.3164 | 0.1458 | -0.0012 |
| 323 | SLE RA 12 | 4.48 | 0.43 | 31.32 | -0.3164 | 0.1463 | -0.0012 |
| 323 | SLE RA 13 | 4.41 | 0.42 | 31.08 | -0.3131 | 0.1438 | -0.0012 |
| 323 | SLE RA 14 | 4.35 | 0.43 | 31.39 | -0.3174 | 0.1403 | -0.0012 |
| 323 | SLE RA 15 | 4.36 | 0.43 | 31.39 | -0.3174 | 0.1408 | -0.0012 |
| 323 | SLE RA 16 | 4.27 | 0.42 | 31.16 | -0.3142 | 0.1373 | -0.0012 |
| 323 | SLE RA 17 | 4.28 | 0.42 | 31.16 | -0.3142 | 0.1379 | -0.0012 |
| 323 | SLE RA 18 | 4.75 | 0.44 | 32 | -0.3254 | 0.1567 | -0.0012 |
| 323 | SLE RA 19 | 4.76 | 0.44 | 32 | -0.3254 | 0.1572 | -0.0012 |
| 323 | SLE RA 20 | 4.63 | 0.44 | 32.07 | -0.3265 | 0.1512 | -0.0013 |
| 323 | SLE RA 21 | 4.64 | 0.44 | 32.07 | -0.3265 | 0.1517 | -0.0013 |
| 323 | SLE FR 1 | 3.96 | 0.38 | 28.7 | -0.2809 | 0.1289 | -0.0011 |
| 323 | SLE FR 2 | 3.96 | 0.38 | 28.7 | -0.2809 | 0.1291 | -0.0011 |
| 323 | SLE FR 3 | 3.91 | 0.38 | 28.73 | -0.2813 | 0.1267 | -0.0011 |
| 323 | SLE FR 4 | 4.2 | 0.4 | 29.69 | -0.2942 | 0.1374 | -0.0011 |
| 323 | SLE FR 5 | 4.15 | 0.4 | 29.72 | -0.2947 | 0.1351 | -0.0011 |
| 323 | SLE FR 6 | 4.36 | 0.41 | 30.35 | -0.3031 | 0.1428 | -0.0012 |
| 323 | SLE QP 1 | 3.96 | 0.38 | 28.7 | -0.2809 | 0.1289 | -0.0011 |
| 323 | SLE QP 2 | 4.2 | 0.4 | 29.69 | -0.2942 | 0.1373 | -0.0011 |
| 323 | SLD 1 | 11.35 | 0.22 | 27.16 | -0.1675 | 0.4696 | -0.0007 |
| 323 | SLD 2 | 11.35 | 0.22 | 27.16 | -0.1675 | 0.4696 | -0.0007 |
| 323 | SLD 3 | 11.89 | 0.34 | 30.49 | -0.2633 | 0.4475 | -0.001 |
| 323 | SLD 4 | 11.89 | 0.34 | 30.49 | -0.2633 | 0.4475 | -0.001 |
| 323 | SLD 5 | 5.53 | 0.15 | 23.88 | -0.1109 | 0.2706 | -0.0005 |
| 323 | SLD 6 | 5.53 | 0.15 | 23.88 | -0.1109 | 0.2706 | -0.0005 |
| 323 | SLD 7 | 7.31 | 0.57 | 34.99 | -0.4302 | 0.1967 | -0.0016 |
| 323 | SLD 8 | 7.31 | 0.57 | 34.99 | -0.4302 | 0.1967 | -0.0016 |
| 323 | SLD 9 | 1.08 | 0.22 | 24.39 | -0.1582 | 0.0778 | -0.0007 |
| 323 | SLD 10 | 1.08 | 0.22 | 24.39 | -0.1582 | 0.0778 | -0.0007 |
| 323 | SLD 11 | 2.86 | 0.64 | 35.51 | -0.4775 | 0.0039 | -0.0017 |
| 323 | SLD 12 | 2.86 | 0.64 | 35.51 | -0.4775 | 0.0039 | -0.0017 |
| 323 | SLD 13 | -3.49 | 0.45 | 28.89 | -0.3252 | -0.173 | -0.0013 |
| 323 | SLD 14 | -3.49 | 0.45 | 28.89 | -0.3252 | -0.173 | -0.0013 |
| 323 | SLD 15 | -2.96 | 0.58 | 32.22 | -0.421 | -0.1951 | -0.0016 |
| 323 | SLD 16 | -2.96 | 0.58 | 32.22 | -0.421 | -0.1951 | -0.0016 |
| 323 | SLV 1 | 20.51 | -0.02 | 23.63 | 0.0039 | 0.8992 | 0 |
| 323 | SLV 2 | 20.51 | -0.02 | 23.63 | 0.0039 | 0.8992 | 0 |
| 323 | SLV 3 | 21.83 | 0.27 | 31.57 | -0.2197 | 0.8449 | -0.0008 |
| 323 | SLV 4 | 21.83 | 0.27 | 31.57 | -0.2197 | 0.8449 | -0.0008 |
| 323 | SLV 5 | 7.1 | -0.18 | 15.83 | 0.1343 | 0.4481 | 0.0003 |
| 323 | SLV 6 | 7.1 | -0.18 | 15.83 | 0.1343 | 0.4481 | 0.0003 |
| 323 | SLV 7 | 11.48 | 0.8 | 42.3 | -0.6109 | 0.2673 | -0.0021 |
| 323 | SLV 8 | 11.48 | 0.8 | 42.3 | -0.6109 | 0.2673 | -0.0021 |
| 323 | SLV 9 | -3.08 | -0.01 | 17.08 | 0.0225 | 0.0073 | -0.0001 |
| 323 | SLV 10 | -3.08 | -0.01 | 17.08 | 0.0225 | 0.0073 | -0.0001 |
| 323 | SLV 11 | 1.29 | 0.97 | 43.55 | -0.7227 | -0.1736 | -0.0026 |
| 323 | SLV 12 | 1.29 | 0.97 | 43.55 | -0.7227 | -0.1736 | -0.0026 |
| 323 | SLV 13 | -13.43 | 0.52 | 27.81 | -0.3688 | -0.5704 | -0.0015 |
| 323 | SLV 14 | -13.43 | 0.52 | 27.81 | -0.3688 | -0.5704 | -0.0015 |
| 323 | SLV 15 | -12.12 | 0.82 | 35.75 | -0.5923 | -0.6247 | -0.0022 |
| 323 | SLV 16 | -12.12 | 0.82 | 35.75 | -0.5923 | -0.6247 | -0.0022 |
| 324 | SLU 1 | 6.65 | 0.36 | 27.06 | -0.2702 | 0.3278 | -0.0012 |
| 324 | SLU 2 | 6.69 | 0.36 | 27.06 | -0.2702 | 0.3293 | -0.0012 |
| 324 | SLU 3 | 6.64 | 0.36 | 27.54 | -0.2769 | 0.328 | -0.0012 |
| 324 | SLU 4 | 6.66 | 0.36 | 27.54 | -0.2769 | 0.3289 | -0.0012 |
| 324 | SLU 5 | 6.5 | 0.36 | 27.2 | -0.272 | 0.3212 | -0.0012 |

| Nodo | Cont. | Reazione a traslazione | | | Reazione a rotazione | | |
|---|---|---|---|---|---|---|---|
| Ind. | N.br. | x | y | z | x | y | z |
| 324 | SLU 6 | 6.46 | 0.37 | 27.69 | -0.2786 | 0.3199 | -0.0012 |
| 324 | SLU 7 | 6.48 | 0.37 | 27.69 | -0.2786 | 0.3208 | -0.0012 |
| 324 | SLU 8 | 6.28 | 0.36 | 27.35 | -0.2737 | 0.3116 | -0.0012 |
| 324 | SLU 9 | 6.31 | 0.36 | 27.35 | -0.2737 | 0.3125 | -0.0012 |
| 324 | SLU 10 | 8.04 | 0.42 | 30.45 | -0.3175 | 0.3944 | -0.0014 |
| 324 | SLU 11 | 8 | 0.43 | 30.93 | -0.3242 | 0.3931 | -0.0014 |
| 324 | SLU 12 | 8.02 | 0.43 | 30.93 | -0.3242 | 0.394 | -0.0014 |
| 324 | SLU 13 | 7.86 | 0.42 | 30.6 | -0.3193 | 0.3863 | -0.0014 |
| 324 | SLU 14 | 7.81 | 0.43 | 31.08 | -0.3259 | 0.385 | -0.0014 |
| 324 | SLU 15 | 7.83 | 0.43 | 31.08 | -0.3259 | 0.3859 | -0.0014 |
| 324 | SLU 16 | 7.64 | 0.42 | 30.74 | -0.321 | 0.3767 | -0.0014 |
| 324 | SLU 17 | 7.66 | 0.42 | 30.74 | -0.321 | 0.3776 | -0.0014 |
| 324 | SLU 18 | 8.59 | 0.44 | 31.9 | -0.3378 | 0.4207 | -0.0015 |
| 324 | SLU 19 | 8.61 | 0.44 | 31.9 | -0.3378 | 0.4216 | -0.0015 |
| 324 | SLU 20 | 8.4 | 0.45 | 32.05 | -0.3395 | 0.4127 | -0.0015 |
| 324 | SLU 21 | 8.43 | 0.45 | 32.05 | -0.3395 | 0.4136 | -0.0015 |
| 324 | SLU 22 | 7.76 | 0.41 | 30.2 | -0.3141 | 0.3818 | -0.0014 |
| 324 | SLU 23 | 7.8 | 0.41 | 30.21 | -0.3141 | 0.3833 | -0.0014 |
| 324 | SLU 24 | 7.75 | 0.42 | 30.69 | -0.3208 | 0.382 | -0.0014 |
| 324 | SLU 25 | 7.77 | 0.42 | 30.69 | -0.3208 | 0.3829 | -0.0014 |
| 324 | SLU 26 | 7.61 | 0.41 | 30.35 | -0.3159 | 0.3752 | -0.0014 |
| 324 | SLU 27 | 7.57 | 0.42 | 30.84 | -0.3225 | 0.3739 | -0.0014 |
| 324 | SLU 28 | 7.59 | 0.42 | 30.84 | -0.3226 | 0.3748 | -0.0014 |
| 324 | SLU 29 | 7.39 | 0.42 | 30.5 | -0.3176 | 0.3656 | -0.0014 |
| 324 | SLU 30 | 7.42 | 0.42 | 30.5 | -0.3176 | 0.3665 | -0.0014 |
| 324 | SLU 31 | 9.15 | 0.47 | 33.6 | -0.3614 | 0.4483 | -0.0016 |
| 324 | SLU 32 | 9.11 | 0.48 | 34.08 | -0.3681 | 0.447 | -0.0016 |
| 324 | SLU 33 | 9.13 | 0.48 | 34.08 | -0.3681 | 0.448 | -0.0016 |
| 324 | SLU 34 | 8.97 | 0.48 | 33.74 | -0.3632 | 0.4403 | -0.0016 |
| 324 | SLU 35 | 8.92 | 0.49 | 34.23 | -0.3699 | 0.439 | -0.0016 |
| 324 | SLU 36 | 8.94 | 0.49 | 34.23 | -0.3699 | 0.4399 | -0.0016 |
| 324 | SLU 37 | 8.75 | 0.48 | 33.89 | -0.3649 | 0.4307 | -0.0016 |
| 324 | SLU 38 | 8.77 | 0.48 | 33.89 | -0.3649 | 0.4316 | -0.0016 |
| 324 | SLU 39 | 9.7 | 0.5 | 35.05 | -0.3817 | 0.4747 | -0.0016 |
| 324 | SLU 40 | 9.72 | 0.5 | 35.05 | -0.3817 | 0.4756 | -0.0016 |
| 324 | SLU 41 | 9.51 | 0.5 | 35.2 | -0.3835 | 0.4666 | -0.0016 |
| 324 | SLU 42 | 9.54 | 0.5 | 35.2 | -0.3835 | 0.4675 | -0.0016 |
| 324 | SLU 43 | 8.27 | 0.44 | 34.1 | -0.3362 | 0.4077 | -0.0015 |
| 324 | SLU 44 | 8.3 | 0.44 | 34.1 | -0.3362 | 0.4092 | -0.0015 |
| 324 | SLU 45 | 8.26 | 0.45 | 34.58 | -0.3429 | 0.4079 | -0.0015 |
| 324 | SLU 46 | 8.28 | 0.45 | 34.58 | -0.3429 | 0.4088 | -0.0015 |
| 324 | SLU 47 | 8.12 | 0.44 | 34.24 | -0.338 | 0.4011 | -0.0015 |
| 324 | SLU 48 | 8.07 | 0.45 | 34.73 | -0.3446 | 0.3998 | -0.0015 |
| 324 | SLU 49 | 8.09 | 0.45 | 34.73 | -0.3446 | 0.4007 | -0.0015 |
| 324 | SLU 50 | 7.9 | 0.45 | 34.39 | -0.3397 | 0.3915 | -0.0015 |
| 324 | SLU 51 | 7.92 | 0.45 | 34.39 | -0.3397 | 0.3924 | -0.0015 |
| 324 | SLU 52 | 9.66 | 0.5 | 37.49 | -0.3835 | 0.4742 | -0.0017 |
| 324 | SLU 53 | 9.61 | 0.51 | 37.97 | -0.3902 | 0.4729 | -0.0017 |
| 324 | SLU 54 | 9.63 | 0.51 | 37.97 | -0.3902 | 0.4738 | -0.0017 |
| 324 | SLU 55 | 9.47 | 0.51 | 37.63 | -0.3853 | 0.4661 | -0.0017 |
| 324 | SLU 56 | 9.43 | 0.51 | 38.12 | -0.3919 | 0.4648 | -0.0017 |
| 324 | SLU 57 | 9.45 | 0.51 | 38.12 | -0.3919 | 0.4657 | -0.0017 |
| 324 | SLU 58 | 9.25 | 0.51 | 37.78 | -0.387 | 0.4565 | -0.0017 |
| 324 | SLU 59 | 9.28 | 0.51 | 37.78 | -0.387 | 0.4574 | -0.0017 |
| 324 | SLU 60 | 10.2 | 0.53 | 38.94 | -0.4038 | 0.5006 | -0.0017 |
| 324 | SLU 61 | 10.22 | 0.53 | 38.94 | -0.4038 | 0.5015 | -0.0017 |
| 324 | SLU 62 | 10.02 | 0.53 | 39.09 | -0.4055 | 0.4925 | -0.0017 |
| 324 | SLU 63 | 10.04 | 0.53 | 39.09 | -0.4055 | 0.4934 | -0.0017 |
| 324 | SLU 64 | 9.38 | 0.5 | 37.24 | -0.3801 | 0.4616 | -0.0016 |
| 324 | SLU 65 | 9.41 | 0.5 | 37.24 | -0.3801 | 0.4631 | -0.0016 |
| 324 | SLU 66 | 9.37 | 0.51 | 37.73 | -0.3868 | 0.4618 | -0.0017 |
| 324 | SLU 67 | 9.39 | 0.51 | 37.73 | -0.3868 | 0.4627 | -0.0017 |
| 324 | SLU 68 | 9.23 | 0.5 | 37.39 | -0.3819 | 0.4551 | -0.0016 |
| 324 | SLU 69 | 9.18 | 0.51 | 37.87 | -0.3885 | 0.4538 | -0.0017 |
| 324 | SLU 70 | 9.2 | 0.51 | 37.87 | -0.3886 | 0.4547 | -0.0017 |
| 324 | SLU 71 | 9.01 | 0.5 | 37.53 | -0.3836 | 0.4455 | -0.0016 |
| 324 | SLU 72 | 9.03 | 0.5 | 37.54 | -0.3836 | 0.4464 | -0.0016 |
| 324 | SLU 73 | 10.77 | 0.56 | 40.64 | -0.4274 | 0.5282 | -0.0018 |
| 324 | SLU 74 | 10.72 | 0.57 | 41.12 | -0.4341 | 0.5269 | -0.0019 |
| 324 | SLU 75 | 10.74 | 0.57 | 41.12 | -0.4341 | 0.5278 | -0.0019 |
| 324 | SLU 76 | 10.58 | 0.56 | 40.78 | -0.4292 | 0.5201 | -0.0018 |
| 324 | SLU 77 | 10.54 | 0.57 | 41.27 | -0.4359 | 0.5188 | -0.0019 |
| 324 | SLU 78 | 10.56 | 0.57 | 41.27 | -0.4359 | 0.5197 | -0.0019 |
| 324 | SLU 79 | 10.36 | 0.57 | 40.93 | -0.4309 | 0.5105 | -0.0019 |
| 324 | SLU 80 | 10.39 | 0.57 | 40.93 | -0.4309 | 0.5114 | -0.0019 |
| 324 | SLU 81 | 11.31 | 0.59 | 42.09 | -0.4477 | 0.5546 | -0.0019 |
| 324 | SLU 82 | 11.33 | 0.59 | 42.09 | -0.4477 | 0.5555 | -0.0019 |
| 324 | SLU 83 | 11.13 | 0.59 | 42.23 | -0.4495 | 0.5465 | -0.0019 |
| 324 | SLU 84 | 11.15 | 0.59 | 42.23 | -0.4495 | 0.5474 | -0.0019 |
| 324 | SLE RA 1 | 6.97 | 0.37 | 27.96 | -0.2827 | 0.3432 | -0.0012 |
| 324 | SLE RA 2 | 6.99 | 0.37 | 27.96 | -0.2828 | 0.3442 | -0.0012 |
| 324 | SLE RA 3 | 6.96 | 0.38 | 28.28 | -0.2872 | 0.3434 | -0.0012 |
| 324 | SLE RA 4 | 6.98 | 0.38 | 28.28 | -0.2872 | 0.344 | -0.0012 |
| 324 | SLE RA 5 | 6.87 | 0.37 | 28.05 | -0.2839 | 0.3389 | -0.0012 |
| 324 | SLE RA 6 | 6.84 | 0.38 | 28.38 | -0.2884 | 0.338 | -0.0012 |
| 324 | SLE RA 7 | 6.85 | 0.38 | 28.38 | -0.2884 | 0.3386 | -0.0012 |
| 324 | SLE RA 8 | 6.72 | 0.37 | 28.15 | -0.2851 | 0.3325 | -0.0012 |
| 324 | SLE RA 9 | 6.74 | 0.37 | 28.15 | -0.2851 | 0.3331 | -0.0012 |

| Nodo | Cont. | Reazione a traslazione | | | Reazione a rotazione | | |
|---|---|---|---|---|---|---|---|
| Ind. | N.br. | x | y | z | x | y | z |
| 324 | SLE RA 10 | 7.9 | 0.41 | 30.22 | -0.3143 | 0.3876 | -0.0014 |
| 324 | SLE RA 11 | 7.87 | 0.42 | 30.54 | -0.3187 | 0.3867 | -0.0014 |
| 324 | SLE RA 12 | 7.88 | 0.42 | 30.54 | -0.3187 | 0.3873 | -0.0014 |
| 324 | SLE RA 13 | 7.77 | 0.41 | 30.32 | -0.3155 | 0.3822 | -0.0014 |
| 324 | SLE RA 14 | 7.74 | 0.42 | 30.64 | -0.3199 | 0.3813 | -0.0014 |
| 324 | SLE RA 15 | 7.76 | 0.42 | 30.64 | -0.3199 | 0.382 | -0.0014 |
| 324 | SLE RA 16 | 7.63 | 0.42 | 30.41 | -0.3166 | 0.3758 | -0.0014 |
| 324 | SLE RA 17 | 7.64 | 0.42 | 30.41 | -0.3166 | 0.3764 | -0.0014 |
| 324 | SLE RA 18 | 8.26 | 0.43 | 31.19 | -0.3278 | 0.4052 | -0.0014 |
| 324 | SLE RA 19 | 8.27 | 0.43 | 31.19 | -0.3278 | 0.4058 | -0.0014 |
| 324 | SLE RA 20 | 8.14 | 0.43 | 31.28 | -0.329 | 0.3998 | -0.0014 |
| 324 | SLE RA 21 | 8.15 | 0.43 | 31.28 | -0.329 | 0.4004 | -0.0014 |
| 324 | SLE FR 1 | 6.97 | 0.37 | 27.96 | -0.2827 | 0.3432 | -0.0012 |
| 324 | SLE FR 2 | 6.97 | 0.37 | 27.96 | -0.2827 | 0.3434 | -0.0012 |
| 324 | SLE FR 3 | 6.92 | 0.37 | 28 | -0.2832 | 0.3411 | -0.0012 |
| 324 | SLE FR 4 | 7.36 | 0.39 | 28.93 | -0.2963 | 0.362 | -0.0013 |
| 324 | SLE FR 5 | 7.31 | 0.39 | 28.96 | -0.2967 | 0.3597 | -0.0013 |
| 324 | SLE FR 6 | 7.61 | 0.4 | 29.57 | -0.3053 | 0.3742 | -0.0013 |
| 324 | SLE QP 1 | 6.97 | 0.37 | 27.96 | -0.2827 | 0.3432 | -0.0012 |
| 324 | SLE QP 2 | 7.36 | 0.39 | 28.93 | -0.2963 | 0.3618 | -0.0013 |
| 324 | SLD 1 | 14.71 | 0.21 | 26.46 | -0.1689 | 0.6804 | -0.0007 |
| 324 | SLD 2 | 14.71 | 0.21 | 26.46 | -0.1689 | 0.6804 | -0.0007 |
| 324 | SLD 3 | 15.41 | 0.35 | 29.55 | -0.2685 | 0.713 | -0.0011 |
| 324 | SLD 4 | 15.41 | 0.35 | 29.55 | -0.2685 | 0.713 | -0.0011 |
| 324 | SLD 5 | 8.5 | 0.13 | 23.5 | -0.107 | 0.4081 | -0.0005 |
| 324 | SLD 6 | 8.5 | 0.13 | 23.5 | -0.107 | 0.4081 | -0.0005 |
| 324 | SLD 7 | 10.84 | 0.58 | 33.8 | -0.439 | 0.5165 | -0.0019 |
| 324 | SLD 8 | 10.84 | 0.58 | 33.8 | -0.439 | 0.5165 | -0.0019 |
| 324 | SLD 9 | 3.87 | 0.2 | 24.05 | -0.1535 | 0.2072 | -0.0007 |
| 324 | SLD 10 | 3.87 | 0.2 | 24.05 | -0.1535 | 0.2072 | -0.0007 |
| 324 | SLD 11 | 6.21 | 0.64 | 34.35 | -0.4855 | 0.3155 | -0.0021 |
| 324 | SLD 12 | 6.21 | 0.64 | 34.35 | -0.4855 | 0.3155 | -0.0021 |
| 324 | SLD 13 | -0.7 | 0.43 | 28.3 | -0.324 | 0.0107 | -0.0014 |
| 324 | SLD 14 | -0.7 | 0.43 | 28.3 | -0.324 | 0.0107 | -0.0014 |
| 324 | SLD 15 | 0 | 0.57 | 31.39 | -0.4236 | 0.0432 | -0.0019 |
| 324 | SLD 16 | 0 | 0.57 | 31.39 | -0.4236 | 0.0432 | -0.0019 |
| 324 | SLV 1 | 24.1 | -0.03 | 23 | 0.0052 | 1.087 | 0.0001 |
| 324 | SLV 2 | 24.1 | -0.03 | 23 | 0.0052 | 1.087 | 0.0001 |
| 324 | SLV 3 | 25.86 | 0.28 | 30.37 | -0.2274 | 1.1681 | -0.0009 |
| 324 | SLV 4 | 25.86 | 0.28 | 30.37 | -0.2274 | 1.1681 | -0.0009 |
| 324 | SLV 5 | 9.72 | -0.21 | 15.97 | 0.147 | 0.4563 | 0.0006 |
| 324 | SLV 6 | 9.72 | -0.21 | 15.97 | 0.147 | 0.4563 | 0.0006 |
| 324 | SLV 7 | 15.57 | 0.83 | 40.54 | -0.6284 | 0.7268 | -0.0027 |
| 324 | SLV 8 | 15.57 | 0.83 | 40.54 | -0.6284 | 0.7268 | -0.0027 |
| 324 | SLV 9 | -0.86 | -0.05 | 17.31 | 0.0359 | -0.0032 | 0.0001 |
| 324 | SLV 10 | -0.86 | -0.05 | 17.31 | 0.0359 | -0.0032 | 0.0001 |
| 324 | SLV 11 | 4.99 | 0.98 | 41.88 | -0.7395 | 0.2674 | -0.0032 |
| 324 | SLV 12 | 4.99 | 0.98 | 41.88 | -0.7395 | 0.2674 | -0.0032 |
| 324 | SLV 13 | -11.15 | 0.49 | 27.48 | -0.3652 | -0.4445 | -0.0017 |
| 324 | SLV 14 | -11.15 | 0.49 | 27.48 | -0.3652 | -0.4445 | -0.0017 |
| 324 | SLV 15 | -9.39 | 0.81 | 34.85 | -0.5978 | -0.3633 | -0.0027 |
| 324 | SLV 16 | -9.39 | 0.81 | 34.85 | -0.5978 | -0.3633 | -0.0027 |
| 325 | SLU 1 | 7.73 | 0.34 | 28.76 | -0.2551 | 0.2917 | -0.0012 |
| 325 | SLU 2 | 7.77 | 0.34 | 28.76 | -0.2551 | 0.2931 | -0.0012 |
| 325 | SLU 3 | 7.75 | 0.35 | 29.31 | -0.2615 | 0.2914 | -0.0012 |
| 325 | SLU 4 | 7.77 | 0.35 | 29.31 | -0.2615 | 0.2923 | -0.0012 |
| 325 | SLU 5 | 7.59 | 0.34 | 28.94 | -0.2568 | 0.2854 | -0.0012 |
| 325 | SLU 6 | 7.58 | 0.35 | 29.49 | -0.2632 | 0.2836 | -0.0012 |
| 325 | SLU 7 | 7.6 | 0.35 | 29.49 | -0.2632 | 0.2845 | -0.0012 |
| 325 | SLU 8 | 7.39 | 0.34 | 29.12 | -0.2585 | 0.2761 | -0.0012 |
| 325 | SLU 9 | 7.41 | 0.34 | 29.12 | -0.2585 | 0.277 | -0.0012 |
| 325 | SLU 10 | 9.33 | 0.4 | 32.52 | -0.3 | 0.3532 | -0.0014 |
| 325 | SLU 11 | 9.31 | 0.41 | 33.06 | -0.3064 | 0.3515 | -0.0014 |
| 325 | SLU 12 | 9.34 | 0.41 | 33.07 | -0.3064 | 0.3524 | -0.0014 |
| 325 | SLU 13 | 9.16 | 0.4 | 32.7 | -0.3017 | 0.3455 | -0.0014 |
| 325 | SLU 14 | 9.14 | 0.41 | 33.24 | -0.3081 | 0.3437 | -0.0015 |
| 325 | SLU 15 | 9.16 | 0.41 | 33.25 | -0.3081 | 0.3446 | -0.0015 |
| 325 | SLU 16 | 8.95 | 0.4 | 32.87 | -0.3034 | 0.3362 | -0.0014 |
| 325 | SLU 17 | 8.97 | 0.4 | 32.88 | -0.3034 | 0.3371 | -0.0014 |
| 325 | SLU 18 | 9.97 | 0.43 | 34.12 | -0.3192 | 0.3775 | -0.0015 |
| 325 | SLU 19 | 9.99 | 0.43 | 34.12 | -0.3192 | 0.3784 | -0.0015 |
| 325 | SLU 20 | 9.79 | 0.43 | 34.3 | -0.3209 | 0.3697 | -0.0015 |
| 325 | SLU 21 | 9.81 | 0.43 | 34.31 | -0.3209 | 0.3706 | -0.0015 |
| 325 | SLU 22 | 9.03 | 0.4 | 32.23 | -0.2967 | 0.3409 | -0.0014 |
| 325 | SLU 23 | 9.07 | 0.4 | 32.24 | -0.2968 | 0.3424 | -0.0014 |
| 325 | SLU 24 | 9.05 | 0.4 | 32.78 | -0.3031 | 0.3406 | -0.0014 |
| 325 | SLU 25 | 9.07 | 0.4 | 32.79 | -0.3031 | 0.3415 | -0.0014 |
| 325 | SLU 26 | 8.89 | 0.4 | 32.42 | -0.2985 | 0.3346 | -0.0014 |
| 325 | SLU 27 | 8.88 | 0.41 | 32.96 | -0.3048 | 0.3328 | -0.0014 |
| 325 | SLU 28 | 8.9 | 0.41 | 32.97 | -0.3048 | 0.3337 | -0.0014 |
| 325 | SLU 29 | 8.69 | 0.4 | 32.6 | -0.3001 | 0.3253 | -0.0014 |
| 325 | SLU 30 | 8.71 | 0.4 | 32.6 | -0.3002 | 0.3262 | -0.0014 |
| 325 | SLU 31 | 10.63 | 0.46 | 35.99 | -0.3416 | 0.4024 | -0.0016 |
| 325 | SLU 32 | 10.61 | 0.46 | 36.54 | -0.348 | 0.4007 | -0.0016 |
| 325 | SLU 33 | 10.64 | 0.46 | 36.54 | -0.348 | 0.4016 | -0.0016 |
| 325 | SLU 34 | 10.46 | 0.46 | 36.18 | -0.3434 | 0.3947 | -0.0016 |
| 325 | SLU 35 | 10.44 | 0.47 | 36.72 | -0.3497 | 0.3929 | -0.0016 |
| 325 | SLU 36 | 10.46 | 0.47 | 36.72 | -0.3497 | 0.3938 | -0.0016 |

| Nodo | Cont. | Reazione a traslazione | | | Reazione a rotazione | | |
|---|---|---|---|---|---|---|---|
| Ind. | N.br. | x | y | z | x | y | z |
| 325 | SLU 37 | 10.25 | 0.46 | 36.35 | -0.345 | 0.3854 | -0.0016 |
| 325 | SLU 38 | 10.27 | 0.46 | 36.35 | -0.345 | 0.3863 | -0.0016 |
| 325 | SLU 39 | 11.27 | 0.48 | 37.6 | -0.3609 | 0.4267 | -0.0017 |
| 325 | SLU 40 | 11.29 | 0.48 | 37.6 | -0.3609 | 0.4276 | -0.0017 |
| 325 | SLU 41 | 11.09 | 0.48 | 37.78 | -0.3626 | 0.4189 | -0.0017 |
| 325 | SLU 42 | 11.11 | 0.48 | 37.78 | -0.3626 | 0.4198 | -0.0017 |
| 325 | SLU 43 | 9.61 | 0.42 | 36.19 | -0.3173 | 0.3623 | -0.0015 |
| 325 | SLU 44 | 9.64 | 0.42 | 36.2 | -0.3174 | 0.3638 | -0.0015 |
| 325 | SLU 45 | 9.62 | 0.43 | 36.74 | -0.3237 | 0.362 | -0.0015 |
| 325 | SLU 46 | 9.65 | 0.43 | 36.74 | -0.3237 | 0.3629 | -0.0015 |
| 325 | SLU 47 | 9.47 | 0.43 | 36.38 | -0.3191 | 0.356 | -0.0015 |
| 325 | SLU 48 | 9.45 | 0.43 | 36.92 | -0.3254 | 0.3543 | -0.0015 |
| 325 | SLU 49 | 9.47 | 0.43 | 36.93 | -0.3254 | 0.3551 | -0.0015 |
| 325 | SLU 50 | 9.26 | 0.43 | 36.55 | -0.3207 | 0.3467 | -0.0015 |
| 325 | SLU 51 | 9.28 | 0.43 | 36.56 | -0.3208 | 0.3476 | -0.0015 |
| 325 | SLU 52 | 11.2 | 0.48 | 39.95 | -0.3623 | 0.4239 | -0.0017 |
| 325 | SLU 53 | 11.19 | 0.49 | 40.5 | -0.3686 | 0.4221 | -0.0017 |
| 325 | SLU 54 | 11.21 | 0.49 | 40.5 | -0.3686 | 0.423 | -0.0017 |
| 325 | SLU 55 | 11.03 | 0.49 | 40.13 | -0.364 | 0.4161 | -0.0017 |
| 325 | SLU 56 | 11.02 | 0.49 | 40.68 | -0.3703 | 0.4143 | -0.0017 |
| 325 | SLU 57 | 11.04 | 0.49 | 40.68 | -0.3703 | 0.4152 | -0.0017 |
| 325 | SLU 58 | 10.82 | 0.49 | 40.31 | -0.3656 | 0.4068 | -0.0017 |
| 325 | SLU 59 | 10.84 | 0.49 | 40.31 | -0.3657 | 0.4077 | -0.0017 |
| 325 | SLU 60 | 11.84 | 0.51 | 41.56 | -0.3815 | 0.4482 | -0.0018 |
| 325 | SLU 61 | 11.86 | 0.51 | 41.56 | -0.3815 | 0.449 | -0.0018 |
| 325 | SLU 62 | 11.67 | 0.51 | 41.74 | -0.3832 | 0.4404 | -0.0018 |
| 325 | SLU 63 | 11.69 | 0.51 | 41.74 | -0.3832 | 0.4412 | -0.0018 |
| 325 | SLU 64 | 10.91 | 0.48 | 39.67 | -0.359 | 0.4115 | -0.0017 |
| 325 | SLU 65 | 10.94 | 0.48 | 39.67 | -0.359 | 0.413 | -0.0017 |
| 325 | SLU 66 | 10.92 | 0.49 | 40.22 | -0.3654 | 0.4112 | -0.0017 |
| 325 | SLU 67 | 10.95 | 0.49 | 40.22 | -0.3654 | 0.4121 | -0.0017 |
| 325 | SLU 68 | 10.77 | 0.48 | 39.85 | -0.3607 | 0.4052 | -0.0017 |
| 325 | SLU 69 | 10.75 | 0.49 | 40.4 | -0.3671 | 0.4035 | -0.0017 |
| 325 | SLU 70 | 10.77 | 0.49 | 40.4 | -0.3671 | 0.4043 | -0.0017 |
| 325 | SLU 71 | 10.56 | 0.48 | 40.03 | -0.3624 | 0.3959 | -0.0017 |
| 325 | SLU 72 | 10.58 | 0.48 | 40.03 | -0.3624 | 0.3968 | -0.0017 |
| 325 | SLU 73 | 12.5 | 0.54 | 43.43 | -0.4039 | 0.4731 | -0.0019 |
| 325 | SLU 74 | 12.49 | 0.55 | 43.97 | -0.4103 | 0.4713 | -0.0019 |
| 325 | SLU 75 | 12.51 | 0.55 | 43.98 | -0.4103 | 0.4722 | -0.0019 |
| 325 | SLU 76 | 12.33 | 0.54 | 43.61 | -0.4056 | 0.4653 | -0.0019 |
| 325 | SLU 77 | 12.32 | 0.55 | 44.15 | -0.412 | 0.4636 | -0.0019 |
| 325 | SLU 78 | 12.34 | 0.55 | 44.16 | -0.412 | 0.4644 | -0.0019 |
| 325 | SLU 79 | 12.12 | 0.54 | 43.79 | -0.4073 | 0.456 | -0.0019 |
| 325 | SLU 80 | 12.14 | 0.54 | 43.79 | -0.4073 | 0.4569 | -0.0019 |
| 325 | SLU 81 | 13.14 | 0.56 | 45.03 | -0.4231 | 0.4974 | -0.002 |
| 325 | SLU 82 | 13.16 | 0.56 | 45.04 | -0.4231 | 0.4982 | -0.002 |
| 325 | SLU 83 | 12.97 | 0.57 | 45.21 | -0.4248 | 0.4896 | -0.002 |
| 325 | SLU 84 | 12.99 | 0.57 | 45.22 | -0.4248 | 0.4905 | -0.002 |
| 325 | SLE RA 1 | 8.1 | 0.36 | 29.75 | -0.267 | 0.3057 | -0.0013 |
| 325 | SLE RA 2 | 8.13 | 0.36 | 29.75 | -0.267 | 0.3067 | -0.0013 |
| 325 | SLE RA 3 | 8.12 | 0.36 | 30.12 | -0.2712 | 0.3056 | -0.0013 |
| 325 | SLE RA 4 | 8.13 | 0.36 | 30.12 | -0.2712 | 0.3061 | -0.0013 |
| 325 | SLE RA 5 | 8.01 | 0.36 | 29.87 | -0.2681 | 0.3015 | -0.0013 |
| 325 | SLE RA 6 | 8 | 0.36 | 30.24 | -0.2724 | 0.3004 | -0.0013 |
| 325 | SLE RA 7 | 8.01 | 0.36 | 30.24 | -0.2724 | 0.301 | -0.0013 |
| 325 | SLE RA 8 | 7.87 | 0.36 | 29.99 | -0.2693 | 0.2954 | -0.0013 |
| 325 | SLE RA 9 | 7.89 | 0.36 | 29.99 | -0.2693 | 0.2959 | -0.0013 |
| 325 | SLE RA 10 | 9.17 | 0.4 | 32.26 | -0.2969 | 0.3468 | -0.0014 |
| 325 | SLE RA 11 | 9.16 | 0.4 | 32.62 | -0.3012 | 0.3456 | -0.0014 |
| 325 | SLE RA 12 | 9.17 | 0.4 | 32.62 | -0.3012 | 0.3462 | -0.0014 |
| 325 | SLE RA 13 | 9.05 | 0.4 | 32.38 | -0.2981 | 0.3416 | -0.0014 |
| 325 | SLE RA 14 | 9.04 | 0.4 | 32.74 | -0.3023 | 0.3404 | -0.0014 |
| 325 | SLE RA 15 | 9.06 | 0.4 | 32.74 | -0.3023 | 0.341 | -0.0014 |
| 325 | SLE RA 16 | 8.92 | 0.4 | 32.49 | -0.2992 | 0.3354 | -0.0014 |
| 325 | SLE RA 17 | 8.93 | 0.4 | 32.5 | -0.2992 | 0.336 | -0.0014 |
| 325 | SLE RA 18 | 9.59 | 0.41 | 33.33 | -0.3098 | 0.363 | -0.0015 |
| 325 | SLE RA 19 | 9.61 | 0.41 | 33.33 | -0.3098 | 0.3636 | -0.0015 |
| 325 | SLE RA 20 | 9.48 | 0.41 | 33.45 | -0.3109 | 0.3578 | -0.0015 |
| 325 | SLE RA 21 | 9.49 | 0.41 | 33.45 | -0.3109 | 0.3584 | -0.0015 |
| 325 | SLE FR 1 | 8.1 | 0.36 | 29.75 | -0.267 | 0.3057 | -0.0013 |
| 325 | SLE FR 2 | 8.11 | 0.36 | 29.75 | -0.267 | 0.3059 | -0.0013 |
| 325 | SLE FR 3 | 8.06 | 0.36 | 29.8 | -0.2674 | 0.3037 | -0.0013 |
| 325 | SLE FR 4 | 8.55 | 0.37 | 30.82 | -0.2798 | 0.3231 | -0.0013 |
| 325 | SLE FR 5 | 8.5 | 0.37 | 30.87 | -0.2803 | 0.3208 | -0.0013 |
| 325 | SLE FR 6 | 8.85 | 0.38 | 31.54 | -0.2884 | 0.3344 | -0.0014 |
| 325 | SLE QP 1 | 8.1 | 0.36 | 29.75 | -0.267 | 0.3057 | -0.0013 |
| 325 | SLE QP 2 | 8.55 | 0.37 | 30.82 | -0.2798 | 0.3229 | -0.0013 |
| 325 | SLD 1 | 15.82 | 0.22 | 30.61 | -0.1626 | 0.6377 | -0.0007 |
| 325 | SLD 2 | 15.82 | 0.22 | 30.61 | -0.1626 | 0.6377 | -0.0007 |
| 325 | SLD 3 | 16.68 | 0.34 | 33.75 | -0.2559 | 0.6724 | -0.0012 |
| 325 | SLD 4 | 16.68 | 0.34 | 33.75 | -0.2559 | 0.6724 | -0.0012 |
| 325 | SLD 5 | 9.42 | 0.14 | 25.99 | -0.1031 | 0.3647 | -0.0004 |
| 325 | SLD 6 | 9.42 | 0.14 | 25.99 | -0.1031 | 0.3647 | -0.0004 |
| 325 | SLD 7 | 12.3 | 0.55 | 36.47 | -0.4141 | 0.4804 | -0.002 |
| 325 | SLD 8 | 12.3 | 0.55 | 36.47 | -0.4141 | 0.4804 | -0.002 |
| 325 | SLD 9 | 4.8 | 0.2 | 25.18 | -0.1455 | 0.1654 | -0.0006 |
| 325 | SLD 10 | 4.8 | 0.2 | 25.18 | -0.1455 | 0.1654 | -0.0006 |
| 325 | SLD 11 | 7.68 | 0.61 | 35.65 | -0.4565 | 0.2811 | -0.0022 |

| Nodo | Cont. | Reazione a traslazione | | | Reazione a rotazione | | |
|---|---|---|---|---|---|---|---|
| Ind. | N.br. | x | y | z | x | y | z |
| 325 | SLD 12 | 7.68 | 0.61 | 35.65 | -0.4565 | 0.2811 | -0.0022 |
| 325 | SLD 13 | 0.42 | 0.41 | 27.89 | -0.3038 | -0.0266 | -0.0015 |
| 325 | SLD 14 | 0.42 | 0.41 | 27.89 | -0.3038 | -0.0266 | -0.0015 |
| 325 | SLD 15 | 1.28 | 0.53 | 31.04 | -0.3971 | 0.0081 | -0.0019 |
| 325 | SLD 16 | 1.28 | 0.53 | 31.04 | -0.3971 | 0.0081 | -0.0019 |
| 325 | SLV 1 | 25.09 | 0 | 30.28 | 0.0012 | 1.0393 | 0.0002 |
| 325 | SLV 2 | 25.09 | 0 | 30.28 | 0.0012 | 1.0393 | 0.0002 |
| 325 | SLV 3 | 27.24 | 0.29 | 37.81 | -0.2166 | 1.1256 | -0.001 |
| 325 | SLV 4 | 27.24 | 0.29 | 37.81 | -0.2166 | 1.1256 | -0.001 |
| 325 | SLV 5 | 10.25 | -0.18 | 19.23 | 0.1348 | 0.407 | 0.0008 |
| 325 | SLV 6 | 10.25 | -0.18 | 19.23 | 0.1348 | 0.407 | 0.0008 |
| 325 | SLV 7 | 17.42 | 0.79 | 44.35 | -0.5911 | 0.6945 | -0.0029 |
| 325 | SLV 8 | 17.42 | 0.79 | 44.35 | -0.5911 | 0.6945 | -0.0029 |
| 325 | SLV 9 | -0.32 | -0.04 | 17.3 | 0.0315 | -0.0487 | 0.0002 |
| 325 | SLV 10 | -0.32 | -0.04 | 17.3 | 0.0315 | -0.0487 | 0.0002 |
| 325 | SLV 11 | 6.85 | 0.92 | 42.41 | -0.6944 | 0.2388 | -0.0034 |
| 325 | SLV 12 | 6.85 | 0.92 | 42.41 | -0.6944 | 0.2388 | -0.0034 |
| 325 | SLV 13 | -10.14 | 0.46 | 23.83 | -0.3431 | -0.4797 | -0.0017 |
| 325 | SLV 14 | -10.14 | 0.46 | 23.83 | -0.3431 | -0.4797 | -0.0017 |
| 325 | SLV 15 | -7.99 | 0.75 | 31.37 | -0.5609 | -0.3935 | -0.0028 |
| 325 | SLV 16 | -7.99 | 0.75 | 31.37 | -0.5609 | -0.3935 | -0.0028 |
| 326 | SLU 1 | 9.32 | 0.3 | 32.06 | -0.2195 | 0.4082 | -0.001 |
| 326 | SLU 2 | 9.36 | 0.3 | 32.07 | -0.2195 | 0.4096 | -0.001 |
| 326 | SLU 3 | 9.39 | 0.31 | 32.72 | -0.225 | 0.4109 | -0.001 |
| 326 | SLU 4 | 9.41 | 0.31 | 32.73 | -0.225 | 0.4118 | -0.001 |
| 326 | SLU 5 | 9.21 | 0.3 | 32.3 | -0.2209 | 0.4028 | -0.001 |
| 326 | SLU 6 | 9.24 | 0.31 | 32.95 | -0.2263 | 0.4041 | -0.001 |
| 326 | SLU 7 | 9.26 | 0.31 | 32.96 | -0.2263 | 0.405 | -0.001 |
| 326 | SLU 8 | 9.03 | 0.3 | 32.52 | -0.2223 | 0.3946 | -0.001 |
| 326 | SLU 9 | 9.05 | 0.3 | 32.53 | -0.2223 | 0.3955 | -0.001 |
| 326 | SLU 10 | 11.2 | 0.35 | 36.48 | -0.2583 | 0.4897 | -0.0012 |
| 326 | SLU 11 | 11.23 | 0.36 | 37.13 | -0.2637 | 0.491 | -0.0012 |
| 326 | SLU 12 | 11.25 | 0.36 | 37.13 | -0.2637 | 0.4919 | -0.0012 |
| 326 | SLU 13 | 11.05 | 0.35 | 36.71 | -0.2597 | 0.4829 | -0.0012 |
| 326 | SLU 14 | 11.08 | 0.36 | 37.36 | -0.2651 | 0.4842 | -0.0012 |
| 326 | SLU 15 | 11.1 | 0.36 | 37.36 | -0.2651 | 0.4851 | -0.0012 |
| 326 | SLU 16 | 10.87 | 0.36 | 36.93 | -0.261 | 0.4747 | -0.0012 |
| 326 | SLU 17 | 10.89 | 0.36 | 36.94 | -0.261 | 0.4756 | -0.0012 |
| 326 | SLU 18 | 11.95 | 0.38 | 38.36 | -0.2749 | 0.5226 | -0.0013 |
| 326 | SLU 19 | 11.97 | 0.38 | 38.37 | -0.2749 | 0.5235 | -0.0013 |
| 326 | SLU 20 | 11.8 | 0.38 | 38.59 | -0.2763 | 0.5158 | -0.0013 |
| 326 | SLU 21 | 11.82 | 0.38 | 38.6 | -0.2763 | 0.5167 | -0.0013 |
| 326 | SLU 22 | 10.89 | 0.35 | 36.13 | -0.2554 | 0.4762 | -0.0012 |
| 326 | SLU 23 | 10.92 | 0.35 | 36.15 | -0.2554 | 0.4776 | -0.0012 |
| 326 | SLU 24 | 10.95 | 0.36 | 36.79 | -0.2608 | 0.4789 | -0.0012 |
| 326 | SLU 25 | 10.97 | 0.36 | 36.8 | -0.2609 | 0.4798 | -0.0012 |
| 326 | SLU 26 | 10.77 | 0.35 | 36.38 | -0.2568 | 0.4708 | -0.0012 |
| 326 | SLU 27 | 10.8 | 0.36 | 37.02 | -0.2622 | 0.4721 | -0.0012 |
| 326 | SLU 28 | 10.82 | 0.36 | 37.03 | -0.2622 | 0.473 | -0.0012 |
| 326 | SLU 29 | 10.59 | 0.35 | 36.6 | -0.2582 | 0.4626 | -0.0012 |
| 326 | SLU 30 | 10.61 | 0.35 | 36.6 | -0.2582 | 0.4635 | -0.0012 |
| 326 | SLU 31 | 12.76 | 0.4 | 40.55 | -0.2942 | 0.5577 | -0.0014 |
| 326 | SLU 32 | 12.79 | 0.41 | 41.2 | -0.2996 | 0.559 | -0.0014 |
| 326 | SLU 33 | 12.81 | 0.41 | 41.21 | -0.2996 | 0.5599 | -0.0014 |
| 326 | SLU 34 | 12.61 | 0.4 | 40.78 | -0.2956 | 0.5509 | -0.0014 |
| 326 | SLU 35 | 12.65 | 0.41 | 41.43 | -0.301 | 0.5522 | -0.0014 |
| 326 | SLU 36 | 12.67 | 0.41 | 41.44 | -0.301 | 0.5531 | -0.0014 |
| 326 | SLU 37 | 12.43 | 0.41 | 41 | -0.2969 | 0.5427 | -0.0014 |
| 326 | SLU 38 | 12.45 | 0.41 | 41.01 | -0.2969 | 0.5435 | -0.0014 |
| 326 | SLU 39 | 13.52 | 0.42 | 42.43 | -0.3108 | 0.5906 | -0.0014 |
| 326 | SLU 40 | 13.54 | 0.42 | 42.44 | -0.3108 | 0.5914 | -0.0014 |
| 326 | SLU 41 | 13.37 | 0.43 | 42.66 | -0.3121 | 0.5838 | -0.0014 |
| 326 | SLU 42 | 13.39 | 0.43 | 42.67 | -0.3122 | 0.5846 | -0.0014 |
| 326 | SLU 43 | 11.58 | 0.37 | 40.28 | -0.2731 | 0.5073 | -0.0013 |
| 326 | SLU 44 | 11.62 | 0.37 | 40.3 | -0.2731 | 0.5088 | -0.0013 |
| 326 | SLU 45 | 11.65 | 0.38 | 40.94 | -0.2785 | 0.5101 | -0.0013 |
| 326 | SLU 46 | 11.67 | 0.38 | 40.95 | -0.2785 | 0.5109 | -0.0013 |
| 326 | SLU 47 | 11.47 | 0.37 | 40.53 | -0.2745 | 0.502 | -0.0013 |
| 326 | SLU 48 | 11.5 | 0.38 | 41.17 | -0.2799 | 0.5033 | -0.0013 |
| 326 | SLU 49 | 11.52 | 0.38 | 41.18 | -0.2799 | 0.5041 | -0.0013 |
| 326 | SLU 50 | 11.29 | 0.38 | 40.75 | -0.2758 | 0.4937 | -0.0013 |
| 326 | SLU 51 | 11.31 | 0.38 | 40.75 | -0.2758 | 0.4946 | -0.0013 |
| 326 | SLU 52 | 13.46 | 0.43 | 44.7 | -0.3118 | 0.5889 | -0.0014 |
| 326 | SLU 53 | 13.49 | 0.43 | 45.35 | -0.3173 | 0.5901 | -0.0015 |
| 326 | SLU 54 | 13.51 | 0.43 | 45.36 | -0.3173 | 0.591 | -0.0015 |
| 326 | SLU 55 | 13.31 | 0.43 | 44.93 | -0.3132 | 0.5821 | -0.0014 |
| 326 | SLU 56 | 13.34 | 0.43 | 45.58 | -0.3186 | 0.5833 | -0.0015 |
| 326 | SLU 57 | 13.36 | 0.44 | 45.59 | -0.3186 | 0.5842 | -0.0015 |
| 326 | SLU 58 | 13.13 | 0.43 | 45.15 | -0.3146 | 0.5738 | -0.0015 |
| 326 | SLU 59 | 13.15 | 0.43 | 45.16 | -0.3146 | 0.5747 | -0.0015 |
| 326 | SLU 60 | 14.21 | 0.45 | 46.58 | -0.3284 | 0.6217 | -0.0015 |
| 326 | SLU 61 | 14.23 | 0.45 | 46.59 | -0.3284 | 0.6226 | -0.0015 |
| 326 | SLU 62 | 14.07 | 0.45 | 46.81 | -0.3298 | 0.6149 | -0.0015 |
| 326 | SLU 63 | 14.09 | 0.45 | 46.82 | -0.3298 | 0.6158 | -0.0015 |
| 326 | SLU 64 | 13.15 | 0.42 | 44.36 | -0.309 | 0.5753 | -0.0014 |
| 326 | SLU 65 | 13.18 | 0.42 | 44.37 | -0.309 | 0.5768 | -0.0014 |
| 326 | SLU 66 | 13.21 | 0.43 | 45.01 | -0.3144 | 0.578 | -0.0015 |
| 326 | SLU 67 | 13.23 | 0.43 | 45.02 | -0.3144 | 0.5789 | -0.0015 |

| Nodo | Cont. | Reazione a traslazione | | | Reazione a rotazione | | |
|---|---|---|---|---|---|---|---|
| Ind. | N.br. | x | y | z | x | y | z |
| 326 | SLU 68 | 13.03 | 0.42 | 44.6 | -0.3104 | 0.57 | -0.0014 |
| 326 | SLU 69 | 13.07 | 0.43 | 45.24 | -0.3158 | 0.5713 | -0.0015 |
| 326 | SLU 70 | 13.09 | 0.43 | 45.25 | -0.3158 | 0.5721 | -0.0015 |
| 326 | SLU 71 | 12.85 | 0.43 | 44.82 | -0.3117 | 0.5617 | -0.0014 |
| 326 | SLU 72 | 12.87 | 0.43 | 44.83 | -0.3117 | 0.5626 | -0.0014 |
| 326 | SLU 73 | 15.02 | 0.48 | 48.78 | -0.3477 | 0.6568 | -0.0016 |
| 326 | SLU 74 | 15.06 | 0.48 | 49.42 | -0.3531 | 0.6581 | -0.0016 |
| 326 | SLU 75 | 15.08 | 0.48 | 49.43 | -0.3532 | 0.659 | -0.0016 |
| 326 | SLU 76 | 14.87 | 0.48 | 49.01 | -0.3491 | 0.6501 | -0.0016 |
| 326 | SLU 77 | 14.91 | 0.48 | 49.65 | -0.3545 | 0.6513 | -0.0016 |
| 326 | SLU 78 | 14.93 | 0.48 | 49.66 | -0.3545 | 0.6522 | -0.0016 |
| 326 | SLU 79 | 14.69 | 0.48 | 49.23 | -0.3505 | 0.6418 | -0.0016 |
| 326 | SLU 80 | 14.71 | 0.48 | 49.23 | -0.3505 | 0.6427 | -0.0016 |
| 326 | SLU 81 | 15.78 | 0.5 | 50.65 | -0.3643 | 0.6897 | -0.0017 |
| 326 | SLU 82 | 15.8 | 0.5 | 50.66 | -0.3643 | 0.6906 | -0.0017 |
| 326 | SLU 83 | 15.63 | 0.5 | 50.88 | -0.3657 | 0.6829 | -0.0017 |
| 326 | SLU 84 | 15.65 | 0.5 | 50.89 | -0.3657 | 0.6838 | -0.0017 |
| 326 | SLE RA 1 | 9.77 | 0.31 | 33.23 | -0.2298 | 0.4276 | -0.0011 |
| 326 | SLE RA 2 | 9.79 | 0.31 | 33.23 | -0.2298 | 0.4286 | -0.0011 |
| 326 | SLE RA 3 | 9.81 | 0.32 | 33.66 | -0.2334 | 0.4294 | -0.0011 |
| 326 | SLE RA 4 | 9.83 | 0.32 | 33.67 | -0.2334 | 0.43 | -0.0011 |
| 326 | SLE RA 5 | 9.69 | 0.31 | 33.39 | -0.2307 | 0.424 | -0.0011 |
| 326 | SLE RA 6 | 9.72 | 0.32 | 33.82 | -0.2343 | 0.4249 | -0.0011 |
| 326 | SLE RA 7 | 9.73 | 0.32 | 33.82 | -0.2343 | 0.4255 | -0.0011 |
| 326 | SLE RA 8 | 9.57 | 0.32 | 33.53 | -0.2316 | 0.4186 | -0.0011 |
| 326 | SLE RA 9 | 9.58 | 0.32 | 33.54 | -0.2316 | 0.4191 | -0.0011 |
| 326 | SLE RA 10 | 11.02 | 0.35 | 36.17 | -0.2556 | 0.482 | -0.0012 |
| 326 | SLE RA 11 | 11.04 | 0.35 | 36.6 | -0.2592 | 0.4828 | -0.0012 |
| 326 | SLE RA 12 | 11.06 | 0.35 | 36.61 | -0.2592 | 0.4834 | -0.0012 |
| 326 | SLE RA 13 | 10.92 | 0.35 | 36.33 | -0.2565 | 0.4774 | -0.0012 |
| 326 | SLE RA 14 | 10.94 | 0.36 | 36.76 | -0.2601 | 0.4783 | -0.0012 |
| 326 | SLE RA 15 | 10.96 | 0.36 | 36.76 | -0.2602 | 0.4789 | -0.0012 |
| 326 | SLE RA 16 | 10.8 | 0.35 | 36.47 | -0.2574 | 0.4719 | -0.0012 |
| 326 | SLE RA 17 | 10.81 | 0.35 | 36.48 | -0.2575 | 0.4725 | -0.0012 |
| 326 | SLE RA 18 | 11.52 | 0.36 | 37.42 | -0.2667 | 0.5039 | -0.0012 |
| 326 | SLE RA 19 | 11.54 | 0.36 | 37.43 | -0.2667 | 0.5045 | -0.0012 |
| 326 | SLE RA 20 | 11.42 | 0.37 | 37.58 | -0.2676 | 0.4993 | -0.0012 |
| 326 | SLE RA 21 | 11.44 | 0.37 | 37.58 | -0.2676 | 0.4999 | -0.0012 |
| 326 | SLE FR 1 | 9.77 | 0.31 | 33.23 | -0.2298 | 0.4276 | -0.0011 |
| 326 | SLE FR 2 | 9.77 | 0.31 | 33.23 | -0.2298 | 0.4278 | -0.0011 |
| 326 | SLE FR 3 | 9.73 | 0.31 | 33.29 | -0.2301 | 0.4258 | -0.0011 |
| 326 | SLE FR 4 | 10.3 | 0.33 | 34.49 | -0.2408 | 0.4507 | -0.0011 |
| 326 | SLE FR 5 | 10.26 | 0.33 | 34.55 | -0.2412 | 0.4487 | -0.0011 |
| 326 | SLE FR 6 | 10.65 | 0.34 | 35.32 | -0.2482 | 0.4657 | -0.0011 |
| 326 | SLE QP 1 | 9.77 | 0.31 | 33.23 | -0.2298 | 0.4276 | -0.0011 |
| 326 | SLE QP 2 | 10.3 | 0.33 | 34.48 | -0.2408 | 0.4505 | -0.0011 |
| 326 | SLD 1 | 17.28 | 0.2 | 34.6 | -0.1401 | 0.7557 | -0.0006 |
| 326 | SLD 2 | 17.28 | 0.2 | 34.6 | -0.1401 | 0.7557 | -0.0006 |
| 326 | SLD 3 | 18.34 | 0.3 | 38.02 | -0.2188 | 0.8006 | -0.001 |
| 326 | SLD 4 | 18.34 | 0.3 | 38.02 | -0.2188 | 0.8006 | -0.001 |
| 326 | SLD 5 | 10.78 | 0.13 | 29.32 | -0.0913 | 0.4739 | -0.0003 |
| 326 | SLD 6 | 10.78 | 0.13 | 29.32 | -0.0913 | 0.4739 | -0.0003 |
| 326 | SLD 7 | 14.32 | 0.48 | 40.74 | -0.3536 | 0.6236 | -0.0017 |
| 326 | SLD 8 | 14.32 | 0.48 | 40.74 | -0.3536 | 0.6236 | -0.0017 |
| 326 | SLD 9 | 6.27 | 0.18 | 28.23 | -0.1281 | 0.2773 | -0.0005 |
| 326 | SLD 10 | 6.27 | 0.18 | 28.23 | -0.1281 | 0.2773 | -0.0005 |
| 326 | SLD 11 | 9.81 | 0.53 | 39.65 | -0.3904 | 0.4271 | -0.0019 |
| 326 | SLD 12 | 9.81 | 0.53 | 39.65 | -0.3904 | 0.4271 | -0.0019 |
| 326 | SLD 13 | 2.25 | 0.36 | 30.95 | -0.2629 | 0.1004 | -0.0012 |
| 326 | SLD 14 | 2.25 | 0.36 | 30.95 | -0.2629 | 0.1004 | -0.0012 |
| 326 | SLD 15 | 3.31 | 0.46 | 34.37 | -0.3416 | 0.1453 | -0.0017 |
| 326 | SLD 16 | 3.31 | 0.46 | 34.37 | -0.3416 | 0.1453 | -0.0017 |
| 326 | SLV 1 | 26.15 | 0.01 | 34.63 | 0.0061 | 1.1439 | 0.0002 |
| 326 | SLV 2 | 26.15 | 0.01 | 34.63 | 0.0061 | 1.1439 | 0.0002 |
| 326 | SLV 3 | 28.79 | 0.25 | 42.89 | -0.1772 | 1.2555 | -0.0008 |
| 326 | SLV 4 | 28.79 | 0.25 | 42.89 | -0.1772 | 1.2555 | -0.0008 |
| 326 | SLV 5 | 11.05 | -0.14 | 22 | 0.1113 | 0.4892 | 0.0008 |
| 326 | SLV 6 | 11.05 | -0.14 | 22 | 0.1113 | 0.4892 | 0.0008 |
| 326 | SLV 7 | 19.84 | 0.67 | 49.53 | -0.4999 | 0.8612 | -0.0025 |
| 326 | SLV 8 | 19.84 | 0.67 | 49.53 | -0.4999 | 0.8612 | -0.0025 |
| 326 | SLV 9 | 0.75 | -0.02 | 19.44 | 0.0182 | 0.0397 | 0.0003 |
| 326 | SLV 10 | 0.75 | -0.02 | 19.44 | 0.0182 | 0.0397 | 0.0003 |
| 326 | SLV 11 | 9.54 | 0.79 | 46.96 | -0.593 | 0.4117 | -0.003 |
| 326 | SLV 12 | 9.54 | 0.79 | 46.96 | -0.593 | 0.4117 | -0.003 |
| 326 | SLV 13 | -8.2 | 0.41 | 26.08 | -0.3045 | -0.3545 | -0.0014 |
| 326 | SLV 14 | -8.2 | 0.41 | 26.08 | -0.3045 | -0.3545 | -0.0014 |
| 326 | SLV 15 | -5.56 | 0.65 | 34.34 | -0.4878 | -0.2429 | -0.0024 |
| 326 | SLV 16 | -5.56 | 0.65 | 34.34 | -0.4878 | -0.2429 | -0.0024 |
| 327 | SLU 1 | 9.03 | 0.2 | 36.49 | -0.1582 | 0.3478 | -0.0007 |
| 327 | SLU 2 | 9.06 | 0.2 | 36.5 | -0.1582 | 0.349 | -0.0007 |
| 327 | SLU 3 | 9.11 | 0.2 | 37.29 | -0.1619 | 0.35 | -0.0007 |
| 327 | SLU 4 | 9.13 | 0.2 | 37.3 | -0.1619 | 0.3508 | -0.0007 |
| 327 | SLU 5 | 8.94 | 0.2 | 36.81 | -0.159 | 0.3432 | -0.0007 |
| 327 | SLU 6 | 8.99 | 0.2 | 37.6 | -0.1627 | 0.3442 | -0.0007 |
| 327 | SLU 7 | 9.01 | 0.2 | 37.61 | -0.1627 | 0.345 | -0.0007 |
| 327 | SLU 8 | 8.79 | 0.2 | 37.1 | -0.1597 | 0.3361 | -0.0007 |
| 327 | SLU 9 | 8.81 | 0.2 | 37.11 | -0.1597 | 0.3369 | -0.0007 |
| 327 | SLU 10 | 10.85 | 0.24 | 41.76 | -0.1861 | 0.4185 | -0.0008 |

| Nodo | Cont. | Reazione a traslazione | | | Reazione a rotazione | | |
|---|---|---|---|---|---|---|---|
| Ind. | N.br. | x | y | z | x | y | z |
| 327 | SLU 11 | 10.9 | 0.24 | 42.55 | -0.1898 | 0.4195 | -0.0008 |
| 327 | SLU 12 | 10.92 | 0.24 | 42.56 | -0.1898 | 0.4202 | -0.0008 |
| 327 | SLU 13 | 10.73 | 0.24 | 42.07 | -0.1869 | 0.4127 | -0.0008 |
| 327 | SLU 14 | 10.78 | 0.24 | 42.86 | -0.1906 | 0.4137 | -0.0009 |
| 327 | SLU 15 | 10.8 | 0.24 | 42.87 | -0.1906 | 0.4144 | -0.0009 |
| 327 | SLU 16 | 10.57 | 0.24 | 42.36 | -0.1876 | 0.4056 | -0.0008 |
| 327 | SLU 17 | 10.59 | 0.24 | 42.37 | -0.1876 | 0.4064 | -0.0008 |
| 327 | SLU 18 | 11.59 | 0.25 | 43.99 | -0.1981 | 0.447 | -0.0009 |
| 327 | SLU 19 | 11.61 | 0.25 | 44 | -0.1981 | 0.4477 | -0.0009 |
| 327 | SLU 20 | 11.46 | 0.25 | 44.3 | -0.1988 | 0.4412 | -0.0009 |
| 327 | SLU 21 | 11.48 | 0.25 | 44.31 | -0.1988 | 0.4419 | -0.0009 |
| 327 | SLU 22 | 10.56 | 0.23 | 41.34 | -0.184 | 0.4064 | -0.0008 |
| 327 | SLU 23 | 10.59 | 0.23 | 41.36 | -0.184 | 0.4077 | -0.0008 |
| 327 | SLU 24 | 10.64 | 0.24 | 42.15 | -0.1877 | 0.4087 | -0.0008 |
| 327 | SLU 25 | 10.66 | 0.24 | 42.16 | -0.1877 | 0.4094 | -0.0008 |
| 327 | SLU 26 | 10.47 | 0.23 | 41.67 | -0.1847 | 0.4019 | -0.0008 |
| 327 | SLU 27 | 10.51 | 0.24 | 42.46 | -0.1884 | 0.4029 | -0.0008 |
| 327 | SLU 28 | 10.53 | 0.24 | 42.47 | -0.1884 | 0.4036 | -0.0008 |
| 327 | SLU 29 | 10.31 | 0.23 | 41.96 | -0.1855 | 0.3948 | -0.0008 |
| 327 | SLU 30 | 10.33 | 0.23 | 41.97 | -0.1855 | 0.3956 | -0.0008 |
| 327 | SLU 31 | 12.38 | 0.27 | 46.61 | -0.2119 | 0.4771 | -0.0009 |
| 327 | SLU 32 | 12.43 | 0.27 | 47.4 | -0.2156 | 0.4781 | -0.001 |
| 327 | SLU 33 | 12.44 | 0.27 | 47.41 | -0.2156 | 0.4789 | -0.001 |
| 327 | SLU 34 | 12.25 | 0.27 | 46.92 | -0.2126 | 0.4713 | -0.0009 |
| 327 | SLU 35 | 12.3 | 0.27 | 47.71 | -0.2163 | 0.4723 | -0.001 |
| 327 | SLU 36 | 12.32 | 0.27 | 47.72 | -0.2163 | 0.4731 | -0.001 |
| 327 | SLU 37 | 12.1 | 0.27 | 47.21 | -0.2134 | 0.4642 | -0.001 |
| 327 | SLU 38 | 12.12 | 0.27 | 47.22 | -0.2134 | 0.465 | -0.001 |
| 327 | SLU 39 | 13.11 | 0.28 | 48.85 | -0.2238 | 0.5056 | -0.001 |
| 327 | SLU 40 | 13.13 | 0.28 | 48.86 | -0.2238 | 0.5064 | -0.001 |
| 327 | SLU 41 | 12.99 | 0.28 | 49.16 | -0.2246 | 0.4998 | -0.001 |
| 327 | SLU 42 | 13.01 | 0.28 | 49.17 | -0.2246 | 0.5006 | -0.001 |
| 327 | SLU 43 | 11.22 | 0.25 | 45.77 | -0.1968 | 0.432 | -0.0009 |
| 327 | SLU 44 | 11.25 | 0.25 | 45.78 | -0.1968 | 0.4333 | -0.0009 |
| 327 | SLU 45 | 11.3 | 0.25 | 46.57 | -0.2005 | 0.4342 | -0.0009 |
| 327 | SLU 46 | 11.32 | 0.25 | 46.58 | -0.2005 | 0.435 | -0.0009 |
| 327 | SLU 47 | 11.13 | 0.25 | 46.09 | -0.1976 | 0.4275 | -0.0009 |
| 327 | SLU 48 | 11.18 | 0.25 | 46.88 | -0.2013 | 0.4284 | -0.0009 |
| 327 | SLU 49 | 11.2 | 0.25 | 46.89 | -0.2013 | 0.4292 | -0.0009 |
| 327 | SLU 50 | 10.97 | 0.25 | 46.38 | -0.1983 | 0.4204 | -0.0009 |
| 327 | SLU 51 | 10.99 | 0.25 | 46.39 | -0.1983 | 0.4211 | -0.0009 |
| 327 | SLU 52 | 13.04 | 0.28 | 51.04 | -0.2247 | 0.5027 | -0.001 |
| 327 | SLU 53 | 13.09 | 0.29 | 51.83 | -0.2284 | 0.5037 | -0.001 |
| 327 | SLU 54 | 13.11 | 0.29 | 51.84 | -0.2285 | 0.5045 | -0.001 |
| 327 | SLU 55 | 12.92 | 0.28 | 51.35 | -0.2255 | 0.4969 | -0.001 |
| 327 | SLU 56 | 12.97 | 0.29 | 52.14 | -0.2292 | 0.4979 | -0.001 |
| 327 | SLU 57 | 12.98 | 0.29 | 52.15 | -0.2292 | 0.4987 | -0.001 |
| 327 | SLU 58 | 12.76 | 0.29 | 51.64 | -0.2262 | 0.4898 | -0.001 |
| 327 | SLU 59 | 12.78 | 0.29 | 51.65 | -0.2262 | 0.4906 | -0.001 |
| 327 | SLU 60 | 13.78 | 0.3 | 53.27 | -0.2367 | 0.5312 | -0.0011 |
| 327 | SLU 61 | 13.79 | 0.3 | 53.28 | -0.2367 | 0.532 | -0.0011 |
| 327 | SLU 62 | 13.65 | 0.3 | 53.58 | -0.2374 | 0.5254 | -0.0011 |
| 327 | SLU 63 | 13.67 | 0.3 | 53.59 | -0.2374 | 0.5262 | -0.0011 |
| 327 | SLU 64 | 12.75 | 0.28 | 50.62 | -0.2226 | 0.4906 | -0.001 |
| 327 | SLU 65 | 12.78 | 0.28 | 50.64 | -0.2226 | 0.4919 | -0.001 |
| 327 | SLU 66 | 12.83 | 0.29 | 51.43 | -0.2263 | 0.4929 | -0.001 |
| 327 | SLU 67 | 12.84 | 0.29 | 51.44 | -0.2263 | 0.4937 | -0.001 |
| 327 | SLU 68 | 12.65 | 0.28 | 50.95 | -0.2233 | 0.4861 | -0.001 |
| 327 | SLU 69 | 12.7 | 0.29 | 51.74 | -0.2271 | 0.4871 | -0.001 |
| 327 | SLU 70 | 12.72 | 0.29 | 51.75 | -0.2271 | 0.4879 | -0.001 |
| 327 | SLU 71 | 12.5 | 0.28 | 51.24 | -0.2241 | 0.479 | -0.001 |
| 327 | SLU 72 | 12.52 | 0.28 | 51.25 | -0.2241 | 0.4798 | -0.001 |
| 327 | SLU 73 | 14.56 | 0.32 | 55.89 | -0.2505 | 0.5614 | -0.0011 |
| 327 | SLU 74 | 14.61 | 0.32 | 56.68 | -0.2542 | 0.5623 | -0.0011 |
| 327 | SLU 75 | 14.63 | 0.32 | 56.69 | -0.2542 | 0.5631 | -0.0011 |
| 327 | SLU 76 | 14.44 | 0.32 | 56.2 | -0.2512 | 0.5556 | -0.0011 |
| 327 | SLU 77 | 14.49 | 0.32 | 56.99 | -0.255 | 0.5565 | -0.0011 |
| 327 | SLU 78 | 14.51 | 0.32 | 57 | -0.255 | 0.5573 | -0.0011 |
| 327 | SLU 79 | 14.29 | 0.32 | 56.5 | -0.252 | 0.5485 | -0.0011 |
| 327 | SLU 80 | 14.3 | 0.32 | 56.51 | -0.252 | 0.5492 | -0.0011 |
| 327 | SLU 81 | 15.3 | 0.33 | 58.13 | -0.2624 | 0.5898 | -0.0012 |
| 327 | SLU 82 | 15.32 | 0.33 | 58.14 | -0.2624 | 0.5906 | -0.0012 |
| 327 | SLU 83 | 15.18 | 0.33 | 58.44 | -0.2632 | 0.584 | -0.0012 |
| 327 | SLU 84 | 15.19 | 0.33 | 58.45 | -0.2632 | 0.5848 | -0.0012 |
| 327 | SLE RA 1 | 9.47 | 0.21 | 37.87 | -0.1655 | 0.3645 | -0.0007 |
| 327 | SLE RA 2 | 9.49 | 0.21 | 37.88 | -0.1656 | 0.3654 | -0.0007 |
| 327 | SLE RA 3 | 9.52 | 0.21 | 38.41 | -0.168 | 0.366 | -0.0008 |
| 327 | SLE RA 4 | 9.54 | 0.21 | 38.42 | -0.168 | 0.3665 | -0.0007 |
| 327 | SLE RA 5 | 9.41 | 0.21 | 38.09 | -0.1661 | 0.3615 | -0.0007 |
| 327 | SLE RA 6 | 9.44 | 0.21 | 38.62 | -0.1685 | 0.3622 | -0.0008 |
| 327 | SLE RA 7 | 9.45 | 0.21 | 38.62 | -0.1685 | 0.3627 | -0.0008 |
| 327 | SLE RA 8 | 9.3 | 0.21 | 38.29 | -0.1665 | 0.3568 | -0.0007 |
| 327 | SLE RA 9 | 9.32 | 0.21 | 38.29 | -0.1666 | 0.3573 | -0.0007 |
| 327 | SLE RA 10 | 10.68 | 0.23 | 41.39 | -0.1842 | 0.4117 | -0.0008 |
| 327 | SLE RA 11 | 10.71 | 0.24 | 41.91 | -0.1866 | 0.4123 | -0.0008 |
| 327 | SLE RA 12 | 10.73 | 0.24 | 41.92 | -0.1866 | 0.4128 | -0.0008 |
| 327 | SLE RA 13 | 10.6 | 0.23 | 41.59 | -0.1847 | 0.4078 | -0.0008 |
| 327 | SLE RA 14 | 10.63 | 0.24 | 42.12 | -0.1871 | 0.4085 | -0.0008 |

| Nodo | Cont. | Reazione a traslazione | | | Reazione a rotazione | | |
|---|---|---|---|---|---|---|---|
| Ind. | N.br. | x | y | z | x | y | z |
| 327 | SLE RA 15 | 10.64 | 0.24 | 42.13 | -0.1871 | 0.409 | -0.0008 |
| 327 | SLE RA 16 | 10.5 | 0.23 | 41.79 | -0.1851 | 0.4031 | -0.0008 |
| 327 | SLE RA 17 | 10.51 | 0.23 | 41.79 | -0.1852 | 0.4036 | -0.0008 |
| 327 | SLE RA 18 | 11.17 | 0.24 | 42.88 | -0.1921 | 0.4307 | -0.0009 |
| 327 | SLE RA 19 | 11.18 | 0.24 | 42.88 | -0.1921 | 0.4312 | -0.0009 |
| 327 | SLE RA 20 | 11.09 | 0.24 | 43.08 | -0.1926 | 0.4268 | -0.0009 |
| 327 | SLE RA 21 | 11.1 | 0.24 | 43.09 | -0.1926 | 0.4273 | -0.0009 |
| 327 | SLE FR 1 | 9.47 | 0.21 | 37.87 | -0.1655 | 0.3645 | -0.0007 |
| 327 | SLE FR 2 | 9.47 | 0.21 | 37.88 | -0.1656 | 0.3647 | -0.0007 |
| 327 | SLE FR 3 | 9.44 | 0.21 | 37.96 | -0.1657 | 0.363 | -0.0007 |
| 327 | SLE FR 4 | 9.98 | 0.22 | 39.38 | -0.1735 | 0.3845 | -0.0008 |
| 327 | SLE FR 5 | 9.95 | 0.22 | 39.46 | -0.1737 | 0.3828 | -0.0008 |
| 327 | SLE FR 6 | 10.32 | 0.23 | 40.38 | -0.1788 | 0.3976 | -0.0008 |
| 327 | SLE QP 1 | 9.47 | 0.21 | 37.87 | -0.1655 | 0.3645 | -0.0007 |
| 327 | SLE QP 2 | 9.98 | 0.22 | 39.37 | -0.1735 | 0.3844 | -0.0008 |
| 327 | SLD 1 | 16.57 | 0.1 | 39.42 | -0.0915 | 0.6703 | -0.0004 |
| 327 | SLD 2 | 16.57 | 0.1 | 39.42 | -0.0915 | 0.6703 | -0.0004 |
| 327 | SLD 3 | 17.72 | 0.19 | 43.37 | -0.1506 | 0.7161 | -0.0007 |
| 327 | SLD 4 | 17.72 | 0.19 | 43.37 | -0.1506 | 0.7161 | -0.0007 |
| 327 | SLD 5 | 10.2 | 0.06 | 33.39 | -0.0593 | 0.4008 | -0.0002 |
| 327 | SLD 6 | 10.2 | 0.06 | 33.39 | -0.0593 | 0.4008 | -0.0002 |
| 327 | SLD 7 | 14.06 | 0.33 | 46.57 | -0.2563 | 0.5533 | -0.0012 |
| 327 | SLD 8 | 14.06 | 0.33 | 46.57 | -0.2563 | 0.5533 | -0.0012 |
| 327 | SLD 9 | 5.9 | 0.1 | 32.18 | -0.0907 | 0.2155 | -0.0003 |
| 327 | SLD 10 | 5.9 | 0.1 | 32.18 | -0.0907 | 0.2155 | -0.0003 |
| 327 | SLD 11 | 9.76 | 0.38 | 45.35 | -0.2878 | 0.3679 | -0.0014 |
| 327 | SLD 12 | 9.76 | 0.38 | 45.35 | -0.2878 | 0.3679 | -0.0014 |
| 327 | SLD 13 | 2.24 | 0.25 | 35.38 | -0.1964 | 0.0526 | -0.0009 |
| 327 | SLD 14 | 2.24 | 0.25 | 35.38 | -0.1964 | 0.0526 | -0.0009 |
| 327 | SLD 15 | 3.39 | 0.34 | 39.33 | -0.2555 | 0.0984 | -0.0012 |
| 327 | SLD 16 | 3.39 | 0.34 | 39.33 | -0.2555 | 0.0984 | -0.0012 |
| 327 | SLV 1 | 24.93 | -0.08 | 39.31 | 0.0345 | 1.0341 | 0.0002 |
| 327 | SLV 2 | 24.93 | -0.08 | 39.31 | 0.0345 | 1.0341 | 0.0002 |
| 327 | SLV 3 | 27.79 | 0.11 | 48.87 | -0.1028 | 1.147 | -0.0005 |
| 327 | SLV 4 | 27.79 | 0.11 | 48.87 | -0.1028 | 1.147 | -0.0005 |
| 327 | SLV 5 | 10.14 | -0.16 | 24.85 | 0.0972 | 0.4082 | 0.0007 |
| 327 | SLV 6 | 10.14 | -0.16 | 24.85 | 0.0972 | 0.4082 | 0.0007 |
| 327 | SLV 7 | 19.65 | 0.48 | 56.73 | -0.3606 | 0.7843 | -0.0018 |
| 327 | SLV 8 | 19.65 | 0.48 | 56.73 | -0.3606 | 0.7843 | -0.0018 |
| 327 | SLV 9 | 0.31 | -0.04 | 22.02 | 0.0136 | -0.0155 | 0.0003 |
| 327 | SLV 10 | 0.31 | -0.04 | 22.02 | 0.0136 | -0.0155 | 0.0003 |
| 327 | SLV 11 | 9.83 | 0.6 | 53.9 | -0.4443 | 0.3605 | -0.0022 |
| 327 | SLV 12 | 9.83 | 0.6 | 53.9 | -0.4443 | 0.3605 | -0.0022 |
| 327 | SLV 13 | -7.83 | 0.33 | 29.88 | -0.2442 | -0.3782 | -0.001 |
| 327 | SLV 14 | -7.83 | 0.33 | 29.88 | -0.2442 | -0.3782 | -0.001 |
| 327 | SLV 15 | -4.97 | 0.52 | 39.44 | -0.3816 | -0.2654 | -0.0018 |
| 327 | SLV 16 | -4.97 | 0.52 | 39.44 | -0.3816 | -0.2654 | -0.0018 |
| 328 | SLU 1 | 8.59 | 0.02 | 41.19 | -0.0743 | 0.3569 | -0.0001 |
| 328 | SLU 2 | 8.62 | 0.02 | 41.21 | -0.0743 | 0.3581 | -0.0001 |
| 328 | SLU 3 | 8.68 | 0.02 | 42.17 | -0.0757 | 0.3597 | -0.0001 |
| 328 | SLU 4 | 8.69 | 0.02 | 42.18 | -0.0757 | 0.3604 | -0.0001 |
| 328 | SLU 5 | 8.51 | 0.02 | 41.62 | -0.0742 | 0.3527 | -0.0001 |
| 328 | SLU 6 | 8.57 | 0.02 | 42.59 | -0.0755 | 0.3544 | -0.0001 |
| 328 | SLU 7 | 8.59 | 0.02 | 42.6 | -0.0755 | 0.3551 | -0.0001 |
| 328 | SLU 8 | 8.38 | 0.02 | 42.02 | -0.074 | 0.3462 | -0.0001 |
| 328 | SLU 9 | 8.4 | 0.02 | 42.03 | -0.074 | 0.3469 | -0.0001 |
| 328 | SLU 10 | 10.32 | 0.02 | 47.36 | -0.0872 | 0.4285 | -0.0002 |
| 328 | SLU 11 | 10.38 | 0.02 | 48.33 | -0.0886 | 0.4301 | -0.0002 |
| 328 | SLU 12 | 10.39 | 0.02 | 48.34 | -0.0886 | 0.4309 | -0.0002 |
| 328 | SLU 13 | 10.21 | 0.02 | 47.78 | -0.0871 | 0.4232 | -0.0002 |
| 328 | SLU 14 | 10.27 | 0.02 | 48.74 | -0.0885 | 0.4248 | -0.0002 |
| 328 | SLU 15 | 10.29 | 0.02 | 48.76 | -0.0885 | 0.4255 | -0.0002 |
| 328 | SLU 16 | 10.08 | 0.02 | 48.18 | -0.0869 | 0.4166 | -0.0002 |
| 328 | SLU 17 | 10.1 | 0.02 | 48.19 | -0.0869 | 0.4174 | -0.0002 |
| 328 | SLU 18 | 11.02 | 0.03 | 49.98 | -0.0928 | 0.4575 | -0.0002 |
| 328 | SLU 19 | 11.04 | 0.03 | 50 | -0.0928 | 0.4582 | -0.0002 |
| 328 | SLU 20 | 10.91 | 0.02 | 50.4 | -0.0926 | 0.4522 | -0.0002 |
| 328 | SLU 21 | 10.93 | 0.02 | 50.41 | -0.0926 | 0.4529 | -0.0002 |
| 328 | SLU 22 | 10.04 | 0.02 | 46.89 | -0.0861 | 0.4168 | -0.0002 |
| 328 | SLU 23 | 10.07 | 0.02 | 46.91 | -0.0861 | 0.418 | -0.0002 |
| 328 | SLU 24 | 10.13 | 0.02 | 47.87 | -0.0875 | 0.4197 | -0.0002 |
| 328 | SLU 25 | 10.15 | 0.02 | 47.88 | -0.0875 | 0.4204 | -0.0002 |
| 328 | SLU 26 | 9.97 | 0.02 | 47.32 | -0.086 | 0.4127 | -0.0002 |
| 328 | SLU 27 | 10.02 | 0.02 | 48.29 | -0.0874 | 0.4143 | -0.0002 |
| 328 | SLU 28 | 10.04 | 0.02 | 48.3 | -0.0874 | 0.415 | -0.0002 |
| 328 | SLU 29 | 9.83 | 0.02 | 47.72 | -0.0858 | 0.4062 | -0.0002 |
| 328 | SLU 30 | 9.85 | 0.02 | 47.73 | -0.0858 | 0.4069 | -0.0002 |
| 328 | SLU 31 | 11.77 | 0.03 | 53.06 | -0.0991 | 0.4885 | -0.0002 |
| 328 | SLU 32 | 11.83 | 0.03 | 54.03 | -0.1004 | 0.4901 | -0.0002 |
| 328 | SLU 33 | 11.85 | 0.03 | 54.04 | -0.1004 | 0.4908 | -0.0002 |
| 328 | SLU 34 | 11.67 | 0.03 | 53.48 | -0.0989 | 0.4831 | -0.0002 |
| 328 | SLU 35 | 11.72 | 0.03 | 54.45 | -0.1003 | 0.4848 | -0.0002 |
| 328 | SLU 36 | 11.74 | 0.03 | 54.46 | -0.1003 | 0.4855 | -0.0002 |
| 328 | SLU 37 | 11.53 | 0.02 | 53.88 | -0.0988 | 0.4766 | -0.0002 |
| 328 | SLU 38 | 11.55 | 0.02 | 53.89 | -0.0988 | 0.4773 | -0.0002 |
| 328 | SLU 39 | 12.47 | 0.03 | 55.68 | -0.1046 | 0.5175 | -0.0002 |
| 328 | SLU 40 | 12.49 | 0.03 | 55.7 | -0.1046 | 0.5182 | -0.0002 |
| 328 | SLU 41 | 12.37 | 0.03 | 56.1 | -0.1045 | 0.5121 | -0.0002 |

| Nodo | Cont. | Reazione a traslazione | | | Reazione a rotazione | | |
|---|---|---|---|---|---|---|---|
| Ind. | N.br. | x | y | z | x | y | z |
| 328 | SLU 42 | 12.38 | 0.03 | 56.11 | -0.1045 | 0.5129 | -0.0002 |
| 328 | SLU 43 | 10.67 | 0.03 | 51.59 | -0.0925 | 0.4434 | -0.0002 |
| 328 | SLU 44 | 10.7 | 0.03 | 51.61 | -0.0925 | 0.4446 | -0.0002 |
| 328 | SLU 45 | 10.75 | 0.03 | 52.57 | -0.0939 | 0.4462 | -0.0002 |
| 328 | SLU 46 | 10.77 | 0.03 | 52.58 | -0.0939 | 0.4469 | -0.0002 |
| 328 | SLU 47 | 10.59 | 0.03 | 52.02 | -0.0924 | 0.4393 | -0.0002 |
| 328 | SLU 48 | 10.65 | 0.02 | 52.99 | -0.0938 | 0.4409 | -0.0002 |
| 328 | SLU 49 | 10.66 | 0.02 | 53 | -0.0938 | 0.4416 | -0.0002 |
| 328 | SLU 50 | 10.46 | 0.02 | 52.42 | -0.0922 | 0.4327 | -0.0002 |
| 328 | SLU 51 | 10.47 | 0.02 | 52.43 | -0.0922 | 0.4334 | -0.0002 |
| 328 | SLU 52 | 12.4 | 0.03 | 57.77 | -0.1055 | 0.515 | -0.0002 |
| 328 | SLU 53 | 12.45 | 0.03 | 58.73 | -0.1068 | 0.5166 | -0.0002 |
| 328 | SLU 54 | 12.47 | 0.03 | 58.74 | -0.1068 | 0.5174 | -0.0002 |
| 328 | SLU 55 | 12.29 | 0.03 | 58.18 | -0.1053 | 0.5097 | -0.0002 |
| 328 | SLU 56 | 12.35 | 0.03 | 59.15 | -0.1067 | 0.5113 | -0.0002 |
| 328 | SLU 57 | 12.36 | 0.03 | 59.16 | -0.1067 | 0.512 | -0.0002 |
| 328 | SLU 58 | 12.16 | 0.03 | 58.58 | -0.1052 | 0.5032 | -0.0002 |
| 328 | SLU 59 | 12.17 | 0.03 | 58.59 | -0.1052 | 0.5039 | -0.0002 |
| 328 | SLU 60 | 13.1 | 0.03 | 60.38 | -0.111 | 0.544 | -0.0002 |
| 328 | SLU 61 | 13.11 | 0.03 | 60.4 | -0.111 | 0.5447 | -0.0002 |
| 328 | SLU 62 | 12.99 | 0.03 | 60.8 | -0.1109 | 0.5387 | -0.0002 |
| 328 | SLU 63 | 13.01 | 0.03 | 60.81 | -0.1109 | 0.5394 | -0.0002 |
| 328 | SLU 64 | 12.12 | 0.03 | 57.29 | -0.1044 | 0.5034 | -0.0002 |
| 328 | SLU 65 | 12.15 | 0.03 | 57.31 | -0.1044 | 0.5046 | -0.0002 |
| 328 | SLU 66 | 12.21 | 0.03 | 58.27 | -0.1057 | 0.5062 | -0.0002 |
| 328 | SLU 67 | 12.22 | 0.03 | 58.28 | -0.1057 | 0.5069 | -0.0002 |
| 328 | SLU 68 | 12.05 | 0.03 | 57.72 | -0.1042 | 0.4992 | -0.0002 |
| 328 | SLU 69 | 12.1 | 0.03 | 58.69 | -0.1056 | 0.5008 | -0.0002 |
| 328 | SLU 70 | 12.12 | 0.03 | 58.7 | -0.1056 | 0.5016 | -0.0002 |
| 328 | SLU 71 | 11.91 | 0.03 | 58.12 | -0.1041 | 0.4927 | -0.0002 |
| 328 | SLU 72 | 11.93 | 0.03 | 58.13 | -0.1041 | 0.4934 | -0.0002 |
| 328 | SLU 73 | 13.85 | 0.03 | 63.47 | -0.1173 | 0.575 | -0.0002 |
| 328 | SLU 74 | 13.91 | 0.03 | 64.43 | -0.1187 | 0.5766 | -0.0002 |
| 328 | SLU 75 | 13.92 | 0.03 | 64.44 | -0.1187 | 0.5773 | -0.0002 |
| 328 | SLU 76 | 13.75 | 0.03 | 63.88 | -0.1172 | 0.5697 | -0.0002 |
| 328 | SLU 77 | 13.8 | 0.03 | 64.85 | -0.1185 | 0.5713 | -0.0002 |
| 328 | SLU 78 | 13.82 | 0.03 | 64.86 | -0.1185 | 0.572 | -0.0002 |
| 328 | SLU 79 | 13.61 | 0.03 | 64.28 | -0.117 | 0.5631 | -0.0002 |
| 328 | SLU 80 | 13.63 | 0.03 | 64.29 | -0.117 | 0.5638 | -0.0002 |
| 328 | SLU 81 | 14.55 | 0.03 | 66.09 | -0.1228 | 0.604 | -0.0002 |
| 328 | SLU 82 | 14.57 | 0.03 | 66.1 | -0.1228 | 0.6047 | -0.0002 |
| 328 | SLU 83 | 14.45 | 0.03 | 66.5 | -0.1227 | 0.5986 | -0.0002 |
| 328 | SLU 84 | 14.46 | 0.03 | 66.51 | -0.1227 | 0.5994 | -0.0002 |
| 328 | SLE RA 1 | 9.01 | 0.02 | 42.81 | -0.0777 | 0.374 | -0.0002 |
| 328 | SLE RA 2 | 9.02 | 0.02 | 42.83 | -0.0777 | 0.3748 | -0.0002 |
| 328 | SLE RA 3 | 9.06 | 0.02 | 43.47 | -0.0786 | 0.3759 | -0.0002 |
| 328 | SLE RA 4 | 9.07 | 0.02 | 43.48 | -0.0786 | 0.3764 | -0.0002 |
| 328 | SLE RA 5 | 8.95 | 0.02 | 43.11 | -0.0776 | 0.3713 | -0.0001 |
| 328 | SLE RA 6 | 8.99 | 0.02 | 43.75 | -0.0785 | 0.3723 | -0.0002 |
| 328 | SLE RA 7 | 9 | 0.02 | 43.76 | -0.0785 | 0.3728 | -0.0002 |
| 328 | SLE RA 8 | 8.86 | 0.02 | 43.37 | -0.0775 | 0.3669 | -0.0001 |
| 328 | SLE RA 9 | 8.88 | 0.02 | 43.38 | -0.0775 | 0.3674 | -0.0001 |
| 328 | SLE RA 10 | 10.16 | 0.02 | 46.93 | -0.0863 | 0.4218 | -0.0002 |
| 328 | SLE RA 11 | 10.2 | 0.02 | 47.58 | -0.0872 | 0.4229 | -0.0002 |
| 328 | SLE RA 12 | 10.21 | 0.02 | 47.58 | -0.0872 | 0.4233 | -0.0002 |
| 328 | SLE RA 13 | 10.09 | 0.02 | 47.21 | -0.0862 | 0.4182 | -0.0002 |
| 328 | SLE RA 14 | 10.13 | 0.02 | 47.85 | -0.0871 | 0.4193 | -0.0002 |
| 328 | SLE RA 15 | 10.14 | 0.02 | 47.86 | -0.0871 | 0.4198 | -0.0002 |
| 328 | SLE RA 16 | 10 | 0.02 | 47.48 | -0.0861 | 0.4139 | -0.0002 |
| 328 | SLE RA 17 | 10.01 | 0.02 | 47.48 | -0.0861 | 0.4143 | -0.0002 |
| 328 | SLE RA 18 | 10.62 | 0.02 | 48.68 | -0.09 | 0.4411 | -0.0002 |
| 328 | SLE RA 19 | 10.64 | 0.02 | 48.69 | -0.09 | 0.4416 | -0.0002 |
| 328 | SLE RA 20 | 10.55 | 0.02 | 48.96 | -0.0899 | 0.4375 | -0.0002 |
| 328 | SLE RA 21 | 10.57 | 0.02 | 48.97 | -0.0899 | 0.438 | -0.0002 |
| 328 | SLE FR 1 | 9.01 | 0.02 | 42.81 | -0.0777 | 0.374 | -0.0002 |
| 328 | SLE FR 2 | 9.01 | 0.02 | 42.82 | -0.0777 | 0.3742 | -0.0002 |
| 328 | SLE FR 3 | 8.98 | 0.02 | 42.93 | -0.0776 | 0.3726 | -0.0001 |
| 328 | SLE FR 4 | 9.49 | 0.02 | 44.58 | -0.0814 | 0.3943 | -0.0002 |
| 328 | SLE FR 5 | 9.46 | 0.02 | 44.68 | -0.0813 | 0.3927 | -0.0002 |
| 328 | SLE FR 6 | 9.81 | 0.02 | 45.75 | -0.0838 | 0.4076 | -0.0002 |
| 328 | SLE QP 1 | 9.01 | 0.02 | 42.81 | -0.0777 | 0.374 | -0.0002 |
| 328 | SLE QP 2 | 9.49 | 0.02 | 44.57 | -0.0814 | 0.3941 | -0.0002 |
| 328 | SLD 1 | 15.8 | -0.08 | 44.14 | -0.0199 | 0.6729 | 0.0001 |
| 328 | SLD 2 | 15.8 | -0.08 | 44.14 | -0.0199 | 0.6729 | 0.0001 |
| 328 | SLD 3 | 17.04 | -0.03 | 48.88 | -0.0578 | 0.7207 | -0.0002 |
| 328 | SLD 4 | 17.04 | -0.03 | 48.88 | -0.0578 | 0.7207 | -0.0002 |
| 328 | SLD 5 | 9.49 | -0.08 | 37.25 | -0.0056 | 0.4054 | 0.0004 |
| 328 | SLD 6 | 9.49 | -0.08 | 37.25 | -0.0056 | 0.4054 | 0.0004 |
| 328 | SLD 7 | 13.65 | 0.08 | 53.06 | -0.1316 | 0.5645 | -0.0006 |
| 328 | SLD 8 | 13.65 | 0.08 | 53.06 | -0.1316 | 0.5645 | -0.0006 |
| 328 | SLD 9 | 5.33 | -0.03 | 36.09 | -0.0311 | 0.2238 | 0.0003 |
| 328 | SLD 10 | 5.33 | -0.03 | 36.09 | -0.0311 | 0.2238 | 0.0003 |
| 328 | SLD 11 | 9.49 | 0.13 | 51.9 | -0.1572 | 0.3829 | -0.0007 |
| 328 | SLD 12 | 9.49 | 0.13 | 51.9 | -0.1572 | 0.3829 | -0.0007 |
| 328 | SLD 13 | 1.94 | 0.08 | 40.26 | -0.105 | 0.0676 | -0.0002 |
| 328 | SLD 14 | 1.94 | 0.08 | 40.26 | -0.105 | 0.0676 | -0.0002 |
| 328 | SLD 15 | 3.19 | 0.13 | 45.01 | -0.1428 | 0.1154 | -0.0005 |
| 328 | SLD 16 | 3.19 | 0.13 | 45.01 | -0.1428 | 0.1154 | -0.0005 |

| Nodo | Cont. | Reazione a traslazione | | | Reazione a rotazione | | |
|---|---|---|---|---|---|---|---|
| Ind. | N.br. | x | y | z | x | y | z |
| 328 | SLV 1 | 23.8 | -0.25 | 43.35 | 0.0798 | 1.0274 | 0.0006 |
| 328 | SLV 2 | 23.8 | -0.25 | 43.35 | 0.0798 | 1.0274 | 0.0006 |
| 328 | SLV 3 | 26.86 | -0.14 | 54.85 | -0.0077 | 1.1449 | -0.0001 |
| 328 | SLV 4 | 26.86 | -0.14 | 54.85 | -0.0077 | 1.1449 | -0.0001 |
| 328 | SLV 5 | 9.14 | -0.23 | 26.77 | 0.0997 | 0.4059 | 0.0011 |
| 328 | SLV 6 | 9.14 | -0.23 | 26.77 | 0.0997 | 0.4059 | 0.0011 |
| 328 | SLV 7 | 19.34 | 0.14 | 65.1 | -0.192 | 0.7975 | -0.0011 |
| 328 | SLV 8 | 19.34 | 0.14 | 65.1 | -0.192 | 0.7975 | -0.0011 |
| 328 | SLV 9 | -0.36 | -0.1 | 24.05 | 0.0292 | -0.0093 | 0.0008 |
| 328 | SLV 10 | -0.36 | -0.1 | 24.05 | 0.0292 | -0.0093 | 0.0008 |
| 328 | SLV 11 | 9.84 | 0.28 | 62.38 | -0.2624 | 0.3824 | -0.0014 |
| 328 | SLV 12 | 9.84 | 0.28 | 62.38 | -0.2624 | 0.3824 | -0.0014 |
| 328 | SLV 13 | -7.88 | 0.19 | 34.29 | -0.155 | -0.3566 | -0.0002 |
| 328 | SLV 14 | -7.88 | 0.19 | 34.29 | -0.155 | -0.3566 | -0.0002 |
| 328 | SLV 15 | -4.82 | 0.3 | 45.79 | -0.2425 | -0.2391 | -0.0009 |
| 328 | SLV 16 | -4.82 | 0.3 | 45.79 | -0.2425 | -0.2391 | -0.0009 |
| 329 | SLU 1 | 6.96 | -0.22 | 46.79 | 0.0083 | 0.2511 | -0.0003 |
| 329 | SLU 2 | 6.98 | -0.22 | 46.82 | 0.0084 | 0.2522 | -0.0003 |
| 329 | SLU 3 | 7.02 | -0.22 | 48.03 | 0.0094 | 0.2522 | -0.0003 |
| 329 | SLU 4 | 7.03 | -0.22 | 48.04 | 0.0094 | 0.2528 | -0.0003 |
| 329 | SLU 5 | 6.89 | -0.22 | 47.42 | 0.0096 | 0.2473 | -0.0003 |
| 329 | SLU 6 | 6.93 | -0.23 | 48.62 | 0.0106 | 0.2473 | -0.0003 |
| 329 | SLU 7 | 6.94 | -0.23 | 48.64 | 0.0106 | 0.2479 | -0.0003 |
| 329 | SLU 8 | 6.77 | -0.23 | 47.99 | 0.0107 | 0.2414 | -0.0003 |
| 329 | SLU 9 | 6.79 | -0.23 | 48 | 0.0108 | 0.242 | -0.0003 |
| 329 | SLU 10 | 8.38 | -0.26 | 54.07 | 0.0103 | 0.303 | -0.0004 |
| 329 | SLU 11 | 8.42 | -0.26 | 55.28 | 0.0113 | 0.3031 | -0.0004 |
| 329 | SLU 12 | 8.43 | -0.26 | 55.3 | 0.0113 | 0.3037 | -0.0004 |
| 329 | SLU 13 | 8.29 | -0.26 | 54.67 | 0.0115 | 0.2982 | -0.0004 |
| 329 | SLU 14 | 8.33 | -0.27 | 55.88 | 0.0125 | 0.2982 | -0.0004 |
| 329 | SLU 15 | 8.34 | -0.27 | 55.89 | 0.0125 | 0.2988 | -0.0004 |
| 329 | SLU 16 | 8.17 | -0.27 | 55.24 | 0.0126 | 0.2923 | -0.0004 |
| 329 | SLU 17 | 8.19 | -0.27 | 55.26 | 0.0127 | 0.2929 | -0.0004 |
| 329 | SLU 18 | 8.95 | -0.27 | 57.16 | 0.011 | 0.3238 | -0.0004 |
| 329 | SLU 19 | 8.97 | -0.27 | 57.17 | 0.011 | 0.3245 | -0.0004 |
| 329 | SLU 20 | 8.86 | -0.28 | 57.75 | 0.0122 | 0.319 | -0.0004 |
| 329 | SLU 21 | 8.88 | -0.28 | 57.77 | 0.0123 | 0.3196 | -0.0004 |
| 329 | SLU 22 | 8.14 | -0.25 | 53.53 | 0.0103 | 0.2937 | -0.0004 |
| 329 | SLU 23 | 8.17 | -0.25 | 53.56 | 0.0103 | 0.2947 | -0.0004 |
| 329 | SLU 24 | 8.21 | -0.26 | 54.76 | 0.0114 | 0.2947 | -0.0004 |
| 329 | SLU 25 | 8.22 | -0.26 | 54.78 | 0.0114 | 0.2953 | -0.0004 |
| 329 | SLU 26 | 8.08 | -0.26 | 54.15 | 0.0116 | 0.2898 | -0.0004 |
| 329 | SLU 27 | 8.12 | -0.27 | 55.36 | 0.0126 | 0.2898 | -0.0004 |
| 329 | SLU 28 | 8.13 | -0.27 | 55.38 | 0.0126 | 0.2904 | -0.0004 |
| 329 | SLU 29 | 7.96 | -0.26 | 54.72 | 0.0127 | 0.2839 | -0.0004 |
| 329 | SLU 30 | 7.98 | -0.26 | 54.74 | 0.0128 | 0.2845 | -0.0004 |
| 329 | SLU 31 | 9.56 | -0.29 | 60.81 | 0.0122 | 0.3456 | -0.0004 |
| 329 | SLU 32 | 9.6 | -0.3 | 62.02 | 0.0133 | 0.3456 | -0.0004 |
| 329 | SLU 33 | 9.62 | -0.3 | 62.03 | 0.0133 | 0.3462 | -0.0004 |
| 329 | SLU 34 | 9.47 | -0.3 | 61.41 | 0.0135 | 0.3407 | -0.0004 |
| 329 | SLU 35 | 9.51 | -0.31 | 62.61 | 0.0145 | 0.3407 | -0.0005 |
| 329 | SLU 36 | 9.53 | -0.31 | 62.63 | 0.0145 | 0.3413 | -0.0005 |
| 329 | SLU 37 | 9.36 | -0.3 | 61.98 | 0.0146 | 0.3348 | -0.0005 |
| 329 | SLU 38 | 9.37 | -0.3 | 61.99 | 0.0146 | 0.3354 | -0.0005 |
| 329 | SLU 39 | 10.14 | -0.31 | 63.89 | 0.013 | 0.3664 | -0.0005 |
| 329 | SLU 40 | 10.15 | -0.31 | 63.91 | 0.013 | 0.367 | -0.0005 |
| 329 | SLU 41 | 10.05 | -0.32 | 64.49 | 0.0142 | 0.3615 | -0.0005 |
| 329 | SLU 42 | 10.06 | -0.32 | 64.5 | 0.0142 | 0.3621 | -0.0005 |
| 329 | SLU 43 | 8.64 | -0.27 | 58.52 | 0.0101 | 0.3119 | -0.0004 |
| 329 | SLU 44 | 8.66 | -0.27 | 58.55 | 0.0102 | 0.3129 | -0.0004 |
| 329 | SLU 45 | 8.7 | -0.28 | 59.76 | 0.0112 | 0.313 | -0.0004 |
| 329 | SLU 46 | 8.71 | -0.28 | 59.77 | 0.0112 | 0.3136 | -0.0004 |
| 329 | SLU 47 | 8.57 | -0.27 | 59.15 | 0.0114 | 0.308 | -0.0004 |
| 329 | SLU 48 | 8.61 | -0.28 | 60.35 | 0.0124 | 0.3081 | -0.0004 |
| 329 | SLU 49 | 8.62 | -0.28 | 60.37 | 0.0124 | 0.3087 | -0.0004 |
| 329 | SLU 50 | 8.45 | -0.28 | 59.72 | 0.0126 | 0.3021 | -0.0004 |
| 329 | SLU 51 | 8.47 | -0.28 | 59.73 | 0.0126 | 0.3027 | -0.0004 |
| 329 | SLU 52 | 10.06 | -0.31 | 65.8 | 0.0121 | 0.3638 | -0.0005 |
| 329 | SLU 53 | 10.1 | -0.32 | 67.01 | 0.0131 | 0.3638 | -0.0005 |
| 329 | SLU 54 | 10.11 | -0.32 | 67.02 | 0.0131 | 0.3644 | -0.0005 |
| 329 | SLU 55 | 9.97 | -0.31 | 66.4 | 0.0133 | 0.3589 | -0.0005 |
| 329 | SLU 56 | 10.01 | -0.32 | 67.6 | 0.0143 | 0.359 | -0.0005 |
| 329 | SLU 57 | 10.02 | -0.32 | 67.62 | 0.0143 | 0.3596 | -0.0005 |
| 329 | SLU 58 | 9.85 | -0.32 | 66.97 | 0.0144 | 0.353 | -0.0005 |
| 329 | SLU 59 | 9.87 | -0.32 | 66.98 | 0.0145 | 0.3536 | -0.0005 |
| 329 | SLU 60 | 10.63 | -0.33 | 68.88 | 0.0128 | 0.3846 | -0.0005 |
| 329 | SLU 61 | 10.65 | -0.33 | 68.9 | 0.0129 | 0.3852 | -0.0005 |
| 329 | SLU 62 | 10.54 | -0.33 | 69.48 | 0.014 | 0.3797 | -0.0005 |
| 329 | SLU 63 | 10.56 | -0.33 | 69.5 | 0.0141 | 0.3803 | -0.0005 |
| 329 | SLU 64 | 9.82 | -0.31 | 65.26 | 0.0121 | 0.3544 | -0.0004 |
| 329 | SLU 65 | 9.85 | -0.31 | 65.29 | 0.0122 | 0.3554 | -0.0004 |
| 329 | SLU 66 | 9.89 | -0.31 | 66.49 | 0.0132 | 0.3555 | -0.0005 |
| 329 | SLU 67 | 9.9 | -0.31 | 66.51 | 0.0132 | 0.3561 | -0.0005 |
| 329 | SLU 68 | 9.76 | -0.31 | 65.88 | 0.0134 | 0.3505 | -0.0005 |
| 329 | SLU 69 | 9.8 | -0.32 | 67.09 | 0.0144 | 0.3506 | -0.0005 |
| 329 | SLU 70 | 9.81 | -0.32 | 67.1 | 0.0144 | 0.3512 | -0.0005 |
| 329 | SLU 71 | 9.64 | -0.32 | 66.45 | 0.0145 | 0.3446 | -0.0005 |
| 329 | SLU 72 | 9.66 | -0.32 | 66.47 | 0.0146 | 0.3453 | -0.0005 |

| Nodo | Cont. | Reazione a traslazione | | | Reazione a rotazione | | |
|---|---|---|---|---|---|---|---|
| Ind. | N.br. | x | y | z | x | y | z |
| 329 | SLU 73 | 11.24 | -0.35 | 72.54 | 0.0141 | 0.4063 | -0.0005 |
| 329 | SLU 74 | 11.28 | -0.35 | 73.74 | 0.0151 | 0.4063 | -0.0005 |
| 329 | SLU 75 | 11.3 | -0.35 | 73.76 | 0.0151 | 0.407 | -0.0005 |
| 329 | SLU 76 | 11.15 | -0.35 | 73.14 | 0.0153 | 0.4014 | -0.0005 |
| 329 | SLU 77 | 11.19 | -0.36 | 74.34 | 0.0163 | 0.4015 | -0.0005 |
| 329 | SLU 78 | 11.21 | -0.36 | 74.36 | 0.0163 | 0.4021 | -0.0005 |
| 329 | SLU 79 | 11.04 | -0.36 | 73.7 | 0.0164 | 0.3955 | -0.0005 |
| 329 | SLU 80 | 11.05 | -0.36 | 73.72 | 0.0165 | 0.3961 | -0.0005 |
| 329 | SLU 81 | 11.82 | -0.36 | 75.62 | 0.0148 | 0.4271 | -0.0005 |
| 329 | SLU 82 | 11.83 | -0.36 | 75.64 | 0.0148 | 0.4277 | -0.0005 |
| 329 | SLU 83 | 11.73 | -0.37 | 76.22 | 0.016 | 0.4222 | -0.0005 |
| 329 | SLU 84 | 11.74 | -0.37 | 76.23 | 0.0161 | 0.4228 | -0.0005 |
| 329 | SLE RA 1 | 7.29 | -0.23 | 48.72 | 0.0089 | 0.2633 | -0.0003 |
| 329 | SLE RA 2 | 7.31 | -0.23 | 48.74 | 0.0089 | 0.264 | -0.0003 |
| 329 | SLE RA 3 | 7.34 | -0.23 | 49.54 | 0.0096 | 0.264 | -0.0003 |
| 329 | SLE RA 4 | 7.35 | -0.23 | 49.55 | 0.0096 | 0.2644 | -0.0003 |
| 329 | SLE RA 5 | 7.25 | -0.23 | 49.14 | 0.0097 | 0.2607 | -0.0003 |
| 329 | SLE RA 6 | 7.28 | -0.24 | 49.94 | 0.0104 | 0.2607 | -0.0003 |
| 329 | SLE RA 7 | 7.29 | -0.24 | 49.95 | 0.0104 | 0.2611 | -0.0004 |
| 329 | SLE RA 8 | 7.17 | -0.23 | 49.51 | 0.0105 | 0.2568 | -0.0003 |
| 329 | SLE RA 9 | 7.18 | -0.23 | 49.53 | 0.0105 | 0.2572 | -0.0003 |
| 329 | SLE RA 10 | 8.24 | -0.25 | 53.57 | 0.0102 | 0.2979 | -0.0004 |
| 329 | SLE RA 11 | 8.27 | -0.26 | 54.38 | 0.0109 | 0.2979 | -0.0004 |
| 329 | SLE RA 12 | 8.28 | -0.26 | 54.39 | 0.0109 | 0.2983 | -0.0004 |
| 329 | SLE RA 13 | 8.18 | -0.26 | 53.97 | 0.011 | 0.2946 | -0.0004 |
| 329 | SLE RA 14 | 8.21 | -0.26 | 54.77 | 0.0117 | 0.2946 | -0.0004 |
| 329 | SLE RA 15 | 8.22 | -0.26 | 54.78 | 0.0117 | 0.2951 | -0.0004 |
| 329 | SLE RA 16 | 8.11 | -0.26 | 54.35 | 0.0118 | 0.2907 | -0.0004 |
| 329 | SLE RA 17 | 8.12 | -0.26 | 54.36 | 0.0118 | 0.2911 | -0.0004 |
| 329 | SLE RA 18 | 8.62 | -0.26 | 55.63 | 0.0107 | 0.3118 | -0.0004 |
| 329 | SLE RA 19 | 8.64 | -0.26 | 55.64 | 0.0107 | 0.3122 | -0.0004 |
| 329 | SLE RA 20 | 8.56 | -0.27 | 56.02 | 0.0115 | 0.3085 | -0.0004 |
| 329 | SLE RA 21 | 8.57 | -0.27 | 56.03 | 0.0115 | 0.3089 | -0.0004 |
| 329 | SLE FR 1 | 7.29 | -0.23 | 48.72 | 0.0089 | 0.2633 | -0.0003 |
| 329 | SLE FR 2 | 7.3 | -0.23 | 48.72 | 0.0089 | 0.2634 | -0.0003 |
| 329 | SLE FR 3 | 7.27 | -0.23 | 48.88 | 0.0092 | 0.262 | -0.0003 |
| 329 | SLE FR 4 | 7.7 | -0.24 | 50.8 | 0.0094 | 0.278 | -0.0004 |
| 329 | SLE FR 5 | 7.67 | -0.24 | 50.95 | 0.0097 | 0.2765 | -0.0004 |
| 329 | SLE FR 6 | 7.96 | -0.25 | 52.17 | 0.0098 | 0.2875 | -0.0004 |
| 329 | SLE QP 1 | 7.29 | -0.23 | 48.72 | 0.0089 | 0.2633 | -0.0003 |
| 329 | SLE QP 2 | 7.69 | -0.24 | 50.79 | 0.0094 | 0.2778 | -0.0004 |
| 329 | SLD 1 | 13.72 | -0.28 | 49.38 | 0.0234 | 0.5402 | -0.0001 |
| 329 | SLD 2 | 13.72 | -0.28 | 49.38 | 0.0234 | 0.5402 | -0.0001 |
| 329 | SLD 3 | 15.05 | -0.31 | 55.69 | 0.0469 | 0.5856 | -0.0002 |
| 329 | SLD 4 | 15.05 | -0.31 | 55.69 | 0.0469 | 0.5856 | -0.0002 |
| 329 | SLD 5 | 7.49 | -0.2 | 40.78 | -0.022 | 0.2877 | -0.0001 |
| 329 | SLD 6 | 7.49 | -0.2 | 40.78 | -0.022 | 0.2877 | -0.0001 |
| 329 | SLD 7 | 11.92 | -0.31 | 61.84 | 0.0562 | 0.439 | -0.0005 |
| 329 | SLD 8 | 11.92 | -0.31 | 61.84 | 0.0562 | 0.439 | -0.0005 |
| 329 | SLD 9 | 3.47 | -0.17 | 39.74 | -0.0374 | 0.1166 | -0.0002 |
| 329 | SLD 10 | 3.47 | -0.17 | 39.74 | -0.0374 | 0.1166 | -0.0002 |
| 329 | SLD 11 | 7.9 | -0.27 | 60.8 | 0.0408 | 0.268 | -0.0006 |
| 329 | SLD 12 | 7.9 | -0.27 | 60.8 | 0.0408 | 0.268 | -0.0006 |
| 329 | SLD 13 | 0.34 | -0.16 | 45.89 | -0.028 | -0.03 | -0.0005 |
| 329 | SLD 14 | 0.34 | -0.16 | 45.89 | -0.028 | -0.03 | -0.0005 |
| 329 | SLD 15 | 1.67 | -0.19 | 52.21 | -0.0046 | 0.0154 | -0.0006 |
| 329 | SLD 16 | 1.67 | -0.19 | 52.21 | -0.0046 | 0.0154 | -0.0006 |
| 329 | SLV 1 | 21.37 | -0.37 | 47.24 | 0.0543 | 0.8745 | 0.0003 |
| 329 | SLV 2 | 21.37 | -0.37 | 47.24 | 0.0543 | 0.8745 | 0.0003 |
| 329 | SLV 3 | 24.6 | -0.44 | 62.53 | 0.1088 | 0.9849 | 0 |
| 329 | SLV 4 | 24.6 | -0.44 | 62.53 | 0.1088 | 0.9849 | 0 |
| 329 | SLV 5 | 6.91 | -0.16 | 26.54 | -0.0598 | 0.2893 | 0.0003 |
| 329 | SLV 6 | 6.91 | -0.16 | 26.54 | -0.0598 | 0.2893 | 0.0003 |
| 329 | SLV 7 | 17.66 | -0.42 | 77.5 | 0.1219 | 0.6575 | -0.0007 |
| 329 | SLV 8 | 17.66 | -0.42 | 77.5 | 0.1219 | 0.6575 | -0.0007 |
| 329 | SLV 9 | -2.27 | -0.06 | 24.08 | -0.1031 | -0.1018 | 0 |
| 329 | SLV 10 | -2.27 | -0.06 | 24.08 | -0.1031 | -0.1018 | 0 |
| 329 | SLV 11 | 8.48 | -0.32 | 75.05 | 0.0786 | 0.2664 | -0.001 |
| 329 | SLV 12 | 8.48 | -0.32 | 75.05 | 0.0786 | 0.2664 | -0.001 |
| 329 | SLV 13 | -9.21 | -0.03 | 39.06 | -0.09 | -0.4293 | -0.0007 |
| 329 | SLV 14 | -9.21 | -0.03 | 39.06 | -0.09 | -0.4293 | -0.0007 |
| 329 | SLV 15 | -5.99 | -0.11 | 54.34 | -0.0354 | -0.3188 | -0.001 |
| 329 | SLV 16 | -5.99 | -0.11 | 54.34 | -0.0354 | -0.3188 | -0.001 |
| 330 | SLU 1 | 3.07 | -7.57 | 71.65 | 0.131 | 0.1373 | 0.0001 |
| 330 | SLU 2 | 3.09 | -7.59 | 71.7 | 0.1316 | 0.1381 | 0.0001 |
| 330 | SLU 3 | 2.99 | -7.91 | 73.73 | 0.1409 | 0.1338 | 0.0001 |
| 330 | SLU 4 | 3 | -7.91 | 73.76 | 0.1413 | 0.1343 | 0.0001 |
| 330 | SLU 5 | 2.91 | -7.85 | 72.82 | 0.1418 | 0.1302 | 0.0001 |
| 330 | SLU 6 | 2.81 | -8.17 | 74.86 | 0.1511 | 0.126 | 0.0001 |
| 330 | SLU 7 | 2.82 | -8.17 | 74.88 | 0.1515 | 0.1265 | 0.0001 |
| 330 | SLU 8 | 2.71 | -8.09 | 73.91 | 0.1513 | 0.1216 | 0.0001 |
| 330 | SLU 9 | 2.73 | -8.1 | 73.93 | 0.1517 | 0.1221 | 0.0001 |
| 330 | SLU 10 | 3.73 | -8.99 | 83.25 | 0.1574 | 0.1664 | 0.0002 |
| 330 | SLU 11 | 3.63 | -9.31 | 85.28 | 0.1667 | 0.1622 | 0.0001 |
| 330 | SLU 12 | 3.64 | -9.31 | 85.31 | 0.1671 | 0.1627 | 0.0001 |
| 330 | SLU 13 | 3.55 | -9.25 | 84.38 | 0.1676 | 0.1586 | 0.0001 |
| 330 | SLU 14 | 3.45 | -9.57 | 86.41 | 0.1769 | 0.1544 | 0.0001 |
| 330 | SLU 15 | 3.46 | -9.57 | 86.44 | 0.1773 | 0.1549 | 0.0001 |

| Nodo | Cont. | Reazione a traslazione | | | Reazione a rotazione | | |
|---|---|---|---|---|---|---|---|
| Ind. | N.br. | x | y | z | x | y | z |
| 330 | SLU 16 | 3.35 | -9.49 | 85.46 | 0.1772 | 0.15 | 0.0001 |
| 330 | SLU 17 | 3.36 | -9.5 | 85.49 | 0.1775 | 0.1505 | 0.0001 |
| 330 | SLU 18 | 3.98 | -9.57 | 88.16 | 0.1678 | 0.1778 | 0.0002 |
| 330 | SLU 19 | 3.99 | -9.58 | 88.19 | 0.1682 | 0.1783 | 0.0002 |
| 330 | SLU 20 | 3.8 | -9.83 | 89.29 | 0.178 | 0.17 | 0.0002 |
| 330 | SLU 21 | 3.81 | -9.84 | 89.31 | 0.1784 | 0.1705 | 0.0002 |
| 330 | SLU 22 | 3.55 | -8.9 | 82.4 | 0.1567 | 0.1588 | 0.0001 |
| 330 | SLU 23 | 3.57 | -8.91 | 82.45 | 0.1573 | 0.1596 | 0.0001 |
| 330 | SLU 24 | 3.47 | -9.23 | 84.48 | 0.1666 | 0.1554 | 0.0001 |
| 330 | SLU 25 | 3.48 | -9.24 | 84.51 | 0.167 | 0.1558 | 0.0001 |
| 330 | SLU 26 | 3.39 | -9.17 | 83.58 | 0.1675 | 0.1518 | 0.0001 |
| 330 | SLU 27 | 3.3 | -9.49 | 85.61 | 0.1768 | 0.1476 | 0.0001 |
| 330 | SLU 28 | 3.31 | -9.5 | 85.64 | 0.1772 | 0.148 | 0.0001 |
| 330 | SLU 29 | 3.2 | -9.42 | 84.66 | 0.177 | 0.1432 | 0.0001 |
| 330 | SLU 30 | 3.21 | -9.42 | 84.69 | 0.1774 | 0.1436 | 0.0001 |
| 330 | SLU 31 | 4.21 | -10.31 | 94.01 | 0.1831 | 0.188 | 0.0002 |
| 330 | SLU 32 | 4.11 | -10.63 | 96.04 | 0.1924 | 0.1838 | 0.0002 |
| 330 | SLU 33 | 4.12 | -10.64 | 96.07 | 0.1928 | 0.1842 | 0.0002 |
| 330 | SLU 34 | 4.03 | -10.57 | 95.14 | 0.1933 | 0.1801 | 0.0002 |
| 330 | SLU 35 | 3.93 | -10.89 | 97.17 | 0.2026 | 0.1759 | 0.0002 |
| 330 | SLU 36 | 3.94 | -10.9 | 97.2 | 0.203 | 0.1764 | 0.0002 |
| 330 | SLU 37 | 3.83 | -10.81 | 96.22 | 0.2029 | 0.1716 | 0.0001 |
| 330 | SLU 38 | 3.84 | -10.82 | 96.25 | 0.2032 | 0.172 | 0.0001 |
| 330 | SLU 39 | 4.46 | -10.9 | 98.91 | 0.1935 | 0.1994 | 0.0002 |
| 330 | SLU 40 | 4.47 | -10.9 | 98.94 | 0.1939 | 0.1998 | 0.0002 |
| 330 | SLU 41 | 4.29 | -11.16 | 100.04 | 0.2037 | 0.1915 | 0.0002 |
| 330 | SLU 42 | 4.3 | -11.16 | 100.07 | 0.2041 | 0.192 | 0.0002 |
| 330 | SLU 43 | 3.83 | -9.39 | 89.45 | 0.1614 | 0.1711 | 0.0002 |
| 330 | SLU 44 | 3.84 | -9.4 | 89.5 | 0.1621 | 0.1719 | 0.0002 |
| 330 | SLU 45 | 3.75 | -9.72 | 91.53 | 0.1714 | 0.1676 | 0.0001 |
| 330 | SLU 46 | 3.76 | -9.73 | 91.56 | 0.1718 | 0.1681 | 0.0001 |
| 330 | SLU 47 | 3.67 | -9.66 | 90.63 | 0.1723 | 0.164 | 0.0001 |
| 330 | SLU 48 | 3.57 | -9.98 | 92.66 | 0.1816 | 0.1598 | 0.0001 |
| 330 | SLU 49 | 3.58 | -9.99 | 92.69 | 0.182 | 0.1603 | 0.0001 |
| 330 | SLU 50 | 3.47 | -9.91 | 91.71 | 0.1818 | 0.1554 | 0.0001 |
| 330 | SLU 51 | 3.48 | -9.92 | 91.74 | 0.1822 | 0.1559 | 0.0001 |
| 330 | SLU 52 | 4.48 | -10.8 | 101.06 | 0.1879 | 0.2002 | 0.0002 |
| 330 | SLU 53 | 4.39 | -11.12 | 103.09 | 0.1972 | 0.196 | 0.0002 |
| 330 | SLU 54 | 4.4 | -11.13 | 103.12 | 0.1976 | 0.1965 | 0.0002 |
| 330 | SLU 55 | 4.3 | -11.06 | 102.19 | 0.1981 | 0.1924 | 0.0002 |
| 330 | SLU 56 | 4.21 | -11.38 | 104.22 | 0.2074 | 0.1882 | 0.0002 |
| 330 | SLU 57 | 4.22 | -11.39 | 104.25 | 0.2078 | 0.1887 | 0.0002 |
| 330 | SLU 58 | 4.11 | -11.31 | 103.27 | 0.2076 | 0.1838 | 0.0002 |
| 330 | SLU 59 | 4.12 | -11.32 | 103.3 | 0.208 | 0.1843 | 0.0002 |
| 330 | SLU 60 | 4.74 | -11.39 | 105.96 | 0.1983 | 0.2116 | 0.0002 |
| 330 | SLU 61 | 4.75 | -11.4 | 105.99 | 0.1987 | 0.2121 | 0.0002 |
| 330 | SLU 62 | 4.56 | -11.65 | 107.09 | 0.2085 | 0.2038 | 0.0002 |
| 330 | SLU 63 | 4.57 | -11.66 | 107.12 | 0.2089 | 0.2043 | 0.0002 |
| 330 | SLU 64 | 4.31 | -10.71 | 100.21 | 0.1871 | 0.1926 | 0.0002 |
| 330 | SLU 65 | 4.33 | -10.73 | 100.26 | 0.1878 | 0.1934 | 0.0002 |
| 330 | SLU 66 | 4.23 | -11.05 | 102.29 | 0.1971 | 0.1892 | 0.0002 |
| 330 | SLU 67 | 4.24 | -11.06 | 102.32 | 0.1975 | 0.1896 | 0.0002 |
| 330 | SLU 68 | 4.15 | -10.99 | 101.39 | 0.198 | 0.1856 | 0.0002 |
| 330 | SLU 69 | 4.05 | -11.31 | 103.42 | 0.2073 | 0.1814 | 0.0002 |
| 330 | SLU 70 | 4.06 | -11.32 | 103.45 | 0.2077 | 0.1818 | 0.0002 |
| 330 | SLU 71 | 3.95 | -11.23 | 102.47 | 0.2075 | 0.177 | 0.0001 |
| 330 | SLU 72 | 3.96 | -11.24 | 102.5 | 0.2079 | 0.1774 | 0.0001 |
| 330 | SLU 73 | 4.96 | -12.13 | 111.82 | 0.2136 | 0.2218 | 0.0002 |
| 330 | SLU 74 | 4.87 | -12.45 | 113.85 | 0.2229 | 0.2176 | 0.0002 |
| 330 | SLU 75 | 4.88 | -12.46 | 113.88 | 0.2233 | 0.218 | 0.0002 |
| 330 | SLU 76 | 4.79 | -12.39 | 112.94 | 0.2238 | 0.214 | 0.0002 |
| 330 | SLU 77 | 4.69 | -12.71 | 114.98 | 0.2331 | 0.2097 | 0.0002 |
| 330 | SLU 78 | 4.7 | -12.72 | 115 | 0.2335 | 0.2102 | 0.0002 |
| 330 | SLU 79 | 4.59 | -12.63 | 114.03 | 0.2333 | 0.2054 | 0.0002 |
| 330 | SLU 80 | 4.6 | -12.64 | 114.05 | 0.2337 | 0.2058 | 0.0002 |
| 330 | SLU 81 | 5.22 | -12.71 | 116.72 | 0.224 | 0.2332 | 0.0002 |
| 330 | SLU 82 | 5.23 | -12.72 | 116.75 | 0.2244 | 0.2336 | 0.0002 |
| 330 | SLU 83 | 5.04 | -12.97 | 117.85 | 0.2342 | 0.2253 | 0.0002 |
| 330 | SLU 84 | 5.05 | -12.98 | 117.88 | 0.2346 | 0.2258 | 0.0002 |
| 330 | SLE RA 1 | 3.21 | -7.95 | 74.72 | 0.1383 | 0.1434 | 0.0001 |
| 330 | SLE RA 2 | 3.22 | -7.96 | 74.75 | 0.1387 | 0.144 | 0.0001 |
| 330 | SLE RA 3 | 3.16 | -8.17 | 76.11 | 0.1449 | 0.1411 | 0.0001 |
| 330 | SLE RA 4 | 3.16 | -8.18 | 76.13 | 0.1452 | 0.1415 | 0.0001 |
| 330 | SLE RA 5 | 3.1 | -8.13 | 75.51 | 0.1455 | 0.1387 | 0.0001 |
| 330 | SLE RA 6 | 3.04 | -8.35 | 76.86 | 0.1517 | 0.1359 | 0.0001 |
| 330 | SLE RA 7 | 3.04 | -8.35 | 76.88 | 0.152 | 0.1362 | 0.0001 |
| 330 | SLE RA 8 | 2.97 | -8.3 | 76.23 | 0.1519 | 0.133 | 0.0001 |
| 330 | SLE RA 9 | 2.98 | -8.3 | 76.25 | 0.1521 | 0.1333 | 0.0001 |
| 330 | SLE RA 10 | 3.65 | -8.89 | 82.46 | 0.1559 | 0.1629 | 0.0002 |
| 330 | SLE RA 11 | 3.58 | -9.11 | 83.81 | 0.1622 | 0.1601 | 0.0001 |
| 330 | SLE RA 12 | 3.59 | -9.11 | 83.83 | 0.1624 | 0.1604 | 0.0001 |
| 330 | SLE RA 13 | 3.53 | -9.07 | 83.21 | 0.1627 | 0.1577 | 0.0001 |
| 330 | SLE RA 14 | 3.46 | -9.28 | 84.56 | 0.169 | 0.1548 | 0.0001 |
| 330 | SLE RA 15 | 3.47 | -9.28 | 84.58 | 0.1692 | 0.1552 | 0.0001 |
| 330 | SLE RA 16 | 3.4 | -9.23 | 83.93 | 0.1691 | 0.1519 | 0.0001 |
| 330 | SLE RA 17 | 3.4 | -9.23 | 83.95 | 0.1694 | 0.1522 | 0.0001 |
| 330 | SLE RA 18 | 3.82 | -9.28 | 85.73 | 0.1629 | 0.1705 | 0.0002 |
| 330 | SLE RA 19 | 3.82 | -9.29 | 85.75 | 0.1631 | 0.1708 | 0.0002 |

| Nodo | Cont. | Reazione a traslazione | | | Reazione a rotazione | | |
|---|---|---|---|---|---|---|---|
| Ind. | N.br. | x | y | z | x | y | z |
| 330 | SLE RA 20 | 3.7 | -9.46 | 86.48 | 0.1697 | 0.1653 | 0.0001 |
| 330 | SLE RA 21 | 3.7 | -9.46 | 86.5 | 0.1699 | 0.1656 | 0.0001 |
| 330 | SLE FR 1 | 3.21 | -7.95 | 74.72 | 0.1383 | 0.1434 | 0.0001 |
| 330 | SLE FR 2 | 3.21 | -7.95 | 74.73 | 0.1384 | 0.1435 | 0.0001 |
| 330 | SLE FR 3 | 3.16 | -8.02 | 75.02 | 0.141 | 0.1414 | 0.0001 |
| 330 | SLE FR 4 | 3.39 | -8.35 | 78.03 | 0.1458 | 0.1517 | 0.0001 |
| 330 | SLE FR 5 | 3.34 | -8.42 | 78.32 | 0.1484 | 0.1495 | 0.0001 |
| 330 | SLE FR 6 | 3.51 | -8.62 | 80.22 | 0.1506 | 0.157 | 0.0001 |
| 330 | SLE QP 1 | 3.21 | -7.95 | 74.72 | 0.1383 | 0.1434 | 0.0001 |
| 330 | SLE QP 2 | 3.39 | -8.35 | 78.02 | 0.1457 | 0.1516 | 0.0001 |
| 330 | SLD 1 | 10.29 | -6.36 | 69.8 | 0.0613 | 0.454 | 0.0006 |
| 330 | SLD 2 | 10.29 | -6.36 | 69.8 | 0.0613 | 0.454 | 0.0006 |
| 330 | SLD 3 | 9.83 | -9.37 | 81.5 | 0.19 | 0.4342 | 0.0006 |
| 330 | SLD 4 | 9.83 | -9.37 | 81.5 | 0.19 | 0.4342 | 0.0006 |
| 330 | SLD 5 | 6.16 | -3.18 | 57.8 | -0.0749 | 0.2723 | 0.0003 |
| 330 | SLD 6 | 6.16 | -3.18 | 57.8 | -0.0749 | 0.2723 | 0.0003 |
| 330 | SLD 7 | 4.63 | -13.23 | 96.82 | 0.3542 | 0.2063 | 0.0002 |
| 330 | SLD 8 | 4.63 | -13.23 | 96.82 | 0.3542 | 0.2063 | 0.0002 |
| 330 | SLD 9 | 2.16 | -3.47 | 59.22 | -0.0628 | 0.0968 | 0.0001 |
| 330 | SLD 10 | 2.16 | -3.47 | 59.22 | -0.0628 | 0.0968 | 0.0001 |
| 330 | SLD 11 | 0.62 | -13.52 | 98.25 | 0.3662 | 0.0308 | -0.0001 |
| 330 | SLD 12 | 0.62 | -13.52 | 98.25 | 0.3662 | 0.0308 | -0.0001 |
| 330 | SLD 13 | -3.05 | -7.33 | 74.54 | 0.1013 | -0.1311 | -0.0003 |
| 330 | SLD 14 | -3.05 | -7.33 | 74.54 | 0.1013 | -0.1311 | -0.0003 |
| 330 | SLD 15 | -3.51 | -10.34 | 86.25 | 0.2301 | -0.1509 | -0.0004 |
| 330 | SLD 16 | -3.51 | -10.34 | 86.25 | 0.2301 | -0.1509 | -0.0004 |
| 330 | SLV 1 | 19.21 | -3.61 | 58.28 | -0.0543 | 0.8444 | 0.0013 |
| 330 | SLV 2 | 19.21 | -3.61 | 58.28 | -0.0543 | 0.8444 | 0.0013 |
| 330 | SLV 3 | 18.08 | -10.79 | 86.51 | 0.2503 | 0.7961 | 0.0012 |
| 330 | SLV 4 | 18.08 | -10.79 | 86.51 | 0.2503 | 0.7961 | 0.0012 |
| 330 | SLV 5 | 9.84 | 3.97 | 29.29 | -0.3761 | 0.4326 | 0.0006 |
| 330 | SLV 6 | 9.84 | 3.97 | 29.29 | -0.3761 | 0.4326 | 0.0006 |
| 330 | SLV 7 | 6.09 | -19.98 | 123.38 | 0.6389 | 0.2717 | 0.0003 |
| 330 | SLV 8 | 6.09 | -19.98 | 123.38 | 0.6389 | 0.2717 | 0.0003 |
| 330 | SLV 9 | 0.69 | 3.28 | 32.67 | -0.3475 | 0.0314 | -0.0001 |
| 330 | SLV 10 | 0.69 | 3.28 | 32.67 | -0.3475 | 0.0314 | -0.0001 |
| 330 | SLV 11 | -3.06 | -20.67 | 126.75 | 0.6675 | -0.1295 | -0.0003 |
| 330 | SLV 12 | -3.06 | -20.67 | 126.75 | 0.6675 | -0.1295 | -0.0003 |
| 330 | SLV 13 | -11.3 | -5.91 | 69.54 | 0.0411 | -0.493 | -0.0009 |
| 330 | SLV 14 | -11.3 | -5.91 | 69.54 | 0.0411 | -0.493 | -0.0009 |
| 330 | SLV 15 | -12.42 | -13.09 | 97.76 | 0.3456 | -0.5413 | -0.001 |
| 330 | SLV 16 | -12.42 | -13.09 | 97.76 | 0.3456 | -0.5413 | -0.001 |
| 331 | SLU 1 | -1.17 | -0.21 | 46.5 | 0.0049 | -0.0275 | 0.0007 |
| 331 | SLU 2 | -1.16 | -0.21 | 46.52 | 0.005 | -0.027 | 0.0007 |
| 331 | SLU 3 | -1.4 | -0.21 | 47.77 | 0.0056 | -0.0362 | 0.0007 |
| 331 | SLU 4 | -1.4 | -0.21 | 47.78 | 0.0056 | -0.0359 | 0.0007 |
| 331 | SLU 5 | -1.43 | -0.21 | 47.17 | 0.0059 | -0.0374 | 0.0007 |
| 331 | SLU 6 | -1.66 | -0.22 | 48.42 | 0.0064 | -0.0466 | 0.0008 |
| 331 | SLU 7 | -1.66 | -0.22 | 48.43 | 0.0065 | -0.0463 | 0.0008 |
| 331 | SLU 8 | -1.7 | -0.21 | 47.79 | 0.0066 | -0.0483 | 0.0007 |
| 331 | SLU 9 | -1.69 | -0.21 | 47.8 | 0.0067 | -0.048 | 0.0007 |
| 331 | SLU 10 | -1.35 | -0.24 | 53.73 | 0.0059 | -0.0305 | 0.0008 |
| 331 | SLU 11 | -1.59 | -0.25 | 54.98 | 0.0065 | -0.0397 | 0.0009 |
| 331 | SLU 12 | -1.58 | -0.25 | 54.99 | 0.0065 | -0.0394 | 0.0009 |
| 331 | SLU 13 | -1.61 | -0.25 | 54.38 | 0.0068 | -0.0409 | 0.0009 |
| 331 | SLU 14 | -1.85 | -0.26 | 55.63 | 0.0073 | -0.0501 | 0.0009 |
| 331 | SLU 15 | -1.85 | -0.26 | 55.64 | 0.0074 | -0.0498 | 0.0009 |
| 331 | SLU 16 | -1.89 | -0.25 | 55 | 0.0075 | -0.0518 | 0.0009 |
| 331 | SLU 17 | -1.88 | -0.25 | 55.02 | 0.0076 | -0.0515 | 0.0009 |
| 331 | SLU 18 | -1.44 | -0.26 | 56.81 | 0.0062 | -0.0325 | 0.0009 |
| 331 | SLU 19 | -1.43 | -0.26 | 56.82 | 0.0062 | -0.0322 | 0.0009 |
| 331 | SLU 20 | -1.7 | -0.26 | 57.45 | 0.007 | -0.0429 | 0.0009 |
| 331 | SLU 21 | -1.7 | -0.26 | 57.46 | 0.0071 | -0.0426 | 0.0009 |
| 331 | SLU 22 | -1.45 | -0.24 | 53.22 | 0.0059 | -0.0352 | 0.0008 |
| 331 | SLU 23 | -1.44 | -0.24 | 53.24 | 0.006 | -0.0348 | 0.0008 |
| 331 | SLU 24 | -1.68 | -0.25 | 54.49 | 0.0066 | -0.0439 | 0.0009 |
| 331 | SLU 25 | -1.68 | -0.25 | 54.5 | 0.0067 | -0.0437 | 0.0009 |
| 331 | SLU 26 | -1.71 | -0.25 | 53.89 | 0.0069 | -0.0452 | 0.0009 |
| 331 | SLU 27 | -1.95 | -0.25 | 55.14 | 0.0075 | -0.0543 | 0.0009 |
| 331 | SLU 28 | -1.94 | -0.25 | 55.15 | 0.0075 | -0.0541 | 0.0009 |
| 331 | SLU 29 | -1.98 | -0.25 | 54.51 | 0.0077 | -0.056 | 0.0009 |
| 331 | SLU 30 | -1.98 | -0.25 | 54.52 | 0.0077 | -0.0558 | 0.0009 |
| 331 | SLU 31 | -1.63 | -0.28 | 60.45 | 0.0069 | -0.0383 | 0.001 |
| 331 | SLU 32 | -1.87 | -0.29 | 61.7 | 0.0075 | -0.0474 | 0.001 |
| 331 | SLU 33 | -1.86 | -0.29 | 61.71 | 0.0076 | -0.0472 | 0.001 |
| 331 | SLU 34 | -1.9 | -0.28 | 61.1 | 0.0078 | -0.0487 | 0.001 |
| 331 | SLU 35 | -2.13 | -0.29 | 62.35 | 0.0084 | -0.0578 | 0.001 |
| 331 | SLU 36 | -2.13 | -0.29 | 62.36 | 0.0085 | -0.0576 | 0.001 |
| 331 | SLU 37 | -2.17 | -0.29 | 61.72 | 0.0086 | -0.0595 | 0.001 |
| 331 | SLU 38 | -2.16 | -0.29 | 61.73 | 0.0086 | -0.0593 | 0.001 |
| 331 | SLU 39 | -1.72 | -0.3 | 63.52 | 0.0072 | -0.0402 | 0.001 |
| 331 | SLU 40 | -1.72 | -0.3 | 63.54 | 0.0073 | -0.04 | 0.001 |
| 331 | SLU 41 | -1.98 | -0.3 | 64.17 | 0.0081 | -0.0506 | 0.001 |
| 331 | SLU 42 | -1.98 | -0.3 | 64.18 | 0.0082 | -0.0504 | 0.001 |
| 331 | SLU 43 | -1.43 | -0.26 | 58.15 | 0.006 | -0.0331 | 0.0009 |
| 331 | SLU 44 | -1.42 | -0.26 | 58.17 | 0.0061 | -0.0326 | 0.0009 |
| 331 | SLU 45 | -1.66 | -0.26 | 59.42 | 0.0067 | -0.0418 | 0.0009 |
| 331 | SLU 46 | -1.65 | -0.26 | 59.43 | 0.0067 | -0.0415 | 0.0009 |

| Nodo | Cont. | Reazione a traslazione | | | Reazione a rotazione | | |
|---|---|---|---|---|---|---|---|
| Ind. | N.br. | x | y | z | x | y | z |
| 331 | SLU 47 | -1.68 | -0.26 | 58.81 | 0.007 | -0.043 | 0.0009 |
| 331 | SLU 48 | -1.92 | -0.27 | 60.06 | 0.0075 | -0.0521 | 0.0009 |
| 331 | SLU 49 | -1.91 | -0.27 | 60.08 | 0.0076 | -0.0519 | 0.0009 |
| 331 | SLU 50 | -1.95 | -0.26 | 59.44 | 0.0077 | -0.0538 | 0.0009 |
| 331 | SLU 51 | -1.95 | -0.26 | 59.45 | 0.0078 | -0.0536 | 0.0009 |
| 331 | SLU 52 | -1.6 | -0.29 | 65.38 | 0.007 | -0.0361 | 0.001 |
| 331 | SLU 53 | -1.84 | -0.3 | 66.63 | 0.0076 | -0.0453 | 0.001 |
| 331 | SLU 54 | -1.84 | -0.3 | 66.64 | 0.0076 | -0.045 | 0.001 |
| 331 | SLU 55 | -1.87 | -0.3 | 66.03 | 0.0079 | -0.0465 | 0.001 |
| 331 | SLU 56 | -2.11 | -0.31 | 67.28 | 0.0084 | -0.0556 | 0.0011 |
| 331 | SLU 57 | -2.1 | -0.31 | 67.29 | 0.0085 | -0.0554 | 0.0011 |
| 331 | SLU 58 | -2.14 | -0.3 | 66.65 | 0.0086 | -0.0573 | 0.001 |
| 331 | SLU 59 | -2.14 | -0.3 | 66.66 | 0.0087 | -0.0571 | 0.001 |
| 331 | SLU 60 | -1.69 | -0.31 | 68.45 | 0.0073 | -0.0381 | 0.0011 |
| 331 | SLU 61 | -1.69 | -0.31 | 68.46 | 0.0073 | -0.0378 | 0.0011 |
| 331 | SLU 62 | -1.96 | -0.31 | 69.1 | 0.0081 | -0.0484 | 0.0011 |
| 331 | SLU 63 | -1.95 | -0.31 | 69.11 | 0.0082 | -0.0482 | 0.0011 |
| 331 | SLU 64 | -1.71 | -0.29 | 64.87 | 0.007 | -0.0408 | 0.001 |
| 331 | SLU 65 | -1.7 | -0.29 | 64.89 | 0.0071 | -0.0404 | 0.001 |
| 331 | SLU 66 | -1.94 | -0.3 | 66.14 | 0.0077 | -0.0495 | 0.001 |
| 331 | SLU 67 | -1.93 | -0.3 | 66.15 | 0.0078 | -0.0493 | 0.001 |
| 331 | SLU 68 | -1.96 | -0.3 | 65.53 | 0.008 | -0.0508 | 0.001 |
| 331 | SLU 69 | -2.2 | -0.3 | 66.78 | 0.0086 | -0.0599 | 0.001 |
| 331 | SLU 70 | -2.2 | -0.3 | 66.79 | 0.0087 | -0.0596 | 0.001 |
| 331 | SLU 71 | -2.24 | -0.3 | 66.16 | 0.0088 | -0.0616 | 0.001 |
| 331 | SLU 72 | -2.23 | -0.3 | 66.17 | 0.0088 | -0.0613 | 0.001 |
| 331 | SLU 73 | -1.89 | -0.33 | 72.1 | 0.008 | -0.0439 | 0.0011 |
| 331 | SLU 74 | -2.12 | -0.34 | 73.35 | 0.0086 | -0.053 | 0.0012 |
| 331 | SLU 75 | -2.12 | -0.34 | 73.36 | 0.0087 | -0.0528 | 0.0012 |
| 331 | SLU 76 | -2.15 | -0.33 | 72.74 | 0.0089 | -0.0543 | 0.0012 |
| 331 | SLU 77 | -2.39 | -0.34 | 73.99 | 0.0095 | -0.0634 | 0.0012 |
| 331 | SLU 78 | -2.38 | -0.34 | 74.01 | 0.0096 | -0.0631 | 0.0012 |
| 331 | SLU 79 | -2.42 | -0.34 | 73.37 | 0.0097 | -0.0651 | 0.0012 |
| 331 | SLU 80 | -2.42 | -0.34 | 73.38 | 0.0097 | -0.0648 | 0.0012 |
| 331 | SLU 81 | -1.98 | -0.35 | 75.17 | 0.0083 | -0.0458 | 0.0012 |
| 331 | SLU 82 | -1.97 | -0.35 | 75.18 | 0.0084 | -0.0456 | 0.0012 |
| 331 | SLU 83 | -2.24 | -0.35 | 75.82 | 0.0092 | -0.0562 | 0.0012 |
| 331 | SLU 84 | -2.23 | -0.35 | 75.83 | 0.0093 | -0.056 | 0.0012 |
| 331 | SLE RA 1 | -1.25 | -0.22 | 48.42 | 0.0052 | -0.0297 | 0.0007 |
| 331 | SLE RA 2 | -1.25 | -0.22 | 48.44 | 0.0052 | -0.0294 | 0.0007 |
| 331 | SLE RA 3 | -1.4 | -0.22 | 49.27 | 0.0056 | -0.0355 | 0.0008 |
| 331 | SLE RA 4 | -1.4 | -0.22 | 49.28 | 0.0057 | -0.0353 | 0.0008 |
| 331 | SLE RA 5 | -1.42 | -0.22 | 48.87 | 0.0058 | -0.0363 | 0.0008 |
| 331 | SLE RA 6 | -1.58 | -0.22 | 49.7 | 0.0062 | -0.0424 | 0.0008 |
| 331 | SLE RA 7 | -1.58 | -0.22 | 49.71 | 0.0063 | -0.0422 | 0.0008 |
| 331 | SLE RA 8 | -1.6 | -0.22 | 49.28 | 0.0063 | -0.0435 | 0.0008 |
| 331 | SLE RA 9 | -1.6 | -0.22 | 49.29 | 0.0064 | -0.0434 | 0.0008 |
| 331 | SLE RA 10 | -1.37 | -0.24 | 53.24 | 0.0059 | -0.0317 | 0.0008 |
| 331 | SLE RA 11 | -1.53 | -0.25 | 54.08 | 0.0062 | -0.0378 | 0.0009 |
| 331 | SLE RA 12 | -1.53 | -0.25 | 54.08 | 0.0063 | -0.0377 | 0.0009 |
| 331 | SLE RA 13 | -1.55 | -0.24 | 53.67 | 0.0064 | -0.0387 | 0.0008 |
| 331 | SLE RA 14 | -1.71 | -0.25 | 54.51 | 0.0068 | -0.0448 | 0.0009 |
| 331 | SLE RA 15 | -1.7 | -0.25 | 54.51 | 0.0069 | -0.0446 | 0.0009 |
| 331 | SLE RA 16 | -1.73 | -0.25 | 54.09 | 0.0069 | -0.0459 | 0.0009 |
| 331 | SLE RA 17 | -1.73 | -0.25 | 54.1 | 0.007 | -0.0457 | 0.0009 |
| 331 | SLE RA 18 | -1.43 | -0.25 | 55.29 | 0.006 | -0.033 | 0.0009 |
| 331 | SLE RA 19 | -1.43 | -0.25 | 55.3 | 0.0061 | -0.0329 | 0.0009 |
| 331 | SLE RA 20 | -1.61 | -0.26 | 55.72 | 0.0066 | -0.04 | 0.0009 |
| 331 | SLE RA 21 | -1.6 | -0.26 | 55.73 | 0.0067 | -0.0398 | 0.0009 |
| 331 | SLE FR 1 | -1.25 | -0.22 | 48.42 | 0.0052 | -0.0297 | 0.0007 |
| 331 | SLE FR 2 | -1.25 | -0.22 | 48.43 | 0.0052 | -0.0296 | 0.0007 |
| 331 | SLE FR 3 | -1.32 | -0.22 | 48.6 | 0.0054 | -0.0325 | 0.0008 |
| 331 | SLE FR 4 | -1.3 | -0.23 | 50.49 | 0.0054 | -0.0306 | 0.0008 |
| 331 | SLE FR 5 | -1.38 | -0.23 | 50.66 | 0.0057 | -0.0335 | 0.0008 |
| 331 | SLE FR 6 | -1.34 | -0.23 | 51.86 | 0.0056 | -0.0314 | 0.0008 |
| 331 | SLE QP 1 | -1.25 | -0.22 | 48.42 | 0.0052 | -0.0297 | 0.0007 |
| 331 | SLE QP 2 | -1.31 | -0.23 | 50.48 | 0.0054 | -0.0307 | 0.0008 |
| 331 | SLD 1 | 5.77 | -0.15 | 46.06 | -0.0327 | 0.2653 | 0.0008 |
| 331 | SLD 2 | 5.77 | -0.15 | 46.06 | -0.0327 | 0.2653 | 0.0008 |
| 331 | SLD 3 | 4.77 | -0.18 | 52.26 | -0.0067 | 0.2318 | 0.0009 |
| 331 | SLD 4 | 4.77 | -0.18 | 52.26 | -0.0067 | 0.2318 | 0.0009 |
| 331 | SLD 5 | 2.34 | -0.15 | 39.75 | -0.0455 | 0.1089 | 0.0006 |
| 331 | SLD 6 | 2.34 | -0.15 | 39.75 | -0.0455 | 0.1089 | 0.0006 |
| 331 | SLD 7 | -1.01 | -0.27 | 60.43 | 0.0413 | -0.0028 | 0.0011 |
| 331 | SLD 8 | -1.01 | -0.27 | 60.43 | 0.0413 | -0.0028 | 0.0011 |
| 331 | SLD 9 | -1.6 | -0.19 | 40.54 | -0.0304 | -0.0586 | 0.0005 |
| 331 | SLD 10 | -1.6 | -0.19 | 40.54 | -0.0304 | -0.0586 | 0.0005 |
| 331 | SLD 11 | -4.95 | -0.3 | 61.22 | 0.0564 | -0.1703 | 0.001 |
| 331 | SLD 12 | -4.95 | -0.3 | 61.22 | 0.0564 | -0.1703 | 0.001 |
| 331 | SLD 13 | -7.38 | -0.27 | 48.71 | 0.0176 | -0.2932 | 0.0006 |
| 331 | SLD 14 | -7.38 | -0.27 | 48.71 | 0.0176 | -0.2932 | 0.0006 |
| 331 | SLD 15 | -8.38 | -0.31 | 54.91 | 0.0436 | -0.3267 | 0.0008 |
| 331 | SLD 16 | -8.38 | -0.31 | 54.91 | 0.0436 | -0.3267 | 0.0008 |
| 331 | SLV 1 | 14.92 | -0.02 | 39.83 | -0.096 | 0.6477 | 0.0008 |
| 331 | SLV 2 | 14.92 | -0.02 | 39.83 | -0.096 | 0.6477 | 0.0008 |
| 331 | SLV 3 | 12.52 | -0.1 | 54.84 | -0.0347 | 0.5674 | 0.0011 |
| 331 | SLV 4 | 12.52 | -0.1 | 54.84 | -0.0347 | 0.5674 | 0.0011 |
| 331 | SLV 5 | 7.2 | -0.03 | 24.53 | -0.118 | 0.2946 | 0.0002 |

| Nodo | Cont. | Reazione a traslazione | | | Reazione a rotazione | | |
|---|---|---|---|---|---|---|---|
| Ind. | N.br. | x | y | z | x | y | z |
| 331 | SLV 6 | 7.2 | -0.03 | 24.53 | -0.118 | 0.2946 | 0.0002 |
| 331 | SLV 7 | -0.8 | -0.32 | 74.55 | 0.0864 | 0.027 | 0.0014 |
| 331 | SLV 8 | -0.8 | -0.32 | 74.55 | 0.0864 | 0.027 | 0.0014 |
| 331 | SLV 9 | -1.81 | -0.14 | 26.42 | -0.0755 | -0.0884 | 0.0001 |
| 331 | SLV 10 | -1.81 | -0.14 | 26.42 | -0.0755 | -0.0884 | 0.0001 |
| 331 | SLV 11 | -9.81 | -0.42 | 76.44 | 0.1288 | -0.3559 | 0.0013 |
| 331 | SLV 12 | -9.81 | -0.42 | 76.44 | 0.1288 | -0.3559 | 0.0013 |
| 331 | SLV 13 | -15.13 | -0.35 | 46.13 | 0.0455 | -0.6288 | 0.0004 |
| 331 | SLV 14 | -15.13 | -0.35 | 46.13 | 0.0455 | -0.6288 | 0.0004 |
| 331 | SLV 15 | -17.53 | -0.44 | 61.14 | 0.1068 | -0.7091 | 0.0008 |
| 331 | SLV 16 | -17.53 | -0.44 | 61.14 | 0.1068 | -0.7091 | 0.0008 |
| 332 | SLU 1 | -2.37 | 0.04 | 41.4 | -0.0814 | -0.0705 | 0 |
| 332 | SLU 2 | -2.36 | 0.04 | 41.41 | -0.0812 | -0.0701 | 0 |
| 332 | SLU 3 | -2.61 | 0.05 | 42.48 | -0.0835 | -0.0801 | 0 |
| 332 | SLU 4 | -2.61 | 0.05 | 42.48 | -0.0834 | -0.0799 | 0 |
| 332 | SLU 5 | -2.61 | 0.04 | 41.93 | -0.0817 | -0.0806 | 0 |
| 332 | SLU 6 | -2.87 | 0.05 | 43 | -0.084 | -0.0906 | 0 |
| 332 | SLU 7 | -2.86 | 0.05 | 43 | -0.0839 | -0.0903 | 0 |
| 332 | SLU 8 | -2.88 | 0.04 | 42.45 | -0.0824 | -0.0914 | 0 |
| 332 | SLU 9 | -2.87 | 0.04 | 42.45 | -0.0823 | -0.0912 | 0 |
| 332 | SLU 10 | -2.76 | 0.05 | 47.61 | -0.0962 | -0.0815 | 0 |
| 332 | SLU 11 | -3.02 | 0.05 | 48.68 | -0.0985 | -0.0915 | 0 |
| 332 | SLU 12 | -3.01 | 0.05 | 48.69 | -0.0984 | -0.0913 | 0 |
| 332 | SLU 13 | -3.02 | 0.05 | 48.14 | -0.0967 | -0.092 | 0 |
| 332 | SLU 14 | -3.27 | 0.05 | 49.21 | -0.099 | -0.1019 | 0 |
| 332 | SLU 15 | -3.27 | 0.05 | 49.21 | -0.0989 | -0.1017 | 0 |
| 332 | SLU 16 | -3.28 | 0.05 | 48.65 | -0.0974 | -0.1028 | 0 |
| 332 | SLU 17 | -3.28 | 0.05 | 48.66 | -0.0973 | -0.1026 | 0 |
| 332 | SLU 18 | -2.95 | 0.06 | 50.27 | -0.1027 | -0.0868 | 0 |
| 332 | SLU 19 | -2.94 | 0.06 | 50.27 | -0.1026 | -0.0865 | 0 |
| 332 | SLU 20 | -3.2 | 0.06 | 50.79 | -0.1033 | -0.0972 | 0 |
| 332 | SLU 21 | -3.2 | 0.06 | 50.79 | -0.1032 | -0.097 | 0 |
| 332 | SLU 22 | -2.84 | 0.05 | 47.19 | -0.0951 | -0.0855 | 0 |
| 332 | SLU 23 | -2.84 | 0.05 | 47.19 | -0.095 | -0.0851 | 0 |
| 332 | SLU 24 | -3.09 | 0.05 | 48.26 | -0.0973 | -0.095 | 0 |
| 332 | SLU 25 | -3.09 | 0.05 | 48.27 | -0.0972 | -0.0948 | 0 |
| 332 | SLU 26 | -3.09 | 0.05 | 47.71 | -0.0955 | -0.0955 | 0 |
| 332 | SLU 27 | -3.35 | 0.05 | 48.79 | -0.0978 | -0.1055 | 0 |
| 332 | SLU 28 | -3.34 | 0.05 | 48.79 | -0.0977 | -0.1053 | 0 |
| 332 | SLU 29 | -3.35 | 0.05 | 48.23 | -0.0962 | -0.1064 | 0 |
| 332 | SLU 30 | -3.35 | 0.05 | 48.23 | -0.0961 | -0.1061 | 0 |
| 332 | SLU 31 | -3.24 | 0.06 | 53.4 | -0.1099 | -0.0964 | 0 |
| 332 | SLU 32 | -3.5 | 0.06 | 54.47 | -0.1122 | -0.1064 | 0 |
| 332 | SLU 33 | -3.49 | 0.06 | 54.47 | -0.1121 | -0.1062 | 0 |
| 332 | SLU 34 | -3.5 | 0.06 | 53.92 | -0.1105 | -0.1069 | 0 |
| 332 | SLU 35 | -3.75 | 0.06 | 54.99 | -0.1127 | -0.1169 | 0 |
| 332 | SLU 36 | -3.75 | 0.06 | 54.99 | -0.1127 | -0.1166 | 0 |
| 332 | SLU 37 | -3.76 | 0.06 | 54.44 | -0.1111 | -0.1177 | 0 |
| 332 | SLU 38 | -3.76 | 0.06 | 54.44 | -0.111 | -0.1175 | 0 |
| 332 | SLU 39 | -3.42 | 0.06 | 56.05 | -0.1165 | -0.1017 | 0 |
| 332 | SLU 40 | -3.42 | 0.06 | 56.05 | -0.1164 | -0.1015 | 0 |
| 332 | SLU 41 | -3.68 | 0.06 | 56.57 | -0.117 | -0.1122 | 0 |
| 332 | SLU 42 | -3.67 | 0.06 | 56.58 | -0.1169 | -0.1119 | 0 |
| 332 | SLU 43 | -2.91 | 0.06 | 51.84 | -0.101 | -0.0866 | 0 |
| 332 | SLU 44 | -2.91 | 0.06 | 51.85 | -0.1009 | -0.0862 | 0 |
| 332 | SLU 45 | -3.16 | 0.06 | 52.92 | -0.1032 | -0.0962 | 0 |
| 332 | SLU 46 | -3.16 | 0.06 | 52.92 | -0.1031 | -0.0959 | 0 |
| 332 | SLU 47 | -3.16 | 0.06 | 52.37 | -0.1014 | -0.0966 | 0 |
| 332 | SLU 48 | -3.42 | 0.06 | 53.44 | -0.1037 | -0.1066 | 0 |
| 332 | SLU 49 | -3.41 | 0.06 | 53.44 | -0.1036 | -0.1064 | 0 |
| 332 | SLU 50 | -3.42 | 0.06 | 52.89 | -0.1021 | -0.1075 | 0 |
| 332 | SLU 51 | -3.42 | 0.06 | 52.89 | -0.102 | -0.1073 | 0 |
| 332 | SLU 52 | -3.31 | 0.06 | 58.05 | -0.1159 | -0.0976 | 0 |
| 332 | SLU 53 | -3.57 | 0.06 | 59.12 | -0.1182 | -0.1075 | 0 |
| 332 | SLU 54 | -3.56 | 0.06 | 59.13 | -0.1181 | -0.1073 | 0 |
| 332 | SLU 55 | -3.57 | 0.06 | 58.57 | -0.1164 | -0.108 | 0 |
| 332 | SLU 56 | -3.82 | 0.06 | 59.64 | -0.1187 | -0.118 | 0 |
| 332 | SLU 57 | -3.82 | 0.06 | 59.65 | -0.1186 | -0.1178 | 0 |
| 332 | SLU 58 | -3.83 | 0.06 | 59.09 | -0.1171 | -0.1189 | 0 |
| 332 | SLU 59 | -3.83 | 0.06 | 59.09 | -0.117 | -0.1186 | 0 |
| 332 | SLU 60 | -3.49 | 0.07 | 60.71 | -0.1224 | -0.1028 | 0 |
| 332 | SLU 61 | -3.49 | 0.07 | 60.71 | -0.1223 | -0.1026 | 0 |
| 332 | SLU 62 | -3.75 | 0.07 | 61.23 | -0.123 | -0.1133 | 0 |
| 332 | SLU 63 | -3.74 | 0.07 | 61.23 | -0.1229 | -0.113 | 0 |
| 332 | SLU 64 | -3.39 | 0.06 | 57.63 | -0.1148 | -0.1015 | 0 |
| 332 | SLU 65 | -3.38 | 0.06 | 57.63 | -0.1147 | -0.1011 | 0 |
| 332 | SLU 66 | -3.64 | 0.06 | 58.7 | -0.1169 | -0.1111 | 0 |
| 332 | SLU 67 | -3.63 | 0.06 | 58.7 | -0.1169 | -0.1109 | 0 |
| 332 | SLU 68 | -3.64 | 0.06 | 58.15 | -0.1152 | -0.1116 | 0 |
| 332 | SLU 69 | -3.89 | 0.06 | 59.22 | -0.1175 | -0.1215 | 0 |
| 332 | SLU 70 | -3.89 | 0.06 | 59.23 | -0.1174 | -0.1213 | 0 |
| 332 | SLU 71 | -3.9 | 0.06 | 58.67 | -0.1159 | -0.1224 | 0 |
| 332 | SLU 72 | -3.9 | 0.06 | 58.67 | -0.1158 | -0.1222 | 0 |
| 332 | SLU 73 | -3.79 | 0.07 | 63.84 | -0.1296 | -0.1125 | 0 |
| 332 | SLU 74 | -4.04 | 0.07 | 64.91 | -0.1319 | -0.1225 | 0 |
| 332 | SLU 75 | -4.04 | 0.07 | 64.91 | -0.1318 | -0.1222 | 0 |
| 332 | SLU 76 | -4.04 | 0.07 | 64.36 | -0.1301 | -0.1229 | 0 |
| 332 | SLU 77 | -4.3 | 0.07 | 65.43 | -0.1324 | -0.1329 | 0 |

| Nodo | Cont. | Reazione a traslazione | | | Reazione a rotazione | | |
|---|---|---|---|---|---|---|---|
| Ind. | N.br. | x | y | z | x | y | z |
| 332 | SLU 78 | -4.29 | 0.07 | 65.43 | -0.1323 | -0.1327 | 0 |
| 332 | SLU 79 | -4.31 | 0.07 | 64.87 | -0.1308 | -0.1338 | 0 |
| 332 | SLU 80 | -4.3 | 0.07 | 64.88 | -0.1307 | -0.1335 | 0 |
| 332 | SLU 81 | -3.97 | 0.07 | 66.49 | -0.1362 | -0.1178 | 0 |
| 332 | SLU 82 | -3.96 | 0.07 | 66.49 | -0.1361 | -0.1175 | 0 |
| 332 | SLU 83 | -4.22 | 0.07 | 67.01 | -0.1367 | -0.1282 | 0 |
| 332 | SLU 84 | -4.22 | 0.07 | 67.02 | -0.1366 | -0.128 | 0 |
| 332 | SLE RA 1 | -2.5 | 0.05 | 43.06 | -0.0853 | -0.0748 | 0 |
| 332 | SLE RA 2 | -2.5 | 0.05 | 43.06 | -0.0852 | -0.0745 | 0 |
| 332 | SLE RA 3 | -2.67 | 0.05 | 43.77 | -0.0867 | -0.0812 | 0 |
| 332 | SLE RA 4 | -2.66 | 0.05 | 43.78 | -0.0867 | -0.081 | 0 |
| 332 | SLE RA 5 | -2.67 | 0.05 | 43.41 | -0.0855 | -0.0815 | 0 |
| 332 | SLE RA 6 | -2.84 | 0.05 | 44.12 | -0.0871 | -0.0882 | 0 |
| 332 | SLE RA 7 | -2.83 | 0.05 | 44.12 | -0.087 | -0.088 | 0 |
| 332 | SLE RA 8 | -2.84 | 0.05 | 43.75 | -0.086 | -0.0887 | 0 |
| 332 | SLE RA 9 | -2.84 | 0.05 | 43.75 | -0.0859 | -0.0886 | 0 |
| 332 | SLE RA 10 | -2.77 | 0.05 | 47.2 | -0.0952 | -0.0821 | 0 |
| 332 | SLE RA 11 | -2.94 | 0.05 | 47.91 | -0.0967 | -0.0888 | 0 |
| 332 | SLE RA 12 | -2.93 | 0.05 | 47.91 | -0.0966 | -0.0886 | 0 |
| 332 | SLE RA 13 | -2.94 | 0.05 | 47.54 | -0.0955 | -0.0891 | 0 |
| 332 | SLE RA 14 | -3.11 | 0.05 | 48.26 | -0.097 | -0.0957 | 0 |
| 332 | SLE RA 15 | -3.11 | 0.05 | 48.26 | -0.097 | -0.0956 | 0 |
| 332 | SLE RA 16 | -3.11 | 0.05 | 47.89 | -0.096 | -0.0963 | 0 |
| 332 | SLE RA 17 | -3.11 | 0.05 | 47.89 | -0.0959 | -0.0962 | 0 |
| 332 | SLE RA 18 | -2.89 | 0.05 | 48.97 | -0.0995 | -0.0856 | 0 |
| 332 | SLE RA 19 | -2.89 | 0.05 | 48.97 | -0.0995 | -0.0855 | 0 |
| 332 | SLE RA 20 | -3.06 | 0.05 | 49.31 | -0.0999 | -0.0926 | 0 |
| 332 | SLE RA 21 | -3.06 | 0.05 | 49.32 | -0.0998 | -0.0924 | 0 |
| 332 | SLE FR 1 | -2.5 | 0.05 | 43.06 | -0.0853 | -0.0748 | 0 |
| 332 | SLE FR 2 | -2.5 | 0.05 | 43.06 | -0.0853 | -0.0748 | 0 |
| 332 | SLE FR 3 | -2.57 | 0.05 | 43.2 | -0.0854 | -0.0776 | 0 |
| 332 | SLE FR 4 | -2.62 | 0.05 | 44.83 | -0.0895 | -0.078 | 0 |
| 332 | SLE FR 5 | -2.69 | 0.05 | 44.97 | -0.0897 | -0.0808 | 0 |
| 332 | SLE FR 6 | -2.7 | 0.05 | 46.01 | -0.0924 | -0.0802 | 0 |
| 332 | SLE QP 1 | -2.5 | 0.05 | 43.06 | -0.0853 | -0.0748 | 0 |
| 332 | SLE QP 2 | -2.62 | 0.05 | 44.83 | -0.0896 | -0.0781 | 0 |
| 332 | SLD 1 | 4.52 | 0.16 | 41.28 | -0.1494 | 0.2309 | -0.0001 |
| 332 | SLD 2 | 4.52 | 0.16 | 41.28 | -0.1494 | 0.2309 | -0.0001 |
| 332 | SLD 3 | 3.62 | 0.1 | 45.9 | -0.1074 | 0.1983 | -0.0002 |
| 332 | SLD 4 | 3.62 | 0.1 | 45.9 | -0.1074 | 0.1983 | -0.0002 |
| 332 | SLD 5 | 0.9 | 0.17 | 36.75 | -0.1711 | 0.064 | 0.0002 |
| 332 | SLD 6 | 0.9 | 0.17 | 36.75 | -0.1711 | 0.064 | 0.0002 |
| 332 | SLD 7 | -2.12 | -0.03 | 52.16 | -0.0313 | -0.0445 | -0.0003 |
| 332 | SLD 8 | -2.12 | -0.03 | 52.16 | -0.0313 | -0.0445 | -0.0003 |
| 332 | SLD 9 | -3.11 | 0.13 | 37.49 | -0.1479 | -0.1116 | 0.0003 |
| 332 | SLD 10 | -3.11 | 0.13 | 37.49 | -0.1479 | -0.1116 | 0.0003 |
| 332 | SLD 11 | -6.14 | -0.07 | 52.91 | -0.008 | -0.2201 | -0.0001 |
| 332 | SLD 12 | -6.14 | -0.07 | 52.91 | -0.008 | -0.2201 | -0.0001 |
| 332 | SLD 13 | -8.85 | 0 | 43.75 | -0.0717 | -0.3544 | 0.0003 |
| 332 | SLD 14 | -8.85 | 0 | 43.75 | -0.0717 | -0.3544 | 0.0003 |
| 332 | SLD 15 | -9.76 | -0.06 | 48.38 | -0.0298 | -0.387 | 0.0002 |
| 332 | SLD 16 | -9.76 | -0.06 | 48.38 | -0.0298 | -0.387 | 0.0002 |
| 332 | SLV 1 | 13.77 | 0.34 | 36.29 | -0.2487 | 0.6302 | -0.0004 |
| 332 | SLV 2 | 13.77 | 0.34 | 36.29 | -0.2487 | 0.6302 | -0.0004 |
| 332 | SLV 3 | 11.57 | 0.2 | 47.48 | -0.1502 | 0.5516 | -0.0007 |
| 332 | SLV 4 | 11.57 | 0.2 | 47.48 | -0.1502 | 0.5516 | -0.0007 |
| 332 | SLV 5 | 5.62 | 0.35 | 25.29 | -0.2867 | 0.2536 | 0.0004 |
| 332 | SLV 6 | 5.62 | 0.35 | 25.29 | -0.2867 | 0.2536 | 0.0004 |
| 332 | SLV 7 | -1.69 | -0.12 | 62.6 | 0.0416 | -0.0084 | -0.0007 |
| 332 | SLV 8 | -1.69 | -0.12 | 62.6 | 0.0416 | -0.0084 | -0.0007 |
| 332 | SLV 9 | -3.55 | 0.22 | 27.06 | -0.2207 | -0.1478 | 0.0007 |
| 332 | SLV 10 | -3.55 | 0.22 | 27.06 | -0.2207 | -0.1478 | 0.0007 |
| 332 | SLV 11 | -10.86 | -0.25 | 64.37 | 0.1076 | -0.4097 | -0.0003 |
| 332 | SLV 12 | -10.86 | -0.25 | 64.37 | 0.1076 | -0.4097 | -0.0003 |
| 332 | SLV 13 | -16.81 | -0.1 | 42.18 | -0.0289 | -0.7077 | 0.0007 |
| 332 | SLV 14 | -16.81 | -0.1 | 42.18 | -0.0289 | -0.7077 | 0.0007 |
| 332 | SLV 15 | -19 | -0.24 | 53.37 | 0.0696 | -0.7863 | 0.0004 |
| 332 | SLV 16 | -19 | -0.24 | 53.37 | 0.0696 | -0.7863 | 0.0004 |
| 333 | SLU 1 | -3.3 | 0.24 | 37.13 | -0.169 | -0.1257 | -0.0007 |
| 333 | SLU 2 | -3.3 | 0.24 | 37.12 | -0.1688 | -0.1254 | -0.0007 |
| 333 | SLU 3 | -3.56 | 0.25 | 38.07 | -0.1739 | -0.1363 | -0.0007 |
| 333 | SLU 4 | -3.56 | 0.25 | 38.07 | -0.1738 | -0.1361 | -0.0007 |
| 333 | SLU 5 | -3.54 | 0.24 | 37.58 | -0.1705 | -0.1357 | -0.0007 |
| 333 | SLU 6 | -3.81 | 0.25 | 38.53 | -0.1757 | -0.1466 | -0.0007 |
| 333 | SLU 7 | -3.81 | 0.25 | 38.52 | -0.1755 | -0.1464 | -0.0007 |
| 333 | SLU 8 | -3.8 | 0.24 | 38.04 | -0.1725 | -0.1463 | -0.0007 |
| 333 | SLU 9 | -3.79 | 0.24 | 38.04 | -0.1724 | -0.1461 | -0.0007 |
| 333 | SLU 10 | -3.87 | 0.28 | 42.51 | -0.1998 | -0.1469 | -0.0008 |
| 333 | SLU 11 | -4.13 | 0.29 | 43.45 | -0.2049 | -0.1578 | -0.0008 |
| 333 | SLU 12 | -4.13 | 0.29 | 43.45 | -0.2048 | -0.1576 | -0.0008 |
| 333 | SLU 13 | -4.12 | 0.29 | 42.96 | -0.2016 | -0.1572 | -0.0008 |
| 333 | SLU 14 | -4.38 | 0.29 | 43.91 | -0.2067 | -0.1681 | -0.0009 |
| 333 | SLU 15 | -4.38 | 0.29 | 43.91 | -0.2065 | -0.1679 | -0.0009 |
| 333 | SLU 16 | -4.37 | 0.29 | 43.42 | -0.2035 | -0.1678 | -0.0008 |
| 333 | SLU 17 | -4.37 | 0.29 | 43.42 | -0.2034 | -0.1676 | -0.0008 |
| 333 | SLU 18 | -4.12 | 0.3 | 44.82 | -0.2133 | -0.1564 | -0.0009 |
| 333 | SLU 19 | -4.12 | 0.3 | 44.82 | -0.2131 | -0.1562 | -0.0009 |
| 333 | SLU 20 | -4.37 | 0.3 | 45.27 | -0.215 | -0.1667 | -0.0009 |

| Nodo | Cont. | Reazione a traslazione | | | Reazione a rotazione | | |
|---|---|---|---|---|---|---|---|
| Ind. | N.br. | x | y | z | x | y | z |
| 333 | SLU 21 | -4.36 | 0.3 | 45.27 | -0.2149 | -0.1665 | -0.0009 |
| 333 | SLU 22 | -3.93 | 0.28 | 42.16 | -0.1977 | -0.1496 | -0.0008 |
| 333 | SLU 23 | -3.92 | 0.28 | 42.15 | -0.1975 | -0.1493 | -0.0008 |
| 333 | SLU 24 | -4.19 | 0.29 | 43.1 | -0.2026 | -0.1602 | -0.0008 |
| 333 | SLU 25 | -4.18 | 0.29 | 43.09 | -0.2025 | -0.16 | -0.0008 |
| 333 | SLU 26 | -4.17 | 0.28 | 42.61 | -0.1993 | -0.1596 | -0.0008 |
| 333 | SLU 27 | -4.43 | 0.29 | 43.55 | -0.2044 | -0.1705 | -0.0008 |
| 333 | SLU 28 | -4.43 | 0.29 | 43.55 | -0.2043 | -0.1704 | -0.0008 |
| 333 | SLU 29 | -4.42 | 0.29 | 43.07 | -0.2012 | -0.1703 | -0.0008 |
| 333 | SLU 30 | -4.42 | 0.29 | 43.06 | -0.2011 | -0.1701 | -0.0008 |
| 333 | SLU 31 | -4.49 | 0.32 | 47.53 | -0.2285 | -0.1708 | -0.0009 |
| 333 | SLU 32 | -4.76 | 0.33 | 48.48 | -0.2336 | -0.1817 | -0.001 |
| 333 | SLU 33 | -4.75 | 0.33 | 48.48 | -0.2335 | -0.1815 | -0.001 |
| 333 | SLU 34 | -4.74 | 0.33 | 47.99 | -0.2303 | -0.1811 | -0.001 |
| 333 | SLU 35 | -5 | 0.33 | 48.93 | -0.2354 | -0.192 | -0.001 |
| 333 | SLU 36 | -5 | 0.33 | 48.93 | -0.2353 | -0.1919 | -0.001 |
| 333 | SLU 37 | -4.99 | 0.33 | 48.45 | -0.2323 | -0.1918 | -0.001 |
| 333 | SLU 38 | -4.99 | 0.33 | 48.45 | -0.2321 | -0.1916 | -0.001 |
| 333 | SLU 39 | -4.74 | 0.34 | 49.84 | -0.242 | -0.1803 | -0.001 |
| 333 | SLU 40 | -4.74 | 0.34 | 49.84 | -0.2419 | -0.1801 | -0.001 |
| 333 | SLU 41 | -4.99 | 0.35 | 50.3 | -0.2438 | -0.1906 | -0.001 |
| 333 | SLU 42 | -4.99 | 0.35 | 50.3 | -0.2436 | -0.1905 | -0.001 |
| 333 | SLU 43 | -4.08 | 0.3 | 46.55 | -0.2098 | -0.1551 | -0.0009 |
| 333 | SLU 44 | -4.08 | 0.3 | 46.54 | -0.2096 | -0.1548 | -0.0009 |
| 333 | SLU 45 | -4.34 | 0.3 | 47.49 | -0.2147 | -0.1657 | -0.0009 |
| 333 | SLU 46 | -4.34 | 0.3 | 47.48 | -0.2146 | -0.1656 | -0.0009 |
| 333 | SLU 47 | -4.32 | 0.3 | 47 | -0.2114 | -0.1652 | -0.0009 |
| 333 | SLU 48 | -4.59 | 0.31 | 47.94 | -0.2165 | -0.1761 | -0.0009 |
| 333 | SLU 49 | -4.58 | 0.31 | 47.94 | -0.2164 | -0.1759 | -0.0009 |
| 333 | SLU 50 | -4.57 | 0.3 | 47.46 | -0.2134 | -0.1758 | -0.0009 |
| 333 | SLU 51 | -4.57 | 0.3 | 47.45 | -0.2133 | -0.1756 | -0.0009 |
| 333 | SLU 52 | -4.65 | 0.34 | 51.92 | -0.2406 | -0.1763 | -0.001 |
| 333 | SLU 53 | -4.91 | 0.35 | 52.87 | -0.2457 | -0.1872 | -0.001 |
| 333 | SLU 54 | -4.91 | 0.35 | 52.87 | -0.2456 | -0.1871 | -0.001 |
| 333 | SLU 55 | -4.89 | 0.34 | 52.38 | -0.2424 | -0.1867 | -0.001 |
| 333 | SLU 56 | -5.16 | 0.35 | 53.32 | -0.2475 | -0.1976 | -0.001 |
| 333 | SLU 57 | -5.15 | 0.35 | 53.32 | -0.2474 | -0.1974 | -0.001 |
| 333 | SLU 58 | -5.15 | 0.35 | 52.84 | -0.2444 | -0.1973 | -0.001 |
| 333 | SLU 59 | -5.14 | 0.35 | 52.83 | -0.2443 | -0.1971 | -0.001 |
| 333 | SLU 60 | -4.9 | 0.36 | 54.23 | -0.2541 | -0.1858 | -0.001 |
| 333 | SLU 61 | -4.89 | 0.36 | 54.23 | -0.254 | -0.1857 | -0.001 |
| 333 | SLU 62 | -5.14 | 0.36 | 54.69 | -0.2559 | -0.1962 | -0.0011 |
| 333 | SLU 63 | -5.14 | 0.36 | 54.69 | -0.2558 | -0.196 | -0.0011 |
| 333 | SLU 64 | -4.71 | 0.34 | 51.57 | -0.2385 | -0.1791 | -0.001 |
| 333 | SLU 65 | -4.7 | 0.34 | 51.57 | -0.2383 | -0.1788 | -0.001 |
| 333 | SLU 66 | -4.96 | 0.35 | 52.51 | -0.2434 | -0.1897 | -0.001 |
| 333 | SLU 67 | -4.96 | 0.34 | 52.51 | -0.2433 | -0.1895 | -0.001 |
| 333 | SLU 68 | -4.95 | 0.34 | 52.02 | -0.2401 | -0.1891 | -0.001 |
| 333 | SLU 69 | -5.21 | 0.35 | 52.97 | -0.2452 | -0.2 | -0.001 |
| 333 | SLU 70 | -5.21 | 0.35 | 52.97 | -0.2451 | -0.1999 | -0.001 |
| 333 | SLU 71 | -5.2 | 0.34 | 52.48 | -0.2421 | -0.1998 | -0.001 |
| 333 | SLU 72 | -5.19 | 0.34 | 52.48 | -0.242 | -0.1996 | -0.001 |
| 333 | SLU 73 | -5.27 | 0.38 | 56.95 | -0.2693 | -0.2003 | -0.0011 |
| 333 | SLU 74 | -5.54 | 0.39 | 57.89 | -0.2744 | -0.2112 | -0.0011 |
| 333 | SLU 75 | -5.53 | 0.39 | 57.89 | -0.2743 | -0.211 | -0.0011 |
| 333 | SLU 76 | -5.52 | 0.38 | 57.4 | -0.2711 | -0.2106 | -0.0011 |
| 333 | SLU 77 | -5.78 | 0.39 | 58.35 | -0.2762 | -0.2215 | -0.0011 |
| 333 | SLU 78 | -5.78 | 0.39 | 58.35 | -0.2761 | -0.2213 | -0.0011 |
| 333 | SLU 79 | -5.77 | 0.39 | 57.86 | -0.2731 | -0.2212 | -0.0011 |
| 333 | SLU 80 | -5.77 | 0.39 | 57.86 | -0.273 | -0.2211 | -0.0011 |
| 333 | SLU 81 | -5.52 | 0.4 | 59.26 | -0.2828 | -0.2098 | -0.0012 |
| 333 | SLU 82 | -5.52 | 0.4 | 59.26 | -0.2827 | -0.2096 | -0.0012 |
| 333 | SLU 83 | -5.77 | 0.4 | 59.72 | -0.2846 | -0.2201 | -0.0012 |
| 333 | SLU 84 | -5.76 | 0.4 | 59.71 | -0.2845 | -0.22 | -0.0012 |
| 333 | SLE RA 1 | -3.48 | 0.25 | 38.57 | -0.1772 | -0.1325 | -0.0007 |
| 333 | SLE RA 2 | -3.48 | 0.25 | 38.56 | -0.177 | -0.1323 | -0.0007 |
| 333 | SLE RA 3 | -3.65 | 0.26 | 39.19 | -0.1804 | -0.1396 | -0.0007 |
| 333 | SLE RA 4 | -3.65 | 0.26 | 39.19 | -0.1804 | -0.1395 | -0.0007 |
| 333 | SLE RA 5 | -3.64 | 0.25 | 38.87 | -0.1782 | -0.1392 | -0.0007 |
| 333 | SLE RA 6 | -3.82 | 0.26 | 39.5 | -0.1816 | -0.1465 | -0.0008 |
| 333 | SLE RA 7 | -3.82 | 0.26 | 39.49 | -0.1816 | -0.1463 | -0.0008 |
| 333 | SLE RA 8 | -3.81 | 0.25 | 39.17 | -0.1795 | -0.1463 | -0.0007 |
| 333 | SLE RA 9 | -3.81 | 0.25 | 39.17 | -0.1795 | -0.1462 | -0.0007 |
| 333 | SLE RA 10 | -3.86 | 0.28 | 42.15 | -0.1977 | -0.1466 | -0.0008 |
| 333 | SLE RA 11 | -4.04 | 0.29 | 42.78 | -0.2011 | -0.1539 | -0.0008 |
| 333 | SLE RA 12 | -4.03 | 0.28 | 42.78 | -0.201 | -0.1538 | -0.0008 |
| 333 | SLE RA 13 | -4.02 | 0.28 | 42.45 | -0.1989 | -0.1535 | -0.0008 |
| 333 | SLE RA 14 | -4.2 | 0.29 | 43.08 | -0.2023 | -0.1608 | -0.0008 |
| 333 | SLE RA 15 | -4.2 | 0.29 | 43.08 | -0.2022 | -0.1607 | -0.0008 |
| 333 | SLE RA 16 | -4.19 | 0.28 | 42.76 | -0.2002 | -0.1606 | -0.0008 |
| 333 | SLE RA 17 | -4.19 | 0.28 | 42.76 | -0.2001 | -0.1605 | -0.0008 |
| 333 | SLE RA 18 | -4.03 | 0.29 | 43.69 | -0.2067 | -0.153 | -0.0009 |
| 333 | SLE RA 19 | -4.02 | 0.29 | 43.69 | -0.2066 | -0.1529 | -0.0009 |
| 333 | SLE RA 20 | -4.19 | 0.29 | 44 | -0.2079 | -0.1599 | -0.0009 |
| 333 | SLE RA 21 | -4.19 | 0.29 | 43.99 | -0.2078 | -0.1597 | -0.0009 |
| 333 | SLE FR 1 | -3.48 | 0.25 | 38.57 | -0.1772 | -0.1325 | -0.0007 |
| 333 | SLE FR 2 | -3.48 | 0.25 | 38.57 | -0.1771 | -0.1325 | -0.0007 |
| 333 | SLE FR 3 | -3.55 | 0.25 | 38.69 | -0.1776 | -0.1353 | -0.0007 |

| Nodo | Cont. | Reazione a traslazione | | | Reazione a rotazione | | |
|---|---|---|---|---|---|---|---|
| Ind. | N.br. | x | y | z | x | y | z |
| 333 | SLE FR 4 | -3.65 | 0.26 | 40.1 | -0.186 | -0.1386 | -0.0008 |
| 333 | SLE FR 5 | -3.71 | 0.26 | 40.22 | -0.1865 | -0.1414 | -0.0008 |
| 333 | SLE FR 6 | -3.75 | 0.27 | 41.13 | -0.1919 | -0.1427 | -0.0008 |
| 333 | SLE QP 1 | -3.48 | 0.25 | 38.57 | -0.1772 | -0.1325 | -0.0007 |
| 333 | SLE QP 2 | -3.65 | 0.26 | 40.1 | -0.186 | -0.1386 | -0.0008 |
| 333 | SLD 1 | 3.53 | 0.28 | 36.75 | -0.1965 | 0.1673 | -0.0009 |
| 333 | SLD 2 | 3.53 | 0.28 | 36.75 | -0.1965 | 0.1673 | -0.0009 |
| 333 | SLD 3 | 2.67 | 0.38 | 40.56 | -0.2598 | 0.1329 | -0.0012 |
| 333 | SLD 4 | 2.67 | 0.38 | 40.56 | -0.2598 | 0.1329 | -0.0012 |
| 333 | SLD 5 | -0.18 | 0.13 | 33.32 | -0.0932 | 0.0053 | -0.0004 |
| 333 | SLD 6 | -0.18 | 0.13 | 33.32 | -0.0932 | 0.0053 | -0.0004 |
| 333 | SLD 7 | -3.06 | 0.44 | 46.01 | -0.3042 | -0.1093 | -0.0013 |
| 333 | SLD 8 | -3.06 | 0.44 | 46.01 | -0.3042 | -0.1093 | -0.0013 |
| 333 | SLD 9 | -4.23 | 0.09 | 34.19 | -0.0679 | -0.1679 | -0.0002 |
| 333 | SLD 10 | -4.23 | 0.09 | 34.19 | -0.0679 | -0.1679 | -0.0002 |
| 333 | SLD 11 | -7.11 | 0.4 | 46.89 | -0.2789 | -0.2826 | -0.0012 |
| 333 | SLD 12 | -7.11 | 0.4 | 46.89 | -0.2789 | -0.2826 | -0.0012 |
| 333 | SLD 13 | -9.96 | 0.15 | 39.65 | -0.1122 | -0.4102 | -0.0004 |
| 333 | SLD 14 | -9.96 | 0.15 | 39.65 | -0.1122 | -0.4102 | -0.0004 |
| 333 | SLD 15 | -10.82 | 0.24 | 43.46 | -0.1755 | -0.4445 | -0.0007 |
| 333 | SLD 16 | -10.82 | 0.24 | 43.46 | -0.1755 | -0.4445 | -0.0007 |
| 333 | SLV 1 | 12.82 | 0.35 | 32.09 | -0.2307 | 0.5632 | -0.0011 |
| 333 | SLV 2 | 12.82 | 0.35 | 32.09 | -0.2307 | 0.5632 | -0.0011 |
| 333 | SLV 3 | 10.72 | 0.56 | 41.28 | -0.3793 | 0.4796 | -0.0018 |
| 333 | SLV 4 | 10.72 | 0.56 | 41.28 | -0.3793 | 0.4796 | -0.0018 |
| 333 | SLV 5 | 4.48 | -0.04 | 23.76 | 0.0259 | 0.1987 | 0.0002 |
| 333 | SLV 6 | 4.48 | -0.04 | 23.76 | 0.0259 | 0.1987 | 0.0002 |
| 333 | SLV 7 | -2.52 | 0.68 | 54.4 | -0.4694 | -0.08 | -0.0021 |
| 333 | SLV 8 | -2.52 | 0.68 | 54.4 | -0.4694 | -0.08 | -0.0021 |
| 333 | SLV 9 | -4.77 | -0.15 | 25.81 | 0.0974 | -0.1973 | 0.0006 |
| 333 | SLV 10 | -4.77 | -0.15 | 25.81 | 0.0974 | -0.1973 | 0.0006 |
| 333 | SLV 11 | -11.77 | 0.56 | 56.45 | -0.398 | -0.476 | -0.0017 |
| 333 | SLV 12 | -11.77 | 0.56 | 56.45 | -0.398 | -0.476 | -0.0017 |
| 333 | SLV 13 | -18.01 | -0.03 | 38.93 | 0.0073 | -0.7568 | 0.0003 |
| 333 | SLV 14 | -18.01 | -0.03 | 38.93 | 0.0073 | -0.7568 | 0.0003 |
| 333 | SLV 15 | -20.11 | 0.18 | 48.12 | -0.1413 | -0.8404 | -0.0004 |
| 333 | SLV 16 | -20.11 | 0.18 | 48.12 | -0.1413 | -0.8404 | -0.0004 |
| 334 | SLU 1 | -3.3 | 0.35 | 33.05 | -0.232 | -0.1163 | -0.0016 |
| 334 | SLU 2 | -3.3 | 0.35 | 33.04 | -0.2318 | -0.116 | -0.0016 |
| 334 | SLU 3 | -3.55 | 0.36 | 33.88 | -0.239 | -0.1262 | -0.0016 |
| 334 | SLU 4 | -3.55 | 0.36 | 33.87 | -0.2389 | -0.126 | -0.0016 |
| 334 | SLU 5 | -3.53 | 0.35 | 33.45 | -0.2345 | -0.1257 | -0.0016 |
| 334 | SLU 6 | -3.78 | 0.36 | 34.28 | -0.2418 | -0.1359 | -0.0016 |
| 334 | SLU 7 | -3.78 | 0.36 | 34.27 | -0.2417 | -0.1357 | -0.0016 |
| 334 | SLU 8 | -3.77 | 0.36 | 33.86 | -0.2376 | -0.1357 | -0.0016 |
| 334 | SLU 9 | -3.76 | 0.36 | 33.85 | -0.2374 | -0.1355 | -0.0016 |
| 334 | SLU 10 | -3.86 | 0.41 | 37.66 | -0.2743 | -0.1353 | -0.0019 |
| 334 | SLU 11 | -4.11 | 0.42 | 38.5 | -0.2816 | -0.1455 | -0.0019 |
| 334 | SLU 12 | -4.11 | 0.42 | 38.49 | -0.2814 | -0.1453 | -0.0019 |
| 334 | SLU 13 | -4.09 | 0.41 | 38.06 | -0.2771 | -0.145 | -0.0019 |
| 334 | SLU 14 | -4.34 | 0.43 | 38.9 | -0.2844 | -0.1552 | -0.0019 |
| 334 | SLU 15 | -4.34 | 0.43 | 38.89 | -0.2842 | -0.155 | -0.0019 |
| 334 | SLU 16 | -4.33 | 0.42 | 38.48 | -0.2802 | -0.155 | -0.0019 |
| 334 | SLU 17 | -4.32 | 0.42 | 38.47 | -0.28 | -0.1548 | -0.0019 |
| 334 | SLU 18 | -4.1 | 0.44 | 39.65 | -0.2928 | -0.1439 | -0.002 |
| 334 | SLU 19 | -4.1 | 0.44 | 39.64 | -0.2927 | -0.1437 | -0.002 |
| 334 | SLU 20 | -4.33 | 0.44 | 40.06 | -0.2956 | -0.1536 | -0.002 |
| 334 | SLU 21 | -4.33 | 0.44 | 40.05 | -0.2955 | -0.1534 | -0.002 |
| 334 | SLU 22 | -3.91 | 0.41 | 37.38 | -0.2716 | -0.1382 | -0.0018 |
| 334 | SLU 23 | -3.91 | 0.41 | 37.36 | -0.2713 | -0.1379 | -0.0018 |
| 334 | SLU 24 | -4.16 | 0.42 | 38.2 | -0.2786 | -0.1481 | -0.0019 |
| 334 | SLU 25 | -4.16 | 0.42 | 38.19 | -0.2784 | -0.1479 | -0.0019 |
| 334 | SLU 26 | -4.14 | 0.41 | 37.77 | -0.2741 | -0.1476 | -0.0019 |
| 334 | SLU 27 | -4.39 | 0.42 | 38.6 | -0.2814 | -0.1578 | -0.0019 |
| 334 | SLU 28 | -4.39 | 0.42 | 38.6 | -0.2812 | -0.1576 | -0.0019 |
| 334 | SLU 29 | -4.38 | 0.41 | 38.19 | -0.2771 | -0.1576 | -0.0019 |
| 334 | SLU 30 | -4.37 | 0.41 | 38.18 | -0.277 | -0.1574 | -0.0019 |
| 334 | SLU 31 | -4.47 | 0.47 | 41.98 | -0.3139 | -0.1572 | -0.0021 |
| 334 | SLU 32 | -4.72 | 0.48 | 42.82 | -0.3212 | -0.1674 | -0.0022 |
| 334 | SLU 33 | -4.72 | 0.48 | 42.81 | -0.321 | -0.1672 | -0.0022 |
| 334 | SLU 34 | -4.7 | 0.47 | 42.39 | -0.3167 | -0.1669 | -0.0021 |
| 334 | SLU 35 | -4.95 | 0.48 | 43.22 | -0.3239 | -0.177 | -0.0022 |
| 334 | SLU 36 | -4.95 | 0.48 | 43.21 | -0.3238 | -0.1769 | -0.0022 |
| 334 | SLU 37 | -4.94 | 0.48 | 42.8 | -0.3197 | -0.1769 | -0.0022 |
| 334 | SLU 38 | -4.93 | 0.48 | 42.79 | -0.3196 | -0.1767 | -0.0022 |
| 334 | SLU 39 | -4.71 | 0.5 | 43.97 | -0.3324 | -0.1657 | -0.0022 |
| 334 | SLU 40 | -4.71 | 0.5 | 43.97 | -0.3322 | -0.1656 | -0.0022 |
| 334 | SLU 41 | -4.94 | 0.5 | 44.38 | -0.3352 | -0.1754 | -0.0023 |
| 334 | SLU 42 | -4.94 | 0.5 | 44.37 | -0.335 | -0.1753 | -0.0023 |
| 334 | SLU 43 | -4.08 | 0.43 | 41.49 | -0.2881 | -0.1437 | -0.002 |
| 334 | SLU 44 | -4.08 | 0.43 | 41.48 | -0.2878 | -0.1435 | -0.0019 |
| 334 | SLU 45 | -4.33 | 0.44 | 42.31 | -0.2951 | -0.1536 | -0.002 |
| 334 | SLU 46 | -4.33 | 0.44 | 42.3 | -0.2949 | -0.1534 | -0.002 |
| 334 | SLU 47 | -4.31 | 0.44 | 41.88 | -0.2906 | -0.1531 | -0.002 |
| 334 | SLU 48 | -4.56 | 0.45 | 42.72 | -0.2979 | -0.1633 | -0.002 |
| 334 | SLU 49 | -4.56 | 0.45 | 42.71 | -0.2977 | -0.1631 | -0.002 |
| 334 | SLU 50 | -4.55 | 0.44 | 42.3 | -0.2936 | -0.1631 | -0.002 |
| 334 | SLU 51 | -4.54 | 0.44 | 42.29 | -0.2935 | -0.1629 | -0.002 |

| Nodo | Cont. | Reazione a traslazione | | | Reazione a rotazione | | |
|---|---|---|---|---|---|---|---|
| Ind. | N.br. | x | y | z | x | y | z |
| 334 | SLU 52 | -4.64 | 0.49 | 46.09 | -0.3304 | -0.1627 | -0.0022 |
| 334 | SLU 53 | -4.89 | 0.51 | 46.93 | -0.3377 | -0.1729 | -0.0023 |
| 334 | SLU 54 | -4.89 | 0.51 | 46.92 | -0.3375 | -0.1727 | -0.0023 |
| 334 | SLU 55 | -4.87 | 0.5 | 46.5 | -0.3332 | -0.1724 | -0.0023 |
| 334 | SLU 56 | -5.12 | 0.51 | 47.33 | -0.3404 | -0.1826 | -0.0023 |
| 334 | SLU 57 | -5.12 | 0.51 | 47.33 | -0.3403 | -0.1824 | -0.0023 |
| 334 | SLU 58 | -5.11 | 0.5 | 46.91 | -0.3362 | -0.1824 | -0.0023 |
| 334 | SLU 59 | -5.1 | 0.5 | 46.91 | -0.3361 | -0.1822 | -0.0023 |
| 334 | SLU 60 | -4.88 | 0.52 | 48.09 | -0.3489 | -0.1713 | -0.0024 |
| 334 | SLU 61 | -4.88 | 0.52 | 48.08 | -0.3487 | -0.1711 | -0.0024 |
| 334 | SLU 62 | -5.11 | 0.53 | 48.49 | -0.3517 | -0.181 | -0.0024 |
| 334 | SLU 63 | -5.11 | 0.53 | 48.48 | -0.3515 | -0.1808 | -0.0024 |
| 334 | SLU 64 | -4.69 | 0.49 | 45.81 | -0.3276 | -0.1656 | -0.0022 |
| 334 | SLU 65 | -4.69 | 0.49 | 45.8 | -0.3274 | -0.1653 | -0.0022 |
| 334 | SLU 66 | -4.94 | 0.5 | 46.64 | -0.3346 | -0.1755 | -0.0023 |
| 334 | SLU 67 | -4.94 | 0.5 | 46.63 | -0.3345 | -0.1753 | -0.0023 |
| 334 | SLU 68 | -4.92 | 0.49 | 46.2 | -0.3301 | -0.175 | -0.0022 |
| 334 | SLU 69 | -5.17 | 0.51 | 47.04 | -0.3374 | -0.1852 | -0.0023 |
| 334 | SLU 70 | -5.17 | 0.5 | 47.03 | -0.3373 | -0.185 | -0.0023 |
| 334 | SLU 71 | -5.16 | 0.5 | 46.62 | -0.3332 | -0.185 | -0.0023 |
| 334 | SLU 72 | -5.15 | 0.5 | 46.61 | -0.333 | -0.1848 | -0.0023 |
| 334 | SLU 73 | -5.25 | 0.55 | 50.42 | -0.3699 | -0.1846 | -0.0025 |
| 334 | SLU 74 | -5.5 | 0.56 | 51.25 | -0.3772 | -0.1948 | -0.0026 |
| 334 | SLU 75 | -5.5 | 0.56 | 51.24 | -0.377 | -0.1946 | -0.0026 |
| 334 | SLU 76 | -5.48 | 0.56 | 50.82 | -0.3727 | -0.1943 | -0.0025 |
| 334 | SLU 77 | -5.73 | 0.57 | 51.66 | -0.38 | -0.2044 | -0.0026 |
| 334 | SLU 78 | -5.73 | 0.57 | 51.65 | -0.3798 | -0.2043 | -0.0026 |
| 334 | SLU 79 | -5.72 | 0.56 | 51.24 | -0.3758 | -0.2043 | -0.0025 |
| 334 | SLU 80 | -5.71 | 0.56 | 51.23 | -0.3756 | -0.2041 | -0.0025 |
| 334 | SLU 81 | -5.49 | 0.58 | 52.41 | -0.3884 | -0.1931 | -0.0026 |
| 334 | SLU 82 | -5.49 | 0.58 | 52.4 | -0.3883 | -0.193 | -0.0026 |
| 334 | SLU 83 | -5.72 | 0.59 | 52.81 | -0.3912 | -0.2028 | -0.0027 |
| 334 | SLU 84 | -5.72 | 0.59 | 52.8 | -0.3911 | -0.2027 | -0.0026 |
| 334 | SLE RA 1 | -3.48 | 0.36 | 34.29 | -0.2433 | -0.1226 | -0.0016 |
| 334 | SLE RA 2 | -3.47 | 0.36 | 34.28 | -0.2431 | -0.1224 | -0.0016 |
| 334 | SLE RA 3 | -3.64 | 0.37 | 34.84 | -0.248 | -0.1292 | -0.0017 |
| 334 | SLE RA 4 | -3.64 | 0.37 | 34.83 | -0.2479 | -0.129 | -0.0017 |
| 334 | SLE RA 5 | -3.63 | 0.37 | 34.55 | -0.245 | -0.1288 | -0.0017 |
| 334 | SLE RA 6 | -3.8 | 0.37 | 35.11 | -0.2498 | -0.1356 | -0.0017 |
| 334 | SLE RA 7 | -3.79 | 0.37 | 35.1 | -0.2497 | -0.1355 | -0.0017 |
| 334 | SLE RA 8 | -3.79 | 0.37 | 34.83 | -0.247 | -0.1355 | -0.0017 |
| 334 | SLE RA 9 | -3.78 | 0.37 | 34.82 | -0.2469 | -0.1354 | -0.0017 |
| 334 | SLE RA 10 | -3.85 | 0.41 | 37.36 | -0.2715 | -0.1352 | -0.0018 |
| 334 | SLE RA 11 | -4.01 | 0.41 | 37.92 | -0.2764 | -0.142 | -0.0019 |
| 334 | SLE RA 12 | -4.01 | 0.41 | 37.91 | -0.2763 | -0.1419 | -0.0019 |
| 334 | SLE RA 13 | -4 | 0.41 | 37.63 | -0.2734 | -0.1417 | -0.0019 |
| 334 | SLE RA 14 | -4.17 | 0.42 | 38.19 | -0.2782 | -0.1485 | -0.0019 |
| 334 | SLE RA 15 | -4.17 | 0.42 | 38.18 | -0.2781 | -0.1484 | -0.0019 |
| 334 | SLE RA 16 | -4.16 | 0.41 | 37.91 | -0.2754 | -0.1483 | -0.0019 |
| 334 | SLE RA 17 | -4.16 | 0.41 | 37.9 | -0.2753 | -0.1482 | -0.0019 |
| 334 | SLE RA 18 | -4.01 | 0.42 | 38.69 | -0.2839 | -0.1409 | -0.0019 |
| 334 | SLE RA 19 | -4.01 | 0.42 | 38.68 | -0.2838 | -0.1408 | -0.0019 |
| 334 | SLE RA 20 | -4.16 | 0.43 | 38.96 | -0.2857 | -0.1474 | -0.0019 |
| 334 | SLE RA 21 | -4.16 | 0.43 | 38.95 | -0.2856 | -0.1473 | -0.0019 |
| 334 | SLE FR 1 | -3.48 | 0.36 | 34.29 | -0.2433 | -0.1226 | -0.0016 |
| 334 | SLE FR 2 | -3.48 | 0.36 | 34.29 | -0.2433 | -0.1225 | -0.0016 |
| 334 | SLE FR 3 | -3.54 | 0.37 | 34.4 | -0.2441 | -0.1252 | -0.0017 |
| 334 | SLE FR 4 | -3.64 | 0.38 | 35.61 | -0.2555 | -0.128 | -0.0017 |
| 334 | SLE FR 5 | -3.7 | 0.38 | 35.72 | -0.2562 | -0.1307 | -0.0017 |
| 334 | SLE FR 6 | -3.74 | 0.39 | 36.49 | -0.2636 | -0.1318 | -0.0018 |
| 334 | SLE QP 1 | -3.48 | 0.36 | 34.29 | -0.2433 | -0.1226 | -0.0016 |
| 334 | SLE QP 2 | -3.64 | 0.38 | 35.61 | -0.2555 | -0.1281 | -0.0017 |
| 334 | SLD 1 | 3.83 | 0.38 | 32.35 | -0.254 | 0.1978 | -0.0018 |
| 334 | SLD 2 | 3.83 | 0.38 | 32.35 | -0.254 | 0.1978 | -0.0018 |
| 334 | SLD 3 | 3.04 | 0.49 | 35.6 | -0.3372 | 0.1669 | -0.0022 |
| 334 | SLD 4 | 3.04 | 0.49 | 35.6 | -0.3372 | 0.1669 | -0.0022 |
| 334 | SLD 5 | -0.2 | 0.22 | 29.7 | -0.1288 | 0.0167 | -0.001 |
| 334 | SLD 6 | -0.2 | 0.22 | 29.7 | -0.1288 | 0.0167 | -0.001 |
| 334 | SLD 7 | -2.83 | 0.57 | 40.54 | -0.4062 | -0.0866 | -0.0026 |
| 334 | SLD 8 | -2.83 | 0.57 | 40.54 | -0.4062 | -0.0866 | -0.0026 |
| 334 | SLD 9 | -4.44 | 0.19 | 30.68 | -0.1048 | -0.1696 | -0.0008 |
| 334 | SLD 10 | -4.44 | 0.19 | 30.68 | -0.1048 | -0.1696 | -0.0008 |
| 334 | SLD 11 | -7.07 | 0.54 | 41.52 | -0.3821 | -0.2728 | -0.0025 |
| 334 | SLD 12 | -7.07 | 0.54 | 41.52 | -0.3821 | -0.2728 | -0.0025 |
| 334 | SLD 13 | -10.31 | 0.28 | 35.62 | -0.1738 | -0.423 | -0.0012 |
| 334 | SLD 14 | -10.31 | 0.28 | 35.62 | -0.1738 | -0.423 | -0.0012 |
| 334 | SLD 15 | -11.1 | 0.38 | 38.87 | -0.257 | -0.454 | -0.0017 |
| 334 | SLD 16 | -11.1 | 0.38 | 38.87 | -0.257 | -0.454 | -0.0017 |
| 334 | SLV 1 | 13.48 | 0.4 | 27.87 | -0.2699 | 0.6192 | -0.0019 |
| 334 | SLV 2 | 13.48 | 0.4 | 27.87 | -0.2699 | 0.6192 | -0.0019 |
| 334 | SLV 3 | 11.57 | 0.65 | 35.68 | -0.4653 | 0.544 | -0.003 |
| 334 | SLV 4 | 11.57 | 0.65 | 35.68 | -0.4653 | 0.544 | -0.003 |
| 334 | SLV 5 | 4.41 | 0.01 | 21.45 | 0.0365 | 0.2102 | -0.0001 |
| 334 | SLV 6 | 4.41 | 0.01 | 21.45 | 0.0365 | 0.2102 | -0.0001 |
| 334 | SLV 7 | -1.98 | 0.84 | 47.47 | -0.6148 | -0.0405 | -0.0038 |
| 334 | SLV 8 | -1.98 | 0.84 | 47.47 | -0.6148 | -0.0405 | -0.0038 |
| 334 | SLV 9 | -5.29 | -0.07 | 23.75 | 0.1038 | -0.2156 | 0.0004 |
| 334 | SLV 10 | -5.29 | -0.07 | 23.75 | 0.1038 | -0.2156 | 0.0004 |

| Nodo | Cont. | Reazione a traslazione | | | Reazione a rotazione | | |
|---|---|---|---|---|---|---|---|
| Ind. | N.br. | x | y | z | x | y | z |
| 334 | SLV 11 | -11.68 | 0.75 | 49.77 | -0.5475 | -0.4663 | -0.0034 |
| 334 | SLV 12 | -11.68 | 0.75 | 49.77 | -0.5475 | -0.4663 | -0.0034 |
| 334 | SLV 13 | -18.84 | 0.11 | 35.54 | -0.0456 | -0.8002 | -0.0004 |
| 334 | SLV 14 | -18.84 | 0.11 | 35.54 | -0.0456 | -0.8002 | -0.0004 |
| 334 | SLV 15 | -20.75 | 0.36 | 43.35 | -0.241 | -0.8754 | -0.0016 |
| 334 | SLV 16 | -20.75 | 0.36 | 43.35 | -0.241 | -0.8754 | -0.0016 |
| 335 | SLU 1 | -2.78 | 0.38 | 29.57 | -0.2664 | -0.1109 | -0.0023 |
| 335 | SLU 2 | -2.77 | 0.38 | 29.55 | -0.2661 | -0.1107 | -0.0023 |
| 335 | SLU 3 | -3 | 0.39 | 30.29 | -0.2748 | -0.1204 | -0.0024 |
| 335 | SLU 4 | -3 | 0.39 | 30.28 | -0.2746 | -0.1203 | -0.0024 |
| 335 | SLU 5 | -2.99 | 0.38 | 29.91 | -0.2697 | -0.1199 | -0.0023 |
| 335 | SLU 6 | -3.21 | 0.4 | 30.65 | -0.2783 | -0.1296 | -0.0024 |
| 335 | SLU 7 | -3.21 | 0.4 | 30.64 | -0.2781 | -0.1295 | -0.0024 |
| 335 | SLU 8 | -3.2 | 0.39 | 30.29 | -0.2735 | -0.1294 | -0.0024 |
| 335 | SLU 9 | -3.2 | 0.39 | 30.28 | -0.2733 | -0.1293 | -0.0024 |
| 335 | SLU 10 | -3.23 | 0.45 | 33.53 | -0.3151 | -0.1288 | -0.0027 |
| 335 | SLU 11 | -3.45 | 0.46 | 34.27 | -0.3237 | -0.1384 | -0.0028 |
| 335 | SLU 12 | -3.45 | 0.46 | 34.26 | -0.3235 | -0.1383 | -0.0028 |
| 335 | SLU 13 | -3.44 | 0.45 | 33.89 | -0.3186 | -0.138 | -0.0028 |
| 335 | SLU 14 | -3.67 | 0.47 | 34.63 | -0.3273 | -0.1477 | -0.0028 |
| 335 | SLU 15 | -3.66 | 0.47 | 34.62 | -0.3271 | -0.1476 | -0.0028 |
| 335 | SLU 16 | -3.66 | 0.46 | 34.27 | -0.3225 | -0.1474 | -0.0028 |
| 335 | SLU 17 | -3.66 | 0.46 | 34.26 | -0.3223 | -0.1473 | -0.0028 |
| 335 | SLU 18 | -3.43 | 0.48 | 35.25 | -0.3364 | -0.1367 | -0.0029 |
| 335 | SLU 19 | -3.42 | 0.48 | 35.24 | -0.3362 | -0.1366 | -0.0029 |
| 335 | SLU 20 | -3.64 | 0.48 | 35.61 | -0.3399 | -0.1459 | -0.003 |
| 335 | SLU 21 | -3.64 | 0.48 | 35.6 | -0.3397 | -0.1458 | -0.003 |
| 335 | SLU 22 | -3.29 | 0.44 | 33.3 | -0.312 | -0.1315 | -0.0027 |
| 335 | SLU 23 | -3.28 | 0.44 | 33.28 | -0.3117 | -0.1313 | -0.0027 |
| 335 | SLU 24 | -3.51 | 0.46 | 34.02 | -0.3204 | -0.141 | -0.0028 |
| 335 | SLU 25 | -3.51 | 0.46 | 34.01 | -0.3202 | -0.1409 | -0.0028 |
| 335 | SLU 26 | -3.5 | 0.45 | 33.64 | -0.3152 | -0.1406 | -0.0027 |
| 335 | SLU 27 | -3.72 | 0.46 | 34.38 | -0.3239 | -0.1502 | -0.0028 |
| 335 | SLU 28 | -3.72 | 0.46 | 34.37 | -0.3237 | -0.1501 | -0.0028 |
| 335 | SLU 29 | -3.71 | 0.45 | 34.02 | -0.3191 | -0.15 | -0.0028 |
| 335 | SLU 30 | -3.71 | 0.45 | 34.01 | -0.3189 | -0.1499 | -0.0028 |
| 335 | SLU 31 | -3.74 | 0.51 | 37.26 | -0.3606 | -0.1494 | -0.0031 |
| 335 | SLU 32 | -3.96 | 0.53 | 38 | -0.3693 | -0.1591 | -0.0032 |
| 335 | SLU 33 | -3.96 | 0.52 | 37.99 | -0.3691 | -0.1589 | -0.0032 |
| 335 | SLU 34 | -3.95 | 0.52 | 37.62 | -0.3642 | -0.1586 | -0.0032 |
| 335 | SLU 35 | -4.18 | 0.53 | 38.36 | -0.3729 | -0.1683 | -0.0032 |
| 335 | SLU 36 | -4.17 | 0.53 | 38.35 | -0.3727 | -0.1682 | -0.0032 |
| 335 | SLU 37 | -4.17 | 0.52 | 38 | -0.3681 | -0.168 | -0.0032 |
| 335 | SLU 38 | -4.17 | 0.52 | 37.99 | -0.3679 | -0.1679 | -0.0032 |
| 335 | SLU 39 | -3.94 | 0.54 | 38.98 | -0.382 | -0.1573 | -0.0033 |
| 335 | SLU 40 | -3.93 | 0.54 | 38.97 | -0.3818 | -0.1572 | -0.0033 |
| 335 | SLU 41 | -4.15 | 0.55 | 39.34 | -0.3855 | -0.1665 | -0.0034 |
| 335 | SLU 42 | -4.15 | 0.55 | 39.33 | -0.3853 | -0.1664 | -0.0033 |
| 335 | SLU 43 | -3.43 | 0.47 | 37.16 | -0.3307 | -0.1371 | -0.0029 |
| 335 | SLU 44 | -3.43 | 0.47 | 37.14 | -0.3304 | -0.1369 | -0.0029 |
| 335 | SLU 45 | -3.66 | 0.48 | 37.88 | -0.3391 | -0.1466 | -0.0029 |
| 335 | SLU 46 | -3.65 | 0.48 | 37.87 | -0.3389 | -0.1465 | -0.0029 |
| 335 | SLU 47 | -3.64 | 0.48 | 37.5 | -0.334 | -0.1462 | -0.0029 |
| 335 | SLU 48 | -3.87 | 0.49 | 38.24 | -0.3426 | -0.1558 | -0.003 |
| 335 | SLU 49 | -3.87 | 0.49 | 38.23 | -0.3424 | -0.1557 | -0.003 |
| 335 | SLU 50 | -3.86 | 0.48 | 37.88 | -0.3378 | -0.1556 | -0.0029 |
| 335 | SLU 51 | -3.86 | 0.48 | 37.87 | -0.3376 | -0.1555 | -0.0029 |
| 335 | SLU 52 | -3.88 | 0.54 | 41.12 | -0.3794 | -0.155 | -0.0033 |
| 335 | SLU 53 | -4.11 | 0.55 | 41.86 | -0.388 | -0.1647 | -0.0034 |
| 335 | SLU 54 | -4.11 | 0.55 | 41.85 | -0.3878 | -0.1645 | -0.0034 |
| 335 | SLU 55 | -4.1 | 0.54 | 41.48 | -0.3829 | -0.1642 | -0.0033 |
| 335 | SLU 56 | -4.32 | 0.56 | 42.22 | -0.3916 | -0.1739 | -0.0034 |
| 335 | SLU 57 | -4.32 | 0.56 | 42.21 | -0.3914 | -0.1738 | -0.0034 |
| 335 | SLU 58 | -4.32 | 0.55 | 41.86 | -0.3868 | -0.1736 | -0.0034 |
| 335 | SLU 59 | -4.31 | 0.55 | 41.85 | -0.3866 | -0.1735 | -0.0034 |
| 335 | SLU 60 | -4.08 | 0.57 | 42.84 | -0.4007 | -0.1629 | -0.0035 |
| 335 | SLU 61 | -4.08 | 0.57 | 42.83 | -0.4005 | -0.1628 | -0.0035 |
| 335 | SLU 62 | -4.3 | 0.57 | 43.2 | -0.4042 | -0.1721 | -0.0035 |
| 335 | SLU 63 | -4.29 | 0.57 | 43.19 | -0.404 | -0.172 | -0.0035 |
| 335 | SLU 64 | -3.94 | 0.54 | 40.89 | -0.3763 | -0.1577 | -0.0033 |
| 335 | SLU 65 | -3.94 | 0.54 | 40.87 | -0.376 | -0.1575 | -0.0033 |
| 335 | SLU 66 | -4.17 | 0.55 | 41.61 | -0.3847 | -0.1672 | -0.0033 |
| 335 | SLU 67 | -4.16 | 0.55 | 41.6 | -0.3845 | -0.1671 | -0.0033 |
| 335 | SLU 68 | -4.15 | 0.54 | 41.23 | -0.3795 | -0.1668 | -0.0033 |
| 335 | SLU 69 | -4.38 | 0.55 | 41.97 | -0.3882 | -0.1765 | -0.0034 |
| 335 | SLU 70 | -4.38 | 0.55 | 41.96 | -0.388 | -0.1763 | -0.0034 |
| 335 | SLU 71 | -4.37 | 0.55 | 41.61 | -0.3834 | -0.1762 | -0.0033 |
| 335 | SLU 72 | -4.37 | 0.55 | 41.6 | -0.3832 | -0.1761 | -0.0033 |
| 335 | SLU 73 | -4.39 | 0.6 | 44.85 | -0.425 | -0.1756 | -0.0037 |
| 335 | SLU 74 | -4.62 | 0.62 | 45.59 | -0.4336 | -0.1853 | -0.0038 |
| 335 | SLU 75 | -4.62 | 0.62 | 45.58 | -0.4334 | -0.1851 | -0.0038 |
| 335 | SLU 76 | -4.61 | 0.61 | 45.21 | -0.4285 | -0.1848 | -0.0037 |
| 335 | SLU 77 | -4.84 | 0.62 | 45.95 | -0.4372 | -0.1945 | -0.0038 |
| 335 | SLU 78 | -4.83 | 0.62 | 45.94 | -0.437 | -0.1944 | -0.0038 |
| 335 | SLU 79 | -4.83 | 0.61 | 45.59 | -0.4324 | -0.1942 | -0.0038 |
| 335 | SLU 80 | -4.82 | 0.61 | 45.58 | -0.4322 | -0.1941 | -0.0038 |
| 335 | SLU 81 | -4.59 | 0.63 | 46.57 | -0.4463 | -0.1835 | -0.0039 |
| 335 | SLU 82 | -4.59 | 0.63 | 46.56 | -0.4461 | -0.1834 | -0.0039 |

| Nodo | Cont. | Reazione a traslazione | | | Reazione a rotazione | | |
|---|---|---|---|---|---|---|---|
| Ind. | N.br. | x | y | z | x | y | z |
| 335 | SLU 83 | -4.81 | 0.64 | 46.93 | -0.4498 | -0.1928 | -0.0039 |
| 335 | SLU 84 | -4.8 | 0.64 | 46.92 | -0.4496 | -0.1926 | -0.0039 |
| 335 | SLE RA 1 | -2.92 | 0.4 | 30.63 | -0.2795 | -0.1168 | -0.0024 |
| 335 | SLE RA 2 | -2.92 | 0.4 | 30.62 | -0.2792 | -0.1167 | -0.0024 |
| 335 | SLE RA 3 | -3.07 | 0.41 | 31.11 | -0.285 | -0.1231 | -0.0025 |
| 335 | SLE RA 4 | -3.07 | 0.41 | 31.11 | -0.2849 | -0.123 | -0.0025 |
| 335 | SLE RA 5 | -3.06 | 0.4 | 30.86 | -0.2816 | -0.1228 | -0.0024 |
| 335 | SLE RA 6 | -3.21 | 0.41 | 31.36 | -0.2874 | -0.1293 | -0.0025 |
| 335 | SLE RA 7 | -3.21 | 0.41 | 31.35 | -0.2873 | -0.1292 | -0.0025 |
| 335 | SLE RA 8 | -3.21 | 0.4 | 31.11 | -0.2842 | -0.1291 | -0.0025 |
| 335 | SLE RA 9 | -3.21 | 0.4 | 31.11 | -0.2841 | -0.129 | -0.0025 |
| 335 | SLE RA 10 | -3.22 | 0.44 | 33.27 | -0.3119 | -0.1287 | -0.0027 |
| 335 | SLE RA 11 | -3.37 | 0.45 | 33.77 | -0.3177 | -0.1352 | -0.0028 |
| 335 | SLE RA 12 | -3.37 | 0.45 | 33.76 | -0.3175 | -0.1351 | -0.0028 |
| 335 | SLE RA 13 | -3.36 | 0.45 | 33.51 | -0.3142 | -0.1349 | -0.0027 |
| 335 | SLE RA 14 | -3.52 | 0.46 | 34.01 | -0.32 | -0.1413 | -0.0028 |
| 335 | SLE RA 15 | -3.51 | 0.45 | 34 | -0.3199 | -0.1412 | -0.0028 |
| 335 | SLE RA 16 | -3.51 | 0.45 | 33.77 | -0.3168 | -0.1411 | -0.0028 |
| 335 | SLE RA 17 | -3.51 | 0.45 | 33.76 | -0.3167 | -0.1411 | -0.0028 |
| 335 | SLE RA 18 | -3.35 | 0.46 | 34.42 | -0.3261 | -0.134 | -0.0028 |
| 335 | SLE RA 19 | -3.35 | 0.46 | 34.42 | -0.326 | -0.1339 | -0.0028 |
| 335 | SLE RA 20 | -3.5 | 0.47 | 34.66 | -0.3285 | -0.1402 | -0.0029 |
| 335 | SLE RA 21 | -3.5 | 0.47 | 34.66 | -0.3283 | -0.1401 | -0.0029 |
| 335 | SLE FR 1 | -2.92 | 0.4 | 30.63 | -0.2795 | -0.1168 | -0.0024 |
| 335 | SLE FR 2 | -2.92 | 0.4 | 30.63 | -0.2794 | -0.1168 | -0.0024 |
| 335 | SLE FR 3 | -2.98 | 0.4 | 30.73 | -0.2804 | -0.1193 | -0.0024 |
| 335 | SLE FR 4 | -3.05 | 0.42 | 31.77 | -0.2934 | -0.1219 | -0.0026 |
| 335 | SLE FR 5 | -3.11 | 0.42 | 31.87 | -0.2944 | -0.1244 | -0.0026 |
| 335 | SLE FR 6 | -3.14 | 0.43 | 32.53 | -0.3028 | -0.1254 | -0.0026 |
| 335 | SLE QP 1 | -2.92 | 0.4 | 30.63 | -0.2795 | -0.1168 | -0.0024 |
| 335 | SLE QP 2 | -3.05 | 0.42 | 31.77 | -0.2935 | -0.122 | -0.0026 |
| 335 | SLD 1 | 4.66 | 0.4 | 28.79 | -0.2802 | 0.2093 | -0.0025 |
| 335 | SLD 2 | 4.66 | 0.4 | 28.79 | -0.2802 | 0.2093 | -0.0025 |
| 335 | SLD 3 | 3.94 | 0.52 | 31.64 | -0.381 | 0.1792 | -0.0032 |
| 335 | SLD 4 | 3.94 | 0.52 | 31.64 | -0.381 | 0.1792 | -0.0032 |
| 335 | SLD 5 | 0.36 | 0.23 | 26.55 | -0.1365 | 0.023 | -0.0015 |
| 335 | SLD 6 | 0.36 | 0.23 | 26.55 | -0.1365 | 0.023 | -0.0015 |
| 335 | SLD 7 | -2.05 | 0.63 | 36.05 | -0.4727 | -0.0772 | -0.0038 |
| 335 | SLD 8 | -2.05 | 0.63 | 36.05 | -0.4727 | -0.0772 | -0.0038 |
| 335 | SLD 9 | -4.05 | 0.2 | 27.49 | -0.1142 | -0.1667 | -0.0013 |
| 335 | SLD 10 | -4.05 | 0.2 | 27.49 | -0.1142 | -0.1667 | -0.0013 |
| 335 | SLD 11 | -6.46 | 0.61 | 36.99 | -0.4504 | -0.2669 | -0.0036 |
| 335 | SLD 12 | -6.46 | 0.61 | 36.99 | -0.4504 | -0.2669 | -0.0036 |
| 335 | SLD 13 | -10.04 | 0.32 | 31.9 | -0.2059 | -0.4232 | -0.002 |
| 335 | SLD 14 | -10.04 | 0.32 | 31.9 | -0.2059 | -0.4232 | -0.002 |
| 335 | SLD 15 | -10.77 | 0.44 | 34.75 | -0.3067 | -0.4532 | -0.0026 |
| 335 | SLD 16 | -10.77 | 0.44 | 34.75 | -0.3067 | -0.4532 | -0.0026 |
| 335 | SLV 1 | 14.64 | 0.38 | 24.73 | -0.2771 | 0.6375 | -0.0024 |
| 335 | SLV 2 | 14.64 | 0.38 | 24.73 | -0.2771 | 0.6375 | -0.0024 |
| 335 | SLV 3 | 12.88 | 0.67 | 31.54 | -0.514 | 0.5644 | -0.004 |
| 335 | SLV 4 | 12.88 | 0.67 | 31.54 | -0.514 | 0.5644 | -0.004 |
| 335 | SLV 5 | 4.92 | -0.03 | 19.34 | 0.0706 | 0.2166 | -0.0001 |
| 335 | SLV 6 | 4.92 | -0.03 | 19.34 | 0.0706 | 0.2166 | -0.0001 |
| 335 | SLV 7 | -0.94 | 0.92 | 42.02 | -0.7188 | -0.0268 | -0.0054 |
| 335 | SLV 8 | -0.94 | 0.92 | 42.02 | -0.7188 | -0.0268 | -0.0054 |
| 335 | SLV 9 | -5.17 | -0.09 | 21.52 | 0.1319 | -0.2171 | 0.0003 |
| 335 | SLV 10 | -5.17 | -0.09 | 21.52 | 0.1319 | -0.2171 | 0.0003 |
| 335 | SLV 11 | -11.02 | 0.86 | 44.2 | -0.6575 | -0.4606 | -0.005 |
| 335 | SLV 12 | -11.02 | 0.86 | 44.2 | -0.6575 | -0.4606 | -0.005 |
| 335 | SLV 13 | -18.98 | 0.17 | 32 | -0.0729 | -0.8084 | -0.0011 |
| 335 | SLV 14 | -18.98 | 0.17 | 32 | -0.0729 | -0.8084 | -0.0011 |
| 335 | SLV 15 | -20.74 | 0.45 | 38.81 | -0.3098 | -0.8814 | -0.0027 |
| 335 | SLV 16 | -20.74 | 0.45 | 38.81 | -0.3098 | -0.8814 | -0.0027 |
| 336 | SLU 1 | -1.44 | 0.37 | 27.18 | -0.2811 | -0.0463 | -0.0028 |
| 336 | SLU 2 | -1.44 | 0.37 | 27.16 | -0.2807 | -0.0462 | -0.0028 |
| 336 | SLU 3 | -1.61 | 0.39 | 27.84 | -0.2903 | -0.0533 | -0.0029 |
| 336 | SLU 4 | -1.61 | 0.39 | 27.82 | -0.29 | -0.0532 | -0.0029 |
| 336 | SLU 5 | -1.62 | 0.38 | 27.49 | -0.2849 | -0.0539 | -0.0028 |
| 336 | SLU 6 | -1.8 | 0.39 | 28.17 | -0.2944 | -0.061 | -0.0029 |
| 336 | SLU 7 | -1.79 | 0.39 | 28.15 | -0.2942 | -0.0609 | -0.0029 |
| 336 | SLU 8 | -1.81 | 0.39 | 27.84 | -0.2895 | -0.0618 | -0.0029 |
| 336 | SLU 9 | -1.81 | 0.38 | 27.83 | -0.2892 | -0.0617 | -0.0029 |
| 336 | SLU 10 | -1.64 | 0.44 | 30.72 | -0.3325 | -0.0521 | -0.0033 |
| 336 | SLU 11 | -1.81 | 0.46 | 31.4 | -0.3421 | -0.0592 | -0.0034 |
| 336 | SLU 12 | -1.81 | 0.45 | 31.38 | -0.3418 | -0.0591 | -0.0034 |
| 336 | SLU 13 | -1.82 | 0.45 | 31.05 | -0.3367 | -0.0598 | -0.0034 |
| 336 | SLU 14 | -2 | 0.46 | 31.73 | -0.3462 | -0.067 | -0.0035 |
| 336 | SLU 15 | -2 | 0.46 | 31.71 | -0.346 | -0.0669 | -0.0035 |
| 336 | SLU 16 | -2.01 | 0.45 | 31.4 | -0.3412 | -0.0677 | -0.0034 |
| 336 | SLU 17 | -2.01 | 0.45 | 31.38 | -0.341 | -0.0676 | -0.0034 |
| 336 | SLU 18 | -1.73 | 0.47 | 32.27 | -0.3551 | -0.0548 | -0.0035 |
| 336 | SLU 19 | -1.73 | 0.47 | 32.25 | -0.3549 | -0.0547 | -0.0035 |
| 336 | SLU 20 | -1.91 | 0.48 | 32.6 | -0.3593 | -0.0625 | -0.0036 |
| 336 | SLU 21 | -1.91 | 0.48 | 32.58 | -0.359 | -0.0624 | -0.0036 |
| 336 | SLU 22 | -1.71 | 0.44 | 30.52 | -0.3295 | -0.0556 | -0.0033 |
| 336 | SLU 23 | -1.71 | 0.44 | 30.5 | -0.3291 | -0.0554 | -0.0033 |
| 336 | SLU 24 | -1.89 | 0.45 | 31.17 | -0.3386 | -0.0626 | -0.0034 |
| 336 | SLU 25 | -1.89 | 0.45 | 31.16 | -0.3384 | -0.0625 | -0.0034 |

| Nodo | Cont. | Reazione a traslazione | | | Reazione a rotazione | | |
|---|---|---|---|---|---|---|---|
| Ind. | N.br. | x | y | z | x | y | z |
| 336 | SLU 26 | -1.9 | 0.44 | 30.82 | -0.3332 | -0.0632 | -0.0033 |
| 336 | SLU 27 | -2.07 | 0.46 | 31.5 | -0.3428 | -0.0703 | -0.0034 |
| 336 | SLU 28 | -2.07 | 0.46 | 31.49 | -0.3425 | -0.0702 | -0.0034 |
| 336 | SLU 29 | -2.08 | 0.45 | 31.18 | -0.3378 | -0.071 | -0.0034 |
| 336 | SLU 30 | -2.08 | 0.45 | 31.16 | -0.3375 | -0.071 | -0.0034 |
| 336 | SLU 31 | -1.91 | 0.51 | 34.05 | -0.3808 | -0.0614 | -0.0038 |
| 336 | SLU 32 | -2.09 | 0.52 | 34.73 | -0.3904 | -0.0685 | -0.0039 |
| 336 | SLU 33 | -2.09 | 0.52 | 34.72 | -0.3902 | -0.0684 | -0.0039 |
| 336 | SLU 34 | -2.1 | 0.51 | 34.38 | -0.385 | -0.0691 | -0.0038 |
| 336 | SLU 35 | -2.28 | 0.52 | 35.06 | -0.3946 | -0.0762 | -0.0039 |
| 336 | SLU 36 | -2.27 | 0.52 | 35.05 | -0.3943 | -0.0761 | -0.0039 |
| 336 | SLU 37 | -2.29 | 0.52 | 34.74 | -0.3896 | -0.077 | -0.0039 |
| 336 | SLU 38 | -2.28 | 0.52 | 34.72 | -0.3893 | -0.0769 | -0.0039 |
| 336 | SLU 39 | -2 | 0.54 | 35.6 | -0.4034 | -0.0641 | -0.004 |
| 336 | SLU 40 | -2 | 0.54 | 35.59 | -0.4032 | -0.064 | -0.004 |
| 336 | SLU 41 | -2.19 | 0.54 | 35.93 | -0.4076 | -0.0718 | -0.0041 |
| 336 | SLU 42 | -2.19 | 0.54 | 35.92 | -0.4073 | -0.0717 | -0.0041 |
| 336 | SLU 43 | -1.77 | 0.46 | 34.19 | -0.3489 | -0.057 | -0.0035 |
| 336 | SLU 44 | -1.77 | 0.46 | 34.17 | -0.3485 | -0.0569 | -0.0035 |
| 336 | SLU 45 | -1.95 | 0.48 | 34.85 | -0.3581 | -0.064 | -0.0036 |
| 336 | SLU 46 | -1.95 | 0.48 | 34.83 | -0.3578 | -0.0639 | -0.0036 |
| 336 | SLU 47 | -1.96 | 0.47 | 34.5 | -0.3527 | -0.0646 | -0.0035 |
| 336 | SLU 48 | -2.13 | 0.48 | 35.18 | -0.3622 | -0.0717 | -0.0036 |
| 336 | SLU 49 | -2.13 | 0.48 | 35.16 | -0.362 | -0.0716 | -0.0036 |
| 336 | SLU 50 | -2.14 | 0.48 | 34.85 | -0.3572 | -0.0725 | -0.0036 |
| 336 | SLU 51 | -2.14 | 0.48 | 34.84 | -0.357 | -0.0724 | -0.0036 |
| 336 | SLU 52 | -1.98 | 0.53 | 37.73 | -0.4003 | -0.0628 | -0.004 |
| 336 | SLU 53 | -2.15 | 0.55 | 38.41 | -0.4098 | -0.0699 | -0.0041 |
| 336 | SLU 54 | -2.15 | 0.55 | 38.39 | -0.4096 | -0.0699 | -0.0041 |
| 336 | SLU 55 | -2.16 | 0.54 | 38.06 | -0.4044 | -0.0705 | -0.004 |
| 336 | SLU 56 | -2.34 | 0.55 | 38.74 | -0.414 | -0.0777 | -0.0041 |
| 336 | SLU 57 | -2.33 | 0.55 | 38.72 | -0.4138 | -0.0776 | -0.0041 |
| 336 | SLU 58 | -2.35 | 0.54 | 38.41 | -0.409 | -0.0784 | -0.0041 |
| 336 | SLU 59 | -2.35 | 0.54 | 38.4 | -0.4088 | -0.0783 | -0.0041 |
| 336 | SLU 60 | -2.07 | 0.56 | 39.28 | -0.4229 | -0.0655 | -0.0042 |
| 336 | SLU 61 | -2.06 | 0.56 | 39.26 | -0.4226 | -0.0654 | -0.0042 |
| 336 | SLU 62 | -2.25 | 0.57 | 39.61 | -0.427 | -0.0732 | -0.0043 |
| 336 | SLU 63 | -2.25 | 0.57 | 39.59 | -0.4268 | -0.0731 | -0.0043 |
| 336 | SLU 64 | -2.05 | 0.53 | 37.53 | -0.3972 | -0.0663 | -0.004 |
| 336 | SLU 65 | -2.05 | 0.53 | 37.51 | -0.3968 | -0.0661 | -0.004 |
| 336 | SLU 66 | -2.22 | 0.54 | 38.19 | -0.4064 | -0.0733 | -0.0041 |
| 336 | SLU 67 | -2.22 | 0.54 | 38.17 | -0.4061 | -0.0732 | -0.0041 |
| 336 | SLU 68 | -2.23 | 0.53 | 37.84 | -0.401 | -0.0739 | -0.004 |
| 336 | SLU 69 | -2.41 | 0.55 | 38.52 | -0.4105 | -0.081 | -0.0041 |
| 336 | SLU 70 | -2.41 | 0.55 | 38.5 | -0.4103 | -0.0809 | -0.0041 |
| 336 | SLU 71 | -2.42 | 0.54 | 38.19 | -0.4056 | -0.0817 | -0.004 |
| 336 | SLU 72 | -2.42 | 0.54 | 38.17 | -0.4053 | -0.0817 | -0.004 |
| 336 | SLU 73 | -2.25 | 0.6 | 41.06 | -0.4486 | -0.0721 | -0.0045 |
| 336 | SLU 74 | -2.43 | 0.61 | 41.74 | -0.4582 | -0.0792 | -0.0046 |
| 336 | SLU 75 | -2.43 | 0.61 | 41.73 | -0.4579 | -0.0791 | -0.0046 |
| 336 | SLU 76 | -2.44 | 0.6 | 41.39 | -0.4528 | -0.0798 | -0.0045 |
| 336 | SLU 77 | -2.61 | 0.62 | 42.07 | -0.4623 | -0.0869 | -0.0046 |
| 336 | SLU 78 | -2.61 | 0.61 | 42.06 | -0.4621 | -0.0869 | -0.0046 |
| 336 | SLU 79 | -2.62 | 0.61 | 41.75 | -0.4573 | -0.0877 | -0.0046 |
| 336 | SLU 80 | -2.62 | 0.61 | 41.73 | -0.4571 | -0.0876 | -0.0046 |
| 336 | SLU 81 | -2.34 | 0.63 | 42.61 | -0.4712 | -0.0748 | -0.0047 |
| 336 | SLU 82 | -2.34 | 0.63 | 42.6 | -0.471 | -0.0747 | -0.0047 |
| 336 | SLU 83 | -2.53 | 0.63 | 42.94 | -0.4754 | -0.0825 | -0.0047 |
| 336 | SLU 84 | -2.52 | 0.63 | 42.93 | -0.4751 | -0.0824 | -0.0047 |
| 336 | SLE RA 1 | -1.52 | 0.39 | 28.14 | -0.2949 | -0.0489 | -0.0029 |
| 336 | SLE RA 2 | -1.52 | 0.39 | 28.12 | -0.2947 | -0.0489 | -0.0029 |
| 336 | SLE RA 3 | -1.63 | 0.4 | 28.57 | -0.301 | -0.0536 | -0.003 |
| 336 | SLE RA 4 | -1.63 | 0.4 | 28.56 | -0.3009 | -0.0536 | -0.003 |
| 336 | SLE RA 5 | -1.64 | 0.4 | 28.34 | -0.2974 | -0.054 | -0.003 |
| 336 | SLE RA 6 | -1.76 | 0.4 | 28.79 | -0.3038 | -0.0588 | -0.003 |
| 336 | SLE RA 7 | -1.75 | 0.4 | 28.78 | -0.3037 | -0.0587 | -0.003 |
| 336 | SLE RA 8 | -1.76 | 0.4 | 28.58 | -0.3005 | -0.0593 | -0.003 |
| 336 | SLE RA 9 | -1.76 | 0.4 | 28.57 | -0.3003 | -0.0592 | -0.003 |
| 336 | SLE RA 10 | -1.65 | 0.44 | 30.49 | -0.3292 | -0.0528 | -0.0033 |
| 336 | SLE RA 11 | -1.77 | 0.45 | 30.95 | -0.3356 | -0.0576 | -0.0033 |
| 336 | SLE RA 12 | -1.77 | 0.45 | 30.94 | -0.3354 | -0.0575 | -0.0033 |
| 336 | SLE RA 13 | -1.77 | 0.44 | 30.71 | -0.332 | -0.058 | -0.0033 |
| 336 | SLE RA 14 | -1.89 | 0.45 | 31.16 | -0.3383 | -0.0627 | -0.0034 |
| 336 | SLE RA 15 | -1.89 | 0.45 | 31.15 | -0.3382 | -0.0627 | -0.0034 |
| 336 | SLE RA 16 | -1.9 | 0.45 | 30.95 | -0.335 | -0.0632 | -0.0033 |
| 336 | SLE RA 17 | -1.9 | 0.45 | 30.94 | -0.3348 | -0.0632 | -0.0033 |
| 336 | SLE RA 18 | -1.71 | 0.46 | 31.53 | -0.3443 | -0.0546 | -0.0034 |
| 336 | SLE RA 19 | -1.71 | 0.46 | 31.52 | -0.3441 | -0.0545 | -0.0034 |
| 336 | SLE RA 20 | -1.83 | 0.46 | 31.74 | -0.347 | -0.0598 | -0.0035 |
| 336 | SLE RA 21 | -1.83 | 0.46 | 31.73 | -0.3469 | -0.0597 | -0.0035 |
| 336 | SLE FR 1 | -1.52 | 0.39 | 28.14 | -0.2949 | -0.0489 | -0.0029 |
| 336 | SLE FR 2 | -1.52 | 0.39 | 28.13 | -0.2949 | -0.0489 | -0.0029 |
| 336 | SLE FR 3 | -1.57 | 0.39 | 28.22 | -0.296 | -0.051 | -0.003 |
| 336 | SLE FR 4 | -1.57 | 0.41 | 29.15 | -0.3097 | -0.0506 | -0.0031 |
| 336 | SLE FR 5 | -1.62 | 0.41 | 29.24 | -0.3108 | -0.0527 | -0.0031 |
| 336 | SLE FR 6 | -1.61 | 0.43 | 29.83 | -0.3196 | -0.0518 | -0.0032 |
| 336 | SLE QP 1 | -1.52 | 0.39 | 28.14 | -0.2949 | -0.0489 | -0.0029 |
| 336 | SLE QP 2 | -1.57 | 0.41 | 29.15 | -0.3097 | -0.0506 | -0.0031 |

| Nodo | Cont. | Reazione a traslazione | | | Reazione a rotazione | | |
|---|---|---|---|---|---|---|---|
| Ind. | N.br. | x | y | z | x | y | z |
| 336 | SLD 1 | 6.48 | 0.38 | 26.74 | -0.2891 | 0.3021 | -0.0029 |
| 336 | SLD 2 | 6.48 | 0.38 | 26.74 | -0.2891 | 0.3021 | -0.0029 |
| 336 | SLD 3 | 5.84 | 0.52 | 29.29 | -0.4028 | 0.2759 | -0.0038 |
| 336 | SLD 4 | 5.84 | 0.52 | 29.29 | -0.4028 | 0.2759 | -0.0038 |
| 336 | SLD 5 | 1.82 | 0.19 | 24.55 | -0.131 | 0.095 | -0.0016 |
| 336 | SLD 6 | 1.82 | 0.19 | 24.55 | -0.131 | 0.095 | -0.0016 |
| 336 | SLD 7 | -0.33 | 0.65 | 33.07 | -0.5102 | 0.0075 | -0.0048 |
| 336 | SLD 8 | -0.33 | 0.65 | 33.07 | -0.5102 | 0.0075 | -0.0048 |
| 336 | SLD 9 | -2.82 | 0.17 | 25.24 | -0.1093 | -0.1087 | -0.0014 |
| 336 | SLD 10 | -2.82 | 0.17 | 25.24 | -0.1093 | -0.1087 | -0.0014 |
| 336 | SLD 11 | -4.97 | 0.63 | 33.75 | -0.4884 | -0.1963 | -0.0046 |
| 336 | SLD 12 | -4.97 | 0.63 | 33.75 | -0.4884 | -0.1963 | -0.0046 |
| 336 | SLD 13 | -8.99 | 0.31 | 29.01 | -0.2167 | -0.3771 | -0.0024 |
| 336 | SLD 14 | -8.99 | 0.31 | 29.01 | -0.2167 | -0.3771 | -0.0024 |
| 336 | SLD 15 | -9.63 | 0.45 | 31.57 | -0.3304 | -0.4034 | -0.0033 |
| 336 | SLD 16 | -9.63 | 0.45 | 31.57 | -0.3304 | -0.4034 | -0.0033 |
| 336 | SLV 1 | 16.89 | 0.34 | 23.41 | -0.273 | 0.7576 | -0.0026 |
| 336 | SLV 2 | 16.89 | 0.34 | 23.41 | -0.273 | 0.7576 | -0.0026 |
| 336 | SLV 3 | 15.32 | 0.66 | 29.48 | -0.5401 | 0.6941 | -0.0049 |
| 336 | SLV 4 | 15.32 | 0.66 | 29.48 | -0.5401 | 0.6941 | -0.0049 |
| 336 | SLV 5 | 6.33 | -0.1 | 18.22 | 0.1063 | 0.288 | 0.0004 |
| 336 | SLV 6 | 6.33 | -0.1 | 18.22 | 0.1063 | 0.288 | 0.0004 |
| 336 | SLV 7 | 1.13 | 0.98 | 38.46 | -0.7838 | 0.0766 | -0.007 |
| 336 | SLV 8 | 1.13 | 0.98 | 38.46 | -0.7838 | 0.0766 | -0.007 |
| 336 | SLV 9 | -4.28 | -0.15 | 19.85 | 0.1643 | -0.1779 | 0.0008 |
| 336 | SLV 10 | -4.28 | -0.15 | 19.85 | 0.1643 | -0.1779 | 0.0008 |
| 336 | SLV 11 | -9.48 | 0.93 | 40.09 | -0.7257 | -0.3893 | -0.0066 |
| 336 | SLV 12 | -9.48 | 0.93 | 40.09 | -0.7257 | -0.3893 | -0.0066 |
| 336 | SLV 13 | -18.47 | 0.16 | 28.83 | -0.0794 | -0.7954 | -0.0013 |
| 336 | SLV 14 | -18.47 | 0.16 | 28.83 | -0.0794 | -0.7954 | -0.0013 |
| 336 | SLV 15 | -20.04 | 0.49 | 34.9 | -0.3464 | -0.8589 | -0.0036 |
| 336 | SLV 16 | -20.04 | 0.49 | 34.9 | -0.3464 | -0.8589 | -0.0036 |
| 337 | SLU 1 | -0.1 | 0.37 | 26.16 | -0.2882 | -0.0101 | -0.003 |
| 337 | SLU 2 | -0.1 | 0.37 | 26.13 | -0.2877 | -0.0101 | -0.003 |
| 337 | SLU 3 | -0.22 | 0.39 | 26.79 | -0.298 | -0.016 | -0.0031 |
| 337 | SLU 4 | -0.22 | 0.39 | 26.77 | -0.2977 | -0.0159 | -0.0031 |
| 337 | SLU 5 | -0.25 | 0.38 | 26.44 | -0.2925 | -0.0171 | -0.0031 |
| 337 | SLU 6 | -0.38 | 0.39 | 27.1 | -0.3027 | -0.023 | -0.0032 |
| 337 | SLU 7 | -0.38 | 0.39 | 27.08 | -0.3025 | -0.0229 | -0.0032 |
| 337 | SLU 8 | -0.41 | 0.39 | 26.79 | -0.2977 | -0.0242 | -0.0031 |
| 337 | SLU 9 | -0.41 | 0.39 | 26.77 | -0.2974 | -0.0241 | -0.0031 |
| 337 | SLU 10 | -0.05 | 0.44 | 29.53 | -0.341 | -0.0094 | -0.0036 |
| 337 | SLU 11 | -0.18 | 0.46 | 30.18 | -0.3512 | -0.0153 | -0.0037 |
| 337 | SLU 12 | -0.18 | 0.46 | 30.16 | -0.351 | -0.0153 | -0.0037 |
| 337 | SLU 13 | -0.21 | 0.45 | 29.84 | -0.3457 | -0.0164 | -0.0036 |
| 337 | SLU 14 | -0.33 | 0.46 | 30.49 | -0.356 | -0.0223 | -0.0038 |
| 337 | SLU 15 | -0.33 | 0.46 | 30.48 | -0.3557 | -0.0223 | -0.0037 |
| 337 | SLU 16 | -0.36 | 0.46 | 30.18 | -0.3509 | -0.0235 | -0.0037 |
| 337 | SLU 17 | -0.36 | 0.46 | 30.16 | -0.3506 | -0.0235 | -0.0037 |
| 337 | SLU 18 | -0.03 | 0.47 | 31.01 | -0.3643 | -0.0092 | -0.0038 |
| 337 | SLU 19 | -0.03 | 0.47 | 31 | -0.364 | -0.0091 | -0.0038 |
| 337 | SLU 20 | -0.19 | 0.48 | 31.33 | -0.369 | -0.0162 | -0.0039 |
| 337 | SLU 21 | -0.19 | 0.48 | 31.31 | -0.3687 | -0.0162 | -0.0039 |
| 337 | SLU 22 | -0.14 | 0.44 | 29.34 | -0.338 | -0.0132 | -0.0036 |
| 337 | SLU 23 | -0.14 | 0.44 | 29.31 | -0.3375 | -0.0132 | -0.0036 |
| 337 | SLU 24 | -0.27 | 0.45 | 29.96 | -0.3478 | -0.0191 | -0.0037 |
| 337 | SLU 25 | -0.27 | 0.45 | 29.94 | -0.3475 | -0.019 | -0.0037 |
| 337 | SLU 26 | -0.3 | 0.44 | 29.62 | -0.3423 | -0.0202 | -0.0036 |
| 337 | SLU 27 | -0.42 | 0.46 | 30.28 | -0.3526 | -0.0261 | -0.0037 |
| 337 | SLU 28 | -0.42 | 0.46 | 30.26 | -0.3523 | -0.0261 | -0.0037 |
| 337 | SLU 29 | -0.45 | 0.45 | 29.96 | -0.3475 | -0.0273 | -0.0037 |
| 337 | SLU 30 | -0.45 | 0.45 | 29.94 | -0.3472 | -0.0272 | -0.0037 |
| 337 | SLU 31 | -0.1 | 0.51 | 32.7 | -0.3908 | -0.0125 | -0.0041 |
| 337 | SLU 32 | -0.22 | 0.52 | 33.36 | -0.4011 | -0.0184 | -0.0042 |
| 337 | SLU 33 | -0.22 | 0.52 | 33.34 | -0.4008 | -0.0184 | -0.0042 |
| 337 | SLU 34 | -0.25 | 0.51 | 33.02 | -0.3955 | -0.0195 | -0.0042 |
| 337 | SLU 35 | -0.38 | 0.53 | 33.67 | -0.4058 | -0.0254 | -0.0043 |
| 337 | SLU 36 | -0.38 | 0.53 | 33.65 | -0.4055 | -0.0254 | -0.0043 |
| 337 | SLU 37 | -0.41 | 0.52 | 33.36 | -0.4007 | -0.0266 | -0.0042 |
| 337 | SLU 38 | -0.41 | 0.52 | 33.34 | -0.4004 | -0.0266 | -0.0042 |
| 337 | SLU 39 | -0.08 | 0.54 | 34.19 | -0.4141 | -0.0123 | -0.0044 |
| 337 | SLU 40 | -0.08 | 0.54 | 34.17 | -0.4138 | -0.0122 | -0.0044 |
| 337 | SLU 41 | -0.23 | 0.54 | 34.5 | -0.4188 | -0.0193 | -0.0044 |
| 337 | SLU 42 | -0.23 | 0.54 | 34.48 | -0.4185 | -0.0193 | -0.0044 |
| 337 | SLU 43 | -0.11 | 0.46 | 32.92 | -0.3576 | -0.0121 | -0.0038 |
| 337 | SLU 44 | -0.11 | 0.46 | 32.89 | -0.3571 | -0.0121 | -0.0038 |
| 337 | SLU 45 | -0.24 | 0.48 | 33.55 | -0.3674 | -0.0179 | -0.0039 |
| 337 | SLU 46 | -0.24 | 0.48 | 33.53 | -0.3671 | -0.0179 | -0.0039 |
| 337 | SLU 47 | -0.27 | 0.47 | 33.2 | -0.3618 | -0.0191 | -0.0038 |
| 337 | SLU 48 | -0.39 | 0.48 | 33.86 | -0.3721 | -0.025 | -0.0039 |
| 337 | SLU 49 | -0.39 | 0.48 | 33.84 | -0.3718 | -0.0249 | -0.0039 |
| 337 | SLU 50 | -0.42 | 0.48 | 33.55 | -0.367 | -0.0261 | -0.0039 |
| 337 | SLU 51 | -0.42 | 0.48 | 33.53 | -0.3668 | -0.0261 | -0.0039 |
| 337 | SLU 52 | -0.07 | 0.53 | 36.29 | -0.4103 | -0.0114 | -0.0043 |
| 337 | SLU 53 | -0.19 | 0.55 | 36.94 | -0.4206 | -0.0173 | -0.0044 |
| 337 | SLU 54 | -0.19 | 0.55 | 36.92 | -0.4203 | -0.0172 | -0.0044 |
| 337 | SLU 55 | -0.22 | 0.54 | 36.6 | -0.4151 | -0.0184 | -0.0044 |
| 337 | SLU 56 | -0.35 | 0.55 | 37.25 | -0.4254 | -0.0243 | -0.0045 |

| Nodo | Cont. | Reazione a traslazione | | | Reazione a rotazione | | |
|---|---|---|---|---|---|---|---|
| Ind. | N.br. | x | y | z | x | y | z |
| 337 | SLU 57 | -0.35 | 0.55 | 37.24 | -0.4251 | -0.0243 | -0.0045 |
| 337 | SLU 58 | -0.38 | 0.55 | 36.94 | -0.4203 | -0.0255 | -0.0044 |
| 337 | SLU 59 | -0.38 | 0.55 | 36.92 | -0.42 | -0.0254 | -0.0044 |
| 337 | SLU 60 | -0.05 | 0.56 | 37.77 | -0.4336 | -0.0112 | -0.0046 |
| 337 | SLU 61 | -0.05 | 0.56 | 37.76 | -0.4334 | -0.0111 | -0.0046 |
| 337 | SLU 62 | -0.2 | 0.57 | 38.09 | -0.4384 | -0.0182 | -0.0046 |
| 337 | SLU 63 | -0.2 | 0.57 | 38.07 | -0.4381 | -0.0181 | -0.0046 |
| 337 | SLU 64 | -0.16 | 0.53 | 36.1 | -0.4074 | -0.0152 | -0.0043 |
| 337 | SLU 65 | -0.15 | 0.53 | 36.07 | -0.4069 | -0.0152 | -0.0043 |
| 337 | SLU 66 | -0.28 | 0.54 | 36.72 | -0.4172 | -0.0211 | -0.0044 |
| 337 | SLU 67 | -0.28 | 0.54 | 36.71 | -0.4169 | -0.021 | -0.0044 |
| 337 | SLU 68 | -0.31 | 0.54 | 36.38 | -0.4117 | -0.0222 | -0.0043 |
| 337 | SLU 69 | -0.43 | 0.55 | 37.04 | -0.4219 | -0.0281 | -0.0044 |
| 337 | SLU 70 | -0.43 | 0.55 | 37.02 | -0.4217 | -0.028 | -0.0044 |
| 337 | SLU 71 | -0.46 | 0.54 | 36.72 | -0.4169 | -0.0293 | -0.0044 |
| 337 | SLU 72 | -0.46 | 0.54 | 36.71 | -0.4166 | -0.0292 | -0.0044 |
| 337 | SLU 73 | -0.11 | 0.6 | 39.46 | -0.4602 | -0.0145 | -0.0048 |
| 337 | SLU 74 | -0.24 | 0.61 | 40.12 | -0.4704 | -0.0204 | -0.005 |
| 337 | SLU 75 | -0.24 | 0.61 | 40.1 | -0.4702 | -0.0203 | -0.005 |
| 337 | SLU 76 | -0.27 | 0.6 | 39.78 | -0.4649 | -0.0215 | -0.0049 |
| 337 | SLU 77 | -0.39 | 0.62 | 40.43 | -0.4752 | -0.0274 | -0.005 |
| 337 | SLU 78 | -0.39 | 0.62 | 40.41 | -0.4749 | -0.0274 | -0.005 |
| 337 | SLU 79 | -0.42 | 0.61 | 40.12 | -0.4701 | -0.0286 | -0.005 |
| 337 | SLU 80 | -0.42 | 0.61 | 40.1 | -0.4698 | -0.0285 | -0.005 |
| 337 | SLU 81 | -0.09 | 0.63 | 40.95 | -0.4835 | -0.0143 | -0.0051 |
| 337 | SLU 82 | -0.09 | 0.63 | 40.93 | -0.4832 | -0.0142 | -0.0051 |
| 337 | SLU 83 | -0.25 | 0.63 | 41.26 | -0.4882 | -0.0213 | -0.0051 |
| 337 | SLU 84 | -0.25 | 0.63 | 41.24 | -0.4879 | -0.0212 | -0.0051 |
| 337 | SLE RA 1 | -0.11 | 0.39 | 27.07 | -0.3024 | -0.011 | -0.0032 |
| 337 | SLE RA 2 | -0.11 | 0.39 | 27.05 | -0.3021 | -0.011 | -0.0032 |
| 337 | SLE RA 3 | -0.19 | 0.4 | 27.49 | -0.309 | -0.0149 | -0.0033 |
| 337 | SLE RA 4 | -0.19 | 0.4 | 27.47 | -0.3088 | -0.0149 | -0.0033 |
| 337 | SLE RA 5 | -0.21 | 0.4 | 27.26 | -0.3053 | -0.0157 | -0.0032 |
| 337 | SLE RA 6 | -0.3 | 0.41 | 27.7 | -0.3121 | -0.0196 | -0.0033 |
| 337 | SLE RA 7 | -0.3 | 0.41 | 27.68 | -0.3119 | -0.0196 | -0.0033 |
| 337 | SLE RA 8 | -0.32 | 0.4 | 27.49 | -0.3087 | -0.0204 | -0.0033 |
| 337 | SLE RA 9 | -0.32 | 0.4 | 27.47 | -0.3086 | -0.0204 | -0.0033 |
| 337 | SLE RA 10 | -0.08 | 0.44 | 29.31 | -0.3376 | -0.0105 | -0.0036 |
| 337 | SLE RA 11 | -0.16 | 0.45 | 29.75 | -0.3445 | -0.0145 | -0.0036 |
| 337 | SLE RA 12 | -0.16 | 0.45 | 29.74 | -0.3443 | -0.0144 | -0.0036 |
| 337 | SLE RA 13 | -0.18 | 0.44 | 29.52 | -0.3408 | -0.0152 | -0.0036 |
| 337 | SLE RA 14 | -0.27 | 0.45 | 29.96 | -0.3476 | -0.0191 | -0.0037 |
| 337 | SLE RA 15 | -0.27 | 0.45 | 29.95 | -0.3474 | -0.0191 | -0.0037 |
| 337 | SLE RA 16 | -0.29 | 0.45 | 29.75 | -0.3442 | -0.0199 | -0.0036 |
| 337 | SLE RA 17 | -0.29 | 0.45 | 29.74 | -0.344 | -0.0199 | -0.0036 |
| 337 | SLE RA 18 | -0.07 | 0.46 | 30.31 | -0.3531 | -0.0104 | -0.0037 |
| 337 | SLE RA 19 | -0.07 | 0.46 | 30.29 | -0.353 | -0.0104 | -0.0037 |
| 337 | SLE RA 20 | -0.17 | 0.46 | 30.51 | -0.3563 | -0.0151 | -0.0038 |
| 337 | SLE RA 21 | -0.17 | 0.46 | 30.5 | -0.3561 | -0.015 | -0.0038 |
| 337 | SLE FR 1 | -0.11 | 0.39 | 27.07 | -0.3024 | -0.011 | -0.0032 |
| 337 | SLE FR 2 | -0.11 | 0.39 | 27.07 | -0.3024 | -0.011 | -0.0032 |
| 337 | SLE FR 3 | -0.15 | 0.39 | 27.15 | -0.3037 | -0.0129 | -0.0032 |
| 337 | SLE FR 4 | -0.1 | 0.41 | 28.04 | -0.3176 | -0.0108 | -0.0033 |
| 337 | SLE FR 5 | -0.14 | 0.41 | 28.12 | -0.3189 | -0.0127 | -0.0034 |
| 337 | SLE FR 6 | -0.09 | 0.43 | 28.69 | -0.3278 | -0.0107 | -0.0035 |
| 337 | SLE QP 1 | -0.11 | 0.39 | 27.07 | -0.3024 | -0.011 | -0.0032 |
| 337 | SLE QP 2 | -0.1 | 0.41 | 28.04 | -0.3177 | -0.0108 | -0.0033 |
| 337 | SLD 1 | 8 | 0.38 | 26.18 | -0.2967 | 0.3372 | -0.0031 |
| 337 | SLD 2 | 8 | 0.38 | 26.18 | -0.2967 | 0.3372 | -0.0031 |
| 337 | SLD 3 | 7.39 | 0.52 | 28.49 | -0.4153 | 0.3109 | -0.0042 |
| 337 | SLD 4 | 7.39 | 0.52 | 28.49 | -0.4153 | 0.3109 | -0.0042 |
| 337 | SLD 5 | 3.27 | 0.18 | 23.98 | -0.1315 | 0.1335 | -0.0015 |
| 337 | SLD 6 | 3.27 | 0.18 | 23.98 | -0.1315 | 0.1335 | -0.0015 |
| 337 | SLD 7 | 1.21 | 0.67 | 31.68 | -0.5268 | 0.0457 | -0.0053 |
| 337 | SLD 8 | 1.21 | 0.67 | 31.68 | -0.5268 | 0.0457 | -0.0053 |
| 337 | SLD 9 | -1.41 | 0.16 | 24.4 | -0.1085 | -0.0674 | -0.0014 |
| 337 | SLD 10 | -1.41 | 0.16 | 24.4 | -0.1085 | -0.0674 | -0.0014 |
| 337 | SLD 11 | -3.46 | 0.65 | 32.1 | -0.5038 | -0.1552 | -0.0052 |
| 337 | SLD 12 | -3.46 | 0.65 | 32.1 | -0.5038 | -0.1552 | -0.0052 |
| 337 | SLD 13 | -7.58 | 0.3 | 27.59 | -0.22 | -0.3326 | -0.0025 |
| 337 | SLD 14 | -7.58 | 0.3 | 27.59 | -0.22 | -0.3326 | -0.0025 |
| 337 | SLD 15 | -8.2 | 0.45 | 29.9 | -0.3386 | -0.3589 | -0.0036 |
| 337 | SLD 16 | -8.2 | 0.45 | 29.9 | -0.3386 | -0.3589 | -0.0036 |
| 337 | SLV 1 | 18.46 | 0.33 | 23.53 | -0.2781 | 0.7865 | -0.0027 |
| 337 | SLV 2 | 18.46 | 0.33 | 23.53 | -0.2781 | 0.7865 | -0.0027 |
| 337 | SLV 3 | 16.98 | 0.67 | 29 | -0.5564 | 0.7231 | -0.0054 |
| 337 | SLV 4 | 16.98 | 0.67 | 29 | -0.5564 | 0.7231 | -0.0054 |
| 337 | SLV 5 | 7.72 | -0.13 | 18.4 | 0.1164 | 0.3245 | 0.0009 |
| 337 | SLV 6 | 7.72 | -0.13 | 18.4 | 0.1164 | 0.3245 | 0.0009 |
| 337 | SLV 7 | 2.78 | 1.01 | 36.62 | -0.8114 | 0.1132 | -0.008 |
| 337 | SLV 8 | 2.78 | 1.01 | 36.62 | -0.8114 | 0.1132 | -0.008 |
| 337 | SLV 9 | -2.97 | -0.19 | 19.47 | 0.1761 | -0.1349 | 0.0013 |
| 337 | SLV 10 | -2.97 | -0.19 | 19.47 | 0.1761 | -0.1349 | 0.0013 |
| 337 | SLV 11 | -7.91 | 0.96 | 37.68 | -0.7517 | -0.3461 | -0.0076 |
| 337 | SLV 12 | -7.91 | 0.96 | 37.68 | -0.7517 | -0.3461 | -0.0076 |
| 337 | SLV 13 | -17.17 | 0.15 | 27.09 | -0.0789 | -0.7448 | -0.0013 |
| 337 | SLV 14 | -17.17 | 0.15 | 27.09 | -0.0789 | -0.7448 | -0.0013 |
| 337 | SLV 15 | -18.65 | 0.49 | 32.55 | -0.3572 | -0.8081 | -0.004 |

| Nodo | Cont. | Reazione a traslazione | | | Reazione a rotazione | | |
|---|---|---|---|---|---|---|---|
| Ind. | N.br. | x | y | z | x | y | z |
| 337 | SLV 16 | -18.65 | 0.49 | 32.55 | -0.3572 | -0.8081 | -0.004 |
| 338 | SLU 1 | 1.4 | 0.4 | 26.6 | -0.2923 | 0.0632 | -0.0033 |
| 338 | SLU 2 | 1.39 | 0.4 | 26.57 | -0.2918 | 0.0631 | -0.0033 |
| 338 | SLU 3 | 1.34 | 0.41 | 27.25 | -0.3027 | 0.0607 | -0.0034 |
| 338 | SLU 4 | 1.33 | 0.41 | 27.22 | -0.3023 | 0.0607 | -0.0034 |
| 338 | SLU 5 | 1.28 | 0.4 | 26.89 | -0.297 | 0.0585 | -0.0033 |
| 338 | SLU 6 | 1.22 | 0.42 | 27.57 | -0.3079 | 0.0561 | -0.0034 |
| 338 | SLU 7 | 1.22 | 0.42 | 27.54 | -0.3075 | 0.056 | -0.0034 |
| 338 | SLU 8 | 1.17 | 0.41 | 27.24 | -0.3028 | 0.0539 | -0.0034 |
| 338 | SLU 9 | 1.17 | 0.41 | 27.22 | -0.3024 | 0.0538 | -0.0034 |
| 338 | SLU 10 | 1.71 | 0.47 | 30.07 | -0.3459 | 0.0773 | -0.0039 |
| 338 | SLU 11 | 1.65 | 0.48 | 30.75 | -0.3568 | 0.0749 | -0.004 |
| 338 | SLU 12 | 1.65 | 0.48 | 30.73 | -0.3565 | 0.0749 | -0.004 |
| 338 | SLU 13 | 1.6 | 0.48 | 30.39 | -0.3512 | 0.0726 | -0.0039 |
| 338 | SLU 14 | 1.54 | 0.49 | 31.07 | -0.362 | 0.0703 | -0.0041 |
| 338 | SLU 15 | 1.54 | 0.49 | 31.05 | -0.3617 | 0.0702 | -0.004 |
| 338 | SLU 16 | 1.49 | 0.48 | 30.75 | -0.3569 | 0.0681 | -0.004 |
| 338 | SLU 17 | 1.49 | 0.48 | 30.73 | -0.3566 | 0.068 | -0.004 |
| 338 | SLU 18 | 1.85 | 0.5 | 31.61 | -0.3697 | 0.0835 | -0.0041 |
| 338 | SLU 19 | 1.85 | 0.5 | 31.59 | -0.3694 | 0.0834 | -0.0041 |
| 338 | SLU 20 | 1.74 | 0.51 | 31.93 | -0.3749 | 0.0788 | -0.0042 |
| 338 | SLU 21 | 1.74 | 0.51 | 31.91 | -0.3746 | 0.0788 | -0.0042 |
| 338 | SLU 22 | 1.61 | 0.47 | 29.87 | -0.3431 | 0.0731 | -0.0038 |
| 338 | SLU 23 | 1.61 | 0.46 | 29.83 | -0.3426 | 0.073 | -0.0038 |
| 338 | SLU 24 | 1.55 | 0.48 | 30.51 | -0.3534 | 0.0706 | -0.004 |
| 338 | SLU 25 | 1.55 | 0.48 | 30.49 | -0.3531 | 0.0706 | -0.004 |
| 338 | SLU 26 | 1.5 | 0.47 | 30.15 | -0.3478 | 0.0684 | -0.0039 |
| 338 | SLU 27 | 1.44 | 0.49 | 30.83 | -0.3587 | 0.066 | -0.004 |
| 338 | SLU 28 | 1.44 | 0.49 | 30.81 | -0.3583 | 0.066 | -0.004 |
| 338 | SLU 29 | 1.39 | 0.48 | 30.51 | -0.3535 | 0.0638 | -0.004 |
| 338 | SLU 30 | 1.39 | 0.48 | 30.49 | -0.3532 | 0.0638 | -0.004 |
| 338 | SLU 31 | 1.93 | 0.54 | 33.34 | -0.3967 | 0.0872 | -0.0044 |
| 338 | SLU 32 | 1.87 | 0.55 | 34.02 | -0.4076 | 0.0848 | -0.0046 |
| 338 | SLU 33 | 1.87 | 0.55 | 34 | -0.4073 | 0.0848 | -0.0046 |
| 338 | SLU 34 | 1.82 | 0.55 | 33.66 | -0.4019 | 0.0826 | -0.0045 |
| 338 | SLU 35 | 1.76 | 0.56 | 34.34 | -0.4128 | 0.0802 | -0.0046 |
| 338 | SLU 36 | 1.76 | 0.56 | 34.32 | -0.4125 | 0.0801 | -0.0046 |
| 338 | SLU 37 | 1.71 | 0.55 | 34.02 | -0.4077 | 0.078 | -0.0046 |
| 338 | SLU 38 | 1.71 | 0.55 | 34 | -0.4074 | 0.0779 | -0.0046 |
| 338 | SLU 39 | 2.07 | 0.57 | 34.88 | -0.4205 | 0.0934 | -0.0047 |
| 338 | SLU 40 | 2.07 | 0.57 | 34.86 | -0.4202 | 0.0933 | -0.0047 |
| 338 | SLU 41 | 1.96 | 0.58 | 35.2 | -0.4257 | 0.0887 | -0.0048 |
| 338 | SLU 42 | 1.96 | 0.58 | 35.18 | -0.4254 | 0.0887 | -0.0048 |
| 338 | SLU 43 | 1.74 | 0.49 | 33.47 | -0.3626 | 0.0787 | -0.0041 |
| 338 | SLU 44 | 1.74 | 0.49 | 33.43 | -0.3621 | 0.0787 | -0.0041 |
| 338 | SLU 45 | 1.68 | 0.51 | 34.11 | -0.3729 | 0.0763 | -0.0042 |
| 338 | SLU 46 | 1.68 | 0.51 | 34.08 | -0.3726 | 0.0762 | -0.0042 |
| 338 | SLU 47 | 1.63 | 0.5 | 33.75 | -0.3673 | 0.074 | -0.0041 |
| 338 | SLU 48 | 1.57 | 0.51 | 34.43 | -0.3782 | 0.0716 | -0.0042 |
| 338 | SLU 49 | 1.57 | 0.51 | 34.4 | -0.3778 | 0.0716 | -0.0042 |
| 338 | SLU 50 | 1.52 | 0.51 | 34.11 | -0.373 | 0.0695 | -0.0042 |
| 338 | SLU 51 | 1.52 | 0.51 | 34.08 | -0.3727 | 0.0694 | -0.0042 |
| 338 | SLU 52 | 2.06 | 0.56 | 36.93 | -0.4162 | 0.0929 | -0.0047 |
| 338 | SLU 53 | 2 | 0.58 | 37.61 | -0.4271 | 0.0905 | -0.0048 |
| 338 | SLU 54 | 2 | 0.58 | 37.59 | -0.4268 | 0.0904 | -0.0048 |
| 338 | SLU 55 | 1.95 | 0.57 | 37.25 | -0.4214 | 0.0882 | -0.0047 |
| 338 | SLU 56 | 1.89 | 0.59 | 37.93 | -0.4323 | 0.0858 | -0.0048 |
| 338 | SLU 57 | 1.89 | 0.59 | 37.91 | -0.432 | 0.0858 | -0.0048 |
| 338 | SLU 58 | 1.84 | 0.58 | 37.61 | -0.4272 | 0.0836 | -0.0048 |
| 338 | SLU 59 | 1.84 | 0.58 | 37.59 | -0.4269 | 0.0836 | -0.0048 |
| 338 | SLU 60 | 2.2 | 0.6 | 38.47 | -0.44 | 0.099 | -0.0049 |
| 338 | SLU 61 | 2.19 | 0.6 | 38.45 | -0.4397 | 0.099 | -0.0049 |
| 338 | SLU 62 | 2.08 | 0.6 | 38.79 | -0.4452 | 0.0944 | -0.005 |
| 338 | SLU 63 | 2.08 | 0.6 | 38.77 | -0.4449 | 0.0943 | -0.005 |
| 338 | SLU 64 | 1.96 | 0.56 | 36.73 | -0.4134 | 0.0887 | -0.0046 |
| 338 | SLU 65 | 1.96 | 0.56 | 36.7 | -0.4129 | 0.0886 | -0.0046 |
| 338 | SLU 66 | 1.9 | 0.58 | 37.37 | -0.4237 | 0.0862 | -0.0047 |
| 338 | SLU 67 | 1.9 | 0.57 | 37.35 | -0.4234 | 0.0862 | -0.0047 |
| 338 | SLU 68 | 1.85 | 0.57 | 37.02 | -0.4181 | 0.0839 | -0.0047 |
| 338 | SLU 69 | 1.79 | 0.58 | 37.69 | -0.4289 | 0.0816 | -0.0048 |
| 338 | SLU 70 | 1.78 | 0.58 | 37.67 | -0.4286 | 0.0815 | -0.0048 |
| 338 | SLU 71 | 1.74 | 0.58 | 37.37 | -0.4238 | 0.0794 | -0.0047 |
| 338 | SLU 72 | 1.74 | 0.58 | 37.35 | -0.4235 | 0.0793 | -0.0047 |
| 338 | SLU 73 | 2.27 | 0.63 | 40.2 | -0.467 | 0.1028 | -0.0052 |
| 338 | SLU 74 | 2.22 | 0.65 | 40.88 | -0.4779 | 0.1004 | -0.0053 |
| 338 | SLU 75 | 2.21 | 0.65 | 40.86 | -0.4776 | 0.1003 | -0.0053 |
| 338 | SLU 76 | 2.16 | 0.64 | 40.52 | -0.4722 | 0.0981 | -0.0053 |
| 338 | SLU 77 | 2.1 | 0.66 | 41.2 | -0.4831 | 0.0957 | -0.0054 |
| 338 | SLU 78 | 2.1 | 0.66 | 41.18 | -0.4828 | 0.0957 | -0.0054 |
| 338 | SLU 79 | 2.05 | 0.65 | 40.88 | -0.478 | 0.0936 | -0.0054 |
| 338 | SLU 80 | 2.05 | 0.65 | 40.86 | -0.4777 | 0.0935 | -0.0053 |
| 338 | SLU 81 | 2.41 | 0.67 | 41.74 | -0.4908 | 0.1089 | -0.0055 |
| 338 | SLU 82 | 2.41 | 0.67 | 41.72 | -0.4904 | 0.1089 | -0.0055 |
| 338 | SLU 83 | 2.3 | 0.67 | 42.06 | -0.496 | 0.1043 | -0.0056 |
| 338 | SLU 84 | 2.3 | 0.67 | 42.04 | -0.4957 | 0.1042 | -0.0055 |
| 338 | SLE RA 1 | 1.46 | 0.42 | 27.54 | -0.3068 | 0.066 | -0.0034 |
| 338 | SLE RA 2 | 1.46 | 0.42 | 27.51 | -0.3065 | 0.066 | -0.0034 |
| 338 | SLE RA 3 | 1.42 | 0.43 | 27.97 | -0.3137 | 0.0644 | -0.0035 |

| Nodo | Cont. | Reazione a traslazione | | | Reazione a rotazione | | |
|---|---|---|---|---|---|---|---|
| Ind. | N.br. | x | y | z | x | y | z |
| 338 | SLE RA 4 | 1.42 | 0.43 | 27.95 | -0.3135 | 0.0644 | -0.0035 |
| 338 | SLE RA 5 | 1.38 | 0.42 | 27.73 | -0.31 | 0.0629 | -0.0035 |
| 338 | SLE RA 6 | 1.34 | 0.43 | 28.18 | -0.3172 | 0.0613 | -0.0036 |
| 338 | SLE RA 7 | 1.34 | 0.43 | 28.16 | -0.317 | 0.0613 | -0.0035 |
| 338 | SLE RA 8 | 1.31 | 0.43 | 27.96 | -0.3138 | 0.0598 | -0.0035 |
| 338 | SLE RA 9 | 1.31 | 0.43 | 27.95 | -0.3136 | 0.0598 | -0.0035 |
| 338 | SLE RA 10 | 1.67 | 0.46 | 29.85 | -0.3426 | 0.0754 | -0.0038 |
| 338 | SLE RA 11 | 1.63 | 0.47 | 30.3 | -0.3498 | 0.0738 | -0.0039 |
| 338 | SLE RA 12 | 1.63 | 0.47 | 30.29 | -0.3496 | 0.0738 | -0.0039 |
| 338 | SLE RA 13 | 1.6 | 0.47 | 30.06 | -0.3461 | 0.0723 | -0.0039 |
| 338 | SLE RA 14 | 1.56 | 0.48 | 30.52 | -0.3533 | 0.0707 | -0.004 |
| 338 | SLE RA 15 | 1.55 | 0.48 | 30.5 | -0.3531 | 0.0707 | -0.004 |
| 338 | SLE RA 16 | 1.52 | 0.48 | 30.3 | -0.3499 | 0.0693 | -0.0039 |
| 338 | SLE RA 17 | 1.52 | 0.47 | 30.29 | -0.3497 | 0.0693 | -0.0039 |
| 338 | SLE RA 18 | 1.76 | 0.49 | 30.88 | -0.3584 | 0.0795 | -0.004 |
| 338 | SLE RA 19 | 1.76 | 0.49 | 30.86 | -0.3582 | 0.0795 | -0.004 |
| 338 | SLE RA 20 | 1.69 | 0.49 | 31.09 | -0.3619 | 0.0764 | -0.004 |
| 338 | SLE RA 21 | 1.69 | 0.49 | 31.08 | -0.3617 | 0.0764 | -0.004 |
| 338 | SLE FR 1 | 1.46 | 0.42 | 27.54 | -0.3068 | 0.066 | -0.0034 |
| 338 | SLE FR 2 | 1.46 | 0.42 | 27.53 | -0.3068 | 0.066 | -0.0034 |
| 338 | SLE FR 3 | 1.43 | 0.42 | 27.62 | -0.3082 | 0.0648 | -0.0034 |
| 338 | SLE FR 4 | 1.55 | 0.44 | 28.53 | -0.3222 | 0.0701 | -0.0036 |
| 338 | SLE FR 5 | 1.52 | 0.44 | 28.63 | -0.3237 | 0.0688 | -0.0036 |
| 338 | SLE FR 6 | 1.61 | 0.45 | 29.21 | -0.3326 | 0.0728 | -0.0037 |
| 338 | SLE QP 1 | 1.46 | 0.42 | 27.54 | -0.3068 | 0.066 | -0.0034 |
| 338 | SLE QP 2 | 1.55 | 0.44 | 28.54 | -0.3223 | 0.0701 | -0.0036 |
| 338 | SLD 1 | 9.62 | 0.32 | 28.37 | -0.2221 | 0.4257 | -0.0027 |
| 338 | SLD 2 | 9.62 | 0.32 | 28.37 | -0.2221 | 0.4257 | -0.0027 |
| 338 | SLD 3 | 9.02 | 0.46 | 30.46 | -0.3359 | 0.401 | -0.0038 |
| 338 | SLD 4 | 9.02 | 0.46 | 30.46 | -0.3359 | 0.401 | -0.0038 |
| 338 | SLD 5 | 4.88 | 0.19 | 25.32 | -0.1197 | 0.2142 | -0.0015 |
| 338 | SLD 6 | 4.88 | 0.19 | 25.32 | -0.1197 | 0.2142 | -0.0015 |
| 338 | SLD 7 | 2.88 | 0.66 | 32.28 | -0.499 | 0.1319 | -0.0055 |
| 338 | SLD 8 | 2.88 | 0.66 | 32.28 | -0.499 | 0.1319 | -0.0055 |
| 338 | SLD 9 | 0.22 | 0.22 | 24.79 | -0.1457 | 0.0082 | -0.0018 |
| 338 | SLD 10 | 0.22 | 0.22 | 24.79 | -0.1457 | 0.0082 | -0.0018 |
| 338 | SLD 11 | -1.78 | 0.68 | 31.76 | -0.525 | -0.074 | -0.0057 |
| 338 | SLD 12 | -1.78 | 0.68 | 31.76 | -0.525 | -0.074 | -0.0057 |
| 338 | SLD 13 | -5.92 | 0.41 | 26.62 | -0.3088 | -0.2609 | -0.0034 |
| 338 | SLD 14 | -5.92 | 0.41 | 26.62 | -0.3088 | -0.2609 | -0.0034 |
| 338 | SLD 15 | -6.52 | 0.55 | 28.71 | -0.4226 | -0.2855 | -0.0046 |
| 338 | SLD 16 | -6.52 | 0.55 | 28.71 | -0.4226 | -0.2855 | -0.0046 |
| 338 | SLV 1 | 20.04 | 0.17 | 28.23 | -0.0783 | 0.8844 | -0.0013 |
| 338 | SLV 2 | 20.04 | 0.17 | 28.23 | -0.0783 | 0.8844 | -0.0013 |
| 338 | SLV 3 | 18.6 | 0.49 | 33.17 | -0.3454 | 0.8254 | -0.0041 |
| 338 | SLV 4 | 18.6 | 0.49 | 33.17 | -0.3454 | 0.8254 | -0.0041 |
| 338 | SLV 5 | 9.27 | -0.14 | 20.96 | 0.1559 | 0.4039 | 0.0012 |
| 338 | SLV 6 | 9.27 | -0.14 | 20.96 | 0.1559 | 0.4039 | 0.0012 |
| 338 | SLV 7 | 4.49 | 0.95 | 37.41 | -0.7342 | 0.2072 | -0.0079 |
| 338 | SLV 8 | 4.49 | 0.95 | 37.41 | -0.7342 | 0.2072 | -0.0079 |
| 338 | SLV 9 | -1.39 | -0.08 | 19.67 | 0.0896 | -0.067 | 0.0007 |
| 338 | SLV 10 | -1.39 | -0.08 | 19.67 | 0.0896 | -0.067 | 0.0007 |
| 338 | SLV 11 | -6.17 | 1.02 | 36.11 | -0.8005 | -0.2637 | -0.0085 |
| 338 | SLV 12 | -6.17 | 1.02 | 36.11 | -0.8005 | -0.2637 | -0.0085 |
| 338 | SLV 13 | -15.5 | 0.38 | 23.91 | -0.2993 | -0.6853 | -0.0031 |
| 338 | SLV 14 | -15.5 | 0.38 | 23.91 | -0.2993 | -0.6853 | -0.0031 |
| 338 | SLV 15 | -16.94 | 0.71 | 28.85 | -0.5663 | -0.7443 | -0.0059 |
| 338 | SLV 16 | -16.94 | 0.71 | 28.85 | -0.5663 | -0.7443 | -0.0059 |
| 339 | SLU 1 | 2.12 | 0.42 | 28.12 | -0.2869 | 0.0721 | -0.0032 |
| 339 | SLU 2 | 2.12 | 0.42 | 28.08 | -0.2863 | 0.072 | -0.0032 |
| 339 | SLU 3 | 2.1 | 0.44 | 28.82 | -0.2973 | 0.0699 | -0.0033 |
| 339 | SLU 4 | 2.09 | 0.44 | 28.8 | -0.2969 | 0.0698 | -0.0033 |
| 339 | SLU 5 | 2.04 | 0.43 | 28.43 | -0.2917 | 0.0676 | -0.0033 |
| 339 | SLU 6 | 2.01 | 0.44 | 29.17 | -0.3027 | 0.0656 | -0.0034 |
| 339 | SLU 7 | 2.01 | 0.44 | 29.15 | -0.3023 | 0.0655 | -0.0034 |
| 339 | SLU 8 | 1.96 | 0.44 | 28.83 | -0.2977 | 0.0634 | -0.0034 |
| 339 | SLU 9 | 1.95 | 0.44 | 28.8 | -0.2973 | 0.0634 | -0.0034 |
| 339 | SLU 10 | 2.57 | 0.5 | 31.9 | -0.3396 | 0.0877 | -0.0038 |
| 339 | SLU 11 | 2.55 | 0.51 | 32.64 | -0.3505 | 0.0856 | -0.0039 |
| 339 | SLU 12 | 2.54 | 0.51 | 32.62 | -0.3502 | 0.0855 | -0.0039 |
| 339 | SLU 13 | 2.49 | 0.51 | 32.25 | -0.345 | 0.0833 | -0.0039 |
| 339 | SLU 14 | 2.46 | 0.52 | 33 | -0.3559 | 0.0812 | -0.004 |
| 339 | SLU 15 | 2.46 | 0.52 | 32.97 | -0.3556 | 0.0812 | -0.004 |
| 339 | SLU 16 | 2.41 | 0.52 | 32.65 | -0.3509 | 0.0791 | -0.004 |
| 339 | SLU 17 | 2.41 | 0.51 | 32.62 | -0.3506 | 0.0791 | -0.0039 |
| 339 | SLU 18 | 2.77 | 0.53 | 33.58 | -0.363 | 0.0945 | -0.0041 |
| 339 | SLU 19 | 2.76 | 0.53 | 33.56 | -0.3626 | 0.0944 | -0.0041 |
| 339 | SLU 20 | 2.69 | 0.54 | 33.93 | -0.3684 | 0.0902 | -0.0041 |
| 339 | SLU 21 | 2.68 | 0.54 | 33.91 | -0.368 | 0.0901 | -0.0041 |
| 339 | SLU 22 | 2.47 | 0.49 | 31.67 | -0.3369 | 0.0835 | -0.0038 |
| 339 | SLU 23 | 2.47 | 0.49 | 31.63 | -0.3363 | 0.0834 | -0.0038 |
| 339 | SLU 24 | 2.44 | 0.51 | 32.37 | -0.3473 | 0.0813 | -0.0039 |
| 339 | SLU 25 | 2.44 | 0.51 | 32.35 | -0.347 | 0.0812 | -0.0039 |
| 339 | SLU 26 | 2.38 | 0.5 | 31.98 | -0.3417 | 0.079 | -0.0038 |
| 339 | SLU 27 | 2.36 | 0.52 | 32.73 | -0.3527 | 0.0769 | -0.004 |
| 339 | SLU 28 | 2.36 | 0.52 | 32.7 | -0.3523 | 0.0769 | -0.004 |
| 339 | SLU 29 | 2.31 | 0.51 | 32.38 | -0.3477 | 0.0748 | -0.0039 |
| 339 | SLU 30 | 2.3 | 0.51 | 32.35 | -0.3473 | 0.0748 | -0.0039 |

| Nodo | Cont. | Reazione a traslazione | | | Reazione a rotazione | | |
|---|---|---|---|---|---|---|---|
| Ind. | N.br. | x | y | z | x | y | z |
| 339 | SLU 31 | 2.92 | 0.57 | 35.45 | -0.3896 | 0.0991 | -0.0044 |
| 339 | SLU 32 | 2.9 | 0.59 | 36.19 | -0.4006 | 0.097 | -0.0045 |
| 339 | SLU 33 | 2.89 | 0.59 | 36.17 | -0.4002 | 0.0969 | -0.0045 |
| 339 | SLU 34 | 2.84 | 0.58 | 35.8 | -0.395 | 0.0947 | -0.0044 |
| 339 | SLU 35 | 2.81 | 0.6 | 36.55 | -0.406 | 0.0926 | -0.0046 |
| 339 | SLU 36 | 2.81 | 0.6 | 36.52 | -0.4056 | 0.0926 | -0.0046 |
| 339 | SLU 37 | 2.76 | 0.59 | 36.2 | -0.4009 | 0.0905 | -0.0045 |
| 339 | SLU 38 | 2.75 | 0.59 | 36.17 | -0.4006 | 0.0905 | -0.0045 |
| 339 | SLU 39 | 3.12 | 0.61 | 37.13 | -0.413 | 0.1059 | -0.0046 |
| 339 | SLU 40 | 3.11 | 0.61 | 37.11 | -0.4127 | 0.1058 | -0.0046 |
| 339 | SLU 41 | 3.03 | 0.61 | 37.49 | -0.4184 | 0.1016 | -0.0047 |
| 339 | SLU 42 | 3.03 | 0.61 | 37.46 | -0.418 | 0.1015 | -0.0047 |
| 339 | SLU 43 | 2.64 | 0.52 | 35.34 | -0.3558 | 0.0898 | -0.004 |
| 339 | SLU 44 | 2.64 | 0.52 | 35.3 | -0.3552 | 0.0897 | -0.004 |
| 339 | SLU 45 | 2.61 | 0.54 | 36.04 | -0.3662 | 0.0876 | -0.0041 |
| 339 | SLU 46 | 2.61 | 0.54 | 36.02 | -0.3658 | 0.0875 | -0.0041 |
| 339 | SLU 47 | 2.55 | 0.53 | 35.65 | -0.3606 | 0.0854 | -0.0041 |
| 339 | SLU 48 | 2.53 | 0.55 | 36.39 | -0.3716 | 0.0833 | -0.0042 |
| 339 | SLU 49 | 2.53 | 0.54 | 36.37 | -0.3712 | 0.0832 | -0.0042 |
| 339 | SLU 50 | 2.47 | 0.54 | 36.05 | -0.3666 | 0.0812 | -0.0041 |
| 339 | SLU 51 | 2.47 | 0.54 | 36.02 | -0.3662 | 0.0811 | -0.0041 |
| 339 | SLU 52 | 3.09 | 0.6 | 39.12 | -0.4085 | 0.1054 | -0.0046 |
| 339 | SLU 53 | 3.06 | 0.62 | 39.86 | -0.4195 | 0.1033 | -0.0047 |
| 339 | SLU 54 | 3.06 | 0.61 | 39.84 | -0.4191 | 0.1032 | -0.0047 |
| 339 | SLU 55 | 3 | 0.61 | 39.47 | -0.4139 | 0.1011 | -0.0047 |
| 339 | SLU 56 | 2.98 | 0.62 | 40.22 | -0.4248 | 0.099 | -0.0048 |
| 339 | SLU 57 | 2.98 | 0.62 | 40.19 | -0.4245 | 0.0989 | -0.0048 |
| 339 | SLU 58 | 2.93 | 0.62 | 39.87 | -0.4198 | 0.0969 | -0.0047 |
| 339 | SLU 59 | 2.92 | 0.62 | 39.84 | -0.4195 | 0.0968 | -0.0047 |
| 339 | SLU 60 | 3.28 | 0.63 | 40.8 | -0.4319 | 0.1122 | -0.0049 |
| 339 | SLU 61 | 3.28 | 0.63 | 40.78 | -0.4315 | 0.1122 | -0.0049 |
| 339 | SLU 62 | 3.2 | 0.64 | 41.15 | -0.4373 | 0.1079 | -0.0049 |
| 339 | SLU 63 | 3.2 | 0.64 | 41.13 | -0.4369 | 0.1078 | -0.0049 |
| 339 | SLU 64 | 2.99 | 0.59 | 38.89 | -0.4058 | 0.1012 | -0.0046 |
| 339 | SLU 65 | 2.98 | 0.59 | 38.85 | -0.4052 | 0.1011 | -0.0046 |
| 339 | SLU 66 | 2.96 | 0.61 | 39.59 | -0.4162 | 0.099 | -0.0047 |
| 339 | SLU 67 | 2.96 | 0.61 | 39.57 | -0.4159 | 0.0989 | -0.0047 |
| 339 | SLU 68 | 2.9 | 0.6 | 39.2 | -0.4106 | 0.0968 | -0.0046 |
| 339 | SLU 69 | 2.88 | 0.62 | 39.95 | -0.4216 | 0.0947 | -0.0047 |
| 339 | SLU 70 | 2.88 | 0.62 | 39.92 | -0.4213 | 0.0946 | -0.0047 |
| 339 | SLU 71 | 2.82 | 0.61 | 39.6 | -0.4166 | 0.0925 | -0.0047 |
| 339 | SLU 72 | 2.82 | 0.61 | 39.57 | -0.4162 | 0.0925 | -0.0047 |
| 339 | SLU 73 | 3.44 | 0.67 | 42.67 | -0.4585 | 0.1168 | -0.0052 |
| 339 | SLU 74 | 3.41 | 0.69 | 43.41 | -0.4695 | 0.1147 | -0.0053 |
| 339 | SLU 75 | 3.41 | 0.69 | 43.39 | -0.4691 | 0.1146 | -0.0053 |
| 339 | SLU 76 | 3.35 | 0.68 | 43.02 | -0.4639 | 0.1125 | -0.0052 |
| 339 | SLU 77 | 3.33 | 0.7 | 43.77 | -0.4749 | 0.1104 | -0.0053 |
| 339 | SLU 78 | 3.33 | 0.7 | 43.74 | -0.4745 | 0.1103 | -0.0053 |
| 339 | SLU 79 | 3.27 | 0.69 | 43.42 | -0.4699 | 0.1082 | -0.0053 |
| 339 | SLU 80 | 3.27 | 0.69 | 43.39 | -0.4695 | 0.1082 | -0.0053 |
| 339 | SLU 81 | 3.63 | 0.71 | 44.35 | -0.4819 | 0.1236 | -0.0054 |
| 339 | SLU 82 | 3.63 | 0.71 | 44.33 | -0.4816 | 0.1235 | -0.0054 |
| 339 | SLU 83 | 3.55 | 0.71 | 44.71 | -0.4873 | 0.1193 | -0.0055 |
| 339 | SLU 84 | 3.55 | 0.71 | 44.68 | -0.487 | 0.1192 | -0.0055 |
| 339 | SLE RA 1 | 2.22 | 0.44 | 29.14 | -0.3012 | 0.0753 | -0.0034 |
| 339 | SLE RA 2 | 2.22 | 0.44 | 29.11 | -0.3008 | 0.0753 | -0.0034 |
| 339 | SLE RA 3 | 2.2 | 0.45 | 29.6 | -0.3081 | 0.0739 | -0.0035 |
| 339 | SLE RA 4 | 2.2 | 0.45 | 29.59 | -0.3079 | 0.0738 | -0.0035 |
| 339 | SLE RA 5 | 2.16 | 0.45 | 29.34 | -0.3044 | 0.0724 | -0.0034 |
| 339 | SLE RA 6 | 2.15 | 0.46 | 29.84 | -0.3117 | 0.071 | -0.0035 |
| 339 | SLE RA 7 | 2.15 | 0.46 | 29.82 | -0.3115 | 0.0709 | -0.0035 |
| 339 | SLE RA 8 | 2.11 | 0.45 | 29.61 | -0.3084 | 0.0696 | -0.0035 |
| 339 | SLE RA 9 | 2.11 | 0.45 | 29.59 | -0.3081 | 0.0695 | -0.0035 |
| 339 | SLE RA 10 | 2.52 | 0.49 | 31.66 | -0.3363 | 0.0857 | -0.0038 |
| 339 | SLE RA 11 | 2.51 | 0.5 | 32.15 | -0.3436 | 0.0843 | -0.0039 |
| 339 | SLE RA 12 | 2.5 | 0.5 | 32.13 | -0.3434 | 0.0843 | -0.0039 |
| 339 | SLE RA 13 | 2.47 | 0.5 | 31.89 | -0.3399 | 0.0828 | -0.0038 |
| 339 | SLE RA 14 | 2.45 | 0.51 | 32.39 | -0.3472 | 0.0814 | -0.0039 |
| 339 | SLE RA 15 | 2.45 | 0.51 | 32.37 | -0.347 | 0.0814 | -0.0039 |
| 339 | SLE RA 16 | 2.41 | 0.5 | 32.16 | -0.3439 | 0.08 | -0.0039 |
| 339 | SLE RA 17 | 2.41 | 0.5 | 32.14 | -0.3436 | 0.08 | -0.0039 |
| 339 | SLE RA 18 | 2.65 | 0.52 | 32.78 | -0.3519 | 0.0903 | -0.004 |
| 339 | SLE RA 19 | 2.65 | 0.52 | 32.76 | -0.3517 | 0.0902 | -0.004 |
| 339 | SLE RA 20 | 2.6 | 0.52 | 33.01 | -0.3555 | 0.0874 | -0.004 |
| 339 | SLE RA 21 | 2.6 | 0.52 | 32.99 | -0.3553 | 0.0874 | -0.004 |
| 339 | SLE FR 1 | 2.22 | 0.44 | 29.14 | -0.3012 | 0.0753 | -0.0034 |
| 339 | SLE FR 2 | 2.22 | 0.44 | 29.13 | -0.3011 | 0.0753 | -0.0034 |
| 339 | SLE FR 3 | 2.2 | 0.44 | 29.23 | -0.3026 | 0.0742 | -0.0034 |
| 339 | SLE FR 4 | 2.35 | 0.46 | 30.22 | -0.3163 | 0.0798 | -0.0036 |
| 339 | SLE FR 5 | 2.33 | 0.47 | 30.32 | -0.3178 | 0.0787 | -0.0036 |
| 339 | SLE FR 6 | 2.44 | 0.48 | 30.96 | -0.3265 | 0.0828 | -0.0037 |
| 339 | SLE QP 1 | 2.22 | 0.44 | 29.14 | -0.3012 | 0.0753 | -0.0034 |
| 339 | SLE QP 2 | 2.35 | 0.46 | 30.23 | -0.3164 | 0.0798 | -0.0036 |
| 339 | SLD 1 | 10.11 | 0.34 | 30.51 | -0.2156 | 0.4158 | -0.0026 |
| 339 | SLD 2 | 10.11 | 0.34 | 30.51 | -0.2156 | 0.4158 | -0.0026 |
| 339 | SLD 3 | 9.47 | 0.47 | 32.4 | -0.316 | 0.3886 | -0.0036 |
| 339 | SLD 4 | 9.47 | 0.47 | 32.4 | -0.316 | 0.3886 | -0.0036 |
| 339 | SLD 5 | 5.65 | 0.24 | 27.45 | -0.1338 | 0.2218 | -0.0017 |

| Nodo | Cont. | Reazione a traslazione | | | Reazione a rotazione | | |
|---|---|---|---|---|---|---|---|
| Ind. | N.br. | x | y | z | x | y | z |
| 339 | SLD 6 | 5.65 | 0.24 | 27.45 | -0.1338 | 0.2218 | -0.0017 |
| 339 | SLD 7 | 3.51 | 0.65 | 33.75 | -0.4687 | 0.1312 | -0.0051 |
| 339 | SLD 8 | 3.51 | 0.65 | 33.75 | -0.4687 | 0.1312 | -0.0051 |
| 339 | SLD 9 | 1.19 | 0.27 | 26.71 | -0.1641 | 0.0284 | -0.002 |
| 339 | SLD 10 | 1.19 | 0.27 | 26.71 | -0.1641 | 0.0284 | -0.002 |
| 339 | SLD 11 | -0.95 | 0.69 | 33.01 | -0.499 | -0.0622 | -0.0054 |
| 339 | SLD 12 | -0.95 | 0.69 | 33.01 | -0.499 | -0.0622 | -0.0054 |
| 339 | SLD 13 | -4.77 | 0.46 | 28.06 | -0.3167 | -0.229 | -0.0035 |
| 339 | SLD 14 | -4.77 | 0.46 | 28.06 | -0.3167 | -0.229 | -0.0035 |
| 339 | SLD 15 | -5.41 | 0.58 | 29.95 | -0.4172 | -0.2562 | -0.0045 |
| 339 | SLD 16 | -5.41 | 0.58 | 29.95 | -0.4172 | -0.2562 | -0.0045 |
| 339 | SLV 1 | 20.12 | 0.18 | 30.93 | -0.0706 | 0.8492 | -0.0012 |
| 339 | SLV 2 | 20.12 | 0.18 | 30.93 | -0.0706 | 0.8492 | -0.0012 |
| 339 | SLV 3 | 18.6 | 0.47 | 35.39 | -0.3063 | 0.7845 | -0.0036 |
| 339 | SLV 4 | 18.6 | 0.47 | 35.39 | -0.3063 | 0.7845 | -0.0036 |
| 339 | SLV 5 | 10 | -0.06 | 23.68 | 0.1148 | 0.4087 | 0.0008 |
| 339 | SLV 6 | 10 | -0.06 | 23.68 | 0.1148 | 0.4087 | 0.0008 |
| 339 | SLV 7 | 4.91 | 0.9 | 38.53 | -0.6708 | 0.1932 | -0.0072 |
| 339 | SLV 8 | 4.91 | 0.9 | 38.53 | -0.6708 | 0.1932 | -0.0072 |
| 339 | SLV 9 | -0.21 | 0.02 | 21.93 | 0.0381 | -0.0335 | 0.0001 |
| 339 | SLV 10 | -0.21 | 0.02 | 21.93 | 0.0381 | -0.0335 | 0.0001 |
| 339 | SLV 11 | -5.3 | 0.99 | 36.78 | -0.7476 | -0.249 | -0.0079 |
| 339 | SLV 12 | -5.3 | 0.99 | 36.78 | -0.7476 | -0.249 | -0.0079 |
| 339 | SLV 13 | -13.89 | 0.46 | 25.07 | -0.3265 | -0.6249 | -0.0035 |
| 339 | SLV 14 | -13.89 | 0.46 | 25.07 | -0.3265 | -0.6249 | -0.0035 |
| 339 | SLV 15 | -15.42 | 0.75 | 29.53 | -0.5622 | -0.6895 | -0.0059 |
| 339 | SLV 16 | -15.42 | 0.75 | 29.53 | -0.5622 | -0.6895 | -0.0059 |
| 340 | SLU 1 | 2.56 | 0.4 | 30.35 | -0.2579 | 0.1106 | -0.0028 |
| 340 | SLU 2 | 2.55 | 0.4 | 30.3 | -0.2574 | 0.1104 | -0.0028 |
| 340 | SLU 3 | 2.57 | 0.41 | 31.15 | -0.2674 | 0.1111 | -0.0029 |
| 340 | SLU 4 | 2.56 | 0.41 | 31.11 | -0.2671 | 0.111 | -0.0029 |
| 340 | SLU 5 | 2.5 | 0.41 | 30.71 | -0.2624 | 0.1084 | -0.0028 |
| 340 | SLU 6 | 2.52 | 0.42 | 31.56 | -0.2723 | 0.1092 | -0.0029 |
| 340 | SLU 7 | 2.51 | 0.42 | 31.52 | -0.272 | 0.109 | -0.0029 |
| 340 | SLU 8 | 2.46 | 0.42 | 31.17 | -0.2678 | 0.1067 | -0.0029 |
| 340 | SLU 9 | 2.46 | 0.42 | 31.14 | -0.2675 | 0.1066 | -0.0029 |
| 340 | SLU 10 | 3.09 | 0.47 | 34.58 | -0.3054 | 0.1332 | -0.0033 |
| 340 | SLU 11 | 3.1 | 0.49 | 35.42 | -0.3154 | 0.1339 | -0.0034 |
| 340 | SLU 12 | 3.1 | 0.49 | 35.39 | -0.3151 | 0.1338 | -0.0034 |
| 340 | SLU 13 | 3.04 | 0.48 | 34.99 | -0.3103 | 0.1313 | -0.0033 |
| 340 | SLU 14 | 3.05 | 0.5 | 35.83 | -0.3203 | 0.132 | -0.0035 |
| 340 | SLU 15 | 3.05 | 0.5 | 35.8 | -0.32 | 0.1318 | -0.0034 |
| 340 | SLU 16 | 3 | 0.49 | 35.45 | -0.3158 | 0.1295 | -0.0034 |
| 340 | SLU 17 | 2.99 | 0.49 | 35.42 | -0.3155 | 0.1294 | -0.0034 |
| 340 | SLU 18 | 3.32 | 0.51 | 36.47 | -0.3265 | 0.1432 | -0.0035 |
| 340 | SLU 19 | 3.32 | 0.51 | 36.43 | -0.3262 | 0.1431 | -0.0035 |
| 340 | SLU 20 | 3.27 | 0.51 | 36.88 | -0.3314 | 0.1413 | -0.0036 |
| 340 | SLU 21 | 3.27 | 0.51 | 36.84 | -0.3311 | 0.1411 | -0.0036 |
| 340 | SLU 22 | 2.99 | 0.47 | 34.32 | -0.303 | 0.1294 | -0.0033 |
| 340 | SLU 23 | 2.99 | 0.47 | 34.27 | -0.3025 | 0.1291 | -0.0033 |
| 340 | SLU 24 | 3 | 0.48 | 35.11 | -0.3125 | 0.1299 | -0.0034 |
| 340 | SLU 25 | 3 | 0.48 | 35.08 | -0.3121 | 0.1297 | -0.0034 |
| 340 | SLU 26 | 2.94 | 0.48 | 34.68 | -0.3074 | 0.1272 | -0.0033 |
| 340 | SLU 27 | 2.95 | 0.49 | 35.52 | -0.3174 | 0.1279 | -0.0034 |
| 340 | SLU 28 | 2.95 | 0.49 | 35.49 | -0.3171 | 0.1278 | -0.0034 |
| 340 | SLU 29 | 2.9 | 0.49 | 35.14 | -0.3129 | 0.1255 | -0.0034 |
| 340 | SLU 30 | 2.89 | 0.48 | 35.11 | -0.3126 | 0.1253 | -0.0034 |
| 340 | SLU 31 | 3.52 | 0.54 | 38.55 | -0.3505 | 0.152 | -0.0038 |
| 340 | SLU 32 | 3.54 | 0.56 | 39.39 | -0.3604 | 0.1527 | -0.0039 |
| 340 | SLU 33 | 3.53 | 0.56 | 39.36 | -0.3601 | 0.1526 | -0.0039 |
| 340 | SLU 34 | 3.47 | 0.55 | 38.95 | -0.3554 | 0.15 | -0.0038 |
| 340 | SLU 35 | 3.49 | 0.57 | 39.8 | -0.3654 | 0.1507 | -0.0039 |
| 340 | SLU 36 | 3.48 | 0.57 | 39.77 | -0.365 | 0.1506 | -0.0039 |
| 340 | SLU 37 | 3.43 | 0.56 | 39.42 | -0.3608 | 0.1483 | -0.0039 |
| 340 | SLU 38 | 3.43 | 0.56 | 39.39 | -0.3605 | 0.1482 | -0.0039 |
| 340 | SLU 39 | 3.76 | 0.58 | 40.43 | -0.3715 | 0.162 | -0.004 |
| 340 | SLU 40 | 3.75 | 0.58 | 40.4 | -0.3712 | 0.1618 | -0.004 |
| 340 | SLU 41 | 3.71 | 0.58 | 40.84 | -0.3765 | 0.16 | -0.0041 |
| 340 | SLU 42 | 3.7 | 0.58 | 40.81 | -0.3762 | 0.1599 | -0.0041 |
| 340 | SLU 43 | 3.18 | 0.5 | 38.1 | -0.3199 | 0.1374 | -0.0034 |
| 340 | SLU 44 | 3.17 | 0.49 | 38.05 | -0.3194 | 0.1371 | -0.0034 |
| 340 | SLU 45 | 3.18 | 0.51 | 38.89 | -0.3293 | 0.1379 | -0.0035 |
| 340 | SLU 46 | 3.18 | 0.51 | 38.86 | -0.329 | 0.1377 | -0.0035 |
| 340 | SLU 47 | 3.12 | 0.5 | 38.46 | -0.3243 | 0.1352 | -0.0035 |
| 340 | SLU 48 | 3.14 | 0.52 | 39.3 | -0.3343 | 0.1359 | -0.0036 |
| 340 | SLU 49 | 3.13 | 0.52 | 39.27 | -0.334 | 0.1358 | -0.0036 |
| 340 | SLU 50 | 3.08 | 0.51 | 38.92 | -0.3297 | 0.1335 | -0.0036 |
| 340 | SLU 51 | 3.08 | 0.51 | 38.89 | -0.3294 | 0.1333 | -0.0035 |
| 340 | SLU 52 | 3.7 | 0.57 | 42.32 | -0.3673 | 0.16 | -0.004 |
| 340 | SLU 53 | 3.72 | 0.58 | 43.17 | -0.3773 | 0.1607 | -0.0041 |
| 340 | SLU 54 | 3.71 | 0.58 | 43.14 | -0.377 | 0.1606 | -0.0041 |
| 340 | SLU 55 | 3.66 | 0.58 | 42.73 | -0.3723 | 0.158 | -0.004 |
| 340 | SLU 56 | 3.67 | 0.59 | 43.58 | -0.3822 | 0.1588 | -0.0041 |
| 340 | SLU 57 | 3.67 | 0.59 | 43.55 | -0.3819 | 0.1586 | -0.0041 |
| 340 | SLU 58 | 3.61 | 0.59 | 43.2 | -0.3777 | 0.1563 | -0.0041 |
| 340 | SLU 59 | 3.61 | 0.59 | 43.17 | -0.3774 | 0.1562 | -0.0041 |
| 340 | SLU 60 | 3.94 | 0.6 | 44.21 | -0.3884 | 0.17 | -0.0042 |
| 340 | SLU 61 | 3.94 | 0.6 | 44.18 | -0.3881 | 0.1698 | -0.0042 |

| Nodo | Cont. | Reazione a traslazione | | | Reazione a rotazione | | |
|---|---|---|---|---|---|---|---|
| Ind. | N.br. | x | y | z | x | y | z |
| 340 | SLU 62 | 3.89 | 0.61 | 44.62 | -0.3934 | 0.168 | -0.0042 |
| 340 | SLU 63 | 3.89 | 0.61 | 44.59 | -0.393 | 0.1679 | -0.0042 |
| 340 | SLU 64 | 3.61 | 0.57 | 42.07 | -0.3649 | 0.1561 | -0.0039 |
| 340 | SLU 65 | 3.61 | 0.56 | 42.01 | -0.3644 | 0.1559 | -0.0039 |
| 340 | SLU 66 | 3.62 | 0.58 | 42.86 | -0.3744 | 0.1566 | -0.004 |
| 340 | SLU 67 | 3.62 | 0.58 | 42.83 | -0.3741 | 0.1565 | -0.004 |
| 340 | SLU 68 | 3.56 | 0.57 | 42.42 | -0.3693 | 0.1539 | -0.004 |
| 340 | SLU 69 | 3.57 | 0.59 | 43.27 | -0.3793 | 0.1547 | -0.0041 |
| 340 | SLU 70 | 3.57 | 0.59 | 43.24 | -0.379 | 0.1545 | -0.0041 |
| 340 | SLU 71 | 3.52 | 0.58 | 42.89 | -0.3748 | 0.1522 | -0.004 |
| 340 | SLU 72 | 3.51 | 0.58 | 42.86 | -0.3745 | 0.1521 | -0.004 |
| 340 | SLU 73 | 4.14 | 0.64 | 46.29 | -0.4124 | 0.1787 | -0.0044 |
| 340 | SLU 74 | 4.15 | 0.65 | 47.14 | -0.4224 | 0.1795 | -0.0045 |
| 340 | SLU 75 | 4.15 | 0.65 | 47.1 | -0.4221 | 0.1793 | -0.0045 |
| 340 | SLU 76 | 4.09 | 0.65 | 46.7 | -0.4173 | 0.1768 | -0.0045 |
| 340 | SLU 77 | 4.11 | 0.66 | 47.55 | -0.4273 | 0.1775 | -0.0046 |
| 340 | SLU 78 | 4.1 | 0.66 | 47.51 | -0.427 | 0.1774 | -0.0046 |
| 340 | SLU 79 | 4.05 | 0.66 | 47.17 | -0.4228 | 0.1751 | -0.0046 |
| 340 | SLU 80 | 4.05 | 0.66 | 47.13 | -0.4225 | 0.1749 | -0.0046 |
| 340 | SLU 81 | 4.37 | 0.67 | 48.18 | -0.4335 | 0.1887 | -0.0047 |
| 340 | SLU 82 | 4.37 | 0.67 | 48.15 | -0.4332 | 0.1886 | -0.0047 |
| 340 | SLU 83 | 4.33 | 0.68 | 48.59 | -0.4384 | 0.1868 | -0.0047 |
| 340 | SLU 84 | 4.32 | 0.68 | 48.56 | -0.4381 | 0.1866 | -0.0047 |
| 340 | SLE RA 1 | 2.68 | 0.42 | 31.49 | -0.2708 | 0.116 | -0.0029 |
| 340 | SLE RA 2 | 2.68 | 0.42 | 31.45 | -0.2705 | 0.1158 | -0.0029 |
| 340 | SLE RA 3 | 2.69 | 0.43 | 32.02 | -0.2771 | 0.1163 | -0.003 |
| 340 | SLE RA 4 | 2.69 | 0.43 | 31.99 | -0.2769 | 0.1162 | -0.003 |
| 340 | SLE RA 5 | 2.65 | 0.42 | 31.72 | -0.2738 | 0.1145 | -0.0029 |
| 340 | SLE RA 6 | 2.66 | 0.43 | 32.29 | -0.2804 | 0.115 | -0.003 |
| 340 | SLE RA 7 | 2.65 | 0.43 | 32.27 | -0.2802 | 0.1149 | -0.003 |
| 340 | SLE RA 8 | 2.62 | 0.43 | 32.04 | -0.2774 | 0.1134 | -0.003 |
| 340 | SLE RA 9 | 2.62 | 0.43 | 32.01 | -0.2772 | 0.1133 | -0.003 |
| 340 | SLE RA 10 | 3.03 | 0.47 | 34.3 | -0.3025 | 0.131 | -0.0033 |
| 340 | SLE RA 11 | 3.04 | 0.48 | 34.87 | -0.3091 | 0.1315 | -0.0033 |
| 340 | SLE RA 12 | 3.04 | 0.48 | 34.85 | -0.3089 | 0.1314 | -0.0033 |
| 340 | SLE RA 13 | 3 | 0.47 | 34.58 | -0.3057 | 0.1297 | -0.0033 |
| 340 | SLE RA 14 | 3.01 | 0.48 | 35.14 | -0.3124 | 0.1302 | -0.0034 |
| 340 | SLE RA 15 | 3.01 | 0.48 | 35.12 | -0.3122 | 0.1301 | -0.0034 |
| 340 | SLE RA 16 | 2.97 | 0.48 | 34.89 | -0.3094 | 0.1286 | -0.0033 |
| 340 | SLE RA 17 | 2.97 | 0.48 | 34.86 | -0.3092 | 0.1285 | -0.0033 |
| 340 | SLE RA 18 | 3.19 | 0.49 | 35.56 | -0.3165 | 0.1377 | -0.0034 |
| 340 | SLE RA 19 | 3.19 | 0.49 | 35.54 | -0.3163 | 0.1376 | -0.0034 |
| 340 | SLE RA 20 | 3.16 | 0.5 | 35.84 | -0.3198 | 0.1364 | -0.0034 |
| 340 | SLE RA 21 | 3.16 | 0.5 | 35.81 | -0.3196 | 0.1363 | -0.0034 |
| 340 | SLE FR 1 | 2.68 | 0.42 | 31.49 | -0.2708 | 0.116 | -0.0029 |
| 340 | SLE FR 2 | 2.68 | 0.42 | 31.48 | -0.2708 | 0.116 | -0.0029 |
| 340 | SLE FR 3 | 2.67 | 0.42 | 31.6 | -0.2721 | 0.1155 | -0.0029 |
| 340 | SLE FR 4 | 2.83 | 0.44 | 32.7 | -0.2845 | 0.1225 | -0.0031 |
| 340 | SLE FR 5 | 2.82 | 0.44 | 32.82 | -0.2858 | 0.122 | -0.0031 |
| 340 | SLE FR 6 | 2.94 | 0.46 | 33.53 | -0.2937 | 0.1269 | -0.0032 |
| 340 | SLE QP 1 | 2.68 | 0.42 | 31.49 | -0.2708 | 0.116 | -0.0029 |
| 340 | SLE QP 2 | 2.84 | 0.44 | 32.71 | -0.2845 | 0.1225 | -0.0031 |
| 340 | SLD 1 | 10.41 | 0.31 | 33.16 | -0.1851 | 0.4562 | -0.0021 |
| 340 | SLD 2 | 10.41 | 0.31 | 33.16 | -0.1851 | 0.4562 | -0.0021 |
| 340 | SLD 3 | 9.72 | 0.42 | 34.92 | -0.2669 | 0.4287 | -0.0029 |
| 340 | SLD 4 | 9.72 | 0.42 | 34.92 | -0.2669 | 0.4287 | -0.0029 |
| 340 | SLD 5 | 6.16 | 0.24 | 30.18 | -0.1306 | 0.2643 | -0.0016 |
| 340 | SLD 6 | 6.16 | 0.24 | 30.18 | -0.1306 | 0.2643 | -0.0016 |
| 340 | SLD 7 | 3.85 | 0.59 | 36.04 | -0.4033 | 0.1726 | -0.0042 |
| 340 | SLD 8 | 3.85 | 0.59 | 36.04 | -0.4033 | 0.1726 | -0.0042 |
| 340 | SLD 9 | 1.82 | 0.29 | 29.38 | -0.1657 | 0.0724 | -0.0019 |
| 340 | SLD 10 | 1.82 | 0.29 | 29.38 | -0.1657 | 0.0724 | -0.0019 |
| 340 | SLD 11 | -0.49 | 0.64 | 35.24 | -0.4385 | -0.0193 | -0.0045 |
| 340 | SLD 12 | -0.49 | 0.64 | 35.24 | -0.4385 | -0.0193 | -0.0045 |
| 340 | SLD 13 | -4.05 | 0.47 | 30.5 | -0.3022 | -0.1836 | -0.0032 |
| 340 | SLD 14 | -4.05 | 0.47 | 30.5 | -0.3022 | -0.1836 | -0.0032 |
| 340 | SLD 15 | -4.74 | 0.57 | 32.26 | -0.384 | -0.2111 | -0.004 |
| 340 | SLD 16 | -4.74 | 0.57 | 32.26 | -0.384 | -0.2111 | -0.004 |
| 340 | SLV 1 | 20.18 | 0.12 | 33.82 | -0.0405 | 0.8867 | -0.0008 |
| 340 | SLV 2 | 20.18 | 0.12 | 33.82 | -0.0405 | 0.8867 | -0.0008 |
| 340 | SLV 3 | 18.54 | 0.37 | 37.95 | -0.2323 | 0.8212 | -0.0027 |
| 340 | SLV 4 | 18.54 | 0.37 | 37.95 | -0.2323 | 0.8212 | -0.0027 |
| 340 | SLV 5 | 10.53 | -0.03 | 26.77 | 0.0796 | 0.451 | 0.0004 |
| 340 | SLV 6 | 10.53 | -0.03 | 26.77 | 0.0796 | 0.451 | 0.0004 |
| 340 | SLV 7 | 5.05 | 0.79 | 40.55 | -0.5598 | 0.2329 | -0.0057 |
| 340 | SLV 8 | 5.05 | 0.79 | 40.55 | -0.5598 | 0.2329 | -0.0057 |
| 340 | SLV 9 | 0.62 | 0.09 | 24.87 | -0.0093 | 0.0121 | -0.0004 |
| 340 | SLV 10 | 0.62 | 0.09 | 24.87 | -0.0093 | 0.0121 | -0.0004 |
| 340 | SLV 11 | -4.86 | 0.91 | 38.65 | -0.6487 | -0.206 | -0.0065 |
| 340 | SLV 12 | -4.86 | 0.91 | 38.65 | -0.6487 | -0.206 | -0.0065 |
| 340 | SLV 13 | -12.87 | 0.51 | 27.47 | -0.3368 | -0.5762 | -0.0035 |
| 340 | SLV 14 | -12.87 | 0.51 | 27.47 | -0.3368 | -0.5762 | -0.0035 |
| 340 | SLV 15 | -14.51 | 0.76 | 31.6 | -0.5286 | -0.6417 | -0.0053 |
| 340 | SLV 16 | -14.51 | 0.76 | 31.6 | -0.5286 | -0.6417 | -0.0053 |
| 341 | SLU 1 | 1.86 | 0.29 | 32.59 | -0.1958 | 0.0571 | -0.0018 |
| 341 | SLU 2 | 1.85 | 0.29 | 32.53 | -0.1954 | 0.0569 | -0.0018 |
| 341 | SLU 3 | 1.85 | 0.3 | 33.48 | -0.2029 | 0.0554 | -0.0018 |
| 341 | SLU 4 | 1.84 | 0.3 | 33.44 | -0.2027 | 0.0553 | -0.0018 |

| Nodo | Cont. | Reazione a traslazione | | | Reazione a rotazione | | |
|---|---|---|---|---|---|---|---|
| Ind. | N.br. | x | y | z | x | y | z |
| 341 | SLU 5 | 1.8 | 0.29 | 33.01 | -0.1991 | 0.0539 | -0.0018 |
| 341 | SLU 6 | 1.8 | 0.31 | 33.96 | -0.2066 | 0.0523 | -0.0019 |
| 341 | SLU 7 | 1.79 | 0.31 | 33.92 | -0.2063 | 0.0522 | -0.0019 |
| 341 | SLU 8 | 1.76 | 0.3 | 33.55 | -0.2031 | 0.0509 | -0.0018 |
| 341 | SLU 9 | 1.75 | 0.3 | 33.51 | -0.2029 | 0.0508 | -0.0018 |
| 341 | SLU 10 | 2.26 | 0.34 | 37.28 | -0.2319 | 0.0698 | -0.0021 |
| 341 | SLU 11 | 2.25 | 0.35 | 38.23 | -0.2394 | 0.0682 | -0.0022 |
| 341 | SLU 12 | 2.25 | 0.35 | 38.19 | -0.2391 | 0.0681 | -0.0022 |
| 341 | SLU 13 | 2.21 | 0.35 | 37.76 | -0.2355 | 0.0667 | -0.0021 |
| 341 | SLU 14 | 2.2 | 0.36 | 38.71 | -0.243 | 0.0651 | -0.0022 |
| 341 | SLU 15 | 2.2 | 0.36 | 38.67 | -0.2428 | 0.065 | -0.0022 |
| 341 | SLU 16 | 2.16 | 0.35 | 38.3 | -0.2396 | 0.0638 | -0.0022 |
| 341 | SLU 17 | 2.16 | 0.35 | 38.26 | -0.2393 | 0.0637 | -0.0022 |
| 341 | SLU 18 | 2.43 | 0.37 | 39.38 | -0.2479 | 0.0754 | -0.0022 |
| 341 | SLU 19 | 2.43 | 0.37 | 39.34 | -0.2476 | 0.0753 | -0.0022 |
| 341 | SLU 20 | 2.38 | 0.37 | 39.86 | -0.2515 | 0.0723 | -0.0023 |
| 341 | SLU 21 | 2.38 | 0.37 | 39.82 | -0.2513 | 0.0722 | -0.0023 |
| 341 | SLU 22 | 2.18 | 0.34 | 36.99 | -0.23 | 0.0665 | -0.0021 |
| 341 | SLU 23 | 2.17 | 0.34 | 36.93 | -0.2296 | 0.0663 | -0.0021 |
| 341 | SLU 24 | 2.17 | 0.35 | 37.88 | -0.2371 | 0.0648 | -0.0022 |
| 341 | SLU 25 | 2.16 | 0.35 | 37.85 | -0.2369 | 0.0647 | -0.0021 |
| 341 | SLU 26 | 2.12 | 0.35 | 37.41 | -0.2333 | 0.0633 | -0.0021 |
| 341 | SLU 27 | 2.12 | 0.36 | 38.36 | -0.2408 | 0.0617 | -0.0022 |
| 341 | SLU 28 | 2.11 | 0.36 | 38.32 | -0.2405 | 0.0616 | -0.0022 |
| 341 | SLU 29 | 2.08 | 0.35 | 37.95 | -0.2373 | 0.0603 | -0.0022 |
| 341 | SLU 30 | 2.07 | 0.35 | 37.91 | -0.2371 | 0.0602 | -0.0022 |
| 341 | SLU 31 | 2.58 | 0.39 | 41.68 | -0.2661 | 0.0792 | -0.0024 |
| 341 | SLU 32 | 2.57 | 0.41 | 42.63 | -0.2736 | 0.0776 | -0.0025 |
| 341 | SLU 33 | 2.57 | 0.41 | 42.6 | -0.2733 | 0.0775 | -0.0025 |
| 341 | SLU 34 | 2.53 | 0.4 | 42.16 | -0.2697 | 0.0761 | -0.0024 |
| 341 | SLU 35 | 2.52 | 0.41 | 43.11 | -0.2772 | 0.0745 | -0.0025 |
| 341 | SLU 36 | 2.52 | 0.41 | 43.07 | -0.277 | 0.0744 | -0.0025 |
| 341 | SLU 37 | 2.48 | 0.41 | 42.7 | -0.2738 | 0.0732 | -0.0025 |
| 341 | SLU 38 | 2.48 | 0.41 | 42.66 | -0.2735 | 0.0731 | -0.0025 |
| 341 | SLU 39 | 2.75 | 0.42 | 43.78 | -0.2821 | 0.0848 | -0.0026 |
| 341 | SLU 40 | 2.75 | 0.42 | 43.74 | -0.2818 | 0.0847 | -0.0026 |
| 341 | SLU 41 | 2.7 | 0.42 | 44.26 | -0.2857 | 0.0817 | -0.0026 |
| 341 | SLU 42 | 2.7 | 0.42 | 44.22 | -0.2855 | 0.0816 | -0.0026 |
| 341 | SLU 43 | 2.31 | 0.36 | 40.86 | -0.2428 | 0.071 | -0.0022 |
| 341 | SLU 44 | 2.3 | 0.36 | 40.8 | -0.2424 | 0.0708 | -0.0022 |
| 341 | SLU 45 | 2.29 | 0.37 | 41.75 | -0.2499 | 0.0693 | -0.0023 |
| 341 | SLU 46 | 2.29 | 0.37 | 41.71 | -0.2497 | 0.0692 | -0.0023 |
| 341 | SLU 47 | 2.25 | 0.36 | 41.28 | -0.2461 | 0.0678 | -0.0022 |
| 341 | SLU 48 | 2.24 | 0.38 | 42.23 | -0.2536 | 0.0662 | -0.0023 |
| 341 | SLU 49 | 2.24 | 0.38 | 42.19 | -0.2534 | 0.0661 | -0.0023 |
| 341 | SLU 50 | 2.21 | 0.37 | 41.82 | -0.2501 | 0.0648 | -0.0023 |
| 341 | SLU 51 | 2.2 | 0.37 | 41.78 | -0.2499 | 0.0647 | -0.0023 |
| 341 | SLU 52 | 2.7 | 0.41 | 45.55 | -0.2789 | 0.0837 | -0.0025 |
| 341 | SLU 53 | 2.7 | 0.42 | 46.5 | -0.2864 | 0.0821 | -0.0026 |
| 341 | SLU 54 | 2.7 | 0.42 | 46.46 | -0.2862 | 0.082 | -0.0026 |
| 341 | SLU 55 | 2.65 | 0.42 | 46.03 | -0.2825 | 0.0806 | -0.0026 |
| 341 | SLU 56 | 2.65 | 0.43 | 46.98 | -0.29 | 0.079 | -0.0026 |
| 341 | SLU 57 | 2.65 | 0.43 | 46.94 | -0.2898 | 0.079 | -0.0026 |
| 341 | SLU 58 | 2.61 | 0.42 | 46.57 | -0.2866 | 0.0777 | -0.0026 |
| 341 | SLU 59 | 2.61 | 0.42 | 46.53 | -0.2863 | 0.0776 | -0.0026 |
| 341 | SLU 60 | 2.88 | 0.44 | 47.65 | -0.2949 | 0.0893 | -0.0027 |
| 341 | SLU 61 | 2.88 | 0.44 | 47.61 | -0.2947 | 0.0892 | -0.0027 |
| 341 | SLU 62 | 2.83 | 0.44 | 48.13 | -0.2985 | 0.0862 | -0.0027 |
| 341 | SLU 63 | 2.83 | 0.44 | 48.09 | -0.2983 | 0.0862 | -0.0027 |
| 341 | SLU 64 | 2.62 | 0.41 | 45.26 | -0.277 | 0.0804 | -0.0025 |
| 341 | SLU 65 | 2.62 | 0.41 | 45.2 | -0.2766 | 0.0802 | -0.0025 |
| 341 | SLU 66 | 2.61 | 0.42 | 46.15 | -0.2841 | 0.0787 | -0.0026 |
| 341 | SLU 67 | 2.61 | 0.42 | 46.11 | -0.2839 | 0.0786 | -0.0026 |
| 341 | SLU 68 | 2.57 | 0.42 | 45.68 | -0.2803 | 0.0772 | -0.0025 |
| 341 | SLU 69 | 2.56 | 0.43 | 46.63 | -0.2878 | 0.0756 | -0.0026 |
| 341 | SLU 70 | 2.56 | 0.43 | 46.59 | -0.2876 | 0.0755 | -0.0026 |
| 341 | SLU 71 | 2.53 | 0.42 | 46.22 | -0.2843 | 0.0742 | -0.0026 |
| 341 | SLU 72 | 2.52 | 0.42 | 46.18 | -0.2841 | 0.0741 | -0.0026 |
| 341 | SLU 73 | 3.02 | 0.46 | 49.95 | -0.3131 | 0.0931 | -0.0028 |
| 341 | SLU 74 | 3.02 | 0.47 | 50.9 | -0.3206 | 0.0915 | -0.0029 |
| 341 | SLU 75 | 3.01 | 0.47 | 50.86 | -0.3204 | 0.0914 | -0.0029 |
| 341 | SLU 76 | 2.97 | 0.47 | 50.43 | -0.3167 | 0.09 | -0.0029 |
| 341 | SLU 77 | 2.97 | 0.48 | 51.38 | -0.3242 | 0.0884 | -0.0029 |
| 341 | SLU 78 | 2.97 | 0.48 | 51.34 | -0.324 | 0.0883 | -0.0029 |
| 341 | SLU 79 | 2.93 | 0.48 | 50.97 | -0.3208 | 0.0871 | -0.0029 |
| 341 | SLU 80 | 2.93 | 0.47 | 50.93 | -0.3205 | 0.087 | -0.0029 |
| 341 | SLU 81 | 3.2 | 0.49 | 52.05 | -0.3291 | 0.0987 | -0.003 |
| 341 | SLU 82 | 3.2 | 0.49 | 52.01 | -0.3289 | 0.0986 | -0.003 |
| 341 | SLU 83 | 3.15 | 0.49 | 52.53 | -0.3327 | 0.0956 | -0.003 |
| 341 | SLU 84 | 3.15 | 0.49 | 52.49 | -0.3325 | 0.0955 | -0.003 |
| 341 | SLE RA 1 | 1.95 | 0.3 | 33.85 | -0.2056 | 0.0598 | -0.0019 |
| 341 | SLE RA 2 | 1.95 | 0.3 | 33.81 | -0.2053 | 0.0597 | -0.0019 |
| 341 | SLE RA 3 | 1.94 | 0.31 | 34.44 | -0.2103 | 0.0586 | -0.0019 |
| 341 | SLE RA 4 | 1.94 | 0.31 | 34.42 | -0.2102 | 0.0586 | -0.0019 |
| 341 | SLE RA 5 | 1.91 | 0.31 | 34.13 | -0.2078 | 0.0576 | -0.0019 |
| 341 | SLE RA 6 | 1.91 | 0.32 | 34.76 | -0.2128 | 0.0566 | -0.0019 |
| 341 | SLE RA 7 | 1.91 | 0.31 | 34.74 | -0.2126 | 0.0565 | -0.0019 |
| 341 | SLE RA 8 | 1.88 | 0.31 | 34.49 | -0.2104 | 0.0557 | -0.0019 |

| Nodo | Cont. | Reazione a traslazione | | | Reazione a rotazione | | |
|---|---|---|---|---|---|---|---|
| Ind. | N.br. | x | y | z | x | y | z |
| 341 | SLE RA 9 | 1.88 | 0.31 | 34.46 | -0.2103 | 0.0556 | -0.0019 |
| 341 | SLE RA 10 | 2.21 | 0.34 | 36.97 | -0.2296 | 0.0682 | -0.0021 |
| 341 | SLE RA 11 | 2.21 | 0.35 | 37.61 | -0.2346 | 0.0672 | -0.0021 |
| 341 | SLE RA 12 | 2.21 | 0.35 | 37.58 | -0.2345 | 0.0671 | -0.0021 |
| 341 | SLE RA 13 | 2.18 | 0.34 | 37.29 | -0.2321 | 0.0662 | -0.0021 |
| 341 | SLE RA 14 | 2.18 | 0.35 | 37.93 | -0.2371 | 0.0651 | -0.0021 |
| 341 | SLE RA 15 | 2.18 | 0.35 | 37.9 | -0.2369 | 0.0651 | -0.0021 |
| 341 | SLE RA 16 | 2.15 | 0.35 | 37.65 | -0.2347 | 0.0642 | -0.0021 |
| 341 | SLE RA 17 | 2.15 | 0.35 | 37.63 | -0.2346 | 0.0642 | -0.0021 |
| 341 | SLE RA 18 | 2.33 | 0.36 | 38.37 | -0.2403 | 0.072 | -0.0022 |
| 341 | SLE RA 19 | 2.33 | 0.36 | 38.35 | -0.2401 | 0.0719 | -0.0022 |
| 341 | SLE RA 20 | 2.3 | 0.36 | 38.69 | -0.2427 | 0.0699 | -0.0022 |
| 341 | SLE RA 21 | 2.3 | 0.36 | 38.67 | -0.2426 | 0.0699 | -0.0022 |
| 341 | SLE FR 1 | 1.95 | 0.3 | 33.85 | -0.2056 | 0.0598 | -0.0019 |
| 341 | SLE FR 2 | 1.95 | 0.3 | 33.84 | -0.2055 | 0.0598 | -0.0019 |
| 341 | SLE FR 3 | 1.94 | 0.31 | 33.98 | -0.2066 | 0.059 | -0.0019 |
| 341 | SLE FR 4 | 2.06 | 0.32 | 35.2 | -0.2159 | 0.0634 | -0.002 |
| 341 | SLE FR 5 | 2.05 | 0.32 | 35.34 | -0.217 | 0.0626 | -0.002 |
| 341 | SLE FR 6 | 2.14 | 0.33 | 36.11 | -0.2229 | 0.0659 | -0.002 |
| 341 | SLE QP 1 | 1.95 | 0.3 | 33.85 | -0.2056 | 0.0598 | -0.0019 |
| 341 | SLE QP 2 | 2.06 | 0.32 | 35.21 | -0.216 | 0.0634 | -0.002 |
| 341 | SLD 1 | 8.64 | 0.17 | 35.49 | -0.1217 | 0.3489 | -0.0012 |
| 341 | SLD 2 | 8.64 | 0.17 | 35.49 | -0.1217 | 0.3489 | -0.0012 |
| 341 | SLD 3 | 9.43 | 0.26 | 37.29 | -0.1826 | 0.3809 | -0.0017 |
| 341 | SLD 4 | 9.43 | 0.26 | 37.29 | -0.1826 | 0.3809 | -0.0017 |
| 341 | SLD 5 | 2.85 | 0.14 | 32.56 | -0.0954 | 0.1006 | -0.0009 |
| 341 | SLD 6 | 2.85 | 0.14 | 32.56 | -0.0954 | 0.1006 | -0.0009 |
| 341 | SLD 7 | 5.46 | 0.44 | 38.56 | -0.2983 | 0.2072 | -0.0027 |
| 341 | SLD 8 | 5.46 | 0.44 | 38.56 | -0.2983 | 0.2072 | -0.0027 |
| 341 | SLD 9 | -1.33 | 0.2 | 31.86 | -0.1337 | -0.0803 | -0.0012 |
| 341 | SLD 10 | -1.33 | 0.2 | 31.86 | -0.1337 | -0.0803 | -0.0012 |
| 341 | SLD 11 | 1.28 | 0.5 | 37.85 | -0.3366 | 0.0263 | -0.003 |
| 341 | SLD 12 | 1.28 | 0.5 | 37.85 | -0.3366 | 0.0263 | -0.003 |
| 341 | SLD 13 | -5.3 | 0.38 | 33.13 | -0.2494 | -0.254 | -0.0022 |
| 341 | SLD 14 | -5.3 | 0.38 | 33.13 | -0.2494 | -0.254 | -0.0022 |
| 341 | SLD 15 | -4.51 | 0.47 | 34.93 | -0.3102 | -0.222 | -0.0027 |
| 341 | SLD 16 | -4.51 | 0.47 | 34.93 | -0.3102 | -0.222 | -0.0027 |
| 341 | SLV 1 | 17.07 | -0.05 | 35.94 | 0.0173 | 0.7146 | 0 |
| 341 | SLV 2 | 17.07 | -0.05 | 35.94 | 0.0173 | 0.7146 | 0 |
| 341 | SLV 3 | 18.92 | 0.16 | 40.14 | -0.1252 | 0.7904 | -0.0013 |
| 341 | SLV 4 | 18.92 | 0.16 | 40.14 | -0.1252 | 0.7904 | -0.0013 |
| 341 | SLV 5 | 3.76 | -0.11 | 29.05 | 0.0701 | 0.1438 | 0.0005 |
| 341 | SLV 6 | 3.76 | -0.11 | 29.05 | 0.0701 | 0.1438 | 0.0005 |
| 341 | SLV 7 | 9.93 | 0.59 | 43.07 | -0.4049 | 0.3965 | -0.0036 |
| 341 | SLV 8 | 9.93 | 0.59 | 43.07 | -0.4049 | 0.3965 | -0.0036 |
| 341 | SLV 9 | -5.8 | 0.05 | 27.35 | -0.0271 | -0.2696 | -0.0003 |
| 341 | SLV 10 | -5.8 | 0.05 | 27.35 | -0.0271 | -0.2696 | -0.0003 |
| 341 | SLV 11 | 0.37 | 0.75 | 41.37 | -0.5021 | -0.0169 | -0.0044 |
| 341 | SLV 12 | 0.37 | 0.75 | 41.37 | -0.5021 | -0.0169 | -0.0044 |
| 341 | SLV 13 | -14.8 | 0.48 | 30.27 | -0.3068 | -0.6635 | -0.0026 |
| 341 | SLV 14 | -14.8 | 0.48 | 30.27 | -0.3068 | -0.6635 | -0.0026 |
| 341 | SLV 15 | -12.94 | 0.69 | 34.48 | -0.4493 | -0.5877 | -0.0039 |
| 341 | SLV 16 | -12.94 | 0.69 | 34.48 | -0.4493 | -0.5877 | -0.0039 |
| 342 | SLU 1 | 1.05 | 0.08 | 34.44 | -0.1062 | 0.0484 | -0.0006 |
| 342 | SLU 2 | 1.05 | 0.08 | 34.36 | -0.106 | 0.0482 | -0.0006 |
| 342 | SLU 3 | 1.02 | 0.08 | 35.42 | -0.1099 | 0.0476 | -0.0006 |
| 342 | SLU 4 | 1.02 | 0.08 | 35.37 | -0.1098 | 0.0475 | -0.0006 |
| 342 | SLU 5 | 1 | 0.08 | 34.91 | -0.1078 | 0.0464 | -0.0006 |
| 342 | SLU 6 | 0.98 | 0.08 | 35.96 | -0.1117 | 0.0459 | -0.0006 |
| 342 | SLU 7 | 0.97 | 0.08 | 35.92 | -0.1116 | 0.0458 | -0.0006 |
| 342 | SLU 8 | 0.96 | 0.08 | 35.53 | -0.1097 | 0.0449 | -0.0006 |
| 342 | SLU 9 | 0.95 | 0.08 | 35.48 | -0.1096 | 0.0448 | -0.0006 |
| 342 | SLU 10 | 1.29 | 0.09 | 39.53 | -0.1258 | 0.0589 | -0.0007 |
| 342 | SLU 11 | 1.27 | 0.1 | 40.58 | -0.1297 | 0.0584 | -0.0007 |
| 342 | SLU 12 | 1.27 | 0.1 | 40.54 | -0.1296 | 0.0582 | -0.0007 |
| 342 | SLU 13 | 1.25 | 0.09 | 40.08 | -0.1275 | 0.0572 | -0.0007 |
| 342 | SLU 14 | 1.23 | 0.1 | 41.13 | -0.1314 | 0.0566 | -0.0007 |
| 342 | SLU 15 | 1.22 | 0.1 | 41.09 | -0.1313 | 0.0565 | -0.0007 |
| 342 | SLU 16 | 1.2 | 0.09 | 40.7 | -0.1295 | 0.0556 | -0.0007 |
| 342 | SLU 17 | 1.2 | 0.09 | 40.65 | -0.1294 | 0.0555 | -0.0007 |
| 342 | SLU 18 | 1.4 | 0.1 | 41.82 | -0.1344 | 0.0637 | -0.0007 |
| 342 | SLU 19 | 1.4 | 0.1 | 41.78 | -0.1343 | 0.0636 | -0.0007 |
| 342 | SLU 20 | 1.36 | 0.1 | 42.37 | -0.1362 | 0.062 | -0.0007 |
| 342 | SLU 21 | 1.35 | 0.1 | 42.32 | -0.1361 | 0.0619 | -0.0007 |
| 342 | SLU 22 | 1.23 | 0.09 | 39.22 | -0.1247 | 0.0566 | -0.0007 |
| 342 | SLU 23 | 1.23 | 0.09 | 39.15 | -0.1245 | 0.0564 | -0.0007 |
| 342 | SLU 24 | 1.21 | 0.09 | 40.2 | -0.1284 | 0.0559 | -0.0007 |
| 342 | SLU 25 | 1.21 | 0.09 | 40.15 | -0.1283 | 0.0557 | -0.0007 |
| 342 | SLU 26 | 1.18 | 0.09 | 39.69 | -0.1263 | 0.0547 | -0.0007 |
| 342 | SLU 27 | 1.16 | 0.09 | 40.74 | -0.1302 | 0.0541 | -0.0007 |
| 342 | SLU 28 | 1.16 | 0.09 | 40.7 | -0.13 | 0.054 | -0.0007 |
| 342 | SLU 29 | 1.14 | 0.09 | 40.31 | -0.1282 | 0.0531 | -0.0007 |
| 342 | SLU 30 | 1.14 | 0.09 | 40.26 | -0.1281 | 0.053 | -0.0007 |
| 342 | SLU 31 | 1.48 | 0.11 | 44.31 | -0.1442 | 0.0672 | -0.0008 |
| 342 | SLU 32 | 1.46 | 0.11 | 45.37 | -0.1481 | 0.0666 | -0.0008 |
| 342 | SLU 33 | 1.45 | 0.11 | 45.32 | -0.148 | 0.0665 | -0.0008 |
| 342 | SLU 34 | 1.43 | 0.11 | 44.86 | -0.146 | 0.0654 | -0.0008 |
| 342 | SLU 35 | 1.41 | 0.11 | 45.91 | -0.1499 | 0.0649 | -0.0008 |

| Nodo | Cont. | Reazione a traslazione | | | Reazione a rotazione | | |
|---|---|---|---|---|---|---|---|
| Ind. | N.br. | x | y | z | x | y | z |
| 342 | SLU 36 | 1.41 | 0.11 | 45.87 | -0.1498 | 0.0648 | -0.0008 |
| 342 | SLU 37 | 1.39 | 0.11 | 45.48 | -0.1479 | 0.0639 | -0.0008 |
| 342 | SLU 38 | 1.39 | 0.11 | 45.43 | -0.1478 | 0.0638 | -0.0008 |
| 342 | SLU 39 | 1.59 | 0.11 | 46.6 | -0.1529 | 0.072 | -0.0008 |
| 342 | SLU 40 | 1.58 | 0.11 | 46.56 | -0.1528 | 0.0718 | -0.0008 |
| 342 | SLU 41 | 1.54 | 0.11 | 47.15 | -0.1546 | 0.0702 | -0.0008 |
| 342 | SLU 42 | 1.54 | 0.11 | 47.1 | -0.1545 | 0.0701 | -0.0008 |
| 342 | SLU 43 | 1.3 | 0.1 | 43.13 | -0.1317 | 0.0601 | -0.0007 |
| 342 | SLU 44 | 1.3 | 0.1 | 43.06 | -0.1316 | 0.0599 | -0.0007 |
| 342 | SLU 45 | 1.28 | 0.1 | 44.11 | -0.1354 | 0.0593 | -0.0007 |
| 342 | SLU 46 | 1.27 | 0.1 | 44.07 | -0.1353 | 0.0592 | -0.0007 |
| 342 | SLU 47 | 1.25 | 0.1 | 43.6 | -0.1333 | 0.0581 | -0.0007 |
| 342 | SLU 48 | 1.23 | 0.1 | 44.65 | -0.1372 | 0.0576 | -0.0007 |
| 342 | SLU 49 | 1.23 | 0.1 | 44.61 | -0.1371 | 0.0575 | -0.0007 |
| 342 | SLU 50 | 1.21 | 0.1 | 44.22 | -0.1353 | 0.0566 | -0.0007 |
| 342 | SLU 51 | 1.21 | 0.1 | 44.18 | -0.1351 | 0.0565 | -0.0007 |
| 342 | SLU 52 | 1.54 | 0.11 | 48.22 | -0.1513 | 0.0706 | -0.0008 |
| 342 | SLU 53 | 1.52 | 0.11 | 49.28 | -0.1552 | 0.07 | -0.0008 |
| 342 | SLU 54 | 1.52 | 0.11 | 49.23 | -0.1551 | 0.0699 | -0.0008 |
| 342 | SLU 55 | 1.5 | 0.11 | 48.77 | -0.1531 | 0.0689 | -0.0008 |
| 342 | SLU 56 | 1.48 | 0.12 | 49.82 | -0.1569 | 0.0683 | -0.0008 |
| 342 | SLU 57 | 1.47 | 0.12 | 49.78 | -0.1568 | 0.0682 | -0.0008 |
| 342 | SLU 58 | 1.46 | 0.11 | 49.39 | -0.155 | 0.0673 | -0.0008 |
| 342 | SLU 59 | 1.45 | 0.11 | 49.34 | -0.1549 | 0.0672 | -0.0008 |
| 342 | SLU 60 | 1.66 | 0.12 | 50.51 | -0.1599 | 0.0754 | -0.0009 |
| 342 | SLU 61 | 1.65 | 0.12 | 50.47 | -0.1598 | 0.0753 | -0.0009 |
| 342 | SLU 62 | 1.61 | 0.12 | 51.06 | -0.1617 | 0.0737 | -0.0009 |
| 342 | SLU 63 | 1.61 | 0.12 | 51.01 | -0.1616 | 0.0735 | -0.0009 |
| 342 | SLU 64 | 1.49 | 0.11 | 47.91 | -0.1502 | 0.0683 | -0.0008 |
| 342 | SLU 65 | 1.48 | 0.11 | 47.84 | -0.15 | 0.0681 | -0.0008 |
| 342 | SLU 66 | 1.46 | 0.11 | 48.89 | -0.1539 | 0.0675 | -0.0008 |
| 342 | SLU 67 | 1.46 | 0.11 | 48.85 | -0.1538 | 0.0674 | -0.0008 |
| 342 | SLU 68 | 1.43 | 0.11 | 48.38 | -0.1518 | 0.0664 | -0.0008 |
| 342 | SLU 69 | 1.41 | 0.11 | 49.43 | -0.1557 | 0.0658 | -0.0008 |
| 342 | SLU 70 | 1.41 | 0.11 | 49.39 | -0.1556 | 0.0657 | -0.0008 |
| 342 | SLU 71 | 1.39 | 0.11 | 49 | -0.1537 | 0.0648 | -0.0008 |
| 342 | SLU 72 | 1.39 | 0.11 | 48.96 | -0.1536 | 0.0647 | -0.0008 |
| 342 | SLU 73 | 1.73 | 0.13 | 53.01 | -0.1698 | 0.0788 | -0.0009 |
| 342 | SLU 74 | 1.71 | 0.13 | 54.06 | -0.1737 | 0.0783 | -0.0009 |
| 342 | SLU 75 | 1.71 | 0.13 | 54.01 | -0.1736 | 0.0782 | -0.0009 |
| 342 | SLU 76 | 1.68 | 0.13 | 53.55 | -0.1715 | 0.0771 | -0.0009 |
| 342 | SLU 77 | 1.66 | 0.13 | 54.6 | -0.1754 | 0.0766 | -0.0009 |
| 342 | SLU 78 | 1.66 | 0.13 | 54.56 | -0.1753 | 0.0764 | -0.0009 |
| 342 | SLU 79 | 1.64 | 0.13 | 54.17 | -0.1735 | 0.0756 | -0.0009 |
| 342 | SLU 80 | 1.64 | 0.13 | 54.12 | -0.1734 | 0.0754 | -0.0009 |
| 342 | SLU 81 | 1.84 | 0.13 | 55.29 | -0.1784 | 0.0836 | -0.001 |
| 342 | SLU 82 | 1.84 | 0.13 | 55.25 | -0.1783 | 0.0835 | -0.001 |
| 342 | SLU 83 | 1.79 | 0.13 | 55.84 | -0.1802 | 0.0819 | -0.001 |
| 342 | SLU 84 | 1.79 | 0.13 | 55.79 | -0.1801 | 0.0818 | -0.001 |
| 342 | SLE RA 1 | 1.1 | 0.08 | 35.8 | -0.1115 | 0.0507 | -0.0006 |
| 342 | SLE RA 2 | 1.1 | 0.08 | 35.75 | -0.1114 | 0.0506 | -0.0006 |
| 342 | SLE RA 3 | 1.09 | 0.08 | 36.46 | -0.114 | 0.0502 | -0.0006 |
| 342 | SLE RA 4 | 1.08 | 0.08 | 36.43 | -0.1139 | 0.0501 | -0.0006 |
| 342 | SLE RA 5 | 1.07 | 0.08 | 36.12 | -0.1125 | 0.0494 | -0.0006 |
| 342 | SLE RA 6 | 1.05 | 0.08 | 36.82 | -0.1151 | 0.0491 | -0.0006 |
| 342 | SLE RA 7 | 1.05 | 0.08 | 36.79 | -0.1151 | 0.049 | -0.0006 |
| 342 | SLE RA 8 | 1.04 | 0.08 | 36.53 | -0.1138 | 0.0484 | -0.0006 |
| 342 | SLE RA 9 | 1.04 | 0.08 | 36.5 | -0.1138 | 0.0483 | -0.0006 |
| 342 | SLE RA 10 | 1.26 | 0.09 | 39.2 | -0.1245 | 0.0577 | -0.0007 |
| 342 | SLE RA 11 | 1.25 | 0.09 | 39.9 | -0.1271 | 0.0574 | -0.0007 |
| 342 | SLE RA 12 | 1.25 | 0.09 | 39.87 | -0.127 | 0.0573 | -0.0007 |
| 342 | SLE RA 13 | 1.23 | 0.09 | 39.56 | -0.1257 | 0.0566 | -0.0007 |
| 342 | SLE RA 14 | 1.22 | 0.09 | 40.26 | -0.1283 | 0.0562 | -0.0007 |
| 342 | SLE RA 15 | 1.22 | 0.09 | 40.24 | -0.1282 | 0.0561 | -0.0007 |
| 342 | SLE RA 16 | 1.21 | 0.09 | 39.98 | -0.127 | 0.0556 | -0.0007 |
| 342 | SLE RA 17 | 1.2 | 0.09 | 39.95 | -0.1269 | 0.0555 | -0.0007 |
| 342 | SLE RA 18 | 1.34 | 0.1 | 40.72 | -0.1303 | 0.061 | -0.0007 |
| 342 | SLE RA 19 | 1.34 | 0.1 | 40.7 | -0.1302 | 0.0609 | -0.0007 |
| 342 | SLE RA 20 | 1.31 | 0.1 | 41.09 | -0.1315 | 0.0598 | -0.0007 |
| 342 | SLE RA 21 | 1.31 | 0.1 | 41.06 | -0.1314 | 0.0597 | -0.0007 |
| 342 | SLE FR 1 | 1.1 | 0.08 | 35.8 | -0.1115 | 0.0507 | -0.0006 |
| 342 | SLE FR 2 | 1.1 | 0.08 | 35.79 | -0.1115 | 0.0507 | -0.0006 |
| 342 | SLE FR 3 | 1.09 | 0.08 | 35.95 | -0.112 | 0.0503 | -0.0006 |
| 342 | SLE FR 4 | 1.17 | 0.09 | 37.27 | -0.1171 | 0.0538 | -0.0006 |
| 342 | SLE FR 5 | 1.16 | 0.09 | 37.42 | -0.1176 | 0.0533 | -0.0006 |
| 342 | SLE FR 6 | 1.22 | 0.09 | 38.26 | -0.1209 | 0.0558 | -0.0006 |
| 342 | SLE QP 1 | 1.1 | 0.08 | 35.8 | -0.1115 | 0.0507 | -0.0006 |
| 342 | SLE QP 2 | 1.17 | 0.09 | 37.28 | -0.1171 | 0.0538 | -0.0006 |
| 342 | SLD 1 | 7.66 | -0.07 | 37.14 | -0.0376 | 0.3406 | 0 |
| 342 | SLD 2 | 7.66 | -0.07 | 37.14 | -0.0376 | 0.3406 | 0 |
| 342 | SLD 3 | 8.53 | -0.01 | 39.32 | -0.077 | 0.3721 | -0.0004 |
| 342 | SLD 4 | 8.53 | -0.01 | 39.32 | -0.077 | 0.3721 | -0.0004 |
| 342 | SLD 5 | 1.8 | -0.05 | 33.92 | -0.0336 | 0.0921 | 0.0001 |
| 342 | SLD 6 | 1.8 | -0.05 | 33.92 | -0.0336 | 0.0921 | 0.0001 |
| 342 | SLD 7 | 4.7 | 0.15 | 41.21 | -0.1647 | 0.197 | -0.0012 |
| 342 | SLD 8 | 4.7 | 0.15 | 41.21 | -0.1647 | 0.197 | -0.0012 |
| 342 | SLD 9 | -2.36 | 0.02 | 33.35 | -0.0695 | -0.0894 | -0.0001 |
| 342 | SLD 10 | -2.36 | 0.02 | 33.35 | -0.0695 | -0.0894 | -0.0001 |

| Nodo | Cont. | Reazione a traslazione | | | Reazione a rotazione | | |
|---|---|---|---|---|---|---|---|
| Ind. | N.br. | x | y | z | x | y | z |
| 342 | SLD 11 | 0.55 | 0.22 | 40.64 | -0.2006 | 0.0155 | -0.0014 |
| 342 | SLD 12 | 0.55 | 0.22 | 40.64 | -0.2006 | 0.0155 | -0.0014 |
| 342 | SLD 13 | -6.19 | 0.18 | 35.24 | -0.1573 | -0.2645 | -0.0008 |
| 342 | SLD 14 | -6.19 | 0.18 | 35.24 | -0.1573 | -0.2645 | -0.0008 |
| 342 | SLD 15 | -5.31 | 0.24 | 37.42 | -0.1966 | -0.233 | -0.0012 |
| 342 | SLD 16 | -5.31 | 0.24 | 37.42 | -0.1966 | -0.233 | -0.0012 |
| 342 | SLV 1 | 15.97 | -0.3 | 37.04 | 0.0813 | 0.708 | 0.0008 |
| 342 | SLV 2 | 15.97 | -0.3 | 37.04 | 0.0813 | 0.708 | 0.0008 |
| 342 | SLV 3 | 18.03 | -0.16 | 42.12 | -0.0107 | 0.7829 | -0.0001 |
| 342 | SLV 4 | 18.03 | -0.16 | 42.12 | -0.0107 | 0.7829 | -0.0001 |
| 342 | SLV 5 | 2.48 | -0.24 | 29.5 | 0.082 | 0.1365 | 0.0012 |
| 342 | SLV 6 | 2.48 | -0.24 | 29.5 | 0.082 | 0.1365 | 0.0012 |
| 342 | SLV 7 | 9.37 | 0.22 | 46.44 | -0.2248 | 0.386 | -0.0018 |
| 342 | SLV 8 | 9.37 | 0.22 | 46.44 | -0.2248 | 0.386 | -0.0018 |
| 342 | SLV 9 | -7.02 | -0.05 | 28.12 | -0.0094 | -0.2785 | 0.0006 |
| 342 | SLV 10 | -7.02 | -0.05 | 28.12 | -0.0094 | -0.2785 | 0.0006 |
| 342 | SLV 11 | -0.13 | 0.41 | 45.06 | -0.3163 | -0.0289 | -0.0024 |
| 342 | SLV 12 | -0.13 | 0.41 | 45.06 | -0.3163 | -0.0289 | -0.0024 |
| 342 | SLV 13 | -15.69 | 0.33 | 32.43 | -0.2235 | -0.6753 | -0.0012 |
| 342 | SLV 14 | -15.69 | 0.33 | 32.43 | -0.2235 | -0.6753 | -0.0012 |
| 342 | SLV 15 | -13.62 | 0.47 | 37.52 | -0.3156 | -0.6004 | -0.0021 |
| 342 | SLV 16 | -13.62 | 0.47 | 37.52 | -0.3156 | -0.6004 | -0.0021 |
| 343 | SLU 1 | -0.55 | -0.14 | 35.64 | -0.0251 | -0.0397 | -0.0001 |
| 343 | SLU 2 | -0.55 | -0.14 | 35.56 | -0.025 | -0.0397 | -0.0001 |
| 343 | SLU 3 | -0.63 | -0.14 | 36.68 | -0.0259 | -0.0444 | -0.0001 |
| 343 | SLU 4 | -0.64 | -0.14 | 36.63 | -0.0259 | -0.0444 | -0.0001 |
| 343 | SLU 5 | -0.63 | -0.14 | 36.16 | -0.0253 | -0.0438 | -0.0001 |
| 343 | SLU 6 | -0.71 | -0.15 | 37.28 | -0.0261 | -0.0485 | -0.0001 |
| 343 | SLU 7 | -0.71 | -0.15 | 37.23 | -0.0261 | -0.0485 | -0.0001 |
| 343 | SLU 8 | -0.7 | -0.14 | 36.83 | -0.0255 | -0.0479 | -0.0001 |
| 343 | SLU 9 | -0.7 | -0.14 | 36.79 | -0.0255 | -0.0479 | -0.0001 |
| 343 | SLU 10 | -0.61 | -0.16 | 41.06 | -0.0295 | -0.046 | -0.0001 |
| 343 | SLU 11 | -0.7 | -0.17 | 42.18 | -0.0304 | -0.0507 | -0.0001 |
| 343 | SLU 12 | -0.7 | -0.17 | 42.13 | -0.0303 | -0.0507 | -0.0001 |
| 343 | SLU 13 | -0.69 | -0.17 | 41.66 | -0.0297 | -0.0502 | -0.0001 |
| 343 | SLU 14 | -0.78 | -0.17 | 42.78 | -0.0306 | -0.0548 | -0.0001 |
| 343 | SLU 15 | -0.78 | -0.17 | 42.73 | -0.0306 | -0.0548 | -0.0001 |
| 343 | SLU 16 | -0.77 | -0.17 | 42.33 | -0.03 | -0.0543 | -0.0001 |
| 343 | SLU 17 | -0.77 | -0.17 | 42.29 | -0.03 | -0.0543 | -0.0001 |
| 343 | SLU 18 | -0.64 | -0.17 | 43.5 | -0.0315 | -0.0488 | -0.0001 |
| 343 | SLU 19 | -0.64 | -0.17 | 43.45 | -0.0314 | -0.0488 | -0.0001 |
| 343 | SLU 20 | -0.72 | -0.18 | 44.1 | -0.0317 | -0.0529 | -0.0001 |
| 343 | SLU 21 | -0.72 | -0.18 | 44.05 | -0.0317 | -0.0529 | -0.0001 |
| 343 | SLU 22 | -0.65 | -0.16 | 40.71 | -0.0293 | -0.0475 | -0.0001 |
| 343 | SLU 23 | -0.65 | -0.16 | 40.63 | -0.0293 | -0.0475 | -0.0001 |
| 343 | SLU 24 | -0.74 | -0.17 | 41.75 | -0.0302 | -0.0522 | -0.0001 |
| 343 | SLU 25 | -0.74 | -0.17 | 41.7 | -0.0302 | -0.0522 | -0.0001 |
| 343 | SLU 26 | -0.73 | -0.16 | 41.23 | -0.0296 | -0.0516 | -0.0001 |
| 343 | SLU 27 | -0.82 | -0.17 | 42.34 | -0.0304 | -0.0563 | -0.0001 |
| 343 | SLU 28 | -0.82 | -0.17 | 42.3 | -0.0304 | -0.0563 | -0.0001 |
| 343 | SLU 29 | -0.81 | -0.17 | 41.9 | -0.0298 | -0.0558 | -0.0001 |
| 343 | SLU 30 | -0.81 | -0.17 | 41.85 | -0.0298 | -0.0558 | -0.0001 |
| 343 | SLU 31 | -0.72 | -0.19 | 46.13 | -0.0338 | -0.0539 | -0.0001 |
| 343 | SLU 32 | -0.8 | -0.19 | 47.25 | -0.0346 | -0.0585 | -0.0001 |
| 343 | SLU 33 | -0.8 | -0.19 | 47.2 | -0.0346 | -0.0585 | -0.0001 |
| 343 | SLU 34 | -0.79 | -0.19 | 46.73 | -0.034 | -0.058 | -0.0001 |
| 343 | SLU 35 | -0.88 | -0.2 | 47.84 | -0.0349 | -0.0626 | -0.0001 |
| 343 | SLU 36 | -0.88 | -0.2 | 47.8 | -0.0349 | -0.0626 | -0.0001 |
| 343 | SLU 37 | -0.87 | -0.19 | 47.4 | -0.0343 | -0.0621 | -0.0001 |
| 343 | SLU 38 | -0.87 | -0.19 | 47.36 | -0.0343 | -0.0621 | -0.0001 |
| 343 | SLU 39 | -0.74 | -0.2 | 48.57 | -0.0357 | -0.0566 | -0.0001 |
| 343 | SLU 40 | -0.74 | -0.2 | 48.52 | -0.0357 | -0.0566 | -0.0001 |
| 343 | SLU 41 | -0.82 | -0.2 | 49.16 | -0.036 | -0.0607 | -0.0001 |
| 343 | SLU 42 | -0.82 | -0.2 | 49.12 | -0.036 | -0.0607 | -0.0001 |
| 343 | SLU 43 | -0.68 | -0.17 | 44.6 | -0.0311 | -0.0489 | -0.0001 |
| 343 | SLU 44 | -0.68 | -0.17 | 44.52 | -0.0311 | -0.0489 | -0.0001 |
| 343 | SLU 45 | -0.76 | -0.17 | 45.64 | -0.0319 | -0.0536 | -0.0001 |
| 343 | SLU 46 | -0.76 | -0.17 | 45.59 | -0.0319 | -0.0536 | -0.0001 |
| 343 | SLU 47 | -0.76 | -0.17 | 45.12 | -0.0313 | -0.053 | -0.0001 |
| 343 | SLU 48 | -0.84 | -0.18 | 46.23 | -0.0322 | -0.0577 | -0.0001 |
| 343 | SLU 49 | -0.84 | -0.18 | 46.19 | -0.0322 | -0.0577 | -0.0001 |
| 343 | SLU 50 | -0.83 | -0.18 | 45.79 | -0.0316 | -0.0572 | -0.0001 |
| 343 | SLU 51 | -0.83 | -0.18 | 45.74 | -0.0316 | -0.0572 | -0.0001 |
| 343 | SLU 52 | -0.74 | -0.19 | 50.02 | -0.0356 | -0.0553 | -0.0001 |
| 343 | SLU 53 | -0.83 | -0.2 | 51.14 | -0.0364 | -0.0599 | -0.0001 |
| 343 | SLU 54 | -0.83 | -0.2 | 51.09 | -0.0364 | -0.0599 | -0.0001 |
| 343 | SLU 55 | -0.82 | -0.2 | 50.62 | -0.0358 | -0.0594 | -0.0001 |
| 343 | SLU 56 | -0.9 | -0.2 | 51.73 | -0.0366 | -0.064 | -0.0001 |
| 343 | SLU 57 | -0.91 | -0.2 | 51.69 | -0.0366 | -0.064 | -0.0001 |
| 343 | SLU 58 | -0.9 | -0.2 | 51.29 | -0.036 | -0.0635 | -0.0001 |
| 343 | SLU 59 | -0.9 | -0.2 | 51.24 | -0.036 | -0.0635 | -0.0001 |
| 343 | SLU 60 | -0.77 | -0.21 | 52.46 | -0.0375 | -0.058 | -0.0001 |
| 343 | SLU 61 | -0.77 | -0.21 | 52.41 | -0.0375 | -0.058 | -0.0001 |
| 343 | SLU 62 | -0.84 | -0.21 | 53.05 | -0.0377 | -0.0621 | -0.0001 |
| 343 | SLU 63 | -0.85 | -0.21 | 53 | -0.0377 | -0.0621 | -0.0001 |
| 343 | SLU 64 | -0.78 | -0.19 | 49.66 | -0.0354 | -0.0568 | -0.0001 |
| 343 | SLU 65 | -0.78 | -0.19 | 49.59 | -0.0354 | -0.0568 | -0.0001 |
| 343 | SLU 66 | -0.87 | -0.2 | 50.7 | -0.0362 | -0.0614 | -0.0001 |

| Nodo | Cont. | Reazione a traslazione | | | Reazione a rotazione | | |
|---|---|---|---|---|---|---|---|
| Ind. | N.br. | x | y | z | x | y | z |
| 343 | SLU 67 | -0.87 | -0.2 | 50.66 | -0.0362 | -0.0614 | -0.0001 |
| 343 | SLU 68 | -0.86 | -0.2 | 50.18 | -0.0356 | -0.0609 | -0.0001 |
| 343 | SLU 69 | -0.95 | -0.2 | 51.3 | -0.0364 | -0.0655 | -0.0001 |
| 343 | SLU 70 | -0.95 | -0.2 | 51.25 | -0.0364 | -0.0655 | -0.0001 |
| 343 | SLU 71 | -0.94 | -0.2 | 50.86 | -0.0359 | -0.065 | -0.0001 |
| 343 | SLU 72 | -0.94 | -0.2 | 50.81 | -0.0358 | -0.065 | -0.0001 |
| 343 | SLU 73 | -0.84 | -0.22 | 55.09 | -0.0399 | -0.0631 | -0.0001 |
| 343 | SLU 74 | -0.93 | -0.22 | 56.2 | -0.0407 | -0.0678 | -0.0001 |
| 343 | SLU 75 | -0.93 | -0.22 | 56.16 | -0.0407 | -0.0678 | -0.0001 |
| 343 | SLU 76 | -0.92 | -0.22 | 55.68 | -0.0401 | -0.0672 | -0.0001 |
| 343 | SLU 77 | -1.01 | -0.23 | 56.8 | -0.0409 | -0.0719 | -0.0001 |
| 343 | SLU 78 | -1.01 | -0.23 | 56.75 | -0.0409 | -0.0719 | -0.0001 |
| 343 | SLU 79 | -1 | -0.23 | 56.36 | -0.0403 | -0.0713 | -0.0001 |
| 343 | SLU 80 | -1 | -0.23 | 56.31 | -0.0403 | -0.0713 | -0.0001 |
| 343 | SLU 81 | -0.87 | -0.23 | 57.52 | -0.0418 | -0.0658 | -0.0002 |
| 343 | SLU 82 | -0.87 | -0.23 | 57.48 | -0.0418 | -0.0658 | -0.0002 |
| 343 | SLU 83 | -0.95 | -0.23 | 58.12 | -0.042 | -0.0699 | -0.0002 |
| 343 | SLU 84 | -0.95 | -0.23 | 58.07 | -0.042 | -0.0699 | -0.0002 |
| 343 | SLE RA 1 | -0.58 | -0.14 | 37.09 | -0.0263 | -0.0419 | -0.0001 |
| 343 | SLE RA 2 | -0.58 | -0.14 | 37.04 | -0.0263 | -0.0419 | -0.0001 |
| 343 | SLE RA 3 | -0.64 | -0.15 | 37.78 | -0.0268 | -0.045 | -0.0001 |
| 343 | SLE RA 4 | -0.64 | -0.15 | 37.75 | -0.0268 | -0.045 | -0.0001 |
| 343 | SLE RA 5 | -0.63 | -0.15 | 37.44 | -0.0264 | -0.0447 | -0.0001 |
| 343 | SLE RA 6 | -0.69 | -0.15 | 38.18 | -0.027 | -0.0478 | -0.0001 |
| 343 | SLE RA 7 | -0.69 | -0.15 | 38.15 | -0.027 | -0.0478 | -0.0001 |
| 343 | SLE RA 8 | -0.68 | -0.15 | 37.88 | -0.0266 | -0.0474 | -0.0001 |
| 343 | SLE RA 9 | -0.68 | -0.15 | 37.85 | -0.0266 | -0.0474 | -0.0001 |
| 343 | SLE RA 10 | -0.62 | -0.16 | 40.7 | -0.0293 | -0.0462 | -0.0001 |
| 343 | SLE RA 11 | -0.68 | -0.16 | 41.45 | -0.0298 | -0.0493 | -0.0001 |
| 343 | SLE RA 12 | -0.68 | -0.16 | 41.42 | -0.0298 | -0.0493 | -0.0001 |
| 343 | SLE RA 13 | -0.67 | -0.16 | 41.1 | -0.0294 | -0.0489 | -0.0001 |
| 343 | SLE RA 14 | -0.73 | -0.17 | 41.85 | -0.03 | -0.052 | -0.0001 |
| 343 | SLE RA 15 | -0.73 | -0.17 | 41.82 | -0.03 | -0.052 | -0.0001 |
| 343 | SLE RA 16 | -0.72 | -0.17 | 41.55 | -0.0296 | -0.0517 | -0.0001 |
| 343 | SLE RA 17 | -0.72 | -0.17 | 41.52 | -0.0296 | -0.0517 | -0.0001 |
| 343 | SLE RA 18 | -0.64 | -0.17 | 42.33 | -0.0305 | -0.048 | -0.0001 |
| 343 | SLE RA 19 | -0.64 | -0.17 | 42.3 | -0.0305 | -0.048 | -0.0001 |
| 343 | SLE RA 20 | -0.69 | -0.17 | 42.73 | -0.0307 | -0.0507 | -0.0001 |
| 343 | SLE RA 21 | -0.69 | -0.17 | 42.69 | -0.0307 | -0.0507 | -0.0001 |
| 343 | SLE FR 1 | -0.58 | -0.14 | 37.09 | -0.0263 | -0.0419 | -0.0001 |
| 343 | SLE FR 2 | -0.58 | -0.14 | 37.08 | -0.0263 | -0.0419 | -0.0001 |
| 343 | SLE FR 3 | -0.6 | -0.14 | 37.25 | -0.0264 | -0.043 | -0.0001 |
| 343 | SLE FR 4 | -0.6 | -0.15 | 38.65 | -0.0276 | -0.0438 | -0.0001 |
| 343 | SLE FR 5 | -0.62 | -0.15 | 38.82 | -0.0276 | -0.0449 | -0.0001 |
| 343 | SLE FR 6 | -0.61 | -0.16 | 39.71 | -0.0284 | -0.045 | -0.0001 |
| 343 | SLE QP 1 | -0.58 | -0.14 | 37.09 | -0.0263 | -0.0419 | -0.0001 |
| 343 | SLE QP 2 | -0.6 | -0.15 | 38.66 | -0.0276 | -0.0438 | -0.0001 |
| 343 | SLD 1 | 5.73 | -0.22 | 36.03 | 0.0234 | 0.2311 | 0.0003 |
| 343 | SLD 2 | 5.73 | -0.22 | 36.03 | 0.0234 | 0.2311 | 0.0003 |
| 343 | SLD 3 | 6.78 | -0.27 | 39.5 | -0.0011 | 0.2673 | 0.0002 |
| 343 | SLD 4 | 6.78 | -0.27 | 39.5 | -0.0011 | 0.2673 | 0.0002 |
| 343 | SLD 5 | -0.3 | -0.11 | 32.61 | 0.0249 | -0.0163 | 0.0002 |
| 343 | SLD 6 | -0.3 | -0.11 | 32.61 | 0.0249 | -0.0163 | 0.0002 |
| 343 | SLD 7 | 3.22 | -0.25 | 44.17 | -0.0568 | 0.1045 | -0.0002 |
| 343 | SLD 8 | 3.22 | -0.25 | 44.17 | -0.0568 | 0.1045 | -0.0002 |
| 343 | SLD 9 | -4.41 | -0.05 | 33.15 | 0.0017 | -0.192 | 0 |
| 343 | SLD 10 | -4.41 | -0.05 | 33.15 | 0.0017 | -0.192 | 0 |
| 343 | SLD 11 | -0.89 | -0.2 | 44.71 | -0.08 | -0.0712 | -0.0004 |
| 343 | SLD 12 | -0.89 | -0.2 | 44.71 | -0.08 | -0.0712 | -0.0004 |
| 343 | SLD 13 | -7.97 | -0.03 | 37.82 | -0.054 | -0.3548 | -0.0004 |
| 343 | SLD 14 | -7.97 | -0.03 | 37.82 | -0.054 | -0.3548 | -0.0004 |
| 343 | SLD 15 | -6.92 | -0.08 | 41.29 | -0.0785 | -0.3186 | -0.0005 |
| 343 | SLD 16 | -6.92 | -0.08 | 41.29 | -0.0785 | -0.3186 | -0.0005 |
| 343 | SLV 1 | 13.82 | -0.34 | 32.5 | 0.0999 | 0.5829 | 0.0009 |
| 343 | SLV 2 | 13.82 | -0.34 | 32.5 | 0.0999 | 0.5829 | 0.0009 |
| 343 | SLV 3 | 16.31 | -0.45 | 40.55 | 0.0426 | 0.6688 | 0.0006 |
| 343 | SLV 4 | 16.31 | -0.45 | 40.55 | 0.0426 | 0.6688 | 0.0006 |
| 343 | SLV 5 | -0.06 | -0.05 | 24.61 | 0.0976 | 0.014 | 0.0005 |
| 343 | SLV 6 | -0.06 | -0.05 | 24.61 | 0.0976 | 0.014 | 0.0005 |
| 343 | SLV 7 | 8.26 | -0.4 | 51.44 | -0.0934 | 0.3003 | -0.0002 |
| 343 | SLV 8 | 8.26 | -0.4 | 51.44 | -0.0934 | 0.3003 | -0.0002 |
| 343 | SLV 9 | -9.45 | 0.09 | 25.89 | 0.0383 | -0.3878 | 0 |
| 343 | SLV 10 | -9.45 | 0.09 | 25.89 | 0.0383 | -0.3878 | 0 |
| 343 | SLV 11 | -1.13 | -0.25 | 52.72 | -0.1527 | -0.1015 | -0.0007 |
| 343 | SLV 12 | -1.13 | -0.25 | 52.72 | -0.1527 | -0.1015 | -0.0007 |
| 343 | SLV 13 | -17.5 | 0.14 | 36.77 | -0.0977 | -0.7563 | -0.0008 |
| 343 | SLV 14 | -17.5 | 0.14 | 36.77 | -0.0977 | -0.7563 | -0.0008 |
| 343 | SLV 15 | -15.01 | 0.04 | 44.82 | -0.155 | -0.6704 | -0.0011 |
| 343 | SLV 16 | -15.01 | 0.04 | 44.82 | -0.155 | -0.6704 | -0.0011 |
| 344 | SLU 1 | -2.09 | -0.41 | 48.82 | -0.204 | -0.0812 | -0.0001 |
| 344 | SLU 2 | -2.09 | -0.41 | 48.72 | -0.2033 | -0.0812 | -0.0001 |
| 344 | SLU 3 | -2.22 | -0.35 | 50.23 | -0.2151 | -0.086 | -0.0001 |
| 344 | SLU 4 | -2.22 | -0.35 | 50.16 | -0.2146 | -0.086 | -0.0001 |
| 344 | SLU 5 | -2.19 | -0.37 | 49.55 | -0.2101 | -0.0848 | -0.0001 |
| 344 | SLU 6 | -2.31 | -0.32 | 51.06 | -0.2218 | -0.0896 | -0.0002 |
| 344 | SLU 7 | -2.31 | -0.32 | 50.99 | -0.2214 | -0.0896 | -0.0002 |
| 344 | SLU 8 | -2.28 | -0.34 | 50.48 | -0.2175 | -0.0883 | -0.0002 |
| 344 | SLU 9 | -2.28 | -0.34 | 50.42 | -0.2171 | -0.0883 | -0.0002 |

| Nodo | Cont. | Reazione a traslazione | | | Reazione a rotazione | | |
|---|---|---|---|---|---|---|---|
| Ind. | N.br. | x | y | z | x | y | z |
| 344 | SLU 10 | -2.52 | -0.55 | 56.53 | -0.238 | -0.0979 | -0.0002 |
| 344 | SLU 11 | -2.65 | -0.49 | 58.04 | -0.2497 | -0.1028 | -0.0002 |
| 344 | SLU 12 | -2.65 | -0.5 | 57.98 | -0.2493 | -0.1028 | -0.0002 |
| 344 | SLU 13 | -2.62 | -0.52 | 57.36 | -0.2447 | -0.1015 | -0.0002 |
| 344 | SLU 14 | -2.74 | -0.46 | 58.87 | -0.2564 | -0.1064 | -0.0002 |
| 344 | SLU 15 | -2.74 | -0.46 | 58.81 | -0.256 | -0.1064 | -0.0002 |
| 344 | SLU 16 | -2.71 | -0.48 | 58.29 | -0.2522 | -0.1051 | -0.0002 |
| 344 | SLU 17 | -2.71 | -0.48 | 58.23 | -0.2517 | -0.1051 | -0.0002 |
| 344 | SLU 18 | -2.71 | -0.61 | 59.99 | -0.2535 | -0.1051 | -0.0002 |
| 344 | SLU 19 | -2.71 | -0.61 | 59.92 | -0.2531 | -0.1051 | -0.0002 |
| 344 | SLU 20 | -2.8 | -0.58 | 60.82 | -0.2603 | -0.1087 | -0.0002 |
| 344 | SLU 21 | -2.8 | -0.58 | 60.75 | -0.2598 | -0.1087 | -0.0002 |
| 344 | SLU 22 | -2.51 | -0.46 | 55.93 | -0.2399 | -0.0973 | -0.0002 |
| 344 | SLU 23 | -2.51 | -0.46 | 55.83 | -0.2392 | -0.0973 | -0.0002 |
| 344 | SLU 24 | -2.63 | -0.41 | 57.34 | -0.251 | -0.1022 | -0.0002 |
| 344 | SLU 25 | -2.63 | -0.41 | 57.27 | -0.2505 | -0.1022 | -0.0002 |
| 344 | SLU 26 | -2.6 | -0.43 | 56.65 | -0.246 | -0.1009 | -0.0002 |
| 344 | SLU 27 | -2.73 | -0.37 | 58.17 | -0.2577 | -0.1058 | -0.0002 |
| 344 | SLU 28 | -2.72 | -0.37 | 58.1 | -0.2573 | -0.1058 | -0.0002 |
| 344 | SLU 29 | -2.69 | -0.39 | 57.59 | -0.2534 | -0.1045 | -0.0002 |
| 344 | SLU 30 | -2.69 | -0.39 | 57.53 | -0.253 | -0.1045 | -0.0002 |
| 344 | SLU 31 | -2.94 | -0.61 | 63.64 | -0.2739 | -0.1141 | -0.0002 |
| 344 | SLU 32 | -3.06 | -0.55 | 65.15 | -0.2856 | -0.119 | -0.0002 |
| 344 | SLU 33 | -3.06 | -0.55 | 65.09 | -0.2852 | -0.119 | -0.0002 |
| 344 | SLU 34 | -3.03 | -0.57 | 64.47 | -0.2806 | -0.1177 | -0.0002 |
| 344 | SLU 35 | -3.15 | -0.52 | 65.98 | -0.2923 | -0.1225 | -0.0002 |
| 344 | SLU 36 | -3.15 | -0.52 | 65.92 | -0.2919 | -0.1225 | -0.0002 |
| 344 | SLU 37 | -3.12 | -0.54 | 65.4 | -0.2881 | -0.1213 | -0.0002 |
| 344 | SLU 38 | -3.12 | -0.54 | 65.34 | -0.2876 | -0.1213 | -0.0002 |
| 344 | SLU 39 | -3.12 | -0.67 | 67.1 | -0.2894 | -0.1213 | -0.0002 |
| 344 | SLU 40 | -3.12 | -0.67 | 67.03 | -0.289 | -0.1213 | -0.0002 |
| 344 | SLU 41 | -3.21 | -0.63 | 67.92 | -0.2962 | -0.1249 | -0.0002 |
| 344 | SLU 42 | -3.21 | -0.63 | 67.86 | -0.2957 | -0.1249 | -0.0002 |
| 344 | SLU 43 | -2.58 | -0.51 | 61.03 | -0.2529 | -0.1 | -0.0002 |
| 344 | SLU 44 | -2.58 | -0.51 | 60.93 | -0.2522 | -0.1 | -0.0002 |
| 344 | SLU 45 | -2.71 | -0.45 | 62.44 | -0.264 | -0.1049 | -0.0002 |
| 344 | SLU 46 | -2.71 | -0.45 | 62.37 | -0.2635 | -0.1049 | -0.0002 |
| 344 | SLU 47 | -2.67 | -0.48 | 61.75 | -0.259 | -0.1036 | -0.0002 |
| 344 | SLU 48 | -2.8 | -0.42 | 63.27 | -0.2707 | -0.1084 | -0.0002 |
| 344 | SLU 49 | -2.8 | -0.42 | 63.2 | -0.2703 | -0.1084 | -0.0002 |
| 344 | SLU 50 | -2.77 | -0.44 | 62.69 | -0.2664 | -0.1072 | -0.0002 |
| 344 | SLU 51 | -2.77 | -0.44 | 62.63 | -0.266 | -0.1072 | -0.0002 |
| 344 | SLU 52 | -3.01 | -0.65 | 68.74 | -0.2869 | -0.1168 | -0.0002 |
| 344 | SLU 53 | -3.14 | -0.6 | 70.25 | -0.2986 | -0.1216 | -0.0002 |
| 344 | SLU 54 | -3.13 | -0.6 | 70.19 | -0.2982 | -0.1216 | -0.0002 |
| 344 | SLU 55 | -3.1 | -0.62 | 69.57 | -0.2936 | -0.1203 | -0.0002 |
| 344 | SLU 56 | -3.23 | -0.56 | 71.08 | -0.3053 | -0.1252 | -0.0002 |
| 344 | SLU 57 | -3.23 | -0.56 | 71.02 | -0.3049 | -0.1252 | -0.0002 |
| 344 | SLU 58 | -3.19 | -0.58 | 70.5 | -0.3011 | -0.1239 | -0.0002 |
| 344 | SLU 59 | -3.19 | -0.58 | 70.44 | -0.3006 | -0.1239 | -0.0002 |
| 344 | SLU 60 | -3.19 | -0.71 | 72.2 | -0.3024 | -0.1239 | -0.0002 |
| 344 | SLU 61 | -3.19 | -0.71 | 72.13 | -0.302 | -0.1239 | -0.0002 |
| 344 | SLU 62 | -3.29 | -0.68 | 73.03 | -0.3092 | -0.1275 | -0.0002 |
| 344 | SLU 63 | -3.29 | -0.68 | 72.96 | -0.3087 | -0.1275 | -0.0002 |
| 344 | SLU 64 | -2.99 | -0.56 | 68.14 | -0.2888 | -0.1161 | -0.0002 |
| 344 | SLU 65 | -2.99 | -0.57 | 68.04 | -0.2881 | -0.1161 | -0.0002 |
| 344 | SLU 66 | -3.12 | -0.51 | 69.55 | -0.2999 | -0.121 | -0.0002 |
| 344 | SLU 67 | -3.12 | -0.51 | 69.48 | -0.2994 | -0.121 | -0.0002 |
| 344 | SLU 68 | -3.09 | -0.53 | 68.86 | -0.2949 | -0.1197 | -0.0002 |
| 344 | SLU 69 | -3.21 | -0.47 | 70.38 | -0.3066 | -0.1246 | -0.0002 |
| 344 | SLU 70 | -3.21 | -0.48 | 70.31 | -0.3062 | -0.1246 | -0.0002 |
| 344 | SLU 71 | -3.18 | -0.49 | 69.8 | -0.3023 | -0.1233 | -0.0002 |
| 344 | SLU 72 | -3.18 | -0.5 | 69.73 | -0.3019 | -0.1233 | -0.0002 |
| 344 | SLU 73 | -3.42 | -0.71 | 75.85 | -0.3228 | -0.1329 | -0.0002 |
| 344 | SLU 74 | -3.55 | -0.65 | 77.36 | -0.3345 | -0.1378 | -0.0002 |
| 344 | SLU 75 | -3.55 | -0.65 | 77.3 | -0.3341 | -0.1378 | -0.0002 |
| 344 | SLU 76 | -3.52 | -0.67 | 76.68 | -0.3295 | -0.1365 | -0.0002 |
| 344 | SLU 77 | -3.64 | -0.62 | 78.19 | -0.3412 | -0.1414 | -0.0002 |
| 344 | SLU 78 | -3.64 | -0.62 | 78.13 | -0.3408 | -0.1414 | -0.0002 |
| 344 | SLU 79 | -3.61 | -0.64 | 77.61 | -0.337 | -0.1401 | -0.0002 |
| 344 | SLU 80 | -3.61 | -0.64 | 77.55 | -0.3365 | -0.1401 | -0.0002 |
| 344 | SLU 81 | -3.61 | -0.77 | 79.31 | -0.3383 | -0.1401 | -0.0002 |
| 344 | SLU 82 | -3.61 | -0.77 | 79.24 | -0.3379 | -0.1401 | -0.0002 |
| 344 | SLU 83 | -3.7 | -0.73 | 80.13 | -0.3451 | -0.1437 | -0.0002 |
| 344 | SLU 84 | -3.7 | -0.74 | 80.07 | -0.3446 | -0.1437 | -0.0002 |
| 344 | SLE RA 1 | -2.21 | -0.42 | 50.85 | -0.2143 | -0.0858 | -0.0001 |
| 344 | SLE RA 2 | -2.21 | -0.42 | 50.78 | -0.2138 | -0.0858 | -0.0001 |
| 344 | SLE RA 3 | -2.3 | -0.38 | 51.79 | -0.2216 | -0.089 | -0.0002 |
| 344 | SLE RA 4 | -2.3 | -0.39 | 51.75 | -0.2214 | -0.089 | -0.0002 |
| 344 | SLE RA 5 | -2.27 | -0.4 | 51.34 | -0.2183 | -0.0882 | -0.0002 |
| 344 | SLE RA 6 | -2.36 | -0.36 | 52.34 | -0.2261 | -0.0914 | -0.0002 |
| 344 | SLE RA 7 | -2.36 | -0.36 | 52.3 | -0.2259 | -0.0914 | -0.0002 |
| 344 | SLE RA 8 | -2.34 | -0.37 | 51.96 | -0.2233 | -0.0906 | -0.0002 |
| 344 | SLE RA 9 | -2.34 | -0.38 | 51.92 | -0.223 | -0.0906 | -0.0002 |
| 344 | SLE RA 10 | -2.5 | -0.52 | 55.99 | -0.2369 | -0.097 | -0.0002 |
| 344 | SLE RA 11 | -2.58 | -0.48 | 57 | -0.2447 | -0.1002 | -0.0002 |
| 344 | SLE RA 12 | -2.58 | -0.48 | 56.96 | -0.2445 | -0.1002 | -0.0002 |
| 344 | SLE RA 13 | -2.56 | -0.5 | 56.55 | -0.2414 | -0.0994 | -0.0002 |

| Nodo | Cont. | Reazione a traslazione | | | Reazione a rotazione | | |
|---|---|---|---|---|---|---|---|
| Ind. | N.br. | x | y | z | x | y | z |
| 344 | SLE RA 14 | -2.64 | -0.46 | 57.55 | -0.2492 | -0.1026 | -0.0002 |
| 344 | SLE RA 15 | -2.64 | -0.46 | 57.51 | -0.249 | -0.1026 | -0.0002 |
| 344 | SLE RA 16 | -2.62 | -0.47 | 57.17 | -0.2464 | -0.1017 | -0.0002 |
| 344 | SLE RA 17 | -2.62 | -0.47 | 57.13 | -0.2461 | -0.1017 | -0.0002 |
| 344 | SLE RA 18 | -2.62 | -0.56 | 58.3 | -0.2473 | -0.1018 | -0.0002 |
| 344 | SLE RA 19 | -2.62 | -0.56 | 58.25 | -0.247 | -0.1018 | -0.0002 |
| 344 | SLE RA 20 | -2.68 | -0.53 | 58.85 | -0.2518 | -0.1041 | -0.0002 |
| 344 | SLE RA 21 | -2.68 | -0.54 | 58.81 | -0.2515 | -0.1041 | -0.0002 |
| 344 | SLE FR 1 | -2.21 | -0.42 | 50.85 | -0.2143 | -0.0858 | -0.0001 |
| 344 | SLE FR 2 | -2.21 | -0.42 | 50.84 | -0.2142 | -0.0858 | -0.0001 |
| 344 | SLE FR 3 | -2.24 | -0.41 | 51.08 | -0.2161 | -0.0867 | -0.0001 |
| 344 | SLE FR 4 | -2.34 | -0.46 | 53.07 | -0.2241 | -0.0906 | -0.0002 |
| 344 | SLE FR 5 | -2.36 | -0.45 | 53.31 | -0.226 | -0.0915 | -0.0002 |
| 344 | SLE FR 6 | -2.42 | -0.49 | 54.58 | -0.2308 | -0.0938 | -0.0002 |
| 344 | SLE QP 1 | -2.21 | -0.42 | 50.85 | -0.2143 | -0.0858 | -0.0001 |
| 344 | SLE QP 2 | -2.34 | -0.46 | 53.09 | -0.2242 | -0.0906 | -0.0002 |
| 344 | SLD 1 | 4.53 | -2.46 | 47.46 | -0.1236 | 0.2072 | 0.0003 |
| 344 | SLD 2 | 4.53 | -2.46 | 47.46 | -0.1236 | 0.2072 | 0.0003 |
| 344 | SLD 3 | 4.95 | 0.49 | 55.41 | -0.2632 | 0.2255 | 0.0004 |
| 344 | SLD 4 | 4.95 | 0.49 | 55.41 | -0.2632 | 0.2255 | 0.0004 |
| 344 | SLD 5 | -0.9 | -5.53 | 39.34 | 0.0178 | -0.029 | -0.0001 |
| 344 | SLD 6 | -0.9 | -5.53 | 39.34 | 0.0178 | -0.029 | -0.0001 |
| 344 | SLD 7 | 0.47 | 4.29 | 65.85 | -0.4477 | 0.032 | 0.0001 |
| 344 | SLD 8 | 0.47 | 4.29 | 65.85 | -0.4477 | 0.032 | 0.0001 |
| 344 | SLD 9 | -5.15 | -5.22 | 40.33 | -0.0006 | -0.2132 | -0.0004 |
| 344 | SLD 10 | -5.15 | -5.22 | 40.33 | -0.0006 | -0.2132 | -0.0004 |
| 344 | SLD 11 | -3.77 | 4.6 | 66.84 | -0.4662 | -0.1522 | -0.0002 |
| 344 | SLD 12 | -3.77 | 4.6 | 66.84 | -0.4662 | -0.1522 | -0.0002 |
| 344 | SLD 13 | -9.62 | -1.41 | 50.76 | -0.1851 | -0.4067 | -0.0007 |
| 344 | SLD 14 | -9.62 | -1.41 | 50.76 | -0.1851 | -0.4067 | -0.0007 |
| 344 | SLD 15 | -9.2 | 1.53 | 58.71 | -0.3248 | -0.3884 | -0.0006 |
| 344 | SLD 16 | -9.2 | 1.53 | 58.71 | -0.3248 | -0.3884 | -0.0006 |
| 344 | SLV 1 | 13.34 | -5.13 | 39.97 | 0.0117 | 0.5891 | 0.0009 |
| 344 | SLV 2 | 13.34 | -5.13 | 39.97 | 0.0117 | 0.5891 | 0.0009 |
| 344 | SLV 3 | 14.33 | 1.75 | 58.47 | -0.3153 | 0.6331 | 0.001 |
| 344 | SLV 4 | 14.33 | 1.75 | 58.47 | -0.3153 | 0.6331 | 0.001 |
| 344 | SLV 5 | 0.86 | -12.31 | 21.1 | 0.3425 | 0.0465 | 0 |
| 344 | SLV 6 | 0.86 | -12.31 | 21.1 | 0.3425 | 0.0465 | 0 |
| 344 | SLV 7 | 4.17 | 10.65 | 82.75 | -0.7474 | 0.1934 | 0.0003 |
| 344 | SLV 8 | 4.17 | 10.65 | 82.75 | -0.7474 | 0.1934 | 0.0003 |
| 344 | SLV 9 | -8.84 | -11.57 | 23.42 | 0.299 | -0.3745 | -0.0006 |
| 344 | SLV 10 | -8.84 | -11.57 | 23.42 | 0.299 | -0.3745 | -0.0006 |
| 344 | SLV 11 | -5.53 | 11.38 | 85.07 | -0.7909 | -0.2276 | -0.0003 |
| 344 | SLV 12 | -5.53 | 11.38 | 85.07 | -0.7909 | -0.2276 | -0.0003 |
| 344 | SLV 13 | -19 | -2.68 | 47.71 | -0.1331 | -0.8143 | -0.0013 |
| 344 | SLV 14 | -19 | -2.68 | 47.71 | -0.1331 | -0.8143 | -0.0013 |
| 344 | SLV 15 | -18.01 | 4.21 | 66.2 | -0.4601 | -0.7702 | -0.0012 |
| 344 | SLV 16 | -18.01 | 4.21 | 66.2 | -0.4601 | -0.7702 | -0.0012 |
| 345 | SLU 1 | -4.08 | -0.14 | 37.42 | -0.0255 | -0.1674 | 0.0003 |
| 345 | SLU 2 | -4.08 | -0.14 | 37.33 | -0.0253 | -0.1672 | 0.0003 |
| 345 | SLU 3 | -4.27 | -0.15 | 38.57 | -0.0273 | -0.1759 | 0.0003 |
| 345 | SLU 4 | -4.27 | -0.15 | 38.52 | -0.0272 | -0.1758 | 0.0003 |
| 345 | SLU 5 | -4.2 | -0.14 | 38.03 | -0.0268 | -0.1732 | 0.0003 |
| 345 | SLU 6 | -4.4 | -0.15 | 39.28 | -0.0288 | -0.1819 | 0.0003 |
| 345 | SLU 7 | -4.4 | -0.15 | 39.22 | -0.0287 | -0.1818 | 0.0003 |
| 345 | SLU 8 | -4.34 | -0.15 | 38.82 | -0.0284 | -0.1793 | 0.0003 |
| 345 | SLU 9 | -4.34 | -0.15 | 38.77 | -0.0283 | -0.1792 | 0.0003 |
| 345 | SLU 10 | -4.95 | -0.17 | 43.1 | -0.0298 | -0.2027 | 0.0003 |
| 345 | SLU 11 | -5.15 | -0.17 | 44.35 | -0.0318 | -0.2114 | 0.0003 |
| 345 | SLU 12 | -5.15 | -0.17 | 44.3 | -0.0317 | -0.2113 | 0.0003 |
| 345 | SLU 13 | -5.08 | -0.17 | 43.81 | -0.0313 | -0.2087 | 0.0003 |
| 345 | SLU 14 | -5.28 | -0.18 | 45.05 | -0.0333 | -0.2174 | 0.0004 |
| 345 | SLU 15 | -5.27 | -0.18 | 45 | -0.0332 | -0.2173 | 0.0004 |
| 345 | SLU 16 | -5.21 | -0.17 | 44.6 | -0.0329 | -0.2148 | 0.0003 |
| 345 | SLU 17 | -5.21 | -0.17 | 44.55 | -0.0328 | -0.2147 | 0.0003 |
| 345 | SLU 18 | -5.33 | -0.18 | 45.67 | -0.0319 | -0.2181 | 0.0004 |
| 345 | SLU 19 | -5.33 | -0.18 | 45.61 | -0.0318 | -0.218 | 0.0004 |
| 345 | SLU 20 | -5.46 | -0.18 | 46.37 | -0.0333 | -0.224 | 0.0004 |
| 345 | SLU 21 | -5.46 | -0.18 | 46.32 | -0.0332 | -0.2239 | 0.0004 |
| 345 | SLU 22 | -4.88 | -0.17 | 42.77 | -0.0303 | -0.2004 | 0.0003 |
| 345 | SLU 23 | -4.88 | -0.17 | 42.68 | -0.0301 | -0.2003 | 0.0003 |
| 345 | SLU 24 | -5.08 | -0.17 | 43.93 | -0.0321 | -0.209 | 0.0003 |
| 345 | SLU 25 | -5.07 | -0.17 | 43.87 | -0.032 | -0.2089 | 0.0003 |
| 345 | SLU 26 | -5.01 | -0.17 | 43.39 | -0.0316 | -0.2062 | 0.0003 |
| 345 | SLU 27 | -5.21 | -0.17 | 44.63 | -0.0336 | -0.2149 | 0.0003 |
| 345 | SLU 28 | -5.2 | -0.17 | 44.58 | -0.0335 | -0.2148 | 0.0003 |
| 345 | SLU 29 | -5.14 | -0.17 | 44.18 | -0.0332 | -0.2123 | 0.0003 |
| 345 | SLU 30 | -5.14 | -0.17 | 44.12 | -0.0331 | -0.2122 | 0.0003 |
| 345 | SLU 31 | -5.76 | -0.19 | 48.46 | -0.0346 | -0.2358 | 0.0004 |
| 345 | SLU 32 | -5.95 | -0.2 | 49.7 | -0.0366 | -0.2444 | 0.0004 |
| 345 | SLU 33 | -5.95 | -0.2 | 49.65 | -0.0365 | -0.2443 | 0.0004 |
| 345 | SLU 34 | -5.89 | -0.2 | 49.16 | -0.036 | -0.2417 | 0.0004 |
| 345 | SLU 35 | -6.08 | -0.2 | 50.41 | -0.038 | -0.2504 | 0.0004 |
| 345 | SLU 36 | -6.08 | -0.2 | 50.35 | -0.0379 | -0.2503 | 0.0004 |
| 345 | SLU 37 | -6.02 | -0.2 | 49.95 | -0.0376 | -0.2478 | 0.0004 |
| 345 | SLU 38 | -6.02 | -0.2 | 49.9 | -0.0375 | -0.2477 | 0.0004 |
| 345 | SLU 39 | -6.13 | -0.21 | 51.02 | -0.0367 | -0.2511 | 0.0004 |
| 345 | SLU 40 | -6.13 | -0.21 | 50.97 | -0.0366 | -0.251 | 0.0004 |

| Nodo | Cont. | Reazione a traslazione | | | Reazione a rotazione | | |
|---|---|---|---|---|---|---|---|
| Ind. | N.br. | x | y | z | x | y | z |
| 345 | SLU 41 | -6.26 | -0.21 | 51.73 | -0.0381 | -0.2571 | 0.0004 |
| 345 | SLU 42 | -6.26 | -0.21 | 51.67 | -0.038 | -0.257 | 0.0004 |
| 345 | SLU 43 | -5.03 | -0.18 | 46.81 | -0.0315 | -0.2063 | 0.0004 |
| 345 | SLU 44 | -5.02 | -0.18 | 46.72 | -0.0313 | -0.2061 | 0.0003 |
| 345 | SLU 45 | -5.22 | -0.18 | 47.96 | -0.0333 | -0.2148 | 0.0004 |
| 345 | SLU 46 | -5.22 | -0.18 | 47.91 | -0.0332 | -0.2147 | 0.0004 |
| 345 | SLU 47 | -5.15 | -0.18 | 47.42 | -0.0328 | -0.2121 | 0.0004 |
| 345 | SLU 48 | -5.35 | -0.18 | 48.67 | -0.0348 | -0.2208 | 0.0004 |
| 345 | SLU 49 | -5.35 | -0.18 | 48.61 | -0.0347 | -0.2207 | 0.0004 |
| 345 | SLU 50 | -5.29 | -0.18 | 48.21 | -0.0344 | -0.2182 | 0.0004 |
| 345 | SLU 51 | -5.28 | -0.18 | 48.16 | -0.0343 | -0.2181 | 0.0004 |
| 345 | SLU 52 | -5.9 | -0.2 | 52.49 | -0.0358 | -0.2416 | 0.0004 |
| 345 | SLU 53 | -6.09 | -0.21 | 53.74 | -0.0378 | -0.2503 | 0.0004 |
| 345 | SLU 54 | -6.09 | -0.21 | 53.69 | -0.0377 | -0.2502 | 0.0004 |
| 345 | SLU 55 | -6.03 | -0.21 | 53.2 | -0.0373 | -0.2476 | 0.0004 |
| 345 | SLU 56 | -6.22 | -0.21 | 54.44 | -0.0393 | -0.2563 | 0.0004 |
| 345 | SLU 57 | -6.22 | -0.21 | 54.39 | -0.0392 | -0.2562 | 0.0004 |
| 345 | SLU 58 | -6.16 | -0.21 | 53.99 | -0.0389 | -0.2537 | 0.0004 |
| 345 | SLU 59 | -6.16 | -0.21 | 53.94 | -0.0388 | -0.2536 | 0.0004 |
| 345 | SLU 60 | -6.28 | -0.22 | 55.06 | -0.0379 | -0.257 | 0.0004 |
| 345 | SLU 61 | -6.28 | -0.22 | 55 | -0.0378 | -0.2569 | 0.0004 |
| 345 | SLU 62 | -6.41 | -0.22 | 55.76 | -0.0393 | -0.2629 | 0.0004 |
| 345 | SLU 63 | -6.41 | -0.22 | 55.71 | -0.0392 | -0.2628 | 0.0004 |
| 345 | SLU 64 | -5.83 | -0.2 | 52.16 | -0.0363 | -0.2393 | 0.0004 |
| 345 | SLU 65 | -5.83 | -0.2 | 52.07 | -0.0361 | -0.2392 | 0.0004 |
| 345 | SLU 66 | -6.02 | -0.21 | 53.32 | -0.0381 | -0.2479 | 0.0004 |
| 345 | SLU 67 | -6.02 | -0.21 | 53.26 | -0.038 | -0.2478 | 0.0004 |
| 345 | SLU 68 | -5.96 | -0.2 | 52.78 | -0.0376 | -0.2451 | 0.0004 |
| 345 | SLU 69 | -6.15 | -0.21 | 54.02 | -0.0396 | -0.2538 | 0.0004 |
| 345 | SLU 70 | -6.15 | -0.21 | 53.97 | -0.0395 | -0.2537 | 0.0004 |
| 345 | SLU 71 | -6.09 | -0.21 | 53.57 | -0.0392 | -0.2512 | 0.0004 |
| 345 | SLU 72 | -6.09 | -0.21 | 53.51 | -0.0391 | -0.2511 | 0.0004 |
| 345 | SLU 73 | -6.7 | -0.23 | 57.85 | -0.0406 | -0.2747 | 0.0005 |
| 345 | SLU 74 | -6.9 | -0.23 | 59.09 | -0.0426 | -0.2833 | 0.0005 |
| 345 | SLU 75 | -6.9 | -0.23 | 59.04 | -0.0425 | -0.2832 | 0.0005 |
| 345 | SLU 76 | -6.83 | -0.23 | 58.55 | -0.042 | -0.2806 | 0.0005 |
| 345 | SLU 77 | -7.03 | -0.24 | 59.8 | -0.044 | -0.2893 | 0.0005 |
| 345 | SLU 78 | -7.03 | -0.24 | 59.74 | -0.0439 | -0.2892 | 0.0005 |
| 345 | SLU 79 | -6.97 | -0.23 | 59.34 | -0.0437 | -0.2867 | 0.0005 |
| 345 | SLU 80 | -6.96 | -0.23 | 59.29 | -0.0436 | -0.2866 | 0.0005 |
| 345 | SLU 81 | -7.08 | -0.24 | 60.41 | -0.0427 | -0.29 | 0.0005 |
| 345 | SLU 82 | -7.08 | -0.24 | 60.36 | -0.0426 | -0.2899 | 0.0005 |
| 345 | SLU 83 | -7.21 | -0.24 | 61.12 | -0.0441 | -0.296 | 0.0005 |
| 345 | SLU 84 | -7.21 | -0.24 | 61.06 | -0.044 | -0.2959 | 0.0005 |
| 345 | SLE RA 1 | -4.31 | -0.15 | 38.95 | -0.0269 | -0.1768 | 0.0003 |
| 345 | SLE RA 2 | -4.31 | -0.15 | 38.89 | -0.0268 | -0.1767 | 0.0003 |
| 345 | SLE RA 3 | -4.44 | -0.15 | 39.72 | -0.0281 | -0.1825 | 0.0003 |
| 345 | SLE RA 4 | -4.44 | -0.15 | 39.68 | -0.028 | -0.1825 | 0.0003 |
| 345 | SLE RA 5 | -4.39 | -0.15 | 39.36 | -0.0277 | -0.1807 | 0.0003 |
| 345 | SLE RA 6 | -4.52 | -0.15 | 40.19 | -0.0291 | -0.1865 | 0.0003 |
| 345 | SLE RA 7 | -4.52 | -0.15 | 40.15 | -0.029 | -0.1864 | 0.0003 |
| 345 | SLE RA 8 | -4.48 | -0.15 | 39.89 | -0.0288 | -0.1848 | 0.0003 |
| 345 | SLE RA 9 | -4.48 | -0.15 | 39.85 | -0.0287 | -0.1847 | 0.0003 |
| 345 | SLE RA 10 | -4.89 | -0.17 | 42.74 | -0.0297 | -0.2004 | 0.0003 |
| 345 | SLE RA 11 | -5.02 | -0.17 | 43.57 | -0.0311 | -0.2062 | 0.0003 |
| 345 | SLE RA 12 | -5.02 | -0.17 | 43.53 | -0.031 | -0.2061 | 0.0003 |
| 345 | SLE RA 13 | -4.98 | -0.17 | 43.21 | -0.0307 | -0.2043 | 0.0003 |
| 345 | SLE RA 14 | -5.11 | -0.17 | 44.04 | -0.032 | -0.2101 | 0.0003 |
| 345 | SLE RA 15 | -5.11 | -0.17 | 44 | -0.032 | -0.2101 | 0.0003 |
| 345 | SLE RA 16 | -5.07 | -0.17 | 43.74 | -0.0318 | -0.2084 | 0.0003 |
| 345 | SLE RA 17 | -5.06 | -0.17 | 43.7 | -0.0317 | -0.2083 | 0.0003 |
| 345 | SLE RA 18 | -5.14 | -0.18 | 44.45 | -0.0311 | -0.2106 | 0.0003 |
| 345 | SLE RA 19 | -5.14 | -0.18 | 44.41 | -0.0311 | -0.2106 | 0.0003 |
| 345 | SLE RA 20 | -5.23 | -0.18 | 44.92 | -0.0321 | -0.2146 | 0.0004 |
| 345 | SLE RA 21 | -5.23 | -0.18 | 44.88 | -0.032 | -0.2145 | 0.0004 |
| 345 | SLE FR 1 | -4.31 | -0.15 | 38.95 | -0.0269 | -0.1768 | 0.0003 |
| 345 | SLE FR 2 | -4.31 | -0.15 | 38.94 | -0.0268 | -0.1768 | 0.0003 |
| 345 | SLE FR 3 | -4.34 | -0.15 | 39.13 | -0.0272 | -0.1784 | 0.0003 |
| 345 | SLE FR 4 | -4.56 | -0.16 | 40.59 | -0.0281 | -0.187 | 0.0003 |
| 345 | SLE FR 5 | -4.59 | -0.16 | 40.78 | -0.0285 | -0.1886 | 0.0003 |
| 345 | SLE FR 6 | -4.73 | -0.16 | 41.7 | -0.029 | -0.1937 | 0.0003 |
| 345 | SLE QP 1 | -4.31 | -0.15 | 38.95 | -0.0269 | -0.1768 | 0.0003 |
| 345 | SLE QP 2 | -4.56 | -0.16 | 40.6 | -0.0281 | -0.187 | 0.0003 |
| 345 | SLD 1 | 3.17 | -0.03 | 37.09 | -0.0576 | 0.1349 | 0.0005 |
| 345 | SLD 2 | 3.17 | -0.03 | 37.09 | -0.0576 | 0.1349 | 0.0005 |
| 345 | SLD 3 | 2.22 | -0.08 | 40.66 | -0.0841 | 0.1044 | 0.0005 |
| 345 | SLD 4 | 2.22 | -0.08 | 40.66 | -0.0841 | 0.1044 | 0.0005 |
| 345 | SLD 5 | -0.8 | -0.05 | 34.13 | 0.0032 | -0.0441 | 0.0003 |
| 345 | SLD 6 | -0.8 | -0.05 | 34.13 | 0.0032 | -0.0441 | 0.0003 |
| 345 | SLD 7 | -3.96 | -0.21 | 46.03 | -0.0851 | -0.1459 | 0.0005 |
| 345 | SLD 8 | -3.96 | -0.21 | 46.03 | -0.0851 | -0.1459 | 0.0005 |
| 345 | SLD 9 | -5.15 | -0.11 | 35.16 | 0.0288 | -0.2281 | 0.0002 |
| 345 | SLD 10 | -5.15 | -0.11 | 35.16 | 0.0288 | -0.2281 | 0.0002 |
| 345 | SLD 11 | -8.31 | -0.27 | 47.07 | -0.0594 | -0.3299 | 0.0003 |
| 345 | SLD 12 | -8.31 | -0.27 | 47.07 | -0.0594 | -0.3299 | 0.0003 |
| 345 | SLD 13 | -11.34 | -0.23 | 40.53 | 0.0279 | -0.4784 | 0.0001 |
| 345 | SLD 14 | -11.34 | -0.23 | 40.53 | 0.0279 | -0.4784 | 0.0001 |
| 345 | SLD 15 | -12.28 | -0.28 | 44.11 | 0.0014 | -0.5089 | 0.0001 |

| Nodo | Cont. | Reazione a traslazione | | | Reazione a rotazione | | |
|---|---|---|---|---|---|---|---|
| Ind. | N.br. | x | y | z | x | y | z |
| 345 | SLD 16 | -12.28 | -0.28 | 44.11 | 0.0014 | -0.5089 | 0.0001 |
| 345 | SLV 1 | 13.12 | 0.16 | 32.46 | -0.1061 | 0.5495 | 0.0008 |
| 345 | SLV 2 | 13.12 | 0.16 | 32.46 | -0.1061 | 0.5495 | 0.0008 |
| 345 | SLV 3 | 10.91 | 0.05 | 40.74 | -0.1679 | 0.4784 | 0.0009 |
| 345 | SLV 4 | 10.91 | 0.05 | 40.74 | -0.1679 | 0.4784 | 0.0009 |
| 345 | SLV 5 | 4.09 | 0.1 | 25.59 | 0.0421 | 0.1419 | 0.0003 |
| 345 | SLV 6 | 4.09 | 0.1 | 25.59 | 0.0421 | 0.1419 | 0.0003 |
| 345 | SLV 7 | -3.26 | -0.26 | 53.2 | -0.1637 | -0.0953 | 0.0007 |
| 345 | SLV 8 | -3.26 | -0.26 | 53.2 | -0.1637 | -0.0953 | 0.0007 |
| 345 | SLV 9 | -5.86 | -0.05 | 27.99 | 0.1074 | -0.2787 | -0.0001 |
| 345 | SLV 10 | -5.86 | -0.05 | 27.99 | 0.1074 | -0.2787 | -0.0001 |
| 345 | SLV 11 | -13.21 | -0.42 | 55.6 | -0.0984 | -0.5159 | 0.0004 |
| 345 | SLV 12 | -13.21 | -0.42 | 55.6 | -0.0984 | -0.5159 | 0.0004 |
| 345 | SLV 13 | -20.03 | -0.36 | 40.45 | 0.1116 | -0.8523 | -0.0003 |
| 345 | SLV 14 | -20.03 | -0.36 | 40.45 | 0.1116 | -0.8523 | -0.0003 |
| 345 | SLV 15 | -22.24 | -0.47 | 48.74 | 0.0499 | -0.9235 | -0.0002 |
| 345 | SLV 16 | -22.24 | -0.47 | 48.74 | 0.0499 | -0.9235 | -0.0002 |
| 346 | SLU 1 | -5.73 | 0.08 | 35.75 | -0.1103 | -0.2299 | 0.0003 |
| 346 | SLU 2 | -5.72 | 0.08 | 35.66 | -0.1098 | -0.2297 | 0.0003 |
| 346 | SLU 3 | -5.98 | 0.08 | 36.9 | -0.1162 | -0.2398 | 0.0003 |
| 346 | SLU 4 | -5.97 | 0.08 | 36.84 | -0.1159 | -0.2397 | 0.0003 |
| 346 | SLU 5 | -5.88 | 0.08 | 36.38 | -0.1141 | -0.2357 | 0.0003 |
| 346 | SLU 6 | -6.13 | 0.08 | 37.61 | -0.1205 | -0.2459 | 0.0003 |
| 346 | SLU 7 | -6.13 | 0.08 | 37.56 | -0.1202 | -0.2457 | 0.0003 |
| 346 | SLU 8 | -6.04 | 0.08 | 37.19 | -0.1189 | -0.242 | 0.0003 |
| 346 | SLU 9 | -6.03 | 0.08 | 37.13 | -0.1186 | -0.2419 | 0.0003 |
| 346 | SLU 10 | -6.92 | 0.09 | 41.03 | -0.1301 | -0.2776 | 0.0003 |
| 346 | SLU 11 | -7.18 | 0.1 | 42.26 | -0.1365 | -0.2878 | 0.0004 |
| 346 | SLU 12 | -7.17 | 0.09 | 42.21 | -0.1362 | -0.2876 | 0.0004 |
| 346 | SLU 13 | -7.08 | 0.09 | 41.74 | -0.1344 | -0.2837 | 0.0004 |
| 346 | SLU 14 | -7.33 | 0.1 | 42.98 | -0.1408 | -0.2939 | 0.0004 |
| 346 | SLU 15 | -7.33 | 0.1 | 42.92 | -0.1405 | -0.2937 | 0.0004 |
| 346 | SLU 16 | -7.24 | 0.1 | 42.55 | -0.1392 | -0.29 | 0.0004 |
| 346 | SLU 17 | -7.23 | 0.1 | 42.49 | -0.1389 | -0.2899 | 0.0004 |
| 346 | SLU 18 | -7.44 | 0.1 | 43.41 | -0.1393 | -0.2985 | 0.0004 |
| 346 | SLU 19 | -7.44 | 0.1 | 43.36 | -0.139 | -0.2983 | 0.0004 |
| 346 | SLU 20 | -7.6 | 0.1 | 44.13 | -0.1436 | -0.3045 | 0.0004 |
| 346 | SLU 21 | -7.59 | 0.1 | 44.08 | -0.1433 | -0.3044 | 0.0004 |
| 346 | SLU 22 | -6.83 | 0.09 | 40.78 | -0.1303 | -0.274 | 0.0003 |
| 346 | SLU 23 | -6.82 | 0.09 | 40.69 | -0.1299 | -0.2737 | 0.0003 |
| 346 | SLU 24 | -7.08 | 0.1 | 41.92 | -0.1362 | -0.2839 | 0.0004 |
| 346 | SLU 25 | -7.07 | 0.1 | 41.87 | -0.136 | -0.2837 | 0.0004 |
| 346 | SLU 26 | -6.98 | 0.09 | 41.4 | -0.1342 | -0.2798 | 0.0004 |
| 346 | SLU 27 | -7.23 | 0.1 | 42.64 | -0.1405 | -0.2899 | 0.0004 |
| 346 | SLU 28 | -7.23 | 0.1 | 42.58 | -0.1403 | -0.2898 | 0.0004 |
| 346 | SLU 29 | -7.14 | 0.1 | 42.21 | -0.1389 | -0.2861 | 0.0004 |
| 346 | SLU 30 | -7.13 | 0.1 | 42.15 | -0.1387 | -0.286 | 0.0004 |
| 346 | SLU 31 | -8.02 | 0.1 | 46.05 | -0.1502 | -0.3217 | 0.0004 |
| 346 | SLU 32 | -8.28 | 0.11 | 47.28 | -0.1566 | -0.3318 | 0.0004 |
| 346 | SLU 33 | -8.27 | 0.11 | 47.23 | -0.1563 | -0.3317 | 0.0004 |
| 346 | SLU 34 | -8.18 | 0.11 | 46.76 | -0.1545 | -0.3278 | 0.0004 |
| 346 | SLU 35 | -8.43 | 0.11 | 48 | -0.1609 | -0.3379 | 0.0004 |
| 346 | SLU 36 | -8.43 | 0.11 | 47.95 | -0.1606 | -0.3378 | 0.0004 |
| 346 | SLU 37 | -8.34 | 0.11 | 47.57 | -0.1593 | -0.3341 | 0.0004 |
| 346 | SLU 38 | -8.33 | 0.11 | 47.52 | -0.159 | -0.3339 | 0.0004 |
| 346 | SLU 39 | -8.54 | 0.11 | 48.44 | -0.1594 | -0.3425 | 0.0004 |
| 346 | SLU 40 | -8.54 | 0.11 | 48.38 | -0.1591 | -0.3424 | 0.0004 |
| 346 | SLU 41 | -8.7 | 0.11 | 49.15 | -0.1637 | -0.3486 | 0.0004 |
| 346 | SLU 42 | -8.69 | 0.11 | 49.1 | -0.1634 | -0.3484 | 0.0004 |
| 346 | SLU 43 | -7.07 | 0.09 | 44.76 | -0.1365 | -0.2838 | 0.0004 |
| 346 | SLU 44 | -7.07 | 0.09 | 44.67 | -0.136 | -0.2835 | 0.0004 |
| 346 | SLU 45 | -7.32 | 0.1 | 45.9 | -0.1424 | -0.2937 | 0.0004 |
| 346 | SLU 46 | -7.32 | 0.1 | 45.85 | -0.1421 | -0.2935 | 0.0004 |
| 346 | SLU 47 | -7.22 | 0.1 | 45.38 | -0.1403 | -0.2896 | 0.0004 |
| 346 | SLU 48 | -7.47 | 0.1 | 46.62 | -0.1467 | -0.2997 | 0.0004 |
| 346 | SLU 49 | -7.47 | 0.1 | 46.56 | -0.1464 | -0.2996 | 0.0004 |
| 346 | SLU 50 | -7.38 | 0.1 | 46.19 | -0.1451 | -0.2959 | 0.0004 |
| 346 | SLU 51 | -7.37 | 0.1 | 46.14 | -0.1448 | -0.2958 | 0.0004 |
| 346 | SLU 52 | -8.27 | 0.11 | 50.03 | -0.1563 | -0.3315 | 0.0004 |
| 346 | SLU 53 | -8.52 | 0.11 | 51.27 | -0.1627 | -0.3417 | 0.0004 |
| 346 | SLU 54 | -8.52 | 0.11 | 51.21 | -0.1624 | -0.3415 | 0.0004 |
| 346 | SLU 55 | -8.42 | 0.11 | 50.75 | -0.1606 | -0.3376 | 0.0004 |
| 346 | SLU 56 | -8.67 | 0.12 | 51.98 | -0.167 | -0.3477 | 0.0004 |
| 346 | SLU 57 | -8.67 | 0.12 | 51.93 | -0.1667 | -0.3476 | 0.0004 |
| 346 | SLU 58 | -8.58 | 0.12 | 51.55 | -0.1654 | -0.3439 | 0.0004 |
| 346 | SLU 59 | -8.57 | 0.12 | 51.5 | -0.1651 | -0.3438 | 0.0004 |
| 346 | SLU 60 | -8.79 | 0.11 | 52.42 | -0.1655 | -0.3523 | 0.0004 |
| 346 | SLU 61 | -8.78 | 0.11 | 52.36 | -0.1652 | -0.3522 | 0.0004 |
| 346 | SLU 62 | -8.94 | 0.12 | 53.13 | -0.1698 | -0.3584 | 0.0005 |
| 346 | SLU 63 | -8.94 | 0.12 | 53.08 | -0.1695 | -0.3582 | 0.0005 |
| 346 | SLU 64 | -8.17 | 0.11 | 49.78 | -0.1565 | -0.3278 | 0.0004 |
| 346 | SLU 65 | -8.17 | 0.11 | 49.69 | -0.1561 | -0.3276 | 0.0004 |
| 346 | SLU 66 | -8.42 | 0.11 | 50.93 | -0.1624 | -0.3377 | 0.0004 |
| 346 | SLU 67 | -8.42 | 0.11 | 50.87 | -0.1622 | -0.3376 | 0.0004 |
| 346 | SLU 68 | -8.32 | 0.11 | 50.41 | -0.1604 | -0.3337 | 0.0004 |
| 346 | SLU 69 | -8.57 | 0.12 | 51.64 | -0.1668 | -0.3438 | 0.0004 |
| 346 | SLU 70 | -8.57 | 0.12 | 51.59 | -0.1665 | -0.3437 | 0.0004 |
| 346 | SLU 71 | -8.48 | 0.12 | 51.21 | -0.1651 | -0.34 | 0.0004 |

| Nodo | Cont. | Reazione a traslazione | | | Reazione a rotazione | | |
|---|---|---|---|---|---|---|---|
| Ind. | N.br. | x | y | z | x | y | z |
| 346 | SLU 72 | -8.47 | 0.12 | 51.16 | -0.1649 | -0.3398 | 0.0004 |
| 346 | SLU 73 | -9.37 | 0.12 | 55.05 | -0.1764 | -0.3756 | 0.0005 |
| 346 | SLU 74 | -9.62 | 0.13 | 56.29 | -0.1828 | -0.3857 | 0.0005 |
| 346 | SLU 75 | -9.62 | 0.13 | 56.23 | -0.1825 | -0.3856 | 0.0005 |
| 346 | SLU 76 | -9.52 | 0.13 | 55.77 | -0.1807 | -0.3816 | 0.0005 |
| 346 | SLU 77 | -9.77 | 0.13 | 57 | -0.1871 | -0.3918 | 0.0005 |
| 346 | SLU 78 | -9.77 | 0.13 | 56.95 | -0.1868 | -0.3916 | 0.0005 |
| 346 | SLU 79 | -9.68 | 0.13 | 56.58 | -0.1855 | -0.388 | 0.0005 |
| 346 | SLU 80 | -9.67 | 0.13 | 56.52 | -0.1852 | -0.3878 | 0.0005 |
| 346 | SLU 81 | -9.89 | 0.13 | 57.44 | -0.1856 | -0.3964 | 0.0005 |
| 346 | SLU 82 | -9.88 | 0.13 | 57.39 | -0.1853 | -0.3962 | 0.0005 |
| 346 | SLU 83 | -10.04 | 0.13 | 58.16 | -0.1899 | -0.4024 | 0.0005 |
| 346 | SLU 84 | -10.04 | 0.13 | 58.1 | -0.1896 | -0.4023 | 0.0005 |
| 346 | SLE RA 1 | -6.04 | 0.08 | 37.19 | -0.116 | -0.2425 | 0.0003 |
| 346 | SLE RA 2 | -6.04 | 0.08 | 37.13 | -0.1157 | -0.2423 | 0.0003 |
| 346 | SLE RA 3 | -6.21 | 0.08 | 37.95 | -0.1199 | -0.2491 | 0.0003 |
| 346 | SLE RA 4 | -6.21 | 0.08 | 37.92 | -0.1198 | -0.249 | 0.0003 |
| 346 | SLE RA 5 | -6.14 | 0.08 | 37.61 | -0.1186 | -0.2464 | 0.0003 |
| 346 | SLE RA 6 | -6.31 | 0.09 | 38.43 | -0.1228 | -0.2531 | 0.0003 |
| 346 | SLE RA 7 | -6.31 | 0.09 | 38.39 | -0.1226 | -0.253 | 0.0003 |
| 346 | SLE RA 8 | -6.25 | 0.09 | 38.14 | -0.1217 | -0.2506 | 0.0003 |
| 346 | SLE RA 9 | -6.25 | 0.09 | 38.11 | -0.1216 | -0.2505 | 0.0003 |
| 346 | SLE RA 10 | -6.84 | 0.09 | 40.7 | -0.1292 | -0.2743 | 0.0003 |
| 346 | SLE RA 11 | -7.01 | 0.09 | 41.53 | -0.1335 | -0.2811 | 0.0004 |
| 346 | SLE RA 12 | -7.01 | 0.09 | 41.49 | -0.1333 | -0.281 | 0.0004 |
| 346 | SLE RA 13 | -6.94 | 0.09 | 41.18 | -0.1321 | -0.2784 | 0.0004 |
| 346 | SLE RA 14 | -7.11 | 0.1 | 42 | -0.1364 | -0.2851 | 0.0004 |
| 346 | SLE RA 15 | -7.11 | 0.1 | 41.97 | -0.1362 | -0.285 | 0.0004 |
| 346 | SLE RA 16 | -7.05 | 0.09 | 41.72 | -0.1353 | -0.2826 | 0.0004 |
| 346 | SLE RA 17 | -7.05 | 0.09 | 41.68 | -0.1351 | -0.2825 | 0.0004 |
| 346 | SLE RA 18 | -7.19 | 0.09 | 42.3 | -0.1354 | -0.2882 | 0.0004 |
| 346 | SLE RA 19 | -7.18 | 0.09 | 42.26 | -0.1352 | -0.2881 | 0.0004 |
| 346 | SLE RA 20 | -7.29 | 0.1 | 42.77 | -0.1382 | -0.2922 | 0.0004 |
| 346 | SLE RA 21 | -7.29 | 0.1 | 42.74 | -0.138 | -0.2921 | 0.0004 |
| 346 | SLE FR 1 | -6.04 | 0.08 | 37.19 | -0.116 | -0.2425 | 0.0003 |
| 346 | SLE FR 2 | -6.04 | 0.08 | 37.18 | -0.1159 | -0.2425 | 0.0003 |
| 346 | SLE FR 3 | -6.09 | 0.08 | 37.38 | -0.1172 | -0.2441 | 0.0003 |
| 346 | SLE FR 4 | -6.39 | 0.08 | 38.71 | -0.1217 | -0.2562 | 0.0003 |
| 346 | SLE FR 5 | -6.43 | 0.09 | 38.91 | -0.123 | -0.2578 | 0.0003 |
| 346 | SLE FR 6 | -6.62 | 0.09 | 39.74 | -0.1257 | -0.2653 | 0.0003 |
| 346 | SLE QP 1 | -6.04 | 0.08 | 37.19 | -0.116 | -0.2425 | 0.0003 |
| 346 | SLE QP 2 | -6.39 | 0.08 | 38.72 | -0.1218 | -0.2562 | 0.0003 |
| 346 | SLD 1 | 1.5 | 0.18 | 35.32 | -0.1677 | 0.0816 | 0.0003 |
| 346 | SLD 2 | 1.5 | 0.18 | 35.32 | -0.1677 | 0.0816 | 0.0003 |
| 346 | SLD 3 | 0.68 | 0.24 | 37.57 | -0.2114 | 0.0511 | 0.0005 |
| 346 | SLD 4 | 0.68 | 0.24 | 37.57 | -0.2114 | 0.0511 | 0.0005 |
| 346 | SLD 5 | -2.78 | 0.01 | 34.28 | -0.0692 | -0.1085 | -0.0001 |
| 346 | SLD 6 | -2.78 | 0.01 | 34.28 | -0.0692 | -0.1085 | -0.0001 |
| 346 | SLD 7 | -5.51 | 0.23 | 41.79 | -0.2151 | -0.2104 | 0.0008 |
| 346 | SLD 8 | -5.51 | 0.23 | 41.79 | -0.2151 | -0.2104 | 0.0008 |
| 346 | SLD 9 | -7.27 | -0.06 | 35.65 | -0.0286 | -0.302 | -0.0001 |
| 346 | SLD 10 | -7.27 | -0.06 | 35.65 | -0.0286 | -0.302 | -0.0001 |
| 346 | SLD 11 | -10 | 0.15 | 43.16 | -0.1744 | -0.4039 | 0.0007 |
| 346 | SLD 12 | -10 | 0.15 | 43.16 | -0.1744 | -0.4039 | 0.0007 |
| 346 | SLD 13 | -13.46 | -0.08 | 39.87 | -0.0322 | -0.5635 | 0.0001 |
| 346 | SLD 14 | -13.46 | -0.08 | 39.87 | -0.0322 | -0.5635 | 0.0001 |
| 346 | SLD 15 | -14.28 | -0.01 | 42.13 | -0.0759 | -0.594 | 0.0004 |
| 346 | SLD 16 | -14.28 | -0.01 | 42.13 | -0.0759 | -0.594 | 0.0004 |
| 346 | SLV 1 | 11.66 | 0.33 | 30.82 | -0.2421 | 0.5166 | 0.0003 |
| 346 | SLV 2 | 11.66 | 0.33 | 30.82 | -0.2421 | 0.5166 | 0.0003 |
| 346 | SLV 3 | 9.75 | 0.49 | 36.04 | -0.3442 | 0.4453 | 0.0008 |
| 346 | SLV 4 | 9.75 | 0.49 | 36.04 | -0.3442 | 0.4453 | 0.0008 |
| 346 | SLV 5 | 1.92 | -0.07 | 28.44 | -0.0032 | 0.0838 | -0.0006 |
| 346 | SLV 6 | 1.92 | -0.07 | 28.44 | -0.0032 | 0.0838 | -0.0006 |
| 346 | SLV 7 | -4.44 | 0.43 | 45.83 | -0.3433 | -0.1539 | 0.0014 |
| 346 | SLV 8 | -4.44 | 0.43 | 45.83 | -0.3433 | -0.1539 | 0.0014 |
| 346 | SLV 9 | -8.34 | -0.27 | 31.61 | 0.0996 | -0.3585 | -0.0007 |
| 346 | SLV 10 | -8.34 | -0.27 | 31.61 | 0.0996 | -0.3585 | -0.0007 |
| 346 | SLV 11 | -14.69 | 0.24 | 49.01 | -0.2404 | -0.5962 | 0.0012 |
| 346 | SLV 12 | -14.69 | 0.24 | 49.01 | -0.2404 | -0.5962 | 0.0012 |
| 346 | SLV 13 | -22.53 | -0.32 | 41.4 | 0.1005 | -0.9577 | -0.0002 |
| 346 | SLV 14 | -22.53 | -0.32 | 41.4 | 0.1005 | -0.9577 | -0.0002 |
| 346 | SLV 15 | -24.44 | -0.17 | 46.62 | -0.0015 | -1.0291 | 0.0004 |
| 346 | SLV 16 | -24.44 | -0.17 | 46.62 | -0.0015 | -1.0291 | 0.0004 |
| 347 | SLU 1 | -7.1 | 0.27 | 33.19 | -0.2002 | -0.2921 | 0.0004 |
| 347 | SLU 2 | -7.09 | 0.27 | 33.1 | -0.1994 | -0.2918 | 0.0004 |
| 347 | SLU 3 | -7.4 | 0.28 | 34.28 | -0.2105 | -0.3051 | 0.0004 |
| 347 | SLU 4 | -7.4 | 0.28 | 34.23 | -0.21 | -0.3049 | 0.0004 |
| 347 | SLU 5 | -7.28 | 0.28 | 33.81 | -0.2068 | -0.2998 | 0.0004 |
| 347 | SLU 6 | -7.59 | 0.29 | 34.98 | -0.218 | -0.3132 | 0.0004 |
| 347 | SLU 7 | -7.58 | 0.29 | 34.93 | -0.2175 | -0.313 | 0.0004 |
| 347 | SLU 8 | -7.46 | 0.29 | 34.6 | -0.215 | -0.3082 | 0.0004 |
| 347 | SLU 9 | -7.46 | 0.29 | 34.54 | -0.2145 | -0.308 | 0.0004 |
| 347 | SLU 10 | -8.56 | 0.32 | 37.92 | -0.2364 | -0.352 | 0.0005 |
| 347 | SLU 11 | -8.87 | 0.33 | 39.09 | -0.2475 | -0.3653 | 0.0005 |
| 347 | SLU 12 | -8.86 | 0.33 | 39.04 | -0.2471 | -0.3651 | 0.0005 |
| 347 | SLU 13 | -8.74 | 0.33 | 38.62 | -0.2438 | -0.36 | 0.0005 |
| 347 | SLU 14 | -9.05 | 0.34 | 39.79 | -0.255 | -0.3733 | 0.0005 |

| Nodo | Cont. | Reazione a traslazione | | | Reazione a rotazione | | |
|---|---|---|---|---|---|---|---|
| Ind. | N.br. | x | y | z | x | y | z |
| 347 | SLU 15 | -9.04 | 0.34 | 39.74 | -0.2545 | -0.3731 | 0.0005 |
| 347 | SLU 16 | -8.93 | 0.34 | 39.41 | -0.252 | -0.3684 | 0.0005 |
| 347 | SLU 17 | -8.92 | 0.34 | 39.36 | -0.2515 | -0.3682 | 0.0005 |
| 347 | SLU 18 | -9.19 | 0.34 | 40.07 | -0.2531 | -0.3781 | 0.0005 |
| 347 | SLU 19 | -9.19 | 0.34 | 40.01 | -0.2526 | -0.3779 | 0.0005 |
| 347 | SLU 20 | -9.37 | 0.35 | 40.77 | -0.2605 | -0.3861 | 0.0005 |
| 347 | SLU 21 | -9.37 | 0.35 | 40.72 | -0.26 | -0.3859 | 0.0005 |
| 347 | SLU 22 | -8.45 | 0.32 | 37.74 | -0.2365 | -0.3477 | 0.0005 |
| 347 | SLU 23 | -8.44 | 0.32 | 37.65 | -0.2356 | -0.3473 | 0.0005 |
| 347 | SLU 24 | -8.75 | 0.33 | 38.83 | -0.2468 | -0.3607 | 0.0005 |
| 347 | SLU 25 | -8.74 | 0.33 | 38.78 | -0.2463 | -0.3605 | 0.0005 |
| 347 | SLU 26 | -8.62 | 0.33 | 38.35 | -0.243 | -0.3554 | 0.0005 |
| 347 | SLU 27 | -8.93 | 0.34 | 39.53 | -0.2542 | -0.3687 | 0.0005 |
| 347 | SLU 28 | -8.93 | 0.34 | 39.48 | -0.2537 | -0.3685 | 0.0005 |
| 347 | SLU 29 | -8.81 | 0.34 | 39.14 | -0.2513 | -0.3637 | 0.0005 |
| 347 | SLU 30 | -8.8 | 0.34 | 39.09 | -0.2508 | -0.3635 | 0.0005 |
| 347 | SLU 31 | -9.9 | 0.37 | 42.46 | -0.2726 | -0.4075 | 0.0005 |
| 347 | SLU 32 | -10.21 | 0.38 | 43.64 | -0.2838 | -0.4208 | 0.0005 |
| 347 | SLU 33 | -10.21 | 0.38 | 43.59 | -0.2833 | -0.4206 | 0.0005 |
| 347 | SLU 34 | -10.08 | 0.38 | 43.17 | -0.2801 | -0.4155 | 0.0005 |
| 347 | SLU 35 | -10.39 | 0.39 | 44.34 | -0.2912 | -0.4289 | 0.0006 |
| 347 | SLU 36 | -10.39 | 0.39 | 44.29 | -0.2907 | -0.4287 | 0.0006 |
| 347 | SLU 37 | -10.27 | 0.39 | 43.96 | -0.2883 | -0.4239 | 0.0006 |
| 347 | SLU 38 | -10.27 | 0.39 | 43.9 | -0.2878 | -0.4237 | 0.0006 |
| 347 | SLU 39 | -10.54 | 0.39 | 44.61 | -0.2893 | -0.4336 | 0.0006 |
| 347 | SLU 40 | -10.53 | 0.39 | 44.56 | -0.2888 | -0.4334 | 0.0006 |
| 347 | SLU 41 | -10.72 | 0.4 | 45.32 | -0.2967 | -0.4416 | 0.0006 |
| 347 | SLU 42 | -10.71 | 0.4 | 45.26 | -0.2962 | -0.4414 | 0.0006 |
| 347 | SLU 43 | -8.77 | 0.33 | 41.59 | -0.2478 | -0.3608 | 0.0005 |
| 347 | SLU 44 | -8.76 | 0.33 | 41.5 | -0.247 | -0.3604 | 0.0005 |
| 347 | SLU 45 | -9.07 | 0.35 | 42.68 | -0.2582 | -0.3737 | 0.0005 |
| 347 | SLU 46 | -9.07 | 0.35 | 42.62 | -0.2577 | -0.3735 | 0.0005 |
| 347 | SLU 47 | -8.95 | 0.34 | 42.2 | -0.2544 | -0.3684 | 0.0005 |
| 347 | SLU 48 | -9.26 | 0.36 | 43.38 | -0.2656 | -0.3818 | 0.0005 |
| 347 | SLU 49 | -9.25 | 0.36 | 43.33 | -0.2651 | -0.3816 | 0.0005 |
| 347 | SLU 50 | -9.13 | 0.35 | 42.99 | -0.2627 | -0.3768 | 0.0005 |
| 347 | SLU 51 | -9.13 | 0.35 | 42.94 | -0.2622 | -0.3766 | 0.0005 |
| 347 | SLU 52 | -10.23 | 0.38 | 46.31 | -0.284 | -0.4206 | 0.0006 |
| 347 | SLU 53 | -10.54 | 0.4 | 47.49 | -0.2952 | -0.4339 | 0.0006 |
| 347 | SLU 54 | -10.53 | 0.4 | 47.44 | -0.2947 | -0.4337 | 0.0006 |
| 347 | SLU 55 | -10.41 | 0.39 | 47.02 | -0.2914 | -0.4286 | 0.0006 |
| 347 | SLU 56 | -10.72 | 0.41 | 48.19 | -0.3026 | -0.4419 | 0.0006 |
| 347 | SLU 57 | -10.71 | 0.41 | 48.14 | -0.3021 | -0.4417 | 0.0006 |
| 347 | SLU 58 | -10.6 | 0.4 | 47.81 | -0.2997 | -0.437 | 0.0006 |
| 347 | SLU 59 | -10.59 | 0.4 | 47.75 | -0.2992 | -0.4368 | 0.0006 |
| 347 | SLU 60 | -10.86 | 0.41 | 48.46 | -0.3007 | -0.4467 | 0.0006 |
| 347 | SLU 61 | -10.86 | 0.41 | 48.41 | -0.3002 | -0.4465 | 0.0006 |
| 347 | SLU 62 | -11.04 | 0.42 | 49.17 | -0.3081 | -0.4547 | 0.0006 |
| 347 | SLU 63 | -11.04 | 0.42 | 49.11 | -0.3076 | -0.4545 | 0.0006 |
| 347 | SLU 64 | -10.12 | 0.38 | 46.14 | -0.2841 | -0.4163 | 0.0006 |
| 347 | SLU 65 | -10.11 | 0.38 | 46.05 | -0.2833 | -0.416 | 0.0005 |
| 347 | SLU 66 | -10.42 | 0.4 | 47.23 | -0.2944 | -0.4293 | 0.0006 |
| 347 | SLU 67 | -10.41 | 0.4 | 47.17 | -0.2939 | -0.4291 | 0.0006 |
| 347 | SLU 68 | -10.29 | 0.39 | 46.75 | -0.2907 | -0.424 | 0.0006 |
| 347 | SLU 69 | -10.6 | 0.41 | 47.93 | -0.3018 | -0.4373 | 0.0006 |
| 347 | SLU 70 | -10.6 | 0.41 | 47.88 | -0.3014 | -0.4371 | 0.0006 |
| 347 | SLU 71 | -10.48 | 0.4 | 47.54 | -0.2989 | -0.4323 | 0.0006 |
| 347 | SLU 72 | -10.47 | 0.4 | 47.49 | -0.2984 | -0.4321 | 0.0006 |
| 347 | SLU 73 | -11.57 | 0.43 | 50.86 | -0.3203 | -0.4761 | 0.0006 |
| 347 | SLU 74 | -11.88 | 0.45 | 52.04 | -0.3314 | -0.4894 | 0.0006 |
| 347 | SLU 75 | -11.88 | 0.45 | 51.99 | -0.3309 | -0.4892 | 0.0006 |
| 347 | SLU 76 | -11.75 | 0.44 | 51.56 | -0.3277 | -0.4841 | 0.0006 |
| 347 | SLU 77 | -12.06 | 0.46 | 52.74 | -0.3389 | -0.4975 | 0.0007 |
| 347 | SLU 78 | -12.06 | 0.46 | 52.69 | -0.3384 | -0.4973 | 0.0007 |
| 347 | SLU 79 | -11.94 | 0.45 | 52.35 | -0.3359 | -0.4925 | 0.0006 |
| 347 | SLU 80 | -11.94 | 0.45 | 52.3 | -0.3354 | -0.4923 | 0.0006 |
| 347 | SLU 81 | -12.21 | 0.46 | 53.01 | -0.3369 | -0.5022 | 0.0007 |
| 347 | SLU 82 | -12.2 | 0.45 | 52.96 | -0.3364 | -0.502 | 0.0007 |
| 347 | SLU 83 | -12.39 | 0.46 | 53.71 | -0.3444 | -0.5103 | 0.0007 |
| 347 | SLU 84 | -12.38 | 0.46 | 53.66 | -0.3439 | -0.5101 | 0.0007 |
| 347 | SLE RA 1 | -7.49 | 0.28 | 34.49 | -0.2106 | -0.308 | 0.0004 |
| 347 | SLE RA 2 | -7.48 | 0.28 | 34.43 | -0.21 | -0.3078 | 0.0004 |
| 347 | SLE RA 3 | -7.69 | 0.29 | 35.22 | -0.2175 | -0.3167 | 0.0004 |
| 347 | SLE RA 4 | -7.68 | 0.29 | 35.18 | -0.2171 | -0.3165 | 0.0004 |
| 347 | SLE RA 5 | -7.6 | 0.29 | 34.9 | -0.215 | -0.3131 | 0.0004 |
| 347 | SLE RA 6 | -7.81 | 0.3 | 35.68 | -0.2224 | -0.322 | 0.0004 |
| 347 | SLE RA 7 | -7.81 | 0.3 | 35.65 | -0.2221 | -0.3219 | 0.0004 |
| 347 | SLE RA 8 | -7.73 | 0.3 | 35.43 | -0.2205 | -0.3187 | 0.0004 |
| 347 | SLE RA 9 | -7.72 | 0.3 | 35.39 | -0.2201 | -0.3186 | 0.0004 |
| 347 | SLE RA 10 | -8.46 | 0.32 | 37.64 | -0.2347 | -0.3479 | 0.0005 |
| 347 | SLE RA 11 | -8.66 | 0.33 | 38.42 | -0.2421 | -0.3568 | 0.0005 |
| 347 | SLE RA 12 | -8.66 | 0.33 | 38.39 | -0.2418 | -0.3566 | 0.0005 |
| 347 | SLE RA 13 | -8.58 | 0.32 | 38.11 | -0.2396 | -0.3532 | 0.0005 |
| 347 | SLE RA 14 | -8.78 | 0.33 | 38.89 | -0.2471 | -0.3621 | 0.0005 |
| 347 | SLE RA 15 | -8.78 | 0.33 | 38.86 | -0.2467 | -0.362 | 0.0005 |
| 347 | SLE RA 16 | -8.7 | 0.33 | 38.64 | -0.2451 | -0.3588 | 0.0005 |
| 347 | SLE RA 17 | -8.7 | 0.33 | 38.6 | -0.2448 | -0.3587 | 0.0005 |
| 347 | SLE RA 18 | -8.88 | 0.33 | 39.07 | -0.2458 | -0.3653 | 0.0005 |

| Nodo | Cont. | Reazione a traslazione | | | Reazione a rotazione | | |
|---|---|---|---|---|---|---|---|
| Ind. | N.br. | x | y | z | x | y | z |
| 347 | SLE RA 19 | -8.88 | 0.33 | 39.04 | -0.2455 | -0.3652 | 0.0005 |
| 347 | SLE RA 20 | -9 | 0.34 | 39.54 | -0.2507 | -0.3707 | 0.0005 |
| 347 | SLE RA 21 | -9 | 0.34 | 39.51 | -0.2504 | -0.3705 | 0.0005 |
| 347 | SLE FR 1 | -7.49 | 0.28 | 34.49 | -0.2106 | -0.308 | 0.0004 |
| 347 | SLE FR 2 | -7.49 | 0.28 | 34.48 | -0.2104 | -0.308 | 0.0004 |
| 347 | SLE FR 3 | -7.53 | 0.29 | 34.68 | -0.2125 | -0.3102 | 0.0004 |
| 347 | SLE FR 4 | -7.9 | 0.3 | 35.85 | -0.221 | -0.3252 | 0.0004 |
| 347 | SLE FR 5 | -7.95 | 0.3 | 36.05 | -0.2231 | -0.3273 | 0.0004 |
| 347 | SLE FR 6 | -8.18 | 0.31 | 36.78 | -0.2282 | -0.3367 | 0.0004 |
| 347 | SLE QP 1 | -7.49 | 0.28 | 34.49 | -0.2106 | -0.308 | 0.0004 |
| 347 | SLE QP 2 | -7.9 | 0.3 | 35.87 | -0.2211 | -0.3252 | 0.0004 |
| 347 | SLD 1 | 0.17 | 0.37 | 32.35 | -0.2654 | 0.0181 | 0.0005 |
| 347 | SLD 2 | 0.17 | 0.37 | 32.35 | -0.2654 | 0.0181 | 0.0005 |
| 347 | SLD 3 | -0.57 | 0.46 | 34.26 | -0.3333 | -0.0101 | 0.0007 |
| 347 | SLD 4 | -0.57 | 0.46 | 34.26 | -0.3333 | -0.0101 | 0.0007 |
| 347 | SLD 5 | -4.37 | 0.17 | 31.92 | -0.1314 | -0.1795 | 0.0002 |
| 347 | SLD 6 | -4.37 | 0.17 | 31.92 | -0.1314 | -0.1795 | 0.0002 |
| 347 | SLD 7 | -6.82 | 0.49 | 38.28 | -0.3578 | -0.2734 | 0.0008 |
| 347 | SLD 8 | -6.82 | 0.49 | 38.28 | -0.3578 | -0.2734 | 0.0008 |
| 347 | SLD 9 | -8.99 | 0.1 | 33.45 | -0.0844 | -0.377 | 0.0001 |
| 347 | SLD 10 | -8.99 | 0.1 | 33.45 | -0.0844 | -0.377 | 0.0001 |
| 347 | SLD 11 | -11.44 | 0.42 | 39.82 | -0.3109 | -0.4709 | 0.0007 |
| 347 | SLD 12 | -11.44 | 0.42 | 39.82 | -0.3109 | -0.4709 | 0.0007 |
| 347 | SLD 13 | -15.24 | 0.13 | 37.47 | -0.1089 | -0.6403 | 0.0002 |
| 347 | SLD 14 | -15.24 | 0.13 | 37.47 | -0.1089 | -0.6403 | 0.0002 |
| 347 | SLD 15 | -15.98 | 0.23 | 39.38 | -0.1769 | -0.6685 | 0.0004 |
| 347 | SLD 16 | -15.98 | 0.23 | 39.38 | -0.1769 | -0.6685 | 0.0004 |
| 347 | SLV 1 | 10.56 | 0.48 | 27.71 | -0.3366 | 0.46 | 0.0005 |
| 347 | SLV 2 | 10.56 | 0.48 | 27.71 | -0.3366 | 0.46 | 0.0005 |
| 347 | SLV 3 | 8.84 | 0.7 | 32.14 | -0.4952 | 0.3941 | 0.001 |
| 347 | SLV 4 | 8.84 | 0.7 | 32.14 | -0.4952 | 0.3941 | 0.001 |
| 347 | SLV 5 | 0.24 | 0.01 | 26.7 | -0.0151 | 0.0104 | -0.0002 |
| 347 | SLV 6 | 0.24 | 0.01 | 26.7 | -0.0151 | 0.0104 | -0.0002 |
| 347 | SLV 7 | -5.48 | 0.76 | 41.47 | -0.544 | -0.2095 | 0.0012 |
| 347 | SLV 8 | -5.48 | 0.76 | 41.47 | -0.544 | -0.2095 | 0.0012 |
| 347 | SLV 9 | -10.33 | -0.16 | 30.26 | 0.1017 | -0.4409 | -0.0004 |
| 347 | SLV 10 | -10.33 | -0.16 | 30.26 | 0.1017 | -0.4409 | -0.0004 |
| 347 | SLV 11 | -16.05 | 0.58 | 45.03 | -0.4271 | -0.6608 | 0.001 |
| 347 | SLV 12 | -16.05 | 0.58 | 45.03 | -0.4271 | -0.6608 | 0.001 |
| 347 | SLV 13 | -24.65 | -0.1 | 39.59 | 0.053 | -1.0445 | -0.0001 |
| 347 | SLV 14 | -24.65 | -0.1 | 39.59 | 0.053 | -1.0445 | -0.0001 |
| 347 | SLV 15 | -26.37 | 0.12 | 44.02 | -0.1057 | -1.1104 | 0.0003 |
| 347 | SLV 16 | -26.37 | 0.12 | 44.02 | -0.1057 | -1.1104 | 0.0003 |
| 348 | SLU 1 | -7.59 | 0.36 | 30.18 | -0.2618 | -0.3061 | 0.0003 |
| 348 | SLU 2 | -7.59 | 0.35 | 30.09 | -0.2607 | -0.3058 | 0.0003 |
| 348 | SLU 3 | -7.9 | 0.37 | 31.19 | -0.2755 | -0.3184 | 0.0003 |
| 348 | SLU 4 | -7.9 | 0.37 | 31.14 | -0.2748 | -0.3182 | 0.0003 |
| 348 | SLU 5 | -7.76 | 0.37 | 30.77 | -0.2706 | -0.3127 | 0.0003 |
| 348 | SLU 6 | -8.07 | 0.39 | 31.87 | -0.2854 | -0.3253 | 0.0003 |
| 348 | SLU 7 | -8.07 | 0.38 | 31.82 | -0.2847 | -0.3251 | 0.0003 |
| 348 | SLU 8 | -7.94 | 0.38 | 31.54 | -0.2816 | -0.3199 | 0.0003 |
| 348 | SLU 9 | -7.94 | 0.38 | 31.49 | -0.2809 | -0.3197 | 0.0003 |
| 348 | SLU 10 | -9.14 | 0.42 | 34.28 | -0.309 | -0.3683 | 0.0003 |
| 348 | SLU 11 | -9.45 | 0.44 | 35.38 | -0.3238 | -0.3809 | 0.0003 |
| 348 | SLU 12 | -9.45 | 0.44 | 35.33 | -0.3231 | -0.3807 | 0.0003 |
| 348 | SLU 13 | -9.31 | 0.43 | 34.96 | -0.3189 | -0.3752 | 0.0003 |
| 348 | SLU 14 | -9.63 | 0.45 | 36.06 | -0.3337 | -0.3878 | 0.0003 |
| 348 | SLU 15 | -9.62 | 0.45 | 36.01 | -0.333 | -0.3876 | 0.0003 |
| 348 | SLU 16 | -9.49 | 0.45 | 35.73 | -0.3299 | -0.3824 | 0.0003 |
| 348 | SLU 17 | -9.49 | 0.44 | 35.67 | -0.3292 | -0.3823 | 0.0003 |
| 348 | SLU 18 | -9.81 | 0.45 | 36.16 | -0.3308 | -0.3954 | 0.0003 |
| 348 | SLU 19 | -9.81 | 0.45 | 36.11 | -0.3301 | -0.3952 | 0.0003 |
| 348 | SLU 20 | -9.98 | 0.46 | 36.84 | -0.3407 | -0.4023 | 0.0003 |
| 348 | SLU 21 | -9.98 | 0.46 | 36.79 | -0.3401 | -0.4021 | 0.0003 |
| 348 | SLU 22 | -9.01 | 0.42 | 34.18 | -0.3092 | -0.3633 | 0.0003 |
| 348 | SLU 23 | -9.01 | 0.42 | 34.09 | -0.3081 | -0.363 | 0.0003 |
| 348 | SLU 24 | -9.32 | 0.44 | 35.19 | -0.3229 | -0.3756 | 0.0003 |
| 348 | SLU 25 | -9.32 | 0.44 | 35.14 | -0.3222 | -0.3754 | 0.0003 |
| 348 | SLU 26 | -9.18 | 0.43 | 34.77 | -0.318 | -0.37 | 0.0003 |
| 348 | SLU 27 | -9.5 | 0.45 | 35.87 | -0.3328 | -0.3825 | 0.0003 |
| 348 | SLU 28 | -9.49 | 0.45 | 35.82 | -0.3321 | -0.3824 | 0.0003 |
| 348 | SLU 29 | -9.36 | 0.44 | 35.54 | -0.329 | -0.3771 | 0.0003 |
| 348 | SLU 30 | -9.36 | 0.44 | 35.49 | -0.3284 | -0.377 | 0.0003 |
| 348 | SLU 31 | -10.56 | 0.48 | 38.28 | -0.3564 | -0.4256 | 0.0004 |
| 348 | SLU 32 | -10.87 | 0.5 | 39.38 | -0.3712 | -0.4381 | 0.0004 |
| 348 | SLU 33 | -10.87 | 0.5 | 39.33 | -0.3705 | -0.438 | 0.0004 |
| 348 | SLU 34 | -10.73 | 0.5 | 38.96 | -0.3663 | -0.4325 | 0.0004 |
| 348 | SLU 35 | -11.05 | 0.51 | 40.06 | -0.3811 | -0.4451 | 0.0004 |
| 348 | SLU 36 | -11.04 | 0.51 | 40.01 | -0.3804 | -0.4449 | 0.0004 |
| 348 | SLU 37 | -10.92 | 0.51 | 39.73 | -0.3773 | -0.4397 | 0.0004 |
| 348 | SLU 38 | -10.91 | 0.51 | 39.68 | -0.3767 | -0.4395 | 0.0004 |
| 348 | SLU 39 | -11.23 | 0.51 | 40.16 | -0.3782 | -0.4526 | 0.0004 |
| 348 | SLU 40 | -11.23 | 0.51 | 40.11 | -0.3776 | -0.4525 | 0.0004 |
| 348 | SLU 41 | -11.41 | 0.53 | 40.84 | -0.3881 | -0.4595 | 0.0004 |
| 348 | SLU 42 | -11.4 | 0.52 | 40.79 | -0.3875 | -0.4594 | 0.0004 |
| 348 | SLU 43 | -9.38 | 0.44 | 37.86 | -0.3241 | -0.3782 | 0.0003 |
| 348 | SLU 44 | -9.38 | 0.44 | 37.77 | -0.323 | -0.378 | 0.0003 |
| 348 | SLU 45 | -9.69 | 0.46 | 38.87 | -0.3377 | -0.3905 | 0.0003 |

| Nodo | Cont. | Reazione a traslazione | | | Reazione a rotazione | | |
|---|---|---|---|---|---|---|---|
| Ind. | N.br. | x | y | z | x | y | z |
| 348 | SLU 46 | -9.69 | 0.46 | 38.82 | -0.3371 | -0.3904 | 0.0003 |
| 348 | SLU 47 | -9.55 | 0.45 | 38.45 | -0.3329 | -0.3849 | 0.0003 |
| 348 | SLU 48 | -9.86 | 0.47 | 39.55 | -0.3476 | -0.3975 | 0.0003 |
| 348 | SLU 49 | -9.86 | 0.47 | 39.5 | -0.347 | -0.3973 | 0.0003 |
| 348 | SLU 50 | -9.73 | 0.46 | 39.22 | -0.3439 | -0.3921 | 0.0003 |
| 348 | SLU 51 | -9.73 | 0.46 | 39.17 | -0.3432 | -0.3919 | 0.0003 |
| 348 | SLU 52 | -10.93 | 0.5 | 41.96 | -0.3713 | -0.4405 | 0.0004 |
| 348 | SLU 53 | -11.24 | 0.52 | 43.06 | -0.386 | -0.4531 | 0.0004 |
| 348 | SLU 54 | -11.24 | 0.52 | 43.01 | -0.3854 | -0.4529 | 0.0004 |
| 348 | SLU 55 | -11.1 | 0.52 | 42.64 | -0.3812 | -0.4474 | 0.0004 |
| 348 | SLU 56 | -11.42 | 0.54 | 43.74 | -0.396 | -0.46 | 0.0004 |
| 348 | SLU 57 | -11.41 | 0.53 | 43.69 | -0.3953 | -0.4598 | 0.0004 |
| 348 | SLU 58 | -11.28 | 0.53 | 43.41 | -0.3922 | -0.4546 | 0.0004 |
| 348 | SLU 59 | -11.28 | 0.53 | 43.36 | -0.3915 | -0.4544 | 0.0004 |
| 348 | SLU 60 | -11.6 | 0.53 | 43.84 | -0.3931 | -0.4676 | 0.0004 |
| 348 | SLU 61 | -11.6 | 0.53 | 43.79 | -0.3924 | -0.4674 | 0.0004 |
| 348 | SLU 62 | -11.77 | 0.55 | 44.52 | -0.403 | -0.4745 | 0.0004 |
| 348 | SLU 63 | -11.77 | 0.54 | 44.47 | -0.4023 | -0.4743 | 0.0004 |
| 348 | SLU 64 | -10.8 | 0.5 | 41.86 | -0.3715 | -0.4355 | 0.0004 |
| 348 | SLU 65 | -10.8 | 0.5 | 41.78 | -0.3704 | -0.4352 | 0.0004 |
| 348 | SLU 66 | -11.11 | 0.52 | 42.87 | -0.3852 | -0.4478 | 0.0004 |
| 348 | SLU 67 | -11.11 | 0.52 | 42.82 | -0.3845 | -0.4476 | 0.0004 |
| 348 | SLU 68 | -10.97 | 0.51 | 42.46 | -0.3803 | -0.4421 | 0.0004 |
| 348 | SLU 69 | -11.29 | 0.53 | 43.55 | -0.3951 | -0.4547 | 0.0004 |
| 348 | SLU 70 | -11.28 | 0.53 | 43.5 | -0.3944 | -0.4546 | 0.0004 |
| 348 | SLU 71 | -11.15 | 0.53 | 43.22 | -0.3913 | -0.4493 | 0.0004 |
| 348 | SLU 72 | -11.15 | 0.53 | 43.17 | -0.3906 | -0.4492 | 0.0004 |
| 348 | SLU 73 | -12.35 | 0.57 | 45.96 | -0.4187 | -0.4977 | 0.0004 |
| 348 | SLU 74 | -12.66 | 0.59 | 47.06 | -0.4335 | -0.5103 | 0.0004 |
| 348 | SLU 75 | -12.66 | 0.59 | 47.01 | -0.4328 | -0.5102 | 0.0004 |
| 348 | SLU 76 | -12.52 | 0.58 | 46.64 | -0.4286 | -0.5047 | 0.0004 |
| 348 | SLU 77 | -12.84 | 0.6 | 47.74 | -0.4434 | -0.5172 | 0.0004 |
| 348 | SLU 78 | -12.83 | 0.6 | 47.69 | -0.4427 | -0.5171 | 0.0004 |
| 348 | SLU 79 | -12.71 | 0.59 | 47.41 | -0.4396 | -0.5119 | 0.0004 |
| 348 | SLU 80 | -12.7 | 0.59 | 47.36 | -0.439 | -0.5117 | 0.0004 |
| 348 | SLU 81 | -13.02 | 0.6 | 47.84 | -0.4405 | -0.5248 | 0.0004 |
| 348 | SLU 82 | -13.02 | 0.6 | 47.79 | -0.4399 | -0.5247 | 0.0004 |
| 348 | SLU 83 | -13.2 | 0.61 | 48.52 | -0.4504 | -0.5317 | 0.0005 |
| 348 | SLU 84 | -13.19 | 0.61 | 48.47 | -0.4498 | -0.5316 | 0.0004 |
| 348 | SLE RA 1 | -8 | 0.37 | 31.32 | -0.2754 | -0.3224 | 0.0003 |
| 348 | SLE RA 2 | -7.99 | 0.37 | 31.26 | -0.2746 | -0.3222 | 0.0003 |
| 348 | SLE RA 3 | -8.2 | 0.39 | 32 | -0.2845 | -0.3306 | 0.0003 |
| 348 | SLE RA 4 | -8.2 | 0.38 | 31.96 | -0.284 | -0.3305 | 0.0003 |
| 348 | SLE RA 5 | -8.11 | 0.38 | 31.72 | -0.2812 | -0.3268 | 0.0003 |
| 348 | SLE RA 6 | -8.32 | 0.39 | 32.45 | -0.2911 | -0.3352 | 0.0003 |
| 348 | SLE RA 7 | -8.32 | 0.39 | 32.42 | -0.2906 | -0.3351 | 0.0003 |
| 348 | SLE RA 8 | -8.23 | 0.39 | 32.23 | -0.2886 | -0.3316 | 0.0003 |
| 348 | SLE RA 9 | -8.23 | 0.39 | 32.19 | -0.2881 | -0.3315 | 0.0003 |
| 348 | SLE RA 10 | -9.03 | 0.42 | 34.06 | -0.3068 | -0.3639 | 0.0003 |
| 348 | SLE RA 11 | -9.24 | 0.43 | 34.79 | -0.3167 | -0.3723 | 0.0003 |
| 348 | SLE RA 12 | -9.24 | 0.43 | 34.75 | -0.3162 | -0.3722 | 0.0003 |
| 348 | SLE RA 13 | -9.15 | 0.42 | 34.51 | -0.3134 | -0.3685 | 0.0003 |
| 348 | SLE RA 14 | -9.35 | 0.44 | 35.24 | -0.3233 | -0.3769 | 0.0003 |
| 348 | SLE RA 15 | -9.35 | 0.44 | 35.21 | -0.3228 | -0.3768 | 0.0003 |
| 348 | SLE RA 16 | -9.27 | 0.43 | 35.02 | -0.3208 | -0.3733 | 0.0003 |
| 348 | SLE RA 17 | -9.26 | 0.43 | 34.99 | -0.3203 | -0.3732 | 0.0003 |
| 348 | SLE RA 18 | -9.48 | 0.44 | 35.31 | -0.3214 | -0.382 | 0.0003 |
| 348 | SLE RA 19 | -9.47 | 0.44 | 35.28 | -0.3209 | -0.3818 | 0.0003 |
| 348 | SLE RA 20 | -9.59 | 0.44 | 35.76 | -0.328 | -0.3866 | 0.0003 |
| 348 | SLE RA 21 | -9.59 | 0.44 | 35.73 | -0.3275 | -0.3865 | 0.0003 |
| 348 | SLE FR 1 | -8 | 0.37 | 31.32 | -0.2754 | -0.3224 | 0.0003 |
| 348 | SLE FR 2 | -8 | 0.37 | 31.31 | -0.2752 | -0.3224 | 0.0003 |
| 348 | SLE FR 3 | -8.04 | 0.38 | 31.5 | -0.278 | -0.3243 | 0.0003 |
| 348 | SLE FR 4 | -8.44 | 0.39 | 32.51 | -0.289 | -0.3402 | 0.0003 |
| 348 | SLE FR 5 | -8.49 | 0.4 | 32.7 | -0.2918 | -0.3421 | 0.0003 |
| 348 | SLE FR 6 | -8.74 | 0.4 | 33.32 | -0.2984 | -0.3522 | 0.0003 |
| 348 | SLE QP 1 | -8 | 0.37 | 31.32 | -0.2754 | -0.3224 | 0.0003 |
| 348 | SLE QP 2 | -8.44 | 0.39 | 32.52 | -0.2892 | -0.3403 | 0.0003 |
| 348 | SLD 1 | -0.82 | 0.44 | 29.05 | -0.3277 | 0.0181 | 0.0003 |
| 348 | SLD 2 | -0.82 | 0.44 | 29.05 | -0.3277 | 0.0181 | 0.0003 |
| 348 | SLD 3 | -0.14 | 0.56 | 30.96 | -0.4186 | -0.0104 | 0.0005 |
| 348 | SLD 4 | -0.14 | 0.56 | 30.96 | -0.4186 | -0.0104 | 0.0005 |
| 348 | SLD 5 | -7.18 | 0.23 | 28.57 | -0.1628 | -0.1895 | 0 |
| 348 | SLD 6 | -7.18 | 0.23 | 28.57 | -0.1628 | -0.1895 | 0 |
| 348 | SLD 7 | -4.92 | 0.62 | 34.96 | -0.4659 | -0.2845 | 0.0006 |
| 348 | SLD 8 | -4.92 | 0.62 | 34.96 | -0.4659 | -0.2845 | 0.0006 |
| 348 | SLD 9 | -11.96 | 0.16 | 30.08 | -0.1124 | -0.396 | 0 |
| 348 | SLD 10 | -11.96 | 0.16 | 30.08 | -0.1124 | -0.396 | 0 |
| 348 | SLD 11 | -9.7 | 0.55 | 36.47 | -0.4155 | -0.491 | 0.0005 |
| 348 | SLD 12 | -9.7 | 0.55 | 36.47 | -0.4155 | -0.491 | 0.0005 |
| 348 | SLD 13 | -16.74 | 0.22 | 34.07 | -0.1597 | -0.6701 | 0.0001 |
| 348 | SLD 14 | -16.74 | 0.22 | 34.07 | -0.1597 | -0.6701 | 0.0001 |
| 348 | SLD 15 | -16.06 | 0.34 | 35.99 | -0.2506 | -0.6986 | 0.0002 |
| 348 | SLD 16 | -16.06 | 0.34 | 35.99 | -0.2506 | -0.6986 | 0.0002 |
| 348 | SLV 1 | 8.96 | 0.52 | 24.44 | -0.3876 | 0.4798 | 0.0004 |
| 348 | SLV 2 | 8.96 | 0.52 | 24.44 | -0.3876 | 0.4798 | 0.0004 |
| 348 | SLV 3 | 10.55 | 0.8 | 28.9 | -0.6003 | 0.4128 | 0.0008 |
| 348 | SLV 4 | 10.55 | 0.8 | 28.9 | -0.6003 | 0.4128 | 0.0008 |

| Nodo | Cont. | Reazione a traslazione | | | Reazione a rotazione | | |
|---|---|---|---|---|---|---|---|
| Ind. | N.br. | x | y | z | x | y | z |
| 348 | SLV 5 | -5.63 | 0.02 | 23.33 | 0.0039 | 0.0074 | -0.0003 |
| 348 | SLV 6 | -5.63 | 0.02 | 23.33 | 0.0039 | 0.0074 | -0.0003 |
| 348 | SLV 7 | -0.33 | 0.93 | 38.2 | -0.7051 | -0.216 | 0.0011 |
| 348 | SLV 8 | -0.33 | 0.93 | 38.2 | -0.7051 | -0.216 | 0.0011 |
| 348 | SLV 9 | -16.55 | -0.14 | 26.84 | 0.1267 | -0.4646 | -0.0005 |
| 348 | SLV 10 | -16.55 | -0.14 | 26.84 | 0.1267 | -0.4646 | -0.0005 |
| 348 | SLV 11 | -11.25 | 0.76 | 41.71 | -0.5822 | -0.6879 | 0.0009 |
| 348 | SLV 12 | -11.25 | 0.76 | 41.71 | -0.5822 | -0.6879 | 0.0009 |
| 348 | SLV 13 | -27.43 | -0.01 | 36.14 | 0.022 | -1.0933 | -0.0003 |
| 348 | SLV 14 | -27.43 | -0.01 | 36.14 | 0.022 | -1.0933 | -0.0003 |
| 348 | SLV 15 | -25.84 | 0.26 | 40.6 | -0.1907 | -1.1604 | 0.0001 |
| 348 | SLV 16 | -25.84 | 0.26 | 40.6 | -0.1907 | -1.1604 | 0.0001 |
| 349 | SLU 1 | -7.47 | 0.37 | 27.45 | -0.2977 | -0.3174 | 0.0001 |
| 349 | SLU 2 | -7.47 | 0.37 | 27.36 | -0.2964 | -0.3172 | 0.0001 |
| 349 | SLU 3 | -7.78 | 0.39 | 28.4 | -0.3138 | -0.3309 | 0.0002 |
| 349 | SLU 4 | -7.77 | 0.39 | 28.35 | -0.3129 | -0.3307 | 0.0002 |
| 349 | SLU 5 | -7.63 | 0.38 | 28.03 | -0.3083 | -0.3249 | 0.0002 |
| 349 | SLU 6 | -7.94 | 0.4 | 29.07 | -0.3257 | -0.3385 | 0.0002 |
| 349 | SLU 7 | -7.94 | 0.4 | 29.02 | -0.3248 | -0.3384 | 0.0002 |
| 349 | SLU 8 | -7.81 | 0.4 | 28.79 | -0.3215 | -0.3328 | 0.0002 |
| 349 | SLU 9 | -7.8 | 0.4 | 28.74 | -0.3207 | -0.3326 | 0.0002 |
| 349 | SLU 10 | -8.99 | 0.44 | 30.98 | -0.3511 | -0.382 | 0.0002 |
| 349 | SLU 11 | -9.3 | 0.46 | 32.02 | -0.3685 | -0.3957 | 0.0002 |
| 349 | SLU 12 | -9.3 | 0.46 | 31.97 | -0.3677 | -0.3955 | 0.0002 |
| 349 | SLU 13 | -9.16 | 0.45 | 31.65 | -0.363 | -0.3897 | 0.0002 |
| 349 | SLU 14 | -9.47 | 0.47 | 32.69 | -0.3804 | -0.4034 | 0.0002 |
| 349 | SLU 15 | -9.47 | 0.47 | 32.63 | -0.3796 | -0.4032 | 0.0002 |
| 349 | SLU 16 | -9.33 | 0.47 | 32.41 | -0.3763 | -0.3976 | 0.0002 |
| 349 | SLU 17 | -9.33 | 0.46 | 32.35 | -0.3755 | -0.3975 | 0.0002 |
| 349 | SLU 18 | -9.65 | 0.47 | 32.62 | -0.3759 | -0.41 | 0.0002 |
| 349 | SLU 19 | -9.65 | 0.47 | 32.57 | -0.3751 | -0.4099 | 0.0002 |
| 349 | SLU 20 | -9.82 | 0.48 | 33.29 | -0.3878 | -0.4177 | 0.0002 |
| 349 | SLU 21 | -9.82 | 0.48 | 33.24 | -0.387 | -0.4176 | 0.0002 |
| 349 | SLU 22 | -8.87 | 0.44 | 30.95 | -0.3518 | -0.377 | 0.0002 |
| 349 | SLU 23 | -8.86 | 0.43 | 30.87 | -0.3504 | -0.3767 | 0.0002 |
| 349 | SLU 24 | -9.17 | 0.46 | 31.9 | -0.3678 | -0.3904 | 0.0002 |
| 349 | SLU 25 | -9.17 | 0.45 | 31.85 | -0.367 | -0.3903 | 0.0002 |
| 349 | SLU 26 | -9.03 | 0.45 | 31.54 | -0.3623 | -0.3844 | 0.0002 |
| 349 | SLU 27 | -9.34 | 0.47 | 32.57 | -0.3797 | -0.3981 | 0.0002 |
| 349 | SLU 28 | -9.34 | 0.47 | 32.52 | -0.3789 | -0.398 | 0.0002 |
| 349 | SLU 29 | -9.2 | 0.46 | 32.29 | -0.3756 | -0.3924 | 0.0002 |
| 349 | SLU 30 | -9.2 | 0.46 | 32.24 | -0.3748 | -0.3922 | 0.0002 |
| 349 | SLU 31 | -10.39 | 0.5 | 34.49 | -0.4052 | -0.4416 | 0.0002 |
| 349 | SLU 32 | -10.7 | 0.52 | 35.52 | -0.4226 | -0.4553 | 0.0002 |
| 349 | SLU 33 | -10.69 | 0.52 | 35.47 | -0.4217 | -0.4551 | 0.0002 |
| 349 | SLU 34 | -10.56 | 0.52 | 35.16 | -0.4171 | -0.4493 | 0.0002 |
| 349 | SLU 35 | -10.86 | 0.54 | 36.19 | -0.4345 | -0.4629 | 0.0002 |
| 349 | SLU 36 | -10.86 | 0.54 | 36.14 | -0.4336 | -0.4628 | 0.0002 |
| 349 | SLU 37 | -10.73 | 0.53 | 35.91 | -0.4303 | -0.4572 | 0.0002 |
| 349 | SLU 38 | -10.73 | 0.53 | 35.86 | -0.4295 | -0.457 | 0.0002 |
| 349 | SLU 39 | -11.05 | 0.53 | 36.12 | -0.43 | -0.4696 | 0.0002 |
| 349 | SLU 40 | -11.05 | 0.53 | 36.07 | -0.4292 | -0.4695 | 0.0002 |
| 349 | SLU 41 | -11.22 | 0.55 | 36.79 | -0.4419 | -0.4773 | 0.0002 |
| 349 | SLU 42 | -11.21 | 0.55 | 36.74 | -0.4411 | -0.4771 | 0.0002 |
| 349 | SLU 43 | -9.24 | 0.46 | 34.48 | -0.3685 | -0.3922 | 0.0002 |
| 349 | SLU 44 | -9.23 | 0.46 | 34.39 | -0.3672 | -0.392 | 0.0002 |
| 349 | SLU 45 | -9.54 | 0.48 | 35.43 | -0.3845 | -0.4057 | 0.0002 |
| 349 | SLU 46 | -9.54 | 0.48 | 35.38 | -0.3837 | -0.4055 | 0.0002 |
| 349 | SLU 47 | -9.4 | 0.47 | 35.06 | -0.3791 | -0.3997 | 0.0002 |
| 349 | SLU 48 | -9.71 | 0.49 | 36.1 | -0.3964 | -0.4133 | 0.0002 |
| 349 | SLU 49 | -9.7 | 0.49 | 36.05 | -0.3956 | -0.4132 | 0.0002 |
| 349 | SLU 50 | -9.57 | 0.49 | 35.82 | -0.3923 | -0.4076 | 0.0002 |
| 349 | SLU 51 | -9.57 | 0.48 | 35.77 | -0.3915 | -0.4074 | 0.0002 |
| 349 | SLU 52 | -10.76 | 0.52 | 38.01 | -0.4219 | -0.4568 | 0.0002 |
| 349 | SLU 53 | -11.06 | 0.54 | 39.05 | -0.4393 | -0.4705 | 0.0002 |
| 349 | SLU 54 | -11.06 | 0.54 | 39 | -0.4385 | -0.4703 | 0.0002 |
| 349 | SLU 55 | -10.92 | 0.54 | 38.68 | -0.4338 | -0.4645 | 0.0002 |
| 349 | SLU 56 | -11.23 | 0.56 | 39.72 | -0.4512 | -0.4782 | 0.0002 |
| 349 | SLU 57 | -11.23 | 0.56 | 39.67 | -0.4504 | -0.478 | 0.0002 |
| 349 | SLU 58 | -11.1 | 0.55 | 39.44 | -0.4471 | -0.4724 | 0.0002 |
| 349 | SLU 59 | -11.09 | 0.55 | 39.39 | -0.4463 | -0.4723 | 0.0002 |
| 349 | SLU 60 | -11.42 | 0.55 | 39.65 | -0.4467 | -0.4848 | 0.0002 |
| 349 | SLU 61 | -11.41 | 0.55 | 39.6 | -0.4459 | -0.4847 | 0.0002 |
| 349 | SLU 62 | -11.58 | 0.57 | 40.32 | -0.4586 | -0.4925 | 0.0002 |
| 349 | SLU 63 | -11.58 | 0.57 | 40.27 | -0.4578 | -0.4924 | 0.0002 |
| 349 | SLU 64 | -10.63 | 0.52 | 37.99 | -0.4226 | -0.4518 | 0.0002 |
| 349 | SLU 65 | -10.63 | 0.52 | 37.9 | -0.4212 | -0.4516 | 0.0002 |
| 349 | SLU 66 | -10.94 | 0.54 | 38.94 | -0.4386 | -0.4652 | 0.0002 |
| 349 | SLU 67 | -10.93 | 0.54 | 38.88 | -0.4378 | -0.4651 | 0.0002 |
| 349 | SLU 68 | -10.79 | 0.54 | 38.57 | -0.4331 | -0.4592 | 0.0002 |
| 349 | SLU 69 | -11.1 | 0.56 | 39.61 | -0.4505 | -0.4729 | 0.0002 |
| 349 | SLU 70 | -11.1 | 0.56 | 39.55 | -0.4497 | -0.4728 | 0.0002 |
| 349 | SLU 71 | -10.97 | 0.55 | 39.32 | -0.4464 | -0.4672 | 0.0002 |
| 349 | SLU 72 | -10.96 | 0.55 | 39.27 | -0.4456 | -0.467 | 0.0002 |
| 349 | SLU 73 | -12.15 | 0.59 | 41.52 | -0.476 | -0.5164 | 0.0002 |
| 349 | SLU 74 | -12.46 | 0.61 | 42.55 | -0.4933 | -0.5301 | 0.0002 |
| 349 | SLU 75 | -12.46 | 0.61 | 42.5 | -0.4925 | -0.5299 | 0.0002 |
| 349 | SLU 76 | -12.32 | 0.6 | 42.19 | -0.4879 | -0.5241 | 0.0002 |

| Nodo | Cont. | Reazione a traslazione | | | Reazione a rotazione | | |
|---|---|---|---|---|---|---|---|
| Ind. | N.br. | x | y | z | x | y | z |
| 349 | SLU 77 | -12.63 | 0.63 | 43.22 | -0.5053 | -0.5377 | 0.0002 |
| 349 | SLU 78 | -12.62 | 0.62 | 43.17 | -0.5044 | -0.5376 | 0.0002 |
| 349 | SLU 79 | -12.49 | 0.62 | 42.94 | -0.5011 | -0.532 | 0.0002 |
| 349 | SLU 80 | -12.49 | 0.62 | 42.89 | -0.5003 | -0.5318 | 0.0002 |
| 349 | SLU 81 | -12.81 | 0.62 | 43.16 | -0.5008 | -0.5444 | 0.0002 |
| 349 | SLU 82 | -12.81 | 0.62 | 43.1 | -0.5 | -0.5443 | 0.0002 |
| 349 | SLU 83 | -12.98 | 0.64 | 43.83 | -0.5127 | -0.5521 | 0.0003 |
| 349 | SLU 84 | -12.98 | 0.63 | 43.77 | -0.5119 | -0.5519 | 0.0003 |
| 349 | SLE RA 1 | -7.87 | 0.39 | 28.45 | -0.3132 | -0.3344 | 0.0002 |
| 349 | SLE RA 2 | -7.87 | 0.39 | 28.39 | -0.3123 | -0.3343 | 0.0002 |
| 349 | SLE RA 3 | -8.07 | 0.4 | 29.08 | -0.3239 | -0.3434 | 0.0002 |
| 349 | SLE RA 4 | -8.07 | 0.4 | 29.05 | -0.3233 | -0.3433 | 0.0002 |
| 349 | SLE RA 5 | -7.98 | 0.4 | 28.84 | -0.3202 | -0.3394 | 0.0002 |
| 349 | SLE RA 6 | -8.18 | 0.41 | 29.53 | -0.3318 | -0.3485 | 0.0002 |
| 349 | SLE RA 7 | -8.18 | 0.41 | 29.49 | -0.3313 | -0.3484 | 0.0002 |
| 349 | SLE RA 8 | -8.09 | 0.41 | 29.34 | -0.3291 | -0.3447 | 0.0002 |
| 349 | SLE RA 9 | -8.09 | 0.41 | 29.31 | -0.3285 | -0.3446 | 0.0002 |
| 349 | SLE RA 10 | -8.89 | 0.43 | 30.8 | -0.3488 | -0.3775 | 0.0002 |
| 349 | SLE RA 11 | -9.09 | 0.45 | 31.5 | -0.3604 | -0.3866 | 0.0002 |
| 349 | SLE RA 12 | -9.09 | 0.45 | 31.46 | -0.3598 | -0.3865 | 0.0002 |
| 349 | SLE RA 13 | -9 | 0.44 | 31.25 | -0.3567 | -0.3826 | 0.0002 |
| 349 | SLE RA 14 | -9.2 | 0.46 | 31.94 | -0.3683 | -0.3917 | 0.0002 |
| 349 | SLE RA 15 | -9.2 | 0.46 | 31.91 | -0.3677 | -0.3916 | 0.0002 |
| 349 | SLE RA 16 | -9.11 | 0.45 | 31.75 | -0.3655 | -0.3879 | 0.0002 |
| 349 | SLE RA 17 | -9.11 | 0.45 | 31.72 | -0.365 | -0.3878 | 0.0002 |
| 349 | SLE RA 18 | -9.33 | 0.45 | 31.9 | -0.3653 | -0.3962 | 0.0002 |
| 349 | SLE RA 19 | -9.32 | 0.45 | 31.86 | -0.3648 | -0.3961 | 0.0002 |
| 349 | SLE RA 20 | -9.44 | 0.46 | 32.34 | -0.3733 | -0.4013 | 0.0002 |
| 349 | SLE RA 21 | -9.43 | 0.46 | 32.31 | -0.3727 | -0.4012 | 0.0002 |
| 349 | SLE FR 1 | -7.87 | 0.39 | 28.45 | -0.3132 | -0.3344 | 0.0002 |
| 349 | SLE FR 2 | -7.87 | 0.39 | 28.44 | -0.313 | -0.3344 | 0.0002 |
| 349 | SLE FR 3 | -7.92 | 0.39 | 28.63 | -0.3164 | -0.3365 | 0.0002 |
| 349 | SLE FR 4 | -8.31 | 0.41 | 29.47 | -0.3286 | -0.3529 | 0.0002 |
| 349 | SLE FR 5 | -8.35 | 0.41 | 29.66 | -0.332 | -0.355 | 0.0002 |
| 349 | SLE FR 6 | -8.6 | 0.42 | 30.17 | -0.3393 | -0.3653 | 0.0002 |
| 349 | SLE QP 1 | -7.87 | 0.39 | 28.45 | -0.3132 | -0.3344 | 0.0002 |
| 349 | SLE QP 2 | -8.31 | 0.41 | 29.48 | -0.3288 | -0.353 | 0.0002 |
| 349 | SLD 1 | -0.68 | 0.22 | 26.19 | -0.3634 | -0.026 | 0.0002 |
| 349 | SLD 2 | -0.68 | 0.22 | 26.19 | -0.3634 | -0.026 | 0.0002 |
| 349 | SLD 3 | -0.14 | 0.36 | 28.21 | -0.4728 | -0.0045 | 0.0003 |
| 349 | SLD 4 | -0.14 | 0.36 | 28.21 | -0.4728 | -0.0045 | 0.0003 |
| 349 | SLD 5 | -6.84 | 0.14 | 25.42 | -0.1733 | -0.2875 | 0 |
| 349 | SLD 6 | -6.84 | 0.14 | 25.42 | -0.1733 | -0.2875 | 0 |
| 349 | SLD 7 | -5.03 | 0.6 | 32.17 | -0.5379 | -0.2158 | 0.0004 |
| 349 | SLD 8 | -5.03 | 0.6 | 32.17 | -0.5379 | -0.2158 | 0.0004 |
| 349 | SLD 9 | -11.58 | 0.21 | 26.79 | -0.1197 | -0.4901 | -0.0001 |
| 349 | SLD 10 | -11.58 | 0.21 | 26.79 | -0.1197 | -0.4901 | -0.0001 |
| 349 | SLD 11 | -9.77 | 0.67 | 33.54 | -0.4844 | -0.4184 | 0.0003 |
| 349 | SLD 12 | -9.77 | 0.67 | 33.54 | -0.4844 | -0.4184 | 0.0003 |
| 349 | SLD 13 | -16.48 | 0.46 | 30.75 | -0.1849 | -0.7014 | 0 |
| 349 | SLD 14 | -16.48 | 0.46 | 30.75 | -0.1849 | -0.7014 | 0 |
| 349 | SLD 15 | -15.93 | 0.59 | 32.78 | -0.2943 | -0.6799 | 0.0001 |
| 349 | SLD 16 | -15.93 | 0.59 | 32.78 | -0.2943 | -0.6799 | 0.0001 |
| 349 | SLV 1 | 9.1 | -0.03 | 21.82 | -0.4145 | 0.3934 | 0.0003 |
| 349 | SLV 2 | 9.1 | -0.03 | 21.82 | -0.4145 | 0.3934 | 0.0003 |
| 349 | SLV 3 | 10.39 | 0.29 | 26.54 | -0.6706 | 0.4443 | 0.0005 |
| 349 | SLV 4 | 10.39 | 0.29 | 26.54 | -0.6706 | 0.4443 | 0.0005 |
| 349 | SLV 5 | -5.03 | -0.21 | 20.02 | 0.0339 | -0.2062 | -0.0002 |
| 349 | SLV 6 | -5.03 | -0.21 | 20.02 | 0.0339 | -0.2062 | -0.0002 |
| 349 | SLV 7 | -0.75 | 0.86 | 35.77 | -0.8198 | -0.0367 | 0.0007 |
| 349 | SLV 8 | -0.75 | 0.86 | 35.77 | -0.8198 | -0.0367 | 0.0007 |
| 349 | SLV 9 | -15.86 | -0.05 | 23.2 | 0.1622 | -0.6693 | -0.0004 |
| 349 | SLV 10 | -15.86 | -0.05 | 23.2 | 0.1622 | -0.6693 | -0.0004 |
| 349 | SLV 11 | -11.58 | 1.03 | 38.95 | -0.6916 | -0.4998 | 0.0006 |
| 349 | SLV 12 | -11.58 | 1.03 | 38.95 | -0.6916 | -0.4998 | 0.0006 |
| 349 | SLV 13 | -27 | 0.52 | 32.43 | 0.013 | -1.1502 | -0.0002 |
| 349 | SLV 14 | -27 | 0.52 | 32.43 | 0.013 | -1.1502 | -0.0002 |
| 349 | SLV 15 | -25.72 | 0.85 | 37.15 | -0.2432 | -1.0994 | 0.0001 |
| 349 | SLV 16 | -25.72 | 0.85 | 37.15 | -0.2432 | -1.0994 | 0.0001 |
| 350 | SLU 1 | -6.52 | 0.37 | 25.85 | -0.3238 | -0.2667 | -0.0001 |
| 350 | SLU 2 | -6.51 | 0.37 | 25.76 | -0.3222 | -0.2666 | -0.0001 |
| 350 | SLU 3 | -6.77 | 0.39 | 26.79 | -0.342 | -0.2768 | -0.0001 |
| 350 | SLU 4 | -6.77 | 0.39 | 26.73 | -0.341 | -0.2768 | -0.0001 |
| 350 | SLU 5 | -6.65 | 0.38 | 26.45 | -0.3361 | -0.2719 | -0.0001 |
| 350 | SLU 6 | -6.9 | 0.41 | 27.48 | -0.3559 | -0.2822 | -0.0001 |
| 350 | SLU 7 | -6.9 | 0.4 | 27.42 | -0.3549 | -0.2821 | -0.0001 |
| 350 | SLU 8 | -6.78 | 0.4 | 27.23 | -0.3516 | -0.2773 | -0.0001 |
| 350 | SLU 9 | -6.78 | 0.4 | 27.18 | -0.3506 | -0.2772 | -0.0001 |
| 350 | SLU 10 | -7.84 | 0.44 | 29.03 | -0.3814 | -0.3203 | -0.0001 |
| 350 | SLU 11 | -8.09 | 0.46 | 30.06 | -0.4012 | -0.3306 | -0.0001 |
| 350 | SLU 12 | -8.09 | 0.46 | 30.01 | -0.4002 | -0.3305 | -0.0001 |
| 350 | SLU 13 | -7.97 | 0.45 | 29.72 | -0.3953 | -0.3256 | -0.0001 |
| 350 | SLU 14 | -8.22 | 0.47 | 30.75 | -0.4151 | -0.3359 | -0.0001 |
| 350 | SLU 15 | -8.22 | 0.47 | 30.7 | -0.4141 | -0.3358 | -0.0001 |
| 350 | SLU 16 | -8.1 | 0.47 | 30.5 | -0.4108 | -0.331 | -0.0001 |
| 350 | SLU 17 | -8.1 | 0.47 | 30.45 | -0.4099 | -0.331 | -0.0001 |
| 350 | SLU 18 | -8.4 | 0.47 | 30.53 | -0.4084 | -0.3434 | -0.0001 |
| 350 | SLU 19 | -8.4 | 0.47 | 30.47 | -0.4074 | -0.3434 | -0.0001 |

| Nodo | Cont. | Reazione a traslazione | | | Reazione a rotazione | | |
|---|---|---|---|---|---|---|---|
| Ind. | N.br. | x | y | z | x | y | z |
| 350 | SLU 20 | -8.53 | 0.48 | 31.22 | -0.4223 | -0.3487 | -0.0001 |
| 350 | SLU 21 | -8.53 | 0.48 | 31.16 | -0.4213 | -0.3487 | -0.0001 |
| 350 | SLU 22 | -7.72 | 0.44 | 29.07 | -0.3828 | -0.3157 | -0.0001 |
| 350 | SLU 23 | -7.72 | 0.44 | 28.98 | -0.3811 | -0.3156 | -0.0001 |
| 350 | SLU 24 | -7.97 | 0.46 | 30 | -0.401 | -0.3259 | -0.0001 |
| 350 | SLU 25 | -7.97 | 0.46 | 29.95 | -0.4 | -0.3258 | -0.0001 |
| 350 | SLU 26 | -7.85 | 0.45 | 29.67 | -0.395 | -0.3209 | -0.0001 |
| 350 | SLU 27 | -8.1 | 0.47 | 30.69 | -0.4149 | -0.3312 | -0.0001 |
| 350 | SLU 28 | -8.1 | 0.47 | 30.64 | -0.4139 | -0.3311 | -0.0001 |
| 350 | SLU 29 | -7.98 | 0.47 | 30.45 | -0.4106 | -0.3263 | -0.0001 |
| 350 | SLU 30 | -7.98 | 0.47 | 30.39 | -0.4096 | -0.3263 | -0.0001 |
| 350 | SLU 31 | -9.04 | 0.5 | 32.25 | -0.4404 | -0.3693 | -0.0001 |
| 350 | SLU 32 | -9.29 | 0.53 | 33.27 | -0.4602 | -0.3796 | -0.0001 |
| 350 | SLU 33 | -9.29 | 0.52 | 33.22 | -0.4592 | -0.3795 | -0.0001 |
| 350 | SLU 34 | -9.17 | 0.52 | 32.94 | -0.4543 | -0.3746 | -0.0001 |
| 350 | SLU 35 | -9.42 | 0.54 | 33.96 | -0.4741 | -0.3849 | -0.0001 |
| 350 | SLU 36 | -9.42 | 0.54 | 33.91 | -0.4731 | -0.3848 | -0.0001 |
| 350 | SLU 37 | -9.3 | 0.54 | 33.72 | -0.4698 | -0.3801 | -0.0001 |
| 350 | SLU 38 | -9.3 | 0.53 | 33.67 | -0.4688 | -0.38 | -0.0001 |
| 350 | SLU 39 | -9.61 | 0.53 | 33.74 | -0.4674 | -0.3924 | -0.0001 |
| 350 | SLU 40 | -9.61 | 0.53 | 33.69 | -0.4664 | -0.3924 | -0.0001 |
| 350 | SLU 41 | -9.74 | 0.55 | 34.43 | -0.4813 | -0.3978 | -0.0001 |
| 350 | SLU 42 | -9.74 | 0.55 | 34.38 | -0.4803 | -0.3977 | -0.0001 |
| 350 | SLU 43 | -8.06 | 0.46 | 32.51 | -0.4007 | -0.3299 | -0.0001 |
| 350 | SLU 44 | -8.06 | 0.46 | 32.42 | -0.3991 | -0.3298 | -0.0001 |
| 350 | SLU 45 | -8.31 | 0.48 | 33.44 | -0.4189 | -0.34 | -0.0001 |
| 350 | SLU 46 | -8.31 | 0.48 | 33.39 | -0.4179 | -0.34 | -0.0001 |
| 350 | SLU 47 | -8.19 | 0.47 | 33.11 | -0.413 | -0.3351 | -0.0001 |
| 350 | SLU 48 | -8.44 | 0.49 | 34.13 | -0.4328 | -0.3454 | -0.0001 |
| 350 | SLU 49 | -8.44 | 0.49 | 34.08 | -0.4318 | -0.3453 | -0.0001 |
| 350 | SLU 50 | -8.32 | 0.49 | 33.89 | -0.4285 | -0.3405 | -0.0001 |
| 350 | SLU 51 | -8.32 | 0.49 | 33.83 | -0.4275 | -0.3404 | -0.0001 |
| 350 | SLU 52 | -9.38 | 0.52 | 35.69 | -0.4583 | -0.3835 | -0.0001 |
| 350 | SLU 53 | -9.63 | 0.55 | 36.71 | -0.4781 | -0.3938 | -0.0001 |
| 350 | SLU 54 | -9.63 | 0.55 | 36.66 | -0.4771 | -0.3937 | -0.0001 |
| 350 | SLU 55 | -9.51 | 0.54 | 36.38 | -0.4722 | -0.3888 | -0.0001 |
| 350 | SLU 56 | -9.76 | 0.56 | 37.4 | -0.492 | -0.3991 | -0.0001 |
| 350 | SLU 57 | -9.76 | 0.56 | 37.35 | -0.4911 | -0.399 | -0.0001 |
| 350 | SLU 58 | -9.64 | 0.56 | 37.16 | -0.4878 | -0.3942 | -0.0001 |
| 350 | SLU 59 | -9.64 | 0.56 | 37.1 | -0.4868 | -0.3942 | -0.0001 |
| 350 | SLU 60 | -9.95 | 0.56 | 37.18 | -0.4853 | -0.4066 | -0.0001 |
| 350 | SLU 61 | -9.94 | 0.55 | 37.13 | -0.4843 | -0.4066 | -0.0001 |
| 350 | SLU 62 | -10.08 | 0.57 | 37.87 | -0.4992 | -0.4119 | -0.0001 |
| 350 | SLU 63 | -10.08 | 0.57 | 37.82 | -0.4983 | -0.4119 | -0.0001 |
| 350 | SLU 64 | -9.26 | 0.53 | 35.72 | -0.4597 | -0.3789 | -0.0001 |
| 350 | SLU 65 | -9.26 | 0.52 | 35.63 | -0.4581 | -0.3788 | -0.0001 |
| 350 | SLU 66 | -9.51 | 0.55 | 36.66 | -0.4779 | -0.389 | -0.0001 |
| 350 | SLU 67 | -9.51 | 0.54 | 36.6 | -0.4769 | -0.389 | -0.0001 |
| 350 | SLU 68 | -9.39 | 0.54 | 36.32 | -0.472 | -0.3841 | -0.0001 |
| 350 | SLU 69 | -9.64 | 0.56 | 37.35 | -0.4918 | -0.3944 | -0.0001 |
| 350 | SLU 70 | -9.64 | 0.56 | 37.29 | -0.4908 | -0.3943 | -0.0001 |
| 350 | SLU 71 | -9.52 | 0.56 | 37.1 | -0.4875 | -0.3895 | -0.0001 |
| 350 | SLU 72 | -9.52 | 0.56 | 37.05 | -0.4865 | -0.3895 | -0.0001 |
| 350 | SLU 73 | -10.58 | 0.59 | 38.9 | -0.5173 | -0.4325 | -0.0001 |
| 350 | SLU 74 | -10.83 | 0.61 | 39.93 | -0.5371 | -0.4428 | -0.0001 |
| 350 | SLU 75 | -10.83 | 0.61 | 39.87 | -0.5361 | -0.4427 | -0.0001 |
| 350 | SLU 76 | -10.71 | 0.61 | 39.59 | -0.5312 | -0.4378 | -0.0001 |
| 350 | SLU 77 | -10.97 | 0.63 | 40.62 | -0.551 | -0.4481 | -0.0001 |
| 350 | SLU 78 | -10.96 | 0.63 | 40.56 | -0.55 | -0.448 | -0.0001 |
| 350 | SLU 79 | -10.85 | 0.62 | 40.37 | -0.5467 | -0.4433 | -0.0001 |
| 350 | SLU 80 | -10.84 | 0.62 | 40.32 | -0.5458 | -0.4432 | -0.0001 |
| 350 | SLU 81 | -11.15 | 0.62 | 40.39 | -0.5443 | -0.4556 | -0.0001 |
| 350 | SLU 82 | -11.15 | 0.62 | 40.34 | -0.5433 | -0.4556 | -0.0001 |
| 350 | SLU 83 | -11.28 | 0.64 | 41.08 | -0.5582 | -0.461 | -0.0001 |
| 350 | SLU 84 | -11.28 | 0.64 | 41.03 | -0.5572 | -0.4609 | -0.0001 |
| 350 | SLE RA 1 | -6.86 | 0.39 | 26.77 | -0.3406 | -0.2807 | -0.0001 |
| 350 | SLE RA 2 | -6.86 | 0.39 | 26.71 | -0.3396 | -0.2806 | -0.0001 |
| 350 | SLE RA 3 | -7.03 | 0.4 | 27.39 | -0.3528 | -0.2874 | -0.0001 |
| 350 | SLE RA 4 | -7.03 | 0.4 | 27.36 | -0.3521 | -0.2874 | -0.0001 |
| 350 | SLE RA 5 | -6.95 | 0.4 | 27.17 | -0.3488 | -0.2841 | -0.0001 |
| 350 | SLE RA 6 | -7.12 | 0.41 | 27.85 | -0.362 | -0.291 | -0.0001 |
| 350 | SLE RA 7 | -7.11 | 0.41 | 27.82 | -0.3614 | -0.291 | -0.0001 |
| 350 | SLE RA 8 | -7.04 | 0.41 | 27.69 | -0.3592 | -0.2878 | -0.0001 |
| 350 | SLE RA 9 | -7.03 | 0.41 | 27.65 | -0.3585 | -0.2877 | -0.0001 |
| 350 | SLE RA 10 | -7.74 | 0.43 | 28.89 | -0.379 | -0.3164 | -0.0001 |
| 350 | SLE RA 11 | -7.91 | 0.45 | 29.58 | -0.3923 | -0.3233 | -0.0001 |
| 350 | SLE RA 12 | -7.91 | 0.45 | 29.54 | -0.3916 | -0.3232 | -0.0001 |
| 350 | SLE RA 13 | -7.83 | 0.44 | 29.35 | -0.3883 | -0.32 | -0.0001 |
| 350 | SLE RA 14 | -8 | 0.46 | 30.04 | -0.4015 | -0.3268 | -0.0001 |
| 350 | SLE RA 15 | -7.99 | 0.46 | 30 | -0.4009 | -0.3268 | -0.0001 |
| 350 | SLE RA 16 | -7.92 | 0.46 | 29.87 | -0.3987 | -0.3236 | -0.0001 |
| 350 | SLE RA 17 | -7.91 | 0.45 | 29.84 | -0.398 | -0.3235 | -0.0001 |
| 350 | SLE RA 18 | -8.12 | 0.45 | 29.89 | -0.3971 | -0.3318 | -0.0001 |
| 350 | SLE RA 19 | -8.12 | 0.45 | 29.85 | -0.3964 | -0.3318 | -0.0001 |
| 350 | SLE RA 20 | -8.21 | 0.46 | 30.35 | -0.4063 | -0.3354 | -0.0001 |
| 350 | SLE RA 21 | -8.2 | 0.46 | 30.31 | -0.4057 | -0.3353 | -0.0001 |
| 350 | SLE FR 1 | -6.86 | 0.39 | 26.77 | -0.3406 | -0.2807 | -0.0001 |
| 350 | SLE FR 2 | -6.86 | 0.39 | 26.76 | -0.3404 | -0.2807 | -0.0001 |

| Nodo | Cont. | Reazione a traslazione | | | Reazione a rotazione | | |
|---|---|---|---|---|---|---|---|
| Ind. | N.br. | x | y | z | x | y | z |
| 350 | SLE FR 3 | -6.9 | 0.39 | 26.95 | -0.3443 | -0.2821 | -0.0001 |
| 350 | SLE FR 4 | -7.24 | 0.41 | 27.69 | -0.3573 | -0.296 | -0.0001 |
| 350 | SLE FR 5 | -7.27 | 0.41 | 27.89 | -0.3613 | -0.2974 | -0.0001 |
| 350 | SLE FR 6 | -7.49 | 0.42 | 28.33 | -0.3688 | -0.3063 | -0.0001 |
| 350 | SLE QP 1 | -6.86 | 0.39 | 26.77 | -0.3406 | -0.2807 | -0.0001 |
| 350 | SLE QP 2 | -7.24 | 0.41 | 27.71 | -0.3576 | -0.296 | -0.0001 |
| 350 | SLD 1 | 0.09 | 0.21 | 24.41 | -0.3909 | 0.0246 | 0 |
| 350 | SLD 2 | 0.09 | 0.21 | 24.41 | -0.3909 | 0.0246 | 0 |
| 350 | SLD 3 | 0.53 | 0.36 | 26.49 | -0.5098 | 0.0453 | -0.0001 |
| 350 | SLD 4 | 0.53 | 0.36 | 26.49 | -0.5098 | 0.0453 | -0.0001 |
| 350 | SLD 5 | -5.72 | 0.12 | 23.56 | -0.1871 | -0.2313 | 0 |
| 350 | SLD 6 | -5.72 | 0.12 | 23.56 | -0.1871 | -0.2313 | 0 |
| 350 | SLD 7 | -4.23 | 0.63 | 30.5 | -0.5837 | -0.1622 | -0.0001 |
| 350 | SLD 8 | -4.23 | 0.63 | 30.5 | -0.5837 | -0.1622 | -0.0001 |
| 350 | SLD 9 | -10.25 | 0.19 | 24.91 | -0.1314 | -0.4298 | 0 |
| 350 | SLD 10 | -10.25 | 0.19 | 24.91 | -0.1314 | -0.4298 | 0 |
| 350 | SLD 11 | -8.76 | 0.7 | 31.85 | -0.528 | -0.3608 | -0.0001 |
| 350 | SLD 12 | -8.76 | 0.7 | 31.85 | -0.528 | -0.3608 | -0.0001 |
| 350 | SLD 13 | -15.01 | 0.46 | 28.92 | -0.2053 | -0.6373 | -0.0001 |
| 350 | SLD 14 | -15.01 | 0.46 | 28.92 | -0.2053 | -0.6373 | -0.0001 |
| 350 | SLD 15 | -14.57 | 0.61 | 31 | -0.3243 | -0.6166 | -0.0001 |
| 350 | SLD 16 | -14.57 | 0.61 | 31 | -0.3243 | -0.6166 | -0.0001 |
| 350 | SLV 1 | 9.49 | -0.06 | 20.07 | -0.438 | 0.4359 | 0 |
| 350 | SLV 2 | 9.49 | -0.06 | 20.07 | -0.438 | 0.4359 | 0 |
| 350 | SLV 3 | 10.55 | 0.3 | 24.93 | -0.7167 | 0.4852 | -0.0001 |
| 350 | SLV 4 | 10.55 | 0.3 | 24.93 | -0.7167 | 0.4852 | -0.0001 |
| 350 | SLV 5 | -3.83 | -0.27 | 18.04 | 0.0409 | -0.1512 | 0 |
| 350 | SLV 6 | -3.83 | -0.27 | 18.04 | 0.0409 | -0.1512 | 0 |
| 350 | SLV 7 | -0.29 | 0.92 | 34.24 | -0.8879 | 0.0131 | -0.0001 |
| 350 | SLV 8 | -0.29 | 0.92 | 34.24 | -0.8879 | 0.0131 | -0.0001 |
| 350 | SLV 9 | -14.18 | -0.1 | 21.17 | 0.1728 | -0.6052 | 0 |
| 350 | SLV 10 | -14.18 | -0.1 | 21.17 | 0.1728 | -0.6052 | 0 |
| 350 | SLV 11 | -10.65 | 1.09 | 37.37 | -0.7561 | -0.4408 | -0.0002 |
| 350 | SLV 12 | -10.65 | 1.09 | 37.37 | -0.7561 | -0.4408 | -0.0002 |
| 350 | SLV 13 | -25.03 | 0.52 | 30.49 | 0.0016 | -1.0772 | -0.0001 |
| 350 | SLV 14 | -25.03 | 0.52 | 30.49 | 0.0016 | -1.0772 | -0.0001 |
| 350 | SLV 15 | -23.97 | 0.88 | 35.34 | -0.2771 | -1.0279 | -0.0001 |
| 350 | SLV 16 | -23.97 | 0.88 | 35.34 | -0.2771 | -1.0279 | -0.0001 |
| 351 | SLU 1 | -5.9 | 0.39 | 25.62 | -0.3537 | -0.2705 | -0.0002 |
| 351 | SLU 2 | -5.9 | 0.39 | 25.53 | -0.3518 | -0.2703 | -0.0002 |
| 351 | SLU 3 | -6.13 | 0.41 | 26.6 | -0.3745 | -0.2816 | -0.0002 |
| 351 | SLU 4 | -6.13 | 0.41 | 26.55 | -0.3733 | -0.2815 | -0.0002 |
| 351 | SLU 5 | -6.02 | 0.4 | 26.28 | -0.3681 | -0.2765 | -0.0002 |
| 351 | SLU 6 | -6.25 | 0.43 | 27.35 | -0.3908 | -0.2878 | -0.0002 |
| 351 | SLU 7 | -6.25 | 0.43 | 27.29 | -0.3896 | -0.2877 | -0.0002 |
| 351 | SLU 8 | -6.15 | 0.42 | 27.12 | -0.3863 | -0.2828 | -0.0002 |
| 351 | SLU 9 | -6.14 | 0.42 | 27.06 | -0.3851 | -0.2827 | -0.0002 |
| 351 | SLU 10 | -7.07 | 0.46 | 28.73 | -0.4161 | -0.3241 | -0.0003 |
| 351 | SLU 11 | -7.3 | 0.48 | 29.8 | -0.4388 | -0.3354 | -0.0003 |
| 351 | SLU 12 | -7.3 | 0.48 | 29.75 | -0.4377 | -0.3353 | -0.0003 |
| 351 | SLU 13 | -7.19 | 0.48 | 29.48 | -0.4324 | -0.3302 | -0.0003 |
| 351 | SLU 14 | -7.42 | 0.5 | 30.55 | -0.4551 | -0.3415 | -0.0003 |
| 351 | SLU 15 | -7.42 | 0.5 | 30.49 | -0.4539 | -0.3414 | -0.0003 |
| 351 | SLU 16 | -7.32 | 0.5 | 30.32 | -0.4507 | -0.3365 | -0.0003 |
| 351 | SLU 17 | -7.31 | 0.49 | 30.26 | -0.4495 | -0.3364 | -0.0003 |
| 351 | SLU 18 | -7.58 | 0.49 | 30.19 | -0.4457 | -0.3473 | -0.0003 |
| 351 | SLU 19 | -7.57 | 0.49 | 30.14 | -0.4445 | -0.3472 | -0.0003 |
| 351 | SLU 20 | -7.7 | 0.51 | 30.94 | -0.4619 | -0.3534 | -0.0003 |
| 351 | SLU 21 | -7.7 | 0.51 | 30.88 | -0.4608 | -0.3533 | -0.0003 |
| 351 | SLU 22 | -6.97 | 0.46 | 28.8 | -0.4184 | -0.3199 | -0.0003 |
| 351 | SLU 23 | -6.97 | 0.46 | 28.71 | -0.4164 | -0.3197 | -0.0003 |
| 351 | SLU 24 | -7.2 | 0.48 | 29.78 | -0.4391 | -0.331 | -0.0003 |
| 351 | SLU 25 | -7.2 | 0.48 | 29.73 | -0.4379 | -0.3309 | -0.0003 |
| 351 | SLU 26 | -7.09 | 0.48 | 29.46 | -0.4327 | -0.3259 | -0.0003 |
| 351 | SLU 27 | -7.32 | 0.5 | 30.53 | -0.4554 | -0.3372 | -0.0003 |
| 351 | SLU 28 | -7.32 | 0.5 | 30.47 | -0.4542 | -0.3371 | -0.0003 |
| 351 | SLU 29 | -7.22 | 0.5 | 30.3 | -0.4509 | -0.3322 | -0.0003 |
| 351 | SLU 30 | -7.21 | 0.49 | 30.24 | -0.4498 | -0.3321 | -0.0003 |
| 351 | SLU 31 | -8.14 | 0.53 | 31.91 | -0.4808 | -0.3735 | -0.0003 |
| 351 | SLU 32 | -8.37 | 0.55 | 32.98 | -0.5035 | -0.3848 | -0.0003 |
| 351 | SLU 33 | -8.37 | 0.55 | 32.93 | -0.5023 | -0.3847 | -0.0003 |
| 351 | SLU 34 | -8.26 | 0.55 | 32.65 | -0.497 | -0.3796 | -0.0003 |
| 351 | SLU 35 | -8.5 | 0.57 | 33.73 | -0.5197 | -0.3909 | -0.0003 |
| 351 | SLU 36 | -8.49 | 0.57 | 33.67 | -0.5186 | -0.3908 | -0.0003 |
| 351 | SLU 37 | -8.39 | 0.57 | 33.49 | -0.5153 | -0.3859 | -0.0003 |
| 351 | SLU 38 | -8.39 | 0.57 | 33.44 | -0.5141 | -0.3858 | -0.0003 |
| 351 | SLU 39 | -8.65 | 0.56 | 33.37 | -0.5103 | -0.3967 | -0.0003 |
| 351 | SLU 40 | -8.65 | 0.56 | 33.32 | -0.5091 | -0.3966 | -0.0003 |
| 351 | SLU 41 | -8.77 | 0.58 | 34.12 | -0.5266 | -0.4028 | -0.0003 |
| 351 | SLU 42 | -8.77 | 0.58 | 34.06 | -0.5254 | -0.4027 | -0.0003 |
| 351 | SLU 43 | -7.31 | 0.48 | 32.22 | -0.4377 | -0.3347 | -0.0003 |
| 351 | SLU 44 | -7.3 | 0.48 | 32.13 | -0.4358 | -0.3345 | -0.0003 |
| 351 | SLU 45 | -7.54 | 0.5 | 33.2 | -0.4585 | -0.3458 | -0.0003 |
| 351 | SLU 46 | -7.54 | 0.5 | 33.15 | -0.4573 | -0.3457 | -0.0003 |
| 351 | SLU 47 | -7.43 | 0.5 | 32.87 | -0.452 | -0.3407 | -0.0003 |
| 351 | SLU 48 | -7.66 | 0.52 | 33.95 | -0.4748 | -0.352 | -0.0003 |
| 351 | SLU 49 | -7.66 | 0.52 | 33.89 | -0.4736 | -0.3519 | -0.0003 |
| 351 | SLU 50 | -7.55 | 0.52 | 33.71 | -0.4703 | -0.347 | -0.0003 |

| Nodo | Cont. | Reazione a traslazione | | | Reazione a rotazione | | |
|---|---|---|---|---|---|---|---|
| Ind. | N.br. | x | y | z | x | y | z |
| 351 | SLU 51 | -7.55 | 0.52 | 33.66 | -0.4691 | -0.3469 | -0.0003 |
| 351 | SLU 52 | -8.48 | 0.55 | 35.33 | -0.5001 | -0.3883 | -0.0003 |
| 351 | SLU 53 | -8.71 | 0.58 | 36.4 | -0.5228 | -0.3996 | -0.0003 |
| 351 | SLU 54 | -8.71 | 0.57 | 36.34 | -0.5216 | -0.3995 | -0.0003 |
| 351 | SLU 55 | -8.6 | 0.57 | 36.07 | -0.5164 | -0.3944 | -0.0003 |
| 351 | SLU 56 | -8.83 | 0.59 | 37.15 | -0.5391 | -0.4057 | -0.0003 |
| 351 | SLU 57 | -8.83 | 0.59 | 37.09 | -0.5379 | -0.4056 | -0.0003 |
| 351 | SLU 58 | -8.72 | 0.59 | 36.91 | -0.5346 | -0.4007 | -0.0003 |
| 351 | SLU 59 | -8.72 | 0.59 | 36.86 | -0.5335 | -0.4006 | -0.0003 |
| 351 | SLU 60 | -8.98 | 0.58 | 36.79 | -0.5296 | -0.4115 | -0.0003 |
| 351 | SLU 61 | -8.98 | 0.58 | 36.74 | -0.5285 | -0.4114 | -0.0003 |
| 351 | SLU 62 | -9.1 | 0.6 | 37.54 | -0.5459 | -0.4176 | -0.0003 |
| 351 | SLU 63 | -9.1 | 0.6 | 37.48 | -0.5447 | -0.4175 | -0.0003 |
| 351 | SLU 64 | -8.38 | 0.55 | 35.4 | -0.5023 | -0.3841 | -0.0003 |
| 351 | SLU 65 | -8.38 | 0.55 | 35.31 | -0.5004 | -0.3839 | -0.0003 |
| 351 | SLU 66 | -8.61 | 0.58 | 36.38 | -0.5231 | -0.3952 | -0.0003 |
| 351 | SLU 67 | -8.61 | 0.57 | 36.32 | -0.5219 | -0.3951 | -0.0003 |
| 351 | SLU 68 | -8.5 | 0.57 | 36.05 | -0.5167 | -0.3901 | -0.0003 |
| 351 | SLU 69 | -8.73 | 0.59 | 37.13 | -0.5394 | -0.4014 | -0.0003 |
| 351 | SLU 70 | -8.73 | 0.59 | 37.07 | -0.5382 | -0.4013 | -0.0003 |
| 351 | SLU 71 | -8.62 | 0.59 | 36.89 | -0.5349 | -0.3964 | -0.0003 |
| 351 | SLU 72 | -8.62 | 0.59 | 36.84 | -0.5337 | -0.3963 | -0.0003 |
| 351 | SLU 73 | -9.55 | 0.62 | 38.51 | -0.5647 | -0.4377 | -0.0004 |
| 351 | SLU 74 | -9.78 | 0.65 | 39.58 | -0.5874 | -0.449 | -0.0004 |
| 351 | SLU 75 | -9.78 | 0.64 | 39.52 | -0.5862 | -0.4489 | -0.0004 |
| 351 | SLU 76 | -9.67 | 0.64 | 39.25 | -0.581 | -0.4438 | -0.0004 |
| 351 | SLU 77 | -9.9 | 0.66 | 40.33 | -0.6037 | -0.4551 | -0.0004 |
| 351 | SLU 78 | -9.9 | 0.66 | 40.27 | -0.6025 | -0.455 | -0.0004 |
| 351 | SLU 79 | -9.79 | 0.66 | 40.09 | -0.5992 | -0.4501 | -0.0004 |
| 351 | SLU 80 | -9.79 | 0.66 | 40.04 | -0.5981 | -0.45 | -0.0004 |
| 351 | SLU 81 | -10.05 | 0.65 | 39.97 | -0.5942 | -0.4609 | -0.0004 |
| 351 | SLU 82 | -10.05 | 0.65 | 39.91 | -0.5931 | -0.4608 | -0.0004 |
| 351 | SLU 83 | -10.17 | 0.67 | 40.72 | -0.6105 | -0.467 | -0.0004 |
| 351 | SLU 84 | -10.17 | 0.67 | 40.66 | -0.6094 | -0.4669 | -0.0004 |
| 351 | SLE RA 1 | -6.21 | 0.41 | 26.53 | -0.3722 | -0.2846 | -0.0002 |
| 351 | SLE RA 2 | -6.21 | 0.41 | 26.47 | -0.3709 | -0.2845 | -0.0002 |
| 351 | SLE RA 3 | -6.36 | 0.42 | 27.19 | -0.386 | -0.292 | -0.0002 |
| 351 | SLE RA 4 | -6.36 | 0.42 | 27.15 | -0.3853 | -0.292 | -0.0002 |
| 351 | SLE RA 5 | -6.29 | 0.42 | 26.97 | -0.3818 | -0.2886 | -0.0002 |
| 351 | SLE RA 6 | -6.44 | 0.44 | 27.68 | -0.3969 | -0.2961 | -0.0002 |
| 351 | SLE RA 7 | -6.44 | 0.44 | 27.65 | -0.3961 | -0.2961 | -0.0002 |
| 351 | SLE RA 8 | -6.37 | 0.43 | 27.53 | -0.3939 | -0.2928 | -0.0002 |
| 351 | SLE RA 9 | -6.37 | 0.43 | 27.49 | -0.3931 | -0.2927 | -0.0002 |
| 351 | SLE RA 10 | -6.99 | 0.46 | 28.6 | -0.4138 | -0.3203 | -0.0003 |
| 351 | SLE RA 11 | -7.14 | 0.47 | 29.32 | -0.4289 | -0.3279 | -0.0003 |
| 351 | SLE RA 12 | -7.14 | 0.47 | 29.28 | -0.4282 | -0.3278 | -0.0003 |
| 351 | SLE RA 13 | -7.07 | 0.47 | 29.1 | -0.4247 | -0.3244 | -0.0003 |
| 351 | SLE RA 14 | -7.22 | 0.48 | 29.82 | -0.4398 | -0.332 | -0.0003 |
| 351 | SLE RA 15 | -7.22 | 0.48 | 29.78 | -0.439 | -0.3319 | -0.0003 |
| 351 | SLE RA 16 | -7.15 | 0.48 | 29.66 | -0.4368 | -0.3286 | -0.0003 |
| 351 | SLE RA 17 | -7.15 | 0.48 | 29.62 | -0.436 | -0.3286 | -0.0003 |
| 351 | SLE RA 18 | -7.32 | 0.48 | 29.58 | -0.4335 | -0.3358 | -0.0003 |
| 351 | SLE RA 19 | -7.32 | 0.48 | 29.54 | -0.4327 | -0.3357 | -0.0003 |
| 351 | SLE RA 20 | -7.41 | 0.49 | 30.08 | -0.4443 | -0.3399 | -0.0003 |
| 351 | SLE RA 21 | -7.4 | 0.49 | 30.04 | -0.4436 | -0.3398 | -0.0003 |
| 351 | SLE FR 1 | -6.21 | 0.41 | 26.53 | -0.3722 | -0.2846 | -0.0002 |
| 351 | SLE FR 2 | -6.21 | 0.41 | 26.52 | -0.372 | -0.2846 | -0.0002 |
| 351 | SLE FR 3 | -6.24 | 0.41 | 26.73 | -0.3766 | -0.2862 | -0.0002 |
| 351 | SLE FR 4 | -6.54 | 0.43 | 27.43 | -0.3903 | -0.2999 | -0.0002 |
| 351 | SLE FR 5 | -6.58 | 0.43 | 27.65 | -0.3949 | -0.3016 | -0.0002 |
| 351 | SLE FR 6 | -6.77 | 0.44 | 28.06 | -0.4028 | -0.3102 | -0.0003 |
| 351 | SLE QP 1 | -6.21 | 0.41 | 26.53 | -0.3722 | -0.2846 | -0.0002 |
| 351 | SLE QP 2 | -6.54 | 0.43 | 27.45 | -0.3906 | -0.3 | -0.0002 |
| 351 | SLD 1 | 0 | 0.23 | 23.45 | -0.4246 | -0.0147 | -0.0001 |
| 351 | SLD 2 | 0 | 0.23 | 23.45 | -0.4246 | -0.0147 | -0.0001 |
| 351 | SLD 3 | 0.34 | 0.38 | 25.46 | -0.5416 | 0.0003 | -0.0002 |
| 351 | SLD 4 | 0.34 | 0.38 | 25.46 | -0.5416 | 0.0003 | -0.0002 |
| 351 | SLD 5 | -5.1 | 0.14 | 23.2 | -0.2234 | -0.2371 | -0.0001 |
| 351 | SLD 6 | -5.1 | 0.14 | 23.2 | -0.2234 | -0.2371 | -0.0001 |
| 351 | SLD 7 | -3.96 | 0.65 | 29.9 | -0.6133 | -0.1871 | -0.0004 |
| 351 | SLD 8 | -3.96 | 0.65 | 29.9 | -0.6133 | -0.1871 | -0.0004 |
| 351 | SLD 9 | -9.13 | 0.21 | 25 | -0.1679 | -0.4128 | -0.0001 |
| 351 | SLD 10 | -9.13 | 0.21 | 25 | -0.1679 | -0.4128 | -0.0001 |
| 351 | SLD 11 | -7.99 | 0.72 | 31.69 | -0.5578 | -0.3628 | -0.0004 |
| 351 | SLD 12 | -7.99 | 0.72 | 31.69 | -0.5578 | -0.3628 | -0.0004 |
| 351 | SLD 13 | -13.43 | 0.48 | 29.44 | -0.2396 | -0.6002 | -0.0003 |
| 351 | SLD 14 | -13.43 | 0.48 | 29.44 | -0.2396 | -0.6002 | -0.0003 |
| 351 | SLD 15 | -13.09 | 0.63 | 31.44 | -0.3566 | -0.5852 | -0.0004 |
| 351 | SLD 16 | -13.09 | 0.63 | 31.44 | -0.3566 | -0.5852 | -0.0004 |
| 351 | SLV 1 | 8.4 | -0.03 | 18.25 | -0.4714 | 0.3513 | 0 |
| 351 | SLV 2 | 8.4 | -0.03 | 18.25 | -0.4714 | 0.3513 | 0 |
| 351 | SLV 3 | 9.21 | 0.32 | 22.93 | -0.7453 | 0.387 | -0.0002 |
| 351 | SLV 4 | 9.21 | 0.32 | 22.93 | -0.7453 | 0.387 | -0.0002 |
| 351 | SLV 5 | -3.29 | -0.25 | 17.59 | 0.0005 | -0.1588 | 0.0002 |
| 351 | SLV 6 | -3.29 | -0.25 | 17.59 | 0.0005 | -0.1588 | 0.0002 |
| 351 | SLV 7 | -0.59 | 0.93 | 33.19 | -0.9123 | -0.0397 | -0.0005 |
| 351 | SLV 8 | -0.59 | 0.93 | 33.19 | -0.9123 | -0.0397 | -0.0005 |
| 351 | SLV 9 | -12.5 | -0.07 | 21.7 | 0.1311 | -0.5602 | 0.0001 |

| Nodo | Cont. | Reazione a traslazione | | | Reazione a rotazione | | |
|---|---|---|---|---|---|---|---|
| Ind. | N.br. | x | y | z | x | y | z |
| 351 | SLV 10 | -12.5 | -0.07 | 21.7 | 0.1311 | -0.5602 | 0.0001 |
| 351 | SLV 11 | -9.8 | 1.11 | 37.31 | -0.7817 | -0.4411 | -0.0006 |
| 351 | SLV 12 | -9.8 | 1.11 | 37.31 | -0.7817 | -0.4411 | -0.0006 |
| 351 | SLV 13 | -22.3 | 0.54 | 31.97 | -0.0359 | -0.9869 | -0.0003 |
| 351 | SLV 14 | -22.3 | 0.54 | 31.97 | -0.0359 | -0.9869 | -0.0003 |
| 351 | SLV 15 | -21.49 | 0.89 | 36.65 | -0.3097 | -0.9512 | -0.0005 |
| 351 | SLV 16 | -21.49 | 0.89 | 36.65 | -0.3097 | -0.9512 | -0.0005 |
| 352 | SLU 1 | -5.08 | 0.43 | 26.91 | -0.3942 | -0.2128 | -0.0004 |
| 352 | SLU 2 | -5.08 | 0.43 | 26.81 | -0.3919 | -0.2127 | -0.0004 |
| 352 | SLU 3 | -5.28 | 0.45 | 28 | -0.4182 | -0.2207 | -0.0005 |
| 352 | SLU 4 | -5.27 | 0.45 | 27.94 | -0.4168 | -0.2206 | -0.0005 |
| 352 | SLU 5 | -5.18 | 0.45 | 27.65 | -0.411 | -0.217 | -0.0005 |
| 352 | SLU 6 | -5.38 | 0.47 | 28.84 | -0.4373 | -0.2251 | -0.0005 |
| 352 | SLU 7 | -5.38 | 0.47 | 28.78 | -0.4359 | -0.225 | -0.0005 |
| 352 | SLU 8 | -5.29 | 0.47 | 28.58 | -0.4326 | -0.2216 | -0.0005 |
| 352 | SLU 9 | -5.29 | 0.47 | 28.52 | -0.4312 | -0.2215 | -0.0005 |
| 352 | SLU 10 | -6.03 | 0.5 | 30.26 | -0.4632 | -0.2522 | -0.0005 |
| 352 | SLU 11 | -6.23 | 0.53 | 31.45 | -0.4895 | -0.2602 | -0.0005 |
| 352 | SLU 12 | -6.22 | 0.53 | 31.39 | -0.4881 | -0.2601 | -0.0005 |
| 352 | SLU 13 | -6.14 | 0.52 | 31.09 | -0.4823 | -0.2565 | -0.0005 |
| 352 | SLU 14 | -6.33 | 0.55 | 32.28 | -0.5086 | -0.2646 | -0.0006 |
| 352 | SLU 15 | -6.33 | 0.55 | 32.22 | -0.5072 | -0.2645 | -0.0006 |
| 352 | SLU 16 | -6.24 | 0.55 | 32.03 | -0.5039 | -0.2611 | -0.0006 |
| 352 | SLU 17 | -6.24 | 0.54 | 31.97 | -0.5024 | -0.261 | -0.0006 |
| 352 | SLU 18 | -6.44 | 0.54 | 31.84 | -0.4961 | -0.2692 | -0.0006 |
| 352 | SLU 19 | -6.44 | 0.54 | 31.78 | -0.4947 | -0.2691 | -0.0006 |
| 352 | SLU 20 | -6.55 | 0.56 | 32.67 | -0.5152 | -0.2736 | -0.0006 |
| 352 | SLU 21 | -6.54 | 0.56 | 32.61 | -0.5138 | -0.2735 | -0.0006 |
| 352 | SLU 22 | -5.96 | 0.51 | 30.35 | -0.4664 | -0.2493 | -0.0005 |
| 352 | SLU 23 | -5.96 | 0.5 | 30.25 | -0.464 | -0.2491 | -0.0005 |
| 352 | SLU 24 | -6.15 | 0.53 | 31.43 | -0.4903 | -0.2572 | -0.0005 |
| 352 | SLU 25 | -6.15 | 0.53 | 31.37 | -0.4889 | -0.2571 | -0.0005 |
| 352 | SLU 26 | -6.06 | 0.52 | 31.08 | -0.4832 | -0.2535 | -0.0005 |
| 352 | SLU 27 | -6.26 | 0.55 | 32.27 | -0.5095 | -0.2616 | -0.0006 |
| 352 | SLU 28 | -6.25 | 0.55 | 32.21 | -0.5081 | -0.2615 | -0.0006 |
| 352 | SLU 29 | -6.17 | 0.55 | 32.02 | -0.5047 | -0.258 | -0.0006 |
| 352 | SLU 30 | -6.17 | 0.55 | 31.96 | -0.5033 | -0.2579 | -0.0006 |
| 352 | SLU 31 | -6.91 | 0.58 | 33.69 | -0.5353 | -0.2886 | -0.0006 |
| 352 | SLU 32 | -7.1 | 0.61 | 34.88 | -0.5616 | -0.2967 | -0.0006 |
| 352 | SLU 33 | -7.1 | 0.61 | 34.82 | -0.5602 | -0.2966 | -0.0006 |
| 352 | SLU 34 | -7.01 | 0.6 | 34.53 | -0.5545 | -0.293 | -0.0006 |
| 352 | SLU 35 | -7.21 | 0.63 | 35.72 | -0.5808 | -0.3011 | -0.0006 |
| 352 | SLU 36 | -7.2 | 0.63 | 35.66 | -0.5794 | -0.301 | -0.0006 |
| 352 | SLU 37 | -7.12 | 0.62 | 35.46 | -0.576 | -0.2975 | -0.0006 |
| 352 | SLU 38 | -7.12 | 0.62 | 35.4 | -0.5746 | -0.2974 | -0.0006 |
| 352 | SLU 39 | -7.32 | 0.62 | 35.27 | -0.5682 | -0.3057 | -0.0006 |
| 352 | SLU 40 | -7.32 | 0.61 | 35.21 | -0.5668 | -0.3056 | -0.0006 |
| 352 | SLU 41 | -7.42 | 0.64 | 36.1 | -0.5874 | -0.3101 | -0.0007 |
| 352 | SLU 42 | -7.42 | 0.64 | 36.04 | -0.586 | -0.31 | -0.0007 |
| 352 | SLU 43 | -6.31 | 0.53 | 33.81 | -0.4877 | -0.2642 | -0.0005 |
| 352 | SLU 44 | -6.31 | 0.53 | 33.71 | -0.4854 | -0.264 | -0.0005 |
| 352 | SLU 45 | -6.5 | 0.56 | 34.9 | -0.5117 | -0.2721 | -0.0006 |
| 352 | SLU 46 | -6.5 | 0.55 | 34.84 | -0.5103 | -0.272 | -0.0006 |
| 352 | SLU 47 | -6.41 | 0.55 | 34.55 | -0.5046 | -0.2684 | -0.0006 |
| 352 | SLU 48 | -6.6 | 0.58 | 35.73 | -0.5309 | -0.2765 | -0.0006 |
| 352 | SLU 49 | -6.6 | 0.57 | 35.67 | -0.5295 | -0.2764 | -0.0006 |
| 352 | SLU 50 | -6.52 | 0.57 | 35.48 | -0.5261 | -0.2729 | -0.0006 |
| 352 | SLU 51 | -6.52 | 0.57 | 35.42 | -0.5247 | -0.2728 | -0.0006 |
| 352 | SLU 52 | -7.26 | 0.6 | 37.16 | -0.5567 | -0.3035 | -0.0006 |
| 352 | SLU 53 | -7.45 | 0.63 | 38.34 | -0.583 | -0.3116 | -0.0006 |
| 352 | SLU 54 | -7.45 | 0.63 | 38.28 | -0.5816 | -0.3115 | -0.0006 |
| 352 | SLU 55 | -7.36 | 0.62 | 37.99 | -0.5759 | -0.3079 | -0.0006 |
| 352 | SLU 56 | -7.56 | 0.65 | 39.18 | -0.6022 | -0.316 | -0.0007 |
| 352 | SLU 57 | -7.55 | 0.65 | 39.12 | -0.6008 | -0.3159 | -0.0007 |
| 352 | SLU 58 | -7.47 | 0.65 | 38.93 | -0.5974 | -0.3124 | -0.0007 |
| 352 | SLU 59 | -7.47 | 0.65 | 38.87 | -0.596 | -0.3123 | -0.0007 |
| 352 | SLU 60 | -7.67 | 0.64 | 38.73 | -0.5896 | -0.3206 | -0.0007 |
| 352 | SLU 61 | -7.67 | 0.64 | 38.67 | -0.5882 | -0.3205 | -0.0007 |
| 352 | SLU 62 | -7.77 | 0.66 | 39.57 | -0.6088 | -0.325 | -0.0007 |
| 352 | SLU 63 | -7.77 | 0.66 | 39.51 | -0.6074 | -0.3249 | -0.0007 |
| 352 | SLU 64 | -7.19 | 0.61 | 37.24 | -0.5599 | -0.3006 | -0.0006 |
| 352 | SLU 65 | -7.18 | 0.6 | 37.14 | -0.5576 | -0.3005 | -0.0006 |
| 352 | SLU 66 | -7.38 | 0.63 | 38.33 | -0.5839 | -0.3085 | -0.0006 |
| 352 | SLU 67 | -7.37 | 0.63 | 38.27 | -0.5825 | -0.3084 | -0.0006 |
| 352 | SLU 68 | -7.29 | 0.63 | 37.98 | -0.5767 | -0.3048 | -0.0006 |
| 352 | SLU 69 | -7.48 | 0.65 | 39.17 | -0.603 | -0.3129 | -0.0007 |
| 352 | SLU 70 | -7.48 | 0.65 | 39.11 | -0.6016 | -0.3128 | -0.0007 |
| 352 | SLU 71 | -7.39 | 0.65 | 38.91 | -0.5982 | -0.3094 | -0.0007 |
| 352 | SLU 72 | -7.39 | 0.65 | 38.85 | -0.5968 | -0.3093 | -0.0007 |
| 352 | SLU 73 | -8.13 | 0.68 | 40.59 | -0.6288 | -0.34 | -0.0007 |
| 352 | SLU 74 | -8.33 | 0.71 | 41.78 | -0.6551 | -0.348 | -0.0007 |
| 352 | SLU 75 | -8.32 | 0.71 | 41.72 | -0.6537 | -0.3479 | -0.0007 |
| 352 | SLU 76 | -8.24 | 0.7 | 41.42 | -0.648 | -0.3443 | -0.0007 |
| 352 | SLU 77 | -8.43 | 0.73 | 42.61 | -0.6743 | -0.3524 | -0.0007 |
| 352 | SLU 78 | -8.43 | 0.73 | 42.55 | -0.6729 | -0.3523 | -0.0007 |
| 352 | SLU 79 | -8.34 | 0.73 | 42.36 | -0.6695 | -0.3489 | -0.0007 |
| 352 | SLU 80 | -8.34 | 0.72 | 42.3 | -0.6681 | -0.3488 | -0.0007 |
| 352 | SLU 81 | -8.54 | 0.72 | 42.17 | -0.6617 | -0.357 | -0.0007 |

| Nodo | Cont. | Reazione a traslazione | | | Reazione a rotazione | | |
|---|---|---|---|---|---|---|---|
| Ind. | N.br. | x | y | z | x | y | z |
| 352 | SLU 82 | -8.54 | 0.72 | 42.11 | -0.6603 | -0.3569 | -0.0007 |
| 352 | SLU 83 | -8.65 | 0.74 | 43 | -0.6809 | -0.3614 | -0.0008 |
| 352 | SLU 84 | -8.65 | 0.74 | 42.94 | -0.6795 | -0.3613 | -0.0008 |
| 352 | SLE RA 1 | -5.33 | 0.45 | 27.89 | -0.4148 | -0.2232 | -0.0005 |
| 352 | SLE RA 2 | -5.33 | 0.45 | 27.83 | -0.4133 | -0.2231 | -0.0005 |
| 352 | SLE RA 3 | -5.46 | 0.47 | 28.62 | -0.4308 | -0.2285 | -0.0005 |
| 352 | SLE RA 4 | -5.46 | 0.47 | 28.58 | -0.4299 | -0.2285 | -0.0005 |
| 352 | SLE RA 5 | -5.4 | 0.46 | 28.38 | -0.4261 | -0.226 | -0.0005 |
| 352 | SLE RA 6 | -5.53 | 0.48 | 29.18 | -0.4436 | -0.2314 | -0.0005 |
| 352 | SLE RA 7 | -5.53 | 0.48 | 29.14 | -0.4426 | -0.2314 | -0.0005 |
| 352 | SLE RA 8 | -5.47 | 0.48 | 29.01 | -0.4404 | -0.2291 | -0.0005 |
| 352 | SLE RA 9 | -5.47 | 0.48 | 28.97 | -0.4395 | -0.229 | -0.0005 |
| 352 | SLE RA 10 | -5.97 | 0.5 | 30.12 | -0.4608 | -0.2495 | -0.0005 |
| 352 | SLE RA 11 | -6.1 | 0.52 | 30.92 | -0.4783 | -0.2548 | -0.0005 |
| 352 | SLE RA 12 | -6.09 | 0.52 | 30.88 | -0.4774 | -0.2548 | -0.0005 |
| 352 | SLE RA 13 | -6.04 | 0.51 | 30.68 | -0.4736 | -0.2524 | -0.0005 |
| 352 | SLE RA 14 | -6.17 | 0.53 | 31.47 | -0.4911 | -0.2578 | -0.0005 |
| 352 | SLE RA 15 | -6.16 | 0.53 | 31.43 | -0.4902 | -0.2577 | -0.0005 |
| 352 | SLE RA 16 | -6.11 | 0.53 | 31.31 | -0.4879 | -0.2554 | -0.0005 |
| 352 | SLE RA 17 | -6.11 | 0.53 | 31.27 | -0.487 | -0.2553 | -0.0005 |
| 352 | SLE RA 18 | -6.24 | 0.52 | 31.18 | -0.4827 | -0.2608 | -0.0005 |
| 352 | SLE RA 19 | -6.24 | 0.52 | 31.14 | -0.4818 | -0.2608 | -0.0005 |
| 352 | SLE RA 20 | -6.31 | 0.54 | 31.73 | -0.4955 | -0.2638 | -0.0006 |
| 352 | SLE RA 21 | -6.31 | 0.54 | 31.69 | -0.4946 | -0.2637 | -0.0005 |
| 352 | SLE FR 1 | -5.33 | 0.45 | 27.89 | -0.4148 | -0.2232 | -0.0005 |
| 352 | SLE FR 2 | -5.33 | 0.45 | 27.88 | -0.4145 | -0.2232 | -0.0005 |
| 352 | SLE FR 3 | -5.36 | 0.46 | 28.12 | -0.4199 | -0.2244 | -0.0005 |
| 352 | SLE FR 4 | -5.61 | 0.47 | 28.87 | -0.4349 | -0.2345 | -0.0005 |
| 352 | SLE FR 5 | -5.63 | 0.48 | 29.1 | -0.4403 | -0.2357 | -0.0005 |
| 352 | SLE FR 6 | -5.79 | 0.49 | 29.53 | -0.4488 | -0.242 | -0.0005 |
| 352 | SLE QP 1 | -5.33 | 0.45 | 27.89 | -0.4148 | -0.2232 | -0.0005 |
| 352 | SLE QP 2 | -5.61 | 0.47 | 28.88 | -0.4352 | -0.2345 | -0.0005 |
| 352 | SLD 1 | 0.08 | 0.52 | 22.94 | -0.4705 | 0.0274 | -0.0003 |
| 352 | SLD 2 | 0.08 | 0.52 | 22.94 | -0.4705 | 0.0274 | -0.0003 |
| 352 | SLD 3 | 0.42 | 0.65 | 24.78 | -0.5747 | 0.0418 | -0.0004 |
| 352 | SLD 4 | 0.42 | 0.65 | 24.78 | -0.5747 | 0.0418 | -0.0004 |
| 352 | SLD 5 | -4.42 | 0.28 | 24.31 | -0.2877 | -0.1777 | -0.0002 |
| 352 | SLD 6 | -4.42 | 0.28 | 24.31 | -0.2877 | -0.1777 | -0.0002 |
| 352 | SLD 7 | -3.28 | 0.73 | 30.43 | -0.6352 | -0.1299 | -0.0007 |
| 352 | SLD 8 | -3.28 | 0.73 | 30.43 | -0.6352 | -0.1299 | -0.0007 |
| 352 | SLD 9 | -7.94 | 0.21 | 27.32 | -0.2352 | -0.3392 | -0.0003 |
| 352 | SLD 10 | -7.94 | 0.21 | 27.32 | -0.2352 | -0.3392 | -0.0003 |
| 352 | SLD 11 | -6.79 | 0.66 | 33.45 | -0.5827 | -0.2913 | -0.0007 |
| 352 | SLD 12 | -6.79 | 0.66 | 33.45 | -0.5827 | -0.2913 | -0.0007 |
| 352 | SLD 13 | -11.63 | 0.29 | 32.98 | -0.2957 | -0.5108 | -0.0005 |
| 352 | SLD 14 | -11.63 | 0.29 | 32.98 | -0.2957 | -0.5108 | -0.0005 |
| 352 | SLD 15 | -11.29 | 0.42 | 34.82 | -0.3999 | -0.4965 | -0.0007 |
| 352 | SLD 16 | -11.29 | 0.42 | 34.82 | -0.3999 | -0.4965 | -0.0007 |
| 352 | SLV 1 | 7.38 | 0.58 | 15.27 | -0.5184 | 0.3637 | -0.0001 |
| 352 | SLV 2 | 7.38 | 0.58 | 15.27 | -0.5184 | 0.3637 | -0.0001 |
| 352 | SLV 3 | 8.19 | 0.9 | 19.55 | -0.7621 | 0.398 | -0.0004 |
| 352 | SLV 4 | 8.19 | 0.9 | 19.55 | -0.7621 | 0.398 | -0.0004 |
| 352 | SLV 5 | -2.94 | 0.02 | 18.31 | -0.0906 | -0.1071 | 0.0001 |
| 352 | SLV 6 | -2.94 | 0.02 | 18.31 | -0.0906 | -0.1071 | 0.0001 |
| 352 | SLV 7 | -0.24 | 1.08 | 32.57 | -0.9029 | 0.0073 | -0.0009 |
| 352 | SLV 8 | -0.24 | 1.08 | 32.57 | -0.9029 | 0.0073 | -0.0009 |
| 352 | SLV 9 | -10.98 | -0.14 | 25.19 | 0.0325 | -0.4763 | 0 |
| 352 | SLV 10 | -10.98 | -0.14 | 25.19 | 0.0325 | -0.4763 | 0 |
| 352 | SLV 11 | -8.27 | 0.92 | 39.45 | -0.7798 | -0.362 | -0.0011 |
| 352 | SLV 12 | -8.27 | 0.92 | 39.45 | -0.7798 | -0.362 | -0.0011 |
| 352 | SLV 13 | -19.4 | 0.05 | 38.21 | -0.1083 | -0.867 | -0.0006 |
| 352 | SLV 14 | -19.4 | 0.05 | 38.21 | -0.1083 | -0.867 | -0.0006 |
| 352 | SLV 15 | -18.59 | 0.36 | 42.49 | -0.352 | -0.8327 | -0.0009 |
| 352 | SLV 16 | -18.59 | 0.36 | 42.49 | -0.352 | -0.8327 | -0.0009 |
| 353 | SLU 1 | -5.52 | 0.5 | 29.4 | -0.452 | -0.2675 | -0.0005 |
| 353 | SLU 2 | -5.51 | 0.5 | 29.3 | -0.4492 | -0.2671 | -0.0005 |
| 353 | SLU 3 | -5.74 | 0.53 | 30.65 | -0.4802 | -0.2788 | -0.0005 |
| 353 | SLU 4 | -5.74 | 0.53 | 30.58 | -0.4785 | -0.2786 | -0.0005 |
| 353 | SLU 5 | -5.65 | 0.52 | 30.25 | -0.472 | -0.274 | -0.0005 |
| 353 | SLU 6 | -5.88 | 0.56 | 31.6 | -0.5031 | -0.2858 | -0.0005 |
| 353 | SLU 7 | -5.87 | 0.56 | 31.53 | -0.5013 | -0.2855 | -0.0005 |
| 353 | SLU 8 | -5.79 | 0.55 | 31.3 | -0.4977 | -0.2814 | -0.0005 |
| 353 | SLU 9 | -5.79 | 0.55 | 31.24 | -0.496 | -0.2812 | -0.0005 |
| 353 | SLU 10 | -6.48 | 0.59 | 33.26 | -0.5305 | -0.3151 | -0.0006 |
| 353 | SLU 11 | -6.71 | 0.62 | 34.61 | -0.5615 | -0.3269 | -0.0006 |
| 353 | SLU 12 | -6.7 | 0.62 | 34.54 | -0.5598 | -0.3266 | -0.0006 |
| 353 | SLU 13 | -6.61 | 0.62 | 34.21 | -0.5533 | -0.3221 | -0.0006 |
| 353 | SLU 14 | -6.84 | 0.65 | 35.56 | -0.5844 | -0.3338 | -0.0006 |
| 353 | SLU 15 | -6.84 | 0.65 | 35.49 | -0.5827 | -0.3336 | -0.0006 |
| 353 | SLU 16 | -6.76 | 0.64 | 35.26 | -0.579 | -0.3295 | -0.0006 |
| 353 | SLU 17 | -6.75 | 0.64 | 35.2 | -0.5773 | -0.3292 | -0.0006 |
| 353 | SLU 18 | -6.9 | 0.63 | 35.06 | -0.5682 | -0.3361 | -0.0006 |
| 353 | SLU 19 | -6.9 | 0.63 | 35 | -0.5665 | -0.3359 | -0.0006 |
| 353 | SLU 20 | -7.04 | 0.66 | 36.01 | -0.591 | -0.3431 | -0.0006 |
| 353 | SLU 21 | -7.03 | 0.66 | 35.95 | -0.5893 | -0.3428 | -0.0006 |
| 353 | SLU 22 | -6.43 | 0.59 | 33.33 | -0.5348 | -0.3126 | -0.0006 |
| 353 | SLU 23 | -6.42 | 0.59 | 33.23 | -0.532 | -0.3122 | -0.0006 |
| 353 | SLU 24 | -6.65 | 0.63 | 34.58 | -0.563 | -0.3239 | -0.0006 |

| Nodo | Cont. | Reazione a traslazione | | | Reazione a rotazione | | |
|---|---|---|---|---|---|---|---|
| Ind. | N.br. | x | y | z | x | y | z |
| 353 | SLU 25 | -6.64 | 0.62 | 34.51 | -0.5613 | -0.3237 | -0.0006 |
| 353 | SLU 26 | -6.55 | 0.62 | 34.18 | -0.5548 | -0.3191 | -0.0006 |
| 353 | SLU 27 | -6.78 | 0.65 | 35.53 | -0.5859 | -0.3309 | -0.0006 |
| 353 | SLU 28 | -6.78 | 0.65 | 35.46 | -0.5842 | -0.3306 | -0.0006 |
| 353 | SLU 29 | -6.7 | 0.65 | 35.23 | -0.5805 | -0.3265 | -0.0006 |
| 353 | SLU 30 | -6.69 | 0.64 | 35.17 | -0.5788 | -0.3263 | -0.0006 |
| 353 | SLU 31 | -7.39 | 0.68 | 37.19 | -0.6133 | -0.3602 | -0.0007 |
| 353 | SLU 32 | -7.62 | 0.72 | 38.54 | -0.6443 | -0.372 | -0.0007 |
| 353 | SLU 33 | -7.61 | 0.71 | 38.47 | -0.6426 | -0.3717 | -0.0007 |
| 353 | SLU 34 | -7.52 | 0.71 | 38.14 | -0.6361 | -0.3672 | -0.0007 |
| 353 | SLU 35 | -7.75 | 0.74 | 39.49 | -0.6672 | -0.3789 | -0.0007 |
| 353 | SLU 36 | -7.74 | 0.74 | 39.42 | -0.6655 | -0.3787 | -0.0007 |
| 353 | SLU 37 | -7.66 | 0.74 | 39.19 | -0.6619 | -0.3746 | -0.0007 |
| 353 | SLU 38 | -7.66 | 0.73 | 39.13 | -0.6601 | -0.3743 | -0.0007 |
| 353 | SLU 39 | -7.81 | 0.72 | 38.99 | -0.651 | -0.3812 | -0.0007 |
| 353 | SLU 40 | -7.8 | 0.72 | 38.93 | -0.6493 | -0.381 | -0.0007 |
| 353 | SLU 41 | -7.94 | 0.75 | 39.94 | -0.6738 | -0.3882 | -0.0007 |
| 353 | SLU 42 | -7.94 | 0.75 | 39.88 | -0.6721 | -0.3879 | -0.0007 |
| 353 | SLU 43 | -6.87 | 0.62 | 36.88 | -0.5592 | -0.3323 | -0.0006 |
| 353 | SLU 44 | -6.86 | 0.62 | 36.77 | -0.5564 | -0.3319 | -0.0006 |
| 353 | SLU 45 | -7.09 | 0.65 | 38.12 | -0.5874 | -0.3436 | -0.0006 |
| 353 | SLU 46 | -7.08 | 0.65 | 38.06 | -0.5857 | -0.3434 | -0.0006 |
| 353 | SLU 47 | -6.99 | 0.64 | 37.72 | -0.5792 | -0.3388 | -0.0006 |
| 353 | SLU 48 | -7.22 | 0.68 | 39.07 | -0.6103 | -0.3506 | -0.0007 |
| 353 | SLU 49 | -7.22 | 0.68 | 39.01 | -0.6086 | -0.3503 | -0.0007 |
| 353 | SLU 50 | -7.14 | 0.67 | 38.77 | -0.6049 | -0.3462 | -0.0007 |
| 353 | SLU 51 | -7.13 | 0.67 | 38.71 | -0.6032 | -0.346 | -0.0007 |
| 353 | SLU 52 | -7.83 | 0.71 | 40.73 | -0.6377 | -0.3799 | -0.0007 |
| 353 | SLU 53 | -8.06 | 0.74 | 42.08 | -0.6687 | -0.3917 | -0.0007 |
| 353 | SLU 54 | -8.05 | 0.74 | 42.02 | -0.667 | -0.3914 | -0.0007 |
| 353 | SLU 55 | -7.96 | 0.73 | 41.68 | -0.6605 | -0.3869 | -0.0007 |
| 353 | SLU 56 | -8.19 | 0.77 | 43.03 | -0.6916 | -0.3986 | -0.0008 |
| 353 | SLU 57 | -8.18 | 0.77 | 42.97 | -0.6899 | -0.3984 | -0.0007 |
| 353 | SLU 58 | -8.1 | 0.76 | 42.73 | -0.6863 | -0.3943 | -0.0007 |
| 353 | SLU 59 | -8.1 | 0.76 | 42.67 | -0.6845 | -0.394 | -0.0007 |
| 353 | SLU 60 | -8.25 | 0.75 | 42.53 | -0.6754 | -0.4009 | -0.0007 |
| 353 | SLU 61 | -8.24 | 0.75 | 42.47 | -0.6737 | -0.4007 | -0.0007 |
| 353 | SLU 62 | -8.38 | 0.78 | 43.48 | -0.6982 | -0.4079 | -0.0008 |
| 353 | SLU 63 | -8.38 | 0.77 | 43.42 | -0.6965 | -0.4076 | -0.0008 |
| 353 | SLU 64 | -7.77 | 0.71 | 40.81 | -0.642 | -0.3774 | -0.0007 |
| 353 | SLU 65 | -7.77 | 0.71 | 40.7 | -0.6392 | -0.377 | -0.0007 |
| 353 | SLU 66 | -8 | 0.75 | 42.05 | -0.6702 | -0.3887 | -0.0007 |
| 353 | SLU 67 | -7.99 | 0.74 | 41.99 | -0.6685 | -0.3885 | -0.0007 |
| 353 | SLU 68 | -7.9 | 0.74 | 41.65 | -0.662 | -0.3839 | -0.0007 |
| 353 | SLU 69 | -8.13 | 0.77 | 43 | -0.6931 | -0.3957 | -0.0008 |
| 353 | SLU 70 | -8.12 | 0.77 | 42.94 | -0.6914 | -0.3954 | -0.0008 |
| 353 | SLU 71 | -8.04 | 0.76 | 42.7 | -0.6877 | -0.3913 | -0.0007 |
| 353 | SLU 72 | -8.04 | 0.76 | 42.64 | -0.686 | -0.3911 | -0.0007 |
| 353 | SLU 73 | -8.73 | 0.8 | 44.66 | -0.7205 | -0.425 | -0.0008 |
| 353 | SLU 74 | -8.96 | 0.84 | 46.01 | -0.7515 | -0.4368 | -0.0008 |
| 353 | SLU 75 | -8.96 | 0.83 | 45.95 | -0.7498 | -0.4365 | -0.0008 |
| 353 | SLU 76 | -8.87 | 0.83 | 45.61 | -0.7433 | -0.432 | -0.0008 |
| 353 | SLU 77 | -9.1 | 0.86 | 46.96 | -0.7744 | -0.4437 | -0.0008 |
| 353 | SLU 78 | -9.09 | 0.86 | 46.9 | -0.7727 | -0.4435 | -0.0008 |
| 353 | SLU 79 | -9.01 | 0.86 | 46.66 | -0.7691 | -0.4394 | -0.0008 |
| 353 | SLU 80 | -9 | 0.85 | 46.6 | -0.7674 | -0.4391 | -0.0008 |
| 353 | SLU 81 | -9.15 | 0.84 | 46.46 | -0.7582 | -0.446 | -0.0008 |
| 353 | SLU 82 | -9.15 | 0.84 | 46.4 | -0.7565 | -0.4458 | -0.0008 |
| 353 | SLU 83 | -9.29 | 0.87 | 47.41 | -0.781 | -0.453 | -0.0008 |
| 353 | SLU 84 | -9.28 | 0.87 | 47.35 | -0.7793 | -0.4527 | -0.0008 |
| 353 | SLE RA 1 | -5.78 | 0.53 | 30.53 | -0.4757 | -0.2804 | -0.0005 |
| 353 | SLE RA 2 | -5.78 | 0.53 | 30.46 | -0.4738 | -0.2801 | -0.0005 |
| 353 | SLE RA 3 | -5.93 | 0.55 | 31.36 | -0.4945 | -0.288 | -0.0005 |
| 353 | SLE RA 4 | -5.92 | 0.55 | 31.31 | -0.4933 | -0.2878 | -0.0005 |
| 353 | SLE RA 5 | -5.86 | 0.54 | 31.09 | -0.489 | -0.2848 | -0.0005 |
| 353 | SLE RA 6 | -6.02 | 0.57 | 31.99 | -0.5097 | -0.2926 | -0.0006 |
| 353 | SLE RA 7 | -6.01 | 0.57 | 31.95 | -0.5086 | -0.2924 | -0.0006 |
| 353 | SLE RA 8 | -5.96 | 0.56 | 31.79 | -0.5061 | -0.2897 | -0.0005 |
| 353 | SLE RA 9 | -5.96 | 0.56 | 31.75 | -0.505 | -0.2895 | -0.0005 |
| 353 | SLE RA 10 | -6.42 | 0.59 | 33.1 | -0.528 | -0.3121 | -0.0006 |
| 353 | SLE RA 11 | -6.57 | 0.61 | 33.99 | -0.5487 | -0.32 | -0.0006 |
| 353 | SLE RA 12 | -6.57 | 0.61 | 33.95 | -0.5475 | -0.3198 | -0.0006 |
| 353 | SLE RA 13 | -6.51 | 0.6 | 33.73 | -0.5432 | -0.3168 | -0.0006 |
| 353 | SLE RA 14 | -6.66 | 0.63 | 34.63 | -0.5639 | -0.3246 | -0.0006 |
| 353 | SLE RA 15 | -6.66 | 0.63 | 34.59 | -0.5628 | -0.3244 | -0.0006 |
| 353 | SLE RA 16 | -6.6 | 0.62 | 34.43 | -0.5604 | -0.3217 | -0.0006 |
| 353 | SLE RA 17 | -6.6 | 0.62 | 34.39 | -0.5592 | -0.3215 | -0.0006 |
| 353 | SLE RA 18 | -6.7 | 0.61 | 34.3 | -0.5531 | -0.3262 | -0.0006 |
| 353 | SLE RA 19 | -6.7 | 0.61 | 34.26 | -0.552 | -0.326 | -0.0006 |
| 353 | SLE RA 20 | -6.79 | 0.63 | 34.93 | -0.5683 | -0.3308 | -0.0006 |
| 353 | SLE RA 21 | -6.79 | 0.63 | 34.89 | -0.5672 | -0.3306 | -0.0006 |
| 353 | SLE FR 1 | -5.78 | 0.53 | 30.53 | -0.4757 | -0.2804 | -0.0005 |
| 353 | SLE FR 2 | -5.78 | 0.53 | 30.51 | -0.4753 | -0.2804 | -0.0005 |
| 353 | SLE FR 3 | -5.82 | 0.54 | 30.78 | -0.4818 | -0.2823 | -0.0005 |
| 353 | SLE FR 4 | -6.06 | 0.55 | 31.64 | -0.4985 | -0.2941 | -0.0005 |
| 353 | SLE FR 5 | -6.09 | 0.56 | 31.91 | -0.505 | -0.296 | -0.0005 |
| 353 | SLE FR 6 | -6.24 | 0.57 | 32.41 | -0.5144 | -0.3033 | -0.0006 |
| 353 | SLE QP 1 | -5.78 | 0.53 | 30.53 | -0.4757 | -0.2804 | -0.0005 |

| Nodo | Cont. | Reazione a traslazione | | | Reazione a rotazione | | |
|---|---|---|---|---|---|---|---|
| Ind. | N.br. | x | y | z | x | y | z |
| 353 | SLE QP 2 | -6.06 | 0.55 | 31.66 | -0.4989 | -0.2941 | -0.0005 |
| 353 | SLD 1 | -1.34 | 0.6 | 22.13 | -0.5342 | -0.074 | -0.0004 |
| 353 | SLD 2 | -1.34 | 0.6 | 22.13 | -0.5342 | -0.074 | -0.0004 |
| 353 | SLD 3 | -0.91 | 0.71 | 23.89 | -0.6199 | -0.0558 | -0.0005 |
| 353 | SLD 4 | -0.91 | 0.71 | 23.89 | -0.6199 | -0.0558 | -0.0005 |
| 353 | SLD 5 | -5.3 | 0.39 | 26.14 | -0.3795 | -0.2557 | -0.0004 |
| 353 | SLD 6 | -5.3 | 0.39 | 26.14 | -0.3795 | -0.2557 | -0.0004 |
| 353 | SLD 7 | -3.86 | 0.78 | 31.99 | -0.6652 | -0.195 | -0.0007 |
| 353 | SLD 8 | -3.86 | 0.78 | 31.99 | -0.6652 | -0.195 | -0.0007 |
| 353 | SLD 9 | -8.26 | 0.33 | 31.32 | -0.3326 | -0.3933 | -0.0004 |
| 353 | SLD 10 | -8.26 | 0.33 | 31.32 | -0.3326 | -0.3933 | -0.0004 |
| 353 | SLD 11 | -6.82 | 0.72 | 37.18 | -0.6183 | -0.3325 | -0.0007 |
| 353 | SLD 12 | -6.82 | 0.72 | 37.18 | -0.6183 | -0.3325 | -0.0007 |
| 353 | SLD 13 | -11.21 | 0.39 | 39.42 | -0.3779 | -0.5325 | -0.0006 |
| 353 | SLD 14 | -11.21 | 0.39 | 39.42 | -0.3779 | -0.5325 | -0.0006 |
| 353 | SLD 15 | -10.77 | 0.51 | 41.18 | -0.4636 | -0.5143 | -0.0007 |
| 353 | SLD 16 | -10.77 | 0.51 | 41.18 | -0.4636 | -0.5143 | -0.0007 |
| 353 | SLV 1 | 4.71 | 0.66 | 9.84 | -0.582 | 0.2084 | -0.0003 |
| 353 | SLV 2 | 4.71 | 0.66 | 9.84 | -0.582 | 0.2084 | -0.0003 |
| 353 | SLV 3 | 5.73 | 0.93 | 13.95 | -0.7817 | 0.2514 | -0.0005 |
| 353 | SLV 4 | 5.73 | 0.93 | 13.95 | -0.7817 | 0.2514 | -0.0005 |
| 353 | SLV 5 | -4.37 | 0.18 | 18.88 | -0.221 | -0.2085 | -0.0002 |
| 353 | SLV 6 | -4.37 | 0.18 | 18.88 | -0.221 | -0.2085 | -0.0002 |
| 353 | SLV 7 | -0.98 | 1.07 | 32.58 | -0.8866 | -0.0653 | -0.0008 |
| 353 | SLV 8 | -0.98 | 1.07 | 32.58 | -0.8866 | -0.0653 | -0.0008 |
| 353 | SLV 9 | -11.14 | 0.03 | 30.74 | -0.1112 | -0.523 | -0.0003 |
| 353 | SLV 10 | -11.14 | 0.03 | 30.74 | -0.1112 | -0.523 | -0.0003 |
| 353 | SLV 11 | -7.74 | 0.93 | 44.44 | -0.7768 | -0.3797 | -0.0009 |
| 353 | SLV 12 | -7.74 | 0.93 | 44.44 | -0.7768 | -0.3797 | -0.0009 |
| 353 | SLV 13 | -17.84 | 0.18 | 49.36 | -0.2161 | -0.8396 | -0.0006 |
| 353 | SLV 14 | -17.84 | 0.18 | 49.36 | -0.2161 | -0.8396 | -0.0006 |
| 353 | SLV 15 | -16.83 | 0.45 | 53.47 | -0.4158 | -0.7967 | -0.0008 |
| 353 | SLV 16 | -16.83 | 0.45 | 53.47 | -0.4158 | -0.7967 | -0.0008 |
| 354 | SLU 1 | -5.66 | 0.76 | 35.1 | -0.5246 | -0.2755 | 0.0021 |
| 354 | SLU 2 | -5.64 | 0.76 | 34.99 | -0.5211 | -0.2749 | 0.0021 |
| 354 | SLU 3 | -5.89 | 0.81 | 36.64 | -0.5579 | -0.2868 | 0.0022 |
| 354 | SLU 4 | -5.88 | 0.81 | 36.57 | -0.5559 | -0.2864 | 0.0022 |
| 354 | SLU 5 | -5.8 | 0.8 | 36.13 | -0.5484 | -0.2825 | 0.0022 |
| 354 | SLU 6 | -6.04 | 0.85 | 37.79 | -0.5852 | -0.2944 | 0.0023 |
| 354 | SLU 7 | -6.03 | 0.85 | 37.72 | -0.5831 | -0.2941 | 0.0023 |
| 354 | SLU 8 | -5.97 | 0.84 | 37.39 | -0.5791 | -0.2908 | 0.0023 |
| 354 | SLU 9 | -5.96 | 0.84 | 37.33 | -0.5771 | -0.2904 | 0.0023 |
| 354 | SLU 10 | -6.54 | 0.89 | 40.06 | -0.615 | -0.3191 | 0.0024 |
| 354 | SLU 11 | -6.79 | 0.95 | 41.71 | -0.6518 | -0.331 | 0.0026 |
| 354 | SLU 12 | -6.78 | 0.94 | 41.64 | -0.6498 | -0.3306 | 0.0026 |
| 354 | SLU 13 | -6.7 | 0.93 | 41.21 | -0.6423 | -0.3267 | 0.0025 |
| 354 | SLU 14 | -6.94 | 0.99 | 42.86 | -0.6791 | -0.3387 | 0.0027 |
| 354 | SLU 15 | -6.94 | 0.98 | 42.79 | -0.6771 | -0.3383 | 0.0027 |
| 354 | SLU 16 | -6.87 | 0.98 | 42.47 | -0.6731 | -0.335 | 0.0027 |
| 354 | SLU 17 | -6.86 | 0.97 | 42.4 | -0.671 | -0.3347 | 0.0026 |
| 354 | SLU 18 | -6.95 | 0.96 | 42.35 | -0.6587 | -0.3387 | 0.0026 |
| 354 | SLU 19 | -6.94 | 0.95 | 42.28 | -0.6567 | -0.3383 | 0.0026 |
| 354 | SLU 20 | -7.1 | 1 | 43.49 | -0.686 | -0.3463 | 0.0027 |
| 354 | SLU 21 | -7.09 | 0.99 | 43.42 | -0.6839 | -0.3459 | 0.0027 |
| 354 | SLU 22 | -6.52 | 0.9 | 40.09 | -0.6207 | -0.3179 | 0.0024 |
| 354 | SLU 23 | -6.51 | 0.9 | 39.97 | -0.6172 | -0.3172 | 0.0024 |
| 354 | SLU 24 | -6.75 | 0.95 | 41.63 | -0.654 | -0.3292 | 0.0026 |
| 354 | SLU 25 | -6.74 | 0.95 | 41.56 | -0.652 | -0.3288 | 0.0026 |
| 354 | SLU 26 | -6.66 | 0.94 | 41.12 | -0.6445 | -0.3249 | 0.0025 |
| 354 | SLU 27 | -6.91 | 0.99 | 42.77 | -0.6813 | -0.3368 | 0.0027 |
| 354 | SLU 28 | -6.9 | 0.99 | 42.7 | -0.6792 | -0.3364 | 0.0027 |
| 354 | SLU 29 | -6.83 | 0.98 | 42.38 | -0.6752 | -0.3332 | 0.0027 |
| 354 | SLU 30 | -6.82 | 0.98 | 42.31 | -0.6732 | -0.3328 | 0.0027 |
| 354 | SLU 31 | -7.41 | 1.03 | 45.05 | -0.7111 | -0.3614 | 0.0028 |
| 354 | SLU 32 | -7.65 | 1.08 | 46.7 | -0.7479 | -0.3734 | 0.0029 |
| 354 | SLU 33 | -7.64 | 1.08 | 46.63 | -0.7459 | -0.373 | 0.0029 |
| 354 | SLU 34 | -7.56 | 1.07 | 46.19 | -0.7384 | -0.3691 | 0.0029 |
| 354 | SLU 35 | -7.81 | 1.12 | 47.84 | -0.7752 | -0.381 | 0.0031 |
| 354 | SLU 36 | -7.8 | 1.12 | 47.77 | -0.7732 | -0.3806 | 0.0031 |
| 354 | SLU 37 | -7.73 | 1.12 | 47.45 | -0.7692 | -0.3774 | 0.003 |
| 354 | SLU 38 | -7.72 | 1.11 | 47.38 | -0.7671 | -0.377 | 0.003 |
| 354 | SLU 39 | -7.81 | 1.09 | 47.33 | -0.7548 | -0.381 | 0.003 |
| 354 | SLU 40 | -7.8 | 1.09 | 47.26 | -0.7528 | -0.3806 | 0.003 |
| 354 | SLU 41 | -7.96 | 1.13 | 48.48 | -0.7821 | -0.3887 | 0.0031 |
| 354 | SLU 42 | -7.96 | 1.13 | 48.41 | -0.78 | -0.3883 | 0.0031 |
| 354 | SLU 43 | -7.06 | 0.94 | 43.93 | -0.649 | -0.3436 | 0.0026 |
| 354 | SLU 44 | -7.04 | 0.94 | 43.81 | -0.6455 | -0.343 | 0.0025 |
| 354 | SLU 45 | -7.29 | 0.99 | 45.46 | -0.6824 | -0.3549 | 0.0027 |
| 354 | SLU 46 | -7.28 | 0.99 | 45.4 | -0.6803 | -0.3545 | 0.0027 |
| 354 | SLU 47 | -7.2 | 0.98 | 44.96 | -0.6728 | -0.3506 | 0.0027 |
| 354 | SLU 48 | -7.44 | 1.03 | 46.61 | -0.7096 | -0.3626 | 0.0028 |
| 354 | SLU 49 | -7.43 | 1.03 | 46.54 | -0.7076 | -0.3622 | 0.0028 |
| 354 | SLU 50 | -7.37 | 1.02 | 46.22 | -0.7036 | -0.3589 | 0.0028 |
| 354 | SLU 51 | -7.36 | 1.02 | 46.15 | -0.7015 | -0.3586 | 0.0028 |
| 354 | SLU 52 | -7.95 | 1.07 | 48.88 | -0.7395 | -0.3872 | 0.0029 |
| 354 | SLU 53 | -8.19 | 1.13 | 50.53 | -0.7763 | -0.3991 | 0.0031 |
| 354 | SLU 54 | -8.18 | 1.12 | 50.47 | -0.7742 | -0.3987 | 0.0031 |
| 354 | SLU 55 | -8.1 | 1.11 | 50.03 | -0.7667 | -0.3949 | 0.003 |

| Nodo | Cont. | Reazione a traslazione | | | Reazione a rotazione | | |
|---|---|---|---|---|---|---|---|
| Ind. | N.br. | x | y | z | x | y | z |
| 354 | SLU 56 | -8.34 | 1.17 | 51.68 | -0.8036 | -0.4068 | 0.0032 |
| 354 | SLU 57 | -8.34 | 1.16 | 51.61 | -0.8015 | -0.4064 | 0.0032 |
| 354 | SLU 58 | -8.27 | 1.16 | 51.29 | -0.7975 | -0.4032 | 0.0031 |
| 354 | SLU 59 | -8.26 | 1.15 | 51.22 | -0.7954 | -0.4028 | 0.0031 |
| 354 | SLU 60 | -8.35 | 1.14 | 51.17 | -0.7832 | -0.4068 | 0.0031 |
| 354 | SLU 61 | -8.34 | 1.13 | 51.1 | -0.7811 | -0.4064 | 0.0031 |
| 354 | SLU 62 | -8.5 | 1.18 | 52.32 | -0.8104 | -0.4145 | 0.0032 |
| 354 | SLU 63 | -8.49 | 1.17 | 52.25 | -0.8084 | -0.4141 | 0.0032 |
| 354 | SLU 64 | -7.92 | 1.08 | 48.91 | -0.7451 | -0.386 | 0.0029 |
| 354 | SLU 65 | -7.91 | 1.08 | 48.8 | -0.7416 | -0.3853 | 0.0029 |
| 354 | SLU 66 | -8.15 | 1.13 | 50.45 | -0.7785 | -0.3973 | 0.0031 |
| 354 | SLU 67 | -8.14 | 1.13 | 50.38 | -0.7764 | -0.3969 | 0.0031 |
| 354 | SLU 68 | -8.06 | 1.12 | 49.94 | -0.7689 | -0.393 | 0.003 |
| 354 | SLU 69 | -8.31 | 1.17 | 51.59 | -0.8057 | -0.4049 | 0.0032 |
| 354 | SLU 70 | -8.3 | 1.17 | 51.53 | -0.8037 | -0.4046 | 0.0032 |
| 354 | SLU 71 | -8.23 | 1.16 | 51.2 | -0.7997 | -0.4013 | 0.0032 |
| 354 | SLU 72 | -8.22 | 1.16 | 51.13 | -0.7976 | -0.4009 | 0.0032 |
| 354 | SLU 73 | -8.81 | 1.21 | 53.87 | -0.8356 | -0.4296 | 0.0033 |
| 354 | SLU 74 | -9.05 | 1.27 | 55.52 | -0.8724 | -0.4415 | 0.0034 |
| 354 | SLU 75 | -9.05 | 1.26 | 55.45 | -0.8703 | -0.4411 | 0.0034 |
| 354 | SLU 76 | -8.96 | 1.25 | 55.01 | -0.8628 | -0.4372 | 0.0034 |
| 354 | SLU 77 | -9.21 | 1.31 | 56.66 | -0.8997 | -0.4492 | 0.0036 |
| 354 | SLU 78 | -9.2 | 1.3 | 56.6 | -0.8976 | -0.4488 | 0.0035 |
| 354 | SLU 79 | -9.13 | 1.3 | 56.27 | -0.8936 | -0.4455 | 0.0035 |
| 354 | SLU 80 | -9.13 | 1.29 | 56.2 | -0.8915 | -0.4451 | 0.0035 |
| 354 | SLU 81 | -9.21 | 1.28 | 56.16 | -0.8793 | -0.4492 | 0.0035 |
| 354 | SLU 82 | -9.2 | 1.27 | 56.09 | -0.8772 | -0.4488 | 0.0035 |
| 354 | SLU 83 | -9.36 | 1.32 | 57.3 | -0.9065 | -0.4568 | 0.0036 |
| 354 | SLU 84 | -9.36 | 1.31 | 57.23 | -0.9045 | -0.4564 | 0.0036 |
| 354 | SLE RA 1 | -5.9 | 0.8 | 36.53 | -0.552 | -0.2876 | 0.0022 |
| 354 | SLE RA 2 | -5.89 | 0.8 | 36.45 | -0.5497 | -0.2872 | 0.0022 |
| 354 | SLE RA 3 | -6.06 | 0.83 | 37.55 | -0.5743 | -0.2951 | 0.0023 |
| 354 | SLE RA 4 | -6.05 | 0.83 | 37.51 | -0.5729 | -0.2949 | 0.0023 |
| 354 | SLE RA 5 | -6 | 0.82 | 37.22 | -0.5679 | -0.2923 | 0.0022 |
| 354 | SLE RA 6 | -6.16 | 0.86 | 38.32 | -0.5925 | -0.3002 | 0.0023 |
| 354 | SLE RA 7 | -6.15 | 0.86 | 38.27 | -0.5911 | -0.3 | 0.0023 |
| 354 | SLE RA 8 | -6.11 | 0.85 | 38.06 | -0.5884 | -0.2978 | 0.0023 |
| 354 | SLE RA 9 | -6.1 | 0.85 | 38.01 | -0.587 | -0.2976 | 0.0023 |
| 354 | SLE RA 10 | -6.5 | 0.89 | 39.83 | -0.6123 | -0.3167 | 0.0024 |
| 354 | SLE RA 11 | -6.66 | 0.92 | 40.93 | -0.6369 | -0.3246 | 0.0025 |
| 354 | SLE RA 12 | -6.65 | 0.92 | 40.89 | -0.6355 | -0.3243 | 0.0025 |
| 354 | SLE RA 13 | -6.6 | 0.91 | 40.6 | -0.6305 | -0.3218 | 0.0025 |
| 354 | SLE RA 14 | -6.76 | 0.95 | 41.7 | -0.6551 | -0.3297 | 0.0026 |
| 354 | SLE RA 15 | -6.76 | 0.95 | 41.65 | -0.6537 | -0.3295 | 0.0026 |
| 354 | SLE RA 16 | -6.71 | 0.94 | 41.44 | -0.651 | -0.3273 | 0.0026 |
| 354 | SLE RA 17 | -6.71 | 0.94 | 41.39 | -0.6496 | -0.327 | 0.0026 |
| 354 | SLE RA 18 | -6.76 | 0.93 | 41.36 | -0.6415 | -0.3297 | 0.0025 |
| 354 | SLE RA 19 | -6.76 | 0.93 | 41.31 | -0.6401 | -0.3295 | 0.0025 |
| 354 | SLE RA 20 | -6.87 | 0.96 | 42.12 | -0.6597 | -0.3348 | 0.0026 |
| 354 | SLE RA 21 | -6.86 | 0.95 | 42.08 | -0.6583 | -0.3346 | 0.0026 |
| 354 | SLE FR 1 | -5.9 | 0.8 | 36.53 | -0.552 | -0.2876 | 0.0022 |
| 354 | SLE FR 2 | -5.9 | 0.8 | 36.51 | -0.5516 | -0.2875 | 0.0022 |
| 354 | SLE FR 3 | -5.94 | 0.81 | 36.83 | -0.5593 | -0.2896 | 0.0022 |
| 354 | SLE FR 4 | -6.16 | 0.84 | 37.96 | -0.5784 | -0.3002 | 0.0023 |
| 354 | SLE FR 5 | -6.2 | 0.85 | 38.28 | -0.5861 | -0.3023 | 0.0023 |
| 354 | SLE FR 6 | -6.33 | 0.87 | 38.94 | -0.5968 | -0.3087 | 0.0024 |
| 354 | SLE QP 1 | -5.9 | 0.8 | 36.53 | -0.552 | -0.2876 | 0.0022 |
| 354 | SLE QP 2 | -6.16 | 0.84 | 37.98 | -0.5789 | -0.3002 | 0.0023 |
| 354 | SLD 1 | -1.72 | 0.87 | 21.44 | -0.6056 | -0.055 | 0.0023 |
| 354 | SLD 2 | -1.72 | 0.87 | 21.44 | -0.6056 | -0.055 | 0.0023 |
| 354 | SLD 3 | -2.12 | 0.99 | 23.55 | -0.6802 | -0.0732 | 0.0026 |
| 354 | SLD 4 | -2.12 | 0.99 | 23.55 | -0.6802 | -0.0732 | 0.0026 |
| 354 | SLD 5 | -4.23 | 0.67 | 29.82 | -0.4736 | -0.1991 | 0.0019 |
| 354 | SLD 6 | -4.23 | 0.67 | 29.82 | -0.4736 | -0.1991 | 0.0019 |
| 354 | SLD 7 | -5.55 | 1.07 | 36.85 | -0.7225 | -0.2597 | 0.0028 |
| 354 | SLD 8 | -5.55 | 1.07 | 36.85 | -0.7225 | -0.2597 | 0.0028 |
| 354 | SLD 9 | -6.77 | 0.61 | 39.11 | -0.4352 | -0.3408 | 0.0018 |
| 354 | SLD 10 | -6.77 | 0.61 | 39.11 | -0.4352 | -0.3408 | 0.0018 |
| 354 | SLD 11 | -8.1 | 1.01 | 46.13 | -0.6841 | -0.4014 | 0.0027 |
| 354 | SLD 12 | -8.1 | 1.01 | 46.13 | -0.6841 | -0.4014 | 0.0027 |
| 354 | SLD 13 | -10.2 | 0.69 | 52.41 | -0.4775 | -0.5273 | 0.002 |
| 354 | SLD 14 | -10.2 | 0.69 | 52.41 | -0.4775 | -0.5273 | 0.002 |
| 354 | SLD 15 | -10.6 | 0.81 | 54.51 | -0.5522 | -0.5455 | 0.0022 |
| 354 | SLD 16 | -10.6 | 0.81 | 54.51 | -0.5522 | -0.5455 | 0.0022 |
| 354 | SLV 1 | 4 | 0.91 | 0.1 | -0.6419 | 0.2612 | 0.0024 |
| 354 | SLV 2 | 4 | 0.91 | 0.1 | -0.6419 | 0.2612 | 0.0024 |
| 354 | SLV 3 | 3.06 | 1.19 | 5.09 | -0.815 | 0.218 | 0.003 |
| 354 | SLV 4 | 3.06 | 1.19 | 5.09 | -0.815 | 0.218 | 0.003 |
| 354 | SLV 5 | -1.69 | 0.44 | 19.05 | -0.3354 | -0.0663 | 0.0013 |
| 354 | SLV 6 | -1.69 | 0.44 | 19.05 | -0.3354 | -0.0663 | 0.0013 |
| 354 | SLV 7 | -4.81 | 1.36 | 35.67 | -0.9121 | -0.2103 | 0.0035 |
| 354 | SLV 8 | -4.81 | 1.36 | 35.67 | -0.9121 | -0.2103 | 0.0035 |
| 354 | SLV 9 | -7.51 | 0.32 | 40.28 | -0.2456 | -0.3902 | 0.001 |
| 354 | SLV 10 | -7.51 | 0.32 | 40.28 | -0.2456 | -0.3902 | 0.001 |
| 354 | SLV 11 | -10.63 | 1.24 | 56.9 | -0.8224 | -0.5342 | 0.0033 |
| 354 | SLV 12 | -10.63 | 1.24 | 56.9 | -0.8224 | -0.5342 | 0.0033 |
| 354 | SLV 13 | -15.38 | 0.49 | 70.87 | -0.3428 | -0.8185 | 0.0015 |
| 354 | SLV 14 | -15.38 | 0.49 | 70.87 | -0.3428 | -0.8185 | 0.0015 |

| Nodo | Cont. | Reazione a traslazione | | | Reazione a rotazione | | |
|---|---|---|---|---|---|---|---|
| Ind. | N.br. | x | y | z | x | y | z |
| 354 | SLV 15 | -16.32 | 0.77 | 75.85 | -0.5158 | -0.8617 | 0.0022 |
| 354 | SLV 16 | -16.32 | 0.77 | 75.85 | -0.5158 | -0.8617 | 0.0022 |
| 355 | SLU 1 | -6.73 | 0.38 | 23.63 | -0.2775 | -0.2016 | -0.0418 |
| 355 | SLU 2 | -6.71 | 0.38 | 23.56 | -0.2757 | -0.2011 | -0.0415 |
| 355 | SLU 3 | -7.03 | 0.4 | 24.68 | -0.2954 | -0.2106 | -0.0445 |
| 355 | SLU 4 | -7.02 | 0.4 | 24.63 | -0.2943 | -0.2103 | -0.0443 |
| 355 | SLU 5 | -6.92 | 0.4 | 24.32 | -0.2903 | -0.2073 | -0.0437 |
| 355 | SLU 6 | -7.24 | 0.43 | 25.44 | -0.3101 | -0.2167 | -0.0467 |
| 355 | SLU 7 | -7.23 | 0.42 | 25.4 | -0.3089 | -0.2164 | -0.0465 |
| 355 | SLU 8 | -7.15 | 0.42 | 25.15 | -0.3069 | -0.2139 | -0.0462 |
| 355 | SLU 9 | -7.14 | 0.42 | 25.11 | -0.3058 | -0.2136 | -0.046 |
| 355 | SLU 10 | -7.77 | 0.44 | 27.15 | -0.3252 | -0.2342 | -0.0489 |
| 355 | SLU 11 | -8.08 | 0.47 | 28.27 | -0.3449 | -0.2436 | -0.0519 |
| 355 | SLU 12 | -8.07 | 0.47 | 28.22 | -0.3438 | -0.2433 | -0.0517 |
| 355 | SLU 13 | -7.98 | 0.46 | 27.91 | -0.3398 | -0.2403 | -0.0511 |
| 355 | SLU 14 | -8.29 | 0.49 | 29.03 | -0.3596 | -0.2498 | -0.0541 |
| 355 | SLU 15 | -8.28 | 0.49 | 28.99 | -0.3584 | -0.2495 | -0.054 |
| 355 | SLU 16 | -8.2 | 0.49 | 28.74 | -0.3564 | -0.247 | -0.0536 |
| 355 | SLU 17 | -8.19 | 0.49 | 28.7 | -0.3553 | -0.2467 | -0.0535 |
| 355 | SLU 18 | -8.24 | 0.47 | 28.75 | -0.3483 | -0.2489 | -0.0524 |
| 355 | SLU 19 | -8.23 | 0.47 | 28.71 | -0.3471 | -0.2485 | -0.0522 |
| 355 | SLU 20 | -8.45 | 0.49 | 29.52 | -0.3629 | -0.255 | -0.0546 |
| 355 | SLU 21 | -8.44 | 0.49 | 29.48 | -0.3618 | -0.2547 | -0.0544 |
| 355 | SLU 22 | -7.75 | 0.45 | 27.13 | -0.3284 | -0.2334 | -0.0494 |
| 355 | SLU 23 | -7.73 | 0.44 | 27.06 | -0.3265 | -0.2329 | -0.0491 |
| 355 | SLU 24 | -8.05 | 0.47 | 28.18 | -0.3462 | -0.2424 | -0.0521 |
| 355 | SLU 25 | -8.04 | 0.47 | 28.13 | -0.3451 | -0.2421 | -0.0519 |
| 355 | SLU 26 | -7.94 | 0.47 | 27.82 | -0.3412 | -0.239 | -0.0513 |
| 355 | SLU 27 | -8.26 | 0.49 | 28.94 | -0.3609 | -0.2485 | -0.0543 |
| 355 | SLU 28 | -8.25 | 0.49 | 28.9 | -0.3598 | -0.2482 | -0.0542 |
| 355 | SLU 29 | -8.17 | 0.49 | 28.65 | -0.3577 | -0.2457 | -0.0539 |
| 355 | SLU 30 | -8.16 | 0.49 | 28.61 | -0.3566 | -0.2454 | -0.0537 |
| 355 | SLU 31 | -8.79 | 0.51 | 30.65 | -0.376 | -0.2659 | -0.0566 |
| 355 | SLU 32 | -9.1 | 0.54 | 31.77 | -0.3957 | -0.2754 | -0.0596 |
| 355 | SLU 33 | -9.09 | 0.54 | 31.72 | -0.3946 | -0.2751 | -0.0594 |
| 355 | SLU 34 | -9 | 0.53 | 31.41 | -0.3907 | -0.2721 | -0.0588 |
| 355 | SLU 35 | -9.31 | 0.56 | 32.53 | -0.4104 | -0.2816 | -0.0618 |
| 355 | SLU 36 | -9.3 | 0.56 | 32.49 | -0.4093 | -0.2812 | -0.0616 |
| 355 | SLU 37 | -9.23 | 0.56 | 32.24 | -0.4072 | -0.2788 | -0.0613 |
| 355 | SLU 38 | -9.21 | 0.55 | 32.2 | -0.4061 | -0.2784 | -0.0611 |
| 355 | SLU 39 | -9.26 | 0.54 | 32.25 | -0.3991 | -0.2806 | -0.06 |
| 355 | SLU 40 | -9.25 | 0.54 | 32.21 | -0.3979 | -0.2803 | -0.0599 |
| 355 | SLU 41 | -9.47 | 0.56 | 33.02 | -0.4137 | -0.2868 | -0.0623 |
| 355 | SLU 42 | -9.46 | 0.56 | 32.97 | -0.4126 | -0.2865 | -0.0621 |
| 355 | SLU 43 | -8.4 | 0.47 | 29.52 | -0.3434 | -0.2512 | -0.0517 |
| 355 | SLU 44 | -8.38 | 0.47 | 29.45 | -0.3415 | -0.2507 | -0.0514 |
| 355 | SLU 45 | -8.7 | 0.49 | 30.57 | -0.3612 | -0.2602 | -0.0544 |
| 355 | SLU 46 | -8.68 | 0.49 | 30.52 | -0.3601 | -0.2599 | -0.0542 |
| 355 | SLU 47 | -8.59 | 0.49 | 30.21 | -0.3562 | -0.2569 | -0.0536 |
| 355 | SLU 48 | -8.91 | 0.52 | 31.33 | -0.3759 | -0.2663 | -0.0566 |
| 355 | SLU 49 | -8.89 | 0.51 | 31.29 | -0.3748 | -0.266 | -0.0564 |
| 355 | SLU 50 | -8.82 | 0.51 | 31.04 | -0.3727 | -0.2635 | -0.0561 |
| 355 | SLU 51 | -8.81 | 0.51 | 31 | -0.3716 | -0.2632 | -0.0559 |
| 355 | SLU 52 | -9.44 | 0.53 | 33.03 | -0.391 | -0.2838 | -0.0588 |
| 355 | SLU 53 | -9.75 | 0.56 | 34.15 | -0.4107 | -0.2932 | -0.0618 |
| 355 | SLU 54 | -9.74 | 0.56 | 34.11 | -0.4096 | -0.2929 | -0.0616 |
| 355 | SLU 55 | -9.65 | 0.55 | 33.8 | -0.4057 | -0.2899 | -0.061 |
| 355 | SLU 56 | -9.96 | 0.58 | 34.92 | -0.4254 | -0.2994 | -0.064 |
| 355 | SLU 57 | -9.95 | 0.58 | 34.87 | -0.4243 | -0.2991 | -0.0639 |
| 355 | SLU 58 | -9.87 | 0.58 | 34.63 | -0.4222 | -0.2966 | -0.0636 |
| 355 | SLU 59 | -9.86 | 0.58 | 34.59 | -0.4211 | -0.2963 | -0.0634 |
| 355 | SLU 60 | -9.91 | 0.56 | 34.64 | -0.4141 | -0.2985 | -0.0623 |
| 355 | SLU 61 | -9.89 | 0.56 | 34.6 | -0.413 | -0.2981 | -0.0621 |
| 355 | SLU 62 | -10.12 | 0.58 | 35.41 | -0.4288 | -0.3046 | -0.0645 |
| 355 | SLU 63 | -10.1 | 0.58 | 35.36 | -0.4276 | -0.3043 | -0.0644 |
| 355 | SLU 64 | -9.42 | 0.54 | 33.02 | -0.3942 | -0.283 | -0.0593 |
| 355 | SLU 65 | -9.4 | 0.53 | 32.95 | -0.3923 | -0.2825 | -0.059 |
| 355 | SLU 66 | -9.72 | 0.56 | 34.07 | -0.4121 | -0.292 | -0.062 |
| 355 | SLU 67 | -9.71 | 0.56 | 34.02 | -0.4109 | -0.2917 | -0.0618 |
| 355 | SLU 68 | -9.61 | 0.56 | 33.71 | -0.407 | -0.2886 | -0.0613 |
| 355 | SLU 69 | -9.93 | 0.58 | 34.83 | -0.4267 | -0.2981 | -0.0642 |
| 355 | SLU 70 | -9.92 | 0.58 | 34.79 | -0.4256 | -0.2978 | -0.0641 |
| 355 | SLU 71 | -9.84 | 0.58 | 34.54 | -0.4235 | -0.2953 | -0.0638 |
| 355 | SLU 72 | -9.83 | 0.58 | 34.5 | -0.4224 | -0.295 | -0.0636 |
| 355 | SLU 73 | -10.46 | 0.6 | 36.53 | -0.4418 | -0.3155 | -0.0665 |
| 355 | SLU 74 | -10.77 | 0.63 | 37.65 | -0.4616 | -0.325 | -0.0695 |
| 355 | SLU 75 | -10.76 | 0.63 | 37.61 | -0.4604 | -0.3247 | -0.0693 |
| 355 | SLU 76 | -10.67 | 0.62 | 37.3 | -0.4565 | -0.3217 | -0.0687 |
| 355 | SLU 77 | -10.98 | 0.65 | 38.42 | -0.4762 | -0.3312 | -0.0717 |
| 355 | SLU 78 | -10.97 | 0.65 | 38.37 | -0.4751 | -0.3309 | -0.0715 |
| 355 | SLU 79 | -10.9 | 0.65 | 38.13 | -0.473 | -0.3284 | -0.0712 |
| 355 | SLU 80 | -10.88 | 0.64 | 38.09 | -0.4719 | -0.328 | -0.071 |
| 355 | SLU 81 | -10.93 | 0.63 | 38.14 | -0.4649 | -0.3302 | -0.0699 |
| 355 | SLU 82 | -10.92 | 0.63 | 38.1 | -0.4638 | -0.3299 | -0.0698 |
| 355 | SLU 83 | -11.14 | 0.65 | 38.91 | -0.4796 | -0.3364 | -0.0722 |
| 355 | SLU 84 | -11.13 | 0.65 | 38.86 | -0.4785 | -0.3361 | -0.072 |
| 355 | SLE RA 1 | -7.02 | 0.4 | 24.63 | -0.2921 | -0.2107 | -0.0439 |
| 355 | SLE RA 2 | -7.01 | 0.4 | 24.58 | -0.2908 | -0.2104 | -0.0438 |

| Nodo | Cont. | Reazione a traslazione | | | Reazione a rotazione | | |
|---|---|---|---|---|---|---|---|
| Ind. | N.br. | x | y | z | x | y | z |
| 355 | SLE RA 3 | -7.22 | 0.42 | 25.33 | -0.304 | -0.2167 | -0.0457 |
| 355 | SLE RA 4 | -7.21 | 0.41 | 25.3 | -0.3032 | -0.2165 | -0.0456 |
| 355 | SLE RA 5 | -7.15 | 0.41 | 25.09 | -0.3006 | -0.2145 | -0.0452 |
| 355 | SLE RA 6 | -7.36 | 0.43 | 25.84 | -0.3137 | -0.2208 | -0.0472 |
| 355 | SLE RA 7 | -7.35 | 0.43 | 25.81 | -0.313 | -0.2206 | -0.0471 |
| 355 | SLE RA 8 | -7.3 | 0.43 | 25.65 | -0.3116 | -0.2189 | -0.0469 |
| 355 | SLE RA 9 | -7.29 | 0.43 | 25.62 | -0.3109 | -0.2187 | -0.0468 |
| 355 | SLE RA 10 | -7.71 | 0.44 | 26.97 | -0.3238 | -0.2324 | -0.0487 |
| 355 | SLE RA 11 | -7.92 | 0.46 | 27.72 | -0.337 | -0.2387 | -0.0507 |
| 355 | SLE RA 12 | -7.92 | 0.46 | 27.69 | -0.3362 | -0.2385 | -0.0506 |
| 355 | SLE RA 13 | -7.85 | 0.45 | 27.48 | -0.3336 | -0.2365 | -0.0502 |
| 355 | SLE RA 14 | -8.06 | 0.47 | 28.23 | -0.3467 | -0.2428 | -0.0522 |
| 355 | SLE RA 15 | -8.06 | 0.47 | 28.2 | -0.346 | -0.2426 | -0.0521 |
| 355 | SLE RA 16 | -8.01 | 0.47 | 28.04 | -0.3446 | -0.241 | -0.0519 |
| 355 | SLE RA 17 | -8 | 0.47 | 28.01 | -0.3439 | -0.2407 | -0.0518 |
| 355 | SLE RA 18 | -8.03 | 0.46 | 28.05 | -0.3392 | -0.2422 | -0.051 |
| 355 | SLE RA 19 | -8.02 | 0.46 | 28.02 | -0.3384 | -0.242 | -0.0509 |
| 355 | SLE RA 20 | -8.17 | 0.48 | 28.55 | -0.349 | -0.2463 | -0.0525 |
| 355 | SLE RA 21 | -8.16 | 0.47 | 28.53 | -0.3482 | -0.2461 | -0.0524 |
| 355 | SLE FR 1 | -7.02 | 0.4 | 24.63 | -0.2921 | -0.2107 | -0.0439 |
| 355 | SLE FR 2 | -7.02 | 0.4 | 24.62 | -0.2918 | -0.2106 | -0.0439 |
| 355 | SLE FR 3 | -7.08 | 0.4 | 24.83 | -0.296 | -0.2124 | -0.0445 |
| 355 | SLE FR 4 | -7.32 | 0.42 | 25.64 | -0.3059 | -0.2201 | -0.046 |
| 355 | SLE FR 5 | -7.38 | 0.42 | 25.86 | -0.3101 | -0.2218 | -0.0467 |
| 355 | SLE FR 6 | -7.52 | 0.43 | 26.34 | -0.3156 | -0.2265 | -0.0475 |
| 355 | SLE QP 1 | -7.02 | 0.4 | 24.63 | -0.2921 | -0.2107 | -0.0439 |
| 355 | SLE QP 2 | -7.32 | 0.42 | 25.65 | -0.3062 | -0.2202 | -0.0461 |
| 355 | SLD 1 | -3.13 | 0.38 | 11.94 | -0.3089 | -0.0876 | -0.0458 |
| 355 | SLD 2 | -3.13 | 0.38 | 11.94 | -0.3089 | -0.0876 | -0.0458 |
| 355 | SLD 3 | -3.5 | 0.55 | 13.39 | -0.3522 | -0.0986 | -0.0528 |
| 355 | SLD 4 | -3.5 | 0.55 | 13.39 | -0.3522 | -0.0986 | -0.0528 |
| 355 | SLD 5 | -5.49 | 0.14 | 19.35 | -0.2414 | -0.1638 | -0.0354 |
| 355 | SLD 6 | -5.49 | 0.14 | 19.35 | -0.2414 | -0.1638 | -0.0354 |
| 355 | SLD 7 | -6.75 | 0.72 | 24.16 | -0.3856 | -0.2003 | -0.0587 |
| 355 | SLD 8 | -6.75 | 0.72 | 24.16 | -0.3856 | -0.2003 | -0.0587 |
| 355 | SLD 9 | -7.9 | 0.12 | 27.14 | -0.2268 | -0.24 | -0.0334 |
| 355 | SLD 10 | -7.9 | 0.12 | 27.14 | -0.2268 | -0.24 | -0.0334 |
| 355 | SLD 11 | -9.16 | 0.69 | 31.96 | -0.371 | -0.2765 | -0.0568 |
| 355 | SLD 12 | -9.16 | 0.69 | 31.96 | -0.371 | -0.2765 | -0.0568 |
| 355 | SLD 13 | -11.15 | 0.28 | 37.92 | -0.2602 | -0.3417 | -0.0393 |
| 355 | SLD 14 | -11.15 | 0.28 | 37.92 | -0.2602 | -0.3417 | -0.0393 |
| 355 | SLD 15 | -11.52 | 0.46 | 39.36 | -0.3035 | -0.3527 | -0.0463 |
| 355 | SLD 16 | -11.52 | 0.46 | 39.36 | -0.3035 | -0.3527 | -0.0463 |
| 355 | SLV 1 | 2.29 | 0.33 | -5.74 | -0.3129 | 0.0831 | -0.0456 |
| 355 | SLV 2 | 2.29 | 0.33 | -5.74 | -0.3129 | 0.0831 | -0.0456 |
| 355 | SLV 3 | 1.39 | 0.74 | -2.31 | -0.4134 | 0.0571 | -0.0619 |
| 355 | SLV 4 | 1.39 | 0.74 | -2.31 | -0.4134 | 0.0571 | -0.0619 |
| 355 | SLV 5 | -3.08 | -0.22 | 11.02 | -0.1557 | -0.0897 | -0.0212 |
| 355 | SLV 6 | -3.08 | -0.22 | 11.02 | -0.1557 | -0.0897 | -0.0212 |
| 355 | SLV 7 | -6.07 | 1.13 | 22.48 | -0.4909 | -0.1764 | -0.0756 |
| 355 | SLV 8 | -6.07 | 1.13 | 22.48 | -0.4909 | -0.1764 | -0.0756 |
| 355 | SLV 9 | -8.58 | -0.29 | 28.83 | -0.1215 | -0.2639 | -0.0166 |
| 355 | SLV 10 | -8.58 | -0.29 | 28.83 | -0.1215 | -0.2639 | -0.0166 |
| 355 | SLV 11 | -11.57 | 1.06 | 40.28 | -0.4567 | -0.3506 | -0.071 |
| 355 | SLV 12 | -11.57 | 1.06 | 40.28 | -0.4567 | -0.3506 | -0.071 |
| 355 | SLV 13 | -16.04 | 0.1 | 53.61 | -0.199 | -0.4974 | -0.0303 |
| 355 | SLV 14 | -16.04 | 0.1 | 53.61 | -0.199 | -0.4974 | -0.0303 |
| 355 | SLV 15 | -16.93 | 0.5 | 57.05 | -0.2995 | -0.5234 | -0.0466 |
| 355 | SLV 16 | -16.93 | 0.5 | 57.05 | -0.2995 | -0.5234 | -0.0466 |
| 356 | SLU 1 | -0.02 | -13.03 | 49.88 | 0.3827 | -0.0046 | -0.0008 |
| 356 | SLU 2 | -0.02 | -12.89 | 49.38 | 0.3781 | -0.0047 | -0.0008 |
| 356 | SLU 3 | -0.02 | -14.04 | 53.59 | 0.4129 | -0.0049 | -0.0008 |
| 356 | SLU 4 | -0.02 | -13.95 | 53.29 | 0.4102 | -0.0049 | -0.0008 |
| 356 | SLU 5 | -0.02 | -13.8 | 52.71 | 0.4056 | -0.0049 | -0.0008 |
| 356 | SLU 6 | -0.02 | -14.95 | 56.92 | 0.4404 | -0.005 | -0.0009 |
| 356 | SLU 7 | -0.02 | -14.87 | 56.62 | 0.4376 | -0.0051 | -0.0009 |
| 356 | SLU 8 | -0.02 | -14.86 | 56.54 | 0.4376 | -0.0049 | -0.0009 |
| 356 | SLU 9 | -0.02 | -14.77 | 56.24 | 0.4349 | -0.005 | -0.0009 |
| 356 | SLU 10 | -0.03 | -15.15 | 57.91 | 0.4461 | -0.0055 | -0.001 |
| 356 | SLU 11 | -0.03 | -16.31 | 62.12 | 0.4809 | -0.0057 | -0.001 |
| 356 | SLU 12 | -0.03 | -16.22 | 61.82 | 0.4782 | -0.0057 | -0.001 |
| 356 | SLU 13 | -0.03 | -16.07 | 61.24 | 0.4736 | -0.0057 | -0.001 |
| 356 | SLU 14 | -0.03 | -17.22 | 65.45 | 0.5083 | -0.0059 | -0.001 |
| 356 | SLU 15 | -0.03 | -17.13 | 65.15 | 0.5056 | -0.0059 | -0.001 |
| 356 | SLU 16 | -0.03 | -17.13 | 65.07 | 0.5056 | -0.0058 | -0.001 |
| 356 | SLU 17 | -0.03 | -17.04 | 64.77 | 0.5029 | -0.0058 | -0.001 |
| 356 | SLU 18 | -0.03 | -16.27 | 62.06 | 0.4798 | -0.0058 | -0.001 |
| 356 | SLU 19 | -0.03 | -16.19 | 61.76 | 0.4771 | -0.0059 | -0.001 |
| 356 | SLU 20 | -0.03 | -17.19 | 65.39 | 0.5073 | -0.006 | -0.001 |
| 356 | SLU 21 | -0.03 | -17.1 | 65.09 | 0.5045 | -0.006 | -0.001 |
| 356 | SLU 22 | -0.03 | -15.45 | 58.95 | 0.455 | -0.0054 | -0.0009 |
| 356 | SLU 23 | -0.03 | -15.31 | 58.45 | 0.4505 | -0.0055 | -0.001 |
| 356 | SLU 24 | -0.03 | -16.46 | 62.66 | 0.4853 | -0.0057 | -0.001 |
| 356 | SLU 25 | -0.03 | -16.37 | 62.36 | 0.4825 | -0.0057 | -0.001 |
| 356 | SLU 26 | -0.03 | -16.22 | 61.78 | 0.478 | -0.0057 | -0.001 |
| 356 | SLU 27 | -0.03 | -17.37 | 65.99 | 0.5127 | -0.0058 | -0.001 |
| 356 | SLU 28 | -0.03 | -17.29 | 65.69 | 0.51 | -0.0059 | -0.001 |
| 356 | SLU 29 | -0.03 | -17.28 | 65.61 | 0.51 | -0.0058 | -0.001 |

| Nodo | Cont. | Reazione a traslazione | | | Reazione a rotazione | | |
|---|---|---|---|---|---|---|---|
| Ind. | N.br. | x | y | z | x | y | z |
| 356 | SLU 30 | -0.03 | -17.19 | 65.31 | 0.5072 | -0.0058 | -0.001 |
| 356 | SLU 31 | -0.03 | -17.57 | 66.98 | 0.5185 | -0.0064 | -0.0011 |
| 356 | SLU 32 | -0.03 | -18.73 | 71.19 | 0.5533 | -0.0065 | -0.0011 |
| 356 | SLU 33 | -0.03 | -18.64 | 70.89 | 0.5505 | -0.0066 | -0.0011 |
| 356 | SLU 34 | -0.03 | -18.49 | 70.31 | 0.546 | -0.0065 | -0.0011 |
| 356 | SLU 35 | -0.03 | -19.64 | 74.52 | 0.5807 | -0.0067 | -0.0012 |
| 356 | SLU 36 | -0.03 | -19.55 | 74.22 | 0.578 | -0.0067 | -0.0012 |
| 356 | SLU 37 | -0.03 | -19.55 | 74.14 | 0.578 | -0.0066 | -0.0011 |
| 356 | SLU 38 | -0.03 | -19.46 | 73.84 | 0.5752 | -0.0066 | -0.0011 |
| 356 | SLU 39 | -0.03 | -18.69 | 71.13 | 0.5522 | -0.0066 | -0.0011 |
| 356 | SLU 40 | -0.03 | -18.61 | 70.83 | 0.5495 | -0.0067 | -0.0011 |
| 356 | SLU 41 | -0.03 | -19.61 | 74.46 | 0.5796 | -0.0068 | -0.0012 |
| 356 | SLU 42 | -0.03 | -19.52 | 74.16 | 0.5769 | -0.0068 | -0.0012 |
| 356 | SLU 43 | -0.03 | -16.11 | 61.73 | 0.4727 | -0.0057 | -0.001 |
| 356 | SLU 44 | -0.03 | -15.97 | 61.23 | 0.4681 | -0.0058 | -0.001 |
| 356 | SLU 45 | -0.03 | -17.12 | 65.44 | 0.5029 | -0.006 | -0.001 |
| 356 | SLU 46 | -0.03 | -17.03 | 65.14 | 0.5002 | -0.006 | -0.001 |
| 356 | SLU 47 | -0.03 | -16.88 | 64.56 | 0.4956 | -0.006 | -0.001 |
| 356 | SLU 48 | -0.03 | -18.03 | 68.77 | 0.5303 | -0.0061 | -0.0011 |
| 356 | SLU 49 | -0.03 | -17.95 | 68.47 | 0.5276 | -0.0062 | -0.0011 |
| 356 | SLU 50 | -0.03 | -17.94 | 68.39 | 0.5276 | -0.006 | -0.001 |
| 356 | SLU 51 | -0.03 | -17.85 | 68.09 | 0.5249 | -0.0061 | -0.0011 |
| 356 | SLU 52 | -0.03 | -18.23 | 69.76 | 0.5361 | -0.0066 | -0.0011 |
| 356 | SLU 53 | -0.03 | -19.39 | 73.97 | 0.5709 | -0.0068 | -0.0012 |
| 356 | SLU 54 | -0.03 | -19.3 | 73.67 | 0.5682 | -0.0068 | -0.0012 |
| 356 | SLU 55 | -0.03 | -19.15 | 73.09 | 0.5636 | -0.0068 | -0.0012 |
| 356 | SLU 56 | -0.03 | -20.3 | 77.3 | 0.5983 | -0.0069 | -0.0012 |
| 356 | SLU 57 | -0.03 | -20.21 | 77 | 0.5956 | -0.007 | -0.0012 |
| 356 | SLU 58 | -0.03 | -20.21 | 76.92 | 0.5956 | -0.0069 | -0.0012 |
| 356 | SLU 59 | -0.03 | -20.12 | 76.62 | 0.5929 | -0.0069 | -0.0012 |
| 356 | SLU 60 | -0.03 | -19.35 | 73.91 | 0.5698 | -0.0069 | -0.0012 |
| 356 | SLU 61 | -0.03 | -19.27 | 73.62 | 0.5671 | -0.007 | -0.0012 |
| 356 | SLU 62 | -0.03 | -20.27 | 77.24 | 0.5973 | -0.0071 | -0.0012 |
| 356 | SLU 63 | -0.03 | -20.18 | 76.95 | 0.5945 | -0.0071 | -0.0012 |
| 356 | SLU 64 | -0.03 | -18.53 | 70.8 | 0.545 | -0.0065 | -0.0011 |
| 356 | SLU 65 | -0.03 | -18.39 | 70.3 | 0.5405 | -0.0066 | -0.0011 |
| 356 | SLU 66 | -0.03 | -19.54 | 74.51 | 0.5752 | -0.0068 | -0.0012 |
| 356 | SLU 67 | -0.03 | -19.45 | 74.21 | 0.5725 | -0.0068 | -0.0012 |
| 356 | SLU 68 | -0.03 | -19.3 | 73.63 | 0.568 | -0.0068 | -0.0012 |
| 356 | SLU 69 | -0.03 | -20.45 | 77.84 | 0.6027 | -0.0069 | -0.0012 |
| 356 | SLU 70 | -0.03 | -20.37 | 77.54 | 0.6 | -0.007 | -0.0012 |
| 356 | SLU 71 | -0.03 | -20.36 | 77.46 | 0.6 | -0.0068 | -0.0012 |
| 356 | SLU 72 | -0.03 | -20.27 | 77.16 | 0.5972 | -0.0069 | -0.0012 |
| 356 | SLU 73 | -0.03 | -20.65 | 78.83 | 0.6085 | -0.0075 | -0.0013 |
| 356 | SLU 74 | -0.04 | -21.81 | 83.04 | 0.6432 | -0.0076 | -0.0013 |
| 356 | SLU 75 | -0.04 | -21.72 | 82.74 | 0.6405 | -0.0077 | -0.0013 |
| 356 | SLU 76 | -0.03 | -21.57 | 82.16 | 0.636 | -0.0076 | -0.0013 |
| 356 | SLU 77 | -0.04 | -22.72 | 86.37 | 0.6707 | -0.0078 | -0.0013 |
| 356 | SLU 78 | -0.04 | -22.63 | 86.07 | 0.668 | -0.0078 | -0.0014 |
| 356 | SLU 79 | -0.04 | -22.63 | 85.99 | 0.6679 | -0.0077 | -0.0013 |
| 356 | SLU 80 | -0.04 | -22.54 | 85.69 | 0.6652 | -0.0077 | -0.0013 |
| 356 | SLU 81 | -0.04 | -21.77 | 82.99 | 0.6422 | -0.0077 | -0.0013 |
| 356 | SLU 82 | -0.04 | -21.69 | 82.69 | 0.6394 | -0.0078 | -0.0013 |
| 356 | SLU 83 | -0.04 | -22.69 | 86.32 | 0.6696 | -0.0079 | -0.0014 |
| 356 | SLU 84 | -0.04 | -22.6 | 86.02 | 0.6669 | -0.0079 | -0.0014 |
| 356 | SLE RA 1 | -0.02 | -13.72 | 52.47 | 0.4033 | -0.0048 | -0.0008 |
| 356 | SLE RA 2 | -0.02 | -13.63 | 52.14 | 0.4003 | -0.0049 | -0.0008 |
| 356 | SLE RA 3 | -0.02 | -14.4 | 54.94 | 0.4235 | -0.005 | -0.0009 |
| 356 | SLE RA 4 | -0.02 | -14.34 | 54.74 | 0.4217 | -0.005 | -0.0009 |
| 356 | SLE RA 5 | -0.02 | -14.23 | 54.36 | 0.4186 | -0.005 | -0.0009 |
| 356 | SLE RA 6 | -0.02 | -15 | 57.16 | 0.4418 | -0.0051 | -0.0009 |
| 356 | SLE RA 7 | -0.02 | -14.95 | 56.96 | 0.44 | -0.0051 | -0.0009 |
| 356 | SLE RA 8 | -0.02 | -14.94 | 56.91 | 0.44 | -0.0051 | -0.0009 |
| 356 | SLE RA 9 | -0.02 | -14.88 | 56.71 | 0.4382 | -0.0051 | -0.0009 |
| 356 | SLE RA 10 | -0.02 | -15.14 | 57.82 | 0.4457 | -0.0055 | -0.0009 |
| 356 | SLE RA 11 | -0.03 | -15.91 | 60.63 | 0.4688 | -0.0056 | -0.001 |
| 356 | SLE RA 12 | -0.03 | -15.85 | 60.43 | 0.467 | -0.0056 | -0.001 |
| 356 | SLE RA 13 | -0.03 | -15.75 | 60.04 | 0.464 | -0.0056 | -0.001 |
| 356 | SLE RA 14 | -0.03 | -16.52 | 62.85 | 0.4871 | -0.0057 | -0.001 |
| 356 | SLE RA 15 | -0.03 | -16.46 | 62.65 | 0.4853 | -0.0057 | -0.001 |
| 356 | SLE RA 16 | -0.03 | -16.45 | 62.59 | 0.4853 | -0.0056 | -0.001 |
| 356 | SLE RA 17 | -0.03 | -16.4 | 62.4 | 0.4835 | -0.0056 | -0.001 |
| 356 | SLE RA 18 | -0.03 | -15.88 | 60.59 | 0.4681 | -0.0056 | -0.001 |
| 356 | SLE RA 19 | -0.03 | -15.83 | 60.39 | 0.4663 | -0.0057 | -0.001 |
| 356 | SLE RA 20 | -0.03 | -16.49 | 62.81 | 0.4864 | -0.0057 | -0.001 |
| 356 | SLE RA 21 | -0.03 | -16.43 | 62.61 | 0.4846 | -0.0058 | -0.001 |
| 356 | SLE FR 1 | -0.02 | -13.72 | 52.47 | 0.4033 | -0.0048 | -0.0008 |
| 356 | SLE FR 2 | -0.02 | -13.7 | 52.4 | 0.4027 | -0.0049 | -0.0008 |
| 356 | SLE FR 3 | -0.02 | -13.97 | 53.36 | 0.4107 | -0.0049 | -0.0008 |
| 356 | SLE FR 4 | -0.02 | -14.35 | 54.84 | 0.4222 | -0.0051 | -0.0009 |
| 356 | SLE FR 5 | -0.02 | -14.62 | 55.79 | 0.4301 | -0.0051 | -0.0009 |
| 356 | SLE FR 6 | -0.02 | -14.8 | 56.53 | 0.4357 | -0.0052 | -0.0009 |
| 356 | SLE QP 1 | -0.02 | -13.72 | 52.47 | 0.4033 | -0.0048 | -0.0008 |
| 356 | SLE QP 2 | -0.02 | -14.37 | 54.91 | 0.4228 | -0.0051 | -0.0009 |
| 356 | SLD 1 | -0.17 | -14.14 | 54.32 | 0.4165 | -0.0759 | -0.011 |
| 356 | SLD 2 | -0.17 | -14.14 | 54.32 | 0.4165 | -0.0759 | -0.011 |
| 356 | SLD 3 | -0.2 | -17.17 | 63.52 | 0.5162 | -0.0833 | -0.0121 |
| 356 | SLD 4 | -0.2 | -17.17 | 63.52 | 0.5162 | -0.0833 | -0.0121 |

| Nodo | Cont. | Reazione a traslazione | | | Reazione a rotazione | | |
|---|---|---|---|---|---|---|---|
| Ind. | N.br. | x | y | z | x | y | z |
| 356 | SLD 5 | -0.02 | -9.71 | 40.78 | 0.2697 | -0.0151 | -0.0022 |
| 356 | SLD 6 | -0.02 | -9.71 | 40.78 | 0.2697 | -0.0151 | -0.0022 |
| 356 | SLD 7 | -0.12 | -19.81 | 71.44 | 0.602 | -0.0398 | -0.006 |
| 356 | SLD 8 | -0.12 | -19.81 | 71.44 | 0.602 | -0.0398 | -0.006 |
| 356 | SLD 9 | 0.07 | -8.94 | 38.37 | 0.2435 | 0.0296 | 0.0042 |
| 356 | SLD 10 | 0.07 | -8.94 | 38.37 | 0.2435 | 0.0296 | 0.0042 |
| 356 | SLD 11 | -0.02 | -19.03 | 69.03 | 0.5759 | 0.005 | 0.0004 |
| 356 | SLD 12 | -0.02 | -19.03 | 69.03 | 0.5759 | 0.005 | 0.0004 |
| 356 | SLD 13 | 0.15 | -11.57 | 46.29 | 0.3293 | 0.0731 | 0.0104 |
| 356 | SLD 14 | 0.15 | -11.57 | 46.29 | 0.3293 | 0.0731 | 0.0104 |
| 356 | SLD 15 | 0.12 | -14.6 | 55.49 | 0.429 | 0.0657 | 0.0092 |
| 356 | SLD 16 | 0.12 | -14.6 | 55.49 | 0.429 | 0.0657 | 0.0092 |
| 356 | SLV 1 | -0.38 | -13.86 | 53.59 | 0.4086 | -0.1729 | -0.0249 |
| 356 | SLV 2 | -0.38 | -13.86 | 53.59 | 0.4086 | -0.1729 | -0.0249 |
| 356 | SLV 3 | -0.45 | -20.95 | 75.17 | 0.6419 | -0.1917 | -0.0278 |
| 356 | SLV 4 | -0.45 | -20.95 | 75.17 | 0.6419 | -0.1917 | -0.0278 |
| 356 | SLV 5 | -0.02 | -3.46 | 21.79 | 0.0647 | -0.027 | -0.0037 |
| 356 | SLV 6 | -0.02 | -3.46 | 21.79 | 0.0647 | -0.027 | -0.0037 |
| 356 | SLV 7 | -0.26 | -27.1 | 93.71 | 0.8423 | -0.0895 | -0.0134 |
| 356 | SLV 8 | -0.26 | -27.1 | 93.71 | 0.8423 | -0.0895 | -0.0134 |
| 356 | SLV 9 | 0.21 | -1.65 | 16.11 | 0.0032 | 0.0793 | 0.0116 |
| 356 | SLV 10 | 0.21 | -1.65 | 16.11 | 0.0032 | 0.0793 | 0.0116 |
| 356 | SLV 11 | -0.03 | -25.28 | 88.02 | 0.7808 | 0.0168 | 0.0019 |
| 356 | SLV 12 | -0.03 | -25.28 | 88.02 | 0.7808 | 0.0168 | 0.0019 |
| 356 | SLV 13 | 0.4 | -7.8 | 34.64 | 0.2036 | 0.1815 | 0.026 |
| 356 | SLV 14 | 0.4 | -7.8 | 34.64 | 0.2036 | 0.1815 | 0.026 |
| 356 | SLV 15 | 0.33 | -14.89 | 56.22 | 0.4369 | 0.1628 | 0.0231 |
| 356 | SLV 16 | 0.33 | -14.89 | 56.22 | 0.4369 | 0.1628 | 0.0231 |

# 1.3 Risposta modale

***Modo***: *identificativo del modo di vibrare.*
***Periodo***: *periodo. [s]*
***Massa X***: *massa partecipante in direzione globale X. Il valore è adimensionale.*
***Massa Y***: *massa partecipante in direzione globale Y. Il valore è adimensionale.*
***Massa Z***: *massa partecipante in direzione globale Z. Il valore è adimensionale.*
***Massa rot. X***: *massa rotazionale partecipante attorno la direzione globale X. Il valore è adimensionale.*
***Massa rot. Y***: *massa rotazionale partecipante attorno la direzione globale Y. Il valore è adimensionale.*
***Massa rot. Z***: *massa rotazionale partecipante attorno la direzione globale Z. Il valore è adimensionale.*
***Massa sX***: *massa partecipante in direzione Sisma X. Il valore è adimensionale.*
***Massa sY***: *massa partecipante in direzione Sisma Y. Il valore è adimensionale.*

**Totale masse partecipanti:**

Traslazione X: 0.87051
Traslazione Y: 0.895522
Traslazione Z: 0
Rotazione X: 0.839882
Rotazione Y: 0.916458
Rotazione Z: 0.708586

| Modo | Periodo | Massa X | Massa Y | Massa Z | Massa rot. X | Massa rot. Y | Massa rot. Z | Massa sX | Massa sY |
|---|---|---|---|---|---|---|---|---|---|
| 1 | 4.202877508 | 0.00002172 | 0.036018723 | 0 | 0.037989553 | 0.000017715 | 0.013617544 | 0.00002172 | 0.036018723 |
| 2 | 2.563146237 | 0.011326184 | 0.000243283 | 0 | 0.000494448 | 0.009074621 | 0.00032393 | 0.011326184 | 0.000243283 |
| 3 | 2.557558622 | 0.000022894 | 0.000724445 | 0 | 0.001049806 | 0.000008608 | 0.000483097 | 0.000022894 | 0.000724445 |
| 4 | 2.405261286 | 0.00001372 | 0.000016947 | 0 | 0.004593116 | 0.000199931 | 0.000076704 | 0.00001372 | 0.000016947 |
| 5 | 2.359424122 | 0.000021207 | 0.005456203 | 0 | 0.014467711 | 0.000048992 | 0.012693491 | 0.000021207 | 0.005456203 |
| 6 | 2.338837872 | 0.004902059 | 0.000063044 | 0 | 0.000564925 | 0.000047884 | 0.000421403 | 0.004902059 | 0.000063044 |
| 7 | 2.149498979 | 0.005443504 | 0.00000352 | 0 | 0.000000939 | 0.010242921 | 0.000458105 | 0.005443504 | 0.00000352 |
| 8 | 2.074132327 | 0.00088365 | 0.006039077 | 0 | 0.007719672 | 0.001724176 | 0.003857826 | 0.00088365 | 0.006039077 |
| 9 | 2.067151294 | 0.005071695 | 0.000021825 | 0 | 0.000070512 | 0.009438725 | 0.000052754 | 0.005071695 | 0.000021825 |
| 10 | 2.009285194 | 0.000823898 | 0.008565325 | 0 | 0.009435012 | 0.001667259 | 0.008048822 | 0.000823898 | 0.008565325 |
| 11 | 1.98197078 | 0.000349033 | 0.011087234 | 0 | 0.01851009 | 0.000585818 | 0.028015416 | 0.000349033 | 0.011087234 |
| 12 | 1.967559201 | 0.000229554 | 0.01153715 | 0 | 0.018817469 | 0.000399832 | 0.000242067 | 0.000229554 | 0.01153715 |
| 13 | 1.877639685 | 0.000061316 | 0.011408885 | 0 | 0.010290055 | 0.000050919 | 0.025510851 | 0.000061316 | 0.011408885 |
| 14 | 1.838810169 | 0.000019545 | 0.012646521 | 0 | 0.010879137 | 0.000016608 | 0.000617536 | 0.000019545 | 0.012646521 |
| 15 | 1.784388457 | 0.000000256 | 0.002422049 | 0 | 0.008292158 | 0.000000567 | 0.007623146 | 0.000000256 | 0.002422049 |
| 16 | 1.722384707 | 0.009209474 | 0.000012433 | 0 | 0.000004651 | 0.000253196 | 0.000487523 | 0.009209474 | 0.000012433 |
| 17 | 1.715914573 | 0.000468225 | 0.000018945 | 0 | 0.000059384 | 0.000866493 | 0.00009096 | 0.000468225 | 0.000018945 |
| 18 | 1.604794784 | 0.000008507 | 0.000822104 | 0 | 0.00170159 | 0.000017949 | 0.000388756 | 0.000008507 | 0.000822104 |
| 19 | 1.501257956 | 0.000167411 | 0.018394357 | 0 | 0.016934759 | 0.000012862 | 0.042660636 | 0.000167411 | 0.018394357 |
| 20 | 1.499780343 | 0.000006439 | 0.041877261 | 0 | 0.047791881 | 0.000077228 | 0.008214574 | 0.000006439 | 0.041877261 |
| 21 | 1.452576455 | 0.000405296 | 0.000775205 | 0 | 0.000967758 | 0.000186901 | 0.001222333 | 0.000405296 | 0.000775205 |
| 22 | 1.375110294 | 0.000647518 | 0.023711673 | 0 | 0.01984935 | 0.000068404 | 0.028074602 | 0.000647518 | 0.023711673 |
| 23 | 1.366523661 | 0.003106224 | 0.003920621 | 0 | 0.006012294 | 0.000693357 | 0.001297287 | 0.003106224 | 0.003920621 |
| 24 | 1.332066645 | 0.000372979 | 0.013651108 | 0 | 0.009953861 | 0.000122704 | 0.01336015 | 0.000372979 | 0.013651108 |
| 25 | 1.307825261 | 0.010056025 | 0.005752686 | 0 | 0.001590979 | 0.0058271 | 0.020911123 | 0.010056025 | 0.005752686 |
| 26 | 1.274951788 | 0.002088866 | 0.017972606 | 0 | 0.007162428 | 0.001669628 | 0.002687326 | 0.002088866 | 0.017972606 |
| 27 | 1.255787647 | 0.006224414 | 0.000290335 | 0 | 0.00011485 | 0.000540703 | 0.003167008 | 0.006224414 | 0.000290335 |
| 28 | 1.204644259 | 0.002694131 | 0.008000647 | 0 | 0.005886827 | 0.002264867 | 0.007958762 | 0.002694131 | 0.008000647 |
| 29 | 1.192989478 | 0.013781891 | 0.002199745 | 0 | 0.001729835 | 0.017252195 | 0.000001937 | 0.013781891 | 0.002199745 |

| Modo | Periodo | Massa X | Massa Y | Massa Z | Massa rot. X | Massa rot. Y | Massa rot. Z | Massa sX | Massa sY |
|---|---|---|---|---|---|---|---|---|---|
| 30 | 1.112854586 | 0.001439048 | 0.000619146 | 0 | 0.000427472 | 0.000008971 | 0.001467998 | 0.001439048 | 0.000619146 |
| 31 | 1.095757872 | 0.000601107 | 0.006161684 | 0 | 0.003775613 | 0.000015463 | 0.002154719 | 0.000601107 | 0.006161684 |
| 32 | 0.983727535 | 0.000078934 | 0.009797611 | 0 | 0.003998342 | 0.000001941 | 0.005730884 | 0.000078934 | 0.009797611 |
| 33 | 0.952034089 | 0.00411499 | 0.000375436 | 0 | 0.000245112 | 0.001152393 | 0.000664328 | 0.00411499 | 0.000375436 |
| 34 | 0.874597825 | 0.019501822 | 0.009823011 | 0 | 0.01314833 | 0.027859394 | 0.004618659 | 0.019501822 | 0.009823011 |
| 35 | 0.847096147 | 0.005458823 | 0.011343248 | 0 | 0.010776458 | 0.005085286 | 0.01683889 | 0.005458823 | 0.011343248 |
| 36 | 0.802108561 | 0.000273653 | 0.042167821 | 0 | 0.04241114 | 0.000004082 | 0.030129588 | 0.000273653 | 0.042167821 |
| 37 | 0.764716205 | 0.040035229 | 0.000044422 | 0 | 0.000062798 | 0.029796635 | 0.001041586 | 0.040035229 | 0.000044422 |
| 38 | 0.66746628 | 0.015660508 | 0.000365282 | 0 | 0.000233235 | 0.014122324 | 0.000870644 | 0.015660508 | 0.000365282 |
| 39 | 0.659426242 | 0.000353786 | 0.053041925 | 0 | 0.068895472 | 0.00050261 | 0.037275343 | 0.000353786 | 0.053041925 |
| 40 | 0.576769506 | 0.004245695 | 0.041902673 | 0 | 0.028980831 | 0.003361459 | 0.029925497 | 0.004245695 | 0.041902673 |
| 41 | 0.566453853 | 0.021534408 | 0.004706987 | 0 | 0.002380232 | 0.012873729 | 0.003219896 | 0.021534408 | 0.004706987 |
| 42 | 0.464562725 | 0.000483504 | 0.04725202 | 0 | 0.026625488 | 0.000316215 | 0.035179392 | 0.000483504 | 0.04725202 |
| 43 | 0.447343199 | 0.015466958 | 0.001878743 | 0 | 0.000597782 | 0.00610969 | 0.002206506 | 0.015466958 | 0.001878743 |
| 44 | 0.326793755 | 0.000720354 | 0.071256637 | 0 | 0.067490619 | 0.000593299 | 0.05411134 | 0.000720354 | 0.071256637 |
| 45 | 0.302731624 | 0.037250612 | 0.000628176 | 0 | 0.000560773 | 0.030283109 | 0.000037943 | 0.037250612 | 0.000628176 |
| 46 | 0.207218269 | 0.002077735 | 0.147304184 | 0 | 0.204246061 | 0.003076572 | 0.097504866 | 0.002077735 | 0.147304184 |
| 47 | 0.184337073 | 0.382867909 | 0.001027549 | 0 | 0.001356155 | 0.560762198 | 0.000667797 | 0.382867909 | 0.001027549 |
| 48 | 0.11555177 | 0.236399578 | 0.00295818 | 0 | 0.001347343 | 0.154698639 | 0.003360132 | 0.236399578 | 0.00295818 |
| 49 | 0.109763588 | 0.003517652 | 0.199194121 | 0 | 0.099227787 | 0.002444627 | 0.148934079 | 0.003517652 | 0.199194121 |
| 50 | 0.024821636 | 0.000000069 | 0.000019158 | 0 | 0.00016001 | 0.000011011 | 0.000080053 | 0.000000069 | 0.000019158 |

# 1.4 Equilibrio globale forze

*Contributo: Nome attribuito al sistema risultante.*
*Fx: Componente X di forza del sistema risultante. [kN]*
*Fy: Componente Y di forza del sistema risultante. [kN]*
*Fz: Componente Z di forza del sistema risultante. [kN]*
*Mx: Componente di momento attorno l'asse X del sistema risultante. [kN*m]*
*My: Componente di momento attorno l'asse Y del sistema risultante. [kN*m]*
*Mz: Componente di momento attorno l'asse Z del sistema risultante. [kN*m]*

Bilancio in condizione di carico: Pesi strutturali

| Contributo | Fx | Fy | Fz | Mx | My | Mz |
|---|---|---|---|---|---|---|
| Forze applicate | 0.44806 | -0.03542 | -11894.58905 | -11553.324 | -147647.5623 | -1.6384 |
| Reazioni | -0.44806 | 0.03542 | 11894.58905 | 11553.324 | 147647.5623 | 1.6384 |
| P-Delta | 0 | 0 | 0 | 0 | 0 | 0 |
| Totale | 0 | 0 | 0 | 0 | 0 | 0 |

Bilancio in condizione di carico: Permanenti portati

| Contributo | Fx | Fy | Fz | Mx | My | Mz |
|---|---|---|---|---|---|---|
| Forze applicate | 0 | 0 | -2736.10821 | -4081.3463 | -33913.6799 | 0 |
| Reazioni | 0 | 0 | 2736.10821 | 4081.3463 | 33913.6799 | 0 |
| P-Delta | 0 | 0 | 0 | 0 | 0 | 0 |
| Totale | 0 | 0 | 0 | 0 | 0 | 0 |

Bilancio in condizione di carico: Variabile A

| Contributo | Fx | Fy | Fz | Mx | My | Mz |
|---|---|---|---|---|---|---|
| Forze applicate | 0 | 0 | -2123.71393 | -2524.3747 | -26309.7651 | 0 |
| Reazioni | 0 | 0 | 2123.71393 | 2524.3747 | 26309.7651 | 0 |
| P-Delta | 0 | 0 | 0 | 0 | 0 | 0 |
| Totale | 0 | 0 | 0 | 0 | 0 | 0 |

Bilancio in condizione di carico: Neve

| Contributo | Fx | Fy | Fz | Mx | My | Mz |
|---|---|---|---|---|---|---|
| Forze applicate | 0 | 0 | -342.29684 | -346.6213 | -4232.273 | 0 |
| Reazioni | 0 | 0 | 342.29684 | 346.6213 | 4232.273 | 0 |
| P-Delta | 0 | 0 | 0 | 0 | 0 | 0 |
| Totale | 0 | 0 | 0 | 0 | 0 | 0 |

Bilancio in condizione di carico: Variabile H

| Contributo | Fx | Fy | Fz | Mx | My | Mz |
|---|---|---|---|---|---|---|
| Forze applicate | 0 | 0 | -265.44738 | -345.2911 | -3286.4585 | 0 |
| Reazioni | 0 | 0 | 265.44738 | 345.2911 | 3286.4585 | 0 |
| P-Delta | 0 | 0 | 0 | 0 | 0 | 0 |
| Totale | 0 | 0 | 0 | 0 | 0 | 0 |

Bilancio in condizione di carico: Vento

| Contributo | Fx | Fy | Fz | Mx | My | Mz |
|---|---|---|---|---|---|---|
| Forze applicate | 0 | -46.48153 | 0 | 405.1341 | 0 | 576.364 |
| Reazioni | 0 | 46.48153 | 0 | -405.1341 | 0 | -576.364 |
| P-Delta | 0 | 0 | 0 | 0 | 0 | 0 |
| Totale | 0 | 0 | 0 | 0 | 0 | 0 |

Bilancio in condizione di carico: Sisma X SLV

| Contributo | Fx | Fy | Fz | Mx | My | Mz |
|---|---|---|---|---|---|---|
| Forze applicate | 4750.21344 | 0 | 0 | 0 | 50579.4406 | -5158.6641 |
| Reazioni | -4750.21344 | 0 | 0 | 0 | -50579.4406 | 5158.6641 |
| P-Delta | 0 | 0 | 0 | 0 | 0 | 0 |
| Totale | 0 | 0 | 0 | 0 | 0 | 0 |

Bilancio in condizione di carico: Sisma Y SLV

| Contributo | Fx | Fy | Fz | Mx | My | Mz |
|---|---|---|---|---|---|---|
| Forze applicate | 0 | 4194.66801 | 0 | -44664.0901 | 0 | -52114.5993 |
| Reazioni | 0 | -4194.66801 | 0 | 44664.0901 | 0 | 52114.5993 |
| P-Delta | 0 | 0 | 0 | 0 | 0 | 0 |
| Totale | 0 | 0 | 0 | 0 | 0 | 0 |

Bilancio in condizione di carico: Sisma X SLD

| Contributo | Fx | Fy | Fz | Mx | My | Mz |
|---|---|---|---|---|---|---|
| Forze applicate | 2031.1548 | 0 | 0 | 0 | 21627.3804 | -2205.8051 |
| Reazioni | -2031.1548 | 0 | 0 | 0 | -21627.3804 | 2205.8051 |
| P-Delta | 0 | 0 | 0 | 0 | 0 | 0 |
| Totale | 0 | 0 | 0 | 0 | 0 | 0 |

Bilancio in condizione di carico: Sisma Y SLD

| Contributo | Fx | Fy | Fz | Mx | My | Mz |
|---|---|---|---|---|---|---|
| Forze applicate | 0 | 1834.15986 | 0 | -19529.8129 | 0 | -22787.6214 |
| Reazioni | 0 | -1834.15986 | 0 | 19529.8129 | 0 | 22787.6214 |
| P-Delta | 0 | 0 | 0 | 0 | 0 | 0 |
| Totale | 0 | 0 | 0 | 0 | 0 | 0 |

Bilancio in condizione di carico: Rig Ux

| Contributo | Fx | Fy | Fz | Mx | My | Mz |
|---|---|---|---|---|---|---|
| Forze applicate | 0 | 0 | 0 | 0 | 0 | 0 |
| Reazioni | 0 | 0 | 0 | 0 | 0 | 0 |
| P-Delta | 0 | 0 | 0 | 0 | 0 | 0 |
| Totale | 0 | 0 | 0 | 0 | 0 | 0 |

Bilancio in condizione di carico: Rig Uy

| Contributo | Fx | Fy | Fz | Mx | My | Mz |
|---|---|---|---|---|---|---|
| Forze applicate | 0 | 0 | 0 | 0 | 0 | 0 |
| Reazioni | 0 | 0 | 0 | 0 | 0 | 0 |
| P-Delta | 0 | 0 | 0 | 0 | 0 | 0 |
| Totale | 0 | 0 | 0 | 0 | 0 | 0 |

Bilancio in condizione di carico: Rig Rz

| Contributo | Fx | Fy | Fz | Mx | My | Mz |
|---|---|---|---|---|---|---|
| Forze applicate | 0 | 0 | 0 | 0 | 0 | 0 |
| Reazioni | 0 | 0 | 0 | 0 | 0 | 0 |
| P-Delta | 0 | 0 | 0 | 0 | 0 | 0 |
| Totale | 0 | 0 | 0 | 0 | 0 | 0 |

# 1.5 Risposta di spettro

*Spettro: condizione elementare corrispondente allo spettro.*
*N.b.: nome breve della condizione elementare.*
*Fx: componente della forza lungo l'asse X. [kN]*
*Fy: componente della forza lungo l'asse Y. [kN]*
*Fz: componente della forza lungo l'asse Z. [kN]*
*Mx: componente della coppia attorno all'asse X. [kN*m]*
*My: componente della coppia attorno all'asse Y. [kN*m]*
*Mz: componente della coppia attorno all'asse Z. [kN*m]*
*Max X: massima reazione lungo l'asse X.*
*Valore: valore massimo della reazione. [kN]*
*Angolo: angolo d'ingresso del sisma che provoca il valore massimo della reazione. [deg]*
*Max Y: massima reazione lungo l'asse Y.*
*Valore: valore massimo della reazione. [kN]*
*Angolo: angolo d'ingresso del sisma che provoca il valore massimo della reazione. [deg]*
*Max Z: massima reazione lungo l'asse Z.*
*Valore: valore massimo della reazione. [kN]*
*Angolo: angolo d'ingresso del sisma che provoca il valore massimo della reazione. [deg]*

| Spettro | Fx | Fy | Fz | Mx | My | Mz | Max X | | Max Y | | Max Z | |
|---|---|---|---|---|---|---|---|---|---|---|---|---|
| N.b. | | | | | | | Valore | Angolo | Valore | Angolo | Valore | Angolo |
| SLV X | 2539.2033 | 149.6637 | 0 | 1.365E03 | 2.541E04 | 3.965E03 | 2539.5833 | 1 | 1521.7795 | 91 | 0 | 0 |
| SLV Y | 149.6637 | 1521.7023 | 0 | 1.269E04 | 1.448E03 | 1.909E04 | 2539.5833 | 1 | 1521.7795 | 91 | 0 | 0 |
| X SLD | 1090.8559 | 64.121 | 0 | 581.69005 | 1.089E04 | 1.725E03 | 1091.0122 | 1 | 648.6381 | 91 | 0 | 0 |
| Y SLD | 64.121 | 648.6116 | 0 | 5.387E03 | 6.181E02 | 8.135E03 | 1091.0122 | 1 | 648.6381 | 91 | 0 | 0 |

# 1.6 Annotazioni solutore

*Informazioni: informazioni fornite dal solutore al termine del calcolo del modello.*

| Informazioni |
|---|
| |

## 1.7 Statistiche soluzione

| | |
|---|---|
| Tipo di equazioni | Lineari |
| Tecnica di soluzione | Intel MKL PARDISO |
| Numero equazioni | 103356 |
| Elemento min. diagonale | 41.6865106 |
| Elemento max diagonale | 2280828138.03575 |
| Rapporto max/min | 54713817.6161589 |
| Elementi non nulli | 4099049 |

SIDEL
INGEGNERIA

# TABULATI DI CALCOLO – VERIFICHE
# CIVICO 37
# STATO DI FATTO

# Sommario

1 Verifiche ..... 3
1.1 Verifica regolarità strutturale ..... 3
1.2 Verifiche aste in legno ..... 6
1.3 Verifiche superelementi in legno ..... 308
1.4 Verifica sismica globale ..... 398
1.5 Verifiche maschi in muratura ..... 430
1.6 Verifiche travi di accoppiamento in muratura ..... 823

# 1 Verifiche

## 1.1 Verifica regolarità strutturale

Le unità di misura elencate nel capitolo sono in [cm, daN] ove non espressamente specificato.

***Livello***:
***Descr***: *descrizione livello.*
***Quota***: *quota livello. [cm]*
***Q***: *quota livello. [cm]*
***Qinf***: *quota livello precedente. [cm]*
***Comb***: *combinazione.*
***A1***: *a1 (Distribuzione masse).*
***A1n***: *a1 numeratore (distanza tra centro massa vs. centro rigidezza [se presente] o centro dell'ingombro del piano). [cm]*
***A1d***: *a1 denominatore (ingombro del piano nella medesima direzione [x o y globale]). [cm]*
***A1r***: *a1 rapporto (distanza centro massa/rigidezza su ingombro del piano).*
***A2***: *a2 (Distribuzione rigidezze).*
***A2n***: *a2 numeratore (rigidezza max [x o y globale]).*
***A2d***: *a2 denominatore (rigidezza min [x o y globale]).*
***A2r***: *a2 rapporto (rigidezza max/min).*
***A3***: *a3 (Forma compatta).*
***A3n***: *a3 numeratore (area convessa). [cm²]*
***A3d***: *a3 denominatore (area piano). [cm²]*
***A3r***: *a3 rapporto (area convessa/area piano).*
***B***: *b (Rapporto lati).*
***Bn***: *b numeratore (lato max [x o y globale]). [cm]*
***Bd***: *b denominatore (lato min [x o y globale]). [cm]*
***Br***: *b rapporto (lato max/min).*
***C***: *c (Rapporto rigidezze piano).*
***Cn***: *c numeratore (rigidezza elementi verticali).*
***Cd***: *c denominatore (rigidezza piano).*
***Cr***: *c rapporto (rigidezza elementi verticali/rigidezza piano).*
***E1***: *e1 (Variazione masse).*
***E1n***: *e1 numeratore (massa max). [daN]*
***E1d***: *e1 denominatore (massa min). [daN]*
***E1r***: *e1 rapporto (massa max/min).*
***E2***: *e2 (Riduzione rigidezze).*
***E2n***: *e2 numeratore (rigidezza relativa alla traslazione KUmax). [daN/cm]*
***E2d***: *e2 denominatore (rigidezza relativa alla traslazione KUmin). [daN/cm]*
***E2r***: *e2 rapporto (variazione massima in decremento Kmax/Kmin).*
***E3***: *e3 (Incremento rigidezze).*
***E3n***: *e3 numeratore (rigidezza relativa alla traslazione KUmax). [daN/cm]*
***E3d***: *e3 denominatore (rigidezza relativa alla traslazione KUmin). [daN/cm]*
***E3r***: *e3 rapporto (variazione massima in incremento Kmax/Kmin).*
***F***: *f (Rapporto Capacità/Domanda).*
***Fn***: *f numeratore (rapporto capacità/domanda massimo [c/d max]). [daN]*
***Fd***: *f denominatore (rapporto capacità/domanda minimo [c/d min]). [daN]*
***Fr***: *f rapporto (variazione massima [rapporto (c/d max)/(c/d min)]).*
***G1***: *g1 (Rastremazione di piano).*
***G1n***: *g1 numeratore (L1). [cm]*
***G1d***: *g1 denominatore (L2). [cm]*
***G1r***: *g1 rapporto (L1/L2).*
***G2***: *g2 (Rastremazione totale).*
***G2n***: *g2 numeratore (L0). [cm]*
***G2d***: *g2 denominatore (Li). [cm]*
***G2r***: *g2 rapporto (L0/Li).*
***Capacità/Domanda in X***:
***VrdX***: *taglio resistente complessivo in direzione X. [daN]*
***VedX***: *taglio agente complessivo in direzione X). [daN]*
***|Rd/Ed|***: *|Rd/Ed| (rapporto capacità/domanda in termini di resistenza a taglio).*
***Capacità/Domanda in Y***:
***VrdY***: *taglio resistente complessivo in direzione Y. [daN]*
***VedY***: *taglio agente complessivo in direzione Y). [daN]*

**Verifica regolarità strutturale**

Controllo regolarità edificio secondo D.M. 17-01-18 (N.T.C.) §7.2.1 - §C7.2.1

**Avvertenze**

La seguente procedura valuta la regolarità della costruzione secondo quanto indicato nelle NTC 2018 §7.2.1.
Tali valutazioni sono a carattere puramente informativo e vengono condotte sulla base del modello e delle verifiche presenti alla sua generazione, con le limitazioni indicate nella manualistica.
In ogni caso l'impostazione di regolarità della costruzione, in pianta ed elevazione, va indicata nelle preferenze di analisi dall'utente utilizzatore del software.

**Sintesi dei risultati**

Orizzontamenti considerati nella valutazione
Nessun livello di fondazione trovato
Livelli di elevazione considerati: Rialzato(L3), Primo(L4), Secondo(L5), Terzo(L6), Sottotetto(L7),

Regolarità in pianta - NO
L'edificio risulta NON regolare in pianta, in base alle condizioni indicate in NTC 2018 §7.2.1
N.V. - Criterio A1 (Distribuzione masse) non valutabile al livello Rialzato
N.V. - Criterio A2 (Distribuzione rigidezze) non valutabile al livello Rialzato
No - Criterio A3 (Forma compatta) NON rispettato, con rapporto massimo 2820474.5/2639361.4=1.1 (limite=1,05) al livello Sottotetto
Ok - Criterio B (Rapporto lati) rispettato, con rapporto massimo 2,42 (limite=4) al livello Rialzato
No - Criterio C (Rapporto rigidezze piano) NON rispettato, con rapporto massimo > 999 (limite=0) al livello Rialzato

Regolarità in altezza - NO
L'edificio risulta NON regolare in altezza, in base alle condizioni indicate in NTC 2018 §7.2.1
Ok - Criterio D (Altezza elementi sismoresistenti) rispettato, con rapporto massimo 1 (limite=1,01)
No - Criterio E1 (Variazione masse) NON rispettato, con rapporto massimo 136225.8/99491.7=1.4 (limite=1,25) tra il livello Sottotetto ed il precedente
N.V. - Criterio E2 (Riduzione rigidezze) non valutabile tra il livello Primo ed il precedente
N.V. - Criterio E3 (Incremento rigidezze) non valutabile tra il livello Primo ed il precedente
No - Criterio F (Rapporto Capacità/Domanda) NON rispettato, con rapporto massimo 189.9/5.3=35.7 (limite=1) tra il livello Sottotetto ed il precedente
No - Criterio G1 (Rastremazione di piano) NON rispettato, con rapporto massimo 151.1/1030.1=0.1 (limite=0,1) tra il livello Sottotetto ed il precedente
Ok - Criterio G2 (Rastremazione totale) rispettato, con rapporto massimo 0 (limite=0,3) tra il livello Primo ed il precedente

**Valori per piano**

**Verifiche di regolarità in pianta**

| Livello | | A1 | | | A2 | | | A3 | | | B | | | C | | |
|---|---|---|---|---|---|---|---|---|---|---|---|---|---|---|---|---|
| Descr | Quota | A1n | A1d | A1r | A2n | A2d | A2r | A3n | A3d | A3r | Bn | Bd | Br | Cn | Cd | Cr |
| Rialzato | 171 | | | | | | | 2540259 | 2521595 | 1.01 | 2498 | 1031 | 2.42 | 9999 | 1 | 9999 |
| Primo | 544 | | | | | | | 2523182 | 2494940 | 1.01 | 2484 | 1031 | 2.41 | 9999 | 1 | 9999 |
| Secondo | 896 | | | | | | | 2522292 | 2497684 | 1.01 | 2484 | 1030 | 2.41 | 9999 | 1 | 9999 |
| Terzo | 1248 | | | | | | | 2522292 | 2486024 | 1.01 | 2484 | 1030 | 2.41 | 9999 | 1 | 9999 |
| Sottotetto | 1564 | | | | | | | 2820475 | 2639361 | 1.07 | 2504 | 1187 | 2.11 | 9999 | 1 | 9999 |

**Verifiche di regolarità in elevazione**

Rapporto di regolarità per la condizione D (Altezza elementi sismoresistenti): 1393/1393=1.

| Livello | | | E1 | | | E2 | | | E3 | | | F | | | G1 | | | G2 | | |
|---|---|---|---|---|---|---|---|---|---|---|---|---|---|---|---|---|---|---|---|---|
| Descr | Q | Qinf | E1n | E1d | E1r | E2n | E2d | E2r | E3n | E3d | E3r | Fn | Fd | Fr | G1n | G1d | G1r | G2n | G2d | G2r |
| Primo | 544 | 171 | 178330 | 137470 | 1.3 | | | | | | | 6.7 | 3 | 2.2 | 9 | 2498 | 0 | 9 | 2498 | 0 |
| Secondo | 896 | 544 | 137470 | 136226 | 1.01 | | | | | | | 4.9 | 3.9 | 1.24 | 0 | 1031 | 0 | 8 | 2498 | 0 |
| Terzo | 1248 | 896 | 136226 | 136226 | 1 | | | | | | | 4.1 | 3 | 1.4 | 0 | 2484 | 0 | 8 | 2498 | 0 |
| Sottotetto | 1564 | 1248 | 136226 | 99492 | 1.37 | | | | | | | 189.9 | 5.3 | 35.74 | 151 | 1030 | 0.15 | 0 | 1 | 0 |

**Dettaglio delle resistenze di piano a taglio (per valutazione punto F)**

| Livello | | | Capacità/Domanda in X | | | Capacità/Domanda in Y | | |
|---|---|---|---|---|---|---|---|---|
| Descr | Q | Comb | VrdX | VedX | \|Rd/Ed\| | VrdY | VedY | \|Rd/Ed\| |
| Rialzato | 171 | SLD 1 | 336732 | -121597 | 2.8 | 279606 | -29036 | 9.6 |
| Rialzato | 171 | SLD 2 | 336732 | -121597 | 2.8 | 279606 | -29036 | 9.6 |
| Rialzato | 171 | SLD 3 | 336949 | -131375 | 2.6 | 277967 | 24152 | 11.5 |
| Rialzato | 171 | SLD 4 | 336949 | -131375 | 2.6 | 277967 | 24152 | 11.5 |
| Rialzato | 171 | SLD 5 | 336209 | -21616 | 15.6 | 281149 | -89382 | 3.1 |
| Rialzato | 171 | SLD 6 | 336209 | -21616 | 15.6 | 281149 | -89382 | 3.1 |
| Rialzato | 171 | SLD 7 | 336480 | -54208 | 6.2 | 275704 | 87911 | 3.1 |
| Rialzato | 171 | SLD 8 | 336480 | -54208 | 6.2 | 275704 | 87911 | 3.1 |
| Rialzato | 171 | SLD 9 | 335305 | 54304 | 6.2 | 281569 | -87918 | 3.2 |
| Rialzato | 171 | SLD 10 | 335305 | 54304 | 6.2 | 281569 | -87918 | 3.2 |
| Rialzato | 171 | SLD 11 | 335924 | 21712 | 15.5 | 276029 | 89375 | 3.1 |
| Rialzato | 171 | SLD 12 | 335924 | 21712 | 15.5 | 276029 | 89375 | 3.1 |
| Rialzato | 171 | SLD 13 | 334982 | 131471 | 2.5 | 281122 | -24159 | 11.6 |
| Rialzato | 171 | SLD 14 | 334982 | 131471 | 2.5 | 281122 | -24159 | 11.6 |
| Rialzato | 171 | SLD 15 | 334391 | 121693 | 2.7 | 279442 | 29029 | 9.6 |
| Rialzato | 171 | SLD 16 | 334391 | 121693 | 2.7 | 279442 | 29029 | 9.6 |
| Rialzato | 171 | SLV 1 | 332782 | -283942 | 1.2 | 273057 | -69550 | 3.9 |
| Rialzato | 171 | SLV 2 | 332782 | -283942 | 1.2 | 273057 | -69550 | 3.9 |
| Rialzato | 171 | SLV 3 | 321323 | -308237 | 1 | 261231 | 57422 | 4.5 |
| Rialzato | 171 | SLV 4 | 321323 | -308237 | 1 | 261231 | 57422 | 4.5 |
| Rialzato | 171 | SLV 5 | 321702 | -48302 | 6.7 | 277811 | -213442 | 1.3 |
| Rialzato | 171 | SLV 6 | 321702 | -48302 | 6.7 | 277811 | -213442 | 1.3 |
| Rialzato | 171 | SLV 7 | 322447 | -129284 | 2.5 | 262348 | 209799 | 1.3 |
| Rialzato | 171 | SLV 8 | 322447 | -129284 | 2.5 | 262348 | 209799 | 1.3 |
| Rialzato | 171 | SLV 9 | 320981 | 129380 | 2.5 | 286435 | -209806 | 1.4 |
| Rialzato | 171 | SLV 10 | 320981 | 129380 | 2.5 | 286435 | -209806 | 1.4 |
| Rialzato | 171 | SLV 11 | 316207 | 48398 | 6.5 | 264102 | 213435 | 1.2 |
| Rialzato | 171 | SLV 12 | 316207 | 48398 | 6.5 | 264102 | 213435 | 1.2 |
| Rialzato | 171 | SLV 13 | 317647 | 308333 | 1 | 276227 | -57429 | 4.8 |
| Rialzato | 171 | SLV 14 | 317647 | 308333 | 1 | 276227 | -57429 | 4.8 |
| Rialzato | 171 | SLV 15 | 320788 | 284038 | 1.1 | 270598 | 69543 | 3.9 |

| Livello | | | Capacità/Domanda in X | | | Capacità/Domanda in Y | | |
|---|---|---|---|---|---|---|---|---|
| Descr | Q | Comb | VrdX | VedX | \|Rd/Ed\| | VrdY | VedY | \|Rd/Ed\| |
| Rialzato | 171 | SLV 16 | 320788 | 284038 | 1.1 | 270598 | 69543 | 3.9 |
| Primo | 544 | SLD 1 | 233286 | -106059 | 2.2 | 137692 | -18762 | 7.3 |
| Primo | 544 | SLD 2 | 233286 | -106059 | 2.2 | 137692 | -18762 | 7.3 |
| Primo | 544 | SLD 3 | 234289 | -106395 | 2.2 | 137548 | 14231 | 9.7 |
| Primo | 544 | SLD 4 | 234289 | -106395 | 2.2 | 137548 | 14231 | 9.7 |
| Primo | 544 | SLD 5 | 233759 | -31308 | 7.5 | 136637 | -55671 | 2.5 |
| Primo | 544 | SLD 6 | 233759 | -31308 | 7.5 | 136637 | -55671 | 2.5 |
| Primo | 544 | SLD 7 | 236439 | -32429 | 7.3 | 137253 | 54307 | 2.5 |
| Primo | 544 | SLD 8 | 236439 | -32429 | 7.3 | 137253 | 54307 | 2.5 |
| Primo | 544 | SLD 9 | 233772 | 32429 | 7.2 | 136396 | -54314 | 2.5 |
| Primo | 544 | SLD 10 | 233772 | 32429 | 7.2 | 136396 | -54314 | 2.5 |
| Primo | 544 | SLD 11 | 236619 | 31307 | 7.6 | 136568 | 55664 | 2.5 |
| Primo | 544 | SLD 12 | 236619 | 31307 | 7.6 | 136568 | 55664 | 2.5 |
| Primo | 544 | SLD 13 | 231765 | 106395 | 2.2 | 136634 | -14238 | 9.6 |
| Primo | 544 | SLD 14 | 231765 | 106395 | 2.2 | 136634 | -14238 | 9.6 |
| Primo | 544 | SLD 15 | 232577 | 106059 | 2.2 | 135998 | 18755 | 7.3 |
| Primo | 544 | SLD 16 | 232577 | 106059 | 2.2 | 135998 | 18755 | 7.3 |
| Primo | 544 | SLV 1 | 215136 | -247929 | 0.9 | 131561 | -44720 | 2.9 |
| Primo | 544 | SLV 2 | 215136 | -247929 | 0.9 | 131561 | -44720 | 2.9 |
| Primo | 544 | SLV 3 | 214182 | -248524 | 0.9 | 133646 | 34000 | 3.9 |
| Primo | 544 | SLV 4 | 214182 | -248524 | 0.9 | 133646 | 34000 | 3.9 |
| Primo | 544 | SLV 5 | 221980 | -73475 | 3 | 133441 | -132812 | 1 |
| Primo | 544 | SLV 6 | 221980 | -73475 | 3 | 133441 | -132812 | 1 |
| Primo | 544 | SLV 7 | 221304 | -75461 | 2.9 | 136296 | 129591 | 1.1 |
| Primo | 544 | SLV 8 | 221304 | -75461 | 2.9 | 136296 | 129591 | 1.1 |
| Primo | 544 | SLV 9 | 220782 | 75461 | 2.9 | 134931 | -129598 | 1 |
| Primo | 544 | SLV 10 | 220782 | 75461 | 2.9 | 134931 | -129598 | 1 |
| Primo | 544 | SLV 11 | 230750 | 73475 | 3.1 | 135464 | 132805 | 1 |
| Primo | 544 | SLV 12 | 230750 | 73475 | 3.1 | 135464 | 132805 | 1 |
| Primo | 544 | SLV 13 | 211765 | 248524 | 0.9 | 131219 | -34008 | 3.9 |
| Primo | 544 | SLV 14 | 211765 | 248524 | 0.9 | 131219 | -34008 | 3.9 |
| Primo | 544 | SLV 15 | 209212 | 247928 | 0.8 | 126612 | 44713 | 2.8 |
| Primo | 544 | SLV 16 | 209212 | 247928 | 0.8 | 126612 | 44713 | 2.8 |
| Secondo | 896 | SLD 1 | 201226 | -95964 | 2.1 | 122940 | -14198 | 8.7 |
| Secondo | 896 | SLD 2 | 201226 | -95964 | 2.1 | 122940 | -14198 | 8.7 |
| Secondo | 896 | SLD 3 | 200542 | -95674 | 2.1 | 123715 | 10463 | 11.8 |
| Secondo | 896 | SLD 4 | 200542 | -95674 | 2.1 | 123715 | 10463 | 11.8 |
| Secondo | 896 | SLD 5 | 203020 | -29229 | 6.9 | 119993 | -41665 | 2.9 |
| Secondo | 896 | SLD 6 | 203020 | -29229 | 6.9 | 119993 | -41665 | 2.9 |
| Secondo | 896 | SLD 7 | 201176 | -28262 | 7.1 | 123312 | 40540 | 3 |
| Secondo | 896 | SLD 8 | 201176 | -28262 | 7.1 | 123312 | 40540 | 3 |
| Secondo | 896 | SLD 9 | 202843 | 28262 | 7.2 | 118096 | -40547 | 2.9 |
| Secondo | 896 | SLD 10 | 202843 | 28262 | 7.2 | 118096 | -40547 | 2.9 |
| Secondo | 896 | SLD 11 | 201088 | 29229 | 6.9 | 122306 | 41658 | 2.9 |
| Secondo | 896 | SLD 12 | 201088 | 29229 | 6.9 | 122306 | 41658 | 2.9 |
| Secondo | 896 | SLD 13 | 200623 | 95674 | 2.1 | 115167 | -10471 | 11 |
| Secondo | 896 | SLD 14 | 200623 | 95674 | 2.1 | 115167 | -10471 | 11 |
| Secondo | 896 | SLD 15 | 200154 | 95964 | 2.1 | 117562 | 14191 | 8.3 |
| Secondo | 896 | SLD 16 | 200154 | 95964 | 2.1 | 117562 | 14191 | 8.3 |
| Secondo | 896 | SLV 1 | 189146 | -224772 | 0.8 | 122411 | -33804 | 3.6 |
| Secondo | 896 | SLV 2 | 189146 | -224772 | 0.8 | 122411 | -33804 | 3.6 |
| Secondo | 896 | SLV 3 | 183173 | -223952 | 0.8 | 123098 | 25171 | 4.9 |
| Secondo | 896 | SLV 4 | 183173 | -223952 | 0.8 | 123098 | 25171 | 4.9 |
| Secondo | 896 | SLV 5 | 203156 | -68674 | 3 | 117675 | -99589 | 1.2 |
| Secondo | 896 | SLV 6 | 203156 | -68674 | 3 | 117675 | -99589 | 1.2 |
| Secondo | 896 | SLV 7 | 193984 | -65943 | 2.9 | 124645 | 96995 | 1.3 |
| Secondo | 896 | SLV 8 | 193984 | -65943 | 2.9 | 124645 | 96995 | 1.3 |
| Secondo | 896 | SLV 9 | 202599 | 65943 | 3.1 | 109686 | -97002 | 1.1 |
| Secondo | 896 | SLV 10 | 202599 | 65943 | 3.1 | 109686 | -97002 | 1.1 |
| Secondo | 896 | SLV 11 | 196783 | 68674 | 2.9 | 122863 | 99582 | 1.2 |
| Secondo | 896 | SLV 12 | 196783 | 68674 | 2.9 | 122863 | 99582 | 1.2 |
| Secondo | 896 | SLV 13 | 181216 | 223952 | 0.8 | 107951 | -25178 | 4.3 |
| Secondo | 896 | SLV 14 | 181216 | 223952 | 0.8 | 107951 | -25178 | 4.3 |
| Secondo | 896 | SLV 15 | 176085 | 224772 | 0.8 | 109129 | 33797 | 3.2 |
| Secondo | 896 | SLV 16 | 176085 | 224772 | 0.8 | 109129 | 33797 | 3.2 |
| Terzo | 1248 | SLD 1 | 167701 | -63704 | 2.6 | 95355 | -9352 | 10.2 |
| Terzo | 1248 | SLD 2 | 167701 | -63704 | 2.6 | 95355 | -9352 | 10.2 |
| Terzo | 1248 | SLD 3 | 166946 | -64641 | 2.6 | 95615 | 7494 | 12.8 |
| Terzo | 1248 | SLD 4 | 166946 | -64641 | 2.6 | 95615 | 7494 | 12.8 |
| Terzo | 1248 | SLD 5 | 171527 | -17691 | 9.7 | 94598 | -28359 | 3.3 |
| Terzo | 1248 | SLD 6 | 171527 | -17691 | 9.7 | 94598 | -28359 | 3.3 |
| Terzo | 1248 | SLD 7 | 169287 | -20812 | 8.1 | 95459 | 27796 | 3.4 |
| Terzo | 1248 | SLD 8 | 169287 | -20812 | 8.1 | 95459 | 27796 | 3.4 |
| Terzo | 1248 | SLD 9 | 171960 | 20812 | 8.3 | 94322 | -27803 | 3.4 |
| Terzo | 1248 | SLD 10 | 171960 | 20812 | 8.3 | 94322 | -27803 | 3.4 |
| Terzo | 1248 | SLD 11 | 169774 | 17691 | 9.6 | 95178 | 28352 | 3.4 |
| Terzo | 1248 | SLD 12 | 169774 | 17691 | 9.6 | 95178 | 28352 | 3.4 |
| Terzo | 1248 | SLD 13 | 168839 | 64641 | 2.6 | 94391 | -7501 | 12.6 |
| Terzo | 1248 | SLD 14 | 168839 | 64641 | 2.6 | 94391 | -7501 | 12.6 |
| Terzo | 1248 | SLD 15 | 167978 | 63704 | 2.6 | 94411 | 9345 | 10.1 |
| Terzo | 1248 | SLD 16 | 167978 | 63704 | 2.6 | 94411 | 9345 | 10.1 |
| Terzo | 1248 | SLV 1 | 138387 | -149105 | 0.9 | 95632 | -22291 | 4.3 |
| Terzo | 1248 | SLV 2 | 138387 | -149105 | 0.9 | 95632 | -22291 | 4.3 |
| Terzo | 1248 | SLV 3 | 140376 | -151468 | 0.9 | 96255 | 18120 | 5.3 |
| Terzo | 1248 | SLV 4 | 140376 | -151468 | 0.9 | 96255 | 18120 | 5.3 |
| Terzo | 1248 | SLV 5 | 170280 | -41148 | 4.1 | 92692 | -67980 | 1.4 |
| Terzo | 1248 | SLV 6 | 170280 | -41148 | 4.1 | 92692 | -67980 | 1.4 |
| Terzo | 1248 | SLV 7 | 160315 | -49024 | 3.3 | 95386 | 66723 | 1.4 |

| Livello | | | Capacità/Domanda in X | | | Capacità/Domanda in Y | | |
|---|---|---|---|---|---|---|---|---|
| Descr | Q | Comb | VrdX | VedX | \|Rd/Ed\| | VrdY | VedY | \|Rd/Ed\| |
| Terzo | 1248 | SLV 8 | 160315 | -49024 | 3.3 | 95386 | 66723 | 1.4 |
| Terzo | 1248 | SLV 9 | 171071 | 49024 | 3.5 | 92623 | -66731 | 1.4 |
| Terzo | 1248 | SLV 10 | 171071 | 49024 | 3.5 | 92623 | -66731 | 1.4 |
| Terzo | 1248 | SLV 11 | 163877 | 41148 | 4 | 94460 | 67973 | 1.4 |
| Terzo | 1248 | SLV 12 | 163877 | 41148 | 4 | 94460 | 67973 | 1.4 |
| Terzo | 1248 | SLV 13 | 138239 | 151468 | 0.9 | 93468 | -18127 | 5.2 |
| Terzo | 1248 | SLV 14 | 138239 | 151468 | 0.9 | 93468 | -18127 | 5.2 |
| Terzo | 1248 | SLV 15 | 134577 | 149105 | 0.9 | 94089 | 22284 | 4.2 |
| Terzo | 1248 | SLV 16 | 134577 | 149105 | 0.9 | 94089 | 22284 | 4.2 |
| Sottotetto | 1564 | SLD 1 | 89191 | -15249 | 5.8 | 67016 | -2068 | 32.4 |
| Sottotetto | 1564 | SLD 2 | 89191 | -15249 | 5.8 | 67016 | -2068 | 32.4 |
| Sottotetto | 1564 | SLD 3 | 88307 | -15518 | 5.7 | 64210 | 215 | 298.9 |
| Sottotetto | 1564 | SLD 4 | 88307 | -15518 | 5.7 | 64210 | 215 | 298.9 |
| Sottotetto | 1564 | SLD 5 | 97391 | -4191 | 23.2 | 59255 | -4108 | 14.4 |
| Sottotetto | 1564 | SLD 6 | 97391 | -4191 | 23.2 | 59255 | -4108 | 14.4 |
| Sottotetto | 1564 | SLD 7 | 95304 | -5089 | 18.7 | 61894 | 3501 | 17.7 |
| Sottotetto | 1564 | SLD 8 | 95304 | -5089 | 18.7 | 61894 | 3501 | 17.7 |
| Sottotetto | 1564 | SLD 9 | 97506 | 5017 | 19.4 | 57799 | -3574 | 16.2 |
| Sottotetto | 1564 | SLD 10 | 97506 | 5017 | 19.4 | 57799 | -3574 | 16.2 |
| Sottotetto | 1564 | SLD 11 | 99793 | 4119 | 24.2 | 61610 | 4035 | 15.3 |
| Sottotetto | 1564 | SLD 12 | 99793 | 4119 | 24.2 | 61610 | 4035 | 15.3 |
| Sottotetto | 1564 | SLD 13 | 91853 | 15446 | 5.9 | 65384 | -288 | 227.3 |
| Sottotetto | 1564 | SLD 14 | 91853 | 15446 | 5.9 | 65384 | -288 | 227.3 |
| Sottotetto | 1564 | SLD 15 | 91060 | 15177 | 6 | 67982 | 1995 | 34.1 |
| Sottotetto | 1564 | SLD 16 | 91060 | 15177 | 6 | 67982 | 1995 | 34.1 |
| Sottotetto | 1564 | SLV 1 | 76401 | -35467 | 2.2 | 63985 | -4756 | 13.5 |
| Sottotetto | 1564 | SLV 2 | 76401 | -35467 | 2.2 | 63985 | -4756 | 13.5 |
| Sottotetto | 1564 | SLV 3 | 69929 | -36209 | 1.9 | 59909 | 316 | 189.9 |
| Sottotetto | 1564 | SLV 4 | 69929 | -36209 | 1.9 | 59909 | 316 | 189.9 |
| Sottotetto | 1564 | SLV 5 | 90645 | -9540 | 9.5 | 50807 | -9143 | 5.6 |
| Sottotetto | 1564 | SLV 6 | 90645 | -9540 | 9.5 | 50807 | -9143 | 5.6 |
| Sottotetto | 1564 | SLV 7 | 94145 | -12013 | 7.8 | 38820 | 7760 | 5 |
| Sottotetto | 1564 | SLV 8 | 94145 | -12013 | 7.8 | 38820 | 7760 | 5 |
| Sottotetto | 1564 | SLV 9 | 93756 | 11941 | 7.9 | 47402 | -7833 | 6.1 |
| Sottotetto | 1564 | SLV 10 | 93756 | 11941 | 7.9 | 47402 | -7833 | 6.1 |
| Sottotetto | 1564 | SLV 11 | 95046 | 9468 | 10 | 35367 | 9070 | 3.9 |
| Sottotetto | 1564 | SLV 12 | 95046 | 9468 | 10 | 35367 | 9070 | 3.9 |
| Sottotetto | 1564 | SLV 13 | 65396 | 36137 | 1.8 | 60028 | -388 | 154.6 |
| Sottotetto | 1564 | SLV 14 | 65396 | 36137 | 1.8 | 60028 | -388 | 154.6 |
| Sottotetto | 1564 | SLV 15 | 66610 | 35395 | 1.9 | 58962 | 4683 | 12.6 |
| Sottotetto | 1564 | SLV 16 | 66610 | 35395 | 1.9 | 58962 | 4683 | 12.6 |

# 1.2 Verifiche aste in legno

Le unità di misura elencate nel capitolo sono in [cm] ove non espressamente specificato.

***Descrizione***: *descrizione della sezione.*
***Tipo***: *tipo di sezione.*
***Base***: *base della sezione. [cm]*
***Altezza***: *altezza della sezione. [cm]*
***Area***: *area inerziale nel sistema geometrico centrato nel baricentro. [cm²]*
***Jx***: *momento d'inerzia attorno all'asse orizzontale baricentrico di definizione della sezione. [cm4]*
***Jy***: *momento d'inerzia attorno all'asse verticale baricentrico di definizione della sezione. [cm4]*
***Wx***: *modulo di resistenza elastico minimo relativo all'asse x. [cm³]*
***Wy***: *modulo di resistenza elastico minimo relativo all'asse y. [cm³]*

## Asta 11: Trave in legno a falda Falda 1 fili 55-241

Verifiche condotte secondo D.M. 17-01-18 (N.T.C.)

### Dati generali

Lunghezza = 34.8

### Caratteristiche della sezione

| Descrizione | Tipo | Base | Altezza | Area | Jx | Jy | Wx | Wy |
|---|---|---|---|---|---|---|---|---|
| R 20x20 | Rettangolare | 20 | 20 | 400 | 13333.33 | 13333.33 | 1333.33 | 1333.33 |

Materiale: C14 EN 338:2016
Rapporto luce/freccia elastica limite = 300
Rapporto luce/freccia elastica differita = 200
Mensola Y: Nessuno; Mensola X: Nessuno
Classe di servizio 1

### Verifica pressoflessione D.M. 17-01-18 §4.4.8.1.8

Sezione ad ascissa 0
Coefficiente parziale di sicurezza del materiale γ = 1.5
Kmod = 0.8

(Sc,0,d/fc,0,d)^2 + Sm,y,d/fm,y,d + Km*(Sm,z,d/fm,z,d) <= 1
(Sc,0,d/fc,0,d)^2 + Km*(Sm,y,d/fm,y,d) + Sm,z,d/fm,z,d <= 1
(7.9/85.3)^2+0.7*2/74.7+36.5/74.7=0.52 <= 1 [4.4.7b] Comb: SLU, 72; Durata minima del carico nella combinazione: media
Mx = 2607.7; My = -48706.1; N = -3140.5

**Verifica taglio D.M. 17-01-18 §4.4.8.1.9**

Sezione ad ascissa 34.8
Coefficiente parziale di sicurezza del materiale γ = 1.5
Kmod = 1.1; kcr = 0.67
τ,d <= fv,d
Sqrt(1.9^2+0.14^2) = 1.9 <= 22 Comb: SLV, 14; Durata minima del carico nella combinazione: istantaneo
Tx = 337.1; Ty = -25.2

**Verifica taglio+torsione D.M. 17-01-18 §4.4.8.1.11**

Sezione ad ascissa 0
Coefficiente parziale di sicurezza del materiale γ = 1.5
Kmod = 0.8; kcr = 0.67
τ,tor,d/(ksh*fv,d) + (τ,y,d/fv,d)^2 + (τ,z,d/fv,d)^2 <= 1
0.6+0+0 <= 1 Comb: SLU, 37; Durata minima del carico nella combinazione: media
Tx = 146.5; Ty = 22.3; Mt = 18471.2

**Verifica torsione D.M. 17-01-18 §4.4.8.1.10**

Sezione ad ascissa 34.8
Coefficiente parziale di sicurezza del materiale γ = 1.5
Kmod = 0.8
τ,tor,d <= Ksh * fv,d
11.09 <= 18.4 Comb: SLU, 37; Durata minima del carico nella combinazione: media
Mt = 18471.2

**Verifica della freccia istantanea totale D.M. 17-01-18 §C4.4.7 Circolare 7 21-01-19**

Sezione ad ascissa 17.4
Kdef = 0
Uinst tot in x = 0
Uinst tot in y = 0
Uinst tot = 0
Luce/Uinst,tot > limite
34.8/0=6957.8 > 300 Comb: SLE rara, 8

**Verifica della freccia istantanea variabile D.M. 17-01-18 §4.4.7**

Sezione ad ascissa 17.4
Kdef = 0
Uinst var in x = 0
Uinst var in y = 0
Uinst var = 0
Luce/Uinst,var > limite
34.8/0=10918.5 > 300 Comb: SLE rara, 8

**Verifica della freccia finale EC5 §4.4.7 - EC5 2.2.3 (3)**

Sezione ad ascissa 17.4
Kdef = 0.6
Ufin in x = -0.01
Ufin in y = 0
Ufin = 0.01
Luce/Ufin > limite
34.8/0.01=5714.1 > 200
Coefficienti combinatori impiegati:
Pesi strutturali = 1,000 + 0,600 = 1,600
Permanenti portati = 1,000 + 0,600 = 1,600
Neve = 0,500 + 0,500 = 1,000

---

## Asta 12: Trave in legno a falda Falda 1 fili 55-241

Verifiche condotte secondo D.M. 17-01-18 (N.T.C.)

**Dati generali**

Lunghezza = 33.8

**Caratteristiche della sezione**

| Descrizione | Tipo | Base | Altezza | Area | Jx | Jy | Wx | Wy |
|---|---|---|---|---|---|---|---|---|
| R 20x20 | Rettangolare | 20 | 20 | 400 | 13333.33 | 13333.33 | 1333.33 | 1333.33 |

Materiale: C14 EN 338:2016
Rapporto luce/freccia elastica limite = 300

Rapporto luce/freccia elastica differita = 200
Mensola Y: Nessuno; Mensola X: Nessuno
Classe di servizio 1

**Verifica pressoflessione D.M. 17-01-18 §4.4.8.1.8**

Sezione ad ascissa 0
Coefficiente parziale di sicurezza del materiale γ = 1.5
Kmod = 0.8
(Sc,0,d/fc,0,d)^2 + Sm,y,d/fm,y,d + Km*(Sm,z,d/fm,z,d) <= 1
(Sc,0,d/fc,0,d)^2 + Km*(Sm,y,d/fm,y,d) + Sm,z,d/fm,z,d <= 1
(4.6/85.3)^2+0.7*14.5/74.7+31/74.7=0.55 <= 1 [4.4.7b] Comb: SLU, 71; Durata minima del carico nella combinazione: media
Mx = 19298; My = -41279.4; N = -1840.4

**Verifica taglio D.M. 17-01-18 §4.4.8.1.9**

Sezione ad ascissa 0
Coefficiente parziale di sicurezza del materiale γ = 1.5
Kmod = 0.8; kcr = 0.67
τ,d <= fv,d
Sqrt(2.75^2+1.02^2) = 2.93 <= 16 Comb: SLU, 72; Durata minima del carico nella combinazione: media
Tx = 488.9; Ty = 181.8

**Verifica taglio+torsione D.M. 17-01-18 §4.4.8.1.11**

Sezione ad ascissa 0
Coefficiente parziale di sicurezza del materiale γ = 1.5
Kmod = 0.8; kcr = 0.67
τ,tor,d/(ksh*fv,d) + (τ,y,d/fv,d)^2 + (τ,z,d/fv,d)^2 <= 1
0.08+0.03+0 <= 1 Comb: SLU, 72; Durata minima del carico nella combinazione: media
Tx = 488.9; Ty = 181.8; Mt = -2387.7

**Verifica torsione D.M. 17-01-18 §4.4.8.1.10**

Sezione ad ascissa 33.8
Coefficiente parziale di sicurezza del materiale γ = 1.5
Kmod = 0.8
τ,tor,d <= Ksh * fv,d
1.43 <= 18.4 Comb: SLU, 72; Durata minima del carico nella combinazione: media
Mt = -2387.7

**Verifica della freccia istantanea totale D.M. 17-01-18 §C4.4.7 Circolare 7 21-01-19**

Sezione ad ascissa 15.8
Kdef = 0
Uinst tot in x = 0
Uinst tot in y = 0
Uinst tot = 0
Luce/Uinst,tot > limite
33.8/0=9915.5 > 300 Comb: SLE rara, 8

**Verifica della freccia istantanea variabile D.M. 17-01-18 §4.4.7**

Sezione ad ascissa 15.8
Kdef = 0
Uinst var in x = 0
Uinst var in y = 0
Uinst var = 0
Luce/Uinst,var > limite
33.8/0=15354.1 > 300 Comb: SLE rara, 8

**Verifica della freccia finale EC5 §4.4.7 - EC5 2.2.3 (3)**

Sezione ad ascissa 15.8
Kdef = 0.6
Ufin in x = 0
Ufin in y = 0
Ufin = 0
Luce/Ufin > limite
33.8/0=8177.5 > 200
Coefficienti combinatori impiegati:
Pesi strutturali = 1,000 + 0,600 = 1,600
Permanenti portati = 1,000 + 0,600 = 1,600
Neve = 0,500 + 0,500 = 1,000

---

## Asta 13: Trave in legno a falda Falda 1 fili 55-241

Verifiche condotte secondo D.M. 17-01-18 (N.T.C.)

Dati generali

Lunghezza = 33.8

Caratteristiche della sezione

| Descrizione | Tipo | Base | Altezza | Area | Jx | Jy | Wx | Wy |
|---|---|---|---|---|---|---|---|---|
| R 20x20 | Rettangolare | 20 | 20 | 400 | 13333.33 | 13333.33 | 1333.33 | 1333.33 |

Materiale: C14 EN 338:2016
Rapporto luce/freccia elastica limite = 300
Rapporto luce/freccia elastica differita = 200
Mensola Y: Nessuno; Mensola X: Nessuno
Classe di servizio 1

Verifica flessione D.M. 17-01-18 §4.4.8.1.6

Sezione ad ascissa 33.8
Coefficiente parziale di sicurezza del materiale γ = 1.5
Kmod = 1.1
Sm,y,d/fm,y,d + Km*(Sm,z,d/fm,z,d) <= 1
Km*(Sm,y,d/fm,y,d) + Sm,z,d/fm,z,d <= 1
0.7*0.6/102.7+26/102.7=0.26 <= 1 (formula 4.4.5b) Comb: SLV, 8; Durata minima del carico nella combinazione: istantaneo
Mx = -787; My = 34620.8

Verifica taglio D.M. 17-01-18 §4.4.8.1.9

Sezione ad ascissa 0
Coefficiente parziale di sicurezza del materiale γ = 1.5
Kmod = 0.8; kcr = 0.67
τ,d <= fv,d
Sqrt(3.93^2+0.18^2) = 3.93 <= 16 Comb: SLU, 72; Durata minima del carico nella combinazione: media
Tx = 698.3; Ty = 32.6

Verifica taglio+torsione D.M. 17-01-18 §4.4.8.1.11

Sezione ad ascissa 0
Coefficiente parziale di sicurezza del materiale γ = 1.5
Kmod = 0.8; kcr = 0.67
τ,tor,d/(ksh*fv,d) + (τ,y,d/fv,d)^2 + (τ,z,d/fv,d)^2 <= 1
0.36+0.06+0 <= 1 Comb: SLU, 80; Durata minima del carico nella combinazione: media
Tx = 696.7; Ty = 30.3; Mt = 11117.8

Verifica torsione D.M. 17-01-18 §4.4.8.1.10

Sezione ad ascissa 33.8
Coefficiente parziale di sicurezza del materiale γ = 1.5
Kmod = 0.8
τ,tor,d <= Ksh * fv,d
6.68 <= 18.4 Comb: SLU, 80; Durata minima del carico nella combinazione: media
Mt = 11117.8

Verifica della freccia istantanea totale D.M. 17-01-18 §C4.4.7 Circolare 7 21-01-19

Sezione ad ascissa 14.6
Kdef = 0
Uinst tot in x = 0
Uinst tot in y = 0
Uinst tot = 0
Luce/Uinst,tot > limite
33.8/0=27578.2 > 300 Comb: SLE rara, 8

Verifica della freccia istantanea variabile D.M. 17-01-18 §4.4.7

Sezione ad ascissa 14.6
Kdef = 0
Uinst var in x = 0
Uinst var in y = 0
Uinst var = 0
Luce/Uinst,var > limite
33.8/0=37892.5 > 300 Comb: SLE rara, 8

Verifica della freccia finale EC5 §4.4.7 - EC5 2.2.3 (3)

Sezione ad ascissa 14.6
Kdef = 0.6
Ufin in x = 0
Ufin in y = 0
Ufin = 0
Luce/Ufin > limite
33.8/0=23706.5 > 200
Coefficienti combinatori impiegati:

Pesi strutturali = 1,000 + 0,600 = 1,600
Permanenti portati = 1,000 + 0,600 = 1,600
Neve = 0,500 + 0,500 = 1,000

## Asta 14: Trave in legno a falda Falda 1 fili 55-241

Verifiche condotte secondo D.M. 17-01-18 (N.T.C.)

### Dati generali

Lunghezza = 33.8

### Caratteristiche della sezione

| Descrizione | Tipo | Base | Altezza | Area | Jx | Jy | Wx | Wy |
|---|---|---|---|---|---|---|---|---|
| R 20x20 | Rettangolare | 20 | 20 | 400 | 13333.33 | 13333.33 | 1333.33 | 1333.33 |

Materiale: C14 EN 338:2016
Rapporto luce/freccia elastica limite = 300
Rapporto luce/freccia elastica differita = 200
Mensola Y: Nessuno; Mensola X: Nessuno
Classe di servizio 1

### Verifica pressoflessione D.M. 17-01-18 §4.4.8.1.8

Sezione ad ascissa 33.8
Coefficiente parziale di sicurezza del materiale γ = 1.5
Kmod = 1.1
(Sc,0,d/fc,0,d)^2 + Sm,y,d/fm,y,d + Km*(Sm,z,d/fm,z,d) <= 1
(Sc,0,d/fc,0,d)^2 + Km*(Sm,y,d/fm,y,d) + Sm,z,d/fm,z,d <= 1
(0.7/117.3)^2+0.7*0/102.7+30.5/102.7=0.3 <= 1 [4.4.7b] Comb: SLV, 12; Durata minima del carico nella combinazione: istantaneo
Mx = -0.2; My = 40706.1; N = -291.4

### Verifica taglio D.M. 17-01-18 §4.4.8.1.9

Sezione ad ascissa 33.8
Coefficiente parziale di sicurezza del materiale γ = 1.5
Kmod = 1.1; kcr = 0.67
τ,d <= fv,d
Sqrt(1.37^2+0.06^2) = 1.37 <= 22 Comb: SLV, 12; Durata minima del carico nella combinazione: istantaneo
Tx = 244; Ty = -10.3

### Verifica taglio+torsione D.M. 17-01-18 §4.4.8.1.11

Sezione ad ascissa 0
Coefficiente parziale di sicurezza del materiale γ = 1.5
Kmod = 0.8; kcr = 0.67
τ,tor,d/(ksh*fv,d) + (τ,y,d/fv,d)^2 + (τ,z,d/fv,d)^2 <= 1
0.19+0+0 <= 1 Comb: SLU, 71; Durata minima del carico nella combinazione: media
Tx = 104.8; Ty = 21.2; Mt = -5910

### Verifica torsione D.M. 17-01-18 §4.4.8.1.10

Sezione ad ascissa 33.8
Coefficiente parziale di sicurezza del materiale γ = 1.5
Kmod = 0.8
τ,tor,d <= Ksh * fv,d
3.55 <= 18.4 Comb: SLU, 71; Durata minima del carico nella combinazione: media
Mt = -5910

### Verifica della freccia istantanea totale D.M. 17-01-18 §C4.4.7 Circolare 7 21-01-19

Sezione ad ascissa 18
Kdef = 0
Uinst tot in x = 0
Uinst tot in y = 0
Uinst tot = 0
Luce/Uinst,tot > limite
33.8/0=57026.5 > 300 Comb: SLE rara, 10

### Verifica della freccia istantanea variabile D.M. 17-01-18 §4.4.7

Sezione ad ascissa 16.9
Kdef = 0
Uinst var in x = 0
Uinst var in y = 0
Uinst var = 0
Luce/Uinst,var > limite
33.8/0=123121.7 > 300 Comb: SLE rara, 10

### Verifica della freccia finale EC5 §4.4.7 - EC5 2.2.3 (3)

Sezione ad ascissa 18
Kdef = 0.6
Ufin in x = 0
Ufin in y = 0
Ufin = 0
Luce/Ufin > limite
33.8/0=42697.5 > 200
Coefficienti combinatori impiegati:
Pesi strutturali = 1,000 + 0,600 = 1,600
Permanenti portati = 1,000 + 0,600 = 1,600
Variabile A = 0,700 + 0,180 = 0,880
Vento = 0,600 + 0,400 = 1,000

---

## Asta 15: Trave in legno a falda Falda 1 fili 55-241

Verifiche condotte secondo D.M. 17-01-18 (N.T.C.)

### Dati generali

Lunghezza = 33.8

### Caratteristiche della sezione

| Descrizione | Tipo | Base | Altezza | Area | Jx | Jy | Wx | Wy |
|---|---|---|---|---|---|---|---|---|
| R 20x20 | Rettangolare | 20 | 20 | 400 | 13333.33 | 13333.33 | 1333.33 | 1333.33 |

Materiale: C14 EN 338:2016
Rapporto luce/freccia elastica limite = 300
Rapporto luce/freccia elastica differita = 200
Mensola Y: Nessuno; Mensola X: Nessuno
Classe di servizio 1

### Verifica pressoflessione D.M. 17-01-18 §4.4.8.1.8

Sezione ad ascissa 33.8
Coefficiente parziale di sicurezza del materiale γ = 1.5
Kmod = 1.1
(Sc,0,d/fc,0,d)^2 + Sm,y,d/fm,y,d + Km*(Sm,z,d/fm,z,d) <= 1
(Sc,0,d/fc,0,d)^2 + Km*(Sm,y,d/fm,y,d) + Sm,z,d/fm,z,d <= 1
(0.6/117.3)^2+0.7*0.5/102.7+39.8/102.7=0.39 <= 1 [4.4.7b] Comb: SLV, 12; Durata minima del carico nella combinazione: istantaneo
Mx = -626.1; My = 53082.5; N = -237.7

### Verifica taglio D.M. 17-01-18 §4.4.8.1.9

Sezione ad ascissa 0
Coefficiente parziale di sicurezza del materiale γ = 1.5
Kmod = 0.8; kcr = 0.67
τ,d <= fv,d
Sqrt(2.26^2+0.17^2) = 2.27 <= 16 Comb: SLU, 72; Durata minima del carico nella combinazione: media
Tx = 402.6; Ty = 29.9

### Verifica taglio+torsione D.M. 17-01-18 §4.4.8.1.11

Sezione ad ascissa 0
Coefficiente parziale di sicurezza del materiale γ = 1.5
Kmod = 0.8; kcr = 0.67
τ,tor,d/(ksh*fv,d) + (τ,y,d/fv,d)^2 + (τ,z,d/fv,d)^2 <= 1
0.31+0.02+0 <= 1 Comb: SLU, 80; Durata minima del carico nella combinazione: media
Tx = 399.1; Ty = 29.3; Mt = 9603.1

### Verifica torsione D.M. 17-01-18 §4.4.8.1.10

Sezione ad ascissa 33.8
Coefficiente parziale di sicurezza del materiale γ = 1.5
Kmod = 0.8
τ,tor,d <= Ksh * fv,d
5.77 <= 18.4 Comb: SLU, 80; Durata minima del carico nella combinazione: media
Mt = 9603.1

### Verifica della freccia istantanea totale D.M. 17-01-18 §C4.4.7 Circolare 7 21-01-19

Sezione ad ascissa 18
Kdef = 0
Uinst tot in x = 0
Uinst tot in y = 0
Uinst tot = 0
Luce/Uinst,tot > limite
33.8/0=23669.3 > 300 Comb: SLE rara, 17

### Verifica della freccia istantanea variabile D.M. 17-01-18 §4.4.7

Sezione ad ascissa 18
Kdef = 0
Uinst var in x = 0
Uinst var in y = 0
Uinst var = 0
Luce/Uinst,var > limite
33.8/0=53259.8 > 300 Comb: SLE rara, 17

### Verifica della freccia finale EC5 §4.4.7 - EC5 2.2.3 (3)

Sezione ad ascissa 18
Kdef = 0.6
Ufin in x = 0
Ufin in y = 0
Ufin = 0
Luce/Ufin > limite
33.8/0=17708.7 > 200
Coefficienti combinatori impiegati:
Pesi strutturali = 1,000 + 0,600 = 1,600
Permanenti portati = 1,000 + 0,600 = 1,600
Variabile A = 0,700 + 0,180 = 0,880
Neve = 0,500 + 0,500 = 1,000
Vento = 0,600 + 0,000 = 0,600

---

## Asta 16: Trave in legno a falda Falda 1 fili 55-241

Verifiche condotte secondo D.M. 17-01-18 (N.T.C.)

### Dati generali

Lunghezza = 33.8

### Caratteristiche della sezione

| Descrizione | Tipo | Base | Altezza | Area | Jx | Jy | Wx | Wy |
|---|---|---|---|---|---|---|---|---|
| R 20x20 | Rettangolare | 20 | 20 | 400 | 13333.33 | 13333.33 | 1333.33 | 1333.33 |

Materiale: C14 EN 338:2016
Rapporto luce/freccia elastica limite = 300
Rapporto luce/freccia elastica differita = 200
Mensola Y: Nessuno; Mensola X: Nessuno
Classe di servizio 1

### Verifica pressoflessione D.M. 17-01-18 §4.4.8.1.8

Sezione ad ascissa 0
Coefficiente parziale di sicurezza del materiale γ = 1.5
Kmod = 1.1
(Sc,0,d/fc,0,d)^2 + Sm,y,d/fm,y,d + Km*(Sm,z,d/fm,z,d) <= 1
(Sc,0,d/fc,0,d)^2 + Km*(Sm,y,d/fm,y,d) + Sm,z,d/fm,z,d <= 1
(0.5/117.3)^2+0.7*1/102.7+40.7/102.7=0.4 <= 1 [4.4.7b] Comb: SLV, 12; Durata minima del carico nella combinazione: istantaneo
Mx = -1297.1; My = 54220.9; N = -217.9

### Verifica taglio D.M. 17-01-18 §4.4.8.1.9

Sezione ad ascissa 33.8
Coefficiente parziale di sicurezza del materiale γ = 1.5
Kmod = 1.1; kcr = 0.67
τ,d <= fv,d
Sqrt(4.98^2+0.15^2) = 4.98 <= 22 Comb: SLV, 12; Durata minima del carico nella combinazione: istantaneo
Tx = -885.8; Ty = -26.3

### Verifica taglio+torsione D.M. 17-01-18 §4.4.8.1.11

Sezione ad ascissa 33.8
Coefficiente parziale di sicurezza del materiale γ = 1.5
Kmod = 0.8; kcr = 0.67
τ,tor,d/(ksh*fv,d) + (τ,y,d/fv,d)^2 + (τ,z,d/fv,d)^2 <= 1
0.23+0.03+0 <= 1 Comb: SLU, 71; Durata minima del carico nella combinazione: media
Tx = -451.1; Ty = -8.7; Mt = -7121.8

### Verifica torsione D.M. 17-01-18 §4.4.8.1.10

Sezione ad ascissa 33.8
Coefficiente parziale di sicurezza del materiale γ = 1.5
Kmod = 0.8
τ,tor,d <= Ksh * fv,d
4.28 <= 18.4 Comb: SLU, 71; Durata minima del carico nella combinazione: media

Mt = -7121.8

**Verifica della freccia istantanea totale D.M. 17-01-18 §C4.4.7 Circolare 7 21-01-19**

Sezione ad ascissa 14.6
Kdef = 0
Uinst tot in x = 0
Uinst tot in y = 0
Uinst tot = 0
Luce/Uinst,tot > limite
33.8/0=26383.1 > 300 Comb: SLE rara, 17

**Verifica della freccia istantanea variabile D.M. 17-01-18 §4.4.7**

Sezione ad ascissa 14.6
Kdef = 0
Uinst var in x = 0
Uinst var in y = 0
Uinst var = 0
Luce/Uinst,var > limite
33.8/0=64460.5 > 300 Comb: SLE rara, 17

**Verifica della freccia finale EC5 §4.4.7 - EC5 2.2.3 (3)**

Sezione ad ascissa 14.6
Kdef = 0.6
Ufin in x = 0
Ufin in y = 0
Ufin = 0
Luce/Ufin > limite
33.8/0=19475.1 > 200
Coefficienti combinatori impiegati:
Pesi strutturali = 1,000 + 0,600 = 1,600
Permanenti portati = 1,000 + 0,600 = 1,600
Variabile A = 0,700 + 0,180 = 0,880
Neve = 0,500 + 0,500 = 1,000
Vento = 0,600 + 0,000 = 0,600

---

## Asta 17: Trave in legno a falda Falda 1 fili 55-241

Verifiche condotte secondo D.M. 17-01-18 (N.T.C.)

**Dati generali**

Lunghezza = 33.8

**Caratteristiche della sezione**

| Descrizione | Tipo | Base | Altezza | Area | Jx | Jy | Wx | Wy |
|---|---|---|---|---|---|---|---|---|
| R 20x20 | Rettangolare | 20 | 20 | 400 | 13333.33 | 13333.33 | 1333.33 | 1333.33 |

Materiale: C14 EN 338:2016
Rapporto luce/freccia elastica limite = 300
Rapporto luce/freccia elastica differita = 200
Mensola Y: Nessuno; Mensola X: Nessuno
Classe di servizio 1

**Verifica flessione D.M. 17-01-18 §4.4.8.1.6**

Sezione ad ascissa 0
Coefficiente parziale di sicurezza del materiale γ = 1.5
Kmod = 1.1
Sm,y,d/fm,y,d + Km*(Sm,z,d/fm,z,d) <= 1
Km*(Sm,y,d/fm,y,d) + Sm,z,d/fm,z,d <= 1
0.7*0.4/102.7+17.8/102.7=0.18 <= 1 (formula 4.4.5b) Comb: SLV, 12; Durata minima del carico nella combinazione: istantaneo
Mx = 540.8; My = 23765.9

**Verifica taglio D.M. 17-01-18 §4.4.8.1.9**

Sezione ad ascissa 33.8
Coefficiente parziale di sicurezza del materiale γ = 1.5
Kmod = 1.1; kcr = 0.67
τ,d <= fv,d
Sqrt(4.02^2+0.04^2) = 4.02 <= 22 Comb: SLV, 12; Durata minima del carico nella combinazione: istantaneo
Tx = -715.3; Ty = -7.8

**Verifica taglio+torsione D.M. 17-01-18 §4.4.8.1.11**

Sezione ad ascissa 0
Coefficiente parziale di sicurezza del materiale γ = 1.5
Kmod = 0.8; kcr = 0.67

τ,tor,d/(ksh*fv,d) + (τ,y,d/fv,d)^2 + (τ,z,d/fv,d)^2 <= 1
0.3+0+0 <= 1 Comb: SLU, 80; Durata minima del carico nella combinazione: media
Tx = -179.5; Ty = 15.1; Mt = 9159.3

**Verifica torsione D.M. 17-01-18 §4.4.8.1.10**

Sezione ad ascissa 33.8
Coefficiente parziale di sicurezza del materiale γ = 1.5
Kmod = 0.8
τ,tor,d <= Ksh * fv,d
5.5 <= 18.4 Comb: SLU, 80; Durata minima del carico nella combinazione: media
Mt = 9159.3

**Verifica della freccia istantanea totale D.M. 17-01-18 §C4.4.7 Circolare 7 21-01-19**

Sezione ad ascissa 13.5
Kdef = 0
Uinst tot in x = 0
Uinst tot in y = 0
Uinst tot = 0
Luce/Uinst,tot > limite
33.8/0=146645 > 300 Comb: SLE rara, 2

**Verifica della freccia istantanea variabile D.M. 17-01-18 §4.4.7**

Sezione ad ascissa 18
Kdef = 0
Uinst var in x = 0
Uinst var in y = 0
Uinst var = 0
Luce/Uinst,var > limite
33.8/0=142776.5 > 300 Comb: SLE rara, 16

**Verifica della freccia finale EC5 §4.4.7 - EC5 2.2.3 (3)**

Sezione ad ascissa 14.6
Kdef = 0.6
Ufin in x = 0
Ufin in y = 0
Ufin = 0
Luce/Ufin > limite
33.8/0=94115 > 200
Coefficienti combinatori impiegati:
Pesi strutturali = 1,000 + 0,600 = 1,600
Permanenti portati = 1,000 + 0,600 = 1,600
Vento = 0,600 + 0,400 = 1,000

---

## Asta 18: Trave in legno a falda Falda 1 fili 55-241

Verifiche condotte secondo D.M. 17-01-18 (N.T.C.)

**Dati generali**

Lunghezza = 33.8

**Caratteristiche della sezione**

| Descrizione | Tipo | Base | Altezza | Area | Jx | Jy | Wx | Wy |
|---|---|---|---|---|---|---|---|---|
| R 20x20 | Rettangolare | 20 | 20 | 400 | 13333.33 | 13333.33 | 1333.33 | 1333.33 |

Materiale: C14 EN 338:2016
Rapporto luce/freccia elastica limite = 300
Rapporto luce/freccia elastica differita = 200
Mensola Y: Nessuno; Mensola X: Nessuno
Classe di servizio 1

**Verifica flessione D.M. 17-01-18 §4.4.8.1.6**

Sezione ad ascissa 33.8
Coefficiente parziale di sicurezza del materiale γ = 1.5
Kmod = 1.1
Sm,y,d/fm,y,d + Km*(Sm,z,d/fm,z,d) <= 1
Km*(Sm,y,d/fm,y,d) + Sm,z,d/fm,z,d <= 1
0.7*0.4/102.7+22.3/102.7=0.22 <= 1 (formula 4.4.5b) Comb: SLV, 12; Durata minima del carico nella combinazione: istantaneo
Mx = -484.8; My = -29718.9

**Verifica taglio D.M. 17-01-18 §4.4.8.1.9**

Sezione ad ascissa 33.8
Coefficiente parziale di sicurezza del materiale γ = 1.5
Kmod = 1.1; kcr = 0.67

τ,d <= fv,d
Sqrt(4.3^2+0.09^2) = 4.3 <= 22 Comb: SLV, 12; Durata minima del carico nella combinazione: istantaneo
Tx = -764.8; Ty = -16.6

**Verifica taglio+torsione D.M. 17-01-18 §4.4.8.1.11**

Sezione ad ascissa 33.8
Coefficiente parziale di sicurezza del materiale γ = 1.5
Kmod = 0.8; kcr = 0.67
τ,tor,d/(ksh*fv,d) + (τ,y,d/fv,d)^2 + (τ,z,d/fv,d)^2 <= 1
0.21+0.01+0 <= 1 Comb: SLU, 71; Durata minima del carico nella combinazione: media
Tx = -256.7; Ty = -7.7; Mt = -6560.5

**Verifica torsione D.M. 17-01-18 §4.4.8.1.10**

Sezione ad ascissa 33.8
Coefficiente parziale di sicurezza del materiale γ = 1.5
Kmod = 0.8
τ,tor,d <= Ksh * fv,d
3.95 <= 18.4 Comb: SLU, 29; Durata minima del carico nella combinazione: media
Mt = -6577.9

**Verifica della freccia istantanea totale D.M. 17-01-18 §C4.4.7 Circolare 7 21-01-19**

Sezione ad ascissa 19.1
Kdef = 0
Uinst tot in x = 0
Uinst tot in y = 0
Uinst tot = 0
Luce/Uinst,tot > limite
33.8/0=39276.4 > 300 Comb: SLE rara, 17

**Verifica della freccia istantanea variabile D.M. 17-01-18 §4.4.7**

Sezione ad ascissa 18
Kdef = 0
Uinst var in x = 0
Uinst var in y = 0
Uinst var = 0
Luce/Uinst,var > limite
33.8/0=48676 > 300 Comb: SLE rara, 17

**Verifica della freccia finale EC5 §4.4.7 - EC5 2.2.3 (3)**

Sezione ad ascissa 19.1
Kdef = 0.6
Ufin in x = 0
Ufin in y = 0
Ufin = 0
Luce/Ufin > limite
33.8/0=34579.5 > 200
Coefficienti combinatori impiegati:
Pesi strutturali = 1,000 + 0,600 = 1,600
Permanenti portati = 1,000 + 0,600 = 1,600
Variabile A = 0,700 + 0,180 = 0,880
Neve = 0,500 + 0,500 = 1,000
Vento = 0,600 + 0,000 = 0,600

---

## Asta 19: Trave in legno a falda Falda 1 fili 55-241

Verifiche condotte secondo D.M. 17-01-18 (N.T.C.)

**Dati generali**

Lunghezza = 33.8

**Caratteristiche della sezione**

| Descrizione | Tipo | Base | Altezza | Area | Jx | Jy | Wx | Wy |
|---|---|---|---|---|---|---|---|---|
| R 20x20 | Rettangolare | 20 | 20 | 400 | 13333.33 | 13333.33 | 1333.33 | 1333.33 |

Materiale: C14 EN 338:2016
Rapporto luce/freccia elastica limite = 300
Rapporto luce/freccia elastica differita = 200
Mensola Y: Nessuno; Mensola X: Nessuno
Classe di servizio 1

**Verifica flessione D.M. 17-01-18 §4.4.8.1.6**

Sezione ad ascissa 33.8
Coefficiente parziale di sicurezza del materiale γ = 1.5

Kmod = 1.1
Sm,y,d/fm,y,d + Km*(Sm,z,d/fm,z,d) <= 1
Km*(Sm,y,d/fm,y,d) + Sm,z,d/fm,z,d <= 1
0.7*0.7/102.7+38.3/102.7=0.38 <= 1 (formula 4.4.5b) Comb: SLV, 12; Durata minima del carico nella combinazione: istantaneo
Mx = 894.7; My = -51019.6

**Verifica taglio D.M. 17-01-18 §4.4.8.1.9**

Sezione ad ascissa 33.8
Coefficiente parziale di sicurezza del materiale γ = 1.5
Kmod = 1.1; kcr = 0.67
τ,d <= fv,d
Sqrt(3.5^2+0.09^2) = 3.51 <= 22 Comb: SLV, 12; Durata minima del carico nella combinazione: istantaneo
Tx = -623; Ty = -15.8

**Verifica taglio+torsione D.M. 17-01-18 §4.4.8.1.11**

Sezione ad ascissa 0
Coefficiente parziale di sicurezza del materiale γ = 1.5
Kmod = 0.8; kcr = 0.67
τ,tor,d/(ksh*fv,d) + (τ,y,d/fv,d)^2 + (τ,z,d/fv,d)^2 <= 1
0.29+0+0 <= 1 Comb: SLU, 80; Durata minima del carico nella combinazione: media
Tx = 5.8; Ty = 12.9; Mt = 9020.9

**Verifica torsione D.M. 17-01-18 §4.4.8.1.10**

Sezione ad ascissa 33.8
Coefficiente parziale di sicurezza del materiale γ = 1.5
Kmod = 0.8
τ,tor,d <= Ksh * fv,d
5.42 <= 18.4 Comb: SLU, 80; Durata minima del carico nella combinazione: media
Mt = 9020.9

**Verifica della freccia istantanea totale D.M. 17-01-18 §C4.4.7 Circolare 7 21-01-19**

Sezione ad ascissa 16.9
Kdef = 0
Uinst tot in x = 0
Uinst tot in y = 0
Uinst tot = 0
Luce/Uinst,tot > limite
33.8/0=23954.3 > 300 Comb: SLE rara, 17

**Verifica della freccia istantanea variabile D.M. 17-01-18 §4.4.7**

Sezione ad ascissa 16.9
Kdef = 0
Uinst var in x = 0
Uinst var in y = 0
Uinst var = 0
Luce/Uinst,var > limite
33.8/0=35278.4 > 300 Comb: SLE rara, 17

**Verifica della freccia finale EC5 §4.4.7 - EC5 2.2.3 (3)**

Sezione ad ascissa 16.9
Kdef = 0.6
Ufin in x = 0
Ufin in y = 0
Ufin = 0
Luce/Ufin > limite
33.8/0=19804.8 > 200
Coefficienti combinatori impiegati:
Pesi strutturali = 1,000 + 0,600 = 1,600
Permanenti portati = 1,000 + 0,600 = 1,600
Variabile A = 0,700 + 0,180 = 0,880
Neve = 0,500 + 0,500 = 1,000
Vento = 0,600 + 0,000 = 0,600

---

## Asta 20: Trave in legno a falda Falda 1 fili 55-241

Verifiche condotte secondo D.M. 17-01-18 (N.T.C.)

**Dati generali**

Lunghezza = 33.8

**Caratteristiche della sezione**

| Descrizione | Tipo | Base | Altezza | Area | Jx | Jy | Wx | Wy |
|---|---|---|---|---|---|---|---|---|
| R 20x20 | Rettangolare | 20 | 20 | 400 | 13333.33 | 13333.33 | 1333.33 | 1333.33 |

Materiale: C14 EN 338:2016
Rapporto luce/freccia elastica limite = 300
Rapporto luce/freccia elastica differita = 200
Mensola Y: Nessuno; Mensola X: Nessuno
Classe di servizio 1

**Verifica flessione D.M. 17-01-18 §4.4.8.1.6**

Sezione ad ascissa 0
Coefficiente parziale di sicurezza del materiale γ = 1.5
Kmod = 1.1
Sm,y,d/fm,y,d + Km*(Sm,z,d/fm,z,d) <= 1
Km*(Sm,y,d/fm,y,d) + Sm,z,d/fm,z,d <= 1
0.7*0.3/102.7+37.6/102.7=0.37 <= 1 (formula 4.4.5b) Comb: SLV, 12; Durata minima del carico nella combinazione: istantaneo
Mx = -409.9; My = -50150.8

**Verifica taglio D.M. 17-01-18 §4.4.8.1.9**

Sezione ad ascissa 33.8
Coefficiente parziale di sicurezza del materiale γ = 1.5
Kmod = 1.1; kcr = 0.67
τ,d <= fv,d
Sqrt(1.57^2+0.05^2) = 1.57 <= 22 Comb: SLV, 8; Durata minima del carico nella combinazione: istantaneo
Tx = -279.4; Ty = -8.9

**Verifica taglio+torsione D.M. 17-01-18 §4.4.8.1.11**

Sezione ad ascissa 33.8
Coefficiente parziale di sicurezza del materiale γ = 1.5
Kmod = 0.8; kcr = 0.67
τ,tor,d/(ksh*fv,d) + (τ,y,d/fv,d)^2 + (τ,z,d/fv,d)^2 <= 1
0.24+0+0 <= 1 Comb: SLU, 29; Durata minima del carico nella combinazione: media
Tx = -184.4; Ty = -7.3; Mt = -7297

**Verifica torsione D.M. 17-01-18 §4.4.8.1.10**

Sezione ad ascissa 33.8
Coefficiente parziale di sicurezza del materiale γ = 1.5
Kmod = 0.8
τ,tor,d <= Ksh * fv,d
4.38 <= 18.4 Comb: SLU, 29; Durata minima del carico nella combinazione: media
Mt = -7297

**Verifica della freccia istantanea totale D.M. 17-01-18 §C4.4.7 Circolare 7 21-01-19**

Sezione ad ascissa 16.9
Kdef = 0
Uinst tot in x = 0
Uinst tot in y = 0
Uinst tot = 0
Luce/Uinst,tot > limite
33.8/0=20233.5 > 300 Comb: SLE rara, 17

**Verifica della freccia istantanea variabile D.M. 17-01-18 §4.4.7**

Sezione ad ascissa 16.9
Kdef = 0
Uinst var in x = 0
Uinst var in y = 0
Uinst var = 0
Luce/Uinst,var > limite
33.8/0=31048.7 > 300 Comb: SLE rara, 17

**Verifica della freccia finale EC5 §4.4.7 - EC5 2.2.3 (3)**

Sezione ad ascissa 16.9
Kdef = 0.6
Ufin in x = 0
Ufin in y = 0
Ufin = 0
Luce/Ufin > limite
33.8/0=16537.2 > 200
Coefficienti combinatori impiegati:
Pesi strutturali = 1,000 + 0,600 = 1,600
Permanenti portati = 1,000 + 0,600 = 1,600
Variabile A = 0,700 + 0,180 = 0,880
Neve = 0,500 + 0,500 = 1,000
Vento = 0,600 + 0,000 = 0,600

## Asta 21: Trave in legno a falda Falda 1 fili 55-241

Verifiche condotte secondo D.M. 17-01-18 (N.T.C.)

### Dati generali

Lunghezza = 33.8

### Caratteristiche della sezione

| Descrizione | Tipo | Base | Altezza | Area | Jx | Jy | Wx | Wy |
|---|---|---|---|---|---|---|---|---|
| R 20x20 | Rettangolare | 20 | 20 | 400 | 13333.33 | 13333.33 | 1333.33 | 1333.33 |

Materiale: C14 EN 338:2016
Rapporto luce/freccia elastica limite = 300
Rapporto luce/freccia elastica differita = 200
Mensola Y: Nessuno; Mensola X: Nessuno
Classe di servizio 1

### Verifica flessione D.M. 17-01-18 §4.4.8.1.6

Sezione ad ascissa 0
Coefficiente parziale di sicurezza del materiale γ = 1.5
Kmod = 1.1
Sm,y,d/fm,y,d + Km*(Sm,z,d/fm,z,d) <= 1
Km*(Sm,y,d/fm,y,d) + Sm,z,d/fm,z,d <= 1
0.7*0.1/102.7+35.2/102.7=0.34 <= 1 (formula 4.4.5b) Comb: SLV, 12; Durata minima del carico nella combinazione: istantaneo
Mx = 191; My = -46946.8

### Verifica taglio D.M. 17-01-18 §4.4.8.1.9

Sezione ad ascissa 33.8
Coefficiente parziale di sicurezza del materiale γ = 1.5
Kmod = 1.1; kcr = 0.67
τ,d <= fv,d
Sqrt(1.41^2+0.06^2) = 1.41 <= 22 Comb: SLV, 12; Durata minima del carico nella combinazione: istantaneo
Tx = 250.1; Ty = -10.3

### Verifica taglio+torsione D.M. 17-01-18 §4.4.8.1.11

Sezione ad ascissa 0
Coefficiente parziale di sicurezza del materiale γ = 1.5
Kmod = 0.8; kcr = 0.67
τ,tor,d/(ksh*fv,d) + (τ,y,d/fv,d)^2 + (τ,z,d/fv,d)^2 <= 1
0.23+0+0 <= 1 Comb: SLU, 80; Durata minima del carico nella combinazione: media
Tx = 117.2; Ty = 13.2; Mt = 7171.8

### Verifica torsione D.M. 17-01-18 §4.4.8.1.10

Sezione ad ascissa 33.8
Coefficiente parziale di sicurezza del materiale γ = 1.5
Kmod = 0.8
τ,tor,d <= Ksh * fv,d
4.31 <= 18.4 Comb: SLU, 80; Durata minima del carico nella combinazione: media
Mt = 7171.8

### Verifica della freccia istantanea totale D.M. 17-01-18 §C4.4.7 Circolare 7 21-01-19

Sezione ad ascissa 16.9
Kdef = 0
Uinst tot in x = 0
Uinst tot in y = 0
Uinst tot = 0
Luce/Uinst,tot > limite
33.8/0=19384.3 > 300 Comb: SLE rara, 17

### Verifica della freccia istantanea variabile D.M. 17-01-18 §4.4.7

Sezione ad ascissa 16.9
Kdef = 0
Uinst var in x = 0
Uinst var in y = 0
Uinst var = 0
Luce/Uinst,var > limite
33.8/0=29917.5 > 300 Comb: SLE rara, 17

### Verifica della freccia finale EC5 §4.4.7 - EC5 2.2.3 (3)

Sezione ad ascissa 16.9
Kdef = 0.6
Ufin in x = 0

Ufin in y = 0
Ufin = 0
Luce/Ufin > limite
33.8/0=15883.4 > 200
Coefficienti combinatori impiegati:
Pesi strutturali = 1,000 + 0,600 = 1,600
Permanenti portati = 1,000 + 0,600 = 1,600
Variabile A = 0,700 + 0,180 = 0,880
Neve = 0,500 + 0,500 = 1,000
Vento = 0,600 + 0,000 = 0,600

## Asta 22: Trave in legno a falda Falda 1 fili 55-241

Verifiche condotte secondo D.M. 17-01-18 (N.T.C.)

### Dati generali

Lunghezza = 33.8

### Caratteristiche della sezione

| Descrizione | Tipo | Base | Altezza | Area | Jx | Jy | Wx | Wy |
|---|---|---|---|---|---|---|---|---|
| R 20x20 | Rettangolare | 20 | 20 | 400 | 13333.33 | 13333.33 | 1333.33 | 1333.33 |

Materiale: C14 EN 338:2016
Rapporto luce/freccia elastica limite = 300
Rapporto luce/freccia elastica differita = 200
Mensola Y: Nessuno; Mensola X: Nessuno
Classe di servizio 1

### Verifica flessione D.M. 17-01-18 §4.4.8.1.6

Sezione ad ascissa 0
Coefficiente parziale di sicurezza del materiale γ = 1.5
Kmod = 1.1
Sm,y,d/fm,y,d + Km*(Sm,z,d/fm,z,d) <= 1
Km*(Sm,y,d/fm,y,d) + Sm,z,d/fm,z,d <= 1
0.7*0.3/102.7+30.4/102.7=0.3 <= 1 (formula 4.4.5b) Comb: SLV, 12; Durata minima del carico nella combinazione: istantaneo
Mx = -453.2; My = -40471.3

### Verifica taglio D.M. 17-01-18 §4.4.8.1.9

Sezione ad ascissa 0
Coefficiente parziale di sicurezza del materiale γ = 1.5
Kmod = 1.1; kcr = 0.67
τ,d <= fv,d
Sqrt(2.46^2+0.05^2) = 2.46 <= 22 Comb: SLV, 6; Durata minima del carico nella combinazione: istantaneo
Tx = -437.9; Ty = 8.3

### Verifica taglio+torsione D.M. 17-01-18 §4.4.8.1.11

Sezione ad ascissa 33.8
Coefficiente parziale di sicurezza del materiale γ = 1.5
Kmod = 0.8; kcr = 0.67
τ,tor,d/(ksh*fv,d) + (τ,y,d/fv,d)^2 + (τ,z,d/fv,d)^2 <= 1
0.31+0+0 <= 1 Comb: SLU, 71; Durata minima del carico nella combinazione: media
Tx = -122.5; Ty = -3.8; Mt = -9634.3

### Verifica torsione D.M. 17-01-18 §4.4.8.1.10

Sezione ad ascissa 33.8
Coefficiente parziale di sicurezza del materiale γ = 1.5
Kmod = 0.8
τ,tor,d <= Ksh * fv,d
5.79 <= 18.4 Comb: SLU, 71; Durata minima del carico nella combinazione: media
Mt = -9634.3

### Verifica della freccia istantanea totale D.M. 17-01-18 §C4.4.7 Circolare 7 21-01-19

Sezione ad ascissa 16.9
Kdef = 0
Uinst tot in x = 0
Uinst tot in y = 0
Uinst tot = 0
Luce/Uinst,tot > limite
33.8/0=19687.2 > 300 Comb: SLE rara, 17

### Verifica della freccia istantanea variabile D.M. 17-01-18 §4.4.7

Sezione ad ascissa 16.9
Kdef = 0

Uinst var in x = 0
Uinst var in y = 0
Uinst var = 0
Luce/Uinst,var > limite
33.8/0=30150 > 300 Comb: SLE rara, 17

**Verifica della freccia finale EC5 §4.4.7 - EC5 2.2.3 (3)**

Sezione ad ascissa 16.9
Kdef = 0.6
Ufin in x = 0
Ufin in y = 0
Ufin = 0
Luce/Ufin > limite
33.8/0=16236.4 > 200
Coefficienti combinatori impiegati:
Pesi strutturali = 1,000 + 0,600 = 1,600
Permanenti portati = 1,000 + 0,600 = 1,600
Variabile A = 0,700 + 0,180 = 0,880
Neve = 0,500 + 0,500 = 1,000
Vento = 0,600 + 0,000 = 0,600

---

## Asta 23: Trave in legno a falda Falda 1 fili 55-241

Verifiche condotte secondo D.M. 17-01-18 (N.T.C.)

**Dati generali**

Lunghezza = 33.8

**Caratteristiche della sezione**

| Descrizione | Tipo | Base | Altezza | Area | Jx | Jy | Wx | Wy |
|---|---|---|---|---|---|---|---|---|
| R 20x20 | Rettangolare | 20 | 20 | 400 | 13333.33 | 13333.33 | 1333.33 | 1333.33 |

Materiale: C14 EN 338:2016
Rapporto luce/freccia elastica limite = 300
Rapporto luce/freccia elastica differita = 200
Mensola Y: Nessuno; Mensola X: Nessuno
Classe di servizio 1

**Verifica flessione D.M. 17-01-18 §4.4.8.1.6**

Sezione ad ascissa 0
Coefficiente parziale di sicurezza del materiale γ = 1.5
Kmod = 1.1
Sm,y,d/fm,y,d + Km*(Sm,z,d/fm,z,d) <= 1
Km*(Sm,y,d/fm,y,d) + Sm,z,d/fm,z,d <= 1
0.7*0.3/102.7+23.1/102.7=0.23 <= 1 (formula 4.4.5b) Comb: SLV, 12; Durata minima del carico nella combinazione: istantaneo
Mx = 408.9; My = -30803.8

**Verifica taglio D.M. 17-01-18 §4.4.8.1.9**

Sezione ad ascissa 33.8
Coefficiente parziale di sicurezza del materiale γ = 1.5
Kmod = 1.1; kcr = 0.67
τ,d <= fv,d
Sqrt(2.62^2+0.08^2) = 2.63 <= 22 Comb: SLV, 12; Durata minima del carico nella combinazione: istantaneo
Tx = 466.5; Ty = -15

**Verifica taglio+torsione D.M. 17-01-18 §4.4.8.1.11**

Sezione ad ascissa 33.8
Coefficiente parziale di sicurezza del materiale γ = 1.5
Kmod = 1.1; kcr = 0.67
τ,tor,d/(ksh*fv,d) + (τ,y,d/fv,d)^2 + (τ,z,d/fv,d)^2 <= 1
0.22+0.01+0 <= 1 Comb: SLV, 12; Durata minima del carico nella combinazione: istantaneo
Tx = 466.5; Ty = -15; Mt = 9100.4

**Verifica torsione D.M. 17-01-18 §4.4.8.1.10**

Sezione ad ascissa 33.8
Coefficiente parziale di sicurezza del materiale γ = 1.5
Kmod = 1.1
τ,tor,d <= Ksh * fv,d
5.46 <= 25.3 Comb: SLV, 12; Durata minima del carico nella combinazione: istantaneo
Mt = 9100.4

**Verifica della freccia istantanea totale D.M. 17-01-18 §C4.4.7 Circolare 7 21-01-19**

Sezione ad ascissa 15.8

Kdef = 0
Uinst tot in x = 0
Uinst tot in y = 0
Uinst tot = 0
Luce/Uinst,tot > limite
33.8/0=22116.6 > 300 Comb: SLE rara, 9

**Verifica della freccia istantanea variabile D.M. 17-01-18 §4.4.7**

Sezione ad ascissa 16.9
Kdef = 0
Uinst var in x = 0
Uinst var in y = 0
Uinst var = 0
Luce/Uinst,var > limite
33.8/0=33477.9 > 300 Comb: SLE rara, 9

**Verifica della freccia finale EC5 §4.4.7 - EC5 2.2.3 (3)**

Sezione ad ascissa 15.8
Kdef = 0.6
Ufin in x = 0
Ufin in y = 0
Ufin = 0
Luce/Ufin > limite
33.8/0=18373.5 > 200
Coefficienti combinatori impiegati:
Pesi strutturali = 1,000 + 0,600 = 1,600
Permanenti portati = 1,000 + 0,600 = 1,600
Neve = 0,500 + 0,500 = 1,000
Vento = 0,600 + 0,000 = 0,600

## Asta 24: Trave in legno a falda Falda 1 fili 55-241

Verifiche condotte secondo D.M. 17-01-18 (N.T.C.)

**Dati generali**

Lunghezza = 33.8

**Caratteristiche della sezione**

| Descrizione | Tipo | Base | Altezza | Area | Jx | Jy | Wx | Wy |
|---|---|---|---|---|---|---|---|---|
| R 20x20 | Rettangolare | 20 | 20 | 400 | 13333.33 | 13333.33 | 1333.33 | 1333.33 |

Materiale: C14 EN 338:2016
Rapporto luce/freccia elastica limite = 300
Rapporto luce/freccia elastica differita = 200
Mensola Y: Nessuno; Mensola X: Nessuno
Classe di servizio 1

**Verifica pressoflessione D.M. 17-01-18 §4.4.8.1.8**

Sezione ad ascissa 33.8
Coefficiente parziale di sicurezza del materiale γ = 1.5
Kmod = 1.1
(Sc,0,d/fc,0,d)^2 + Sm,y,d/fm,y,d + Km*(Sm,z,d/fm,z,d) <= 1
(Sc,0,d/fc,0,d)^2 + Km*(Sm,y,d/fm,y,d) + Sm,z,d/fm,z,d <= 1
(1.7/117.3)^2+0.7*0.8/102.7+19.1/102.7=0.19 <= 1 [4.4.7b] Comb: SLV, 6; Durata minima del carico nella combinazione: istantaneo
Mx = 1005.4; My = -25400.8; N = -662.3

**Verifica taglio D.M. 17-01-18 §4.4.8.1.9**

Sezione ad ascissa 0
Coefficiente parziale di sicurezza del materiale γ = 1.5
Kmod = 1.1; kcr = 0.67
τ,d <= fv,d
Sqrt(2.37^2+0.06^2) = 2.37 <= 22 Comb: SLV, 6; Durata minima del carico nella combinazione: istantaneo
Tx = -421.4; Ty = 10.8

**Verifica taglio+torsione D.M. 17-01-18 §4.4.8.1.11**

Sezione ad ascissa 0
Coefficiente parziale di sicurezza del materiale γ = 1.5
Kmod = 0.8; kcr = 0.67
τ,tor,d/(ksh*fv,d) + (τ,y,d/fv,d)^2 + (τ,z,d/fv,d)^2 <= 1
0.39+0+0 <= 1 Comb: SLU, 71; Durata minima del carico nella combinazione: media
Tx = -95.8; Ty = 15.1; Mt = -12080.9

**Verifica torsione D.M. 17-01-18 §4.4.8.1.10**

Sezione ad ascissa 33.8
Coefficiente parziale di sicurezza del materiale γ = 1.5
Kmod = 0.8
τ,tor,d <= Ksh * fv,d
7.25 <= 18.4 Comb: SLU, 71; Durata minima del carico nella combinazione: media
Mt = -12080.9

**Verifica della freccia istantanea totale D.M. 17-01-18 §C4.4.7 Circolare 7 21-01-19**

Sezione ad ascissa 16.9
Kdef = 0
Uinst tot in x = 0
Uinst tot in y = 0
Uinst tot = 0
Luce/Uinst,tot > limite
33.8/0=22710.2 > 300 Comb: SLE rara, 8

**Verifica della freccia istantanea variabile D.M. 17-01-18 §4.4.7**

Sezione ad ascissa 16.9
Kdef = 0
Uinst var in x = 0
Uinst var in y = 0
Uinst var = 0
Luce/Uinst,var > limite
33.8/0=32802.9 > 300 Comb: SLE rara, 8

**Verifica della freccia finale EC5 §4.4.7 - EC5 2.2.3 (3)**

Sezione ad ascissa 16.9
Kdef = 0.6
Ufin in x = 0
Ufin in y = 0
Ufin = 0
Luce/Ufin > limite
33.8/0=19171.1 > 200
Coefficienti combinatori impiegati:
Pesi strutturali = 1,000 + 0,600 = 1,600
Permanenti portati = 1,000 + 0,600 = 1,600
Neve = 0,500 + 0,500 = 1,000

---

## Asta 25: Trave in legno a falda Falda 1 fili 55-241

Verifiche condotte secondo D.M. 17-01-18 (N.T.C.)

**Dati generali**

Lunghezza = 33.8

**Caratteristiche della sezione**

| Descrizione | Tipo | Base | Altezza | Area | Jx | Jy | Wx | Wy |
|---|---|---|---|---|---|---|---|---|
| R 20x20 | Rettangolare | 20 | 20 | 400 | 13333.33 | 13333.33 | 1333.33 | 1333.33 |

Materiale: C14 EN 338:2016
Rapporto luce/freccia elastica limite = 300
Rapporto luce/freccia elastica differita = 200
Mensola Y: Nessuno; Mensola X: Nessuno
Classe di servizio 1

**Verifica pressoflessione D.M. 17-01-18 §4.4.8.1.8**

Sezione ad ascissa 0
Coefficiente parziale di sicurezza del materiale γ = 1.5
Kmod = 1.1
(Sc,0,d/fc,0,d)^2 + Sm,y,d/fm,y,d + Km*(Sm,z,d/fm,z,d) <= 1
(Sc,0,d/fc,0,d)^2 + Km*(Sm,y,d/fm,y,d) + Sm,z,d/fm,z,d <= 1
(1.2/117.3)^2+0.7*2.8/102.7+18.7/102.7=0.2 <= 1 [4.4.7b] Comb: SLV, 6; Durata minima del carico nella combinazione: istantaneo
Mx = -3706.9; My = -24956.1; N = -495.2

**Verifica taglio D.M. 17-01-18 §4.4.8.1.9**

Sezione ad ascissa 33.8
Coefficiente parziale di sicurezza del materiale γ = 1.5
Kmod = 1.1; kcr = 0.67
τ,d <= fv,d
Sqrt(2.14^2+0.51^2) = 2.2 <= 22 Comb: SLV, 12; Durata minima del carico nella combinazione: istantaneo
Tx = 381; Ty = -89.8

**Verifica taglio+torsione D.M. 17-01-18 §4.4.8.1.11**

Sezione ad ascissa 33.8
Coefficiente parziale di sicurezza del materiale γ = 1.5
Kmod = 1.1; kcr = 0.67
τ,tor,d/(ksh*fv,d) + (τ,y,d/fv,d)^2 + (τ,z,d/fv,d)^2 <= 1
0.23+0.01+0 <= 1 Comb: SLV, 12; Durata minima del carico nella combinazione: istantaneo
Tx = 381; Ty = -89.8; Mt = 9782.3

**Verifica torsione D.M. 17-01-18 §4.4.8.1.10**

Sezione ad ascissa 33.8
Coefficiente parziale di sicurezza del materiale γ = 1.5
Kmod = 1.1
τ,tor,d <= Ksh * fv,d
5.87 <= 25.3 Comb: SLV, 12; Durata minima del carico nella combinazione: istantaneo
Mt = 9782.3

**Verifica della freccia istantanea totale D.M. 17-01-18 §C4.4.7 Circolare 7 21-01-19**

Sezione ad ascissa 15.8
Kdef = 0
Uinst tot in x = 0
Uinst tot in y = 0
Uinst tot = 0
Luce/Uinst,tot > limite
33.8/0=27885.9 > 300 Comb: SLE rara, 8

**Verifica della freccia istantanea variabile D.M. 17-01-18 §4.4.7**

Sezione ad ascissa 15.8
Kdef = 0
Uinst var in x = 0
Uinst var in y = 0
Uinst var = 0
Luce/Uinst,var > limite
33.8/0=38092.9 > 300 Comb: SLE rara, 8

**Verifica della freccia finale EC5 §4.4.7 - EC5 2.2.3 (3)**

Sezione ad ascissa 15.8
Kdef = 0.6
Ufin in x = 0
Ufin in y = 0
Ufin = 0
Luce/Ufin > limite
33.8/0=24023.6 > 200
Coefficienti combinatori impiegati:
Pesi strutturali = 1,000 + 0,600 = 1,600
Permanenti portati = 1,000 + 0,600 = 1,600
Neve = 0,500 + 0,500 = 1,000

---

## Asta 26: Trave in legno a falda Falda 1 fili 55-241

Verifiche condotte secondo D.M. 17-01-18 (N.T.C.)

**Dati generali**

Lunghezza = 33.8

**Caratteristiche della sezione**

| Descrizione | Tipo | Base | Altezza | Area | Jx | Jy | Wx | Wy |
|---|---|---|---|---|---|---|---|---|
| R 20x20 | Rettangolare | 20 | 20 | 400 | 13333.33 | 13333.33 | 1333.33 | 1333.33 |

Materiale: C14 EN 338:2016
Rapporto luce/freccia elastica limite = 300
Rapporto luce/freccia elastica differita = 200
Mensola Y: Nessuno; Mensola X: Nessuno
Classe di servizio 1

**Verifica pressoflessione D.M. 17-01-18 §4.4.8.1.8**

Sezione ad ascissa 0
Coefficiente parziale di sicurezza del materiale γ = 1.5
Kmod = 1.1
(Sc,0,d/fc,0,d)^2 + Sm,y,d/fm,y,d + Km*(Sm,z,d/fm,z,d) <= 1
(Sc,0,d/fc,0,d)^2 + Km*(Sm,y,d/fm,y,d) + Sm,z,d/fm,z,d <= 1
(1/117.3)^2+0.7*4.4/102.7+14.6/102.7=0.17 <= 1 [4.4.7b] Comb: SLV, 6; Durata minima del carico nella combinazione: istantaneo
Mx = 5922.6; My = -19409.7; N = -400.6

**Verifica taglio D.M. 17-01-18 §4.4.8.1.9**

Sezione ad ascissa 0
Coefficiente parziale di sicurezza del materiale γ = 1.5
Kmod = 1.1; kcr = 0.67
τ,d <= fv,d
Sqrt(3.14^2+0.39^2) = 3.17 <= 22 Comb: SLV, 10; Durata minima del carico nella combinazione: istantaneo
Tx = 559; Ty = 68.7

**Verifica taglio+torsione D.M. 17-01-18 §4.4.8.1.11**

Sezione ad ascissa 0
Coefficiente parziale di sicurezza del materiale γ = 1.5
Kmod = 0.8; kcr = 0.67
τ,tor,d/(ksh*fv,d) + (τ,y,d/fv,d)^2 + (τ,z,d/fv,d)^2 <= 1
0.31+0.01+0 <= 1 Comb: SLU, 80; Durata minima del carico nella combinazione: media
Tx = 293.6; Ty = 10.9; Mt = -9408.1

**Verifica torsione D.M. 17-01-18 §4.4.8.1.10**

Sezione ad ascissa 33.8
Coefficiente parziale di sicurezza del materiale γ = 1.5
Kmod = 0.8
τ,tor,d <= Ksh * fv,d
5.65 <= 18.4 Comb: SLU, 80; Durata minima del carico nella combinazione: media
Mt = -9408.1

**Verifica della freccia istantanea totale D.M. 17-01-18 §C4.4.7 Circolare 7 21-01-19**

Sezione ad ascissa 18
Kdef = 0
Uinst tot in x = 0
Uinst tot in y = 0
Uinst tot = 0
Luce/Uinst,tot > limite
33.8/0=130444.5 > 300 Comb: SLE rara, 10

**Verifica della freccia istantanea variabile D.M. 17-01-18 §4.4.7**

Sezione ad ascissa 16.9
Kdef = 0
Uinst var in x = 0
Uinst var in y = 0
Uinst var = 0
Luce/Uinst,var > limite
33.8/0=146910.8 > 300 Comb: SLE rara, 10

**Verifica della freccia finale EC5 §4.4.7 - EC5 2.2.3 (3)**

Sezione ad ascissa 19.1
Kdef = 0.6
Ufin in x = 0
Ufin in y = 0
Ufin = 0
Luce/Ufin > limite
33.8/0=112775.1 > 200
Coefficienti combinatori impiegati:
Pesi strutturali = 1,000 + 0,600 = 1,600
Permanenti portati = 1,000 + 0,600 = 1,600
Variabile A = 0,700 + 0,180 = 0,880
Vento = 0,600 + 0,400 = 1,000

---

## Asta 27: Trave in legno a falda Falda 1 fili 55-241

Verifiche condotte secondo D.M. 17-01-18 (N.T.C.)

**Dati generali**

Lunghezza = 33.8

**Caratteristiche della sezione**

| Descrizione | Tipo | Base | Altezza | Area | Jx | Jy | Wx | Wy |
|---|---|---|---|---|---|---|---|---|
| R 20x20 | Rettangolare | 20 | 20 | 400 | 13333.33 | 13333.33 | 1333.33 | 1333.33 |

Materiale: C14 EN 338:2016
Rapporto luce/freccia elastica limite = 300
Rapporto luce/freccia elastica differita = 200
Mensola Y: Nessuno; Mensola X: Nessuno
Classe di servizio 1

**Verifica pressoflessione D.M. 17-01-18 §4.4.8.1.8**

Sezione ad ascissa 33.8
Coefficiente parziale di sicurezza del materiale γ = 1.5
Kmod = 0.8
(Sc,0,d/fc,0,d)^2 + Sm,y,d/fm,y,d + Km*(Sm,z,d/fm,z,d) <= 1
(Sc,0,d/fc,0,d)^2 + Km*(Sm,y,d/fm,y,d) + Sm,z,d/fm,z,d <= 1
(0.6/85.3)^2+0.7*7.1/74.7+26.7/74.7=0.42 <= 1 [4.4.7b] Comb: SLU, 80; Durata minima del carico nella combinazione: media
Mx = 9514.1; My = 35545.3; N = -238.1

**Verifica taglio D.M. 17-01-18 §4.4.8.1.9**

Sezione ad ascissa 33.8
Coefficiente parziale di sicurezza del materiale γ = 1.5
Kmod = 0.8; kcr = 0.67
τ,d <= fv,d
Sqrt(4.71^2+0.62^2) = 4.76 <= 16 Comb: SLU, 71; Durata minima del carico nella combinazione: media
Tx = 838.2; Ty = -109.9

**Verifica taglio+torsione D.M. 17-01-18 §4.4.8.1.11**

Sezione ad ascissa 33.8
Coefficiente parziale di sicurezza del materiale γ = 1.5
Kmod = 0.8; kcr = 0.67
τ,tor,d/(ksh*fv,d) + (τ,y,d/fv,d)^2 + (τ,z,d/fv,d)^2 <= 1
0.33+0.09+0 <= 1 Comb: SLU, 71; Durata minima del carico nella combinazione: media
Tx = 838.2; Ty = -109.9; Mt = 10036.8

**Verifica torsione D.M. 17-01-18 §4.4.8.1.10**

Sezione ad ascissa 33.8
Coefficiente parziale di sicurezza del materiale γ = 1.5
Kmod = 0.8
τ,tor,d <= Ksh * fv,d
6.03 <= 18.4 Comb: SLU, 71; Durata minima del carico nella combinazione: media
Mt = 10036.8

**Verifica della freccia istantanea totale D.M. 17-01-18 §C4.4.7 Circolare 7 21-01-19**

Sezione ad ascissa 19.1
Kdef = 0
Uinst tot in x = 0
Uinst tot in y = 0
Uinst tot = 0
Luce/Uinst,tot > limite
33.8/0=15102.1 > 300 Comb: SLE rara, 17

**Verifica della freccia istantanea variabile D.M. 17-01-18 §4.4.7**

Sezione ad ascissa 19.1
Kdef = 0
Uinst var in x = 0
Uinst var in y = 0
Uinst var = 0
Luce/Uinst,var > limite
33.8/0=22605.4 > 300 Comb: SLE rara, 17

**Verifica della freccia finale EC5 §4.4.7 - EC5 2.2.3 (3)**

Sezione ad ascissa 19.1
Kdef = 0.6
Ufin in x = 0
Ufin in y = 0
Ufin = 0
Luce/Ufin > limite
33.8/0=12514.1 > 200
Coefficienti combinatori impiegati:
Pesi strutturali = 1,000 + 0,600 = 1,600
Permanenti portati = 1,000 + 0,600 = 1,600
Variabile A = 0,700 + 0,180 = 0,880
Neve = 0,500 + 0,500 = 1,000
Vento = 0,600 + 0,000 = 0,600

---

## Asta 28: Trave in legno a falda Falda 1 fili 55-241

Verifiche condotte secondo D.M. 17-01-18 (N.T.C.)

Dati generali

Lunghezza = 33.8

Caratteristiche della sezione

| Descrizione | Tipo | Base | Altezza | Area | Jx | Jy | Wx | Wy |
|---|---|---|---|---|---|---|---|---|
| R 20x20 | Rettangolare | 20 | 20 | 400 | 13333.33 | 13333.33 | 1333.33 | 1333.33 |

Materiale: C14 EN 338:2016
Rapporto luce/freccia elastica limite = 300
Rapporto luce/freccia elastica differita = 200
Mensola Y: Nessuno; Mensola X: Nessuno
Classe di servizio 1

Verifica pressoflessione D.M. 17-01-18 §4.4.8.1.8

Sezione ad ascissa 0
Coefficiente parziale di sicurezza del materiale γ = 1.5
Kmod = 0.8
(Sc,0,d/fc,0,d)^2 + Sm,y,d/fm,y,d + Km*(Sm,z,d/fm,z,d) <= 1
(Sc,0,d/fc,0,d)^2 + Km*(Sm,y,d/fm,y,d) + Sm,z,d/fm,z,d <= 1
(2.2/85.3)^2+0.7*8.1/74.7+28.2/74.7=0.45 <= 1 [4.4.7b] Comb: SLU, 80; Durata minima del carico nella combinazione: media
Mx = -10866.6; My = 37595.2; N = -864.4

Verifica taglio D.M. 17-01-18 §4.4.8.1.9

Sezione ad ascissa 33.8
Coefficiente parziale di sicurezza del materiale γ = 1.5
Kmod = 1.1; kcr = 0.67
τ,d <= fv,d
Sqrt(4.61^2+0.45^2) = 4.63 <= 22 Comb: SLV, 8; Durata minima del carico nella combinazione: istantaneo
Tx = -818.9; Ty = -79.7

Verifica taglio+torsione D.M. 17-01-18 §4.4.8.1.11

Sezione ad ascissa 33.8
Coefficiente parziale di sicurezza del materiale γ = 1.5
Kmod = 0.8; kcr = 0.67
τ,tor,d/(ksh*fv,d) + (τ,y,d/fv,d)^2 + (τ,z,d/fv,d)^2 <= 1
0.59+0.01+0 <= 1 Comb: SLU, 80; Durata minima del carico nella combinazione: media
Tx = -276.2; Ty = -98.1; Mt = -18032.9

Verifica torsione D.M. 17-01-18 §4.4.8.1.10

Sezione ad ascissa 33.8
Coefficiente parziale di sicurezza del materiale γ = 1.5
Kmod = 0.8
τ,tor,d <= Ksh * fv,d
10.83 <= 18.4 Comb: SLU, 80; Durata minima del carico nella combinazione: media
Mt = -18032.9

Verifica della freccia istantanea totale D.M. 17-01-18 §C4.4.7 Circolare 7 21-01-19

Sezione ad ascissa 16.9
Kdef = 0
Uinst tot in x = 0
Uinst tot in y = 0
Uinst tot = 0
Luce/Uinst,tot > limite
33.8/0=10023.4 > 300 Comb: SLE rara, 16

Verifica della freccia istantanea variabile D.M. 17-01-18 §4.4.7

Sezione ad ascissa 16.9
Kdef = 0
Uinst var in x = 0
Uinst var in y = 0
Uinst var = 0
Luce/Uinst,var > limite
33.8/0=15017.8 > 300 Comb: SLE rara, 16

Verifica della freccia finale EC5 §4.4.7 - EC5 2.2.3 (3)

Sezione ad ascissa 16.9
Kdef = 0.6
Ufin in x = 0
Ufin in y = 0
Ufin = 0
Luce/Ufin > limite
33.8/0=8331 > 200
Coefficienti combinatori impiegati:

Pesi strutturali = 1,000 + 0,600 = 1,600
Permanenti portati = 1,000 + 0,600 = 1,600
Variabile A = 0,700 + 0,180 = 0,880
Neve = 0,500 + 0,500 = 1,000

## Asta 29: Trave in legno a falda Falda 1 fili 55-241

Verifiche condotte secondo D.M. 17-01-18 (N.T.C.)

### Dati generali

Lunghezza = 33.8

### Caratteristiche della sezione

| Descrizione | Tipo | Base | Altezza | Area | Jx | Jy | Wx | Wy |
|---|---|---|---|---|---|---|---|---|
| R 20x20 | Rettangolare | 20 | 20 | 400 | 13333.33 | 13333.33 | 1333.33 | 1333.33 |

Materiale: C14 EN 338:2016
Rapporto luce/freccia elastica limite = 300
Rapporto luce/freccia elastica differita = 200
Mensola Y: Nessuno; Mensola X: Nessuno
Classe di servizio 1

### Verifica pressoflessione D.M. 17-01-18 §4.4.8.1.8

Sezione ad ascissa 33.8
Coefficiente parziale di sicurezza del materiale γ = 1.5
Kmod = 1.1
(Sc,0,d/fc,0,d)^2 + Sm,y,d/fm,y,d + Km*(Sm,z,d/fm,z,d) <= 1
(Sc,0,d/fc,0,d)^2 + Km*(Sm,y,d/fm,y,d) + Sm,z,d/fm,z,d <= 1
(1.7/117.3)^2+0.7*1.4/102.7+77.6/102.7=0.77 <= 1 [4.4.7b] Comb: SLV, 10; Durata minima del carico nella combinazione: istantaneo
Mx = -1851.2; My = 103421.7; N = -669.2

### Verifica taglio D.M. 17-01-18 §4.4.8.1.9

Sezione ad ascissa 0
Coefficiente parziale di sicurezza del materiale γ = 1.5
Kmod = 1.1; kcr = 0.67
τ,d <= fv,d
Sqrt(7.45^2+0.16^2) = 7.45 <= 22 Comb: SLV, 10; Durata minima del carico nella combinazione: istantaneo
Tx = 1324.4; Ty = 27.7

### Verifica taglio+torsione D.M. 17-01-18 §4.4.8.1.11

Sezione ad ascissa 0
Coefficiente parziale di sicurezza del materiale γ = 1.5
Kmod = 1.1; kcr = 0.67
τ,tor,d/(ksh*fv,d) + (τ,y,d/fv,d)^2 + (τ,z,d/fv,d)^2 <= 1
0.19+0.11+0 <= 1 Comb: SLV, 10; Durata minima del carico nella combinazione: istantaneo
Tx = 1324.4; Ty = 27.7; Mt = 8080.1

### Verifica torsione D.M. 17-01-18 §4.4.8.1.10

Sezione ad ascissa 33.8
Coefficiente parziale di sicurezza del materiale γ = 1.5
Kmod = 1.1
τ,tor,d <= Ksh * fv,d
4.85 <= 25.3 Comb: SLV, 10; Durata minima del carico nella combinazione: istantaneo
Mt = 8080.1

### Verifica della freccia istantanea totale D.M. 17-01-18 §C4.4.7 Circolare 7 21-01-19

Sezione ad ascissa 16.9
Kdef = 0
Uinst tot in x = 0
Uinst tot in y = 0
Uinst tot = 0
Luce/Uinst,tot > limite
33.8/0=10672.7 > 300 Comb: SLE rara, 16

### Verifica della freccia istantanea variabile D.M. 17-01-18 §4.4.7

Sezione ad ascissa 16.9
Kdef = 0
Uinst var in x = 0
Uinst var in y = 0
Uinst var = 0
Luce/Uinst,var > limite
33.8/0=16386 > 300 Comb: SLE rara, 16

### Verifica della freccia finale EC5 §4.4.7 - EC5 2.2.3 (3)

Sezione ad ascissa 16.9
Kdef = 0.6
Ufin in x = 0
Ufin in y = 0
Ufin = 0
Luce/Ufin > limite
33.8/0=8804.7 > 200
Coefficienti combinatori impiegati:
Pesi strutturali = 1,000 + 0,600 = 1,600
Permanenti portati = 1,000 + 0,600 = 1,600
Variabile A = 0,700 + 0,180 = 0,880
Neve = 0,500 + 0,500 = 1,000

---

## Asta 30: Trave in legno a falda Falda 1 fili 55-241

Verifiche condotte secondo D.M. 17-01-18 (N.T.C.)

### Dati generali

Lunghezza = 33.8

### Caratteristiche della sezione

| Descrizione | Tipo | Base | Altezza | Area | Jx | Jy | Wx | Wy |
|---|---|---|---|---|---|---|---|---|
| R 20x20 | Rettangolare | 20 | 20 | 400 | 13333.33 | 13333.33 | 1333.33 | 1333.33 |

Materiale: C14 EN 338:2016
Rapporto luce/freccia elastica limite = 300
Rapporto luce/freccia elastica differita = 200
Mensola Y: Nessuno; Mensola X: Nessuno
Classe di servizio 1

### Verifica pressoflessione D.M. 17-01-18 §4.4.8.1.8

Sezione ad ascissa 0
Coefficiente parziale di sicurezza del materiale γ = 1.5
Kmod = 1.1
(Sc,0,d/fc,0,d)^2 + Sm,y,d/fm,y,d + Km*(Sm,z,d/fm,z,d) <= 1
(Sc,0,d/fc,0,d)^2 + Km*(Sm,y,d/fm,y,d) + Sm,z,d/fm,z,d <= 1
(1.5/117.3)^2+0.7*0.1/102.7+78.5/102.7=0.77 <= 1 [4.4.7b] Comb: SLV, 10; Durata minima del carico nella combinazione: istantaneo
Mx = -198.1; My = 104683.3; N = -589.2

### Verifica taglio D.M. 17-01-18 §4.4.8.1.9

Sezione ad ascissa 33.8
Coefficiente parziale di sicurezza del materiale γ = 1.5
Kmod = 0.8; kcr = 0.67
τ,d <= fv,d
Sqrt(2.86^2+0.06^2) = 2.86 <= 16 Comb: SLU, 79; Durata minima del carico nella combinazione: media
Tx = -508.2; Ty = -10.9

### Verifica taglio+torsione D.M. 17-01-18 §4.4.8.1.11

Sezione ad ascissa 33.8
Coefficiente parziale di sicurezza del materiale γ = 1.5
Kmod = 0.8; kcr = 0.67
τ,tor,d/(ksh*fv,d) + (τ,y,d/fv,d)^2 + (τ,z,d/fv,d)^2 <= 1
0.51+0.03+0 <= 1 Comb: SLU, 80; Durata minima del carico nella combinazione: media
Tx = -505.2; Ty = -10.7; Mt = -15548.7

### Verifica torsione D.M. 17-01-18 §4.4.8.1.10

Sezione ad ascissa 33.8
Coefficiente parziale di sicurezza del materiale γ = 1.5
Kmod = 0.8
τ,tor,d <= Ksh * fv,d
9.34 <= 18.4 Comb: SLU, 80; Durata minima del carico nella combinazione: media
Mt = -15548.7

### Verifica della freccia istantanea totale D.M. 17-01-18 §C4.4.7 Circolare 7 21-01-19

Sezione ad ascissa 15.8
Kdef = 0
Uinst tot in x = 0
Uinst tot in y = 0
Uinst tot = 0
Luce/Uinst,tot > limite
33.8/0=14374.7 > 300 Comb: SLE rara, 16

**Verifica della freccia istantanea variabile D.M. 17-01-18 §4.4.7**

Sezione ad ascissa 15.8
Kdef = 0
Uinst var in x = 0
Uinst var in y = 0
Uinst var = 0
Luce/Uinst,var > limite
33.8/0=22418.5 > 300 Comb: SLE rara, 16

**Verifica della freccia finale EC5 §4.4.7 - EC5 2.2.3 (3)**

Sezione ad ascissa 15.8
Kdef = 0.6
Ufin in x = 0
Ufin in y = 0
Ufin = 0
Luce/Ufin > limite
33.8/0=11805.2 > 200
Coefficienti combinatori impiegati:
Pesi strutturali = 1,000 + 0,600 = 1,600
Permanenti portati = 1,000 + 0,600 = 1,600
Variabile A = 0,700 + 0,180 = 0,880
Neve = 0,500 + 0,500 = 1,000

---

## Asta 31: Trave in legno a falda Falda 1 fili 55-241

Verifiche condotte secondo D.M. 17-01-18 (N.T.C.)

**Dati generali**

Lunghezza = 33.8

**Caratteristiche della sezione**

| Descrizione | Tipo | Base | Altezza | Area | Jx | Jy | Wx | Wy |
|---|---|---|---|---|---|---|---|---|
| R 20x20 | Rettangolare | 20 | 20 | 400 | 13333.33 | 13333.33 | 1333.33 | 1333.33 |

Materiale: C14 EN 338:2016
Rapporto luce/freccia elastica limite = 300
Rapporto luce/freccia elastica differita = 200
Mensola Y: Nessuno; Mensola X: Nessuno
Classe di servizio 1

**Verifica pressoflessione D.M. 17-01-18 §4.4.8.1.8**

Sezione ad ascissa 0
Coefficiente parziale di sicurezza del materiale γ = 1.5
Kmod = 1.1
(Sc,0,d/fc,0,d)^2 + Sm,y,d/fm,y,d + Km*(Sm,z,d/fm,z,d) <= 1
(Sc,0,d/fc,0,d)^2 + Km*(Sm,y,d/fm,y,d) + Sm,z,d/fm,z,d <= 1
(1.4/117.3)^2+0.7*0.3/102.7+61/102.7=0.6 <= 1 [4.4.7b] Comb: SLV, 10; Durata minima del carico nella combinazione: istantaneo
Mx = 350.6; My = 81379.1; N = -548.8

**Verifica taglio D.M. 17-01-18 §4.4.8.1.9**

Sezione ad ascissa 0
Coefficiente parziale di sicurezza del materiale γ = 1.5
Kmod = 1.1; kcr = 0.67
τ,d <= fv,d
Sqrt(2.63^2+0.03^2) = 2.63 <= 22 Comb: SLV, 8; Durata minima del carico nella combinazione: istantaneo
Tx = 467.2; Ty = 6.1

**Verifica taglio+torsione D.M. 17-01-18 §4.4.8.1.11**

Sezione ad ascissa 0
Coefficiente parziale di sicurezza del materiale γ = 1.5
Kmod = 0.8; kcr = 0.67
τ,tor,d/(ksh*fv,d) + (τ,y,d/fv,d)^2 + (τ,z,d/fv,d)^2 <= 1
0.25+0+0 <= 1 Comb: SLU, 71; Durata minima del carico nella combinazione: media
Tx = 196.2; Ty = 5.5; Mt = 7712.2

**Verifica torsione D.M. 17-01-18 §4.4.8.1.10**

Sezione ad ascissa 33.8
Coefficiente parziale di sicurezza del materiale γ = 1.5
Kmod = 0.8
τ,tor,d <= Ksh * fv,d
4.63 <= 18.4 Comb: SLU, 79; Durata minima del carico nella combinazione: media
Mt = 7715.5

### Verifica della freccia istantanea totale D.M. 17-01-18 §C4.4.7 Circolare 7 21-01-19

Sezione ad ascissa 16.9
Kdef = 0
Uinst tot in x = 0
Uinst tot in y = 0
Uinst tot = 0
Luce/Uinst,tot > limite
33.8/0=19154.3 > 300 Comb: SLE rara, 16

### Verifica della freccia istantanea variabile D.M. 17-01-18 §4.4.7

Sezione ad ascissa 16.9
Kdef = 0
Uinst var in x = 0
Uinst var in y = 0
Uinst var = 0
Luce/Uinst,var > limite
33.8/0=29996.2 > 300 Comb: SLE rara, 16

### Verifica della freccia finale EC5 §4.4.7 - EC5 2.2.3 (3)

Sezione ad ascissa 16.9
Kdef = 0.6
Ufin in x = 0
Ufin in y = 0
Ufin = 0
Luce/Ufin > limite
33.8/0=15718.3 > 200
Coefficienti combinatori impiegati:
Pesi strutturali = 1,000 + 0,600 = 1,600
Permanenti portati = 1,000 + 0,600 = 1,600
Variabile A = 0,700 + 0,180 = 0,880
Neve = 0,500 + 0,500 = 1,000

---

## Asta 32: Trave in legno a falda Falda 1 fili 55-241

Verifiche condotte secondo D.M. 17-01-18 (N.T.C.)

### Dati generali

Lunghezza = 33.8

### Caratteristiche della sezione

| Descrizione | Tipo | Base | Altezza | Area | Jx | Jy | Wx | Wy |
|---|---|---|---|---|---|---|---|---|
| R 20x20 | Rettangolare | 20 | 20 | 400 | 13333.33 | 13333.33 | 1333.33 | 1333.33 |

Materiale: C14 EN 338:2016
Rapporto luce/freccia elastica limite = 300
Rapporto luce/freccia elastica differita = 200
Mensola Y: Nessuno; Mensola X: Nessuno
Classe di servizio 1

### Verifica pressoflessione D.M. 17-01-18 §4.4.8.1.8

Sezione ad ascissa 0
Coefficiente parziale di sicurezza del materiale γ = 1.5
Kmod = 1.1
(Sc,0,d/fc,0,d)^2 + Sm,y,d/fm,y,d + Km*(Sm,z,d/fm,z,d) <= 1
(Sc,0,d/fc,0,d)^2 + Km*(Sm,y,d/fm,y,d) + Sm,z,d/fm,z,d <= 1
(1.2/117.3)^2+0.7*0.8/102.7+54/102.7=0.53 <= 1 [4.4.7b] Comb: SLV, 10; Durata minima del carico nella combinazione: istantaneo
Mx = -1125.6; My = 72017.7; N = -478.2

### Verifica taglio D.M. 17-01-18 §4.4.8.1.9

Sezione ad ascissa 33.8
Coefficiente parziale di sicurezza del materiale γ = 1.5
Kmod = 1.1; kcr = 0.67
τ,d <= fv,d
Sqrt(5.04^2+0.11^2) = 5.04 <= 22 Comb: SLV, 10; Durata minima del carico nella combinazione: istantaneo
Tx = -895.4; Ty = -19.4

### Verifica taglio+torsione D.M. 17-01-18 §4.4.8.1.11

Sezione ad ascissa 33.8
Coefficiente parziale di sicurezza del materiale γ = 1.5
Kmod = 0.8; kcr = 0.67
τ,tor,d/(ksh*fv,d) + (τ,y,d/fv,d)^2 + (τ,z,d/fv,d)^2 <= 1
0.42+0.03+0 <= 1 Comb: SLU, 72; Durata minima del carico nella combinazione: media

Tx = -508.9; Ty = -9.8; Mt = -12792.2

**Verifica torsione D.M. 17-01-18 §4.4.8.1.10**

Sezione ad ascissa 33.8
Coefficiente parziale di sicurezza del materiale γ = 1.5
Kmod = 0.8
τ,tor,d <= Ksh * fv,d
7.68 <= 18.4 Comb: SLU, 72; Durata minima del carico nella combinazione: media
Mt = -12792.2

**Verifica della freccia istantanea totale D.M. 17-01-18 §C4.4.7 Circolare 7 21-01-19**

Sezione ad ascissa 14.6
Kdef = 0
Uinst tot in x = 0
Uinst tot in y = 0
Uinst tot = 0
Luce/Uinst,tot > limite
33.8/0=27227.4 > 300 Comb: SLE rara, 16

**Verifica della freccia istantanea variabile D.M. 17-01-18 §4.4.7**

Sezione ad ascissa 14.6
Kdef = 0
Uinst var in x = 0
Uinst var in y = 0
Uinst var = 0
Luce/Uinst,var > limite
33.8/0=42374.5 > 300 Comb: SLE rara, 16

**Verifica della freccia finale EC5 §4.4.7 - EC5 2.2.3 (3)**

Sezione ad ascissa 14.6
Kdef = 0.6
Ufin in x = 0
Ufin in y = 0
Ufin = 0
Luce/Ufin > limite
33.8/0=22407.3 > 200
Coefficienti combinatori impiegati:
Pesi strutturali = 1,000 + 0,600 = 1,600
Permanenti portati = 1,000 + 0,600 = 1,600
Variabile A = 0,700 + 0,180 = 0,880
Neve = 0,500 + 0,500 = 1,000

---

## Asta 33: Trave in legno a falda Falda 1 fili 55-241

Verifiche condotte secondo D.M. 17-01-18 (N.T.C.)

**Dati generali**

Lunghezza = 33.8

**Caratteristiche della sezione**

| Descrizione | Tipo | Base | Altezza | Area | Jx | Jy | Wx | Wy |
|---|---|---|---|---|---|---|---|---|
| R 20x20 | Rettangolare | 20 | 20 | 400 | 13333.33 | 13333.33 | 1333.33 | 1333.33 |

Materiale: C14 EN 338:2016
Rapporto luce/freccia elastica limite = 300
Rapporto luce/freccia elastica differita = 200
Mensola Y: Nessuno; Mensola X: Nessuno
Classe di servizio 1

**Verifica pressoflessione D.M. 17-01-18 §4.4.8.1.8**

Sezione ad ascissa 0
Coefficiente parziale di sicurezza del materiale γ = 1.5
Kmod = 1.1
(Sc,0,d/fc,0,d)^2 + Sm,y,d/fm,y,d + Km*(Sm,z,d/fm,z,d) <= 1
(Sc,0,d/fc,0,d)^2 + Km*(Sm,y,d/fm,y,d) + Sm,z,d/fm,z,d <= 1
(1/117.3)^2+0.7*0.3/102.7+31.8/102.7=0.31 <= 1 [4.4.7b] Comb: SLV, 10; Durata minima del carico nella combinazione: istantaneo
Mx = 436.2; My = 42350.6; N = -382.7

**Verifica taglio D.M. 17-01-18 §4.4.8.1.9**

Sezione ad ascissa 0
Coefficiente parziale di sicurezza del materiale γ = 1.5
Kmod = 1.1; kcr = 0.67
τ,d <= fv,d

Sqrt(4.27^2+0.1^2) = 4.27 <= 22 Comb: SLV, 8; Durata minima del carico nella combinazione: istantaneo
Tx = 758.4; Ty = 17.1

**Verifica taglio+torsione D.M. 17-01-18 §4.4.8.1.11**

Sezione ad ascissa 0
Coefficiente parziale di sicurezza del materiale γ = 1.5
Kmod = 0.8; kcr = 0.67
τ,tor,d/(ksh*fv,d) + (τ,y,d/fv,d)^2 + (τ,z,d/fv,d)^2 <= 1
0.33+0+0 <= 1 Comb: SLU, 79; Durata minima del carico nella combinazione: media
Tx = 173.2; Ty = 4.6; Mt = 10222

**Verifica torsione D.M. 17-01-18 §4.4.8.1.10**

Sezione ad ascissa 33.8
Coefficiente parziale di sicurezza del materiale γ = 1.5
Kmod = 0.8
τ,tor,d <= Ksh * fv,d
6.14 <= 18.4 Comb: SLU, 79; Durata minima del carico nella combinazione: media
Mt = 10222

**Verifica della freccia istantanea totale D.M. 17-01-18 §C4.4.7 Circolare 7 21-01-19**

Sezione ad ascissa 18
Kdef = 0
Uinst tot in x = 0
Uinst tot in y = 0
Uinst tot = 0
Luce/Uinst,tot > limite
33.8/0=56838.8 > 300 Comb: SLE rara, 8

**Verifica della freccia istantanea variabile D.M. 17-01-18 §4.4.7**

Sezione ad ascissa 18
Kdef = 0
Uinst var in x = 0
Uinst var in y = 0
Uinst var = 0
Luce/Uinst,var > limite
33.8/0=80495.1 > 300 Comb: SLE rara, 8

**Verifica della freccia finale EC5 §4.4.7 - EC5 2.2.3 (3)**

Sezione ad ascissa 18
Kdef = 0.6
Ufin in x = 0
Ufin in y = 0
Ufin = 0
Luce/Ufin > limite
33.8/0=48318.7 > 200
Coefficienti combinatori impiegati:
Pesi strutturali = 1,000 + 0,600 = 1,600
Permanenti portati = 1,000 + 0,600 = 1,600
Neve = 0,500 + 0,500 = 1,000

---

## Asta 34: Trave in legno a falda Falda 1 fili 55-241

Verifiche condotte secondo D.M. 17-01-18 (N.T.C.)

**Dati generali**

Lunghezza = 33.8

**Caratteristiche della sezione**

| Descrizione | Tipo | Base | Altezza | Area | Jx | Jy | Wx | Wy |
|---|---|---|---|---|---|---|---|---|
| R 20x20 | Rettangolare | 20 | 20 | 400 | 13333.33 | 13333.33 | 1333.33 | 1333.33 |

Materiale: C14 EN 338:2016
Rapporto luce/freccia elastica limite = 300
Rapporto luce/freccia elastica differita = 200
Mensola Y: Nessuno; Mensola X: Nessuno
Classe di servizio 1

**Verifica tensoflessione D.M. 17-01-18 §4.4.8.1.7**

Sezione ad ascissa 0
Coefficiente parziale di sicurezza del materiale γ = 1.5
Kmod = 1.1
St,0,d/ft,0,d + Sm,y,d/fm,y,d + Km*(Sm,z,d/fm,z,d) <= 1
St,0,d/ft,0,d + Km*(Sm,y,d/fm,y,d) + Sm,z,d/fm,z,d <= 1

0.9/52.8+0.7*0.6/102.7+20/102.7=0.22 <= 1 [4.4.6b] Comb: SLV, 6; Durata minima del carico nella combinazione: istantaneo
Mx = -809.4; My = 26723.4; N = 352.9

**Verifica taglio D.M. 17-01-18 §4.4.8.1.9**

Sezione ad ascissa 33.8
Coefficiente parziale di sicurezza del materiale γ = 1.5
Kmod = 1.1; kcr = 0.67
τ,d <= fv,d
Sqrt(4.71^2+0.07^2) = 4.71 <= 22 Comb: SLV, 6; Durata minima del carico nella combinazione: istantaneo
Tx = -836.9; Ty = -12.9

**Verifica taglio+torsione D.M. 17-01-18 §4.4.8.1.11**

Sezione ad ascissa 33.8
Coefficiente parziale di sicurezza del materiale γ = 1.5
Kmod = 0.8; kcr = 0.67
τ,tor,d/(ksh*fv,d) + (τ,y,d/fv,d)^2 + (τ,z,d/fv,d)^2 <= 1
0.34+0.04+0 <= 1 Comb: SLU, 72; Durata minima del carico nella combinazione: media
Tx = -567.4; Ty = -10.5; Mt = -10406.9

**Verifica torsione D.M. 17-01-18 §4.4.8.1.10**

Sezione ad ascissa 33.8
Coefficiente parziale di sicurezza del materiale γ = 1.5
Kmod = 0.8
τ,tor,d <= Ksh * fv,d
6.25 <= 18.4 Comb: SLU, 72; Durata minima del carico nella combinazione: media
Mt = -10406.9

**Verifica della freccia istantanea totale D.M. 17-01-18 §C4.4.7 Circolare 7 21-01-19**

Sezione ad ascissa 23.6
Kdef = 0
Uinst tot in x = 0
Uinst tot in y = 0
Uinst tot = 0
Luce/Uinst,tot > limite
33.8/0=153475.9 > 300 Comb: SLE rara, 13

**Verifica della freccia istantanea variabile D.M. 17-01-18 §4.4.7**

Sezione ad ascissa 9
Kdef = 0
Uinst var in x = 0
Uinst var in y = 0
Uinst var = 0
Luce/Uinst,var > limite
33.8/0=278812.1 > 300 Comb: SLE rara, 8

**Verifica della freccia finale EC5 §4.4.7 - EC5 2.2.3 (3)**

Sezione ad ascissa 23.6
Kdef = 0.6
Ufin in x = 0
Ufin in y = 0
Ufin = 0
Luce/Ufin > limite
33.8/0=113338.5 > 200
Coefficienti combinatori impiegati:
Pesi strutturali = 1,000 + 0,600 = 1,600
Permanenti portati = 1,000 + 0,600 = 1,600
Variabile A = 0,700 + 0,180 = 0,880
Neve = 0,500 + 0,000 = 0,500
Vento = 0,600 + 0,400 = 1,000

---

## Asta 35: Trave in legno a falda Falda 1 fili 55-241

Verifiche condotte secondo D.M. 17-01-18 (N.T.C.)

**Dati generali**

Lunghezza = 33.8

**Caratteristiche della sezione**

| Descrizione | Tipo | Base | Altezza | Area | Jx | Jy | Wx | Wy |
|---|---|---|---|---|---|---|---|---|
| R 20x20 | Rettangolare | 20 | 20 | 400 | 13333.33 | 13333.33 | 1333.33 | 1333.33 |

Materiale: C14 EN 338:2016
Rapporto luce/freccia elastica limite = 300

Rapporto luce/freccia elastica differita = 200
Mensola Y: Nessuno; Mensola X: Nessuno
Classe di servizio 1

**Verifica flessione D.M. 17-01-18 §4.4.8.1.6**

Sezione ad ascissa 33.8
Coefficiente parziale di sicurezza del materiale γ = 1.5
Kmod = 1.1
Sm,y,d/fm,y,d + Km*(Sm,z,d/fm,z,d) <= 1
Km*(Sm,y,d/fm,y,d) + Sm,z,d/fm,z,d <= 1
0.7*0.9/102.7+29.9/102.7=0.3 <= 1 (formula 4.4.5b) Comb: SLV, 10; Durata minima del carico nella combinazione: istantaneo
Mx = 1146.1; My = -39850.2

**Verifica taglio D.M. 17-01-18 §4.4.8.1.9**

Sezione ad ascissa 0
Coefficiente parziale di sicurezza del materiale γ = 1.5
Kmod = 1.1; kcr = 0.67
τ,d <= fv,d
Sqrt(4.37^2+0.08^2) = 4.38 <= 22 Comb: SLV, 12; Durata minima del carico nella combinazione: istantaneo
Tx = 777.7; Ty = 13.4

**Verifica taglio+torsione D.M. 17-01-18 §4.4.8.1.11**

Sezione ad ascissa 33.8
Coefficiente parziale di sicurezza del materiale γ = 1.5
Kmod = 0.8; kcr = 0.67
τ,tor,d/(ksh*fv,d) + (τ,y,d/fv,d)^2 + (τ,z,d/fv,d)^2 <= 1
0.41+0+0 <= 1 Comb: SLU, 79; Durata minima del carico nella combinazione: media
Tx = 98.9; Ty = -5.1; Mt = 12450.5

**Verifica torsione D.M. 17-01-18 §4.4.8.1.10**

Sezione ad ascissa 33.8
Coefficiente parziale di sicurezza del materiale γ = 1.5
Kmod = 0.8
τ,tor,d <= Ksh * fv,d
7.48 <= 18.4 Comb: SLU, 79; Durata minima del carico nella combinazione: media
Mt = 12450.5

**Verifica della freccia istantanea totale D.M. 17-01-18 §C4.4.7 Circolare 7 21-01-19**

Sezione ad ascissa 16.9
Kdef = 0
Uinst tot in x = 0
Uinst tot in y = 0
Uinst tot = 0
Luce/Uinst,tot > limite
33.8/0=34963.8 > 300 Comb: SLE rara, 16

**Verifica della freccia istantanea variabile D.M. 17-01-18 §4.4.7**

Sezione ad ascissa 15.8
Kdef = 0
Uinst var in x = 0
Uinst var in y = 0
Uinst var = 0
Luce/Uinst,var > limite
33.8/0=65377 > 300 Comb: SLE rara, 16

**Verifica della freccia finale EC5 §4.4.7 - EC5 2.2.3 (3)**

Sezione ad ascissa 16.9
Kdef = 0.6
Ufin in x = 0
Ufin in y = 0
Ufin = 0
Luce/Ufin > limite
33.8/0=27003.7 > 200
Coefficienti combinatori impiegati:
Pesi strutturali = 1,000 + 0,600 = 1,600
Permanenti portati = 1,000 + 0,600 = 1,600
Variabile A = 0,700 + 0,180 = 0,880
Neve = 0,500 + 0,500 = 1,000

---

## Asta 36: Trave in legno a falda Falda 1 fili 55-241

Verifiche condotte secondo D.M. 17-01-18 (N.T.C.)

Dati generali

Lunghezza = 33.8

Caratteristiche della sezione

| Descrizione | Tipo | Base | Altezza | Area | Jx | Jy | Wx | Wy |
|---|---|---|---|---|---|---|---|---|
| R 20x20 | Rettangolare | 20 | 20 | 400 | 13333.33 | 13333.33 | 1333.33 | 1333.33 |

Materiale: C14 EN 338:2016
Rapporto luce/freccia elastica limite = 300
Rapporto luce/freccia elastica differita = 200
Mensola Y: Nessuno; Mensola X: Nessuno
Classe di servizio 1

Verifica flessione D.M. 17-01-18 §4.4.8.1.6

Sezione ad ascissa 33.8
Coefficiente parziale di sicurezza del materiale γ = 1.5
Kmod = 1.1
Sm,y,d/fm,y,d + Km*(Sm,z,d/fm,z,d) <= 1
Km*(Sm,y,d/fm,y,d) + Sm,z,d/fm,z,d <= 1
0.7*0.1/102.7+42.6/102.7=0.42 <= 1 (formula 4.4.5b) Comb: SLV, 10; Durata minima del carico nella combinazione: istantaneo
Mx = 109.6; My = -56746

Verifica taglio D.M. 17-01-18 §4.4.8.1.9

Sezione ad ascissa 33.8
Coefficiente parziale di sicurezza del materiale γ = 1.5
Kmod = 1.1; kcr = 0.67
τ,d <= fv,d
Sqrt(3.55^2+0.03^2) = 3.55 <= 22 Comb: SLV, 6; Durata minima del carico nella combinazione: istantaneo
Tx = -631; Ty = -6

Verifica taglio+torsione D.M. 17-01-18 §4.4.8.1.11

Sezione ad ascissa 0
Coefficiente parziale di sicurezza del materiale γ = 1.5
Kmod = 0.8; kcr = 0.67
τ,tor,d/(ksh*fv,d) + (τ,y,d/fv,d)^2 + (τ,z,d/fv,d)^2 <= 1
0.25+0.02+0 <= 1 Comb: SLU, 71; Durata minima del carico nella combinazione: media
Tx = -383.9; Ty = 11.4; Mt = -7777.1

Verifica torsione D.M. 17-01-18 §4.4.8.1.10

Sezione ad ascissa 33.8
Coefficiente parziale di sicurezza del materiale γ = 1.5
Kmod = 0.8
τ,tor,d <= Ksh * fv,d
4.69 <= 18.4 Comb: SLU, 72; Durata minima del carico nella combinazione: media
Mt = -7806.4

Verifica della freccia istantanea totale D.M. 17-01-18 §C4.4.7 Circolare 7 21-01-19

Sezione ad ascissa 18
Kdef = 0
Uinst tot in x = 0
Uinst tot in y = 0
Uinst tot = 0
Luce/Uinst,tot > limite
33.8/0=24460.2 > 300 Comb: SLE rara, 16

Verifica della freccia istantanea variabile D.M. 17-01-18 §4.4.7

Sezione ad ascissa 18
Kdef = 0
Uinst var in x = 0
Uinst var in y = 0
Uinst var = 0
Luce/Uinst,var > limite
33.8/0=45467.8 > 300 Comb: SLE rara, 16

Verifica della freccia finale EC5 §4.4.7 - EC5 2.2.3 (3)

Sezione ad ascissa 18
Kdef = 0.6
Ufin in x = 0
Ufin in y = 0
Ufin = 0
Luce/Ufin > limite
33.8/0=18937.5 > 200
Coefficienti combinatori impiegati:

Pesi strutturali = 1,000 + 0,600 = 1,600
Permanenti portati = 1,000 + 0,600 = 1,600
Variabile A = 0,700 + 0,180 = 0,880
Neve = 0,500 + 0,500 = 1,000

## Asta 37: Trave in legno a falda Falda 1 fili 55-241

Verifiche condotte secondo D.M. 17-01-18 (N.T.C.)

### Dati generali

Lunghezza = 33.8

### Caratteristiche della sezione

| Descrizione | Tipo | Base | Altezza | Area | Jx | Jy | Wx | Wy |
|---|---|---|---|---|---|---|---|---|
| R 20x20 | Rettangolare | 20 | 20 | 400 | 13333.33 | 13333.33 | 1333.33 | 1333.33 |

Materiale: C14 EN 338:2016
Rapporto luce/freccia elastica limite = 300
Rapporto luce/freccia elastica differita = 200
Mensola Y: Nessuno; Mensola X: Nessuno
Classe di servizio 1

### Verifica flessione D.M. 17-01-18 §4.4.8.1.6

Sezione ad ascissa 33.8
Coefficiente parziale di sicurezza del materiale γ = 1.5
Kmod = 1.1
Sm,y,d/fm,y,d + Km*(Sm,z,d/fm,z,d) <= 1
Km*(Sm,y,d/fm,y,d) + Sm,z,d/fm,z,d <= 1
0.7*2.1/102.7+57.8/102.7=0.58 <= 1 (formula 4.4.5b) Comb: SLV, 10; Durata minima del carico nella combinazione: istantaneo
Mx = 2757; My = -77005.3

### Verifica taglio D.M. 17-01-18 §4.4.8.1.9

Sezione ad ascissa 0
Coefficiente parziale di sicurezza del materiale γ = 1.5
Kmod = 1.1; kcr = 0.67
τ,d <= fv,d
Sqrt(4.15^2+0.01^2) = 4.15 <= 22 Comb: SLV, 12; Durata minima del carico nella combinazione: istantaneo
Tx = 738.7; Ty = 2.4

### Verifica taglio+torsione D.M. 17-01-18 §4.4.8.1.11

Sezione ad ascissa 33.8
Coefficiente parziale di sicurezza del materiale γ = 1.5
Kmod = 0.8; kcr = 0.67
τ,tor,d/(ksh*fv,d) + (τ,y,d/fv,d)^2 + (τ,z,d/fv,d)^2 <= 1
0.53+0.01+0 <= 1 Comb: SLU, 80; Durata minima del carico nella combinazione: media
Tx = 290.2; Ty = -70.5; Mt = 16230.8

### Verifica torsione D.M. 17-01-18 §4.4.8.1.10

Sezione ad ascissa 33.8
Coefficiente parziale di sicurezza del materiale γ = 1.5
Kmod = 0.8
τ,tor,d <= Ksh * fv,d
9.75 <= 18.4 Comb: SLU, 80; Durata minima del carico nella combinazione: media
Mt = 16230.8

### Verifica della freccia istantanea totale D.M. 17-01-18 §C4.4.7 Circolare 7 21-01-19

Sezione ad ascissa 15.8
Kdef = 0
Uinst tot in x = 0
Uinst tot in y = 0
Uinst tot = 0
Luce/Uinst,tot > limite
33.8/0=21432.7 > 300 Comb: SLE rara, 16

### Verifica della freccia istantanea variabile D.M. 17-01-18 §4.4.7

Sezione ad ascissa 15.8
Kdef = 0
Uinst var in x = 0
Uinst var in y = 0
Uinst var = 0
Luce/Uinst,var > limite
33.8/0=40937.4 > 300 Comb: SLE rara, 16

### Verifica della freccia finale EC5 §4.4.7 - EC5 2.2.3 (3)

Sezione ad ascissa 15.8
Kdef = 0.6
Ufin in x = 0
Ufin in y = 0
Ufin = 0
Luce/Ufin > limite
33.8/0=16464.4 > 200
Coefficienti combinatori impiegati:
Pesi strutturali = 1,000 + 0,600 = 1,600
Permanenti portati = 1,000 + 0,600 = 1,600
Variabile A = 0,700 + 0,180 = 0,880
Neve = 0,500 + 0,500 = 1,000

---

## Asta 38: Trave in legno a falda Falda 1 fili 55-241

Verifiche condotte secondo D.M. 17-01-18 (N.T.C.)

### Dati generali

Lunghezza = 49.6

### Caratteristiche della sezione

| Descrizione | Tipo | Base | Altezza | Area | Jx | Jy | Wx | Wy |
|---|---|---|---|---|---|---|---|---|
| R 20x20 | Rettangolare | 20 | 20 | 400 | 13333.33 | 13333.33 | 1333.33 | 1333.33 |

Materiale: C14 EN 338:2016
Rapporto luce/freccia elastica limite = 300
Rapporto luce/freccia elastica differita = 200
Mensola Y: Nessuno; Mensola X: Nessuno
Classe di servizio 1

### Verifica tensoflessione D.M. 17-01-18 §4.4.8.1.7

Sezione ad ascissa 0
Coefficiente parziale di sicurezza del materiale γ = 1.5
Kmod = 1.1
St,0,d/ft,0,d + Sm,y,d/fm,y,d + Km*(Sm,z,d/fm,z,d) <= 1
St,0,d/ft,0,d + Km*(Sm,y,d/fm,y,d) + Sm,z,d/fm,z,d <= 1
0.6/52.8+0.7*0.5/102.7+57.2/102.7=0.57 <= 1 [4.4.6b] Comb: SLV, 10; Durata minima del carico nella combinazione: istantaneo
Mx = -729.4; My = -76219.5; N = 254.9

### Verifica taglio D.M. 17-01-18 §4.4.8.1.9

Sezione ad ascissa 0
Coefficiente parziale di sicurezza del materiale γ = 1.5
Kmod = 0.8; kcr = 0.67
τ,d <= fv,d
Sqrt(4.72^2+0.81^2) = 4.79 <= 16 Comb: SLU, 38; Durata minima del carico nella combinazione: media
Tx = 839.4; Ty = 144.8

### Verifica taglio+torsione D.M. 17-01-18 §4.4.8.1.11

Sezione ad ascissa 0
Coefficiente parziale di sicurezza del materiale γ = 1.5
Kmod = 0.8; kcr = 0.67
τ,tor,d/(ksh*fv,d) + (τ,y,d/fv,d)^2 + (τ,z,d/fv,d)^2 <= 1
0.17+0.09+0 <= 1 Comb: SLU, 38; Durata minima del carico nella combinazione: media
Tx = 839.4; Ty = 144.8; Mt = 5172.8

### Verifica torsione D.M. 17-01-18 §4.4.8.1.10

Sezione ad ascissa 49.6
Coefficiente parziale di sicurezza del materiale γ = 1.5
Kmod = 0.8
τ,tor,d <= Ksh * fv,d
3.11 <= 18.4 Comb: SLU, 38; Durata minima del carico nella combinazione: media
Mt = 5172.8

### Verifica della freccia istantanea totale D.M. 17-01-18 §C4.4.7 Circolare 7 21-01-19

Sezione ad ascissa 29.8
Kdef = 0
Uinst tot in x = 0
Uinst tot in y = 0
Uinst tot = 0
Luce/Uinst,tot > limite
49.6/0=16684 > 300 Comb: SLE rara, 9

**Verifica della freccia istantanea variabile D.M. 17-01-18 §4.4.7**

Sezione ad ascissa 29.8
Kdef = 0
Uinst var in x = 0
Uinst var in y = 0
Uinst var = 0
Luce/Uinst,var > limite
49.6/0=18346 > 300 Comb: SLE rara, 9

**Verifica della freccia finale EC5 §4.4.7 - EC5 2.2.3 (3)**

Sezione ad ascissa 31.4
Kdef = 0.6
Ufin in x = 0
Ufin in y = 0
Ufin = 0
Luce/Ufin > limite
49.6/0=15776.8 > 200
Coefficienti combinatori impiegati:
Pesi strutturali = 1,000 + 0,600 = 1,600
Permanenti portati = 1,000 + 0,600 = 1,600
Neve = 0,500 + 0,500 = 1,000
Vento = 0,600 + 0,000 = 0,600

---

## Asta 39: Trave in legno a falda Falda 1 fili 55-241

Verifiche condotte secondo D.M. 17-01-18 (N.T.C.)

**Dati generali**

Lunghezza = 18

**Caratteristiche della sezione**

| Descrizione | Tipo | Base | Altezza | Area | Jx | Jy | Wx | Wy |
|---|---|---|---|---|---|---|---|---|
| R 20x20 | Rettangolare | 20 | 20 | 400 | 13333.33 | 13333.33 | 1333.33 | 1333.33 |

Materiale: C14 EN 338:2016
Rapporto luce/freccia elastica limite = 300
Rapporto luce/freccia elastica differita = 200
Mensola Y: Nessuno; Mensola X: Nessuno
Classe di servizio 1

**Verifica pressoflessione D.M. 17-01-18 §4.4.8.1.8**

Sezione ad ascissa 0
Coefficiente parziale di sicurezza del materiale γ = 1.5
Kmod = 1.1
(Sc,0,d/fc,0,d)^2 + Sm,y,d/fm,y,d + Km*(Sm,z,d/fm,z,d) <= 1
(Sc,0,d/fc,0,d)^2 + Km*(Sm,y,d/fm,y,d) + Sm,z,d/fm,z,d <= 1
(2.6/117.3)^2+0.7*4.2/102.7+48.2/102.7=0.5 <= 1 [4.4.7b] Comb: SLV, 12; Durata minima del carico nella combinazione: istantaneo
Mx = 5622.9; My = 64285; N = -1031.4

**Verifica taglio D.M. 17-01-18 §4.4.8.1.9**

Sezione ad ascissa 0
Coefficiente parziale di sicurezza del materiale γ = 1.5
Kmod = 0.8; kcr = 0.67
τ,d <= fv,d
Sqrt(3.52^2+1.09^2) = 3.68 <= 16 Comb: SLU, 30; Durata minima del carico nella combinazione: media
Tx = -625.3; Ty = 193.7

**Verifica taglio+torsione D.M. 17-01-18 §4.4.8.1.11**

Sezione ad ascissa 0
Coefficiente parziale di sicurezza del materiale γ = 1.5
Kmod = 0.8; kcr = 0.67
τ,tor,d/(ksh*fv,d) + (τ,y,d/fv,d)^2 + (τ,z,d/fv,d)^2 <= 1
0.27+0.05+0 <= 1 Comb: SLU, 80; Durata minima del carico nella combinazione: media
Tx = -613.7; Ty = 195.8; Mt = 8318.6

**Verifica torsione D.M. 17-01-18 §4.4.8.1.10**

Sezione ad ascissa 18
Coefficiente parziale di sicurezza del materiale γ = 1.5
Kmod = 0.8
τ,tor,d <= Ksh * fv,d
5 <= 18.4 Comb: SLU, 80; Durata minima del carico nella combinazione: media
Mt = 8318.6

**Verifica della freccia istantanea totale D.M. 17-01-18 §C4.4.7 Circolare 7 21-01-19**

Sezione ad ascissa 8.4
Kdef = 0
Uinst tot in x = 0
Uinst tot in y = 0
Uinst tot = 0
Luce/Uinst,tot > limite
18/0=23702 > 300 Comb: SLE rara, 9

**Verifica della freccia istantanea variabile D.M. 17-01-18 §4.4.7**

Sezione ad ascissa 9
Kdef = 0
Uinst var in x = 0
Uinst var in y = 0
Uinst var = 0
Luce/Uinst,var > limite
18/0=30573.6 > 300 Comb: SLE rara, 9

**Verifica della freccia finale EC5 §4.4.7 - EC5 2.2.3 (3)**

Sezione ad ascissa 8.4
Kdef = 0.6
Ufin in x = 0
Ufin in y = 0
Ufin = 0
Luce/Ufin > limite
18/0=20885.1 > 200
Coefficienti combinatori impiegati:
Pesi strutturali = 1,000 + 0,600 = 1,600
Permanenti portati = 1,000 + 0,600 = 1,600
Neve = 0,500 + 0,500 = 1,000
Vento = 0,600 + 0,000 = 0,600

---

## Asta 40: Trave in legno a falda Falda 1 fili 55-241

Verifiche condotte secondo D.M. 17-01-18 (N.T.C.)

**Dati generali**

Lunghezza = 33.8

**Caratteristiche della sezione**

| Descrizione | Tipo | Base | Altezza | Area | Jx | Jy | Wx | Wy |
|---|---|---|---|---|---|---|---|---|
| R 20x20 | Rettangolare | 20 | 20 | 400 | 13333.33 | 13333.33 | 1333.33 | 1333.33 |

Materiale: C14 EN 338:2016
Rapporto luce/freccia elastica limite = 300
Rapporto luce/freccia elastica differita = 200
Mensola Y: Nessuno; Mensola X: Nessuno
Classe di servizio 1

**Verifica pressoflessione D.M. 17-01-18 §4.4.8.1.8**

Sezione ad ascissa 0
Coefficiente parziale di sicurezza del materiale γ = 1.5
Kmod = 1.1
(Sc,0,d/fc,0,d)^2 + Sm,y,d/fm,y,d + Km*(Sm,z,d/fm,z,d) <= 1
(Sc,0,d/fc,0,d)^2 + Km*(Sm,y,d/fm,y,d) + Sm,z,d/fm,z,d <= 1
(3/117.3)^2+0.7*0.6/102.7+43/102.7=0.42 <= 1 [4.4.7b] Comb: SLV, 8; Durata minima del carico nella combinazione: istantaneo
Mx = 830.9; My = 57359.4; N = -1189.2

**Verifica taglio D.M. 17-01-18 §4.4.8.1.9**

Sezione ad ascissa 0
Coefficiente parziale di sicurezza del materiale γ = 1.5
Kmod = 0.8; kcr = 0.67
τ,d <= fv,d
Sqrt(3.42^2+0.07^2) = 3.42 <= 16 Comb: SLU, 30; Durata minima del carico nella combinazione: media
Tx = -607.3; Ty = 12.1

**Verifica taglio+torsione D.M. 17-01-18 §4.4.8.1.11**

Sezione ad ascissa 0
Coefficiente parziale di sicurezza del materiale γ = 1.5
Kmod = 0.8; kcr = 0.67
τ,tor,d/(ksh*fv,d) + (τ,y,d/fv,d)^2 + (τ,z,d/fv,d)^2 <= 1
0.34+0.05+0 <= 1 Comb: SLU, 29; Durata minima del carico nella combinazione: media

Tx = -604.4; Ty = 12.3; Mt = -10350.3

**Verifica torsione D.M. 17-01-18 §4.4.8.1.10**

Sezione ad ascissa 33.8
Coefficiente parziale di sicurezza del materiale γ = 1.5
Kmod = 0.8
τ,tor,d <= Ksh * fv,d
6.22 <= 18.4 Comb: SLU, 29; Durata minima del carico nella combinazione: media
Mt = -10350.3

**Verifica della freccia istantanea totale D.M. 17-01-18 §C4.4.7 Circolare 7 21-01-19**

Sezione ad ascissa 14.6
Kdef = 0
Uinst tot in x = 0
Uinst tot in y = 0
Uinst tot = 0
Luce/Uinst,tot > limite
33.8/0=29802.5 > 300 Comb: SLE rara, 17

**Verifica della freccia istantanea variabile D.M. 17-01-18 §4.4.7**

Sezione ad ascissa 14.6
Kdef = 0
Uinst var in x = 0
Uinst var in y = 0
Uinst var = 0
Luce/Uinst,var > limite
33.8/0=38806.1 > 300 Comb: SLE rara, 17

**Verifica della freccia finale EC5 §4.4.7 - EC5 2.2.3 (3)**

Sezione ad ascissa 14.6
Kdef = 0.6
Ufin in x = 0
Ufin in y = 0
Ufin = 0
Luce/Ufin > limite
33.8/0=26107.2 > 200
Coefficienti combinatori impiegati:
Pesi strutturali = 1,000 + 0,600 = 1,600
Permanenti portati = 1,000 + 0,600 = 1,600
Variabile A = 0,700 + 0,180 = 0,880
Neve = 0,500 + 0,500 = 1,000
Vento = 0,600 + 0,000 = 0,600

---

## Asta 41: Trave in legno a falda Falda 1 fili 55-241

Verifiche condotte secondo D.M. 17-01-18 (N.T.C.)

**Dati generali**

Lunghezza = 33.8

**Caratteristiche della sezione**

| Descrizione | Tipo | Base | Altezza | Area | Jx | Jy | Wx | Wy |
|---|---|---|---|---|---|---|---|---|
| R 20x20 | Rettangolare | 20 | 20 | 400 | 13333.33 | 13333.33 | 1333.33 | 1333.33 |

Materiale: C14 EN 338:2016
Rapporto luce/freccia elastica limite = 300
Rapporto luce/freccia elastica differita = 200
Mensola Y: Nessuno; Mensola X: Nessuno
Classe di servizio 1

**Verifica tensoflessione D.M. 17-01-18 §4.4.8.1.7**

Sezione ad ascissa 0
Coefficiente parziale di sicurezza del materiale γ = 1.5
Kmod = 1.1
St,0,d/ft,0,d + Sm,y,d/fm,y,d + Km*(Sm,z,d/fm,z,d) <= 1
St,0,d/ft,0,d + Km*(Sm,y,d/fm,y,d) + Sm,z,d/fm,z,d <= 1
1/52.8+0.7*0.4/102.7+27.4/102.7=0.29 <= 1 [4.4.6b] Comb: SLV, 10; Durata minima del carico nella combinazione: istantaneo
Mx = 472.1; My = -36466.9; N = 388.3

**Verifica taglio D.M. 17-01-18 §4.4.8.1.9**

Sezione ad ascissa 0
Coefficiente parziale di sicurezza del materiale γ = 1.5
Kmod = 1.1; kcr = 0.67

τ,d <= fv,d
Sqrt(3.31^2+0.17^2) = 3.31 <= 22 Comb: SLV, 8; Durata minima del carico nella combinazione: istantaneo
Tx = -588.5; Ty = 30.4

**Verifica taglio+torsione D.M. 17-01-18 §4.4.8.1.11**

Sezione ad ascissa 0
Coefficiente parziale di sicurezza del materiale γ = 1.5
Kmod = 0.8; kcr = 0.67
τ,tor,d/(ksh*fv,d) + (τ,y,d/fv,d)^2 + (τ,z,d/fv,d)^2 <= 1
0.32+0+0 <= 1 Comb: SLU, 80; Durata minima del carico nella combinazione: media
Tx = -159.6; Ty = 34.1; Mt = 9909.6

**Verifica torsione D.M. 17-01-18 §4.4.8.1.10**

Sezione ad ascissa 33.8
Coefficiente parziale di sicurezza del materiale γ = 1.5
Kmod = 0.8
τ,tor,d <= Ksh * fv,d
5.95 <= 18.4 Comb: SLU, 80; Durata minima del carico nella combinazione: media
Mt = 9909.6

**Verifica della freccia istantanea totale D.M. 17-01-18 §C4.4.7 Circolare 7 21-01-19**

Sezione ad ascissa 19.1
Kdef = 0
Uinst tot in x = 0
Uinst tot in y = 0
Uinst tot = 0
Luce/Uinst,tot > limite
33.8/0=106830.5 > 300 Comb: SLE rara, 8

**Verifica della freccia istantanea variabile D.M. 17-01-18 §4.4.7**

Sezione ad ascissa 19.1
Kdef = 0
Uinst var in x = 0
Uinst var in y = 0
Uinst var = 0
Luce/Uinst,var > limite
33.8/0=97870.4 > 300 Comb: SLE rara, 8

**Verifica della freccia finale EC5 §4.4.7 - EC5 2.2.3 (3)**

Sezione ad ascissa 16.9
Kdef = 0.6
Ufin in x = 0
Ufin in y = 0
Ufin = 0
Luce/Ufin > limite
33.8/0=87412 > 200
Coefficienti combinatori impiegati:
Pesi strutturali = 1,000 + 0,600 = 1,600
Permanenti portati = 1,000 + 0,600 = 1,600
Variabile A = 0,700 + 0,180 = 0,880
Neve = 0,500 + 0,500 = 1,000
Vento = 0,600 + 0,000 = 0,600

---

## Asta 42: Trave in legno a falda Falda 1 fili 55-241

Verifiche condotte secondo D.M. 17-01-18 (N.T.C.)

**Dati generali**

Lunghezza = 33.8

**Caratteristiche della sezione**

| Descrizione | Tipo | Base | Altezza | Area | Jx | Jy | Wx | Wy |
|---|---|---|---|---|---|---|---|---|
| R 20x20 | Rettangolare | 20 | 20 | 400 | 13333.33 | 13333.33 | 1333.33 | 1333.33 |

Materiale: C14 EN 338:2016
Rapporto luce/freccia elastica limite = 300
Rapporto luce/freccia elastica differita = 200
Mensola Y: Nessuno; Mensola X: Nessuno
Classe di servizio 1

**Verifica pressoflessione D.M. 17-01-18 §4.4.8.1.8**

Sezione ad ascissa 0
Coefficiente parziale di sicurezza del materiale γ = 1.5

Kmod = 1.1
(Sc,0,d/fc,0,d)^2 + Sm,y,d/fm,y,d + Km*(Sm,z,d/fm,z,d) <= 1
(Sc,0,d/fc,0,d)^2 + Km*(Sm,y,d/fm,y,d) + Sm,z,d/fm,z,d <= 1
(2.9/117.3)^2+0.7*2/102.7+17.5/102.7=0.19 <= 1 [4.4.7b] Comb: SLV, 8; Durata minima del carico nella combinazione: istantaneo
Mx = 2723.4; My = 23351.5; N = -1155.1

**Verifica taglio D.M. 17-01-18 §4.4.8.1.9**

Sezione ad ascissa 0
Coefficiente parziale di sicurezza del materiale γ = 1.5
Kmod = 1.1; kcr = 0.67
τ,d <= fv,d
Sqrt(3.91^2+0.24^2) = 3.92 <= 22 Comb: SLV, 8; Durata minima del carico nella combinazione: istantaneo
Tx = -695.8; Ty = 42.4

**Verifica taglio+torsione D.M. 17-01-18 §4.4.8.1.11**

Sezione ad ascissa 0
Coefficiente parziale di sicurezza del materiale γ = 1.5
Kmod = 0.8; kcr = 0.67
τ,tor,d/(ksh*fv,d) + (τ,y,d/fv,d)^2 + (τ,z,d/fv,d)^2 <= 1
0.15+0.01+0 <= 1 Comb: SLU, 80; Durata minima del carico nella combinazione: media
Tx = -240.7; Ty = 34.2; Mt = -4526.4

**Verifica torsione D.M. 17-01-18 §4.4.8.1.10**

Sezione ad ascissa 33.8
Coefficiente parziale di sicurezza del materiale γ = 1.5
Kmod = 0.8
τ,tor,d <= Ksh * fv,d
2.72 <= 18.4 Comb: SLU, 80; Durata minima del carico nella combinazione: media
Mt = -4526.4

**Verifica della freccia istantanea totale D.M. 17-01-18 §C4.4.7 Circolare 7 21-01-19**

Sezione ad ascissa 19.1
Kdef = 0
Uinst tot in x = 0
Uinst tot in y = 0
Uinst tot = 0
Luce/Uinst,tot > limite
33.8/0=59603.8 > 300 Comb: SLE rara, 8

**Verifica della freccia istantanea variabile D.M. 17-01-18 §4.4.7**

Sezione ad ascissa 18
Kdef = 0
Uinst var in x = 0
Uinst var in y = 0
Uinst var = 0
Luce/Uinst,var > limite
33.8/0=61916.7 > 300 Comb: SLE rara, 8

**Verifica della freccia finale EC5 §4.4.7 - EC5 2.2.3 (3)**

Sezione ad ascissa 19.1
Kdef = 0.6
Ufin in x = 0
Ufin in y = 0
Ufin = 0
Luce/Ufin > limite
33.8/0=58178.9 > 200
Coefficienti combinatori impiegati:
Pesi strutturali = 1,000 + 0,600 = 1,600
Permanenti portati = 1,000 + 0,600 = 1,600
Neve = 0,500 + 0,500 = 1,000

---

## Asta 43: Trave in legno a falda Falda 1 fili 55-241

Verifiche condotte secondo D.M. 17-01-18 (N.T.C.)

**Dati generali**

Lunghezza = 33.8

**Caratteristiche della sezione**

| Descrizione | Tipo | Base | Altezza | Area | Jx | Jy | Wx | Wy |
|---|---|---|---|---|---|---|---|---|
| R 20x20 | Rettangolare | 20 | 20 | 400 | 13333.33 | 13333.33 | 1333.33 | 1333.33 |

Materiale: C14 EN 338:2016

Rapporto luce/freccia elastica limite = 300
Rapporto luce/freccia elastica differita = 200
Mensola Y: Nessuno; Mensola X: Nessuno
Classe di servizio 1

**Verifica tensoflessione D.M. 17-01-18 §4.4.8.1.7**

Sezione ad ascissa 33.8
Coefficiente parziale di sicurezza del materiale γ = 1.5
Kmod = 1.1
St,0,d/ft,0,d + Sm,y,d/fm,y,d + Km*(Sm,z,d/fm,z,d) <= 1
St,0,d/ft,0,d + Km*(Sm,y,d/fm,y,d) + Sm,z,d/fm,z,d <= 1
0.9/52.8+0.7*0.1/102.7+24/102.7=0.25 <= 1 [4.4.6b] Comb: SLV, 10; Durata minima del carico nella combinazione: istantaneo
Mx = -128.6; My = 31960.8; N = 363.8

**Verifica taglio D.M. 17-01-18 §4.4.8.1.9**

Sezione ad ascissa 0
Coefficiente parziale di sicurezza del materiale γ = 1.5
Kmod = 1.1; kcr = 0.67
τ,d <= fv,d
Sqrt(3.38^2+0.02^2) = 3.38 <= 22 Comb: SLV, 10; Durata minima del carico nella combinazione: istantaneo
Tx = 601.2; Ty = 4

**Verifica taglio+torsione D.M. 17-01-18 §4.4.8.1.11**

Sezione ad ascissa 33.8
Coefficiente parziale di sicurezza del materiale γ = 1.5
Kmod = 0.8; kcr = 0.67
τ,tor,d/(ksh*fv,d) + (τ,y,d/fv,d)^2 + (τ,z,d/fv,d)^2 <= 1
0.28+0+0 <= 1 Comb: SLU, 71; Durata minima del carico nella combinazione: media
Tx = 89.4; Ty = -3.6; Mt = 8586.4

**Verifica torsione D.M. 17-01-18 §4.4.8.1.10**

Sezione ad ascissa 33.8
Coefficiente parziale di sicurezza del materiale γ = 1.5
Kmod = 0.8
τ,tor,d <= Ksh * fv,d
5.16 <= 18.4 Comb: SLU, 71; Durata minima del carico nella combinazione: media
Mt = 8586.4

**Verifica della freccia istantanea totale D.M. 17-01-18 §C4.4.7 Circolare 7 21-01-19**

Sezione ad ascissa 16.9
Kdef = 0
Uinst tot in x = 0
Uinst tot in y = 0
Uinst tot = 0
Luce/Uinst,tot > limite
33.8/0=42987.3 > 300 Comb: SLE rara, 9

**Verifica della freccia istantanea variabile D.M. 17-01-18 §4.4.7**

Sezione ad ascissa 16.9
Kdef = 0
Uinst var in x = 0
Uinst var in y = 0
Uinst var = 0
Luce/Uinst,var > limite
33.8/0=51317.4 > 300 Comb: SLE rara, 9

**Verifica della freccia finale EC5 §4.4.7 - EC5 2.2.3 (3)**

Sezione ad ascissa 16.9
Kdef = 0.6
Ufin in x = 0
Ufin in y = 0
Ufin = 0
Luce/Ufin > limite
33.8/0=39172.2 > 200
Coefficienti combinatori impiegati:
Pesi strutturali = 1,000 + 0,600 = 1,600
Permanenti portati = 1,000 + 0,600 = 1,600
Neve = 0,500 + 0,500 = 1,000
Vento = 0,600 + 0,000 = 0,600

## Asta 44: Trave in legno a falda Falda 1 fili 55-241

Verifiche condotte secondo D.M. 17-01-18 (N.T.C.)

### Dati generali

Lunghezza = 33.8

### Caratteristiche della sezione

| Descrizione | Tipo | Base | Altezza | Area | Jx | Jy | Wx | Wy |
|---|---|---|---|---|---|---|---|---|
| R 20x20 | Rettangolare | 20 | 20 | 400 | 13333.33 | 13333.33 | 1333.33 | 1333.33 |

Materiale: C14 EN 338:2016
Rapporto luce/freccia elastica limite = 300
Rapporto luce/freccia elastica differita = 200
Mensola Y: Nessuno; Mensola X: Nessuno
Classe di servizio 1

### Verifica pressoflessione D.M. 17-01-18 §4.4.8.1.8

Sezione ad ascissa 33.8
Coefficiente parziale di sicurezza del materiale γ = 1.5
Kmod = 1.1
(Sc,0,d/fc,0,d)^2 + Sm,y,d/fm,y,d + Km*(Sm,z,d/fm,z,d) <= 1
(Sc,0,d/fc,0,d)^2 + Km*(Sm,y,d/fm,y,d) + Sm,z,d/fm,z,d <= 1
(2.9/117.3)^2+0.7*0.2/102.7+35.4/102.7=0.35 <= 1 [4.4.7b] Comb: SLV, 8; Durata minima del carico nella combinazione: istantaneo
Mx = -299.9; My = -47162.3; N = -1145.9

### Verifica taglio D.M. 17-01-18 §4.4.8.1.9

Sezione ad ascissa 33.8
Coefficiente parziale di sicurezza del materiale γ = 1.5
Kmod = 1.1; kcr = 0.67
τ,d <= fv,d
Sqrt(3.16^2+0.03^2) = 3.16 <= 22 Comb: SLV, 8; Durata minima del carico nella combinazione: istantaneo
Tx = -561.6; Ty = -5.8

### Verifica taglio+torsione D.M. 17-01-18 §4.4.8.1.11

Sezione ad ascissa 33.8
Coefficiente parziale di sicurezza del materiale γ = 1.5
Kmod = 0.8; kcr = 0.67
τ,tor,d/(ksh*fv,d) + (τ,y,d/fv,d)^2 + (τ,z,d/fv,d)^2 <= 1
0.21+0+0 <= 1 Comb: SLU, 80; Durata minima del carico nella combinazione: media
Tx = -192.4; Ty = -10; Mt = -6441.7

### Verifica torsione D.M. 17-01-18 §4.4.8.1.10

Sezione ad ascissa 33.8
Coefficiente parziale di sicurezza del materiale γ = 1.5
Kmod = 0.8
τ,tor,d <= Ksh * fv,d
3.87 <= 18.4 Comb: SLU, 80; Durata minima del carico nella combinazione: media
Mt = -6441.7

### Verifica della freccia istantanea totale D.M. 17-01-18 §C4.4.7 Circolare 7 21-01-19

Sezione ad ascissa 18
Kdef = 0
Uinst tot in x = 0
Uinst tot in y = 0
Uinst tot = 0
Luce/Uinst,tot > limite
33.8/0=36859 > 300 Comb: SLE rara, 9

### Verifica della freccia istantanea variabile D.M. 17-01-18 §4.4.7

Sezione ad ascissa 18
Kdef = 0
Uinst var in x = 0
Uinst var in y = 0
Uinst var = 0
Luce/Uinst,var > limite
33.8/0=47351.9 > 300 Comb: SLE rara, 9

### Verifica della freccia finale EC5 §4.4.7 - EC5 2.2.3 (3)

Sezione ad ascissa 18
Kdef = 0.6
Ufin in x = 0
Ufin in y = 0
Ufin = 0

Luce/Ufin > limite
33.8/0=32533.5 > 200
Coefficienti combinatori impiegati:
Pesi strutturali = 1,000 + 0,600 = 1,600
Permanenti portati = 1,000 + 0,600 = 1,600
Neve = 0,500 + 0,500 = 1,000
Vento = 0,600 + 0,000 = 0,600

## Asta 45: Trave in legno a falda Falda 1 fili 55-241

Verifiche condotte secondo D.M. 17-01-18 (N.T.C.)

### Dati generali

Lunghezza = 33.8

### Caratteristiche della sezione

| Descrizione | Tipo | Base | Altezza | Area | Jx | Jy | Wx | Wy |
|---|---|---|---|---|---|---|---|---|
| R 20x20 | Rettangolare | 20 | 20 | 400 | 13333.33 | 13333.33 | 1333.33 | 1333.33 |

Materiale: C14 EN 338:2016
Rapporto luce/freccia elastica limite = 300
Rapporto luce/freccia elastica differita = 200
Mensola Y: Nessuno; Mensola X: Nessuno
Classe di servizio 1

### Verifica pressoflessione D.M. 17-01-18 §4.4.8.1.8

Sezione ad ascissa 33.8
Coefficiente parziale di sicurezza del materiale γ = 1.5
Kmod = 1.1
(Sc,0,d/fc,0,d)^2 + Sm,y,d/fm,y,d + Km*(Sm,z,d/fm,z,d) <= 1
(Sc,0,d/fc,0,d)^2 + Km*(Sm,y,d/fm,y,d) + Sm,z,d/fm,z,d <= 1
(2.8/117.3)^2+0.7*0.3/102.7+45.7/102.7=0.45 <= 1 [4.4.7b] Comb: SLV, 8; Durata minima del carico nella combinazione: istantaneo
Mx = -378.7; My = -60895.1; N = -1111.4

### Verifica taglio D.M. 17-01-18 §4.4.8.1.9

Sezione ad ascissa 0
Coefficiente parziale di sicurezza del materiale γ = 1.5
Kmod = 1.1; kcr = 0.67
τ,d <= fv,d
Sqrt(2.5^2+0.05^2) = 2.5 <= 22 Comb: SLV, 10; Durata minima del carico nella combinazione: istantaneo
Tx = 444.4; Ty = 9

### Verifica taglio+torsione D.M. 17-01-18 §4.4.8.1.11

Sezione ad ascissa 0
Coefficiente parziale di sicurezza del materiale γ = 1.5
Kmod = 0.8; kcr = 0.67
τ,tor,d/(ksh*fv,d) + (τ,y,d/fv,d)^2 + (τ,z,d/fv,d)^2 <= 1
0.19+0+0 <= 1 Comb: SLU, 71; Durata minima del carico nella combinazione: media
Tx = 90.2; Ty = 5.9; Mt = 5761.9

### Verifica torsione D.M. 17-01-18 §4.4.8.1.10

Sezione ad ascissa 33.8
Coefficiente parziale di sicurezza del materiale γ = 1.5
Kmod = 0.8
τ,tor,d <= Ksh * fv,d
3.46 <= 18.4 Comb: SLU, 71; Durata minima del carico nella combinazione: media
Mt = 5761.9

### Verifica della freccia istantanea totale D.M. 17-01-18 §C4.4.7 Circolare 7 21-01-19

Sezione ad ascissa 16.9
Kdef = 0
Uinst tot in x = 0
Uinst tot in y = 0
Uinst tot = 0
Luce/Uinst,tot > limite
33.8/0=29734.3 > 300 Comb: SLE rara, 9

### Verifica della freccia istantanea variabile D.M. 17-01-18 §4.4.7

Sezione ad ascissa 16.9
Kdef = 0
Uinst var in x = 0
Uinst var in y = 0
Uinst var = 0

Luce/Uinst,var > limite
33.8/0=40321.6 > 300 Comb: SLE rara, 9

**Verifica della freccia finale EC5 §4.4.7 - EC5 2.2.3 (3)**

Sezione ad ascissa 16.9
Kdef = 0.6
Ufin in x = 0
Ufin in y = 0
Ufin = 0
Luce/Ufin > limite
33.8/0=25687.5 > 200
Coefficienti combinatori impiegati:
Pesi strutturali = 1,000 + 0,600 = 1,600
Permanenti portati = 1,000 + 0,600 = 1,600
Neve = 0,500 + 0,500 = 1,000
Vento = 0,600 + 0,000 = 0,600

## Asta 46: Trave in legno a falda Falda 1 fili 55-241

Verifiche condotte secondo D.M. 17-01-18 (N.T.C.)

**Dati generali**

Lunghezza = 33.8

**Caratteristiche della sezione**

| Descrizione | Tipo | Base | Altezza | Area | Jx | Jy | Wx | Wy |
|---|---|---|---|---|---|---|---|---|
| R 20x20 | Rettangolare | 20 | 20 | 400 | 13333.33 | 13333.33 | 1333.33 | 1333.33 |

Materiale: C14 EN 338:2016
Rapporto luce/freccia elastica limite = 300
Rapporto luce/freccia elastica differita = 200
Mensola Y: Nessuno; Mensola X: Nessuno
Classe di servizio 1

**Verifica pressoflessione D.M. 17-01-18 §4.4.8.1.8**

Sezione ad ascissa 33.8
Coefficiente parziale di sicurezza del materiale γ = 1.5
Kmod = 1.1
(Sc,0,d/fc,0,d)^2 + Sm,y,d/fm,y,d + Km*(Sm,z,d/fm,z,d) <= 1
(Sc,0,d/fc,0,d)^2 + Km*(Sm,y,d/fm,y,d) + Sm,z,d/fm,z,d <= 1
(2.6/117.3)^2+0.7*0/102.7+49.3/102.7=0.48 <= 1 [4.4.7b] Comb: SLV, 8; Durata minima del carico nella combinazione: istantaneo
Mx = 10.9; My = -65731; N = -1058.7

**Verifica taglio D.M. 17-01-18 §4.4.8.1.9**

Sezione ad ascissa 33.8
Coefficiente parziale di sicurezza del materiale γ = 1.5
Kmod = 1.1; kcr = 0.67
τ,d <= fv,d
Sqrt(1.28^2+0.06^2) = 1.28 <= 22 Comb: SLV, 8; Durata minima del carico nella combinazione: istantaneo
Tx = -227.2; Ty = -10.1

**Verifica taglio+torsione D.M. 17-01-18 §4.4.8.1.11**

Sezione ad ascissa 33.8
Coefficiente parziale di sicurezza del materiale γ = 1.5
Kmod = 0.8; kcr = 0.67
τ,tor,d/(ksh*fv,d) + (τ,y,d/fv,d)^2 + (τ,z,d/fv,d)^2 <= 1
0.27+0+0 <= 1 Comb: SLU, 80; Durata minima del carico nella combinazione: media
Tx = -139.9; Ty = -11.4; Mt = -8312.3

**Verifica torsione D.M. 17-01-18 §4.4.8.1.10**

Sezione ad ascissa 33.8
Coefficiente parziale di sicurezza del materiale γ = 1.5
Kmod = 0.8
τ,tor,d <= Ksh * fv,d
4.99 <= 18.4 Comb: SLU, 80; Durata minima del carico nella combinazione: media
Mt = -8312.3

**Verifica della freccia istantanea totale D.M. 17-01-18 §C4.4.7 Circolare 7 21-01-19**

Sezione ad ascissa 16.9
Kdef = 0
Uinst tot in x = 0
Uinst tot in y = 0
Uinst tot = 0

Luce/Uinst,tot > limite
33.8/0=26839.9 > 300 Comb: SLE rara, 17

**Verifica della freccia istantanea variabile D.M. 17-01-18 §4.4.7**

Sezione ad ascissa 16.9
Kdef = 0
Uinst var in x = 0
Uinst var in y = 0
Uinst var = 0
Luce/Uinst,var > limite
33.8/0=37460.1 > 300 Comb: SLE rara, 17

**Verifica della freccia finale EC5 §4.4.7 - EC5 2.2.3 (3)**

Sezione ad ascissa 18
Kdef = 0.6
Ufin in x = 0
Ufin in y = 0
Ufin = 0
Luce/Ufin > limite
33.8/0=22828.4 > 200
Coefficienti combinatori impiegati:
Pesi strutturali = 1,000 + 0,600 = 1,600
Permanenti portati = 1,000 + 0,600 = 1,600
Variabile A = 0,700 + 0,180 = 0,880
Neve = 0,500 + 0,500 = 1,000
Vento = 0,600 + 0,000 = 0,600

---

## Asta 47: Trave in legno a falda Falda 1 fili 55-241

Verifiche condotte secondo D.M. 17-01-18 (N.T.C.)

**Dati generali**

Lunghezza = 33.8

**Caratteristiche della sezione**

| Descrizione | Tipo | Base | Altezza | Area | Jx | Jy | Wx | Wy |
|---|---|---|---|---|---|---|---|---|
| R 20x20 | Rettangolare | 20 | 20 | 400 | 13333.33 | 13333.33 | 1333.33 | 1333.33 |

Materiale: C14 EN 338:2016
Rapporto luce/freccia elastica limite = 300
Rapporto luce/freccia elastica differita = 200
Mensola Y: Nessuno; Mensola X: Nessuno
Classe di servizio 1

**Verifica pressoflessione D.M. 17-01-18 §4.4.8.1.8**

Sezione ad ascissa 33.8
Coefficiente parziale di sicurezza del materiale γ = 1.5
Kmod = 1.1
(Sc,0,d/fc,0,d)^2 + Sm,y,d/fm,y,d + Km*(Sm,z,d/fm,z,d) <= 1
(Sc,0,d/fc,0,d)^2 + Km*(Sm,y,d/fm,y,d) + Sm,z,d/fm,z,d <= 1
(2.5/117.3)^2+0.7*0.4/102.7+51.2/102.7=0.5 <= 1 [4.4.7b] Comb: SLV, 8; Durata minima del carico nella combinazione: istantaneo
Mx = -513; My = -68263.6; N = -997.7

**Verifica taglio D.M. 17-01-18 §4.4.8.1.9**

Sezione ad ascissa 33.8
Coefficiente parziale di sicurezza del materiale γ = 1.5
Kmod = 1.1; kcr = 0.67
τ,d <= fv,d
Sqrt(1.27^2+0.05^2) = 1.27 <= 22 Comb: SLV, 12; Durata minima del carico nella combinazione: istantaneo
Tx = 226.1; Ty = -8.5

**Verifica taglio+torsione D.M. 17-01-18 §4.4.8.1.11**

Sezione ad ascissa 0
Coefficiente parziale di sicurezza del materiale γ = 1.5
Kmod = 1.1; kcr = 0.67
τ,tor,d/(ksh*fv,d) + (τ,y,d/fv,d)^2 + (τ,z,d/fv,d)^2 <= 1
0.14+0+0 <= 1 Comb: SLV, 10; Durata minima del carico nella combinazione: istantaneo
Tx = -146.5; Ty = 10.6; Mt = 5795.7

**Verifica torsione D.M. 17-01-18 §4.4.8.1.10**

Sezione ad ascissa 33.8
Coefficiente parziale di sicurezza del materiale γ = 1.5
Kmod = 1.1

τ,tor,d <= Ksh * fv,d
3.48 <= 25.3 Comb: SLV, 10; Durata minima del carico nella combinazione: istantaneo
Mt = 5795.7

**Verifica della freccia istantanea totale D.M. 17-01-18 §C4.4.7 Circolare 7 21-01-19**

Sezione ad ascissa 16.9
Kdef = 0
Uinst tot in x = 0
Uinst tot in y = 0
Uinst tot = 0
Luce/Uinst,tot > limite
33.8/0=26015.8 > 300 Comb: SLE rara, 17

**Verifica della freccia istantanea variabile D.M. 17-01-18 §4.4.7**

Sezione ad ascissa 16.9
Kdef = 0
Uinst var in x = 0
Uinst var in y = 0
Uinst var = 0
Luce/Uinst,var > limite
33.8/0=36601.5 > 300 Comb: SLE rara, 17

**Verifica della freccia finale EC5 §4.4.7 - EC5 2.2.3 (3)**

Sezione ad ascissa 16.9
Kdef = 0.6
Ufin in x = 0
Ufin in y = 0
Ufin = 0
Luce/Ufin > limite
33.8/0=21959.5 > 200
Coefficienti combinatori impiegati:
Pesi strutturali = 1,000 + 0,600 = 1,600
Permanenti portati = 1,000 + 0,600 = 1,600
Variabile A = 0,700 + 0,180 = 0,880
Neve = 0,500 + 0,500 = 1,000
Vento = 0,600 + 0,000 = 0,600

---

## Asta 48: Trave in legno a falda Falda 1 fili 55-241

Verifiche condotte secondo D.M. 17-01-18 (N.T.C.)

**Dati generali**

Lunghezza = 33.8

**Caratteristiche della sezione**

| Descrizione | Tipo | Base | Altezza | Area | Jx | Jy | Wx | Wy |
|---|---|---|---|---|---|---|---|---|
| R 20x20 | Rettangolare | 20 | 20 | 400 | 13333.33 | 13333.33 | 1333.33 | 1333.33 |

Materiale: C14 EN 338:2016
Rapporto luce/freccia elastica limite = 300
Rapporto luce/freccia elastica differita = 200
Mensola Y: Nessuno; Mensola X: Nessuno
Classe di servizio 1

**Verifica pressoflessione D.M. 17-01-18 §4.4.8.1.8**

Sezione ad ascissa 0
Coefficiente parziale di sicurezza del materiale γ = 1.5
Kmod = 1.1
(Sc,0,d/fc,0,d)^2 + Sm,y,d/fm,y,d + Km*(Sm,z,d/fm,z,d) <= 1
(Sc,0,d/fc,0,d)^2 + Km*(Sm,y,d/fm,y,d) + Sm,z,d/fm,z,d <= 1
(2.3/117.3)^2+0.7*0.6/102.7+51.4/102.7=0.5 <= 1 [4.4.7b] Comb: SLV, 8; Durata minima del carico nella combinazione: istantaneo
Mx = 743.3; My = -68550.4; N = -928.5

**Verifica taglio D.M. 17-01-18 §4.4.8.1.9**

Sezione ad ascissa 33.8
Coefficiente parziale di sicurezza del materiale γ = 1.5
Kmod = 1.1; kcr = 0.67
τ,d <= fv,d
Sqrt(4.2^2+0.12^2) = 4.2 <= 22 Comb: SLV, 6; Durata minima del carico nella combinazione: istantaneo
Tx = -746.9; Ty = -21.1

**Verifica taglio+torsione D.M. 17-01-18 §4.4.8.1.11**

Sezione ad ascissa 33.8

Coefficiente parziale di sicurezza del materiale γ = 1.5
Kmod = 0.8; kcr = 0.67
τ,tor,d/(ksh*fv,d) + (τ,y,d/fv,d)^2 + (τ,z,d/fv,d)^2 <= 1
0.29+0+0 <= 1 Comb: SLU, 80; Durata minima del carico nella combinazione: media
Tx = -45.7; Ty = -13.4; Mt = -9031.9

**Verifica torsione D.M. 17-01-18 §4.4.8.1.10**

Sezione ad ascissa 33.8
Coefficiente parziale di sicurezza del materiale γ = 1.5
Kmod = 0.8
τ,tor,d <= Ksh * fv,d
5.42 <= 18.4 Comb: SLU, 80; Durata minima del carico nella combinazione: media
Mt = -9031.9

**Verifica della freccia istantanea totale D.M. 17-01-18 §C4.4.7 Circolare 7 21-01-19**

Sezione ad ascissa 16.9
Kdef = 0
Uinst tot in x = 0
Uinst tot in y = 0
Uinst tot = 0
Luce/Uinst,tot > limite
33.8/0=28862 > 300 Comb: SLE rara, 17

**Verifica della freccia istantanea variabile D.M. 17-01-18 §4.4.7**

Sezione ad ascissa 16.9
Kdef = 0
Uinst var in x = 0
Uinst var in y = 0
Uinst var = 0
Luce/Uinst,var > limite
33.8/0=41347.4 > 300 Comb: SLE rara, 17

**Verifica della freccia finale EC5 §4.4.7 - EC5 2.2.3 (3)**

Sezione ad ascissa 16.9
Kdef = 0.6
Ufin in x = 0
Ufin in y = 0
Ufin = 0
Luce/Ufin > limite
33.8/0=24141.2 > 200
Coefficienti combinatori impiegati:
Pesi strutturali = 1,000 + 0,600 = 1,600
Permanenti portati = 1,000 + 0,600 = 1,600
Variabile A = 0,700 + 0,180 = 0,880
Neve = 0,500 + 0,500 = 1,000
Vento = 0,600 + 0,000 = 0,600

---

## Asta 49: Trave in legno a falda Falda 1 fili 55-241

Verifiche condotte secondo D.M. 17-01-18 (N.T.C.)

**Dati generali**

Lunghezza = 33.8

**Caratteristiche della sezione**

| Descrizione | Tipo | Base | Altezza | Area | Jx | Jy | Wx | Wy |
|---|---|---|---|---|---|---|---|---|
| R 20x20 | Rettangolare | 20 | 20 | 400 | 13333.33 | 13333.33 | 1333.33 | 1333.33 |

Materiale: C14 EN 338:2016
Rapporto luce/freccia elastica limite = 300
Rapporto luce/freccia elastica differita = 200
Mensola Y: Nessuno; Mensola X: Nessuno
Classe di servizio 1

**Verifica pressoflessione D.M. 17-01-18 §4.4.8.1.8**

Sezione ad ascissa 0
Coefficiente parziale di sicurezza del materiale γ = 1.5
Kmod = 1.1
(Sc,0,d/fc,0,d)^2 + Sm,y,d/fm,y,d + Km*(Sm,z,d/fm,z,d) <= 1
(Sc,0,d/fc,0,d)^2 + Km*(Sm,y,d/fm,y,d) + Sm,z,d/fm,z,d <= 1
(2.1/117.3)^2+0.7*0.5/102.7+32.5/102.7=0.32 <= 1 [4.4.7b] Comb: SLV, 8; Durata minima del carico nella combinazione: istantaneo
Mx = -720.6; My = -43300.1; N = -857.6

**Verifica taglio D.M. 17-01-18 §4.4.8.1.9**

Sezione ad ascissa 0
Coefficiente parziale di sicurezza del materiale γ = 1.5
Kmod = 1.1; kcr = 0.67
τ,d <= fv,d
Sqrt(4.58^2+0.07^2) = 4.58 <= 22 Comb: SLV, 8; Durata minima del carico nella combinazione: istantaneo
Tx = 814.6; Ty = 11.9

**Verifica taglio+torsione D.M. 17-01-18 §4.4.8.1.11**

Sezione ad ascissa 33.8
Coefficiente parziale di sicurezza del materiale γ = 1.5
Kmod = 1.1; kcr = 0.67
τ,tor,d/(ksh*fv,d) + (τ,y,d/fv,d)^2 + (τ,z,d/fv,d)^2 <= 1
0.16+0.03+0 <= 1 Comb: SLV, 6; Durata minima del carico nella combinazione: istantaneo
Tx = -635.7; Ty = -10.5; Mt = 6883.6

**Verifica torsione D.M. 17-01-18 §4.4.8.1.10**

Sezione ad ascissa 33.8
Coefficiente parziale di sicurezza del materiale γ = 1.5
Kmod = 1.1
τ,tor,d <= Ksh * fv,d
4.13 <= 25.3 Comb: SLV, 6; Durata minima del carico nella combinazione: istantaneo
Mt = 6883.6

**Verifica della freccia istantanea totale D.M. 17-01-18 §C4.4.7 Circolare 7 21-01-19**

Sezione ad ascissa 15.8
Kdef = 0
Uinst tot in x = 0
Uinst tot in y = 0
Uinst tot = 0
Luce/Uinst,tot > limite
33.8/0=41275.7 > 300 Comb: SLE rara, 17

**Verifica della freccia istantanea variabile D.M. 17-01-18 §4.4.7**

Sezione ad ascissa 15.8
Kdef = 0
Uinst var in x = 0
Uinst var in y = 0
Uinst var = 0
Luce/Uinst,var > limite
33.8/0=60303.7 > 300 Comb: SLE rara, 17

**Verifica della freccia finale EC5 §4.4.7 - EC5 2.2.3 (3)**

Sezione ad ascissa 15.8
Kdef = 0.6
Ufin in x = 0
Ufin in y = 0
Ufin = 0
Luce/Ufin > limite
33.8/0=34203.3 > 200
Coefficienti combinatori impiegati:
Pesi strutturali = 1,000 + 0,600 = 1,600
Permanenti portati = 1,000 + 0,600 = 1,600
Variabile A = 0,700 + 0,180 = 0,880
Neve = 0,500 + 0,500 = 1,000
Vento = 0,600 + 0,000 = 0,600

---

## Asta 50: Trave in legno a falda Falda 1 fili 55-241

Verifiche condotte secondo D.M. 17-01-18 (N.T.C.)

**Dati generali**

Lunghezza = 33.8

**Caratteristiche della sezione**

| Descrizione | Tipo | Base | Altezza | Area | Jx | Jy | Wx | Wy |
|---|---|---|---|---|---|---|---|---|
| R 20x20 | Rettangolare | 20 | 20 | 400 | 13333.33 | 13333.33 | 1333.33 | 1333.33 |

Materiale: C14 EN 338:2016
Rapporto luce/freccia elastica limite = 300
Rapporto luce/freccia elastica differita = 200
Mensola Y: Nessuno; Mensola X: Nessuno

Classe di servizio 1

**Verifica pressoflessione D.M. 17-01-18 §4.4.8.1.8**

Sezione ad ascissa 0
Coefficiente parziale di sicurezza del materiale γ = 1.5
Kmod = 1.1
(Sc,0,d/fc,0,d)^2 + Sm,y,d/fm,y,d + Km*(Sm,z,d/fm,z,d) <= 1
(Sc,0,d/fc,0,d)^2 + Km*(Sm,y,d/fm,y,d) + Sm,z,d/fm,z,d <= 1
(2/117.3)^2+0.7*0.6/102.7+14.2/102.7=0.14 <= 1 [4.4.7b] Comb: SLV, 8; Durata minima del carico nella combinazione: istantaneo
Mx = 762.9; My = -18998; N = -785.8

**Verifica taglio D.M. 17-01-18 §4.4.8.1.9**

Sezione ad ascissa 33.8
Coefficiente parziale di sicurezza del materiale γ = 1.5
Kmod = 1.1; kcr = 0.67
τ,d <= fv,d
Sqrt(4.4^2+0.08^2) = 4.4 <= 22 Comb: SLV, 12; Durata minima del carico nella combinazione: istantaneo
Tx = 781.5; Ty = -14.5

**Verifica taglio+torsione D.M. 17-01-18 §4.4.8.1.11**

Sezione ad ascissa 33.8
Coefficiente parziale di sicurezza del materiale γ = 1.5
Kmod = 0.8; kcr = 0.67
τ,tor,d/(ksh*fv,d) + (τ,y,d/fv,d)^2 + (τ,z,d/fv,d)^2 <= 1
0.27+0+0 <= 1 Comb: SLU, 80; Durata minima del carico nella combinazione: media
Tx = 103.3; Ty = -17; Mt = -8337.3

**Verifica torsione D.M. 17-01-18 §4.4.8.1.10**

Sezione ad ascissa 33.8
Coefficiente parziale di sicurezza del materiale γ = 1.5
Kmod = 0.8
τ,tor,d <= Ksh * fv,d
5.01 <= 18.4 Comb: SLU, 80; Durata minima del carico nella combinazione: media
Mt = -8337.3

**Verifica della freccia istantanea totale D.M. 17-01-18 §C4.4.7 Circolare 7 21-01-19**

Sezione ad ascissa 14.6
Kdef = 0
Uinst tot in x = 0
Uinst tot in y = 0
Uinst tot = 0
Luce/Uinst,tot > limite
33.8/0=148003.9 > 300 Comb: SLE rara, 15

**Verifica della freccia istantanea variabile D.M. 17-01-18 §4.4.7**

Sezione ad ascissa 14.6
Kdef = 0
Uinst var in x = 0
Uinst var in y = 0
Uinst var = 0
Luce/Uinst,var > limite
33.8/0=242740.6 > 300 Comb: SLE rara, 15

**Verifica della freccia finale EC5 §4.4.7 - EC5 2.2.3 (3)**

Sezione ad ascissa 14.6
Kdef = 0.6
Ufin in x = 0
Ufin in y = 0
Ufin = 0
Luce/Ufin > limite
33.8/0=114915.8 > 200
Coefficienti combinatori impiegati:
Pesi strutturali = 1,000 + 0,600 = 1,600
Permanenti portati = 1,000 + 0,600 = 1,600
Variabile A = 0,700 + 0,180 = 0,880
Neve = 0,500 + 0,000 = 0,500
Variabile H = 0,000 + 1,000 = 1,000
Vento = 0,600 + 0,000 = 0,600

---

## Asta 51: Trave in legno a falda Falda 1 fili 55-241

Verifiche condotte secondo D.M. 17-01-18 (N.T.C.)

Dati generali

Lunghezza = 33.8

Caratteristiche della sezione

| Descrizione | Tipo | Base | Altezza | Area | Jx | Jy | Wx | Wy |
|---|---|---|---|---|---|---|---|---|
| R 20x20 | Rettangolare | 20 | 20 | 400 | 13333.33 | 13333.33 | 1333.33 | 1333.33 |

Materiale: C14 EN 338:2016
Rapporto luce/freccia elastica limite = 300
Rapporto luce/freccia elastica differita = 200
Mensola Y: Nessuno; Mensola X: Nessuno
Classe di servizio 1

Verifica pressoflessione D.M. 17-01-18 §4.4.8.1.8

Sezione ad ascissa 33.8
Coefficiente parziale di sicurezza del materiale γ = 1.5
Kmod = 1.1
(Sc,0,d/fc,0,d)^2 + Sm,y,d/fm,y,d + Km*(Sm,z,d/fm,z,d) <= 1
(Sc,0,d/fc,0,d)^2 + Km*(Sm,y,d/fm,y,d) + Sm,z,d/fm,z,d <= 1
(0.6/117.3)^2+0.7*0.7/102.7+32.5/102.7=0.32 <= 1 [4.4.7b] Comb: SLV, 12; Durata minima del carico nella combinazione: istantaneo
Mx = -997.7; My = 43312; N = -235.2

Verifica taglio D.M. 17-01-18 §4.4.8.1.9

Sezione ad ascissa 0
Coefficiente parziale di sicurezza del materiale γ = 1.5
Kmod = 1.1; kcr = 0.67
τ,d <= fv,d
Sqrt(5.01^2+0.12^2) = 5.01 <= 22 Comb: SLV, 8; Durata minima del carico nella combinazione: istantaneo
Tx = 889.8; Ty = 21

Verifica taglio+torsione D.M. 17-01-18 §4.4.8.1.11

Sezione ad ascissa 33.8
Coefficiente parziale di sicurezza del materiale γ = 1.5
Kmod = 1.1; kcr = 0.67
τ,tor,d/(ksh*fv,d) + (τ,y,d/fv,d)^2 + (τ,z,d/fv,d)^2 <= 1
0.15+0.02+0 <= 1 Comb: SLV, 6; Durata minima del carico nella combinazione: istantaneo
Tx = -618.1; Ty = -16.8; Mt = 6437.5

Verifica torsione D.M. 17-01-18 §4.4.8.1.10

Sezione ad ascissa 33.8
Coefficiente parziale di sicurezza del materiale γ = 1.5
Kmod = 0.8
τ,tor,d <= Ksh * fv,d
2.83 <= 18.4 Comb: SLU, 71; Durata minima del carico nella combinazione: media
Mt = 4720.8

Verifica della freccia istantanea totale D.M. 17-01-18 §C4.4.7 Circolare 7 21-01-19

Sezione ad ascissa 19.1
Kdef = 0
Uinst tot in x = 0
Uinst tot in y = 0
Uinst tot = 0
Luce/Uinst,tot > limite
33.8/0=44111.4 > 300 Comb: SLE rara, 9

Verifica della freccia istantanea variabile D.M. 17-01-18 §4.4.7

Sezione ad ascissa 19.1
Kdef = 0
Uinst var in x = 0
Uinst var in y = 0
Uinst var = 0
Luce/Uinst,var > limite
33.8/0=60798.2 > 300 Comb: SLE rara, 9

Verifica della freccia finale EC5 §4.4.7 - EC5 2.2.3 (3)

Sezione ad ascissa 19.1
Kdef = 0.6
Ufin in x = 0
Ufin in y = 0
Ufin = 0
Luce/Ufin > limite
33.8/0=37874.4 > 200
Coefficienti combinatori impiegati:

Pesi strutturali = 1,000 + 0,600 = 1,600
Permanenti portati = 1,000 + 0,600 = 1,600
Neve = 0,500 + 0,500 = 1,000
Vento = 0,600 + 0,000 = 0,600

## Asta 52: Trave in legno a falda Falda 1 fili 55-241

Verifiche condotte secondo D.M. 17-01-18 (N.T.C.)

### Dati generali

Lunghezza = 33.8

### Caratteristiche della sezione

| Descrizione | Tipo | Base | Altezza | Area | Jx | Jy | Wx | Wy |
|---|---|---|---|---|---|---|---|---|
| R 20x20 | Rettangolare | 20 | 20 | 400 | 13333.33 | 13333.33 | 1333.33 | 1333.33 |

Materiale: C14 EN 338:2016
Rapporto luce/freccia elastica limite = 300
Rapporto luce/freccia elastica differita = 200
Mensola Y: Nessuno; Mensola X: Nessuno
Classe di servizio 1

### Verifica pressoflessione D.M. 17-01-18 §4.4.8.1.8

Sezione ad ascissa 0
Coefficiente parziale di sicurezza del materiale γ = 1.5
Kmod = 1.1
(Sc,0,d/fc,0,d)^2 + Sm,y,d/fm,y,d + Km*(Sm,z,d/fm,z,d) <= 1
(Sc,0,d/fc,0,d)^2 + Km*(Sm,y,d/fm,y,d) + Sm,z,d/fm,z,d <= 1
(1.7/117.3)^2+0.7*0.2/102.7+31.2/102.7=0.31 <= 1 [4.4.7b] Comb: SLV, 8; Durata minima del carico nella combinazione: istantaneo
Mx = 237.9; My = 41662.5; N = -682.9

### Verifica taglio D.M. 17-01-18 §4.4.8.1.9

Sezione ad ascissa 33.8
Coefficiente parziale di sicurezza del materiale γ = 1.5
Kmod = 0.8; kcr = 0.67
τ,d <= fv,d
Sqrt(2.22^2+0.18^2) = 2.23 <= 16 Comb: SLU, 72; Durata minima del carico nella combinazione: media
Tx = -394.6; Ty = -32.3

### Verifica taglio+torsione D.M. 17-01-18 §4.4.8.1.11

Sezione ad ascissa 33.8
Coefficiente parziale di sicurezza del materiale γ = 1.5
Kmod = 0.8; kcr = 0.67
τ,tor,d/(ksh*fv,d) + (τ,y,d/fv,d)^2 + (τ,z,d/fv,d)^2 <= 1
0.27+0.02+0 <= 1 Comb: SLU, 80; Durata minima del carico nella combinazione: media
Tx = -389.6; Ty = -31.4; Mt = -8150.7

### Verifica torsione D.M. 17-01-18 §4.4.8.1.10

Sezione ad ascissa 33.8
Coefficiente parziale di sicurezza del materiale γ = 1.5
Kmod = 0.8
τ,tor,d <= Ksh * fv,d
4.89 <= 18.4 Comb: SLU, 80; Durata minima del carico nella combinazione: media
Mt = -8150.7

### Verifica della freccia istantanea totale D.M. 17-01-18 §C4.4.7 Circolare 7 21-01-19

Sezione ad ascissa 14.6
Kdef = 0
Uinst tot in x = 0
Uinst tot in y = 0
Uinst tot = 0
Luce/Uinst,tot > limite
33.8/0=44741.2 > 300 Comb: SLE rara, 9

### Verifica della freccia istantanea variabile D.M. 17-01-18 §4.4.7

Sezione ad ascissa 14.6
Kdef = 0
Uinst var in x = 0
Uinst var in y = 0
Uinst var = 0
Luce/Uinst,var > limite
33.8/0=57152.8 > 300 Comb: SLE rara, 9

### Verifica della freccia finale EC5 §4.4.7 - EC5 2.2.3 (3)

Sezione ad ascissa 14.6
Kdef = 0.6
Ufin in x = 0
Ufin in y = 0
Ufin = 0
Luce/Ufin > limite
33.8/0=39583.5 > 200
Coefficienti combinatori impiegati:
Pesi strutturali = 1,000 + 0,600 = 1,600
Permanenti portati = 1,000 + 0,600 = 1,600
Neve = 0,500 + 0,500 = 1,000
Vento = 0,600 + 0,000 = 0,600

---

## Asta 53: Trave in legno a falda Falda 1 fili 55-241

Verifiche condotte secondo D.M. 17-01-18 (N.T.C.)

### Dati generali

Lunghezza = 33.8

### Caratteristiche della sezione

| Descrizione | Tipo | Base | Altezza | Area | Jx | Jy | Wx | Wy |
|---|---|---|---|---|---|---|---|---|
| R 20x20 | Rettangolare | 20 | 20 | 400 | 13333.33 | 13333.33 | 1333.33 | 1333.33 |

Materiale: C14 EN 338:2016
Rapporto luce/freccia elastica limite = 300
Rapporto luce/freccia elastica differita = 200
Mensola Y: Nessuno; Mensola X: Nessuno
Classe di servizio 1

### Verifica pressoflessione D.M. 17-01-18 §4.4.8.1.8

Sezione ad ascissa 33.8
Coefficiente parziale di sicurezza del materiale γ = 1.5
Kmod = 1.1
(Sc,0,d/fc,0,d)^2 + Sm,y,d/fm,y,d + Km*(Sm,z,d/fm,z,d) <= 1
(Sc,0,d/fc,0,d)^2 + Km*(Sm,y,d/fm,y,d) + Sm,z,d/fm,z,d <= 1
(0.9/117.3)^2+0.7*0.8/102.7+28.8/102.7=0.29 <= 1 [4.4.7b] Comb: SLV, 6; Durata minima del carico nella combinazione: istantaneo
Mx = 1080; My = -38462; N = -365.4

### Verifica taglio D.M. 17-01-18 §4.4.8.1.9

Sezione ad ascissa 0
Coefficiente parziale di sicurezza del materiale γ = 1.5
Kmod = 1.1; kcr = 0.67
τ,d <= fv,d
Sqrt(1.03^2+0.05^2) = 1.03 <= 22 Comb: SLV, 8; Durata minima del carico nella combinazione: istantaneo
Tx = -182.5; Ty = 9.3

### Verifica taglio+torsione D.M. 17-01-18 §4.4.8.1.11

Sezione ad ascissa 33.8
Coefficiente parziale di sicurezza del materiale γ = 1.5
Kmod = 0.8; kcr = 0.67
τ,tor,d/(ksh*fv,d) + (τ,y,d/fv,d)^2 + (τ,z,d/fv,d)^2 <= 1
0.14+0+0 <= 1 Comb: SLU, 71; Durata minima del carico nella combinazione: media
Tx = -113.5; Ty = -38.8; Mt = 4327.9

### Verifica torsione D.M. 17-01-18 §4.4.8.1.10

Sezione ad ascissa 33.8
Coefficiente parziale di sicurezza del materiale γ = 1.5
Kmod = 0.8
τ,tor,d <= Ksh * fv,d
2.6 <= 18.4 Comb: SLU, 71; Durata minima del carico nella combinazione: media
Mt = 4327.9

### Verifica della freccia istantanea totale D.M. 17-01-18 §C4.4.7 Circolare 7 21-01-19

Sezione ad ascissa 18
Kdef = 0
Uinst tot in x = 0
Uinst tot in y = 0
Uinst tot = 0
Luce/Uinst,tot > limite
33.8/0=95615.8 > 300 Comb: SLE rara, 16

**Verifica della freccia istantanea variabile D.M. 17-01-18 §4.4.7**

Sezione ad ascissa 18
Kdef = 0
Uinst var in x = 0
Uinst var in y = 0
Uinst var = 0
Luce/Uinst,var > limite
33.8/0=145323.7 > 300 Comb: SLE rara, 9

**Verifica della freccia finale EC5 §4.4.7 - EC5 2.2.3 (3)**

Sezione ad ascissa 18
Kdef = 0.6
Ufin in x = 0
Ufin in y = 0
Ufin = 0
Luce/Ufin > limite
33.8/0=70048.8 > 200
Coefficienti combinatori impiegati:
Pesi strutturali = 1,000 + 0,600 = 1,600
Permanenti portati = 1,000 + 0,600 = 1,600
Variabile A = 0,700 + 0,180 = 0,880
Neve = 0,500 + 0,500 = 1,000

---

## Asta 54: Trave in legno a falda Falda 1 fili 55-241

Verifiche condotte secondo D.M. 17-01-18 (N.T.C.)

**Dati generali**

Lunghezza = 33.8

**Caratteristiche della sezione**

| Descrizione | Tipo | Base | Altezza | Area | Jx | Jy | Wx | Wy |
|---|---|---|---|---|---|---|---|---|
| R 20x20 | Rettangolare | 20 | 20 | 400 | 13333.33 | 13333.33 | 1333.33 | 1333.33 |

Materiale: C14 EN 338:2016
Rapporto luce/freccia elastica limite = 300
Rapporto luce/freccia elastica differita = 200
Mensola Y: Nessuno; Mensola X: Nessuno
Classe di servizio 1

**Verifica pressoflessione D.M. 17-01-18 §4.4.8.1.8**

Sezione ad ascissa 33.8
Coefficiente parziale di sicurezza del materiale γ = 1.5
Kmod = 0.8
(Sc,0,d/fc,0,d)^2 + Sm,y,d/fm,y,d + Km*(Sm,z,d/fm,z,d) <= 1
(Sc,0,d/fc,0,d)^2 + Km*(Sm,y,d/fm,y,d) + Sm,z,d/fm,z,d <= 1
(2.1/85.3)^2+0.7*0.5/74.7+22/74.7=0.3 <= 1 [4.4.7b] Comb: SLU, 71; Durata minima del carico nella combinazione: media
Mx = -637.9; My = -29385.5; N = -852.2

**Verifica taglio D.M. 17-01-18 §4.4.8.1.9**

Sezione ad ascissa 33.8
Coefficiente parziale di sicurezza del materiale γ = 1.5
Kmod = 0.8; kcr = 0.67
τ,d <= fv,d
Sqrt(3.98^2+0.19^2) = 3.98 <= 16 Comb: SLU, 72; Durata minima del carico nella combinazione: media
Tx = -707; Ty = -33.5

**Verifica taglio+torsione D.M. 17-01-18 §4.4.8.1.11**

Sezione ad ascissa 33.8
Coefficiente parziale di sicurezza del materiale γ = 1.5
Kmod = 0.8; kcr = 0.67
τ,tor,d/(ksh*fv,d) + (τ,y,d/fv,d)^2 + (τ,z,d/fv,d)^2 <= 1
0.27+0.06+0 <= 1 Comb: SLU, 30; Durata minima del carico nella combinazione: media
Tx = -697; Ty = -34.1; Mt = -8137.9

**Verifica torsione D.M. 17-01-18 §4.4.8.1.10**

Sezione ad ascissa 33.8
Coefficiente parziale di sicurezza del materiale γ = 1.5
Kmod = 0.8
τ,tor,d <= Ksh * fv,d
4.89 <= 18.4 Comb: SLU, 30; Durata minima del carico nella combinazione: media
Mt = -8137.9

**Verifica della freccia istantanea totale D.M. 17-01-18 §C4.4.7 Circolare 7 21-01-19**

Sezione ad ascissa 19.1
Kdef = 0
Uinst tot in x = 0
Uinst tot in y = 0
Uinst tot = 0
Luce/Uinst,tot > limite
33.8/0=18197.2 > 300 Comb: SLE rara, 8

**Verifica della freccia istantanea variabile D.M. 17-01-18 §4.4.7**

Sezione ad ascissa 19.1
Kdef = 0
Uinst var in x = 0
Uinst var in y = 0
Uinst var = 0
Luce/Uinst,var > limite
33.8/0=29922.8 > 300 Comb: SLE rara, 8

**Verifica della freccia finale EC5 §4.4.7 - EC5 2.2.3 (3)**

Sezione ad ascissa 19.1
Kdef = 0.6
Ufin in x = 0
Ufin in y = 0
Ufin = 0
Luce/Ufin > limite
33.8/0=14733.2 > 200
Coefficienti combinatori impiegati:
Pesi strutturali = 1,000 + 0,600 = 1,600
Permanenti portati = 1,000 + 0,600 = 1,600
Neve = 0,500 + 0,500 = 1,000

---

## Asta 55: Trave in legno a falda Falda 1 fili 55-241

Verifiche condotte secondo D.M. 17-01-18 (N.T.C.)

**Dati generali**

Lunghezza = 33.8

**Caratteristiche della sezione**

| Descrizione | Tipo | Base | Altezza | Area | Jx | Jy | Wx | Wy |
|---|---|---|---|---|---|---|---|---|
| R 20x20 | Rettangolare | 20 | 20 | 400 | 13333.33 | 13333.33 | 1333.33 | 1333.33 |

Materiale: C14 EN 338:2016
Rapporto luce/freccia elastica limite = 300
Rapporto luce/freccia elastica differita = 200
Mensola Y: Nessuno; Mensola X: Nessuno
Classe di servizio 1

**Verifica pressoflessione D.M. 17-01-18 §4.4.8.1.8**

Sezione ad ascissa 33.8
Coefficiente parziale di sicurezza del materiale γ = 1.5
Kmod = 0.8
(Sc,0,d/fc,0,d)^2 + Sm,y,d/fm,y,d + Km*(Sm,z,d/fm,z,d) <= 1
(Sc,0,d/fc,0,d)^2 + Km*(Sm,y,d/fm,y,d) + Sm,z,d/fm,z,d <= 1
(7.8/85.3)^2+0.7*10.7/74.7+32.8/74.7=0.55 <= 1 [4.4.7b] Comb: SLU, 71; Durata minima del carico nella combinazione: media
Mx = 14322.6; My = -43772.3; N = -3114.1

**Verifica taglio D.M. 17-01-18 §4.4.8.1.9**

Sezione ad ascissa 33.8
Coefficiente parziale di sicurezza del materiale γ = 1.5
Kmod = 0.8; kcr = 0.67
τ,d <= fv,d
Sqrt(2.18^2+0.25^2) = 2.19 <= 16 Comb: SLU, 30; Durata minima del carico nella combinazione: media
Tx = -387; Ty = -43.7

**Verifica taglio+torsione D.M. 17-01-18 §4.4.8.1.11**

Sezione ad ascissa 33.8
Coefficiente parziale di sicurezza del materiale γ = 1.5
Kmod = 0.8; kcr = 0.67
τ,tor,d/(ksh*fv,d) + (τ,y,d/fv,d)^2 + (τ,z,d/fv,d)^2 <= 1
0.1+0.02+0 <= 1 Comb: SLU, 80; Durata minima del carico nella combinazione: media
Tx = -366.9; Ty = -39.9; Mt = 3071.9

**Verifica torsione D.M. 17-01-18 §4.4.8.1.10**

Sezione ad ascissa 33.8
Coefficiente parziale di sicurezza del materiale γ = 1.5
Kmod = 0.8
τ,tor,d <= Ksh * fv,d
1.84 <= 18.4 Comb: SLU, 80; Durata minima del carico nella combinazione: media
Mt = 3071.9

**Verifica della freccia istantanea totale D.M. 17-01-18 §C4.4.7 Circolare 7 21-01-19**

Sezione ad ascissa 16.9
Kdef = 0
Uinst tot in x = 0
Uinst tot in y = 0
Uinst tot = 0
Luce/Uinst,tot > limite
33.8/0=8796.2 > 300 Comb: SLE rara, 8

**Verifica della freccia istantanea variabile D.M. 17-01-18 §4.4.7**

Sezione ad ascissa 18
Kdef = 0
Uinst var in x = 0
Uinst var in y = 0
Uinst var = 0
Luce/Uinst,var > limite
33.8/0=13184.6 > 300 Comb: SLE rara, 8

**Verifica della freccia finale EC5 §4.4.7 - EC5 2.2.3 (3)**

Sezione ad ascissa 16.9
Kdef = 0.6
Ufin in x = 0
Ufin in y = 0
Ufin = 0
Luce/Ufin > limite
33.8/0=7331.5 > 200
Coefficienti combinatori impiegati:
Pesi strutturali = 1,000 + 0,600 = 1,600
Permanenti portati = 1,000 + 0,600 = 1,600
Neve = 0,500 + 0,500 = 1,000

---

## Asta 56: Trave in legno a falda Falda 1 fili 55-241

Verifiche condotte secondo D.M. 17-01-18 (N.T.C.)

**Dati generali**

Lunghezza = 18.9

**Caratteristiche della sezione**

| Descrizione | Tipo | Base | Altezza | Area | Jx | Jy | Wx | Wy |
|---|---|---|---|---|---|---|---|---|
| R 20x20 | Rettangolare | 20 | 20 | 400 | 13333.33 | 13333.33 | 1333.33 | 1333.33 |

Materiale: C14 EN 338:2016
Rapporto luce/freccia elastica limite = 300
Rapporto luce/freccia elastica differita = 200
Mensola Y: Nessuno; Mensola X: Nessuno
Classe di servizio 1

**Verifica pressoflessione D.M. 17-01-18 §4.4.8.1.8**

Sezione ad ascissa 18.9
Coefficiente parziale di sicurezza del materiale γ = 1.5
Kmod = 0.8
(Sc,0,d/fc,0,d)^2 + Sm,y,d/fm,y,d + Km*(Sm,z,d/fm,z,d) <= 1
(Sc,0,d/fc,0,d)^2 + Km*(Sm,y,d/fm,y,d) + Sm,z,d/fm,z,d <= 1
(8.7/85.3)^2+0.7*3.4/74.7+42.6/74.7=0.61 <= 1 [4.4.7b] Comb: SLU, 72; Durata minima del carico nella combinazione: media
Mx = 4467.9; My = -56778.2; N = -3462.7

**Verifica taglio D.M. 17-01-18 §4.4.8.1.9**

Sezione ad ascissa 0
Coefficiente parziale di sicurezza del materiale γ = 1.5
Kmod = 0.8; kcr = 0.67
τ,d <= fv,d
Sqrt(3.78^2+0.31^2) = 3.79 <= 16 Comb: SLU, 72; Durata minima del carico nella combinazione: media
Tx = -672.1; Ty = 55

**Verifica taglio+torsione D.M. 17-01-18 §4.4.8.1.11**

Sezione ad ascissa 0
Coefficiente parziale di sicurezza del materiale γ = 1.5
Kmod = 0.8; kcr = 0.67
τ,tor,d/(ksh*fv,d) + (τ,y,d/fv,d)^2 + (τ,z,d/fv,d)^2 <= 1
0.54+0.05+0 <= 1 Comb: SLU, 30; Durata minima del carico nella combinazione: media
Tx = -658.4; Ty = 51.8; Mt = -16638.3

**Verifica torsione D.M. 17-01-18 §4.4.8.1.10**

Sezione ad ascissa 18.9
Coefficiente parziale di sicurezza del materiale γ = 1.5
Kmod = 0.8
τ,tor,d <= Ksh * fv,d
10.06 <= 18.4 Comb: SLU, 29; Durata minima del carico nella combinazione: media
Mt = -16752.9

**Verifica della freccia istantanea totale D.M. 17-01-18 §C4.4.7 Circolare 7 21-01-19**

Sezione ad ascissa 9.5
Kdef = 0
Uinst tot in x = 0
Uinst tot in y = 0
Uinst tot = 0
Luce/Uinst,tot > limite
18.9/0=11685.8 > 300 Comb: SLE rara, 9

**Verifica della freccia istantanea variabile D.M. 17-01-18 §4.4.7**

Sezione ad ascissa 9.5
Kdef = 0
Uinst var in x = 0
Uinst var in y = 0
Uinst var = 0
Luce/Uinst,var > limite
18.9/0=16791.8 > 300 Comb: SLE rara, 9

**Verifica della freccia finale EC5 §4.4.7 - EC5 2.2.3 (3)**

Sezione ad ascissa 9.5
Kdef = 0.6
Ufin in x = 0
Ufin in y = 0
Ufin = 0
Luce/Ufin > limite
18.9/0=9882.7 > 200
Coefficienti combinatori impiegati:
Pesi strutturali = 1,000 + 0,600 = 1,600
Permanenti portati = 1,000 + 0,600 = 1,600
Neve = 0,500 + 0,500 = 1,000
Vento = 0,600 + 0,000 = 0,600

---

## Asta 57: Trave in legno a falda Falda 5 fili 241-277

Verifiche condotte secondo D.M. 17-01-18 (N.T.C.)

**Dati generali**

Lunghezza = 13.7

**Caratteristiche della sezione**

| Descrizione | Tipo | Base | Altezza | Area | Jx | Jy | Wx | Wy |
|---|---|---|---|---|---|---|---|---|
| R 18x23 | Rettangolare | 18 | 23 | 414 | 18250.5 | 11178 | 1587 | 1242 |

Materiale: C14 EN 338:2016
Rapporto luce/freccia elastica limite = 300
Rapporto luce/freccia elastica differita = 200
Mensola Y: Nessuno; Mensola X: Nessuno
Classe di servizio 1

**Verifica tensoflessione D.M. 17-01-18 §4.4.8.1.7**

Sezione ad ascissa 13.7
Coefficiente parziale di sicurezza del materiale γ = 1.5
Kmod = 0.8
St,0,d/ft,0,d + Sm,y,d/fm,y,d + Km*(Sm,z,d/fm,z,d) !> 1
St,0,d/ft,0,d + Km*(Sm,y,d/fm,y,d) + Sm,z,d/fm,z,d !> 1
0.7/38.4+99.1/74.7+0.7*84.2/74.7=2.13 !> 1 [4.4.6a] Comb: SLU, 72; Durata minima del carico nella combinazione: media - NON SODDISFATTA

Mx = 157271; My = 104521.9; N = 279.4

**Verifica taglio D.M. 17-01-18 §4.4.8.1.9**

Sezione ad ascissa 13.7
Coefficiente parziale di sicurezza del materiale γ = 1.5
Kmod = 0.8; kcr = 0.67
τ,d <= fv,d
Sqrt(6.22^2+9.49^2) = 11.35 <= 16 Comb: SLU, 72; Durata minima del carico nella combinazione: media
Tx = -1144.4; Ty = -1746.7

**Verifica taglio+torsione D.M. 17-01-18 §4.4.8.1.11**

Sezione ad ascissa 13.7
Coefficiente parziale di sicurezza del materiale γ = 1.5
Kmod = 0.8; kcr = 0.67
τ,tor,d/(ksh*fv,d) + (τ,y,d/fv,d)^2 + (τ,z,d/fv,d)^2 > 1
3.96+0.16+0.33 > 1 Comb: SLU, 80; Durata minima del carico nella combinazione: media - NON SODDISFATTA
Tx = -1179; Ty = -1686.4; Mt = 124963.5

**Verifica torsione D.M. 17-01-18 §4.4.8.1.10**

Sezione ad ascissa 13.7
Coefficiente parziale di sicurezza del materiale γ = 1.5
Kmod = 0.8
τ,tor,d > Ksh * fv,d
75.42 > 19.07 Comb: SLU, 80; Durata minima del carico nella combinazione: media - NON SODDISFATTA
Mt = 124963.5

**Verifica della freccia istantanea totale D.M. 17-01-18 §C4.4.7 Circolare 7 21-01-19**

Sezione ad ascissa 6.9
Kdef = 0
Uinst tot in x = 0
Uinst tot in y = 0
Uinst tot = 0
Luce/Uinst,tot > limite
13.7/0=6002.4 > 300 Comb: SLE rara, 8

**Verifica della freccia istantanea variabile D.M. 17-01-18 §4.4.7**

Sezione ad ascissa 6.9
Kdef = 0
Uinst var in x = 0
Uinst var in y = 0
Uinst var = 0
Luce/Uinst,var > limite
13.7/0=8934 > 300 Comb: SLE rara, 8

**Verifica della freccia finale EC5 §4.4.7 - EC5 2.2.3 (3)**

Sezione ad ascissa 6.9
Kdef = 0.6
Ufin in x = 0
Ufin in y = 0
Ufin = 0
Luce/Ufin > limite
13.7/0=5015 > 200
Coefficienti combinatori impiegati:
Pesi strutturali = 1,000 + 0,600 = 1,600
Permanenti portati = 1,000 + 0,600 = 1,600
Neve = 0,500 + 0,500 = 1,000

## Asta 58: Trave in legno a falda Falda 5 fili 241-277

Verifiche condotte secondo D.M. 17-01-18 (N.T.C.)

**Dati generali**

Lunghezza = 57.7

**Caratteristiche della sezione**

| Descrizione | Tipo | Base | Altezza | Area | Jx | Jy | Wx | Wy |
|---|---|---|---|---|---|---|---|---|
| R 18x23 | Rettangolare | 18 | 23 | 414 | 18250.5 | 11178 | 1587 | 1242 |

Materiale: C14 EN 338:2016
Rapporto luce/freccia elastica limite = 300
Rapporto luce/freccia elastica differita = 200
Mensola Y: Nessuno; Mensola X: Nessuno
Classe di servizio 1

### Verifica taglio D.M. 17-01-18 §4.4.8.1.9

Sezione ad ascissa 0
Coefficiente parziale di sicurezza del materiale γ = 1.5
Kmod = 0.8; kcr = 0.67
τ,d <= fv,d
Sqrt(1.31^2+15.25^2) = 15.31 <= 16 Comb: SLU, 72; Durata minima del carico nella combinazione: media
Tx = 240.5; Ty = 2806.7

### Verifica pressoflessione D.M. 17-01-18 §4.4.8.1.8

Sezione ad ascissa 0
Coefficiente parziale di sicurezza del materiale γ = 1.5
Kmod = 0.8
(Sc,0,d/fc,0,d)^2 + Sm,y,d/fm,y,d + Km*(Sm,z,d/fm,z,d) <= 1
(Sc,0,d/fc,0,d)^2 + Km*(Sm,y,d/fm,y,d) + Sm,z,d/fm,z,d <= 1
(0.8/85.3)^2+155.3/74.7+0.7*20.8/74.67=2.28 !> 1 [4.4.7a] Comb: SLU, 72; Durata minima del carico nella combinazione: media - NON SODDISFATTA
Mx = 246497.9; My = 25882.8; N = -350.7

### Verifica taglio+torsione D.M. 17-01-18 §4.4.8.1.11

Sezione ad ascissa 0
Coefficiente parziale di sicurezza del materiale γ = 1.5
Kmod = 0.8; kcr = 0.67
τ,tor,d/(ksh*fv,d) + (τ,y,d/fv,d)^2 + (τ,z,d/fv,d)^2 > 1
0.29+0.01+0.91 > 1 Comb: SLU, 72; Durata minima del carico nella combinazione: media - NON SODDISFATTA
Tx = 240.5; Ty = 2806.7; Mt = 9051.1

### Verifica torsione D.M. 17-01-18 §4.4.8.1.10

Sezione ad ascissa 57.7
Coefficiente parziale di sicurezza del materiale γ = 1.5
Kmod = 0.8
τ,tor,d <= Ksh * fv,d
5.49 <= 19.07 Comb: SLU, 71; Durata minima del carico nella combinazione: media
Mt = 9104.1

---

## Asta 59: Trave in legno a falda Falda 5 fili 241-277

Verifiche condotte secondo D.M. 17-01-18 (N.T.C.)

### Dati generali

Lunghezza = 12.2

### Caratteristiche della sezione

| Descrizione | Tipo | Base | Altezza | Area | Jx | Jy | Wx | Wy |
|---|---|---|---|---|---|---|---|---|
| R 18x23 | Rettangolare | 18 | 23 | 414 | 18250.5 | 11178 | 1587 | 1242 |

Materiale: C14 EN 338:2016
Rapporto luce/freccia elastica limite = 300
Rapporto luce/freccia elastica differita = 200
Mensola Y: Nessuno; Mensola X: Nessuno
Classe di servizio 1

### Verifica taglio D.M. 17-01-18 §4.4.8.1.9

Sezione ad ascissa 0
Coefficiente parziale di sicurezza del materiale γ = 1.5
Kmod = 0.8; kcr = 0.67
τ,d <= fv,d
Sqrt(0.92^2+12.79^2) = 12.82 <= 16 Comb: SLU, 72; Durata minima del carico nella combinazione: media
Tx = 170.1; Ty = 2353.2

### Verifica pressoflessione D.M. 17-01-18 §4.4.8.1.8

Sezione ad ascissa 0
Coefficiente parziale di sicurezza del materiale γ = 1.5
Kmod = 0.8
(Sc,0,d/fc,0,d)^2 + Sm,y,d/fm,y,d + Km*(Sm,z,d/fm,z,d) <= 1
(Sc,0,d/fc,0,d)^2 + Km*(Sm,y,d/fm,y,d) + Sm,z,d/fm,z,d <= 1
(1.1/85.3)^2+62.9/74.7+0.7*32.9/74.67=1.15 !> 1 [4.4.7a] Comb: SLU, 72; Durata minima del carico nella combinazione: media - NON SODDISFATTA
Mx = 99752.8; My = 40857.3; N = -453.5

### Verifica taglio+torsione D.M. 17-01-18 §4.4.8.1.11

Sezione ad ascissa 0
Coefficiente parziale di sicurezza del materiale γ = 1.5
Kmod = 0.8; kcr = 0.67
τ,tor,d/(ksh*fv,d) + (τ,y,d/fv,d)^2 + (τ,z,d/fv,d)^2 <= 1

0.27+0+0.64 <= 1 Comb: SLU, 72; Durata minima del carico nella combinazione: media
Tx = 170.1; Ty = 2353.2; Mt = 8473.4

**Verifica torsione D.M. 17-01-18 §4.4.8.1.10**

Sezione ad ascissa 12.2
Coefficiente parziale di sicurezza del materiale γ = 1.5
Kmod = 0.8
τ,tor,d <= Ksh * fv,d
5.17 <= 19.07 Comb: SLU, 71; Durata minima del carico nella combinazione: media
Mt = 8566.2

## Asta 60: Trave in legno a falda Falda 5 fili 241-277

Verifiche condotte secondo D.M. 17-01-18 (N.T.C.)

**Dati generali**

Lunghezza = 87

**Caratteristiche della sezione**

| Descrizione | Tipo | Base | Altezza | Area | Jx | Jy | Wx | Wy |
|---|---|---|---|---|---|---|---|---|
| R 18x23 | Rettangolare | 18 | 23 | 414 | 18250.5 | 11178 | 1587 | 1242 |

Materiale: C14 EN 338:2016
Rapporto luce/freccia elastica limite = 300
Rapporto luce/freccia elastica differita = 200
Mensola Y: Nessuno; Mensola X: Nessuno
Classe di servizio 1

**Verifica taglio D.M. 17-01-18 §4.4.8.1.9**

Sezione ad ascissa 0
Coefficiente parziale di sicurezza del materiale γ = 1.5
Kmod = 0.8; kcr = 0.67
τ,d <= fv,d
Sqrt(1.05^2+10.49^2) = 10.54 <= 16 Comb: SLU, 72; Durata minima del carico nella combinazione: media
Tx = -193.7; Ty = 1929.7

**Verifica pressoflessione D.M. 17-01-18 §4.4.8.1.8**

Sezione ad ascissa 0
Coefficiente parziale di sicurezza del materiale γ = 1.5
Kmod = 0.8
(Sc,0,d/fc,0,d)^2 + Sm,y,d/fm,y,d + Km*(Sm,z,d/fm,z,d) <= 1
(Sc,0,d/fc,0,d)^2 + Km*(Sm,y,d/fm,y,d) + Sm,z,d/fm,z,d <= 1
(2.5/85.3)^2+48.6/74.7+0.7*28/74.67=0.91 <= 1 [4.4.7a] Comb: SLU, 72; Durata minima del carico nella combinazione: media
Mx = 77128.5; My = 34801; N = -1027.9

**Verifica taglio+torsione D.M. 17-01-18 §4.4.8.1.11**

Sezione ad ascissa 0
Coefficiente parziale di sicurezza del materiale γ = 1.5
Kmod = 0.8; kcr = 0.67
τ,tor,d/(ksh*fv,d) + (τ,y,d/fv,d)^2 + (τ,z,d/fv,d)^2 <= 1
0.23+0+0.43 <= 1 Comb: SLU, 72; Durata minima del carico nella combinazione: media
Tx = -193.7; Ty = 1929.7; Mt = 7181.9

**Verifica torsione D.M. 17-01-18 §4.4.8.1.10**

Sezione ad ascissa 87
Coefficiente parziale di sicurezza del materiale γ = 1.5
Kmod = 0.8
τ,tor,d <= Ksh * fv,d
4.33 <= 19.07 Comb: SLU, 72; Durata minima del carico nella combinazione: media
Mt = 7181.9

## Asta 61: Trave in legno a falda Falda 5 fili 241-277

Verifiche condotte secondo D.M. 17-01-18 (N.T.C.)

**Dati generali**

Lunghezza = 99.2

**Caratteristiche della sezione**

| Descrizione | Tipo | Base | Altezza | Area | Jx | Jy | Wx | Wy |
|---|---|---|---|---|---|---|---|---|
| R 18x23 | Rettangolare | 18 | 23 | 414 | 18250.5 | 11178 | 1587 | 1242 |

Materiale: C14 EN 338:2016

Rapporto luce/freccia elastica limite = 300
Rapporto luce/freccia elastica differita = 200
Mensola Y: Nessuno; Mensola X: Nessuno
Classe di servizio 1

**Verifica taglio D.M. 17-01-18 §4.4.8.1.9**

Sezione ad ascissa 0
Coefficiente parziale di sicurezza del materiale γ = 1.5
Kmod = 0.8; kcr = 0.67
τ,d <= fv,d
Sqrt(1.91^2+5.36^2) = 5.69 <= 16 Comb: SLU, 72; Durata minima del carico nella combinazione: media
Tx = -351; Ty = 986.8

**Verifica pressoflessione D.M. 17-01-18 §4.4.8.1.8**

Sezione ad ascissa 99.2
Coefficiente parziale di sicurezza del materiale γ = 1.5
Kmod = 0.8
(Sc,0,d/fc,0,d)^2 + Sm,y,d/fm,y,d + Km*(Sm,z,d/fm,z,d) <= 1
(Sc,0,d/fc,0,d)^2 + Km*(Sm,y,d/fm,y,d) + Sm,z,d/fm,z,d <= 1
(5/85.3)^2+79.3/74.7+0.7*16.9/74.67=1.22 !> 1 [4.4.7a] Comb: SLU, 80; Durata minima del carico nella combinazione: media - NON SODDISFATTA
Mx = -125791.3; My = -20948.3; N = -2089

**Verifica taglio+torsione D.M. 17-01-18 §4.4.8.1.11**

Sezione ad ascissa 0
Coefficiente parziale di sicurezza del materiale γ = 1.5
Kmod = 0.8; kcr = 0.67
τ,tor,d/(ksh*fv,d) + (τ,y,d/fv,d)^2 + (τ,z,d/fv,d)^2 <= 1
0.06+0.01+0.11 <= 1 Comb: SLU, 72; Durata minima del carico nella combinazione: media
Tx = -351; Ty = 986.8; Mt = 1807

**Verifica torsione D.M. 17-01-18 §4.4.8.1.10**

Sezione ad ascissa 99.2
Coefficiente parziale di sicurezza del materiale γ = 1.5
Kmod = 0.8
τ,tor,d <= Ksh * fv,d
1.09 <= 19.07 Comb: SLU, 72; Durata minima del carico nella combinazione: media
Mt = 1807

---

## Asta 62: Trave in legno a falda Falda 5 fili 241-277

Verifiche condotte secondo D.M. 17-01-18 (N.T.C.)

**Dati generali**

Lunghezza = 59

**Caratteristiche della sezione**

| Descrizione | Tipo | Base | Altezza | Area | Jx | Jy | Wx | Wy |
|---|---|---|---|---|---|---|---|---|
| R 18x23 | Rettangolare | 18 | 23 | 414 | 18250.5 | 11178 | 1587 | 1242 |

Materiale: C14 EN 338:2016
Rapporto luce/freccia elastica limite = 300
Rapporto luce/freccia elastica differita = 200
Mensola Y: Nessuno; Mensola X: Nessuno
Classe di servizio 1

**Verifica taglio D.M. 17-01-18 §4.4.8.1.9**

Sezione ad ascissa 59
Coefficiente parziale di sicurezza del materiale γ = 1.5
Kmod = 0.8; kcr = 0.67
τ,d <= fv,d
Sqrt(2.33^2+1.17^2) = 2.6 <= 16 Comb: SLU, 80; Durata minima del carico nella combinazione: media
Tx = -428.4; Ty = -214.6

**Verifica pressoflessione D.M. 17-01-18 §4.4.8.1.8**

Sezione ad ascissa 59
Coefficiente parziale di sicurezza del materiale γ = 1.5
Kmod = 0.8
(Sc,0,d/fc,0,d)^2 + Sm,y,d/fm,y,d + Km*(Sm,z,d/fm,z,d) <= 1
(Sc,0,d/fc,0,d)^2 + Km*(Sm,y,d/fm,y,d) + Sm,z,d/fm,z,d <= 1
(6.5/85.3)^2+68.1/74.7+0.7*37/74.67=1.26 !> 1 [4.4.7a] Comb: SLU, 80; Durata minima del carico nella combinazione: media - NON SODDISFATTA
Mx = -108038.5; My = -45943.8; N = -2703.7

**Verifica taglio+torsione D.M. 17-01-18 §4.4.8.1.11**

Sezione ad ascissa 0
Coefficiente parziale di sicurezza del materiale γ = 1.5
Kmod = 1.1; kcr = 0.67
τ,tor,d/(ksh*fv,d) + (τ,y,d/fv,d)^2 + (τ,z,d/fv,d)^2 <= 1
0.05+0+0 <= 1 Comb: SLV, 10; Durata minima del carico nella combinazione: istantaneo
Tx = -197.3; Ty = 45.5; Mt = 1976.3

**Verifica torsione D.M. 17-01-18 §4.4.8.1.10**

Sezione ad ascissa 59
Coefficiente parziale di sicurezza del materiale γ = 1.5
Kmod = 1.1
τ,tor,d <= Ksh * fv,d
1.21 <= 26.22 Comb: SLV, 8; Durata minima del carico nella combinazione: istantaneo
Mt = -2011.4

---

## Asta 63: Trave in legno a falda Falda 5 fili 241-277

Verifiche condotte secondo D.M. 17-01-18 (N.T.C.)

**Dati generali**

Lunghezza = 42

**Caratteristiche della sezione**

| Descrizione | Tipo | Base | Altezza | Area | Jx | Jy | Wx | Wy |
|---|---|---|---|---|---|---|---|---|
| R 18x23 | Rettangolare | 18 | 23 | 414 | 18250.5 | 11178 | 1587 | 1242 |

Materiale: C14 EN 338:2016
Rapporto luce/freccia elastica limite = 300
Rapporto luce/freccia elastica differita = 200
Mensola Y: Nessuno; Mensola X: Nessuno
Classe di servizio 1

**Verifica taglio D.M. 17-01-18 §4.4.8.1.9**

Sezione ad ascissa 42
Coefficiente parziale di sicurezza del materiale γ = 1.5
Kmod = 0.8; kcr = 0.67
τ,d <= fv,d
Sqrt(0.39^2+2.36^2) = 2.4 <= 16 Comb: SLU, 79; Durata minima del carico nella combinazione: media
Tx = 71.6; Ty = -434.9

**Verifica pressoflessione D.M. 17-01-18 §4.4.8.1.8**

Sezione ad ascissa 0
Coefficiente parziale di sicurezza del materiale γ = 1.5
Kmod = 0.8
(Sc,0,d/fc,0,d)^2 + Sm,y,d/fm,y,d + Km*(Sm,z,d/fm,z,d) <= 1
(Sc,0,d/fc,0,d)^2 + Km*(Sm,y,d/fm,y,d) + Sm,z,d/fm,z,d <= 1
(5.8/85.3)^2+74.4/74.7+0.7*18.1/74.67=1.17 !> 1 [4.4.7a] Comb: SLU, 80; Durata minima del carico nella combinazione: media - NON SODDISFATTA
Mx = -118137; My = -22513.1; N = -2421.9

**Verifica taglio+torsione D.M. 17-01-18 §4.4.8.1.11**

Sezione ad ascissa 42
Coefficiente parziale di sicurezza del materiale γ = 1.5
Kmod = 0.8; kcr = 0.67
τ,tor,d/(ksh*fv,d) + (τ,y,d/fv,d)^2 + (τ,z,d/fv,d)^2 <= 1
0.39+0+0.02 <= 1 Comb: SLU, 80; Durata minima del carico nella combinazione: media
Tx = 141.4; Ty = -408.8; Mt = -12252.1

**Verifica torsione D.M. 17-01-18 §4.4.8.1.10**

Sezione ad ascissa 42
Coefficiente parziale di sicurezza del materiale γ = 1.5
Kmod = 0.8
τ,tor,d <= Ksh * fv,d
7.39 <= 19.07 Comb: SLU, 80; Durata minima del carico nella combinazione: media
Mt = -12252.1

---

## Asta 64: Trave in legno a falda Falda 5 fili 241-277

Verifiche condotte secondo D.M. 17-01-18 (N.T.C.)

### Dati generali

Lunghezza = 98.5

### Caratteristiche della sezione

| Descrizione | Tipo | Base | Altezza | Area | Jx | Jy | Wx | Wy |
|---|---|---|---|---|---|---|---|---|
| R 18x23 | Rettangolare | 18 | 23 | 414 | 18250.5 | 11178 | 1587 | 1242 |

Materiale: C14 EN 338:2016
Rapporto luce/freccia elastica limite = 300
Rapporto luce/freccia elastica differita = 200
Mensola Y: Nessuno; Mensola X: Nessuno
Classe di servizio 1

### Verifica taglio D.M. 17-01-18 §4.4.8.1.9

Sezione ad ascissa 98.5
Coefficiente parziale di sicurezza del materiale γ = 1.5
Kmod = 0.8; kcr = 0.67
τ,d <= fv,d
Sqrt(0.08^2+3.6^2) = 3.6 <= 16 Comb: SLU, 79; Durata minima del carico nella combinazione: media
Tx = 14.3; Ty = -662

### Verifica pressoflessione D.M. 17-01-18 §4.4.8.1.8

Sezione ad ascissa 0
Coefficiente parziale di sicurezza del materiale γ = 1.5
Kmod = 0.8
(Sc,0,d/fc,0,d)^2 + Sm,y,d/fm,y,d + Km*(Sm,z,d/fm,z,d) <= 1
(Sc,0,d/fc,0,d)^2 + Km*(Sm,y,d/fm,y,d) + Sm,z,d/fm,z,d <= 1
(5.8/85.3)^2+59.1/74.7+0.7*10.6/74.67=0.9 <= 1 [4.4.7a] Comb: SLU, 80; Durata minima del carico nella combinazione: media
Mx = -93768.1; My = -13127.3; N = -2401.3

### Verifica taglio+torsione D.M. 17-01-18 §4.4.8.1.11

Sezione ad ascissa 98.5
Coefficiente parziale di sicurezza del materiale γ = 1.5
Kmod = 0.8; kcr = 0.67
τ,tor,d/(ksh*fv,d) + (τ,y,d/fv,d)^2 + (τ,z,d/fv,d)^2 <= 1
0.21+0+0.05 <= 1 Comb: SLU, 80; Durata minima del carico nella combinazione: media
Tx = 40.1; Ty = -655.3; Mt = -6595.4

### Verifica torsione D.M. 17-01-18 §4.4.8.1.10

Sezione ad ascissa 98.5
Coefficiente parziale di sicurezza del materiale γ = 1.5
Kmod = 0.8
τ,tor,d <= Ksh * fv,d
3.98 <= 19.07 Comb: SLU, 72; Durata minima del carico nella combinazione: media
Mt = -6597.4

---

## Asta 65: Trave in legno a falda Falda 5 fili 241-277

Verifiche condotte secondo D.M. 17-01-18 (N.T.C.)

### Dati generali

Lunghezza = 99.4

### Caratteristiche della sezione

| Descrizione | Tipo | Base | Altezza | Area | Jx | Jy | Wx | Wy |
|---|---|---|---|---|---|---|---|---|
| R 18x23 | Rettangolare | 18 | 23 | 414 | 18250.5 | 11178 | 1587 | 1242 |

Materiale: C14 EN 338:2016
Rapporto luce/freccia elastica limite = 300
Rapporto luce/freccia elastica differita = 200
Mensola Y: Nessuno; Mensola X: Nessuno
Classe di servizio 1

### Verifica taglio D.M. 17-01-18 §4.4.8.1.9

Sezione ad ascissa 99.4
Coefficiente parziale di sicurezza del materiale γ = 1.5
Kmod = 0.8; kcr = 0.67
τ,d <= fv,d
Sqrt(0.05^2+3.88^2) = 3.88 <= 16 Comb: SLU, 80; Durata minima del carico nella combinazione: media
Tx = 9.5; Ty = -713.5

### Verifica pressoflessione D.M. 17-01-18 §4.4.8.1.8

Sezione ad ascissa 0
Coefficiente parziale di sicurezza del materiale γ = 1.5

Kmod = 0.8
(Sc,0,d/fc,0,d)^2 + Sm,y,d/fm,y,d + Km*(Sm,z,d/fm,z,d) <= 1
(Sc,0,d/fc,0,d)^2 + Km*(Sm,y,d/fm,y,d) + Sm,z,d/fm,z,d <= 1
(5.3/85.3)^2+21.8/74.7+0.7*7/74.67=0.36 <= 1 [4.4.7a] Comb: SLU, 79; Durata minima del carico nella combinazione: media
Mx = -34586; My = -8724.8; N = -2198.3

**Verifica taglio+torsione D.M. 17-01-18 §4.4.8.1.11**

Sezione ad ascissa 99.4
Coefficiente parziale di sicurezza del materiale γ = 1.5
Kmod = 0.8; kcr = 0.67
τ,tor,d/(ksh*fv,d) + (τ,y,d/fv,d)^2 + (τ,z,d/fv,d)^2 <= 1
0.1+0+0.06 <= 1 Comb: SLU, 72; Durata minima del carico nella combinazione: media
Tx = 11.5; Ty = -712.7; Mt = -3299.4

**Verifica torsione D.M. 17-01-18 §4.4.8.1.10**

Sezione ad ascissa 99.4
Coefficiente parziale di sicurezza del materiale γ = 1.5
Kmod = 0.8
τ,tor,d <= Ksh * fv,d
1.99 <= 19.07 Comb: SLU, 72; Durata minima del carico nella combinazione: media
Mt = -3299.4

---

## Asta 66: Trave in legno a falda Falda 5 fili 241-277

Verifiche condotte secondo D.M. 17-01-18 (N.T.C.)

**Dati generali**

Lunghezza = 110.5

**Caratteristiche della sezione**

| Descrizione | Tipo | Base | Altezza | Area | Jx | Jy | Wx | Wy |
|---|---|---|---|---|---|---|---|---|
| R 18x23 | Rettangolare | 18 | 23 | 414 | 18250.5 | 11178 | 1587 | 1242 |

Materiale: C14 EN 338:2016
Rapporto luce/freccia elastica limite = 300
Rapporto luce/freccia elastica differita = 200
Mensola Y: Nessuno; Mensola X: Nessuno
Classe di servizio 1

**Verifica taglio D.M. 17-01-18 §4.4.8.1.9**

Sezione ad ascissa 110.5
Coefficiente parziale di sicurezza del materiale γ = 1.5
Kmod = 0.8; kcr = 0.67
τ,d <= fv,d
Sqrt(0.21^2+2.15^2) = 2.16 <= 16 Comb: SLU, 80; Durata minima del carico nella combinazione: media
Tx = -38.6; Ty = -395.3

**Verifica pressoflessione D.M. 17-01-18 §4.4.8.1.8**

Sezione ad ascissa 110.5
Coefficiente parziale di sicurezza del materiale γ = 1.5
Kmod = 0.8
(Sc,0,d/fc,0,d)^2 + Sm,y,d/fm,y,d + Km*(Sm,z,d/fm,z,d) <= 1
(Sc,0,d/fc,0,d)^2 + Km*(Sm,y,d/fm,y,d) + Sm,z,d/fm,z,d <= 1
(5.1/85.3)^2+46.5/74.7+0.7*7.3/74.67=0.69 <= 1 [4.4.7a] Comb: SLU, 80; Durata minima del carico nella combinazione: media
Mx = 73838; My = -9030.4; N = -2092

**Verifica taglio+torsione D.M. 17-01-18 §4.4.8.1.11**

Sezione ad ascissa 110.5
Coefficiente parziale di sicurezza del materiale γ = 1.5
Kmod = 0.8; kcr = 0.67
τ,tor,d/(ksh*fv,d) + (τ,y,d/fv,d)^2 + (τ,z,d/fv,d)^2 <= 1
0.05+0+0.02 <= 1 Comb: SLU, 72; Durata minima del carico nella combinazione: media
Tx = -34.4; Ty = -394.4; Mt = -1698.2

**Verifica torsione D.M. 17-01-18 §4.4.8.1.10**

Sezione ad ascissa 110.5
Coefficiente parziale di sicurezza del materiale γ = 1.5
Kmod = 0.8
τ,tor,d <= Ksh * fv,d
1.02 <= 19.07 Comb: SLU, 72; Durata minima del carico nella combinazione: media
Mt = -1698.2

---

## Asta 67: Trave in legno a falda Falda 5 fili 241-279

Verifiche condotte secondo D.M. 17-01-18 (N.T.C.)

### Dati generali

Lunghezza = 74.2

### Caratteristiche della sezione

| Descrizione | Tipo | Base | Altezza | Area | Jx | Jy | Wx | Wy |
|---|---|---|---|---|---|---|---|---|
| R 18x23 | Rettangolare | 18 | 23 | 414 | 18250.5 | 11178 | 1587 | 1242 |

Materiale: C14 EN 338:2016
Rapporto luce/freccia elastica limite = 300
Rapporto luce/freccia elastica differita = 200
Mensola Y: Nessuno; Mensola X: Nessuno
Classe di servizio 1

### Verifica taglio D.M. 17-01-18 §4.4.8.1.9

Sezione ad ascissa 0
Coefficiente parziale di sicurezza del materiale γ = 1.5
Kmod = 0.8; kcr = 0.67
τ,d > fv,d
Sqrt(0.53^2+16.01^2) = 16.02 > 16 Comb: SLU, 80; Durata minima del carico nella combinazione: media - NON SODDISFATTA
Tx = 97.3; Ty = 2946.5

### Verifica pressoflessione D.M. 17-01-18 §4.4.8.1.8

Sezione ad ascissa 0
Coefficiente parziale di sicurezza del materiale γ = 1.5
Kmod = 0.8
(Sc,0,d/fc,0,d)^2 + Sm,y,d/fm,y,d + Km*(Sm,z,d/fm,z,d) <= 1
(Sc,0,d/fc,0,d)^2 + Km*(Sm,y,d/fm,y,d) + Sm,z,d/fm,z,d <= 1
(4.5/85.3)^2+163.8/74.7+0.7*49.7/74.67=2.66 !> 1 [4.4.7a] Comb: SLU, 71; Durata minima del carico nella combinazione: media - NON SODDISFATTA
Mx = 260010.5; My = -61701.1; N = -1878.7

### Verifica taglio+torsione D.M. 17-01-18 §4.4.8.1.11

Sezione ad ascissa 0
Coefficiente parziale di sicurezza del materiale γ = 1.5
Kmod = 0.8; kcr = 0.67
τ,tor,d/(ksh*fv,d) + (τ,y,d/fv,d)^2 + (τ,z,d/fv,d)^2 > 1
0.54+0+1 > 1 Comb: SLU, 80; Durata minima del carico nella combinazione: media - NON SODDISFATTA
Tx = 97.3; Ty = 2946.5; Mt = -17107.1

### Verifica torsione D.M. 17-01-18 §4.4.8.1.10

Sezione ad ascissa 74.2
Coefficiente parziale di sicurezza del materiale γ = 1.5
Kmod = 0.8
τ,tor,d <= Ksh * fv,d
10.33 <= 19.07 Comb: SLU, 79; Durata minima del carico nella combinazione: media
Mt = -17115.8

---

## Asta 68: Trave in legno a falda Falda 5 fili 241-279

Verifiche condotte secondo D.M. 17-01-18 (N.T.C.)

### Dati generali

Lunghezza = 103.7

### Caratteristiche della sezione

| Descrizione | Tipo | Base | Altezza | Area | Jx | Jy | Wx | Wy |
|---|---|---|---|---|---|---|---|---|
| R 18x23 | Rettangolare | 18 | 23 | 414 | 18250.5 | 11178 | 1587 | 1242 |

Materiale: C14 EN 338:2016
Rapporto luce/freccia elastica limite = 300
Rapporto luce/freccia elastica differita = 200
Mensola Y: Nessuno; Mensola X: Nessuno
Classe di servizio 1

### Verifica taglio D.M. 17-01-18 §4.4.8.1.9

Sezione ad ascissa 0
Coefficiente parziale di sicurezza del materiale γ = 1.5
Kmod = 0.8; kcr = 0.67
τ,d <= fv,d
Sqrt(2.86^2+11.2^2) = 11.56 <= 16 Comb: SLU, 79; Durata minima del carico nella combinazione: media
Tx = 526.1; Ty = 2061.1

**Verifica pressoflessione D.M. 17-01-18 §4.4.8.1.8**

Sezione ad ascissa 103.7
Coefficiente parziale di sicurezza del materiale γ = 1.5
Kmod = 0.8
(Sc,0,d/fc,0,d)^2 + Sm,y,d/fm,y,d + Km*(Sm,z,d/fm,z,d) <= 1
(Sc,0,d/fc,0,d)^2 + Km*(Sm,y,d/fm,y,d) + Sm,z,d/fm,z,d <= 1
(6.7/85.3)^2+68.2/74.7+0.7*4.6/74.67=0.96 <= 1 [4.4.7a] Comb: SLU, 72; Durata minima del carico nella combinazione: media
Mx = -108262.8; My = 5664.7; N = -2781.9

**Verifica taglio+torsione D.M. 17-01-18 §4.4.8.1.11**

Sezione ad ascissa 0
Coefficiente parziale di sicurezza del materiale γ = 1.5
Kmod = 0.8; kcr = 0.67
τ,tor,d/(ksh*fv,d) + (τ,y,d/fv,d)^2 + (τ,z,d/fv,d)^2 <= 1
0.19+0.03+0.49 <= 1 Comb: SLU, 79; Durata minima del carico nella combinazione: media
Tx = 526.1; Ty = 2061.1; Mt = -6158.9

**Verifica torsione D.M. 17-01-18 §4.4.8.1.10**

Sezione ad ascissa 103.7
Coefficiente parziale di sicurezza del materiale γ = 1.5
Kmod = 0.8
τ,tor,d <= Ksh * fv,d
3.72 <= 19.07 Comb: SLU, 79; Durata minima del carico nella combinazione: media
Mt = -6158.9

---

## Asta 69: Trave in legno a falda Falda 5 fili 241-279

Verifiche condotte secondo D.M. 17-01-18 (N.T.C.)

**Dati generali**

Lunghezza = 104.3

**Caratteristiche della sezione**

| Descrizione | Tipo | Base | Altezza | Area | Jx | Jy | Wx | Wy |
|---|---|---|---|---|---|---|---|---|
| R 18x23 | Rettangolare | 18 | 23 | 414 | 18250.5 | 11178 | 1587 | 1242 |

Materiale: C14 EN 338:2016
Rapporto luce/freccia elastica limite = 300
Rapporto luce/freccia elastica differita = 200
Mensola Y: Nessuno; Mensola X: Nessuno
Classe di servizio 1

**Verifica taglio D.M. 17-01-18 §4.4.8.1.9**

Sezione ad ascissa 0
Coefficiente parziale di sicurezza del materiale γ = 1.5
Kmod = 0.8; kcr = 0.67
τ,d <= fv,d
Sqrt(1.38^2+6.74^2) = 6.88 <= 16 Comb: SLU, 79; Durata minima del carico nella combinazione: media
Tx = 253.3; Ty = 1241.1

**Verifica pressoflessione D.M. 17-01-18 §4.4.8.1.8**

Sezione ad ascissa 104.3
Coefficiente parziale di sicurezza del materiale γ = 1.5
Kmod = 0.8
(Sc,0,d/fc,0,d)^2 + Sm,y,d/fm,y,d + Km*(Sm,z,d/fm,z,d) <= 1
(Sc,0,d/fc,0,d)^2 + Km*(Sm,y,d/fm,y,d) + Sm,z,d/fm,z,d <= 1
(7.2/85.3)^2+123.5/74.7+0.7*23.7/74.67=1.88 !> 1 [4.4.7a] Comb: SLU, 80; Durata minima del carico nella combinazione: media - NON SODDISFATTA
Mx = -195922.3; My = 29446.2; N = -2974

**Verifica taglio+torsione D.M. 17-01-18 §4.4.8.1.11**

Sezione ad ascissa 0
Coefficiente parziale di sicurezza del materiale γ = 1.5
Kmod = 0.8; kcr = 0.67
τ,tor,d/(ksh*fv,d) + (τ,y,d/fv,d)^2 + (τ,z,d/fv,d)^2 <= 1
0.01+0.01+0.18 <= 1 Comb: SLU, 80; Durata minima del carico nella combinazione: media
Tx = 252.7; Ty = 1240.5; Mt = 441.4

**Verifica torsione D.M. 17-01-18 §4.4.8.1.10**

Sezione ad ascissa 104.3
Coefficiente parziale di sicurezza del materiale γ = 1.5
Kmod = 1.1
τ,tor,d <= Ksh * fv,d

0.51 <= 26.22 Comb: SLV, 10; Durata minima del carico nella combinazione: istantaneo
Mt = 851.4

## Asta 70: Trave in legno a falda Falda 5 fili 241-279

Verifiche condotte secondo D.M. 17-01-18 (N.T.C.)

### Dati generali

Lunghezza = 116.7

### Caratteristiche della sezione

| Descrizione | Tipo | Base | Altezza | Area | Jx | Jy | Wx | Wy |
|---|---|---|---|---|---|---|---|---|
| R 18x23 | Rettangolare | 18 | 23 | 414 | 18250.5 | 11178 | 1587 | 1242 |

Materiale: C14 EN 338:2016
Rapporto luce/freccia elastica limite = 300
Rapporto luce/freccia elastica differita = 200
Mensola Y: Nessuno; Mensola X: Nessuno
Classe di servizio 1

### Verifica taglio D.M. 17-01-18 §4.4.8.1.9

Sezione ad ascissa 0
Coefficiente parziale di sicurezza del materiale γ = 1.5
Kmod = 0.8; kcr = 0.67
τ,d <= fv,d
Sqrt(0.61^2+2.76^2) = 2.83 <= 16 Comb: SLU, 79; Durata minima del carico nella combinazione: media
Tx = 112.2; Ty = 507.6

### Verifica pressoflessione D.M. 17-01-18 §4.4.8.1.8

Sezione ad ascissa 116.7
Coefficiente parziale di sicurezza del materiale γ = 1.5
Kmod = 0.8
(Sc,0,d/fc,0,d)^2 + Sm,y,d/fm,y,d + Km*(Sm,z,d/fm,z,d) <= 1
(Sc,0,d/fc,0,d)^2 + Km*(Sm,y,d/fm,y,d) + Sm,z,d/fm,z,d <= 1
(6.3/85.3)^2+130.9/74.7+0.7*30.8/74.67=2.05 !> 1 [4.4.7a] Comb: SLU, 72; Durata minima del carico nella combinazione: media - NON SODDISFATTA
Mx = -207811.1; My = 38273; N = -2599.8

### Verifica taglio+torsione D.M. 17-01-18 §4.4.8.1.11

Sezione ad ascissa 0
Coefficiente parziale di sicurezza del materiale γ = 1.5
Kmod = 0.8; kcr = 0.67
τ,tor,d/(ksh*fv,d) + (τ,y,d/fv,d)^2 + (τ,z,d/fv,d)^2 <= 1
0.19+0+0.03 <= 1 Comb: SLU, 80; Durata minima del carico nella combinazione: media
Tx = 108.4; Ty = 507.6; Mt = 5894.4

### Verifica torsione D.M. 17-01-18 §4.4.8.1.10

Sezione ad ascissa 116.7
Coefficiente parziale di sicurezza del materiale γ = 1.5
Kmod = 0.8
τ,tor,d <= Ksh * fv,d
3.56 <= 19.07 Comb: SLU, 80; Durata minima del carico nella combinazione: media
Mt = 5894.4

## Asta 71: Trave in legno a falda Falda 5 fili 241-279

Verifiche condotte secondo D.M. 17-01-18 (N.T.C.)

### Dati generali

Lunghezza = 90.8

### Caratteristiche della sezione

| Descrizione | Tipo | Base | Altezza | Area | Jx | Jy | Wx | Wy |
|---|---|---|---|---|---|---|---|---|
| R 18x23 | Rettangolare | 18 | 23 | 414 | 18250.5 | 11178 | 1587 | 1242 |

Materiale: C14 EN 338:2016
Rapporto luce/freccia elastica limite = 300
Rapporto luce/freccia elastica differita = 200
Mensola Y: Nessuno; Mensola X: Nessuno
Classe di servizio 1

### Verifica taglio D.M. 17-01-18 §4.4.8.1.9

Sezione ad ascissa 90.8
Coefficiente parziale di sicurezza del materiale γ = 1.5

Kmod = 0.8; kcr = 0.67
τ,d <= fv,d
Sqrt(0.83^2+7.2^2) = 7.25 <= 16 Comb: SLU, 80; Durata minima del carico nella combinazione: media
Tx = -153.1; Ty = -1325.5

**Verifica pressoflessione D.M. 17-01-18 §4.4.8.1.8**

Sezione ad ascissa 0
Coefficiente parziale di sicurezza del materiale γ = 1.5
Kmod = 0.8
(Sc,0,d/fc,0,d)^2 + Sm,y,d/fm,y,d + Km*(Sm,z,d/fm,z,d) <= 1
(Sc,0,d/fc,0,d)^2 + Km*(Sm,y,d/fm,y,d) + Sm,z,d/fm,z,d <= 1
(8.4/85.3)^2+119.3/74.7+0.7*35.5/74.67=1.94 !> 1 [4.4.7a] Comb: SLU, 72; Durata minima del carico nella combinazione: media - NON SODDISFATTA
Mx = -189375.4; My = 44066.3; N = -3470

**Verifica taglio+torsione D.M. 17-01-18 §4.4.8.1.11**

Sezione ad ascissa 90.8
Coefficiente parziale di sicurezza del materiale γ = 1.5
Kmod = 0.8; kcr = 0.67
τ,tor,d/(ksh*fv,d) + (τ,y,d/fv,d)^2 + (τ,z,d/fv,d)^2 <= 1
0.08+0+0.2 <= 1 Comb: SLU, 72; Durata minima del carico nella combinazione: media
Tx = -160.3; Ty = -1323.1; Mt = 2639.7

**Verifica torsione D.M. 17-01-18 §4.4.8.1.10**

Sezione ad ascissa 90.8
Coefficiente parziale di sicurezza del materiale γ = 1.5
Kmod = 0.8
τ,tor,d <= Ksh * fv,d
1.61 <= 19.07 Comb: SLU, 29; Durata minima del carico nella combinazione: media
Mt = 2665.6

---

## Asta 72: Trave in legno a falda Falda 5 fili 241-279

Verifiche condotte secondo D.M. 17-01-18 (N.T.C.)

**Dati generali**

Lunghezza = 102.8

**Caratteristiche della sezione**

| Descrizione | Tipo | Base | Altezza | Area | Jx | Jy | Wx | Wy |
|---|---|---|---|---|---|---|---|---|
| R 18x23 | Rettangolare | 18 | 23 | 414 | 18250.5 | 11178 | 1587 | 1242 |

Materiale: C14 EN 338:2016
Rapporto luce/freccia elastica limite = 300
Rapporto luce/freccia elastica differita = 200
Mensola Y: Nessuno; Mensola X: Nessuno
Classe di servizio 1

**Verifica taglio D.M. 17-01-18 §4.4.8.1.9**

Sezione ad ascissa 102.8
Coefficiente parziale di sicurezza del materiale γ = 1.5
Kmod = 0.8; kcr = 0.67
τ,d <= fv,d
Sqrt(0.37^2+6.73^2) = 6.74 <= 16 Comb: SLU, 80; Durata minima del carico nella combinazione: media
Tx = -67.9; Ty = -1239

**Verifica pressoflessione D.M. 17-01-18 §4.4.8.1.8**

Sezione ad ascissa 0
Coefficiente parziale di sicurezza del materiale γ = 1.5
Kmod = 0.8
(Sc,0,d/fc,0,d)^2 + Sm,y,d/fm,y,d + Km*(Sm,z,d/fm,z,d) <= 1
(Sc,0,d/fc,0,d)^2 + Km*(Sm,y,d/fm,y,d) + Sm,z,d/fm,z,d <= 1
(8.7/85.3)^2+39.9/74.7+0.7*20.1/74.67=0.73 <= 1 [4.4.7a] Comb: SLU, 79; Durata minima del carico nella combinazione: media
Mx = -63258; My = 25012.8; N = -3612.7

**Verifica taglio+torsione D.M. 17-01-18 §4.4.8.1.11**

Sezione ad ascissa 102.8
Coefficiente parziale di sicurezza del materiale γ = 1.5
Kmod = 0.8; kcr = 0.67
τ,tor,d/(ksh*fv,d) + (τ,y,d/fv,d)^2 + (τ,z,d/fv,d)^2 <= 1
0.05+0+0.18 <= 1 Comb: SLU, 72; Durata minima del carico nella combinazione: media
Tx = -74.2; Ty = -1236.8; Mt = 1729.8

**Verifica torsione D.M. 17-01-18 §4.4.8.1.10**

Sezione ad ascissa 102.8
Coefficiente parziale di sicurezza del materiale γ = 1.5
Kmod = 0.8
τ,tor,d <= Ksh * fv,d
1.06 <= 19.07 Comb: SLU, 29; Durata minima del carico nella combinazione: media
Mt = 1759.8

## Asta 73: Trave in legno a falda Falda 5 fili 241-279

Verifiche condotte secondo D.M. 17-01-18 (N.T.C.)

**Dati generali**

Lunghezza = 118.2

**Caratteristiche della sezione**

| Descrizione | Tipo | Base | Altezza | Area | Jx | Jy | Wx | Wy |
|---|---|---|---|---|---|---|---|---|
| R 18x23 | Rettangolare | 18 | 23 | 414 | 18250.5 | 11178 | 1587 | 1242 |

Materiale: C14 EN 338:2016
Rapporto luce/freccia elastica limite = 300
Rapporto luce/freccia elastica differita = 200
Mensola Y: Nessuno; Mensola X: Nessuno
Classe di servizio 1

**Verifica taglio D.M. 17-01-18 §4.4.8.1.9**

Sezione ad ascissa 118.2
Coefficiente parziale di sicurezza del materiale γ = 1.5
Kmod = 0.8; kcr = 0.67
τ,d <= fv,d
Sqrt(0.04^2+3.34^2) = 3.34 <= 16 Comb: SLU, 80; Durata minima del carico nella combinazione: media
Tx = 7.9; Ty = -614.7

**Verifica pressoflessione D.M. 17-01-18 §4.4.8.1.8**

Sezione ad ascissa 118.2
Coefficiente parziale di sicurezza del materiale γ = 1.5
Kmod = 0.8
(Sc,0,d/fc,0,d)^2 + Sm,y,d/fm,y,d + Km*(Sm,z,d/fm,z,d) <= 1
(Sc,0,d/fc,0,d)^2 + Km*(Sm,y,d/fm,y,d) + Sm,z,d/fm,z,d <= 1
(7.3/85.3)^2+88.4/74.7+0.7*12.9/74.67=1.31 !> 1 [4.4.7a] Comb: SLU, 80; Durata minima del carico nella combinazione: media - NON SODDISFATTA
Mx = 140303.8; My = 16029.8; N = -3023

**Verifica taglio+torsione D.M. 17-01-18 §4.4.8.1.11**

Sezione ad ascissa 118.2
Coefficiente parziale di sicurezza del materiale γ = 1.5
Kmod = 0.8; kcr = 0.67
τ,tor,d/(ksh*fv,d) + (τ,y,d/fv,d)^2 + (τ,z,d/fv,d)^2 <= 1
0.05+0+0.04 <= 1 Comb: SLU, 71; Durata minima del carico nella combinazione: media
Tx = -1.5; Ty = -611.6; Mt = 1684.5

**Verifica torsione D.M. 17-01-18 §4.4.8.1.10**

Sezione ad ascissa 118.2
Coefficiente parziale di sicurezza del materiale γ = 1.5
Kmod = 0.8
τ,tor,d <= Ksh * fv,d
1.02 <= 19.07 Comb: SLU, 29; Durata minima del carico nella combinazione: media
Mt = 1691.6

## Asta 74: Trave in legno a falda Falda 6 fili 177-240

Verifiche condotte secondo D.M. 17-01-18 (N.T.C.)

**Dati generali**

Lunghezza = 127.2

**Caratteristiche della sezione**

| Descrizione | Tipo | Base | Altezza | Area | Jx | Jy | Wx | Wy |
|---|---|---|---|---|---|---|---|---|
| R 18x23 | Rettangolare | 18 | 23 | 414 | 18250.5 | 11178 | 1587 | 1242 |

Materiale: C14 EN 338:2016
Rapporto luce/freccia elastica limite = 300
Rapporto luce/freccia elastica differita = 200

Mensola Y: Nessuno; Mensola X: Nessuno
Classe di servizio 1

**Verifica tensoflessione D.M. 17-01-18 §4.4.8.1.7**

Sezione ad ascissa 127.2
Coefficiente parziale di sicurezza del materiale γ = 1.5
Kmod = 1.1
St,0,d/ft,0,d + Sm,y,d/fm,y,d + Km*(Sm,z,d/fm,z,d) <= 1
St,0,d/ft,0,d + Km*(Sm,y,d/fm,y,d) + Sm,z,d/fm,z,d <= 1
2.6/52.8+0.7*10.9/102.7+19.8/102.7=0.32 <= 1 [4.4.6b] Comb: SLV, 10; Durata minima del carico nella combinazione: istantaneo
Mx = -17371.9; My = 24530.1; N = 1070.3

**Verifica taglio D.M. 17-01-18 §4.4.8.1.9**

Sezione ad ascissa 0
Coefficiente parziale di sicurezza del materiale γ = 1.5
Kmod = 0.8; kcr = 0.67
τ,d <= fv,d
Sqrt(0.36^2+1.45^2) = 1.49 <= 16 Comb: SLU, 71; Durata minima del carico nella combinazione: media
Tx = 65.5; Ty = 266.9

**Verifica taglio+torsione D.M. 17-01-18 §4.4.8.1.11**

Sezione ad ascissa 0
Coefficiente parziale di sicurezza del materiale γ = 1.5
Kmod = 0.8; kcr = 0.67
τ,tor,d/(ksh*fv,d) + (τ,y,d/fv,d)^2 + (τ,z,d/fv,d)^2 <= 1
0.02+0+0.01 <= 1 Comb: SLU, 71; Durata minima del carico nella combinazione: media
Tx = 65.5; Ty = 266.9; Mt = 574.8

**Verifica torsione D.M. 17-01-18 §4.4.8.1.10**

Sezione ad ascissa 127.2
Coefficiente parziale di sicurezza del materiale γ = 1.5
Kmod = 1.1
τ,tor,d <= Ksh * fv,d
0.56 <= 26.22 Comb: SLV, 6; Durata minima del carico nella combinazione: istantaneo
Mt = 922.6

---

## Asta 75: Trave in legno a falda Falda 6 fili 177-240

Verifiche condotte secondo D.M. 17-01-18 (N.T.C.)

**Dati generali**

Lunghezza = 104.2

**Caratteristiche della sezione**

| Descrizione | Tipo | Base | Altezza | Area | Jx | Jy | Wx | Wy |
|---|---|---|---|---|---|---|---|---|
| R 18x23 | Rettangolare | 18 | 23 | 414 | 18250.5 | 11178 | 1587 | 1242 |

Materiale: C14 EN 338:2016
Rapporto luce/freccia elastica limite = 300
Rapporto luce/freccia elastica differita = 200
Mensola Y: Nessuno; Mensola X: Nessuno
Classe di servizio 1

**Verifica tensoflessione D.M. 17-01-18 §4.4.8.1.7**

Sezione ad ascissa 104.2
Coefficiente parziale di sicurezza del materiale γ = 1.5
Kmod = 0.8
St,0,d/ft,0,d + Sm,y,d/fm,y,d + Km*(Sm,z,d/fm,z,d) <= 1
St,0,d/ft,0,d + Km*(Sm,y,d/fm,y,d) + Sm,z,d/fm,z,d <= 1
1.3/38.4+36.2/74.7+0.7*15/74.7=0.66 <= 1 [4.4.6a] Comb: SLU, 71; Durata minima del carico nella combinazione: media
Mx = -57481.5; My = 18578.6; N = 558.6

**Verifica taglio D.M. 17-01-18 §4.4.8.1.9**

Sezione ad ascissa 0
Coefficiente parziale di sicurezza del materiale γ = 1.5
Kmod = 0.8; kcr = 0.67
τ,d <= fv,d
Sqrt(0.04^2+2.38^2) = 2.38 <= 16 Comb: SLU, 80; Durata minima del carico nella combinazione: media
Tx = 6.8; Ty = 438.2

**Verifica taglio+torsione D.M. 17-01-18 §4.4.8.1.11**

Sezione ad ascissa 0
Coefficiente parziale di sicurezza del materiale γ = 1.5

Kmod = 0.8; kcr = 0.67
τ,tor,d/(ksh*fv,d) + (τ,y,d/fv,d)^2 + (τ,z,d/fv,d)^2 <= 1
0.18+0+0.02 <= 1 Comb: SLU, 72; Durata minima del carico nella combinazione: media
Tx = 6.7; Ty = 437.3; Mt = 5656.6

**Verifica torsione D.M. 17-01-18 §4.4.8.1.10**

Sezione ad ascissa 104.2
Coefficiente parziale di sicurezza del materiale γ = 1.5
Kmod = 0.8
τ,tor,d <= Ksh * fv,d
3.41 <= 19.07 Comb: SLU, 72; Durata minima del carico nella combinazione: media
Mt = 5656.6

---

## Asta 76: Trave in legno a falda Falda 6 fili 177-240

Verifiche condotte secondo D.M. 17-01-18 (N.T.C.)

**Dati generali**

Lunghezza = 104.2

**Caratteristiche della sezione**

| Descrizione | Tipo | Base | Altezza | Area | Jx | Jy | Wx | Wy |
|---|---|---|---|---|---|---|---|---|
| R 18x23 | Rettangolare | 18 | 23 | 414 | 18250.5 | 11178 | 1587 | 1242 |

Materiale: C14 EN 338:2016
Rapporto luce/freccia elastica limite = 300
Rapporto luce/freccia elastica differita = 200
Mensola Y: Nessuno; Mensola X: Nessuno
Classe di servizio 1

**Verifica tensoflessione D.M. 17-01-18 §4.4.8.1.7**

Sezione ad ascissa 104.2
Coefficiente parziale di sicurezza del materiale γ = 1.5
Kmod = 0.8
St,0,d/ft,0,d + Sm,y,d/fm,y,d + Km*(Sm,z,d/fm,z,d) !> 1
St,0,d/ft,0,d + Km*(Sm,y,d/fm,y,d) + Sm,z,d/fm,z,d <= 1
1.5/38.4+64.7/74.7+0.7*12.6/74.7=1.03 !> 1 [4.4.6a] Comb: SLU, 71; Durata minima del carico nella combinazione: media - NON SODDISFATTA
Mx = -102687.6; My = 15681.6; N = 641.4

**Verifica taglio D.M. 17-01-18 §4.4.8.1.9**

Sezione ad ascissa 0
Coefficiente parziale di sicurezza del materiale γ = 1.5
Kmod = 0.8; kcr = 0.67
τ,d <= fv,d
Sqrt(0.33^2+2.48^2) = 2.5 <= 16 Comb: SLU, 79; Durata minima del carico nella combinazione: media
Tx = -60.5; Ty = 455.7

**Verifica taglio+torsione D.M. 17-01-18 §4.4.8.1.11**

Sezione ad ascissa 0
Coefficiente parziale di sicurezza del materiale γ = 1.5
Kmod = 0.8; kcr = 0.67
τ,tor,d/(ksh*fv,d) + (τ,y,d/fv,d)^2 + (τ,z,d/fv,d)^2 <= 1
0.41+0+0.02 <= 1 Comb: SLU, 72; Durata minima del carico nella combinazione: media
Tx = -58; Ty = 455.3; Mt = 12881.7

**Verifica torsione D.M. 17-01-18 §4.4.8.1.10**

Sezione ad ascissa 104.2
Coefficiente parziale di sicurezza del materiale γ = 1.5
Kmod = 0.8
τ,tor,d <= Ksh * fv,d
7.77 <= 19.07 Comb: SLU, 72; Durata minima del carico nella combinazione: media
Mt = 12881.7

---

## Asta 77: Trave in legno a falda Falda 6 fili 177-240

Verifiche condotte secondo D.M. 17-01-18 (N.T.C.)

**Dati generali**

Lunghezza = 63.3

**Caratteristiche della sezione**

| Descrizione | Tipo | Base | Altezza | Area | Jx | Jy | Wx | Wy |
|---|---|---|---|---|---|---|---|---|
| R 18x23 | Rettangolare | 18 | 23 | 414 | 18250.5 | 11178 | 1587 | 1242 |

Materiale: C14 EN 338:2016
Rapporto luce/freccia elastica limite = 300
Rapporto luce/freccia elastica differita = 200
Mensola Y: Nessuno; Mensola X: Nessuno
Classe di servizio 1

**Verifica tensoflessione D.M. 17-01-18 §4.4.8.1.7**

Sezione ad ascissa 63.3
Coefficiente parziale di sicurezza del materiale γ = 1.5
Kmod = 0.8
St,0,d/ft,0,d + Sm,y,d/fm,y,d + Km*(Sm,z,d/fm,z,d) !> 1
St,0,d/ft,0,d + Km*(Sm,y,d/fm,y,d) + Sm,z,d/fm,z,d <= 1
2/38.4+84.6/74.7+0.7*3.9/74.7=1.22 !> 1 [4.4.6a] Comb: SLU, 71; Durata minima del carico nella combinazione: media - NON SODDISFATTA
Mx = -134220.4; My = 4849.7; N = 839.4

**Verifica taglio D.M. 17-01-18 §4.4.8.1.9**

Sezione ad ascissa 0
Coefficiente parziale di sicurezza del materiale γ = 1.5
Kmod = 0.8; kcr = 0.67
τ,d <= fv,d
Sqrt(1.28^2+2.21^2) = 2.56 <= 16 Comb: SLU, 71; Durata minima del carico nella combinazione: media
Tx = -235.2; Ty = 407.4

**Verifica taglio+torsione D.M. 17-01-18 §4.4.8.1.11**

Sezione ad ascissa 0
Coefficiente parziale di sicurezza del materiale γ = 1.5
Kmod = 0.8; kcr = 0.67
τ,tor,d/(ksh*fv,d) + (τ,y,d/fv,d)^2 + (τ,z,d/fv,d)^2 <= 1
0.72+0.01+0.02 <= 1 Comb: SLU, 72; Durata minima del carico nella combinazione: media
Tx = -220.1; Ty = 405.1; Mt = 22643.4

**Verifica torsione D.M. 17-01-18 §4.4.8.1.10**

Sezione ad ascissa 63.3
Coefficiente parziale di sicurezza del materiale γ = 1.5
Kmod = 0.8
τ,tor,d <= Ksh * fv,d
13.67 <= 19.07 Comb: SLU, 72; Durata minima del carico nella combinazione: media
Mt = 22643.4

---

## Asta 78: Trave in legno a falda Falda 6 fili 177-240

Verifiche condotte secondo D.M. 17-01-18 (N.T.C.)

**Dati generali**

Lunghezza = 40.9

**Caratteristiche della sezione**

| Descrizione | Tipo | Base | Altezza | Area | Jx | Jy | Wx | Wy |
|---|---|---|---|---|---|---|---|---|
| R 18x23 | Rettangolare | 18 | 23 | 414 | 18250.5 | 11178 | 1587 | 1242 |

Materiale: C14 EN 338:2016
Rapporto luce/freccia elastica limite = 300
Rapporto luce/freccia elastica differita = 200
Mensola Y: Nessuno; Mensola X: Nessuno
Classe di servizio 1

**Verifica tensoflessione D.M. 17-01-18 §4.4.8.1.7**

Sezione ad ascissa 0
Coefficiente parziale di sicurezza del materiale γ = 1.5
Kmod = 0.8
St,0,d/ft,0,d + Sm,y,d/fm,y,d + Km*(Sm,z,d/fm,z,d) !> 1
St,0,d/ft,0,d + Km*(Sm,y,d/fm,y,d) + Sm,z,d/fm,z,d !> 1
3.1/38.4+101.2/74.7+0.7*14.2/74.7=1.57 !> 1 [4.4.6a] Comb: SLU, 71; Durata minima del carico nella combinazione: media - NON SODDISFATTA
Mx = -160670.4; My = 17640.7; N = 1301

**Verifica taglio D.M. 17-01-18 §4.4.8.1.9**

Sezione ad ascissa 40.9
Coefficiente parziale di sicurezza del materiale γ = 1.5
Kmod = 0.8; kcr = 0.67
τ,d <= fv,d
Sqrt(0.62^2+4.44^2) = 4.48 <= 16 Comb: SLU, 72; Durata minima del carico nella combinazione: media
Tx = 115; Ty = -816.5

**Verifica taglio+torsione D.M. 17-01-18 §4.4.8.1.11**

Sezione ad ascissa 40.9
Coefficiente parziale di sicurezza del materiale γ = 1.5
Kmod = 0.8; kcr = 0.67
τ,tor,d/(ksh*fv,d) + (τ,y,d/fv,d)^2 + (τ,z,d/fv,d)^2 <= 1
0.27+0+0.08 <= 1 Comb: SLU, 72; Durata minima del carico nella combinazione: media
Tx = 115; Ty = -816.5; Mt = -8562.7

**Verifica torsione D.M. 17-01-18 §4.4.8.1.10**

Sezione ad ascissa 40.9
Coefficiente parziale di sicurezza del materiale γ = 1.5
Kmod = 0.8
τ,tor,d <= Ksh * fv,d
5.18 <= 19.07 Comb: SLU, 80; Durata minima del carico nella combinazione: media
Mt = -8578.2

---

## Asta 79: Trave in legno a falda Falda 6 fili 177-240

Verifiche condotte secondo D.M. 17-01-18 (N.T.C.)

**Dati generali**

Lunghezza = 104.2

**Caratteristiche della sezione**

| Descrizione | Tipo | Base | Altezza | Area | Jx | Jy | Wx | Wy |
|---|---|---|---|---|---|---|---|---|
| R 18x23 | Rettangolare | 18 | 23 | 414 | 18250.5 | 11178 | 1587 | 1242 |

Materiale: C14 EN 338:2016
Rapporto luce/freccia elastica limite = 300
Rapporto luce/freccia elastica differita = 200
Mensola Y: Nessuno; Mensola X: Nessuno
Classe di servizio 1

**Verifica tensoflessione D.M. 17-01-18 §4.4.8.1.7**

Sezione ad ascissa 0
Coefficiente parziale di sicurezza del materiale γ = 1.5
Kmod = 0.8
St,0,d/ft,0,d + Sm,y,d/fm,y,d + Km*(Sm,z,d/fm,z,d) !> 1
St,0,d/ft,0,d + Km*(Sm,y,d/fm,y,d) + Sm,z,d/fm,z,d !> 1
3.9/38.4+87.7/74.7+0.7*20.9/74.7=1.47 !> 1 [4.4.6a] Comb: SLU, 71; Durata minima del carico nella combinazione: media - NON SODDISFATTA
Mx = -139106.8; My = 25909.5; N = 1604.7

**Verifica taglio D.M. 17-01-18 §4.4.8.1.9**

Sezione ad ascissa 104.2
Coefficiente parziale di sicurezza del materiale γ = 1.5
Kmod = 0.8; kcr = 0.67
τ,d <= fv,d
Sqrt(0.62^2+4.08^2) = 4.13 <= 16 Comb: SLU, 72; Durata minima del carico nella combinazione: media
Tx = -115; Ty = -751.4

**Verifica taglio+torsione D.M. 17-01-18 §4.4.8.1.11**

Sezione ad ascissa 104.2
Coefficiente parziale di sicurezza del materiale γ = 1.5
Kmod = 0.8; kcr = 0.67
τ,tor,d/(ksh*fv,d) + (τ,y,d/fv,d)^2 + (τ,z,d/fv,d)^2 <= 1
0.06+0+0.07 <= 1 Comb: SLU, 71; Durata minima del carico nella combinazione: media
Tx = -115.9; Ty = -750.8; Mt = 1877.2

**Verifica torsione D.M. 17-01-18 §4.4.8.1.10**

Sezione ad ascissa 104.2
Coefficiente parziale di sicurezza del materiale γ = 1.5
Kmod = 0.8
τ,tor,d <= Ksh * fv,d
1.13 <= 19.07 Comb: SLU, 71; Durata minima del carico nella combinazione: media
Mt = 1877.2

---

## Asta 80: Trave in legno a falda Falda 6 fili 177-240

Verifiche condotte secondo D.M. 17-01-18 (N.T.C.)

### Dati generali

Lunghezza = 104.2

### Caratteristiche della sezione

| Descrizione | Tipo | Base | Altezza | Area | Jx | Jy | Wx | Wy |
|---|---|---|---|---|---|---|---|---|
| R 18x23 | Rettangolare | 18 | 23 | 414 | 18250.5 | 11178 | 1587 | 1242 |

Materiale: C14 EN 338:2016
Rapporto luce/freccia elastica limite = 300
Rapporto luce/freccia elastica differita = 200
Mensola Y: Nessuno; Mensola X: Nessuno
Classe di servizio 1

### Verifica tensoflessione D.M. 17-01-18 §4.4.8.1.7

Sezione ad ascissa 104.2
Coefficiente parziale di sicurezza del materiale γ = 1.5
Kmod = 0.8
St,0,d/ft,0,d + Sm,y,d/fm,y,d + Km*(Sm,z,d/fm,z,d) <= 1
St,0,d/ft,0,d + Km*(Sm,y,d/fm,y,d) + Sm,z,d/fm,z,d <= 1
3.6/38.4+38.8/74.7+0.7*5.2/74.7=0.66 <= 1 [4.4.6a] Comb: SLU, 71; Durata minima del carico nella combinazione: media
Mx = 61602.3; My = -6411.4; N = 1471.1

### Verifica taglio D.M. 17-01-18 §4.4.8.1.9

Sezione ad ascissa 104.2
Coefficiente parziale di sicurezza del materiale γ = 1.5
Kmod = 0.8; kcr = 0.67
τ,d <= fv,d
Sqrt(0.91^2+6.58^2) = 6.64 <= 16 Comb: SLU, 71; Durata minima del carico nella combinazione: media
Tx = -167.6; Ty = -1210.9

### Verifica taglio+torsione D.M. 17-01-18 §4.4.8.1.11

Sezione ad ascissa 104.2
Coefficiente parziale di sicurezza del materiale γ = 1.5
Kmod = 0.8; kcr = 0.67
τ,tor,d/(ksh*fv,d) + (τ,y,d/fv,d)^2 + (τ,z,d/fv,d)^2 <= 1
0.21+0+0.17 <= 1 Comb: SLU, 79; Durata minima del carico nella combinazione: media
Tx = -167.5; Ty = -1210; Mt = -6671.6

### Verifica torsione D.M. 17-01-18 §4.4.8.1.10

Sezione ad ascissa 104.2
Coefficiente parziale di sicurezza del materiale γ = 1.5
Kmod = 0.8
τ,tor,d <= Ksh * fv,d
4.03 <= 19.07 Comb: SLU, 79; Durata minima del carico nella combinazione: media
Mt = -6671.6

---

## Asta 81: Trave in legno a falda Falda 6 fili 177-240

Verifiche condotte secondo D.M. 17-01-18 (N.T.C.)

### Dati generali

Lunghezza = 71.2

### Caratteristiche della sezione

| Descrizione | Tipo | Base | Altezza | Area | Jx | Jy | Wx | Wy |
|---|---|---|---|---|---|---|---|---|
| R 18x23 | Rettangolare | 18 | 23 | 414 | 18250.5 | 11178 | 1587 | 1242 |

Materiale: C14 EN 338:2016
Rapporto luce/freccia elastica limite = 300
Rapporto luce/freccia elastica differita = 200
Mensola Y: Nessuno; Mensola X: Nessuno
Classe di servizio 1

### Verifica tensoflessione D.M. 17-01-18 §4.4.8.1.7

Sezione ad ascissa 71.2
Coefficiente parziale di sicurezza del materiale γ = 1.5
Kmod = 0.8
St,0,d/ft,0,d + Sm,y,d/fm,y,d + Km*(Sm,z,d/fm,z,d) !> 1
St,0,d/ft,0,d + Km*(Sm,y,d/fm,y,d) + Sm,z,d/fm,z,d !> 1
3.3/38.4+112.1/74.7+0.7*29.4/74.7=1.86 !> 1 [4.4.6a] Comb: SLU, 80; Durata minima del carico nella combinazione: media - NON SODDISFATTA
Mx = 177959.3; My = -36573.6; N = 1372.4

### Verifica taglio D.M. 17-01-18 §4.4.8.1.9

Sezione ad ascissa 71.2

Coefficiente parziale di sicurezza del materiale γ = 1.5
Kmod = 0.8; kcr = 0.67
τ,d <= fv,d
Sqrt(1.7^2+8.31^2) = 8.48 <= 16 Comb: SLU, 71; Durata minima del carico nella combinazione: media
Tx = -312.8; Ty = -1529.3

**Verifica taglio+torsione D.M. 17-01-18 §4.4.8.1.11**

Sezione ad ascissa 71.2
Coefficiente parziale di sicurezza del materiale γ = 1.5
Kmod = 0.8; kcr = 0.67
τ,tor,d/(ksh*fv,d) + (τ,y,d/fv,d)^2 + (τ,z,d/fv,d)^2 <= 1
0.6+0.01+0.27 <= 1 Comb: SLU, 79; Durata minima del carico nella combinazione: media
Tx = -324.3; Ty = -1524.6; Mt = -18855

**Verifica torsione D.M. 17-01-18 §4.4.8.1.10**

Sezione ad ascissa 71.2
Coefficiente parziale di sicurezza del materiale γ = 1.5
Kmod = 0.8
τ,tor,d <= Ksh * fv,d
11.38 <= 19.07 Comb: SLU, 79; Durata minima del carico nella combinazione: media
Mt = -18855

---

## Asta 82: Trave in legno a falda Falda 4 fili 169-233

Verifiche condotte secondo D.M. 17-01-18 (N.T.C.)

**Dati generali**

Lunghezza = 129.7

**Caratteristiche della sezione**

| Descrizione | Tipo | Base | Altezza | Area | Jx | Jy | Wx | Wy |
|---|---|---|---|---|---|---|---|---|
| R 18x23 | Rettangolare | 18 | 23 | 414 | 18250.5 | 11178 | 1587 | 1242 |

Materiale: C14 EN 338:2016
Rapporto luce/freccia elastica limite = 300
Rapporto luce/freccia elastica differita = 200
Mensola Y: Nessuno; Mensola X: Nessuno
Classe di servizio 1

**Verifica taglio D.M. 17-01-18 §4.4.8.1.9**

Sezione ad ascissa 0
Coefficiente parziale di sicurezza del materiale γ = 1.5
Kmod = 0.8; kcr = 0.67
τ,d <= fv,d
Sqrt(1.32^2+12.48^2) = 12.55 <= 16 Comb: SLU, 71; Durata minima del carico nella combinazione: media
Tx = 242.3; Ty = 2296.9

**Verifica pressoflessione D.M. 17-01-18 §4.4.8.1.8**

Sezione ad ascissa 129.7
Coefficiente parziale di sicurezza del materiale γ = 1.5
Kmod = 0.8
(Sc,0,d/fc,0,d)^2 + Sm,y,d/fm,y,d + Km*(Sm,z,d/fm,z,d) <= 1
(Sc,0,d/fc,0,d)^2 + Km*(Sm,y,d/fm,y,d) + Sm,z,d/fm,z,d <= 1
(8.2/85.3)^2+108.5/74.7+0.7*22.3/74.67=1.67 !> 1 [4.4.7a] Comb: SLU, 71; Durata minima del carico nella combinazione: media - NON SODDISFATTA
Mx = -172203.8; My = 27647.5; N = -3404.7

**Verifica taglio+torsione D.M. 17-01-18 §4.4.8.1.11**

Sezione ad ascissa 0
Coefficiente parziale di sicurezza del materiale γ = 1.5
Kmod = 0.8; kcr = 0.67
τ,tor,d/(ksh*fv,d) + (τ,y,d/fv,d)^2 + (τ,z,d/fv,d)^2 <= 1
0.2+0.01+0.61 <= 1 Comb: SLU, 80; Durata minima del carico nella combinazione: media
Tx = 243.5; Ty = 2295.6; Mt = -6209.9

**Verifica torsione D.M. 17-01-18 §4.4.8.1.10**

Sezione ad ascissa 129.7
Coefficiente parziale di sicurezza del materiale γ = 1.5
Kmod = 0.8
τ,tor,d <= Ksh * fv,d
3.78 <= 19.07 Comb: SLU, 38; Durata minima del carico nella combinazione: media
Mt = -6257.4

---

## Asta 83: Trave in legno a falda Falda 4 fili 169-233

Verifiche condotte secondo D.M. 17-01-18 (N.T.C.)

### Dati generali

Lunghezza = 102.4

### Caratteristiche della sezione

| Descrizione | Tipo | Base | Altezza | Area | Jx | Jy | Wx | Wy |
|---|---|---|---|---|---|---|---|---|
| R 18x23 | Rettangolare | 18 | 23 | 414 | 18250.5 | 11178 | 1587 | 1242 |

Materiale: C14 EN 338:2016
Rapporto luce/freccia elastica limite = 300
Rapporto luce/freccia elastica differita = 200
Mensola Y: Nessuno; Mensola X: Nessuno
Classe di servizio 1

### Verifica taglio D.M. 17-01-18 §4.4.8.1.9

Sezione ad ascissa 0
Coefficiente parziale di sicurezza del materiale γ = 1.5
Kmod = 0.8; kcr = 0.67
τ,d <= fv,d
Sqrt(1.19^2+8.86^2) = 8.94 <= 16 Comb: SLU, 72; Durata minima del carico nella combinazione: media
Tx = 218.1; Ty = 1629.9

### Verifica pressoflessione D.M. 17-01-18 §4.4.8.1.8

Sezione ad ascissa 102.4
Coefficiente parziale di sicurezza del materiale γ = 1.5
Kmod = 0.8
(Sc,0,d/fc,0,d)^2 + Sm,y,d/fm,y,d + Km*(Sm,z,d/fm,z,d) <= 1
(Sc,0,d/fc,0,d)^2 + Km*(Sm,y,d/fm,y,d) + Sm,z,d/fm,z,d <= 1
(8.6/85.3)^2+210.5/74.7+0.7*43/74.67=3.23 !> 1 [4.4.7a] Comb: SLU, 71; Durata minima del carico nella combinazione: media - NON SODDISFATTA
Mx = -334083.8; My = 53364; N = -3577

### Verifica taglio+torsione D.M. 17-01-18 §4.4.8.1.11

Sezione ad ascissa 0
Coefficiente parziale di sicurezza del materiale γ = 1.5
Kmod = 0.8; kcr = 0.67
τ,tor,d/(ksh*fv,d) + (τ,y,d/fv,d)^2 + (τ,z,d/fv,d)^2 <= 1
0.13+0.01+0.31 <= 1 Comb: SLU, 71; Durata minima del carico nella combinazione: media
Tx = 218.3; Ty = 1629.7; Mt = 4130.7

### Verifica torsione D.M. 17-01-18 §4.4.8.1.10

Sezione ad ascissa 102.4
Coefficiente parziale di sicurezza del materiale γ = 1.5
Kmod = 0.8
τ,tor,d <= Ksh * fv,d
2.49 <= 19.07 Comb: SLU, 71; Durata minima del carico nella combinazione: media
Mt = 4130.7

---

## Asta 84: Trave in legno a falda Falda 4 fili 169-233

Verifiche condotte secondo D.M. 17-01-18 (N.T.C.)

### Dati generali

Lunghezza = 102.4

### Caratteristiche della sezione

| Descrizione | Tipo | Base | Altezza | Area | Jx | Jy | Wx | Wy |
|---|---|---|---|---|---|---|---|---|
| R 18x23 | Rettangolare | 18 | 23 | 414 | 18250.5 | 11178 | 1587 | 1242 |

Materiale: C14 EN 338:2016
Rapporto luce/freccia elastica limite = 300
Rapporto luce/freccia elastica differita = 200
Mensola Y: Nessuno; Mensola X: Nessuno
Classe di servizio 1

### Verifica taglio D.M. 17-01-18 §4.4.8.1.9

Sezione ad ascissa 0
Coefficiente parziale di sicurezza del materiale γ = 1.5
Kmod = 0.8; kcr = 0.67
τ,d <= fv,d
Sqrt(0.67^2+4.89^2) = 4.93 <= 16 Comb: SLU, 72; Durata minima del carico nella combinazione: media
Tx = 123.1; Ty = 898.9

**Verifica pressoflessione D.M. 17-01-18 §4.4.8.1.8**

Sezione ad ascissa 102.4
Coefficiente parziale di sicurezza del materiale γ = 1.5
Kmod = 0.8
(Sc,0,d/fc,0,d)^2 + Sm,y,d/fm,y,d + Km*(Sm,z,d/fm,z,d) <= 1
(Sc,0,d/fc,0,d)^2 + Km*(Sm,y,d/fm,y,d) + Sm,z,d/fm,z,d <= 1
(8.9/85.3)^2+264.3/74.7+0.7*54.8/74.67=4.06 !> 1 [4.4.7a] Comb: SLU, 71; Durata minima del carico nella combinazione: media - NON SODDISFATTA
Mx = -419387.1; My = 68091.8; N = -3695

**Verifica taglio+torsione D.M. 17-01-18 §4.4.8.1.11**

Sezione ad ascissa 0
Coefficiente parziale di sicurezza del materiale γ = 1.5
Kmod = 0.8; kcr = 0.67
τ,tor,d/(ksh*fv,d) + (τ,y,d/fv,d)^2 + (τ,z,d/fv,d)^2 <= 1
0.32+0+0.09 <= 1 Comb: SLU, 71; Durata minima del carico nella combinazione: media
Tx = 123.8; Ty = 898.4; Mt = 10035.2

**Verifica torsione D.M. 17-01-18 §4.4.8.1.10**

Sezione ad ascissa 102.4
Coefficiente parziale di sicurezza del materiale γ = 1.5
Kmod = 0.8
τ,tor,d <= Ksh * fv,d
6.06 <= 19.07 Comb: SLU, 71; Durata minima del carico nella combinazione: media
Mt = 10035.2

---

## Asta 85: Trave in legno a falda Falda 4 fili 169-233

Verifiche condotte secondo D.M. 17-01-18 (N.T.C.)

**Dati generali**

Lunghezza = 59.9

**Caratteristiche della sezione**

| Descrizione | Tipo | Base | Altezza | Area | Jx | Jy | Wx | Wy |
|---|---|---|---|---|---|---|---|---|
| R 18x23 | Rettangolare | 18 | 23 | 414 | 18250.5 | 11178 | 1587 | 1242 |

Materiale: C14 EN 338:2016
Rapporto luce/freccia elastica limite = 300
Rapporto luce/freccia elastica differita = 200
Mensola Y: Nessuno; Mensola X: Nessuno
Classe di servizio 1

**Verifica taglio D.M. 17-01-18 §4.4.8.1.9**

Sezione ad ascissa 59.9
Coefficiente parziale di sicurezza del materiale γ = 1.5
Kmod = 1.1; kcr = 0.67
τ,d <= fv,d
Sqrt(1.07^2+0.78^2) = 1.33 <= 22 Comb: SLV, 6; Durata minima del carico nella combinazione: istantaneo
Tx = -197.4; Ty = -143.2

**Verifica pressoflessione D.M. 17-01-18 §4.4.8.1.8**

Sezione ad ascissa 0
Coefficiente parziale di sicurezza del materiale γ = 1.5
Kmod = 0.8
(Sc,0,d/fc,0,d)^2 + Sm,y,d/fm,y,d + Km*(Sm,z,d/fm,z,d) <= 1
(Sc,0,d/fc,0,d)^2 + Km*(Sm,y,d/fm,y,d) + Sm,z,d/fm,z,d <= 1
(9.1/85.3)^2+262.5/74.7+0.7*54.4/74.67=4.04 !> 1 [4.4.7a] Comb: SLU, 71; Durata minima del carico nella combinazione: media - NON SODDISFATTA
Mx = -416525.5; My = 67502.8; N = -3758.4

**Verifica taglio+torsione D.M. 17-01-18 §4.4.8.1.11**

Sezione ad ascissa 59.9
Coefficiente parziale di sicurezza del materiale γ = 1.5
Kmod = 0.8; kcr = 0.67
τ,tor,d/(ksh*fv,d) + (τ,y,d/fv,d)^2 + (τ,z,d/fv,d)^2 <= 1
0.27+0+0 <= 1 Comb: SLU, 71; Durata minima del carico nella combinazione: media
Tx = -40.8; Ty = -167; Mt = 8643.6

**Verifica torsione D.M. 17-01-18 §4.4.8.1.10**

Sezione ad ascissa 59.9
Coefficiente parziale di sicurezza del materiale γ = 1.5
Kmod = 0.8
τ,tor,d <= Ksh * fv,d

5.22 <= 19.07 Comb: SLU, 71; Durata minima del carico nella combinazione: media
Mt = 8643.6

## Asta 86: Trave in legno a falda Falda 4 fili 169-233

Verifiche condotte secondo D.M. 17-01-18 (N.T.C.)

### Dati generali

Lunghezza = 42.6

### Caratteristiche della sezione

| Descrizione | Tipo | Base | Altezza | Area | Jx | Jy | Wx | Wy |
|---|---|---|---|---|---|---|---|---|
| R 18x23 | Rettangolare | 18 | 23 | 414 | 18250.5 | 11178 | 1587 | 1242 |

Materiale: C14 EN 338:2016
Rapporto luce/freccia elastica limite = 300
Rapporto luce/freccia elastica differita = 200
Mensola Y: Nessuno; Mensola X: Nessuno
Classe di servizio 1

### Verifica taglio D.M. 17-01-18 §4.4.8.1.9

Sezione ad ascissa 42.6
Coefficiente parziale di sicurezza del materiale γ = 1.5
Kmod = 0.8; kcr = 0.67
τ,d <= fv,d
Sqrt(0.82^2+6.22^2) = 6.28 <= 16 Comb: SLU, 79; Durata minima del carico nella combinazione: media
Tx = -150.8; Ty = -1144.8

### Verifica pressoflessione D.M. 17-01-18 §4.4.8.1.8

Sezione ad ascissa 0
Coefficiente parziale di sicurezza del materiale γ = 1.5
Kmod = 0.8
(Sc,0,d/fc,0,d)^2 + Sm,y,d/fm,y,d + Km*(Sm,z,d/fm,z,d) <= 1
(Sc,0,d/fc,0,d)^2 + Km*(Sm,y,d/fm,y,d) + Sm,z,d/fm,z,d <= 1
(9.7/85.3)^2+237.2/74.7+0.7*46.1/74.67=3.62 !> 1 [4.4.7a] Comb: SLU, 79; Durata minima del carico nella combinazione: media - NON SODDISFATTA
Mx = -376407.3; My = 57204.5; N = -4012

### Verifica taglio+torsione D.M. 17-01-18 §4.4.8.1.11

Sezione ad ascissa 42.6
Coefficiente parziale di sicurezza del materiale γ = 1.5
Kmod = 0.8; kcr = 0.67
τ,tor,d/(ksh*fv,d) + (τ,y,d/fv,d)^2 + (τ,z,d/fv,d)^2 > 1
1.37+0+0.15 > 1 Comb: SLU, 71; Durata minima del carico nella combinazione: media - NON SODDISFATTA
Tx = -147.9; Ty = -1144.4; Mt = 43402.2

### Verifica torsione D.M. 17-01-18 §4.4.8.1.10

Sezione ad ascissa 42.6
Coefficiente parziale di sicurezza del materiale γ = 1.5
Kmod = 0.8
τ,tor,d > Ksh * fv,d
26.2 > 19.07 Comb: SLU, 71; Durata minima del carico nella combinazione: media - NON SODDISFATTA
Mt = 43402.2

## Asta 87: Trave in legno a falda Falda 4 fili 169-233

Verifiche condotte secondo D.M. 17-01-18 (N.T.C.)

### Dati generali

Lunghezza = 102.4

### Caratteristiche della sezione

| Descrizione | Tipo | Base | Altezza | Area | Jx | Jy | Wx | Wy |
|---|---|---|---|---|---|---|---|---|
| R 18x23 | Rettangolare | 18 | 23 | 414 | 18250.5 | 11178 | 1587 | 1242 |

Materiale: C14 EN 338:2016
Rapporto luce/freccia elastica limite = 300
Rapporto luce/freccia elastica differita = 200
Mensola Y: Nessuno; Mensola X: Nessuno
Classe di servizio 1

### Verifica taglio D.M. 17-01-18 §4.4.8.1.9

Sezione ad ascissa 102.4
Coefficiente parziale di sicurezza del materiale γ = 1.5

Kmod = 0.8; kcr = 0.67
τ,d <= fv,d
Sqrt(0.85^2+8.72^2) = 8.76 <= 16 Comb: SLU, 79; Durata minima del carico nella combinazione: media
Tx = -155.7; Ty = -1604.6

**Verifica pressoflessione D.M. 17-01-18 §4.4.8.1.8**

Sezione ad ascissa 0
Coefficiente parziale di sicurezza del materiale γ = 1.5
Kmod = 0.8
(Sc,0,d/fc,0,d)^2 + Sm,y,d/fm,y,d + Km*(Sm,z,d/fm,z,d) <= 1
(Sc,0,d/fc,0,d)^2 + Km*(Sm,y,d/fm,y,d) + Sm,z,d/fm,z,d <= 1
(9.8/85.3)^2+196.7/74.7+0.7*35.5/74.67=2.98 !> 1 [4.4.7a] Comb: SLU, 71; Durata minima del carico nella combinazione: media - NON SODDISFATTA
Mx = -312133.3; My = 44125; N = -4052.6

**Verifica taglio+torsione D.M. 17-01-18 §4.4.8.1.11**

Sezione ad ascissa 102.4
Coefficiente parziale di sicurezza del materiale γ = 1.5
Kmod = 0.8; kcr = 0.67
τ,tor,d/(ksh*fv,d) + (τ,y,d/fv,d)^2 + (τ,z,d/fv,d)^2 > 1
0.72+0+0.3 > 1 Comb: SLU, 71; Durata minima del carico nella combinazione: media - NON SODDISFATTA
Tx = -153.4; Ty = -1603.8; Mt = 22797

**Verifica torsione D.M. 17-01-18 §4.4.8.1.10**

Sezione ad ascissa 102.4
Coefficiente parziale di sicurezza del materiale γ = 1.5
Kmod = 0.8
τ,tor,d <= Ksh * fv,d
13.76 <= 19.07 Comb: SLU, 71; Durata minima del carico nella combinazione: media
Mt = 22797

---

## Asta 88: Trave in legno a falda Falda 4 fili 169-233

Verifiche condotte secondo D.M. 17-01-18 (N.T.C.)

**Dati generali**

Lunghezza = 102.5

**Caratteristiche della sezione**

| Descrizione | Tipo | Base | Altezza | Area | Jx | Jy | Wx | Wy |
|---|---|---|---|---|---|---|---|---|
| R 18x23 | Rettangolare | 18 | 23 | 414 | 18250.5 | 11178 | 1587 | 1242 |

Materiale: C14 EN 338:2016
Rapporto luce/freccia elastica limite = 300
Rapporto luce/freccia elastica differita = 200
Mensola Y: Nessuno; Mensola X: Nessuno
Classe di servizio 1

**Verifica taglio D.M. 17-01-18 §4.4.8.1.9**

Sezione ad ascissa 102.4
Coefficiente parziale di sicurezza del materiale γ = 1.5
Kmod = 0.8; kcr = 0.67
τ,d <= fv,d
Sqrt(0.82^2+10.45^2) = 10.49 <= 16 Comb: SLU, 79; Durata minima del carico nella combinazione: media
Tx = -151.7; Ty = -1923.4

**Verifica pressoflessione D.M. 17-01-18 §4.4.8.1.8**

Sezione ad ascissa 0
Coefficiente parziale di sicurezza del materiale γ = 1.5
Kmod = 0.8
(Sc,0,d/fc,0,d)^2 + Sm,y,d/fm,y,d + Km*(Sm,z,d/fm,z,d) <= 1
(Sc,0,d/fc,0,d)^2 + Km*(Sm,y,d/fm,y,d) + Sm,z,d/fm,z,d <= 1
(10.1/85.3)^2+101.6/74.7+0.7*18.5/74.67=1.55 !> 1 [4.4.7a] Comb: SLU, 71; Durata minima del carico nella combinazione: media - NON SODDISFATTA
Mx = -161179.9; My = 22941.9; N = -4184.3

**Verifica taglio+torsione D.M. 17-01-18 §4.4.8.1.11**

Sezione ad ascissa 102.4
Coefficiente parziale di sicurezza del materiale γ = 1.5
Kmod = 0.8; kcr = 0.67
τ,tor,d/(ksh*fv,d) + (τ,y,d/fv,d)^2 + (τ,z,d/fv,d)^2 <= 1
0.23+0+0.43 <= 1 Comb: SLU, 71; Durata minima del carico nella combinazione: media
Tx = -149.6; Ty = -1922.2; Mt = 7380.7

**Verifica torsione D.M. 17-01-18 §4.4.8.1.10**

Sezione ad ascissa 102.4
Coefficiente parziale di sicurezza del materiale γ = 1.5
Kmod = 0.8
τ,tor,d <= Ksh * fv,d
4.45 <= 19.07 Comb: SLU, 71; Durata minima del carico nella combinazione: media
Mt = 7380.7

---

## Asta 89: Trave in legno a falda Falda 4 fili 169-233

Verifiche condotte secondo D.M. 17-01-18 (N.T.C.)

**Dati generali**

Lunghezza = 102.5

**Caratteristiche della sezione**

| Descrizione | Tipo | Base | Altezza | Area | Jx | Jy | Wx | Wy |
|---|---|---|---|---|---|---|---|---|
| R 18x23 | Rettangolare | 18 | 23 | 414 | 18250.5 | 11178 | 1587 | 1242 |

Materiale: C14 EN 338:2016
Rapporto luce/freccia elastica limite = 300
Rapporto luce/freccia elastica differita = 200
Mensola Y: Nessuno; Mensola X: Nessuno
Classe di servizio 1

**Verifica taglio D.M. 17-01-18 §4.4.8.1.9**

Sezione ad ascissa 102.4
Coefficiente parziale di sicurezza del materiale γ = 1.5
Kmod = 0.8; kcr = 0.67
τ,d <= fv,d
Sqrt(0.82^2+11.08^2) = 11.11 <= 16 Comb: SLU, 80; Durata minima del carico nella combinazione: media
Tx = -151.5; Ty = -2038

**Verifica pressoflessione D.M. 17-01-18 §4.4.8.1.8**

Sezione ad ascissa 102.4
Coefficiente parziale di sicurezza del materiale γ = 1.5
Kmod = 0.8
(Sc,0,d/fc,0,d)^2 + Sm,y,d/fm,y,d + Km*(Sm,z,d/fm,z,d) <= 1
(Sc,0,d/fc,0,d)^2 + Km*(Sm,y,d/fm,y,d) + Sm,z,d/fm,z,d <= 1
(10.5/85.3)^2+138.8/74.7+0.7*11.2/74.67=1.98 !> 1 [4.4.7a] Comb: SLU, 80; Durata minima del carico nella combinazione: media - NON SODDISFATTA
Mx = 220278.5; My = -13851; N = -4338

**Verifica taglio+torsione D.M. 17-01-18 §4.4.8.1.11**

Sezione ad ascissa 102.4
Coefficiente parziale di sicurezza del materiale γ = 1.5
Kmod = 0.8; kcr = 0.67
τ,tor,d/(ksh*fv,d) + (τ,y,d/fv,d)^2 + (τ,z,d/fv,d)^2 <= 1
0.2+0+0.48 <= 1 Comb: SLU, 80; Durata minima del carico nella combinazione: media
Tx = -151.5; Ty = -2038; Mt = -6446.5

**Verifica torsione D.M. 17-01-18 §4.4.8.1.10**

Sezione ad ascissa 102.4
Coefficiente parziale di sicurezza del materiale γ = 1.5
Kmod = 0.8
τ,tor,d <= Ksh * fv,d
3.89 <= 19.07 Comb: SLU, 71; Durata minima del carico nella combinazione: media
Mt = -6451.8

---

## Asta 90: Trave in legno a falda Falda 4 fili 169-233

Verifiche condotte secondo D.M. 17-01-18 (N.T.C.)

**Dati generali**

Lunghezza = 60.5

**Caratteristiche della sezione**

| Descrizione | Tipo | Base | Altezza | Area | Jx | Jy | Wx | Wy |
|---|---|---|---|---|---|---|---|---|
| R 18x23 | Rettangolare | 18 | 23 | 414 | 18250.5 | 11178 | 1587 | 1242 |

Materiale: C14 EN 338:2016
Rapporto luce/freccia elastica limite = 300
Rapporto luce/freccia elastica differita = 200

Mensola Y: Nessuno; Mensola X: Nessuno
Classe di servizio 1

**Verifica taglio D.M. 17-01-18 §4.4.8.1.9**

Sezione ad ascissa 60.5
Coefficiente parziale di sicurezza del materiale γ = 1.5
Kmod = 0.8; kcr = 0.67
τ,d <= fv,d
Sqrt(0.69^2+6.97^2) = 7.01 <= 16 Comb: SLU, 80; Durata minima del carico nella combinazione: media
Tx = -127.2; Ty = -1282.9

**Verifica pressoflessione D.M. 17-01-18 §4.4.8.1.8**

Sezione ad ascissa 60.5
Coefficiente parziale di sicurezza del materiale γ = 1.5
Kmod = 0.8
(Sc,0,d/fc,0,d)^2 + Sm,y,d/fm,y,d + Km*(Sm,z,d/fm,z,d) <= 1
(Sc,0,d/fc,0,d)^2 + Km*(Sm,y,d/fm,y,d) + Sm,z,d/fm,z,d <= 1
(9.6/85.3)^2+202.2/74.7+0.7*25.5/74.67=2.96 !> 1 [4.4.7a] Comb: SLU, 80; Durata minima del carico nella combinazione: media - NON SODDISFATTA
Mx = 320867.6; My = -31716.8; N = -3970.4

**Verifica taglio+torsione D.M. 17-01-18 §4.4.8.1.11**

Sezione ad ascissa 60.5
Coefficiente parziale di sicurezza del materiale γ = 1.5
Kmod = 0.8; kcr = 0.67
τ,tor,d/(ksh*fv,d) + (τ,y,d/fv,d)^2 + (τ,z,d/fv,d)^2 > 1
1.07+0+0.19 > 1 Comb: SLU, 71; Durata minima del carico nella combinazione: media - NON SODDISFATTA
Tx = -125.8; Ty = -1274.1; Mt = -33825.4

**Verifica torsione D.M. 17-01-18 §4.4.8.1.10**

Sezione ad ascissa 60.5
Coefficiente parziale di sicurezza del materiale γ = 1.5
Kmod = 0.8
τ,tor,d > Ksh * fv,d
20.42 > 19.07 Comb: SLU, 71; Durata minima del carico nella combinazione: media - NON SODDISFATTA
Mt = -33825.4

---

## Asta 91: Trave in legno a falda Falda 4 fili 169-233

Verifiche condotte secondo D.M. 17-01-18 (N.T.C.)

**Dati generali**

Lunghezza = 18.9

**Caratteristiche della sezione**

| Descrizione | Tipo | Base | Altezza | Area | Jx | Jy | Wx | Wy |
|---|---|---|---|---|---|---|---|---|
| R 18x23 | Rettangolare | 18 | 23 | 414 | 18250.5 | 11178 | 1587 | 1242 |

Materiale: C14 EN 338:2016
Rapporto luce/freccia elastica limite = 300
Rapporto luce/freccia elastica differita = 200
Mensola Y: Nessuno; Mensola X: Nessuno
Classe di servizio 1

**Verifica tensoflessione D.M. 17-01-18 §4.4.8.1.7**

Sezione ad ascissa 0
Coefficiente parziale di sicurezza del materiale γ = 1.5
Kmod = 0.8
St,0,d/ft,0,d + Sm,y,d/fm,y,d + Km*(Sm,z,d/fm,z,d) !> 1
St,0,d/ft,0,d + Km*(Sm,y,d/fm,y,d) + Sm,z,d/fm,z,d !> 1
0.6/38.4+112.2/74.7+0.7*43.1/74.7=1.92 !> 1 [4.4.6a] Comb: SLU, 80; Durata minima del carico nella combinazione: media - NON SODDISFATTA
Mx = 178096.1; My = 53587.2; N = 262.4

**Verifica taglio D.M. 17-01-18 §4.4.8.1.9**

Sezione ad ascissa 0
Coefficiente parziale di sicurezza del materiale γ = 1.5
Kmod = 0.8; kcr = 0.67
τ,d > fv,d
Sqrt(8.58^2+29.37^2) = 30.6 > 16 Comb: SLU, 80; Durata minima del carico nella combinazione: media - NON SODDISFATTA
Tx = -1578.6; Ty = 5404.2

**Verifica taglio+torsione D.M. 17-01-18 §4.4.8.1.11**

Sezione ad ascissa 0
Coefficiente parziale di sicurezza del materiale γ = 1.5

Kmod = 0.8; kcr = 0.67
τ,tor,d/(ksh*fv,d) + (τ,y,d/fv,d)^2 + (τ,z,d/fv,d)^2 > 1
4.22+0.29+3.37 > 1 Comb: SLU, 80; Durata minima del carico nella combinazione: media - NON SODDISFATTA
Tx = -1578.6; Ty = 5404.2; Mt = 133381.5

**Verifica torsione D.M. 17-01-18 §4.4.8.1.10**

Sezione ad ascissa 18.9
Coefficiente parziale di sicurezza del materiale γ = 1.5
Kmod = 0.8
τ,tor,d > Ksh * fv,d
80.5 > 19.07 Comb: SLU, 80; Durata minima del carico nella combinazione: media - NON SODDISFATTA
Mt = 133381.5

## Asta 92: Trave in legno a falda Falda 4 fili 169-233

Verifiche condotte secondo D.M. 17-01-18 (N.T.C.)

**Dati generali**

Lunghezza = 10.9

**Caratteristiche della sezione**

| Descrizione | Tipo | Base | Altezza | Area | Jx | Jy | Wx | Wy |
|---|---|---|---|---|---|---|---|---|
| R 18x23 | Rettangolare | 18 | 23 | 414 | 18250.5 | 11178 | 1587 | 1242 |

Materiale: C14 EN 338:2016
Rapporto luce/freccia elastica limite = 300
Rapporto luce/freccia elastica differita = 200
Mensola Y: Nessuno; Mensola X: Nessuno
Classe di servizio 1

**Verifica trazione parallela alla fibratura D.M. 17-01-18 §4.4.8.1.1**

Sezione ad ascissa 6.2
Coefficiente parziale di sicurezza del materiale γ = 1.5
Kmod = 1.1
St,0,d <= ft,0,d
0.1 <= 52.8 Comb: SLD, 16; Durata minima del carico nella combinazione: istantaneo
N = 42.4

**Verifica flessione D.M. 17-01-18 §4.4.8.1.6**

Sezione ad ascissa 0
Coefficiente parziale di sicurezza del materiale γ = 1.5
Kmod = 0.8
Sm,y,d/fm,y,d + Km*(Sm,z,d/fm,z,d) <= 1
Km*(Sm,y,d/fm,y,d) + Sm,z,d/fm,z,d <= 1
0.1/74.7+0.7*0/74.7=0 <= 1 (formula 4.4.5a) Comb: SLU, 79; Durata minima del carico nella combinazione: media
Mx = 88.6; My = 0

**Verifica taglio D.M. 17-01-18 §4.4.8.1.9**

Sezione ad ascissa 0
Coefficiente parziale di sicurezza del materiale γ = 1.5
Kmod = 0.8; kcr = 0.67
τ,d <= fv,d
Sqrt(0^2+0.09^2) = 0.09 <= 16 Comb: SLU, 71; Durata minima del carico nella combinazione: media
Tx = 0; Ty = 16.6

## Asta 93: Trave in legno a falda Falda 4 fili 126-61

Verifiche condotte secondo D.M. 17-01-18 (N.T.C.)

**Dati generali**

Lunghezza = 123.8

**Caratteristiche della sezione**

| Descrizione | Tipo | Base | Altezza | Area | Jx | Jy | Wx | Wy |
|---|---|---|---|---|---|---|---|---|
| R 18x23 | Rettangolare | 18 | 23 | 414 | 18250.5 | 11178 | 1587 | 1242 |

Materiale: C14 EN 338:2016
Rapporto luce/freccia elastica limite = 300
Rapporto luce/freccia elastica differita = 200
Mensola Y: Nessuno; Mensola X: Nessuno
Classe di servizio 1

### Verifica taglio D.M. 17-01-18 §4.4.8.1.9

Sezione ad ascissa 0
Coefficiente parziale di sicurezza del materiale γ = 1.5
Kmod = 0.8; kcr = 0.67
τ,d <= fv,d
Sqrt(1.01^2+12.27^2) = 12.31 <= 16 Comb: SLU, 80; Durata minima del carico nella combinazione: media
Tx = -185.3; Ty = 2257.4

### Verifica pressoflessione D.M. 17-01-18 §4.4.8.1.8

Sezione ad ascissa 123.8
Coefficiente parziale di sicurezza del materiale γ = 1.5
Kmod = 0.8
(Sc,0,d/fc,0,d)^2 + Sm,y,d/fm,y,d + Km*(Sm,z,d/fm,z,d) <= 1
(Sc,0,d/fc,0,d)^2 + Km*(Sm,y,d/fm,y,d) + Sm,z,d/fm,z,d <= 1
(3.9/85.3)^2+122/74.7+0.7*17.6/74.67=1.8 !> 1 [4.4.7a] Comb: SLU, 71; Durata minima del carico nella combinazione: media - NON SODDISFATTA
Mx = -193586.3; My = -21827; N = -1599

### Verifica taglio+torsione D.M. 17-01-18 §4.4.8.1.11

Sezione ad ascissa 0
Coefficiente parziale di sicurezza del materiale γ = 1.5
Kmod = 0.8; kcr = 0.67
τ,tor,d/(ksh*fv,d) + (τ,y,d/fv,d)^2 + (τ,z,d/fv,d)^2 <= 1
0.1+0+0.59 <= 1 Comb: SLU, 80; Durata minima del carico nella combinazione: media
Tx = -185.3; Ty = 2257.4; Mt = 3233.1

### Verifica torsione D.M. 17-01-18 §4.4.8.1.10

Sezione ad ascissa 123.8
Coefficiente parziale di sicurezza del materiale γ = 1.5
Kmod = 0.8
τ,tor,d <= Ksh * fv,d
1.99 <= 19.07 Comb: SLU, 38; Durata minima del carico nella combinazione: media
Mt = 3301.8

---

## Asta 94: Trave in legno a falda Falda 4 fili 126-61

Verifiche condotte secondo D.M. 17-01-18 (N.T.C.)

### Dati generali

Lunghezza = 102.4

### Caratteristiche della sezione

| Descrizione | Tipo | Base | Altezza | Area | Jx | Jy | Wx | Wy |
|---|---|---|---|---|---|---|---|---|
| R 18x23 | Rettangolare | 18 | 23 | 414 | 18250.5 | 11178 | 1587 | 1242 |

Materiale: C14 EN 338:2016
Rapporto luce/freccia elastica limite = 300
Rapporto luce/freccia elastica differita = 200
Mensola Y: Nessuno; Mensola X: Nessuno
Classe di servizio 1

### Verifica taglio D.M. 17-01-18 §4.4.8.1.9

Sezione ad ascissa 0
Coefficiente parziale di sicurezza del materiale γ = 1.5
Kmod = 0.8; kcr = 0.67
τ,d <= fv,d
Sqrt(1.85^2+8.3^2) = 8.51 <= 16 Comb: SLU, 72; Durata minima del carico nella combinazione: media
Tx = -341.1; Ty = 1527.8

### Verifica pressoflessione D.M. 17-01-18 §4.4.8.1.8

Sezione ad ascissa 102.4
Coefficiente parziale di sicurezza del materiale γ = 1.5
Kmod = 0.8
(Sc,0,d/fc,0,d)^2 + Sm,y,d/fm,y,d + Km*(Sm,z,d/fm,z,d) <= 1
(Sc,0,d/fc,0,d)^2 + Km*(Sm,y,d/fm,y,d) + Sm,z,d/fm,z,d <= 1
(4.8/85.3)^2+217.5/74.7+0.7*48.5/74.67=3.37 !> 1 [4.4.7a] Comb: SLU, 71; Durata minima del carico nella combinazione: media - NON SODDISFATTA
Mx = -345165.5; My = -60220.1; N = -1996.3

### Verifica taglio+torsione D.M. 17-01-18 §4.4.8.1.11

Sezione ad ascissa 0
Coefficiente parziale di sicurezza del materiale γ = 1.5
Kmod = 0.8; kcr = 0.67
τ,tor,d/(ksh*fv,d) + (τ,y,d/fv,d)^2 + (τ,z,d/fv,d)^2 <= 1

0.23+0.01+0.27 <= 1 Comb: SLU, 71; Durata minima del carico nella combinazione: media
Tx = -341.1; Ty = 1527.1; Mt = -7108.6

**Verifica torsione D.M. 17-01-18 §4.4.8.1.10**

Sezione ad ascissa 102.4
Coefficiente parziale di sicurezza del materiale γ = 1.5
Kmod = 0.8
τ,tor,d <= Ksh * fv,d
4.29 <= 19.07 Comb: SLU, 71; Durata minima del carico nella combinazione: media
Mt = -7108.6

---

## Asta 95: Trave in legno a falda Falda 4 fili 126-61

Verifiche condotte secondo D.M. 17-01-18 (N.T.C.)

**Dati generali**

Lunghezza = 102.4

**Caratteristiche della sezione**

| Descrizione | Tipo | Base | Altezza | Area | Jx | Jy | Wx | Wy |
|---|---|---|---|---|---|---|---|---|
| R 18x23 | Rettangolare | 18 | 23 | 414 | 18250.5 | 11178 | 1587 | 1242 |

Materiale: C14 EN 338:2016
Rapporto luce/freccia elastica limite = 300
Rapporto luce/freccia elastica differita = 200
Mensola Y: Nessuno; Mensola X: Nessuno
Classe di servizio 1

**Verifica taglio D.M. 17-01-18 §4.4.8.1.9**

Sezione ad ascissa 0
Coefficiente parziale di sicurezza del materiale γ = 1.5
Kmod = 0.8; kcr = 0.67
τ,d <= fv,d
Sqrt(0.73^2+4.33^2) = 4.39 <= 16 Comb: SLU, 72; Durata minima del carico nella combinazione: media
Tx = -134.9; Ty = 796.4

**Verifica pressoflessione D.M. 17-01-18 §4.4.8.1.8**

Sezione ad ascissa 102.4
Coefficiente parziale di sicurezza del materiale γ = 1.5
Kmod = 0.8
(Sc,0,d/fc,0,d)^2 + Sm,y,d/fm,y,d + Km*(Sm,z,d/fm,z,d) <= 1
(Sc,0,d/fc,0,d)^2 + Km*(Sm,y,d/fm,y,d) + Sm,z,d/fm,z,d <= 1
(4.8/85.3)^2+263.4/74.7+0.7*60.7/74.67=4.1 !> 1 [4.4.7a] Comb: SLU, 71; Durata minima del carico nella combinazione: media - NON SODDISFATTA
Mx = -417963.2; My = -75401.8; N = -1982.9

**Verifica taglio+torsione D.M. 17-01-18 §4.4.8.1.11**

Sezione ad ascissa 0
Coefficiente parziale di sicurezza del materiale γ = 1.5
Kmod = 0.8; kcr = 0.67
τ,tor,d/(ksh*fv,d) + (τ,y,d/fv,d)^2 + (τ,z,d/fv,d)^2 <= 1
0.4+0+0.07 <= 1 Comb: SLU, 71; Durata minima del carico nella combinazione: media
Tx = -135.8; Ty = 795.4; Mt = -12520.4

**Verifica torsione D.M. 17-01-18 §4.4.8.1.10**

Sezione ad ascissa 102.4
Coefficiente parziale di sicurezza del materiale γ = 1.5
Kmod = 0.8
τ,tor,d <= Ksh * fv,d
7.56 <= 19.07 Comb: SLU, 71; Durata minima del carico nella combinazione: media
Mt = -12520.4

---

## Asta 96: Trave in legno a falda Falda 4 fili 126-61

Verifiche condotte secondo D.M. 17-01-18 (N.T.C.)

**Dati generali**

Lunghezza = 65.7

**Caratteristiche della sezione**

| Descrizione | Tipo | Base | Altezza | Area | Jx | Jy | Wx | Wy |
|---|---|---|---|---|---|---|---|---|
| R 18x23 | Rettangolare | 18 | 23 | 414 | 18250.5 | 11178 | 1587 | 1242 |

Materiale: C14 EN 338:2016

Rapporto luce/freccia elastica limite = 300
Rapporto luce/freccia elastica differita = 200
Mensola Y: Nessuno; Mensola X: Nessuno
Classe di servizio 1

**Verifica taglio D.M. 17-01-18 §4.4.8.1.9**

Sezione ad ascissa 65.7
Coefficiente parziale di sicurezza del materiale γ = 1.5
Kmod = 0.8; kcr = 0.67
τ,d <= fv,d
Sqrt(0.38^2+1.7^2) = 1.74 <= 16 Comb: SLU, 79; Durata minima del carico nella combinazione: media
Tx = 69.2; Ty = -313.4

**Verifica pressoflessione D.M. 17-01-18 §4.4.8.1.8**

Sezione ad ascissa 0
Coefficiente parziale di sicurezza del materiale γ = 1.5
Kmod = 0.8
(Sc,0,d/fc,0,d)^2 + Sm,y,d/fm,y,d + Km*(Sm,z,d/fm,z,d) <= 1
(Sc,0,d/fc,0,d)^2 + Km*(Sm,y,d/fm,y,d) + Sm,z,d/fm,z,d <= 1
(4.8/85.3)^2+261.4/74.7+0.7*59.8/74.67=4.06 !> 1 [4.4.7a] Comb: SLU, 71; Durata minima del carico nella combinazione: media - NON SODDISFATTA
Mx = -414816.8; My = -74285.7; N = -1972

**Verifica taglio+torsione D.M. 17-01-18 §4.4.8.1.11**

Sezione ad ascissa 65.7
Coefficiente parziale di sicurezza del materiale γ = 1.5
Kmod = 0.8; kcr = 0.67
τ,tor,d/(ksh*fv,d) + (τ,y,d/fv,d)^2 + (τ,z,d/fv,d)^2 <= 1
0.34+0+0.01 <= 1 Comb: SLU, 71; Durata minima del carico nella combinazione: media
Tx = 71.1; Ty = -312.8; Mt = -10660.9

**Verifica torsione D.M. 17-01-18 §4.4.8.1.10**

Sezione ad ascissa 65.7
Coefficiente parziale di sicurezza del materiale γ = 1.5
Kmod = 0.8
τ,tor,d <= Ksh * fv,d
6.43 <= 19.07 Comb: SLU, 71; Durata minima del carico nella combinazione: media
Mt = -10660.9

---

## Asta 97: Trave in legno a falda Falda 4 fili 126-61

Verifiche condotte secondo D.M. 17-01-18 (N.T.C.)

**Dati generali**

Lunghezza = 36.7

**Caratteristiche della sezione**

| Descrizione | Tipo | Base | Altezza | Area | Jx | Jy | Wx | Wy |
|---|---|---|---|---|---|---|---|---|
| R 18x23 | Rettangolare | 18 | 23 | 414 | 18250.5 | 11178 | 1587 | 1242 |

Materiale: C14 EN 338:2016
Rapporto luce/freccia elastica limite = 300
Rapporto luce/freccia elastica differita = 200
Mensola Y: Nessuno; Mensola X: Nessuno
Classe di servizio 1

**Verifica taglio D.M. 17-01-18 §4.4.8.1.9**

Sezione ad ascissa 36.7
Coefficiente parziale di sicurezza del materiale γ = 1.5
Kmod = 0.8; kcr = 0.67
τ,d <= fv,d
Sqrt(0.63^2+5.77^2) = 5.8 <= 16 Comb: SLU, 79; Durata minima del carico nella combinazione: media
Tx = 116.8; Ty = -1061.3

**Verifica pressoflessione D.M. 17-01-18 §4.4.8.1.8**

Sezione ad ascissa 0
Coefficiente parziale di sicurezza del materiale γ = 1.5
Kmod = 0.8
(Sc,0,d/fc,0,d)^2 + Sm,y,d/fm,y,d + Km*(Sm,z,d/fm,z,d) <= 1
(Sc,0,d/fc,0,d)^2 + Km*(Sm,y,d/fm,y,d) + Sm,z,d/fm,z,d <= 1
(5.2/85.3)^2+226.7/74.7+0.7*55/74.67=3.56 !> 1 [4.4.7a] Comb: SLU, 71; Durata minima del carico nella combinazione: media - NON SODDISFATTA
Mx = -359742.4; My = -68344.8; N = -2164.3

**Verifica taglio+torsione D.M. 17-01-18 §4.4.8.1.11**

Sezione ad ascissa 36.7
Coefficiente parziale di sicurezza del materiale γ = 1.5
Kmod = 0.8; kcr = 0.67
τ,tor,d/(ksh*fv,d) + (τ,y,d/fv,d)^2 + (τ,z,d/fv,d)^2 > 1
1.39+0+0.13 > 1 Comb: SLU, 71; Durata minima del carico nella combinazione: media - NON SODDISFATTA
Tx = 116.7; Ty = -1060; Mt = -44029.1

**Verifica torsione D.M. 17-01-18 §4.4.8.1.10**

Sezione ad ascissa 36.7
Coefficiente parziale di sicurezza del materiale γ = 1.5
Kmod = 0.8
τ,tor,d > Ksh * fv,d
26.57 > 19.07 Comb: SLU, 71; Durata minima del carico nella combinazione: media - NON SODDISFATTA
Mt = -44029.1

---

## Asta 98: Trave in legno a falda Falda 4 fili 126-61

Verifiche condotte secondo D.M. 17-01-18 (N.T.C.)

**Dati generali**

Lunghezza = 102.4

**Caratteristiche della sezione**

| Descrizione | Tipo | Base | Altezza | Area | Jx | Jy | Wx | Wy |
|---|---|---|---|---|---|---|---|---|
| R 18x23 | Rettangolare | 18 | 23 | 414 | 18250.5 | 11178 | 1587 | 1242 |

Materiale: C14 EN 338:2016
Rapporto luce/freccia elastica limite = 300
Rapporto luce/freccia elastica differita = 200
Mensola Y: Nessuno; Mensola X: Nessuno
Classe di servizio 1

**Verifica taglio D.M. 17-01-18 §4.4.8.1.9**

Sezione ad ascissa 102.4
Coefficiente parziale di sicurezza del materiale γ = 1.5
Kmod = 0.8; kcr = 0.67
τ,d <= fv,d
Sqrt(0.74^2+8.21^2) = 8.25 <= 16 Comb: SLU, 79; Durata minima del carico nella combinazione: media
Tx = 136.8; Ty = -1511.4

**Verifica pressoflessione D.M. 17-01-18 §4.4.8.1.8**

Sezione ad ascissa 0
Coefficiente parziale di sicurezza del materiale γ = 1.5
Kmod = 0.8
(Sc,0,d/fc,0,d)^2 + Sm,y,d/fm,y,d + Km*(Sm,z,d/fm,z,d) <= 1
(Sc,0,d/fc,0,d)^2 + Km*(Sm,y,d/fm,y,d) + Sm,z,d/fm,z,d <= 1
(5.2/85.3)^2+190.8/74.7+0.7*45/74.67=2.98 !> 1 [4.4.7a] Comb: SLU, 71; Durata minima del carico nella combinazione: media - NON SODDISFATTA
Mx = -302744; My = -55943.2; N = -2152.9

**Verifica taglio+torsione D.M. 17-01-18 §4.4.8.1.11**

Sezione ad ascissa 102.4
Coefficiente parziale di sicurezza del materiale γ = 1.5
Kmod = 0.8; kcr = 0.67
τ,tor,d/(ksh*fv,d) + (τ,y,d/fv,d)^2 + (τ,z,d/fv,d)^2 <= 1
0.71+0+0.26 <= 1 Comb: SLU, 71; Durata minima del carico nella combinazione: media
Tx = 136.8; Ty = -1510; Mt = -22391.9

**Verifica torsione D.M. 17-01-18 §4.4.8.1.10**

Sezione ad ascissa 102.4
Coefficiente parziale di sicurezza del materiale γ = 1.5
Kmod = 0.8
τ,tor,d <= Ksh * fv,d
13.52 <= 19.07 Comb: SLU, 71; Durata minima del carico nella combinazione: media
Mt = -22391.9

---

## Asta 99: Trave in legno a falda Falda 4 fili 126-61

Verifiche condotte secondo D.M. 17-01-18 (N.T.C.)

### Dati generali

Lunghezza = 102.4

### Caratteristiche della sezione

| Descrizione | Tipo | Base | Altezza | Area | Jx | Jy | Wx | Wy |
|---|---|---|---|---|---|---|---|---|
| R 18x23 | Rettangolare | 18 | 23 | 414 | 18250.5 | 11178 | 1587 | 1242 |

Materiale: C14 EN 338:2016
Rapporto luce/freccia elastica limite = 300
Rapporto luce/freccia elastica differita = 200
Mensola Y: Nessuno; Mensola X: Nessuno
Classe di servizio 1

### Verifica taglio D.M. 17-01-18 §4.4.8.1.9

Sezione ad ascissa 102.4
Coefficiente parziale di sicurezza del materiale γ = 1.5
Kmod = 0.8; kcr = 0.67
τ,d <= fv,d
Sqrt(0.85^2+9.88^2) = 9.91 <= 16 Comb: SLU, 79; Durata minima del carico nella combinazione: media
Tx = 157.1; Ty = -1817.1

### Verifica pressoflessione D.M. 17-01-18 §4.4.8.1.8

Sezione ad ascissa 0
Coefficiente parziale di sicurezza del materiale γ = 1.5
Kmod = 0.8
(Sc,0,d/fc,0,d)^2 + Sm,y,d/fm,y,d + Km*(Sm,z,d/fm,z,d) <= 1
(Sc,0,d/fc,0,d)^2 + Km*(Sm,y,d/fm,y,d) + Sm,z,d/fm,z,d <= 1
(5.4/85.3)^2+102.5/74.7+0.7*28.4/74.67=1.64 !> 1 [4.4.7a] Comb: SLU, 71; Durata minima del carico nella combinazione: media - NON SODDISFATTA
Mx = -162632.5; My = -35327.2; N = -2241.7

### Verifica taglio+torsione D.M. 17-01-18 §4.4.8.1.11

Sezione ad ascissa 102.4
Coefficiente parziale di sicurezza del materiale γ = 1.5
Kmod = 0.8; kcr = 0.67
τ,tor,d/(ksh*fv,d) + (τ,y,d/fv,d)^2 + (τ,z,d/fv,d)^2 <= 1
0.22+0+0.38 <= 1 Comb: SLU, 71; Durata minima del carico nella combinazione: media
Tx = 157; Ty = -1815.6; Mt = -6802.5

### Verifica torsione D.M. 17-01-18 §4.4.8.1.10

Sezione ad ascissa 102.4
Coefficiente parziale di sicurezza del materiale γ = 1.5
Kmod = 0.8
τ,tor,d <= Ksh * fv,d
4.11 <= 19.07 Comb: SLU, 72; Durata minima del carico nella combinazione: media
Mt = -6803.2

---

## Asta 100: Trave in legno a falda Falda 4 fili 126-61

Verifiche condotte secondo D.M. 17-01-18 (N.T.C.)

### Dati generali

Lunghezza = 102.5

### Caratteristiche della sezione

| Descrizione | Tipo | Base | Altezza | Area | Jx | Jy | Wx | Wy |
|---|---|---|---|---|---|---|---|---|
| R 18x23 | Rettangolare | 18 | 23 | 414 | 18250.5 | 11178 | 1587 | 1242 |

Materiale: C14 EN 338:2016
Rapporto luce/freccia elastica limite = 300
Rapporto luce/freccia elastica differita = 200
Mensola Y: Nessuno; Mensola X: Nessuno
Classe di servizio 1

### Verifica taglio D.M. 17-01-18 §4.4.8.1.9

Sezione ad ascissa 102.4
Coefficiente parziale di sicurezza del materiale γ = 1.5
Kmod = 0.8; kcr = 0.67
τ,d <= fv,d
Sqrt(0.93^2+10.44^2) = 10.48 <= 16 Comb: SLU, 79; Durata minima del carico nella combinazione: media
Tx = 171.9; Ty = -1920.9

### Verifica pressoflessione D.M. 17-01-18 §4.4.8.1.8

Sezione ad ascissa 102.4
Coefficiente parziale di sicurezza del materiale γ = 1.5

Kmod = 0.8
(Sc,0,d/fc,0,d)^2 + Sm,y,d/fm,y,d + Km*(Sm,z,d/fm,z,d) <= 1
(Sc,0,d/fc,0,d)^2 + Km*(Sm,y,d/fm,y,d) + Sm,z,d/fm,z,d <= 1
(6.1/85.3)^2+121.7/74.7+0.7*3.9/74.67=1.67 !> 1 [4.4.7a] Comb: SLU, 80; Durata minima del carico nella combinazione: media - NON SODDISFATTA
Mx = 193210.4; My = 4801.4; N = -2516.7

**Verifica taglio+torsione D.M. 17-01-18 §4.4.8.1.11**

Sezione ad ascissa 102.4
Coefficiente parziale di sicurezza del materiale γ = 1.5
Kmod = 0.8; kcr = 0.67
τ,tor,d/(ksh*fv,d) + (τ,y,d/fv,d)^2 + (τ,z,d/fv,d)^2 <= 1
0.2+0+0.43 <= 1 Comb: SLU, 79; Durata minima del carico nella combinazione: media
Tx = 171.9; Ty = -1920.9; Mt = 6209.9

**Verifica torsione D.M. 17-01-18 §4.4.8.1.10**

Sezione ad ascissa 102.4
Coefficiente parziale di sicurezza del materiale γ = 1.5
Kmod = 0.8
τ,tor,d <= Ksh * fv,d
3.75 <= 19.07 Comb: SLU, 79; Durata minima del carico nella combinazione: media
Mt = 6209.9

---

## Asta 101: Trave in legno a falda Falda 4 fili 126-61

Verifiche condotte secondo D.M. 17-01-18 (N.T.C.)

**Dati generali**

Lunghezza = 66.4

**Caratteristiche della sezione**

| Descrizione | Tipo | Base | Altezza | Area | Jx | Jy | Wx | Wy |
|---|---|---|---|---|---|---|---|---|
| R 18x23 | Rettangolare | 18 | 23 | 414 | 18250.5 | 11178 | 1587 | 1242 |

Materiale: C14 EN 338:2016
Rapporto luce/freccia elastica limite = 300
Rapporto luce/freccia elastica differita = 200
Mensola Y: Nessuno; Mensola X: Nessuno
Classe di servizio 1

**Verifica taglio D.M. 17-01-18 §4.4.8.1.9**

Sezione ad ascissa 66.4
Coefficiente parziale di sicurezza del materiale γ = 1.5
Kmod = 0.8; kcr = 0.67
τ,d <= fv,d
Sqrt(0.77^2+7.42^2) = 7.46 <= 16 Comb: SLU, 80; Durata minima del carico nella combinazione: media
Tx = 141.5; Ty = -1366

**Verifica pressoflessione D.M. 17-01-18 §4.4.8.1.8**

Sezione ad ascissa 66.4
Coefficiente parziale di sicurezza del materiale γ = 1.5
Kmod = 0.8
(Sc,0,d/fc,0,d)^2 + Sm,y,d/fm,y,d + Km*(Sm,z,d/fm,z,d) <= 1
(Sc,0,d/fc,0,d)^2 + Km*(Sm,y,d/fm,y,d) + Sm,z,d/fm,z,d <= 1
(5.4/85.3)^2+188.6/74.7+0.7*18.2/74.67=2.7 !> 1 [4.4.7a] Comb: SLU, 80; Durata minima del carico nella combinazione: media - NON SODDISFATTA
Mx = 299244.8; My = 22620.2; N = -2234.9

**Verifica taglio+torsione D.M. 17-01-18 §4.4.8.1.11**

Sezione ad ascissa 66.4
Coefficiente parziale di sicurezza del materiale γ = 1.5
Kmod = 0.8; kcr = 0.67
τ,tor,d/(ksh*fv,d) + (τ,y,d/fv,d)^2 + (τ,z,d/fv,d)^2 > 1
0.86+0+0.22 > 1 Comb: SLU, 79; Durata minima del carico nella combinazione: media - NON SODDISFATTA
Tx = 141.8; Ty = -1365.4; Mt = 27058.6

**Verifica torsione D.M. 17-01-18 §4.4.8.1.10**

Sezione ad ascissa 66.4
Coefficiente parziale di sicurezza del materiale γ = 1.5
Kmod = 0.8
τ,tor,d <= Ksh * fv,d
16.36 <= 19.07 Comb: SLU, 71; Durata minima del carico nella combinazione: media
Mt = 27106.3

---

## Asta 102: Trave in legno a falda Falda 4 fili 126-61

Verifiche condotte secondo D.M. 17-01-18 (N.T.C.)

### Dati generali

Lunghezza = 18.9

### Caratteristiche della sezione

| Descrizione | Tipo | Base | Altezza | Area | Jx | Jy | Wx | Wy |
|---|---|---|---|---|---|---|---|---|
| R 18x23 | Rettangolare | 18 | 23 | 414 | 18250.5 | 11178 | 1587 | 1242 |

Materiale: C14 EN 338:2016
Rapporto luce/freccia elastica limite = 300
Rapporto luce/freccia elastica differita = 200
Mensola Y: Nessuno; Mensola X: Nessuno
Classe di servizio 1

### Verifica tensoflessione D.M. 17-01-18 §4.4.8.1.7

Sezione ad ascissa 0
Coefficiente parziale di sicurezza del materiale γ = 1.5
Kmod = 0.8
St,0,d/ft,0,d + Sm,y,d/fm,y,d + Km*(Sm,z,d/fm,z,d) !> 1
St,0,d/ft,0,d + Km*(Sm,y,d/fm,y,d) + Sm,z,d/fm,z,d !> 1
4.2/38.4+122.8/74.7+0.7*36.4/74.7=2.09 !> 1 [4.4.6a] Comb: SLU, 80; Durata minima del carico nella combinazione: media - NON SODDISFATTA
Mx = 194875.8; My = -45217; N = 1725.2

### Verifica taglio D.M. 17-01-18 §4.4.8.1.9

Sezione ad ascissa 0
Coefficiente parziale di sicurezza del materiale γ = 1.5
Kmod = 0.8; kcr = 0.67
τ,d > fv,d
Sqrt(4.55^2+41.62^2) = 41.87 > 16 Comb: SLU, 80; Durata minima del carico nella combinazione: media - NON SODDISFATTA
Tx = 836.6; Ty = 7658.8

### Verifica taglio+torsione D.M. 17-01-18 §4.4.8.1.11

Sezione ad ascissa 0
Coefficiente parziale di sicurezza del materiale γ = 1.5
Kmod = 0.8; kcr = 0.67
τ,tor,d/(ksh*fv,d) + (τ,y,d/fv,d)^2 + (τ,z,d/fv,d)^2 > 1
3.95+0.08+6.77 > 1 Comb: SLU, 80; Durata minima del carico nella combinazione: media - NON SODDISFATTA
Tx = 836.6; Ty = 7658.8; Mt = -124810.4

### Verifica torsione D.M. 17-01-18 §4.4.8.1.10

Sezione ad ascissa 18.9
Coefficiente parziale di sicurezza del materiale γ = 1.5
Kmod = 0.8
τ,tor,d > Ksh * fv,d
75.35 > 19.07 Comb: SLU, 79; Durata minima del carico nella combinazione: media - NON SODDISFATTA
Mt = -124842

---

## Asta 103: Trave in legno a falda Falda 4 fili 126-61

Verifiche condotte secondo D.M. 17-01-18 (N.T.C.)

### Dati generali

Lunghezza = 10.9

### Caratteristiche della sezione

| Descrizione | Tipo | Base | Altezza | Area | Jx | Jy | Wx | Wy |
|---|---|---|---|---|---|---|---|---|
| R 18x23 | Rettangolare | 18 | 23 | 414 | 18250.5 | 11178 | 1587 | 1242 |

Materiale: C14 EN 338:2016
Rapporto luce/freccia elastica limite = 300
Rapporto luce/freccia elastica differita = 200
Mensola Y: Nessuno; Mensola X: Nessuno
Classe di servizio 1

### Verifica trazione parallela alla fibratura D.M. 17-01-18 §4.4.8.1.1

Sezione ad ascissa 6.9
Coefficiente parziale di sicurezza del materiale γ = 1.5
Kmod = 1.1
St,0,d <= ft,0,d
0.05 <= 52.8 Comb: SLD, 8; Durata minima del carico nella combinazione: istantaneo
N = 20

**Verifica flessione D.M. 17-01-18 §4.4.8.1.6**

Sezione ad ascissa 0
Coefficiente parziale di sicurezza del materiale γ = 1.5
Kmod = 0.8
Sm,y,d/fm,y,d + Km*(Sm,z,d/fm,z,d) <= 1
Km*(Sm,y,d/fm,y,d) + Sm,z,d/fm,z,d <= 1
0.1/74.7+0.7*0/74.7=0 <= 1 (formula 4.4.5a) Comb: SLU, 71; Durata minima del carico nella combinazione: media
Mx = 88.5; My = 0

**Verifica taglio D.M. 17-01-18 §4.4.8.1.9**

Sezione ad ascissa 0
Coefficiente parziale di sicurezza del materiale γ = 1.5
Kmod = 0.8; kcr = 0.67
τ,d <= fv,d
Sqrt(0^2+0.09^2) = 0.09 <= 16 Comb: SLU, 80; Durata minima del carico nella combinazione: media
Tx = 0; Ty = 16.6

---

## Asta 104: Trave in legno a falda Falda 3 fili 16-55

Verifiche condotte secondo D.M. 17-01-18 (N.T.C.)

**Dati generali**

Lunghezza = 25.3

**Caratteristiche della sezione**

| Descrizione | Tipo | Base | Altezza | Area | Jx | Jy | Wx | Wy |
|---|---|---|---|---|---|---|---|---|
| R 18x23 | Rettangolare | 18 | 23 | 414 | 18250.5 | 11178 | 1587 | 1242 |

Materiale: C14 EN 338:2016
Rapporto luce/freccia elastica limite = 300
Rapporto luce/freccia elastica differita = 200
Mensola Y: Nessuno; Mensola X: Nessuno
Classe di servizio 1

**Verifica taglio D.M. 17-01-18 §4.4.8.1.9**

Sezione ad ascissa 25.3
Coefficiente parziale di sicurezza del materiale γ = 1.5
Kmod = 0.8; kcr = 0.67
τ,d <= fv,d
Sqrt(0.62^2+4.51^2) = 4.55 <= 16 Comb: SLU, 72; Durata minima del carico nella combinazione: media
Tx = 114.5; Ty = -829.1

**Verifica pressoflessione D.M. 17-01-18 §4.4.8.1.8**

Sezione ad ascissa 25.3
Coefficiente parziale di sicurezza del materiale γ = 1.5
Kmod = 0.8
(Sc,0,d/fc,0,d)^2 + Sm,y,d/fm,y,d + Km*(Sm,z,d/fm,z,d) <= 1
(Sc,0,d/fc,0,d)^2 + Km*(Sm,y,d/fm,y,d) + Sm,z,d/fm,z,d <= 1
(6/85.3)^2+88.6/74.7+0.7*9.5/74.67=1.28 !> 1 [4.4.7a] Comb: SLU, 80; Durata minima del carico nella combinazione: media - NON SODDISFATTA
Mx = 140626.2; My = 11787.9; N = -2502.6

**Verifica taglio+torsione D.M. 17-01-18 §4.4.8.1.11**

Sezione ad ascissa 25.3
Coefficiente parziale di sicurezza del materiale γ = 1.5
Kmod = 0.8; kcr = 0.67
τ,tor,d/(ksh*fv,d) + (τ,y,d/fv,d)^2 + (τ,z,d/fv,d)^2 <= 1
0.2+0+0.08 <= 1 Comb: SLU, 72; Durata minima del carico nella combinazione: media
Tx = 114.5; Ty = -829.1; Mt = 6329.4

**Verifica torsione D.M. 17-01-18 §4.4.8.1.10**

Sezione ad ascissa 25.3
Coefficiente parziale di sicurezza del materiale γ = 1.5
Kmod = 0.8
τ,tor,d <= Ksh * fv,d
3.82 <= 19.07 Comb: SLU, 72; Durata minima del carico nella combinazione: media
Mt = 6329.4

---

## Asta 105: Trave in legno a falda Falda 3 fili 16-55

Verifiche condotte secondo D.M. 17-01-18 (N.T.C.)

### Dati generali

Lunghezza = 105.8

### Caratteristiche della sezione

| Descrizione | Tipo | Base | Altezza | Area | Jx | Jy | Wx | Wy |
|---|---|---|---|---|---|---|---|---|
| R 18x23 | Rettangolare | 18 | 23 | 414 | 18250.5 | 11178 | 1587 | 1242 |

Materiale: C14 EN 338:2016
Rapporto luce/freccia elastica limite = 300
Rapporto luce/freccia elastica differita = 200
Mensola Y: Nessuno; Mensola X: Nessuno
Classe di servizio 1

### Verifica taglio D.M. 17-01-18 §4.4.8.1.9

Sezione ad ascissa 0
Coefficiente parziale di sicurezza del materiale γ = 1.5
Kmod = 0.8; kcr = 0.67
τ,d <= fv,d
Sqrt(0.11^2+4.61^2) = 4.61 <= 16 Comb: SLU, 80; Durata minima del carico nella combinazione: media
Tx = 19.5; Ty = 848.6

### Verifica pressoflessione D.M. 17-01-18 §4.4.8.1.8

Sezione ad ascissa 0
Coefficiente parziale di sicurezza del materiale γ = 1.5
Kmod = 0.8
(Sc,0,d/fc,0,d)^2 + Sm,y,d/fm,y,d + Km*(Sm,z,d/fm,z,d) <= 1
(Sc,0,d/fc,0,d)^2 + Km*(Sm,y,d/fm,y,d) + Sm,z,d/fm,z,d <= 1
(8.7/85.3)^2+82.8/74.7+0.7*7.9/74.67=1.19 !> 1 [4.4.7a] Comb: SLU, 80; Durata minima del carico nella combinazione: media - NON SODDISFATTA
Mx = 131457; My = 9802.3; N = -3613.8

### Verifica taglio+torsione D.M. 17-01-18 §4.4.8.1.11

Sezione ad ascissa 0
Coefficiente parziale di sicurezza del materiale γ = 1.5
Kmod = 0.8; kcr = 0.67
τ,tor,d/(ksh*fv,d) + (τ,y,d/fv,d)^2 + (τ,z,d/fv,d)^2 <= 1
0.08+0+0.08 <= 1 Comb: SLU, 79; Durata minima del carico nella combinazione: media
Tx = 20; Ty = 847.9; Mt = -2419.2

### Verifica torsione D.M. 17-01-18 §4.4.8.1.10

Sezione ad ascissa 105.8
Coefficiente parziale di sicurezza del materiale γ = 1.5
Kmod = 0.8
τ,tor,d <= Ksh * fv,d
1.46 <= 19.07 Comb: SLU, 71; Durata minima del carico nella combinazione: media
Mt = -2420.5

---

## Asta 106: Trave in legno a falda Falda 3 fili 16-55

Verifiche condotte secondo D.M. 17-01-18 (N.T.C.)

### Dati generali

Lunghezza = 105.8

### Caratteristiche della sezione

| Descrizione | Tipo | Base | Altezza | Area | Jx | Jy | Wx | Wy |
|---|---|---|---|---|---|---|---|---|
| R 18x23 | Rettangolare | 18 | 23 | 414 | 18250.5 | 11178 | 1587 | 1242 |

Materiale: C14 EN 338:2016
Rapporto luce/freccia elastica limite = 300
Rapporto luce/freccia elastica differita = 200
Mensola Y: Nessuno; Mensola X: Nessuno
Classe di servizio 1

### Verifica taglio D.M. 17-01-18 §4.4.8.1.9

Sezione ad ascissa 0
Coefficiente parziale di sicurezza del materiale γ = 1.5
Kmod = 0.8; kcr = 0.67
τ,d <= fv,d
Sqrt(0.65^2+7.67^2) = 7.69 <= 16 Comb: SLU, 80; Durata minima del carico nella combinazione: media
Tx = 120.4; Ty = 1410.4

### Verifica pressoflessione D.M. 17-01-18 §4.4.8.1.8

Sezione ad ascissa 105.8
Coefficiente parziale di sicurezza del materiale γ = 1.5

Kmod = 0.8
(Sc,0,d/fc,0,d)^2 + Sm,y,d/fm,y,d + Km*(Sm,z,d/fm,z,d) <= 1
(Sc,0,d/fc,0,d)^2 + Km*(Sm,y,d/fm,y,d) + Sm,z,d/fm,z,d <= 1
(9.2/85.3)^2+60.3/74.7+0.7*20.5/74.67=1.01 !> 1 [4.4.7a] Comb: SLU, 72; Durata minima del carico nella combinazione: media - NON SODDISFATTA
Mx = -95692.9; My = 25418.6; N = -3818.1

**Verifica taglio+torsione D.M. 17-01-18 §4.4.8.1.11**

Sezione ad ascissa 0
Coefficiente parziale di sicurezza del materiale γ = 1.5
Kmod = 0.8; kcr = 0.67
τ,tor,d/(ksh*fv,d) + (τ,y,d/fv,d)^2 + (τ,z,d/fv,d)^2 <= 1
0.03+0+0.23 <= 1 Comb: SLU, 80; Durata minima del carico nella combinazione: media
Tx = 120.4; Ty = 1410.4; Mt = -847.5

**Verifica torsione D.M. 17-01-18 §4.4.8.1.10**

Sezione ad ascissa 105.8
Coefficiente parziale di sicurezza del materiale γ = 1.5
Kmod = 1.1
τ,tor,d <= Ksh * fv,d
1.19 <= 26.22 Comb: SLV, 12; Durata minima del carico nella combinazione: istantaneo
Mt = -1974.8

---

## Asta 107: Trave in legno a falda Falda 3 fili 16-55

Verifiche condotte secondo D.M. 17-01-18 (N.T.C.)

**Dati generali**

Lunghezza = 80

**Caratteristiche della sezione**

| Descrizione | Tipo | Base | Altezza | Area | Jx | Jy | Wx | Wy |
|---|---|---|---|---|---|---|---|---|
| R 18x23 | Rettangolare | 18 | 23 | 414 | 18250.5 | 11178 | 1587 | 1242 |

Materiale: C14 EN 338:2016
Rapporto luce/freccia elastica limite = 300
Rapporto luce/freccia elastica differita = 200
Mensola Y: Nessuno; Mensola X: Nessuno
Classe di servizio 1

**Verifica taglio D.M. 17-01-18 §4.4.8.1.9**

Sezione ad ascissa 0
Coefficiente parziale di sicurezza del materiale γ = 1.5
Kmod = 0.8; kcr = 0.67
τ,d <= fv,d
Sqrt(1.16^2+6.89^2) = 6.99 <= 16 Comb: SLU, 80; Durata minima del carico nella combinazione: media
Tx = 214.1; Ty = 1267.7

**Verifica pressoflessione D.M. 17-01-18 §4.4.8.1.8**

Sezione ad ascissa 80
Coefficiente parziale di sicurezza del materiale γ = 1.5
Kmod = 0.8
(Sc,0,d/fc,0,d)^2 + Sm,y,d/fm,y,d + Km*(Sm,z,d/fm,z,d) <= 1
(Sc,0,d/fc,0,d)^2 + Km*(Sm,y,d/fm,y,d) + Sm,z,d/fm,z,d <= 1
(9.4/85.3)^2+125/74.7+0.7*37.2/74.67=2.04 !> 1 [4.4.7a] Comb: SLU, 72; Durata minima del carico nella combinazione: media - NON SODDISFATTA
Mx = -198452.1; My = 46147.2; N = -3911.7

**Verifica taglio+torsione D.M. 17-01-18 §4.4.8.1.11**

Sezione ad ascissa 0
Coefficiente parziale di sicurezza del materiale γ = 1.5
Kmod = 0.8; kcr = 0.67
τ,tor,d/(ksh*fv,d) + (τ,y,d/fv,d)^2 + (τ,z,d/fv,d)^2 <= 1
0+0.01+0.19 <= 1 Comb: SLU, 80; Durata minima del carico nella combinazione: media
Tx = 214.1; Ty = 1267.7; Mt = 68

**Verifica torsione D.M. 17-01-18 §4.4.8.1.10**

Sezione ad ascissa 80
Coefficiente parziale di sicurezza del materiale γ = 1.5
Kmod = 1.1
τ,tor,d <= Ksh * fv,d
0.8 <= 26.22 Comb: SLV, 12; Durata minima del carico nella combinazione: istantaneo
Mt = -1323.7

---

## Asta 108: Trave in legno a falda Falda 3 fili 16-55

Verifiche condotte secondo D.M. 17-01-18 (N.T.C.)

### Dati generali

Lunghezza = 25.8

### Caratteristiche della sezione

| Descrizione | Tipo | Base | Altezza | Area | Jx | Jy | Wx | Wy |
|---|---|---|---|---|---|---|---|---|
| R 18x23 | Rettangolare | 18 | 23 | 414 | 18250.5 | 11178 | 1587 | 1242 |

Materiale: C14 EN 338:2016
Rapporto luce/freccia elastica limite = 300
Rapporto luce/freccia elastica differita = 200
Mensola Y: Nessuno; Mensola X: Nessuno
Classe di servizio 1

### Verifica taglio D.M. 17-01-18 §4.4.8.1.9

Sezione ad ascissa 25.8
Coefficiente parziale di sicurezza del materiale γ = 1.5
Kmod = 0.8; kcr = 0.67
τ,d <= fv,d
Sqrt(2^2+1.86^2) = 2.73 <= 16 Comb: SLU, 71; Durata minima del carico nella combinazione: media
Tx = -367.4; Ty = -342.9

### Verifica pressoflessione D.M. 17-01-18 §4.4.8.1.8

Sezione ad ascissa 0
Coefficiente parziale di sicurezza del materiale γ = 1.5
Kmod = 0.8
(Sc,0,d/fc,0,d)^2 + Sm,y,d/fm,y,d + Km*(Sm,z,d/fm,z,d) <= 1
(Sc,0,d/fc,0,d)^2 + Km*(Sm,y,d/fm,y,d) + Sm,z,d/fm,z,d <= 1
(7.2/85.3)^2+123.2/74.7+0.7*35.3/74.67=1.99 !> 1 [4.4.7a] Comb: SLU, 72; Durata minima del carico nella combinazione: media - NON SODDISFATTA
Mx = -195525.9; My = 43822.8; N = -2982.7

### Verifica taglio+torsione D.M. 17-01-18 §4.4.8.1.11

Sezione ad ascissa 25.8
Coefficiente parziale di sicurezza del materiale γ = 1.5
Kmod = 0.8; kcr = 0.67
τ,tor,d/(ksh*fv,d) + (τ,y,d/fv,d)^2 + (τ,z,d/fv,d)^2 <= 1
0.18+0.01+0.01 <= 1 Comb: SLU, 80; Durata minima del carico nella combinazione: media
Tx = -359.4; Ty = -344.5; Mt = -5783.8

### Verifica torsione D.M. 17-01-18 §4.4.8.1.10

Sezione ad ascissa 25.8
Coefficiente parziale di sicurezza del materiale γ = 1.5
Kmod = 0.8
τ,tor,d <= Ksh * fv,d
3.49 <= 19.07 Comb: SLU, 80; Durata minima del carico nella combinazione: media
Mt = -5783.8

---

## Asta 109: Trave in legno a falda Falda 3 fili 16-55

Verifiche condotte secondo D.M. 17-01-18 (N.T.C.)

### Dati generali

Lunghezza = 106.1

### Caratteristiche della sezione

| Descrizione | Tipo | Base | Altezza | Area | Jx | Jy | Wx | Wy |
|---|---|---|---|---|---|---|---|---|
| R 18x23 | Rettangolare | 18 | 23 | 414 | 18250.5 | 11178 | 1587 | 1242 |

Materiale: C14 EN 338:2016
Rapporto luce/freccia elastica limite = 300
Rapporto luce/freccia elastica differita = 200
Mensola Y: Nessuno; Mensola X: Nessuno
Classe di servizio 1

### Verifica taglio D.M. 17-01-18 §4.4.8.1.9

Sezione ad ascissa 106.1
Coefficiente parziale di sicurezza del materiale γ = 1.5
Kmod = 0.8; kcr = 0.67
τ,d <= fv,d
Sqrt(1.04^2+3.83^2) = 3.97 <= 16 Comb: SLU, 79; Durata minima del carico nella combinazione: media
Tx = -192.1; Ty = -705.3

**Verifica pressoflessione D.M. 17-01-18 §4.4.8.1.8**

Sezione ad ascissa 0
Coefficiente parziale di sicurezza del materiale γ = 1.5
Kmod = 0.8
(Sc,0,d/fc,0,d)^2 + Sm,y,d/fm,y,d + Km*(Sm,z,d/fm,z,d) <= 1
(Sc,0,d/fc,0,d)^2 + Km*(Sm,y,d/fm,y,d) + Sm,z,d/fm,z,d <= 1
(7.5/85.3)^2+133.8/74.7+0.7*33.1/74.67=2.11 !> 1 [4.4.7a] Comb: SLU, 72; Durata minima del carico nella combinazione: media - NON SODDISFATTA
Mx = -212363.2; My = 41079.3; N = -3122.2

**Verifica taglio+torsione D.M. 17-01-18 §4.4.8.1.11**

Sezione ad ascissa 106.1
Coefficiente parziale di sicurezza del materiale γ = 1.5
Kmod = 0.8; kcr = 0.67
τ,tor,d/(ksh*fv,d) + (τ,y,d/fv,d)^2 + (τ,z,d/fv,d)^2 <= 1
0.18+0+0.06 <= 1 Comb: SLU, 80; Durata minima del carico nella combinazione: media
Tx = -188.7; Ty = -705.8; Mt = -5528.3

**Verifica torsione D.M. 17-01-18 §4.4.8.1.10**

Sezione ad ascissa 106.1
Coefficiente parziale di sicurezza del materiale γ = 1.5
Kmod = 0.8
τ,tor,d <= Ksh * fv,d
3.34 <= 19.07 Comb: SLU, 80; Durata minima del carico nella combinazione: media
Mt = -5528.3

---

## Asta 110: Trave in legno a falda Falda 3 fili 16-55

Verifiche condotte secondo D.M. 17-01-18 (N.T.C.)

**Dati generali**

Lunghezza = 105.7

**Caratteristiche della sezione**

| Descrizione | Tipo | Base | Altezza | Area | Jx | Jy | Wx | Wy |
|---|---|---|---|---|---|---|---|---|
| R 18x23 | Rettangolare | 18 | 23 | 414 | 18250.5 | 11178 | 1587 | 1242 |

Materiale: C14 EN 338:2016
Rapporto luce/freccia elastica limite = 300
Rapporto luce/freccia elastica differita = 200
Mensola Y: Nessuno; Mensola X: Nessuno
Classe di servizio 1

**Verifica taglio D.M. 17-01-18 §4.4.8.1.9**

Sezione ad ascissa 105.7
Coefficiente parziale di sicurezza del materiale γ = 1.5
Kmod = 0.8; kcr = 0.67
τ,d <= fv,d
Sqrt(1.47^2+8.52^2) = 8.65 <= 16 Comb: SLU, 79; Durata minima del carico nella combinazione: media
Tx = -270.2; Ty = -1568.2

**Verifica pressoflessione D.M. 17-01-18 §4.4.8.1.8**

Sezione ad ascissa 0
Coefficiente parziale di sicurezza del materiale γ = 1.5
Kmod = 0.8
(Sc,0,d/fc,0,d)^2 + Sm,y,d/fm,y,d + Km*(Sm,z,d/fm,z,d) <= 1
(Sc,0,d/fc,0,d)^2 + Km*(Sm,y,d/fm,y,d) + Sm,z,d/fm,z,d <= 1
(7.4/85.3)^2+115.1/74.7+0.7*19.9/74.67=1.74 !> 1 [4.4.7a] Comb: SLU, 72; Durata minima del carico nella combinazione: media - NON SODDISFATTA
Mx = -182623.2; My = 24719.6; N = -3065.1

**Verifica taglio+torsione D.M. 17-01-18 §4.4.8.1.11**

Sezione ad ascissa 105.7
Coefficiente parziale di sicurezza del materiale γ = 1.5
Kmod = 0.8; kcr = 0.67
τ,tor,d/(ksh*fv,d) + (τ,y,d/fv,d)^2 + (τ,z,d/fv,d)^2 <= 1
0.02+0.01+0.28 <= 1 Comb: SLU, 71; Durata minima del carico nella combinazione: media
Tx = -271.5; Ty = -1567.9; Mt = 657.1

**Verifica torsione D.M. 17-01-18 §4.4.8.1.10**

Sezione ad ascissa 105.7
Coefficiente parziale di sicurezza del materiale γ = 1.5
Kmod = 1.1
τ,tor,d <= Ksh * fv,d

0.66 <= 26.22 Comb: SLV, 12; Durata minima del carico nella combinazione: istantaneo
Mt = 1089.2

## Asta 111: Trave in legno a falda Falda 3 fili 16-55

Verifiche condotte secondo D.M. 17-01-18 (N.T.C.)

### Dati generali

Lunghezza = 105.7

### Caratteristiche della sezione

| Descrizione | Tipo | Base | Altezza | Area | Jx | Jy | Wx | Wy |
|---|---|---|---|---|---|---|---|---|
| R 18x23 | Rettangolare | 18 | 23 | 414 | 18250.5 | 11178 | 1587 | 1242 |

Materiale: C14 EN 338:2016
Rapporto luce/freccia elastica limite = 300
Rapporto luce/freccia elastica differita = 200
Mensola Y: Nessuno; Mensola X: Nessuno
Classe di servizio 1

### Verifica taglio D.M. 17-01-18 §4.4.8.1.9

Sezione ad ascissa 105.7
Coefficiente parziale di sicurezza del materiale γ = 1.5
Kmod = 0.8; kcr = 0.67
τ,d <= fv,d
Sqrt(2.73^2+14.31^2) = 14.57 <= 16 Comb: SLU, 72; Durata minima del carico nella combinazione: media
Tx = -502.4; Ty = -2632.5

### Verifica pressoflessione D.M. 17-01-18 §4.4.8.1.8

Sezione ad ascissa 105.7
Coefficiente parziale di sicurezza del materiale γ = 1.5
Kmod = 0.8
(Sc,0,d/fc,0,d)^2 + Sm,y,d/fm,y,d + Km*(Sm,z,d/fm,z,d) <= 1
(Sc,0,d/fc,0,d)^2 + Km*(Sm,y,d/fm,y,d) + Sm,z,d/fm,z,d <= 1
(6.4/85.3)^2+99.6/74.7+0.7*43.9/74.67=1.75 !> 1 [4.4.7a] Comb: SLU, 71; Durata minima del carico nella combinazione: media - NON SODDISFATTA
Mx = 157999.4; My = -54572.8; N = -2630.4

### Verifica taglio+torsione D.M. 17-01-18 §4.4.8.1.11

Sezione ad ascissa 105.7
Coefficiente parziale di sicurezza del materiale γ = 1.5
Kmod = 0.8; kcr = 0.67
τ,tor,d/(ksh*fv,d) + (τ,y,d/fv,d)^2 + (τ,z,d/fv,d)^2 > 1
0.24+0.03+0.8 > 1 Comb: SLU, 71; Durata minima del carico nella combinazione: media - NON SODDISFATTA
Tx = -496; Ty = -2633.6; Mt = 7602.7

### Verifica torsione D.M. 17-01-18 §4.4.8.1.10

Sezione ad ascissa 105.7
Coefficiente parziale di sicurezza del materiale γ = 1.5
Kmod = 0.8
τ,tor,d <= Ksh * fv,d
4.59 <= 19.07 Comb: SLU, 71; Durata minima del carico nella combinazione: media
Mt = 7602.7

## Asta 112: Trave in legno a falda Falda 3 fili 16-55

Verifiche condotte secondo D.M. 17-01-18 (N.T.C.)

### Dati generali

Lunghezza = 51.1

### Caratteristiche della sezione

| Descrizione | Tipo | Base | Altezza | Area | Jx | Jy | Wx | Wy |
|---|---|---|---|---|---|---|---|---|
| R 18x23 | Rettangolare | 18 | 23 | 414 | 18250.5 | 11178 | 1587 | 1242 |

Materiale: C14 EN 338:2016
Rapporto luce/freccia elastica limite = 300
Rapporto luce/freccia elastica differita = 200
Mensola Y: Nessuno; Mensola X: Nessuno
Classe di servizio 1

### Verifica taglio D.M. 17-01-18 §4.4.8.1.9

Sezione ad ascissa 51.1
Coefficiente parziale di sicurezza del materiale γ = 1.5

Kmod = 0.8; kcr = 0.67
τ,d > fv,d
Sqrt(1.12^2+18.85^2) = 18.88 > 16 Comb: SLU, 80; Durata minima del carico nella combinazione: media - NON SODDISFATTA
Tx = -205.8; Ty = -3468.4

**Verifica pressoflessione D.M. 17-01-18 §4.4.8.1.8**

Sezione ad ascissa 51.1
Coefficiente parziale di sicurezza del materiale γ = 1.5
Kmod = 0.8
(Sc,0,d/fc,0,d)^2 + Sm,y,d/fm,y,d + Km*(Sm,z,d/fm,z,d) <= 1
(Sc,0,d/fc,0,d)^2 + Km*(Sm,y,d/fm,y,d) + Sm,z,d/fm,z,d <= 1
(4.7/85.3)^2+205.8/74.7+0.7*56.5/74.67=3.29 !> 1 [4.4.7a] Comb: SLU, 71; Durata minima del carico nella combinazione: media - NON SODDISFATTA
Mx = 326655.5; My = -70195.4; N = -1939.7

**Verifica taglio+torsione D.M. 17-01-18 §4.4.8.1.11**

Sezione ad ascissa 51.1
Coefficiente parziale di sicurezza del materiale γ = 1.5
Kmod = 0.8; kcr = 0.67
τ,tor,d/(ksh*fv,d) + (τ,y,d/fv,d)^2 + (τ,z,d/fv,d)^2 > 1
0.57+0.01+1.39 > 1 Comb: SLU, 72; Durata minima del carico nella combinazione: media - NON SODDISFATTA
Tx = -209.9; Ty = -3467.9; Mt = 18012

**Verifica torsione D.M. 17-01-18 §4.4.8.1.10**

Sezione ad ascissa 51.1
Coefficiente parziale di sicurezza del materiale γ = 1.5
Kmod = 0.8
τ,tor,d <= Ksh * fv,d
10.89 <= 19.07 Comb: SLU, 71; Durata minima del carico nella combinazione: media
Mt = 18043.6

---

## Asta 113: Trave in legno a falda Falda 2 fili 55-1

Verifiche condotte secondo D.M. 17-01-18 (N.T.C.)

**Dati generali**

Lunghezza = 13.7

**Caratteristiche della sezione**

| Descrizione | Tipo | Base | Altezza | Area | Jx | Jy | Wx | Wy |
|---|---|---|---|---|---|---|---|---|
| R 18x23 | Rettangolare | 18 | 23 | 414 | 18250.5 | 11178 | 1587 | 1242 |

Materiale: C14 EN 338:2016
Rapporto luce/freccia elastica limite = 300
Rapporto luce/freccia elastica differita = 200
Mensola Y: Nessuno; Mensola X: Nessuno
Classe di servizio 1

**Verifica taglio D.M. 17-01-18 §4.4.8.1.9**

Sezione ad ascissa 0
Coefficiente parziale di sicurezza del materiale γ = 1.5
Kmod = 1.1; kcr = 0.67
τ,d <= fv,d
Sqrt(1.05^2+2.29^2) = 2.52 <= 22 Comb: SLV, 14; Durata minima del carico nella combinazione: istantaneo
Tx = -192.6; Ty = 421.6

**Verifica pressoflessione D.M. 17-01-18 §4.4.8.1.8**

Sezione ad ascissa 13.7
Coefficiente parziale di sicurezza del materiale γ = 1.5
Kmod = 0.8
(Sc,0,d/fc,0,d)^2 + Sm,y,d/fm,y,d + Km*(Sm,z,d/fm,z,d) <= 1
(Sc,0,d/fc,0,d)^2 + Km*(Sm,y,d/fm,y,d) + Sm,z,d/fm,z,d <= 1
(7/85.3)^2+144.1/74.7+0.7*89.4/74.67=2.77 !> 1 [4.4.7a] Comb: SLU, 71; Durata minima del carico nella combinazione: media - NON SODDISFATTA
Mx = 228639.9; My = -111044.7; N = -2913

**Verifica taglio+torsione D.M. 17-01-18 §4.4.8.1.11**

Sezione ad ascissa 0
Coefficiente parziale di sicurezza del materiale γ = 1.5
Kmod = 0.8; kcr = 0.67
τ,tor,d/(ksh*fv,d) + (τ,y,d/fv,d)^2 + (τ,z,d/fv,d)^2 > 1
3.32+0+0 > 1 Comb: SLU, 80; Durata minima del carico nella combinazione: media - NON SODDISFATTA
Tx = -130.1; Ty = 78.1; Mt = -104838.9

**Verifica torsione D.M. 17-01-18 §4.4.8.1.10**

Sezione ad ascissa 13.7
Coefficiente parziale di sicurezza del materiale γ = 1.5
Kmod = 0.8
τ,tor,d > Ksh * fv,d
63.28 > 19.07 Comb: SLU, 80; Durata minima del carico nella combinazione: media - NON SODDISFATTA
Mt = -104838.9

---

## Asta 114: Trave in legno a falda Falda 2 fili 55-1

Verifiche condotte secondo D.M. 17-01-18 (N.T.C.)

**Dati generali**

Lunghezza = 35

**Caratteristiche della sezione**

| Descrizione | Tipo | Base | Altezza | Area | Jx | Jy | Wx | Wy |
|---|---|---|---|---|---|---|---|---|
| R 18x23 | Rettangolare | 18 | 23 | 414 | 18250.5 | 11178 | 1587 | 1242 |

Materiale: C14 EN 338:2016
Rapporto luce/freccia elastica limite = 300
Rapporto luce/freccia elastica differita = 200
Mensola Y: Nessuno; Mensola X: Nessuno
Classe di servizio 1

**Verifica taglio D.M. 17-01-18 §4.4.8.1.9**

Sezione ad ascissa 0
Coefficiente parziale di sicurezza del materiale γ = 1.5
Kmod = 0.8; kcr = 0.67
τ,d > fv,d
Sqrt(1.52^2+18.56^2) = 18.62 > 16 Comb: SLU, 72; Durata minima del carico nella combinazione: media - NON SODDISFATTA
Tx = -280.3; Ty = 3414.2

**Verifica pressoflessione D.M. 17-01-18 §4.4.8.1.8**

Sezione ad ascissa 0
Coefficiente parziale di sicurezza del materiale γ = 1.5
Kmod = 0.8
(Sc,0,d/fc,0,d)^2 + Sm,y,d/fm,y,d + Km*(Sm,z,d/fm,z,d) <= 1
(Sc,0,d/fc,0,d)^2 + Km*(Sm,y,d/fm,y,d) + Sm,z,d/fm,z,d <= 1
(5.9/85.3)^2+186.9/74.7+0.7*19.2/74.67=2.69 !> 1 [4.4.7a] Comb: SLU, 72; Durata minima del carico nella combinazione: media - NON SODDISFATTA
Mx = 296569.6; My = -23797.7; N = -2436.9

**Verifica taglio+torsione D.M. 17-01-18 §4.4.8.1.11**

Sezione ad ascissa 0
Coefficiente parziale di sicurezza del materiale γ = 1.5
Kmod = 0.8; kcr = 0.67
τ,tor,d/(ksh*fv,d) + (τ,y,d/fv,d)^2 + (τ,z,d/fv,d)^2 > 1
0.49+0.01+1.34 > 1 Comb: SLU, 72; Durata minima del carico nella combinazione: media - NON SODDISFATTA
Tx = -280.3; Ty = 3414.2; Mt = -15391.4

**Verifica torsione D.M. 17-01-18 §4.4.8.1.10**

Sezione ad ascissa 35
Coefficiente parziale di sicurezza del materiale γ = 1.5
Kmod = 0.8
τ,tor,d <= Ksh * fv,d
9.38 <= 19.07 Comb: SLU, 71; Durata minima del carico nella combinazione: media
Mt = -15539.6

---

## Asta 115: Trave in legno a falda Falda 2 fili 55-1

Verifiche condotte secondo D.M. 17-01-18 (N.T.C.)

**Dati generali**

Lunghezza = 12.9

**Caratteristiche della sezione**

| Descrizione | Tipo | Base | Altezza | Area | Jx | Jy | Wx | Wy |
|---|---|---|---|---|---|---|---|---|
| R 18x23 | Rettangolare | 18 | 23 | 414 | 18250.5 | 11178 | 1587 | 1242 |

Materiale: C14 EN 338:2016
Rapporto luce/freccia elastica limite = 300
Rapporto luce/freccia elastica differita = 200

Mensola Y: Nessuno; Mensola X: Nessuno
Classe di servizio 1

**Verifica taglio D.M. 17-01-18 §4.4.8.1.9**

Sezione ad ascissa 0
Coefficiente parziale di sicurezza del materiale γ = 1.5
Kmod = 0.8; kcr = 0.67
τ,d > fv,d
Sqrt(1.77^2+16.84^2) = 16.94 > 16 Comb: SLU, 72; Durata minima del carico nella combinazione: media - NON SODDISFATTA
Tx = -326.4; Ty = 3099.4

**Verifica pressoflessione D.M. 17-01-18 §4.4.8.1.8**

Sezione ad ascissa 0
Coefficiente parziale di sicurezza del materiale γ = 1.5
Kmod = 0.8
(Sc,0,d/fc,0,d)^2 + Sm,y,d/fm,y,d + Km*(Sm,z,d/fm,z,d) <= 1
(Sc,0,d/fc,0,d)^2 + Km*(Sm,y,d/fm,y,d) + Sm,z,d/fm,z,d <= 1
(6.3/85.3)^2+114.7/74.7+0.7*28.2/74.67=1.81 !> 1 [4.4.7a] Comb: SLU, 72; Durata minima del carico nella combinazione: media - NON SODDISFATTA
Mx = 181972.1; My = -35081.4; N = -2617.7

**Verifica taglio+torsione D.M. 17-01-18 §4.4.8.1.11**

Sezione ad ascissa 0
Coefficiente parziale di sicurezza del materiale γ = 1.5
Kmod = 0.8; kcr = 0.67
τ,tor,d/(ksh*fv,d) + (τ,y,d/fv,d)^2 + (τ,z,d/fv,d)^2 > 1
0.52+0.01+1.11 > 1 Comb: SLU, 72; Durata minima del carico nella combinazione: media - NON SODDISFATTA
Tx = -326.4; Ty = 3099.4; Mt = -16429.1

**Verifica torsione D.M. 17-01-18 §4.4.8.1.10**

Sezione ad ascissa 12.9
Coefficiente parziale di sicurezza del materiale γ = 1.5
Kmod = 0.8
τ,tor,d <= Ksh * fv,d
10.03 <= 19.07 Comb: SLU, 79; Durata minima del carico nella combinazione: media
Mt = -16619.8

---

## Asta 116: Trave in legno a falda Falda 2 fili 55-1

Verifiche condotte secondo D.M. 17-01-18 (N.T.C.)

**Dati generali**

Lunghezza = 87.9

**Caratteristiche della sezione**

| Descrizione | Tipo | Base | Altezza | Area | Jx | Jy | Wx | Wy |
|---|---|---|---|---|---|---|---|---|
| R 18x23 | Rettangolare | 18 | 23 | 414 | 18250.5 | 11178 | 1587 | 1242 |

Materiale: C14 EN 338:2016
Rapporto luce/freccia elastica limite = 300
Rapporto luce/freccia elastica differita = 200
Mensola Y: Nessuno; Mensola X: Nessuno
Classe di servizio 1

**Verifica taglio D.M. 17-01-18 §4.4.8.1.9**

Sezione ad ascissa 0
Coefficiente parziale di sicurezza del materiale γ = 1.5
Kmod = 0.8; kcr = 0.67
τ,d <= fv,d
Sqrt(0.28^2+14.06^2) = 14.06 <= 16 Comb: SLU, 72; Durata minima del carico nella combinazione: media
Tx = 52; Ty = 2586.9

**Verifica pressoflessione D.M. 17-01-18 §4.4.8.1.8**

Sezione ad ascissa 0
Coefficiente parziale di sicurezza del materiale γ = 1.5
Kmod = 0.8
(Sc,0,d/fc,0,d)^2 + Sm,y,d/fm,y,d + Km*(Sm,z,d/fm,z,d) <= 1
(Sc,0,d/fc,0,d)^2 + Km*(Sm,y,d/fm,y,d) + Sm,z,d/fm,z,d <= 1
(7.8/85.3)^2+90.8/74.7+0.7*23.5/74.67=1.44 !> 1 [4.4.7a] Comb: SLU, 72; Durata minima del carico nella combinazione: media - NON SODDISFATTA
Mx = 144074.7; My = -29232.5; N = -3243.4

**Verifica taglio+torsione D.M. 17-01-18 §4.4.8.1.11**

Sezione ad ascissa 0
Coefficiente parziale di sicurezza del materiale γ = 1.5

Kmod = 0.8; kcr = 0.67
τ,tor,d/(ksh*fv,d) + (τ,y,d/fv,d)^2 + (τ,z,d/fv,d)^2 > 1
0.33+0+0.77 > 1 Comb: SLU, 72; Durata minima del carico nella combinazione: media - NON SODDISFATTA
Tx = 52; Ty = 2586.9; Mt = -10427.3

**Verifica torsione D.M. 17-01-18 §4.4.8.1.10**

Sezione ad ascissa 87.9
Coefficiente parziale di sicurezza del materiale γ = 1.5
Kmod = 0.8
τ,tor,d <= Ksh * fv,d
6.29 <= 19.07 Comb: SLU, 72; Durata minima del carico nella combinazione: media
Mt = -10427.3

---

## Asta 117: Trave in legno a falda Falda 2 fili 55-1

Verifiche condotte secondo D.M. 17-01-18 (N.T.C.)

**Dati generali**

Lunghezza = 100.8

**Caratteristiche della sezione**

| Descrizione | Tipo | Base | Altezza | Area | Jx | Jy | Wx | Wy |
|---|---|---|---|---|---|---|---|---|
| R 18x23 | Rettangolare | 18 | 23 | 414 | 18250.5 | 11178 | 1587 | 1242 |

Materiale: C14 EN 338:2016
Rapporto luce/freccia elastica limite = 300
Rapporto luce/freccia elastica differita = 200
Mensola Y: Nessuno; Mensola X: Nessuno
Classe di servizio 1

**Verifica taglio D.M. 17-01-18 §4.4.8.1.9**

Sezione ad ascissa 0
Coefficiente parziale di sicurezza del materiale γ = 1.5
Kmod = 0.8; kcr = 0.67
τ,d <= fv,d
Sqrt(2.04^2+7.77^2) = 8.03 <= 16 Comb: SLU, 72; Durata minima del carico nella combinazione: media
Tx = 374.5; Ty = 1430

**Verifica pressoflessione D.M. 17-01-18 §4.4.8.1.8**

Sezione ad ascissa 100.8
Coefficiente parziale di sicurezza del materiale γ = 1.5
Kmod = 0.8
(Sc,0,d/fc,0,d)^2 + Sm,y,d/fm,y,d + Km*(Sm,z,d/fm,z,d) <= 1
(Sc,0,d/fc,0,d)^2 + Km*(Sm,y,d/fm,y,d) + Sm,z,d/fm,z,d <= 1
(11.2/85.3)^2+101.7/74.7+0.7*14.5/74.67=1.51 !> 1 [4.4.7a] Comb: SLU, 80; Durata minima del carico nella combinazione: media - NON SODDISFATTA
Mx = -161325.9; My = 18007.4; N = -4654.1

**Verifica taglio+torsione D.M. 17-01-18 §4.4.8.1.11**

Sezione ad ascissa 0
Coefficiente parziale di sicurezza del materiale γ = 1.5
Kmod = 0.8; kcr = 0.67
τ,tor,d/(ksh*fv,d) + (τ,y,d/fv,d)^2 + (τ,z,d/fv,d)^2 <= 1
0.16+0.02+0.24 <= 1 Comb: SLU, 72; Durata minima del carico nella combinazione: media
Tx = 374.5; Ty = 1430; Mt = -5133.1

**Verifica torsione D.M. 17-01-18 §4.4.8.1.10**

Sezione ad ascissa 100.8
Coefficiente parziale di sicurezza del materiale γ = 1.5
Kmod = 0.8
τ,tor,d <= Ksh * fv,d
3.1 <= 19.07 Comb: SLU, 72; Durata minima del carico nella combinazione: media
Mt = -5133.1

---

## Asta 118: Trave in legno a falda Falda 2 fili 55-1

Verifiche condotte secondo D.M. 17-01-18 (N.T.C.)

**Dati generali**

Lunghezza = 73.7

**Caratteristiche della sezione**

| Descrizione | Tipo | Base | Altezza | Area | Jx | Jy | Wx | Wy |
|---|---|---|---|---|---|---|---|---|
| R 18x23 | Rettangolare | 18 | 23 | 414 | 18250.5 | 11178 | 1587 | 1242 |

Materiale: C14 EN 338:2016
Rapporto luce/freccia elastica limite = 300
Rapporto luce/freccia elastica differita = 200
Mensola Y: Nessuno; Mensola X: Nessuno
Classe di servizio 1

**Verifica taglio D.M. 17-01-18 §4.4.8.1.9**

Sezione ad ascissa 0
Coefficiente parziale di sicurezza del materiale γ = 1.5
Kmod = 0.8; kcr = 0.67
τ,d <= fv,d
Sqrt(2.75^2+1.61^2) = 3.18 <= 16 Comb: SLU, 72; Durata minima del carico nella combinazione: media
Tx = 505.7; Ty = 295.6

**Verifica pressoflessione D.M. 17-01-18 §4.4.8.1.8**

Sezione ad ascissa 73.7
Coefficiente parziale di sicurezza del materiale γ = 1.5
Kmod = 0.8
(Sc,0,d/fc,0,d)^2 + Sm,y,d/fm,y,d + Km*(Sm,z,d/fm,z,d) <= 1
(Sc,0,d/fc,0,d)^2 + Km*(Sm,y,d/fm,y,d) + Sm,z,d/fm,z,d <= 1
(13.3/85.3)^2+96.3/74.7+0.7*45.8/74.67=1.74 !> 1 [4.4.7a] Comb: SLU, 80; Durata minima del carico nella combinazione: media - NON SODDISFATTA
Mx = -152783.6; My = 56841.1; N = -5518.9

**Verifica taglio+torsione D.M. 17-01-18 §4.4.8.1.11**

Sezione ad ascissa 0
Coefficiente parziale di sicurezza del materiale γ = 1.5
Kmod = 0.8; kcr = 0.67
τ,tor,d/(ksh*fv,d) + (τ,y,d/fv,d)^2 + (τ,z,d/fv,d)^2 <= 1
0.08+0.03+0.01 <= 1 Comb: SLU, 72; Durata minima del carico nella combinazione: media
Tx = 505.7; Ty = 295.6; Mt = -2466

**Verifica torsione D.M. 17-01-18 §4.4.8.1.10**

Sezione ad ascissa 73.7
Coefficiente parziale di sicurezza del materiale γ = 1.5
Kmod = 0.8
τ,tor,d <= Ksh * fv,d
1.49 <= 19.07 Comb: SLU, 80; Durata minima del carico nella combinazione: media
Mt = -2467.7

---

## Asta 119: Trave in legno a falda Falda 2 fili 55-1

Verifiche condotte secondo D.M. 17-01-18 (N.T.C.)

**Dati generali**

Lunghezza = 29.2

**Caratteristiche della sezione**

| Descrizione | Tipo | Base | Altezza | Area | Jx | Jy | Wx | Wy |
|---|---|---|---|---|---|---|---|---|
| R 18x23 | Rettangolare | 18 | 23 | 414 | 18250.5 | 11178 | 1587 | 1242 |

Materiale: C14 EN 338:2016
Rapporto luce/freccia elastica limite = 300
Rapporto luce/freccia elastica differita = 200
Mensola Y: Nessuno; Mensola X: Nessuno
Classe di servizio 1

**Verifica taglio D.M. 17-01-18 §4.4.8.1.9**

Sezione ad ascissa 29.2
Coefficiente parziale di sicurezza del materiale γ = 1.5
Kmod = 0.8; kcr = 0.67
τ,d <= fv,d
Sqrt(0.65^2+3.69^2) = 3.75 <= 16 Comb: SLU, 79; Durata minima del carico nella combinazione: media
Tx = -118.9; Ty = -679.8

**Verifica pressoflessione D.M. 17-01-18 §4.4.8.1.8**

Sezione ad ascissa 0
Coefficiente parziale di sicurezza del materiale γ = 1.5
Kmod = 0.8
(Sc,0,d/fc,0,d)^2 + Sm,y,d/fm,y,d + Km*(Sm,z,d/fm,z,d) <= 1
(Sc,0,d/fc,0,d)^2 + Km*(Sm,y,d/fm,y,d) + Sm,z,d/fm,z,d <= 1
(12.1/85.3)^2+101.4/74.7+0.7*21.2/74.67=1.58 !> 1 [4.4.7a] Comb: SLU, 80; Durata minima del carico nella combinazione: media - NON SODDISFATTA
Mx = -160979.6; My = 26354; N = -5029.9

**Verifica taglio+torsione D.M. 17-01-18 §4.4.8.1.11**

Sezione ad ascissa 29.2
Coefficiente parziale di sicurezza del materiale γ = 1.5
Kmod = 0.8; kcr = 0.67
τ,tor,d/(ksh*fv,d) + (τ,y,d/fv,d)^2 + (τ,z,d/fv,d)^2 <= 1
0.68+0+0.05 <= 1 Comb: SLU, 80; Durata minima del carico nella combinazione: media
Tx = -198.8; Ty = -650.8; Mt = 21622.6

**Verifica torsione D.M. 17-01-18 §4.4.8.1.10**

Sezione ad ascissa 29.2
Coefficiente parziale di sicurezza del materiale γ = 1.5
Kmod = 0.8
τ,tor,d <= Ksh * fv,d
13.05 <= 19.07 Comb: SLU, 80; Durata minima del carico nella combinazione: media
Mt = 21622.6

---

## Asta 120: Trave in legno a falda Falda 2 fili 55-1

Verifiche condotte secondo D.M. 17-01-18 (N.T.C.)

**Dati generali**

Lunghezza = 100.3

**Caratteristiche della sezione**

| Descrizione | Tipo | Base | Altezza | Area | Jx | Jy | Wx | Wy |
|---|---|---|---|---|---|---|---|---|
| R 18x23 | Rettangolare | 18 | 23 | 414 | 18250.5 | 11178 | 1587 | 1242 |

Materiale: C14 EN 338:2016
Rapporto luce/freccia elastica limite = 300
Rapporto luce/freccia elastica differita = 200
Mensola Y: Nessuno; Mensola X: Nessuno
Classe di servizio 1

**Verifica taglio D.M. 17-01-18 §4.4.8.1.9**

Sezione ad ascissa 100.3
Coefficiente parziale di sicurezza del materiale γ = 1.5
Kmod = 0.8; kcr = 0.67
τ,d <= fv,d
Sqrt(0.15^2+4.89^2) = 4.89 <= 16 Comb: SLU, 79; Durata minima del carico nella combinazione: media
Tx = -28.2; Ty = -899.8

**Verifica pressoflessione D.M. 17-01-18 §4.4.8.1.8**

Sezione ad ascissa 0
Coefficiente parziale di sicurezza del materiale γ = 1.5
Kmod = 0.8
(Sc,0,d/fc,0,d)^2 + Sm,y,d/fm,y,d + Km*(Sm,z,d/fm,z,d) <= 1
(Sc,0,d/fc,0,d)^2 + Km*(Sm,y,d/fm,y,d) + Sm,z,d/fm,z,d <= 1
(12/85.3)^2+82/74.7+0.7*12.5/74.67=1.24 !> 1 [4.4.7a] Comb: SLU, 80; Durata minima del carico nella combinazione: media - NON SODDISFATTA
Mx = -130166.8; My = 15570.8; N = -4987.2

**Verifica taglio+torsione D.M. 17-01-18 §4.4.8.1.11**

Sezione ad ascissa 100.3
Coefficiente parziale di sicurezza del materiale γ = 1.5
Kmod = 0.8; kcr = 0.67
τ,tor,d/(ksh*fv,d) + (τ,y,d/fv,d)^2 + (τ,z,d/fv,d)^2 <= 1
0.36+0+0.09 <= 1 Comb: SLU, 80; Durata minima del carico nella combinazione: media
Tx = -59.9; Ty = -891.7; Mt = 11522.4

**Verifica torsione D.M. 17-01-18 §4.4.8.1.10**

Sezione ad ascissa 100.3
Coefficiente parziale di sicurezza del materiale γ = 1.5
Kmod = 0.8
τ,tor,d <= Ksh * fv,d
6.95 <= 19.07 Comb: SLU, 80; Durata minima del carico nella combinazione: media
Mt = 11522.4

---

## Asta 121: Trave in legno a falda Falda 2 fili 55-1

Verifiche condotte secondo D.M. 17-01-18 (N.T.C.)

### Dati generali

Lunghezza = 100.3

### Caratteristiche della sezione

| Descrizione | Tipo | Base | Altezza | Area | Jx | Jy | Wx | Wy |
|---|---|---|---|---|---|---|---|---|
| R 18x23 | Rettangolare | 18 | 23 | 414 | 18250.5 | 11178 | 1587 | 1242 |

Materiale: C14 EN 338:2016
Rapporto luce/freccia elastica limite = 300
Rapporto luce/freccia elastica differita = 200
Mensola Y: Nessuno; Mensola X: Nessuno
Classe di servizio 1

### Verifica taglio D.M. 17-01-18 §4.4.8.1.9

Sezione ad ascissa 100.3
Coefficiente parziale di sicurezza del materiale γ = 1.5
Kmod = 0.8; kcr = 0.67
τ,d <= fv,d
Sqrt(0.23^2+4.96^2) = 4.97 <= 16 Comb: SLU, 80; Durata minima del carico nella combinazione: media
Tx = -42.5; Ty = -913.1

### Verifica pressoflessione D.M. 17-01-18 §4.4.8.1.8

Sezione ad ascissa 0
Coefficiente parziale di sicurezza del materiale γ = 1.5
Kmod = 0.8
(Sc,0,d/fc,0,d)^2 + Sm,y,d/fm,y,d + Km*(Sm,z,d/fm,z,d) <= 1
(Sc,0,d/fc,0,d)^2 + Km*(Sm,y,d/fm,y,d) + Sm,z,d/fm,z,d <= 1
(10.9/85.3)^2+29.1/74.7+0.7*7.1/74.67=0.47 <= 1 [4.4.7a] Comb: SLU, 71; Durata minima del carico nella combinazione: media
Mx = -46202.2; My = 8811.7; N = -4524.4

### Verifica taglio+torsione D.M. 17-01-18 §4.4.8.1.11

Sezione ad ascissa 100.3
Coefficiente parziale di sicurezza del materiale γ = 1.5
Kmod = 0.8; kcr = 0.67
τ,tor,d/(ksh*fv,d) + (τ,y,d/fv,d)^2 + (τ,z,d/fv,d)^2 <= 1
0.19+0+0.1 <= 1 Comb: SLU, 80; Durata minima del carico nella combinazione: media
Tx = -42.5; Ty = -913.1; Mt = 6136.5

### Verifica torsione D.M. 17-01-18 §4.4.8.1.10

Sezione ad ascissa 100.3
Coefficiente parziale di sicurezza del materiale γ = 1.5
Kmod = 0.8
τ,tor,d <= Ksh * fv,d
3.7 <= 19.07 Comb: SLU, 80; Durata minima del carico nella combinazione: media
Mt = 6136.5

---

## Asta 122: Trave in legno a falda Falda 2 fili 55-1

Verifiche condotte secondo D.M. 17-01-18 (N.T.C.)

### Dati generali

Lunghezza = 101.1

### Caratteristiche della sezione

| Descrizione | Tipo | Base | Altezza | Area | Jx | Jy | Wx | Wy |
|---|---|---|---|---|---|---|---|---|
| R 18x23 | Rettangolare | 18 | 23 | 414 | 18250.5 | 11178 | 1587 | 1242 |

Materiale: C14 EN 338:2016
Rapporto luce/freccia elastica limite = 300
Rapporto luce/freccia elastica differita = 200
Mensola Y: Nessuno; Mensola X: Nessuno
Classe di servizio 1

### Verifica taglio D.M. 17-01-18 §4.4.8.1.9

Sezione ad ascissa 101.1
Coefficiente parziale di sicurezza del materiale γ = 1.5
Kmod = 0.8; kcr = 0.67
τ,d <= fv,d
Sqrt(0.1^2+3^2) = 3 <= 16 Comb: SLU, 80; Durata minima del carico nella combinazione: media
Tx = 18; Ty = -552.5

### Verifica pressoflessione D.M. 17-01-18 §4.4.8.1.8

Sezione ad ascissa 101.1
Coefficiente parziale di sicurezza del materiale γ = 1.5

Kmod = 0.8
(Sc,0,d/fc,0,d)^2 + Sm,y,d/fm,y,d + Km*(Sm,z,d/fm,z,d) <= 1
(Sc,0,d/fc,0,d)^2 + Km*(Sm,y,d/fm,y,d) + Sm,z,d/fm,z,d <= 1
(11.1/85.3)^2+60.5/74.7+0.7*2.8/74.67=0.85 <= 1 [4.4.7a] Comb: SLU, 80; Durata minima del carico nella combinazione: media
Mx = 96006.3; My = 3508.6; N = -4588.6

**Verifica taglio+torsione D.M. 17-01-18 §4.4.8.1.11**

Sezione ad ascissa 101.1
Coefficiente parziale di sicurezza del materiale γ = 1.5
Kmod = 0.8; kcr = 0.67
τ,tor,d/(ksh*fv,d) + (τ,y,d/fv,d)^2 + (τ,z,d/fv,d)^2 <= 1
0.09+0+0.04 <= 1 Comb: SLU, 80; Durata minima del carico nella combinazione: media
Tx = 18; Ty = -552.5; Mt = 2979.3

**Verifica torsione D.M. 17-01-18 §4.4.8.1.10**

Sezione ad ascissa 101.1
Coefficiente parziale di sicurezza del materiale γ = 1.5
Kmod = 0.8
τ,tor,d <= Ksh * fv,d
1.8 <= 19.07 Comb: SLU, 80; Durata minima del carico nella combinazione: media
Mt = 2979.3

---

## Asta 123: Trave in legno a falda Falda 2 fili 55-1

Verifiche condotte secondo D.M. 17-01-18 (N.T.C.)

**Dati generali**

Lunghezza = 20.4

**Caratteristiche della sezione**

| Descrizione | Tipo | Base | Altezza | Area | Jx | Jy | Wx | Wy |
|---|---|---|---|---|---|---|---|---|
| R 18x23 | Rettangolare | 18 | 23 | 414 | 18250.5 | 11178 | 1587 | 1242 |

Materiale: C14 EN 338:2016
Rapporto luce/freccia elastica limite = 300
Rapporto luce/freccia elastica differita = 200
Mensola Y: Nessuno; Mensola X: Nessuno
Classe di servizio 1

**Verifica taglio D.M. 17-01-18 §4.4.8.1.9**

Sezione ad ascissa 0
Coefficiente parziale di sicurezza del materiale γ = 1.5
Kmod = 0.8; kcr = 0.67
τ,d <= fv,d
Sqrt(0.06^2+3.51^2) = 3.51 <= 16 Comb: SLU, 29; Durata minima del carico nella combinazione: media
Tx = -11.6; Ty = 645.7

**Verifica pressoflessione D.M. 17-01-18 §4.4.8.1.8**

Sezione ad ascissa 0
Coefficiente parziale di sicurezza del materiale γ = 1.5
Kmod = 0.8
(Sc,0,d/fc,0,d)^2 + Sm,y,d/fm,y,d + Km*(Sm,z,d/fm,z,d) <= 1
(Sc,0,d/fc,0,d)^2 + Km*(Sm,y,d/fm,y,d) + Sm,z,d/fm,z,d <= 1
(8.3/85.3)^2+61.2/74.7+0.7*4.7/74.67=0.87 <= 1 [4.4.7a] Comb: SLU, 80; Durata minima del carico nella combinazione: media
Mx = 97198.8; My = 5830; N = -3435.6

**Verifica taglio+torsione D.M. 17-01-18 §4.4.8.1.11**

Sezione ad ascissa 0
Coefficiente parziale di sicurezza del materiale γ = 1.5
Kmod = 0.8; kcr = 0.67
τ,tor,d/(ksh*fv,d) + (τ,y,d/fv,d)^2 + (τ,z,d/fv,d)^2 <= 1
0.11+0+0.05 <= 1 Comb: SLU, 71; Durata minima del carico nella combinazione: media
Tx = -4.9; Ty = 645.7; Mt = -3344.3

**Verifica torsione D.M. 17-01-18 §4.4.8.1.10**

Sezione ad ascissa 20.4
Coefficiente parziale di sicurezza del materiale γ = 1.5
Kmod = 0.8
τ,tor,d <= Ksh * fv,d
2.02 <= 19.07 Comb: SLU, 71; Durata minima del carico nella combinazione: media
Mt = -3344.3

---

## Asta 124: Trave in legno a falda Falda 1 fili 158-161

Verifiche condotte secondo D.M. 17-01-18 (N.T.C.)

### Dati generali

Lunghezza = 37.2

### Caratteristiche della sezione

| Descrizione | Tipo | Base | Altezza | Area | Jx | Jy | Wx | Wy |
|---|---|---|---|---|---|---|---|---|
| R 8x10 | Rettangolare | 8 | 10 | 80 | 666.67 | 426.67 | 133.33 | 106.67 |

Materiale: C14 EN 338:2016
Rapporto luce/freccia elastica limite = 300
Rapporto luce/freccia elastica differita = 200
Mensola Y: Nessuno; Mensola X: Nessuno
Classe di servizio 1

### Verifica tensoflessione D.M. 17-01-18 §4.4.8.1.7

Sezione ad ascissa 0
Coefficiente parziale di sicurezza del materiale γ = 1.5
Kmod = 1.1; Kh = 1.084 (formula 11.7.1)
St,0,d/ft,0,d + Sm,y,d/fm,y,d + Km*(Sm,z,d/fm,z,d) <= 1
St,0,d/ft,0,d + Km*(Sm,y,d/fm,y,d) + Sm,z,d/fm,z,d <= 1
7.5/57.3+0.7*1.7/111.3+32.6/111.3=0.43 <= 1 [4.4.6b] Comb: SLV, 6; Durata minima del carico nella combinazione: istantaneo
Mx = -226.2; My = -3472.4; N = 596.6

### Verifica taglio D.M. 17-01-18 §4.4.8.1.9

Sezione ad ascissa 37.2
Coefficiente parziale di sicurezza del materiale γ = 1.5
Kmod = 1.1; kcr = 0.67
τ,d <= fv,d
Sqrt(1.73^2+0.26^2) = 1.75 <= 22 Comb: SLV, 16; Durata minima del carico nella combinazione: istantaneo
Tx = -61.5; Ty = -9.3

### Verifica taglio+torsione D.M. 17-01-18 §4.4.8.1.11

Sezione ad ascissa 37.2
Coefficiente parziale di sicurezza del materiale γ = 1.5
Kmod = 1.1; Kh = 1.084 (formula 11.7.1); kcr = 0.67
τ,tor,d/(ksh*fv,d) + (τ,y,d/fv,d)^2 + (τ,z,d/fv,d)^2 <= 1
0.04+0+0 <= 1 Comb: SLV, 12; Durata minima del carico nella combinazione: istantaneo
Tx = -50.5; Ty = -9.8; Mt = 150.2

### Verifica torsione D.M. 17-01-18 §4.4.8.1.10

Sezione ad ascissa 37.2
Coefficiente parziale di sicurezza del materiale γ = 1.5
Kmod = 1.1
τ,tor,d <= Ksh * fv,d
1.06 <= 26.13 Comb: SLV, 12; Durata minima del carico nella combinazione: istantaneo
Mt = 150.2

### Verifica della freccia istantanea totale D.M. 17-01-18 §C4.4.7 Circolare 7 21-01-19

Sezione ad ascissa 19.8
Kdef = 0
Uinst tot in x = 0
Uinst tot in y = 0
Uinst tot = 0
Luce/Uinst,tot > limite
37.2/0=12796.6 > 300 Comb: SLE rara, 8

### Verifica della freccia istantanea variabile D.M. 17-01-18 §4.4.7

Sezione ad ascissa 19.8
Kdef = 0
Uinst var in x = 0
Uinst var in y = 0
Uinst var = 0
Luce/Uinst,var > limite
37.2/0=23057.9 > 300 Comb: SLE rara, 8

### Verifica della freccia finale EC5 §4.4.7 - EC5 2.2.3 (3)

Sezione ad ascissa 18.6
Kdef = 0.6
Ufin in x = 0
Ufin in y = 0
Ufin = 0

Luce/Ufin > limite
37.2/0=10099.3 > 200
Coefficienti combinatori impiegati:
Pesi strutturali = 1,000 + 0,600 = 1,600
Permanenti portati = 1,000 + 0,600 = 1,600
Neve = 0,500 + 0,500 = 1,000

## Asta 125: Trave in legno a falda Falda 1 fili 158-161

Verifiche condotte secondo D.M. 17-01-18 (N.T.C.)

### Dati generali

Lunghezza = 37.2

### Caratteristiche della sezione

| Descrizione | Tipo | Base | Altezza | Area | Jx | Jy | Wx | Wy |
|---|---|---|---|---|---|---|---|---|
| R 8x10 | Rettangolare | 8 | 10 | 80 | 666.67 | 426.67 | 133.33 | 106.67 |

Materiale: C14 EN 338:2016
Rapporto luce/freccia elastica limite = 300
Rapporto luce/freccia elastica differita = 200
Mensola Y: Nessuno; Mensola X: Nessuno
Classe di servizio 1

### Verifica tensoflessione D.M. 17-01-18 §4.4.8.1.7

Sezione ad ascissa 5
Coefficiente parziale di sicurezza del materiale γ = 1.5
Kmod = 1.1; Kh = 1.084 (formula 11.7.1)
St,0,d/ft,0,d + Sm,y,d/fm,y,d + Km*(Sm,z,d/fm,z,d) <= 1
St,0,d/ft,0,d + Km*(Sm,y,d/fm,y,d) + Sm,z,d/fm,z,d <= 1
5.5/57.3+0.7*0.9/111.3+24.2/111.3=0.32 <= 1 [4.4.6b] Comb: SLV, 14; Durata minima del carico nella combinazione: istantaneo
Mx = 122.9; My = -2578.6; N = 439.1

### Verifica taglio D.M. 17-01-18 §4.4.8.1.9

Sezione ad ascissa 37.2
Coefficiente parziale di sicurezza del materiale γ = 1.5
Kmod = 1.1; kcr = 0.67
τ,d <= fv,d
Sqrt(1.54^2+0.08^2) = 1.54 <= 22 Comb: SLV, 2; Durata minima del carico nella combinazione: istantaneo
Tx = 54.6; Ty = -2.9

### Verifica taglio+torsione D.M. 17-01-18 §4.4.8.1.11

Sezione ad ascissa 0
Coefficiente parziale di sicurezza del materiale γ = 1.5
Kmod = 1.1; Kh = 1.084 (formula 11.7.1); kcr = 0.67
τ,tor,d/(ksh*fv,d) + (τ,y,d/fv,d)^2 + (τ,z,d/fv,d)^2 <= 1
0.03+0+0 <= 1 Comb: SLV, 14; Durata minima del carico nella combinazione: istantaneo
Tx = -32.2; Ty = 8.3; Mt = -98.3

### Verifica torsione D.M. 17-01-18 §4.4.8.1.10

Sezione ad ascissa 37.2
Coefficiente parziale di sicurezza del materiale γ = 1.5
Kmod = 1.1
τ,tor,d <= Ksh * fv,d
0.69 <= 26.13 Comb: SLV, 14; Durata minima del carico nella combinazione: istantaneo
Mt = -98.3

### Verifica della freccia istantanea totale D.M. 17-01-18 §C4.4.7 Circolare 7 21-01-19

Sezione ad ascissa 18.6
Kdef = 0
Uinst tot in x = 0
Uinst tot in y = 0
Uinst tot = 0
Luce/Uinst,tot > limite
37.2/0=10814.5 > 300 Comb: SLE rara, 8

### Verifica della freccia istantanea variabile D.M. 17-01-18 §4.4.7

Sezione ad ascissa 18.6
Kdef = 0
Uinst var in x = 0
Uinst var in y = 0
Uinst var = 0
Luce/Uinst,var > limite

37.2/0=17546 > 300 Comb: SLE rara, 8

**Verifica della freccia finale EC5 §4.4.7 - EC5 2.2.3 (3)**

Sezione ad ascissa 18.6
Kdef = 0.6
Ufin in x = 0
Ufin in y = 0
Ufin = 0
Luce/Ufin > limite
37.2/0=8790.9 > 200
Coefficienti combinatori impiegati:
Pesi strutturali = 1,000 + 0,600 = 1,600
Permanenti portati = 1,000 + 0,600 = 1,600
Neve = 0,500 + 0,500 = 1,000

## Asta 126: Trave in legno a falda Falda 1 fili 158-161

Verifiche condotte secondo D.M. 17-01-18 (N.T.C.)

**Dati generali**

Lunghezza = 37.2

**Caratteristiche della sezione**

| Descrizione | Tipo | Base | Altezza | Area | Jx | Jy | Wx | Wy |
|---|---|---|---|---|---|---|---|---|
| R 8x10 | Rettangolare | 8 | 10 | 80 | 666.67 | 426.67 | 133.33 | 106.67 |

Materiale: C14 EN 338:2016
Rapporto luce/freccia elastica limite = 300
Rapporto luce/freccia elastica differita = 200
Mensola Y: Nessuno; Mensola X: Nessuno
Classe di servizio 1

**Verifica tensoflessione D.M. 17-01-18 §4.4.8.1.7**

Sezione ad ascissa 37.2
Coefficiente parziale di sicurezza del materiale γ = 1.5
Kmod = 1.1; Kh = 1.084 (formula 11.7.1)
St,0,d/ft,0,d + Sm,y,d/fm,y,d + Km*(Sm,z,d/fm,z,d) <= 1
St,0,d/ft,0,d + Km*(Sm,y,d/fm,y,d) + Sm,z,d/fm,z,d <= 1
3.6/57.3+0.7*2/111.3+23.9/111.3=0.29 <= 1 [4.4.6b] Comb: SLV, 14; Durata minima del carico nella combinazione: istantaneo
Mx = -265; My = -2552.2; N = 290

**Verifica taglio D.M. 17-01-18 §4.4.8.1.9**

Sezione ad ascissa 37.2
Coefficiente parziale di sicurezza del materiale γ = 1.5
Kmod = 1.1; kcr = 0.67
τ,d <= fv,d
Sqrt(1.72^2+0.09^2) = 1.72 <= 22 Comb: SLV, 2; Durata minima del carico nella combinazione: istantaneo
Tx = 61.1; Ty = -3.3

**Verifica taglio+torsione D.M. 17-01-18 §4.4.8.1.11**

Sezione ad ascissa 0
Coefficiente parziale di sicurezza del materiale γ = 1.5
Kmod = 1.1; Kh = 1.084 (formula 11.7.1); kcr = 0.67
τ,tor,d/(ksh*fv,d) + (τ,y,d/fv,d)^2 + (τ,z,d/fv,d)^2 <= 1
0.03+0+0 <= 1 Comb: SLV, 14; Durata minima del carico nella combinazione: istantaneo
Tx = -36; Ty = 10.6; Mt = -119.6

**Verifica torsione D.M. 17-01-18 §4.4.8.1.10**

Sezione ad ascissa 37.2
Coefficiente parziale di sicurezza del materiale γ = 1.5
Kmod = 1.1
τ,tor,d <= Ksh * fv,d
0.84 <= 26.13 Comb: SLV, 14; Durata minima del carico nella combinazione: istantaneo
Mt = -119.6

**Verifica della freccia istantanea totale D.M. 17-01-18 §C4.4.7 Circolare 7 21-01-19**

Sezione ad ascissa 17.3
Kdef = 0
Uinst tot in x = 0
Uinst tot in y = 0
Uinst tot = 0
Luce/Uinst,tot > limite
37.2/0=13619.2 > 300 Comb: SLE rara, 16

**Verifica della freccia istantanea variabile D.M. 17-01-18 §4.4.7**

Sezione ad ascissa 17.3
Kdef = 0
Uinst var in x = 0
Uinst var in y = 0
Uinst var = 0
Luce/Uinst,var > limite
37.2/0=20312.9 > 300 Comb: SLE rara, 16

**Verifica della freccia finale EC5 §4.4.7 - EC5 2.2.3 (3)**

Sezione ad ascissa 17.3
Kdef = 0.6
Ufin in x = 0
Ufin in y = 0
Ufin = 0
Luce/Ufin > limite
37.2/0=11353.5 > 200
Coefficienti combinatori impiegati:
Pesi strutturali = 1,000 + 0,600 = 1,600
Permanenti portati = 1,000 + 0,600 = 1,600
Variabile A = 0,700 + 0,180 = 0,880
Neve = 0,500 + 0,500 = 1,000

---

## Asta 127: Trave in legno a falda Falda 1 fili 158-161

Verifiche condotte secondo D.M. 17-01-18 (N.T.C.)

**Dati generali**

Lunghezza = 38.9

**Caratteristiche della sezione**

| Descrizione | Tipo | Base | Altezza | Area | Jx | Jy | Wx | Wy |
|---|---|---|---|---|---|---|---|---|
| R 8x10 | Rettangolare | 8 | 10 | 80 | 666.67 | 426.67 | 133.33 | 106.67 |

Materiale: C14 EN 338:2016
Rapporto luce/freccia elastica limite = 300
Rapporto luce/freccia elastica differita = 200
Mensola Y: Nessuno; Mensola X: Nessuno
Classe di servizio 1

**Verifica tensoflessione D.M. 17-01-18 §4.4.8.1.7**

Sezione ad ascissa 38.9
Coefficiente parziale di sicurezza del materiale γ = 1.5
Kmod = 1.1; Kh = 1.084 (formula 11.7.1)
St,0,d/ft,0,d + Sm,y,d/fm,y,d + Km*(Sm,z,d/fm,z,d) <= 1
St,0,d/ft,0,d + Km*(Sm,y,d/fm,y,d) + Sm,z,d/fm,z,d <= 1
6.7/57.3+0.7*0.6/111.3+22.2/111.3=0.32 <= 1 [4.4.6b] Comb: SLV, 16; Durata minima del carico nella combinazione: istantaneo
Mx = 80.3; My = -2370.9; N = 537.3

**Verifica taglio D.M. 17-01-18 §4.4.8.1.9**

Sezione ad ascissa 0
Coefficiente parziale di sicurezza del materiale γ = 1.5
Kmod = 1.1; kcr = 0.67
τ,d <= fv,d
Sqrt(1.91^2+0.44^2) = 1.96 <= 22 Comb: SLV, 14; Durata minima del carico nella combinazione: istantaneo
Tx = 67.8; Ty = 15.8

**Verifica taglio+torsione D.M. 17-01-18 §4.4.8.1.11**

Sezione ad ascissa 0
Coefficiente parziale di sicurezza del materiale γ = 1.5
Kmod = 1.1; Kh = 1.084 (formula 11.7.1); kcr = 0.67
τ,tor,d/(ksh*fv,d) + (τ,y,d/fv,d)^2 + (τ,z,d/fv,d)^2 <= 1
0.06+0.01+0 <= 1 Comb: SLV, 14; Durata minima del carico nella combinazione: istantaneo
Tx = 67.8; Ty = 15.8; Mt = -221.1

**Verifica torsione D.M. 17-01-18 §4.4.8.1.10**

Sezione ad ascissa 38.9
Coefficiente parziale di sicurezza del materiale γ = 1.5
Kmod = 1.1
τ,tor,d <= Ksh * fv,d
1.56 <= 26.13 Comb: SLV, 14; Durata minima del carico nella combinazione: istantaneo
Mt = -221.1

**Verifica della freccia istantanea totale D.M. 17-01-18 §C4.4.7 Circolare 7 21-01-19**

Sezione ad ascissa 20.7
Kdef = 0
Uinst tot in x = 0
Uinst tot in y = 0
Uinst tot = 0
Luce/Uinst,tot > limite
38.9/0=26527.7 > 300 Comb: SLE rara, 9

**Verifica della freccia istantanea variabile D.M. 17-01-18 §4.4.7**

Sezione ad ascissa 20.7
Kdef = 0
Uinst var in x = 0
Uinst var in y = 0
Uinst var = 0
Luce/Uinst,var > limite
38.9/0=40264.4 > 300 Comb: SLE rara, 9

**Verifica della freccia finale EC5 §4.4.7 - EC5 2.2.3 (3)**

Sezione ad ascissa 20.7
Kdef = 0.6
Ufin in x = 0
Ufin in y = 0
Ufin = 0
Luce/Ufin > limite
38.9/0=22020.2 > 200
Coefficienti combinatori impiegati:
Pesi strutturali = 1,000 + 0,600 = 1,600
Permanenti portati = 1,000 + 0,600 = 1,600
Neve = 0,500 + 0,500 = 1,000
Vento = 0,600 + 0,000 = 0,600

---

## Asta 128: Trave in legno a falda Falda 1 fili 158-161

Verifiche condotte secondo D.M. 17-01-18 (N.T.C.)

**Dati generali**

Lunghezza = 277.6

**Caratteristiche della sezione**

| Descrizione | Tipo | Base | Altezza | Area | Jx | Jy | Wx | Wy |
|---|---|---|---|---|---|---|---|---|
| R 8x10 | Rettangolare | 8 | 10 | 80 | 666.67 | 426.67 | 133.33 | 106.67 |

Materiale: C14 EN 338:2016
Rapporto luce/freccia elastica limite = 300
Rapporto luce/freccia elastica differita = 200
Mensola Y: Nessuno; Mensola X: Nessuno
Classe di servizio 1

**Verifica pressoflessione D.M. 17-01-18 §4.4.8.1.8**

Sezione ad ascissa 277.6
Coefficiente parziale di sicurezza del materiale γ = 1.5
Kmod = 0.8; Kh = 1.084 (formula 11.7.1)
(Sc,0,d/fc,0,d)^2 + Sm,y,d/fm,y,d + Km*(Sm,z,d/fm,z,d) <= 1
(Sc,0,d/fc,0,d)^2 + Km*(Sm,y,d/fm,y,d) + Sm,z,d/fm,z,d <= 1
(31.7/85.3)^2+302.7/81+0.7*0.5/80.97=3.88 !> 1 [4.4.7a] Comb: SLU, 79; Durata minima del carico nella combinazione: media - NON SODDISFATTA
Mx = -40355.4; My = 50.1; N = -2536.4

**Verifica taglio D.M. 17-01-18 §4.4.8.1.9**

Sezione ad ascissa 0
Coefficiente parziale di sicurezza del materiale γ = 1.5
Kmod = 0.8; kcr = 0.67
τ,d <= fv,d
Sqrt(0.04^2+7.87^2) = 7.87 <= 16 Comb: SLU, 80; Durata minima del carico nella combinazione: media
Tx = -1.4; Ty = 279.9

**Verifica taglio+torsione D.M. 17-01-18 §4.4.8.1.11**

Sezione ad ascissa 0
Coefficiente parziale di sicurezza del materiale γ = 1.5
Kmod = 0.8; Kh = 1.084 (formula 11.7.1); kcr = 0.67
τ,tor,d/(ksh*fv,d) + (τ,y,d/fv,d)^2 + (τ,z,d/fv,d)^2 <= 1
0.02+0+0.24 <= 1 Comb: SLU, 80; Durata minima del carico nella combinazione: media

Tx = -1.4; Ty = 279.9; Mt = -43.3

**Verifica torsione D.M. 17-01-18 §4.4.8.1.10**

Sezione ad ascissa 277.6
Coefficiente parziale di sicurezza del materiale γ = 1.5
Kmod = 1.1
τ,tor,d <= Ksh * fv,d
0.53 <= 26.13 Comb: SLV, 8; Durata minima del carico nella combinazione: istantaneo
Mt = -75.5

**Verifica della freccia istantanea totale D.M. 17-01-18 §C4.4.7 Circolare 7 21-01-19**

Sezione ad ascissa 212.9
Kdef = 0
Uinst tot in x = 0.04
Uinst tot in y = -0.92
Uinst tot = 0.92
Luce/Uinst,tot > limite
277.6/0.92=303.4 > 300 Comb: SLE rara, 16

**Verifica della freccia istantanea variabile D.M. 17-01-18 §4.4.7**

Sezione ad ascissa 212.9
Kdef = 0
Uinst var in x = 0.02
Uinst var in y = -0.59
Uinst var = 0.59
Luce/Uinst,var > limite
277.6/0.59=472.3 > 300 Comb: SLE rara, 16

**Verifica della freccia finale EC5 §4.4.7 - EC5 2.2.3 (3)**

Sezione ad ascissa 212.9
Kdef = 0.6
Ufin in x = 0.05
Ufin in y = -1.11
Ufin = 1.11
Luce/Ufin > limite
277.6/1.11=249.8 > 200
Coefficienti combinatori impiegati:
Pesi strutturali = 1,000 + 0,600 = 1,600
Permanenti portati = 1,000 + 0,600 = 1,600
Variabile A = 0,700 + 0,180 = 0,880
Neve = 0,500 + 0,500 = 1,000

---

## Asta 129: Trave in legno a falda Falda 1 fili 170-171

Verifiche condotte secondo D.M. 17-01-18 (N.T.C.)

**Dati generali**

Lunghezza = 165.2

**Caratteristiche della sezione**

| Descrizione | Tipo | Base | Altezza | Area | Jx | Jy | Wx | Wy |
|---|---|---|---|---|---|---|---|---|
| R 8x10 | Rettangolare | 8 | 10 | 80 | 666.67 | 426.67 | 133.33 | 106.67 |

Materiale: C14 EN 338:2016
Rapporto luce/freccia elastica limite = 300
Rapporto luce/freccia elastica differita = 200
Mensola Y: Nessuno; Mensola X: Nessuno
Classe di servizio 1

**Verifica taglio D.M. 17-01-18 §4.4.8.1.9**

Sezione ad ascissa 165.2
Coefficiente parziale di sicurezza del materiale γ = 1.5
Kmod = 0.8; kcr = 0.67
τ,d <= fv,d
Sqrt(0.16^2+2.85^2) = 2.85 <= 16 Comb: SLU, 72; Durata minima del carico nella combinazione: media
Tx = -5.8; Ty = -101.3

**Verifica pressoflessione D.M. 17-01-18 §4.4.8.1.8**

Sezione ad ascissa 165.2
Coefficiente parziale di sicurezza del materiale γ = 1.5
Kmod = 0.8; Kh = 1.084 (formula 11.7.1)
(Sc,0,d/fc,0,d)^2 + Sm,y,d/fm,y,d + Km*(Sm,z,d/fm,z,d) <= 1
(Sc,0,d/fc,0,d)^2 + Km*(Sm,y,d/fm,y,d) + Sm,z,d/fm,z,d <= 1

(1.4/85.3)^2+112.9/81+0.7*6.2/80.97=1.45 !> 1 [4.4.7a] Comb: SLU, 79; Durata minima del carico nella combinazione: media - NON SODDISFATTA
Mx = 15054.8; My = -656.4; N = -115.8

**Verifica taglio+torsione D.M. 17-01-18 §4.4.8.1.11**

Sezione ad ascissa 165.2
Coefficiente parziale di sicurezza del materiale γ = 1.5
Kmod = 0.8; Kh = 1.084 (formula 11.7.1); kcr = 0.67
τ,tor,d/(ksh*fv,d) + (τ,y,d/fv,d)^2 + (τ,z,d/fv,d)^2 <= 1
0+0+0.03 <= 1 Comb: SLU, 80; Durata minima del carico nella combinazione: media
Tx = -7.3; Ty = -100.8; Mt = 3.6

**Verifica torsione D.M. 17-01-18 §4.4.8.1.10**

Sezione ad ascissa 165.2
Coefficiente parziale di sicurezza del materiale γ = 1.5
Kmod = 1.1
τ,tor,d <= Ksh * fv,d
0.19 <= 26.13 Comb: SLV, 6; Durata minima del carico nella combinazione: istantaneo
Mt = 27

## Asta 130: Trave in legno a falda Falda 1 fili 170-171

Verifiche condotte secondo D.M. 17-01-18 (N.T.C.)

**Dati generali**

Lunghezza = 262.7

**Caratteristiche della sezione**

| Descrizione | Tipo | Base | Altezza | Area | Jx | Jy | Wx | Wy |
|---|---|---|---|---|---|---|---|---|
| R 8x10 | Rettangolare | 8 | 10 | 80 | 666.67 | 426.67 | 133.33 | 106.67 |

Materiale: C14 EN 338:2016
Rapporto luce/freccia elastica limite = 300
Rapporto luce/freccia elastica differita = 200
Mensola Y: Nessuno; Mensola X: Nessuno
Classe di servizio 1

**Verifica taglio D.M. 17-01-18 §4.4.8.1.9**

Sezione ad ascissa 0
Coefficiente parziale di sicurezza del materiale γ = 1.5
Kmod = 0.8; kcr = 0.67
τ,d <= fv,d
Sqrt(0.04^2+6.65^2) = 6.65 <= 16 Comb: SLU, 80; Durata minima del carico nella combinazione: media
Tx = -1.5; Ty = 236.4

**Verifica pressoflessione D.M. 17-01-18 §4.4.8.1.8**

Sezione ad ascissa 262.7
Coefficiente parziale di sicurezza del materiale γ = 1.5
Kmod = 0.8; Kh = 1.084 (formula 11.7.1)
(Sc,0,d/fc,0,d)^2 + Sm,y,d/fm,y,d + Km*(Sm,z,d/fm,z,d) <= 1
(Sc,0,d/fc,0,d)^2 + Km*(Sm,y,d/fm,y,d) + Sm,z,d/fm,z,d <= 1
(6.7/85.3)^2+264.2/81+0.7*0.6/80.97=3.27 !> 1 [4.4.7a] Comb: SLU, 80; Durata minima del carico nella combinazione: media - NON SODDISFATTA
Mx = -35228.9; My = -65; N = -533.7

**Verifica taglio+torsione D.M. 17-01-18 §4.4.8.1.11**

Sezione ad ascissa 0
Coefficiente parziale di sicurezza del materiale γ = 1.5
Kmod = 0.8; Kh = 1.084 (formula 11.7.1); kcr = 0.67
τ,tor,d/(ksh*fv,d) + (τ,y,d/fv,d)^2 + (τ,z,d/fv,d)^2 <= 1
0.02+0+0.17 <= 1 Comb: SLU, 80; Durata minima del carico nella combinazione: media
Tx = -1.5; Ty = 236.4; Mt = -57.8

**Verifica torsione D.M. 17-01-18 §4.4.8.1.10**

Sezione ad ascissa 262.7
Coefficiente parziale di sicurezza del materiale γ = 1.5
Kmod = 0.8
τ,tor,d <= Ksh * fv,d
0.41 <= 19 Comb: SLU, 79; Durata minima del carico nella combinazione: media
Mt = -58.5

## Asta 131: Trave in legno a falda Falda 6 fili 209-265

Verifiche condotte secondo D.M. 17-01-18 (N.T.C.)

### Dati generali

Lunghezza = 94.1

### Caratteristiche della sezione

| Descrizione | Tipo | Base | Altezza | Area | Jx | Jy | Wx | Wy |
|---|---|---|---|---|---|---|---|---|
| R 18x23 | Rettangolare | 18 | 23 | 414 | 18250.5 | 11178 | 1587 | 1242 |

Materiale: C14 EN 338:2016
Rapporto luce/freccia elastica limite = 300
Rapporto luce/freccia elastica differita = 200
Mensola Y: Nessuno; Mensola X: Nessuno
Classe di servizio 1

### Verifica taglio D.M. 17-01-18 §4.4.8.1.9

Sezione ad ascissa 0
Coefficiente parziale di sicurezza del materiale γ = 1.5
Kmod = 0.8; kcr = 0.67
τ,d <= fv,d
Sqrt(1.79^2+4.6^2) = 4.93 <= 16 Comb: SLU, 80; Durata minima del carico nella combinazione: media
Tx = 329.9; Ty = 845.6

### Verifica pressoflessione D.M. 17-01-18 §4.4.8.1.8

Sezione ad ascissa 0
Coefficiente parziale di sicurezza del materiale γ = 1.5
Kmod = 0.8
(Sc,0,d/fc,0,d)^2 + Sm,y,d/fm,y,d + Km*(Sm,z,d/fm,z,d) <= 1
(Sc,0,d/fc,0,d)^2 + Km*(Sm,y,d/fm,y,d) + Sm,z,d/fm,z,d <= 1
(1.8/85.3)^2+23/74.7+0.7*18/74.67=0.48 <= 1 [4.4.7a] Comb: SLU, 80; Durata minima del carico nella combinazione: media
Mx = 36560.2; My = -22319.4; N = -758.2

### Verifica taglio+torsione D.M. 17-01-18 §4.4.8.1.11

Sezione ad ascissa 0
Coefficiente parziale di sicurezza del materiale γ = 1.5
Kmod = 0.8; kcr = 0.67
τ,tor,d/(ksh*fv,d) + (τ,y,d/fv,d)^2 + (τ,z,d/fv,d)^2 <= 1
0.06+0.01+0.08 <= 1 Comb: SLU, 79; Durata minima del carico nella combinazione: media
Tx = 330.1; Ty = 842.3; Mt = -1982.9

### Verifica torsione D.M. 17-01-18 §4.4.8.1.10

Sezione ad ascissa 94.1
Coefficiente parziale di sicurezza del materiale γ = 1.5
Kmod = 0.8
τ,tor,d <= Ksh * fv,d
1.22 <= 19.07 Comb: SLU, 37; Durata minima del carico nella combinazione: media
Mt = -2019.3

---

## Asta 132: Trave in legno a falda Falda 6 fili 209-265

Verifiche condotte secondo D.M. 17-01-18 (N.T.C.)

### Dati generali

Lunghezza = 67.6

### Caratteristiche della sezione

| Descrizione | Tipo | Base | Altezza | Area | Jx | Jy | Wx | Wy |
|---|---|---|---|---|---|---|---|---|
| R 18x23 | Rettangolare | 18 | 23 | 414 | 18250.5 | 11178 | 1587 | 1242 |

Materiale: C14 EN 338:2016
Rapporto luce/freccia elastica limite = 300
Rapporto luce/freccia elastica differita = 200
Mensola Y: Nessuno; Mensola X: Nessuno
Classe di servizio 1

### Verifica taglio D.M. 17-01-18 §4.4.8.1.9

Sezione ad ascissa 0
Coefficiente parziale di sicurezza del materiale γ = 1.5
Kmod = 0.8; kcr = 0.67
τ,d <= fv,d
Sqrt(0.97^2+5^2) = 5.09 <= 16 Comb: SLU, 80; Durata minima del carico nella combinazione: media
Tx = 178.6; Ty = 919.9

### Verifica pressoflessione D.M. 17-01-18 §4.4.8.1.8

Sezione ad ascissa 67.6
Coefficiente parziale di sicurezza del materiale γ = 1.5

Kmod = 0.8
(Sc,0,d/fc,0,d)^2 + Sm,y,d/fm,y,d + Km*(Sm,z,d/fm,z,d) <= 1
(Sc,0,d/fc,0,d)^2 + Km*(Sm,y,d/fm,y,d) + Sm,z,d/fm,z,d <= 1
(1.9/85.3)^2+43.8/74.7+0.7*17.3/74.67=0.75 <= 1 [4.4.7a] Comb: SLU, 71; Durata minima del carico nella combinazione: media
Mx = -69482.4; My = 21462.3; N = -802.7

**Verifica taglio+torsione D.M. 17-01-18 §4.4.8.1.11**

Sezione ad ascissa 0
Coefficiente parziale di sicurezza del materiale γ = 1.5
Kmod = 0.8; kcr = 0.67
τ,tor,d/(ksh*fv,d) + (τ,y,d/fv,d)^2 + (τ,z,d/fv,d)^2 <= 1
0.1+0+0.1 <= 1 Comb: SLU, 80; Durata minima del carico nella combinazione: media
Tx = 178.6; Ty = 919.9; Mt = -3235.4

**Verifica torsione D.M. 17-01-18 §4.4.8.1.10**

Sezione ad ascissa 67.6
Coefficiente parziale di sicurezza del materiale γ = 1.5
Kmod = 0.8
τ,tor,d <= Ksh * fv,d
1.96 <= 19.07 Comb: SLU, 79; Durata minima del carico nella combinazione: media
Mt = -3253.1

---

## Asta 133: Trave in legno a falda Falda 6 fili 209-265

Verifiche condotte secondo D.M. 17-01-18 (N.T.C.)

**Dati generali**

Lunghezza = 67.6

**Caratteristiche della sezione**

| Descrizione | Tipo | Base | Altezza | Area | Jx | Jy | Wx | Wy |
|---|---|---|---|---|---|---|---|---|
| R 18x23 | Rettangolare | 18 | 23 | 414 | 18250.5 | 11178 | 1587 | 1242 |

Materiale: C14 EN 338:2016
Rapporto luce/freccia elastica limite = 300
Rapporto luce/freccia elastica differita = 200
Mensola Y: Nessuno; Mensola X: Nessuno
Classe di servizio 1

**Verifica taglio D.M. 17-01-18 §4.4.8.1.9**

Sezione ad ascissa 0
Coefficiente parziale di sicurezza del materiale γ = 1.5
Kmod = 0.8; kcr = 0.67
τ,d <= fv,d
Sqrt(2.04^2+4.16^2) = 4.64 <= 16 Comb: SLU, 80; Durata minima del carico nella combinazione: media
Tx = 375; Ty = 766.3

**Verifica pressoflessione D.M. 17-01-18 §4.4.8.1.8**

Sezione ad ascissa 67.6
Coefficiente parziale di sicurezza del materiale γ = 1.5
Kmod = 0.8
(Sc,0,d/fc,0,d)^2 + Sm,y,d/fm,y,d + Km*(Sm,z,d/fm,z,d) <= 1
(Sc,0,d/fc,0,d)^2 + Km*(Sm,y,d/fm,y,d) + Sm,z,d/fm,z,d <= 1
(1.8/85.3)^2+66.3/74.7+0.7*36.3/74.67=1.23 !> 1 [4.4.7a] Comb: SLU, 80; Durata minima del carico nella combinazione: media - NON SODDISFATTA
Mx = -105268.6; My = 45125.7; N = -764.4

**Verifica taglio+torsione D.M. 17-01-18 §4.4.8.1.11**

Sezione ad ascissa 0
Coefficiente parziale di sicurezza del materiale γ = 1.5
Kmod = 0.8; kcr = 0.67
τ,tor,d/(ksh*fv,d) + (τ,y,d/fv,d)^2 + (τ,z,d/fv,d)^2 <= 1
0.12+0.02+0.07 <= 1 Comb: SLU, 80; Durata minima del carico nella combinazione: media
Tx = 375; Ty = 766.3; Mt = -3739.6

**Verifica torsione D.M. 17-01-18 §4.4.8.1.10**

Sezione ad ascissa 67.6
Coefficiente parziale di sicurezza del materiale γ = 1.5
Kmod = 0.8
τ,tor,d <= Ksh * fv,d
2.26 <= 19.07 Comb: SLU, 80; Durata minima del carico nella combinazione: media
Mt = -3739.6

---

## Asta 134: Trave in legno a falda Falda 6 fili 209-265

Verifiche condotte secondo D.M. 17-01-18 (N.T.C.)

### Dati generali

Lunghezza = 67.6

### Caratteristiche della sezione

| Descrizione | Tipo | Base | Altezza | Area | Jx | Jy | Wx | Wy |
|---|---|---|---|---|---|---|---|---|
| R 18x23 | Rettangolare | 18 | 23 | 414 | 18250.5 | 11178 | 1587 | 1242 |

Materiale: C14 EN 338:2016
Rapporto luce/freccia elastica limite = 300
Rapporto luce/freccia elastica differita = 200
Mensola Y: Nessuno; Mensola X: Nessuno
Classe di servizio 1

### Verifica taglio D.M. 17-01-18 §4.4.8.1.9

Sezione ad ascissa 0
Coefficiente parziale di sicurezza del materiale γ = 1.5
Kmod = 0.8; kcr = 0.67
τ,d <= fv,d
Sqrt(0.25^2+4.24^2) = 4.25 <= 16 Comb: SLU, 29; Durata minima del carico nella combinazione: media
Tx = -46.5; Ty = 780.3

### Verifica pressoflessione D.M. 17-01-18 §4.4.8.1.8

Sezione ad ascissa 58.5
Coefficiente parziale di sicurezza del materiale γ = 1.5
Kmod = 0.8
(Sc,0,d/fc,0,d)^2 + Sm,y,d/fm,y,d + Km*(Sm,z,d/fm,z,d) <= 1
(Sc,0,d/fc,0,d)^2 + Km*(Sm,y,d/fm,y,d) + Sm,z,d/fm,z,d <= 1
(1.9/85.3)^2+80.4/74.7+0.7*36.7/74.67=1.42 !> 1 [4.4.7a] Comb: SLU, 80; Durata minima del carico nella combinazione: media - NON SODDISFATTA
Mx = -127554; My = 45528.6; N = -787.9

### Verifica taglio+torsione D.M. 17-01-18 §4.4.8.1.11

Sezione ad ascissa 0
Coefficiente parziale di sicurezza del materiale γ = 1.5
Kmod = 0.8; kcr = 0.67
τ,tor,d/(ksh*fv,d) + (τ,y,d/fv,d)^2 + (τ,z,d/fv,d)^2 <= 1
0.2+0+0.07 <= 1 Comb: SLU, 71; Durata minima del carico nella combinazione: media
Tx = -10.5; Ty = 764; Mt = -6470.1

### Verifica torsione D.M. 17-01-18 §4.4.8.1.10

Sezione ad ascissa 67.6
Coefficiente parziale di sicurezza del materiale γ = 1.5
Kmod = 0.8
τ,tor,d <= Ksh * fv,d
3.93 <= 19.07 Comb: SLU, 80; Durata minima del carico nella combinazione: media
Mt = -6508.9

---

## Asta 135: Trave in legno a falda Falda 6 fili 209-265

Verifiche condotte secondo D.M. 17-01-18 (N.T.C.)

### Dati generali

Lunghezza = 67.6

### Caratteristiche della sezione

| Descrizione | Tipo | Base | Altezza | Area | Jx | Jy | Wx | Wy |
|---|---|---|---|---|---|---|---|---|
| R 18x23 | Rettangolare | 18 | 23 | 414 | 18250.5 | 11178 | 1587 | 1242 |

Materiale: C14 EN 338:2016
Rapporto luce/freccia elastica limite = 300
Rapporto luce/freccia elastica differita = 200
Mensola Y: Nessuno; Mensola X: Nessuno
Classe di servizio 1

### Verifica taglio D.M. 17-01-18 §4.4.8.1.9

Sezione ad ascissa 0
Coefficiente parziale di sicurezza del materiale γ = 1.5
Kmod = 0.8; kcr = 0.67
τ,d <= fv,d
Sqrt(3.05^2+2.32^2) = 3.83 <= 16 Comb: SLU, 80; Durata minima del carico nella combinazione: media
Tx = -560.9; Ty = 427.8

**Verifica pressoflessione D.M. 17-01-18 §4.4.8.1.8**

Sezione ad ascissa 0
Coefficiente parziale di sicurezza del materiale γ = 1.5
Kmod = 0.8
(Sc,0,d/fc,0,d)^2 + Sm,y,d/fm,y,d + Km*(Sm,z,d/fm,z,d) <= 1
(Sc,0,d/fc,0,d)^2 + Km*(Sm,y,d/fm,y,d) + Sm,z,d/fm,z,d <= 1
(1.9/85.3)^2+79.3/74.7+0.7*38.3/74.67=1.42 !> 1 [4.4.7a] Comb: SLU, 80; Durata minima del carico nella combinazione: media - NON SODDISFATTA
Mx = -125842.2; My = 47611.3; N = -775.7

**Verifica taglio+torsione D.M. 17-01-18 §4.4.8.1.11**

Sezione ad ascissa 0
Coefficiente parziale di sicurezza del materiale γ = 1.5
Kmod = 0.8; kcr = 0.67
τ,tor,d/(ksh*fv,d) + (τ,y,d/fv,d)^2 + (τ,z,d/fv,d)^2 <= 1
0.11+0.04+0.02 <= 1 Comb: SLU, 80; Durata minima del carico nella combinazione: media
Tx = -560.9; Ty = 427.8; Mt = -3564.2

**Verifica torsione D.M. 17-01-18 §4.4.8.1.10**

Sezione ad ascissa 67.6
Coefficiente parziale di sicurezza del materiale γ = 1.5
Kmod = 0.8
τ,tor,d <= Ksh * fv,d
2.16 <= 19.07 Comb: SLU, 71; Durata minima del carico nella combinazione: media
Mt = -3575.4

---

## Asta 136: Trave in legno a falda Falda 6 fili 209-265

Verifiche condotte secondo D.M. 17-01-18 (N.T.C.)

**Dati generali**

Lunghezza = 67.6

**Caratteristiche della sezione**

| Descrizione | Tipo | Base | Altezza | Area | Jx | Jy | Wx | Wy |
|---|---|---|---|---|---|---|---|---|
| R 18x23 | Rettangolare | 18 | 23 | 414 | 18250.5 | 11178 | 1587 | 1242 |

Materiale: C14 EN 338:2016
Rapporto luce/freccia elastica limite = 300
Rapporto luce/freccia elastica differita = 200
Mensola Y: Nessuno; Mensola X: Nessuno
Classe di servizio 1

**Verifica taglio D.M. 17-01-18 §4.4.8.1.9**

Sezione ad ascissa 67.6
Coefficiente parziale di sicurezza del materiale γ = 1.5
Kmod = 0.8; kcr = 0.67
τ,d <= fv,d
Sqrt(0.84^2+5.48^2) = 5.54 <= 16 Comb: SLU, 71; Durata minima del carico nella combinazione: media
Tx = -154.4; Ty = -1008.5

**Verifica pressoflessione D.M. 17-01-18 §4.4.8.1.8**

Sezione ad ascissa 0
Coefficiente parziale di sicurezza del materiale γ = 1.5
Kmod = 0.8
(Sc,0,d/fc,0,d)^2 + Sm,y,d/fm,y,d + Km*(Sm,z,d/fm,z,d) <= 1
(Sc,0,d/fc,0,d)^2 + Km*(Sm,y,d/fm,y,d) + Sm,z,d/fm,z,d <= 1
(1.8/85.3)^2+78.9/74.7+0.7*8.8/74.67=1.14 !> 1 [4.4.7a] Comb: SLU, 80; Durata minima del carico nella combinazione: media - NON SODDISFATTA
Mx = -125214.1; My = 10927.9; N = -755.3

**Verifica taglio+torsione D.M. 17-01-18 §4.4.8.1.11**

Sezione ad ascissa 67.6
Coefficiente parziale di sicurezza del materiale γ = 1.5
Kmod = 0.8; kcr = 0.67
τ,tor,d/(ksh*fv,d) + (τ,y,d/fv,d)^2 + (τ,z,d/fv,d)^2 <= 1
0.08+0+0.12 <= 1 Comb: SLU, 71; Durata minima del carico nella combinazione: media
Tx = -154.4; Ty = -1008.5; Mt = -2495.3

**Verifica torsione D.M. 17-01-18 §4.4.8.1.10**

Sezione ad ascissa 67.6
Coefficiente parziale di sicurezza del materiale γ = 1.5
Kmod = 0.8
τ,tor,d <= Ksh * fv,d

1.51 <= 19.07 Comb: SLU, 71; Durata minima del carico nella combinazione: media
Mt = -2495.3

## Asta 137: Trave in legno a falda Falda 6 fili 209-265

Verifiche condotte secondo D.M. 17-01-18 (N.T.C.)

### Dati generali

Lunghezza = 75.8

### Caratteristiche della sezione

| Descrizione | Tipo | Base | Altezza | Area | Jx | Jy | Wx | Wy |
|---|---|---|---|---|---|---|---|---|
| R 18x23 | Rettangolare | 18 | 23 | 414 | 18250.5 | 11178 | 1587 | 1242 |

Materiale: C14 EN 338:2016
Rapporto luce/freccia elastica limite = 300
Rapporto luce/freccia elastica differita = 200
Mensola Y: Nessuno; Mensola X: Nessuno
Classe di servizio 1

### Verifica taglio D.M. 17-01-18 §4.4.8.1.9

Sezione ad ascissa 75.8
Coefficiente parziale di sicurezza del materiale γ = 1.5
Kmod = 0.8; kcr = 0.67
τ,d <= fv,d
Sqrt(0.82^2+7.71^2) = 7.76 <= 16 Comb: SLU, 71; Durata minima del carico nella combinazione: media
Tx = 150.3; Ty = -1419.5

### Verifica pressoflessione D.M. 17-01-18 §4.4.8.1.8

Sezione ad ascissa 0
Coefficiente parziale di sicurezza del materiale γ = 1.5
Kmod = 0.8
(Sc,0,d/fc,0,d)^2 + Sm,y,d/fm,y,d + Km*(Sm,z,d/fm,z,d) <= 1
(Sc,0,d/fc,0,d)^2 + Km*(Sm,y,d/fm,y,d) + Sm,z,d/fm,z,d <= 1
(1.8/85.3)^2+51.2/74.7+0.7*1.5/74.67=0.7 <= 1 [4.4.7a] Comb: SLU, 79; Durata minima del carico nella combinazione: media
Mx = -81273.1; My = -1850; N = -749.3

### Verifica taglio+torsione D.M. 17-01-18 §4.4.8.1.11

Sezione ad ascissa 75.8
Coefficiente parziale di sicurezza del materiale γ = 1.5
Kmod = 0.8; kcr = 0.67
τ,tor,d/(ksh*fv,d) + (τ,y,d/fv,d)^2 + (τ,z,d/fv,d)^2 <= 1
0.05+0+0.23 <= 1 Comb: SLU, 71; Durata minima del carico nella combinazione: media
Tx = 150.3; Ty = -1419.5; Mt = -1451.4

### Verifica torsione D.M. 17-01-18 §4.4.8.1.10

Sezione ad ascissa 75.8
Coefficiente parziale di sicurezza del materiale γ = 1.5
Kmod = 0.8
τ,tor,d <= Ksh * fv,d
0.88 <= 19.07 Comb: SLU, 29; Durata minima del carico nella combinazione: media
Mt = -1459.6

## Asta 138: Trave in legno a falda Falda 1 fili 36-74

Verifiche condotte secondo D.M. 17-01-18 (N.T.C.)

### Dati generali

Lunghezza = 49.3

### Caratteristiche della sezione

| Descrizione | Tipo | Base | Altezza | Area | Jx | Jy | Wx | Wy |
|---|---|---|---|---|---|---|---|---|
| R 18x23 | Rettangolare | 18 | 23 | 414 | 18250.5 | 11178 | 1587 | 1242 |

Materiale: C14 EN 338:2016
Rapporto luce/freccia elastica limite = 300
Rapporto luce/freccia elastica differita = 200
Mensola Y: Nessuno; Mensola X: Nessuno
Classe di servizio 1

### Verifica flessione D.M. 17-01-18 §4.4.8.1.6

Sezione ad ascissa 0
Coefficiente parziale di sicurezza del materiale γ = 1.5

Kmod = 0.8
Sm,y,d/fm,y,d + Km*(Sm,z,d/fm,z,d) <= 1
Km*(Sm,y,d/fm,y,d) + Sm,z,d/fm,z,d <= 1
0.7*1.1/74.7+32.3/74.7=0.44 <= 1 (formula 4.4.5b) Comb: SLU, 71; Durata minima del carico nella combinazione: media
Mx = 1764.7; My = 40077.7

**Verifica taglio D.M. 17-01-18 §4.4.8.1.9**

Sezione ad ascissa 49.3
Coefficiente parziale di sicurezza del materiale γ = 1.5
Kmod = 0.8; kcr = 0.67
τ,d <= fv,d
Sqrt(5.3^2+1.12^2) = 5.42 <= 16 Comb: SLU, 71; Durata minima del carico nella combinazione: media
Tx = -974.8; Ty = -206.1

**Verifica taglio+torsione D.M. 17-01-18 §4.4.8.1.11**

Sezione ad ascissa 49.3
Coefficiente parziale di sicurezza del materiale γ = 1.5
Kmod = 0.8; kcr = 0.67
τ,tor,d/(ksh*fv,d) + (τ,y,d/fv,d)^2 + (τ,z,d/fv,d)^2 <= 1
0.02+0.11+0 <= 1 Comb: SLU, 29; Durata minima del carico nella combinazione: media
Tx = -970.5; Ty = -204.6; Mt = -534.3

**Verifica torsione D.M. 17-01-18 §4.4.8.1.10**

Sezione ad ascissa 49.3
Coefficiente parziale di sicurezza del materiale γ = 1.5
Kmod = 1.1
τ,tor,d <= Ksh * fv,d
1.02 <= 26.22 Comb: SLV, 6; Durata minima del carico nella combinazione: istantaneo
Mt = 1687.5

---

## Asta 139: Trave in legno a falda Falda 1 fili 36-74

Verifiche condotte secondo D.M. 17-01-18 (N.T.C.)

**Dati generali**

Lunghezza = 67.6

**Caratteristiche della sezione**

| Descrizione | Tipo | Base | Altezza | Area | Jx | Jy | Wx | Wy |
|---|---|---|---|---|---|---|---|---|
| R 18x23 | Rettangolare | 18 | 23 | 414 | 18250.5 | 11178 | 1587 | 1242 |

Materiale: C14 EN 338:2016
Rapporto luce/freccia elastica limite = 300
Rapporto luce/freccia elastica differita = 200
Mensola Y: Nessuno; Mensola X: Nessuno
Classe di servizio 1

**Verifica taglio D.M. 17-01-18 §4.4.8.1.9**

Sezione ad ascissa 0
Coefficiente parziale di sicurezza del materiale γ = 1.5
Kmod = 0.8; kcr = 0.67
τ,d <= fv,d
Sqrt(3.29^2+3.75^2) = 4.98 <= 16 Comb: SLU, 72; Durata minima del carico nella combinazione: media
Tx = -604.7; Ty = 689.2

**Verifica pressoflessione D.M. 17-01-18 §4.4.8.1.8**

Sezione ad ascissa 67.6
Coefficiente parziale di sicurezza del materiale γ = 1.5
Kmod = 0.8
(Sc,0,d/fc,0,d)^2 + Sm,y,d/fm,y,d + Km*(Sm,z,d/fm,z,d) <= 1
(Sc,0,d/fc,0,d)^2 + Km*(Sm,y,d/fm,y,d) + Sm,z,d/fm,z,d <= 1
(1/85.3)^2+0.7*19/74.7+31.8/74.7=0.6 <= 1 [4.4.7b] Comb: SLU, 72; Durata minima del carico nella combinazione: media
Mx = -30204.1; My = -39498; N = -413.7

**Verifica taglio+torsione D.M. 17-01-18 §4.4.8.1.11**

Sezione ad ascissa 0
Coefficiente parziale di sicurezza del materiale γ = 1.5
Kmod = 0.8; kcr = 0.67
τ,tor,d/(ksh*fv,d) + (τ,y,d/fv,d)^2 + (τ,z,d/fv,d)^2 <= 1
0.01+0.04+0.05 <= 1 Comb: SLU, 72; Durata minima del carico nella combinazione: media
Tx = -604.7; Ty = 689.2; Mt = 442.3

**Verifica torsione D.M. 17-01-18 §4.4.8.1.10**

Sezione ad ascissa 67.6
Coefficiente parziale di sicurezza del materiale γ = 1.5
Kmod = 1.1
τ,tor,d <= Ksh * fv,d
0.59 <= 26.22 Comb: SLV, 2; Durata minima del carico nella combinazione: istantaneo
Mt = 981.8

---

## Asta 140: Trave in legno a falda Falda 1 fili 36-74

Verifiche condotte secondo D.M. 17-01-18 (N.T.C.)

**Dati generali**

Lunghezza = 67.6

**Caratteristiche della sezione**

| Descrizione | Tipo | Base | Altezza | Area | Jx | Jy | Wx | Wy |
|---|---|---|---|---|---|---|---|---|
| R 18x23 | Rettangolare | 18 | 23 | 414 | 18250.5 | 11178 | 1587 | 1242 |

Materiale: C14 EN 338:2016
Rapporto luce/freccia elastica limite = 300
Rapporto luce/freccia elastica differita = 200
Mensola Y: Nessuno; Mensola X: Nessuno
Classe di servizio 1

**Verifica taglio D.M. 17-01-18 §4.4.8.1.9**

Sezione ad ascissa 0
Coefficiente parziale di sicurezza del materiale γ = 1.5
Kmod = 0.8; kcr = 0.67
τ,d <= fv,d
Sqrt(0.49^2+4.68^2) = 4.71 <= 16 Comb: SLU, 79; Durata minima del carico nella combinazione: media
Tx = -90.9; Ty = 861.7

**Verifica pressoflessione D.M. 17-01-18 §4.4.8.1.8**

Sezione ad ascissa 67.6
Coefficiente parziale di sicurezza del materiale γ = 1.5
Kmod = 0.8
(Sc,0,d/fc,0,d)^2 + Sm,y,d/fm,y,d + Km*(Sm,z,d/fm,z,d) <= 1
(Sc,0,d/fc,0,d)^2 + Km*(Sm,y,d/fm,y,d) + Sm,z,d/fm,z,d <= 1
(1.3/85.3)^2+40.6/74.7+0.7*32.4/74.67=0.85 <= 1 [4.4.7a] Comb: SLU, 72; Durata minima del carico nella combinazione: media
Mx = -64423.9; My = -40198; N = -527.7

**Verifica taglio+torsione D.M. 17-01-18 §4.4.8.1.11**

Sezione ad ascissa 0
Coefficiente parziale di sicurezza del materiale γ = 1.5
Kmod = 0.8; kcr = 0.67
τ,tor,d/(ksh*fv,d) + (τ,y,d/fv,d)^2 + (τ,z,d/fv,d)^2 <= 1
0.09+0+0.08 <= 1 Comb: SLU, 80; Durata minima del carico nella combinazione: media
Tx = -95.7; Ty = 856.8; Mt = -2839.7

**Verifica torsione D.M. 17-01-18 §4.4.8.1.10**

Sezione ad ascissa 67.6
Coefficiente parziale di sicurezza del materiale γ = 1.5
Kmod = 0.8
τ,tor,d <= Ksh * fv,d
1.71 <= 19.07 Comb: SLU, 80; Durata minima del carico nella combinazione: media
Mt = -2839.7

---

## Asta 141: Trave in legno a falda Falda 1 fili 36-74

Verifiche condotte secondo D.M. 17-01-18 (N.T.C.)

**Dati generali**

Lunghezza = 67.6

**Caratteristiche della sezione**

| Descrizione | Tipo | Base | Altezza | Area | Jx | Jy | Wx | Wy |
|---|---|---|---|---|---|---|---|---|
| R 18x23 | Rettangolare | 18 | 23 | 414 | 18250.5 | 11178 | 1587 | 1242 |

Materiale: C14 EN 338:2016
Rapporto luce/freccia elastica limite = 300
Rapporto luce/freccia elastica differita = 200

Mensola Y: Nessuno; Mensola X: Nessuno
Classe di servizio 1

**Verifica taglio D.M. 17-01-18 §4.4.8.1.9**

Sezione ad ascissa 0
Coefficiente parziale di sicurezza del materiale γ = 1.5
Kmod = 0.8; kcr = 0.67
τ,d <= fv,d
Sqrt(2.37^2+4.4^2) = 5 <= 16 Comb: SLU, 79; Durata minima del carico nella combinazione: media
Tx = 436.6; Ty = 810.4

**Verifica pressoflessione D.M. 17-01-18 §4.4.8.1.8**

Sezione ad ascissa 31.5
Coefficiente parziale di sicurezza del materiale γ = 1.5
Kmod = 0.8
(Sc,0,d/fc,0,d)^2 + Sm,y,d/fm,y,d + Km*(Sm,z,d/fm,z,d) <= 1
(Sc,0,d/fc,0,d)^2 + Km*(Sm,y,d/fm,y,d) + Sm,z,d/fm,z,d <= 1
(1.4/85.3)^2+52.2/74.7+0.7*21/74.67=0.9 <= 1 [4.4.7a] Comb: SLU, 72; Durata minima del carico nella combinazione: media
Mx = -82784.5; My = -26060.6; N = -560.3

**Verifica taglio+torsione D.M. 17-01-18 §4.4.8.1.11**

Sezione ad ascissa 0
Coefficiente parziale di sicurezza del materiale γ = 1.5
Kmod = 0.8; kcr = 0.67
τ,tor,d/(ksh*fv,d) + (τ,y,d/fv,d)^2 + (τ,z,d/fv,d)^2 <= 1
0.12+0.02+0.07 <= 1 Comb: SLU, 80; Durata minima del carico nella combinazione: media
Tx = 425.5; Ty = 792.5; Mt = -3849.9

**Verifica torsione D.M. 17-01-18 §4.4.8.1.10**

Sezione ad ascissa 67.6
Coefficiente parziale di sicurezza del materiale γ = 1.5
Kmod = 0.8
τ,tor,d <= Ksh * fv,d
2.32 <= 19.07 Comb: SLU, 80; Durata minima del carico nella combinazione: media
Mt = -3849.9

---

## Asta 142: Trave in legno a falda Falda 1 fili 36-74

Verifiche condotte secondo D.M. 17-01-18 (N.T.C.)

**Dati generali**

Lunghezza = 67.6

**Caratteristiche della sezione**

| Descrizione | Tipo | Base | Altezza | Area | Jx | Jy | Wx | Wy |
|---|---|---|---|---|---|---|---|---|
| R 18x23 | Rettangolare | 18 | 23 | 414 | 18250.5 | 11178 | 1587 | 1242 |

Materiale: C14 EN 338:2016
Rapporto luce/freccia elastica limite = 300
Rapporto luce/freccia elastica differita = 200
Mensola Y: Nessuno; Mensola X: Nessuno
Classe di servizio 1

**Verifica taglio D.M. 17-01-18 §4.4.8.1.9**

Sezione ad ascissa 67.6
Coefficiente parziale di sicurezza del materiale γ = 1.5
Kmod = 0.8; kcr = 0.67
τ,d <= fv,d
Sqrt(0.9^2+2.75^2) = 2.89 <= 16 Comb: SLU, 38; Durata minima del carico nella combinazione: media
Tx = -164.7; Ty = -506.1

**Verifica pressoflessione D.M. 17-01-18 §4.4.8.1.8**

Sezione ad ascissa 31.5
Coefficiente parziale di sicurezza del materiale γ = 1.5
Kmod = 0.8
(Sc,0,d/fc,0,d)^2 + Sm,y,d/fm,y,d + Km*(Sm,z,d/fm,z,d) <= 1
(Sc,0,d/fc,0,d)^2 + Km*(Sm,y,d/fm,y,d) + Sm,z,d/fm,z,d <= 1
(1.4/85.3)^2+56.8/74.7+0.7*13.4/74.67=0.89 <= 1 [4.4.7a] Comb: SLU, 72; Durata minima del carico nella combinazione: media
Mx = -90068.5; My = -16582.5; N = -569.2

**Verifica taglio+torsione D.M. 17-01-18 §4.4.8.1.11**

Sezione ad ascissa 67.6
Coefficiente parziale di sicurezza del materiale γ = 1.5

Kmod = 0.8; kcr = 0.67
τ,tor,d/(ksh*fv,d) + (τ,y,d/fv,d)^2 + (τ,z,d/fv,d)^2 <= 1
0.1+0+0.03 <= 1 Comb: SLU, 38; Durata minima del carico nella combinazione: media
Tx = -164.7; Ty = -506.1; Mt = -3003.4

**Verifica torsione D.M. 17-01-18 §4.4.8.1.10**

Sezione ad ascissa 67.6
Coefficiente parziale di sicurezza del materiale γ = 1.5
Kmod = 0.8
τ,tor,d <= Ksh * fv,d
1.81 <= 19.07 Comb: SLU, 38; Durata minima del carico nella combinazione: media
Mt = -3003.4

## Asta 143: Trave in legno a falda Falda 1 fili 36-74

Verifiche condotte secondo D.M. 17-01-18 (N.T.C.)

**Dati generali**

Lunghezza = 67.6

**Caratteristiche della sezione**

| Descrizione | Tipo | Base | Altezza | Area | Jx | Jy | Wx | Wy |
|---|---|---|---|---|---|---|---|---|
| R 18x23 | Rettangolare | 18 | 23 | 414 | 18250.5 | 11178 | 1587 | 1242 |

Materiale: C14 EN 338:2016
Rapporto luce/freccia elastica limite = 300
Rapporto luce/freccia elastica differita = 200
Mensola Y: Nessuno; Mensola X: Nessuno
Classe di servizio 1

**Verifica taglio D.M. 17-01-18 §4.4.8.1.9**

Sezione ad ascissa 67.6
Coefficiente parziale di sicurezza del materiale γ = 1.5
Kmod = 0.8; kcr = 0.67
τ,d <= fv,d
Sqrt(2.25^2+2.37^2) = 3.27 <= 16 Comb: SLU, 72; Durata minima del carico nella combinazione: media
Tx = 413.3; Ty = -436.3

**Verifica pressoflessione D.M. 17-01-18 §4.4.8.1.8**

Sezione ad ascissa 0
Coefficiente parziale di sicurezza del materiale γ = 1.5
Kmod = 0.8
(Sc,0,d/fc,0,d)^2 + Sm,y,d/fm,y,d + Km*(Sm,z,d/fm,z,d) <= 1
(Sc,0,d/fc,0,d)^2 + Km*(Sm,y,d/fm,y,d) + Sm,z,d/fm,z,d <= 1
(1.4/85.3)^2+49.2/74.7+0.7*18.3/74.67=0.83 <= 1 [4.4.7a] Comb: SLU, 72; Durata minima del carico nella combinazione: media
Mx = -78147.7; My = -22716.7; N = -569

**Verifica taglio+torsione D.M. 17-01-18 §4.4.8.1.11**

Sezione ad ascissa 67.6
Coefficiente parziale di sicurezza del materiale γ = 1.5
Kmod = 0.8; kcr = 0.67
τ,tor,d/(ksh*fv,d) + (τ,y,d/fv,d)^2 + (τ,z,d/fv,d)^2 <= 1
0.13+0.02+0.02 <= 1 Comb: SLU, 80; Durata minima del carico nella combinazione: media
Tx = 411.6; Ty = -436.5; Mt = -4128.1

**Verifica torsione D.M. 17-01-18 §4.4.8.1.10**

Sezione ad ascissa 67.6
Coefficiente parziale di sicurezza del materiale γ = 1.5
Kmod = 0.8
τ,tor,d <= Ksh * fv,d
2.49 <= 19.07 Comb: SLU, 80; Durata minima del carico nella combinazione: media
Mt = -4128.1

## Asta 144: Trave in legno a falda Falda 3 fili 31-87

Verifiche condotte secondo D.M. 17-01-18 (N.T.C.)

**Dati generali**

Lunghezza = 84

**Caratteristiche della sezione**

| Descrizione | Tipo | Base | Altezza | Area | Jx | Jy | Wx | Wy |
|---|---|---|---|---|---|---|---|---|
| R 18x23 | Rettangolare | 18 | 23 | 414 | 18250.5 | 11178 | 1587 | 1242 |

Materiale: C14 EN 338:2016
Rapporto luce/freccia elastica limite = 300
Rapporto luce/freccia elastica differita = 200
Mensola Y: Nessuno; Mensola X: Nessuno
Classe di servizio 1

**Verifica taglio D.M. 17-01-18 §4.4.8.1.9**

Sezione ad ascissa 0
Coefficiente parziale di sicurezza del materiale γ = 1.5
Kmod = 0.8; kcr = 0.67
τ,d <= fv,d
Sqrt(0.15^2+6.32^2) = 6.32 <= 16 Comb: SLU, 71; Durata minima del carico nella combinazione: media
Tx = -28.3; Ty = 1163.4

**Verifica pressoflessione D.M. 17-01-18 §4.4.8.1.8**

Sezione ad ascissa 84
Coefficiente parziale di sicurezza del materiale γ = 1.5
Kmod = 0.8
(Sc,0,d/fc,0,d)^2 + Sm,y,d/fm,y,d + Km*(Sm,z,d/fm,z,d) <= 1
(Sc,0,d/fc,0,d)^2 + Km*(Sm,y,d/fm,y,d) + Sm,z,d/fm,z,d <= 1
(1.9/85.3)^2+48.5/74.7+0.7*1.9/74.67=0.67 <= 1 [4.4.7a] Comb: SLU, 80; Durata minima del carico nella combinazione: media
Mx = -76957; My = 2339; N = -799.2

**Verifica taglio+torsione D.M. 17-01-18 §4.4.8.1.11**

Sezione ad ascissa 0
Coefficiente parziale di sicurezza del materiale γ = 1.5
Kmod = 0.8; kcr = 0.67
τ,tor,d/(ksh*fv,d) + (τ,y,d/fv,d)^2 + (τ,z,d/fv,d)^2 <= 1
0.03+0+0.16 <= 1 Comb: SLU, 71; Durata minima del carico nella combinazione: media
Tx = -28.3; Ty = 1163.4; Mt = 1049.9

**Verifica torsione D.M. 17-01-18 §4.4.8.1.10**

Sezione ad ascissa 84
Coefficiente parziale di sicurezza del materiale γ = 1.5
Kmod = 1.1
τ,tor,d <= Ksh * fv,d
1.15 <= 26.22 Comb: SLV, 10; Durata minima del carico nella combinazione: istantaneo
Mt = 1898.7

---

## Asta 145: Trave in legno a falda Falda 3 fili 31-87

Verifiche condotte secondo D.M. 17-01-18 (N.T.C.)

**Dati generali**

Lunghezza = 67.6

**Caratteristiche della sezione**

| Descrizione | Tipo | Base | Altezza | Area | Jx | Jy | Wx | Wy |
|---|---|---|---|---|---|---|---|---|
| R 18x23 | Rettangolare | 18 | 23 | 414 | 18250.5 | 11178 | 1587 | 1242 |

Materiale: C14 EN 338:2016
Rapporto luce/freccia elastica limite = 300
Rapporto luce/freccia elastica differita = 200
Mensola Y: Nessuno; Mensola X: Nessuno
Classe di servizio 1

**Verifica taglio D.M. 17-01-18 §4.4.8.1.9**

Sezione ad ascissa 0
Coefficiente parziale di sicurezza del materiale γ = 1.5
Kmod = 0.8; kcr = 0.67
τ,d <= fv,d
Sqrt(0.83^2+4.01^2) = 4.1 <= 16 Comb: SLU, 71; Durata minima del carico nella combinazione: media
Tx = 152; Ty = 738.3

**Verifica pressoflessione D.M. 17-01-18 §4.4.8.1.8**

Sezione ad ascissa 67.6
Coefficiente parziale di sicurezza del materiale γ = 1.5
Kmod = 0.8
(Sc,0,d/fc,0,d)^2 + Sm,y,d/fm,y,d + Km*(Sm,z,d/fm,z,d) <= 1
(Sc,0,d/fc,0,d)^2 + Km*(Sm,y,d/fm,y,d) + Sm,z,d/fm,z,d <= 1
(2/85.3)^2+67.1/74.7+0.7*10.5/74.67=1 <= 1 [4.4.7a] Comb: SLU, 80; Durata minima del carico nella combinazione: media
Mx = -106528.2; My = 13076.4; N = -828.3

**Verifica taglio+torsione D.M. 17-01-18 §4.4.8.1.11**

Sezione ad ascissa 0
Coefficiente parziale di sicurezza del materiale γ = 1.5
Kmod = 0.8; kcr = 0.67
τ,tor,d/(ksh*fv,d) + (τ,y,d/fv,d)^2 + (τ,z,d/fv,d)^2 <= 1
0.05+0+0.06 <= 1 Comb: SLU, 71; Durata minima del carico nella combinazione: media
Tx = 152; Ty = 738.3; Mt = 1522.9

**Verifica torsione D.M. 17-01-18 §4.4.8.1.10**

Sezione ad ascissa 67.6
Coefficiente parziale di sicurezza del materiale γ = 1.5
Kmod = 0.8
τ,tor,d <= Ksh * fv,d
0.92 <= 19.07 Comb: SLU, 71; Durata minima del carico nella combinazione: media
Mt = 1522.9

---

## Asta 146: Trave in legno a falda Falda 3 fili 31-87

Verifiche condotte secondo D.M. 17-01-18 (N.T.C.)

**Dati generali**

Lunghezza = 67.6

**Caratteristiche della sezione**

| Descrizione | Tipo | Base | Altezza | Area | Jx | Jy | Wx | Wy |
|---|---|---|---|---|---|---|---|---|
| R 18x23 | Rettangolare | 18 | 23 | 414 | 18250.5 | 11178 | 1587 | 1242 |

Materiale: C14 EN 338:2016
Rapporto luce/freccia elastica limite = 300
Rapporto luce/freccia elastica differita = 200
Mensola Y: Nessuno; Mensola X: Nessuno
Classe di servizio 1

**Verifica taglio D.M. 17-01-18 §4.4.8.1.9**

Sezione ad ascissa 67.6
Coefficiente parziale di sicurezza del materiale γ = 1.5
Kmod = 0.8; kcr = 0.67
τ,d <= fv,d
Sqrt(2.45^2+2.19^2) = 3.29 <= 16 Comb: SLU, 80; Durata minima del carico nella combinazione: media
Tx = 451.3; Ty = -403.7

**Verifica pressoflessione D.M. 17-01-18 §4.4.8.1.8**

Sezione ad ascissa 67.6
Coefficiente parziale di sicurezza del materiale γ = 1.5
Kmod = 0.8
(Sc,0,d/fc,0,d)^2 + Sm,y,d/fm,y,d + Km*(Sm,z,d/fm,z,d) <= 1
(Sc,0,d/fc,0,d)^2 + Km*(Sm,y,d/fm,y,d) + Sm,z,d/fm,z,d <= 1
(2/85.3)^2+64.9/74.7+0.7*33.5/74.67=1.18 !> 1 [4.4.7a] Comb: SLU, 80; Durata minima del carico nella combinazione: media - NON SODDISFATTA
Mx = -103043.5; My = 41645.3; N = -843.5

**Verifica taglio+torsione D.M. 17-01-18 §4.4.8.1.11**

Sezione ad ascissa 67.6
Coefficiente parziale di sicurezza del materiale γ = 1.5
Kmod = 0.8; kcr = 0.67
τ,tor,d/(ksh*fv,d) + (τ,y,d/fv,d)^2 + (τ,z,d/fv,d)^2 <= 1
0.07+0.02+0.02 <= 1 Comb: SLU, 80; Durata minima del carico nella combinazione: media
Tx = 451.3; Ty = -403.7; Mt = 2193

**Verifica torsione D.M. 17-01-18 §4.4.8.1.10**

Sezione ad ascissa 67.6
Coefficiente parziale di sicurezza del materiale γ = 1.5
Kmod = 0.8
τ,tor,d <= Ksh * fv,d
1.33 <= 19.07 Comb: SLU, 72; Durata minima del carico nella combinazione: media
Mt = 2198.6

---

## Asta 147: Trave in legno a falda Falda 3 fili 31-87

Verifiche condotte secondo D.M. 17-01-18 (N.T.C.)

### Dati generali

Lunghezza = 67.6

### Caratteristiche della sezione

| Descrizione | Tipo | Base | Altezza | Area | Jx | Jy | Wx | Wy |
|---|---|---|---|---|---|---|---|---|
| R 18x23 | Rettangolare | 18 | 23 | 414 | 18250.5 | 11178 | 1587 | 1242 |

Materiale: C14 EN 338:2016
Rapporto luce/freccia elastica limite = 300
Rapporto luce/freccia elastica differita = 200
Mensola Y: Nessuno; Mensola X: Nessuno
Classe di servizio 1

### Verifica taglio D.M. 17-01-18 §4.4.8.1.9

Sezione ad ascissa 67.6
Coefficiente parziale di sicurezza del materiale γ = 1.5
Kmod = 0.8; kcr = 0.67
τ,d <= fv,d
Sqrt(0.3^2+3.35^2) = 3.37 <= 16 Comb: SLU, 37; Durata minima del carico nella combinazione: media
Tx = -55.6; Ty = -616.8

### Verifica pressoflessione D.M. 17-01-18 §4.4.8.1.8

Sezione ad ascissa 2.3
Coefficiente parziale di sicurezza del materiale γ = 1.5
Kmod = 0.8
(Sc,0,d/fc,0,d)^2 + Sm,y,d/fm,y,d + Km*(Sm,z,d/fm,z,d) <= 1
(Sc,0,d/fc,0,d)^2 + Km*(Sm,y,d/fm,y,d) + Sm,z,d/fm,z,d <= 1
(2/85.3)^2+65.7/74.7+0.7*31.7/74.67=1.18 !> 1 [4.4.7a] Comb: SLU, 80; Durata minima del carico nella combinazione: media - NON SODDISFATTA
Mx = -104325; My = 39373.5; N = -848.5

### Verifica taglio+torsione D.M. 17-01-18 §4.4.8.1.11

Sezione ad ascissa 67.6
Coefficiente parziale di sicurezza del materiale γ = 1.5
Kmod = 0.8; kcr = 0.67
τ,tor,d/(ksh*fv,d) + (τ,y,d/fv,d)^2 + (τ,z,d/fv,d)^2 <= 1
0.15+0+0.04 <= 1 Comb: SLU, 79; Durata minima del carico nella combinazione: media
Tx = -77.9; Ty = -607.6; Mt = 4744.5

### Verifica torsione D.M. 17-01-18 §4.4.8.1.10

Sezione ad ascissa 67.6
Coefficiente parziale di sicurezza del materiale γ = 1.5
Kmod = 0.8
τ,tor,d <= Ksh * fv,d
2.9 <= 19.07 Comb: SLU, 72; Durata minima del carico nella combinazione: media
Mt = 4804

---

## Asta 148: Trave in legno a falda Falda 3 fili 31-87

Verifiche condotte secondo D.M. 17-01-18 (N.T.C.)

### Dati generali

Lunghezza = 67.6

### Caratteristiche della sezione

| Descrizione | Tipo | Base | Altezza | Area | Jx | Jy | Wx | Wy |
|---|---|---|---|---|---|---|---|---|
| R 18x23 | Rettangolare | 18 | 23 | 414 | 18250.5 | 11178 | 1587 | 1242 |

Materiale: C14 EN 338:2016
Rapporto luce/freccia elastica limite = 300
Rapporto luce/freccia elastica differita = 200
Mensola Y: Nessuno; Mensola X: Nessuno
Classe di servizio 1

### Verifica taglio D.M. 17-01-18 §4.4.8.1.9

Sezione ad ascissa 67.6
Coefficiente parziale di sicurezza del materiale γ = 1.5
Kmod = 0.8; kcr = 0.67
τ,d <= fv,d
Sqrt(0.32^2+4.46^2) = 4.48 <= 16 Comb: SLU, 72; Durata minima del carico nella combinazione: media
Tx = -59.4; Ty = -821.5

### Verifica pressoflessione D.M. 17-01-18 §4.4.8.1.8

Sezione ad ascissa 0
Coefficiente parziale di sicurezza del materiale γ = 1.5

Kmod = 0.8
(Sc,0,d/fc,0,d)^2 + Sm,y,d/fm,y,d + Km*(Sm,z,d/fm,z,d) <= 1
(Sc,0,d/fc,0,d)^2 + Km*(Sm,y,d/fm,y,d) + Sm,z,d/fm,z,d <= 1
(2.1/85.3)^2+56.4/74.7+0.7*25.1/74.67=0.99 <= 1 [4.4.7a] Comb: SLU, 79; Durata minima del carico nella combinazione: media
Mx = -89434.1; My = 31135.1; N = -858.1

**Verifica taglio+torsione D.M. 17-01-18 §4.4.8.1.11**

Sezione ad ascissa 67.6
Coefficiente parziale di sicurezza del materiale γ = 1.5
Kmod = 0.8; kcr = 0.67
τ,tor,d/(ksh*fv,d) + (τ,y,d/fv,d)^2 + (τ,z,d/fv,d)^2 <= 1
0.12+0+0.08 <= 1 Comb: SLU, 72; Durata minima del carico nella combinazione: media
Tx = -59.4; Ty = -821.5; Mt = 3897.2

**Verifica torsione D.M. 17-01-18 §4.4.8.1.10**

Sezione ad ascissa 67.6
Coefficiente parziale di sicurezza del materiale γ = 1.5
Kmod = 0.8
τ,tor,d <= Ksh * fv,d
2.35 <= 19.07 Comb: SLU, 80; Durata minima del carico nella combinazione: media
Mt = 3898.6

---

## Asta 149: Trave in legno a falda Falda 3 fili 31-87

Verifiche condotte secondo D.M. 17-01-18 (N.T.C.)

**Dati generali**

Lunghezza = 67.6

**Caratteristiche della sezione**

| Descrizione | Tipo | Base | Altezza | Area | Jx | Jy | Wx | Wy |
|---|---|---|---|---|---|---|---|---|
| R 18x23 | Rettangolare | 18 | 23 | 414 | 18250.5 | 11178 | 1587 | 1242 |

Materiale: C14 EN 338:2016
Rapporto luce/freccia elastica limite = 300
Rapporto luce/freccia elastica differita = 200
Mensola Y: Nessuno; Mensola X: Nessuno
Classe di servizio 1

**Verifica taglio D.M. 17-01-18 §4.4.8.1.9**

Sezione ad ascissa 67.6
Coefficiente parziale di sicurezza del materiale γ = 1.5
Kmod = 0.8; kcr = 0.67
τ,d <= fv,d
Sqrt(1.26^2+4.42^2) = 4.59 <= 16 Comb: SLU, 72; Durata minima del carico nella combinazione: media
Tx = -232.1; Ty = -812.4

**Verifica pressoflessione D.M. 17-01-18 §4.4.8.1.8**

Sezione ad ascissa 0
Coefficiente parziale di sicurezza del materiale γ = 1.5
Kmod = 0.8
(Sc,0,d/fc,0,d)^2 + Sm,y,d/fm,y,d + Km*(Sm,z,d/fm,z,d) <= 1
(Sc,0,d/fc,0,d)^2 + Km*(Sm,y,d/fm,y,d) + Sm,z,d/fm,z,d <= 1
(2/85.3)^2+32.8/74.7+0.7*20.2/74.67=0.63 <= 1 [4.4.7a] Comb: SLU, 80; Durata minima del carico nella combinazione: media
Mx = -52093.8; My = 25085.2; N = -834.9

**Verifica taglio+torsione D.M. 17-01-18 §4.4.8.1.11**

Sezione ad ascissa 67.6
Coefficiente parziale di sicurezza del materiale γ = 1.5
Kmod = 0.8; kcr = 0.67
τ,tor,d/(ksh*fv,d) + (τ,y,d/fv,d)^2 + (τ,z,d/fv,d)^2 <= 1
0.11+0.01+0.08 <= 1 Comb: SLU, 80; Durata minima del carico nella combinazione: media
Tx = -235.3; Ty = -811.5; Mt = 3586.4

**Verifica torsione D.M. 17-01-18 §4.4.8.1.10**

Sezione ad ascissa 67.6
Coefficiente parziale di sicurezza del materiale γ = 1.5
Kmod = 0.8
τ,tor,d <= Ksh * fv,d
2.18 <= 19.07 Comb: SLU, 79; Durata minima del carico nella combinazione: media
Mt = 3619

---

## Asta 150: Trave in legno a falda Falda 3 fili 31-87

Verifiche condotte secondo D.M. 17-01-18 (N.T.C.)

### Dati generali

Lunghezza = 81.9

### Caratteristiche della sezione

| Descrizione | Tipo | Base | Altezza | Area | Jx | Jy | Wx | Wy |
|---|---|---|---|---|---|---|---|---|
| R 18x23 | Rettangolare | 18 | 23 | 414 | 18250.5 | 11178 | 1587 | 1242 |

Materiale: C14 EN 338:2016
Rapporto luce/freccia elastica limite = 300
Rapporto luce/freccia elastica differita = 200
Mensola Y: Nessuno; Mensola X: Nessuno
Classe di servizio 1

### Verifica taglio D.M. 17-01-18 §4.4.8.1.9

Sezione ad ascissa 81.9
Coefficiente parziale di sicurezza del materiale γ = 1.5
Kmod = 0.8; kcr = 0.67
τ,d <= fv,d
Sqrt(1.96^2+3.87^2) = 4.34 <= 16 Comb: SLU, 80; Durata minima del carico nella combinazione: media
Tx = -360.7; Ty = -712.2

### Verifica pressoflessione D.M. 17-01-18 §4.4.8.1.8

Sezione ad ascissa 81.9
Coefficiente parziale di sicurezza del materiale γ = 1.5
Kmod = 0.8
(Sc,0,d/fc,0,d)^2 + Sm,y,d/fm,y,d + Km*(Sm,z,d/fm,z,d) <= 1
(Sc,0,d/fc,0,d)^2 + Km*(Sm,y,d/fm,y,d) + Sm,z,d/fm,z,d <= 1
(2/85.3)^2+19.9/74.7+0.7*16.5/74.67=0.42 <= 1 [4.4.7a] Comb: SLU, 79; Durata minima del carico nella combinazione: media
Mx = 31564.4; My = -20498.7; N = -845

### Verifica taglio+torsione D.M. 17-01-18 §4.4.8.1.11

Sezione ad ascissa 81.9
Coefficiente parziale di sicurezza del materiale γ = 1.5
Kmod = 0.8; kcr = 0.67
τ,tor,d/(ksh*fv,d) + (τ,y,d/fv,d)^2 + (τ,z,d/fv,d)^2 <= 1
0.08+0.01+0.06 <= 1 Comb: SLU, 79; Durata minima del carico nella combinazione: media
Tx = -359.3; Ty = -708.6; Mt = 2626

### Verifica torsione D.M. 17-01-18 §4.4.8.1.10

Sezione ad ascissa 81.9
Coefficiente parziale di sicurezza del materiale γ = 1.5
Kmod = 0.8
τ,tor,d <= Ksh * fv,d
1.61 <= 19.07 Comb: SLU, 37; Durata minima del carico nella combinazione: media
Mt = 2665.8

---

## Asta 151: Trave in legno a falda Falda 4 fili 95-198

Verifiche condotte secondo D.M. 17-01-18 (N.T.C.)

### Dati generali

Lunghezza = 43.4

### Caratteristiche della sezione

| Descrizione | Tipo | Base | Altezza | Area | Jx | Jy | Wx | Wy |
|---|---|---|---|---|---|---|---|---|
| R 18x23 | Rettangolare | 18 | 23 | 414 | 18250.5 | 11178 | 1587 | 1242 |

Materiale: C14 EN 338:2016
Rapporto luce/freccia elastica limite = 300
Rapporto luce/freccia elastica differita = 200
Mensola Y: Nessuno; Mensola X: Nessuno
Classe di servizio 1

### Verifica flessione D.M. 17-01-18 §4.4.8.1.6

Sezione ad ascissa 0
Coefficiente parziale di sicurezza del materiale γ = 1.5
Kmod = 0.8
Sm,y,d/fm,y,d + Km*(Sm,z,d/fm,z,d) <= 1
Km*(Sm,y,d/fm,y,d) + Sm,z,d/fm,z,d <= 1
31.1/74.7+0.7*9/74.7=0.5 <= 1 (formula 4.4.5a) Comb: SLU, 71; Durata minima del carico nella combinazione: media

Mx = 49362.1; My = -11207.3

**Verifica taglio D.M. 17-01-18 §4.4.8.1.9**

Sezione ad ascissa 0
Coefficiente parziale di sicurezza del materiale γ = 1.5
Kmod = 0.8; kcr = 0.67
τ,d <= fv,d
Sqrt(0.15^2+2.82^2) = 2.83 <= 16 Comb: SLU, 79; Durata minima del carico nella combinazione: media
Tx = 27.9; Ty = 519.6

**Verifica taglio+torsione D.M. 17-01-18 §4.4.8.1.11**

Sezione ad ascissa 0
Coefficiente parziale di sicurezza del materiale γ = 1.5
Kmod = 0.8; kcr = 0.67
τ,tor,d/(ksh*fv,d) + (τ,y,d/fv,d)^2 + (τ,z,d/fv,d)^2 <= 1
0.19+0+0.03 <= 1 Comb: SLU, 79; Durata minima del carico nella combinazione: media
Tx = 27.9; Ty = 519.6; Mt = 6104.2

**Verifica torsione D.M. 17-01-18 §4.4.8.1.10**

Sezione ad ascissa 43.4
Coefficiente parziale di sicurezza del materiale γ = 1.5
Kmod = 0.8
τ,tor,d <= Ksh * fv,d
3.68 <= 19.07 Comb: SLU, 79; Durata minima del carico nella combinazione: media
Mt = 6104.2

---

## Asta 152: Trave in legno a falda Falda 4 fili 95-198

Verifiche condotte secondo D.M. 17-01-18 (N.T.C.)

**Dati generali**

Lunghezza = 67.6

**Caratteristiche della sezione**

| Descrizione | Tipo | Base | Altezza | Area | Jx | Jy | Wx | Wy |
|---|---|---|---|---|---|---|---|---|
| R 18x23 | Rettangolare | 18 | 23 | 414 | 18250.5 | 11178 | 1587 | 1242 |

Materiale: C14 EN 338:2016
Rapporto luce/freccia elastica limite = 300
Rapporto luce/freccia elastica differita = 200
Mensola Y: Nessuno; Mensola X: Nessuno
Classe di servizio 1

**Verifica flessione D.M. 17-01-18 §4.4.8.1.6**

Sezione ad ascissa 0
Coefficiente parziale di sicurezza del materiale γ = 1.5
Kmod = 0.8
Sm,y,d/fm,y,d + Km*(Sm,z,d/fm,z,d) <= 1
Km*(Sm,y,d/fm,y,d) + Sm,z,d/fm,z,d <= 1
23.5/74.7+0.7*7.2/74.7=0.38 <= 1 (formula 4.4.5a) Comb: SLU, 71; Durata minima del carico nella combinazione: media
Mx = 37243.4; My = -8934.8

**Verifica taglio D.M. 17-01-18 §4.4.8.1.9**

Sezione ad ascissa 0
Coefficiente parziale di sicurezza del materiale γ = 1.5
Kmod = 0.8; kcr = 0.67
τ,d <= fv,d
Sqrt(1.15^2+5.84^2) = 5.95 <= 16 Comb: SLU, 79; Durata minima del carico nella combinazione: media
Tx = 211.6; Ty = 1074.2

**Verifica taglio+torsione D.M. 17-01-18 §4.4.8.1.11**

Sezione ad ascissa 0
Coefficiente parziale di sicurezza del materiale γ = 1.5
Kmod = 0.8; kcr = 0.67
τ,tor,d/(ksh*fv,d) + (τ,y,d/fv,d)^2 + (τ,z,d/fv,d)^2 <= 1
0.17+0.01+0.13 <= 1 Comb: SLU, 79; Durata minima del carico nella combinazione: media
Tx = 211.6; Ty = 1074.2; Mt = 5292.7

**Verifica torsione D.M. 17-01-18 §4.4.8.1.10**

Sezione ad ascissa 67.6
Coefficiente parziale di sicurezza del materiale γ = 1.5
Kmod = 0.8
τ,tor,d <= Ksh * fv,d

3.19 <= 19.07 Comb: SLU, 79; Durata minima del carico nella combinazione: media
Mt = 5292.7

## Asta 153: Trave in legno a falda Falda 4 fili 95-198

Verifiche condotte secondo D.M. 17-01-18 (N.T.C.)

### Dati generali

Lunghezza = 67.6

### Caratteristiche della sezione

| Descrizione | Tipo | Base | Altezza | Area | Jx | Jy | Wx | Wy |
|---|---|---|---|---|---|---|---|---|
| R 18x23 | Rettangolare | 18 | 23 | 414 | 18250.5 | 11178 | 1587 | 1242 |

Materiale: C14 EN 338:2016
Rapporto luce/freccia elastica limite = 300
Rapporto luce/freccia elastica differita = 200
Mensola Y: Nessuno; Mensola X: Nessuno
Classe di servizio 1

### Verifica flessione D.M. 17-01-18 §4.4.8.1.6

Sezione ad ascissa 67.6
Coefficiente parziale di sicurezza del materiale γ = 1.5
Kmod = 0.8
Sm,y,d/fm,y,d + Km*(Sm,z,d/fm,z,d) <= 1
Km*(Sm,y,d/fm,y,d) + Sm,z,d/fm,z,d <= 1
47.3/74.7+0.7*0.8/74.7=0.64 <= 1 (formula 4.4.5a) Comb: SLU, 79; Durata minima del carico nella combinazione: media
Mx = -75107.8; My = -1007.6

### Verifica taglio D.M. 17-01-18 §4.4.8.1.9

Sezione ad ascissa 0
Coefficiente parziale di sicurezza del materiale γ = 1.5
Kmod = 0.8; kcr = 0.67
τ,d <= fv,d
Sqrt(0.53^2+7.1^2) = 7.12 <= 16 Comb: SLU, 79; Durata minima del carico nella combinazione: media
Tx = -96.9; Ty = 1306.3

### Verifica taglio+torsione D.M. 17-01-18 §4.4.8.1.11

Sezione ad ascissa 0
Coefficiente parziale di sicurezza del materiale γ = 1.5
Kmod = 0.8; kcr = 0.67
τ,tor,d/(ksh*fv,d) + (τ,y,d/fv,d)^2 + (τ,z,d/fv,d)^2 <= 1
0.26+0+0.2 <= 1 Comb: SLU, 79; Durata minima del carico nella combinazione: media
Tx = -96.9; Ty = 1306.3; Mt = 8291.1

### Verifica torsione D.M. 17-01-18 §4.4.8.1.10

Sezione ad ascissa 67.6
Coefficiente parziale di sicurezza del materiale γ = 1.5
Kmod = 0.8
τ,tor,d <= Ksh * fv,d
5 <= 19.07 Comb: SLU, 71; Durata minima del carico nella combinazione: media
Mt = 8292.1

## Asta 154: Trave in legno a falda Falda 4 fili 95-198

Verifiche condotte secondo D.M. 17-01-18 (N.T.C.)

### Dati generali

Lunghezza = 67.6

### Caratteristiche della sezione

| Descrizione | Tipo | Base | Altezza | Area | Jx | Jy | Wx | Wy |
|---|---|---|---|---|---|---|---|---|
| R 18x23 | Rettangolare | 18 | 23 | 414 | 18250.5 | 11178 | 1587 | 1242 |

Materiale: C14 EN 338:2016
Rapporto luce/freccia elastica limite = 300
Rapporto luce/freccia elastica differita = 200
Mensola Y: Nessuno; Mensola X: Nessuno
Classe di servizio 1

### Verifica flessione D.M. 17-01-18 §4.4.8.1.6

Sezione ad ascissa 67.6
Coefficiente parziale di sicurezza del materiale γ = 1.5

Kmod = 0.8
Sm,y,d/fm,y,d + Km*(Sm,z,d/fm,z,d) !> 1
Km*(Sm,y,d/fm,y,d) + Sm,z,d/fm,z,d !> 1
70.7/74.7+0.7*43.3/74.7=1.35 !> 1 (formula 4.4.5a) Comb: SLU, 80; Durata minima del carico nella combinazione: media - NON SODDISFATTA
Mx = -112217.1; My = 53827.5

**Verifica taglio D.M. 17-01-18 §4.4.8.1.9**

Sezione ad ascissa 0
Coefficiente parziale di sicurezza del materiale γ = 1.5
Kmod = 0.8; kcr = 0.67
τ,d <= fv,d
Sqrt(4.36^2+5.28^2) = 6.85 <= 16 Comb: SLU, 79; Durata minima del carico nella combinazione: media
Tx = 802.9; Ty = 971.8

**Verifica taglio+torsione D.M. 17-01-18 §4.4.8.1.11**

Sezione ad ascissa 0
Coefficiente parziale di sicurezza del materiale γ = 1.5
Kmod = 0.8; kcr = 0.67
τ,tor,d/(ksh*fv,d) + (τ,y,d/fv,d)^2 + (τ,z,d/fv,d)^2 <= 1
0.06+0.07+0.11 <= 1 Comb: SLU, 80; Durata minima del carico nella combinazione: media
Tx = 802.8; Ty = 971; Mt = -1849.9

**Verifica torsione D.M. 17-01-18 §4.4.8.1.10**

Sezione ad ascissa 67.6
Coefficiente parziale di sicurezza del materiale γ = 1.5
Kmod = 0.8
τ,tor,d <= Ksh * fv,d
1.12 <= 19.07 Comb: SLU, 80; Durata minima del carico nella combinazione: media
Mt = -1849.9

---

## Asta 155: Trave in legno a falda Falda 4 fili 95-198

Verifiche condotte secondo D.M. 17-01-18 (N.T.C.)

**Dati generali**

Lunghezza = 67.6

**Caratteristiche della sezione**

| Descrizione | Tipo | Base | Altezza | Area | Jx | Jy | Wx | Wy |
|---|---|---|---|---|---|---|---|---|
| R 18x23 | Rettangolare | 18 | 23 | 414 | 18250.5 | 11178 | 1587 | 1242 |

Materiale: C14 EN 338:2016
Rapporto luce/freccia elastica limite = 300
Rapporto luce/freccia elastica differita = 200
Mensola Y: Nessuno; Mensola X: Nessuno
Classe di servizio 1

**Verifica flessione D.M. 17-01-18 §4.4.8.1.6**

Sezione ad ascissa 67.6
Coefficiente parziale di sicurezza del materiale γ = 1.5
Kmod = 0.8
Sm,y,d/fm,y,d + Km*(Sm,z,d/fm,z,d) !> 1
Km*(Sm,y,d/fm,y,d) + Sm,z,d/fm,z,d !> 1
97.2/74.7+0.7*43.9/74.7=1.71 !> 1 (formula 4.4.5a) Comb: SLU, 79; Durata minima del carico nella combinazione: media - NON SODDISFATTA
Mx = -154213.7; My = 54517.1

**Verifica taglio D.M. 17-01-18 §4.4.8.1.9**

Sezione ad ascissa 0
Coefficiente parziale di sicurezza del materiale γ = 1.5
Kmod = 0.8; kcr = 0.67
τ,d <= fv,d
Sqrt(0.07^2+5.82^2) = 5.82 <= 16 Comb: SLU, 80; Durata minima del carico nella combinazione: media
Tx = -12.2; Ty = 1071.3

**Verifica taglio+torsione D.M. 17-01-18 §4.4.8.1.11**

Sezione ad ascissa 0
Coefficiente parziale di sicurezza del materiale γ = 1.5
Kmod = 0.8; kcr = 0.67
τ,tor,d/(ksh*fv,d) + (τ,y,d/fv,d)^2 + (τ,z,d/fv,d)^2 <= 1
0.23+0+0.13 <= 1 Comb: SLU, 80; Durata minima del carico nella combinazione: media
Tx = -12.2; Ty = 1071.3; Mt = -7124.1

**Verifica torsione D.M. 17-01-18 §4.4.8.1.10**

Sezione ad ascissa 67.6
Coefficiente parziale di sicurezza del materiale γ = 1.5
Kmod = 0.8
τ,tor,d <= Ksh * fv,d
4.3 <= 19.07 Comb: SLU, 80; Durata minima del carico nella combinazione: media
Mt = -7124.1

---

## Asta 156: Trave in legno a falda Falda 4 fili 95-198

Verifiche condotte secondo D.M. 17-01-18 (N.T.C.)

**Dati generali**

Lunghezza = 67.6

**Caratteristiche della sezione**

| Descrizione | Tipo | Base | Altezza | Area | Jx | Jy | Wx | Wy |
|---|---|---|---|---|---|---|---|---|
| R 18x23 | Rettangolare | 18 | 23 | 414 | 18250.5 | 11178 | 1587 | 1242 |

Materiale: C14 EN 338:2016
Rapporto luce/freccia elastica limite = 300
Rapporto luce/freccia elastica differita = 200
Mensola Y: Nessuno; Mensola X: Nessuno
Classe di servizio 1

**Verifica flessione D.M. 17-01-18 §4.4.8.1.6**

Sezione ad ascissa 60.8
Coefficiente parziale di sicurezza del materiale γ = 1.5
Kmod = 0.8
Sm,y,d/fm,y,d + Km*(Sm,z,d/fm,z,d) !> 1
Km*(Sm,y,d/fm,y,d) + Sm,z,d/fm,z,d !> 1
116.9/74.7+0.7*36.9/74.7=1.91 !> 1 (formula 4.4.5a) Comb: SLU, 79; Durata minima del carico nella combinazione: media - NON SODDISFATTA
Mx = -185495.3; My = 45780.5

**Verifica taglio D.M. 17-01-18 §4.4.8.1.9**

Sezione ad ascissa 0
Coefficiente parziale di sicurezza del materiale γ = 1.5
Kmod = 0.8; kcr = 0.67
τ,d <= fv,d
Sqrt(0.99^2+5.05^2) = 5.15 <= 16 Comb: SLU, 80; Durata minima del carico nella combinazione: media
Tx = -182.1; Ty = 929.1

**Verifica taglio+torsione D.M. 17-01-18 §4.4.8.1.11**

Sezione ad ascissa 0
Coefficiente parziale di sicurezza del materiale γ = 1.5
Kmod = 0.8; kcr = 0.67
τ,tor,d/(ksh*fv,d) + (τ,y,d/fv,d)^2 + (τ,z,d/fv,d)^2 <= 1
0.18+0+0.1 <= 1 Comb: SLU, 80; Durata minima del carico nella combinazione: media
Tx = -182.1; Ty = 929.1; Mt = -5820.5

**Verifica torsione D.M. 17-01-18 §4.4.8.1.10**

Sezione ad ascissa 67.6
Coefficiente parziale di sicurezza del materiale γ = 1.5
Kmod = 0.8
τ,tor,d <= Ksh * fv,d
3.52 <= 19.07 Comb: SLU, 79; Durata minima del carico nella combinazione: media
Mt = -5828.4

---

## Asta 157: Trave in legno a falda Falda 4 fili 95-198

Verifiche condotte secondo D.M. 17-01-18 (N.T.C.)

**Dati generali**

Lunghezza = 67.6

**Caratteristiche della sezione**

| Descrizione | Tipo | Base | Altezza | Area | Jx | Jy | Wx | Wy |
|---|---|---|---|---|---|---|---|---|
| R 18x23 | Rettangolare | 18 | 23 | 414 | 18250.5 | 11178 | 1587 | 1242 |

Materiale: C14 EN 338:2016
Rapporto luce/freccia elastica limite = 300
Rapporto luce/freccia elastica differita = 200

Mensola Y: Nessuno; Mensola X: Nessuno
Classe di servizio 1

**Verifica flessione D.M. 17-01-18 §4.4.8.1.6**

Sezione ad ascissa 45
Coefficiente parziale di sicurezza del materiale γ = 1.5
Kmod = 0.8
Sm,y,d/fm,y,d + Km*(Sm,z,d/fm,z,d) !> 1
Km*(Sm,y,d/fm,y,d) + Sm,z,d/fm,z,d !> 1
126.7/74.7+0.7*35/74.7=2.03 !> 1 (formula 4.4.5a) Comb: SLU, 79; Durata minima del carico nella combinazione: media - NON SODDISFATTA
Mx = -201059.1; My = 43496.3

**Verifica taglio D.M. 17-01-18 §4.4.8.1.9**

Sezione ad ascissa 0
Coefficiente parziale di sicurezza del materiale γ = 1.5
Kmod = 0.8; kcr = 0.67
τ,d <= fv,d
Sqrt(0.38^2+3.5^2) = 3.52 <= 16 Comb: SLU, 79; Durata minima del carico nella combinazione: media
Tx = -70.2; Ty = 644.1

**Verifica taglio+torsione D.M. 17-01-18 §4.4.8.1.11**

Sezione ad ascissa 0
Coefficiente parziale di sicurezza del materiale γ = 1.5
Kmod = 0.8; kcr = 0.67
τ,tor,d/(ksh*fv,d) + (τ,y,d/fv,d)^2 + (τ,z,d/fv,d)^2 <= 1
0.1+0+0.05 <= 1 Comb: SLU, 79; Durata minima del carico nella combinazione: media
Tx = -70.2; Ty = 644.1; Mt = -3315.6

**Verifica torsione D.M. 17-01-18 §4.4.8.1.10**

Sezione ad ascissa 67.6
Coefficiente parziale di sicurezza del materiale γ = 1.5
Kmod = 0.8
τ,tor,d <= Ksh * fv,d
2 <= 19.07 Comb: SLU, 79; Durata minima del carico nella combinazione: media
Mt = -3315.6

---

## Asta 158: Trave in legno a falda Falda 4 fili 95-198

Verifiche condotte secondo D.M. 17-01-18 (N.T.C.)

**Dati generali**

Lunghezza = 67.6

**Caratteristiche della sezione**

| Descrizione | Tipo | Base | Altezza | Area | Jx | Jy | Wx | Wy |
|---|---|---|---|---|---|---|---|---|
| R 18x23 | Rettangolare | 18 | 23 | 414 | 18250.5 | 11178 | 1587 | 1242 |

Materiale: C14 EN 338:2016
Rapporto luce/freccia elastica limite = 300
Rapporto luce/freccia elastica differita = 200
Mensola Y: Nessuno; Mensola X: Nessuno
Classe di servizio 1

**Verifica flessione D.M. 17-01-18 §4.4.8.1.6**

Sezione ad ascissa 27
Coefficiente parziale di sicurezza del materiale γ = 1.5
Kmod = 0.8
Sm,y,d/fm,y,d + Km*(Sm,z,d/fm,z,d) !> 1
Km*(Sm,y,d/fm,y,d) + Sm,z,d/fm,z,d !> 1
128.9/74.7+0.7*34.1/74.7=2.05 !> 1 (formula 4.4.5a) Comb: SLU, 71; Durata minima del carico nella combinazione: media - NON SODDISFATTA
Mx = -204594.9; My = 42344.8

**Verifica taglio D.M. 17-01-18 §4.4.8.1.9**

Sezione ad ascissa 67.6
Coefficiente parziale di sicurezza del materiale γ = 1.5
Kmod = 0.8; kcr = 0.67
τ,d <= fv,d
Sqrt(0.27^2+2.51^2) = 2.52 <= 16 Comb: SLU, 72; Durata minima del carico nella combinazione: media
Tx = -49; Ty = -461.6

**Verifica taglio+torsione D.M. 17-01-18 §4.4.8.1.11**

Sezione ad ascissa 67.6
Coefficiente parziale di sicurezza del materiale γ = 1.5

Kmod = 0.8; kcr = 0.67
τ,tor,d/(ksh*fv,d) + (τ,y,d/fv,d)^2 + (τ,z,d/fv,d)^2 <= 1
0.07+0+0.02 <= 1 Comb: SLU, 79; Durata minima del carico nella combinazione: media
Tx = -61.5; Ty = -457.3; Mt = -2273.2

**Verifica torsione D.M. 17-01-18 §4.4.8.1.10**

Sezione ad ascissa 67.6
Coefficiente parziale di sicurezza del materiale γ = 1.5
Kmod = 0.8
τ,tor,d <= Ksh * fv,d
1.37 <= 19.07 Comb: SLU, 79; Durata minima del carico nella combinazione: media
Mt = -2273.2

---

## Asta 159: Trave in legno a falda Falda 4 fili 95-198

Verifiche condotte secondo D.M. 17-01-18 (N.T.C.)

**Dati generali**

Lunghezza = 67.6

**Caratteristiche della sezione**

| Descrizione | Tipo | Base | Altezza | Area | Jx | Jy | Wx | Wy |
|---|---|---|---|---|---|---|---|---|
| R 18x23 | Rettangolare | 18 | 23 | 414 | 18250.5 | 11178 | 1587 | 1242 |

Materiale: C14 EN 338:2016
Rapporto luce/freccia elastica limite = 300
Rapporto luce/freccia elastica differita = 200
Mensola Y: Nessuno; Mensola X: Nessuno
Classe di servizio 1

**Verifica flessione D.M. 17-01-18 §4.4.8.1.6**

Sezione ad ascissa 11.3
Coefficiente parziale di sicurezza del materiale γ = 1.5
Kmod = 0.8
Sm,y,d/fm,y,d + Km*(Sm,z,d/fm,z,d) !> 1
Km*(Sm,y,d/fm,y,d) + Sm,z,d/fm,z,d !> 1
124.1/74.7+0.7*33.1/74.7=1.97 !> 1 (formula 4.4.5a) Comb: SLU, 71; Durata minima del carico nella combinazione: media - NON SODDISFATTA
Mx = -196909.9; My = 41103.5

**Verifica taglio D.M. 17-01-18 §4.4.8.1.9**

Sezione ad ascissa 67.6
Coefficiente parziale di sicurezza del materiale γ = 1.5
Kmod = 0.8; kcr = 0.67
τ,d <= fv,d
Sqrt(0.12^2+4.05^2) = 4.05 <= 16 Comb: SLU, 80; Durata minima del carico nella combinazione: media
Tx = 22.4; Ty = -744.5

**Verifica taglio+torsione D.M. 17-01-18 §4.4.8.1.11**

Sezione ad ascissa 67.6
Coefficiente parziale di sicurezza del materiale γ = 1.5
Kmod = 0.8; kcr = 0.67
τ,tor,d/(ksh*fv,d) + (τ,y,d/fv,d)^2 + (τ,z,d/fv,d)^2 <= 1
0.05+0+0.06 <= 1 Comb: SLU, 38; Durata minima del carico nella combinazione: media
Tx = 27.1; Ty = -744.1; Mt = -1570

**Verifica torsione D.M. 17-01-18 §4.4.8.1.10**

Sezione ad ascissa 67.6
Coefficiente parziale di sicurezza del materiale γ = 1.5
Kmod = 0.8
τ,tor,d <= Ksh * fv,d
0.95 <= 19.07 Comb: SLU, 37; Durata minima del carico nella combinazione: media
Mt = -1577.8

---

## Asta 160: Trave in legno a falda Falda 4 fili 95-198

Verifiche condotte secondo D.M. 17-01-18 (N.T.C.)

**Dati generali**

Lunghezza = 67.6

**Caratteristiche della sezione**

| Descrizione | Tipo | Base | Altezza | Area | Jx | Jy | Wx | Wy |
|---|---|---|---|---|---|---|---|---|
| R 18x23 | Rettangolare | 18 | 23 | 414 | 18250.5 | 11178 | 1587 | 1242 |

Materiale: C14 EN 338:2016
Rapporto luce/freccia elastica limite = 300
Rapporto luce/freccia elastica differita = 200
Mensola Y: Nessuno; Mensola X: Nessuno
Classe di servizio 1

**Verifica flessione D.M. 17-01-18 §4.4.8.1.6**

Sezione ad ascissa 0
Coefficiente parziale di sicurezza del materiale γ = 1.5
Kmod = 0.8
Sm,y,d/fm,y,d + Km*(Sm,z,d/fm,z,d) !> 1
Km*(Sm,y,d/fm,y,d) + Sm,z,d/fm,z,d !> 1
110.5/74.7+0.7*34.6/74.7=1.8 !> 1 (formula 4.4.5a) Comb: SLU, 72; Durata minima del carico nella combinazione: media - NON SODDISFATTA
Mx = -175401; My = 43016

**Verifica taglio D.M. 17-01-18 §4.4.8.1.9**

Sezione ad ascissa 67.6
Coefficiente parziale di sicurezza del materiale γ = 1.5
Kmod = 0.8; kcr = 0.67
τ,d <= fv,d
Sqrt(0.87^2+5.48^2) = 5.55 <= 16 Comb: SLU, 80; Durata minima del carico nella combinazione: media
Tx = 160.8; Ty = -1007.7

**Verifica taglio+torsione D.M. 17-01-18 §4.4.8.1.11**

Sezione ad ascissa 67.6
Coefficiente parziale di sicurezza del materiale γ = 1.5
Kmod = 0.8; kcr = 0.67
τ,tor,d/(ksh*fv,d) + (τ,y,d/fv,d)^2 + (τ,z,d/fv,d)^2 <= 1
0.05+0+0.12 <= 1 Comb: SLU, 80; Durata minima del carico nella combinazione: media
Tx = 160.8; Ty = -1007.7; Mt = 1453.8

**Verifica torsione D.M. 17-01-18 §4.4.8.1.10**

Sezione ad ascissa 67.6
Coefficiente parziale di sicurezza del materiale γ = 1.5
Kmod = 0.8
τ,tor,d <= Ksh * fv,d
0.88 <= 19.07 Comb: SLU, 80; Durata minima del carico nella combinazione: media
Mt = 1453.8

---

## Asta 161: Trave in legno a falda Falda 4 fili 95-198

Verifiche condotte secondo D.M. 17-01-18 (N.T.C.)

**Dati generali**

Lunghezza = 67.6

**Caratteristiche della sezione**

| Descrizione | Tipo | Base | Altezza | Area | Jx | Jy | Wx | Wy |
|---|---|---|---|---|---|---|---|---|
| R 18x23 | Rettangolare | 18 | 23 | 414 | 18250.5 | 11178 | 1587 | 1242 |

Materiale: C14 EN 338:2016
Rapporto luce/freccia elastica limite = 300
Rapporto luce/freccia elastica differita = 200
Mensola Y: Nessuno; Mensola X: Nessuno
Classe di servizio 1

**Verifica flessione D.M. 17-01-18 §4.4.8.1.6**

Sezione ad ascissa 0
Coefficiente parziale di sicurezza del materiale γ = 1.5
Kmod = 0.8
Sm,y,d/fm,y,d + Km*(Sm,z,d/fm,z,d) !> 1
Km*(Sm,y,d/fm,y,d) + Sm,z,d/fm,z,d !> 1
86.7/74.7+0.7*42.7/74.7=1.56 !> 1 (formula 4.4.5a) Comb: SLU, 80; Durata minima del carico nella combinazione: media - NON SODDISFATTA
Mx = -137616.9; My = 53034.3

**Verifica taglio D.M. 17-01-18 §4.4.8.1.9**

Sezione ad ascissa 67.6
Coefficiente parziale di sicurezza del materiale γ = 1.5
Kmod = 0.8; kcr = 0.67
τ,d <= fv,d
Sqrt(2.07^2+5.64^2) = 6.01 <= 16 Comb: SLU, 71; Durata minima del carico nella combinazione: media
Tx = -381.4; Ty = -1037.8

**Verifica taglio+torsione D.M. 17-01-18 §4.4.8.1.11**

Sezione ad ascissa 67.6
Coefficiente parziale di sicurezza del materiale γ = 1.5
Kmod = 0.8; kcr = 0.67
τ,tor,d/(ksh*fv,d) + (τ,y,d/fv,d)^2 + (τ,z,d/fv,d)^2 <= 1
0.04+0.02+0.12 <= 1 Comb: SLU, 71; Durata minima del carico nella combinazione: media
Tx = -381.4; Ty = -1037.8; Mt = -1229.8

**Verifica torsione D.M. 17-01-18 §4.4.8.1.10**

Sezione ad ascissa 67.6
Coefficiente parziale di sicurezza del materiale γ = 1.5
Kmod = 0.8
τ,tor,d <= Ksh * fv,d
0.74 <= 19.07 Comb: SLU, 71; Durata minima del carico nella combinazione: media
Mt = -1229.8

---

## Asta 162: Trave in legno a falda Falda 4 fili 95-198

Verifiche condotte secondo D.M. 17-01-18 (N.T.C.)

**Dati generali**

Lunghezza = 67.6

**Caratteristiche della sezione**

| Descrizione | Tipo | Base | Altezza | Area | Jx | Jy | Wx | Wy |
|---|---|---|---|---|---|---|---|---|
| R 18x23 | Rettangolare | 18 | 23 | 414 | 18250.5 | 11178 | 1587 | 1242 |

Materiale: C14 EN 338:2016
Rapporto luce/freccia elastica limite = 300
Rapporto luce/freccia elastica differita = 200
Mensola Y: Nessuno; Mensola X: Nessuno
Classe di servizio 1

**Verifica flessione D.M. 17-01-18 §4.4.8.1.6**

Sezione ad ascissa 0
Coefficiente parziale di sicurezza del materiale γ = 1.5
Kmod = 0.8
Sm,y,d/fm,y,d + Km*(Sm,z,d/fm,z,d) !> 1
Km*(Sm,y,d/fm,y,d) + Sm,z,d/fm,z,d <= 1
59.9/74.7+0.7*23/74.7=1.02 !> 1 (formula 4.4.5a) Comb: SLU, 80; Durata minima del carico nella combinazione: media - NON SODDISFATTA
Mx = -95093; My = 28550.2

**Verifica taglio D.M. 17-01-18 §4.4.8.1.9**

Sezione ad ascissa 67.6
Coefficiente parziale di sicurezza del materiale γ = 1.5
Kmod = 0.8; kcr = 0.67
τ,d <= fv,d
Sqrt(2.09^2+6.63^2) = 6.95 <= 16 Comb: SLU, 79; Durata minima del carico nella combinazione: media
Tx = -384.3; Ty = -1219.7

**Verifica taglio+torsione D.M. 17-01-18 §4.4.8.1.11**

Sezione ad ascissa 67.6
Coefficiente parziale di sicurezza del materiale γ = 1.5
Kmod = 0.8; kcr = 0.67
τ,tor,d/(ksh*fv,d) + (τ,y,d/fv,d)^2 + (τ,z,d/fv,d)^2 <= 1
0.08+0.02+0.17 <= 1 Comb: SLU, 71; Durata minima del carico nella combinazione: media
Tx = -387.8; Ty = -1218.2; Mt = -2390.7

**Verifica torsione D.M. 17-01-18 §4.4.8.1.10**

Sezione ad ascissa 67.6
Coefficiente parziale di sicurezza del materiale γ = 1.5
Kmod = 0.8
τ,tor,d <= Ksh * fv,d
1.44 <= 19.07 Comb: SLU, 71; Durata minima del carico nella combinazione: media
Mt = -2390.7

---

## Asta 163: Trave in legno a falda Falda 4 fili 95-198

Verifiche condotte secondo D.M. 17-01-18 (N.T.C.)

Dati generali

Lunghezza = 67.6

Caratteristiche della sezione

| Descrizione | Tipo | Base | Altezza | Area | Jx | Jy | Wx | Wy |
|---|---|---|---|---|---|---|---|---|
| R 18x23 | Rettangolare | 18 | 23 | 414 | 18250.5 | 11178 | 1587 | 1242 |

Materiale: C14 EN 338:2016
Rapporto luce/freccia elastica limite = 300
Rapporto luce/freccia elastica differita = 200
Mensola Y: Nessuno; Mensola X: Nessuno
Classe di servizio 1

Verifica flessione D.M. 17-01-18 §4.4.8.1.6

Sezione ad ascissa 0
Coefficiente parziale di sicurezza del materiale γ = 1.5
Kmod = 0.8
Sm,y,d/fm,y,d + Km*(Sm,z,d/fm,z,d) <= 1
Km*(Sm,y,d/fm,y,d) + Sm,z,d/fm,z,d <= 1
24/74.7+0.7*3.2/74.7=0.35 <= 1 (formula 4.4.5a) Comb: SLU, 80; Durata minima del carico nella combinazione: media
Mx = -38106; My = 3956.1

Verifica taglio D.M. 17-01-18 §4.4.8.1.9

Sezione ad ascissa 67.6
Coefficiente parziale di sicurezza del materiale γ = 1.5
Kmod = 0.8; kcr = 0.67
τ,d <= fv,d
Sqrt(1.62^2+6.81^2) = 6.99 <= 16 Comb: SLU, 79; Durata minima del carico nella combinazione: media
Tx = -297.4; Ty = -1252.1

Verifica taglio+torsione D.M. 17-01-18 §4.4.8.1.11

Sezione ad ascissa 67.6
Coefficiente parziale di sicurezza del materiale γ = 1.5
Kmod = 0.8; kcr = 0.67
τ,tor,d/(ksh*fv,d) + (τ,y,d/fv,d)^2 + (τ,z,d/fv,d)^2 <= 1
0.02+0.01+0.18 <= 1 Comb: SLU, 79; Durata minima del carico nella combinazione: media
Tx = -297.4; Ty = -1252.1; Mt = -535.4

Verifica torsione D.M. 17-01-18 §4.4.8.1.10

Sezione ad ascissa 67.6
Coefficiente parziale di sicurezza del materiale γ = 1.5
Kmod = 1.1
τ,tor,d <= Ksh * fv,d
0.92 <= 26.22 Comb: SLV, 6; Durata minima del carico nella combinazione: istantaneo
Mt = -1520.3

## Asta 164: Trave in legno a falda Falda 4 fili 95-198

Verifiche condotte secondo D.M. 17-01-18 (N.T.C.)

Dati generali

Lunghezza = 39.5

Caratteristiche della sezione

| Descrizione | Tipo | Base | Altezza | Area | Jx | Jy | Wx | Wy |
|---|---|---|---|---|---|---|---|---|
| R 18x23 | Rettangolare | 18 | 23 | 414 | 18250.5 | 11178 | 1587 | 1242 |

Materiale: C14 EN 338:2016
Rapporto luce/freccia elastica limite = 300
Rapporto luce/freccia elastica differita = 200
Mensola Y: Nessuno; Mensola X: Nessuno
Classe di servizio 1

Verifica flessione D.M. 17-01-18 §4.4.8.1.6

Sezione ad ascissa 39.5
Coefficiente parziale di sicurezza del materiale γ = 1.5
Kmod = 0.8
Sm,y,d/fm,y,d + Km*(Sm,z,d/fm,z,d) <= 1
Km*(Sm,y,d/fm,y,d) + Sm,z,d/fm,z,d <= 1
28.2/74.7+0.7*14.8/74.7=0.52 <= 1 (formula 4.4.5a) Comb: SLU, 71; Durata minima del carico nella combinazione: media
Mx = 44710.2; My = -18387.4

Verifica taglio D.M. 17-01-18 §4.4.8.1.9

Sezione ad ascissa 39.5

Coefficiente parziale di sicurezza del materiale γ = 1.5
Kmod = 0.8; kcr = 0.67
τ,d <= fv,d
Sqrt(0.38^2+3.96^2) = 3.98 <= 16 Comb: SLU, 79; Durata minima del carico nella combinazione: media
Tx = -69.6; Ty = -729.1

**Verifica taglio+torsione D.M. 17-01-18 §4.4.8.1.11**

Sezione ad ascissa 39.5
Coefficiente parziale di sicurezza del materiale γ = 1.5
Kmod = 0.8; kcr = 0.67
τ,tor,d/(ksh*fv,d) + (τ,y,d/fv,d)^2 + (τ,z,d/fv,d)^2 <= 1
0.08+0+0.06 <= 1 Comb: SLU, 29; Durata minima del carico nella combinazione: media
Tx = -72.5; Ty = -720.9; Mt = -2444.2

**Verifica torsione D.M. 17-01-18 §4.4.8.1.10**

Sezione ad ascissa 39.5
Coefficiente parziale di sicurezza del materiale γ = 1.5
Kmod = 0.8
τ,tor,d <= Ksh * fv,d
1.48 <= 19.07 Comb: SLU, 29; Durata minima del carico nella combinazione: media
Mt = -2444.2

---

## Asta 165: Trave in legno a falda Falda 1 fili 178-179

Verifiche condotte secondo D.M. 17-01-18 (N.T.C.)

**Dati generali**

Lunghezza = 165.2

**Caratteristiche della sezione**

| Descrizione | Tipo | Base | Altezza | Area | Jx | Jy | Wx | Wy |
|---|---|---|---|---|---|---|---|---|
| R 8x10 | Rettangolare | 8 | 10 | 80 | 666.67 | 426.67 | 133.33 | 106.67 |

Materiale: C14 EN 338:2016
Rapporto luce/freccia elastica limite = 300
Rapporto luce/freccia elastica differita = 200
Mensola Y: Nessuno; Mensola X: Nessuno
Classe di servizio 1

**Verifica tensoflessione D.M. 17-01-18 §4.4.8.1.7**

Sezione ad ascissa 165.2
Coefficiente parziale di sicurezza del materiale γ = 1.5
Kmod = 0.8; Kh = 1.084 (formula 11.7.1)
St,0,d/ft,0,d + Sm,y,d/fm,y,d + Km*(Sm,z,d/fm,z,d) !> 1
St,0,d/ft,0,d + Km*(Sm,y,d/fm,y,d) + Sm,z,d/fm,z,d !> 1
0.7/41.6+118.9/81+0.7*6.8/81=1.54 !> 1 [4.4.6a] Comb: SLU, 72; Durata minima del carico nella combinazione: media - NON SODDISFATTA
Mx = 15856.3; My = 723.4; N = 55.8

**Verifica taglio D.M. 17-01-18 §4.4.8.1.9**

Sezione ad ascissa 165.2
Coefficiente parziale di sicurezza del materiale γ = 1.5
Kmod = 0.8; kcr = 0.67
τ,d <= fv,d
Sqrt(0.26^2+3^2) = 3.01 <= 16 Comb: SLU, 72; Durata minima del carico nella combinazione: media
Tx = 9.4; Ty = -106.6

**Verifica taglio+torsione D.M. 17-01-18 §4.4.8.1.11**

Sezione ad ascissa 165.2
Coefficiente parziale di sicurezza del materiale γ = 1.5
Kmod = 0.8; Kh = 1.084 (formula 11.7.1); kcr = 0.67
τ,tor,d/(ksh*fv,d) + (τ,y,d/fv,d)^2 + (τ,z,d/fv,d)^2 <= 1
0+0+0.04 <= 1 Comb: SLU, 72; Durata minima del carico nella combinazione: media
Tx = 9.4; Ty = -106.6; Mt = -1.6

**Verifica torsione D.M. 17-01-18 §4.4.8.1.10**

Sezione ad ascissa 165.2
Coefficiente parziale di sicurezza del materiale γ = 1.5
Kmod = 1.1
τ,tor,d <= Ksh * fv,d
0.17 <= 26.13 Comb: SLV, 6; Durata minima del carico nella combinazione: istantaneo
Mt = 24

---

## Asta 166: Trave in legno a falda Falda 1 fili 178-179

Verifiche condotte secondo D.M. 17-01-18 (N.T.C.)

### Dati generali

Lunghezza = 262.7

### Caratteristiche della sezione

| Descrizione | Tipo | Base | Altezza | Area | Jx | Jy | Wx | Wy |
|---|---|---|---|---|---|---|---|---|
| R 8x10 | Rettangolare | 8 | 10 | 80 | 666.67 | 426.67 | 133.33 | 106.67 |

Materiale: C14 EN 338:2016
Rapporto luce/freccia elastica limite = 300
Rapporto luce/freccia elastica differita = 200
Mensola Y: Nessuno; Mensola X: Nessuno
Classe di servizio 1

### Verifica taglio D.M. 17-01-18 §4.4.8.1.9

Sezione ad ascissa 0
Coefficiente parziale di sicurezza del materiale γ = 1.5
Kmod = 0.8; kcr = 0.67
τ,d <= fv,d
Sqrt(0.09^2+6.11^2) = 6.11 <= 16 Comb: SLU, 80; Durata minima del carico nella combinazione: media
Tx = 3.1; Ty = 217.4

### Verifica pressoflessione D.M. 17-01-18 §4.4.8.1.8

Sezione ad ascissa 262.7
Coefficiente parziale di sicurezza del materiale γ = 1.5
Kmod = 0.8; Kh = 1.084 (formula 11.7.1)
(Sc,0,d/fc,0,d)^2 + Sm,y,d/fm,y,d + Km*(Sm,z,d/fm,z,d) <= 1
(Sc,0,d/fc,0,d)^2 + Km*(Sm,y,d/fm,y,d) + Sm,z,d/fm,z,d <= 1
(1.6/85.3)^2+244.5/81+0.7*4.8/80.97=3.06 !> 1 [4.4.7a] Comb: SLU, 80; Durata minima del carico nella combinazione: media - NON SODDISFATTA
Mx = -32602; My = 511.9; N = -124.8

### Verifica taglio+torsione D.M. 17-01-18 §4.4.8.1.11

Sezione ad ascissa 0
Coefficiente parziale di sicurezza del materiale γ = 1.5
Kmod = 0.8; Kh = 1.084 (formula 11.7.1); kcr = 0.67
τ,tor,d/(ksh*fv,d) + (τ,y,d/fv,d)^2 + (τ,z,d/fv,d)^2 <= 1
0.02+0+0.15 <= 1 Comb: SLU, 80; Durata minima del carico nella combinazione: media
Tx = 3.1; Ty = 217.4; Mt = -61.4

### Verifica torsione D.M. 17-01-18 §4.4.8.1.10

Sezione ad ascissa 262.7
Coefficiente parziale di sicurezza del materiale γ = 1.5
Kmod = 0.8
τ,tor,d <= Ksh * fv,d
0.44 <= 19 Comb: SLU, 79; Durata minima del carico nella combinazione: media
Mt = -62.6

---

## Asta 167: Trave in legno a falda Falda 1 fili 184-185

Verifiche condotte secondo D.M. 17-01-18 (N.T.C.)

### Dati generali

Lunghezza = 165.2

### Caratteristiche della sezione

| Descrizione | Tipo | Base | Altezza | Area | Jx | Jy | Wx | Wy |
|---|---|---|---|---|---|---|---|---|
| R 8x10 | Rettangolare | 8 | 10 | 80 | 666.67 | 426.67 | 133.33 | 106.67 |

Materiale: C14 EN 338:2016
Rapporto luce/freccia elastica limite = 300
Rapporto luce/freccia elastica differita = 200
Mensola Y: Nessuno; Mensola X: Nessuno
Classe di servizio 1

### Verifica tensoflessione D.M. 17-01-18 §4.4.8.1.7

Sezione ad ascissa 165.2
Coefficiente parziale di sicurezza del materiale γ = 1.5
Kmod = 0.8; Kh = 1.084 (formula 11.7.1)
St,0,d/ft,0,d + Sm,y,d/fm,y,d + Km*(Sm,z,d/fm,z,d) !> 1
St,0,d/ft,0,d + Km*(Sm,y,d/fm,y,d) + Sm,z,d/fm,z,d !> 1
0.6/41.6+116.5/81+0.7*6.3/81=1.51 !> 1 [4.4.6a] Comb: SLU, 72; Durata minima del carico nella combinazione: media - NON SODDISFATTA

Mx = 15534.4; My = 675.3; N = 50.1

**Verifica taglio D.M. 17-01-18 §4.4.8.1.9**

Sezione ad ascissa 165.2
Coefficiente parziale di sicurezza del materiale γ = 1.5
Kmod = 0.8; kcr = 0.67
τ,d <= fv,d
Sqrt(0.25^2+3.02^2) = 3.03 <= 16 Comb: SLU, 72; Durata minima del carico nella combinazione: media
Tx = 8.9; Ty = -107.4

**Verifica taglio+torsione D.M. 17-01-18 §4.4.8.1.11**

Sezione ad ascissa 165.2
Coefficiente parziale di sicurezza del materiale γ = 1.5
Kmod = 0.8; Kh = 1.084 (formula 11.7.1); kcr = 0.67
τ,tor,d/(ksh*fv,d) + (τ,y,d/fv,d)^2 + (τ,z,d/fv,d)^2 <= 1
0+0+0.04 <= 1 Comb: SLU, 72; Durata minima del carico nella combinazione: media
Tx = 8.9; Ty = -107.4; Mt = -3.4

**Verifica torsione D.M. 17-01-18 §4.4.8.1.10**

Sezione ad ascissa 165.2
Coefficiente parziale di sicurezza del materiale γ = 1.5
Kmod = 1.1
τ,tor,d <= Ksh * fv,d
0.14 <= 26.13 Comb: SLV, 6; Durata minima del carico nella combinazione: istantaneo
Mt = 20.4

---

## Asta 168: Trave in legno a falda Falda 1 fili 184-185

Verifiche condotte secondo D.M. 17-01-18 (N.T.C.)

**Dati generali**

Lunghezza = 262.7

**Caratteristiche della sezione**

| Descrizione | Tipo | Base | Altezza | Area | Jx | Jy | Wx | Wy |
|---|---|---|---|---|---|---|---|---|
| R 8x10 | Rettangolare | 8 | 10 | 80 | 666.67 | 426.67 | 133.33 | 106.67 |

Materiale: C14 EN 338:2016
Rapporto luce/freccia elastica limite = 300
Rapporto luce/freccia elastica differita = 200
Mensola Y: Nessuno; Mensola X: Nessuno
Classe di servizio 1

**Verifica taglio D.M. 17-01-18 §4.4.8.1.9**

Sezione ad ascissa 0
Coefficiente parziale di sicurezza del materiale γ = 1.5
Kmod = 0.8; kcr = 0.67
τ,d <= fv,d
Sqrt(0.08^2+5.79^2) = 5.79 <= 16 Comb: SLU, 80; Durata minima del carico nella combinazione: media
Tx = 2.8; Ty = 206

**Verifica pressoflessione D.M. 17-01-18 §4.4.8.1.8**

Sezione ad ascissa 262.7
Coefficiente parziale di sicurezza del materiale γ = 1.5
Kmod = 0.8; Kh = 1.084 (formula 11.7.1)
(Sc,0,d/fc,0,d)^2 + Sm,y,d/fm,y,d + Km*(Sm,z,d/fm,z,d) <= 1
(Sc,0,d/fc,0,d)^2 + Km*(Sm,y,d/fm,y,d) + Sm,z,d/fm,z,d <= 1
(1.2/85.3)^2+231.2/81+0.7*4.4/80.97=2.89 !> 1 [4.4.7a] Comb: SLU, 80; Durata minima del carico nella combinazione: media - NON SODDISFATTA
Mx = -30833; My = 474.1; N = -96.2

**Verifica taglio+torsione D.M. 17-01-18 §4.4.8.1.11**

Sezione ad ascissa 0
Coefficiente parziale di sicurezza del materiale γ = 1.5
Kmod = 0.8; Kh = 1.084 (formula 11.7.1); kcr = 0.67
τ,tor,d/(ksh*fv,d) + (τ,y,d/fv,d)^2 + (τ,z,d/fv,d)^2 <= 1
0.02+0+0.13 <= 1 Comb: SLU, 79; Durata minima del carico nella combinazione: media
Tx = 2.8; Ty = 205.6; Mt = -57.9

**Verifica torsione D.M. 17-01-18 §4.4.8.1.10**

Sezione ad ascissa 262.7
Coefficiente parziale di sicurezza del materiale γ = 1.5
Kmod = 0.8
τ,tor,d <= Ksh * fv,d

0.41 <= 19 Comb: SLU, 79; Durata minima del carico nella combinazione: media
Mt = -57.9

## Asta 169: Trave in legno a falda Falda 1 fili 191-192

Verifiche condotte secondo D.M. 17-01-18 (N.T.C.)

### Dati generali

Lunghezza = 165.2

### Caratteristiche della sezione

| Descrizione | Tipo | Base | Altezza | Area | Jx | Jy | Wx | Wy |
|---|---|---|---|---|---|---|---|---|
| R 8x10 | Rettangolare | 8 | 10 | 80 | 666.67 | 426.67 | 133.33 | 106.67 |

Materiale: C14 EN 338:2016
Rapporto luce/freccia elastica limite = 300
Rapporto luce/freccia elastica differita = 200
Mensola Y: Nessuno; Mensola X: Nessuno
Classe di servizio 1

### Verifica tensoflessione D.M. 17-01-18 §4.4.8.1.7

Sezione ad ascissa 165.2
Coefficiente parziale di sicurezza del materiale γ = 1.5
Kmod = 0.8; Kh = 1.084 (formula 11.7.1)
St,0,d/ft,0,d + Sm,y,d/fm,y,d + Km*(Sm,z,d/fm,z,d) !> 1
St,0,d/ft,0,d + Km*(Sm,y,d/fm,y,d) + Sm,z,d/fm,z,d !> 1
1.5/41.6+104.8/81+0.7*6.1/81=1.38 !> 1 [4.4.6a] Comb: SLU, 72; Durata minima del carico nella combinazione: media - NON SODDISFATTA
Mx = 13978.4; My = 649.5; N = 116.8

### Verifica taglio D.M. 17-01-18 §4.4.8.1.9

Sezione ad ascissa 165.2
Coefficiente parziale di sicurezza del materiale γ = 1.5
Kmod = 0.8; kcr = 0.67
τ,d <= fv,d
Sqrt(0.18^2+2.91^2) = 2.91 <= 16 Comb: SLU, 72; Durata minima del carico nella combinazione: media
Tx = 6.4; Ty = -103.4

### Verifica taglio+torsione D.M. 17-01-18 §4.4.8.1.11

Sezione ad ascissa 165.2
Coefficiente parziale di sicurezza del materiale γ = 1.5
Kmod = 0.8; Kh = 1.084 (formula 11.7.1); kcr = 0.67
τ,tor,d/(ksh*fv,d) + (τ,y,d/fv,d)^2 + (τ,z,d/fv,d)^2 <= 1
0+0+0.03 <= 1 Comb: SLU, 71; Durata minima del carico nella combinazione: media
Tx = 4.8; Ty = -103.4; Mt = 1.9

### Verifica torsione D.M. 17-01-18 §4.4.8.1.10

Sezione ad ascissa 165.2
Coefficiente parziale di sicurezza del materiale γ = 1.5
Kmod = 1.1
τ,tor,d <= Ksh * fv,d
0.13 <= 26.13 Comb: SLV, 4; Durata minima del carico nella combinazione: istantaneo
Mt = 18.7

## Asta 170: Trave in legno a falda Falda 1 fili 191-192

Verifiche condotte secondo D.M. 17-01-18 (N.T.C.)

### Dati generali

Lunghezza = 262.7

### Caratteristiche della sezione

| Descrizione | Tipo | Base | Altezza | Area | Jx | Jy | Wx | Wy |
|---|---|---|---|---|---|---|---|---|
| R 8x10 | Rettangolare | 8 | 10 | 80 | 666.67 | 426.67 | 133.33 | 106.67 |

Materiale: C14 EN 338:2016
Rapporto luce/freccia elastica limite = 300
Rapporto luce/freccia elastica differita = 200
Mensola Y: Nessuno; Mensola X: Nessuno
Classe di servizio 1

### Verifica taglio D.M. 17-01-18 §4.4.8.1.9

Sezione ad ascissa 0
Coefficiente parziale di sicurezza del materiale γ = 1.5

Kmod = 0.8; kcr = 0.67
τ,d <= fv,d
Sqrt(0.05^2+5.73^2) = 5.73 <= 16 Comb: SLU, 80; Durata minima del carico nella combinazione: media
Tx = 1.9; Ty = 203.8

**Verifica pressoflessione D.M. 17-01-18 §4.4.8.1.8**

Sezione ad ascissa 262.7
Coefficiente parziale di sicurezza del materiale γ = 1.5
Kmod = 0.8; Kh = 1.084 (formula 11.7.1)
(Sc,0,d/fc,0,d)^2 + Sm,y,d/fm,y,d + Km*(Sm,z,d/fm,z,d) <= 1
(Sc,0,d/fc,0,d)^2 + Km*(Sm,y,d/fm,y,d) + Sm,z,d/fm,z,d <= 1
(2.2/85.3)^2+225.1/81+0.7*2.3/80.97=2.8 !> 1 [4.4.7a] Comb: SLU, 80; Durata minima del carico nella combinazione: media - NON SODDISFATTA
Mx = -30008; My = 249.4; N = -176.6

**Verifica taglio+torsione D.M. 17-01-18 §4.4.8.1.11**

Sezione ad ascissa 0
Coefficiente parziale di sicurezza del materiale γ = 1.5
Kmod = 0.8; Kh = 1.084 (formula 11.7.1); kcr = 0.67
τ,tor,d/(ksh*fv,d) + (τ,y,d/fv,d)^2 + (τ,z,d/fv,d)^2 <= 1
0.02+0+0.13 <= 1 Comb: SLU, 80; Durata minima del carico nella combinazione: media
Tx = 1.9; Ty = 203.8; Mt = -54.9

**Verifica torsione D.M. 17-01-18 §4.4.8.1.10**

Sezione ad ascissa 262.7
Coefficiente parziale di sicurezza del materiale γ = 1.5
Kmod = 0.8
τ,tor,d <= Ksh * fv,d
0.4 <= 19 Comb: SLU, 79; Durata minima del carico nella combinazione: media
Mt = -56.7

---

## Asta 171: Trave in legno a falda Falda 1 fili 201-202

Verifiche condotte secondo D.M. 17-01-18 (N.T.C.)

**Dati generali**

Lunghezza = 41.5

**Caratteristiche della sezione**

| Descrizione | Tipo | Base | Altezza | Area | Jx | Jy | Wx | Wy |
|---|---|---|---|---|---|---|---|---|
| R 8x10 | Rettangolare | 8 | 10 | 80 | 666.67 | 426.67 | 133.33 | 106.67 |

Materiale: C14 EN 338:2016
Rapporto luce/freccia elastica limite = 300
Rapporto luce/freccia elastica differita = 200
Mensola Y: Nessuno; Mensola X: Nessuno
Classe di servizio 1

**Verifica tensoflessione D.M. 17-01-18 §4.4.8.1.7**

Sezione ad ascissa 0
Coefficiente parziale di sicurezza del materiale γ = 1.5
Kmod = 1.1; Kh = 1.084 (formula 11.7.1)
St,0,d/ft,0,d + Sm,y,d/fm,y,d + Km*(Sm,z,d/fm,z,d) <= 1
St,0,d/ft,0,d + Km*(Sm,y,d/fm,y,d) + Sm,z,d/fm,z,d <= 1
8.1/57.3+0.7*10.6/111.3+25.9/111.3=0.44 <= 1 [4.4.6b] Comb: SLV, 10; Durata minima del carico nella combinazione: istantaneo
Mx = -1409.1; My = -2764.9; N = 651.1

**Verifica taglio D.M. 17-01-18 §4.4.8.1.9**

Sezione ad ascissa 0
Coefficiente parziale di sicurezza del materiale γ = 1.5
Kmod = 1.1; kcr = 0.67
τ,d <= fv,d
Sqrt(3.84^2+1.36^2) = 4.08 <= 22 Comb: SLV, 8; Durata minima del carico nella combinazione: istantaneo
Tx = -136.6; Ty = 48.5

**Verifica taglio+torsione D.M. 17-01-18 §4.4.8.1.11**

Sezione ad ascissa 41.5
Coefficiente parziale di sicurezza del materiale γ = 1.5
Kmod = 1.1; Kh = 1.084 (formula 11.7.1); kcr = 0.67
τ,tor,d/(ksh*fv,d) + (τ,y,d/fv,d)^2 + (τ,z,d/fv,d)^2 <= 1
0.02+0.03+0 <= 1 Comb: SLV, 10; Durata minima del carico nella combinazione: istantaneo
Tx = 135.1; Ty = -46.3; Mt = -71.5

### Verifica torsione D.M. 17-01-18 §4.4.8.1.10

Sezione ad ascissa 41.5
Coefficiente parziale di sicurezza del materiale γ = 1.5
Kmod = 1.1
τ,tor,d <= Ksh * fv,d
0.53 <= 26.13 Comb: SLV, 14; Durata minima del carico nella combinazione: istantaneo
Mt = -74.6

---

## Asta 172: Trave in legno a falda Falda 1 fili 201-202

Verifiche condotte secondo D.M. 17-01-18 (N.T.C.)

### Dati generali

Lunghezza = 41.6

### Caratteristiche della sezione

| Descrizione | Tipo | Base | Altezza | Area | Jx | Jy | Wx | Wy |
|---|---|---|---|---|---|---|---|---|
| R 8x10 | Rettangolare | 8 | 10 | 80 | 666.67 | 426.67 | 133.33 | 106.67 |

Materiale: C14 EN 338:2016
Rapporto luce/freccia elastica limite = 300
Rapporto luce/freccia elastica differita = 200
Mensola Y: Nessuno; Mensola X: Nessuno
Classe di servizio 1

### Verifica tensoflessione D.M. 17-01-18 §4.4.8.1.7

Sezione ad ascissa 41.6
Coefficiente parziale di sicurezza del materiale γ = 1.5
Kmod = 1.1; Kh = 1.084 (formula 11.7.1)
St,0,d/ft,0,d + Sm,y,d/fm,y,d + Km*(Sm,z,d/fm,z,d) <= 1
St,0,d/ft,0,d + Km*(Sm,y,d/fm,y,d) + Sm,z,d/fm,z,d <= 1
16.5/57.3+0.7*4.4/111.3+26/111.3=0.55 <= 1 [4.4.6b] Comb: SLV, 10; Durata minima del carico nella combinazione: istantaneo
Mx = 581; My = 2775.5; N = 1318.8

### Verifica taglio D.M. 17-01-18 §4.4.8.1.9

Sezione ad ascissa 0
Coefficiente parziale di sicurezza del materiale γ = 1.5
Kmod = 1.1; kcr = 0.67
τ,d <= fv,d
Sqrt(3.67^2+0.17^2) = 3.68 <= 22 Comb: SLV, 8; Durata minima del carico nella combinazione: istantaneo
Tx = -130.6; Ty = 5.9

### Verifica taglio+torsione D.M. 17-01-18 §4.4.8.1.11

Sezione ad ascissa 0
Coefficiente parziale di sicurezza del materiale γ = 1.5
Kmod = 1.1; Kh = 1.084 (formula 11.7.1); kcr = 0.67
τ,tor,d/(ksh*fv,d) + (τ,y,d/fv,d)^2 + (τ,z,d/fv,d)^2 <= 1
0.01+0.03+0 <= 1 Comb: SLV, 8; Durata minima del carico nella combinazione: istantaneo
Tx = -130.6; Ty = 5.9; Mt = 26.6

### Verifica torsione D.M. 17-01-18 §4.4.8.1.10

Sezione ad ascissa 41.6
Coefficiente parziale di sicurezza del materiale γ = 1.5
Kmod = 1.1
τ,tor,d <= Ksh * fv,d
0.19 <= 26.13 Comb: SLV, 8; Durata minima del carico nella combinazione: istantaneo
Mt = 26.6

---

## Asta 173: Trave in legno a falda Falda 1 fili 201-202

Verifiche condotte secondo D.M. 17-01-18 (N.T.C.)

### Dati generali

Lunghezza = 41.6

### Caratteristiche della sezione

| Descrizione | Tipo | Base | Altezza | Area | Jx | Jy | Wx | Wy |
|---|---|---|---|---|---|---|---|---|
| R 8x10 | Rettangolare | 8 | 10 | 80 | 666.67 | 426.67 | 133.33 | 106.67 |

Materiale: C14 EN 338:2016
Rapporto luce/freccia elastica limite = 300
Rapporto luce/freccia elastica differita = 200

Mensola Y: Nessuno; Mensola X: Nessuno
Classe di servizio 1

**Verifica tensoflessione D.M. 17-01-18 §4.4.8.1.7**

Sezione ad ascissa 41.6
Coefficiente parziale di sicurezza del materiale γ = 1.5
Kmod = 1.1; Kh = 1.084 (formula 11.7.1)
St,0,d/ft,0,d + Sm,y,d/fm,y,d + Km*(Sm,z,d/fm,z,d) <= 1
St,0,d/ft,0,d + Km*(Sm,y,d/fm,y,d) + Sm,z,d/fm,z,d <= 1
19.4/57.3+0.7*3/111.3+26.5/111.3=0.6 <= 1 [4.4.6b] Comb: SLV, 6; Durata minima del carico nella combinazione: istantaneo
Mx = -402.2; My = 2831.1; N = 1551

**Verifica taglio D.M. 17-01-18 §4.4.8.1.9**

Sezione ad ascissa 41.6
Coefficiente parziale di sicurezza del materiale γ = 1.5
Kmod = 1.1; kcr = 0.67
τ,d <= fv,d
Sqrt(3.15^2+0.46^2) = 3.18 <= 22 Comb: SLV, 12; Durata minima del carico nella combinazione: istantaneo
Tx = -112; Ty = -16.5

**Verifica taglio+torsione D.M. 17-01-18 §4.4.8.1.11**

Sezione ad ascissa 41.6
Coefficiente parziale di sicurezza del materiale γ = 1.5
Kmod = 1.1; Kh = 1.084 (formula 11.7.1); kcr = 0.67
τ,tor,d/(ksh*fv,d) + (τ,y,d/fv,d)^2 + (τ,z,d/fv,d)^2 <= 1
0.02+0.02+0 <= 1 Comb: SLV, 12; Durata minima del carico nella combinazione: istantaneo
Tx = -112; Ty = -16.5; Mt = -70.7

**Verifica torsione D.M. 17-01-18 §4.4.8.1.10**

Sezione ad ascissa 41.6
Coefficiente parziale di sicurezza del materiale γ = 1.5
Kmod = 1.1
τ,tor,d <= Ksh * fv,d
0.71 <= 26.13 Comb: SLV, 8; Durata minima del carico nella combinazione: istantaneo
Mt = -99.9

---

## Asta 174: Trave in legno a falda Falda 1 fili 201-202

Verifiche condotte secondo D.M. 17-01-18 (N.T.C.)

**Dati generali**

Lunghezza = 41.6

**Caratteristiche della sezione**

| Descrizione | Tipo | Base | Altezza | Area | Jx | Jy | Wx | Wy |
|---|---|---|---|---|---|---|---|---|
| R 8x10 | Rettangolare | 8 | 10 | 80 | 666.67 | 426.67 | 133.33 | 106.67 |

Materiale: C14 EN 338:2016
Rapporto luce/freccia elastica limite = 300
Rapporto luce/freccia elastica differita = 200
Mensola Y: Nessuno; Mensola X: Nessuno
Classe di servizio 1

**Verifica tensoflessione D.M. 17-01-18 §4.4.8.1.7**

Sezione ad ascissa 41.6
Coefficiente parziale di sicurezza del materiale γ = 1.5
Kmod = 1.1; Kh = 1.084 (formula 11.7.1)
St,0,d/ft,0,d + Sm,y,d/fm,y,d + Km*(Sm,z,d/fm,z,d) <= 1
St,0,d/ft,0,d + Km*(Sm,y,d/fm,y,d) + Sm,z,d/fm,z,d <= 1
28.5/57.3+0.7*1.7/111.3+15.6/111.3=0.65 <= 1 [4.4.6b] Comb: SLV, 10; Durata minima del carico nella combinazione: istantaneo
Mx = -233.1; My = 1661.2; N = 2279.5

**Verifica taglio D.M. 17-01-18 §4.4.8.1.9**

Sezione ad ascissa 41.6
Coefficiente parziale di sicurezza del materiale γ = 1.5
Kmod = 0.8; kcr = 0.67
τ,d <= fv,d
Sqrt(0.33^2+1.67^2) = 1.7 <= 16 Comb: SLU, 79; Durata minima del carico nella combinazione: media
Tx = 11.7; Ty = -59.4

**Verifica taglio+torsione D.M. 17-01-18 §4.4.8.1.11**

Sezione ad ascissa 41.6
Coefficiente parziale di sicurezza del materiale γ = 1.5

Kmod = 1.1; Kh = 1.084 (formula 11.7.1); kcr = 0.67
τ,tor,d/(ksh*fv,d) + (τ,y,d/fv,d)^2 + (τ,z,d/fv,d)^2 <= 1
0.04+0+0.01 <= 1 Comb: SLV, 8; Durata minima del carico nella combinazione: istantaneo
Tx = -33.9; Ty = -55.8; Mt = -142.7

**Verifica torsione D.M. 17-01-18 §4.4.8.1.10**

Sezione ad ascissa 41.6
Coefficiente parziale di sicurezza del materiale γ = 1.5
Kmod = 1.1
τ,tor,d <= Ksh * fv,d
1.01 <= 26.13 Comb: SLV, 8; Durata minima del carico nella combinazione: istantaneo
Mt = -142.7

---

## Asta 175: Trave in legno a falda Falda 1 fili 201-202

Verifiche condotte secondo D.M. 17-01-18 (N.T.C.)

**Dati generali**

Lunghezza = 278.2

**Caratteristiche della sezione**

| Descrizione | Tipo | Base | Altezza | Area | Jx | Jy | Wx | Wy |
|---|---|---|---|---|---|---|---|---|
| R 8x10 | Rettangolare | 8 | 10 | 80 | 666.67 | 426.67 | 133.33 | 106.67 |

Materiale: C14 EN 338:2016
Rapporto luce/freccia elastica limite = 300
Rapporto luce/freccia elastica differita = 200
Mensola Y: Nessuno; Mensola X: Nessuno
Classe di servizio 1

**Verifica tensoflessione D.M. 17-01-18 §4.4.8.1.7**

Sezione ad ascissa 278.2
Coefficiente parziale di sicurezza del materiale γ = 1.5
Kmod = 0.8; Kh = 1.084 (formula 11.7.1)
St,0,d/ft,0,d + Sm,y,d/fm,y,d + Km*(Sm,z,d/fm,z,d) !> 1
St,0,d/ft,0,d + Km*(Sm,y,d/fm,y,d) + Sm,z,d/fm,z,d !> 1
2.4/41.6+225.8/81+0.7*2/81=2.86 !> 1 [4.4.6a] Comb: SLU, 71; Durata minima del carico nella combinazione: media - NON SODDISFATTA
Mx = -30113; My = -215.1; N = 190.5

**Verifica taglio D.M. 17-01-18 §4.4.8.1.9**

Sezione ad ascissa 0
Coefficiente parziale di sicurezza del materiale γ = 1.5
Kmod = 0.8; kcr = 0.67
τ,d <= fv,d
Sqrt(0.06^2+6.02^2) = 6.02 <= 16 Comb: SLU, 80; Durata minima del carico nella combinazione: media
Tx = -2.3; Ty = 214.1

**Verifica taglio+torsione D.M. 17-01-18 §4.4.8.1.11**

Sezione ad ascissa 0
Coefficiente parziale di sicurezza del materiale γ = 1.5
Kmod = 0.8; Kh = 1.084 (formula 11.7.1); kcr = 0.67
τ,tor,d/(ksh*fv,d) + (τ,y,d/fv,d)^2 + (τ,z,d/fv,d)^2 <= 1
0.02+0+0.14 <= 1 Comb: SLU, 80; Durata minima del carico nella combinazione: media
Tx = -2.3; Ty = 214.1; Mt = -40.6

**Verifica torsione D.M. 17-01-18 §4.4.8.1.10**

Sezione ad ascissa 278.2
Coefficiente parziale di sicurezza del materiale γ = 1.5
Kmod = 0.8
τ,tor,d <= Ksh * fv,d
0.31 <= 19 Comb: SLU, 79; Durata minima del carico nella combinazione: media
Mt = -43.5

---

## Asta 176: Trave in legno a falda Falda 1 fili 210-211

Verifiche condotte secondo D.M. 17-01-18 (N.T.C.)

**Dati generali**

Lunghezza = 262.7

**Caratteristiche della sezione**

| Descrizione | Tipo | Base | Altezza | Area | Jx | Jy | Wx | Wy |
|---|---|---|---|---|---|---|---|---|
| R 8x10 | Rettangolare | 8 | 10 | 80 | 666.67 | 426.67 | 133.33 | 106.67 |

Materiale: C14 EN 338:2016
Rapporto luce/freccia elastica limite = 300
Rapporto luce/freccia elastica differita = 200
Mensola Y: Nessuno; Mensola X: Nessuno
Classe di servizio 1

**Verifica taglio D.M. 17-01-18 §4.4.8.1.9**

Sezione ad ascissa 0
Coefficiente parziale di sicurezza del materiale γ = 1.5
Kmod = 0.8; kcr = 0.67
τ,d <= fv,d
Sqrt(0.16^2+4.6^2) = 4.6 <= 16 Comb: SLU, 80; Durata minima del carico nella combinazione: media
Tx = -5.9; Ty = 163.5

**Verifica pressoflessione D.M. 17-01-18 §4.4.8.1.8**

Sezione ad ascissa 262.7
Coefficiente parziale di sicurezza del materiale γ = 1.5
Kmod = 0.8; Kh = 1.084 (formula 11.7.1)
(Sc,0,d/fc,0,d)^2 + Sm,y,d/fm,y,d + Km*(Sm,z,d/fm,z,d) <= 1
(Sc,0,d/fc,0,d)^2 + Km*(Sm,y,d/fm,y,d) + Sm,z,d/fm,z,d <= 1
(5.5/85.3)^2+194.7/81+0.7*7.6/80.97=2.47 !> 1 [4.4.7a] Comb: SLU, 80; Durata minima del carico nella combinazione: media - NON SODDISFATTA
Mx = -25955.5; My = -806.3; N = -437.7

**Verifica taglio+torsione D.M. 17-01-18 §4.4.8.1.11**

Sezione ad ascissa 0
Coefficiente parziale di sicurezza del materiale γ = 1.5
Kmod = 0.8; Kh = 1.084 (formula 11.7.1); kcr = 0.67
τ,tor,d/(ksh*fv,d) + (τ,y,d/fv,d)^2 + (τ,z,d/fv,d)^2 <= 1
0.02+0+0.08 <= 1 Comb: SLU, 80; Durata minima del carico nella combinazione: media
Tx = -5.9; Ty = 163.5; Mt = -57.1

**Verifica torsione D.M. 17-01-18 §4.4.8.1.10**

Sezione ad ascissa 262.7
Coefficiente parziale di sicurezza del materiale γ = 1.5
Kmod = 0.8
τ,tor,d <= Ksh * fv,d
0.42 <= 19 Comb: SLU, 79; Durata minima del carico nella combinazione: media
Mt = -59.8

---

## Asta 177: Trave in legno a falda Falda 1 fili 216-217

Verifiche condotte secondo D.M. 17-01-18 (N.T.C.)

**Dati generali**

Lunghezza = 262.7

**Caratteristiche della sezione**

| Descrizione | Tipo | Base | Altezza | Area | Jx | Jy | Wx | Wy |
|---|---|---|---|---|---|---|---|---|
| R 8x10 | Rettangolare | 8 | 10 | 80 | 666.67 | 426.67 | 133.33 | 106.67 |

Materiale: C14 EN 338:2016
Rapporto luce/freccia elastica limite = 300
Rapporto luce/freccia elastica differita = 200
Mensola Y: Nessuno; Mensola X: Nessuno
Classe di servizio 1

**Verifica tensoflessione D.M. 17-01-18 §4.4.8.1.7**

Sezione ad ascissa 262.7
Coefficiente parziale di sicurezza del materiale γ = 1.5
Kmod = 0.8; Kh = 1.084 (formula 11.7.1)
St,0,d/ft,0,d + Sm,y,d/fm,y,d + Km*(Sm,z,d/fm,z,d) !> 1
St,0,d/ft,0,d + Km*(Sm,y,d/fm,y,d) + Sm,z,d/fm,z,d !> 1
18.7/41.6+231/81+0.7*9.9/81=3.39 !> 1 [4.4.6a] Comb: SLU, 80; Durata minima del carico nella combinazione: media - NON SODDISFATTA
Mx = -30794.5; My = -1060.5; N = 1495.2

**Verifica taglio D.M. 17-01-18 §4.4.8.1.9**

Sezione ad ascissa 0
Coefficiente parziale di sicurezza del materiale γ = 1.5
Kmod = 0.8; kcr = 0.67
τ,d <= fv,d
Sqrt(0.27^2+6.34^2) = 6.35 <= 16 Comb: SLU, 80; Durata minima del carico nella combinazione: media
Tx = -9.5; Ty = 225.6

**Verifica taglio+torsione D.M. 17-01-18 §4.4.8.1.11**

Sezione ad ascissa 0
Coefficiente parziale di sicurezza del materiale γ = 1.5
Kmod = 0.8; Kh = 1.084 (formula 11.7.1); kcr = 0.67
τ,tor,d/(ksh*fv,d) + (τ,y,d/fv,d)^2 + (τ,z,d/fv,d)^2 <= 1
0.02+0+0.16 <= 1 Comb: SLU, 80; Durata minima del carico nella combinazione: media
Tx = -9.5; Ty = 225.6; Mt = -63.1

**Verifica torsione D.M. 17-01-18 §4.4.8.1.10**

Sezione ad ascissa 262.7
Coefficiente parziale di sicurezza del materiale γ = 1.5
Kmod = 0.8
τ,tor,d <= Ksh * fv,d
0.48 <= 19 Comb: SLU, 79; Durata minima del carico nella combinazione: media
Mt = -67.3

---

## Asta 178: Trave in legno a falda Falda 1 fili 225-226

Verifiche condotte secondo D.M. 17-01-18 (N.T.C.)

**Dati generali**

Lunghezza = 262.7

**Caratteristiche della sezione**

| Descrizione | Tipo | Base | Altezza | Area | Jx | Jy | Wx | Wy |
|---|---|---|---|---|---|---|---|---|
| R 8x10 | Rettangolare | 8 | 10 | 80 | 666.67 | 426.67 | 133.33 | 106.67 |

Materiale: C14 EN 338:2016
Rapporto luce/freccia elastica limite = 300
Rapporto luce/freccia elastica differita = 200
Mensola Y: Nessuno; Mensola X: Nessuno
Classe di servizio 1

**Verifica taglio D.M. 17-01-18 §4.4.8.1.9**

Sezione ad ascissa 0
Coefficiente parziale di sicurezza del materiale γ = 1.5
Kmod = 0.8; kcr = 0.67
τ,d <= fv,d
Sqrt(0.08^2+3.76^2) = 3.76 <= 16 Comb: SLU, 79; Durata minima del carico nella combinazione: media
Tx = -3; Ty = 133.7

**Verifica pressoflessione D.M. 17-01-18 §4.4.8.1.8**

Sezione ad ascissa 262.7
Coefficiente parziale di sicurezza del materiale γ = 1.5
Kmod = 0.8; Kh = 1.084 (formula 11.7.1)
(Sc,0,d/fc,0,d)^2 + Sm,y,d/fm,y,d + Km*(Sm,z,d/fm,z,d) <= 1
(Sc,0,d/fc,0,d)^2 + Km*(Sm,y,d/fm,y,d) + Sm,z,d/fm,z,d <= 1
(2/85.3)^2+171.2/81+0.7*3.5/80.97=2.14 !> 1 [4.4.7a] Comb: SLU, 80; Durata minima del carico nella combinazione: media - NON SODDISFATTA
Mx = -22821.1; My = -368.1; N = -160.7

**Verifica taglio+torsione D.M. 17-01-18 §4.4.8.1.11**

Sezione ad ascissa 0
Coefficiente parziale di sicurezza del materiale γ = 1.5
Kmod = 0.8; Kh = 1.084 (formula 11.7.1); kcr = 0.67
τ,tor,d/(ksh*fv,d) + (τ,y,d/fv,d)^2 + (τ,z,d/fv,d)^2 <= 1
0.04+0+0.06 <= 1 Comb: SLU, 79; Durata minima del carico nella combinazione: media
Tx = -3; Ty = 133.7; Mt = -97.7

**Verifica torsione D.M. 17-01-18 §4.4.8.1.10**

Sezione ad ascissa 262.7
Coefficiente parziale di sicurezza del materiale γ = 1.5
Kmod = 0.8
τ,tor,d <= Ksh * fv,d
0.69 <= 19 Comb: SLU, 80; Durata minima del carico nella combinazione: media
Mt = -98.1

---

## Asta 179: Trave in legno a falda Falda 1 fili 236-237

Verifiche condotte secondo D.M. 17-01-18 (N.T.C.)

### Dati generali

Lunghezza = 262.7

### Caratteristiche della sezione

| Descrizione | Tipo | Base | Altezza | Area | Jx | Jy | Wx | Wy |
|---|---|---|---|---|---|---|---|---|
| R 8x10 | Rettangolare | 8 | 10 | 80 | 666.67 | 426.67 | 133.33 | 106.67 |

Materiale: C14 EN 338:2016
Rapporto luce/freccia elastica limite = 300
Rapporto luce/freccia elastica differita = 200
Mensola Y: Nessuno; Mensola X: Nessuno
Classe di servizio 1

### Verifica taglio D.M. 17-01-18 §4.4.8.1.9

Sezione ad ascissa 0
Coefficiente parziale di sicurezza del materiale γ = 1.5
Kmod = 0.8; kcr = 0.67
τ,d <= fv,d
Sqrt(0.04^2+3.28^2) = 3.28 <= 16 Comb: SLU, 79; Durata minima del carico nella combinazione: media
Tx = 1.5; Ty = 116.7

### Verifica pressoflessione D.M. 17-01-18 §4.4.8.1.8

Sezione ad ascissa 262.7
Coefficiente parziale di sicurezza del materiale γ = 1.5
Kmod = 0.8; Kh = 1.084 (formula 11.7.1)
(Sc,0,d/fc,0,d)^2 + Sm,y,d/fm,y,d + Km*(Sm,z,d/fm,z,d) <= 1
(Sc,0,d/fc,0,d)^2 + Km*(Sm,y,d/fm,y,d) + Sm,z,d/fm,z,d <= 1
(1.7/85.3)^2+156.7/81+0.7*1.5/80.97=1.95 !> 1 [4.4.7a] Comb: SLU, 79; Durata minima del carico nella combinazione: media - NON SODDISFATTA
Mx = -20896.4; My = 158.4; N = -133.4

### Verifica taglio+torsione D.M. 17-01-18 §4.4.8.1.11

Sezione ad ascissa 0
Coefficiente parziale di sicurezza del materiale γ = 1.5
Kmod = 0.8; Kh = 1.084 (formula 11.7.1); kcr = 0.67
τ,tor,d/(ksh*fv,d) + (τ,y,d/fv,d)^2 + (τ,z,d/fv,d)^2 <= 1
0.05+0+0.04 <= 1 Comb: SLU, 79; Durata minima del carico nella combinazione: media
Tx = 1.5; Ty = 116.7; Mt = -132.7

### Verifica torsione D.M. 17-01-18 §4.4.8.1.10

Sezione ad ascissa 262.7
Coefficiente parziale di sicurezza del materiale γ = 1.5
Kmod = 0.8
τ,tor,d <= Ksh * fv,d
0.94 <= 19 Comb: SLU, 80; Durata minima del carico nella combinazione: media
Mt = -132.9

---

## Asta 180: Trave in legno a falda Falda 1 fili 242-243

Verifiche condotte secondo D.M. 17-01-18 (N.T.C.)

### Dati generali

Lunghezza = 262.7

### Caratteristiche della sezione

| Descrizione | Tipo | Base | Altezza | Area | Jx | Jy | Wx | Wy |
|---|---|---|---|---|---|---|---|---|
| R 8x10 | Rettangolare | 8 | 10 | 80 | 666.67 | 426.67 | 133.33 | 106.67 |

Materiale: C14 EN 338:2016
Rapporto luce/freccia elastica limite = 300
Rapporto luce/freccia elastica differita = 200
Mensola Y: Nessuno; Mensola X: Nessuno
Classe di servizio 1

### Verifica taglio D.M. 17-01-18 §4.4.8.1.9

Sezione ad ascissa 0
Coefficiente parziale di sicurezza del materiale γ = 1.5
Kmod = 0.8; kcr = 0.67
τ,d <= fv,d
Sqrt(0.03^2+2.91^2) = 2.91 <= 16 Comb: SLU, 79; Durata minima del carico nella combinazione: media
Tx = 1; Ty = 103.4

### Verifica pressoflessione D.M. 17-01-18 §4.4.8.1.8

Sezione ad ascissa 262.7
Coefficiente parziale di sicurezza del materiale γ = 1.5

Kmod = 0.8; Kh = 1.084 (formula 11.7.1)
(Sc,0,d/fc,0,d)^2 + Sm,y,d/fm,y,d + Km*(Sm,z,d/fm,z,d) <= 1
(Sc,0,d/fc,0,d)^2 + Km*(Sm,y,d/fm,y,d) + Sm,z,d/fm,z,d <= 1
(0.7/85.3)^2+144.6/81+0.7*1.2/80.97=1.8 !> 1 [4.4.7a] Comb: SLU, 79; Durata minima del carico nella combinazione: media - NON SODDISFATTA
Mx = -19282; My = 123.6; N = -56.2

**Verifica taglio+torsione D.M. 17-01-18 §4.4.8.1.11**

Sezione ad ascissa 0
Coefficiente parziale di sicurezza del materiale γ = 1.5
Kmod = 0.8; Kh = 1.084 (formula 11.7.1); kcr = 0.67
τ,tor,d/(ksh*fv,d) + (τ,y,d/fv,d)^2 + (τ,z,d/fv,d)^2 <= 1
0.06+0+0.03 <= 1 Comb: SLU, 79; Durata minima del carico nella combinazione: media
Tx = 1; Ty = 103.4; Mt = -159.3

**Verifica torsione D.M. 17-01-18 §4.4.8.1.10**

Sezione ad ascissa 262.7
Coefficiente parziale di sicurezza del materiale γ = 1.5
Kmod = 0.8
τ,tor,d <= Ksh * fv,d
1.15 <= 19 Comb: SLU, 80; Durata minima del carico nella combinazione: media
Mt = -162.3

---

## Asta 181: Trave in legno a falda Falda 1 fili 248-249

Verifiche condotte secondo D.M. 17-01-18 (N.T.C.)

**Dati generali**

Lunghezza = 262.7

**Caratteristiche della sezione**

| Descrizione | Tipo | Base | Altezza | Area | Jx | Jy | Wx | Wy |
|---|---|---|---|---|---|---|---|---|
| R 8x10 | Rettangolare | 8 | 10 | 80 | 666.67 | 426.67 | 133.33 | 106.67 |

Materiale: C14 EN 338:2016
Rapporto luce/freccia elastica limite = 300
Rapporto luce/freccia elastica differita = 200
Mensola Y: Nessuno; Mensola X: Nessuno
Classe di servizio 1

**Verifica flessione D.M. 17-01-18 §4.4.8.1.6**

Sezione ad ascissa 262.7
Coefficiente parziale di sicurezza del materiale γ = 1.5
Kmod = 0.8; Kh = 1.084 (formula 11.7.1)
Sm,y,d/fm,y,d + Km*(Sm,z,d/fm,z,d) !> 1
Km*(Sm,y,d/fm,y,d) + Sm,z,d/fm,z,d !> 1
127.6/81+0.7*4.2/81=1.61 !> 1 (formula 4.4.5a) Comb: SLU, 71; Durata minima del carico nella combinazione: media - NON SODDISFATTA
Mx = -17013.5; My = -445.7

**Verifica taglio D.M. 17-01-18 §4.4.8.1.9**

Sezione ad ascissa 0
Coefficiente parziale di sicurezza del materiale γ = 1.5
Kmod = 0.8; kcr = 0.67
τ,d <= fv,d
Sqrt(0.07^2+2.47^2) = 2.47 <= 16 Comb: SLU, 79; Durata minima del carico nella combinazione: media
Tx = -2.6; Ty = 87.8

**Verifica taglio+torsione D.M. 17-01-18 §4.4.8.1.11**

Sezione ad ascissa 0
Coefficiente parziale di sicurezza del materiale γ = 1.5
Kmod = 0.8; Kh = 1.084 (formula 11.7.1); kcr = 0.67
τ,tor,d/(ksh*fv,d) + (τ,y,d/fv,d)^2 + (τ,z,d/fv,d)^2 <= 1
0.07+0+0.02 <= 1 Comb: SLU, 79; Durata minima del carico nella combinazione: media
Tx = -2.6; Ty = 87.8; Mt = -177.4

**Verifica torsione D.M. 17-01-18 §4.4.8.1.10**

Sezione ad ascissa 262.7
Coefficiente parziale di sicurezza del materiale γ = 1.5
Kmod = 0.8
τ,tor,d <= Ksh * fv,d
1.29 <= 19 Comb: SLU, 80; Durata minima del carico nella combinazione: media
Mt = -182.8

---

## Asta 182: Trave in legno a falda Falda 1 fili 254-255

Verifiche condotte secondo D.M. 17-01-18 (N.T.C.)

### Dati generali

Lunghezza = 262.7

### Caratteristiche della sezione

| Descrizione | Tipo | Base | Altezza | Area | Jx | Jy | Wx | Wy |
|---|---|---|---|---|---|---|---|---|
| R 8x10 | Rettangolare | 8 | 10 | 80 | 666.67 | 426.67 | 133.33 | 106.67 |

Materiale: C14 EN 338:2016
Rapporto luce/freccia elastica limite = 300
Rapporto luce/freccia elastica differita = 200
Mensola Y: Nessuno; Mensola X: Nessuno
Classe di servizio 1

### Verifica flessione D.M. 17-01-18 §4.4.8.1.6

Sezione ad ascissa 262.7
Coefficiente parziale di sicurezza del materiale γ = 1.5
Kmod = 0.8; Kh = 1.084 (formula 11.7.1)
Sm,y,d/fm,y,d + Km*(Sm,z,d/fm,z,d) !> 1
Km*(Sm,y,d/fm,y,d) + Sm,z,d/fm,z,d !> 1
106.3/81+0.7*6.7/81=1.37 !> 1 (formula 4.4.5a) Comb: SLU, 71; Durata minima del carico nella combinazione: media - NON SODDISFATTA
Mx = -14174.9; My = -717.8

### Verifica taglio D.M. 17-01-18 §4.4.8.1.9

Sezione ad ascissa 0
Coefficiente parziale di sicurezza del materiale γ = 1.5
Kmod = 0.8; kcr = 0.67
τ,d <= fv,d
Sqrt(0.15^2+1.99^2) = 1.99 <= 16 Comb: SLU, 79; Durata minima del carico nella combinazione: media
Tx = -5.3; Ty = 70.6

### Verifica taglio+torsione D.M. 17-01-18 §4.4.8.1.11

Sezione ad ascissa 0
Coefficiente parziale di sicurezza del materiale γ = 1.5
Kmod = 0.8; Kh = 1.084 (formula 11.7.1); kcr = 0.67
τ,tor,d/(ksh*fv,d) + (τ,y,d/fv,d)^2 + (τ,z,d/fv,d)^2 <= 1
0.07+0+0.02 <= 1 Comb: SLU, 79; Durata minima del carico nella combinazione: media
Tx = -5.3; Ty = 70.6; Mt = -175.5

### Verifica torsione D.M. 17-01-18 §4.4.8.1.10

Sezione ad ascissa 262.7
Coefficiente parziale di sicurezza del materiale γ = 1.5
Kmod = 0.8
τ,tor,d <= Ksh * fv,d
1.29 <= 19 Comb: SLU, 80; Durata minima del carico nella combinazione: media
Mt = -183.1

---

## Asta 183: Trave in legno a falda Falda 1 fili 261-262

Verifiche condotte secondo D.M. 17-01-18 (N.T.C.)

### Dati generali

Lunghezza = 230.8

### Caratteristiche della sezione

| Descrizione | Tipo | Base | Altezza | Area | Jx | Jy | Wx | Wy |
|---|---|---|---|---|---|---|---|---|
| R 8x10 | Rettangolare | 8 | 10 | 80 | 666.67 | 426.67 | 133.33 | 106.67 |

Materiale: C14 EN 338:2016
Rapporto luce/freccia elastica limite = 300
Rapporto luce/freccia elastica differita = 200
Mensola Y: Nessuno; Mensola X: Nessuno
Classe di servizio 1

### Verifica taglio D.M. 17-01-18 §4.4.8.1.9

Sezione ad ascissa 0
Coefficiente parziale di sicurezza del materiale γ = 1.5
Kmod = 0.8; kcr = 0.67
τ,d <= fv,d
Sqrt(0.09^2+2.02^2) = 2.02 <= 16 Comb: SLU, 79; Durata minima del carico nella combinazione: media
Tx = -3.2; Ty = 71.8

**Verifica pressoflessione D.M. 17-01-18 §4.4.8.1.8**

Sezione ad ascissa 230.8
Coefficiente parziale di sicurezza del materiale γ = 1.5
Kmod = 0.8; Kh = 1.084 (formula 11.7.1)
(Sc,0,d/fc,0,d)^2 + Sm,y,d/fm,y,d + Km*(Sm,z,d/fm,z,d) <= 1
(Sc,0,d/fc,0,d)^2 + Km*(Sm,y,d/fm,y,d) + Sm,z,d/fm,z,d <= 1
(0.7/85.3)^2+91.7/81+0.7*2.2/80.97=1.15 !> 1 [4.4.7a] Comb: SLU, 71; Durata minima del carico nella combinazione: media - NON SODDISFATTA
Mx = -12232.3; My = -237.1; N = -56.9

**Verifica taglio+torsione D.M. 17-01-18 §4.4.8.1.11**

Sezione ad ascissa 0
Coefficiente parziale di sicurezza del materiale γ = 1.5
Kmod = 0.8; Kh = 1.084 (formula 11.7.1); kcr = 0.67
τ,tor,d/(ksh*fv,d) + (τ,y,d/fv,d)^2 + (τ,z,d/fv,d)^2 <= 1
0.06+0+0.02 <= 1 Comb: SLU, 79; Durata minima del carico nella combinazione: media
Tx = -3.2; Ty = 71.8; Mt = -173.5

**Verifica torsione D.M. 17-01-18 §4.4.8.1.10**

Sezione ad ascissa 230.8
Coefficiente parziale di sicurezza del materiale γ = 1.5
Kmod = 0.8
τ,tor,d <= Ksh * fv,d
1.29 <= 19 Comb: SLU, 80; Durata minima del carico nella combinazione: media
Mt = -182.2

---

## Asta 184: Trave in legno a falda Falda 1 fili 266-267

Verifiche condotte secondo D.M. 17-01-18 (N.T.C.)

**Dati generali**

Lunghezza = 158.9

**Caratteristiche della sezione**

| Descrizione | Tipo | Base | Altezza | Area | Jx | Jy | Wx | Wy |
|---|---|---|---|---|---|---|---|---|
| R 8x10 | Rettangolare | 8 | 10 | 80 | 666.67 | 426.67 | 133.33 | 106.67 |

Materiale: C14 EN 338:2016
Rapporto luce/freccia elastica limite = 300
Rapporto luce/freccia elastica differita = 200
Mensola Y: Nessuno; Mensola X: Nessuno
Classe di servizio 1

**Verifica taglio D.M. 17-01-18 §4.4.8.1.9**

Sezione ad ascissa 0
Coefficiente parziale di sicurezza del materiale γ = 1.5
Kmod = 0.8; kcr = 0.67
τ,d <= fv,d
Sqrt(0.22^2+2.91^2) = 2.92 <= 16 Comb: SLU, 79; Durata minima del carico nella combinazione: media
Tx = 7.9; Ty = 103.4

**Verifica pressoflessione D.M. 17-01-18 §4.4.8.1.8**

Sezione ad ascissa 158.9
Coefficiente parziale di sicurezza del materiale γ = 1.5
Kmod = 0.8; Kh = 1.084 (formula 11.7.1)
(Sc,0,d/fc,0,d)^2 + Sm,y,d/fm,y,d + Km*(Sm,z,d/fm,z,d) <= 1
(Sc,0,d/fc,0,d)^2 + Km*(Sm,y,d/fm,y,d) + Sm,z,d/fm,z,d <= 1
(1.5/85.3)^2+83.8/81+0.7*7.4/80.97=1.1 !> 1 [4.4.7a] Comb: SLU, 79; Durata minima del carico nella combinazione: media - NON SODDISFATTA
Mx = -11176.2; My = 793.8; N = -118.4

**Verifica taglio+torsione D.M. 17-01-18 §4.4.8.1.11**

Sezione ad ascissa 0
Coefficiente parziale di sicurezza del materiale γ = 1.5
Kmod = 0.8; Kh = 1.084 (formula 11.7.1); kcr = 0.67
τ,tor,d/(ksh*fv,d) + (τ,y,d/fv,d)^2 + (τ,z,d/fv,d)^2 <= 1
0.09+0+0.03 <= 1 Comb: SLU, 79; Durata minima del carico nella combinazione: media
Tx = 7.9; Ty = 103.4; Mt = -240.2

**Verifica torsione D.M. 17-01-18 §4.4.8.1.10**

Sezione ad ascissa 158.9
Coefficiente parziale di sicurezza del materiale γ = 1.5
Kmod = 0.8
τ,tor,d <= Ksh * fv,d

1.77 <= 19 Comb: SLU, 80; Durata minima del carico nella combinazione: media
Mt = -251

## Asta 185: Trave in legno a falda Falda 1 fili 270-271

Verifiche condotte secondo D.M. 17-01-18 (N.T.C.)

### Dati generali

Lunghezza = 87

### Caratteristiche della sezione

| Descrizione | Tipo | Base | Altezza | Area | Jx | Jy | Wx | Wy |
|---|---|---|---|---|---|---|---|---|
| R 8x10 | Rettangolare | 8 | 10 | 80 | 666.67 | 426.67 | 133.33 | 106.67 |

Materiale: C14 EN 338:2016
Rapporto luce/freccia elastica limite = 300
Rapporto luce/freccia elastica differita = 200
Mensola Y: Nessuno; Mensola X: Nessuno
Classe di servizio 1

### Verifica taglio D.M. 17-01-18 §4.4.8.1.9

Sezione ad ascissa 0
Coefficiente parziale di sicurezza del materiale γ = 1.5
Kmod = 0.8; kcr = 0.67
τ,d <= fv,d
Sqrt(1.02^2+5.67^2) = 5.77 <= 16 Comb: SLU, 79; Durata minima del carico nella combinazione: media
Tx = 36.4; Ty = 201.7

### Verifica pressoflessione D.M. 17-01-18 §4.4.8.1.8

Sezione ad ascissa 87
Coefficiente parziale di sicurezza del materiale γ = 1.5
Kmod = 0.8; Kh = 1.084 (formula 11.7.1)
(Sc,0,d/fc,0,d)^2 + Sm,y,d/fm,y,d + Km*(Sm,z,d/fm,z,d) <= 1
(Sc,0,d/fc,0,d)^2 + Km*(Sm,y,d/fm,y,d) + Sm,z,d/fm,z,d <= 1
(2.9/85.3)^2+86.2/81+0.7*15.4/80.97=1.2 !> 1 [4.4.7a] Comb: SLU, 79; Durata minima del carico nella combinazione: media - NON SODDISFATTA
Mx = -11497.1; My = 1639.1; N = -229.7

### Verifica taglio+torsione D.M. 17-01-18 §4.4.8.1.11

Sezione ad ascissa 0
Coefficiente parziale di sicurezza del materiale γ = 1.5
Kmod = 0.8; Kh = 1.084 (formula 11.7.1); kcr = 0.67
τ,tor,d/(ksh*fv,d) + (τ,y,d/fv,d)^2 + (τ,z,d/fv,d)^2 <= 1
0.12+0+0.13 <= 1 Comb: SLU, 71; Durata minima del carico nella combinazione: media
Tx = 35.1; Ty = 201.9; Mt = -330.7

### Verifica torsione D.M. 17-01-18 §4.4.8.1.10

Sezione ad ascissa 87
Coefficiente parziale di sicurezza del materiale γ = 1.5
Kmod = 0.8
τ,tor,d <= Ksh * fv,d
2.42 <= 19 Comb: SLU, 72; Durata minima del carico nella combinazione: media
Mt = -343

## Asta 186: Trave in legno a falda Falda 1 fili 277-275

Verifiche condotte secondo D.M. 17-01-18 (N.T.C.)

### Dati generali

Lunghezza = 30

### Caratteristiche della sezione

| Descrizione | Tipo | Base | Altezza | Area | Jx | Jy | Wx | Wy |
|---|---|---|---|---|---|---|---|---|
| R 8x10 | Rettangolare | 8 | 10 | 80 | 666.67 | 426.67 | 133.33 | 106.67 |

Materiale: C14 EN 338:2016
Rapporto luce/freccia elastica limite = 300
Rapporto luce/freccia elastica differita = 200
Mensola Y: Nessuno; Mensola X: Nessuno
Classe di servizio 1

### Verifica trazione parallela alla fibratura D.M. 17-01-18 §4.4.8.1.1

Sezione ad ascissa 13
Coefficiente parziale di sicurezza del materiale γ = 1.5

Kmod = 1.1; Kh = 1.084 (formula 11.7.1)
St,0,d <= ft,0,d
0.01 <= 57.26 Comb: SLV, 10; Durata minima del carico nella combinazione: istantaneo
N = 0.5

**Verifica flessione D.M. 17-01-18 §4.4.8.1.6**

Sezione ad ascissa 30
Coefficiente parziale di sicurezza del materiale γ = 1.5
Kmod = 0.6; Kh = 1.084 (formula 11.7.1)
Sm,y,d/fm,y,d + Km*(Sm,z,d/fm,z,d) <= 1
Km*(Sm,y,d/fm,y,d) + Sm,z,d/fm,z,d <= 1
0.1/60.7+0.7*0/60.7=0 <= 1 (formula 4.4.5a) Comb: SLU, 43; Durata minima del carico nella combinazione: permanente
Mx = 14.9; My = 0

**Verifica della freccia istantanea totale D.M. 17-01-18 §C4.4.7 Circolare 7 21-01-19**

Sezione ad ascissa 9
Kdef = 0
Uinst tot in x = 0
Uinst tot in y = 0
Uinst tot = 0
Luce/Uinst,tot > limite
30/0=10648093.1 > 300 Comb: SLE rara, 7

**Verifica della freccia istantanea variabile D.M. 17-01-18 §4.4.7**

Sezione ad ascissa 28
Kdef = 0
Uinst var in x = 0
Uinst var in y = 0
Uinst var = 0
Luce/Uinst,var > limite
30/0=22109696300.3 > 300 Comb: SLE rara, 15

**Verifica della freccia finale EC5 §4.4.7 - EC5 2.2.3 (3)**

Sezione ad ascissa 9
Kdef = 0.6
Ufin in x = 0
Ufin in y = 0
Ufin = 0
Luce/Ufin > limite
30/0=6655103.3 > 200
Coefficienti combinatori impiegati:
Pesi strutturali = 1,000 + 0,600 = 1,600
Permanenti portati = 1,000 + 0,600 = 1,600
Neve = 0,500 + 0,000 = 0,500
Variabile H = 0,000 + 1,000 = 1,000

---

## Asta 187: Trave in legno a falda Falda 5 fili 275-280

Verifiche condotte secondo D.M. 17-01-18 (N.T.C.)

**Dati generali**

Lunghezza = 24.2

**Caratteristiche della sezione**

| Descrizione | Tipo | Base | Altezza | Area | Jx | Jy | Wx | Wy |
|---|---|---|---|---|---|---|---|---|
| R 8x10 | Rettangolare | 8 | 10 | 80 | 666.67 | 426.67 | 133.33 | 106.67 |

Materiale: C14 EN 338:2016
Rapporto luce/freccia elastica limite = 300
Rapporto luce/freccia elastica differita = 200
Mensola Y: Nessuno; Mensola X: Nessuno
Classe di servizio 1

**Verifica trazione parallela alla fibratura D.M. 17-01-18 §4.4.8.1.1**

Sezione ad ascissa 11.3
Coefficiente parziale di sicurezza del materiale γ = 1.5
Kmod = 1.1; Kh = 1.084 (formula 11.7.1)
St,0,d <= ft,0,d
0.01 <= 57.26 Comb: SLV, 14; Durata minima del carico nella combinazione: istantaneo
N = 0.9

**Verifica flessione D.M. 17-01-18 §4.4.8.1.6**

Sezione ad ascissa 0

Coefficiente parziale di sicurezza del materiale γ = 1.5
Kmod = 0.6; Kh = 1.084 (formula 11.7.1)
Sm,y,d/fm,y,d + Km*(Sm,z,d/fm,z,d) <= 1
Km*(Sm,y,d/fm,y,d) + Sm,z,d/fm,z,d <= 1
0.1/60.7+0.7*0/60.7=0 <= 1 (formula 4.4.5a) Comb: SLU, 64; Durata minima del carico nella combinazione: permanente
Mx = 9.5; My = 0

**Verifica della freccia istantanea totale D.M. 17-01-18 §C4.4.7 Circolare 7 21-01-19**

Sezione ad ascissa 15.3
Kdef = 0
Uinst tot in x = 0
Uinst tot in y = 0
Uinst tot = 0
Luce/Uinst,tot > limite
24.2/0=7812343.4 > 300 Comb: SLE rara, 18

**Verifica della freccia istantanea variabile D.M. 17-01-18 §4.4.7**

Sezione ad ascissa 19.4
Kdef = 0
Uinst var in x = 0
Uinst var in y = 0
Uinst var = 0
Luce/Uinst,var > limite
24.2/0=8683628025 > 300 Comb: SLE rara, 9

**Verifica della freccia finale EC5 §4.4.7 - EC5 2.2.3 (3)**

Sezione ad ascissa 15.3
Kdef = 0.6
Ufin in x = 0
Ufin in y = 0
Ufin = 0
Luce/Ufin > limite
24.2/0=4882778.8 > 200
Condizione base per ricombinare la freccia: Variabile A
Comb: SLE quasi permanente, 2 + incrementi viscosi
Coefficienti combinatori impiegati:
Pesi strutturali = 1,000 + 0,600 = 1,600
Permanenti portati = 1,000 + 0,600 = 1,600
Variabile A = 1,000 + 0,180 = 1,180

---

## Asta 188: Trave in legno a falda Falda 1 fili 132-133

Verifiche condotte secondo D.M. 17-01-18 (N.T.C.)

**Dati generali**

Lunghezza = 14.5

**Caratteristiche della sezione**

| Descrizione | Tipo | Base | Altezza | Area | Jx | Jy | Wx | Wy |
|---|---|---|---|---|---|---|---|---|
| R 8x10 | Rettangolare | 8 | 10 | 80 | 666.67 | 426.67 | 133.33 | 106.67 |

Materiale: C14 EN 338:2016
Rapporto luce/freccia elastica limite = 300
Rapporto luce/freccia elastica differita = 200
Mensola Y: Nessuno; Mensola X: Nessuno
Classe di servizio 1

**Verifica tensoflessione D.M. 17-01-18 §4.4.8.1.7**

Sezione ad ascissa 0
Coefficiente parziale di sicurezza del materiale γ = 1.5
Kmod = 1.1; Kh = 1.084 (formula 11.7.1)
St,0,d/ft,0,d + Sm,y,d/fm,y,d + Km*(Sm,z,d/fm,z,d) <= 1
St,0,d/ft,0,d + Km*(Sm,y,d/fm,y,d) + Sm,z,d/fm,z,d <= 1
7/57.3+0.7*3.5/111.3+12.3/111.3=0.25 <= 1 [4.4.6b] Comb: SLV, 10; Durata minima del carico nella combinazione: istantaneo
Mx = 469.2; My = 1316.7; N = 558.6

**Verifica taglio D.M. 17-01-18 §4.4.8.1.9**

Sezione ad ascissa 14.5
Coefficiente parziale di sicurezza del materiale γ = 1.5
Kmod = 1.1; kcr = 0.67
τ,d <= fv,d
Sqrt(1.87^2+0.64^2) = 1.97 <= 22 Comb: SLV, 2; Durata minima del carico nella combinazione: istantaneo
Tx = 66.3; Ty = -22.8

**Verifica taglio+torsione D.M. 17-01-18 §4.4.8.1.11**

Sezione ad ascissa 14.5
Coefficiente parziale di sicurezza del materiale γ = 1.5
Kmod = 1.1; Kh = 1.084 (formula 11.7.1); kcr = 0.67
τ,tor,d/(ksh*fv,d) + (τ,y,d/fv,d)^2 + (τ,z,d/fv,d)^2 <= 1
0.04+0+0 <= 1 Comb: SLV, 4; Durata minima del carico nella combinazione: istantaneo
Tx = 41.6; Ty = -35.4; Mt = -153.6

**Verifica torsione D.M. 17-01-18 §4.4.8.1.10**

Sezione ad ascissa 14.5
Coefficiente parziale di sicurezza del materiale γ = 1.5
Kmod = 1.1
τ,tor,d <= Ksh * fv,d
1.08 <= 26.13 Comb: SLV, 4; Durata minima del carico nella combinazione: istantaneo
Mt = -153.6

**Verifica della freccia istantanea totale D.M. 17-01-18 §C4.4.7 Circolare 7 21-01-19**

Sezione ad ascissa 6.8
Kdef = 0
Uinst tot in x = 0
Uinst tot in y = 0
Uinst tot = 0
Luce/Uinst,tot > limite
14.5/0=116106.3 > 300 Comb: SLE rara, 10

**Verifica della freccia istantanea variabile D.M. 17-01-18 §4.4.7**

Sezione ad ascissa 7.2
Kdef = 0
Uinst var in x = 0
Uinst var in y = 0
Uinst var = 0
Luce/Uinst,var > limite
14.5/0=112454.1 > 300 Comb: SLE rara, 8

**Verifica della freccia finale EC5 §4.4.7 - EC5 2.2.3 (3)**

Sezione ad ascissa 6.8
Kdef = 0.6
Ufin in x = 0
Ufin in y = 0
Ufin = 0
Luce/Ufin > limite
14.5/0=74238.6 > 200
Coefficienti combinatori impiegati:
Pesi strutturali = 1,000 + 0,600 = 1,600
Permanenti portati = 1,000 + 0,600 = 1,600
Variabile A = 0,700 + 0,180 = 0,880
Vento = 0,600 + 0,400 = 1,000

---

## Asta 189: Trave in legno a falda Falda 1 fili 132-133

Verifiche condotte secondo D.M. 17-01-18 (N.T.C.)

**Dati generali**

Lunghezza = 14.5

**Caratteristiche della sezione**

| Descrizione | Tipo | Base | Altezza | Area | Jx | Jy | Wx | Wy |
|---|---|---|---|---|---|---|---|---|
| R 8x10 | Rettangolare | 8 | 10 | 80 | 666.67 | 426.67 | 133.33 | 106.67 |

Materiale: C14 EN 338:2016
Rapporto luce/freccia elastica limite = 300
Rapporto luce/freccia elastica differita = 200
Mensola Y: Nessuno; Mensola X: Nessuno
Classe di servizio 1

**Verifica tensoflessione D.M. 17-01-18 §4.4.8.1.7**

Sezione ad ascissa 14.5
Coefficiente parziale di sicurezza del materiale γ = 1.5
Kmod = 1.1; Kh = 1.084 (formula 11.7.1)
St,0,d/ft,0,d + Sm,y,d/fm,y,d + Km*(Sm,z,d/fm,z,d) <= 1
St,0,d/ft,0,d + Km*(Sm,y,d/fm,y,d) + Sm,z,d/fm,z,d <= 1
8.9/57.3+0.7*1.6/111.3+14.5/111.3=0.3 <= 1 [4.4.6b] Comb: SLV, 14; Durata minima del carico nella combinazione: istantaneo

Mx = -216.7; My = 1542.8; N = 710.5

**Verifica taglio D.M. 17-01-18 §4.4.8.1.9**

Sezione ad ascissa 14.5
Coefficiente parziale di sicurezza del materiale γ = 1.5
Kmod = 1.1; kcr = 0.67
τ,d <= fv,d
Sqrt(1.55^2+0.34^2) = 1.59 <= 22 Comb: SLV, 8; Durata minima del carico nella combinazione: istantaneo
Tx = 55.3; Ty = -11.9

**Verifica taglio+torsione D.M. 17-01-18 §4.4.8.1.11**

Sezione ad ascissa 0
Coefficiente parziale di sicurezza del materiale γ = 1.5
Kmod = 1.1; Kh = 1.084 (formula 11.7.1); kcr = 0.67
τ,tor,d/(ksh*fv,d) + (τ,y,d/fv,d)^2 + (τ,z,d/fv,d)^2 <= 1
0.02+0+0 <= 1 Comb: SLV, 14; Durata minima del carico nella combinazione: istantaneo
Tx = -45.3; Ty = 18.9; Mt = 81.8

**Verifica torsione D.M. 17-01-18 §4.4.8.1.10**

Sezione ad ascissa 14.5
Coefficiente parziale di sicurezza del materiale γ = 1.5
Kmod = 1.1
τ,tor,d <= Ksh * fv,d
0.58 <= 26.13 Comb: SLV, 14; Durata minima del carico nella combinazione: istantaneo
Mt = 81.8

**Verifica della freccia istantanea totale D.M. 17-01-18 §C4.4.7 Circolare 7 21-01-19**

Sezione ad ascissa 7.7
Kdef = 0
Uinst tot in x = 0
Uinst tot in y = 0
Uinst tot = 0
Luce/Uinst,tot > limite
14.5/0=126416.8 > 300 Comb: SLE rara, 8

**Verifica della freccia istantanea variabile D.M. 17-01-18 §4.4.7**

Sezione ad ascissa 7.2
Kdef = 0
Uinst var in x = 0
Uinst var in y = 0
Uinst var = 0
Luce/Uinst,var > limite
14.5/0=91745.5 > 300 Comb: SLE rara, 8

**Verifica della freccia finale EC5 §4.4.7 - EC5 2.2.3 (3)**

Sezione ad ascissa 7.7
Kdef = 0.6
Ufin in x = 0
Ufin in y = 0
Ufin = 0
Luce/Ufin > limite
14.5/0=162823.4 > 200
Coefficienti combinatori impiegati:
Pesi strutturali = 1,000 + 0,600 = 1,600
Permanenti portati = 1,000 + 0,600 = 1,600
Neve = 0,500 + 0,500 = 1,000

---

## Asta 190: Trave in legno a falda Falda 1 fili 132-133

Verifiche condotte secondo D.M. 17-01-18 (N.T.C.)

**Dati generali**

Lunghezza = 40.7

**Caratteristiche della sezione**

| Descrizione | Tipo | Base | Altezza | Area | Jx | Jy | Wx | Wy |
|---|---|---|---|---|---|---|---|---|
| R 8x10 | Rettangolare | 8 | 10 | 80 | 666.67 | 426.67 | 133.33 | 106.67 |

Materiale: C14 EN 338:2016
Rapporto luce/freccia elastica limite = 300
Rapporto luce/freccia elastica differita = 200
Mensola Y: Nessuno; Mensola X: Nessuno
Classe di servizio 1

**Verifica tensoflessione D.M. 17-01-18 §4.4.8.1.7**

Sezione ad ascissa 40.7
Coefficiente parziale di sicurezza del materiale γ = 1.5
Kmod = 1.1; Kh = 1.084 (formula 11.7.1)
St,0,d/ft,0,d + Sm,y,d/fm,y,d + Km*(Sm,z,d/fm,z,d) <= 1
St,0,d/ft,0,d + Km*(Sm,y,d/fm,y,d) + Sm,z,d/fm,z,d <= 1
13.4/57.3+0.7*1.4/111.3+25.7/111.3=0.47 <= 1 [4.4.6b] Comb: SLV, 2; Durata minima del carico nella combinazione: istantaneo
Mx = 187; My = 2737.3; N = 1073.1

**Verifica taglio D.M. 17-01-18 §4.4.8.1.9**

Sezione ad ascissa 40.7
Coefficiente parziale di sicurezza del materiale γ = 1.5
Kmod = 1.1; kcr = 0.67
τ,d <= fv,d
Sqrt(1.95^2+0.21^2) = 1.96 <= 22 Comb: SLV, 8; Durata minima del carico nella combinazione: istantaneo
Tx = 69.3; Ty = -7.5

**Verifica taglio+torsione D.M. 17-01-18 §4.4.8.1.11**

Sezione ad ascissa 0
Coefficiente parziale di sicurezza del materiale γ = 1.5
Kmod = 1.1; Kh = 1.084 (formula 11.7.1); kcr = 0.67
τ,tor,d/(ksh*fv,d) + (τ,y,d/fv,d)^2 + (τ,z,d/fv,d)^2 <= 1
0.03+0+0 <= 1 Comb: SLV, 14; Durata minima del carico nella combinazione: istantaneo
Tx = -49.5; Ty = 13.9; Mt = 97.3

**Verifica torsione D.M. 17-01-18 §4.4.8.1.10**

Sezione ad ascissa 40.7
Coefficiente parziale di sicurezza del materiale γ = 1.5
Kmod = 1.1
τ,tor,d <= Ksh * fv,d
0.69 <= 26.13 Comb: SLV, 14; Durata minima del carico nella combinazione: istantaneo
Mt = 97.3

**Verifica della freccia istantanea totale D.M. 17-01-18 §C4.4.7 Circolare 7 21-01-19**

Sezione ad ascissa 21.7
Kdef = 0
Uinst tot in x = 0
Uinst tot in y = 0
Uinst tot = 0
Luce/Uinst,tot > limite
40.7/0=28852.5 > 300 Comb: SLE rara, 8

**Verifica della freccia istantanea variabile D.M. 17-01-18 §4.4.7**

Sezione ad ascissa 19
Kdef = 0
Uinst var in x = 0
Uinst var in y = 0
Uinst var = 0
Luce/Uinst,var > limite
40.7/0=34783.2 > 300 Comb: SLE rara, 8

**Verifica della freccia finale EC5 §4.4.7 - EC5 2.2.3 (3)**

Sezione ad ascissa 21.7
Kdef = 0.6
Ufin in x = 0
Ufin in y = 0
Ufin = 0
Luce/Ufin > limite
40.7/0=26056.1 > 200
Coefficienti combinatori impiegati:
Pesi strutturali = 1,000 + 0,600 = 1,600
Permanenti portati = 1,000 + 0,600 = 1,600
Neve = 0,500 + 0,500 = 1,000

---

## Asta 191: Trave in legno a falda Falda 1 fili 132-133

Verifiche condotte secondo D.M. 17-01-18 (N.T.C.)

**Dati generali**

Lunghezza = 40.7

Caratteristiche della sezione

| Descrizione | Tipo | Base | Altezza | Area | Jx | Jy | Wx | Wy |
|---|---|---|---|---|---|---|---|---|
| R 8x10 | Rettangolare | 8 | 10 | 80 | 666.67 | 426.67 | 133.33 | 106.67 |

Materiale: C14 EN 338:2016
Rapporto luce/freccia elastica limite = 300
Rapporto luce/freccia elastica differita = 200
Mensola Y: Nessuno; Mensola X: Nessuno
Classe di servizio 1

Verifica tensoflessione D.M. 17-01-18 §4.4.8.1.7

Sezione ad ascissa 40.7
Coefficiente parziale di sicurezza del materiale γ = 1.5
Kmod = 1.1; Kh = 1.084 (formula 11.7.1)
St,0,d/ft,0,d + Sm,y,d/fm,y,d + Km*(Sm,z,d/fm,z,d) <= 1
St,0,d/ft,0,d + Km*(Sm,y,d/fm,y,d) + Sm,z,d/fm,z,d <= 1
20.2/57.3+0.7*3.4/111.3+32.6/111.3=0.67 <= 1 [4.4.6b] Comb: SLV, 6; Durata minima del carico nella combinazione: istantaneo
Mx = -450.9; My = 3477.4; N = 1612.8

Verifica taglio D.M. 17-01-18 §4.4.8.1.9

Sezione ad ascissa 0
Coefficiente parziale di sicurezza del materiale γ = 1.5
Kmod = 1.1; kcr = 0.67
τ,d <= fv,d
Sqrt(1.84^2+0.27^2) = 1.86 <= 22 Comb: SLV, 4; Durata minima del carico nella combinazione: istantaneo
Tx = 65.5; Ty = 9.7

Verifica taglio+torsione D.M. 17-01-18 §4.4.8.1.11

Sezione ad ascissa 0
Coefficiente parziale di sicurezza del materiale γ = 1.5
Kmod = 1.1; Kh = 1.084 (formula 11.7.1); kcr = 0.67
τ,tor,d/(ksh*fv,d) + (τ,y,d/fv,d)^2 + (τ,z,d/fv,d)^2 <= 1
0.04+0+0 <= 1 Comb: SLV, 6; Durata minima del carico nella combinazione: istantaneo
Tx = -15.7; Ty = 21.2; Mt = 147.8

Verifica torsione D.M. 17-01-18 §4.4.8.1.10

Sezione ad ascissa 40.7
Coefficiente parziale di sicurezza del materiale γ = 1.5
Kmod = 1.1
τ,tor,d <= Ksh * fv,d
1.04 <= 26.13 Comb: SLV, 6; Durata minima del carico nella combinazione: istantaneo
Mt = 147.8

Verifica della freccia istantanea totale D.M. 17-01-18 §C4.4.7 Circolare 7 21-01-19

Sezione ad ascissa 20.4
Kdef = 0
Uinst tot in x = 0
Uinst tot in y = 0
Uinst tot = 0
Luce/Uinst,tot > limite
40.7/0=26844.9 > 300 Comb: SLE rara, 8

Verifica della freccia istantanea variabile D.M. 17-01-18 §4.4.7

Sezione ad ascissa 17.6
Kdef = 0
Uinst var in x = 0
Uinst var in y = 0
Uinst var = 0
Luce/Uinst,var > limite
40.7/0=57326.4 > 300 Comb: SLE rara, 8

Verifica della freccia finale EC5 §4.4.7 - EC5 2.2.3 (3)

Sezione ad ascissa 20.4
Kdef = 0.6
Ufin in x = 0
Ufin in y = 0
Ufin = 0
Luce/Ufin > limite
40.7/0=20300.6 > 200
Coefficienti combinatori impiegati:
Pesi strutturali = 1,000 + 0,600 = 1,600
Permanenti portati = 1,000 + 0,600 = 1,600
Neve = 0,500 + 0,500 = 1,000

## Asta 192: Trave in legno a falda Falda 1 fili 132-133

Verifiche condotte secondo D.M. 17-01-18 (N.T.C.)

### Dati generali

Lunghezza = 40.7

### Caratteristiche della sezione

| Descrizione | Tipo | Base | Altezza | Area | Jx | Jy | Wx | Wy |
|---|---|---|---|---|---|---|---|---|
| R 8x10 | Rettangolare | 8 | 10 | 80 | 666.67 | 426.67 | 133.33 | 106.67 |

Materiale: C14 EN 338:2016
Rapporto luce/freccia elastica limite = 300
Rapporto luce/freccia elastica differita = 200
Mensola Y: Nessuno; Mensola X: Nessuno
Classe di servizio 1

### Verifica tensoflessione D.M. 17-01-18 §4.4.8.1.7

Sezione ad ascissa 6.8
Coefficiente parziale di sicurezza del materiale γ = 1.5
Kmod = 1.1; Kh = 1.084 (formula 11.7.1)
St,0,d/ft,0,d + Sm,y,d/fm,y,d + Km*(Sm,z,d/fm,z,d) <= 1
St,0,d/ft,0,d + Km*(Sm,y,d/fm,y,d) + Sm,z,d/fm,z,d <= 1
22.5/57.3+0.7*1.8/111.3+32.7/111.3=0.7 <= 1 [4.4.6b] Comb: SLV, 6; Durata minima del carico nella combinazione: istantaneo
Mx = -234.3; My = 3483.6; N = 1797.5

### Verifica taglio D.M. 17-01-18 §4.4.8.1.9

Sezione ad ascissa 0
Coefficiente parziale di sicurezza del materiale γ = 1.5
Kmod = 1.1; kcr = 0.67
τ,d <= fv,d
Sqrt(2.67^2+1.04^2) = 2.86 <= 22 Comb: SLV, 8; Durata minima del carico nella combinazione: istantaneo
Tx = -94.8; Ty = 36.8

### Verifica taglio+torsione D.M. 17-01-18 §4.4.8.1.11

Sezione ad ascissa 0
Coefficiente parziale di sicurezza del materiale γ = 1.5
Kmod = 1.1; Kh = 1.084 (formula 11.7.1); kcr = 0.67
τ,tor,d/(ksh*fv,d) + (τ,y,d/fv,d)^2 + (τ,z,d/fv,d)^2 <= 1
0.08+0.01+0 <= 1 Comb: SLV, 8; Durata minima del carico nella combinazione: istantaneo
Tx = -94.8; Ty = 36.8; Mt = 293.1

### Verifica torsione D.M. 17-01-18 §4.4.8.1.10

Sezione ad ascissa 40.7
Coefficiente parziale di sicurezza del materiale γ = 1.5
Kmod = 1.1
τ,tor,d <= Ksh * fv,d
2.07 <= 26.13 Comb: SLV, 8; Durata minima del carico nella combinazione: istantaneo
Mt = 293.1

### Verifica della freccia istantanea totale D.M. 17-01-18 §C4.4.7 Circolare 7 21-01-19

Sezione ad ascissa 17.6
Kdef = 0
Uinst tot in x = 0
Uinst tot in y = 0
Uinst tot = 0
Luce/Uinst,tot > limite
40.7/0=29529.6 > 300 Comb: SLE rara, 8

### Verifica della freccia istantanea variabile D.M. 17-01-18 §4.4.7

Sezione ad ascissa 21.7
Kdef = 0
Uinst var in x = 0
Uinst var in y = 0
Uinst var = 0
Luce/Uinst,var > limite
40.7/0=46811.5 > 300 Comb: SLE rara, 17

### Verifica della freccia finale EC5 §4.4.7 - EC5 2.2.3 (3)

Sezione ad ascissa 17.6
Kdef = 0.6
Ufin in x = 0

Ufin in y = 0
Ufin = 0
Luce/Ufin > limite
40.7/0=20059.9 > 200
Coefficienti combinatori impiegati:
Pesi strutturali = 1,000 + 0,600 = 1,600
Permanenti portati = 1,000 + 0,600 = 1,600
Neve = 0,500 + 0,500 = 1,000

## Asta 193: Trave in legno a falda Falda 1 fili 132-133

Verifiche condotte secondo D.M. 17-01-18 (N.T.C.)

### Dati generali

Lunghezza = 276.8

### Caratteristiche della sezione

| Descrizione | Tipo | Base | Altezza | Area | Jx | Jy | Wx | Wy |
|---|---|---|---|---|---|---|---|---|
| R 8x10 | Rettangolare | 8 | 10 | 80 | 666.67 | 426.67 | 133.33 | 106.67 |

Materiale: C14 EN 338:2016
Rapporto luce/freccia elastica limite = 300
Rapporto luce/freccia elastica differita = 200
Mensola Y: Nessuno; Mensola X: Nessuno
Classe di servizio 1

### Verifica pressoflessione D.M. 17-01-18 §4.4.8.1.8

Sezione ad ascissa 276.8
Coefficiente parziale di sicurezza del materiale γ = 1.5
Kmod = 0.8; Kh = 1.084 (formula 11.7.1)
(Sc,0,d/fc,0,d)^2 + Sm,y,d/fm,y,d + Km*(Sm,z,d/fm,z,d) <= 1
(Sc,0,d/fc,0,d)^2 + Km*(Sm,y,d/fm,y,d) + Sm,z,d/fm,z,d <= 1
(1.9/85.3)^2+316.3/81+0.7*3.7/80.97=3.94 !> 1 [4.4.7a] Comb: SLU, 79; Durata minima del carico nella combinazione: media - NON SODDISFATTA
Mx = -42173.3; My = -398.1; N = -155.9

### Verifica taglio D.M. 17-01-18 §4.4.8.1.9

Sezione ad ascissa 0
Coefficiente parziale di sicurezza del materiale γ = 1.5
Kmod = 0.8; kcr = 0.67
τ,d <= fv,d
Sqrt(0.07^2+8.2^2) = 8.2 <= 16 Comb: SLU, 79; Durata minima del carico nella combinazione: media
Tx = -2.3; Ty = 291.6

### Verifica taglio+torsione D.M. 17-01-18 §4.4.8.1.11

Sezione ad ascissa 0
Coefficiente parziale di sicurezza del materiale γ = 1.5
Kmod = 0.8; Kh = 1.084 (formula 11.7.1); kcr = 0.67
τ,tor,d/(ksh*fv,d) + (τ,y,d/fv,d)^2 + (τ,z,d/fv,d)^2 <= 1
0+0+0.26 <= 1 Comb: SLU, 79; Durata minima del carico nella combinazione: media
Tx = -2.3; Ty = 291.6; Mt = 2.7

### Verifica torsione D.M. 17-01-18 §4.4.8.1.10

Sezione ad ascissa 276.8
Coefficiente parziale di sicurezza del materiale γ = 1.5
Kmod = 1.1
τ,tor,d <= Ksh * fv,d
0.35 <= 26.13 Comb: SLV, 12; Durata minima del carico nella combinazione: istantaneo
Mt = 49.7

### Verifica della freccia istantanea totale D.M. 17-01-18 §C4.4.7 Circolare 7 21-01-19

Sezione ad ascissa 212.2
Kdef = 0
Uinst tot in x = -0.02
Uinst tot in y = -0.96
Uinst tot = 0.96
Luce/Uinst,tot < limite
276.8/0.96=287 < 300 Comb: SLE rara, 16 - NON SODDISFATTA

### Verifica della freccia istantanea variabile D.M. 17-01-18 §4.4.7

Sezione ad ascissa 212.2
Kdef = 0
Uinst var in x = -0.02
Uinst var in y = -0.62

Uinst var = 0.62
Luce/Uinst,var > limite
276.8/0.62=449.8 > 300 Comb: SLE rara, 16

**Verifica della freccia finale EC5 §4.4.7 - EC5 2.2.3 (3)**

Sezione ad ascissa 212.2
Kdef = 0.6
Ufin in x = -0.02
Ufin in y = -1.17
Ufin = 1.17
Luce/Ufin > limite
276.8/1.17=235.7 > 200
Coefficienti combinatori impiegati:
Pesi strutturali = 1,000 + 0,600 = 1,600
Permanenti portati = 1,000 + 0,600 = 1,600
Variabile A = 0,700 + 0,180 = 0,880
Neve = 0,500 + 0,500 = 1,000

## Asta 194: Trave in legno a falda Falda 1 fili 121-122

Verifiche condotte secondo D.M. 17-01-18 (N.T.C.)

**Dati generali**

Lunghezza = 165.2

**Caratteristiche della sezione**

| Descrizione | Tipo | Base | Altezza | Area | Jx | Jy | Wx | Wy |
|---|---|---|---|---|---|---|---|---|
| R 8x10 | Rettangolare | 8 | 10 | 80 | 666.67 | 426.67 | 133.33 | 106.67 |

Materiale: C14 EN 338:2016
Rapporto luce/freccia elastica limite = 300
Rapporto luce/freccia elastica differita = 200
Mensola Y: Nessuno; Mensola X: Nessuno
Classe di servizio 1

**Verifica tensoflessione D.M. 17-01-18 §4.4.8.1.7**

Sezione ad ascissa 165.2
Coefficiente parziale di sicurezza del materiale γ = 1.5
Kmod = 0.8; Kh = 1.084 (formula 11.7.1)
St,0,d/ft,0,d + Sm,y,d/fm,y,d + Km*(Sm,z,d/fm,z,d) !> 1
St,0,d/ft,0,d + Km*(Sm,y,d/fm,y,d) + Sm,z,d/fm,z,d !> 1
1/41.6+125.5/81+0.7*5.4/81=1.62 !> 1 [4.4.6a] Comb: SLU, 71; Durata minima del carico nella combinazione: media - NON SODDISFATTA
Mx = 16737.4; My = -577; N = 80

**Verifica taglio D.M. 17-01-18 §4.4.8.1.9**

Sezione ad ascissa 165.2
Coefficiente parziale di sicurezza del materiale γ = 1.5
Kmod = 0.8; kcr = 0.67
τ,d <= fv,d
Sqrt(0.29^2+3.4^2) = 3.41 <= 16 Comb: SLU, 71; Durata minima del carico nella combinazione: media
Tx = -10.2; Ty = -121

**Verifica taglio+torsione D.M. 17-01-18 §4.4.8.1.11**

Sezione ad ascissa 165.2
Coefficiente parziale di sicurezza del materiale γ = 1.5
Kmod = 0.8; Kh = 1.084 (formula 11.7.1); kcr = 0.67
τ,tor,d/(ksh*fv,d) + (τ,y,d/fv,d)^2 + (τ,z,d/fv,d)^2 <= 1
0.01+0+0.05 <= 1 Comb: SLU, 71; Durata minima del carico nella combinazione: media
Tx = -10.2; Ty = -121; Mt = 22.6

**Verifica torsione D.M. 17-01-18 §4.4.8.1.10**

Sezione ad ascissa 165.2
Coefficiente parziale di sicurezza del materiale γ = 1.5
Kmod = 1.1
τ,tor,d <= Ksh * fv,d
0.3 <= 26.13 Comb: SLV, 6; Durata minima del carico nella combinazione: istantaneo
Mt = 42.3

## Asta 195: Trave in legno a falda Falda 1 fili 121-122

Verifiche condotte secondo D.M. 17-01-18 (N.T.C.)

### Dati generali

Lunghezza = 262.8

### Caratteristiche della sezione

| Descrizione | Tipo | Base | Altezza | Area | Jx | Jy | Wx | Wy |
|---|---|---|---|---|---|---|---|---|
| R 8x10 | Rettangolare | 8 | 10 | 80 | 666.67 | 426.67 | 133.33 | 106.67 |

Materiale: C14 EN 338:2016
Rapporto luce/freccia elastica limite = 300
Rapporto luce/freccia elastica differita = 200
Mensola Y: Nessuno; Mensola X: Nessuno
Classe di servizio 1

### Verifica taglio D.M. 17-01-18 §4.4.8.1.9

Sezione ad ascissa 0
Coefficiente parziale di sicurezza del materiale γ = 1.5
Kmod = 0.8; kcr = 0.67
τ,d <= fv,d
Sqrt(0.23^2+7.05^2) = 7.05 <= 16 Comb: SLU, 80; Durata minima del carico nella combinazione: media
Tx = -8.2; Ty = 250.5

### Verifica pressoflessione D.M. 17-01-18 §4.4.8.1.8

Sezione ad ascissa 262.8
Coefficiente parziale di sicurezza del materiale γ = 1.5
Kmod = 0.8; Kh = 1.084 (formula 11.7.1)
(Sc,0,d/fc,0,d)^2 + Sm,y,d/fm,y,d + Km*(Sm,z,d/fm,z,d) <= 1
(Sc,0,d/fc,0,d)^2 + Km*(Sm,y,d/fm,y,d) + Sm,z,d/fm,z,d <= 1
(3.8/85.3)^2+281.7/81+0.7*12.5/80.97=3.59 !> 1 [4.4.7a] Comb: SLU, 79; Durata minima del carico nella combinazione: media - NON SODDISFATTA
Mx = -37559.3; My = -1331.3; N = -306.6

### Verifica taglio+torsione D.M. 17-01-18 §4.4.8.1.11

Sezione ad ascissa 0
Coefficiente parziale di sicurezza del materiale γ = 1.5
Kmod = 0.8; Kh = 1.084 (formula 11.7.1); kcr = 0.67
τ,tor,d/(ksh*fv,d) + (τ,y,d/fv,d)^2 + (τ,z,d/fv,d)^2 <= 1
0+0+0.19 <= 1 Comb: SLU, 80; Durata minima del carico nella combinazione: media
Tx = -8.2; Ty = 250.5; Mt = -2.3

### Verifica torsione D.M. 17-01-18 §4.4.8.1.10

Sezione ad ascissa 262.8
Coefficiente parziale di sicurezza del materiale γ = 1.5
Kmod = 1.1
τ,tor,d <= Ksh * fv,d
0.08 <= 26.13 Comb: SLV, 8; Durata minima del carico nella combinazione: istantaneo
Mt = -10.6

---

## Asta 196: Trave in legno a falda Falda 1 fili 113-114

Verifiche condotte secondo D.M. 17-01-18 (N.T.C.)

### Dati generali

Lunghezza = 165.2

### Caratteristiche della sezione

| Descrizione | Tipo | Base | Altezza | Area | Jx | Jy | Wx | Wy |
|---|---|---|---|---|---|---|---|---|
| R 8x10 | Rettangolare | 8 | 10 | 80 | 666.67 | 426.67 | 133.33 | 106.67 |

Materiale: C14 EN 338:2016
Rapporto luce/freccia elastica limite = 300
Rapporto luce/freccia elastica differita = 200
Mensola Y: Nessuno; Mensola X: Nessuno
Classe di servizio 1

### Verifica tensoflessione D.M. 17-01-18 §4.4.8.1.7

Sezione ad ascissa 165.2
Coefficiente parziale di sicurezza del materiale γ = 1.5
Kmod = 0.8; Kh = 1.084 (formula 11.7.1)
St,0,d/ft,0,d + Sm,y,d/fm,y,d + Km*(Sm,z,d/fm,z,d) !> 1
St,0,d/ft,0,d + Km*(Sm,y,d/fm,y,d) + Sm,z,d/fm,z,d !> 1
0.9/41.6+134.1/81+0.7*9.8/81=1.76 !> 1 [4.4.6a] Comb: SLU, 72; Durata minima del carico nella combinazione: media - NON SODDISFATTA
Mx = 17883.4; My = -1048.5; N = 73.5

### Verifica taglio D.M. 17-01-18 §4.4.8.1.9

Sezione ad ascissa 165.2

Coefficiente parziale di sicurezza del materiale γ = 1.5
Kmod = 0.8; kcr = 0.67
τ,d <= fv,d
Sqrt(0.41^2+3.49^2) = 3.52 <= 16 Comb: SLU, 72; Durata minima del carico nella combinazione: media
Tx = -14.7; Ty = -124.2

**Verifica taglio+torsione D.M. 17-01-18 §4.4.8.1.11**

Sezione ad ascissa 165.2
Coefficiente parziale di sicurezza del materiale γ = 1.5
Kmod = 0.8; Kh = 1.084 (formula 11.7.1); kcr = 0.67
τ,tor,d/(ksh*fv,d) + (τ,y,d/fv,d)^2 + (τ,z,d/fv,d)^2 <= 1
0.01+0+0.05 <= 1 Comb: SLU, 72; Durata minima del carico nella combinazione: media
Tx = -14.7; Ty = -124.2; Mt = 18.3

**Verifica torsione D.M. 17-01-18 §4.4.8.1.10**

Sezione ad ascissa 165.2
Coefficiente parziale di sicurezza del materiale γ = 1.5
Kmod = 1.1
τ,tor,d <= Ksh * fv,d
0.21 <= 26.13 Comb: SLV, 6; Durata minima del carico nella combinazione: istantaneo
Mt = 29.9

---

## Asta 197: Trave in legno a falda Falda 1 fili 113-114

Verifiche condotte secondo D.M. 17-01-18 (N.T.C.)

**Dati generali**

Lunghezza = 262.8

**Caratteristiche della sezione**

| Descrizione | Tipo | Base | Altezza | Area | Jx | Jy | Wx | Wy |
|---|---|---|---|---|---|---|---|---|
| R 8x10 | Rettangolare | 8 | 10 | 80 | 666.67 | 426.67 | 133.33 | 106.67 |

Materiale: C14 EN 338:2016
Rapporto luce/freccia elastica limite = 300
Rapporto luce/freccia elastica differita = 200
Mensola Y: Nessuno; Mensola X: Nessuno
Classe di servizio 1

**Verifica taglio D.M. 17-01-18 §4.4.8.1.9**

Sezione ad ascissa 0
Coefficiente parziale di sicurezza del materiale γ = 1.5
Kmod = 0.8; kcr = 0.67
τ,d <= fv,d
Sqrt(0.33^2+6.71^2) = 6.72 <= 16 Comb: SLU, 80; Durata minima del carico nella combinazione: media
Tx = -11.8; Ty = 238.5

**Verifica pressoflessione D.M. 17-01-18 §4.4.8.1.8**

Sezione ad ascissa 262.8
Coefficiente parziale di sicurezza del materiale γ = 1.5
Kmod = 0.8; Kh = 1.084 (formula 11.7.1)
(Sc,0,d/fc,0,d)^2 + Sm,y,d/fm,y,d + Km*(Sm,z,d/fm,z,d) <= 1
(Sc,0,d/fc,0,d)^2 + Km*(Sm,y,d/fm,y,d) + Sm,z,d/fm,z,d <= 1
(1.4/85.3)^2+270.6/81+0.7*16.4/80.97=3.48 !> 1 [4.4.7a] Comb: SLU, 80; Durata minima del carico nella combinazione: media - NON SODDISFATTA
Mx = -36074.2; My = -1747.7; N = -109.6

**Verifica taglio+torsione D.M. 17-01-18 §4.4.8.1.11**

Sezione ad ascissa 0
Coefficiente parziale di sicurezza del materiale γ = 1.5
Kmod = 0.8; Kh = 1.084 (formula 11.7.1); kcr = 0.67
τ,tor,d/(ksh*fv,d) + (τ,y,d/fv,d)^2 + (τ,z,d/fv,d)^2 <= 1
0.01+0+0.18 <= 1 Comb: SLU, 80; Durata minima del carico nella combinazione: media
Tx = -11.8; Ty = 238.5; Mt = -14.3

**Verifica torsione D.M. 17-01-18 §4.4.8.1.10**

Sezione ad ascissa 262.8
Coefficiente parziale di sicurezza del materiale γ = 1.5
Kmod = 1.1
τ,tor,d <= Ksh * fv,d
0.2 <= 26.13 Comb: SLV, 6; Durata minima del carico nella combinazione: istantaneo
Mt = -28.9

---

## Asta 198: Trave in legno a falda Falda 1 fili 104-105

Verifiche condotte secondo D.M. 17-01-18 (N.T.C.)

### Dati generali

Lunghezza = 165.2

### Caratteristiche della sezione

| Descrizione | Tipo | Base | Altezza | Area | Jx | Jy | Wx | Wy |
|---|---|---|---|---|---|---|---|---|
| R 8x10 | Rettangolare | 8 | 10 | 80 | 666.67 | 426.67 | 133.33 | 106.67 |

Materiale: C14 EN 338:2016
Rapporto luce/freccia elastica limite = 300
Rapporto luce/freccia elastica differita = 200
Mensola Y: Nessuno; Mensola X: Nessuno
Classe di servizio 1

### Verifica tensoflessione D.M. 17-01-18 §4.4.8.1.7

Sezione ad ascissa 165.2
Coefficiente parziale di sicurezza del materiale γ = 1.5
Kmod = 0.8; Kh = 1.084 (formula 11.7.1)
St,0,d/ft,0,d + Sm,y,d/fm,y,d + Km*(Sm,z,d/fm,z,d) !> 1
St,0,d/ft,0,d + Km*(Sm,y,d/fm,y,d) + Sm,z,d/fm,z,d !> 1
0.8/41.6+134.9/81+0.7*6.3/81=1.74 !> 1 [4.4.6a] Comb: SLU, 80; Durata minima del carico nella combinazione: media - NON SODDISFATTA
Mx = 17988.9; My = -666.7; N = 63.9

### Verifica taglio D.M. 17-01-18 §4.4.8.1.9

Sezione ad ascissa 165.2
Coefficiente parziale di sicurezza del materiale γ = 1.5
Kmod = 0.8; kcr = 0.67
τ,d <= fv,d
Sqrt(0.28^2+3.51^2) = 3.52 <= 16 Comb: SLU, 72; Durata minima del carico nella combinazione: media
Tx = -9.9; Ty = -124.8

### Verifica taglio+torsione D.M. 17-01-18 §4.4.8.1.11

Sezione ad ascissa 165.2
Coefficiente parziale di sicurezza del materiale γ = 1.5
Kmod = 0.8; Kh = 1.084 (formula 11.7.1); kcr = 0.67
τ,tor,d/(ksh*fv,d) + (τ,y,d/fv,d)^2 + (τ,z,d/fv,d)^2 <= 1
0.01+0+0.05 <= 1 Comb: SLU, 72; Durata minima del carico nella combinazione: media
Tx = -9.9; Ty = -124.8; Mt = 18.9

### Verifica torsione D.M. 17-01-18 §4.4.8.1.10

Sezione ad ascissa 165.2
Coefficiente parziale di sicurezza del materiale γ = 1.5
Kmod = 0.8
τ,tor,d <= Ksh * fv,d
0.13 <= 19 Comb: SLU, 80; Durata minima del carico nella combinazione: media
Mt = 19.1

---

## Asta 199: Trave in legno a falda Falda 1 fili 104-105

Verifiche condotte secondo D.M. 17-01-18 (N.T.C.)

### Dati generali

Lunghezza = 262.8

### Caratteristiche della sezione

| Descrizione | Tipo | Base | Altezza | Area | Jx | Jy | Wx | Wy |
|---|---|---|---|---|---|---|---|---|
| R 8x10 | Rettangolare | 8 | 10 | 80 | 666.67 | 426.67 | 133.33 | 106.67 |

Materiale: C14 EN 338:2016
Rapporto luce/freccia elastica limite = 300
Rapporto luce/freccia elastica differita = 200
Mensola Y: Nessuno; Mensola X: Nessuno
Classe di servizio 1

### Verifica taglio D.M. 17-01-18 §4.4.8.1.9

Sezione ad ascissa 0
Coefficiente parziale di sicurezza del materiale γ = 1.5
Kmod = 0.8; kcr = 0.67
τ,d <= fv,d
Sqrt(0.26^2+6.65^2) = 6.65 <= 16 Comb: SLU, 80; Durata minima del carico nella combinazione: media
Tx = -9.3; Ty = 236.3

**Verifica pressoflessione D.M. 17-01-18 §4.4.8.1.8**

Sezione ad ascissa 262.8
Coefficiente parziale di sicurezza del materiale γ = 1.5
Kmod = 0.8; Kh = 1.084 (formula 11.7.1)
(Sc,0,d/fc,0,d)^2 + Sm,y,d/fm,y,d + Km*(Sm,z,d/fm,z,d) <= 1
(Sc,0,d/fc,0,d)^2 + Km*(Sm,y,d/fm,y,d) + Sm,z,d/fm,z,d <= 1
(1.3/85.3)^2+267.3/81+0.7*13.3/80.97=3.42 !> 1 [4.4.7a] Comb: SLU, 80; Durata minima del carico nella combinazione: media - NON SODDISFATTA
Mx = -35637.2; My = -1415.8; N = -100.9

**Verifica taglio+torsione D.M. 17-01-18 §4.4.8.1.11**

Sezione ad ascissa 0
Coefficiente parziale di sicurezza del materiale γ = 1.5
Kmod = 0.8; Kh = 1.084 (formula 11.7.1); kcr = 0.67
τ,tor,d/(ksh*fv,d) + (τ,y,d/fv,d)^2 + (τ,z,d/fv,d)^2 <= 1
0.01+0+0.17 <= 1 Comb: SLU, 80; Durata minima del carico nella combinazione: media
Tx = -9.3; Ty = 236.3; Mt = -32

**Verifica torsione D.M. 17-01-18 §4.4.8.1.10**

Sezione ad ascissa 262.8
Coefficiente parziale di sicurezza del materiale γ = 1.5
Kmod = 0.8
τ,tor,d <= Ksh * fv,d
0.23 <= 19 Comb: SLU, 30; Durata minima del carico nella combinazione: media
Mt = -32.8

---

## Asta 200: Trave in legno a falda Falda 1 fili 97-98

Verifiche condotte secondo D.M. 17-01-18 (N.T.C.)

**Dati generali**

Lunghezza = 165.2

**Caratteristiche della sezione**

| Descrizione | Tipo | Base | Altezza | Area | Jx | Jy | Wx | Wy |
|---|---|---|---|---|---|---|---|---|
| R 8x10 | Rettangolare | 8 | 10 | 80 | 666.67 | 426.67 | 133.33 | 106.67 |

Materiale: C14 EN 338:2016
Rapporto luce/freccia elastica limite = 300
Rapporto luce/freccia elastica differita = 200
Mensola Y: Nessuno; Mensola X: Nessuno
Classe di servizio 1

**Verifica tensoflessione D.M. 17-01-18 §4.4.8.1.7**

Sezione ad ascissa 165.2
Coefficiente parziale di sicurezza del materiale γ = 1.5
Kmod = 0.8; Kh = 1.084 (formula 11.7.1)
St,0,d/ft,0,d + Sm,y,d/fm,y,d + Km*(Sm,z,d/fm,z,d) !> 1
St,0,d/ft,0,d + Km*(Sm,y,d/fm,y,d) + Sm,z,d/fm,z,d !> 1
1.6/41.6+126.5/81+0.7*5.4/81=1.65 !> 1 [4.4.6a] Comb: SLU, 80; Durata minima del carico nella combinazione: media - NON SODDISFATTA
Mx = 16865.1; My = -574.5; N = 129.4

**Verifica taglio D.M. 17-01-18 §4.4.8.1.9**

Sezione ad ascissa 165.2
Coefficiente parziale di sicurezza del materiale γ = 1.5
Kmod = 0.8; kcr = 0.67
τ,d <= fv,d
Sqrt(0.16^2+3.46^2) = 3.46 <= 16 Comb: SLU, 72; Durata minima del carico nella combinazione: media
Tx = -5.6; Ty = -122.9

**Verifica taglio+torsione D.M. 17-01-18 §4.4.8.1.11**

Sezione ad ascissa 165.2
Coefficiente parziale di sicurezza del materiale γ = 1.5
Kmod = 0.8; Kh = 1.084 (formula 11.7.1); kcr = 0.67
τ,tor,d/(ksh*fv,d) + (τ,y,d/fv,d)^2 + (τ,z,d/fv,d)^2 <= 1
0+0+0.05 <= 1 Comb: SLU, 72; Durata minima del carico nella combinazione: media
Tx = -5.6; Ty = -122.9; Mt = 8.7

**Verifica torsione D.M. 17-01-18 §4.4.8.1.10**

Sezione ad ascissa 165.2
Coefficiente parziale di sicurezza del materiale γ = 1.5
Kmod = 1.1
τ,tor,d <= Ksh * fv,d

0.13 <= 26.13 Comb: SLV, 6; Durata minima del carico nella combinazione: istantaneo
Mt = 18.1

## Asta 201: Trave in legno a falda Falda 1 fili 97-98

Verifiche condotte secondo D.M. 17-01-18 (N.T.C.)

### Dati generali

Lunghezza = 262.8

### Caratteristiche della sezione

| Descrizione | Tipo | Base | Altezza | Area | Jx | Jy | Wx | Wy |
|---|---|---|---|---|---|---|---|---|
| R 8x10 | Rettangolare | 8 | 10 | 80 | 666.67 | 426.67 | 133.33 | 106.67 |

Materiale: C14 EN 338:2016
Rapporto luce/freccia elastica limite = 300
Rapporto luce/freccia elastica differita = 200
Mensola Y: Nessuno; Mensola X: Nessuno
Classe di servizio 1

### Verifica taglio D.M. 17-01-18 §4.4.8.1.9

Sezione ad ascissa 0
Coefficiente parziale di sicurezza del materiale γ = 1.5
Kmod = 0.8; kcr = 0.67
τ,d <= fv,d
Sqrt(0.2^2+6.89^2) = 6.89 <= 16 Comb: SLU, 80; Durata minima del carico nella combinazione: media
Tx = -7.3; Ty = 244.9

### Verifica pressoflessione D.M. 17-01-18 §4.4.8.1.8

Sezione ad ascissa 262.8
Coefficiente parziale di sicurezza del materiale γ = 1.5
Kmod = 0.8; Kh = 1.084 (formula 11.7.1)
(Sc,0,d/fc,0,d)^2 + Sm,y,d/fm,y,d + Km*(Sm,z,d/fm,z,d) <= 1
(Sc,0,d/fc,0,d)^2 + Km*(Sm,y,d/fm,y,d) + Sm,z,d/fm,z,d <= 1
(2.8/85.3)^2+272.5/81+0.7*9.4/80.97=3.45 !> 1 [4.4.7a] Comb: SLU, 80; Durata minima del carico nella combinazione: media - NON SODDISFATTA
Mx = -36329.2; My = -997.7; N = -220.4

### Verifica taglio+torsione D.M. 17-01-18 §4.4.8.1.11

Sezione ad ascissa 0
Coefficiente parziale di sicurezza del materiale γ = 1.5
Kmod = 0.8; Kh = 1.084 (formula 11.7.1); kcr = 0.67
τ,tor,d/(ksh*fv,d) + (τ,y,d/fv,d)^2 + (τ,z,d/fv,d)^2 <= 1
0.01+0+0.19 <= 1 Comb: SLU, 72; Durata minima del carico nella combinazione: media
Tx = -6.9; Ty = 244.8; Mt = -38.9

### Verifica torsione D.M. 17-01-18 §4.4.8.1.10

Sezione ad ascissa 262.8
Coefficiente parziale di sicurezza del materiale γ = 1.5
Kmod = 1.1
τ,tor,d <= Ksh * fv,d
0.39 <= 26.13 Comb: SLV, 6; Durata minima del carico nella combinazione: istantaneo
Mt = -55.7

## Asta 202: Trave in legno a falda Falda 1 fili 89-90

Verifiche condotte secondo D.M. 17-01-18 (N.T.C.)

### Dati generali

Lunghezza = 41.6

### Caratteristiche della sezione

| Descrizione | Tipo | Base | Altezza | Area | Jx | Jy | Wx | Wy |
|---|---|---|---|---|---|---|---|---|
| R 8x10 | Rettangolare | 8 | 10 | 80 | 666.67 | 426.67 | 133.33 | 106.67 |

Materiale: C14 EN 338:2016
Rapporto luce/freccia elastica limite = 300
Rapporto luce/freccia elastica differita = 200
Mensola Y: Nessuno; Mensola X: Nessuno
Classe di servizio 1

### Verifica tensoflessione D.M. 17-01-18 §4.4.8.1.7

Sezione ad ascissa 0
Coefficiente parziale di sicurezza del materiale γ = 1.5

Kmod = 1.1; Kh = 1.084 (formula 11.7.1)
St,0,d/ft,0,d + Sm,y,d/fm,y,d + Km*(Sm,z,d/fm,z,d) <= 1
St,0,d/ft,0,d + Km*(Sm,y,d/fm,y,d) + Sm,z,d/fm,z,d <= 1
3.2/57.3+0.7*10.5/111.3+27.9/111.3=0.37 <= 1 [4.4.6b] Comb: SLV, 12; Durata minima del carico nella combinazione: istantaneo
Mx = 1398.2; My = -2980.6; N = 255

**Verifica taglio D.M. 17-01-18 §4.4.8.1.9**

Sezione ad ascissa 0
Coefficiente parziale di sicurezza del materiale γ = 1.5
Kmod = 1.1; kcr = 0.67
τ,d <= fv,d
Sqrt(3.16^2+1.26^2) = 3.4 <= 22 Comb: SLV, 12; Durata minima del carico nella combinazione: istantaneo
Tx = 112.2; Ty = 44.7

**Verifica taglio+torsione D.M. 17-01-18 §4.4.8.1.11**

Sezione ad ascissa 0
Coefficiente parziale di sicurezza del materiale γ = 1.5
Kmod = 1.1; Kh = 1.084 (formula 11.7.1); kcr = 0.67
τ,tor,d/(ksh*fv,d) + (τ,y,d/fv,d)^2 + (τ,z,d/fv,d)^2 <= 1
0.03+0.02+0 <= 1 Comb: SLV, 12; Durata minima del carico nella combinazione: istantaneo
Tx = 112.2; Ty = 44.7; Mt = -113.8

**Verifica torsione D.M. 17-01-18 §4.4.8.1.10**

Sezione ad ascissa 41.6
Coefficiente parziale di sicurezza del materiale γ = 1.5
Kmod = 1.1
τ,tor,d <= Ksh * fv,d
0.95 <= 26.13 Comb: SLV, 6; Durata minima del carico nella combinazione: istantaneo
Mt = 133.8

---

## Asta 203: Trave in legno a falda Falda 1 fili 89-90

Verifiche condotte secondo D.M. 17-01-18 (N.T.C.)

**Dati generali**

Lunghezza = 41.6

**Caratteristiche della sezione**

| Descrizione | Tipo | Base | Altezza | Area | Jx | Jy | Wx | Wy |
|---|---|---|---|---|---|---|---|---|
| R 8x10 | Rettangolare | 8 | 10 | 80 | 666.67 | 426.67 | 133.33 | 106.67 |

Materiale: C14 EN 338:2016
Rapporto luce/freccia elastica limite = 300
Rapporto luce/freccia elastica differita = 200
Mensola Y: Nessuno; Mensola X: Nessuno
Classe di servizio 1

**Verifica tensoflessione D.M. 17-01-18 §4.4.8.1.7**

Sezione ad ascissa 41.6
Coefficiente parziale di sicurezza del materiale γ = 1.5
Kmod = 1.1; Kh = 1.084 (formula 11.7.1)
St,0,d/ft,0,d + Sm,y,d/fm,y,d + Km*(Sm,z,d/fm,z,d) <= 1
St,0,d/ft,0,d + Km*(Sm,y,d/fm,y,d) + Sm,z,d/fm,z,d <= 1
13.7/57.3+0.7*3.9/111.3+20.7/111.3=0.45 <= 1 [4.4.6b] Comb: SLV, 6; Durata minima del carico nella combinazione: istantaneo
Mx = 514.7; My = -2205; N = 1096.5

**Verifica taglio D.M. 17-01-18 §4.4.8.1.9**

Sezione ad ascissa 0
Coefficiente parziale di sicurezza del materiale γ = 1.5
Kmod = 1.1; kcr = 0.67
τ,d <= fv,d
Sqrt(3.07^2+0.03^2) = 3.07 <= 22 Comb: SLV, 12; Durata minima del carico nella combinazione: istantaneo
Tx = 109; Ty = 1.1

**Verifica taglio+torsione D.M. 17-01-18 §4.4.8.1.11**

Sezione ad ascissa 0
Coefficiente parziale di sicurezza del materiale γ = 1.5
Kmod = 1.1; Kh = 1.084 (formula 11.7.1); kcr = 0.67
τ,tor,d/(ksh*fv,d) + (τ,y,d/fv,d)^2 + (τ,z,d/fv,d)^2 <= 1
0+0.02+0 <= 1 Comb: SLV, 12; Durata minima del carico nella combinazione: istantaneo
Tx = 109; Ty = 1.1; Mt = -16.4

**Verifica torsione D.M. 17-01-18 §4.4.8.1.10**

Sezione ad ascissa 41.6
Coefficiente parziale di sicurezza del materiale γ = 1.5
Kmod = 1.1
τ,tor,d <= Ksh * fv,d
0.32 <= 26.13 Comb: SLV, 14; Durata minima del carico nella combinazione: istantaneo
Mt = 45.1

---

## Asta 204: Trave in legno a falda Falda 1 fili 89-90

Verifiche condotte secondo D.M. 17-01-18 (N.T.C.)

**Dati generali**

Lunghezza = 41.6

**Caratteristiche della sezione**

| Descrizione | Tipo | Base | Altezza | Area | Jx | Jy | Wx | Wy |
|---|---|---|---|---|---|---|---|---|
| R 8x10 | Rettangolare | 8 | 10 | 80 | 666.67 | 426.67 | 133.33 | 106.67 |

Materiale: C14 EN 338:2016
Rapporto luce/freccia elastica limite = 300
Rapporto luce/freccia elastica differita = 200
Mensola Y: Nessuno; Mensola X: Nessuno
Classe di servizio 1

**Verifica tensoflessione D.M. 17-01-18 §4.4.8.1.7**

Sezione ad ascissa 41.6
Coefficiente parziale di sicurezza del materiale γ = 1.5
Kmod = 1.1; Kh = 1.084 (formula 11.7.1)
St,0,d/ft,0,d + Sm,y,d/fm,y,d + Km*(Sm,z,d/fm,z,d) <= 1
St,0,d/ft,0,d + Km*(Sm,y,d/fm,y,d) + Sm,z,d/fm,z,d <= 1
20.5/57.3+0.7*5.1/111.3+23.2/111.3=0.6 <= 1 [4.4.6b] Comb: SLV, 6; Durata minima del carico nella combinazione: istantaneo
Mx = -680.8; My = -2474.9; N = 1637.8

**Verifica taglio D.M. 17-01-18 §4.4.8.1.9**

Sezione ad ascissa 41.6
Coefficiente parziale di sicurezza del materiale γ = 1.5
Kmod = 1.1; kcr = 0.67
τ,d <= fv,d
Sqrt(2.38^2+0.41^2) = 2.41 <= 22 Comb: SLV, 8; Durata minima del carico nella combinazione: istantaneo
Tx = 84.5; Ty = -14.6

**Verifica taglio+torsione D.M. 17-01-18 §4.4.8.1.11**

Sezione ad ascissa 41.6
Coefficiente parziale di sicurezza del materiale γ = 1.5
Kmod = 1.1; Kh = 1.084 (formula 11.7.1); kcr = 0.67
τ,tor,d/(ksh*fv,d) + (τ,y,d/fv,d)^2 + (τ,z,d/fv,d)^2 <= 1
0.04+0.01+0 <= 1 Comb: SLV, 12; Durata minima del carico nella combinazione: istantaneo
Tx = 59.4; Ty = -20.9; Mt = 157.2

**Verifica torsione D.M. 17-01-18 §4.4.8.1.10**

Sezione ad ascissa 41.6
Coefficiente parziale di sicurezza del materiale γ = 1.5
Kmod = 1.1
τ,tor,d <= Ksh * fv,d
1.11 <= 26.13 Comb: SLV, 12; Durata minima del carico nella combinazione: istantaneo
Mt = 157.2

---

## Asta 205: Trave in legno a falda Falda 1 fili 89-90

Verifiche condotte secondo D.M. 17-01-18 (N.T.C.)

**Dati generali**

Lunghezza = 41.6

**Caratteristiche della sezione**

| Descrizione | Tipo | Base | Altezza | Area | Jx | Jy | Wx | Wy |
|---|---|---|---|---|---|---|---|---|
| R 8x10 | Rettangolare | 8 | 10 | 80 | 666.67 | 426.67 | 133.33 | 106.67 |

Materiale: C14 EN 338:2016
Rapporto luce/freccia elastica limite = 300
Rapporto luce/freccia elastica differita = 200

Mensola Y: Nessuno; Mensola X: Nessuno
Classe di servizio 1

**Verifica tensoflessione D.M. 17-01-18 §4.4.8.1.7**

Sezione ad ascissa 13.9
Coefficiente parziale di sicurezza del materiale γ = 1.5
Kmod = 1.1; Kh = 1.084 (formula 11.7.1)
St,0,d/ft,0,d + Sm,y,d/fm,y,d + Km*(Sm,z,d/fm,z,d) <= 1
St,0,d/ft,0,d + Km*(Sm,y,d/fm,y,d) + Sm,z,d/fm,z,d <= 1
23.7/57.3+0.7*4.6/111.3+16.7/111.3=0.59 <= 1 [4.4.6b] Comb: SLV, 6; Durata minima del carico nella combinazione: istantaneo
Mx = 614.4; My = -1785.9; N = 1894.5

**Verifica taglio D.M. 17-01-18 §4.4.8.1.9**

Sezione ad ascissa 41.6
Coefficiente parziale di sicurezza del materiale γ = 1.5
Kmod = 0.8; kcr = 0.67
τ,d <= fv,d
Sqrt(0.34^2+1.34^2) = 1.39 <= 16 Comb: SLU, 71; Durata minima del carico nella combinazione: media
Tx = -12.2; Ty = -47.8

**Verifica taglio+torsione D.M. 17-01-18 §4.4.8.1.11**

Sezione ad ascissa 41.6
Coefficiente parziale di sicurezza del materiale γ = 1.5
Kmod = 1.1; Kh = 1.084 (formula 11.7.1); kcr = 0.67
τ,tor,d/(ksh*fv,d) + (τ,y,d/fv,d)^2 + (τ,z,d/fv,d)^2 <= 1
0.05+0+0 <= 1 Comb: SLV, 12; Durata minima del carico nella combinazione: istantaneo
Tx = -35.3; Ty = -46.5; Mt = 192.5

**Verifica torsione D.M. 17-01-18 §4.4.8.1.10**

Sezione ad ascissa 41.6
Coefficiente parziale di sicurezza del materiale γ = 1.5
Kmod = 1.1
τ,tor,d <= Ksh * fv,d
1.36 <= 26.13 Comb: SLV, 12; Durata minima del carico nella combinazione: istantaneo
Mt = 192.5

---

## Asta 206: Trave in legno a falda Falda 1 fili 89-90

Verifiche condotte secondo D.M. 17-01-18 (N.T.C.)

**Dati generali**

Lunghezza = 278.2

**Caratteristiche della sezione**

| Descrizione | Tipo | Base | Altezza | Area | Jx | Jy | Wx | Wy |
|---|---|---|---|---|---|---|---|---|
| R 8x10 | Rettangolare | 8 | 10 | 80 | 666.67 | 426.67 | 133.33 | 106.67 |

Materiale: C14 EN 338:2016
Rapporto luce/freccia elastica limite = 300
Rapporto luce/freccia elastica differita = 200
Mensola Y: Nessuno; Mensola X: Nessuno
Classe di servizio 1

**Verifica tensoflessione D.M. 17-01-18 §4.4.8.1.7**

Sezione ad ascissa 278.2
Coefficiente parziale di sicurezza del materiale γ = 1.5
Kmod = 0.8; Kh = 1.084 (formula 11.7.1)
St,0,d/ft,0,d + Sm,y,d/fm,y,d + Km*(Sm,z,d/fm,z,d) !> 1
St,0,d/ft,0,d + Km*(Sm,y,d/fm,y,d) + Sm,z,d/fm,z,d !> 1
2.4/41.6+287.9/81+0.7*2.5/81=3.64 !> 1 [4.4.6a] Comb: SLU, 71; Durata minima del carico nella combinazione: media - NON SODDISFATTA
Mx = -38389.7; My = -268.7; N = 191.9

**Verifica taglio D.M. 17-01-18 §4.4.8.1.9**

Sezione ad ascissa 0
Coefficiente parziale di sicurezza del materiale γ = 1.5
Kmod = 0.8; kcr = 0.67
τ,d <= fv,d
Sqrt(0.01^2+7.64^2) = 7.64 <= 16 Comb: SLU, 72; Durata minima del carico nella combinazione: media
Tx = -0.4; Ty = 271.7

**Verifica taglio+torsione D.M. 17-01-18 §4.4.8.1.11**

Sezione ad ascissa 0
Coefficiente parziale di sicurezza del materiale γ = 1.5

Kmod = 0.8; Kh = 1.084 (formula 11.7.1); kcr = 0.67
τ,tor,d/(ksh*fv,d) + (τ,y,d/fv,d)^2 + (τ,z,d/fv,d)^2 <= 1
0.02+0+0.23 <= 1 Comb: SLU, 72; Durata minima del carico nella combinazione: media
Tx = -0.4; Ty = 271.7; Mt = -42.7

**Verifica torsione D.M. 17-01-18 §4.4.8.1.10**

Sezione ad ascissa 278.2
Coefficiente parziale di sicurezza del materiale γ = 1.5
Kmod = 0.8
τ,tor,d <= Ksh * fv,d
0.31 <= 19 Comb: SLU, 30; Durata minima del carico nella combinazione: media
Mt = -43.8

## Asta 207: Trave in legno a falda Falda 1 fili 81-82

Verifiche condotte secondo D.M. 17-01-18 (N.T.C.)

**Dati generali**

Lunghezza = 262.8

**Caratteristiche della sezione**

| Descrizione | Tipo | Base | Altezza | Area | Jx | Jy | Wx | Wy |
|---|---|---|---|---|---|---|---|---|
| R 8x10 | Rettangolare | 8 | 10 | 80 | 666.67 | 426.67 | 133.33 | 106.67 |

Materiale: C14 EN 338:2016
Rapporto luce/freccia elastica limite = 300
Rapporto luce/freccia elastica differita = 200
Mensola Y: Nessuno; Mensola X: Nessuno
Classe di servizio 1

**Verifica taglio D.M. 17-01-18 §4.4.8.1.9**

Sezione ad ascissa 0
Coefficiente parziale di sicurezza del materiale γ = 1.5
Kmod = 0.8; kcr = 0.67
τ,d <= fv,d
Sqrt(0.1^2+6.31^2) = 6.31 <= 16 Comb: SLU, 80; Durata minima del carico nella combinazione: media
Tx = 3.5; Ty = 224.2

**Verifica pressoflessione D.M. 17-01-18 §4.4.8.1.8**

Sezione ad ascissa 262.8
Coefficiente parziale di sicurezza del materiale γ = 1.5
Kmod = 0.8; Kh = 1.084 (formula 11.7.1)
(Sc,0,d/fc,0,d)^2 + Sm,y,d/fm,y,d + Km*(Sm,z,d/fm,z,d) <= 1
(Sc,0,d/fc,0,d)^2 + Km*(Sm,y,d/fm,y,d) + Sm,z,d/fm,z,d <= 1
(8.3/85.3)^2+264.1/81+0.7*4/80.97=3.31 !> 1 [4.4.7a] Comb: SLU, 80; Durata minima del carico nella combinazione: media - NON SODDISFATTA
Mx = -35214.1; My = 424.6; N = -663.8

**Verifica taglio+torsione D.M. 17-01-18 §4.4.8.1.11**

Sezione ad ascissa 0
Coefficiente parziale di sicurezza del materiale γ = 1.5
Kmod = 0.8; Kh = 1.084 (formula 11.7.1); kcr = 0.67
τ,tor,d/(ksh*fv,d) + (τ,y,d/fv,d)^2 + (τ,z,d/fv,d)^2 <= 1
0+0+0.16 <= 1 Comb: SLU, 80; Durata minima del carico nella combinazione: media
Tx = 3.5; Ty = 224.2; Mt = -13.3

**Verifica torsione D.M. 17-01-18 §4.4.8.1.10**

Sezione ad ascissa 262.8
Coefficiente parziale di sicurezza del materiale γ = 1.5
Kmod = 1.1
τ,tor,d <= Ksh * fv,d
0.32 <= 26.13 Comb: SLV, 6; Durata minima del carico nella combinazione: istantaneo
Mt = -45.9

## Asta 208: Trave in legno a falda Falda 1 fili 72-74

Verifiche condotte secondo D.M. 17-01-18 (N.T.C.)

**Dati generali**

Lunghezza = 262.8

**Caratteristiche della sezione**

| Descrizione | Tipo | Base | Altezza | Area | Jx | Jy | Wx | Wy |
|---|---|---|---|---|---|---|---|---|
| R 8x10 | Rettangolare | 8 | 10 | 80 | 666.67 | 426.67 | 133.33 | 106.67 |

Materiale: C14 EN 338:2016
Rapporto luce/freccia elastica limite = 300
Rapporto luce/freccia elastica differita = 200
Mensola Y: Nessuno; Mensola X: Nessuno
Classe di servizio 1

**Verifica tensoflessione D.M. 17-01-18 §4.4.8.1.7**

Sezione ad ascissa 262.8
Coefficiente parziale di sicurezza del materiale γ = 1.5
Kmod = 0.8; Kh = 1.084 (formula 11.7.1)
St,0,d/ft,0,d + Sm,y,d/fm,y,d + Km*(Sm,z,d/fm,z,d) !> 1
St,0,d/ft,0,d + Km*(Sm,y,d/fm,y,d) + Sm,z,d/fm,z,d !> 1
22.4/41.6+308.4/81+0.7*0.3/81=4.35 !> 1 [4.4.6a] Comb: SLU, 80; Durata minima del carico nella combinazione: media - NON SODDISFATTA
Mx = -41114.8; My = 35; N = 1789.4

**Verifica taglio D.M. 17-01-18 §4.4.8.1.9**

Sezione ad ascissa 0
Coefficiente parziale di sicurezza del materiale γ = 1.5
Kmod = 0.8; kcr = 0.67
τ,d <= fv,d
Sqrt(0.01^2+8.23^2) = 8.23 <= 16 Comb: SLU, 80; Durata minima del carico nella combinazione: media
Tx = 0.4; Ty = 292.5

**Verifica taglio+torsione D.M. 17-01-18 §4.4.8.1.11**

Sezione ad ascissa 0
Coefficiente parziale di sicurezza del materiale γ = 1.5
Kmod = 0.8; Kh = 1.084 (formula 11.7.1); kcr = 0.67
τ,tor,d/(ksh*fv,d) + (τ,y,d/fv,d)^2 + (τ,z,d/fv,d)^2 <= 1
0.02+0+0.26 <= 1 Comb: SLU, 80; Durata minima del carico nella combinazione: media
Tx = 0.4; Ty = 292.5; Mt = 41.1

**Verifica torsione D.M. 17-01-18 §4.4.8.1.10**

Sezione ad ascissa 262.8
Coefficiente parziale di sicurezza del materiale γ = 1.5
Kmod = 1.1
τ,tor,d <= Ksh * fv,d
0.44 <= 26.13 Comb: SLV, 12; Durata minima del carico nella combinazione: istantaneo
Mt = 62

---

## Asta 209: Trave in legno a falda Falda 1 fili 65-66

Verifiche condotte secondo D.M. 17-01-18 (N.T.C.)

**Dati generali**

Lunghezza = 262.8

**Caratteristiche della sezione**

| Descrizione | Tipo | Base | Altezza | Area | Jx | Jy | Wx | Wy |
|---|---|---|---|---|---|---|---|---|
| R 8x10 | Rettangolare | 8 | 10 | 80 | 666.67 | 426.67 | 133.33 | 106.67 |

Materiale: C14 EN 338:2016
Rapporto luce/freccia elastica limite = 300
Rapporto luce/freccia elastica differita = 200
Mensola Y: Nessuno; Mensola X: Nessuno
Classe di servizio 1

**Verifica taglio D.M. 17-01-18 §4.4.8.1.9**

Sezione ad ascissa 0
Coefficiente parziale di sicurezza del materiale γ = 1.5
Kmod = 0.8; kcr = 0.67
τ,d <= fv,d
Sqrt(0.06^2+5.23^2) = 5.23 <= 16 Comb: SLU, 79; Durata minima del carico nella combinazione: media
Tx = -2; Ty = 185.9

**Verifica pressoflessione D.M. 17-01-18 §4.4.8.1.8**

Sezione ad ascissa 262.8
Coefficiente parziale di sicurezza del materiale γ = 1.5
Kmod = 0.8; Kh = 1.084 (formula 11.7.1)
(Sc,0,d/fc,0,d)^2 + Sm,y,d/fm,y,d + Km*(Sm,z,d/fm,z,d) <= 1
(Sc,0,d/fc,0,d)^2 + Km*(Sm,y,d/fm,y,d) + Sm,z,d/fm,z,d <= 1
(3.6/85.3)^2+241.3/81+0.7*3.8/80.97=3.01 !> 1 [4.4.7a] Comb: SLU, 80; Durata minima del carico nella combinazione: media - NON SODDISFATTA
Mx = -32176.8; My = -403.6; N = -286.7

**Verifica taglio+torsione D.M. 17-01-18 §4.4.8.1.11**

Sezione ad ascissa 0
Coefficiente parziale di sicurezza del materiale γ = 1.5
Kmod = 0.8; Kh = 1.084 (formula 11.7.1); kcr = 0.67
τ,tor,d/(ksh*fv,d) + (τ,y,d/fv,d)^2 + (τ,z,d/fv,d)^2 <= 1
0.04+0+0.11 <= 1 Comb: SLU, 79; Durata minima del carico nella combinazione: media
Tx = -2; Ty = 185.9; Mt = 101.4

**Verifica torsione D.M. 17-01-18 §4.4.8.1.10**

Sezione ad ascissa 262.8
Coefficiente parziale di sicurezza del materiale γ = 1.5
Kmod = 0.8
τ,tor,d <= Ksh * fv,d
0.72 <= 19 Comb: SLU, 79; Durata minima del carico nella combinazione: media
Mt = 101.4

---

## Asta 210: Trave in legno a falda Falda 1 fili 56-57

Verifiche condotte secondo D.M. 17-01-18 (N.T.C.)

**Dati generali**

Lunghezza = 262.8

**Caratteristiche della sezione**

| Descrizione | Tipo | Base | Altezza | Area | Jx | Jy | Wx | Wy |
|---|---|---|---|---|---|---|---|---|
| R 8x10 | Rettangolare | 8 | 10 | 80 | 666.67 | 426.67 | 133.33 | 106.67 |

Materiale: C14 EN 338:2016
Rapporto luce/freccia elastica limite = 300
Rapporto luce/freccia elastica differita = 200
Mensola Y: Nessuno; Mensola X: Nessuno
Classe di servizio 1

**Verifica taglio D.M. 17-01-18 §4.4.8.1.9**

Sezione ad ascissa 0
Coefficiente parziale di sicurezza del materiale γ = 1.5
Kmod = 0.8; kcr = 0.67
τ,d <= fv,d
Sqrt(0.21^2+4.79^2) = 4.8 <= 16 Comb: SLU, 79; Durata minima del carico nella combinazione: media
Tx = -7.5; Ty = 170.3

**Verifica pressoflessione D.M. 17-01-18 §4.4.8.1.8**

Sezione ad ascissa 262.8
Coefficiente parziale di sicurezza del materiale γ = 1.5
Kmod = 0.8; Kh = 1.084 (formula 11.7.1)
(Sc,0,d/fc,0,d)^2 + Sm,y,d/fm,y,d + Km*(Sm,z,d/fm,z,d) <= 1
(Sc,0,d/fc,0,d)^2 + Km*(Sm,y,d/fm,y,d) + Sm,z,d/fm,z,d <= 1
(2.5/85.3)^2+227.7/81+0.7*10/80.97=2.9 !> 1 [4.4.7a] Comb: SLU, 79; Durata minima del carico nella combinazione: media - NON SODDISFATTA
Mx = -30364.6; My = -1064.8; N = -199.9

**Verifica taglio+torsione D.M. 17-01-18 §4.4.8.1.11**

Sezione ad ascissa 0
Coefficiente parziale di sicurezza del materiale γ = 1.5
Kmod = 0.8; Kh = 1.084 (formula 11.7.1); kcr = 0.67
τ,tor,d/(ksh*fv,d) + (τ,y,d/fv,d)^2 + (τ,z,d/fv,d)^2 <= 1
0.07+0+0.09 <= 1 Comb: SLU, 79; Durata minima del carico nella combinazione: media
Tx = -7.5; Ty = 170.3; Mt = 177.3

**Verifica torsione D.M. 17-01-18 §4.4.8.1.10**

Sezione ad ascissa 262.8
Coefficiente parziale di sicurezza del materiale γ = 1.5
Kmod = 0.8
τ,tor,d <= Ksh * fv,d
1.25 <= 19 Comb: SLU, 80; Durata minima del carico nella combinazione: media
Mt = 177.3

---

## Asta 211: Trave in legno a falda Falda 1 fili 49-50

Verifiche condotte secondo D.M. 17-01-18 (N.T.C.)

### Dati generali

Lunghezza = 262.8

### Caratteristiche della sezione

| Descrizione | Tipo | Base | Altezza | Area | Jx | Jy | Wx | Wy |
|---|---|---|---|---|---|---|---|---|
| R 8x10 | Rettangolare | 8 | 10 | 80 | 666.67 | 426.67 | 133.33 | 106.67 |

Materiale: C14 EN 338:2016
Rapporto luce/freccia elastica limite = 300
Rapporto luce/freccia elastica differita = 200
Mensola Y: Nessuno; Mensola X: Nessuno
Classe di servizio 1

### Verifica taglio D.M. 17-01-18 §4.4.8.1.9

Sezione ad ascissa 0
Coefficiente parziale di sicurezza del materiale γ = 1.5
Kmod = 0.8; kcr = 0.67
τ,d <= fv,d
Sqrt(0.23^2+4.13^2) = 4.13 <= 16 Comb: SLU, 79; Durata minima del carico nella combinazione: media
Tx = -8.1; Ty = 146.7

### Verifica pressoflessione D.M. 17-01-18 §4.4.8.1.8

Sezione ad ascissa 262.8
Coefficiente parziale di sicurezza del materiale γ = 1.5
Kmod = 0.8; Kh = 1.084 (formula 11.7.1)
(Sc,0,d/fc,0,d)^2 + Sm,y,d/fm,y,d + Km*(Sm,z,d/fm,z,d) <= 1
(Sc,0,d/fc,0,d)^2 + Km*(Sm,y,d/fm,y,d) + Sm,z,d/fm,z,d <= 1
(0.9/85.3)^2+208.3/81+0.7*10/80.97=2.66 !> 1 [4.4.7a] Comb: SLU, 79; Durata minima del carico nella combinazione: media - NON SODDISFATTA
Mx = -27769.2; My = -1071.4; N = -72.4

### Verifica taglio+torsione D.M. 17-01-18 §4.4.8.1.11

Sezione ad ascissa 0
Coefficiente parziale di sicurezza del materiale γ = 1.5
Kmod = 0.8; Kh = 1.084 (formula 11.7.1); kcr = 0.67
τ,tor,d/(ksh*fv,d) + (τ,y,d/fv,d)^2 + (τ,z,d/fv,d)^2 <= 1
0.09+0+0.07 <= 1 Comb: SLU, 79; Durata minima del carico nella combinazione: media
Tx = -8.1; Ty = 146.7; Mt = 246.8

### Verifica torsione D.M. 17-01-18 §4.4.8.1.10

Sezione ad ascissa 262.8
Coefficiente parziale di sicurezza del materiale γ = 1.5
Kmod = 0.8
τ,tor,d <= Ksh * fv,d
1.76 <= 19 Comb: SLU, 80; Durata minima del carico nella combinazione: media
Mt = 249.3

---

## Asta 212: Trave in legno a falda Falda 1 fili 43-44

Verifiche condotte secondo D.M. 17-01-18 (N.T.C.)

### Dati generali

Lunghezza = 262.8

### Caratteristiche della sezione

| Descrizione | Tipo | Base | Altezza | Area | Jx | Jy | Wx | Wy |
|---|---|---|---|---|---|---|---|---|
| R 8x10 | Rettangolare | 8 | 10 | 80 | 666.67 | 426.67 | 133.33 | 106.67 |

Materiale: C14 EN 338:2016
Rapporto luce/freccia elastica limite = 300
Rapporto luce/freccia elastica differita = 200
Mensola Y: Nessuno; Mensola X: Nessuno
Classe di servizio 1

### Verifica taglio D.M. 17-01-18 §4.4.8.1.9

Sezione ad ascissa 0
Coefficiente parziale di sicurezza del materiale γ = 1.5
Kmod = 0.8; kcr = 0.67
τ,d <= fv,d
Sqrt(0.01^2+3.54^2) = 3.54 <= 16 Comb: SLU, 79; Durata minima del carico nella combinazione: media
Tx = -0.5; Ty = 125.8

### Verifica pressoflessione D.M. 17-01-18 §4.4.8.1.8

Sezione ad ascissa 262.8
Coefficiente parziale di sicurezza del materiale γ = 1.5

Kmod = 0.8; Kh = 1.084 (formula 11.7.1)
(Sc,0,d/fc,0,d)^2 + Sm,y,d/fm,y,d + Km*(Sm,z,d/fm,z,d) <= 1
(Sc,0,d/fc,0,d)^2 + Km*(Sm,y,d/fm,y,d) + Sm,z,d/fm,z,d <= 1
(0.6/85.3)^2+186.5/81+0.7*0.3/80.97=2.31 !> 1 [4.4.7a] Comb: SLU, 71; Durata minima del carico nella combinazione: media - NON SODDISFATTA
Mx = -24866.3; My = 30.3; N = -49.2

**Verifica taglio+torsione D.M. 17-01-18 §4.4.8.1.11**

Sezione ad ascissa 0
Coefficiente parziale di sicurezza del materiale γ = 1.5
Kmod = 0.8; Kh = 1.084 (formula 11.7.1); kcr = 0.67
τ,tor,d/(ksh*fv,d) + (τ,y,d/fv,d)^2 + (τ,z,d/fv,d)^2 <= 1
0.11+0+0.05 <= 1 Comb: SLU, 79; Durata minima del carico nella combinazione: media
Tx = -0.5; Ty = 125.8; Mt = 292.3

**Verifica torsione D.M. 17-01-18 §4.4.8.1.10**

Sezione ad ascissa 262.8
Coefficiente parziale di sicurezza del materiale γ = 1.5
Kmod = 0.8
τ,tor,d <= Ksh * fv,d
2.1 <= 19 Comb: SLU, 80; Durata minima del carico nella combinazione: media
Mt = 297.6

---

## Asta 213: Trave in legno a falda Falda 1 fili 37-38

Verifiche condotte secondo D.M. 17-01-18 (N.T.C.)

**Dati generali**

Lunghezza = 262.8

**Caratteristiche della sezione**

| Descrizione | Tipo | Base | Altezza | Area | Jx | Jy | Wx | Wy |
|---|---|---|---|---|---|---|---|---|
| R 8x10 | Rettangolare | 8 | 10 | 80 | 666.67 | 426.67 | 133.33 | 106.67 |

Materiale: C14 EN 338:2016
Rapporto luce/freccia elastica limite = 300
Rapporto luce/freccia elastica differita = 200
Mensola Y: Nessuno; Mensola X: Nessuno
Classe di servizio 1

**Verifica flessione D.M. 17-01-18 §4.4.8.1.6**

Sezione ad ascissa 262.8
Coefficiente parziale di sicurezza del materiale γ = 1.5
Kmod = 0.8; Kh = 1.084 (formula 11.7.1)
Sm,y,d/fm,y,d + Km*(Sm,z,d/fm,z,d) !> 1
Km*(Sm,y,d/fm,y,d) + Sm,z,d/fm,z,d !> 1
154.7/81+0.7*7.4/81=1.98 !> 1 (formula 4.4.5a) Comb: SLU, 71; Durata minima del carico nella combinazione: media - NON SODDISFATTA
Mx = -20632.4; My = 793.3

**Verifica taglio D.M. 17-01-18 §4.4.8.1.9**

Sezione ad ascissa 0
Coefficiente parziale di sicurezza del materiale γ = 1.5
Kmod = 0.8; kcr = 0.67
τ,d <= fv,d
Sqrt(0.16^2+2.8^2) = 2.8 <= 16 Comb: SLU, 71; Durata minima del carico nella combinazione: media
Tx = 5.8; Ty = 99.5

**Verifica taglio+torsione D.M. 17-01-18 §4.4.8.1.11**

Sezione ad ascissa 0
Coefficiente parziale di sicurezza del materiale γ = 1.5
Kmod = 0.8; Kh = 1.084 (formula 11.7.1); kcr = 0.67
τ,tor,d/(ksh*fv,d) + (τ,y,d/fv,d)^2 + (τ,z,d/fv,d)^2 <= 1
0.11+0+0.03 <= 1 Comb: SLU, 79; Durata minima del carico nella combinazione: media
Tx = 5.5; Ty = 99.5; Mt = 305.7

**Verifica torsione D.M. 17-01-18 §4.4.8.1.10**

Sezione ad ascissa 262.8
Coefficiente parziale di sicurezza del materiale γ = 1.5
Kmod = 0.8
τ,tor,d <= Ksh * fv,d
2.22 <= 19 Comb: SLU, 80; Durata minima del carico nella combinazione: media
Mt = 313.6

---

## Asta 214: Trave in legno a falda Falda 1 fili 32-33

Verifiche condotte secondo D.M. 17-01-18 (N.T.C.)

### Dati generali

Lunghezza = 239.9

### Caratteristiche della sezione

| Descrizione | Tipo | Base | Altezza | Area | Jx | Jy | Wx | Wy |
|---|---|---|---|---|---|---|---|---|
| R 8x10 | Rettangolare | 8 | 10 | 80 | 666.67 | 426.67 | 133.33 | 106.67 |

Materiale: C14 EN 338:2016
Rapporto luce/freccia elastica limite = 300
Rapporto luce/freccia elastica differita = 200
Mensola Y: Nessuno; Mensola X: Nessuno
Classe di servizio 1

### Verifica taglio D.M. 17-01-18 §4.4.8.1.9

Sezione ad ascissa 0
Coefficiente parziale di sicurezza del materiale γ = 1.5
Kmod = 0.8; kcr = 0.67
τ,d <= fv,d
Sqrt(0.17^2+2.59^2) = 2.59 <= 16 Comb: SLU, 71; Durata minima del carico nella combinazione: media
Tx = 6.1; Ty = 92

### Verifica pressoflessione D.M. 17-01-18 §4.4.8.1.8

Sezione ad ascissa 239.9
Coefficiente parziale di sicurezza del materiale γ = 1.5
Kmod = 0.8; Kh = 1.084 (formula 11.7.1)
(Sc,0,d/fc,0,d)^2 + Sm,y,d/fm,y,d + Km*(Sm,z,d/fm,z,d) <= 1
(Sc,0,d/fc,0,d)^2 + Km*(Sm,y,d/fm,y,d) + Sm,z,d/fm,z,d <= 1
(0.5/85.3)^2+127.6/81+0.7*4.5/80.97=1.61 !> 1 [4.4.7a] Comb: SLU, 71; Durata minima del carico nella combinazione: media - NON SODDISFATTA
Mx = -17012.4; My = 481.6; N = -41.3

### Verifica taglio+torsione D.M. 17-01-18 §4.4.8.1.11

Sezione ad ascissa 0
Coefficiente parziale di sicurezza del materiale γ = 1.5
Kmod = 0.8; Kh = 1.084 (formula 11.7.1); kcr = 0.67
τ,tor,d/(ksh*fv,d) + (τ,y,d/fv,d)^2 + (τ,z,d/fv,d)^2 <= 1
0.11+0+0.03 <= 1 Comb: SLU, 79; Durata minima del carico nella combinazione: media
Tx = 5.9; Ty = 91.9; Mt = 290.6

### Verifica torsione D.M. 17-01-18 §4.4.8.1.10

Sezione ad ascissa 239.9
Coefficiente parziale di sicurezza del materiale γ = 1.5
Kmod = 0.8
τ,tor,d <= Ksh * fv,d
2.12 <= 19 Comb: SLU, 80; Durata minima del carico nella combinazione: media
Mt = 300.6

---

## Asta 215: Trave in legno a falda Falda 1 fili 27-28

Verifiche condotte secondo D.M. 17-01-18 (N.T.C.)

### Dati generali

Lunghezza = 165.7

### Caratteristiche della sezione

| Descrizione | Tipo | Base | Altezza | Area | Jx | Jy | Wx | Wy |
|---|---|---|---|---|---|---|---|---|
| R 8x10 | Rettangolare | 8 | 10 | 80 | 666.67 | 426.67 | 133.33 | 106.67 |

Materiale: C14 EN 338:2016
Rapporto luce/freccia elastica limite = 300
Rapporto luce/freccia elastica differita = 200
Mensola Y: Nessuno; Mensola X: Nessuno
Classe di servizio 1

### Verifica taglio D.M. 17-01-18 §4.4.8.1.9

Sezione ad ascissa 0
Coefficiente parziale di sicurezza del materiale γ = 1.5
Kmod = 0.8; kcr = 0.67
τ,d <= fv,d
Sqrt(0.09^2+3.72^2) = 3.73 <= 16 Comb: SLU, 71; Durata minima del carico nella combinazione: media
Tx = -3.2; Ty = 132.4

### Verifica pressoflessione D.M. 17-01-18 §4.4.8.1.8

Sezione ad ascissa 165.7
Coefficiente parziale di sicurezza del materiale γ = 1.5
Kmod = 0.8; Kh = 1.084 (formula 11.7.1)
(Sc,0,d/fc,0,d)^2 + Sm,y,d/fm,y,d + Km*(Sm,z,d/fm,z,d) <= 1
(Sc,0,d/fc,0,d)^2 + Km*(Sm,y,d/fm,y,d) + Sm,z,d/fm,z,d <= 1
(2.2/85.3)^2+112.2/81+0.7*5.8/80.97=1.44 !> 1 [4.4.7a] Comb: SLU, 71; Durata minima del carico nella combinazione: media - NON SODDISFATTA
Mx = -14957.7; My = -619.4; N = -172.9

### Verifica taglio+torsione D.M. 17-01-18 §4.4.8.1.11

Sezione ad ascissa 0
Coefficiente parziale di sicurezza del materiale γ = 1.5
Kmod = 0.8; Kh = 1.084 (formula 11.7.1); kcr = 0.67
τ,tor,d/(ksh*fv,d) + (τ,y,d/fv,d)^2 + (τ,z,d/fv,d)^2 <= 1
0.14+0+0.05 <= 1 Comb: SLU, 71; Durata minima del carico nella combinazione: media
Tx = -3.2; Ty = 132.4; Mt = 370.4

### Verifica torsione D.M. 17-01-18 §4.4.8.1.10

Sezione ad ascissa 165.7
Coefficiente parziale di sicurezza del materiale γ = 1.5
Kmod = 0.8
τ,tor,d <= Ksh * fv,d
2.7 <= 19 Comb: SLU, 72; Durata minima del carico nella combinazione: media
Mt = 382.2

---

## Asta 216: Trave in legno a falda Falda 1 fili 23-24

Verifiche condotte secondo D.M. 17-01-18 (N.T.C.)

### Dati generali

Lunghezza = 91.3

### Caratteristiche della sezione

| Descrizione | Tipo | Base | Altezza | Area | Jx | Jy | Wx | Wy |
|---|---|---|---|---|---|---|---|---|
| R 8x10 | Rettangolare | 8 | 10 | 80 | 666.67 | 426.67 | 133.33 | 106.67 |

Materiale: C14 EN 338:2016
Rapporto luce/freccia elastica limite = 300
Rapporto luce/freccia elastica differita = 200
Mensola Y: Nessuno; Mensola X: Nessuno
Classe di servizio 1

### Verifica taglio D.M. 17-01-18 §4.4.8.1.9

Sezione ad ascissa 0
Coefficiente parziale di sicurezza del materiale γ = 1.5
Kmod = 0.8; kcr = 0.67
τ,d <= fv,d
Sqrt(0.9^2+6.77^2) = 6.83 <= 16 Comb: SLU, 71; Durata minima del carico nella combinazione: media
Tx = -31.9; Ty = 240.9

### Verifica pressoflessione D.M. 17-01-18 §4.4.8.1.8

Sezione ad ascissa 91.3
Coefficiente parziale di sicurezza del materiale γ = 1.5
Kmod = 0.8; Kh = 1.084 (formula 11.7.1)
(Sc,0,d/fc,0,d)^2 + Sm,y,d/fm,y,d + Km*(Sm,z,d/fm,z,d) <= 1
(Sc,0,d/fc,0,d)^2 + Km*(Sm,y,d/fm,y,d) + Sm,z,d/fm,z,d <= 1
(3.1/85.3)^2+107.4/81+0.7*16.6/80.97=1.47 !> 1 [4.4.7a] Comb: SLU, 71; Durata minima del carico nella combinazione: media - NON SODDISFATTA
Mx = -14325.8; My = -1774.1; N = -245.7

### Verifica taglio+torsione D.M. 17-01-18 §4.4.8.1.11

Sezione ad ascissa 0
Coefficiente parziale di sicurezza del materiale γ = 1.5
Kmod = 0.8; Kh = 1.084 (formula 11.7.1); kcr = 0.67
τ,tor,d/(ksh*fv,d) + (τ,y,d/fv,d)^2 + (τ,z,d/fv,d)^2 <= 1
0.21+0+0.18 <= 1 Comb: SLU, 71; Durata minima del carico nella combinazione: media
Tx = -31.9; Ty = 240.9; Mt = 554.7

### Verifica torsione D.M. 17-01-18 §4.4.8.1.10

Sezione ad ascissa 91.3
Coefficiente parziale di sicurezza del materiale γ = 1.5
Kmod = 0.8
τ,tor,d <= Ksh * fv,d

4.01 <= 19 Comb: SLU, 72; Durata minima del carico nella combinazione: media
Mt = 568.4

## Asta 217: Trave in legno a falda Falda 1 fili 18-19

Verifiche condotte secondo D.M. 17-01-18 (N.T.C.)

### Dati generali

Lunghezza = 17

### Caratteristiche della sezione

| Descrizione | Tipo | Base | Altezza | Area | Jx | Jy | Wx | Wy |
|---|---|---|---|---|---|---|---|---|
| R 8x10 | Rettangolare | 8 | 10 | 80 | 666.67 | 426.67 | 133.33 | 106.67 |

Materiale: C14 EN 338:2016
Rapporto luce/freccia elastica limite = 300
Rapporto luce/freccia elastica differita = 200
Mensola Y: Nessuno; Mensola X: Nessuno
Classe di servizio 1

### Verifica pressoflessione D.M. 17-01-18 §4.4.8.1.8

Sezione ad ascissa 17
Coefficiente parziale di sicurezza del materiale γ = 1.5
Kmod = 0.8; Kh = 1.084 (formula 11.7.1)
(Sc,0,d/fc,0,d)^2 + Sm,y,d/fm,y,d + Km*(Sm,z,d/fm,z,d) <= 1
(Sc,0,d/fc,0,d)^2 + Km*(Sm,y,d/fm,y,d) + Sm,z,d/fm,z,d <= 1
(10.2/85.3)^2+70.1/81+0.7*30/80.97=1.14 !> 1 [4.4.7a] Comb: SLU, 72; Durata minima del carico nella combinazione: media - NON SODDISFATTA
Mx = -9351.3; My = 3199.3; N = -818.8

### Verifica taglio D.M. 17-01-18 §4.4.8.1.9

Sezione ad ascissa 0
Coefficiente parziale di sicurezza del materiale γ = 1.5
Kmod = 0.8; kcr = 0.67
τ,d > fv,d
Sqrt(6.75^2+23.94^2) = 24.87 > 16 Comb: SLU, 72; Durata minima del carico nella combinazione: media - NON SODDISFATTA
Tx = 239.9; Ty = 851.2

### Verifica taglio+torsione D.M. 17-01-18 §4.4.8.1.11

Sezione ad ascissa 0
Coefficiente parziale di sicurezza del materiale γ = 1.5
Kmod = 0.8; Kh = 1.084 (formula 11.7.1); kcr = 0.67
τ,tor,d/(ksh*fv,d) + (τ,y,d/fv,d)^2 + (τ,z,d/fv,d)^2 > 1
0.79+0.18+2.24 > 1 Comb: SLU, 72; Durata minima del carico nella combinazione: media - NON SODDISFATTA
Tx = 239.9; Ty = 851.2; Mt = 2125.8

### Verifica torsione D.M. 17-01-18 §4.4.8.1.10

Sezione ad ascissa 17
Coefficiente parziale di sicurezza del materiale γ = 1.5
Kmod = 0.8
τ,tor,d <= Ksh * fv,d
15.01 <= 19 Comb: SLU, 72; Durata minima del carico nella combinazione: media
Mt = 2125.8

### Verifica della freccia istantanea totale D.M. 17-01-18 §C4.4.7 Circolare 7 21-01-19

Sezione ad ascissa 11.4
Kdef = 0
Uinst tot in x = 0
Uinst tot in y = 0
Uinst tot = 0
Luce/Uinst,tot > limite
17/0=12670.9 > 300 Comb: SLE rara, 9

### Verifica della freccia istantanea variabile D.M. 17-01-18 §4.4.7

Sezione ad ascissa 11.4
Kdef = 0
Uinst var in x = 0
Uinst var in y = 0
Uinst var = 0
Luce/Uinst,var > limite
17/0=17797.2 > 300 Comb: SLE rara, 9

### Verifica della freccia finale EC5 §4.4.7 - EC5 2.2.3 (3)

Sezione ad ascissa 11.4

Kdef = 0.6
Ufin in x = 0
Ufin in y = 0
Ufin = 0
Luce/Ufin > limite
17/0=10803.7 > 200
Coefficienti combinatori impiegati:
Pesi strutturali = 1,000 + 0,600 = 1,600
Permanenti portati = 1,000 + 0,600 = 1,600
Neve = 0,500 + 0,500 = 1,000
Vento = 0,600 + 0,000 = 0,600

## Asta 218: Trave in legno a falda Falda 3 fili 60-115

Verifiche condotte secondo D.M. 17-01-18 (N.T.C.)

### Dati generali

Lunghezza = 79.8

### Caratteristiche della sezione

| Descrizione | Tipo | Base | Altezza | Area | Jx | Jy | Wx | Wy |
|---|---|---|---|---|---|---|---|---|
| R 18x23 | Rettangolare | 18 | 23 | 414 | 18250.5 | 11178 | 1587 | 1242 |

Materiale: C14 EN 338:2016
Rapporto luce/freccia elastica limite = 300
Rapporto luce/freccia elastica differita = 200
Mensola Y: Nessuno; Mensola X: Nessuno
Classe di servizio 1

### Verifica tensoflessione D.M. 17-01-18 §4.4.8.1.7

Sezione ad ascissa 0
Coefficiente parziale di sicurezza del materiale γ = 1.5
Kmod = 0.8
St,0,d/ft,0,d + Sm,y,d/fm,y,d + Km*(Sm,z,d/fm,z,d) !> 1
St,0,d/ft,0,d + Km*(Sm,y,d/fm,y,d) + Sm,z,d/fm,z,d !> 1
5.5/38.4+100.5/74.7+0.7*9.2/74.7=1.58 !> 1 [4.4.6a] Comb: SLU, 72; Durata minima del carico nella combinazione: media - NON SODDISFATTA
Mx = 159553.3; My = -11484; N = 2287.3

### Verifica taglio D.M. 17-01-18 §4.4.8.1.9

Sezione ad ascissa 0
Coefficiente parziale di sicurezza del materiale γ = 1.5
Kmod = 0.8; kcr = 0.67
τ,d <= fv,d
Sqrt(0.31^2+7.96^2) = 7.97 <= 16 Comb: SLU, 79; Durata minima del carico nella combinazione: media
Tx = 57.8; Ty = 1465

### Verifica taglio+torsione D.M. 17-01-18 §4.4.8.1.11

Sezione ad ascissa 0
Coefficiente parziale di sicurezza del materiale γ = 1.5
Kmod = 0.8; kcr = 0.67
τ,tor,d/(ksh*fv,d) + (τ,y,d/fv,d)^2 + (τ,z,d/fv,d)^2 <= 1
0.43+0+0.25 <= 1 Comb: SLU, 79; Durata minima del carico nella combinazione: media
Tx = 57.8; Ty = 1465; Mt = 13438.3

### Verifica torsione D.M. 17-01-18 §4.4.8.1.10

Sezione ad ascissa 79.8
Coefficiente parziale di sicurezza del materiale γ = 1.5
Kmod = 0.8
τ,tor,d <= Ksh * fv,d
8.11 <= 19.07 Comb: SLU, 79; Durata minima del carico nella combinazione: media
Mt = 13438.3

## Asta 219: Trave in legno a falda Falda 3 fili 60-115

Verifiche condotte secondo D.M. 17-01-18 (N.T.C.)

### Dati generali

Lunghezza = 106.5

### Caratteristiche della sezione

| Descrizione | Tipo | Base | Altezza | Area | Jx | Jy | Wx | Wy |
|---|---|---|---|---|---|---|---|---|
| R 18x23 | Rettangolare | 18 | 23 | 414 | 18250.5 | 11178 | 1587 | 1242 |

Materiale: C14 EN 338:2016
Rapporto luce/freccia elastica limite = 300
Rapporto luce/freccia elastica differita = 200
Mensola Y: Nessuno; Mensola X: Nessuno
Classe di servizio 1

**Verifica tensoflessione D.M. 17-01-18 §4.4.8.1.7**

Sezione ad ascissa 106.5
Coefficiente parziale di sicurezza del materiale γ = 1.5
Kmod = 0.8
St,0,d/ft,0,d + Sm,y,d/fm,y,d + Km*(Sm,z,d/fm,z,d) <= 1
St,0,d/ft,0,d + Km*(Sm,y,d/fm,y,d) + Sm,z,d/fm,z,d <= 1
6.4/38.4+43/74.7+0.7*12.1/74.7=0.86 <= 1 [4.4.6a] Comb: SLU, 71; Durata minima del carico nella combinazione: media
Mx = -68257.3; My = 15004.8; N = 2663.3

**Verifica taglio D.M. 17-01-18 §4.4.8.1.9**

Sezione ad ascissa 0
Coefficiente parziale di sicurezza del materiale γ = 1.5
Kmod = 0.8; kcr = 0.67
τ,d <= fv,d
Sqrt(0.83^2+5.88^2) = 5.94 <= 16 Comb: SLU, 71; Durata minima del carico nella combinazione: media
Tx = 153.5; Ty = 1082.2

**Verifica taglio+torsione D.M. 17-01-18 §4.4.8.1.11**

Sezione ad ascissa 0
Coefficiente parziale di sicurezza del materiale γ = 1.5
Kmod = 0.8; kcr = 0.67
τ,tor,d/(ksh*fv,d) + (τ,y,d/fv,d)^2 + (τ,z,d/fv,d)^2 <= 1
0.13+0+0.14 <= 1 Comb: SLU, 79; Durata minima del carico nella combinazione: media
Tx = 152.6; Ty = 1082.1; Mt = 4065.7

**Verifica torsione D.M. 17-01-18 §4.4.8.1.10**

Sezione ad ascissa 106.5
Coefficiente parziale di sicurezza del materiale γ = 1.5
Kmod = 0.8
τ,tor,d <= Ksh * fv,d
2.46 <= 19.07 Comb: SLU, 80; Durata minima del carico nella combinazione: media
Mt = 4076.7

---

## Asta 220: Trave in legno a falda Falda 3 fili 60-115

Verifiche condotte secondo D.M. 17-01-18 (N.T.C.)

**Dati generali**

Lunghezza = 106.5

**Caratteristiche della sezione**

| Descrizione | Tipo | Base | Altezza | Area | Jx | Jy | Wx | Wy |
|---|---|---|---|---|---|---|---|---|
| R 18x23 | Rettangolare | 18 | 23 | 414 | 18250.5 | 11178 | 1587 | 1242 |

Materiale: C14 EN 338:2016
Rapporto luce/freccia elastica limite = 300
Rapporto luce/freccia elastica differita = 200
Mensola Y: Nessuno; Mensola X: Nessuno
Classe di servizio 1

**Verifica tensoflessione D.M. 17-01-18 §4.4.8.1.7**

Sezione ad ascissa 106.5
Coefficiente parziale di sicurezza del materiale γ = 1.5
Kmod = 0.8
St,0,d/ft,0,d + Sm,y,d/fm,y,d + Km*(Sm,z,d/fm,z,d) !> 1
St,0,d/ft,0,d + Km*(Sm,y,d/fm,y,d) + Sm,z,d/fm,z,d !> 1
6.5/38.4+89.2/74.7+0.7*18.8/74.7=1.54 !> 1 [4.4.6a] Comb: SLU, 71; Durata minima del carico nella combinazione: media - NON SODDISFATTA
Mx = -141614.7; My = 23309.1; N = 2673

**Verifica taglio D.M. 17-01-18 §4.4.8.1.9**

Sezione ad ascissa 0
Coefficiente parziale di sicurezza del materiale γ = 1.5
Kmod = 0.8; kcr = 0.67
τ,d <= fv,d
Sqrt(0.33^2+3.61^2) = 3.63 <= 16 Comb: SLU, 71; Durata minima del carico nella combinazione: media
Tx = 61.1; Ty = 664.8

**Verifica taglio+torsione D.M. 17-01-18 §4.4.8.1.11**

Sezione ad ascissa 0
Coefficiente parziale di sicurezza del materiale γ = 1.5
Kmod = 0.8; kcr = 0.67
τ,tor,d/(ksh*fv,d) + (τ,y,d/fv,d)^2 + (τ,z,d/fv,d)^2 <= 1
0.07+0+0.05 <= 1 Comb: SLU, 71; Durata minima del carico nella combinazione: media
Tx = 61.1; Ty = 664.8; Mt = -2079.6

**Verifica torsione D.M. 17-01-18 §4.4.8.1.10**

Sezione ad ascissa 106.5
Coefficiente parziale di sicurezza del materiale γ = 1.5
Kmod = 0.8
τ,tor,d <= Ksh * fv,d
1.26 <= 19.07 Comb: SLU, 71; Durata minima del carico nella combinazione: media
Mt = -2079.6

---

## Asta 221: Trave in legno a falda Falda 3 fili 60-115

Verifiche condotte secondo D.M. 17-01-18 (N.T.C.)

**Dati generali**

Lunghezza = 22.6

**Caratteristiche della sezione**

| Descrizione | Tipo | Base | Altezza | Area | Jx | Jy | Wx | Wy |
|---|---|---|---|---|---|---|---|---|
| R 18x23 | Rettangolare | 18 | 23 | 414 | 18250.5 | 11178 | 1587 | 1242 |

Materiale: C14 EN 338:2016
Rapporto luce/freccia elastica limite = 300
Rapporto luce/freccia elastica differita = 200
Mensola Y: Nessuno; Mensola X: Nessuno
Classe di servizio 1

**Verifica tensoflessione D.M. 17-01-18 §4.4.8.1.7**

Sezione ad ascissa 22.6
Coefficiente parziale di sicurezza del materiale γ = 1.5
Kmod = 0.8
St,0,d/ft,0,d + Sm,y,d/fm,y,d + Km*(Sm,z,d/fm,z,d) !> 1
St,0,d/ft,0,d + Km*(Sm,y,d/fm,y,d) + Sm,z,d/fm,z,d !> 1
5.6/38.4+92.5/74.7+0.7*12.4/74.7=1.5 !> 1 [4.4.6a] Comb: SLU, 71; Durata minima del carico nella combinazione: media - NON SODDISFATTA
Mx = -146734.3; My = 15422.7; N = 2326.3

**Verifica taglio D.M. 17-01-18 §4.4.8.1.9**

Sezione ad ascissa 0
Coefficiente parziale di sicurezza del materiale γ = 1.5
Kmod = 0.8; kcr = 0.67
τ,d <= fv,d
Sqrt(1.04^2+4.09^2) = 4.22 <= 16 Comb: SLU, 71; Durata minima del carico nella combinazione: media
Tx = -190.7; Ty = 753

**Verifica taglio+torsione D.M. 17-01-18 §4.4.8.1.11**

Sezione ad ascissa 0
Coefficiente parziale di sicurezza del materiale γ = 1.5
Kmod = 0.8; kcr = 0.67
τ,tor,d/(ksh*fv,d) + (τ,y,d/fv,d)^2 + (τ,z,d/fv,d)^2 <= 1
0.26+0+0.07 <= 1 Comb: SLU, 80; Durata minima del carico nella combinazione: media
Tx = -187.4; Ty = 751.2; Mt = 8249.4

**Verifica torsione D.M. 17-01-18 §4.4.8.1.10**

Sezione ad ascissa 22.6
Coefficiente parziale di sicurezza del materiale γ = 1.5
Kmod = 0.8
τ,tor,d <= Ksh * fv,d
4.98 <= 19.07 Comb: SLU, 80; Durata minima del carico nella combinazione: media
Mt = 8249.4

---

## Asta 222: Trave in legno a falda Falda 3 fili 60-115

Verifiche condotte secondo D.M. 17-01-18 (N.T.C.)

### Dati generali

Lunghezza = 83.9

### Caratteristiche della sezione

| Descrizione | Tipo | Base | Altezza | Area | Jx | Jy | Wx | Wy |
|---|---|---|---|---|---|---|---|---|
| R 18x23 | Rettangolare | 18 | 23 | 414 | 18250.5 | 11178 | 1587 | 1242 |

Materiale: C14 EN 338:2016
Rapporto luce/freccia elastica limite = 300
Rapporto luce/freccia elastica differita = 200
Mensola Y: Nessuno; Mensola X: Nessuno
Classe di servizio 1

### Verifica tensoflessione D.M. 17-01-18 §4.4.8.1.7

Sezione ad ascissa 0
Coefficiente parziale di sicurezza del materiale γ = 1.5
Kmod = 0.8
St,0,d/ft,0,d + Sm,y,d/fm,y,d + Km*(Sm,z,d/fm,z,d) !> 1
St,0,d/ft,0,d + Km*(Sm,y,d/fm,y,d) + Sm,z,d/fm,z,d <= 1
4.3/38.4+77.8/74.7+0.7*2.9/74.7=1.18 !> 1 [4.4.6a] Comb: SLU, 71; Durata minima del carico nella combinazione: media - NON SODDISFATTA
Mx = -123482.4; My = 3638.4; N = 1777.7

### Verifica taglio D.M. 17-01-18 §4.4.8.1.9

Sezione ad ascissa 83.9
Coefficiente parziale di sicurezza del materiale γ = 1.5
Kmod = 0.8; kcr = 0.67
τ,d <= fv,d
Sqrt(1.08^2+2.18^2) = 2.43 <= 16 Comb: SLU, 71; Durata minima del carico nella combinazione: media
Tx = 199.6; Ty = -400.3

### Verifica taglio+torsione D.M. 17-01-18 §4.4.8.1.11

Sezione ad ascissa 83.9
Coefficiente parziale di sicurezza del materiale γ = 1.5
Kmod = 0.8; kcr = 0.67
τ,tor,d/(ksh*fv,d) + (τ,y,d/fv,d)^2 + (τ,z,d/fv,d)^2 <= 1
0.6+0+0.02 <= 1 Comb: SLU, 72; Durata minima del carico nella combinazione: media
Tx = 184.1; Ty = -400.1; Mt = -19071.4

### Verifica torsione D.M. 17-01-18 §4.4.8.1.10

Sezione ad ascissa 83.9
Coefficiente parziale di sicurezza del materiale γ = 1.5
Kmod = 0.8
τ,tor,d <= Ksh * fv,d
11.51 <= 19.07 Comb: SLU, 72; Durata minima del carico nella combinazione: media
Mt = -19071.4

---

## Asta 223: Trave in legno a falda Falda 3 fili 60-115

Verifiche condotte secondo D.M. 17-01-18 (N.T.C.)

### Dati generali

Lunghezza = 106.5

### Caratteristiche della sezione

| Descrizione | Tipo | Base | Altezza | Area | Jx | Jy | Wx | Wy |
|---|---|---|---|---|---|---|---|---|
| R 18x23 | Rettangolare | 18 | 23 | 414 | 18250.5 | 11178 | 1587 | 1242 |

Materiale: C14 EN 338:2016
Rapporto luce/freccia elastica limite = 300
Rapporto luce/freccia elastica differita = 200
Mensola Y: Nessuno; Mensola X: Nessuno
Classe di servizio 1

### Verifica tensoflessione D.M. 17-01-18 §4.4.8.1.7

Sezione ad ascissa 0
Coefficiente parziale di sicurezza del materiale γ = 1.5
Kmod = 0.8
St,0,d/ft,0,d + Sm,y,d/fm,y,d + Km*(Sm,z,d/fm,z,d) <= 1
St,0,d/ft,0,d + Km*(Sm,y,d/fm,y,d) + Sm,z,d/fm,z,d <= 1
3.8/38.4+55.4/74.7+0.7*13.4/74.7=0.97 <= 1 [4.4.6a] Comb: SLU, 71; Durata minima del carico nella combinazione: media
Mx = -87964.3; My = 16653.8; N = 1587.9

### Verifica taglio D.M. 17-01-18 §4.4.8.1.9

Sezione ad ascissa 106.5

Coefficiente parziale di sicurezza del materiale γ = 1.5
Kmod = 0.8; kcr = 0.67
τ,d <= fv,d
Sqrt(0.13^2+2.34^2) = 2.35 <= 16 Comb: SLU, 80; Durata minima del carico nella combinazione: media
Tx = 23.6; Ty = -431.4

**Verifica taglio+torsione D.M. 17-01-18 §4.4.8.1.11**

Sezione ad ascissa 106.5
Coefficiente parziale di sicurezza del materiale γ = 1.5
Kmod = 0.8; kcr = 0.67
τ,tor,d/(ksh*fv,d) + (τ,y,d/fv,d)^2 + (τ,z,d/fv,d)^2 <= 1
0.33+0+0.02 <= 1 Comb: SLU, 72; Durata minima del carico nella combinazione: media
Tx = 24.6; Ty = -431.2; Mt = -10384.1

**Verifica torsione D.M. 17-01-18 §4.4.8.1.10**

Sezione ad ascissa 106.5
Coefficiente parziale di sicurezza del materiale γ = 1.5
Kmod = 0.8
τ,tor,d <= Ksh * fv,d
6.27 <= 19.07 Comb: SLU, 72; Durata minima del carico nella combinazione: media
Mt = -10384.1

---

## Asta 224: Trave in legno a falda Falda 3 fili 60-115

Verifiche condotte secondo D.M. 17-01-18 (N.T.C.)

**Dati generali**

Lunghezza = 106.5

**Caratteristiche della sezione**

| Descrizione | Tipo | Base | Altezza | Area | Jx | Jy | Wx | Wy |
|---|---|---|---|---|---|---|---|---|
| R 18x23 | Rettangolare | 18 | 23 | 414 | 18250.5 | 11178 | 1587 | 1242 |

Materiale: C14 EN 338:2016
Rapporto luce/freccia elastica limite = 300
Rapporto luce/freccia elastica differita = 200
Mensola Y: Nessuno; Mensola X: Nessuno
Classe di servizio 1

**Verifica tensoflessione D.M. 17-01-18 §4.4.8.1.7**

Sezione ad ascissa 0
Coefficiente parziale di sicurezza del materiale γ = 1.5
Kmod = 0.8
St,0,d/ft,0,d + Sm,y,d/fm,y,d + Km*(Sm,z,d/fm,z,d) <= 1
St,0,d/ft,0,d + Km*(Sm,y,d/fm,y,d) + Sm,z,d/fm,z,d <= 1
3.6/38.4+28/74.7+0.7*13.5/74.7=0.59 <= 1 [4.4.6a] Comb: SLU, 71; Durata minima del carico nella combinazione: media
Mx = -44389.4; My = 16719.8; N = 1486.3

**Verifica taglio D.M. 17-01-18 §4.4.8.1.9**

Sezione ad ascissa 106.5
Coefficiente parziale di sicurezza del materiale γ = 1.5
Kmod = 0.8; kcr = 0.67
τ,d <= fv,d
Sqrt(0.23^2+2.06^2) = 2.08 <= 16 Comb: SLU, 80; Durata minima del carico nella combinazione: media
Tx = -42.4; Ty = -379.8

**Verifica taglio+torsione D.M. 17-01-18 §4.4.8.1.11**

Sezione ad ascissa 106.5
Coefficiente parziale di sicurezza del materiale γ = 1.5
Kmod = 0.8; kcr = 0.67
τ,tor,d/(ksh*fv,d) + (τ,y,d/fv,d)^2 + (τ,z,d/fv,d)^2 <= 1
0.13+0+0.02 <= 1 Comb: SLU, 72; Durata minima del carico nella combinazione: media
Tx = -44.3; Ty = -379.2; Mt = -4011.7

**Verifica torsione D.M. 17-01-18 §4.4.8.1.10**

Sezione ad ascissa 106.5
Coefficiente parziale di sicurezza del materiale γ = 1.5
Kmod = 0.8
τ,tor,d <= Ksh * fv,d
2.42 <= 19.07 Comb: SLU, 72; Durata minima del carico nella combinazione: media
Mt = -4011.7

---

## Asta 225: Trave in legno a falda Falda 3 fili 60-115

Verifiche condotte secondo D.M. 17-01-18 (N.T.C.)

### Dati generali

Lunghezza = 95.6

### Caratteristiche della sezione

| Descrizione | Tipo | Base | Altezza | Area | Jx | Jy | Wx | Wy |
|---|---|---|---|---|---|---|---|---|
| R 18x23 | Rettangolare | 18 | 23 | 414 | 18250.5 | 11178 | 1587 | 1242 |

Materiale: C14 EN 338:2016
Rapporto luce/freccia elastica limite = 300
Rapporto luce/freccia elastica differita = 200
Mensola Y: Nessuno; Mensola X: Nessuno
Classe di servizio 1

### Verifica tensoflessione D.M. 17-01-18 §4.4.8.1.7

Sezione ad ascissa 0
Coefficiente parziale di sicurezza del materiale γ = 1.5
Kmod = 1.1
St,0,d/ft,0,d + Sm,y,d/fm,y,d + Km*(Sm,z,d/fm,z,d) <= 1
St,0,d/ft,0,d + Km*(Sm,y,d/fm,y,d) + Sm,z,d/fm,z,d <= 1
7.4/52.8+23.3/102.7+0.7*21.2/102.7=0.51 <= 1 [4.4.6a] Comb: SLV, 6; Durata minima del carico nella combinazione: istantaneo
Mx = -36971.5; My = 26317.6; N = 3055.4

### Verifica taglio D.M. 17-01-18 §4.4.8.1.9

Sezione ad ascissa 0
Coefficiente parziale di sicurezza del materiale γ = 1.5
Kmod = 1.1; kcr = 0.67
τ,d <= fv,d
Sqrt(1.86^2+0.1^2) = 1.87 <= 22 Comb: SLV, 6; Durata minima del carico nella combinazione: istantaneo
Tx = -342.8; Ty = 18.3

### Verifica taglio+torsione D.M. 17-01-18 §4.4.8.1.11

Sezione ad ascissa 95.6
Coefficiente parziale di sicurezza del materiale γ = 1.5
Kmod = 1.1; kcr = 0.67
τ,tor,d/(ksh*fv,d) + (τ,y,d/fv,d)^2 + (τ,z,d/fv,d)^2 <= 1
0.04+0.01+0 <= 1 Comb: SLV, 10; Durata minima del carico nella combinazione: istantaneo
Tx = -320.8; Ty = -15.6; Mt = -1741.6

### Verifica torsione D.M. 17-01-18 §4.4.8.1.10

Sezione ad ascissa 95.6
Coefficiente parziale di sicurezza del materiale γ = 1.5
Kmod = 1.1
τ,tor,d <= Ksh * fv,d
1.05 <= 26.22 Comb: SLV, 10; Durata minima del carico nella combinazione: istantaneo
Mt = -1741.6

---

## Asta 226: Trave in legno a falda Falda 5 fili 271-281

Verifiche condotte secondo D.M. 17-01-18 (N.T.C.)

### Dati generali

Lunghezza = 85.3

### Caratteristiche della sezione

| Descrizione | Tipo | Base | Altezza | Area | Jx | Jy | Wx | Wy |
|---|---|---|---|---|---|---|---|---|
| R 8x10 | Rettangolare | 8 | 10 | 80 | 666.67 | 426.67 | 133.33 | 106.67 |

Materiale: C14 EN 338:2016
Rapporto luce/freccia elastica limite = 300
Rapporto luce/freccia elastica differita = 200
Mensola Y: Nessuno; Mensola X: Nessuno
Classe di servizio 1

### Verifica taglio D.M. 17-01-18 §4.4.8.1.9

Sezione ad ascissa 85.3
Coefficiente parziale di sicurezza del materiale γ = 1.5
Kmod = 0.8; kcr = 0.67
τ,d <= fv,d
Sqrt(0.64^2+5.81^2) = 5.84 <= 16 Comb: SLU, 80; Durata minima del carico nella combinazione: media
Tx = -22.6; Ty = -206.5

**Verifica pressoflessione D.M. 17-01-18 §4.4.8.1.8**

Sezione ad ascissa 85.3
Coefficiente parziale di sicurezza del materiale γ = 1.5
Kmod = 0.8; Kh = 1.084 (formula 11.7.1)
(Sc,0,d/fc,0,d)^2 + Sm,y,d/fm,y,d + Km*(Sm,z,d/fm,z,d) <= 1
(Sc,0,d/fc,0,d)^2 + Km*(Sm,y,d/fm,y,d) + Sm,z,d/fm,z,d <= 1
(3.9/85.3)^2+65.9/81+0.7*11.5/80.97=0.92 <= 1 [4.4.7a] Comb: SLU, 80; Durata minima del carico nella combinazione: media
Mx = 8786; My = -1226.8; N = -310.5

**Verifica taglio+torsione D.M. 17-01-18 §4.4.8.1.11**

Sezione ad ascissa 85.3
Coefficiente parziale di sicurezza del materiale γ = 1.5
Kmod = 0.8; Kh = 1.084 (formula 11.7.1); kcr = 0.67
τ,tor,d/(ksh*fv,d) + (τ,y,d/fv,d)^2 + (τ,z,d/fv,d)^2 <= 1
0.08+0+0.13 <= 1 Comb: SLU, 80; Durata minima del carico nella combinazione: media
Tx = -22.6; Ty = -206.5; Mt = 215.1

**Verifica torsione D.M. 17-01-18 §4.4.8.1.10**

Sezione ad ascissa 85.3
Coefficiente parziale di sicurezza del materiale γ = 1.5
Kmod = 0.8
τ,tor,d <= Ksh * fv,d
1.59 <= 19 Comb: SLU, 71; Durata minima del carico nella combinazione: media
Mt = 224.8

## Asta 227: Trave in legno a falda Falda 5 fili 271-281

Verifiche condotte secondo D.M. 17-01-18 (N.T.C.)

**Dati generali**

Lunghezza = 23.1

**Caratteristiche della sezione**

| Descrizione | Tipo | Base | Altezza | Area | Jx | Jy | Wx | Wy |
|---|---|---|---|---|---|---|---|---|
| R 8x10 | Rettangolare | 8 | 10 | 80 | 666.67 | 426.67 | 133.33 | 106.67 |

Materiale: C14 EN 338:2016
Rapporto luce/freccia elastica limite = 300
Rapporto luce/freccia elastica differita = 200
Mensola Y: Nessuno; Mensola X: Nessuno
Classe di servizio 1

**Verifica trazione parallela alla fibratura D.M. 17-01-18 §4.4.8.1.1**

Sezione ad ascissa 13.9
Coefficiente parziale di sicurezza del materiale γ = 1.5
Kmod = 1.1; Kh = 1.084 (formula 11.7.1)
St,0,d <= ft,0,d
0.06 <= 57.26 Comb: SLV, 10; Durata minima del carico nella combinazione: istantaneo
N = 4.6

**Verifica flessione D.M. 17-01-18 §4.4.8.1.6**

Sezione ad ascissa 0
Coefficiente parziale di sicurezza del materiale γ = 1.5
Kmod = 0.6; Kh = 1.084 (formula 11.7.1)
Sm,y,d/fm,y,d + Km*(Sm,z,d/fm,z,d) <= 1
Km*(Sm,y,d/fm,y,d) + Sm,z,d/fm,z,d <= 1
0.1/60.7+0.7*0/60.7=0 <= 1 (formula 4.4.5a) Comb: SLU, 43; Durata minima del carico nella combinazione: permanente
Mx = 8.6; My = 0

## Asta 228: Trave in legno a falda Falda 5 fili 267-282

Verifiche condotte secondo D.M. 17-01-18 (N.T.C.)

**Dati generali**

Lunghezza = 163.2

**Caratteristiche della sezione**

| Descrizione | Tipo | Base | Altezza | Area | Jx | Jy | Wx | Wy |
|---|---|---|---|---|---|---|---|---|
| R 8x10 | Rettangolare | 8 | 10 | 80 | 666.67 | 426.67 | 133.33 | 106.67 |

Materiale: C14 EN 338:2016
Rapporto luce/freccia elastica limite = 300

Rapporto luce/freccia elastica differita = 200
Mensola Y: Nessuno; Mensola X: Nessuno
Classe di servizio 1

**Verifica taglio D.M. 17-01-18 §4.4.8.1.9**

Sezione ad ascissa 163.3
Coefficiente parziale di sicurezza del materiale γ = 1.5
Kmod = 0.8; kcr = 0.67
τ,d <= fv,d
Sqrt(0.14^2+2.32^2) = 2.32 <= 16 Comb: SLU, 80; Durata minima del carico nella combinazione: media
Tx = 4.9; Ty = -82.4

**Verifica pressoflessione D.M. 17-01-18 §4.4.8.1.8**

Sezione ad ascissa 163.3
Coefficiente parziale di sicurezza del materiale γ = 1.5
Kmod = 0.8; Kh = 1.084 (formula 11.7.1)
(Sc,0,d/fc,0,d)^2 + Sm,y,d/fm,y,d + Km*(Sm,z,d/fm,z,d) <= 1
(Sc,0,d/fc,0,d)^2 + Km*(Sm,y,d/fm,y,d) + Sm,z,d/fm,z,d <= 1
(1.6/85.3)^2+54.8/81+0.7*2.5/80.97=0.7 <= 1 [4.4.7a] Comb: SLU, 80; Durata minima del carico nella combinazione: media
Mx = 7310.4; My = 270.7; N = -124.1

**Verifica taglio+torsione D.M. 17-01-18 §4.4.8.1.11**

Sezione ad ascissa 163.3
Coefficiente parziale di sicurezza del materiale γ = 1.5
Kmod = 0.8; Kh = 1.084 (formula 11.7.1); kcr = 0.67
τ,tor,d/(ksh*fv,d) + (τ,y,d/fv,d)^2 + (τ,z,d/fv,d)^2 <= 1
0.03+0+0.02 <= 1 Comb: SLU, 79; Durata minima del carico nella combinazione: media
Tx = 6.6; Ty = -78; Mt = 68.2

**Verifica torsione D.M. 17-01-18 §4.4.8.1.10**

Sezione ad ascissa 163.3
Coefficiente parziale di sicurezza del materiale γ = 1.5
Kmod = 0.8
τ,tor,d <= Ksh * fv,d
0.48 <= 19 Comb: SLU, 79; Durata minima del carico nella combinazione: media
Mt = 68.2

---

## Asta 229: Trave in legno a falda Falda 5 fili 267-282

Verifiche condotte secondo D.M. 17-01-18 (N.T.C.)

**Dati generali**

Lunghezza = 23.2

**Caratteristiche della sezione**

| Descrizione | Tipo | Base | Altezza | Area | Jx | Jy | Wx | Wy |
|---|---|---|---|---|---|---|---|---|
| R 8x10 | Rettangolare | 8 | 10 | 80 | 666.67 | 426.67 | 133.33 | 106.67 |

Materiale: C14 EN 338:2016
Rapporto luce/freccia elastica limite = 300
Rapporto luce/freccia elastica differita = 200
Mensola Y: Nessuno; Mensola X: Nessuno
Classe di servizio 1

**Verifica trazione parallela alla fibratura D.M. 17-01-18 §4.4.8.1.1**

Sezione ad ascissa 12.4
Coefficiente parziale di sicurezza del materiale γ = 1.5
Kmod = 1.1; Kh = 1.084 (formula 11.7.1)
St,0,d <= ft,0,d
0.08 <= 57.26 Comb: SLV, 14; Durata minima del carico nella combinazione: istantaneo
N = 6.2

**Verifica flessione D.M. 17-01-18 §4.4.8.1.6**

Sezione ad ascissa 0
Coefficiente parziale di sicurezza del materiale γ = 1.5
Kmod = 0.6; Kh = 1.084 (formula 11.7.1)
Sm,y,d/fm,y,d + Km*(Sm,z,d/fm,z,d) <= 1
Km*(Sm,y,d/fm,y,d) + Sm,z,d/fm,z,d <= 1
0.1/60.7+0.7*0/60.7=0 <= 1 (formula 4.4.5a) Comb: SLU, 64; Durata minima del carico nella combinazione: permanente
Mx = 8.6; My = 0

---

## Asta 230: Trave in legno a falda Falda 5 fili 262-283

Verifiche condotte secondo D.M. 17-01-18 (N.T.C.)

### Dati generali

Lunghezza = 239.4

### Caratteristiche della sezione

| Descrizione | Tipo | Base | Altezza | Area | Jx | Jy | Wx | Wy |
|---|---|---|---|---|---|---|---|---|
| R 8x10 | Rettangolare | 8 | 10 | 80 | 666.67 | 426.67 | 133.33 | 106.67 |

Materiale: C14 EN 338:2016
Rapporto luce/freccia elastica limite = 300
Rapporto luce/freccia elastica differita = 200
Mensola Y: Nessuno; Mensola X: Nessuno
Classe di servizio 1

### Verifica taglio D.M. 17-01-18 §4.4.8.1.9

Sezione ad ascissa 239.5
Coefficiente parziale di sicurezza del materiale γ = 1.5
Kmod = 0.8; kcr = 0.67
τ,d <= fv,d
Sqrt(0.43^2+1.3^2) = 1.37 <= 16 Comb: SLU, 80; Durata minima del carico nella combinazione: media
Tx = 15.5; Ty = -46.3

### Verifica pressoflessione D.M. 17-01-18 §4.4.8.1.8

Sezione ad ascissa 239.5
Coefficiente parziale di sicurezza del materiale γ = 1.5
Kmod = 0.8; Kh = 1.084 (formula 11.7.1)
(Sc,0,d/fc,0,d)^2 + Sm,y,d/fm,y,d + Km*(Sm,z,d/fm,z,d) <= 1
(Sc,0,d/fc,0,d)^2 + Km*(Sm,y,d/fm,y,d) + Sm,z,d/fm,z,d <= 1
(1.8/85.3)^2+48.4/81+0.7*15.9/80.97=0.74 <= 1 [4.4.7a] Comb: SLU, 80; Durata minima del carico nella combinazione: media
Mx = 6449.8; My = 1693.1; N = -145

### Verifica taglio+torsione D.M. 17-01-18 §4.4.8.1.11

Sezione ad ascissa 239.5
Coefficiente parziale di sicurezza del materiale γ = 1.5
Kmod = 0.8; Kh = 1.084 (formula 11.7.1); kcr = 0.67
τ,tor,d/(ksh*fv,d) + (τ,y,d/fv,d)^2 + (τ,z,d/fv,d)^2 <= 1
0.04+0+0.01 <= 1 Comb: SLU, 72; Durata minima del carico nella combinazione: media
Tx = 15.3; Ty = -46.3; Mt = -101.3

### Verifica torsione D.M. 17-01-18 §4.4.8.1.10

Sezione ad ascissa 239.5
Coefficiente parziale di sicurezza del materiale γ = 1.5
Kmod = 0.8
τ,tor,d <= Ksh * fv,d
0.72 <= 19 Comb: SLU, 72; Durata minima del carico nella combinazione: media
Mt = -101.3

---

## Asta 231: Trave in legno a falda Falda 5 fili 262-283

Verifiche condotte secondo D.M. 17-01-18 (N.T.C.)

### Dati generali

Lunghezza = 23.2

### Caratteristiche della sezione

| Descrizione | Tipo | Base | Altezza | Area | Jx | Jy | Wx | Wy |
|---|---|---|---|---|---|---|---|---|
| R 8x10 | Rettangolare | 8 | 10 | 80 | 666.67 | 426.67 | 133.33 | 106.67 |

Materiale: C14 EN 338:2016
Rapporto luce/freccia elastica limite = 300
Rapporto luce/freccia elastica differita = 200
Mensola Y: Nessuno; Mensola X: Nessuno
Classe di servizio 1

### Verifica trazione parallela alla fibratura D.M. 17-01-18 §4.4.8.1.1

Sezione ad ascissa 12.4
Coefficiente parziale di sicurezza del materiale γ = 1.5
Kmod = 1.1; Kh = 1.084 (formula 11.7.1)
St,0,d <= ft,0,d
0.01 <= 57.26 Comb: SLV, 16; Durata minima del carico nella combinazione: istantaneo
N = 1

### Verifica flessione D.M. 17-01-18 §4.4.8.1.6

Sezione ad ascissa 0
Coefficiente parziale di sicurezza del materiale γ = 1.5
Kmod = 0.6; Kh = 1.084 (formula 11.7.1)
Sm,y,d/fm,y,d + Km*(Sm,z,d/fm,z,d) <= 1
Km*(Sm,y,d/fm,y,d) + Sm,z,d/fm,z,d <= 1
0.1/60.7+0.7*0/60.7=0 <= 1 (formula 4.4.5a) Comb: SLU, 64; Durata minima del carico nella combinazione: permanente
Mx = 8.7; My = 0

---

## Asta 232: Trave in legno a falda Falda 5 fili 256-284

Verifiche condotte secondo D.M. 17-01-18 (N.T.C.)

### Dati generali

Lunghezza = 315.8

### Caratteristiche della sezione

| Descrizione | Tipo | Base | Altezza | Area | Jx | Jy | Wx | Wy |
|---|---|---|---|---|---|---|---|---|
| R 8x10 | Rettangolare | 8 | 10 | 80 | 666.67 | 426.67 | 133.33 | 106.67 |

Materiale: C14 EN 338:2016
Rapporto luce/freccia elastica limite = 300
Rapporto luce/freccia elastica differita = 200
Mensola Y: Nessuno; Mensola X: Nessuno
Classe di servizio 1

### Verifica taglio D.M. 17-01-18 §4.4.8.1.9

Sezione ad ascissa 315.8
Coefficiente parziale di sicurezza del materiale γ = 1.5
Kmod = 0.8; kcr = 0.67
τ,d <= fv,d
Sqrt(0.62^2+0.78^2) = 1 <= 16 Comb: SLU, 80; Durata minima del carico nella combinazione: media
Tx = 22; Ty = -27.9

### Verifica pressoflessione D.M. 17-01-18 §4.4.8.1.8

Sezione ad ascissa 315.8
Coefficiente parziale di sicurezza del materiale γ = 1.5
Kmod = 0.8; Kh = 1.084 (formula 11.7.1)
(Sc,0,d/fc,0,d)^2 + Sm,y,d/fm,y,d + Km*(Sm,z,d/fm,z,d) <= 1
(Sc,0,d/fc,0,d)^2 + Km*(Sm,y,d/fm,y,d) + Sm,z,d/fm,z,d <= 1
(1.7/85.3)^2+36.7/81+0.7*29.8/80.97=0.71 <= 1 [4.4.7a] Comb: SLU, 80; Durata minima del carico nella combinazione: media
Mx = 4887.7; My = 3178.1; N = -138.2

### Verifica taglio+torsione D.M. 17-01-18 §4.4.8.1.11

Sezione ad ascissa 315.8
Coefficiente parziale di sicurezza del materiale γ = 1.5
Kmod = 0.8; Kh = 1.084 (formula 11.7.1); kcr = 0.67
τ,tor,d/(ksh*fv,d) + (τ,y,d/fv,d)^2 + (τ,z,d/fv,d)^2 <= 1
0.07+0+0 <= 1 Comb: SLU, 80; Durata minima del carico nella combinazione: media
Tx = 22; Ty = -27.9; Mt = -200.6

### Verifica torsione D.M. 17-01-18 §4.4.8.1.10

Sezione ad ascissa 315.8
Coefficiente parziale di sicurezza del materiale γ = 1.5
Kmod = 0.8
τ,tor,d <= Ksh * fv,d
1.42 <= 19 Comb: SLU, 80; Durata minima del carico nella combinazione: media
Mt = -200.6

---

## Asta 233: Trave in legno a falda Falda 5 fili 256-284

Verifiche condotte secondo D.M. 17-01-18 (N.T.C.)

### Dati generali

Lunghezza = 23.2

### Caratteristiche della sezione

| Descrizione | Tipo | Base | Altezza | Area | Jx | Jy | Wx | Wy |
|---|---|---|---|---|---|---|---|---|
| R 8x10 | Rettangolare | 8 | 10 | 80 | 666.67 | 426.67 | 133.33 | 106.67 |

Materiale: C14 EN 338:2016
Rapporto luce/freccia elastica limite = 300

Rapporto luce/freccia elastica differita = 200
Mensola Y: Nessuno; Mensola X: Nessuno
Classe di servizio 1

**Verifica trazione parallela alla fibratura D.M. 17-01-18 §4.4.8.1.1**

Sezione ad ascissa 13.9
Coefficiente parziale di sicurezza del materiale γ = 1.5
Kmod = 1.1; Kh = 1.084 (formula 11.7.1)
St,0,d <= ft,0,d
0.07 <= 57.26 Comb: SLV, 10; Durata minima del carico nella combinazione: istantaneo
N = 5.9

**Verifica flessione D.M. 17-01-18 §4.4.8.1.6**

Sezione ad ascissa 0
Coefficiente parziale di sicurezza del materiale γ = 1.5
Kmod = 0.6; Kh = 1.084 (formula 11.7.1)
Sm,y,d/fm,y,d + Km*(Sm,z,d/fm,z,d) <= 1
Km*(Sm,y,d/fm,y,d) + Sm,z,d/fm,z,d <= 1
0.1/60.7+0.7*0/60.7=0 <= 1 (formula 4.4.5a) Comb: SLU, 43; Durata minima del carico nella combinazione: permanente
Mx = 8.7; My = 0

---

## Asta 234: Trave in legno a falda Falda 5 fili 250-285

Verifiche condotte secondo D.M. 17-01-18 (N.T.C.)

**Dati generali**

Lunghezza = 392

**Caratteristiche della sezione**

| Descrizione | Tipo | Base | Altezza | Area | Jx | Jy | Wx | Wy |
|---|---|---|---|---|---|---|---|---|
| R 8x10 | Rettangolare | 8 | 10 | 80 | 666.67 | 426.67 | 133.33 | 106.67 |

Materiale: C14 EN 338:2016
Rapporto luce/freccia elastica limite = 300
Rapporto luce/freccia elastica differita = 200
Mensola Y: Nessuno; Mensola X: Nessuno
Classe di servizio 1

**Verifica flessione D.M. 17-01-18 §4.4.8.1.6**

Sezione ad ascissa 392
Coefficiente parziale di sicurezza del materiale γ = 1.5
Kmod = 0.8; Kh = 1.084 (formula 11.7.1)
Sm,y,d/fm,y,d + Km*(Sm,z,d/fm,z,d) <= 1
Km*(Sm,y,d/fm,y,d) + Sm,z,d/fm,z,d <= 1
0.7*21.7/81+28.6/81=0.54 <= 1 (formula 4.4.5b) Comb: SLU, 80; Durata minima del carico nella combinazione: media
Mx = 2893; My = 3050

**Verifica taglio D.M. 17-01-18 §4.4.8.1.9**

Sezione ad ascissa 392
Coefficiente parziale di sicurezza del materiale γ = 1.5
Kmod = 0.8; kcr = 0.67
τ,d <= fv,d
Sqrt(0.47^2+0.52^2) = 0.7 <= 16 Comb: SLU, 80; Durata minima del carico nella combinazione: media
Tx = 16.7; Ty = -18.4

**Verifica taglio+torsione D.M. 17-01-18 §4.4.8.1.11**

Sezione ad ascissa 392
Coefficiente parziale di sicurezza del materiale γ = 1.5
Kmod = 0.8; Kh = 1.084 (formula 11.7.1); kcr = 0.67
τ,tor,d/(ksh*fv,d) + (τ,y,d/fv,d)^2 + (τ,z,d/fv,d)^2 <= 1
0.08+0+0 <= 1 Comb: SLU, 80; Durata minima del carico nella combinazione: media
Tx = 16.7; Ty = -18.4; Mt = -204.9

**Verifica compressione parallela alla fibratura D.M. 17-01-18 §4.4.8.1.3**

Sezione ad ascissa 209.1
Coefficiente parziale di sicurezza del materiale γ = 1.5
Kmod = 0.8; Kh = 1.084 (formula 11.7.1)
Sc,0,d <= fc,0,d
|-0.32| <= 85.33 Comb: SLU, 79; Durata minima del carico nella combinazione: media
N = -25.8

**Verifica torsione D.M. 17-01-18 §4.4.8.1.10**

Sezione ad ascissa 392

Coefficiente parziale di sicurezza del materiale γ = 1.5
Kmod = 0.8
τ,tor,d <= Ksh * fv,d
1.45 <= 19 Comb: SLU, 80; Durata minima del carico nella combinazione: media
Mt = -204.9

## Asta 235: Trave in legno a falda Falda 5 fili 250-285

Verifiche condotte secondo D.M. 17-01-18 (N.T.C.)

### Dati generali

Lunghezza = 23.2

### Caratteristiche della sezione

| Descrizione | Tipo | Base | Altezza | Area | Jx | Jy | Wx | Wy |
|---|---|---|---|---|---|---|---|---|
| R 8x10 | Rettangolare | 8 | 10 | 80 | 666.67 | 426.67 | 133.33 | 106.67 |

Materiale: C14 EN 338:2016
Rapporto luce/freccia elastica limite = 300
Rapporto luce/freccia elastica differita = 200
Mensola Y: Nessuno; Mensola X: Nessuno
Classe di servizio 1

### Verifica trazione parallela alla fibratura D.M. 17-01-18 §4.4.8.1.1

Sezione ad ascissa 11.6
Coefficiente parziale di sicurezza del materiale γ = 1.5
Kmod = 1.1; Kh = 1.084 (formula 11.7.1)
St,0,d <= ft,0,d
0 <= 57.26 Comb: SLV, 14; Durata minima del carico nella combinazione: istantaneo
N = 0.4

### Verifica flessione D.M. 17-01-18 §4.4.8.1.6

Sezione ad ascissa 0
Coefficiente parziale di sicurezza del materiale γ = 1.5
Kmod = 0.6; Kh = 1.084 (formula 11.7.1)
Sm,y,d/fm,y,d + Km*(Sm,z,d/fm,z,d) <= 1
Km*(Sm,y,d/fm,y,d) + Sm,z,d/fm,z,d <= 1
0.1/60.7+0.7*0/60.7=0 <= 1 (formula 4.4.5a) Comb: SLU, 64; Durata minima del carico nella combinazione: permanente
Mx = 8.7; My = 0

## Asta 236: Trave in legno a falda Falda 5 fili 244-286

Verifiche condotte secondo D.M. 17-01-18 (N.T.C.)

### Dati generali

Lunghezza = 468.2

### Caratteristiche della sezione

| Descrizione | Tipo | Base | Altezza | Area | Jx | Jy | Wx | Wy |
|---|---|---|---|---|---|---|---|---|
| R 8x10 | Rettangolare | 8 | 10 | 80 | 666.67 | 426.67 | 133.33 | 106.67 |

Materiale: C14 EN 338:2016
Rapporto luce/freccia elastica limite = 300
Rapporto luce/freccia elastica differita = 200
Mensola Y: Nessuno; Mensola X: Nessuno
Classe di servizio 1

### Verifica taglio D.M. 17-01-18 §4.4.8.1.9

Sezione ad ascissa 468.2
Coefficiente parziale di sicurezza del materiale γ = 1.5
Kmod = 0.8; kcr = 0.67
τ,d <= fv,d
Sqrt(0.18^2+0.37^2) = 0.41 <= 16 Comb: SLU, 80; Durata minima del carico nella combinazione: media
Tx = 6.5; Ty = -13.2

### Verifica pressoflessione D.M. 17-01-18 §4.4.8.1.8

Sezione ad ascissa 468.2
Coefficiente parziale di sicurezza del materiale γ = 1.5
Kmod = 0.8; Kh = 1.084 (formula 11.7.1)
(Sc,0,d/fc,0,d)^2 + Sm,y,d/fm,y,d + Km*(Sm,z,d/fm,z,d) <= 1
(Sc,0,d/fc,0,d)^2 + Km*(Sm,y,d/fm,y,d) + Sm,z,d/fm,z,d <= 1
(1.5/85.3)^2+0.7*11.5/81+15.1/81=0.29 <= 1 [4.4.7b] Comb: SLU, 79; Durata minima del carico nella combinazione: media
Mx = 1538; My = 1608.3; N = -120.1

### Verifica taglio+torsione D.M. 17-01-18 §4.4.8.1.11

Sezione ad ascissa 468.2
Coefficiente parziale di sicurezza del materiale γ = 1.5
Kmod = 0.8; Kh = 1.084 (formula 11.7.1); kcr = 0.67
τ,tor,d/(ksh*fv,d) + (τ,y,d/fv,d)^2 + (τ,z,d/fv,d)^2 <= 1
0.05+0+0 <= 1 Comb: SLU, 79; Durata minima del carico nella combinazione: media
Tx = 6.7; Ty = -12.9; Mt = -126.2

### Verifica torsione D.M. 17-01-18 §4.4.8.1.10

Sezione ad ascissa 468.2
Coefficiente parziale di sicurezza del materiale γ = 1.5
Kmod = 0.8
τ,tor,d <= Ksh * fv,d
0.89 <= 19 Comb: SLU, 79; Durata minima del carico nella combinazione: media
Mt = -126.2

---

## Asta 237: Trave in legno a falda Falda 5 fili 244-286

Verifiche condotte secondo D.M. 17-01-18 (N.T.C.)

### Dati generali

Lunghezza = 23.2

### Caratteristiche della sezione

| Descrizione | Tipo | Base | Altezza | Area | Jx | Jy | Wx | Wy |
|---|---|---|---|---|---|---|---|---|
| R 8x10 | Rettangolare | 8 | 10 | 80 | 666.67 | 426.67 | 133.33 | 106.67 |

Materiale: C14 EN 338:2016
Rapporto luce/freccia elastica limite = 300
Rapporto luce/freccia elastica differita = 200
Mensola Y: Nessuno; Mensola X: Nessuno
Classe di servizio 1

### Verifica trazione parallela alla fibratura D.M. 17-01-18 §4.4.8.1.1

Sezione ad ascissa 10.1
Coefficiente parziale di sicurezza del materiale γ = 1.5
Kmod = 1.1; Kh = 1.084 (formula 11.7.1)
St,0,d <= ft,0,d
0.02 <= 57.26 Comb: SLV, 14; Durata minima del carico nella combinazione: istantaneo
N = 1.9

### Verifica flessione D.M. 17-01-18 §4.4.8.1.6

Sezione ad ascissa 0
Coefficiente parziale di sicurezza del materiale γ = 1.5
Kmod = 0.6; Kh = 1.084 (formula 11.7.1)
Sm,y,d/fm,y,d + Km*(Sm,z,d/fm,z,d) <= 1
Km*(Sm,y,d/fm,y,d) + Sm,z,d/fm,z,d <= 1
0.1/60.7+0.7*0/60.7=0 <= 1 (formula 4.4.5a) Comb: SLU, 64; Durata minima del carico nella combinazione: permanente
Mx = 8.7; My = 0

---

## Asta 238: Trave in legno a falda Falda 2 fili 19-1

Verifiche condotte secondo D.M. 17-01-18 (N.T.C.)

### Dati generali

Lunghezza = 15.1

### Caratteristiche della sezione

| Descrizione | Tipo | Base | Altezza | Area | Jx | Jy | Wx | Wy |
|---|---|---|---|---|---|---|---|---|
| R 8x10 | Rettangolare | 8 | 10 | 80 | 666.67 | 426.67 | 133.33 | 106.67 |

Materiale: C14 EN 338:2016
Rapporto luce/freccia elastica limite = 300
Rapporto luce/freccia elastica differita = 200
Mensola Y: Nessuno; Mensola X: Nessuno
Classe di servizio 1

### Verifica pressoflessione D.M. 17-01-18 §4.4.8.1.8

Sezione ad ascissa 0
Coefficiente parziale di sicurezza del materiale γ = 1.5
Kmod = 0.8; Kh = 1.084 (formula 11.7.1)
(Sc,0,d/fc,0,d)^2 + Sm,y,d/fm,y,d + Km*(Sm,z,d/fm,z,d) <= 1

(Sc,0,d/fc,0,d)^2 + Km*(Sm,y,d/fm,y,d) + Sm,z,d/fm,z,d <= 1
(10.2/85.3)^2+13.2/81+0.7*10.8/80.97=0.27 <= 1 [4.4.7a] Comb: SLU, 80; Durata minima del carico nella combinazione: media
Mx = 1755.9; My = -1147.7; N = -813.6

**Verifica taglio D.M. 17-01-18 §4.4.8.1.9**

Sezione ad ascissa 15.1
Coefficiente parziale di sicurezza del materiale γ = 1.5
Kmod = 0.8; kcr = 0.67
τ,d <= fv,d
Sqrt(1.9^2+0.96^2) = 2.13 <= 16 Comb: SLU, 80; Durata minima del carico nella combinazione: media
Tx = 67.5; Ty = -34.3

**Verifica taglio+torsione D.M. 17-01-18 §4.4.8.1.11**

Sezione ad ascissa 15.1
Coefficiente parziale di sicurezza del materiale γ = 1.5
Kmod = 0.8; Kh = 1.084 (formula 11.7.1); kcr = 0.67
τ,tor,d/(ksh*fv,d) + (τ,y,d/fv,d)^2 + (τ,z,d/fv,d)^2 <= 1
0.13+0.01+0 <= 1 Comb: SLU, 80; Durata minima del carico nella combinazione: media
Tx = 67.5; Ty = -34.3; Mt = -348.3

**Verifica torsione D.M. 17-01-18 §4.4.8.1.10**

Sezione ad ascissa 15.1
Coefficiente parziale di sicurezza del materiale γ = 1.5
Kmod = 0.8
τ,tor,d <= Ksh * fv,d
2.47 <= 19 Comb: SLU, 79; Durata minima del carico nella combinazione: media
Mt = -350.2

**Verifica della freccia istantanea totale D.M. 17-01-18 §C4.4.7 Circolare 7 21-01-19**

Sezione ad ascissa 7.6
Kdef = 0
Uinst tot in x = 0
Uinst tot in y = 0
Uinst tot = 0
Luce/Uinst,tot > limite
15.1/0=18180.7 > 300 Comb: SLE rara, 17

**Verifica della freccia istantanea variabile D.M. 17-01-18 §4.4.7**

Sezione ad ascissa 7.6
Kdef = 0
Uinst var in x = 0
Uinst var in y = 0
Uinst var = 0
Luce/Uinst,var > limite
15.1/0=29470.8 > 300 Comb: SLE rara, 17

**Verifica della freccia finale EC5 §4.4.7 - EC5 2.2.3 (3)**

Sezione ad ascissa 7.6
Kdef = 0.6
Ufin in x = 0
Ufin in y = 0
Ufin = 0
Luce/Ufin > limite
15.1/0=14715.7 > 200
Coefficienti combinatori impiegati:
Pesi strutturali = 1,000 + 0,600 = 1,600
Permanenti portati = 1,000 + 0,600 = 1,600
Variabile A = 0,700 + 0,180 = 0,880
Neve = 0,500 + 0,500 = 1,000
Vento = 0,600 + 0,000 = 0,600

---

## Asta 239: Trave in legno a falda Falda 2 fili 24-2

Verifiche condotte secondo D.M. 17-01-18 (N.T.C.)

**Dati generali**

Lunghezza = 92.5

**Caratteristiche della sezione**

| Descrizione | Tipo | Base | Altezza | Area | Jx | Jy | Wx | Wy |
|---|---|---|---|---|---|---|---|---|
| R 8x10 | Rettangolare | 8 | 10 | 80 | 666.67 | 426.67 | 133.33 | 106.67 |

Materiale: C14 EN 338:2016

Rapporto luce/freccia elastica limite = 300
Rapporto luce/freccia elastica differita = 200
Mensola Y: Nessuno; Mensola X: Nessuno
Classe di servizio 1

**Verifica taglio D.M. 17-01-18 §4.4.8.1.9**

Sezione ad ascissa 92.5
Coefficiente parziale di sicurezza del materiale γ = 1.5
Kmod = 0.8; kcr = 0.67
τ,d <= fv,d
Sqrt(1.07^2+5.77^2) = 5.87 <= 16 Comb: SLU, 72; Durata minima del carico nella combinazione: media
Tx = 37.9; Ty = -205.2

**Verifica pressoflessione D.M. 17-01-18 §4.4.8.1.8**

Sezione ad ascissa 92.5
Coefficiente parziale di sicurezza del materiale γ = 1.5
Kmod = 0.8; Kh = 1.084 (formula 11.7.1)
(Sc,0,d/fc,0,d)^2 + Sm,y,d/fm,y,d + Km*(Sm,z,d/fm,z,d) <= 1
(Sc,0,d/fc,0,d)^2 + Km*(Sm,y,d/fm,y,d) + Sm,z,d/fm,z,d <= 1
(4.2/85.3)^2+78.5/81+0.7*18/80.97=1.13 !> 1 [4.4.7a] Comb: SLU, 72; Durata minima del carico nella combinazione: media - NON SODDISFATTA
Mx = 10473; My = 1914.8; N = -339.4

**Verifica taglio+torsione D.M. 17-01-18 §4.4.8.1.11**

Sezione ad ascissa 92.5
Coefficiente parziale di sicurezza del materiale γ = 1.5
Kmod = 0.8; Kh = 1.084 (formula 11.7.1); kcr = 0.67
τ,tor,d/(ksh*fv,d) + (τ,y,d/fv,d)^2 + (τ,z,d/fv,d)^2 <= 1
0.09+0+0.13 <= 1 Comb: SLU, 72; Durata minima del carico nella combinazione: media
Tx = 37.9; Ty = -205.2; Mt = -246.1

**Verifica torsione D.M. 17-01-18 §4.4.8.1.10**

Sezione ad ascissa 92.5
Coefficiente parziale di sicurezza del materiale γ = 1.5
Kmod = 0.8
τ,tor,d <= Ksh * fv,d
1.8 <= 19 Comb: SLU, 71; Durata minima del carico nella combinazione: media
Mt = -255

---

## Asta 240: Trave in legno a falda Falda 2 fili 28-3

Verifiche condotte secondo D.M. 17-01-18 (N.T.C.)

**Dati generali**

Lunghezza = 169.7

**Caratteristiche della sezione**

| Descrizione | Tipo | Base | Altezza | Area | Jx | Jy | Wx | Wy |
|---|---|---|---|---|---|---|---|---|
| R 8x10 | Rettangolare | 8 | 10 | 80 | 666.67 | 426.67 | 133.33 | 106.67 |

Materiale: C14 EN 338:2016
Rapporto luce/freccia elastica limite = 300
Rapporto luce/freccia elastica differita = 200
Mensola Y: Nessuno; Mensola X: Nessuno
Classe di servizio 1

**Verifica taglio D.M. 17-01-18 §4.4.8.1.9**

Sezione ad ascissa 169.7
Coefficiente parziale di sicurezza del materiale γ = 1.5
Kmod = 0.8; kcr = 0.67
τ,d <= fv,d
Sqrt(0.04^2+2.38^2) = 2.38 <= 16 Comb: SLU, 72; Durata minima del carico nella combinazione: media
Tx = -1.6; Ty = -84.4

**Verifica pressoflessione D.M. 17-01-18 §4.4.8.1.8**

Sezione ad ascissa 169.7
Coefficiente parziale di sicurezza del materiale γ = 1.5
Kmod = 0.8; Kh = 1.084 (formula 11.7.1)
(Sc,0,d/fc,0,d)^2 + Sm,y,d/fm,y,d + Km*(Sm,z,d/fm,z,d) <= 1
(Sc,0,d/fc,0,d)^2 + Km*(Sm,y,d/fm,y,d) + Sm,z,d/fm,z,d <= 1
(1.9/85.3)^2+65.5/81+0.7*0.6/80.97=0.81 <= 1 [4.4.7a] Comb: SLU, 72; Durata minima del carico nella combinazione: media
Mx = 8731.7; My = -65.8; N = -152

**Verifica taglio+torsione D.M. 17-01-18 §4.4.8.1.11**

Sezione ad ascissa 169.7
Coefficiente parziale di sicurezza del materiale γ = 1.5
Kmod = 0.8; Kh = 1.084 (formula 11.7.1); kcr = 0.67
τ,tor,d/(ksh*fv,d) + (τ,y,d/fv,d)^2 + (τ,z,d/fv,d)^2 <= 1
0.01+0+0.02 <= 1 Comb: SLU, 71; Durata minima del carico nella combinazione: media
Tx = -3.6; Ty = -79.5; Mt = -40.2

**Verifica torsione D.M. 17-01-18 §4.4.8.1.10**

Sezione ad ascissa 169.7
Coefficiente parziale di sicurezza del materiale γ = 1.5
Kmod = 1.1
τ,tor,d <= Ksh * fv,d
0.51 <= 26.13 Comb: SLV, 4; Durata minima del carico nella combinazione: istantaneo
Mt = -72.4

---

## Asta 241: Trave in legno a falda Falda 2 fili 33-4

Verifiche condotte secondo D.M. 17-01-18 (N.T.C.)

**Dati generali**

Lunghezza = 246.1

**Caratteristiche della sezione**

| Descrizione | Tipo | Base | Altezza | Area | Jx | Jy | Wx | Wy |
|---|---|---|---|---|---|---|---|---|
| R 8x10 | Rettangolare | 8 | 10 | 80 | 666.67 | 426.67 | 133.33 | 106.67 |

Materiale: C14 EN 338:2016
Rapporto luce/freccia elastica limite = 300
Rapporto luce/freccia elastica differita = 200
Mensola Y: Nessuno; Mensola X: Nessuno
Classe di servizio 1

**Verifica taglio D.M. 17-01-18 §4.4.8.1.9**

Sezione ad ascissa 246.1
Coefficiente parziale di sicurezza del materiale γ = 1.5
Kmod = 0.8; kcr = 0.67
τ,d <= fv,d
Sqrt(0.5^2+1.19^2) = 1.29 <= 16 Comb: SLU, 72; Durata minima del carico nella combinazione: media
Tx = -17.6; Ty = -42.2

**Verifica pressoflessione D.M. 17-01-18 §4.4.8.1.8**

Sezione ad ascissa 246.1
Coefficiente parziale di sicurezza del materiale γ = 1.5
Kmod = 0.8; Kh = 1.084 (formula 11.7.1)
(Sc,0,d/fc,0,d)^2 + Sm,y,d/fm,y,d + Km*(Sm,z,d/fm,z,d) <= 1
(Sc,0,d/fc,0,d)^2 + Km*(Sm,y,d/fm,y,d) + Sm,z,d/fm,z,d <= 1
(2.1/85.3)^2+54.9/81+0.7*18.9/80.97=0.84 <= 1 [4.4.7a] Comb: SLU, 72; Durata minima del carico nella combinazione: media
Mx = 7318.6; My = -2016.6; N = -171

**Verifica taglio+torsione D.M. 17-01-18 §4.4.8.1.11**

Sezione ad ascissa 246.1
Coefficiente parziale di sicurezza del materiale γ = 1.5
Kmod = 0.8; Kh = 1.084 (formula 11.7.1); kcr = 0.67
τ,tor,d/(ksh*fv,d) + (τ,y,d/fv,d)^2 + (τ,z,d/fv,d)^2 <= 1
0.07+0+0.01 <= 1 Comb: SLU, 72; Durata minima del carico nella combinazione: media
Tx = -17.6; Ty = -42.2; Mt = 198.6

**Verifica torsione D.M. 17-01-18 §4.4.8.1.10**

Sezione ad ascissa 246.1
Coefficiente parziale di sicurezza del materiale γ = 1.5
Kmod = 0.8
τ,tor,d <= Ksh * fv,d
1.4 <= 19 Comb: SLU, 72; Durata minima del carico nella combinazione: media
Mt = 198.6

---

## Asta 242: Trave in legno a falda Falda 2 fili 39-5

Verifiche condotte secondo D.M. 17-01-18 (N.T.C.)

Dati generali

Lunghezza = 322.5

Caratteristiche della sezione

| Descrizione | Tipo | Base | Altezza | Area | Jx | Jy | Wx | Wy |
|---|---|---|---|---|---|---|---|---|
| R 8x10 | Rettangolare | 8 | 10 | 80 | 666.67 | 426.67 | 133.33 | 106.67 |

Materiale: C14 EN 338:2016
Rapporto luce/freccia elastica limite = 300
Rapporto luce/freccia elastica differita = 200
Mensola Y: Nessuno; Mensola X: Nessuno
Classe di servizio 1

Verifica taglio D.M. 17-01-18 §4.4.8.1.9

Sezione ad ascissa 322.5
Coefficiente parziale di sicurezza del materiale γ = 1.5
Kmod = 0.8; kcr = 0.67
τ,d <= fv,d
Sqrt(0.74^2+0.68^2) = 1.01 <= 16 Comb: SLU, 72; Durata minima del carico nella combinazione: media
Tx = -26.4; Ty = -24.3

Verifica pressoflessione D.M. 17-01-18 §4.4.8.1.8

Sezione ad ascissa 322.5
Coefficiente parziale di sicurezza del materiale γ = 1.5
Kmod = 0.8; Kh = 1.084 (formula 11.7.1)
(Sc,0,d/fc,0,d)^2 + Sm,y,d/fm,y,d + Km*(Sm,z,d/fm,z,d) <= 1
(Sc,0,d/fc,0,d)^2 + Km*(Sm,y,d/fm,y,d) + Sm,z,d/fm,z,d <= 1
(1.7/85.3)^2+36.6/81+0.7*36.2/80.97=0.77 <= 1 [4.4.7a] Comb: SLU, 72; Durata minima del carico nella combinazione: media
Mx = 4879.9; My = -3860.9; N = -135.1

Verifica taglio+torsione D.M. 17-01-18 §4.4.8.1.11

Sezione ad ascissa 322.5
Coefficiente parziale di sicurezza del materiale γ = 1.5
Kmod = 0.8; Kh = 1.084 (formula 11.7.1); kcr = 0.67
τ,tor,d/(ksh*fv,d) + (τ,y,d/fv,d)^2 + (τ,z,d/fv,d)^2 <= 1
0.11+0+0 <= 1 Comb: SLU, 72; Durata minima del carico nella combinazione: media
Tx = -26.4; Ty = -24.3; Mt = 295.9

Verifica torsione D.M. 17-01-18 §4.4.8.1.10

Sezione ad ascissa 322.5
Coefficiente parziale di sicurezza del materiale γ = 1.5
Kmod = 0.8
τ,tor,d <= Ksh * fv,d
2.09 <= 19 Comb: SLU, 72; Durata minima del carico nella combinazione: media
Mt = 295.9

## Asta 243: Trave in legno a falda Falda 2 fili 45-6

Verifiche condotte secondo D.M. 17-01-18 (N.T.C.)

Dati generali

Lunghezza = 399

Caratteristiche della sezione

| Descrizione | Tipo | Base | Altezza | Area | Jx | Jy | Wx | Wy |
|---|---|---|---|---|---|---|---|---|
| R 8x10 | Rettangolare | 8 | 10 | 80 | 666.67 | 426.67 | 133.33 | 106.67 |

Materiale: C14 EN 338:2016
Rapporto luce/freccia elastica limite = 300
Rapporto luce/freccia elastica differita = 200
Mensola Y: Nessuno; Mensola X: Nessuno
Classe di servizio 1

Verifica flessione D.M. 17-01-18 §4.4.8.1.6

Sezione ad ascissa 0
Coefficiente parziale di sicurezza del materiale γ = 1.5
Kmod = 0.8; Kh = 1.084 (formula 11.7.1)
Sm,y,d/fm,y,d + Km*(Sm,z,d/fm,z,d) <= 1
Km*(Sm,y,d/fm,y,d) + Sm,z,d/fm,z,d <= 1
0.7*7.9/81+37.5/81=0.53 <= 1 (formula 4.4.5b) Comb: SLU, 30; Durata minima del carico nella combinazione: media
Mx = -1049.3; My = 4002.4

Verifica taglio D.M. 17-01-18 §4.4.8.1.9

Sezione ad ascissa 399

Coefficiente parziale di sicurezza del materiale γ = 1.5
Kmod = 0.8; kcr = 0.67
τ,d <= fv,d
Sqrt(0.53^2+0.36^2) = 0.64 <= 16 Comb: SLU, 72; Durata minima del carico nella combinazione: media
Tx = -18.9; Ty = -12.7

**Verifica taglio+torsione D.M. 17-01-18 §4.4.8.1.11**

Sezione ad ascissa 399
Coefficiente parziale di sicurezza del materiale γ = 1.5
Kmod = 0.8; Kh = 1.084 (formula 11.7.1); kcr = 0.67
τ,tor,d/(ksh*fv,d) + (τ,y,d/fv,d)^2 + (τ,z,d/fv,d)^2 <= 1
0.1+0+0 <= 1 Comb: SLU, 80; Durata minima del carico nella combinazione: media
Tx = -18.9; Ty = -12.6; Mt = 268

**Verifica torsione D.M. 17-01-18 §4.4.8.1.10**

Sezione ad ascissa 399
Coefficiente parziale di sicurezza del materiale γ = 1.5
Kmod = 0.8
τ,tor,d <= Ksh * fv,d
1.89 <= 19 Comb: SLU, 80; Durata minima del carico nella combinazione: media
Mt = 268

---

## Asta 244: Trave in legno a falda Falda 2 fili 51-7

Verifiche condotte secondo D.M. 17-01-18 (N.T.C.)

**Dati generali**

Lunghezza = 475.4

**Caratteristiche della sezione**

| Descrizione | Tipo | Base | Altezza | Area | Jx | Jy | Wx | Wy |
|---|---|---|---|---|---|---|---|---|
| R 8x10 | Rettangolare | 8 | 10 | 80 | 666.67 | 426.67 | 133.33 | 106.67 |

Materiale: C14 EN 338:2016
Rapporto luce/freccia elastica limite = 300
Rapporto luce/freccia elastica differita = 200
Mensola Y: Nessuno; Mensola X: Nessuno
Classe di servizio 1

**Verifica tensoflessione D.M. 17-01-18 §4.4.8.1.7**

Sezione ad ascissa 475.4
Coefficiente parziale di sicurezza del materiale γ = 1.5
Kmod = 1.1; Kh = 1.084 (formula 11.7.1)
St,0,d/ft,0,d + Sm,y,d/fm,y,d + Km*(Sm,z,d/fm,z,d) <= 1
St,0,d/ft,0,d + Km*(Sm,y,d/fm,y,d) + Sm,z,d/fm,z,d <= 1
1.4/57.3+27.1/111.3+0.7*15.1/111.3=0.36 <= 1 [4.4.6a] Comb: SLV, 4; Durata minima del carico nella combinazione: istantaneo
Mx = -3610.7; My = -1610; N = 112.1

**Verifica taglio D.M. 17-01-18 §4.4.8.1.9**

Sezione ad ascissa 0
Coefficiente parziale di sicurezza del materiale γ = 1.5
Kmod = 1.1; kcr = 0.67
τ,d <= fv,d
Sqrt(0.13^2+0.55^2) = 0.56 <= 22 Comb: SLV, 2; Durata minima del carico nella combinazione: istantaneo
Tx = -4.6; Ty = 19.4

**Verifica taglio+torsione D.M. 17-01-18 §4.4.8.1.11**

Sezione ad ascissa 0
Coefficiente parziale di sicurezza del materiale γ = 1.5
Kmod = 0.8; Kh = 1.084 (formula 11.7.1); kcr = 0.67
τ,tor,d/(ksh*fv,d) + (τ,y,d/fv,d)^2 + (τ,z,d/fv,d)^2 <= 1
0.05+0+0 <= 1 Comb: SLU, 79; Durata minima del carico nella combinazione: media
Tx = -5.6; Ty = 12.3; Mt = 131.1

**Verifica torsione D.M. 17-01-18 §4.4.8.1.10**

Sezione ad ascissa 475.4
Coefficiente parziale di sicurezza del materiale γ = 1.5
Kmod = 0.8
τ,tor,d <= Ksh * fv,d
0.93 <= 19 Comb: SLU, 79; Durata minima del carico nella combinazione: media
Mt = 131.1

---

## Asta 245: Trave in legno a falda Falda 6 fili 238-239

Verifiche condotte secondo D.M. 17-01-18 (N.T.C.)

### Dati generali

Lunghezza = 303.6

### Caratteristiche della sezione

| Descrizione | Tipo | Base | Altezza | Area | Jx | Jy | Wx | Wy |
|---|---|---|---|---|---|---|---|---|
| R 8x10 | Rettangolare | 8 | 10 | 80 | 666.67 | 426.67 | 133.33 | 106.67 |

Materiale: C14 EN 338:2016
Rapporto luce/freccia elastica limite = 300
Rapporto luce/freccia elastica differita = 200
Mensola Y: Nessuno; Mensola X: Nessuno
Classe di servizio 1

### Verifica tensoflessione D.M. 17-01-18 §4.4.8.1.7

Sezione ad ascissa 303.6
Coefficiente parziale di sicurezza del materiale γ = 1.5
Kmod = 0.8; Kh = 1.084 (formula 11.7.1)
St,0,d/ft,0,d + Sm,y,d/fm,y,d + Km*(Sm,z,d/fm,z,d) !> 1
St,0,d/ft,0,d + Km*(Sm,y,d/fm,y,d) + Sm,z,d/fm,z,d !> 1
20.8/41.6+170.6/81+0.7*21.3/81=2.79 !> 1 [4.4.6a] Comb: SLU, 80; Durata minima del carico nella combinazione: media - NON SODDISFATTA
Mx = -22747.6; My = -2276.7; N = 1663.3

### Verifica taglio D.M. 17-01-18 §4.4.8.1.9

Sezione ad ascissa 0
Coefficiente parziale di sicurezza del materiale γ = 1.5
Kmod = 0.8; kcr = 0.67
τ,d <= fv,d
Sqrt(0.55^2+3.55^2) = 3.59 <= 16 Comb: SLU, 71; Durata minima del carico nella combinazione: media
Tx = -19.4; Ty = 126.2

### Verifica taglio+torsione D.M. 17-01-18 §4.4.8.1.11

Sezione ad ascissa 0
Coefficiente parziale di sicurezza del materiale γ = 1.5
Kmod = 0.8; Kh = 1.084 (formula 11.7.1); kcr = 0.67
τ,tor,d/(ksh*fv,d) + (τ,y,d/fv,d)^2 + (τ,z,d/fv,d)^2 <= 1
0.03+0+0.05 <= 1 Comb: SLU, 71; Durata minima del carico nella combinazione: media
Tx = -19.4; Ty = 126.2; Mt = 73.5

### Verifica torsione D.M. 17-01-18 §4.4.8.1.10

Sezione ad ascissa 303.6
Coefficiente parziale di sicurezza del materiale γ = 1.5
Kmod = 0.8
τ,tor,d <= Ksh * fv,d
0.54 <= 19 Comb: SLU, 37; Durata minima del carico nella combinazione: media
Mt = 76.5

---

## Asta 246: Trave in legno a falda Falda 6 fili 276-279

Verifiche condotte secondo D.M. 17-01-18 (N.T.C.)

### Dati generali

Lunghezza = 17.5

### Caratteristiche della sezione

| Descrizione | Tipo | Base | Altezza | Area | Jx | Jy | Wx | Wy |
|---|---|---|---|---|---|---|---|---|
| R 8x10 | Rettangolare | 8 | 10 | 80 | 666.67 | 426.67 | 133.33 | 106.67 |

Materiale: C14 EN 338:2016
Rapporto luce/freccia elastica limite = 300
Rapporto luce/freccia elastica differita = 200
Mensola Y: Nessuno; Mensola X: Nessuno
Classe di servizio 1

### Verifica trazione parallela alla fibratura D.M. 17-01-18 §4.4.8.1.1

Sezione ad ascissa 0.6
Coefficiente parziale di sicurezza del materiale γ = 1.5
Kmod = 1.1; Kh = 1.084 (formula 11.7.1)
St,0,d <= ft,0,d
0.02 <= 57.26 Comb: SLV, 10; Durata minima del carico nella combinazione: istantaneo
N = 2

**Verifica flessione D.M. 17-01-18 §4.4.8.1.6**

Sezione ad ascissa 17.5
Coefficiente parziale di sicurezza del materiale γ = 1.5
Kmod = 0.6; Kh = 1.084 (formula 11.7.1)
Sm,y,d/fm,y,d + Km*(Sm,z,d/fm,z,d) <= 1
Km*(Sm,y,d/fm,y,d) + Sm,z,d/fm,z,d <= 1
0/60.7+0.7*0/60.7=0 <= 1 (formula 4.4.5a) Comb: SLU, 64; Durata minima del carico nella combinazione: permanente
Mx = 5; My = 0

**Verifica della freccia istantanea totale D.M. 17-01-18 §C4.4.7 Circolare 7 21-01-19**

Sezione ad ascissa 7.6
Kdef = 0
Uinst tot in x = 0
Uinst tot in y = 0
Uinst tot = 0
Luce/Uinst,tot > limite
17.5/0=7351870.6 > 300 Comb: SLE rara, 9

**Verifica della freccia istantanea variabile D.M. 17-01-18 §4.4.7**

Sezione ad ascissa 3.5
Kdef = 0
Uinst var in x = 0
Uinst var in y = 0
Uinst var = 0
Luce/Uinst,var > limite
17.5/0=3523358751.8 > 300 Comb: SLE rara, 17

**Verifica della freccia finale EC5 §4.4.7 - EC5 2.2.3 (3)**

Sezione ad ascissa 7.6
Kdef = 0.6
Ufin in x = 0
Ufin in y = 0
Ufin = 0
Luce/Ufin > limite
17.5/0=4597508.3 > 200
Coefficienti combinatori impiegati:
Pesi strutturali = 1,000 + 0,600 = 1,600
Permanenti portati = 1,000 + 0,600 = 1,600
Neve = 0,500 + 0,500 = 1,000
Vento = 0,600 + 0,000 = 0,600

---

## Asta 247: Trave in legno a falda Falda 6 fili 272-273

Verifiche condotte secondo D.M. 17-01-18 (N.T.C.)

**Dati generali**

Lunghezza = 96.3

**Caratteristiche della sezione**

| Descrizione | Tipo | Base | Altezza | Area | Jx | Jy | Wx | Wy |
|---|---|---|---|---|---|---|---|---|
| R 8x10 | Rettangolare | 8 | 10 | 80 | 666.67 | 426.67 | 133.33 | 106.67 |

Materiale: C14 EN 338:2016
Rapporto luce/freccia elastica limite = 300
Rapporto luce/freccia elastica differita = 200
Mensola Y: Nessuno; Mensola X: Nessuno
Classe di servizio 1

**Verifica taglio D.M. 17-01-18 §4.4.8.1.9**

Sezione ad ascissa 96.3
Coefficiente parziale di sicurezza del materiale γ = 1.5
Kmod = 0.8; kcr = 0.67
τ,d <= fv,d
Sqrt(2.15^2+7.98^2) = 8.27 <= 16 Comb: SLU, 80; Durata minima del carico nella combinazione: media
Tx = -76.3; Ty = -283.9

**Verifica pressoflessione D.M. 17-01-18 §4.4.8.1.8**

Sezione ad ascissa 0
Coefficiente parziale di sicurezza del materiale γ = 1.5
Kmod = 0.8; Kh = 1.084 (formula 11.7.1)
(Sc,0,d/fc,0,d)^2 + Sm,y,d/fm,y,d + Km*(Sm,z,d/fm,z,d) <= 1
(Sc,0,d/fc,0,d)^2 + Km*(Sm,y,d/fm,y,d) + Sm,z,d/fm,z,d <= 1

(4.7/85.3)^2+126.8/81+0.7*34.2/80.97=1.86 !> 1 [4.4.7a] Comb: SLU, 80; Durata minima del carico nella combinazione: media - NON SODDISFATTA
Mx = -16900.3; My = 3646.1; N = -375.9

**Verifica taglio+torsione D.M. 17-01-18 §4.4.8.1.11**

Sezione ad ascissa 96.3
Coefficiente parziale di sicurezza del materiale γ = 1.5
Kmod = 0.8; Kh = 1.084 (formula 11.7.1); kcr = 0.67
τ,tor,d/(ksh*fv,d) + (τ,y,d/fv,d)^2 + (τ,z,d/fv,d)^2 <= 1
0.21+0.02+0.25 <= 1 Comb: SLU, 80; Durata minima del carico nella combinazione: media
Tx = -76.3; Ty = -283.9; Mt = 559.3

**Verifica torsione D.M. 17-01-18 §4.4.8.1.10**

Sezione ad ascissa 96.3
Coefficiente parziale di sicurezza del materiale γ = 1.5
Kmod = 0.8
τ,tor,d <= Ksh * fv,d
3.95 <= 19 Comb: SLU, 72; Durata minima del carico nella combinazione: media
Mt = 559.7

## Asta 248: Trave in legno a falda Falda 6 fili 268-269

Verifiche condotte secondo D.M. 17-01-18 (N.T.C.)

**Dati generali**

Lunghezza = 175.1

**Caratteristiche della sezione**

| Descrizione | Tipo | Base | Altezza | Area | Jx | Jy | Wx | Wy |
|---|---|---|---|---|---|---|---|---|
| R 8x10 | Rettangolare | 8 | 10 | 80 | 666.67 | 426.67 | 133.33 | 106.67 |

Materiale: C14 EN 338:2016
Rapporto luce/freccia elastica limite = 300
Rapporto luce/freccia elastica differita = 200
Mensola Y: Nessuno; Mensola X: Nessuno
Classe di servizio 1

**Verifica taglio D.M. 17-01-18 §4.4.8.1.9**

Sezione ad ascissa 175.1
Coefficiente parziale di sicurezza del materiale γ = 1.5
Kmod = 0.8; kcr = 0.67
τ,d <= fv,d
Sqrt(0.86^2+3.88^2) = 3.97 <= 16 Comb: SLU, 80; Durata minima del carico nella combinazione: media
Tx = -30.5; Ty = -138

**Verifica pressoflessione D.M. 17-01-18 §4.4.8.1.8**

Sezione ad ascissa 0
Coefficiente parziale di sicurezza del materiale γ = 1.5
Kmod = 0.8; Kh = 1.084 (formula 11.7.1)
(Sc,0,d/fc,0,d)^2 + Sm,y,d/fm,y,d + Km*(Sm,z,d/fm,z,d) <= 1
(Sc,0,d/fc,0,d)^2 + Km*(Sm,y,d/fm,y,d) + Sm,z,d/fm,z,d <= 1
(1.7/85.3)^2+117.9/81+0.7*25.9/80.97=1.68 !> 1 [4.4.7a] Comb: SLU, 80; Durata minima del carico nella combinazione: media - NON SODDISFATTA
Mx = -15714.7; My = 2757.7; N = -135.1

**Verifica taglio+torsione D.M. 17-01-18 §4.4.8.1.11**

Sezione ad ascissa 175.1
Coefficiente parziale di sicurezza del materiale γ = 1.5
Kmod = 0.8; Kh = 1.084 (formula 11.7.1); kcr = 0.67
τ,tor,d/(ksh*fv,d) + (τ,y,d/fv,d)^2 + (τ,z,d/fv,d)^2 <= 1
0.14+0+0.06 <= 1 Comb: SLU, 80; Durata minima del carico nella combinazione: media
Tx = -30.5; Ty = -138; Mt = 368

**Verifica torsione D.M. 17-01-18 §4.4.8.1.10**

Sezione ad ascissa 175.1
Coefficiente parziale di sicurezza del materiale γ = 1.5
Kmod = 0.8
τ,tor,d <= Ksh * fv,d
2.6 <= 19 Comb: SLU, 72; Durata minima del carico nella combinazione: media
Mt = 368.1

## Asta 249: Trave in legno a falda Falda 6 fili 263-264

Verifiche condotte secondo D.M. 17-01-18 (N.T.C.)

Dati generali

Lunghezza = 253.8

Caratteristiche della sezione

| Descrizione | Tipo | Base | Altezza | Area | Jx | Jy | Wx | Wy |
|---|---|---|---|---|---|---|---|---|
| R 8x10 | Rettangolare | 8 | 10 | 80 | 666.67 | 426.67 | 133.33 | 106.67 |

Materiale: C14 EN 338:2016
Rapporto luce/freccia elastica limite = 300
Rapporto luce/freccia elastica differita = 200
Mensola Y: Nessuno; Mensola X: Nessuno
Classe di servizio 1

Verifica flessione D.M. 17-01-18 §4.4.8.1.6

Sezione ad ascissa 0
Coefficiente parziale di sicurezza del materiale γ = 1.5
Kmod = 0.8; Kh = 1.084 (formula 11.7.1)
Sm,y,d/fm,y,d + Km*(Sm,z,d/fm,z,d) !> 1
Km*(Sm,y,d/fm,y,d) + Sm,z,d/fm,z,d !> 1
115.4/81+0.7*17.7/81=1.58 !> 1 (formula 4.4.5a) Comb: SLU, 79; Durata minima del carico nella combinazione: media - NON SODDISFATTA
Mx = -15386; My = 1883.2

Verifica taglio D.M. 17-01-18 §4.4.8.1.9

Sezione ad ascissa 253.8
Coefficiente parziale di sicurezza del materiale γ = 1.5
Kmod = 0.8; kcr = 0.67
τ,d <= fv,d
Sqrt(0.39^2+2.41^2) = 2.44 <= 16 Comb: SLU, 80; Durata minima del carico nella combinazione: media
Tx = -13.9; Ty = -85.8

Verifica taglio+torsione D.M. 17-01-18 §4.4.8.1.11

Sezione ad ascissa 253.8
Coefficiente parziale di sicurezza del materiale γ = 1.5
Kmod = 0.8; Kh = 1.084 (formula 11.7.1); kcr = 0.67
τ,tor,d/(ksh*fv,d) + (τ,y,d/fv,d)^2 + (τ,z,d/fv,d)^2 <= 1
0.07+0+0.02 <= 1 Comb: SLU, 71; Durata minima del carico nella combinazione: media
Tx = -14.2; Ty = -85.4; Mt = 194.4

Verifica torsione D.M. 17-01-18 §4.4.8.1.10

Sezione ad ascissa 253.8
Coefficiente parziale di sicurezza del materiale γ = 1.5
Kmod = 0.8
τ,tor,d <= Ksh * fv,d
1.37 <= 19 Comb: SLU, 71; Durata minima del carico nella combinazione: media
Mt = 194.4

## Asta 250: Trave in legno a falda Falda 6 fili 257-258

Verifiche condotte secondo D.M. 17-01-18 (N.T.C.)

Dati generali

Lunghezza = 88.7

Caratteristiche della sezione

| Descrizione | Tipo | Base | Altezza | Area | Jx | Jy | Wx | Wy |
|---|---|---|---|---|---|---|---|---|
| R 8x10 | Rettangolare | 8 | 10 | 80 | 666.67 | 426.67 | 133.33 | 106.67 |

Materiale: C14 EN 338:2016
Rapporto luce/freccia elastica limite = 300
Rapporto luce/freccia elastica differita = 200
Mensola Y: Nessuno; Mensola X: Nessuno
Classe di servizio 1

Verifica taglio D.M. 17-01-18 §4.4.8.1.9

Sezione ad ascissa 0
Coefficiente parziale di sicurezza del materiale γ = 1.5
Kmod = 0.8; kcr = 0.67
τ,d <= fv,d
Sqrt(0.27^2+6.25^2) = 6.26 <= 16 Comb: SLU, 71; Durata minima del carico nella combinazione: media
Tx = 9.7; Ty = 222.4

Verifica pressoflessione D.M. 17-01-18 §4.4.8.1.8

Sezione ad ascissa 88.7
Coefficiente parziale di sicurezza del materiale γ = 1.5

Kmod = 0.8; Kh = 1.084 (formula 11.7.1)
(Sc,0,d/fc,0,d)^2 + Sm,y,d/fm,y,d + Km*(Sm,z,d/fm,z,d) <= 1
(Sc,0,d/fc,0,d)^2 + Km*(Sm,y,d/fm,y,d) + Sm,z,d/fm,z,d <= 1
(3.6/85.3)^2+152.4/81+0.7*2.6/80.97=1.91 !> 1 [4.4.7a] Comb: SLU, 72; Durata minima del carico nella combinazione: media - NON SODDISFATTA
Mx = -20315.4; My = 282.3; N = -286.6

**Verifica taglio+torsione D.M. 17-01-18 §4.4.8.1.11**

Sezione ad ascissa 0
Coefficiente parziale di sicurezza del materiale γ = 1.5
Kmod = 0.8; Kh = 1.084 (formula 11.7.1); kcr = 0.67
τ,tor,d/(ksh*fv,d) + (τ,y,d/fv,d)^2 + (τ,z,d/fv,d)^2 <= 1
0.07+0+0.15 <= 1 Comb: SLU, 71; Durata minima del carico nella combinazione: media
Tx = 9.7; Ty = 222.4; Mt = -198.4

**Verifica torsione D.M. 17-01-18 §4.4.8.1.10**

Sezione ad ascissa 88.7
Coefficiente parziale di sicurezza del materiale γ = 1.5
Kmod = 0.8
τ,tor,d <= Ksh * fv,d
1.4 <= 19 Comb: SLU, 72; Durata minima del carico nella combinazione: media
Mt = -198.8

---

## Asta 251: Trave in legno a falda Falda 6 fili 251-252

Verifiche condotte secondo D.M. 17-01-18 (N.T.C.)

**Dati generali**

Lunghezza = 167.5

**Caratteristiche della sezione**

| Descrizione | Tipo | Base | Altezza | Area | Jx | Jy | Wx | Wy |
|---|---|---|---|---|---|---|---|---|
| R 8x10 | Rettangolare | 8 | 10 | 80 | 666.67 | 426.67 | 133.33 | 106.67 |

Materiale: C14 EN 338:2016
Rapporto luce/freccia elastica limite = 300
Rapporto luce/freccia elastica differita = 200
Mensola Y: Nessuno; Mensola X: Nessuno
Classe di servizio 1

**Verifica taglio D.M. 17-01-18 §4.4.8.1.9**

Sezione ad ascissa 0
Coefficiente parziale di sicurezza del materiale γ = 1.5
Kmod = 0.8; kcr = 0.67
τ,d <= fv,d
Sqrt(0.51^2+4.53^2) = 4.56 <= 16 Comb: SLU, 71; Durata minima del carico nella combinazione: media
Tx = 18.2; Ty = 161.1

**Verifica pressoflessione D.M. 17-01-18 §4.4.8.1.8**

Sezione ad ascissa 167.5
Coefficiente parziale di sicurezza del materiale γ = 1.5
Kmod = 0.8; Kh = 1.084 (formula 11.7.1)
(Sc,0,d/fc,0,d)^2 + Sm,y,d/fm,y,d + Km*(Sm,z,d/fm,z,d) <= 1
(Sc,0,d/fc,0,d)^2 + Km*(Sm,y,d/fm,y,d) + Sm,z,d/fm,z,d <= 1
(5.5/85.3)^2+165/81+0.7*14.1/80.97=2.16 !> 1 [4.4.7a] Comb: SLU, 71; Durata minima del carico nella combinazione: media - NON SODDISFATTA
Mx = -21995.5; My = 1502.7; N = -437.3

**Verifica taglio+torsione D.M. 17-01-18 §4.4.8.1.11**

Sezione ad ascissa 0
Coefficiente parziale di sicurezza del materiale γ = 1.5
Kmod = 0.8; Kh = 1.084 (formula 11.7.1); kcr = 0.67
τ,tor,d/(ksh*fv,d) + (τ,y,d/fv,d)^2 + (τ,z,d/fv,d)^2 <= 1
0.06+0+0.08 <= 1 Comb: SLU, 71; Durata minima del carico nella combinazione: media
Tx = 18.2; Ty = 161.1; Mt = -165.2

**Verifica torsione D.M. 17-01-18 §4.4.8.1.10**

Sezione ad ascissa 167.5
Coefficiente parziale di sicurezza del materiale γ = 1.5
Kmod = 0.8
τ,tor,d <= Ksh * fv,d
1.17 <= 19 Comb: SLU, 72; Durata minima del carico nella combinazione: media
Mt = -165.4

---

## Asta 252: Trave in legno a falda Falda 6 fili 245-246

Verifiche condotte secondo D.M. 17-01-18 (N.T.C.)

### Dati generali

Lunghezza = 246.2

### Caratteristiche della sezione

| Descrizione | Tipo | Base | Altezza | Area | Jx | Jy | Wx | Wy |
|---|---|---|---|---|---|---|---|---|
| R 8x10 | Rettangolare | 8 | 10 | 80 | 666.67 | 426.67 | 133.33 | 106.67 |

Materiale: C14 EN 338:2016
Rapporto luce/freccia elastica limite = 300
Rapporto luce/freccia elastica differita = 200
Mensola Y: Nessuno; Mensola X: Nessuno
Classe di servizio 1

### Verifica tensoflessione D.M. 17-01-18 §4.4.8.1.7

Sezione ad ascissa 246.2
Coefficiente parziale di sicurezza del materiale γ = 1.5
Kmod = 0.8; Kh = 1.084 (formula 11.7.1)
St,0,d/ft,0,d + Sm,y,d/fm,y,d + Km*(Sm,z,d/fm,z,d) !> 1
St,0,d/ft,0,d + Km*(Sm,y,d/fm,y,d) + Sm,z,d/fm,z,d !> 1
8.2/41.6+175/81+0.7*14/81=2.48 !> 1 [4.4.6a] Comb: SLU, 80; Durata minima del carico nella combinazione: media - NON SODDISFATTA
Mx = -23333.8; My = 1494.7; N = 652.8

### Verifica taglio D.M. 17-01-18 §4.4.8.1.9

Sezione ad ascissa 0
Coefficiente parziale di sicurezza del materiale γ = 1.5
Kmod = 0.8; kcr = 0.67
τ,d <= fv,d
Sqrt(0.44^2+4.15^2) = 4.17 <= 16 Comb: SLU, 71; Durata minima del carico nella combinazione: media
Tx = 15.5; Ty = 147.5

### Verifica taglio+torsione D.M. 17-01-18 §4.4.8.1.11

Sezione ad ascissa 0
Coefficiente parziale di sicurezza del materiale γ = 1.5
Kmod = 0.8; Kh = 1.084 (formula 11.7.1); kcr = 0.67
τ,tor,d/(ksh*fv,d) + (τ,y,d/fv,d)^2 + (τ,z,d/fv,d)^2 <= 1
0.03+0+0.07 <= 1 Comb: SLU, 71; Durata minima del carico nella combinazione: media
Tx = 15.5; Ty = 147.5; Mt = -90.2

### Verifica torsione D.M. 17-01-18 §4.4.8.1.10

Sezione ad ascissa 246.2
Coefficiente parziale di sicurezza del materiale γ = 1.5
Kmod = 0.8
τ,tor,d <= Ksh * fv,d
0.64 <= 19 Comb: SLU, 71; Durata minima del carico nella combinazione: media
Mt = -90.2

---

## Asta 253: Trave in legno a falda Falda 5 fili 241-287

Verifiche condotte secondo D.M. 17-01-18 (N.T.C.)

### Dati generali

Lunghezza = 523.2

### Caratteristiche della sezione

| Descrizione | Tipo | Base | Altezza | Area | Jx | Jy | Wx | Wy |
|---|---|---|---|---|---|---|---|---|
| R 8x10 | Rettangolare | 8 | 10 | 80 | 666.67 | 426.67 | 133.33 | 106.67 |

Materiale: C14 EN 338:2016
Rapporto luce/freccia elastica limite = 300
Rapporto luce/freccia elastica differita = 200
Mensola Y: Nessuno; Mensola X: Nessuno
Classe di servizio 1

### Verifica taglio D.M. 17-01-18 §4.4.8.1.9

Sezione ad ascissa 523.1
Coefficiente parziale di sicurezza del materiale γ = 1.5
Kmod = 0.8; kcr = 0.67
τ,d <= fv,d
Sqrt(0.12^2+0.56^2) = 0.57 <= 16 Comb: SLU, 72; Durata minima del carico nella combinazione: media
Tx = -4.4; Ty = -19.8

**Verifica pressoflessione D.M. 17-01-18 §4.4.8.1.8**

Sezione ad ascissa 0
Coefficiente parziale di sicurezza del materiale γ = 1.5
Kmod = 0.8; Kh = 1.084 (formula 11.7.1)
(Sc,0,d/fc,0,d)^2 + Sm,y,d/fm,y,d + Km*(Sm,z,d/fm,z,d) <= 1
(Sc,0,d/fc,0,d)^2 + Km*(Sm,y,d/fm,y,d) + Sm,z,d/fm,z,d <= 1
(8/85.3)^2+25.2/81+0.7*10.9/80.97=0.41 <= 1 [4.4.7a] Comb: SLU, 38; Durata minima del carico nella combinazione: media
Mx = -3360.8; My = 1159; N = -640.1

**Verifica taglio+torsione D.M. 17-01-18 §4.4.8.1.11**

Sezione ad ascissa 523.1
Coefficiente parziale di sicurezza del materiale γ = 1.5
Kmod = 0.8; Kh = 1.084 (formula 11.7.1); kcr = 0.67
τ,tor,d/(ksh*fv,d) + (τ,y,d/fv,d)^2 + (τ,z,d/fv,d)^2 <= 1
0.03+0+0 <= 1 Comb: SLU, 72; Durata minima del carico nella combinazione: media
Tx = -4.4; Ty = -19.8; Mt = 73.5

**Verifica torsione D.M. 17-01-18 §4.4.8.1.10**

Sezione ad ascissa 523.1
Coefficiente parziale di sicurezza del materiale γ = 1.5
Kmod = 0.8
τ,tor,d <= Ksh * fv,d
0.52 <= 19 Comb: SLU, 72; Durata minima del carico nella combinazione: media
Mt = 73.5

---

## Asta 254: Trave in legno a falda Falda 5 fili 241-287

Verifiche condotte secondo D.M. 17-01-18 (N.T.C.)

**Dati generali**

Lunghezza = 23.2

**Caratteristiche della sezione**

| Descrizione | Tipo | Base | Altezza | Area | Jx | Jy | Wx | Wy |
|---|---|---|---|---|---|---|---|---|
| R 8x10 | Rettangolare | 8 | 10 | 80 | 666.67 | 426.67 | 133.33 | 106.67 |

Materiale: C14 EN 338:2016
Rapporto luce/freccia elastica limite = 300
Rapporto luce/freccia elastica differita = 200
Mensola Y: Nessuno; Mensola X: Nessuno
Classe di servizio 1

**Verifica trazione parallela alla fibratura D.M. 17-01-18 §4.4.8.1.1**

Sezione ad ascissa 9.3
Coefficiente parziale di sicurezza del materiale γ = 1.5
Kmod = 1.1; Kh = 1.084 (formula 11.7.1)
St,0,d <= ft,0,d
0.01 <= 57.26 Comb: SLV, 14; Durata minima del carico nella combinazione: istantaneo
N = 1

**Verifica flessione D.M. 17-01-18 §4.4.8.1.6**

Sezione ad ascissa 0
Coefficiente parziale di sicurezza del materiale γ = 1.5
Kmod = 0.6; Kh = 1.084 (formula 11.7.1)
Sm,y,d/fm,y,d + Km*(Sm,z,d/fm,z,d) <= 1
Km*(Sm,y,d/fm,y,d) + Sm,z,d/fm,z,d <= 1
0.1/60.7+0.7*0/60.7=0 <= 1 (formula 4.4.5a) Comb: SLU, 43; Durata minima del carico nella combinazione: permanente
Mx = 8.7; My = 0

---

## Asta 255: Trave in legno a falda Falda 5 fili 245-288

Verifiche condotte secondo D.M. 17-01-18 (N.T.C.)

**Dati generali**

Lunghezza = 468.6

**Caratteristiche della sezione**

| Descrizione | Tipo | Base | Altezza | Area | Jx | Jy | Wx | Wy |
|---|---|---|---|---|---|---|---|---|
| R 8x10 | Rettangolare | 8 | 10 | 80 | 666.67 | 426.67 | 133.33 | 106.67 |

Materiale: C14 EN 338:2016
Rapporto luce/freccia elastica limite = 300

Rapporto luce/freccia elastica differita = 200
Mensola Y: Nessuno; Mensola X: Nessuno
Classe di servizio 1

**Verifica taglio D.M. 17-01-18 §4.4.8.1.9**

Sezione ad ascissa 468.6
Coefficiente parziale di sicurezza del materiale γ = 1.5
Kmod = 0.8; kcr = 0.67
τ,d <= fv,d
Sqrt(0.54^2+0.62^2) = 0.82 <= 16 Comb: SLU, 79; Durata minima del carico nella combinazione: media
Tx = -19.2; Ty = -22

**Verifica pressoflessione D.M. 17-01-18 §4.4.8.1.8**

Sezione ad ascissa 0
Coefficiente parziale di sicurezza del materiale γ = 1.5
Kmod = 0.8; Kh = 1.084 (formula 11.7.1)
(Sc,0,d/fc,0,d)^2 + Sm,y,d/fm,y,d + Km*(Sm,z,d/fm,z,d) <= 1
(Sc,0,d/fc,0,d)^2 + Km*(Sm,y,d/fm,y,d) + Sm,z,d/fm,z,d <= 1
(1.4/85.3)^2+0.7*30.1/81+43/81=0.79 <= 1 [4.4.7b] Comb: SLU, 30; Durata minima del carico nella combinazione: media
Mx = -4010; My = 4582; N = -112.2

**Verifica taglio+torsione D.M. 17-01-18 §4.4.8.1.11**

Sezione ad ascissa 468.6
Coefficiente parziale di sicurezza del materiale γ = 1.5
Kmod = 0.8; Kh = 1.084 (formula 11.7.1); kcr = 0.67
τ,tor,d/(ksh*fv,d) + (τ,y,d/fv,d)^2 + (τ,z,d/fv,d)^2 <= 1
0.08+0+0 <= 1 Comb: SLU, 72; Durata minima del carico nella combinazione: media
Tx = -19.3; Ty = -21.9; Mt = 225.8

**Verifica torsione D.M. 17-01-18 §4.4.8.1.10**

Sezione ad ascissa 468.6
Coefficiente parziale di sicurezza del materiale γ = 1.5
Kmod = 0.8
τ,tor,d <= Ksh * fv,d
1.59 <= 19 Comb: SLU, 72; Durata minima del carico nella combinazione: media
Mt = 225.8

---

## Asta 256: Trave in legno a falda Falda 5 fili 245-288

Verifiche condotte secondo D.M. 17-01-18 (N.T.C.)

**Dati generali**

Lunghezza = 23.2

**Caratteristiche della sezione**

| Descrizione | Tipo | Base | Altezza | Area | Jx | Jy | Wx | Wy |
|---|---|---|---|---|---|---|---|---|
| R 8x10 | Rettangolare | 8 | 10 | 80 | 666.67 | 426.67 | 133.33 | 106.67 |

Materiale: C14 EN 338:2016
Rapporto luce/freccia elastica limite = 300
Rapporto luce/freccia elastica differita = 200
Mensola Y: Nessuno; Mensola X: Nessuno
Classe di servizio 1

**Verifica trazione parallela alla fibratura D.M. 17-01-18 §4.4.8.1.1**

Sezione ad ascissa 10.1
Coefficiente parziale di sicurezza del materiale γ = 1.5
Kmod = 1.1; Kh = 1.084 (formula 11.7.1)
St,0,d <= ft,0,d
0.01 <= 57.26 Comb: SLV, 16; Durata minima del carico nella combinazione: istantaneo
N = 0.9

**Verifica flessione D.M. 17-01-18 §4.4.8.1.6**

Sezione ad ascissa 0
Coefficiente parziale di sicurezza del materiale γ = 1.5
Kmod = 0.6; Kh = 1.084 (formula 11.7.1)
Sm,y,d/fm,y,d + Km*(Sm,z,d/fm,z,d) <= 1
Km*(Sm,y,d/fm,y,d) + Sm,z,d/fm,z,d <= 1
0.1/60.7+0.7*0/60.7=0 <= 1 (formula 4.4.5a) Comb: SLU, 64; Durata minima del carico nella combinazione: permanente
Mx = 8.7; My = 0

---

## Asta 257: Trave in legno a falda Falda 5 fili 251-289

Verifiche condotte secondo D.M. 17-01-18 (N.T.C.)

### Dati generali

Lunghezza = 392.4

### Caratteristiche della sezione

| Descrizione | Tipo | Base | Altezza | Area | Jx | Jy | Wx | Wy |
|---|---|---|---|---|---|---|---|---|
| R 8x10 | Rettangolare | 8 | 10 | 80 | 666.67 | 426.67 | 133.33 | 106.67 |

Materiale: C14 EN 338:2016
Rapporto luce/freccia elastica limite = 300
Rapporto luce/freccia elastica differita = 200
Mensola Y: Nessuno; Mensola X: Nessuno
Classe di servizio 1

### Verifica taglio D.M. 17-01-18 §4.4.8.1.9

Sezione ad ascissa 392.4
Coefficiente parziale di sicurezza del materiale γ = 1.5
Kmod = 0.8; kcr = 0.67
τ,d <= fv,d
Sqrt(0.97^2+1.04^2) = 1.42 <= 16 Comb: SLU, 71; Durata minima del carico nella combinazione: media
Tx = -34.4; Ty = -37.1

### Verifica pressoflessione D.M. 17-01-18 §4.4.8.1.8

Sezione ad ascissa 0
Coefficiente parziale di sicurezza del materiale γ = 1.5
Kmod = 0.8; Kh = 1.084 (formula 11.7.1)
(Sc,0,d/fc,0,d)^2 + Sm,y,d/fm,y,d + Km*(Sm,z,d/fm,z,d) <= 1
(Sc,0,d/fc,0,d)^2 + Km*(Sm,y,d/fm,y,d) + Sm,z,d/fm,z,d <= 1
(0.9/85.3)^2+0.7*48.6/81+67/81=1.25 !> 1 [4.4.7b] Comb: SLU, 72; Durata minima del carico nella combinazione: media - NON SODDISFATTA
Mx = -6480.8; My = 7147.5; N = -70.7

### Verifica taglio+torsione D.M. 17-01-18 §4.4.8.1.11

Sezione ad ascissa 392.4
Coefficiente parziale di sicurezza del materiale γ = 1.5
Kmod = 0.8; Kh = 1.084 (formula 11.7.1); kcr = 0.67
τ,tor,d/(ksh*fv,d) + (τ,y,d/fv,d)^2 + (τ,z,d/fv,d)^2 <= 1
0.11+0+0 <= 1 Comb: SLU, 72; Durata minima del carico nella combinazione: media
Tx = -34.4; Ty = -36.9; Mt = 286.6

### Verifica torsione D.M. 17-01-18 §4.4.8.1.10

Sezione ad ascissa 392.4
Coefficiente parziale di sicurezza del materiale γ = 1.5
Kmod = 0.8
τ,tor,d <= Ksh * fv,d
2.02 <= 19 Comb: SLU, 72; Durata minima del carico nella combinazione: media
Mt = 286.6

---

## Asta 258: Trave in legno a falda Falda 5 fili 251-289

Verifiche condotte secondo D.M. 17-01-18 (N.T.C.)

### Dati generali

Lunghezza = 23.2

### Caratteristiche della sezione

| Descrizione | Tipo | Base | Altezza | Area | Jx | Jy | Wx | Wy |
|---|---|---|---|---|---|---|---|---|
| R 8x10 | Rettangolare | 8 | 10 | 80 | 666.67 | 426.67 | 133.33 | 106.67 |

Materiale: C14 EN 338:2016
Rapporto luce/freccia elastica limite = 300
Rapporto luce/freccia elastica differita = 200
Mensola Y: Nessuno; Mensola X: Nessuno
Classe di servizio 1

### Verifica trazione parallela alla fibratura D.M. 17-01-18 §4.4.8.1.1

Sezione ad ascissa 10.1
Coefficiente parziale di sicurezza del materiale γ = 1.5
Kmod = 1.1; Kh = 1.084 (formula 11.7.1)
St,0,d <= ft,0,d
0.03 <= 57.26 Comb: SLV, 16; Durata minima del carico nella combinazione: istantaneo
N = 2.8

### Verifica flessione D.M. 17-01-18 §4.4.8.1.6

Sezione ad ascissa 0
Coefficiente parziale di sicurezza del materiale γ = 1.5
Kmod = 0.6; Kh = 1.084 (formula 11.7.1)
Sm,y,d/fm,y,d + Km*(Sm,z,d/fm,z,d) <= 1
Km*(Sm,y,d/fm,y,d) + Sm,z,d/fm,z,d <= 1
0.1/60.7+0.7*0/60.7=0 <= 1 (formula 4.4.5a) Comb: SLU, 64; Durata minima del carico nella combinazione: permanente
Mx = 8.7; My = 0

---

## Asta 259: Trave in legno a falda Falda 5 fili 257-290

Verifiche condotte secondo D.M. 17-01-18 (N.T.C.)

### Dati generali

Lunghezza = 316.8

### Caratteristiche della sezione

| Descrizione | Tipo | Base | Altezza | Area | Jx | Jy | Wx | Wy |
|---|---|---|---|---|---|---|---|---|
| R 8x10 | Rettangolare | 8 | 10 | 80 | 666.67 | 426.67 | 133.33 | 106.67 |

Materiale: C14 EN 338:2016
Rapporto luce/freccia elastica limite = 300
Rapporto luce/freccia elastica differita = 200
Mensola Y: Nessuno; Mensola X: Nessuno
Classe di servizio 1

### Verifica taglio D.M. 17-01-18 §4.4.8.1.9

Sezione ad ascissa 316.8
Coefficiente parziale di sicurezza del materiale γ = 1.5
Kmod = 0.8; kcr = 0.67
τ,d <= fv,d
Sqrt(1.21^2+1.81^2) = 2.17 <= 16 Comb: SLU, 71; Durata minima del carico nella combinazione: media
Tx = -43.1; Ty = -64.2

### Verifica pressoflessione D.M. 17-01-18 §4.4.8.1.8

Sezione ad ascissa 0
Coefficiente parziale di sicurezza del materiale γ = 1.5
Kmod = 0.8; Kh = 1.084 (formula 11.7.1)
(Sc,0,d/fc,0,d)^2 + Sm,y,d/fm,y,d + Km*(Sm,z,d/fm,z,d) <= 1
(Sc,0,d/fc,0,d)^2 + Km*(Sm,y,d/fm,y,d) + Sm,z,d/fm,z,d <= 1
(1.9/85.3)^2+72.1/81+0.7*68.6/80.97=1.48 !> 1 [4.4.7a] Comb: SLU, 72; Durata minima del carico nella combinazione: media - NON SODDISFATTA
Mx = -9608.2; My = 7317.8; N = -154

### Verifica taglio+torsione D.M. 17-01-18 §4.4.8.1.11

Sezione ad ascissa 316.8
Coefficiente parziale di sicurezza del materiale γ = 1.5
Kmod = 0.8; Kh = 1.084 (formula 11.7.1); kcr = 0.67
τ,tor,d/(ksh*fv,d) + (τ,y,d/fv,d)^2 + (τ,z,d/fv,d)^2 <= 1
0.08+0.01+0.01 <= 1 Comb: SLU, 71; Durata minima del carico nella combinazione: media
Tx = -43.1; Ty = -64.2; Mt = 225.5

### Verifica torsione D.M. 17-01-18 §4.4.8.1.10

Sezione ad ascissa 316.8
Coefficiente parziale di sicurezza del materiale γ = 1.5
Kmod = 0.8
τ,tor,d <= Ksh * fv,d
1.59 <= 19 Comb: SLU, 71; Durata minima del carico nella combinazione: media
Mt = 225.5

---

## Asta 260: Trave in legno a falda Falda 5 fili 257-290

Verifiche condotte secondo D.M. 17-01-18 (N.T.C.)

### Dati generali

Lunghezza = 23.2

### Caratteristiche della sezione

| Descrizione | Tipo | Base | Altezza | Area | Jx | Jy | Wx | Wy |
|---|---|---|---|---|---|---|---|---|
| R 8x10 | Rettangolare | 8 | 10 | 80 | 666.67 | 426.67 | 133.33 | 106.67 |

Materiale: C14 EN 338:2016
Rapporto luce/freccia elastica limite = 300

Rapporto luce/freccia elastica differita = 200
Mensola Y: Nessuno; Mensola X: Nessuno
Classe di servizio 1

**Verifica trazione parallela alla fibratura D.M. 17-01-18 §4.4.8.1.1**

Sezione ad ascissa 12.4
Coefficiente parziale di sicurezza del materiale γ = 1.5
Kmod = 1.1; Kh = 1.084 (formula 11.7.1)
St,0,d <= ft,0,d
0.04 <= 57.26 Comb: SLV, 16; Durata minima del carico nella combinazione: istantaneo
N = 3.1

**Verifica flessione D.M. 17-01-18 §4.4.8.1.6**

Sezione ad ascissa 0
Coefficiente parziale di sicurezza del materiale γ = 1.5
Kmod = 0.6; Kh = 1.084 (formula 11.7.1)
Sm,y,d/fm,y,d + Km*(Sm,z,d/fm,z,d) <= 1
Km*(Sm,y,d/fm,y,d) + Sm,z,d/fm,z,d <= 1
0.1/60.7+0.7*0/60.7=0 <= 1 (formula 4.4.5a) Comb: SLU, 43; Durata minima del carico nella combinazione: permanente
Mx = 8.7; My = 0

---

## Asta 261: Trave in legno a falda Falda 5 fili 263-291

Verifiche condotte secondo D.M. 17-01-18 (N.T.C.)

**Dati generali**

Lunghezza = 240.7

**Caratteristiche della sezione**

| Descrizione | Tipo | Base | Altezza | Area | Jx | Jy | Wx | Wy |
|---|---|---|---|---|---|---|---|---|
| R 8x10 | Rettangolare | 8 | 10 | 80 | 666.67 | 426.67 | 133.33 | 106.67 |

Materiale: C14 EN 338:2016
Rapporto luce/freccia elastica limite = 300
Rapporto luce/freccia elastica differita = 200
Mensola Y: Nessuno; Mensola X: Nessuno
Classe di servizio 1

**Verifica taglio D.M. 17-01-18 §4.4.8.1.9**

Sezione ad ascissa 240.7
Coefficiente parziale di sicurezza del materiale γ = 1.5
Kmod = 0.8; kcr = 0.67
τ,d <= fv,d
Sqrt(1.06^2+3.09^2) = 3.26 <= 16 Comb: SLU, 71; Durata minima del carico nella combinazione: media
Tx = -37.5; Ty = -109.7

**Verifica pressoflessione D.M. 17-01-18 §4.4.8.1.8**

Sezione ad ascissa 0
Coefficiente parziale di sicurezza del materiale γ = 1.5
Kmod = 0.8; Kh = 1.084 (formula 11.7.1)
(Sc,0,d/fc,0,d)^2 + Sm,y,d/fm,y,d + Km*(Sm,z,d/fm,z,d) <= 1
(Sc,0,d/fc,0,d)^2 + Km*(Sm,y,d/fm,y,d) + Sm,z,d/fm,z,d <= 1
(3.2/85.3)^2+96.8/81+0.7*45.7/80.97=1.59 !> 1 [4.4.7a] Comb: SLU, 72; Durata minima del carico nella combinazione: media - NON SODDISFATTA
Mx = -12908.4; My = 4872.4; N = -258.5

**Verifica taglio+torsione D.M. 17-01-18 §4.4.8.1.11**

Sezione ad ascissa 240.7
Coefficiente parziale di sicurezza del materiale γ = 1.5
Kmod = 0.8; Kh = 1.084 (formula 11.7.1); kcr = 0.67
τ,tor,d/(ksh*fv,d) + (τ,y,d/fv,d)^2 + (τ,z,d/fv,d)^2 <= 1
0+0+0.04 <= 1 Comb: SLU, 72; Durata minima del carico nella combinazione: media
Tx = -37.3; Ty = -109.6; Mt = -9.6

**Verifica torsione D.M. 17-01-18 §4.4.8.1.10**

Sezione ad ascissa 240.7
Coefficiente parziale di sicurezza del materiale γ = 1.5
Kmod = 1.1
τ,tor,d <= Ksh * fv,d
0.33 <= 26.13 Comb: SLV, 10; Durata minima del carico nella combinazione: istantaneo
Mt = -47

---

## Asta 262: Trave in legno a falda Falda 5 fili 263-291

Verifiche condotte secondo D.M. 17-01-18 (N.T.C.)

### Dati generali

Lunghezza = 23.3

### Caratteristiche della sezione

| Descrizione | Tipo | Base | Altezza | Area | Jx | Jy | Wx | Wy |
|---|---|---|---|---|---|---|---|---|
| R 8x10 | Rettangolare | 8 | 10 | 80 | 666.67 | 426.67 | 133.33 | 106.67 |

Materiale: C14 EN 338:2016
Rapporto luce/freccia elastica limite = 300
Rapporto luce/freccia elastica differita = 200
Mensola Y: Nessuno; Mensola X: Nessuno
Classe di servizio 1

### Verifica trazione parallela alla fibratura D.M. 17-01-18 §4.4.8.1.1

Sezione ad ascissa 10.9
Coefficiente parziale di sicurezza del materiale γ = 1.5
Kmod = 1.1; Kh = 1.084 (formula 11.7.1)
St,0,d <= ft,0,d
0.03 <= 57.26 Comb: SLV, 16; Durata minima del carico nella combinazione: istantaneo
N = 2.5

### Verifica flessione D.M. 17-01-18 §4.4.8.1.6

Sezione ad ascissa 0
Coefficiente parziale di sicurezza del materiale γ = 1.5
Kmod = 0.6; Kh = 1.084 (formula 11.7.1)
Sm,y,d/fm,y,d + Km*(Sm,z,d/fm,z,d) <= 1
Km*(Sm,y,d/fm,y,d) + Sm,z,d/fm,z,d <= 1
0.1/60.7+0.7*0/60.7=0 <= 1 (formula 4.4.5a) Comb: SLU, 64; Durata minima del carico nella combinazione: permanente
Mx = 8.7; My = 0

---

## Asta 263: Trave in legno a falda Falda 5 fili 268-292

Verifiche condotte secondo D.M. 17-01-18 (N.T.C.)

### Dati generali

Lunghezza = 164.6

### Caratteristiche della sezione

| Descrizione | Tipo | Base | Altezza | Area | Jx | Jy | Wx | Wy |
|---|---|---|---|---|---|---|---|---|
| R 8x10 | Rettangolare | 8 | 10 | 80 | 666.67 | 426.67 | 133.33 | 106.67 |

Materiale: C14 EN 338:2016
Rapporto luce/freccia elastica limite = 300
Rapporto luce/freccia elastica differita = 200
Mensola Y: Nessuno; Mensola X: Nessuno
Classe di servizio 1

### Verifica taglio D.M. 17-01-18 §4.4.8.1.9

Sezione ad ascissa 164.6
Coefficiente parziale di sicurezza del materiale γ = 1.5
Kmod = 0.8; kcr = 0.67
τ,d <= fv,d
Sqrt(0.5^2+4.86^2) = 4.89 <= 16 Comb: SLU, 79; Durata minima del carico nella combinazione: media
Tx = -17.8; Ty = -173

### Verifica pressoflessione D.M. 17-01-18 §4.4.8.1.8

Sezione ad ascissa 0
Coefficiente parziale di sicurezza del materiale γ = 1.5
Kmod = 0.8; Kh = 1.084 (formula 11.7.1)
(Sc,0,d/fc,0,d)^2 + Sm,y,d/fm,y,d + Km*(Sm,z,d/fm,z,d) <= 1
(Sc,0,d/fc,0,d)^2 + Km*(Sm,y,d/fm,y,d) + Sm,z,d/fm,z,d <= 1
(2.9/85.3)^2+108.2/81+0.7*16.6/80.97=1.48 !> 1 [4.4.7a] Comb: SLU, 80; Durata minima del carico nella combinazione: media - NON SODDISFATTA
Mx = -14425.6; My = 1771.6; N = -235.1

### Verifica taglio+torsione D.M. 17-01-18 §4.4.8.1.11

Sezione ad ascissa 164.6
Coefficiente parziale di sicurezza del materiale γ = 1.5
Kmod = 0.8; Kh = 1.084 (formula 11.7.1); kcr = 0.67
τ,tor,d/(ksh*fv,d) + (τ,y,d/fv,d)^2 + (τ,z,d/fv,d)^2 <= 1
0.09+0+0.09 <= 1 Comb: SLU, 80; Durata minima del carico nella combinazione: media

Tx = -17.5; Ty = -172.9; Mt = -230.8

**Verifica torsione D.M. 17-01-18 §4.4.8.1.10**

Sezione ad ascissa 164.6
Coefficiente parziale di sicurezza del materiale γ = 1.5
Kmod = 0.8
τ,tor,d <= Ksh * fv,d
1.63 <= 19 Comb: SLU, 80; Durata minima del carico nella combinazione: media
Mt = -230.8

---

## Asta 264: Trave in legno a falda Falda 5 fili 268-292

Verifiche condotte secondo D.M. 17-01-18 (N.T.C.)

**Dati generali**

Lunghezza = 23.3

**Caratteristiche della sezione**

| Descrizione | Tipo | Base | Altezza | Area | Jx | Jy | Wx | Wy |
|---|---|---|---|---|---|---|---|---|
| R 8x10 | Rettangolare | 8 | 10 | 80 | 666.67 | 426.67 | 133.33 | 106.67 |

Materiale: C14 EN 338:2016
Rapporto luce/freccia elastica limite = 300
Rapporto luce/freccia elastica differita = 200
Mensola Y: Nessuno; Mensola X: Nessuno
Classe di servizio 1

**Verifica trazione parallela alla fibratura D.M. 17-01-18 §4.4.8.1.1**

Sezione ad ascissa 10.9
Coefficiente parziale di sicurezza del materiale γ = 1.5
Kmod = 1.1; Kh = 1.084 (formula 11.7.1)
St,0,d <= ft,0,d
0.02 <= 57.26 Comb: SLV, 14; Durata minima del carico nella combinazione: istantaneo
N = 1.2

**Verifica flessione D.M. 17-01-18 §4.4.8.1.6**

Sezione ad ascissa 0
Coefficiente parziale di sicurezza del materiale γ = 1.5
Kmod = 0.6; Kh = 1.084 (formula 11.7.1)
Sm,y,d/fm,y,d + Km*(Sm,z,d/fm,z,d) <= 1
Km*(Sm,y,d/fm,y,d) + Sm,z,d/fm,z,d <= 1
0.1/60.7+0.7*0/60.7=0 <= 1 (formula 4.4.5a) Comb: SLU, 43; Durata minima del carico nella combinazione: permanente
Mx = 8.8; My = 0

---

## Asta 265: Trave in legno a falda Falda 5 fili 272-293

Verifiche condotte secondo D.M. 17-01-18 (N.T.C.)

**Dati generali**

Lunghezza = 88.5

**Caratteristiche della sezione**

| Descrizione | Tipo | Base | Altezza | Area | Jx | Jy | Wx | Wy |
|---|---|---|---|---|---|---|---|---|
| R 8x10 | Rettangolare | 8 | 10 | 80 | 666.67 | 426.67 | 133.33 | 106.67 |

Materiale: C14 EN 338:2016
Rapporto luce/freccia elastica limite = 300
Rapporto luce/freccia elastica differita = 200
Mensola Y: Nessuno; Mensola X: Nessuno
Classe di servizio 1

**Verifica taglio D.M. 17-01-18 §4.4.8.1.9**

Sezione ad ascissa 88.5
Coefficiente parziale di sicurezza del materiale γ = 1.5
Kmod = 0.8; kcr = 0.67
τ,d <= fv,d
Sqrt(1.02^2+10.59^2) = 10.64 <= 16 Comb: SLU, 80; Durata minima del carico nella combinazione: media
Tx = 36.1; Ty = -376.6

**Verifica pressoflessione D.M. 17-01-18 §4.4.8.1.8**

Sezione ad ascissa 0
Coefficiente parziale di sicurezza del materiale γ = 1.5
Kmod = 0.8; Kh = 1.084 (formula 11.7.1)

(Sc,0,d/fc,0,d)^2 + Sm,y,d/fm,y,d + Km*(Sm,z,d/fm,z,d) <= 1
(Sc,0,d/fc,0,d)^2 + Km*(Sm,y,d/fm,y,d) + Sm,z,d/fm,z,d <= 1
(6.2/85.3)^2+134/81+0.7*10.6/80.97=1.75 !> 1 [4.4.7a] Comb: SLU, 72; Durata minima del carico nella combinazione: media - NON SODDISFATTA
Mx = -17866.9; My = -1135.1; N = -494.7

**Verifica taglio+torsione D.M. 17-01-18 §4.4.8.1.11**

Sezione ad ascissa 88.5
Coefficiente parziale di sicurezza del materiale γ = 1.5
Kmod = 0.8; Kh = 1.084 (formula 11.7.1); kcr = 0.67
τ,tor,d/(ksh*fv,d) + (τ,y,d/fv,d)^2 + (τ,z,d/fv,d)^2 <= 1
0.17+0+0.44 <= 1 Comb: SLU, 80; Durata minima del carico nella combinazione: media
Tx = 36.1; Ty = -376.6; Mt = -469.9

**Verifica torsione D.M. 17-01-18 §4.4.8.1.10**

Sezione ad ascissa 88.5
Coefficiente parziale di sicurezza del materiale γ = 1.5
Kmod = 0.8
τ,tor,d <= Ksh * fv,d
3.32 <= 19 Comb: SLU, 72; Durata minima del carico nella combinazione: media
Mt = -470.2

## Asta 266: Trave in legno a falda Falda 5 fili 272-293

Verifiche condotte secondo D.M. 17-01-18 (N.T.C.)

**Dati generali**

Lunghezza = 23.3

**Caratteristiche della sezione**

| Descrizione | Tipo | Base | Altezza | Area | Jx | Jy | Wx | Wy |
|---|---|---|---|---|---|---|---|---|
| R 8x10 | Rettangolare | 8 | 10 | 80 | 666.67 | 426.67 | 133.33 | 106.67 |

Materiale: C14 EN 338:2016
Rapporto luce/freccia elastica limite = 300
Rapporto luce/freccia elastica differita = 200
Mensola Y: Nessuno; Mensola X: Nessuno
Classe di servizio 1

**Verifica trazione parallela alla fibratura D.M. 17-01-18 §4.4.8.1.1**

Sezione ad ascissa 11.7
Coefficiente parziale di sicurezza del materiale γ = 1.5
Kmod = 1.1; Kh = 1.084 (formula 11.7.1)
St,0,d <= ft,0,d
0.02 <= 57.26 Comb: SLV, 14; Durata minima del carico nella combinazione: istantaneo
N = 1.5

**Verifica flessione D.M. 17-01-18 §4.4.8.1.6**

Sezione ad ascissa 0
Coefficiente parziale di sicurezza del materiale γ = 1.5
Kmod = 0.6; Kh = 1.084 (formula 11.7.1)
Sm,y,d/fm,y,d + Km*(Sm,z,d/fm,z,d) <= 1
Km*(Sm,y,d/fm,y,d) + Sm,z,d/fm,z,d <= 1
0.1/60.7+0.7*0/60.7=0 <= 1 (formula 4.4.5a) Comb: SLU, 64; Durata minima del carico nella combinazione: permanente
Mx = 8.8; My = 0

## Asta 267: Trave in legno a falda Falda 5 fili 276-294

Verifiche condotte secondo D.M. 17-01-18 (N.T.C.)

**Dati generali**

Lunghezza = 24.2

**Caratteristiche della sezione**

| Descrizione | Tipo | Base | Altezza | Area | Jx | Jy | Wx | Wy |
|---|---|---|---|---|---|---|---|---|
| R 8x10 | Rettangolare | 8 | 10 | 80 | 666.67 | 426.67 | 133.33 | 106.67 |

Materiale: C14 EN 338:2016
Rapporto luce/freccia elastica limite = 300
Rapporto luce/freccia elastica differita = 200
Mensola Y: Nessuno; Mensola X: Nessuno
Classe di servizio 1

**Verifica trazione parallela alla fibratura D.M. 17-01-18 §4.4.8.1.1**

Sezione ad ascissa 11.3
Coefficiente parziale di sicurezza del materiale γ = 1.5
Kmod = 1.1; Kh = 1.084 (formula 11.7.1)
St,0,d <= ft,0,d
0.03 <= 57.26 Comb: SLV, 16; Durata minima del carico nella combinazione: istantaneo
N = 2

**Verifica flessione D.M. 17-01-18 §4.4.8.1.6**

Sezione ad ascissa 0
Coefficiente parziale di sicurezza del materiale γ = 1.5
Kmod = 0.6; Kh = 1.084 (formula 11.7.1)
Sm,y,d/fm,y,d + Km*(Sm,z,d/fm,z,d) <= 1
Km*(Sm,y,d/fm,y,d) + Sm,z,d/fm,z,d <= 1
0.1/60.7+0.7*0/60.7=0 <= 1 (formula 4.4.5a) Comb: SLU, 64; Durata minima del carico nella combinazione: permanente
Mx = 9.5; My = 0

**Verifica della freccia istantanea totale D.M. 17-01-18 §C4.4.7 Circolare 7 21-01-19**

Sezione ad ascissa 15.3
Kdef = 0
Uinst tot in x = 0
Uinst tot in y = 0
Uinst tot = 0
Luce/Uinst,tot > limite
24.2/0=7802783.3 > 300 Comb: SLE rara, 7

**Verifica della freccia istantanea variabile D.M. 17-01-18 §4.4.7**

Sezione ad ascissa 14.5
Kdef = 0
Uinst var in x = 0
Uinst var in y = 0
Uinst var = 0
Luce/Uinst,var > limite
24.2/0=6373713948.6 > 300 Comb: SLE rara, 9

**Verifica della freccia finale EC5 §4.4.7 - EC5 2.2.3 (3)**

Sezione ad ascissa 15.3
Kdef = 0.6
Ufin in x = 0
Ufin in y = 0
Ufin = 0
Luce/Ufin > limite
24.2/0=4877217.1 > 200
Coefficienti combinatori impiegati:
Pesi strutturali = 1,000 + 0,600 = 1,600
Permanenti portati = 1,000 + 0,600 = 1,600
Neve = 0,500 + 0,000 = 0,500
Variabile H = 0,000 + 1,000 = 1,000
Vento = 0,600 + 0,000 = 0,600

---

## Asta 268: Trave in legno a falda Falda 6 fili 227-228

Verifiche condotte secondo D.M. 17-01-18 (N.T.C.)

**Dati generali**

Lunghezza = 303.6

**Caratteristiche della sezione**

| Descrizione | Tipo | Base | Altezza | Area | Jx | Jy | Wx | Wy |
|---|---|---|---|---|---|---|---|---|
| R 8x10 | Rettangolare | 8 | 10 | 80 | 666.67 | 426.67 | 133.33 | 106.67 |

Materiale: C14 EN 338:2016
Rapporto luce/freccia elastica limite = 300
Rapporto luce/freccia elastica differita = 200
Mensola Y: Nessuno; Mensola X: Nessuno
Classe di servizio 1

**Verifica tensoflessione D.M. 17-01-18 §4.4.8.1.7**

Sezione ad ascissa 303.6
Coefficiente parziale di sicurezza del materiale γ = 1.5
Kmod = 0.8; Kh = 1.084 (formula 11.7.1)
St,0,d/ft,0,d + Sm,y,d/fm,y,d + Km*(Sm,z,d/fm,z,d) !> 1

St,0,d/ft,0,d + Km*(Sm,y,d/fm,y,d) + Sm,z,d/fm,z,d !> 1
1.9/41.6+165.4/81+0.7*2.7/81=2.11 !> 1 [4.4.6a] Comb: SLU, 80; Durata minima del carico nella combinazione: media - NON SODDISFATTA
Mx = -22055.7; My = -286.7; N = 149

**Verifica taglio D.M. 17-01-18 §4.4.8.1.9**

Sezione ad ascissa 0
Coefficiente parziale di sicurezza del materiale γ = 1.5
Kmod = 0.8; kcr = 0.67
τ,d <= fv,d
Sqrt(0.02^2+3.36^2) = 3.36 <= 16 Comb: SLU, 71; Durata minima del carico nella combinazione: media
Tx = -0.6; Ty = 119.3

**Verifica taglio+torsione D.M. 17-01-18 §4.4.8.1.11**

Sezione ad ascissa 0
Coefficiente parziale di sicurezza del materiale γ = 1.5
Kmod = 0.8; Kh = 1.084 (formula 11.7.1); kcr = 0.67
τ,tor,d/(ksh*fv,d) + (τ,y,d/fv,d)^2 + (τ,z,d/fv,d)^2 <= 1
0.07+0+0.04 <= 1 Comb: SLU, 79; Durata minima del carico nella combinazione: media
Tx = -0.9; Ty = 119.1; Mt = 176.5

**Verifica torsione D.M. 17-01-18 §4.4.8.1.10**

Sezione ad ascissa 303.6
Coefficiente parziale di sicurezza del materiale γ = 1.5
Kmod = 0.8
τ,tor,d <= Ksh * fv,d
1.25 <= 19 Comb: SLU, 80; Durata minima del carico nella combinazione: media
Mt = 177.6

---

## Asta 269: Trave in legno a falda Falda 6 fili 218-219

Verifiche condotte secondo D.M. 17-01-18 (N.T.C.)

**Dati generali**

Lunghezza = 303.6

**Caratteristiche della sezione**

| Descrizione | Tipo | Base | Altezza | Area | Jx | Jy | Wx | Wy |
|---|---|---|---|---|---|---|---|---|
| R 8x10 | Rettangolare | 8 | 10 | 80 | 666.67 | 426.67 | 133.33 | 106.67 |

Materiale: C14 EN 338:2016
Rapporto luce/freccia elastica limite = 300
Rapporto luce/freccia elastica differita = 200
Mensola Y: Nessuno; Mensola X: Nessuno
Classe di servizio 1

**Verifica tensoflessione D.M. 17-01-18 §4.4.8.1.7**

Sezione ad ascissa 303.6
Coefficiente parziale di sicurezza del materiale γ = 1.5
Kmod = 0.8; Kh = 1.084 (formula 11.7.1)
St,0,d/ft,0,d + Sm,y,d/fm,y,d + Km*(Sm,z,d/fm,z,d) !> 1
St,0,d/ft,0,d + Km*(Sm,y,d/fm,y,d) + Sm,z,d/fm,z,d !> 1
3.9/41.6+155.6/81+0.7*3.6/81=2.05 !> 1 [4.4.6a] Comb: SLU, 80; Durata minima del carico nella combinazione: media - NON SODDISFATTA
Mx = -20741.8; My = -386.9; N = 308.4

**Verifica taglio D.M. 17-01-18 §4.4.8.1.9**

Sezione ad ascissa 0
Coefficiente parziale di sicurezza del materiale γ = 1.5
Kmod = 0.8; kcr = 0.67
τ,d <= fv,d
Sqrt(0.05^2+3.09^2) = 3.09 <= 16 Comb: SLU, 71; Durata minima del carico nella combinazione: media
Tx = -1.8; Ty = 109.8

**Verifica taglio+torsione D.M. 17-01-18 §4.4.8.1.11**

Sezione ad ascissa 0
Coefficiente parziale di sicurezza del materiale γ = 1.5
Kmod = 0.8; Kh = 1.084 (formula 11.7.1); kcr = 0.67
τ,tor,d/(ksh*fv,d) + (τ,y,d/fv,d)^2 + (τ,z,d/fv,d)^2 <= 1
0.08+0+0.04 <= 1 Comb: SLU, 79; Durata minima del carico nella combinazione: media
Tx = -2.1; Ty = 109.7; Mt = 203.3

**Verifica torsione D.M. 17-01-18 §4.4.8.1.10**

Sezione ad ascissa 303.6
Coefficiente parziale di sicurezza del materiale γ = 1.5

Kmod = 0.8
τ,tor,d <= Ksh * fv,d
1.44 <= 19 Comb: SLU, 80; Durata minima del carico nella combinazione: media
Mt = 204.3

## Asta 270: Trave in legno a falda Falda 6 fili 212-213

Verifiche condotte secondo D.M. 17-01-18 (N.T.C.)

### Dati generali

Lunghezza = 334.7

### Caratteristiche della sezione

| Descrizione | Tipo | Base | Altezza | Area | Jx | Jy | Wx | Wy |
|---|---|---|---|---|---|---|---|---|
| R 8x10 | Rettangolare | 8 | 10 | 80 | 666.67 | 426.67 | 133.33 | 106.67 |

Materiale: C14 EN 338:2016
Rapporto luce/freccia elastica limite = 300
Rapporto luce/freccia elastica differita = 200
Mensola Y: Nessuno; Mensola X: Nessuno
Classe di servizio 1

### Verifica tensoflessione D.M. 17-01-18 §4.4.8.1.7

Sezione ad ascissa 334.7
Coefficiente parziale di sicurezza del materiale γ = 1.5
Kmod = 0.8; Kh = 1.084 (formula 11.7.1)
St,0,d/ft,0,d + Sm,y,d/fm,y,d + Km*(Sm,z,d/fm,z,d) !> 1
St,0,d/ft,0,d + Km*(Sm,y,d/fm,y,d) + Sm,z,d/fm,z,d !> 1
5/41.6+119.7/81+0.7*1.7/81=1.61 !> 1 [4.4.6a] Comb: SLU, 72; Durata minima del carico nella combinazione: media - NON SODDISFATTA
Mx = -15957.7; My = -183; N = 403.6

### Verifica taglio D.M. 17-01-18 §4.4.8.1.9

Sezione ad ascissa 0
Coefficiente parziale di sicurezza del materiale γ = 1.5
Kmod = 0.8; kcr = 0.67
τ,d <= fv,d
Sqrt(0.03^2+2.15^2) = 2.15 <= 16 Comb: SLU, 80; Durata minima del carico nella combinazione: media
Tx = -1.2; Ty = 76.3

### Verifica taglio+torsione D.M. 17-01-18 §4.4.8.1.11

Sezione ad ascissa 0
Coefficiente parziale di sicurezza del materiale γ = 1.5
Kmod = 0.8; Kh = 1.084 (formula 11.7.1); kcr = 0.67
τ,tor,d/(ksh*fv,d) + (τ,y,d/fv,d)^2 + (τ,z,d/fv,d)^2 <= 1
0.04+0+0.02 <= 1 Comb: SLU, 80; Durata minima del carico nella combinazione: media
Tx = -1.2; Ty = 76.3; Mt = 115.6

### Verifica torsione D.M. 17-01-18 §4.4.8.1.10

Sezione ad ascissa 334.7
Coefficiente parziale di sicurezza del materiale γ = 1.5
Kmod = 0.8
τ,tor,d <= Ksh * fv,d
0.82 <= 19 Comb: SLU, 80; Durata minima del carico nella combinazione: media
Mt = 115.6

## Asta 271: Trave in legno a falda Falda 6 fili 203-204

Verifiche condotte secondo D.M. 17-01-18 (N.T.C.)

### Dati generali

Lunghezza = 255.4

### Caratteristiche della sezione

| Descrizione | Tipo | Base | Altezza | Area | Jx | Jy | Wx | Wy |
|---|---|---|---|---|---|---|---|---|
| R 8x10 | Rettangolare | 8 | 10 | 80 | 666.67 | 426.67 | 133.33 | 106.67 |

Materiale: C14 EN 338:2016
Rapporto luce/freccia elastica limite = 300
Rapporto luce/freccia elastica differita = 200
Mensola Y: Nessuno; Mensola X: Nessuno
Classe di servizio 1

**Verifica tensoflessione D.M. 17-01-18 §4.4.8.1.7**

Sezione ad ascissa 255.4
Coefficiente parziale di sicurezza del materiale γ = 1.5
Kmod = 0.8; Kh = 1.084 (formula 11.7.1)
St,0,d/ft,0,d + Sm,y,d/fm,y,d + Km*(Sm,z,d/fm,z,d) !> 1
St,0,d/ft,0,d + Km*(Sm,y,d/fm,y,d) + Sm,z,d/fm,z,d !> 1
4.1/41.6+111.2/81+0.7*6.1/81=1.53 !> 1 [4.4.6a] Comb: SLU, 71; Durata minima del carico nella combinazione: media - NON SODDISFATTA
Mx = -14831.6; My = 653.2; N = 328.5

**Verifica taglio D.M. 17-01-18 §4.4.8.1.9**

Sezione ad ascissa 0
Coefficiente parziale di sicurezza del materiale γ = 1.5
Kmod = 0.8; kcr = 0.67
τ,d <= fv,d
Sqrt(0.1^2+2.82^2) = 2.82 <= 16 Comb: SLU, 80; Durata minima del carico nella combinazione: media
Tx = 3.6; Ty = 100.1

**Verifica taglio+torsione D.M. 17-01-18 §4.4.8.1.11**

Sezione ad ascissa 0
Coefficiente parziale di sicurezza del materiale γ = 1.5
Kmod = 0.8; Kh = 1.084 (formula 11.7.1); kcr = 0.67
τ,tor,d/(ksh*fv,d) + (τ,y,d/fv,d)^2 + (τ,z,d/fv,d)^2 <= 1
0.05+0+0.03 <= 1 Comb: SLU, 80; Durata minima del carico nella combinazione: media
Tx = 3.6; Ty = 100.1; Mt = 137.9

**Verifica torsione D.M. 17-01-18 §4.4.8.1.10**

Sezione ad ascissa 255.4
Coefficiente parziale di sicurezza del materiale γ = 1.5
Kmod = 0.8
τ,tor,d <= Ksh * fv,d
0.97 <= 19 Comb: SLU, 80; Durata minima del carico nella combinazione: media
Mt = 137.9

---

## Asta 272: Trave in legno a falda Falda 6 fili 193-194

Verifiche condotte secondo D.M. 17-01-18 (N.T.C.)

**Dati generali**

Lunghezza = 176.1

**Caratteristiche della sezione**

| Descrizione | Tipo | Base | Altezza | Area | Jx | Jy | Wx | Wy |
|---|---|---|---|---|---|---|---|---|
| R 8x10 | Rettangolare | 8 | 10 | 80 | 666.67 | 426.67 | 133.33 | 106.67 |

Materiale: C14 EN 338:2016
Rapporto luce/freccia elastica limite = 300
Rapporto luce/freccia elastica differita = 200
Mensola Y: Nessuno; Mensola X: Nessuno
Classe di servizio 1

**Verifica tensoflessione D.M. 17-01-18 §4.4.8.1.7**

Sezione ad ascissa 176.1
Coefficiente parziale di sicurezza del materiale γ = 1.5
Kmod = 0.8; Kh = 1.084 (formula 11.7.1)
St,0,d/ft,0,d + Sm,y,d/fm,y,d + Km*(Sm,z,d/fm,z,d) !> 1
St,0,d/ft,0,d + Km*(Sm,y,d/fm,y,d) + Sm,z,d/fm,z,d <= 1
2.4/41.6+82.5/81+0.7*11.4/81=1.18 !> 1 [4.4.6a] Comb: SLU, 71; Durata minima del carico nella combinazione: media - NON SODDISFATTA
Mx = -10998.3; My = 1220.3; N = 191.8

**Verifica taglio D.M. 17-01-18 §4.4.8.1.9**

Sezione ad ascissa 0
Coefficiente parziale di sicurezza del materiale γ = 1.5
Kmod = 0.8; kcr = 0.67
τ,d <= fv,d
Sqrt(0.32^2+3.64^2) = 3.65 <= 16 Comb: SLU, 80; Durata minima del carico nella combinazione: media
Tx = 11.4; Ty = 129.4

**Verifica taglio+torsione D.M. 17-01-18 §4.4.8.1.11**

Sezione ad ascissa 0
Coefficiente parziale di sicurezza del materiale γ = 1.5
Kmod = 0.8; Kh = 1.084 (formula 11.7.1); kcr = 0.67
τ,tor,d/(ksh*fv,d) + (τ,y,d/fv,d)^2 + (τ,z,d/fv,d)^2 <= 1

0.03+0+0.05 <= 1 Comb: SLU, 80; Durata minima del carico nella combinazione: media
Tx = 11.4; Ty = 129.4; Mt = 82.4

**Verifica torsione D.M. 17-01-18 §4.4.8.1.10**

Sezione ad ascissa 176.1
Coefficiente parziale di sicurezza del materiale γ = 1.5
Kmod = 0.8
τ,tor,d <= Ksh * fv,d
0.58 <= 19 Comb: SLU, 38; Durata minima del carico nella combinazione: media
Mt = 82.5

---

## Asta 273: Trave in legno a falda Falda 6 fili 186-187

Verifiche condotte secondo D.M. 17-01-18 (N.T.C.)

**Dati generali**

Lunghezza = 96.9

**Caratteristiche della sezione**

| Descrizione | Tipo | Base | Altezza | Area | Jx | Jy | Wx | Wy |
|---|---|---|---|---|---|---|---|---|
| R 8x10 | Rettangolare | 8 | 10 | 80 | 666.67 | 426.67 | 133.33 | 106.67 |

Materiale: C14 EN 338:2016
Rapporto luce/freccia elastica limite = 300
Rapporto luce/freccia elastica differita = 200
Mensola Y: Nessuno; Mensola X: Nessuno
Classe di servizio 1

**Verifica tensoflessione D.M. 17-01-18 §4.4.8.1.7**

Sezione ad ascissa 0
Coefficiente parziale di sicurezza del materiale γ = 1.5
Kmod = 0.8; Kh = 1.084 (formula 11.7.1)
St,0,d/ft,0,d + Sm,y,d/fm,y,d + Km*(Sm,z,d/fm,z,d) !> 1
St,0,d/ft,0,d + Km*(Sm,y,d/fm,y,d) + Sm,z,d/fm,z,d !> 1
2.6/41.6+98.5/81+0.7*8.9/81=1.36 !> 1 [4.4.6a] Comb: SLU, 80; Durata minima del carico nella combinazione: media - NON SODDISFATTA
Mx = 13130.5; My = -947.5; N = 208.5

**Verifica taglio D.M. 17-01-18 §4.4.8.1.9**

Sezione ad ascissa 0
Coefficiente parziale di sicurezza del materiale γ = 1.5
Kmod = 0.8; kcr = 0.67
τ,d <= fv,d
Sqrt(0.62^2+6.13^2) = 6.16 <= 16 Comb: SLU, 80; Durata minima del carico nella combinazione: media
Tx = 22; Ty = 218.1

**Verifica taglio+torsione D.M. 17-01-18 §4.4.8.1.11**

Sezione ad ascissa 0
Coefficiente parziale di sicurezza del materiale γ = 1.5
Kmod = 0.8; Kh = 1.084 (formula 11.7.1); kcr = 0.67
τ,tor,d/(ksh*fv,d) + (τ,y,d/fv,d)^2 + (τ,z,d/fv,d)^2 <= 1
0.02+0+0.15 <= 1 Comb: SLU, 80; Durata minima del carico nella combinazione: media
Tx = 22; Ty = 218.1; Mt = 47.8

**Verifica torsione D.M. 17-01-18 §4.4.8.1.10**

Sezione ad ascissa 96.8
Coefficiente parziale di sicurezza del materiale γ = 1.5
Kmod = 0.8
τ,tor,d <= Ksh * fv,d
0.34 <= 19 Comb: SLU, 38; Durata minima del carico nella combinazione: media
Mt = 48

---

## Asta 274: Trave in legno a falda Falda 4 fili 172-173

Verifiche condotte secondo D.M. 17-01-18 (N.T.C.)

**Dati generali**

Lunghezza = 296.6

**Caratteristiche della sezione**

| Descrizione | Tipo | Base | Altezza | Area | Jx | Jy | Wx | Wy |
|---|---|---|---|---|---|---|---|---|
| R 8x10 | Rettangolare | 8 | 10 | 80 | 666.67 | 426.67 | 133.33 | 106.67 |

Materiale: C14 EN 338:2016

Rapporto luce/freccia elastica limite = 300
Rapporto luce/freccia elastica differita = 200
Mensola Y: Nessuno; Mensola X: Nessuno
Classe di servizio 1

**Verifica tensoflessione D.M. 17-01-18 §4.4.8.1.7**

Sezione ad ascissa 296.5
Coefficiente parziale di sicurezza del materiale γ = 1.5
Kmod = 0.8; Kh = 1.084 (formula 11.7.1)
St,0,d/ft,0,d + Sm,y,d/fm,y,d + Km*(Sm,z,d/fm,z,d) !> 1
St,0,d/ft,0,d + Km*(Sm,y,d/fm,y,d) + Sm,z,d/fm,z,d !> 1
8.7/41.6+378.3/81+0.7*11.5/81=4.98 !> 1 [4.4.6a] Comb: SLU, 80; Durata minima del carico nella combinazione: media - NON SODDISFATTA
Mx = -50440.8; My = -1223.9; N = 696.3

**Verifica taglio D.M. 17-01-18 §4.4.8.1.9**

Sezione ad ascissa 0
Coefficiente parziale di sicurezza del materiale γ = 1.5
Kmod = 0.8; kcr = 0.67
τ,d <= fv,d
Sqrt(0.32^2+8.2^2) = 8.2 <= 16 Comb: SLU, 80; Durata minima del carico nella combinazione: media
Tx = -11.4; Ty = 291.5

**Verifica taglio+torsione D.M. 17-01-18 §4.4.8.1.11**

Sezione ad ascissa 0
Coefficiente parziale di sicurezza del materiale γ = 1.5
Kmod = 0.8; Kh = 1.084 (formula 11.7.1); kcr = 0.67
τ,tor,d/(ksh*fv,d) + (τ,y,d/fv,d)^2 + (τ,z,d/fv,d)^2 <= 1
0.15+0+0.26 <= 1 Comb: SLU, 80; Durata minima del carico nella combinazione: media
Tx = -11.4; Ty = 291.5; Mt = -402.7

**Verifica torsione D.M. 17-01-18 §4.4.8.1.10**

Sezione ad ascissa 296.5
Coefficiente parziale di sicurezza del materiale γ = 1.5
Kmod = 0.8
τ,tor,d <= Ksh * fv,d
2.85 <= 19 Comb: SLU, 79; Durata minima del carico nella combinazione: media
Mt = -402.9

---

## Asta 275: Trave in legno a falda Falda 4 fili 163-164

Verifiche condotte secondo D.M. 17-01-18 (N.T.C.)

**Dati generali**

Lunghezza = 296.6

**Caratteristiche della sezione**

| Descrizione | Tipo | Base | Altezza | Area | Jx | Jy | Wx | Wy |
|---|---|---|---|---|---|---|---|---|
| R 8x10 | Rettangolare | 8 | 10 | 80 | 666.67 | 426.67 | 133.33 | 106.67 |

Materiale: C14 EN 338:2016
Rapporto luce/freccia elastica limite = 300
Rapporto luce/freccia elastica differita = 200
Mensola Y: Nessuno; Mensola X: Nessuno
Classe di servizio 1

**Verifica taglio D.M. 17-01-18 §4.4.8.1.9**

Sezione ad ascissa 0
Coefficiente parziale di sicurezza del materiale γ = 1.5
Kmod = 0.8; kcr = 0.67
τ,d <= fv,d
Sqrt(0.11^2+10.53^2) = 10.53 <= 16 Comb: SLU, 80; Durata minima del carico nella combinazione: media
Tx = 4; Ty = 374.3

**Verifica pressoflessione D.M. 17-01-18 §4.4.8.1.8**

Sezione ad ascissa 296.5
Coefficiente parziale di sicurezza del materiale γ = 1.5
Kmod = 0.8; Kh = 1.084 (formula 11.7.1)
(Sc,0,d/fc,0,d)^2 + Sm,y,d/fm,y,d + Km*(Sm,z,d/fm,z,d) <= 1
(Sc,0,d/fc,0,d)^2 + Km*(Sm,y,d/fm,y,d) + Sm,z,d/fm,z,d <= 1
(1.4/85.3)^2+451.3/81+0.7*2.4/80.97=5.59 !> 1 [4.4.7a] Comb: SLU, 79; Durata minima del carico nella combinazione: media - NON SODDISFATTA
Mx = -60173.3; My = 259.9; N = -109

**Verifica taglio+torsione D.M. 17-01-18 §4.4.8.1.11**

Sezione ad ascissa 0
Coefficiente parziale di sicurezza del materiale γ = 1.5
Kmod = 0.8; Kh = 1.084 (formula 11.7.1); kcr = 0.67
τ,tor,d/(ksh*fv,d) + (τ,y,d/fv,d)^2 + (τ,z,d/fv,d)^2 <= 1
0.09+0+0.43 <= 1 Comb: SLU, 80; Durata minima del carico nella combinazione: media
Tx = 4; Ty = 374.3; Mt = -237.7

**Verifica torsione D.M. 17-01-18 §4.4.8.1.10**

Sezione ad ascissa 296.5
Coefficiente parziale di sicurezza del materiale γ = 1.5
Kmod = 0.8
τ,tor,d <= Ksh * fv,d
1.68 <= 19 Comb: SLU, 79; Durata minima del carico nella combinazione: media
Mt = -237.7

---

## Asta 276: Trave in legno a falda Falda 4 fili 155-156

Verifiche condotte secondo D.M. 17-01-18 (N.T.C.)

**Dati generali**

Lunghezza = 296.6

**Caratteristiche della sezione**

| Descrizione | Tipo | Base | Altezza | Area | Jx | Jy | Wx | Wy |
|---|---|---|---|---|---|---|---|---|
| R 8x10 | Rettangolare | 8 | 10 | 80 | 666.67 | 426.67 | 133.33 | 106.67 |

Materiale: C14 EN 338:2016
Rapporto luce/freccia elastica limite = 300
Rapporto luce/freccia elastica differita = 200
Mensola Y: Nessuno; Mensola X: Nessuno
Classe di servizio 1

**Verifica tensoflessione D.M. 17-01-18 §4.4.8.1.7**

Sezione ad ascissa 296.5
Coefficiente parziale di sicurezza del materiale γ = 1.5
Kmod = 0.8; Kh = 1.084 (formula 11.7.1)
St,0,d/ft,0,d + Sm,y,d/fm,y,d + Km*(Sm,z,d/fm,z,d) !> 1
St,0,d/ft,0,d + Km*(Sm,y,d/fm,y,d) + Sm,z,d/fm,z,d !> 1
0.6/41.6+435/81+0.7*1.1/81=5.4 !> 1 [4.4.6a] Comb: SLU, 72; Durata minima del carico nella combinazione: media - NON SODDISFATTA
Mx = -58004.8; My = -117.2; N = 47.5

**Verifica taglio D.M. 17-01-18 §4.4.8.1.9**

Sezione ad ascissa 0
Coefficiente parziale di sicurezza del materiale γ = 1.5
Kmod = 0.8; kcr = 0.67
τ,d <= fv,d
Sqrt(0.01^2+9.48^2) = 9.48 <= 16 Comb: SLU, 80; Durata minima del carico nella combinazione: media
Tx = -0.4; Ty = 337.1

**Verifica taglio+torsione D.M. 17-01-18 §4.4.8.1.11**

Sezione ad ascissa 0
Coefficiente parziale di sicurezza del materiale γ = 1.5
Kmod = 0.8; Kh = 1.084 (formula 11.7.1); kcr = 0.67
τ,tor,d/(ksh*fv,d) + (τ,y,d/fv,d)^2 + (τ,z,d/fv,d)^2 <= 1
0.05+0+0.35 <= 1 Comb: SLU, 80; Durata minima del carico nella combinazione: media
Tx = -0.4; Ty = 337.1; Mt = -127.1

**Verifica torsione D.M. 17-01-18 §4.4.8.1.10**

Sezione ad ascissa 296.5
Coefficiente parziale di sicurezza del materiale γ = 1.5
Kmod = 0.8
τ,tor,d <= Ksh * fv,d
0.9 <= 19 Comb: SLU, 79; Durata minima del carico nella combinazione: media
Mt = -127.2

---

## Asta 277: Trave in legno a falda Falda 4 fili 150-151

Verifiche condotte secondo D.M. 17-01-18 (N.T.C.)

### Dati generali

Lunghezza = 296.6

### Caratteristiche della sezione

| Descrizione | Tipo | Base | Altezza | Area | Jx | Jy | Wx | Wy |
|---|---|---|---|---|---|---|---|---|
| R 8x10 | Rettangolare | 8 | 10 | 80 | 666.67 | 426.67 | 133.33 | 106.67 |

Materiale: C14 EN 338:2016
Rapporto luce/freccia elastica limite = 300
Rapporto luce/freccia elastica differita = 200
Mensola Y: Nessuno; Mensola X: Nessuno
Classe di servizio 1

### Verifica tensoflessione D.M. 17-01-18 §4.4.8.1.7

Sezione ad ascissa 296.5
Coefficiente parziale di sicurezza del materiale γ = 1.5
Kmod = 0.8; Kh = 1.084 (formula 11.7.1)
St,0,d/ft,0,d + Sm,y,d/fm,y,d + Km*(Sm,z,d/fm,z,d) !> 1
St,0,d/ft,0,d + Km*(Sm,y,d/fm,y,d) + Sm,z,d/fm,z,d !> 1
0.6/41.6+444.6/81+0.7*4.9/81=5.55 !> 1 [4.4.6a] Comb: SLU, 79; Durata minima del carico nella combinazione: media - NON SODDISFATTA
Mx = -59276.9; My = 519.8; N = 50

### Verifica taglio D.M. 17-01-18 §4.4.8.1.9

Sezione ad ascissa 0
Coefficiente parziale di sicurezza del materiale γ = 1.5
Kmod = 0.8; kcr = 0.67
τ,d <= fv,d
Sqrt(0.09^2+9.62^2) = 9.62 <= 16 Comb: SLU, 80; Durata minima del carico nella combinazione: media
Tx = 3.2; Ty = 341.9

### Verifica taglio+torsione D.M. 17-01-18 §4.4.8.1.11

Sezione ad ascissa 0
Coefficiente parziale di sicurezza del materiale γ = 1.5
Kmod = 0.8; Kh = 1.084 (formula 11.7.1); kcr = 0.67
τ,tor,d/(ksh*fv,d) + (τ,y,d/fv,d)^2 + (τ,z,d/fv,d)^2 <= 1
0.01+0+0.36 <= 1 Comb: SLU, 80; Durata minima del carico nella combinazione: media
Tx = 3.2; Ty = 341.9; Mt = 17.4

### Verifica torsione D.M. 17-01-18 §4.4.8.1.10

Sezione ad ascissa 296.5
Coefficiente parziale di sicurezza del materiale γ = 1.5
Kmod = 1.1
τ,tor,d <= Ksh * fv,d
0.29 <= 26.13 Comb: SLV, 12; Durata minima del carico nella combinazione: istantaneo
Mt = 40.4

---

## Asta 278: Trave in legno a falda Falda 4 fili 141-142

Verifiche condotte secondo D.M. 17-01-18 (N.T.C.)

### Dati generali

Lunghezza = 296.6

### Caratteristiche della sezione

| Descrizione | Tipo | Base | Altezza | Area | Jx | Jy | Wx | Wy |
|---|---|---|---|---|---|---|---|---|
| R 8x10 | Rettangolare | 8 | 10 | 80 | 666.67 | 426.67 | 133.33 | 106.67 |

Materiale: C14 EN 338:2016
Rapporto luce/freccia elastica limite = 300
Rapporto luce/freccia elastica differita = 200
Mensola Y: Nessuno; Mensola X: Nessuno
Classe di servizio 1

### Verifica tensoflessione D.M. 17-01-18 §4.4.8.1.7

Sezione ad ascissa 296.5
Coefficiente parziale di sicurezza del materiale γ = 1.5
Kmod = 0.8; Kh = 1.084 (formula 11.7.1)
St,0,d/ft,0,d + Sm,y,d/fm,y,d + Km*(Sm,z,d/fm,z,d) !> 1
St,0,d/ft,0,d + Km*(Sm,y,d/fm,y,d) + Sm,z,d/fm,z,d !> 1
0.7/41.6+446.1/81+0.7*7.8/81=5.59 !> 1 [4.4.6a] Comb: SLU, 79; Durata minima del carico nella combinazione: media - NON SODDISFATTA
Mx = -59482.9; My = 828.2; N = 52.4

### Verifica taglio D.M. 17-01-18 §4.4.8.1.9

Sezione ad ascissa 0

Coefficiente parziale di sicurezza del materiale γ = 1.5
Kmod = 0.8; kcr = 0.67
τ,d <= fv,d
Sqrt(0.15^2+9.63^2) = 9.63 <= 16 Comb: SLU, 80; Durata minima del carico nella combinazione: media
Tx = 5.3; Ty = 342.4

**Verifica taglio+torsione D.M. 17-01-18 §4.4.8.1.11**

Sezione ad ascissa 0
Coefficiente parziale di sicurezza del materiale γ = 1.5
Kmod = 0.8; Kh = 1.084 (formula 11.7.1); kcr = 0.67
τ,tor,d/(ksh*fv,d) + (τ,y,d/fv,d)^2 + (τ,z,d/fv,d)^2 <= 1
0.06+0+0.36 <= 1 Comb: SLU, 80; Durata minima del carico nella combinazione: media
Tx = 5.3; Ty = 342.4; Mt = 158.1

**Verifica torsione D.M. 17-01-18 §4.4.8.1.10**

Sezione ad ascissa 296.5
Coefficiente parziale di sicurezza del materiale γ = 1.5
Kmod = 0.8
τ,tor,d <= Ksh * fv,d
1.12 <= 19 Comb: SLU, 80; Durata minima del carico nella combinazione: media
Mt = 158.1

---

## Asta 279: Trave in legno a falda Falda 4 fili 134-135

Verifiche condotte secondo D.M. 17-01-18 (N.T.C.)

**Dati generali**

Lunghezza = 296.6

**Caratteristiche della sezione**

| Descrizione | Tipo | Base | Altezza | Area | Jx | Jy | Wx | Wy |
|---|---|---|---|---|---|---|---|---|
| R 8x10 | Rettangolare | 8 | 10 | 80 | 666.67 | 426.67 | 133.33 | 106.67 |

Materiale: C14 EN 338:2016
Rapporto luce/freccia elastica limite = 300
Rapporto luce/freccia elastica differita = 200
Mensola Y: Nessuno; Mensola X: Nessuno
Classe di servizio 1

**Verifica tensoflessione D.M. 17-01-18 §4.4.8.1.7**

Sezione ad ascissa 296.5
Coefficiente parziale di sicurezza del materiale γ = 1.5
Kmod = 0.8; Kh = 1.084 (formula 11.7.1)
St,0,d/ft,0,d + Sm,y,d/fm,y,d + Km*(Sm,z,d/fm,z,d) !> 1
St,0,d/ft,0,d + Km*(Sm,y,d/fm,y,d) + Sm,z,d/fm,z,d !> 1
1/41.6+439.4/81+0.7*8.6/81=5.53 !> 1 [4.4.6a] Comb: SLU, 80; Durata minima del carico nella combinazione: media - NON SODDISFATTA
Mx = -58592; My = 915.9; N = 81

**Verifica taglio D.M. 17-01-18 §4.4.8.1.9**

Sezione ad ascissa 0
Coefficiente parziale di sicurezza del materiale γ = 1.5
Kmod = 0.8; kcr = 0.67
τ,d <= fv,d
Sqrt(0.19^2+9.39^2) = 9.39 <= 16 Comb: SLU, 80; Durata minima del carico nella combinazione: media
Tx = 6.7; Ty = 333.9

**Verifica taglio+torsione D.M. 17-01-18 §4.4.8.1.11**

Sezione ad ascissa 0
Coefficiente parziale di sicurezza del materiale γ = 1.5
Kmod = 0.8; Kh = 1.084 (formula 11.7.1); kcr = 0.67
τ,tor,d/(ksh*fv,d) + (τ,y,d/fv,d)^2 + (τ,z,d/fv,d)^2 <= 1
0.11+0+0.34 <= 1 Comb: SLU, 80; Durata minima del carico nella combinazione: media
Tx = 6.7; Ty = 333.9; Mt = 292.6

**Verifica torsione D.M. 17-01-18 §4.4.8.1.10**

Sezione ad ascissa 296.5
Coefficiente parziale di sicurezza del materiale γ = 1.5
Kmod = 0.8
τ,tor,d <= Ksh * fv,d
2.07 <= 19 Comb: SLU, 80; Durata minima del carico nella combinazione: media
Mt = 292.6

---

## Asta 280: Trave in legno a falda Falda 4 fili 123-124

Verifiche condotte secondo D.M. 17-01-18 (N.T.C.)

### Dati generali

Lunghezza = 296.6

### Caratteristiche della sezione

| Descrizione | Tipo | Base | Altezza | Area | Jx | Jy | Wx | Wy |
|---|---|---|---|---|---|---|---|---|
| R 8x10 | Rettangolare | 8 | 10 | 80 | 666.67 | 426.67 | 133.33 | 106.67 |

Materiale: C14 EN 338:2016
Rapporto luce/freccia elastica limite = 300
Rapporto luce/freccia elastica differita = 200
Mensola Y: Nessuno; Mensola X: Nessuno
Classe di servizio 1

### Verifica tensoflessione D.M. 17-01-18 §4.4.8.1.7

Sezione ad ascissa 296.5
Coefficiente parziale di sicurezza del materiale γ = 1.5
Kmod = 0.8; Kh = 1.084 (formula 11.7.1)
St,0,d/ft,0,d + Sm,y,d/fm,y,d + Km*(Sm,z,d/fm,z,d) !> 1
St,0,d/ft,0,d + Km*(Sm,y,d/fm,y,d) + Sm,z,d/fm,z,d !> 1
4.9/41.6+372.8/81+0.7*1.4/81=4.73 !> 1 [4.4.6a] Comb: SLU, 80; Durata minima del carico nella combinazione: media - NON SODDISFATTA
Mx = -49712.5; My = -150.8; N = 389.5

### Verifica taglio D.M. 17-01-18 §4.4.8.1.9

Sezione ad ascissa 0
Coefficiente parziale di sicurezza del materiale γ = 1.5
Kmod = 0.8; kcr = 0.67
τ,d <= fv,d
Sqrt(0.03^2+6.98^2) = 6.98 <= 16 Comb: SLU, 72; Durata minima del carico nella combinazione: media
Tx = -1; Ty = 248.1

### Verifica taglio+torsione D.M. 17-01-18 §4.4.8.1.11

Sezione ad ascissa 0
Coefficiente parziale di sicurezza del materiale γ = 1.5
Kmod = 0.8; Kh = 1.084 (formula 11.7.1); kcr = 0.67
τ,tor,d/(ksh*fv,d) + (τ,y,d/fv,d)^2 + (τ,z,d/fv,d)^2 <= 1
0.15+0+0.19 <= 1 Comb: SLU, 72; Durata minima del carico nella combinazione: media
Tx = -1; Ty = 248.1; Mt = 397.6

### Verifica torsione D.M. 17-01-18 §4.4.8.1.10

Sezione ad ascissa 296.5
Coefficiente parziale di sicurezza del materiale γ = 1.5
Kmod = 0.8
τ,tor,d <= Ksh * fv,d
2.81 <= 19 Comb: SLU, 72; Durata minima del carico nella combinazione: media
Mt = 397.6

---

## Asta 281: Trave in legno a falda Falda 4 fili 230-231

Verifiche condotte secondo D.M. 17-01-18 (N.T.C.)

### Dati generali

Lunghezza = 53.4

### Caratteristiche della sezione

| Descrizione | Tipo | Base | Altezza | Area | Jx | Jy | Wx | Wy |
|---|---|---|---|---|---|---|---|---|
| R 8x10 | Rettangolare | 8 | 10 | 80 | 666.67 | 426.67 | 133.33 | 106.67 |

Materiale: C14 EN 338:2016
Rapporto luce/freccia elastica limite = 300
Rapporto luce/freccia elastica differita = 200
Mensola Y: Nessuno; Mensola X: Nessuno
Classe di servizio 1

### Verifica taglio D.M. 17-01-18 §4.4.8.1.9

Sezione ad ascissa 53.4
Coefficiente parziale di sicurezza del materiale γ = 1.5
Kmod = 0.8; kcr = 0.67
τ,d > fv,d
Sqrt(2.94^2+24.44^2) = 24.62 > 16 Comb: SLU, 71; Durata minima del carico nella combinazione: media - NON SODDISFATTA
Tx = -104.4; Ty = -869

### Verifica pressoflessione D.M. 17-01-18 §4.4.8.1.8

Sezione ad ascissa 0
Coefficiente parziale di sicurezza del materiale γ = 1.5
Kmod = 0.8; Kh = 1.084 (formula 11.7.1)
(Sc,0,d/fc,0,d)^2 + Sm,y,d/fm,y,d + Km*(Sm,z,d/fm,z,d) <= 1
(Sc,0,d/fc,0,d)^2 + Km*(Sm,y,d/fm,y,d) + Sm,z,d/fm,z,d <= 1
(5.7/85.3)^2+297.5/81+0.7*22.5/80.97=3.87 !> 1 [4.4.7a] Comb: SLU, 71; Durata minima del carico nella combinazione: media - NON SODDISFATTA
Mx = -39668.4; My = 2405; N = -459

### Verifica taglio+torsione D.M. 17-01-18 §4.4.8.1.11

Sezione ad ascissa 53.4
Coefficiente parziale di sicurezza del materiale γ = 1.5
Kmod = 0.8; Kh = 1.084 (formula 11.7.1); kcr = 0.67
τ,tor,d/(ksh*fv,d) + (τ,y,d/fv,d)^2 + (τ,z,d/fv,d)^2 > 1
0.6+0.03+2.33 > 1 Comb: SLU, 71; Durata minima del carico nella combinazione: media - NON SODDISFATTA
Tx = -104.4; Ty = -869; Mt = 1616.7

### Verifica torsione D.M. 17-01-18 §4.4.8.1.10

Sezione ad ascissa 53.4
Coefficiente parziale di sicurezza del materiale γ = 1.5
Kmod = 0.8
τ,tor,d <= Ksh * fv,d
11.46 <= 19 Comb: SLU, 80; Durata minima del carico nella combinazione: media
Mt = 1622.6

---

## Asta 282: Trave in legno a falda Falda 4 fili 230-231

Verifiche condotte secondo D.M. 17-01-18 (N.T.C.)

### Dati generali

Lunghezza = 14.4

### Caratteristiche della sezione

| Descrizione | Tipo | Base | Altezza | Area | Jx | Jy | Wx | Wy |
|---|---|---|---|---|---|---|---|---|
| R 8x10 | Rettangolare | 8 | 10 | 80 | 666.67 | 426.67 | 133.33 | 106.67 |

Materiale: C14 EN 338:2016
Rapporto luce/freccia elastica limite = 300
Rapporto luce/freccia elastica differita = 200
Mensola Y: Nessuno; Mensola X: Nessuno
Classe di servizio 1

### Verifica trazione parallela alla fibratura D.M. 17-01-18 §4.4.8.1.1

Sezione ad ascissa 4.3
Coefficiente parziale di sicurezza del materiale γ = 1.5
Kmod = 1.1; Kh = 1.084 (formula 11.7.1)
St,0,d <= ft,0,d
0.27 <= 57.26 Comb: SLV, 16; Durata minima del carico nella combinazione: istantaneo
N = 21.5

### Verifica flessione D.M. 17-01-18 §4.4.8.1.6

Sezione ad ascissa 0
Coefficiente parziale di sicurezza del materiale γ = 1.5
Kmod = 1.1; Kh = 1.084 (formula 11.7.1)
Sm,y,d/fm,y,d + Km*(Sm,z,d/fm,z,d) <= 1
Km*(Sm,y,d/fm,y,d) + Sm,z,d/fm,z,d <= 1
0/111.3+0.7*0/111.3=0 <= 1 (formula 4.4.5a) Comb: SLV, 2; Durata minima del carico nella combinazione: istantaneo
Mx = 6.5; My = 1.6

---

## Asta 283: Trave in legno a falda Falda 4 fili 221-222

Verifiche condotte secondo D.M. 17-01-18 (N.T.C.)

### Dati generali

Lunghezza = 130.4

### Caratteristiche della sezione

| Descrizione | Tipo | Base | Altezza | Area | Jx | Jy | Wx | Wy |
|---|---|---|---|---|---|---|---|---|
| R 8x10 | Rettangolare | 8 | 10 | 80 | 666.67 | 426.67 | 133.33 | 106.67 |

Materiale: C14 EN 338:2016
Rapporto luce/freccia elastica limite = 300

Rapporto luce/freccia elastica differita = 200
Mensola Y: Nessuno; Mensola X: Nessuno
Classe di servizio 1

**Verifica taglio D.M. 17-01-18 §4.4.8.1.9**

Sezione ad ascissa 130.4
Coefficiente parziale di sicurezza del materiale γ = 1.5
Kmod = 0.8; kcr = 0.67
τ,d <= fv,d
Sqrt(0.82^2+5.98^2) = 6.03 <= 16 Comb: SLU, 71; Durata minima del carico nella combinazione: media
Tx = -29.3; Ty = -212.5

**Verifica pressoflessione D.M. 17-01-18 §4.4.8.1.8**

Sezione ad ascissa 0
Coefficiente parziale di sicurezza del materiale γ = 1.5
Kmod = 0.8; Kh = 1.084 (formula 11.7.1)
(Sc,0,d/fc,0,d)^2 + Sm,y,d/fm,y,d + Km*(Sm,z,d/fm,z,d) <= 1
(Sc,0,d/fc,0,d)^2 + Km*(Sm,y,d/fm,y,d) + Sm,z,d/fm,z,d <= 1
(1.5/85.3)^2+150.7/81+0.7*17.7/80.97=2.01 !> 1 [4.4.7a] Comb: SLU, 71; Durata minima del carico nella combinazione: media - NON SODDISFATTA
Mx = -20088.4; My = 1888.1; N = -123.2

**Verifica taglio+torsione D.M. 17-01-18 §4.4.8.1.11**

Sezione ad ascissa 130.4
Coefficiente parziale di sicurezza del materiale γ = 1.5
Kmod = 0.8; Kh = 1.084 (formula 11.7.1); kcr = 0.67
τ,tor,d/(ksh*fv,d) + (τ,y,d/fv,d)^2 + (τ,z,d/fv,d)^2 <= 1
0.29+0+0.14 <= 1 Comb: SLU, 79; Durata minima del carico nella combinazione: media
Tx = -29.2; Ty = -211.8; Mt = 782

**Verifica torsione D.M. 17-01-18 §4.4.8.1.10**

Sezione ad ascissa 130.4
Coefficiente parziale di sicurezza del materiale γ = 1.5
Kmod = 0.8
τ,tor,d <= Ksh * fv,d
5.52 <= 19 Comb: SLU, 80; Durata minima del carico nella combinazione: media
Mt = 782.1

---

## Asta 284: Trave in legno a falda Falda 4 fili 221-222

Verifiche condotte secondo D.M. 17-01-18 (N.T.C.)

**Dati generali**

Lunghezza = 14.4

**Caratteristiche della sezione**

| Descrizione | Tipo | Base | Altezza | Area | Jx | Jy | Wx | Wy |
|---|---|---|---|---|---|---|---|---|
| R 8x10 | Rettangolare | 8 | 10 | 80 | 666.67 | 426.67 | 133.33 | 106.67 |

Materiale: C14 EN 338:2016
Rapporto luce/freccia elastica limite = 300
Rapporto luce/freccia elastica differita = 200
Mensola Y: Nessuno; Mensola X: Nessuno
Classe di servizio 1

**Verifica trazione parallela alla fibratura D.M. 17-01-18 §4.4.8.1.1**

Sezione ad ascissa 6.3
Coefficiente parziale di sicurezza del materiale γ = 1.5
Kmod = 1.1; Kh = 1.084 (formula 11.7.1)
St,0,d <= ft,0,d
0.03 <= 57.26 Comb: SLV, 4; Durata minima del carico nella combinazione: istantaneo
N = 2.4

**Verifica flessione D.M. 17-01-18 §4.4.8.1.6**

Sezione ad ascissa 0
Coefficiente parziale di sicurezza del materiale γ = 1.5
Kmod = 0.6; Kh = 1.084 (formula 11.7.1)
Sm,y,d/fm,y,d + Km*(Sm,z,d/fm,z,d) <= 1
Km*(Sm,y,d/fm,y,d) + Sm,z,d/fm,z,d <= 1
0/60.7+0.7*0/60.7=0 <= 1 (formula 4.4.5a) Comb: SLU, 43; Durata minima del carico nella combinazione: permanente
Mx = 3.5; My = 0

---

## Asta 285: Trave in legno a falda Falda 4 fili 214-215

Verifiche condotte secondo D.M. 17-01-18 (N.T.C.)

### Dati generali

Lunghezza = 207.4

### Caratteristiche della sezione

| Descrizione | Tipo | Base | Altezza | Area | Jx | Jy | Wx | Wy |
|---|---|---|---|---|---|---|---|---|
| R 8x10 | Rettangolare | 8 | 10 | 80 | 666.67 | 426.67 | 133.33 | 106.67 |

Materiale: C14 EN 338:2016
Rapporto luce/freccia elastica limite = 300
Rapporto luce/freccia elastica differita = 200
Mensola Y: Nessuno; Mensola X: Nessuno
Classe di servizio 1

### Verifica taglio D.M. 17-01-18 §4.4.8.1.9

Sezione ad ascissa 207.4
Coefficiente parziale di sicurezza del materiale γ = 1.5
Kmod = 0.8; kcr = 0.67
τ,d <= fv,d
Sqrt(0.25^2+4.09^2) = 4.1 <= 16 Comb: SLU, 71; Durata minima del carico nella combinazione: media
Tx = -8.9; Ty = -145.4

### Verifica pressoflessione D.M. 17-01-18 §4.4.8.1.8

Sezione ad ascissa 0
Coefficiente parziale di sicurezza del materiale γ = 1.5
Kmod = 0.8; Kh = 1.084 (formula 11.7.1)
(Sc,0,d/fc,0,d)^2 + Sm,y,d/fm,y,d + Km*(Sm,z,d/fm,z,d) <= 1
(Sc,0,d/fc,0,d)^2 + Km*(Sm,y,d/fm,y,d) + Sm,z,d/fm,z,d <= 1
(0.8/85.3)^2+170.7/81+0.7*8.3/80.97=2.18 !> 1 [4.4.7a] Comb: SLU, 71; Durata minima del carico nella combinazione: media - NON SODDISFATTA
Mx = -22766; My = 887.5; N = -64.4

### Verifica taglio+torsione D.M. 17-01-18 §4.4.8.1.11

Sezione ad ascissa 207.4
Coefficiente parziale di sicurezza del materiale γ = 1.5
Kmod = 0.8; Kh = 1.084 (formula 11.7.1); kcr = 0.67
τ,tor,d/(ksh*fv,d) + (τ,y,d/fv,d)^2 + (τ,z,d/fv,d)^2 <= 1
0.2+0+0.07 <= 1 Comb: SLU, 79; Durata minima del carico nella combinazione: media
Tx = -9; Ty = -145.1; Mt = 538.8

### Verifica torsione D.M. 17-01-18 §4.4.8.1.10

Sezione ad ascissa 207.4
Coefficiente parziale di sicurezza del materiale γ = 1.5
Kmod = 0.8
τ,tor,d <= Ksh * fv,d
3.81 <= 19 Comb: SLU, 79; Durata minima del carico nella combinazione: media
Mt = 538.8

---

## Asta 286: Trave in legno a falda Falda 4 fili 214-215

Verifiche condotte secondo D.M. 17-01-18 (N.T.C.)

### Dati generali

Lunghezza = 14.4

### Caratteristiche della sezione

| Descrizione | Tipo | Base | Altezza | Area | Jx | Jy | Wx | Wy |
|---|---|---|---|---|---|---|---|---|
| R 8x10 | Rettangolare | 8 | 10 | 80 | 666.67 | 426.67 | 133.33 | 106.67 |

Materiale: C14 EN 338:2016
Rapporto luce/freccia elastica limite = 300
Rapporto luce/freccia elastica differita = 200
Mensola Y: Nessuno; Mensola X: Nessuno
Classe di servizio 1

### Verifica trazione parallela alla fibratura D.M. 17-01-18 §4.4.8.1.1

Sezione ad ascissa 2.4
Coefficiente parziale di sicurezza del materiale γ = 1.5
Kmod = 1.1; Kh = 1.084 (formula 11.7.1)
St,0,d <= ft,0,d
0.13 <= 57.26 Comb: SLV, 8; Durata minima del carico nella combinazione: istantaneo
N = 10.7

**Verifica flessione D.M. 17-01-18 §4.4.8.1.6**

Sezione ad ascissa 0
Coefficiente parziale di sicurezza del materiale γ = 1.5
Kmod = 0.6; Kh = 1.084 (formula 11.7.1)
Sm,y,d/fm,y,d + Km*(Sm,z,d/fm,z,d) <= 1
Km*(Sm,y,d/fm,y,d) + Sm,z,d/fm,z,d <= 1
0/60.7+0.7*0/60.7=0 <= 1 (formula 4.4.5a) Comb: SLU, 64; Durata minima del carico nella combinazione: permanente
Mx = 3.5; My = 0

## Asta 287: Trave in legno a falda Falda 4 fili 205-206

Verifiche condotte secondo D.M. 17-01-18 (N.T.C.)

**Dati generali**

Lunghezza = 284.4

**Caratteristiche della sezione**

| Descrizione | Tipo | Base | Altezza | Area | Jx | Jy | Wx | Wy |
|---|---|---|---|---|---|---|---|---|
| R 8x10 | Rettangolare | 8 | 10 | 80 | 666.67 | 426.67 | 133.33 | 106.67 |

Materiale: C14 EN 338:2016
Rapporto luce/freccia elastica limite = 300
Rapporto luce/freccia elastica differita = 200
Mensola Y: Nessuno; Mensola X: Nessuno
Classe di servizio 1

**Verifica taglio D.M. 17-01-18 §4.4.8.1.9**

Sezione ad ascissa 284.4
Coefficiente parziale di sicurezza del materiale γ = 1.5
Kmod = 0.8; kcr = 0.67
τ,d <= fv,d
Sqrt(0.01^2+3.82^2) = 3.82 <= 16 Comb: SLU, 71; Durata minima del carico nella combinazione: media
Tx = -0.3; Ty = -135.8

**Verifica pressoflessione D.M. 17-01-18 §4.4.8.1.8**

Sezione ad ascissa 0
Coefficiente parziale di sicurezza del materiale γ = 1.5
Kmod = 0.8; Kh = 1.084 (formula 11.7.1)
(Sc,0,d/fc,0,d)^2 + Sm,y,d/fm,y,d + Km*(Sm,z,d/fm,z,d) <= 1
(Sc,0,d/fc,0,d)^2 + Km*(Sm,y,d/fm,y,d) + Sm,z,d/fm,z,d <= 1
(0.8/85.3)^2+230.5/81+0.7*0.1/80.97=2.85 !> 1 [4.4.7a] Comb: SLU, 71; Durata minima del carico nella combinazione: media - NON SODDISFATTA
Mx = -30734.7; My = -6.5; N = -63.8

**Verifica taglio+torsione D.M. 17-01-18 §4.4.8.1.11**

Sezione ad ascissa 284.4
Coefficiente parziale di sicurezza del materiale γ = 1.5
Kmod = 0.8; Kh = 1.084 (formula 11.7.1); kcr = 0.67
τ,tor,d/(ksh*fv,d) + (τ,y,d/fv,d)^2 + (τ,z,d/fv,d)^2 <= 1
0.17+0+0.06 <= 1 Comb: SLU, 79; Durata minima del carico nella combinazione: media
Tx = -0.4; Ty = -135.6; Mt = 450.6

**Verifica torsione D.M. 17-01-18 §4.4.8.1.10**

Sezione ad ascissa 284.4
Coefficiente parziale di sicurezza del materiale γ = 1.5
Kmod = 0.8
τ,tor,d <= Ksh * fv,d
3.18 <= 19 Comb: SLU, 79; Durata minima del carico nella combinazione: media
Mt = 450.6

## Asta 288: Trave in legno a falda Falda 4 fili 205-206

Verifiche condotte secondo D.M. 17-01-18 (N.T.C.)

**Dati generali**

Lunghezza = 14.4

**Caratteristiche della sezione**

| Descrizione | Tipo | Base | Altezza | Area | Jx | Jy | Wx | Wy |
|---|---|---|---|---|---|---|---|---|
| R 8x10 | Rettangolare | 8 | 10 | 80 | 666.67 | 426.67 | 133.33 | 106.67 |

Materiale: C14 EN 338:2016
Rapporto luce/freccia elastica limite = 300

Rapporto luce/freccia elastica differita = 200
Mensola Y: Nessuno; Mensola X: Nessuno
Classe di servizio 1

**Verifica trazione parallela alla fibratura D.M. 17-01-18 §4.4.8.1.1**

Sezione ad ascissa 2.9
Coefficiente parziale di sicurezza del materiale γ = 1.5
Kmod = 1.1; Kh = 1.084 (formula 11.7.1)
St,0,d <= ft,0,d
0.02 <= 57.26 Comb: SLV, 12; Durata minima del carico nella combinazione: istantaneo
N = 1.4

**Verifica flessione D.M. 17-01-18 §4.4.8.1.6**

Sezione ad ascissa 0
Coefficiente parziale di sicurezza del materiale γ = 1.5
Kmod = 0.6; Kh = 1.084 (formula 11.7.1)
Sm,y,d/fm,y,d + Km*(Sm,z,d/fm,z,d) <= 1
Km*(Sm,y,d/fm,y,d) + Sm,z,d/fm,z,d <= 1
0/60.7+0.7*0/60.7=0 <= 1 (formula 4.4.5a) Comb: SLU, 43; Durata minima del carico nella combinazione: permanente
Mx = 3.5; My = 0

---

## Asta 289: Trave in legno a falda Falda 4 fili 195-196

Verifiche condotte secondo D.M. 17-01-18 (N.T.C.)

**Dati generali**

Lunghezza = 45

**Caratteristiche della sezione**

| Descrizione | Tipo | Base | Altezza | Area | Jx | Jy | Wx | Wy |
|---|---|---|---|---|---|---|---|---|
| R 8x10 | Rettangolare | 8 | 10 | 80 | 666.67 | 426.67 | 133.33 | 106.67 |

Materiale: C14 EN 338:2016
Rapporto luce/freccia elastica limite = 300
Rapporto luce/freccia elastica differita = 200
Mensola Y: Nessuno; Mensola X: Nessuno
Classe di servizio 1

**Verifica tensoflessione D.M. 17-01-18 §4.4.8.1.7**

Sezione ad ascissa 45
Coefficiente parziale di sicurezza del materiale γ = 1.5
Kmod = 0.8; Kh = 1.084 (formula 11.7.1)
St,0,d/ft,0,d + Sm,y,d/fm,y,d + Km*(Sm,z,d/fm,z,d) !> 1
St,0,d/ft,0,d + Km*(Sm,y,d/fm,y,d) + Sm,z,d/fm,z,d !> 1
1/41.6+278.7/81+0.7*1.1/81=3.47 !> 1 [4.4.6a] Comb: SLU, 71; Durata minima del carico nella combinazione: media - NON SODDISFATTA
Mx = -37157.4; My = 114.9; N = 77.2

**Verifica taglio D.M. 17-01-18 §4.4.8.1.9**

Sezione ad ascissa 0
Coefficiente parziale di sicurezza del materiale γ = 1.5
Kmod = 0.8; kcr = 0.67
τ,d > fv,d
Sqrt(0.21^2+21.3^2) = 21.3 > 16 Comb: SLU, 71; Durata minima del carico nella combinazione: media - NON SODDISFATTA
Tx = 7.5; Ty = 757.2

**Verifica taglio+torsione D.M. 17-01-18 §4.4.8.1.11**

Sezione ad ascissa 0
Coefficiente parziale di sicurezza del materiale γ = 1.5
Kmod = 0.8; Kh = 1.084 (formula 11.7.1); kcr = 0.67
τ,tor,d/(ksh*fv,d) + (τ,y,d/fv,d)^2 + (τ,z,d/fv,d)^2 > 1
0.33+0+1.77 > 1 Comb: SLU, 71; Durata minima del carico nella combinazione: media - NON SODDISFATTA
Tx = 7.5; Ty = 757.2; Mt = -874.9

**Verifica torsione D.M. 17-01-18 §4.4.8.1.10**

Sezione ad ascissa 45
Coefficiente parziale di sicurezza del materiale γ = 1.5
Kmod = 0.8
τ,tor,d <= Ksh * fv,d
6.18 <= 19 Comb: SLU, 71; Durata minima del carico nella combinazione: media
Mt = -874.9

---

## Asta 290: Trave in legno a falda Falda 4 fili 188-189

Verifiche condotte secondo D.M. 17-01-18 (N.T.C.)

### Dati generali

Lunghezza = 122

### Caratteristiche della sezione

| Descrizione | Tipo | Base | Altezza | Area | Jx | Jy | Wx | Wy |
|---|---|---|---|---|---|---|---|---|
| R 8x10 | Rettangolare | 8 | 10 | 80 | 666.67 | 426.67 | 133.33 | 106.67 |

Materiale: C14 EN 338:2016
Rapporto luce/freccia elastica limite = 300
Rapporto luce/freccia elastica differita = 200
Mensola Y: Nessuno; Mensola X: Nessuno
Classe di servizio 1

### Verifica tensoflessione D.M. 17-01-18 §4.4.8.1.7

Sezione ad ascissa 122
Coefficiente parziale di sicurezza del materiale γ = 1.5
Kmod = 0.8; Kh = 1.084 (formula 11.7.1)
St,0,d/ft,0,d + Sm,y,d/fm,y,d + Km*(Sm,z,d/fm,z,d) !> 1
St,0,d/ft,0,d + Km*(Sm,y,d/fm,y,d) + Sm,z,d/fm,z,d !> 1
0.7/41.6+349.3/81+0.7*4.7/81=4.37 !> 1 [4.4.6a] Comb: SLU, 71; Durata minima del carico nella combinazione: media - NON SODDISFATTA
Mx = -46573.5; My = 504.1; N = 54.3

### Verifica taglio D.M. 17-01-18 §4.4.8.1.9

Sezione ad ascissa 0
Coefficiente parziale di sicurezza del materiale γ = 1.5
Kmod = 0.8; kcr = 0.67
τ,d <= fv,d
Sqrt(0.23^2+12.67^2) = 12.67 <= 16 Comb: SLU, 71; Durata minima del carico nella combinazione: media
Tx = 8.3; Ty = 450.4

### Verifica taglio+torsione D.M. 17-01-18 §4.4.8.1.11

Sezione ad ascissa 0
Coefficiente parziale di sicurezza del materiale γ = 1.5
Kmod = 0.8; Kh = 1.084 (formula 11.7.1); kcr = 0.67
τ,tor,d/(ksh*fv,d) + (τ,y,d/fv,d)^2 + (τ,z,d/fv,d)^2 <= 1
0.27+0+0.63 <= 1 Comb: SLU, 71; Durata minima del carico nella combinazione: media
Tx = 8.3; Ty = 450.4; Mt = -713.5

### Verifica torsione D.M. 17-01-18 §4.4.8.1.10

Sezione ad ascissa 122
Coefficiente parziale di sicurezza del materiale γ = 1.5
Kmod = 0.8
τ,tor,d <= Ksh * fv,d
5.04 <= 19 Comb: SLU, 71; Durata minima del carico nella combinazione: media
Mt = -713.5

---

## Asta 291: Trave in legno a falda Falda 4 fili 181-182

Verifiche condotte secondo D.M. 17-01-18 (N.T.C.)

### Dati generali

Lunghezza = 199

### Caratteristiche della sezione

| Descrizione | Tipo | Base | Altezza | Area | Jx | Jy | Wx | Wy |
|---|---|---|---|---|---|---|---|---|
| R 8x10 | Rettangolare | 8 | 10 | 80 | 666.67 | 426.67 | 133.33 | 106.67 |

Materiale: C14 EN 338:2016
Rapporto luce/freccia elastica limite = 300
Rapporto luce/freccia elastica differita = 200
Mensola Y: Nessuno; Mensola X: Nessuno
Classe di servizio 1

### Verifica tensoflessione D.M. 17-01-18 §4.4.8.1.7

Sezione ad ascissa 199
Coefficiente parziale di sicurezza del materiale γ = 1.5
Kmod = 0.8; Kh = 1.084 (formula 11.7.1)
St,0,d/ft,0,d + Sm,y,d/fm,y,d + Km*(Sm,z,d/fm,z,d) !> 1
St,0,d/ft,0,d + Km*(Sm,y,d/fm,y,d) + Sm,z,d/fm,z,d !> 1
1.3/41.6+360.1/81+0.7*3/81=4.5 !> 1 [4.4.6a] Comb: SLU, 71; Durata minima del carico nella combinazione: media - NON SODDISFATTA

Mx = -48019.1; My = 323.7; N = 102.2

**Verifica taglio D.M. 17-01-18 §4.4.8.1.9**

Sezione ad ascissa 0
Coefficiente parziale di sicurezza del materiale γ = 1.5
Kmod = 0.8; kcr = 0.67
τ,d <= fv,d
Sqrt(0.1^2+8.99^2) = 8.99 <= 16 Comb: SLU, 71; Durata minima del carico nella combinazione: media
Tx = 3.5; Ty = 319.6

**Verifica taglio+torsione D.M. 17-01-18 §4.4.8.1.11**

Sezione ad ascissa 0
Coefficiente parziale di sicurezza del materiale γ = 1.5
Kmod = 0.8; Kh = 1.084 (formula 11.7.1); kcr = 0.67
τ,tor,d/(ksh*fv,d) + (τ,y,d/fv,d)^2 + (τ,z,d/fv,d)^2 <= 1
0.21+0+0.32 <= 1 Comb: SLU, 79; Durata minima del carico nella combinazione: media
Tx = 3.4; Ty = 319.6; Mt = -571.1

**Verifica torsione D.M. 17-01-18 §4.4.8.1.10**

Sezione ad ascissa 199
Coefficiente parziale di sicurezza del materiale γ = 1.5
Kmod = 0.8
τ,tor,d <= Ksh * fv,d
4.03 <= 19 Comb: SLU, 79; Durata minima del carico nella combinazione: media
Mt = -571.1

---

## Asta 292: Trave in legno a falda Falda 4 fili 116-117

Verifiche condotte secondo D.M. 17-01-18 (N.T.C.)

**Dati generali**

Lunghezza = 203.5

**Caratteristiche della sezione**

| Descrizione | Tipo | Base | Altezza | Area | Jx | Jy | Wx | Wy |
|---|---|---|---|---|---|---|---|---|
| R 8x10 | Rettangolare | 8 | 10 | 80 | 666.67 | 426.67 | 133.33 | 106.67 |

Materiale: C14 EN 338:2016
Rapporto luce/freccia elastica limite = 300
Rapporto luce/freccia elastica differita = 200
Mensola Y: Nessuno; Mensola X: Nessuno
Classe di servizio 1

**Verifica tensoflessione D.M. 17-01-18 §4.4.8.1.7**

Sezione ad ascissa 203.5
Coefficiente parziale di sicurezza del materiale γ = 1.5
Kmod = 0.8; Kh = 1.084 (formula 11.7.1)
St,0,d/ft,0,d + Sm,y,d/fm,y,d + Km*(Sm,z,d/fm,z,d) !> 1
St,0,d/ft,0,d + Km*(Sm,y,d/fm,y,d) + Sm,z,d/fm,z,d !> 1
5.1/41.6+411.7/81+0.7*5.1/81=5.25 !> 1 [4.4.6a] Comb: SLU, 79; Durata minima del carico nella combinazione: media - NON SODDISFATTA
Mx = -54899; My = -546.6; N = 408.6

**Verifica taglio D.M. 17-01-18 §4.4.8.1.9**

Sezione ad ascissa 0
Coefficiente parziale di sicurezza del materiale γ = 1.5
Kmod = 0.8; kcr = 0.67
τ,d <= fv,d
Sqrt(0.13^2+9.76^2) = 9.76 <= 16 Comb: SLU, 71; Durata minima del carico nella combinazione: media
Tx = -4.7; Ty = 346.9

**Verifica taglio+torsione D.M. 17-01-18 §4.4.8.1.11**

Sezione ad ascissa 0
Coefficiente parziale di sicurezza del materiale γ = 1.5
Kmod = 0.8; Kh = 1.084 (formula 11.7.1); kcr = 0.67
τ,tor,d/(ksh*fv,d) + (τ,y,d/fv,d)^2 + (τ,z,d/fv,d)^2 <= 1
0.2+0+0.37 <= 1 Comb: SLU, 71; Durata minima del carico nella combinazione: media
Tx = -4.7; Ty = 346.9; Mt = 547.4

**Verifica torsione D.M. 17-01-18 §4.4.8.1.10**

Sezione ad ascissa 203.5
Coefficiente parziale di sicurezza del materiale γ = 1.5
Kmod = 0.8
τ,tor,d <= Ksh * fv,d

3.87 <= 19 Comb: SLU, 71; Durata minima del carico nella combinazione: media
Mt = 547.4

## Asta 293: Trave in legno a falda Falda 4 fili 108-109

Verifiche condotte secondo D.M. 17-01-18 (N.T.C.)

### Dati generali

Lunghezza = 126.4

### Caratteristiche della sezione

| Descrizione | Tipo | Base | Altezza | Area | Jx | Jy | Wx | Wy |
|---|---|---|---|---|---|---|---|---|
| R 8x10 | Rettangolare | 8 | 10 | 80 | 666.67 | 426.67 | 133.33 | 106.67 |

Materiale: C14 EN 338:2016
Rapporto luce/freccia elastica limite = 300
Rapporto luce/freccia elastica differita = 200
Mensola Y: Nessuno; Mensola X: Nessuno
Classe di servizio 1

### Verifica taglio D.M. 17-01-18 §4.4.8.1.9

Sezione ad ascissa 0
Coefficiente parziale di sicurezza del materiale γ = 1.5
Kmod = 0.8; kcr = 0.67
τ,d <= fv,d
Sqrt(0.07^2+13.2^2) = 13.2 <= 16 Comb: SLU, 71; Durata minima del carico nella combinazione: media
Tx = 2.3; Ty = 469.4

### Verifica pressoflessione D.M. 17-01-18 §4.4.8.1.8

Sezione ad ascissa 126.4
Coefficiente parziale di sicurezza del materiale γ = 1.5
Kmod = 0.8; Kh = 1.084 (formula 11.7.1)
(Sc,0,d/fc,0,d)^2 + Sm,y,d/fm,y,d + Km*(Sm,z,d/fm,z,d) <= 1
(Sc,0,d/fc,0,d)^2 + Km*(Sm,y,d/fm,y,d) + Sm,z,d/fm,z,d <= 1
(1.6/85.3)^2+387.3/81+0.7*1.3/80.97=4.79 !> 1 [4.4.7a] Comb: SLU, 71; Durata minima del carico nella combinazione: media - NON SODDISFATTA
Mx = -51636.6; My = 135.5; N = -124.4

### Verifica taglio+torsione D.M. 17-01-18 §4.4.8.1.11

Sezione ad ascissa 0
Coefficiente parziale di sicurezza del materiale γ = 1.5
Kmod = 0.8; Kh = 1.084 (formula 11.7.1); kcr = 0.67
τ,tor,d/(ksh*fv,d) + (τ,y,d/fv,d)^2 + (τ,z,d/fv,d)^2 <= 1
0.25+0+0.68 <= 1 Comb: SLU, 71; Durata minima del carico nella combinazione: media
Tx = 2.3; Ty = 469.4; Mt = 667.8

### Verifica torsione D.M. 17-01-18 §4.4.8.1.10

Sezione ad ascissa 126.4
Coefficiente parziale di sicurezza del materiale γ = 1.5
Kmod = 0.8
τ,tor,d <= Ksh * fv,d
4.72 <= 19 Comb: SLU, 71; Durata minima del carico nella combinazione: media
Mt = 667.8

## Asta 294: Trave in legno a falda Falda 4 fili 101-102

Verifiche condotte secondo D.M. 17-01-18 (N.T.C.)

### Dati generali

Lunghezza = 49.4

### Caratteristiche della sezione

| Descrizione | Tipo | Base | Altezza | Area | Jx | Jy | Wx | Wy |
|---|---|---|---|---|---|---|---|---|
| R 8x10 | Rettangolare | 8 | 10 | 80 | 666.67 | 426.67 | 133.33 | 106.67 |

Materiale: C14 EN 338:2016
Rapporto luce/freccia elastica limite = 300
Rapporto luce/freccia elastica differita = 200
Mensola Y: Nessuno; Mensola X: Nessuno
Classe di servizio 1

### Verifica flessione D.M. 17-01-18 §4.4.8.1.6

Sezione ad ascissa 49.4
Coefficiente parziale di sicurezza del materiale γ = 1.5

Kmod = 0.8; Kh = 1.084 (formula 11.7.1)
Sm,y,d/fm,y,d + Km*(Sm,z,d/fm,z,d) !> 1
Km*(Sm,y,d/fm,y,d) + Sm,z,d/fm,z,d !> 1
307.4/81+0.7*1.8/81=3.81 !> 1 (formula 4.4.5a) Comb: SLU, 71; Durata minima del carico nella combinazione: media - NON SODDISFATTA
Mx = -40980.2; My = 187.2

**Verifica taglio D.M. 17-01-18 §4.4.8.1.9**

Sezione ad ascissa 0
Coefficiente parziale di sicurezza del materiale γ = 1.5
Kmod = 0.8; kcr = 0.67
τ,d > fv,d
Sqrt(0.22^2+21.22^2) = 21.22 > 16 Comb: SLU, 71; Durata minima del carico nella combinazione: media - NON SODDISFATTA
Tx = 8; Ty = 754.5

**Verifica taglio+torsione D.M. 17-01-18 §4.4.8.1.11**

Sezione ad ascissa 0
Coefficiente parziale di sicurezza del materiale γ = 1.5
Kmod = 0.8; Kh = 1.084 (formula 11.7.1); kcr = 0.67
τ,tor,d/(ksh*fv,d) + (τ,y,d/fv,d)^2 + (τ,z,d/fv,d)^2 > 1
0.3+0+1.76 > 1 Comb: SLU, 71; Durata minima del carico nella combinazione: media - NON SODDISFATTA
Tx = 8; Ty = 754.5; Mt = 799.4

**Verifica torsione D.M. 17-01-18 §4.4.8.1.10**

Sezione ad ascissa 49.4
Coefficiente parziale di sicurezza del materiale γ = 1.5
Kmod = 0.8
τ,tor,d <= Ksh * fv,d
5.65 <= 19 Comb: SLU, 71; Durata minima del carico nella combinazione: media
Mt = 799.4

---

## Asta 295: Trave in legno a falda Falda 4 fili 93-94

Verifiche condotte secondo D.M. 17-01-18 (N.T.C.)

**Dati generali**

Lunghezza = 288.9

**Caratteristiche della sezione**

| Descrizione | Tipo | Base | Altezza | Area | Jx | Jy | Wx | Wy |
|---|---|---|---|---|---|---|---|---|
| R 8x10 | Rettangolare | 8 | 10 | 80 | 666.67 | 426.67 | 133.33 | 106.67 |

Materiale: C14 EN 338:2016
Rapporto luce/freccia elastica limite = 300
Rapporto luce/freccia elastica differita = 200
Mensola Y: Nessuno; Mensola X: Nessuno
Classe di servizio 1

**Verifica taglio D.M. 17-01-18 §4.4.8.1.9**

Sezione ad ascissa 288.8
Coefficiente parziale di sicurezza del materiale γ = 1.5
Kmod = 0.8; kcr = 0.67
τ,d <= fv,d
Sqrt(0.31^2+4.64^2) = 4.65 <= 16 Comb: SLU, 71; Durata minima del carico nella combinazione: media
Tx = 11; Ty = -165

**Verifica pressoflessione D.M. 17-01-18 §4.4.8.1.8**

Sezione ad ascissa 0
Coefficiente parziale di sicurezza del materiale γ = 1.5
Kmod = 0.8; Kh = 1.084 (formula 11.7.1)
(Sc,0,d/fc,0,d)^2 + Sm,y,d/fm,y,d + Km*(Sm,z,d/fm,z,d) <= 1
(Sc,0,d/fc,0,d)^2 + Km*(Sm,y,d/fm,y,d) + Sm,z,d/fm,z,d <= 1
(1.4/85.3)^2+242.7/81+0.7*14.5/80.97=3.12 !> 1 [4.4.7a] Comb: SLU, 71; Durata minima del carico nella combinazione: media - NON SODDISFATTA
Mx = -32357.4; My = -1549.7; N = -111.8

**Verifica taglio+torsione D.M. 17-01-18 §4.4.8.1.11**

Sezione ad ascissa 288.8
Coefficiente parziale di sicurezza del materiale γ = 1.5
Kmod = 0.8; Kh = 1.084 (formula 11.7.1); kcr = 0.67
τ,tor,d/(ksh*fv,d) + (τ,y,d/fv,d)^2 + (τ,z,d/fv,d)^2 <= 1
0.15+0+0.08 <= 1 Comb: SLU, 79; Durata minima del carico nella combinazione: media
Tx = 11; Ty = -164.9; Mt = -400.1

### Verifica torsione D.M. 17-01-18 §4.4.8.1.10

Sezione ad ascissa 288.8
Coefficiente parziale di sicurezza del materiale γ = 1.5
Kmod = 0.8
τ,tor,d <= Ksh * fv,d
2.83 <= 19 Comb: SLU, 79; Durata minima del carico nella combinazione: media
Mt = -400.1

---

## Asta 296: Trave in legno a falda Falda 4 fili 93-94

Verifiche condotte secondo D.M. 17-01-18 (N.T.C.)

### Dati generali

Lunghezza = 14.4

### Caratteristiche della sezione

| Descrizione | Tipo | Base | Altezza | Area | Jx | Jy | Wx | Wy |
|---|---|---|---|---|---|---|---|---|
| R 8x10 | Rettangolare | 8 | 10 | 80 | 666.67 | 426.67 | 133.33 | 106.67 |

Materiale: C14 EN 338:2016
Rapporto luce/freccia elastica limite = 300
Rapporto luce/freccia elastica differita = 200
Mensola Y: Nessuno; Mensola X: Nessuno
Classe di servizio 1

### Verifica trazione parallela alla fibratura D.M. 17-01-18 §4.4.8.1.1

Sezione ad ascissa 5.8
Coefficiente parziale di sicurezza del materiale γ = 1.5
Kmod = 1.1; Kh = 1.084 (formula 11.7.1)
St,0,d <= ft,0,d
0.13 <= 57.26 Comb: SLV, 16; Durata minima del carico nella combinazione: istantaneo
N = 10.1

### Verifica flessione D.M. 17-01-18 §4.4.8.1.6

Sezione ad ascissa 0
Coefficiente parziale di sicurezza del materiale γ = 1.5
Kmod = 1.1; Kh = 1.084 (formula 11.7.1)
Sm,y,d/fm,y,d + Km*(Sm,z,d/fm,z,d) <= 1
Km*(Sm,y,d/fm,y,d) + Sm,z,d/fm,z,d <= 1
0/111.3+0.7*0/111.3=0 <= 1 (formula 4.4.5a) Comb: SLV, 2; Durata minima del carico nella combinazione: istantaneo
Mx = 5.6; My = 2

---

## Asta 297: Trave in legno a falda Falda 4 fili 85-86

Verifiche condotte secondo D.M. 17-01-18 (N.T.C.)

### Dati generali

Lunghezza = 211.8

### Caratteristiche della sezione

| Descrizione | Tipo | Base | Altezza | Area | Jx | Jy | Wx | Wy |
|---|---|---|---|---|---|---|---|---|
| R 8x10 | Rettangolare | 8 | 10 | 80 | 666.67 | 426.67 | 133.33 | 106.67 |

Materiale: C14 EN 338:2016
Rapporto luce/freccia elastica limite = 300
Rapporto luce/freccia elastica differita = 200
Mensola Y: Nessuno; Mensola X: Nessuno
Classe di servizio 1

### Verifica taglio D.M. 17-01-18 §4.4.8.1.9

Sezione ad ascissa 211.8
Coefficiente parziale di sicurezza del materiale γ = 1.5
Kmod = 0.8; kcr = 0.67
τ,d <= fv,d
Sqrt(0.51^2+4.79^2) = 4.82 <= 16 Comb: SLU, 71; Durata minima del carico nella combinazione: media
Tx = 18.2; Ty = -170.4

### Verifica pressoflessione D.M. 17-01-18 §4.4.8.1.8

Sezione ad ascissa 0
Coefficiente parziale di sicurezza del materiale γ = 1.5
Kmod = 0.8; Kh = 1.084 (formula 11.7.1)
(Sc,0,d/fc,0,d)^2 + Sm,y,d/fm,y,d + Km*(Sm,z,d/fm,z,d) <= 1

(Sc,0,d/fc,0,d)^2 + Km*(Sm,y,d/fm,y,d) + Sm,z,d/fm,z,d <= 1
(1.5/85.3)^2+173.4/81+0.7*18.5/80.97=2.3 !> 1 [4.4.7a] Comb: SLU, 71; Durata minima del carico nella combinazione: media - NON SODDISFATTA
Mx = -23123.3; My = -1975.4; N = -123.8

**Verifica taglio+torsione D.M. 17-01-18 §4.4.8.1.11**

Sezione ad ascissa 211.8
Coefficiente parziale di sicurezza del materiale γ = 1.5
Kmod = 0.8; Kh = 1.084 (formula 11.7.1); kcr = 0.67
τ,tor,d/(ksh*fv,d) + (τ,y,d/fv,d)^2 + (τ,z,d/fv,d)^2 <= 1
0.17+0+0.09 <= 1 Comb: SLU, 79; Durata minima del carico nella combinazione: media
Tx = 18.3; Ty = -170.2; Mt = -455.8

**Verifica torsione D.M. 17-01-18 §4.4.8.1.10**

Sezione ad ascissa 211.8
Coefficiente parziale di sicurezza del materiale γ = 1.5
Kmod = 0.8
τ,tor,d <= Ksh * fv,d
3.22 <= 19 Comb: SLU, 79; Durata minima del carico nella combinazione: media
Mt = -455.8

---

## Asta 298: Trave in legno a falda Falda 4 fili 85-86

Verifiche condotte secondo D.M. 17-01-18 (N.T.C.)

**Dati generali**

Lunghezza = 14.4

**Caratteristiche della sezione**

| Descrizione | Tipo | Base | Altezza | Area | Jx | Jy | Wx | Wy |
|---|---|---|---|---|---|---|---|---|
| R 8x10 | Rettangolare | 8 | 10 | 80 | 666.67 | 426.67 | 133.33 | 106.67 |

Materiale: C14 EN 338:2016
Rapporto luce/freccia elastica limite = 300
Rapporto luce/freccia elastica differita = 200
Mensola Y: Nessuno; Mensola X: Nessuno
Classe di servizio 1

**Verifica trazione parallela alla fibratura D.M. 17-01-18 §4.4.8.1.1**

Sezione ad ascissa 8.2
Coefficiente parziale di sicurezza del materiale γ = 1.5
Kmod = 1.1; Kh = 1.084 (formula 11.7.1)
St,0,d <= ft,0,d
0.09 <= 57.26 Comb: SLV, 4; Durata minima del carico nella combinazione: istantaneo
N = 6.8

**Verifica flessione D.M. 17-01-18 §4.4.8.1.6**

Sezione ad ascissa 0
Coefficiente parziale di sicurezza del materiale γ = 1.5
Kmod = 0.6; Kh = 1.084 (formula 11.7.1)
Sm,y,d/fm,y,d + Km*(Sm,z,d/fm,z,d) <= 1
Km*(Sm,y,d/fm,y,d) + Sm,z,d/fm,z,d <= 1
0/60.7+0.7*0/60.7=0 <= 1 (formula 4.4.5a) Comb: SLU, 43; Durata minima del carico nella combinazione: permanente
Mx = 3.5; My = 0

---

## Asta 299: Trave in legno a falda Falda 4 fili 79-80

Verifiche condotte secondo D.M. 17-01-18 (N.T.C.)

**Dati generali**

Lunghezza = 134.8

**Caratteristiche della sezione**

| Descrizione | Tipo | Base | Altezza | Area | Jx | Jy | Wx | Wy |
|---|---|---|---|---|---|---|---|---|
| R 8x10 | Rettangolare | 8 | 10 | 80 | 666.67 | 426.67 | 133.33 | 106.67 |

Materiale: C14 EN 338:2016
Rapporto luce/freccia elastica limite = 300
Rapporto luce/freccia elastica differita = 200
Mensola Y: Nessuno; Mensola X: Nessuno
Classe di servizio 1

**Verifica taglio D.M. 17-01-18 §4.4.8.1.9**

Sezione ad ascissa 134.8

Coefficiente parziale di sicurezza del materiale γ = 1.5
Kmod = 0.8; kcr = 0.67
τ,d <= fv,d
Sqrt(1.05^2+6.55^2) = 6.63 <= 16 Comb: SLU, 71; Durata minima del carico nella combinazione: media
Tx = 37.3; Ty = -232.8

**Verifica pressoflessione D.M. 17-01-18 §4.4.8.1.8**

Sezione ad ascissa 0
Coefficiente parziale di sicurezza del materiale γ = 1.5
Kmod = 0.8; Kh = 1.084 (formula 11.7.1)
(Sc,0,d/fc,0,d)^2 + Sm,y,d/fm,y,d + Km*(Sm,z,d/fm,z,d) <= 1
(Sc,0,d/fc,0,d)^2 + Km*(Sm,y,d/fm,y,d) + Sm,z,d/fm,z,d <= 1
(2.1/85.3)^2+142.2/81+0.7*24.1/80.97=1.96 !> 1 [4.4.7a] Comb: SLU, 71; Durata minima del carico nella combinazione: media - NON SODDISFATTA
Mx = -18954.8; My = -2566.6; N = -165

**Verifica taglio+torsione D.M. 17-01-18 §4.4.8.1.11**

Sezione ad ascissa 134.8
Coefficiente parziale di sicurezza del materiale γ = 1.5
Kmod = 0.8; Kh = 1.084 (formula 11.7.1); kcr = 0.67
τ,tor,d/(ksh*fv,d) + (τ,y,d/fv,d)^2 + (τ,z,d/fv,d)^2 <= 1
0.25+0+0.17 <= 1 Comb: SLU, 79; Durata minima del carico nella combinazione: media
Tx = 37.5; Ty = -232.4; Mt = -670.4

**Verifica torsione D.M. 17-01-18 §4.4.8.1.10**

Sezione ad ascissa 134.8
Coefficiente parziale di sicurezza del materiale γ = 1.5
Kmod = 0.8
τ,tor,d <= Ksh * fv,d
4.73 <= 19 Comb: SLU, 79; Durata minima del carico nella combinazione: media
Mt = -670.4

---

## Asta 300: Trave in legno a falda Falda 4 fili 79-80

Verifiche condotte secondo D.M. 17-01-18 (N.T.C.)

**Dati generali**

Lunghezza = 14.4

**Caratteristiche della sezione**

| Descrizione | Tipo | Base | Altezza | Area | Jx | Jy | Wx | Wy |
|---|---|---|---|---|---|---|---|---|
| R 8x10 | Rettangolare | 8 | 10 | 80 | 666.67 | 426.67 | 133.33 | 106.67 |

Materiale: C14 EN 338:2016
Rapporto luce/freccia elastica limite = 300
Rapporto luce/freccia elastica differita = 200
Mensola Y: Nessuno; Mensola X: Nessuno
Classe di servizio 1

**Verifica trazione parallela alla fibratura D.M. 17-01-18 §4.4.8.1.1**

Sezione ad ascissa 6.7
Coefficiente parziale di sicurezza del materiale γ = 1.5
Kmod = 1.1; Kh = 1.084 (formula 11.7.1)
St,0,d <= ft,0,d
0.17 <= 57.26 Comb: SLV, 4; Durata minima del carico nella combinazione: istantaneo
N = 13.9

**Verifica flessione D.M. 17-01-18 §4.4.8.1.6**

Sezione ad ascissa 0
Coefficiente parziale di sicurezza del materiale γ = 1.5
Kmod = 0.6; Kh = 1.084 (formula 11.7.1)
Sm,y,d/fm,y,d + Km*(Sm,z,d/fm,z,d) <= 1
Km*(Sm,y,d/fm,y,d) + Sm,z,d/fm,z,d <= 1
0/60.7+0.7*0/60.7=0 <= 1 (formula 4.4.5a) Comb: SLU, 43; Durata minima del carico nella combinazione: permanente
Mx = 3.5; My = 0

---

## Asta 301: Trave in legno a falda Falda 4 fili 70-71

Verifiche condotte secondo D.M. 17-01-18 (N.T.C.)

**Dati generali**

Lunghezza = 57.8

Caratteristiche della sezione

| Descrizione | Tipo | Base | Altezza | Area | Jx | Jy | Wx | Wy |
|---|---|---|---|---|---|---|---|---|
| R 8x10 | Rettangolare | 8 | 10 | 80 | 666.67 | 426.67 | 133.33 | 106.67 |

Materiale: C14 EN 338:2016
Rapporto luce/freccia elastica limite = 300
Rapporto luce/freccia elastica differita = 200
Mensola Y: Nessuno; Mensola X: Nessuno
Classe di servizio 1

Verifica taglio D.M. 17-01-18 §4.4.8.1.9

Sezione ad ascissa 57.8
Coefficiente parziale di sicurezza del materiale γ = 1.5
Kmod = 0.8; kcr = 0.67
τ,d > fv,d
Sqrt(2.59^2+19.47^2) = 19.64 > 16 Comb: SLU, 71; Durata minima del carico nella combinazione: media - NON SODDISFATTA
Tx = 92.2; Ty = -692.3

Verifica pressoflessione D.M. 17-01-18 §4.4.8.1.8

Sezione ad ascissa 0
Coefficiente parziale di sicurezza del materiale γ = 1.5
Kmod = 0.8; Kh = 1.084 (formula 11.7.1)
(Sc,0,d/fc,0,d)^2 + Sm,y,d/fm,y,d + Km*(Sm,z,d/fm,z,d) <= 1
(Sc,0,d/fc,0,d)^2 + Km*(Sm,y,d/fm,y,d) + Sm,z,d/fm,z,d <= 1
(4.5/85.3)^2+226/81+0.7*23.7/80.97=3 !> 1 [4.4.7a] Comb: SLU, 71; Durata minima del carico nella combinazione: media - NON SODDISFATTA
Mx = -30127; My = -2526.8; N = -360.4

Verifica taglio+torsione D.M. 17-01-18 §4.4.8.1.11

Sezione ad ascissa 57.8
Coefficiente parziale di sicurezza del materiale γ = 1.5
Kmod = 0.8; Kh = 1.084 (formula 11.7.1); kcr = 0.67
τ,tor,d/(ksh*fv,d) + (τ,y,d/fv,d)^2 + (τ,z,d/fv,d)^2 > 1
0.51+0.03+1.48 > 1 Comb: SLU, 71; Durata minima del carico nella combinazione: media - NON SODDISFATTA
Tx = 92.2; Ty = -692.3; Mt = -1384.8

Verifica torsione D.M. 17-01-18 §4.4.8.1.10

Sezione ad ascissa 57.8
Coefficiente parziale di sicurezza del materiale γ = 1.5
Kmod = 0.8
τ,tor,d <= Ksh * fv,d
9.81 <= 19 Comb: SLU, 79; Durata minima del carico nella combinazione: media
Mt = -1389.3

## Asta 302: Trave in legno a falda Falda 4 fili 70-71

Verifiche condotte secondo D.M. 17-01-18 (N.T.C.)

Dati generali

Lunghezza = 14.4

Caratteristiche della sezione

| Descrizione | Tipo | Base | Altezza | Area | Jx | Jy | Wx | Wy |
|---|---|---|---|---|---|---|---|---|
| R 8x10 | Rettangolare | 8 | 10 | 80 | 666.67 | 426.67 | 133.33 | 106.67 |

Materiale: C14 EN 338:2016
Rapporto luce/freccia elastica limite = 300
Rapporto luce/freccia elastica differita = 200
Mensola Y: Nessuno; Mensola X: Nessuno
Classe di servizio 1

Verifica trazione parallela alla fibratura D.M. 17-01-18 §4.4.8.1.1

Sezione ad ascissa 5.8
Coefficiente parziale di sicurezza del materiale γ = 1.5
Kmod = 1.1; Kh = 1.084 (formula 11.7.1)
St,0,d <= ft,0,d
0.44 <= 57.26 Comb: SLV, 4; Durata minima del carico nella combinazione: istantaneo
N = 35.1

Verifica flessione D.M. 17-01-18 §4.4.8.1.6

Sezione ad ascissa 0
Coefficiente parziale di sicurezza del materiale γ = 1.5
Kmod = 1.1; Kh = 1.084 (formula 11.7.1)
Sm,y,d/fm,y,d + Km*(Sm,z,d/fm,z,d) <= 1

Km*(Sm,y,d/fm,y,d) + Sm,z,d/fm,z,d <= 1
0.1/111.3+0.7*0/111.3=0 <= 1 (formula 4.4.5a) Comb: SLV, 14; Durata minima del carico nella combinazione: istantaneo
Mx = 8.5; My = -1.7

**Verifica taglio D.M. 17-01-18 §4.4.8.1.9**

Sezione ad ascissa 0
Coefficiente parziale di sicurezza del materiale γ = 1.5
Kmod = 1.1; kcr = 0.67
τ,d <= fv,d
Sqrt(0^2+0.03^2) = 0.03 <= 22 Comb: SLV, 14; Durata minima del carico nella combinazione: istantaneo
Tx = 0.1; Ty = 1.2

---

## Asta 303: Trave in legno a falda Falda 3 fili 106-107

Verifiche condotte secondo D.M. 17-01-18 (N.T.C.)

**Dati generali**

Lunghezza = 74

**Caratteristiche della sezione**

| Descrizione | Tipo | Base | Altezza | Area | Jx | Jy | Wx | Wy |
|---|---|---|---|---|---|---|---|---|
| R 8x10 | Rettangolare | 8 | 10 | 80 | 666.67 | 426.67 | 133.33 | 106.67 |

Materiale: C14 EN 338:2016
Rapporto luce/freccia elastica limite = 300
Rapporto luce/freccia elastica differita = 200
Mensola Y: Nessuno; Mensola X: Nessuno
Classe di servizio 1

**Verifica tensoflessione D.M. 17-01-18 §4.4.8.1.7**

Sezione ad ascissa 0
Coefficiente parziale di sicurezza del materiale γ = 1.5
Kmod = 0.8; Kh = 1.084 (formula 11.7.1)
St,0,d/ft,0,d + Sm,y,d/fm,y,d + Km*(Sm,z,d/fm,z,d) !> 1
St,0,d/ft,0,d + Km*(Sm,y,d/fm,y,d) + Sm,z,d/fm,z,d <= 1
3.7/41.6+87.3/81+0.7*5.4/81=1.21 !> 1 [4.4.6a] Comb: SLU, 80; Durata minima del carico nella combinazione: media - NON SODDISFATTA
Mx = 11646.5; My = 580.3; N = 296.5

**Verifica taglio D.M. 17-01-18 §4.4.8.1.9**

Sezione ad ascissa 0
Coefficiente parziale di sicurezza del materiale γ = 1.5
Kmod = 0.8; kcr = 0.67
τ,d <= fv,d
Sqrt(0.47^2+6.62^2) = 6.64 <= 16 Comb: SLU, 80; Durata minima del carico nella combinazione: media
Tx = -16.7; Ty = 235.5

**Verifica taglio+torsione D.M. 17-01-18 §4.4.8.1.11**

Sezione ad ascissa 0
Coefficiente parziale di sicurezza del materiale γ = 1.5
Kmod = 0.8; Kh = 1.084 (formula 11.7.1); kcr = 0.67
τ,tor,d/(ksh*fv,d) + (τ,y,d/fv,d)^2 + (τ,z,d/fv,d)^2 <= 1
0.01+0+0.17 <= 1 Comb: SLU, 80; Durata minima del carico nella combinazione: media
Tx = -16.7; Ty = 235.5; Mt = -32.8

**Verifica torsione D.M. 17-01-18 §4.4.8.1.10**

Sezione ad ascissa 74
Coefficiente parziale di sicurezza del materiale γ = 1.5
Kmod = 1.1
τ,tor,d <= Ksh * fv,d
0.56 <= 26.13 Comb: SLV, 12; Durata minima del carico nella combinazione: istantaneo
Mt = -79.8

---

## Asta 304: Trave in legno a falda Falda 3 fili 58-59

Verifiche condotte secondo D.M. 17-01-18 (N.T.C.)

**Dati generali**

Lunghezza = 303.6

**Caratteristiche della sezione**

| Descrizione | Tipo | Base | Altezza | Area | Jx | Jy | Wx | Wy |
|---|---|---|---|---|---|---|---|---|
| R 8x10 | Rettangolare | 8 | 10 | 80 | 666.67 | 426.67 | 133.33 | 106.67 |

Materiale: C14 EN 338:2016
Rapporto luce/freccia elastica limite = 300
Rapporto luce/freccia elastica differita = 200
Mensola Y: Nessuno; Mensola X: Nessuno
Classe di servizio 1

**Verifica tensoflessione D.M. 17-01-18 §4.4.8.1.7**

Sezione ad ascissa 303.6
Coefficiente parziale di sicurezza del materiale γ = 1.5
Kmod = 0.8; Kh = 1.084 (formula 11.7.1)
St,0,d/ft,0,d + Sm,y,d/fm,y,d + Km*(Sm,z,d/fm,z,d) !> 1
St,0,d/ft,0,d + Km*(Sm,y,d/fm,y,d) + Sm,z,d/fm,z,d !> 1
1.2/41.6+163/81+0.7*1.8/81=2.06 !> 1 [4.4.6a] Comb: SLU, 71; Durata minima del carico nella combinazione: media - NON SODDISFATTA
Mx = -21731.1; My = -187.1; N = 94.3

**Verifica taglio D.M. 17-01-18 §4.4.8.1.9**

Sezione ad ascissa 0
Coefficiente parziale di sicurezza del materiale γ = 1.5
Kmod = 0.8; kcr = 0.67
τ,d <= fv,d
Sqrt(0.02^2+3.65^2) = 3.65 <= 16 Comb: SLU, 71; Durata minima del carico nella combinazione: media
Tx = -0.7; Ty = 129.7

**Verifica taglio+torsione D.M. 17-01-18 §4.4.8.1.11**

Sezione ad ascissa 0
Coefficiente parziale di sicurezza del materiale γ = 1.5
Kmod = 0.8; Kh = 1.084 (formula 11.7.1); kcr = 0.67
τ,tor,d/(ksh*fv,d) + (τ,y,d/fv,d)^2 + (τ,z,d/fv,d)^2 <= 1
0.04+0+0.05 <= 1 Comb: SLU, 79; Durata minima del carico nella combinazione: media
Tx = -0.5; Ty = 129.6; Mt = -120.2

**Verifica torsione D.M. 17-01-18 §4.4.8.1.10**

Sezione ad ascissa 303.6
Coefficiente parziale di sicurezza del materiale γ = 1.5
Kmod = 0.8
τ,tor,d <= Ksh * fv,d
0.85 <= 19 Comb: SLU, 37; Durata minima del carico nella combinazione: media
Mt = -120.6

---

## Asta 305: Trave in legno a falda Falda 3 fili 67-68

Verifiche condotte secondo D.M. 17-01-18 (N.T.C.)

**Dati generali**

Lunghezza = 303.6

**Caratteristiche della sezione**

| Descrizione | Tipo | Base | Altezza | Area | Jx | Jy | Wx | Wy |
|---|---|---|---|---|---|---|---|---|
| R 8x10 | Rettangolare | 8 | 10 | 80 | 666.67 | 426.67 | 133.33 | 106.67 |

Materiale: C14 EN 338:2016
Rapporto luce/freccia elastica limite = 300
Rapporto luce/freccia elastica differita = 200
Mensola Y: Nessuno; Mensola X: Nessuno
Classe di servizio 1

**Verifica tensoflessione D.M. 17-01-18 §4.4.8.1.7**

Sezione ad ascissa 303.6
Coefficiente parziale di sicurezza del materiale γ = 1.5
Kmod = 0.8; Kh = 1.084 (formula 11.7.1)
St,0,d/ft,0,d + Sm,y,d/fm,y,d + Km*(Sm,z,d/fm,z,d) !> 1
St,0,d/ft,0,d + Km*(Sm,y,d/fm,y,d) + Sm,z,d/fm,z,d !> 1
1.4/41.6+153.5/81+0.7*1.8/81=1.94 !> 1 [4.4.6a] Comb: SLU, 71; Durata minima del carico nella combinazione: media - NON SODDISFATTA
Mx = -20468.9; My = -187.4; N = 110.1

**Verifica taglio D.M. 17-01-18 §4.4.8.1.9**

Sezione ad ascissa 0
Coefficiente parziale di sicurezza del materiale γ = 1.5
Kmod = 0.8; kcr = 0.67
τ,d <= fv,d
Sqrt(0.04^2+3.29^2) = 3.29 <= 16 Comb: SLU, 71; Durata minima del carico nella combinazione: media
Tx = -1.6; Ty = 117

**Verifica taglio+torsione D.M. 17-01-18 §4.4.8.1.11**

Sezione ad ascissa 0
Coefficiente parziale di sicurezza del materiale γ = 1.5
Kmod = 0.8; Kh = 1.084 (formula 11.7.1); kcr = 0.67
τ,tor,d/(ksh*fv,d) + (τ,y,d/fv,d)^2 + (τ,z,d/fv,d)^2 <= 1
0.06+0+0.04 <= 1 Comb: SLU, 79; Durata minima del carico nella combinazione: media
Tx = -1.3; Ty = 116.9; Mt = -168.7

**Verifica torsione D.M. 17-01-18 §4.4.8.1.10**

Sezione ad ascissa 303.6
Coefficiente parziale di sicurezza del materiale γ = 1.5
Kmod = 0.8
τ,tor,d <= Ksh * fv,d
1.2 <= 19 Comb: SLU, 80; Durata minima del carico nella combinazione: media
Mt = -170

---

## Asta 306: Trave in legno a falda Falda 3 fili 76-77

Verifiche condotte secondo D.M. 17-01-18 (N.T.C.)

**Dati generali**

Lunghezza = 303.6

**Caratteristiche della sezione**

| Descrizione | Tipo | Base | Altezza | Area | Jx | Jy | Wx | Wy |
|---|---|---|---|---|---|---|---|---|
| R 8x10 | Rettangolare | 8 | 10 | 80 | 666.67 | 426.67 | 133.33 | 106.67 |

Materiale: C14 EN 338:2016
Rapporto luce/freccia elastica limite = 300
Rapporto luce/freccia elastica differita = 200
Mensola Y: Nessuno; Mensola X: Nessuno
Classe di servizio 1

**Verifica tensoflessione D.M. 17-01-18 §4.4.8.1.7**

Sezione ad ascissa 303.6
Coefficiente parziale di sicurezza del materiale γ = 1.5
Kmod = 0.8; Kh = 1.084 (formula 11.7.1)
St,0,d/ft,0,d + Sm,y,d/fm,y,d + Km*(Sm,z,d/fm,z,d) !> 1
St,0,d/ft,0,d + Km*(Sm,y,d/fm,y,d) + Sm,z,d/fm,z,d !> 1
4.4/41.6+142.6/81+0.7*2.6/81=1.89 !> 1 [4.4.6a] Comb: SLU, 80; Durata minima del carico nella combinazione: media - NON SODDISFATTA
Mx = -19012.8; My = 278.2; N = 353.1

**Verifica taglio D.M. 17-01-18 §4.4.8.1.9**

Sezione ad ascissa 0
Coefficiente parziale di sicurezza del materiale γ = 1.5
Kmod = 0.8; kcr = 0.67
τ,d <= fv,d
Sqrt(0.04^2+2.98^2) = 2.98 <= 16 Comb: SLU, 79; Durata minima del carico nella combinazione: media
Tx = 1.4; Ty = 106.1

**Verifica taglio+torsione D.M. 17-01-18 §4.4.8.1.11**

Sezione ad ascissa 0
Coefficiente parziale di sicurezza del materiale γ = 1.5
Kmod = 0.8; Kh = 1.084 (formula 11.7.1); kcr = 0.67
τ,tor,d/(ksh*fv,d) + (τ,y,d/fv,d)^2 + (τ,z,d/fv,d)^2 <= 1
0.07+0+0.03 <= 1 Comb: SLU, 79; Durata minima del carico nella combinazione: media
Tx = 1.4; Ty = 106.1; Mt = -189.3

**Verifica torsione D.M. 17-01-18 §4.4.8.1.10**

Sezione ad ascissa 303.6
Coefficiente parziale di sicurezza del materiale γ = 1.5
Kmod = 0.8
τ,tor,d <= Ksh * fv,d
1.35 <= 19 Comb: SLU, 80; Durata minima del carico nella combinazione: media
Mt = -190.5

---

## Asta 307: Trave in legno a falda Falda 3 fili 83-84

Verifiche condotte secondo D.M. 17-01-18 (N.T.C.)

### Dati generali

Lunghezza = 321.1

### Caratteristiche della sezione

| Descrizione | Tipo | Base | Altezza | Area | Jx | Jy | Wx | Wy |
|---|---|---|---|---|---|---|---|---|
| R 8x10 | Rettangolare | 8 | 10 | 80 | 666.67 | 426.67 | 133.33 | 106.67 |

Materiale: C14 EN 338:2016
Rapporto luce/freccia elastica limite = 300
Rapporto luce/freccia elastica differita = 200
Mensola Y: Nessuno; Mensola X: Nessuno
Classe di servizio 1

### Verifica tensoflessione D.M. 17-01-18 §4.4.8.1.7

Sezione ad ascissa 321
Coefficiente parziale di sicurezza del materiale γ = 1.5
Kmod = 0.8; Kh = 1.084 (formula 11.7.1)
St,0,d/ft,0,d + Sm,y,d/fm,y,d + Km*(Sm,z,d/fm,z,d) !> 1
St,0,d/ft,0,d + Km*(Sm,y,d/fm,y,d) + Sm,z,d/fm,z,d !> 1
5.5/41.6+120.5/81+0.7*2.1/81=1.64 !> 1 [4.4.6a] Comb: SLU, 80; Durata minima del carico nella combinazione: media - NON SODDISFATTA
Mx = -16064.1; My = 223.3; N = 443.6

### Verifica taglio D.M. 17-01-18 §4.4.8.1.9

Sezione ad ascissa 0
Coefficiente parziale di sicurezza del materiale γ = 1.5
Kmod = 0.8; kcr = 0.67
τ,d <= fv,d
Sqrt(0.03^2+2.35^2) = 2.35 <= 16 Comb: SLU, 79; Durata minima del carico nella combinazione: media
Tx = 0.9; Ty = 83.7

### Verifica taglio+torsione D.M. 17-01-18 §4.4.8.1.11

Sezione ad ascissa 0
Coefficiente parziale di sicurezza del materiale γ = 1.5
Kmod = 0.8; Kh = 1.084 (formula 11.7.1); kcr = 0.67
τ,tor,d/(ksh*fv,d) + (τ,y,d/fv,d)^2 + (τ,z,d/fv,d)^2 <= 1
0.05+0+0.02 <= 1 Comb: SLU, 80; Durata minima del carico nella combinazione: media
Tx = 1.3; Ty = 83.7; Mt = -136.9

### Verifica torsione D.M. 17-01-18 §4.4.8.1.10

Sezione ad ascissa 321
Coefficiente parziale di sicurezza del materiale γ = 1.5
Kmod = 0.8
τ,tor,d <= Ksh * fv,d
0.97 <= 19 Comb: SLU, 80; Durata minima del carico nella combinazione: media
Mt = -136.9

---

## Asta 308: Trave in legno a falda Falda 3 fili 91-92

Verifiche condotte secondo D.M. 17-01-18 (N.T.C.)

### Dati generali

Lunghezza = 238.7

### Caratteristiche della sezione

| Descrizione | Tipo | Base | Altezza | Area | Jx | Jy | Wx | Wy |
|---|---|---|---|---|---|---|---|---|
| R 8x10 | Rettangolare | 8 | 10 | 80 | 666.67 | 426.67 | 133.33 | 106.67 |

Materiale: C14 EN 338:2016
Rapporto luce/freccia elastica limite = 300
Rapporto luce/freccia elastica differita = 200
Mensola Y: Nessuno; Mensola X: Nessuno
Classe di servizio 1

### Verifica tensoflessione D.M. 17-01-18 §4.4.8.1.7

Sezione ad ascissa 238.7
Coefficiente parziale di sicurezza del materiale γ = 1.5
Kmod = 0.8; Kh = 1.084 (formula 11.7.1)
St,0,d/ft,0,d + Sm,y,d/fm,y,d + Km*(Sm,z,d/fm,z,d) !> 1
St,0,d/ft,0,d + Km*(Sm,y,d/fm,y,d) + Sm,z,d/fm,z,d !> 1
4.2/41.6+101.4/81+0.7*6.1/81=1.4 !> 1 [4.4.6a] Comb: SLU, 71; Durata minima del carico nella combinazione: media - NON SODDISFATTA
Mx = -13516.6; My = -655.7; N = 332.8

### Verifica taglio D.M. 17-01-18 §4.4.8.1.9

Sezione ad ascissa 0

Coefficiente parziale di sicurezza del materiale γ = 1.5
Kmod = 0.8; kcr = 0.67
τ,d <= fv,d
Sqrt(0.1^2+2.96^2) = 2.96 <= 16 Comb: SLU, 80; Durata minima del carico nella combinazione: media
Tx = -3.6; Ty = 105.3

**Verifica taglio+torsione D.M. 17-01-18 §4.4.8.1.11**

Sezione ad ascissa 0
Coefficiente parziale di sicurezza del materiale γ = 1.5
Kmod = 0.8; Kh = 1.084 (formula 11.7.1); kcr = 0.67
τ,tor,d/(ksh*fv,d) + (τ,y,d/fv,d)^2 + (τ,z,d/fv,d)^2 <= 1
0.04+0+0.03 <= 1 Comb: SLU, 80; Durata minima del carico nella combinazione: media
Tx = -3.6; Ty = 105.3; Mt = -114.2

**Verifica torsione D.M. 17-01-18 §4.4.8.1.10**

Sezione ad ascissa 238.7
Coefficiente parziale di sicurezza del materiale γ = 1.5
Kmod = 0.8
τ,tor,d <= Ksh * fv,d
0.81 <= 19 Comb: SLU, 38; Durata minima del carico nella combinazione: media
Mt = -114.2

---

## Asta 309: Trave in legno a falda Falda 3 fili 99-100

Verifiche condotte secondo D.M. 17-01-18 (N.T.C.)

**Dati generali**

Lunghezza = 156.3

**Caratteristiche della sezione**

| Descrizione | Tipo | Base | Altezza | Area | Jx | Jy | Wx | Wy |
|---|---|---|---|---|---|---|---|---|
| R 8x10 | Rettangolare | 8 | 10 | 80 | 666.67 | 426.67 | 133.33 | 106.67 |

Materiale: C14 EN 338:2016
Rapporto luce/freccia elastica limite = 300
Rapporto luce/freccia elastica differita = 200
Mensola Y: Nessuno; Mensola X: Nessuno
Classe di servizio 1

**Verifica tensoflessione D.M. 17-01-18 §4.4.8.1.7**

Sezione ad ascissa 0
Coefficiente parziale di sicurezza del materiale γ = 1.5
Kmod = 0.8; Kh = 1.084 (formula 11.7.1)
St,0,d/ft,0,d + Sm,y,d/fm,y,d + Km*(Sm,z,d/fm,z,d) !> 1
St,0,d/ft,0,d + Km*(Sm,y,d/fm,y,d) + Sm,z,d/fm,z,d <= 1
2.4/41.6+90.8/81+0.7*6.4/81=1.24 !> 1 [4.4.6a] Comb: SLU, 80; Durata minima del carico nella combinazione: media - NON SODDISFATTA
Mx = 12112; My = 685.7; N = 192.4

**Verifica taglio D.M. 17-01-18 §4.4.8.1.9**

Sezione ad ascissa 0
Coefficiente parziale di sicurezza del materiale γ = 1.5
Kmod = 0.8; kcr = 0.67
τ,d <= fv,d
Sqrt(0.27^2+4.05^2) = 4.05 <= 16 Comb: SLU, 80; Durata minima del carico nella combinazione: media
Tx = -9.7; Ty = 143.8

**Verifica taglio+torsione D.M. 17-01-18 §4.4.8.1.11**

Sezione ad ascissa 0
Coefficiente parziale di sicurezza del materiale γ = 1.5
Kmod = 0.8; Kh = 1.084 (formula 11.7.1); kcr = 0.67
τ,tor,d/(ksh*fv,d) + (τ,y,d/fv,d)^2 + (τ,z,d/fv,d)^2 <= 1
0.02+0+0.06 <= 1 Comb: SLU, 80; Durata minima del carico nella combinazione: media
Tx = -9.7; Ty = 143.8; Mt = -62.9

**Verifica torsione D.M. 17-01-18 §4.4.8.1.10**

Sezione ad ascissa 156.3
Coefficiente parziale di sicurezza del materiale γ = 1.5
Kmod = 0.8
τ,tor,d <= Ksh * fv,d
0.45 <= 19 Comb: SLU, 38; Durata minima del carico nella combinazione: media
Mt = -63.3

---

## Asta 310: Trave in legno a falda Falda 3 fili 46-47

Verifiche condotte secondo D.M. 17-01-18 (N.T.C.)

### Dati generali

Lunghezza = 182.9

### Caratteristiche della sezione

| Descrizione | Tipo | Base | Altezza | Area | Jx | Jy | Wx | Wy |
|---|---|---|---|---|---|---|---|---|
| R 8x10 | Rettangolare | 8 | 10 | 80 | 666.67 | 426.67 | 133.33 | 106.67 |

Materiale: C14 EN 338:2016
Rapporto luce/freccia elastica limite = 300
Rapporto luce/freccia elastica differita = 200
Mensola Y: Nessuno; Mensola X: Nessuno
Classe di servizio 1

### Verifica taglio D.M. 17-01-18 §4.4.8.1.9

Sezione ad ascissa 0
Coefficiente parziale di sicurezza del materiale γ = 1.5
Kmod = 0.8; kcr = 0.67
τ,d <= fv,d
Sqrt(0.53^2+3.97^2) = 4.01 <= 16 Comb: SLU, 71; Durata minima del carico nella combinazione: media
Tx = -18.7; Ty = 141.2

### Verifica pressoflessione D.M. 17-01-18 §4.4.8.1.8

Sezione ad ascissa 182.9
Coefficiente parziale di sicurezza del materiale γ = 1.5
Kmod = 0.8; Kh = 1.084 (formula 11.7.1)
(Sc,0,d/fc,0,d)^2 + Sm,y,d/fm,y,d + Km*(Sm,z,d/fm,z,d) <= 1
(Sc,0,d/fc,0,d)^2 + Km*(Sm,y,d/fm,y,d) + Sm,z,d/fm,z,d <= 1
(3.9/85.3)^2+152.4/81+0.7*15.9/80.97=2.02 !> 1 [4.4.7a] Comb: SLU, 71; Durata minima del carico nella combinazione: media - NON SODDISFATTA
Mx = -20324.9; My = -1696; N = -315.3

### Verifica taglio+torsione D.M. 17-01-18 §4.4.8.1.11

Sezione ad ascissa 0
Coefficiente parziale di sicurezza del materiale γ = 1.5
Kmod = 0.8; Kh = 1.084 (formula 11.7.1); kcr = 0.67
τ,tor,d/(ksh*fv,d) + (τ,y,d/fv,d)^2 + (τ,z,d/fv,d)^2 <= 1
0.06+0+0.06 <= 1 Comb: SLU, 71; Durata minima del carico nella combinazione: media
Tx = -18.7; Ty = 141.2; Mt = 150.5

### Verifica torsione D.M. 17-01-18 §4.4.8.1.10

Sezione ad ascissa 182.9
Coefficiente parziale di sicurezza del materiale γ = 1.5
Kmod = 0.8
τ,tor,d <= Ksh * fv,d
1.06 <= 19 Comb: SLU, 72; Durata minima del carico nella combinazione: media
Mt = 150.7

---

## Asta 311: Trave in legno a falda Falda 3 fili 52-53

Verifiche condotte secondo D.M. 17-01-18 (N.T.C.)

### Dati generali

Lunghezza = 264.2

### Caratteristiche della sezione

| Descrizione | Tipo | Base | Altezza | Area | Jx | Jy | Wx | Wy |
|---|---|---|---|---|---|---|---|---|
| R 8x10 | Rettangolare | 8 | 10 | 80 | 666.67 | 426.67 | 133.33 | 106.67 |

Materiale: C14 EN 338:2016
Rapporto luce/freccia elastica limite = 300
Rapporto luce/freccia elastica differita = 200
Mensola Y: Nessuno; Mensola X: Nessuno
Classe di servizio 1

### Verifica tensoflessione D.M. 17-01-18 §4.4.8.1.7

Sezione ad ascissa 264.3
Coefficiente parziale di sicurezza del materiale γ = 1.5
Kmod = 0.8; Kh = 1.084 (formula 11.7.1)
St,0,d/ft,0,d + Sm,y,d/fm,y,d + Km*(Sm,z,d/fm,z,d) !> 1
St,0,d/ft,0,d + Km*(Sm,y,d/fm,y,d) + Sm,z,d/fm,z,d !> 1
7.9/41.6+162.9/81+0.7*12.6/81=2.31 !> 1 [4.4.6a] Comb: SLU, 72; Durata minima del carico nella combinazione: media - NON SODDISFATTA

Mx = -21716.3; My = -1345.1; N = 630.8

**Verifica taglio D.M. 17-01-18 §4.4.8.1.9**

Sezione ad ascissa 0
Coefficiente parziale di sicurezza del materiale γ = 1.5
Kmod = 0.8; kcr = 0.67
τ,d <= fv,d
Sqrt(0.35^2+3.89^2) = 3.91 <= 16 Comb: SLU, 71; Durata minima del carico nella combinazione: media
Tx = -12.6; Ty = 138.5

**Verifica taglio+torsione D.M. 17-01-18 §4.4.8.1.11**

Sezione ad ascissa 0
Coefficiente parziale di sicurezza del materiale γ = 1.5
Kmod = 0.8; Kh = 1.084 (formula 11.7.1); kcr = 0.67
τ,tor,d/(ksh*fv,d) + (τ,y,d/fv,d)^2 + (τ,z,d/fv,d)^2 <= 1
0.03+0+0.06 <= 1 Comb: SLU, 71; Durata minima del carico nella combinazione: media
Tx = -12.6; Ty = 138.5; Mt = 68.4

**Verifica torsione D.M. 17-01-18 §4.4.8.1.10**

Sezione ad ascissa 264.3
Coefficiente parziale di sicurezza del materiale γ = 1.5
Kmod = 0.8
τ,tor,d <= Ksh * fv,d
0.48 <= 19 Comb: SLU, 71; Durata minima del carico nella combinazione: media
Mt = 68.4

---

## Asta 312: Trave in legno a falda Falda 3 fili 40-41

Verifiche condotte secondo D.M. 17-01-18 (N.T.C.)

**Dati generali**

Lunghezza = 101.5

**Caratteristiche della sezione**

| Descrizione | Tipo | Base | Altezza | Area | Jx | Jy | Wx | Wy |
|---|---|---|---|---|---|---|---|---|
| R 8x10 | Rettangolare | 8 | 10 | 80 | 666.67 | 426.67 | 133.33 | 106.67 |

Materiale: C14 EN 338:2016
Rapporto luce/freccia elastica limite = 300
Rapporto luce/freccia elastica differita = 200
Mensola Y: Nessuno; Mensola X: Nessuno
Classe di servizio 1

**Verifica taglio D.M. 17-01-18 §4.4.8.1.9**

Sezione ad ascissa 0
Coefficiente parziale di sicurezza del materiale γ = 1.5
Kmod = 0.8; kcr = 0.67
τ,d <= fv,d
Sqrt(0.66^2+5^2) = 5.04 <= 16 Comb: SLU, 71; Durata minima del carico nella combinazione: media
Tx = -23.3; Ty = 177.8

**Verifica pressoflessione D.M. 17-01-18 §4.4.8.1.8**

Sezione ad ascissa 101.5
Coefficiente parziale di sicurezza del materiale γ = 1.5
Kmod = 0.8; Kh = 1.084 (formula 11.7.1)
(Sc,0,d/fc,0,d)^2 + Sm,y,d/fm,y,d + Km*(Sm,z,d/fm,z,d) <= 1
(Sc,0,d/fc,0,d)^2 + Km*(Sm,y,d/fm,y,d) + Sm,z,d/fm,z,d <= 1
(2.1/85.3)^2+141.8/81+0.7*11.4/80.97=1.85 !> 1 [4.4.7a] Comb: SLU, 72; Durata minima del carico nella combinazione: media - NON SODDISFATTA
Mx = -18907.5; My = -1212.5; N = -165.2

**Verifica taglio+torsione D.M. 17-01-18 §4.4.8.1.11**

Sezione ad ascissa 0
Coefficiente parziale di sicurezza del materiale γ = 1.5
Kmod = 0.8; Kh = 1.084 (formula 11.7.1); kcr = 0.67
τ,tor,d/(ksh*fv,d) + (τ,y,d/fv,d)^2 + (τ,z,d/fv,d)^2 <= 1
0.07+0+0.1 <= 1 Comb: SLU, 72; Durata minima del carico nella combinazione: media
Tx = -23.1; Ty = 177.7; Mt = 177.5

**Verifica torsione D.M. 17-01-18 §4.4.8.1.10**

Sezione ad ascissa 101.5
Coefficiente parziale di sicurezza del materiale γ = 1.5
Kmod = 0.8
τ,tor,d <= Ksh * fv,d

1.25 <= 19 Comb: SLU, 72; Durata minima del carico nella combinazione: media
Mt = 177.5

## Asta 313: Trave in legno a falda Falda 3 fili 34-35

Verifiche condotte secondo D.M. 17-01-18 (N.T.C.)

### Dati generali

Lunghezza = 263.8

### Caratteristiche della sezione

| Descrizione | Tipo | Base | Altezza | Area | Jx | Jy | Wx | Wy |
|---|---|---|---|---|---|---|---|---|
| R 8x10 | Rettangolare | 8 | 10 | 80 | 666.67 | 426.67 | 133.33 | 106.67 |

Materiale: C14 EN 338:2016
Rapporto luce/freccia elastica limite = 300
Rapporto luce/freccia elastica differita = 200
Mensola Y: Nessuno; Mensola X: Nessuno
Classe di servizio 1

### Verifica flessione D.M. 17-01-18 §4.4.8.1.6

Sezione ad ascissa 0
Coefficiente parziale di sicurezza del materiale γ = 1.5
Kmod = 0.8; Kh = 1.084 (formula 11.7.1)
Sm,y,d/fm,y,d + Km*(Sm,z,d/fm,z,d) !> 1
Km*(Sm,y,d/fm,y,d) + Sm,z,d/fm,z,d !> 1
122/81+0.7*10.4/81=1.6 !> 1 (formula 4.4.5a) Comb: SLU, 71; Durata minima del carico nella combinazione: media - NON SODDISFATTA
Mx = -16268.5; My = -1105.2

### Verifica taglio D.M. 17-01-18 §4.4.8.1.9

Sezione ad ascissa 263.8
Coefficiente parziale di sicurezza del materiale γ = 1.5
Kmod = 0.8; kcr = 0.67
τ,d <= fv,d
Sqrt(0.2^2+2.41^2) = 2.42 <= 16 Comb: SLU, 72; Durata minima del carico nella combinazione: media
Tx = 7.2; Ty = -85.6

### Verifica taglio+torsione D.M. 17-01-18 §4.4.8.1.11

Sezione ad ascissa 263.8
Coefficiente parziale di sicurezza del materiale γ = 1.5
Kmod = 0.8; Kh = 1.084 (formula 11.7.1); kcr = 0.67
τ,tor,d/(ksh*fv,d) + (τ,y,d/fv,d)^2 + (τ,z,d/fv,d)^2 <= 1
0.06+0+0.02 <= 1 Comb: SLU, 71; Durata minima del carico nella combinazione: media
Tx = 7.4; Ty = -85.4; Mt = -154.2

### Verifica torsione D.M. 17-01-18 §4.4.8.1.10

Sezione ad ascissa 263.8
Coefficiente parziale di sicurezza del materiale γ = 1.5
Kmod = 0.8
τ,tor,d <= Ksh * fv,d
1.09 <= 19 Comb: SLU, 71; Durata minima del carico nella combinazione: media
Mt = -154.2

## Asta 314: Trave in legno a falda Falda 3 fili 29-30

Verifiche condotte secondo D.M. 17-01-18 (N.T.C.)

### Dati generali

Lunghezza = 182.3

### Caratteristiche della sezione

| Descrizione | Tipo | Base | Altezza | Area | Jx | Jy | Wx | Wy |
|---|---|---|---|---|---|---|---|---|
| R 8x10 | Rettangolare | 8 | 10 | 80 | 666.67 | 426.67 | 133.33 | 106.67 |

Materiale: C14 EN 338:2016
Rapporto luce/freccia elastica limite = 300
Rapporto luce/freccia elastica differita = 200
Mensola Y: Nessuno; Mensola X: Nessuno
Classe di servizio 1

### Verifica taglio D.M. 17-01-18 §4.4.8.1.9

Sezione ad ascissa 182.3
Coefficiente parziale di sicurezza del materiale γ = 1.5

Kmod = 0.8; kcr = 0.67
τ,d <= fv,d
Sqrt(0.44^2+4.1^2) = 4.12 <= 16 Comb: SLU, 72; Durata minima del carico nella combinazione: media
Tx = 15.6; Ty = -145.6

**Verifica pressoflessione D.M. 17-01-18 §4.4.8.1.8**

Sezione ad ascissa 0
Coefficiente parziale di sicurezza del materiale γ = 1.5
Kmod = 0.8; Kh = 1.084 (formula 11.7.1)
(Sc,0,d/fc,0,d)^2 + Sm,y,d/fm,y,d + Km*(Sm,z,d/fm,z,d) <= 1
(Sc,0,d/fc,0,d)^2 + Km*(Sm,y,d/fm,y,d) + Sm,z,d/fm,z,d <= 1
(1.9/85.3)^2+128.3/81+0.7*15/80.97=1.71 !> 1 [4.4.7a] Comb: SLU, 72; Durata minima del carico nella combinazione: media - NON SODDISFATTA
Mx = -17100.4; My = -1604.1; N = -149.1

**Verifica taglio+torsione D.M. 17-01-18 §4.4.8.1.11**

Sezione ad ascissa 182.3
Coefficiente parziale di sicurezza del materiale γ = 1.5
Kmod = 0.8; Kh = 1.084 (formula 11.7.1); kcr = 0.67
τ,tor,d/(ksh*fv,d) + (τ,y,d/fv,d)^2 + (τ,z,d/fv,d)^2 <= 1
0.15+0+0.07 <= 1 Comb: SLU, 72; Durata minima del carico nella combinazione: media
Tx = 15.6; Ty = -145.6; Mt = -405.6

**Verifica torsione D.M. 17-01-18 §4.4.8.1.10**

Sezione ad ascissa 182.3
Coefficiente parziale di sicurezza del materiale γ = 1.5
Kmod = 0.8
τ,tor,d <= Ksh * fv,d
2.86 <= 19 Comb: SLU, 72; Durata minima del carico nella combinazione: media
Mt = -405.6

---

## Asta 315: Trave in legno a falda Falda 3 fili 25-26

Verifiche condotte secondo D.M. 17-01-18 (N.T.C.)

**Dati generali**

Lunghezza = 100.9

**Caratteristiche della sezione**

| Descrizione | Tipo | Base | Altezza | Area | Jx | Jy | Wx | Wy |
|---|---|---|---|---|---|---|---|---|
| R 8x10 | Rettangolare | 8 | 10 | 80 | 666.67 | 426.67 | 133.33 | 106.67 |

Materiale: C14 EN 338:2016
Rapporto luce/freccia elastica limite = 300
Rapporto luce/freccia elastica differita = 200
Mensola Y: Nessuno; Mensola X: Nessuno
Classe di servizio 1

**Verifica taglio D.M. 17-01-18 §4.4.8.1.9**

Sezione ad ascissa 100.9
Coefficiente parziale di sicurezza del materiale γ = 1.5
Kmod = 0.8; kcr = 0.67
τ,d <= fv,d
Sqrt(1.06^2+8.56^2) = 8.63 <= 16 Comb: SLU, 72; Durata minima del carico nella combinazione: media
Tx = 37.7; Ty = -304.4

**Verifica pressoflessione D.M. 17-01-18 §4.4.8.1.8**

Sezione ad ascissa 0
Coefficiente parziale di sicurezza del materiale γ = 1.5
Kmod = 0.8; Kh = 1.084 (formula 11.7.1)
(Sc,0,d/fc,0,d)^2 + Sm,y,d/fm,y,d + Km*(Sm,z,d/fm,z,d) <= 1
(Sc,0,d/fc,0,d)^2 + Km*(Sm,y,d/fm,y,d) + Sm,z,d/fm,z,d <= 1
(4.3/85.3)^2+145.3/81+0.7*20.8/80.97=1.98 !> 1 [4.4.7a] Comb: SLU, 72; Durata minima del carico nella combinazione: media - NON SODDISFATTA
Mx = -19378.1; My = -2215.7; N = -343.3

**Verifica taglio+torsione D.M. 17-01-18 §4.4.8.1.11**

Sezione ad ascissa 100.9
Coefficiente parziale di sicurezza del materiale γ = 1.5
Kmod = 0.8; Kh = 1.084 (formula 11.7.1); kcr = 0.67
τ,tor,d/(ksh*fv,d) + (τ,y,d/fv,d)^2 + (τ,z,d/fv,d)^2 <= 1
0.3+0+0.29 <= 1 Comb: SLU, 72; Durata minima del carico nella combinazione: media
Tx = 37.7; Ty = -304.4; Mt = -807

### Verifica torsione D.M. 17-01-18 §4.4.8.1.10

Sezione ad ascissa 100.9
Coefficiente parziale di sicurezza del materiale γ = 1.5
Kmod = 0.8
τ,tor,d <= Ksh * fv,d
5.7 <= 19 Comb: SLU, 72; Durata minima del carico nella combinazione: media
Mt = -807

---

## Asta 316: Trave in legno a falda Falda 3 fili 21-22

Verifiche condotte secondo D.M. 17-01-18 (N.T.C.)

### Dati generali

Lunghezza = 20.5

### Caratteristiche della sezione

| Descrizione | Tipo | Base | Altezza | Area | Jx | Jy | Wx | Wy |
|---|---|---|---|---|---|---|---|---|
| R 8x10 | Rettangolare | 8 | 10 | 80 | 666.67 | 426.67 | 133.33 | 106.67 |

Materiale: C14 EN 338:2016
Rapporto luce/freccia elastica limite = 300
Rapporto luce/freccia elastica differita = 200
Mensola Y: Nessuno; Mensola X: Nessuno
Classe di servizio 1

### Verifica pressoflessione D.M. 17-01-18 §4.4.8.1.8

Sezione ad ascissa 0
Coefficiente parziale di sicurezza del materiale γ = 1.5
Kmod = 0.8; Kh = 1.084 (formula 11.7.1)
(Sc,0,d/fc,0,d)^2 + Sm,y,d/fm,y,d + Km*(Sm,z,d/fm,z,d) <= 1
(Sc,0,d/fc,0,d)^2 + Km*(Sm,y,d/fm,y,d) + Sm,z,d/fm,z,d <= 1
(13.3/85.3)^2+104.2/81+0.7*41.1/80.97=1.67 !> 1 [4.4.7a] Comb: SLU, 72; Durata minima del carico nella combinazione: media - NON SODDISFATTA
Mx = -13897.9; My = 4384.6; N = -1067.6

### Verifica taglio D.M. 17-01-18 §4.4.8.1.9

Sezione ad ascissa 20.5
Coefficiente parziale di sicurezza del materiale γ = 1.5
Kmod = 0.8; kcr = 0.67
τ,d > fv,d
Sqrt(9.95^2+29.5^2) = 31.13 > 16 Comb: SLU, 72; Durata minima del carico nella combinazione: media - NON SODDISFATTA
Tx = -353.8; Ty = -1048.8

### Verifica taglio+torsione D.M. 17-01-18 §4.4.8.1.11

Sezione ad ascissa 20.5
Coefficiente parziale di sicurezza del materiale γ = 1.5
Kmod = 0.8; Kh = 1.084 (formula 11.7.1); kcr = 0.67
τ,tor,d/(ksh*fv,d) + (τ,y,d/fv,d)^2 + (τ,z,d/fv,d)^2 > 1
1.17+0.39+3.4 > 1 Comb: SLU, 72; Durata minima del carico nella combinazione: media - NON SODDISFATTA
Tx = -353.8; Ty = -1048.8; Mt = -3145.4

### Verifica torsione D.M. 17-01-18 §4.4.8.1.10

Sezione ad ascissa 20.5
Coefficiente parziale di sicurezza del materiale γ = 1.5
Kmod = 0.8
τ,tor,d > Ksh * fv,d
22.21 > 19 Comb: SLU, 72; Durata minima del carico nella combinazione: media - NON SODDISFATTA
Mt = -3145.4

### Verifica della freccia istantanea totale D.M. 17-01-18 §C4.4.7 Circolare 7 21-01-19

Sezione ad ascissa 6.8
Kdef = 0
Uinst tot in x = 0
Uinst tot in y = 0
Uinst tot = 0
Luce/Uinst,tot > limite
20.5/0=7026.2 > 300 Comb: SLE rara, 9

### Verifica della freccia istantanea variabile D.M. 17-01-18 §4.4.7

Sezione ad ascissa 6.8
Kdef = 0
Uinst var in x = 0
Uinst var in y = 0

Uinst var = 0
Luce/Uinst,var > limite
20.5/0=10502.2 > 300 Comb: SLE rara, 9

**Verifica della freccia finale EC5 §4.4.7 - EC5 2.2.3 (3)**

Sezione ad ascissa 6.8
Kdef = 0.6
Ufin in x = 0
Ufin in y = 0
Ufin = 0
Luce/Ufin > limite
20.5/0=5862.1 > 200
Coefficienti combinatori impiegati:
Pesi strutturali = 1,000 + 0,600 = 1,600
Permanenti portati = 1,000 + 0,600 = 1,600
Neve = 0,500 + 0,500 = 1,000
Vento = 0,600 + 0,000 = 0,600

---

## Asta 317: Trave in legno a falda Falda 2 fili 55-8

Verifiche condotte secondo D.M. 17-01-18 (N.T.C.)

**Dati generali**

Lunghezza = 512.3

**Caratteristiche della sezione**

| Descrizione | Tipo | Base | Altezza | Area | Jx | Jy | Wx | Wy |
|---|---|---|---|---|---|---|---|---|
| R 8x10 | Rettangolare | 8 | 10 | 80 | 666.67 | 426.67 | 133.33 | 106.67 |

Materiale: C14 EN 338:2016
Rapporto luce/freccia elastica limite = 300
Rapporto luce/freccia elastica differita = 200
Mensola Y: Nessuno; Mensola X: Nessuno
Classe di servizio 1

**Verifica tensoflessione D.M. 17-01-18 §4.4.8.1.7**

Sezione ad ascissa 512.3
Coefficiente parziale di sicurezza del materiale γ = 1.5
Kmod = 1.1; Kh = 1.084 (formula 11.7.1)
St,0,d/ft,0,d + Sm,y,d/fm,y,d + Km*(Sm,z,d/fm,z,d) <= 1
St,0,d/ft,0,d + Km*(Sm,y,d/fm,y,d) + Sm,z,d/fm,z,d <= 1
1.9/57.3+25.7/111.3+0.7*6.5/111.3=0.3 <= 1 [4.4.6a] Comb: SLV, 4; Durata minima del carico nella combinazione: istantaneo
Mx = -3430.4; My = -691.6; N = 148

**Verifica taglio D.M. 17-01-18 §4.4.8.1.9**

Sezione ad ascissa 0
Coefficiente parziale di sicurezza del materiale γ = 1.5
Kmod = 1.1; kcr = 0.67
τ,d <= fv,d
Sqrt(0.01^2+0.5^2) = 0.5 <= 22 Comb: SLV, 2; Durata minima del carico nella combinazione: istantaneo
Tx = -0.5; Ty = 17.6

**Verifica taglio+torsione D.M. 17-01-18 §4.4.8.1.11**

Sezione ad ascissa 0
Coefficiente parziale di sicurezza del materiale γ = 1.5
Kmod = 0.8; Kh = 1.084 (formula 11.7.1); kcr = 0.67
τ,tor,d/(ksh*fv,d) + (τ,y,d/fv,d)^2 + (τ,z,d/fv,d)^2 <= 1
0.02+0+0 <= 1 Comb: SLU, 72; Durata minima del carico nella combinazione: media
Tx = 3; Ty = 9; Mt = -42

**Verifica torsione D.M. 17-01-18 §4.4.8.1.10**

Sezione ad ascissa 512.3
Coefficiente parziale di sicurezza del materiale γ = 1.5
Kmod = 0.8
τ,tor,d <= Ksh * fv,d
0.3 <= 19 Comb: SLU, 72; Durata minima del carico nella combinazione: media
Mt = -42

---

## Asta 318: Trave in legno a falda Falda 2 fili 52-9

Verifiche condotte secondo D.M. 17-01-18 (N.T.C.)

### Dati generali

Lunghezza = 475.2

### Caratteristiche della sezione

| Descrizione | Tipo | Base | Altezza | Area | Jx | Jy | Wx | Wy |
|---|---|---|---|---|---|---|---|---|
| R 8x10 | Rettangolare | 8 | 10 | 80 | 666.67 | 426.67 | 133.33 | 106.67 |

Materiale: C14 EN 338:2016
Rapporto luce/freccia elastica limite = 300
Rapporto luce/freccia elastica differita = 200
Mensola Y: Nessuno; Mensola X: Nessuno
Classe di servizio 1

### Verifica tensoflessione D.M. 17-01-18 §4.4.8.1.7

Sezione ad ascissa 0
Coefficiente parziale di sicurezza del materiale γ = 1.5
Kmod = 0.8; Kh = 1.084 (formula 11.7.1)
St,0,d/ft,0,d + Sm,y,d/fm,y,d + Km*(Sm,z,d/fm,z,d) <= 1
St,0,d/ft,0,d + Km*(Sm,y,d/fm,y,d) + Sm,z,d/fm,z,d <= 1
0.9/41.6+0.7*15.5/81+31.6/81=0.55 <= 1 [4.4.6b] Comb: SLU, 30; Durata minima del carico nella combinazione: media
Mx = -2070.9; My = -3366.8; N = 74.3

### Verifica taglio D.M. 17-01-18 §4.4.8.1.9

Sezione ad ascissa 475.2
Coefficiente parziale di sicurezza del materiale γ = 1.5
Kmod = 0.8; kcr = 0.67
τ,d <= fv,d
Sqrt(0.38^2+0.3^2) = 0.49 <= 16 Comb: SLU, 72; Durata minima del carico nella combinazione: media
Tx = 13.6; Ty = -10.8

### Verifica taglio+torsione D.M. 17-01-18 §4.4.8.1.11

Sezione ad ascissa 475.2
Coefficiente parziale di sicurezza del materiale γ = 1.5
Kmod = 0.8; Kh = 1.084 (formula 11.7.1); kcr = 0.67
τ,tor,d/(ksh*fv,d) + (τ,y,d/fv,d)^2 + (τ,z,d/fv,d)^2 <= 1
0.06+0+0 <= 1 Comb: SLU, 72; Durata minima del carico nella combinazione: media
Tx = 13.6; Ty = -10.8; Mt = -163.2

### Verifica torsione D.M. 17-01-18 §4.4.8.1.10

Sezione ad ascissa 475.2
Coefficiente parziale di sicurezza del materiale γ = 1.5
Kmod = 0.8
τ,tor,d <= Ksh * fv,d
1.15 <= 19 Comb: SLU, 72; Durata minima del carico nella combinazione: media
Mt = -163.2

---

## Asta 319: Trave in legno a falda Falda 2 fili 46-10

Verifiche condotte secondo D.M. 17-01-18 (N.T.C.)

### Dati generali

Lunghezza = 398.7

### Caratteristiche della sezione

| Descrizione | Tipo | Base | Altezza | Area | Jx | Jy | Wx | Wy |
|---|---|---|---|---|---|---|---|---|
| R 8x10 | Rettangolare | 8 | 10 | 80 | 666.67 | 426.67 | 133.33 | 106.67 |

Materiale: C14 EN 338:2016
Rapporto luce/freccia elastica limite = 300
Rapporto luce/freccia elastica differita = 200
Mensola Y: Nessuno; Mensola X: Nessuno
Classe di servizio 1

### Verifica flessione D.M. 17-01-18 §4.4.8.1.6

Sezione ad ascissa 0
Coefficiente parziale di sicurezza del materiale γ = 1.5
Kmod = 0.8; Kh = 1.084 (formula 11.7.1)
Sm,y,d/fm,y,d + Km*(Sm,z,d/fm,z,d) !> 1
Km*(Sm,y,d/fm,y,d) + Sm,z,d/fm,z,d !> 1
0.7*41.6/81+63.4/81=1.14 !> 1 (formula 4.4.5b) Comb: SLU, 72; Durata minima del carico nella combinazione: media - NON SODDISFATTA
Mx = -5540.2; My = -6760.6

### Verifica taglio D.M. 17-01-18 §4.4.8.1.9

Sezione ad ascissa 398.7

Coefficiente parziale di sicurezza del materiale γ = 1.5
Kmod = 0.8; kcr = 0.67
τ,d <= fv,d
Sqrt(0.89^2+0.81^2) = 1.2 <= 16 Comb: SLU, 71; Durata minima del carico nella combinazione: media
Tx = 31.5; Ty = -28.6

**Verifica taglio+torsione D.M. 17-01-18 §4.4.8.1.11**

Sezione ad ascissa 398.7
Coefficiente parziale di sicurezza del materiale γ = 1.5
Kmod = 0.8; Kh = 1.084 (formula 11.7.1); kcr = 0.67
τ,tor,d/(ksh*fv,d) + (τ,y,d/fv,d)^2 + (τ,z,d/fv,d)^2 <= 1
0.1+0+0 <= 1 Comb: SLU, 71; Durata minima del carico nella combinazione: media
Tx = 31.5; Ty = -28.6; Mt = -268.1

**Verifica torsione D.M. 17-01-18 §4.4.8.1.10**

Sezione ad ascissa 398.7
Coefficiente parziale di sicurezza del materiale γ = 1.5
Kmod = 0.8
τ,tor,d <= Ksh * fv,d
1.89 <= 19 Comb: SLU, 72; Durata minima del carico nella combinazione: media
Mt = -268.2

---

## Asta 320: Trave in legno a falda Falda 2 fili 40-11

Verifiche condotte secondo D.M. 17-01-18 (N.T.C.)

**Dati generali**

Lunghezza = 322

**Caratteristiche della sezione**

| Descrizione | Tipo | Base | Altezza | Area | Jx | Jy | Wx | Wy |
|---|---|---|---|---|---|---|---|---|
| R 8x10 | Rettangolare | 8 | 10 | 80 | 666.67 | 426.67 | 133.33 | 106.67 |

Materiale: C14 EN 338:2016
Rapporto luce/freccia elastica limite = 300
Rapporto luce/freccia elastica differita = 200
Mensola Y: Nessuno; Mensola X: Nessuno
Classe di servizio 1

**Verifica taglio D.M. 17-01-18 §4.4.8.1.9**

Sezione ad ascissa 322
Coefficiente parziale di sicurezza del materiale γ = 1.5
Kmod = 0.8; kcr = 0.67
τ,d <= fv,d
Sqrt(1.24^2+1.69^2) = 2.09 <= 16 Comb: SLU, 71; Durata minima del carico nella combinazione: media
Tx = 44; Ty = -60.1

**Verifica pressoflessione D.M. 17-01-18 §4.4.8.1.8**

Sezione ad ascissa 0
Coefficiente parziale di sicurezza del materiale γ = 1.5
Kmod = 0.8; Kh = 1.084 (formula 11.7.1)
(Sc,0,d/fc,0,d)^2 + Sm,y,d/fm,y,d + Km*(Sm,z,d/fm,z,d) <= 1
(Sc,0,d/fc,0,d)^2 + Km*(Sm,y,d/fm,y,d) + Sm,z,d/fm,z,d <= 1
(1.5/85.3)^2+73/81+0.7*71.8/80.97=1.52 !> 1 [4.4.7a] Comb: SLU, 72; Durata minima del carico nella combinazione: media - NON SODDISFATTA
Mx = -9738; My = -7662; N = -117.3

**Verifica taglio+torsione D.M. 17-01-18 §4.4.8.1.11**

Sezione ad ascissa 322
Coefficiente parziale di sicurezza del materiale γ = 1.5
Kmod = 0.8; Kh = 1.084 (formula 11.7.1); kcr = 0.67
τ,tor,d/(ksh*fv,d) + (τ,y,d/fv,d)^2 + (τ,z,d/fv,d)^2 <= 1
0.09+0.01+0.01 <= 1 Comb: SLU, 71; Durata minima del carico nella combinazione: media
Tx = 44; Ty = -60.1; Mt = -234.5

**Verifica torsione D.M. 17-01-18 §4.4.8.1.10**

Sezione ad ascissa 322
Coefficiente parziale di sicurezza del materiale γ = 1.5
Kmod = 0.8
τ,tor,d <= Ksh * fv,d
1.66 <= 19 Comb: SLU, 71; Durata minima del carico nella combinazione: media
Mt = -234.5

---

## Asta 321: Trave in legno a falda Falda 2 fili 34-12

Verifiche condotte secondo D.M. 17-01-18 (N.T.C.)

### Dati generali

Lunghezza = 245.4

### Caratteristiche della sezione

| Descrizione | Tipo | Base | Altezza | Area | Jx | Jy | Wx | Wy |
|---|---|---|---|---|---|---|---|---|
| R 8x10 | Rettangolare | 8 | 10 | 80 | 666.67 | 426.67 | 133.33 | 106.67 |

Materiale: C14 EN 338:2016
Rapporto luce/freccia elastica limite = 300
Rapporto luce/freccia elastica differita = 200
Mensola Y: Nessuno; Mensola X: Nessuno
Classe di servizio 1

### Verifica taglio D.M. 17-01-18 §4.4.8.1.9

Sezione ad ascissa 245.4
Coefficiente parziale di sicurezza del materiale γ = 1.5
Kmod = 0.8; kcr = 0.67
τ,d <= fv,d
Sqrt(1.26^2+3.33^2) = 3.56 <= 16 Comb: SLU, 71; Durata minima del carico nella combinazione: media
Tx = 44.7; Ty = -118.5

### Verifica pressoflessione D.M. 17-01-18 §4.4.8.1.8

Sezione ad ascissa 0
Coefficiente parziale di sicurezza del materiale γ = 1.5
Kmod = 0.8; Kh = 1.084 (formula 11.7.1)
(Sc,0,d/fc,0,d)^2 + Sm,y,d/fm,y,d + Km*(Sm,z,d/fm,z,d) <= 1
(Sc,0,d/fc,0,d)^2 + Km*(Sm,y,d/fm,y,d) + Sm,z,d/fm,z,d <= 1
(3.2/85.3)^2+113.6/81+0.7*57.2/80.97=1.9 !> 1 [4.4.7a] Comb: SLU, 72; Durata minima del carico nella combinazione: media - NON SODDISFATTA
Mx = -15142.8; My = -6102.2; N = -258.1

### Verifica taglio+torsione D.M. 17-01-18 §4.4.8.1.11

Sezione ad ascissa 245.4
Coefficiente parziale di sicurezza del materiale γ = 1.5
Kmod = 0.8; Kh = 1.084 (formula 11.7.1); kcr = 0.67
τ,tor,d/(ksh*fv,d) + (τ,y,d/fv,d)^2 + (τ,z,d/fv,d)^2 <= 1
0.01+0.01+0.04 <= 1 Comb: SLU, 71; Durata minima del carico nella combinazione: media
Tx = 44.7; Ty = -118.5; Mt = -34.3

### Verifica torsione D.M. 17-01-18 §4.4.8.1.10

Sezione ad ascissa 245.4
Coefficiente parziale di sicurezza del materiale γ = 1.5
Kmod = 1.1
τ,tor,d <= Ksh * fv,d
0.4 <= 26.13 Comb: SLV, 12; Durata minima del carico nella combinazione: istantaneo
Mt = -56

---

## Asta 322: Trave in legno a falda Falda 2 fili 29-13

Verifiche condotte secondo D.M. 17-01-18 (N.T.C.)

### Dati generali

Lunghezza = 168.8

### Caratteristiche della sezione

| Descrizione | Tipo | Base | Altezza | Area | Jx | Jy | Wx | Wy |
|---|---|---|---|---|---|---|---|---|
| R 8x10 | Rettangolare | 8 | 10 | 80 | 666.67 | 426.67 | 133.33 | 106.67 |

Materiale: C14 EN 338:2016
Rapporto luce/freccia elastica limite = 300
Rapporto luce/freccia elastica differita = 200
Mensola Y: Nessuno; Mensola X: Nessuno
Classe di servizio 1

### Verifica taglio D.M. 17-01-18 §4.4.8.1.9

Sezione ad ascissa 168.8
Coefficiente parziale di sicurezza del materiale γ = 1.5
Kmod = 0.8; kcr = 0.67
τ,d <= fv,d
Sqrt(0.67^2+5.37^2) = 5.41 <= 16 Comb: SLU, 71; Durata minima del carico nella combinazione: media
Tx = 23.7; Ty = -190.8

**Verifica pressoflessione D.M. 17-01-18 §4.4.8.1.8**

Sezione ad ascissa 0
Coefficiente parziale di sicurezza del materiale γ = 1.5
Kmod = 0.8; Kh = 1.084 (formula 11.7.1)
(Sc,0,d/fc,0,d)^2 + Sm,y,d/fm,y,d + Km*(Sm,z,d/fm,z,d) <= 1
(Sc,0,d/fc,0,d)^2 + Km*(Sm,y,d/fm,y,d) + Sm,z,d/fm,z,d <= 1
(3.5/85.3)^2+126/81+0.7*22.1/80.97=1.75 !> 1 [4.4.7a] Comb: SLU, 72; Durata minima del carico nella combinazione: media - NON SODDISFATTA
Mx = -16794.3; My = -2353.2; N = -276.6

**Verifica taglio+torsione D.M. 17-01-18 §4.4.8.1.11**

Sezione ad ascissa 168.8
Coefficiente parziale di sicurezza del materiale γ = 1.5
Kmod = 0.8; Kh = 1.084 (formula 11.7.1); kcr = 0.67
τ,tor,d/(ksh*fv,d) + (τ,y,d/fv,d)^2 + (τ,z,d/fv,d)^2 <= 1
0.08+0+0.11 <= 1 Comb: SLU, 72; Durata minima del carico nella combinazione: media
Tx = 23.6; Ty = -190.8; Mt = 212.4

**Verifica torsione D.M. 17-01-18 §4.4.8.1.10**

Sezione ad ascissa 168.8
Coefficiente parziale di sicurezza del materiale γ = 1.5
Kmod = 0.8
τ,tor,d <= Ksh * fv,d
1.5 <= 19 Comb: SLU, 80; Durata minima del carico nella combinazione: media
Mt = 212.5

---

## Asta 323: Trave in legno a falda Falda 2 fili 25-14

Verifiche condotte secondo D.M. 17-01-18 (N.T.C.)

**Dati generali**

Lunghezza = 92.2

**Caratteristiche della sezione**

| Descrizione | Tipo | Base | Altezza | Area | Jx | Jy | Wx | Wy |
|---|---|---|---|---|---|---|---|---|
| R 8x10 | Rettangolare | 8 | 10 | 80 | 666.67 | 426.67 | 133.33 | 106.67 |

Materiale: C14 EN 338:2016
Rapporto luce/freccia elastica limite = 300
Rapporto luce/freccia elastica differita = 200
Mensola Y: Nessuno; Mensola X: Nessuno
Classe di servizio 1

**Verifica taglio D.M. 17-01-18 §4.4.8.1.9**

Sezione ad ascissa 92.2
Coefficiente parziale di sicurezza del materiale γ = 1.5
Kmod = 0.8; kcr = 0.67
τ,d <= fv,d
Sqrt(0.89^2+11.25^2) = 11.28 <= 16 Comb: SLU, 72; Durata minima del carico nella combinazione: media
Tx = -31.7; Ty = -399.8

**Verifica pressoflessione D.M. 17-01-18 §4.4.8.1.8**

Sezione ad ascissa 0
Coefficiente parziale di sicurezza del materiale γ = 1.5
Kmod = 0.8; Kh = 1.084 (formula 11.7.1)
(Sc,0,d/fc,0,d)^2 + Sm,y,d/fm,y,d + Km*(Sm,z,d/fm,z,d) <= 1
(Sc,0,d/fc,0,d)^2 + Km*(Sm,y,d/fm,y,d) + Sm,z,d/fm,z,d <= 1
(6.7/85.3)^2+145.5/81+0.7*8.9/80.97=1.88 !> 1 [4.4.7a] Comb: SLU, 80; Durata minima del carico nella combinazione: media - NON SODDISFATTA
Mx = -19399.7; My = 948.5; N = -536.9

**Verifica taglio+torsione D.M. 17-01-18 §4.4.8.1.11**

Sezione ad ascissa 92.2
Coefficiente parziale di sicurezza del materiale γ = 1.5
Kmod = 0.8; Kh = 1.084 (formula 11.7.1); kcr = 0.67
τ,tor,d/(ksh*fv,d) + (τ,y,d/fv,d)^2 + (τ,z,d/fv,d)^2 <= 1
0.18+0+0.49 <= 1 Comb: SLU, 72; Durata minima del carico nella combinazione: media
Tx = -31.7; Ty = -399.8; Mt = 495.8

**Verifica torsione D.M. 17-01-18 §4.4.8.1.10**

Sezione ad ascissa 92.2
Coefficiente parziale di sicurezza del materiale γ = 1.5
Kmod = 0.8
τ,tor,d <= Ksh * fv,d

3.5 <= 19 Comb: SLU, 72; Durata minima del carico nella combinazione: media
Mt = 495.8

## Asta 324: Trave in legno a falda Falda 2 fili 21-15

Verifiche condotte secondo D.M. 17-01-18 (N.T.C.)

### Dati generali

Lunghezza = 15.6

### Caratteristiche della sezione

| Descrizione | Tipo | Base | Altezza | Area | Jx | Jy | Wx | Wy |
|---|---|---|---|---|---|---|---|---|
| R 8x10 | Rettangolare | 8 | 10 | 80 | 666.67 | 426.67 | 133.33 | 106.67 |

Materiale: C14 EN 338:2016
Rapporto luce/freccia elastica limite = 300
Rapporto luce/freccia elastica differita = 200
Mensola Y: Nessuno; Mensola X: Nessuno
Classe di servizio 1

### Verifica pressoflessione D.M. 17-01-18 §4.4.8.1.8

Sezione ad ascissa 15.6
Coefficiente parziale di sicurezza del materiale γ = 1.5
Kmod = 0.8; Kh = 1.084 (formula 11.7.1)
(Sc,0,d/fc,0,d)^2 + Sm,y,d/fm,y,d + Km*(Sm,z,d/fm,z,d) <= 1
(Sc,0,d/fc,0,d)^2 + Km*(Sm,y,d/fm,y,d) + Sm,z,d/fm,z,d <= 1
(9.8/85.3)^2+28/81+0.7*16.5/80.97=0.5 <= 1 [4.4.7a] Comb: SLU, 80; Durata minima del carico nella combinazione: media
Mx = 3727.6; My = 1755; N = -786.3

### Verifica taglio D.M. 17-01-18 §4.4.8.1.9

Sezione ad ascissa 15.6
Coefficiente parziale di sicurezza del materiale γ = 1.5
Kmod = 0.8; kcr = 0.67
τ,d <= fv,d
Sqrt(2.46^2+5.55^2) = 6.07 <= 16 Comb: SLU, 80; Durata minima del carico nella combinazione: media
Tx = 87.4; Ty = -197.4

### Verifica taglio+torsione D.M. 17-01-18 §4.4.8.1.11

Sezione ad ascissa 15.6
Coefficiente parziale di sicurezza del materiale γ = 1.5
Kmod = 0.8; Kh = 1.084 (formula 11.7.1); kcr = 0.67
τ,tor,d/(ksh*fv,d) + (τ,y,d/fv,d)^2 + (τ,z,d/fv,d)^2 <= 1
0.26+0.02+0.12 <= 1 Comb: SLU, 80; Durata minima del carico nella combinazione: media
Tx = 87.4; Ty = -197.4; Mt = 694.3

### Verifica torsione D.M. 17-01-18 §4.4.8.1.10

Sezione ad ascissa 15.6
Coefficiente parziale di sicurezza del materiale γ = 1.5
Kmod = 0.8
τ,tor,d <= Ksh * fv,d
4.9 <= 19 Comb: SLU, 80; Durata minima del carico nella combinazione: media
Mt = 694.3

### Verifica della freccia istantanea totale D.M. 17-01-18 §C4.4.7 Circolare 7 21-01-19

Sezione ad ascissa 8.8
Kdef = 0
Uinst tot in x = 0
Uinst tot in y = 0
Uinst tot = 0
Luce/Uinst,tot > limite
15.6/0=15951.5 > 300 Comb: SLE rara, 16

### Verifica della freccia istantanea variabile D.M. 17-01-18 §4.4.7

Sezione ad ascissa 8.8
Kdef = 0
Uinst var in x = 0
Uinst var in y = 0
Uinst var = 0
Luce/Uinst,var > limite
15.6/0=26555.4 > 300 Comb: SLE rara, 16

### Verifica della freccia finale EC5 §4.4.7 - EC5 2.2.3 (3)

Sezione ad ascissa 8.8

Kdef = 0.6
Ufin in x = 0
Ufin in y = 0
Ufin = 0
Luce/Ufin > limite
15.6/0=12828.4 > 200
Coefficienti combinatori impiegati:
Pesi strutturali = 1,000 + 0,600 = 1,600
Permanenti portati = 1,000 + 0,600 = 1,600
Variabile A = 0,700 + 0,180 = 0,880
Neve = 0,500 + 0,500 = 1,000

## Asta 325: Trave in legno a falda Falda 1 fili 148-149

Verifiche condotte secondo D.M. 17-01-18 (N.T.C.)

### Dati generali

Lunghezza = 428

### Caratteristiche della sezione

| Descrizione | Tipo | Base | Altezza | Area | Jx | Jy | Wx | Wy |
|---|---|---|---|---|---|---|---|---|
| R 8x10 | Rettangolare | 8 | 10 | 80 | 666.67 | 426.67 | 133.33 | 106.67 |

Materiale: C14 EN 338:2016
Rapporto luce/freccia elastica limite = 300
Rapporto luce/freccia elastica differita = 200
Mensola Y: Nessuno; Mensola X: Nessuno
Classe di servizio 1

### Verifica taglio D.M. 17-01-18 §4.4.8.1.9

Sezione ad ascissa 0
Coefficiente parziale di sicurezza del materiale γ = 1.5
Kmod = 0.8; kcr = 0.67
τ,d <= fv,d
Sqrt(0.06^2+2.43^2) = 2.43 <= 16 Comb: SLU, 80; Durata minima del carico nella combinazione: media
Tx = 2.3; Ty = 86.3

### Verifica pressoflessione D.M. 17-01-18 §4.4.8.1.8

Sezione ad ascissa 428
Coefficiente parziale di sicurezza del materiale γ = 1.5
Kmod = 0.8; Kh = 1.084 (formula 11.7.1)
(Sc,0,d/fc,0,d)^2 + Sm,y,d/fm,y,d + Km*(Sm,z,d/fm,z,d) <= 1
(Sc,0,d/fc,0,d)^2 + Km*(Sm,y,d/fm,y,d) + Sm,z,d/fm,z,d <= 1
(1.5/85.3)^2+157.1/81+0.7*5/80.97=1.98 !> 1 [4.4.7a] Comb: SLU, 80; Durata minima del carico nella combinazione: media - NON SODDISFATTA
Mx = -20946.2; My = 528.6; N = -120.5

### Verifica taglio+torsione D.M. 17-01-18 §4.4.8.1.11

Sezione ad ascissa 0
Coefficiente parziale di sicurezza del materiale γ = 1.5
Kmod = 0.8; Kh = 1.084 (formula 11.7.1); kcr = 0.67
τ,tor,d/(ksh*fv,d) + (τ,y,d/fv,d)^2 + (τ,z,d/fv,d)^2 <= 1
0+0+0.02 <= 1 Comb: SLU, 80; Durata minima del carico nella combinazione: media
Tx = 2.3; Ty = 86.3; Mt = -11.8

### Verifica torsione D.M. 17-01-18 §4.4.8.1.10

Sezione ad ascissa 428
Coefficiente parziale di sicurezza del materiale γ = 1.5
Kmod = 1.1
τ,tor,d <= Ksh * fv,d
0.12 <= 26.13 Comb: SLV, 8; Durata minima del carico nella combinazione: istantaneo
Mt = -17.5

## Asta 326: Trave in legno a falda Falda 1 fili 153-154

Verifiche condotte secondo D.M. 17-01-18 (N.T.C.)

### Dati generali

Lunghezza = 428

### Caratteristiche della sezione

| Descrizione | Tipo | Base | Altezza | Area | Jx | Jy | Wx | Wy |
|---|---|---|---|---|---|---|---|---|
| R 8x10 | Rettangolare | 8 | 10 | 80 | 666.67 | 426.67 | 133.33 | 106.67 |

Materiale: C14 EN 338:2016
Rapporto luce/freccia elastica limite = 300
Rapporto luce/freccia elastica differita = 200
Mensola Y: Nessuno; Mensola X: Nessuno
Classe di servizio 1

**Verifica taglio D.M. 17-01-18 §4.4.8.1.9**

Sezione ad ascissa 0
Coefficiente parziale di sicurezza del materiale γ = 1.5
Kmod = 0.8; kcr = 0.67
τ,d <= fv,d
Sqrt(0.14^2+2.41^2) = 2.42 <= 16 Comb: SLU, 80; Durata minima del carico nella combinazione: media
Tx = 5.1; Ty = 85.8

**Verifica pressoflessione D.M. 17-01-18 §4.4.8.1.8**

Sezione ad ascissa 428
Coefficiente parziale di sicurezza del materiale γ = 1.5
Kmod = 0.8; Kh = 1.084 (formula 11.7.1)
(Sc,0,d/fc,0,d)^2 + Sm,y,d/fm,y,d + Km*(Sm,z,d/fm,z,d) <= 1
(Sc,0,d/fc,0,d)^2 + Km*(Sm,y,d/fm,y,d) + Sm,z,d/fm,z,d <= 1
(4.6/85.3)^2+151.7/81+0.7*8.7/80.97=1.95 !> 1 [4.4.7a] Comb: SLU, 80; Durata minima del carico nella combinazione: media - NON SODDISFATTA
Mx = -20226.2; My = 932.3; N = -365.6

**Verifica taglio+torsione D.M. 17-01-18 §4.4.8.1.11**

Sezione ad ascissa 0
Coefficiente parziale di sicurezza del materiale γ = 1.5
Kmod = 0.8; Kh = 1.084 (formula 11.7.1); kcr = 0.67
τ,tor,d/(ksh*fv,d) + (τ,y,d/fv,d)^2 + (τ,z,d/fv,d)^2 <= 1
0.01+0+0.02 <= 1 Comb: SLU, 80; Durata minima del carico nella combinazione: media
Tx = 5.1; Ty = 85.8; Mt = -37.5

**Verifica torsione D.M. 17-01-18 §4.4.8.1.10**

Sezione ad ascissa 428
Coefficiente parziale di sicurezza del materiale γ = 1.5
Kmod = 0.8
τ,tor,d <= Ksh * fv,d
0.27 <= 19 Comb: SLU, 79; Durata minima del carico nella combinazione: media
Mt = -37.9

---

## Asta 327: Trave in legno a falda Falda 1 fili 139-140

Verifiche condotte secondo D.M. 17-01-18 (N.T.C.)

**Dati generali**

Lunghezza = 428

**Caratteristiche della sezione**

| Descrizione | Tipo | Base | Altezza | Area | Jx | Jy | Wx | Wy |
|---|---|---|---|---|---|---|---|---|
| R 8x10 | Rettangolare | 8 | 10 | 80 | 666.67 | 426.67 | 133.33 | 106.67 |

Materiale: C14 EN 338:2016
Rapporto luce/freccia elastica limite = 300
Rapporto luce/freccia elastica differita = 200
Mensola Y: Nessuno; Mensola X: Nessuno
Classe di servizio 1

**Verifica taglio D.M. 17-01-18 §4.4.8.1.9**

Sezione ad ascissa 0
Coefficiente parziale di sicurezza del materiale γ = 1.5
Kmod = 0.8; kcr = 0.67
τ,d <= fv,d
Sqrt(0.04^2+2.42^2) = 2.42 <= 16 Comb: SLU, 80; Durata minima del carico nella combinazione: media
Tx = 1.5; Ty = 85.9

**Verifica pressoflessione D.M. 17-01-18 §4.4.8.1.8**

Sezione ad ascissa 428
Coefficiente parziale di sicurezza del materiale γ = 1.5
Kmod = 0.8; Kh = 1.084 (formula 11.7.1)
(Sc,0,d/fc,0,d)^2 + Sm,y,d/fm,y,d + Km*(Sm,z,d/fm,z,d) <= 1
(Sc,0,d/fc,0,d)^2 + Km*(Sm,y,d/fm,y,d) + Sm,z,d/fm,z,d <= 1
(2.9/85.3)^2+153.5/81+0.7*3.1/80.97=1.92 !> 1 [4.4.7a] Comb: SLU, 80; Durata minima del carico nella combinazione: media - NON SODDISFATTA
Mx = -20466; My = 331; N = -228.5

**Verifica taglio+torsione D.M. 17-01-18 §4.4.8.1.11**

Sezione ad ascissa 0
Coefficiente parziale di sicurezza del materiale γ = 1.5
Kmod = 1.1; Kh = 1.084 (formula 11.7.1); kcr = 0.67
τ,tor,d/(ksh*fv,d) + (τ,y,d/fv,d)^2 + (τ,z,d/fv,d)^2 <= 1
0+0+0 <= 1 Comb: SLV, 12; Durata minima del carico nella combinazione: istantaneo
Tx = -10.6; Ty = 31.9; Mt = 16.2

**Verifica torsione D.M. 17-01-18 §4.4.8.1.10**

Sezione ad ascissa 428
Coefficiente parziale di sicurezza del materiale γ = 1.5
Kmod = 1.1
τ,tor,d <= Ksh * fv,d
0.11 <= 26.13 Comb: SLV, 12; Durata minima del carico nella combinazione: istantaneo
Mt = 16.2

---

## Asta 328: Trave in legno a falda Falda 1 fili 217-260

Verifiche condotte secondo D.M. 17-01-18 (N.T.C.)

**Dati generali**

Lunghezza = 67.6

**Caratteristiche della sezione**

| Descrizione | Tipo | Base | Altezza | Area | Jx | Jy | Wx | Wy |
|---|---|---|---|---|---|---|---|---|
| R 18x23 | Rettangolare | 18 | 23 | 414 | 18250.5 | 11178 | 1587 | 1242 |

Materiale: C14 EN 338:2016
Rapporto luce/freccia elastica limite = 300
Rapporto luce/freccia elastica differita = 200
Mensola Y: Nessuno; Mensola X: Nessuno
Classe di servizio 1

**Verifica tensoflessione D.M. 17-01-18 §4.4.8.1.7**

Sezione ad ascissa 0
Coefficiente parziale di sicurezza del materiale γ = 1.5
Kmod = 1.1
St,0,d/ft,0,d + Sm,y,d/fm,y,d + Km*(Sm,z,d/fm,z,d) <= 1
St,0,d/ft,0,d + Km*(Sm,y,d/fm,y,d) + Sm,z,d/fm,z,d <= 1
2.4/52.8+0.7*16.4/102.7+36.6/102.7=0.51 <= 1 [4.4.6b] Comb: SLV, 8; Durata minima del carico nella combinazione: istantaneo
Mx = -26095.1; My = 45432; N = 1001.9

**Verifica taglio D.M. 17-01-18 §4.4.8.1.9**

Sezione ad ascissa 0
Coefficiente parziale di sicurezza del materiale γ = 1.5
Kmod = 0.8; kcr = 0.67
τ,d <= fv,d
Sqrt(1.78^2+1.37^2) = 2.25 <= 16 Comb: SLU, 72; Durata minima del carico nella combinazione: media
Tx = -327.9; Ty = 251.7

**Verifica taglio+torsione D.M. 17-01-18 §4.4.8.1.11**

Sezione ad ascissa 0
Coefficiente parziale di sicurezza del materiale γ = 1.5
Kmod = 0.8; kcr = 0.67
τ,tor,d/(ksh*fv,d) + (τ,y,d/fv,d)^2 + (τ,z,d/fv,d)^2 <= 1
0.1+0.01+0.01 <= 1 Comb: SLU, 80; Durata minima del carico nella combinazione: media
Tx = -321.4; Ty = 254.3; Mt = 3018

**Verifica torsione D.M. 17-01-18 §4.4.8.1.10**

Sezione ad ascissa 67.6
Coefficiente parziale di sicurezza del materiale γ = 1.5
Kmod = 0.8
τ,tor,d <= Ksh * fv,d
1.82 <= 19.07 Comb: SLU, 80; Durata minima del carico nella combinazione: media
Mt = 3018

---

## Asta 329: Trave in legno a falda Falda 1 fili 217-260

Verifiche condotte secondo D.M. 17-01-18 (N.T.C.)

### Dati generali

Lunghezza = 67.6

### Caratteristiche della sezione

| Descrizione | Tipo | Base | Altezza | Area | Jx | Jy | Wx | Wy |
|---|---|---|---|---|---|---|---|---|
| R 18x23 | Rettangolare | 18 | 23 | 414 | 18250.5 | 11178 | 1587 | 1242 |

Materiale: C14 EN 338:2016
Rapporto luce/freccia elastica limite = 300
Rapporto luce/freccia elastica differita = 200
Mensola Y: Nessuno; Mensola X: Nessuno
Classe di servizio 1

### Verifica taglio D.M. 17-01-18 §4.4.8.1.9

Sezione ad ascissa 0
Coefficiente parziale di sicurezza del materiale γ = 1.5
Kmod = 0.8; kcr = 0.67
τ,d <= fv,d
Sqrt(1.14^2+2.3^2) = 2.57 <= 16 Comb: SLU, 80; Durata minima del carico nella combinazione: media
Tx = 209.8; Ty = 423.2

### Verifica pressoflessione D.M. 17-01-18 §4.4.8.1.8

Sezione ad ascissa 67.6
Coefficiente parziale di sicurezza del materiale γ = 1.5
Kmod = 0.8
(Sc,0,d/fc,0,d)^2 + Sm,y,d/fm,y,d + Km*(Sm,z,d/fm,z,d) <= 1
(Sc,0,d/fc,0,d)^2 + Km*(Sm,y,d/fm,y,d) + Sm,z,d/fm,z,d <= 1
(1.6/85.3)^2+26.5/74.7+0.7*1.6/74.67=0.37 <= 1 [4.4.7a] Comb: SLU, 80; Durata minima del carico nella combinazione: media
Mx = -42080.9; My = 1953.9; N = -653.4

### Verifica taglio+torsione D.M. 17-01-18 §4.4.8.1.11

Sezione ad ascissa 0
Coefficiente parziale di sicurezza del materiale γ = 1.5
Kmod = 0.8; kcr = 0.67
τ,tor,d/(ksh*fv,d) + (τ,y,d/fv,d)^2 + (τ,z,d/fv,d)^2 <= 1
0.07+0.01+0.02 <= 1 Comb: SLU, 80; Durata minima del carico nella combinazione: media
Tx = 209.8; Ty = 423.2; Mt = 2100.3

### Verifica torsione D.M. 17-01-18 §4.4.8.1.10

Sezione ad ascissa 67.6
Coefficiente parziale di sicurezza del materiale γ = 1.5
Kmod = 0.8
τ,tor,d <= Ksh * fv,d
1.27 <= 19.07 Comb: SLU, 38; Durata minima del carico nella combinazione: media
Mt = 2109.2

---

## Asta 330: Trave in legno a falda Falda 1 fili 217-260

Verifiche condotte secondo D.M. 17-01-18 (N.T.C.)

### Dati generali

Lunghezza = 67.6

### Caratteristiche della sezione

| Descrizione | Tipo | Base | Altezza | Area | Jx | Jy | Wx | Wy |
|---|---|---|---|---|---|---|---|---|
| R 18x23 | Rettangolare | 18 | 23 | 414 | 18250.5 | 11178 | 1587 | 1242 |

Materiale: C14 EN 338:2016
Rapporto luce/freccia elastica limite = 300
Rapporto luce/freccia elastica differita = 200
Mensola Y: Nessuno; Mensola X: Nessuno
Classe di servizio 1

### Verifica taglio D.M. 17-01-18 §4.4.8.1.9

Sezione ad ascissa 67.6
Coefficiente parziale di sicurezza del materiale γ = 1.5
Kmod = 0.8; kcr = 0.67
τ,d <= fv,d
Sqrt(1.92^2+2.86^2) = 3.44 <= 16 Comb: SLU, 79; Durata minima del carico nella combinazione: media
Tx = -352.6; Ty = -525.6

### Verifica pressoflessione D.M. 17-01-18 §4.4.8.1.8

Sezione ad ascissa 42.8
Coefficiente parziale di sicurezza del materiale γ = 1.5

Kmod = 0.8
(Sc,0,d/fc,0,d)^2 + Sm,y,d/fm,y,d + Km*(Sm,z,d/fm,z,d) <= 1
(Sc,0,d/fc,0,d)^2 + Km*(Sm,y,d/fm,y,d) + Sm,z,d/fm,z,d <= 1
(1.6/85.3)^2+23.4/74.7+0.7*10.7/74.67=0.41 <= 1 [4.4.7a] Comb: SLU, 72; Durata minima del carico nella combinazione: media
Mx = -37181.8; My = -13313.4; N = -641.8

**Verifica taglio+torsione D.M. 17-01-18 §4.4.8.1.11**

Sezione ad ascissa 67.6
Coefficiente parziale di sicurezza del materiale γ = 1.5
Kmod = 0.8; kcr = 0.67
τ,tor,d/(ksh*fv,d) + (τ,y,d/fv,d)^2 + (τ,z,d/fv,d)^2 <= 1
0.08+0.01+0.03 <= 1 Comb: SLU, 80; Durata minima del carico nella combinazione: media
Tx = -339; Ty = -508.4; Mt = 2373.4

**Verifica torsione D.M. 17-01-18 §4.4.8.1.10**

Sezione ad ascissa 67.6
Coefficiente parziale di sicurezza del materiale γ = 1.5
Kmod = 0.8
τ,tor,d <= Ksh * fv,d
1.43 <= 19.07 Comb: SLU, 80; Durata minima del carico nella combinazione: media
Mt = 2373.4

---

## Asta 331: Trave in legno a falda Falda 1 fili 217-260

Verifiche condotte secondo D.M. 17-01-18 (N.T.C.)

**Dati generali**

Lunghezza = 67.6

**Caratteristiche della sezione**

| Descrizione | Tipo | Base | Altezza | Area | Jx | Jy | Wx | Wy |
|---|---|---|---|---|---|---|---|---|
| R 18x23 | Rettangolare | 18 | 23 | 414 | 18250.5 | 11178 | 1587 | 1242 |

Materiale: C14 EN 338:2016
Rapporto luce/freccia elastica limite = 300
Rapporto luce/freccia elastica differita = 200
Mensola Y: Nessuno; Mensola X: Nessuno
Classe di servizio 1

**Verifica taglio D.M. 17-01-18 §4.4.8.1.9**

Sezione ad ascissa 67.6
Coefficiente parziale di sicurezza del materiale γ = 1.5
Kmod = 0.8; kcr = 0.67
τ,d <= fv,d
Sqrt(0.84^2+2.34^2) = 2.48 <= 16 Comb: SLU, 79; Durata minima del carico nella combinazione: media
Tx = 154; Ty = -430.1

**Verifica pressoflessione D.M. 17-01-18 §4.4.8.1.8**

Sezione ad ascissa 0
Coefficiente parziale di sicurezza del materiale γ = 1.5
Kmod = 0.8
(Sc,0,d/fc,0,d)^2 + Sm,y,d/fm,y,d + Km*(Sm,z,d/fm,z,d) <= 1
(Sc,0,d/fc,0,d)^2 + Km*(Sm,y,d/fm,y,d) + Sm,z,d/fm,z,d <= 1
(1.5/85.3)^2+0.7*16.8/74.7+19.1/74.7=0.41 <= 1 [4.4.7b] Comb: SLU, 72; Durata minima del carico nella combinazione: media
Mx = -26677.7; My = -23746.6; N = -608.9

**Verifica taglio+torsione D.M. 17-01-18 §4.4.8.1.11**

Sezione ad ascissa 67.6
Coefficiente parziale di sicurezza del materiale γ = 1.5
Kmod = 0.8; kcr = 0.67
τ,tor,d/(ksh*fv,d) + (τ,y,d/fv,d)^2 + (τ,z,d/fv,d)^2 <= 1
0.03+0+0.02 <= 1 Comb: SLU, 80; Durata minima del carico nella combinazione: media
Tx = 156.2; Ty = -427.8; Mt = 898.5

**Verifica torsione D.M. 17-01-18 §4.4.8.1.10**

Sezione ad ascissa 67.6
Coefficiente parziale di sicurezza del materiale γ = 1.5
Kmod = 0.8
τ,tor,d <= Ksh * fv,d
0.54 <= 19.07 Comb: SLU, 80; Durata minima del carico nella combinazione: media
Mt = 898.5

---

## Asta 332: Trave in legno a falda Falda 1 fili 217-260

Verifiche condotte secondo D.M. 17-01-18 (N.T.C.)

### Dati generali

Lunghezza = 67.6

### Caratteristiche della sezione

| Descrizione | Tipo | Base | Altezza | Area | Jx | Jy | Wx | Wy |
|---|---|---|---|---|---|---|---|---|
| R 18x23 | Rettangolare | 18 | 23 | 414 | 18250.5 | 11178 | 1587 | 1242 |

Materiale: C14 EN 338:2016
Rapporto luce/freccia elastica limite = 300
Rapporto luce/freccia elastica differita = 200
Mensola Y: Nessuno; Mensola X: Nessuno
Classe di servizio 1

### Verifica taglio D.M. 17-01-18 §4.4.8.1.9

Sezione ad ascissa 67.6
Coefficiente parziale di sicurezza del materiale γ = 1.5
Kmod = 0.8; kcr = 0.67
τ,d <= fv,d
Sqrt(2.24^2+1.47^2) = 2.68 <= 16 Comb: SLU, 71; Durata minima del carico nella combinazione: media
Tx = 412.7; Ty = -269.7

### Verifica pressoflessione D.M. 17-01-18 §4.4.8.1.8

Sezione ad ascissa 0
Coefficiente parziale di sicurezza del materiale γ = 1.5
Kmod = 0.8
(Sc,0,d/fc,0,d)^2 + Sm,y,d/fm,y,d + Km*(Sm,z,d/fm,z,d) <= 1
(Sc,0,d/fc,0,d)^2 + Km*(Sm,y,d/fm,y,d) + Sm,z,d/fm,z,d <= 1
(1.2/85.3)^2+0.7*7.4/74.7+14.8/74.7=0.27 <= 1 [4.4.7b] Comb: SLU, 72; Durata minima del carico nella combinazione: media
Mx = -11796.5; My = -18359; N = -508.1

### Verifica taglio+torsione D.M. 17-01-18 §4.4.8.1.11

Sezione ad ascissa 67.6
Coefficiente parziale di sicurezza del materiale γ = 1.5
Kmod = 0.8; kcr = 0.67
τ,tor,d/(ksh*fv,d) + (τ,y,d/fv,d)^2 + (τ,z,d/fv,d)^2 <= 1
0.03+0.02+0.01 <= 1 Comb: SLU, 72; Durata minima del carico nella combinazione: media
Tx = 397.1; Ty = -287.8; Mt = -1075.7

### Verifica torsione D.M. 17-01-18 §4.4.8.1.10

Sezione ad ascissa 67.6
Coefficiente parziale di sicurezza del materiale γ = 1.5
Kmod = 0.8
τ,tor,d <= Ksh * fv,d
0.65 <= 19.07 Comb: SLU, 72; Durata minima del carico nella combinazione: media
Mt = -1075.7

---

## Asta 333: Trave in legno a falda Falda 1 fili 217-260

Verifiche condotte secondo D.M. 17-01-18 (N.T.C.)

### Dati generali

Lunghezza = 40.1

### Caratteristiche della sezione

| Descrizione | Tipo | Base | Altezza | Area | Jx | Jy | Wx | Wy |
|---|---|---|---|---|---|---|---|---|
| R 18x23 | Rettangolare | 18 | 23 | 414 | 18250.5 | 11178 | 1587 | 1242 |

Materiale: C14 EN 338:2016
Rapporto luce/freccia elastica limite = 300
Rapporto luce/freccia elastica differita = 200
Mensola Y: Nessuno; Mensola X: Nessuno
Classe di servizio 1

### Verifica flessione D.M. 17-01-18 §4.4.8.1.6

Sezione ad ascissa 40.1
Coefficiente parziale di sicurezza del materiale γ = 1.5
Kmod = 0.8
Sm,y,d/fm,y,d + Km*(Sm,z,d/fm,z,d) <= 1
Km*(Sm,y,d/fm,y,d) + Sm,z,d/fm,z,d <= 1
0.7*4.8/74.7+22.5/74.7=0.35 <= 1 (formula 4.4.5b) Comb: SLU, 71; Durata minima del carico nella combinazione: media

Mx = -7687.6; My = 27917.2

**Verifica taglio D.M. 17-01-18 §4.4.8.1.9**

Sezione ad ascissa 0
Coefficiente parziale di sicurezza del materiale γ = 1.5
Kmod = 0.8; kcr = 0.67
τ,d <= fv,d
Sqrt(3.51^2+1.66^2) = 3.88 <= 16 Comb: SLU, 71; Durata minima del carico nella combinazione: media
Tx = 645.2; Ty = 305.6

**Verifica taglio+torsione D.M. 17-01-18 §4.4.8.1.11**

Sezione ad ascissa 0
Coefficiente parziale di sicurezza del materiale γ = 1.5
Kmod = 0.8; kcr = 0.67
τ,tor,d/(ksh*fv,d) + (τ,y,d/fv,d)^2 + (τ,z,d/fv,d)^2 <= 1
0.03+0.05+0.01 <= 1 Comb: SLU, 29; Durata minima del carico nella combinazione: media
Tx = 640.5; Ty = 303.8; Mt = 847.4

**Verifica torsione D.M. 17-01-18 §4.4.8.1.10**

Sezione ad ascissa 40.1
Coefficiente parziale di sicurezza del materiale γ = 1.5
Kmod = 1.1
τ,tor,d <= Ksh * fv,d
1.08 <= 26.22 Comb: SLV, 8; Durata minima del carico nella combinazione: istantaneo
Mt = 1786.1

---

## Asta 334: Trave in legno a falda Falda 1 fili 161-217

Verifiche condotte secondo D.M. 17-01-18 (N.T.C.)

**Dati generali**

Lunghezza = 67.6

**Caratteristiche della sezione**

| Descrizione | Tipo | Base | Altezza | Area | Jx | Jy | Wx | Wy |
|---|---|---|---|---|---|---|---|---|
| R 18x23 | Rettangolare | 18 | 23 | 414 | 18250.5 | 11178 | 1587 | 1242 |

Materiale: C14 EN 338:2016
Rapporto luce/freccia elastica limite = 300
Rapporto luce/freccia elastica differita = 200
Mensola Y: Nessuno; Mensola X: Nessuno
Classe di servizio 1

**Verifica taglio D.M. 17-01-18 §4.4.8.1.9**

Sezione ad ascissa 0
Coefficiente parziale di sicurezza del materiale γ = 1.5
Kmod = 0.8; kcr = 0.67
τ,d <= fv,d
Sqrt(2.86^2+1.49^2) = 3.22 <= 16 Comb: SLU, 79; Durata minima del carico nella combinazione: media
Tx = 525.9; Ty = 274.4

**Verifica pressoflessione D.M. 17-01-18 §4.4.8.1.8**

Sezione ad ascissa 0
Coefficiente parziale di sicurezza del materiale γ = 1.5
Kmod = 1.1
(Sc,0,d/fc,0,d)^2 + Sm,y,d/fm,y,d + Km*(Sm,z,d/fm,z,d) <= 1
(Sc,0,d/fc,0,d)^2 + Km*(Sm,y,d/fm,y,d) + Sm,z,d/fm,z,d <= 1
(2.8/117.3)^2+0.7*18.5/102.7+60.7/102.7=0.72 <= 1 [4.4.7b] Comb: SLV, 10; Durata minima del carico nella combinazione: istantaneo
Mx = 29421; My = -75395.6; N = -1158.3

**Verifica taglio+torsione D.M. 17-01-18 §4.4.8.1.11**

Sezione ad ascissa 0
Coefficiente parziale di sicurezza del materiale γ = 1.5
Kmod = 0.8; kcr = 0.67
τ,tor,d/(ksh*fv,d) + (τ,y,d/fv,d)^2 + (τ,z,d/fv,d)^2 <= 1
0.16+0.03+0.01 <= 1 Comb: SLU, 79; Durata minima del carico nella combinazione: media
Tx = 525.9; Ty = 274.4; Mt = -5126

**Verifica torsione D.M. 17-01-18 §4.4.8.1.10**

Sezione ad ascissa 67.6
Coefficiente parziale di sicurezza del materiale γ = 1.5
Kmod = 0.8
τ,tor,d <= Ksh * fv,d

3.09 <= 19.07 Comb: SLU, 79; Durata minima del carico nella combinazione: media
Mt = -5126

## Asta 335: Trave in legno a falda Falda 1 fili 161-217

Verifiche condotte secondo D.M. 17-01-18 (N.T.C.)

### Dati generali

Lunghezza = 67.6

### Caratteristiche della sezione

| Descrizione | Tipo | Base | Altezza | Area | Jx | Jy | Wx | Wy |
|---|---|---|---|---|---|---|---|---|
| R 18x23 | Rettangolare | 18 | 23 | 414 | 18250.5 | 11178 | 1587 | 1242 |

Materiale: C14 EN 338:2016
Rapporto luce/freccia elastica limite = 300
Rapporto luce/freccia elastica differita = 200
Mensola Y: Nessuno; Mensola X: Nessuno
Classe di servizio 1

### Verifica tensoflessione D.M. 17-01-18 §4.4.8.1.7

Sezione ad ascissa 0
Coefficiente parziale di sicurezza del materiale γ = 1.5
Kmod = 1.1
St,0,d/ft,0,d + Sm,y,d/fm,y,d + Km*(Sm,z,d/fm,z,d) <= 1
St,0,d/ft,0,d + Km*(Sm,y,d/fm,y,d) + Sm,z,d/fm,z,d <= 1
2.3/52.8+0.7*9/102.7+32.7/102.7=0.42 <= 1 [4.4.6b] Comb: SLV, 8; Durata minima del carico nella combinazione: istantaneo
Mx = -14311; My = 40657.2; N = 934.4

### Verifica taglio D.M. 17-01-18 §4.4.8.1.9

Sezione ad ascissa 67.6
Coefficiente parziale di sicurezza del materiale γ = 1.5
Kmod = 0.8; kcr = 0.67
τ,d <= fv,d
Sqrt(0.93^2+2.09^2) = 2.29 <= 16 Comb: SLU, 30; Durata minima del carico nella combinazione: media
Tx = -170.9; Ty = -385.5

### Verifica taglio+torsione D.M. 17-01-18 §4.4.8.1.11

Sezione ad ascissa 67.6
Coefficiente parziale di sicurezza del materiale γ = 1.5
Kmod = 0.8; kcr = 0.67
τ,tor,d/(ksh*fv,d) + (τ,y,d/fv,d)^2 + (τ,z,d/fv,d)^2 <= 1
0.07+0+0.02 <= 1 Comb: SLU, 72; Durata minima del carico nella combinazione: media
Tx = -166.7; Ty = -385.4; Mt = -2267.4

### Verifica torsione D.M. 17-01-18 §4.4.8.1.10

Sezione ad ascissa 67.6
Coefficiente parziale di sicurezza del materiale γ = 1.5
Kmod = 0.8
τ,tor,d <= Ksh * fv,d
1.39 <= 19.07 Comb: SLU, 79; Durata minima del carico nella combinazione: media
Mt = -2295.2

## Asta 336: Trave in legno a falda Falda 1 fili 161-217

Verifiche condotte secondo D.M. 17-01-18 (N.T.C.)

### Dati generali

Lunghezza = 67.6

### Caratteristiche della sezione

| Descrizione | Tipo | Base | Altezza | Area | Jx | Jy | Wx | Wy |
|---|---|---|---|---|---|---|---|---|
| R 18x23 | Rettangolare | 18 | 23 | 414 | 18250.5 | 11178 | 1587 | 1242 |

Materiale: C14 EN 338:2016
Rapporto luce/freccia elastica limite = 300
Rapporto luce/freccia elastica differita = 200
Mensola Y: Nessuno; Mensola X: Nessuno
Classe di servizio 1

### Verifica tensoflessione D.M. 17-01-18 §4.4.8.1.7

Sezione ad ascissa 67.6
Coefficiente parziale di sicurezza del materiale γ = 1.5

Kmod = 1.1
St,0,d/ft,0,d + Sm,y,d/fm,y,d + Km*(Sm,z,d/fm,z,d) <= 1
St,0,d/ft,0,d + Km*(Sm,y,d/fm,y,d) + Sm,z,d/fm,z,d <= 1
2.3/52.8+0.7*7.2/102.7+22.1/102.7=0.31 <= 1 [4.4.6b] Comb: SLV, 8; Durata minima del carico nella combinazione: istantaneo
Mx = 11416.5; My = -27428.9; N = 943.8

**Verifica taglio D.M. 17-01-18 §4.4.8.1.9**

Sezione ad ascissa 67.6
Coefficiente parziale di sicurezza del materiale γ = 1.5
Kmod = 1.1; kcr = 0.67
τ,d <= fv,d
Sqrt(2.79^2+1.36^2) = 3.1 <= 22 Comb: SLV, 8; Durata minima del carico nella combinazione: istantaneo
Tx = -512.7; Ty = -250

**Verifica taglio+torsione D.M. 17-01-18 §4.4.8.1.11**

Sezione ad ascissa 67.6
Coefficiente parziale di sicurezza del materiale γ = 1.5
Kmod = 0.8; kcr = 0.67
τ,tor,d/(ksh*fv,d) + (τ,y,d/fv,d)^2 + (τ,z,d/fv,d)^2 <= 1
0.05+0+0.01 <= 1 Comb: SLU, 71; Durata minima del carico nella combinazione: media
Tx = -143.3; Ty = -289.4; Mt = -1521

**Verifica torsione D.M. 17-01-18 §4.4.8.1.10**

Sezione ad ascissa 67.6
Coefficiente parziale di sicurezza del materiale γ = 1.5
Kmod = 0.8
τ,tor,d <= Ksh * fv,d
0.92 <= 19.07 Comb: SLU, 71; Durata minima del carico nella combinazione: media
Mt = -1521

---

## Asta 337: Trave in legno a falda Falda 1 fili 161-217

Verifiche condotte secondo D.M. 17-01-18 (N.T.C.)

**Dati generali**

Lunghezza = 67.6

**Caratteristiche della sezione**

| Descrizione | Tipo | Base | Altezza | Area | Jx | Jy | Wx | Wy |
|---|---|---|---|---|---|---|---|---|
| R 18x23 | Rettangolare | 18 | 23 | 414 | 18250.5 | 11178 | 1587 | 1242 |

Materiale: C14 EN 338:2016
Rapporto luce/freccia elastica limite = 300
Rapporto luce/freccia elastica differita = 200
Mensola Y: Nessuno; Mensola X: Nessuno
Classe di servizio 1

**Verifica tensoflessione D.M. 17-01-18 §4.4.8.1.7**

Sezione ad ascissa 67.6
Coefficiente parziale di sicurezza del materiale γ = 1.5
Kmod = 1.1
St,0,d/ft,0,d + Sm,y,d/fm,y,d + Km*(Sm,z,d/fm,z,d) <= 1
St,0,d/ft,0,d + Km*(Sm,y,d/fm,y,d) + Sm,z,d/fm,z,d <= 1
2.3/52.8+0.7*11.1/102.7+36.3/102.7=0.47 <= 1 [4.4.6b] Comb: SLV, 8; Durata minima del carico nella combinazione: istantaneo
Mx = 17546.2; My = -45029.8; N = 954.9

**Verifica taglio D.M. 17-01-18 §4.4.8.1.9**

Sezione ad ascissa 67.6
Coefficiente parziale di sicurezza del materiale γ = 1.5
Kmod = 1.1; kcr = 0.67
τ,d <= fv,d
Sqrt(2.14^2+1.1^2) = 2.4 <= 22 Comb: SLV, 8; Durata minima del carico nella combinazione: istantaneo
Tx = -393.3; Ty = -202.3

**Verifica taglio+torsione D.M. 17-01-18 §4.4.8.1.11**

Sezione ad ascissa 0
Coefficiente parziale di sicurezza del materiale γ = 1.5
Kmod = 0.8; kcr = 0.67
τ,tor,d/(ksh*fv,d) + (τ,y,d/fv,d)^2 + (τ,z,d/fv,d)^2 <= 1
0.03+0+0.01 <= 1 Comb: SLU, 71; Durata minima del carico nella combinazione: media
Tx = -76.6; Ty = 237; Mt = -1018.4

**Verifica torsione D.M. 17-01-18 §4.4.8.1.10**

Sezione ad ascissa 67.6
Coefficiente parziale di sicurezza del materiale γ = 1.5
Kmod = 0.8
τ,tor,d <= Ksh * fv,d
0.62 <= 19.07 Comb: SLU, 29; Durata minima del carico nella combinazione: media
Mt = -1020.5

---

## Asta 338: Trave in legno a falda Falda 1 fili 161-217

Verifiche condotte secondo D.M. 17-01-18 (N.T.C.)

**Dati generali**

Lunghezza = 67.6

**Caratteristiche della sezione**

| Descrizione | Tipo | Base | Altezza | Area | Jx | Jy | Wx | Wy |
|---|---|---|---|---|---|---|---|---|
| R 18x23 | Rettangolare | 18 | 23 | 414 | 18250.5 | 11178 | 1587 | 1242 |

Materiale: C14 EN 338:2016
Rapporto luce/freccia elastica limite = 300
Rapporto luce/freccia elastica differita = 200
Mensola Y: Nessuno; Mensola X: Nessuno
Classe di servizio 1

**Verifica tensoflessione D.M. 17-01-18 §4.4.8.1.7**

Sezione ad ascissa 67.6
Coefficiente parziale di sicurezza del materiale γ = 1.5
Kmod = 1.1
St,0,d/ft,0,d + Sm,y,d/fm,y,d + Km*(Sm,z,d/fm,z,d) <= 1
St,0,d/ft,0,d + Km*(Sm,y,d/fm,y,d) + Sm,z,d/fm,z,d <= 1
2.3/52.8+0.7*16.6/102.7+52.7/102.7=0.67 <= 1 [4.4.6b] Comb: SLV, 8; Durata minima del carico nella combinazione: istantaneo
Mx = 26322.6; My = -65434.6; N = 967.6

**Verifica taglio D.M. 17-01-18 §4.4.8.1.9**

Sezione ad ascissa 0
Coefficiente parziale di sicurezza del materiale γ = 1.5
Kmod = 1.1; kcr = 0.67
τ,d <= fv,d
Sqrt(2.12^2+1.35^2) = 2.51 <= 22 Comb: SLV, 10; Durata minima del carico nella combinazione: istantaneo
Tx = 389.4; Ty = 248.8

**Verifica taglio+torsione D.M. 17-01-18 §4.4.8.1.11**

Sezione ad ascissa 0
Coefficiente parziale di sicurezza del materiale γ = 1.5
Kmod = 1.1; kcr = 0.67
τ,tor,d/(ksh*fv,d) + (τ,y,d/fv,d)^2 + (τ,z,d/fv,d)^2 <= 1
0.02+0.01+0 <= 1 Comb: SLV, 10; Durata minima del carico nella combinazione: istantaneo
Tx = 389.4; Ty = 248.8; Mt = -922.6

**Verifica torsione D.M. 17-01-18 §4.4.8.1.10**

Sezione ad ascissa 67.6
Coefficiente parziale di sicurezza del materiale γ = 1.5
Kmod = 1.1
τ,tor,d <= Ksh * fv,d
0.56 <= 26.22 Comb: SLV, 10; Durata minima del carico nella combinazione: istantaneo
Mt = -922.6

---

## Asta 339: Trave in legno a falda Falda 1 fili 161-217

Verifiche condotte secondo D.M. 17-01-18 (N.T.C.)

**Dati generali**

Lunghezza = 67.6

**Caratteristiche della sezione**

| Descrizione | Tipo | Base | Altezza | Area | Jx | Jy | Wx | Wy |
|---|---|---|---|---|---|---|---|---|
| R 18x23 | Rettangolare | 18 | 23 | 414 | 18250.5 | 11178 | 1587 | 1242 |

Materiale: C14 EN 338:2016
Rapporto luce/freccia elastica limite = 300
Rapporto luce/freccia elastica differita = 200

Mensola Y: Nessuno; Mensola X: Nessuno
Classe di servizio 1

**Verifica tensoflessione D.M. 17-01-18 §4.4.8.1.7**

Sezione ad ascissa 0
Coefficiente parziale di sicurezza del materiale γ = 1.5
Kmod = 1.1
St,0,d/ft,0,d + Sm,y,d/fm,y,d + Km*(Sm,z,d/fm,z,d) <= 1
St,0,d/ft,0,d + Km*(Sm,y,d/fm,y,d) + Sm,z,d/fm,z,d <= 1
2.4/52.8+0.7*17.5/102.7+55.7/102.7=0.71 <= 1 [4.4.6b] Comb: SLV, 8; Durata minima del carico nella combinazione: istantaneo
Mx = 27813.6; My = -69179.5; N = 981.6

**Verifica taglio D.M. 17-01-18 §4.4.8.1.9**

Sezione ad ascissa 67.6
Coefficiente parziale di sicurezza del materiale γ = 1.5
Kmod = 1.1; kcr = 0.67
τ,d <= fv,d
Sqrt(4.77^2+2.11^2) = 5.21 <= 22 Comb: SLV, 10; Durata minima del carico nella combinazione: istantaneo
Tx = -877.6; Ty = -387.7

**Verifica taglio+torsione D.M. 17-01-18 §4.4.8.1.11**

Sezione ad ascissa 0
Coefficiente parziale di sicurezza del materiale γ = 1.5
Kmod = 1.1; kcr = 0.67
τ,tor,d/(ksh*fv,d) + (τ,y,d/fv,d)^2 + (τ,z,d/fv,d)^2 <= 1
0.03+0.04+0.01 <= 1 Comb: SLV, 8; Durata minima del carico nella combinazione: istantaneo
Tx = 849.7; Ty = 433.5; Mt = 1392

**Verifica torsione D.M. 17-01-18 §4.4.8.1.10**

Sezione ad ascissa 67.6
Coefficiente parziale di sicurezza del materiale γ = 1.5
Kmod = 0.8
τ,tor,d <= Ksh * fv,d
0.61 <= 19.07 Comb: SLU, 80; Durata minima del carico nella combinazione: media
Mt = 1018.2

---

## Asta 340: Trave in legno a falda Falda 1 fili 161-217

Verifiche condotte secondo D.M. 17-01-18 (N.T.C.)

**Dati generali**

Lunghezza = 67.6

**Caratteristiche della sezione**

| Descrizione | Tipo | Base | Altezza | Area | Jx | Jy | Wx | Wy |
|---|---|---|---|---|---|---|---|---|
| R 18x23 | Rettangolare | 18 | 23 | 414 | 18250.5 | 11178 | 1587 | 1242 |

Materiale: C14 EN 338:2016
Rapporto luce/freccia elastica limite = 300
Rapporto luce/freccia elastica differita = 200
Mensola Y: Nessuno; Mensola X: Nessuno
Classe di servizio 1

**Verifica tensoflessione D.M. 17-01-18 §4.4.8.1.7**

Sezione ad ascissa 67.6
Coefficiente parziale di sicurezza del materiale γ = 1.5
Kmod = 1.1
St,0,d/ft,0,d + Sm,y,d/fm,y,d + Km*(Sm,z,d/fm,z,d) <= 1
St,0,d/ft,0,d + Km*(Sm,y,d/fm,y,d) + Sm,z,d/fm,z,d <= 1
2.4/52.8+0.7*18.1/102.7+41.8/102.7=0.58 <= 1 [4.4.6b] Comb: SLV, 8; Durata minima del carico nella combinazione: istantaneo
Mx = -28768.3; My = 51916.1; N = 992.9

**Verifica taglio D.M. 17-01-18 §4.4.8.1.9**

Sezione ad ascissa 0
Coefficiente parziale di sicurezza del materiale γ = 1.5
Kmod = 1.1; kcr = 0.67
τ,d <= fv,d
Sqrt(5.7^2+2.81^2) = 6.36 <= 22 Comb: SLV, 8; Durata minima del carico nella combinazione: istantaneo
Tx = 1049.3; Ty = 517.6

**Verifica taglio+torsione D.M. 17-01-18 §4.4.8.1.11**

Sezione ad ascissa 0
Coefficiente parziale di sicurezza del materiale γ = 1.5

Kmod = 1.1; kcr = 0.67
τ,tor,d/(ksh*fv,d) + (τ,y,d/fv,d)^2 + (τ,z,d/fv,d)^2 <= 1
0.03+0.07+0.02 <= 1 Comb: SLV, 8; Durata minima del carico nella combinazione: istantaneo
Tx = 1049.3; Ty = 517.6; Mt = -1519.8

**Verifica torsione D.M. 17-01-18 §4.4.8.1.10**

Sezione ad ascissa 67.6
Coefficiente parziale di sicurezza del materiale γ = 1.5
Kmod = 1.1
τ,tor,d <= Ksh * fv,d
0.92 <= 26.22 Comb: SLV, 8; Durata minima del carico nella combinazione: istantaneo
Mt = -1519.8

---

## Asta 341: Trave in legno a falda Falda 1 fili 133-161

Verifiche condotte secondo D.M. 17-01-18 (N.T.C.)

**Dati generali**

Lunghezza = 67.6

**Caratteristiche della sezione**

| Descrizione | Tipo | Base | Altezza | Area | Jx | Jy | Wx | Wy |
|---|---|---|---|---|---|---|---|---|
| R 18x23 | Rettangolare | 18 | 23 | 414 | 18250.5 | 11178 | 1587 | 1242 |

Materiale: C14 EN 338:2016
Rapporto luce/freccia elastica limite = 300
Rapporto luce/freccia elastica differita = 200
Mensola Y: Nessuno; Mensola X: Nessuno
Classe di servizio 1

**Verifica taglio D.M. 17-01-18 §4.4.8.1.9**

Sezione ad ascissa 67.6
Coefficiente parziale di sicurezza del materiale γ = 1.5
Kmod = 1.1; kcr = 0.67
τ,d <= fv,d
Sqrt(5.66^2+2.2^2) = 6.07 <= 22 Comb: SLV, 10; Durata minima del carico nella combinazione: istantaneo
Tx = -1041.1; Ty = -405.2

**Verifica pressoflessione D.M. 17-01-18 §4.4.8.1.8**

Sezione ad ascissa 0
Coefficiente parziale di sicurezza del materiale γ = 1.5
Kmod = 1.1
(Sc,0,d/fc,0,d)^2 + Sm,y,d/fm,y,d + Km*(Sm,z,d/fm,z,d) <= 1
(Sc,0,d/fc,0,d)^2 + Km*(Sm,y,d/fm,y,d) + Sm,z,d/fm,z,d <= 1
(2.7/117.3)^2+0.7*17.2/102.7+87.6/102.7=0.97 <= 1 [4.4.7b] Comb: SLV, 10; Durata minima del carico nella combinazione: istantaneo
Mx = -27332.4; My = 108804.5; N = -1116.1

**Verifica taglio+torsione D.M. 17-01-18 §4.4.8.1.11**

Sezione ad ascissa 0
Coefficiente parziale di sicurezza del materiale γ = 1.5
Kmod = 0.8; kcr = 0.67
τ,tor,d/(ksh*fv,d) + (τ,y,d/fv,d)^2 + (τ,z,d/fv,d)^2 <= 1
0.38+0.01+0.03 <= 1 Comb: SLU, 79; Durata minima del carico nella combinazione: media
Tx = -243.4; Ty = 542.9; Mt = 12117.3

**Verifica torsione D.M. 17-01-18 §4.4.8.1.10**

Sezione ad ascissa 67.6
Coefficiente parziale di sicurezza del materiale γ = 1.5
Kmod = 0.8
τ,tor,d <= Ksh * fv,d
7.31 <= 19.07 Comb: SLU, 79; Durata minima del carico nella combinazione: media
Mt = 12117.3

---

## Asta 342: Trave in legno a falda Falda 1 fili 133-161

Verifiche condotte secondo D.M. 17-01-18 (N.T.C.)

**Dati generali**

Lunghezza = 67.6

**Caratteristiche della sezione**

| Descrizione | Tipo | Base | Altezza | Area | Jx | Jy | Wx | Wy |
|---|---|---|---|---|---|---|---|---|
| R 18x23 | Rettangolare | 18 | 23 | 414 | 18250.5 | 11178 | 1587 | 1242 |

Materiale: C14 EN 338:2016
Rapporto luce/freccia elastica limite = 300
Rapporto luce/freccia elastica differita = 200
Mensola Y: Nessuno; Mensola X: Nessuno
Classe di servizio 1

**Verifica taglio D.M. 17-01-18 §4.4.8.1.9**

Sezione ad ascissa 67.6
Coefficiente parziale di sicurezza del materiale γ = 1.5
Kmod = 1.1; kcr = 0.67
τ,d <= fv,d
Sqrt(3.27^2+1.11^2) = 3.45 <= 22 Comb: SLV, 6; Durata minima del carico nella combinazione: istantaneo
Tx = -601; Ty = -204.4

**Verifica pressoflessione D.M. 17-01-18 §4.4.8.1.8**

Sezione ad ascissa 0
Coefficiente parziale di sicurezza del materiale γ = 1.5
Kmod = 1.1
(Sc,0,d/fc,0,d)^2 + Sm,y,d/fm,y,d + Km*(Sm,z,d/fm,z,d) <= 1
(Sc,0,d/fc,0,d)^2 + Km*(Sm,y,d/fm,y,d) + Sm,z,d/fm,z,d <= 1
(2.7/117.3)^2+0.7*7.5/102.7+37.9/102.7=0.42 <= 1 [4.4.7b] Comb: SLV, 10; Durata minima del carico nella combinazione: istantaneo
Mx = -11959; My = 47064.5; N = -1122.7

**Verifica taglio+torsione D.M. 17-01-18 §4.4.8.1.11**

Sezione ad ascissa 0
Coefficiente parziale di sicurezza del materiale γ = 1.5
Kmod = 0.8; kcr = 0.67
τ,tor,d/(ksh*fv,d) + (τ,y,d/fv,d)^2 + (τ,z,d/fv,d)^2 <= 1
0.1+0+0.02 <= 1 Comb: SLU, 72; Durata minima del carico nella combinazione: media
Tx = -159.3; Ty = 389.6; Mt = 3111.5

**Verifica torsione D.M. 17-01-18 §4.4.8.1.10**

Sezione ad ascissa 67.6
Coefficiente parziale di sicurezza del materiale γ = 1.5
Kmod = 0.8
τ,tor,d <= Ksh * fv,d
1.88 <= 19.07 Comb: SLU, 72; Durata minima del carico nella combinazione: media
Mt = 3111.5

---

## Asta 343: Trave in legno a falda Falda 1 fili 133-161

Verifiche condotte secondo D.M. 17-01-18 (N.T.C.)

**Dati generali**

Lunghezza = 67.6

**Caratteristiche della sezione**

| Descrizione | Tipo | Base | Altezza | Area | Jx | Jy | Wx | Wy |
|---|---|---|---|---|---|---|---|---|
| R 18x23 | Rettangolare | 18 | 23 | 414 | 18250.5 | 11178 | 1587 | 1242 |

Materiale: C14 EN 338:2016
Rapporto luce/freccia elastica limite = 300
Rapporto luce/freccia elastica differita = 200
Mensola Y: Nessuno; Mensola X: Nessuno
Classe di servizio 1

**Verifica taglio D.M. 17-01-18 §4.4.8.1.9**

Sezione ad ascissa 67.6
Coefficiente parziale di sicurezza del materiale γ = 1.5
Kmod = 1.1; kcr = 0.67
τ,d <= fv,d
Sqrt(3.4^2+1.43^2) = 3.69 <= 22 Comb: SLV, 6; Durata minima del carico nella combinazione: istantaneo
Tx = -625.3; Ty = -262.5

**Verifica pressoflessione D.M. 17-01-18 §4.4.8.1.8**

Sezione ad ascissa 38.3
Coefficiente parziale di sicurezza del materiale γ = 1.5
Kmod = 0.8
(Sc,0,d/fc,0,d)^2 + Sm,y,d/fm,y,d + Km*(Sm,z,d/fm,z,d) <= 1
(Sc,0,d/fc,0,d)^2 + Km*(Sm,y,d/fm,y,d) + Sm,z,d/fm,z,d <= 1
(1/85.3)^2+19.1/74.7+0.7*6.6/74.67=0.32 <= 1 [4.4.7a] Comb: SLU, 79; Durata minima del carico nella combinazione: media
Mx = -30282.1; My = -8166.4; N = -398.9

**Verifica taglio+torsione D.M. 17-01-18 §4.4.8.1.11**

Sezione ad ascissa 67.6
Coefficiente parziale di sicurezza del materiale γ = 1.5
Kmod = 0.8; kcr = 0.67
τ,tor,d/(ksh*fv,d) + (τ,y,d/fv,d)^2 + (τ,z,d/fv,d)^2 <= 1
0.12+0+0.02 <= 1 Comb: SLU, 79; Durata minima del carico nella combinazione: media
Tx = -142.4; Ty = -390.1; Mt = -3892.7

**Verifica torsione D.M. 17-01-18 §4.4.8.1.10**

Sezione ad ascissa 67.6
Coefficiente parziale di sicurezza del materiale γ = 1.5
Kmod = 0.8
τ,tor,d <= Ksh * fv,d
2.35 <= 19.07 Comb: SLU, 79; Durata minima del carico nella combinazione: media
Mt = -3892.7

---

## Asta 344: Trave in legno a falda Falda 1 fili 133-161

Verifiche condotte secondo D.M. 17-01-18 (N.T.C.)

**Dati generali**

Lunghezza = 67.5

**Caratteristiche della sezione**

| Descrizione | Tipo | Base | Altezza | Area | Jx | Jy | Wx | Wy |
|---|---|---|---|---|---|---|---|---|
| R 18x23 | Rettangolare | 18 | 23 | 414 | 18250.5 | 11178 | 1587 | 1242 |

Materiale: C14 EN 338:2016
Rapporto luce/freccia elastica limite = 300
Rapporto luce/freccia elastica differita = 200
Mensola Y: Nessuno; Mensola X: Nessuno
Classe di servizio 1

**Verifica taglio D.M. 17-01-18 §4.4.8.1.9**

Sezione ad ascissa 67.5
Coefficiente parziale di sicurezza del materiale γ = 1.5
Kmod = 1.1; kcr = 0.67
τ,d <= fv,d
Sqrt(5.04^2+2.68^2) = 5.71 <= 22 Comb: SLV, 10; Durata minima del carico nella combinazione: istantaneo
Tx = -927.6; Ty = -493.3

**Verifica pressoflessione D.M. 17-01-18 §4.4.8.1.8**

Sezione ad ascissa 67.5
Coefficiente parziale di sicurezza del materiale γ = 1.5
Kmod = 1.1
(Sc,0,d/fc,0,d)^2 + Sm,y,d/fm,y,d + Km*(Sm,z,d/fm,z,d) <= 1
(Sc,0,d/fc,0,d)^2 + Km*(Sm,y,d/fm,y,d) + Sm,z,d/fm,z,d <= 1
(2.8/117.3)^2+0.7*19.4/102.7+63.2/102.7=0.75 <= 1 [4.4.7b] Comb: SLV, 10; Durata minima del carico nella combinazione: istantaneo
Mx = 30750.5; My = -78494.9; N = -1143.2

**Verifica taglio+torsione D.M. 17-01-18 §4.4.8.1.11**

Sezione ad ascissa 67.5
Coefficiente parziale di sicurezza del materiale γ = 1.5
Kmod = 0.8; kcr = 0.67
τ,tor,d/(ksh*fv,d) + (τ,y,d/fv,d)^2 + (τ,z,d/fv,d)^2 <= 1
0.4+0+0.05 <= 1 Comb: SLU, 79; Durata minima del carico nella combinazione: media
Tx = -197.9; Ty = -688.9; Mt = -12495.2

**Verifica torsione D.M. 17-01-18 §4.4.8.1.10**

Sezione ad ascissa 67.5
Coefficiente parziale di sicurezza del materiale γ = 1.5
Kmod = 0.8
τ,tor,d <= Ksh * fv,d
7.54 <= 19.07 Comb: SLU, 79; Durata minima del carico nella combinazione: media
Mt = -12495.2

---

## Asta 345: Trave in legno a falda Falda 1 fili 74-133

Verifiche condotte secondo D.M. 17-01-18 (N.T.C.)

Dati generali

Lunghezza = 67.5

Caratteristiche della sezione

| Descrizione | Tipo | Base | Altezza | Area | Jx | Jy | Wx | Wy |
|---|---|---|---|---|---|---|---|---|
| R 18x23 | Rettangolare | 18 | 23 | 414 | 18250.5 | 11178 | 1587 | 1242 |

Materiale: C14 EN 338:2016
Rapporto luce/freccia elastica limite = 300
Rapporto luce/freccia elastica differita = 200
Mensola Y: Nessuno; Mensola X: Nessuno
Classe di servizio 1

Verifica tensoflessione D.M. 17-01-18 §4.4.8.1.7

Sezione ad ascissa 0
Coefficiente parziale di sicurezza del materiale γ = 1.5
Kmod = 1.1
St,0,d/ft,0,d + Sm,y,d/fm,y,d + Km*(Sm,z,d/fm,z,d) <= 1
St,0,d/ft,0,d + Km*(Sm,y,d/fm,y,d) + Sm,z,d/fm,z,d <= 1
1.9/52.8+0.7*25.1/102.7+48.6/102.7=0.68 <= 1 [4.4.6b] Comb: SLV, 12; Durata minima del carico nella combinazione: istantaneo
Mx = -39817.1; My = 60401.2; N = 774.4

Verifica taglio D.M. 17-01-18 §4.4.8.1.9

Sezione ad ascissa 67.6
Coefficiente parziale di sicurezza del materiale γ = 1.5
Kmod = 0.8; kcr = 0.67
τ,d <= fv,d
Sqrt(2.52^2+4.83^2) = 5.45 <= 16 Comb: SLU, 80; Durata minima del carico nella combinazione: media
Tx = -463.5; Ty = -889.1

Verifica taglio+torsione D.M. 17-01-18 §4.4.8.1.11

Sezione ad ascissa 67.6
Coefficiente parziale di sicurezza del materiale γ = 1.5
Kmod = 1.1; kcr = 0.67
τ,tor,d/(ksh*fv,d) + (τ,y,d/fv,d)^2 + (τ,z,d/fv,d)^2 <= 1
0.03+0.07+0.02 <= 1 Comb: SLV, 12; Durata minima del carico nella combinazione: istantaneo
Tx = -1064.1; Ty = -595; Mt = 1262.8

Verifica torsione D.M. 17-01-18 §4.4.8.1.10

Sezione ad ascissa 67.6
Coefficiente parziale di sicurezza del materiale γ = 1.5
Kmod = 1.1
τ,tor,d <= Ksh * fv,d
0.76 <= 26.22 Comb: SLV, 12; Durata minima del carico nella combinazione: istantaneo
Mt = 1262.8

## Asta 346: Trave in legno a falda Falda 1 fili 74-133

Verifiche condotte secondo D.M. 17-01-18 (N.T.C.)

Dati generali

Lunghezza = 67.5

Caratteristiche della sezione

| Descrizione | Tipo | Base | Altezza | Area | Jx | Jy | Wx | Wy |
|---|---|---|---|---|---|---|---|---|
| R 18x23 | Rettangolare | 18 | 23 | 414 | 18250.5 | 11178 | 1587 | 1242 |

Materiale: C14 EN 338:2016
Rapporto luce/freccia elastica limite = 300
Rapporto luce/freccia elastica differita = 200
Mensola Y: Nessuno; Mensola X: Nessuno
Classe di servizio 1

Verifica tensoflessione D.M. 17-01-18 §4.4.8.1.7

Sezione ad ascissa 67.5
Coefficiente parziale di sicurezza del materiale γ = 1.5
Kmod = 1.1
St,0,d/ft,0,d + Sm,y,d/fm,y,d + Km*(Sm,z,d/fm,z,d) <= 1
St,0,d/ft,0,d + Km*(Sm,y,d/fm,y,d) + Sm,z,d/fm,z,d <= 1
1.9/52.8+0.7*11.9/102.7+45.1/102.7=0.56 <= 1 [4.4.6b] Comb: SLV, 12; Durata minima del carico nella combinazione: istantaneo
Mx = 18936.1; My = -55953.7; N = 790.6

Verifica taglio D.M. 17-01-18 §4.4.8.1.9

Sezione ad ascissa 67.5

Coefficiente parziale di sicurezza del materiale γ = 1.5
Kmod = 0.8; kcr = 0.67
τ,d <= fv,d
Sqrt(0.6^2+3.85^2) = 3.9 <= 16 Comb: SLU, 80; Durata minima del carico nella combinazione: media
Tx = 110.5; Ty = -708.2

**Verifica taglio+torsione D.M. 17-01-18 §4.4.8.1.11**

Sezione ad ascissa 67.5
Coefficiente parziale di sicurezza del materiale γ = 1.5
Kmod = 0.8; kcr = 0.67
τ,tor,d/(ksh*fv,d) + (τ,y,d/fv,d)^2 + (τ,z,d/fv,d)^2 <= 1
0.05+0+0.06 <= 1 Comb: SLU, 80; Durata minima del carico nella combinazione: media
Tx = 110.5; Ty = -708.2; Mt = -1564.4

**Verifica torsione D.M. 17-01-18 §4.4.8.1.10**

Sezione ad ascissa 67.5
Coefficiente parziale di sicurezza del materiale γ = 1.5
Kmod = 0.8
τ,tor,d <= Ksh * fv,d
0.94 <= 19.07 Comb: SLU, 72; Durata minima del carico nella combinazione: media
Mt = -1565.4

---

## Asta 347: Trave in legno a falda Falda 1 fili 74-133

Verifiche condotte secondo D.M. 17-01-18 (N.T.C.)

**Dati generali**

Lunghezza = 67.6

**Caratteristiche della sezione**

| Descrizione | Tipo | Base | Altezza | Area | Jx | Jy | Wx | Wy |
|---|---|---|---|---|---|---|---|---|
| R 18x23 | Rettangolare | 18 | 23 | 414 | 18250.5 | 11178 | 1587 | 1242 |

Materiale: C14 EN 338:2016
Rapporto luce/freccia elastica limite = 300
Rapporto luce/freccia elastica differita = 200
Mensola Y: Nessuno; Mensola X: Nessuno
Classe di servizio 1

**Verifica tensoflessione D.M. 17-01-18 §4.4.8.1.7**

Sezione ad ascissa 0
Coefficiente parziale di sicurezza del materiale γ = 1.5
Kmod = 1.1
St,0,d/ft,0,d + Sm,y,d/fm,y,d + Km*(Sm,z,d/fm,z,d) <= 1
St,0,d/ft,0,d + Km*(Sm,y,d/fm,y,d) + Sm,z,d/fm,z,d <= 1
1.9/52.8+0.7*10.8/102.7+41.8/102.7=0.52 <= 1 [4.4.6b] Comb: SLV, 12; Durata minima del carico nella combinazione: istantaneo
Mx = 17065.9; My = -51867.8; N = 795.3

**Verifica taglio D.M. 17-01-18 §4.4.8.1.9**

Sezione ad ascissa 67.6
Coefficiente parziale di sicurezza del materiale γ = 1.5
Kmod = 0.8; kcr = 0.67
τ,d <= fv,d
Sqrt(0.09^2+3.09^2) = 3.1 <= 16 Comb: SLU, 71; Durata minima del carico nella combinazione: media
Tx = 16.4; Ty = -569.3

**Verifica taglio+torsione D.M. 17-01-18 §4.4.8.1.11**

Sezione ad ascissa 67.6
Coefficiente parziale di sicurezza del materiale γ = 1.5
Kmod = 1.1; kcr = 0.67
τ,tor,d/(ksh*fv,d) + (τ,y,d/fv,d)^2 + (τ,z,d/fv,d)^2 <= 1
0.04+0.01+0.01 <= 1 Comb: SLV, 6; Durata minima del carico nella combinazione: istantaneo
Tx = -382.8; Ty = -366.7; Mt = 1633

**Verifica torsione D.M. 17-01-18 §4.4.8.1.10**

Sezione ad ascissa 67.6
Coefficiente parziale di sicurezza del materiale γ = 1.5
Kmod = 1.1
τ,tor,d <= Ksh * fv,d
0.99 <= 26.22 Comb: SLV, 6; Durata minima del carico nella combinazione: istantaneo
Mt = 1633

---

## Asta 348: Trave in legno a falda Falda 1 fili 74-133

Verifiche condotte secondo D.M. 17-01-18 (N.T.C.)

### Dati generali

Lunghezza = 67.6

### Caratteristiche della sezione

| Descrizione | Tipo | Base | Altezza | Area | Jx | Jy | Wx | Wy |
|---|---|---|---|---|---|---|---|---|
| R 18x23 | Rettangolare | 18 | 23 | 414 | 18250.5 | 11178 | 1587 | 1242 |

Materiale: C14 EN 338:2016
Rapporto luce/freccia elastica limite = 300
Rapporto luce/freccia elastica differita = 200
Mensola Y: Nessuno; Mensola X: Nessuno
Classe di servizio 1

### Verifica tensoflessione D.M. 17-01-18 §4.4.8.1.7

Sezione ad ascissa 0
Coefficiente parziale di sicurezza del materiale γ = 1.5
Kmod = 1.1
St,0,d/ft,0,d + Sm,y,d/fm,y,d + Km*(Sm,z,d/fm,z,d) <= 1
St,0,d/ft,0,d + Km*(Sm,y,d/fm,y,d) + Sm,z,d/fm,z,d <= 1
1.9/52.8+0.7*2.9/102.7+24.5/102.7=0.29 <= 1 [4.4.6b] Comb: SLV, 12; Durata minima del carico nella combinazione: istantaneo
Mx = -4601.5; My = -30394.2; N = 801.7

### Verifica taglio D.M. 17-01-18 §4.4.8.1.9

Sezione ad ascissa 67.6
Coefficiente parziale di sicurezza del materiale γ = 1.5
Kmod = 0.8; kcr = 0.67
τ,d <= fv,d
Sqrt(0.62^2+2.08^2) = 2.17 <= 16 Comb: SLU, 71; Durata minima del carico nella combinazione: media
Tx = 113.4; Ty = -383.2

### Verifica taglio+torsione D.M. 17-01-18 §4.4.8.1.11

Sezione ad ascissa 67.6
Coefficiente parziale di sicurezza del materiale γ = 1.5
Kmod = 1.1; kcr = 0.67
τ,tor,d/(ksh*fv,d) + (τ,y,d/fv,d)^2 + (τ,z,d/fv,d)^2 <= 1
0.05+0+0 <= 1 Comb: SLV, 6; Durata minima del carico nella combinazione: istantaneo
Tx = -246.6; Ty = -278.1; Mt = 2001.3

### Verifica torsione D.M. 17-01-18 §4.4.8.1.10

Sezione ad ascissa 67.6
Coefficiente parziale di sicurezza del materiale γ = 1.5
Kmod = 1.1
τ,tor,d <= Ksh * fv,d
1.21 <= 26.22 Comb: SLV, 6; Durata minima del carico nella combinazione: istantaneo
Mt = 2001.3

---

## Asta 349: Trave in legno a falda Falda 1 fili 74-133

Verifiche condotte secondo D.M. 17-01-18 (N.T.C.)

### Dati generali

Lunghezza = 67.6

### Caratteristiche della sezione

| Descrizione | Tipo | Base | Altezza | Area | Jx | Jy | Wx | Wy |
|---|---|---|---|---|---|---|---|---|
| R 18x23 | Rettangolare | 18 | 23 | 414 | 18250.5 | 11178 | 1587 | 1242 |

Materiale: C14 EN 338:2016
Rapporto luce/freccia elastica limite = 300
Rapporto luce/freccia elastica differita = 200
Mensola Y: Nessuno; Mensola X: Nessuno
Classe di servizio 1

### Verifica taglio D.M. 17-01-18 §4.4.8.1.9

Sezione ad ascissa 0
Coefficiente parziale di sicurezza del materiale γ = 1.5
Kmod = 0.8; kcr = 0.67
τ,d <= fv,d
Sqrt(1.12^2+1.29^2) = 1.7 <= 16 Comb: SLU, 80; Durata minima del carico nella combinazione: media
Tx = 205.4; Ty = 236.6

**Verifica pressoflessione D.M. 17-01-18 §4.4.8.1.8**

Sezione ad ascissa 0
Coefficiente parziale di sicurezza del materiale γ = 1.5
Kmod = 1.1
(Sc,0,d/fc,0,d)^2 + Sm,y,d/fm,y,d + Km*(Sm,z,d/fm,z,d) <= 1
(Sc,0,d/fc,0,d)^2 + Km*(Sm,y,d/fm,y,d) + Sm,z,d/fm,z,d <= 1
(2.7/117.3)^2+0.7*14.9/102.7+17.1/102.7=0.27 <= 1 [4.4.7b] Comb: SLV, 10; Durata minima del carico nella combinazione: istantaneo
Mx = 23608.8; My = -21184.9; N = -1110.1

**Verifica taglio+torsione D.M. 17-01-18 §4.4.8.1.11**

Sezione ad ascissa 0
Coefficiente parziale di sicurezza del materiale γ = 1.5
Kmod = 0.8; kcr = 0.67
τ,tor,d/(ksh*fv,d) + (τ,y,d/fv,d)^2 + (τ,z,d/fv,d)^2 <= 1
0.04+0+0.01 <= 1 Comb: SLU, 79; Durata minima del carico nella combinazione: media
Tx = 198.2; Ty = 232.3; Mt = 1343.8

**Verifica torsione D.M. 17-01-18 §4.4.8.1.10**

Sezione ad ascissa 67.6
Coefficiente parziale di sicurezza del materiale γ = 1.5
Kmod = 1.1
τ,tor,d <= Ksh * fv,d
1.24 <= 26.22 Comb: SLV, 6; Durata minima del carico nella combinazione: istantaneo
Mt = 2050.3

---

## Asta 350: Trave in legno a falda Falda 1 fili 74-133

Verifiche condotte secondo D.M. 17-01-18 (N.T.C.)

**Dati generali**

Lunghezza = 67.6

**Caratteristiche della sezione**

| Descrizione | Tipo | Base | Altezza | Area | Jx | Jy | Wx | Wy |
|---|---|---|---|---|---|---|---|---|
| R 18x23 | Rettangolare | 18 | 23 | 414 | 18250.5 | 11178 | 1587 | 1242 |

Materiale: C14 EN 338:2016
Rapporto luce/freccia elastica limite = 300
Rapporto luce/freccia elastica differita = 200
Mensola Y: Nessuno; Mensola X: Nessuno
Classe di servizio 1

**Verifica taglio D.M. 17-01-18 §4.4.8.1.9**

Sezione ad ascissa 0
Coefficiente parziale di sicurezza del materiale γ = 1.5
Kmod = 0.8; kcr = 0.67
τ,d <= fv,d
Sqrt(1.77^2+2.39^2) = 2.98 <= 16 Comb: SLU, 71; Durata minima del carico nella combinazione: media
Tx = 326.2; Ty = 440.4

**Verifica pressoflessione D.M. 17-01-18 §4.4.8.1.8**

Sezione ad ascissa 67.6
Coefficiente parziale di sicurezza del materiale γ = 1.5
Kmod = 0.8
(Sc,0,d/fc,0,d)^2 + Sm,y,d/fm,y,d + Km*(Sm,z,d/fm,z,d) <= 1
(Sc,0,d/fc,0,d)^2 + Km*(Sm,y,d/fm,y,d) + Sm,z,d/fm,z,d <= 1
(1.4/85.3)^2+0.7*6.2/74.7+19.7/74.7=0.32 <= 1 [4.4.7b] Comb: SLU, 38; Durata minima del carico nella combinazione: media
Mx = 9852.4; My = 24487.7; N = -566.4

**Verifica taglio+torsione D.M. 17-01-18 §4.4.8.1.11**

Sezione ad ascissa 0
Coefficiente parziale di sicurezza del materiale γ = 1.5
Kmod = 0.8; kcr = 0.67
τ,tor,d/(ksh*fv,d) + (τ,y,d/fv,d)^2 + (τ,z,d/fv,d)^2 <= 1
0.06+0.01+0.02 <= 1 Comb: SLU, 79; Durata minima del carico nella combinazione: media
Tx = 323.4; Ty = 438.4; Mt = 1830.9

**Verifica torsione D.M. 17-01-18 §4.4.8.1.10**

Sezione ad ascissa 67.6
Coefficiente parziale di sicurezza del materiale γ = 1.5
Kmod = 0.8
τ,tor,d <= Ksh * fv,d

1.11 <= 19.07 Comb: SLU, 79; Durata minima del carico nella combinazione: media
Mt = 1830.9

## Asta 351: Trave in legno a falda Falda 1 fili 74-133

Verifiche condotte secondo D.M. 17-01-18 (N.T.C.)

### Dati generali

Lunghezza = 67.6

### Caratteristiche della sezione

| Descrizione | Tipo | Base | Altezza | Area | Jx | Jy | Wx | Wy |
|---|---|---|---|---|---|---|---|---|
| R 18x23 | Rettangolare | 18 | 23 | 414 | 18250.5 | 11178 | 1587 | 1242 |

Materiale: C14 EN 338:2016
Rapporto luce/freccia elastica limite = 300
Rapporto luce/freccia elastica differita = 200
Mensola Y: Nessuno; Mensola X: Nessuno
Classe di servizio 1

### Verifica taglio D.M. 17-01-18 §4.4.8.1.9

Sezione ad ascissa 0
Coefficiente parziale di sicurezza del materiale γ = 1.5
Kmod = 1.1; kcr = 0.67
τ,d <= fv,d
Sqrt(7.17^2+3.85^2) = 8.14 <= 22 Comb: SLV, 10; Durata minima del carico nella combinazione: istantaneo
Tx = 1319.3; Ty = 708.4

### Verifica pressoflessione D.M. 17-01-18 §4.4.8.1.8

Sezione ad ascissa 67.6
Coefficiente parziale di sicurezza del materiale γ = 1.5
Kmod = 1.1
(Sc,0,d/fc,0,d)^2 + Sm,y,d/fm,y,d + Km*(Sm,z,d/fm,z,d) <= 1
(Sc,0,d/fc,0,d)^2 + Km*(Sm,y,d/fm,y,d) + Sm,z,d/fm,z,d <= 1
(2.7/117.3)^2+0.7*17.3/102.7+87.7/102.7=0.97 <= 1 [4.4.7b] Comb: SLV, 10; Durata minima del carico nella combinazione: istantaneo
Mx = -27441.8; My = 108885.4; N = -1112.8

### Verifica taglio+torsione D.M. 17-01-18 §4.4.8.1.11

Sezione ad ascissa 67.6
Coefficiente parziale di sicurezza del materiale γ = 1.5
Kmod = 1.1; kcr = 0.67
τ,tor,d/(ksh*fv,d) + (τ,y,d/fv,d)^2 + (τ,z,d/fv,d)^2 <= 1
0.05+0.1+0.02 <= 1 Comb: SLV, 8; Durata minima del carico nella combinazione: istantaneo
Tx = -1297.6; Ty = -599.8; Mt = 2380.1

### Verifica torsione D.M. 17-01-18 §4.4.8.1.10

Sezione ad ascissa 67.6
Coefficiente parziale di sicurezza del materiale γ = 1.5
Kmod = 0.8
τ,tor,d <= Ksh * fv,d
2.78 <= 19.07 Comb: SLU, 79; Durata minima del carico nella combinazione: media
Mt = 4608.6

## Asta 352: Trave in legno a falda Falda 4 fili 173-174

Verifiche condotte secondo D.M. 17-01-18 (N.T.C.)

### Dati generali

Lunghezza = 316.5

### Caratteristiche della sezione

| Descrizione | Tipo | Base | Altezza | Area | Jx | Jy | Wx | Wy |
|---|---|---|---|---|---|---|---|---|
| R 8x10 | Rettangolare | 8 | 10 | 80 | 666.67 | 426.67 | 133.33 | 106.67 |

Materiale: C14 EN 338:2016
Rapporto luce/freccia elastica limite = 300
Rapporto luce/freccia elastica differita = 200
Mensola Y: Nessuno; Mensola X: Nessuno
Classe di servizio 1

### Verifica taglio D.M. 17-01-18 §4.4.8.1.9

Sezione ad ascissa 316.4
Coefficiente parziale di sicurezza del materiale γ = 1.5

Kmod = 0.8; kcr = 0.67
τ,d <= fv,d
Sqrt(0.09^2+6.45^2) = 6.45 <= 16 Comb: SLU, 71; Durata minima del carico nella combinazione: media
Tx = 3.3; Ty = -229.2

**Verifica pressoflessione D.M. 17-01-18 §4.4.8.1.8**

Sezione ad ascissa 0
Coefficiente parziale di sicurezza del materiale γ = 1.5
Kmod = 0.8; Kh = 1.084 (formula 11.7.1)
(Sc,0,d/fc,0,d)^2 + Sm,y,d/fm,y,d + Km*(Sm,z,d/fm,z,d) <= 1
(Sc,0,d/fc,0,d)^2 + Km*(Sm,y,d/fm,y,d) + Sm,z,d/fm,z,d <= 1
(1.4/85.3)^2+398.5/81+0.7*5.7/80.97=4.97 !> 1 [4.4.7a] Comb: SLU, 71; Durata minima del carico nella combinazione: media - NON SODDISFATTA
Mx = -53139.3; My = -606.9; N = -116

**Verifica taglio+torsione D.M. 17-01-18 §4.4.8.1.11**

Sezione ad ascissa 316.4
Coefficiente parziale di sicurezza del materiale γ = 1.5
Kmod = 0.8; Kh = 1.084 (formula 11.7.1); kcr = 0.67
τ,tor,d/(ksh*fv,d) + (τ,y,d/fv,d)^2 + (τ,z,d/fv,d)^2 <= 1
0.13+0+0.16 <= 1 Comb: SLU, 79; Durata minima del carico nella combinazione: media
Tx = 3; Ty = -229.2; Mt = 362.5

**Verifica torsione D.M. 17-01-18 §4.4.8.1.10**

Sezione ad ascissa 316.4
Coefficiente parziale di sicurezza del materiale γ = 1.5
Kmod = 0.8
τ,tor,d <= Ksh * fv,d
2.56 <= 19 Comb: SLU, 79; Durata minima del carico nella combinazione: media
Mt = 362.5

---

## Asta 353: Trave in legno a falda Falda 4 fili 173-174

Verifiche condotte secondo D.M. 17-01-18 (N.T.C.)

**Dati generali**

Lunghezza = 14.4

**Caratteristiche della sezione**

| Descrizione | Tipo | Base | Altezza | Area | Jx | Jy | Wx | Wy |
|---|---|---|---|---|---|---|---|---|
| R 8x10 | Rettangolare | 8 | 10 | 80 | 666.67 | 426.67 | 133.33 | 106.67 |

Materiale: C14 EN 338:2016
Rapporto luce/freccia elastica limite = 300
Rapporto luce/freccia elastica differita = 200
Mensola Y: Nessuno; Mensola X: Nessuno
Classe di servizio 1

**Verifica trazione parallela alla fibratura D.M. 17-01-18 §4.4.8.1.1**

Sezione ad ascissa 5.8
Coefficiente parziale di sicurezza del materiale γ = 1.5
Kmod = 1.1; Kh = 1.084 (formula 11.7.1)
St,0,d <= ft,0,d
0.25 <= 57.26 Comb: SLV, 4; Durata minima del carico nella combinazione: istantaneo
N = 20

**Verifica flessione D.M. 17-01-18 §4.4.8.1.6**

Sezione ad ascissa 14.4
Coefficiente parziale di sicurezza del materiale γ = 1.5
Kmod = 1.1; Kh = 1.084 (formula 11.7.1)
Sm,y,d/fm,y,d + Km*(Sm,z,d/fm,z,d) <= 1
Km*(Sm,y,d/fm,y,d) + Sm,z,d/fm,z,d <= 1
0/111.3+0.7*0/111.3=0 <= 1 (formula 4.4.5a) Comb: SLV, 16; Durata minima del carico nella combinazione: istantaneo
Mx = 6.3; My = 0.4

---

## Asta 354: Trave in legno a falda Falda 4 fili 164-165

Verifiche condotte secondo D.M. 17-01-18 (N.T.C.)

**Dati generali**

Lunghezza = 316.5

### Caratteristiche della sezione

| Descrizione | Tipo | Base | Altezza | Area | Jx | Jy | Wx | Wy |
|---|---|---|---|---|---|---|---|---|
| R 8x10 | Rettangolare | 8 | 10 | 80 | 666.67 | 426.67 | 133.33 | 106.67 |

Materiale: C14 EN 338:2016
Rapporto luce/freccia elastica limite = 300
Rapporto luce/freccia elastica differita = 200
Mensola Y: Nessuno; Mensola X: Nessuno
Classe di servizio 1

### Verifica taglio D.M. 17-01-18 §4.4.8.1.9

Sezione ad ascissa 316.4
Coefficiente parziale di sicurezza del materiale γ = 1.5
Kmod = 0.8; kcr = 0.67
τ,d <= fv,d
Sqrt(0.1^2+7^2) = 7 <= 16 Comb: SLU, 71; Durata minima del carico nella combinazione: media
Tx = 3.5; Ty = -248.9

### Verifica pressoflessione D.M. 17-01-18 §4.4.8.1.8

Sezione ad ascissa 0
Coefficiente parziale di sicurezza del materiale γ = 1.5
Kmod = 0.8; Kh = 1.084 (formula 11.7.1)
(Sc,0,d/fc,0,d)^2 + Sm,y,d/fm,y,d + Km*(Sm,z,d/fm,z,d) <= 1
(Sc,0,d/fc,0,d)^2 + Km*(Sm,y,d/fm,y,d) + Sm,z,d/fm,z,d <= 1
(2.7/85.3)^2+428.7/81+0.7*5.2/80.97=5.34 !> 1 [4.4.7a] Comb: SLU, 71; Durata minima del carico nella combinazione: media - NON SODDISFATTA
Mx = -57158.7; My = -553.3; N = -216.2

### Verifica taglio+torsione D.M. 17-01-18 §4.4.8.1.11

Sezione ad ascissa 316.4
Coefficiente parziale di sicurezza del materiale γ = 1.5
Kmod = 0.8; Kh = 1.084 (formula 11.7.1); kcr = 0.67
τ,tor,d/(ksh*fv,d) + (τ,y,d/fv,d)^2 + (τ,z,d/fv,d)^2 <= 1
0.09+0+0.19 <= 1 Comb: SLU, 79; Durata minima del carico nella combinazione: media
Tx = 3.3; Ty = -248.9; Mt = 249.5

### Verifica torsione D.M. 17-01-18 §4.4.8.1.10

Sezione ad ascissa 316.4
Coefficiente parziale di sicurezza del materiale γ = 1.5
Kmod = 0.8
τ,tor,d <= Ksh * fv,d
1.76 <= 19 Comb: SLU, 79; Durata minima del carico nella combinazione: media
Mt = 249.5

---

## Asta 355: Trave in legno a falda Falda 4 fili 164-165

Verifiche condotte secondo D.M. 17-01-18 (N.T.C.)

### Dati generali

Lunghezza = 14.4

### Caratteristiche della sezione

| Descrizione | Tipo | Base | Altezza | Area | Jx | Jy | Wx | Wy |
|---|---|---|---|---|---|---|---|---|
| R 8x10 | Rettangolare | 8 | 10 | 80 | 666.67 | 426.67 | 133.33 | 106.67 |

Materiale: C14 EN 338:2016
Rapporto luce/freccia elastica limite = 300
Rapporto luce/freccia elastica differita = 200
Mensola Y: Nessuno; Mensola X: Nessuno
Classe di servizio 1

### Verifica trazione parallela alla fibratura D.M. 17-01-18 §4.4.8.1.1

Sezione ad ascissa 3.9
Coefficiente parziale di sicurezza del materiale γ = 1.5
Kmod = 1.1; Kh = 1.084 (formula 11.7.1)
St,0,d <= ft,0,d
0.01 <= 57.26 Comb: SLV, 8; Durata minima del carico nella combinazione: istantaneo
N = 0.8

### Verifica flessione D.M. 17-01-18 §4.4.8.1.6

Sezione ad ascissa 0
Coefficiente parziale di sicurezza del materiale γ = 1.5
Kmod = 0.6; Kh = 1.084 (formula 11.7.1)
Sm,y,d/fm,y,d + Km*(Sm,z,d/fm,z,d) <= 1

Km*(Sm,y,d/fm,y,d) + Sm,z,d/fm,z,d <= 1
0/60.7+0.7*0/60.7=0 <= 1 (formula 4.4.5a) Comb: SLU, 64; Durata minima del carico nella combinazione: permanente
Mx = 3.5; My = 0

## Asta 356: Trave in legno a falda Falda 4 fili 156-157

Verifiche condotte secondo D.M. 17-01-18 (N.T.C.)

### Dati generali

Lunghezza = 316.5

### Caratteristiche della sezione

| Descrizione | Tipo | Base | Altezza | Area | Jx | Jy | Wx | Wy |
|---|---|---|---|---|---|---|---|---|
| R 8x10 | Rettangolare | 8 | 10 | 80 | 666.67 | 426.67 | 133.33 | 106.67 |

Materiale: C14 EN 338:2016
Rapporto luce/freccia elastica limite = 300
Rapporto luce/freccia elastica differita = 200
Mensola Y: Nessuno; Mensola X: Nessuno
Classe di servizio 1

### Verifica taglio D.M. 17-01-18 §4.4.8.1.9

Sezione ad ascissa 316.4
Coefficiente parziale di sicurezza del materiale γ = 1.5
Kmod = 0.8; kcr = 0.67
τ,d <= fv,d
Sqrt(0.17^2+6.85^2) = 6.86 <= 16 Comb: SLU, 71; Durata minima del carico nella combinazione: media
Tx = 6; Ty = -243.7

### Verifica pressoflessione D.M. 17-01-18 §4.4.8.1.8

Sezione ad ascissa 0
Coefficiente parziale di sicurezza del materiale γ = 1.5
Kmod = 0.8; Kh = 1.084 (formula 11.7.1)
(Sc,0,d/fc,0,d)^2 + Sm,y,d/fm,y,d + Km*(Sm,z,d/fm,z,d) <= 1
(Sc,0,d/fc,0,d)^2 + Km*(Sm,y,d/fm,y,d) + Sm,z,d/fm,z,d <= 1
(1.5/85.3)^2+429.9/81+0.7*9/80.97=5.39 !> 1 [4.4.7a] Comb: SLU, 71; Durata minima del carico nella combinazione: media - NON SODDISFATTA
Mx = -57321.8; My = -963.2; N = -117.8

### Verifica taglio+torsione D.M. 17-01-18 §4.4.8.1.11

Sezione ad ascissa 316.4
Coefficiente parziale di sicurezza del materiale γ = 1.5
Kmod = 0.8; Kh = 1.084 (formula 11.7.1); kcr = 0.67
τ,tor,d/(ksh*fv,d) + (τ,y,d/fv,d)^2 + (τ,z,d/fv,d)^2 <= 1
0.04+0+0.18 <= 1 Comb: SLU, 79; Durata minima del carico nella combinazione: media
Tx = 6; Ty = -243.7; Mt = 120.3

### Verifica torsione D.M. 17-01-18 §4.4.8.1.10

Sezione ad ascissa 316.4
Coefficiente parziale di sicurezza del materiale γ = 1.5
Kmod = 0.8
τ,tor,d <= Ksh * fv,d
0.85 <= 19 Comb: SLU, 79; Durata minima del carico nella combinazione: media
Mt = 120.3

## Asta 357: Trave in legno a falda Falda 4 fili 156-157

Verifiche condotte secondo D.M. 17-01-18 (N.T.C.)

### Dati generali

Lunghezza = 14.4

### Caratteristiche della sezione

| Descrizione | Tipo | Base | Altezza | Area | Jx | Jy | Wx | Wy |
|---|---|---|---|---|---|---|---|---|
| R 8x10 | Rettangolare | 8 | 10 | 80 | 666.67 | 426.67 | 133.33 | 106.67 |

Materiale: C14 EN 338:2016
Rapporto luce/freccia elastica limite = 300
Rapporto luce/freccia elastica differita = 200
Mensola Y: Nessuno; Mensola X: Nessuno
Classe di servizio 1

### Verifica trazione parallela alla fibratura D.M. 17-01-18 §4.4.8.1.1

Sezione ad ascissa 6.7

Coefficiente parziale di sicurezza del materiale γ = 1.5
Kmod = 1.1; Kh = 1.084 (formula 11.7.1)
St,0,d <= ft,0,d
0.23 <= 57.26 Comb: SLV, 4; Durata minima del carico nella combinazione: istantaneo
N = 18.4

**Verifica flessione D.M. 17-01-18 §4.4.8.1.6**

Sezione ad ascissa 0
Coefficiente parziale di sicurezza del materiale γ = 1.5
Kmod = 1.1; Kh = 1.084 (formula 11.7.1)
Sm,y,d/fm,y,d + Km*(Sm,z,d/fm,z,d) <= 1
Km*(Sm,y,d/fm,y,d) + Sm,z,d/fm,z,d <= 1
0/111.3+0.7*0/111.3=0 <= 1 (formula 4.4.5a) Comb: SLV, 2; Durata minima del carico nella combinazione: istantaneo
Mx = 5.3; My = 1.5

## Asta 358: Trave in legno a falda Falda 4 fili 151-152

Verifiche condotte secondo D.M. 17-01-18 (N.T.C.)

**Dati generali**

Lunghezza = 316.5

**Caratteristiche della sezione**

| Descrizione | Tipo | Base | Altezza | Area | Jx | Jy | Wx | Wy |
|---|---|---|---|---|---|---|---|---|
| R 8x10 | Rettangolare | 8 | 10 | 80 | 666.67 | 426.67 | 133.33 | 106.67 |

Materiale: C14 EN 338:2016
Rapporto luce/freccia elastica limite = 300
Rapporto luce/freccia elastica differita = 200
Mensola Y: Nessuno; Mensola X: Nessuno
Classe di servizio 1

**Verifica taglio D.M. 17-01-18 §4.4.8.1.9**

Sezione ad ascissa 316.4
Coefficiente parziale di sicurezza del materiale γ = 1.5
Kmod = 0.8; kcr = 0.67
τ,d <= fv,d
Sqrt(0.22^2+7.15^2) = 7.15 <= 16 Comb: SLU, 72; Durata minima del carico nella combinazione: media
Tx = 7.8; Ty = -254.1

**Verifica pressoflessione D.M. 17-01-18 §4.4.8.1.8**

Sezione ad ascissa 0
Coefficiente parziale di sicurezza del materiale γ = 1.5
Kmod = 0.8; Kh = 1.084 (formula 11.7.1)
(Sc,0,d/fc,0,d)^2 + Sm,y,d/fm,y,d + Km*(Sm,z,d/fm,z,d) <= 1
(Sc,0,d/fc,0,d)^2 + Km*(Sm,y,d/fm,y,d) + Sm,z,d/fm,z,d <= 1
(2.4/85.3)^2+436.8/81+0.7*12.8/80.97=5.51 !> 1 [4.4.7a] Comb: SLU, 79; Durata minima del carico nella combinazione: media - NON SODDISFATTA
Mx = -58234.5; My = -1362.5; N = -190.6

**Verifica taglio+torsione D.M. 17-01-18 §4.4.8.1.11**

Sezione ad ascissa 316.4
Coefficiente parziale di sicurezza del materiale γ = 1.5
Kmod = 0.8; Kh = 1.084 (formula 11.7.1); kcr = 0.67
τ,tor,d/(ksh*fv,d) + (τ,y,d/fv,d)^2 + (τ,z,d/fv,d)^2 <= 1
0+0+0.2 <= 1 Comb: SLU, 72; Durata minima del carico nella combinazione: media
Tx = 7.8; Ty = -254.1; Mt = -12.4

**Verifica torsione D.M. 17-01-18 §4.4.8.1.10**

Sezione ad ascissa 316.4
Coefficiente parziale di sicurezza del materiale γ = 1.5
Kmod = 1.1
τ,tor,d <= Ksh * fv,d
0.25 <= 26.13 Comb: SLV, 16; Durata minima del carico nella combinazione: istantaneo
Mt = -35.1

## Asta 359: Trave in legno a falda Falda 4 fili 151-152

Verifiche condotte secondo D.M. 17-01-18 (N.T.C.)

**Dati generali**

Lunghezza = 14.4

### Caratteristiche della sezione

| Descrizione | Tipo | Base | Altezza | Area | Jx | Jy | Wx | Wy |
|---|---|---|---|---|---|---|---|---|
| R 8x10 | Rettangolare | 8 | 10 | 80 | 666.67 | 426.67 | 133.33 | 106.67 |

Materiale: C14 EN 338:2016
Rapporto luce/freccia elastica limite = 300
Rapporto luce/freccia elastica differita = 200
Mensola Y: Nessuno; Mensola X: Nessuno
Classe di servizio 1

### Verifica trazione parallela alla fibratura D.M. 17-01-18 §4.4.8.1.1

Sezione ad ascissa 1.9
Coefficiente parziale di sicurezza del materiale γ = 1.5
Kmod = 1.1; Kh = 1.084 (formula 11.7.1)
St,0,d <= ft,0,d
0.18 <= 57.26 Comb: SLV, 12; Durata minima del carico nella combinazione: istantaneo
N = 14.5

### Verifica flessione D.M. 17-01-18 §4.4.8.1.6

Sezione ad ascissa 0
Coefficiente parziale di sicurezza del materiale γ = 1.5
Kmod = 0.6; Kh = 1.084 (formula 11.7.1)
Sm,y,d/fm,y,d + Km*(Sm,z,d/fm,z,d) <= 1
Km*(Sm,y,d/fm,y,d) + Sm,z,d/fm,z,d <= 1
0/60.7+0.7*0/60.7=0 <= 1 (formula 4.4.5a) Comb: SLU, 64; Durata minima del carico nella combinazione: permanente
Mx = 3.5; My = 0

---

## Asta 360: Trave in legno a falda Falda 4 fili 142-143

Verifiche condotte secondo D.M. 17-01-18 (N.T.C.)

### Dati generali

Lunghezza = 316.5

### Caratteristiche della sezione

| Descrizione | Tipo | Base | Altezza | Area | Jx | Jy | Wx | Wy |
|---|---|---|---|---|---|---|---|---|
| R 8x10 | Rettangolare | 8 | 10 | 80 | 666.67 | 426.67 | 133.33 | 106.67 |

Materiale: C14 EN 338:2016
Rapporto luce/freccia elastica limite = 300
Rapporto luce/freccia elastica differita = 200
Mensola Y: Nessuno; Mensola X: Nessuno
Classe di servizio 1

### Verifica taglio D.M. 17-01-18 §4.4.8.1.9

Sezione ad ascissa 316.4
Coefficiente parziale di sicurezza del materiale γ = 1.5
Kmod = 0.8; kcr = 0.67
τ,d <= fv,d
Sqrt(0.24^2+7.11^2) = 7.11 <= 16 Comb: SLU, 72; Durata minima del carico nella combinazione: media
Tx = 8.6; Ty = -252.8

### Verifica pressoflessione D.M. 17-01-18 §4.4.8.1.8

Sezione ad ascissa 0
Coefficiente parziale di sicurezza del materiale γ = 1.5
Kmod = 0.8; Kh = 1.084 (formula 11.7.1)
(Sc,0,d/fc,0,d)^2 + Sm,y,d/fm,y,d + Km*(Sm,z,d/fm,z,d) <= 1
(Sc,0,d/fc,0,d)^2 + Km*(Sm,y,d/fm,y,d) + Sm,z,d/fm,z,d <= 1
(1/85.3)^2+427.3/81+0.7*14.6/80.97=5.4 !> 1 [4.4.7a] Comb: SLU, 80; Durata minima del carico nella combinazione: media - NON SODDISFATTA
Mx = -56975.7; My = -1560.8; N = -83

### Verifica taglio+torsione D.M. 17-01-18 §4.4.8.1.11

Sezione ad ascissa 316.4
Coefficiente parziale di sicurezza del materiale γ = 1.5
Kmod = 0.8; Kh = 1.084 (formula 11.7.1); kcr = 0.67
τ,tor,d/(ksh*fv,d) + (τ,y,d/fv,d)^2 + (τ,z,d/fv,d)^2 <= 1
0.05+0+0.2 <= 1 Comb: SLU, 72; Durata minima del carico nella combinazione: media
Tx = 8.6; Ty = -252.8; Mt = -140.6

### Verifica torsione D.M. 17-01-18 §4.4.8.1.10

Sezione ad ascissa 316.4
Coefficiente parziale di sicurezza del materiale γ = 1.5
Kmod = 0.8

τ,tor,d <= Ksh * fv,d
0.99 <= 19 Comb: SLU, 80; Durata minima del carico nella combinazione: media
Mt = -140.8

## Asta 361: Trave in legno a falda Falda 4 fili 142-143

Verifiche condotte secondo D.M. 17-01-18 (N.T.C.)

### Dati generali

Lunghezza = 14.4

### Caratteristiche della sezione

| Descrizione | Tipo | Base | Altezza | Area | Jx | Jy | Wx | Wy |
|---|---|---|---|---|---|---|---|---|
| R 8x10 | Rettangolare | 8 | 10 | 80 | 666.67 | 426.67 | 133.33 | 106.67 |

Materiale: C14 EN 338:2016
Rapporto luce/freccia elastica limite = 300
Rapporto luce/freccia elastica differita = 200
Mensola Y: Nessuno; Mensola X: Nessuno
Classe di servizio 1

### Verifica trazione parallela alla fibratura D.M. 17-01-18 §4.4.8.1.1

Sezione ad ascissa 3.9
Coefficiente parziale di sicurezza del materiale γ = 1.5
Kmod = 1.1; Kh = 1.084 (formula 11.7.1)
St,0,d <= ft,0,d
0.21 <= 57.26 Comb: SLV, 8; Durata minima del carico nella combinazione: istantaneo
N = 16.9

### Verifica flessione D.M. 17-01-18 §4.4.8.1.6

Sezione ad ascissa 0
Coefficiente parziale di sicurezza del materiale γ = 1.5
Kmod = 0.6; Kh = 1.084 (formula 11.7.1)
Sm,y,d/fm,y,d + Km*(Sm,z,d/fm,z,d) <= 1
Km*(Sm,y,d/fm,y,d) + Sm,z,d/fm,z,d <= 1
0/60.7+0.7*0/60.7=0 <= 1 (formula 4.4.5a) Comb: SLU, 64; Durata minima del carico nella combinazione: permanente
Mx = 3.5; My = 0

## Asta 362: Trave in legno a falda Falda 4 fili 135-136

Verifiche condotte secondo D.M. 17-01-18 (N.T.C.)

### Dati generali

Lunghezza = 316.5

### Caratteristiche della sezione

| Descrizione | Tipo | Base | Altezza | Area | Jx | Jy | Wx | Wy |
|---|---|---|---|---|---|---|---|---|
| R 8x10 | Rettangolare | 8 | 10 | 80 | 666.67 | 426.67 | 133.33 | 106.67 |

Materiale: C14 EN 338:2016
Rapporto luce/freccia elastica limite = 300
Rapporto luce/freccia elastica differita = 200
Mensola Y: Nessuno; Mensola X: Nessuno
Classe di servizio 1

### Verifica taglio D.M. 17-01-18 §4.4.8.1.9

Sezione ad ascissa 316.4
Coefficiente parziale di sicurezza del materiale γ = 1.5
Kmod = 0.8; kcr = 0.67
τ,d <= fv,d
Sqrt(0.25^2+7.82^2) = 7.83 <= 16 Comb: SLU, 72; Durata minima del carico nella combinazione: media
Tx = 9; Ty = -278.2

### Verifica pressoflessione D.M. 17-01-18 §4.4.8.1.8

Sezione ad ascissa 0
Coefficiente parziale di sicurezza del materiale γ = 1.5
Kmod = 0.8; Kh = 1.084 (formula 11.7.1)
(Sc,0,d/fc,0,d)^2 + Sm,y,d/fm,y,d + Km*(Sm,z,d/fm,z,d) <= 1
(Sc,0,d/fc,0,d)^2 + Km*(Sm,y,d/fm,y,d) + Sm,z,d/fm,z,d <= 1
(4.5/85.3)^2+429.9/81+0.7*14.4/80.97=5.44 !> 1 [4.4.7a] Comb: SLU, 72; Durata minima del carico nella combinazione: media - NON SODDISFATTA
Mx = -57313.6; My = -1535.5; N = -362.2

**Verifica taglio+torsione D.M. 17-01-18 §4.4.8.1.11**

Sezione ad ascissa 316.4
Coefficiente parziale di sicurezza del materiale γ = 1.5
Kmod = 0.8; Kh = 1.084 (formula 11.7.1); kcr = 0.67
τ,tor,d/(ksh*fv,d) + (τ,y,d/fv,d)^2 + (τ,z,d/fv,d)^2 <= 1
0.1+0+0.24 <= 1 Comb: SLU, 72; Durata minima del carico nella combinazione: media
Tx = 9; Ty = -278.2; Mt = -262.3

**Verifica torsione D.M. 17-01-18 §4.4.8.1.10**

Sezione ad ascissa 316.4
Coefficiente parziale di sicurezza del materiale γ = 1.5
Kmod = 0.8
τ,tor,d <= Ksh * fv,d
1.85 <= 19 Comb: SLU, 80; Durata minima del carico nella combinazione: media
Mt = -262.5

---

## Asta 363: Trave in legno a falda Falda 4 fili 135-136

Verifiche condotte secondo D.M. 17-01-18 (N.T.C.)

**Dati generali**

Lunghezza = 14.4

**Caratteristiche della sezione**

| Descrizione | Tipo | Base | Altezza | Area | Jx | Jy | Wx | Wy |
|---|---|---|---|---|---|---|---|---|
| R 8x10 | Rettangolare | 8 | 10 | 80 | 666.67 | 426.67 | 133.33 | 106.67 |

Materiale: C14 EN 338:2016
Rapporto luce/freccia elastica limite = 300
Rapporto luce/freccia elastica differita = 200
Mensola Y: Nessuno; Mensola X: Nessuno
Classe di servizio 1

**Verifica trazione parallela alla fibratura D.M. 17-01-18 §4.4.8.1.1**

Sezione ad ascissa 0
Coefficiente parziale di sicurezza del materiale γ = 1.5
Kmod = 1.1; Kh = 1.084 (formula 11.7.1)
St,0,d <= ft,0,d
0.05 <= 57.26 Comb: SLV, 12; Durata minima del carico nella combinazione: istantaneo
N = 3.9

**Verifica flessione D.M. 17-01-18 §4.4.8.1.6**

Sezione ad ascissa 0
Coefficiente parziale di sicurezza del materiale γ = 1.5
Kmod = 0.6; Kh = 1.084 (formula 11.7.1)
Sm,y,d/fm,y,d + Km*(Sm,z,d/fm,z,d) <= 1
Km*(Sm,y,d/fm,y,d) + Sm,z,d/fm,z,d <= 1
0/60.7+0.7*0/60.7=0 <= 1 (formula 4.4.5a) Comb: SLU, 64; Durata minima del carico nella combinazione: permanente
Mx = 3.5; My = 0

---

## Asta 364: Trave in legno a falda Falda 4 fili 124-125

Verifiche condotte secondo D.M. 17-01-18 (N.T.C.)

**Dati generali**

Lunghezza = 316.5

**Caratteristiche della sezione**

| Descrizione | Tipo | Base | Altezza | Area | Jx | Jy | Wx | Wy |
|---|---|---|---|---|---|---|---|---|
| R 8x10 | Rettangolare | 8 | 10 | 80 | 666.67 | 426.67 | 133.33 | 106.67 |

Materiale: C14 EN 338:2016
Rapporto luce/freccia elastica limite = 300
Rapporto luce/freccia elastica differita = 200
Mensola Y: Nessuno; Mensola X: Nessuno
Classe di servizio 1

**Verifica taglio D.M. 17-01-18 §4.4.8.1.9**

Sezione ad ascissa 316.4
Coefficiente parziale di sicurezza del materiale γ = 1.5
Kmod = 0.8; kcr = 0.67
τ,d <= fv,d

Sqrt(0.32^2+8.07^2) = 8.07 <= 16 Comb: SLU, 71; Durata minima del carico nella combinazione: media
Tx = 11.4; Ty = -286.8

**Verifica pressoflessione D.M. 17-01-18 §4.4.8.1.8**

Sezione ad ascissa 0
Coefficiente parziale di sicurezza del materiale γ = 1.5
Kmod = 0.8; Kh = 1.084 (formula 11.7.1)
(Sc,0,d/fc,0,d)^2 + Sm,y,d/fm,y,d + Km*(Sm,z,d/fm,z,d) <= 1
(Sc,0,d/fc,0,d)^2 + Km*(Sm,y,d/fm,y,d) + Sm,z,d/fm,z,d <= 1
(9.1/85.3)^2+412.7/81+0.7*14.7/80.97=5.23 !> 1 [4.4.7a] Comb: SLU, 72; Durata minima del carico nella combinazione: media - NON SODDISFATTA
Mx = -55028; My = -1563.3; N = -729.1

**Verifica taglio+torsione D.M. 17-01-18 §4.4.8.1.11**

Sezione ad ascissa 316.4
Coefficiente parziale di sicurezza del materiale γ = 1.5
Kmod = 0.8; Kh = 1.084 (formula 11.7.1); kcr = 0.67
τ,tor,d/(ksh*fv,d) + (τ,y,d/fv,d)^2 + (τ,z,d/fv,d)^2 <= 1
0.14+0+0.25 <= 1 Comb: SLU, 71; Durata minima del carico nella combinazione: media
Tx = 11.4; Ty = -286.8; Mt = -376.7

**Verifica torsione D.M. 17-01-18 §4.4.8.1.10**

Sezione ad ascissa 316.4
Coefficiente parziale di sicurezza del materiale γ = 1.5
Kmod = 0.8
τ,tor,d <= Ksh * fv,d
2.66 <= 19 Comb: SLU, 72; Durata minima del carico nella combinazione: media
Mt = -376.8

---

## Asta 365: Trave in legno a falda Falda 4 fili 124-125

Verifiche condotte secondo D.M. 17-01-18 (N.T.C.)

**Dati generali**

Lunghezza = 14.4

**Caratteristiche della sezione**

| Descrizione | Tipo | Base | Altezza | Area | Jx | Jy | Wx | Wy |
|---|---|---|---|---|---|---|---|---|
| R 8x10 | Rettangolare | 8 | 10 | 80 | 666.67 | 426.67 | 133.33 | 106.67 |

Materiale: C14 EN 338:2016
Rapporto luce/freccia elastica limite = 300
Rapporto luce/freccia elastica differita = 200
Mensola Y: Nessuno; Mensola X: Nessuno
Classe di servizio 1

**Verifica trazione parallela alla fibratura D.M. 17-01-18 §4.4.8.1.1**

Sezione ad ascissa 4.3
Coefficiente parziale di sicurezza del materiale γ = 1.5
Kmod = 1.1; Kh = 1.084 (formula 11.7.1)
St,0,d <= ft,0,d
0.09 <= 57.26 Comb: SLV, 12; Durata minima del carico nella combinazione: istantaneo
N = 7.3

**Verifica flessione D.M. 17-01-18 §4.4.8.1.6**

Sezione ad ascissa 0
Coefficiente parziale di sicurezza del materiale γ = 1.5
Kmod = 0.6; Kh = 1.084 (formula 11.7.1)
Sm,y,d/fm,y,d + Km*(Sm,z,d/fm,z,d) <= 1
Km*(Sm,y,d/fm,y,d) + Sm,z,d/fm,z,d <= 1
0/60.7+0.7*0/60.7=0 <= 1 (formula 4.4.5a) Comb: SLU, 64; Durata minima del carico nella combinazione: permanente
Mx = 3.5; My = 0

---

## Asta 366: Trave in legno a falda Falda 4 fili 196-197

Verifiche condotte secondo D.M. 17-01-18 (N.T.C.)

**Dati generali**

Lunghezza = 316.5

**Caratteristiche della sezione**

| Descrizione | Tipo | Base | Altezza | Area | Jx | Jy | Wx | Wy |
|---|---|---|---|---|---|---|---|---|
| R 8x10 | Rettangolare | 8 | 10 | 80 | 666.67 | 426.67 | 133.33 | 106.67 |

Materiale: C14 EN 338:2016
Rapporto luce/freccia elastica limite = 300
Rapporto luce/freccia elastica differita = 200
Mensola Y: Nessuno; Mensola X: Nessuno
Classe di servizio 1

**Verifica taglio D.M. 17-01-18 §4.4.8.1.9**

Sezione ad ascissa 316.4
Coefficiente parziale di sicurezza del materiale γ = 1.5
Kmod = 0.8; kcr = 0.67
τ,d <= fv,d
Sqrt(0.05^2+4.43^2) = 4.43 <= 16 Comb: SLU, 71; Durata minima del carico nella combinazione: media
Tx = 1.9; Ty = -157.4

**Verifica pressoflessione D.M. 17-01-18 §4.4.8.1.8**

Sezione ad ascissa 0
Coefficiente parziale di sicurezza del materiale γ = 1.5
Kmod = 0.8; Kh = 1.084 (formula 11.7.1)
(Sc,0,d/fc,0,d)^2 + Sm,y,d/fm,y,d + Km*(Sm,z,d/fm,z,d) <= 1
(Sc,0,d/fc,0,d)^2 + Km*(Sm,y,d/fm,y,d) + Sm,z,d/fm,z,d <= 1
(0.8/85.3)^2+292.6/81+0.7*3.5/80.97=3.64 !> 1 [4.4.7a] Comb: SLU, 71; Durata minima del carico nella combinazione: media - NON SODDISFATTA
Mx = -39011.2; My = -378.4; N = -66.4

**Verifica taglio+torsione D.M. 17-01-18 §4.4.8.1.11**

Sezione ad ascissa 316.4
Coefficiente parziale di sicurezza del materiale γ = 1.5
Kmod = 0.8; Kh = 1.084 (formula 11.7.1); kcr = 0.67
τ,tor,d/(ksh*fv,d) + (τ,y,d/fv,d)^2 + (τ,z,d/fv,d)^2 <= 1
0.18+0+0.08 <= 1 Comb: SLU, 79; Durata minima del carico nella combinazione: media
Tx = 1.6; Ty = -157.2; Mt = 495

**Verifica torsione D.M. 17-01-18 §4.4.8.1.10**

Sezione ad ascissa 316.4
Coefficiente parziale di sicurezza del materiale γ = 1.5
Kmod = 0.8
τ,tor,d <= Ksh * fv,d
3.5 <= 19 Comb: SLU, 79; Durata minima del carico nella combinazione: media
Mt = 495

---

## Asta 367: Trave in legno a falda Falda 4 fili 196-197

Verifiche condotte secondo D.M. 17-01-18 (N.T.C.)

**Dati generali**

Lunghezza = 14.4

**Caratteristiche della sezione**

| Descrizione | Tipo | Base | Altezza | Area | Jx | Jy | Wx | Wy |
|---|---|---|---|---|---|---|---|---|
| R 8x10 | Rettangolare | 8 | 10 | 80 | 666.67 | 426.67 | 133.33 | 106.67 |

Materiale: C14 EN 338:2016
Rapporto luce/freccia elastica limite = 300
Rapporto luce/freccia elastica differita = 200
Mensola Y: Nessuno; Mensola X: Nessuno
Classe di servizio 1

**Verifica trazione parallela alla fibratura D.M. 17-01-18 §4.4.8.1.1**

Sezione ad ascissa 5.8
Coefficiente parziale di sicurezza del materiale γ = 1.5
Kmod = 1.1; Kh = 1.084 (formula 11.7.1)
St,0,d <= ft,0,d
0.3 <= 57.26 Comb: SLV, 4; Durata minima del carico nella combinazione: istantaneo
N = 23.9

**Verifica flessione D.M. 17-01-18 §4.4.8.1.6**

Sezione ad ascissa 0
Coefficiente parziale di sicurezza del materiale γ = 1.5
Kmod = 0.6; Kh = 1.084 (formula 11.7.1)
Sm,y,d/fm,y,d + Km*(Sm,z,d/fm,z,d) <= 1
Km*(Sm,y,d/fm,y,d) + Sm,z,d/fm,z,d <= 1
0/60.7+0.7*0/60.7=0 <= 1 (formula 4.4.5a) Comb: SLU, 43; Durata minima del carico nella combinazione: permanente
Mx = 3.5; My = 0

---

## Asta 368: Trave in legno a falda Falda 4 fili 189-190

Verifiche condotte secondo D.M. 17-01-18 (N.T.C.)

### Dati generali

Lunghezza = 316.5

### Caratteristiche della sezione

| Descrizione | Tipo | Base | Altezza | Area | Jx | Jy | Wx | Wy |
|---|---|---|---|---|---|---|---|---|
| R 8x10 | Rettangolare | 8 | 10 | 80 | 666.67 | 426.67 | 133.33 | 106.67 |

Materiale: C14 EN 338:2016
Rapporto luce/freccia elastica limite = 300
Rapporto luce/freccia elastica differita = 200
Mensola Y: Nessuno; Mensola X: Nessuno
Classe di servizio 1

### Verifica taglio D.M. 17-01-18 §4.4.8.1.9

Sezione ad ascissa 316.4
Coefficiente parziale di sicurezza del materiale γ = 1.5
Kmod = 0.8; kcr = 0.67
τ,d <= fv,d
Sqrt(0.11^2+5.26^2) = 5.27 <= 16 Comb: SLU, 71; Durata minima del carico nella combinazione: media
Tx = 3.7; Ty = -187.2

### Verifica pressoflessione D.M. 17-01-18 §4.4.8.1.8

Sezione ad ascissa 0
Coefficiente parziale di sicurezza del materiale γ = 1.5
Kmod = 0.8; Kh = 1.084 (formula 11.7.1)
(Sc,0,d/fc,0,d)^2 + Sm,y,d/fm,y,d + Km*(Sm,z,d/fm,z,d) <= 1
(Sc,0,d/fc,0,d)^2 + Km*(Sm,y,d/fm,y,d) + Sm,z,d/fm,z,d <= 1
(1.5/85.3)^2+335.4/81+0.7*6.7/80.97=4.2 !> 1 [4.4.7a] Comb: SLU, 71; Durata minima del carico nella combinazione: media - NON SODDISFATTA
Mx = -44721.4; My = -714.6; N = -120.3

### Verifica taglio+torsione D.M. 17-01-18 §4.4.8.1.11

Sezione ad ascissa 316.4
Coefficiente parziale di sicurezza del materiale γ = 1.5
Kmod = 0.8; Kh = 1.084 (formula 11.7.1); kcr = 0.67
τ,tor,d/(ksh*fv,d) + (τ,y,d/fv,d)^2 + (τ,z,d/fv,d)^2 <= 1
0.18+0+0.11 <= 1 Comb: SLU, 71; Durata minima del carico nella combinazione: media
Tx = 3.7; Ty = -187.2; Mt = 491.5

### Verifica torsione D.M. 17-01-18 §4.4.8.1.10

Sezione ad ascissa 316.4
Coefficiente parziale di sicurezza del materiale γ = 1.5
Kmod = 0.8
τ,tor,d <= Ksh * fv,d
3.47 <= 19 Comb: SLU, 79; Durata minima del carico nella combinazione: media
Mt = 492

---

## Asta 369: Trave in legno a falda Falda 4 fili 189-190

Verifiche condotte secondo D.M. 17-01-18 (N.T.C.)

### Dati generali

Lunghezza = 14.4

### Caratteristiche della sezione

| Descrizione | Tipo | Base | Altezza | Area | Jx | Jy | Wx | Wy |
|---|---|---|---|---|---|---|---|---|
| R 8x10 | Rettangolare | 8 | 10 | 80 | 666.67 | 426.67 | 133.33 | 106.67 |

Materiale: C14 EN 338:2016
Rapporto luce/freccia elastica limite = 300
Rapporto luce/freccia elastica differita = 200
Mensola Y: Nessuno; Mensola X: Nessuno
Classe di servizio 1

### Verifica trazione parallela alla fibratura D.M. 17-01-18 §4.4.8.1.1

Sezione ad ascissa 5.3
Coefficiente parziale di sicurezza del materiale γ = 1.5
Kmod = 1.1; Kh = 1.084 (formula 11.7.1)
St,0,d <= ft,0,d
0.26 <= 57.26 Comb: SLV, 16; Durata minima del carico nella combinazione: istantaneo
N = 20.8

### Verifica flessione D.M. 17-01-18 §4.4.8.1.6

Sezione ad ascissa 0
Coefficiente parziale di sicurezza del materiale γ = 1.5
Kmod = 0.6; Kh = 1.084 (formula 11.7.1)
Sm,y,d/fm,y,d + Km*(Sm,z,d/fm,z,d) <= 1
Km*(Sm,y,d/fm,y,d) + Sm,z,d/fm,z,d <= 1
0/60.7+0.7*0/60.7=0 <= 1 (formula 4.4.5a) Comb: SLU, 64; Durata minima del carico nella combinazione: permanente
Mx = 3.5; My = 0

---

## Asta 370: Trave in legno a falda Falda 4 fili 182-183

Verifiche condotte secondo D.M. 17-01-18 (N.T.C.)

### Dati generali

Lunghezza = 316.5

### Caratteristiche della sezione

| Descrizione | Tipo | Base | Altezza | Area | Jx | Jy | Wx | Wy |
|---|---|---|---|---|---|---|---|---|
| R 8x10 | Rettangolare | 8 | 10 | 80 | 666.67 | 426.67 | 133.33 | 106.67 |

Materiale: C14 EN 338:2016
Rapporto luce/freccia elastica limite = 300
Rapporto luce/freccia elastica differita = 200
Mensola Y: Nessuno; Mensola X: Nessuno
Classe di servizio 1

### Verifica taglio D.M. 17-01-18 §4.4.8.1.9

Sezione ad ascissa 316.4
Coefficiente parziale di sicurezza del materiale γ = 1.5
Kmod = 0.8; kcr = 0.67
τ,d <= fv,d
Sqrt(0.14^2+5.91^2) = 5.91 <= 16 Comb: SLU, 71; Durata minima del carico nella combinazione: media
Tx = 4.8; Ty = -210

### Verifica pressoflessione D.M. 17-01-18 §4.4.8.1.8

Sezione ad ascissa 0
Coefficiente parziale di sicurezza del materiale γ = 1.5
Kmod = 0.8; Kh = 1.084 (formula 11.7.1)
(Sc,0,d/fc,0,d)^2 + Sm,y,d/fm,y,d + Km*(Sm,z,d/fm,z,d) <= 1
(Sc,0,d/fc,0,d)^2 + Km*(Sm,y,d/fm,y,d) + Sm,z,d/fm,z,d <= 1
(1.6/85.3)^2+368.8/81+0.7*8.3/80.97=4.63 !> 1 [4.4.7a] Comb: SLU, 71; Durata minima del carico nella combinazione: media - NON SODDISFATTA
Mx = -49179.9; My = -883.9; N = -127.4

### Verifica taglio+torsione D.M. 17-01-18 §4.4.8.1.11

Sezione ad ascissa 316.4
Coefficiente parziale di sicurezza del materiale γ = 1.5
Kmod = 0.8; Kh = 1.084 (formula 11.7.1); kcr = 0.67
τ,tor,d/(ksh*fv,d) + (τ,y,d/fv,d)^2 + (τ,z,d/fv,d)^2 <= 1
0.17+0+0.14 <= 1 Comb: SLU, 71; Durata minima del carico nella combinazione: media
Tx = 4.8; Ty = -210; Mt = 444.5

### Verifica torsione D.M. 17-01-18 §4.4.8.1.10

Sezione ad ascissa 316.4
Coefficiente parziale di sicurezza del materiale γ = 1.5
Kmod = 0.8
τ,tor,d <= Ksh * fv,d
3.14 <= 19 Comb: SLU, 79; Durata minima del carico nella combinazione: media
Mt = 445

---

## Asta 371: Trave in legno a falda Falda 4 fili 182-183

Verifiche condotte secondo D.M. 17-01-18 (N.T.C.)

### Dati generali

Lunghezza = 14.4

### Caratteristiche della sezione

| Descrizione | Tipo | Base | Altezza | Area | Jx | Jy | Wx | Wy |
|---|---|---|---|---|---|---|---|---|
| R 8x10 | Rettangolare | 8 | 10 | 80 | 666.67 | 426.67 | 133.33 | 106.67 |

Materiale: C14 EN 338:2016
Rapporto luce/freccia elastica limite = 300

Rapporto luce/freccia elastica differita = 200
Mensola Y: Nessuno; Mensola X: Nessuno
Classe di servizio 1

**Verifica trazione parallela alla fibratura D.M. 17-01-18 §4.4.8.1.1**

Sezione ad ascissa 4.8
Coefficiente parziale di sicurezza del materiale γ = 1.5
Kmod = 1.1; Kh = 1.084 (formula 11.7.1)
St,0,d <= ft,0,d
0.23 <= 57.26 Comb: SLV, 16; Durata minima del carico nella combinazione: istantaneo
N = 18.3

**Verifica flessione D.M. 17-01-18 §4.4.8.1.6**

Sezione ad ascissa 0
Coefficiente parziale di sicurezza del materiale γ = 1.5
Kmod = 0.6; Kh = 1.084 (formula 11.7.1)
Sm,y,d/fm,y,d + Km*(Sm,z,d/fm,z,d) <= 1
Km*(Sm,y,d/fm,y,d) + Sm,z,d/fm,z,d <= 1
0/60.7+0.7*0/60.7=0 <= 1 (formula 4.4.5a) Comb: SLU, 43; Durata minima del carico nella combinazione: permanente
Mx = 3.5; My = 0

---

## Asta 372: Trave in legno a falda Falda 4 fili 117-118

Verifiche condotte secondo D.M. 17-01-18 (N.T.C.)

**Dati generali**

Lunghezza = 316.5

**Caratteristiche della sezione**

| Descrizione | Tipo | Base | Altezza | Area | Jx | Jy | Wx | Wy |
|---|---|---|---|---|---|---|---|---|
| R 8x10 | Rettangolare | 8 | 10 | 80 | 666.67 | 426.67 | 133.33 | 106.67 |

Materiale: C14 EN 338:2016
Rapporto luce/freccia elastica limite = 300
Rapporto luce/freccia elastica differita = 200
Mensola Y: Nessuno; Mensola X: Nessuno
Classe di servizio 1

**Verifica tensoflessione D.M. 17-01-18 §4.4.8.1.7**

Sezione ad ascissa 0
Coefficiente parziale di sicurezza del materiale γ = 1.5
Kmod = 0.8; Kh = 1.084 (formula 11.7.1)
St,0,d/ft,0,d + Sm,y,d/fm,y,d + Km*(Sm,z,d/fm,z,d) !> 1
St,0,d/ft,0,d + Km*(Sm,y,d/fm,y,d) + Sm,z,d/fm,z,d !> 1
13.4/41.6+487.7/81+0.7*10.4/81=6.43 !> 1 [4.4.6a] Comb: SLU, 79; Durata minima del carico nella combinazione: media - NON SODDISFATTA
Mx = -65029.2; My = -1113.5; N = 1069.8

**Verifica taglio D.M. 17-01-18 §4.4.8.1.9**

Sezione ad ascissa 316.4
Coefficiente parziale di sicurezza del materiale γ = 1.5
Kmod = 0.8; kcr = 0.67
τ,d <= fv,d
Sqrt(0.22^2+11.43^2) = 11.44 <= 16 Comb: SLU, 71; Durata minima del carico nella combinazione: media
Tx = 7.9; Ty = -406.5

**Verifica taglio+torsione D.M. 17-01-18 §4.4.8.1.11**

Sezione ad ascissa 316.4
Coefficiente parziale di sicurezza del materiale γ = 1.5
Kmod = 0.8; Kh = 1.084 (formula 11.7.1); kcr = 0.67
τ,tor,d/(ksh*fv,d) + (τ,y,d/fv,d)^2 + (τ,z,d/fv,d)^2 <= 1
0.16+0+0.51 <= 1 Comb: SLU, 71; Durata minima del carico nella combinazione: media
Tx = 7.9; Ty = -406.5; Mt = -432

**Verifica torsione D.M. 17-01-18 §4.4.8.1.10**

Sezione ad ascissa 316.4
Coefficiente parziale di sicurezza del materiale γ = 1.5
Kmod = 0.8
τ,tor,d <= Ksh * fv,d
3.05 <= 19 Comb: SLU, 79; Durata minima del carico nella combinazione: media
Mt = -432.5

---

## Asta 373: Trave in legno a falda Falda 4 fili 117-118

Verifiche condotte secondo D.M. 17-01-18 (N.T.C.)

### Dati generali

Lunghezza = 14.4

### Caratteristiche della sezione

| Descrizione | Tipo | Base | Altezza | Area | Jx | Jy | Wx | Wy |
|---|---|---|---|---|---|---|---|---|
| R 8x10 | Rettangolare | 8 | 10 | 80 | 666.67 | 426.67 | 133.33 | 106.67 |

Materiale: C14 EN 338:2016
Rapporto luce/freccia elastica limite = 300
Rapporto luce/freccia elastica differita = 200
Mensola Y: Nessuno; Mensola X: Nessuno
Classe di servizio 1

### Verifica trazione parallela alla fibratura D.M. 17-01-18 §4.4.8.1.1

Sezione ad ascissa 5.3
Coefficiente parziale di sicurezza del materiale γ = 1.5
Kmod = 1.1; Kh = 1.084 (formula 11.7.1)
St,0,d <= ft,0,d
0.26 <= 57.26 Comb: SLV, 16; Durata minima del carico nella combinazione: istantaneo
N = 20.7

### Verifica flessione D.M. 17-01-18 §4.4.8.1.6

Sezione ad ascissa 0
Coefficiente parziale di sicurezza del materiale γ = 1.5
Kmod = 1.1; Kh = 1.084 (formula 11.7.1)
Sm,y,d/fm,y,d + Km*(Sm,z,d/fm,z,d) <= 1
Km*(Sm,y,d/fm,y,d) + Sm,z,d/fm,z,d <= 1
0/111.3+0.7*0/111.3=0 <= 1 (formula 4.4.5a) Comb: SLV, 2; Durata minima del carico nella combinazione: istantaneo
Mx = 6.4; My = 1.5

---

## Asta 374: Trave in legno a falda Falda 4 fili 109-110

Verifiche condotte secondo D.M. 17-01-18 (N.T.C.)

### Dati generali

Lunghezza = 316.5

### Caratteristiche della sezione

| Descrizione | Tipo | Base | Altezza | Area | Jx | Jy | Wx | Wy |
|---|---|---|---|---|---|---|---|---|
| R 8x10 | Rettangolare | 8 | 10 | 80 | 666.67 | 426.67 | 133.33 | 106.67 |

Materiale: C14 EN 338:2016
Rapporto luce/freccia elastica limite = 300
Rapporto luce/freccia elastica differita = 200
Mensola Y: Nessuno; Mensola X: Nessuno
Classe di servizio 1

### Verifica taglio D.M. 17-01-18 §4.4.8.1.9

Sezione ad ascissa 316.4
Coefficiente parziale di sicurezza del materiale γ = 1.5
Kmod = 0.8; kcr = 0.67
τ,d <= fv,d
Sqrt(0.1^2+7.23^2) = 7.23 <= 16 Comb: SLU, 71; Durata minima del carico nella combinazione: media
Tx = 3.4; Ty = -257

### Verifica pressoflessione D.M. 17-01-18 §4.4.8.1.8

Sezione ad ascissa 0
Coefficiente parziale di sicurezza del materiale γ = 1.5
Kmod = 0.8; Kh = 1.084 (formula 11.7.1)
(Sc,0,d/fc,0,d)^2 + Sm,y,d/fm,y,d + Km*(Sm,z,d/fm,z,d) <= 1
(Sc,0,d/fc,0,d)^2 + Km*(Sm,y,d/fm,y,d) + Sm,z,d/fm,z,d <= 1
(9.6/85.3)^2+364.8/81+0.7*7.8/80.97=4.58 !> 1 [4.4.7a] Comb: SLU, 71; Durata minima del carico nella combinazione: media - NON SODDISFATTA
Mx = -48634; My = -829.4; N = -771.8

### Verifica taglio+torsione D.M. 17-01-18 §4.4.8.1.11

Sezione ad ascissa 316.4
Coefficiente parziale di sicurezza del materiale γ = 1.5
Kmod = 0.8; Kh = 1.084 (formula 11.7.1); kcr = 0.67
τ,tor,d/(ksh*fv,d) + (τ,y,d/fv,d)^2 + (τ,z,d/fv,d)^2 <= 1
0.16+0+0.2 <= 1 Comb: SLU, 79; Durata minima del carico nella combinazione: media

Tx = 3.3; Ty = -256.8; Mt = -442.6

**Verifica torsione D.M. 17-01-18 §4.4.8.1.10**

Sezione ad ascissa 316.4
Coefficiente parziale di sicurezza del materiale γ = 1.5
Kmod = 0.8
τ,tor,d <= Ksh * fv,d
3.13 <= 19 Comb: SLU, 79; Durata minima del carico nella combinazione: media
Mt = -442.6

---

## Asta 375: Trave in legno a falda Falda 4 fili 109-110

Verifiche condotte secondo D.M. 17-01-18 (N.T.C.)

**Dati generali**

Lunghezza = 14.4

**Caratteristiche della sezione**

| Descrizione | Tipo | Base | Altezza | Area | Jx | Jy | Wx | Wy |
|---|---|---|---|---|---|---|---|---|
| R 8x10 | Rettangolare | 8 | 10 | 80 | 666.67 | 426.67 | 133.33 | 106.67 |

Materiale: C14 EN 338:2016
Rapporto luce/freccia elastica limite = 300
Rapporto luce/freccia elastica differita = 200
Mensola Y: Nessuno; Mensola X: Nessuno
Classe di servizio 1

**Verifica trazione parallela alla fibratura D.M. 17-01-18 §4.4.8.1.1**

Sezione ad ascissa 6.7
Coefficiente parziale di sicurezza del materiale γ = 1.5
Kmod = 1.1; Kh = 1.084 (formula 11.7.1)
St,0,d <= ft,0,d
0.35 <= 57.26 Comb: SLV, 4; Durata minima del carico nella combinazione: istantaneo
N = 28

**Verifica flessione D.M. 17-01-18 §4.4.8.1.6**

Sezione ad ascissa 0
Coefficiente parziale di sicurezza del materiale γ = 1.5
Kmod = 1.1; Kh = 1.084 (formula 11.7.1)
Sm,y,d/fm,y,d + Km*(Sm,z,d/fm,z,d) <= 1
Km*(Sm,y,d/fm,y,d) + Sm,z,d/fm,z,d <= 1
0.1/111.3+0.7*0/111.3=0 <= 1 (formula 4.4.5a) Comb: SLV, 2; Durata minima del carico nella combinazione: istantaneo
Mx = 7; My = 1.5

---

## Asta 376: Trave in legno a falda Falda 4 fili 102-103

Verifiche condotte secondo D.M. 17-01-18 (N.T.C.)

**Dati generali**

Lunghezza = 316.5

**Caratteristiche della sezione**

| Descrizione | Tipo | Base | Altezza | Area | Jx | Jy | Wx | Wy |
|---|---|---|---|---|---|---|---|---|
| R 8x10 | Rettangolare | 8 | 10 | 80 | 666.67 | 426.67 | 133.33 | 106.67 |

Materiale: C14 EN 338:2016
Rapporto luce/freccia elastica limite = 300
Rapporto luce/freccia elastica differita = 200
Mensola Y: Nessuno; Mensola X: Nessuno
Classe di servizio 1

**Verifica taglio D.M. 17-01-18 §4.4.8.1.9**

Sezione ad ascissa 316.4
Coefficiente parziale di sicurezza del materiale γ = 1.5
Kmod = 0.8; kcr = 0.67
τ,d <= fv,d
Sqrt(0.21^2+5.77^2) = 5.77 <= 16 Comb: SLU, 71; Durata minima del carico nella combinazione: media
Tx = 7.6; Ty = -205

**Verifica pressoflessione D.M. 17-01-18 §4.4.8.1.8**

Sezione ad ascissa 0
Coefficiente parziale di sicurezza del materiale γ = 1.5
Kmod = 0.8; Kh = 1.084 (formula 11.7.1)

(Sc,0,d/fc,0,d)^2 + Sm,y,d/fm,y,d + Km*(Sm,z,d/fm,z,d) <= 1
(Sc,0,d/fc,0,d)^2 + Km*(Sm,y,d/fm,y,d) + Sm,z,d/fm,z,d <= 1
(2.8/85.3)^2+313.4/81+0.7*11.9/80.97=3.97 !> 1 [4.4.7a] Comb: SLU, 71; Durata minima del carico nella combinazione: media - NON SODDISFATTA
Mx = -41792.6; My = -1264.6; N = -220.1

**Verifica taglio+torsione D.M. 17-01-18 §4.4.8.1.11**

Sezione ad ascissa 316.4
Coefficiente parziale di sicurezza del materiale γ = 1.5
Kmod = 0.8; Kh = 1.084 (formula 11.7.1); kcr = 0.67
τ,tor,d/(ksh*fv,d) + (τ,y,d/fv,d)^2 + (τ,z,d/fv,d)^2 <= 1
0.17+0+0.13 <= 1 Comb: SLU, 79; Durata minima del carico nella combinazione: media
Tx = 7.6; Ty = -204.9; Mt = -448.3

**Verifica torsione D.M. 17-01-18 §4.4.8.1.10**

Sezione ad ascissa 316.4
Coefficiente parziale di sicurezza del materiale γ = 1.5
Kmod = 0.8
τ,tor,d <= Ksh * fv,d
3.17 <= 19 Comb: SLU, 79; Durata minima del carico nella combinazione: media
Mt = -448.3

---

## Asta 377: Trave in legno a falda Falda 4 fili 102-103

Verifiche condotte secondo D.M. 17-01-18 (N.T.C.)

**Dati generali**

Lunghezza = 14.4

**Caratteristiche della sezione**

| Descrizione | Tipo | Base | Altezza | Area | Jx | Jy | Wx | Wy |
|---|---|---|---|---|---|---|---|---|
| R 8x10 | Rettangolare | 8 | 10 | 80 | 666.67 | 426.67 | 133.33 | 106.67 |

Materiale: C14 EN 338:2016
Rapporto luce/freccia elastica limite = 300
Rapporto luce/freccia elastica differita = 200
Mensola Y: Nessuno; Mensola X: Nessuno
Classe di servizio 1

**Verifica trazione parallela alla fibratura D.M. 17-01-18 §4.4.8.1.1**

Sezione ad ascissa 1.9
Coefficiente parziale di sicurezza del materiale γ = 1.5
Kmod = 1.1; Kh = 1.084 (formula 11.7.1)
St,0,d <= ft,0,d
0.06 <= 57.26 Comb: SLV, 12; Durata minima del carico nella combinazione: istantaneo
N = 4.4

**Verifica flessione D.M. 17-01-18 §4.4.8.1.6**

Sezione ad ascissa 0
Coefficiente parziale di sicurezza del materiale γ = 1.5
Kmod = 0.6; Kh = 1.084 (formula 11.7.1)
Sm,y,d/fm,y,d + Km*(Sm,z,d/fm,z,d) <= 1
Km*(Sm,y,d/fm,y,d) + Sm,z,d/fm,z,d <= 1
0/60.7+0.7*0/60.7=0 <= 1 (formula 4.4.5a) Comb: SLU, 43; Durata minima del carico nella combinazione: permanente
Mx = 3.5; My = 0

---

## Asta 378: Trave in legno a falda Falda 3 fili 77-78

Verifiche condotte secondo D.M. 17-01-18 (N.T.C.)

**Dati generali**

Lunghezza = 99.8

**Caratteristiche della sezione**

| Descrizione | Tipo | Base | Altezza | Area | Jx | Jy | Wx | Wy |
|---|---|---|---|---|---|---|---|---|
| R 8x10 | Rettangolare | 8 | 10 | 80 | 666.67 | 426.67 | 133.33 | 106.67 |

Materiale: C14 EN 338:2016
Rapporto luce/freccia elastica limite = 300
Rapporto luce/freccia elastica differita = 200
Mensola Y: Nessuno; Mensola X: Nessuno
Classe di servizio 1

### Verifica flessione D.M. 17-01-18 §4.4.8.1.6

Sezione ad ascissa 0
Coefficiente parziale di sicurezza del materiale γ = 1.5
Kmod = 0.8; Kh = 1.084 (formula 11.7.1)
Sm,y,d/fm,y,d + Km*(Sm,z,d/fm,z,d) !> 1
Km*(Sm,y,d/fm,y,d) + Sm,z,d/fm,z,d !> 1
150.7/81+0.7*3.2/81=1.89 !> 1 (formula 4.4.5a) Comb: SLU, 71; Durata minima del carico nella combinazione: media - NON SODDISFATTA
Mx = -20097.1; My = 341.7

### Verifica taglio D.M. 17-01-18 §4.4.8.1.9

Sezione ad ascissa 99.8
Coefficiente parziale di sicurezza del materiale γ = 1.5
Kmod = 0.8; kcr = 0.67
τ,d <= fv,d
Sqrt(0.18^2+8.32^2) = 8.33 <= 16 Comb: SLU, 71; Durata minima del carico nella combinazione: media
Tx = -6.6; Ty = -296

### Verifica taglio+torsione D.M. 17-01-18 §4.4.8.1.11

Sezione ad ascissa 99.8
Coefficiente parziale di sicurezza del materiale γ = 1.5
Kmod = 0.8; Kh = 1.084 (formula 11.7.1); kcr = 0.67
τ,tor,d/(ksh*fv,d) + (τ,y,d/fv,d)^2 + (τ,z,d/fv,d)^2 <= 1
0.11+0+0.27 <= 1 Comb: SLU, 71; Durata minima del carico nella combinazione: media
Tx = -6.6; Ty = -296; Mt = 299

### Verifica torsione D.M. 17-01-18 §4.4.8.1.10

Sezione ad ascissa 99.8
Coefficiente parziale di sicurezza del materiale γ = 1.5
Kmod = 0.8
τ,tor,d <= Ksh * fv,d
2.11 <= 19 Comb: SLU, 72; Durata minima del carico nella combinazione: media
Mt = 299.3

---

## Asta 379: Trave in legno a falda Falda 3 fili 59-60

Verifiche condotte secondo D.M. 17-01-18 (N.T.C.)

### Dati generali

Lunghezza = 243.9

### Caratteristiche della sezione

| Descrizione | Tipo | Base | Altezza | Area | Jx | Jy | Wx | Wy |
|---|---|---|---|---|---|---|---|---|
| R 8x10 | Rettangolare | 8 | 10 | 80 | 666.67 | 426.67 | 133.33 | 106.67 |

Materiale: C14 EN 338:2016
Rapporto luce/freccia elastica limite = 300
Rapporto luce/freccia elastica differita = 200
Mensola Y: Nessuno; Mensola X: Nessuno
Classe di servizio 1

### Verifica tensoflessione D.M. 17-01-18 §4.4.8.1.7

Sezione ad ascissa 0
Coefficiente parziale di sicurezza del materiale γ = 1.5
Kmod = 0.8; Kh = 1.084 (formula 11.7.1)
St,0,d/ft,0,d + Sm,y,d/fm,y,d + Km*(Sm,z,d/fm,z,d) !> 1
St,0,d/ft,0,d + Km*(Sm,y,d/fm,y,d) + Sm,z,d/fm,z,d !> 1
1.3/41.6+169.1/81+0.7*7.4/81=2.18 !> 1 [4.4.6a] Comb: SLU, 72; Durata minima del carico nella combinazione: media - NON SODDISFATTA
Mx = -22547.8; My = 790.5; N = 103.7

### Verifica taglio D.M. 17-01-18 §4.4.8.1.9

Sezione ad ascissa 243.9
Coefficiente parziale di sicurezza del materiale γ = 1.5
Kmod = 0.8; kcr = 0.67
τ,d <= fv,d
Sqrt(0.23^2+5.21^2) = 5.21 <= 16 Comb: SLU, 71; Durata minima del carico nella combinazione: media
Tx = -8; Ty = -185.2

### Verifica taglio+torsione D.M. 17-01-18 §4.4.8.1.11

Sezione ad ascissa 243.9
Coefficiente parziale di sicurezza del materiale γ = 1.5
Kmod = 0.8; Kh = 1.084 (formula 11.7.1); kcr = 0.67
τ,tor,d/(ksh*fv,d) + (τ,y,d/fv,d)^2 + (τ,z,d/fv,d)^2 <= 1

0.06+0+0.11 <= 1 Comb: SLU, 71; Durata minima del carico nella combinazione: media
Tx = -8; Ty = -185.2; Mt = 149

**Verifica torsione D.M. 17-01-18 §4.4.8.1.10**

Sezione ad ascissa 243.9
Coefficiente parziale di sicurezza del materiale γ = 1.5
Kmod = 0.8
τ,tor,d <= Ksh * fv,d
1.05 <= 19 Comb: SLU, 72; Durata minima del carico nella combinazione: media
Mt = 149

---

## Asta 380: Trave in legno a falda Falda 3 fili 68-69

Verifiche condotte secondo D.M. 17-01-18 (N.T.C.)

**Dati generali**

Lunghezza = 182.2

**Caratteristiche della sezione**

| Descrizione | Tipo | Base | Altezza | Area | Jx | Jy | Wx | Wy |
|---|---|---|---|---|---|---|---|---|
| R 8x10 | Rettangolare | 8 | 10 | 80 | 666.67 | 426.67 | 133.33 | 106.67 |

Materiale: C14 EN 338:2016
Rapporto luce/freccia elastica limite = 300
Rapporto luce/freccia elastica differita = 200
Mensola Y: Nessuno; Mensola X: Nessuno
Classe di servizio 1

**Verifica taglio D.M. 17-01-18 §4.4.8.1.9**

Sezione ad ascissa 182.2
Coefficiente parziale di sicurezza del materiale γ = 1.5
Kmod = 0.8; kcr = 0.67
τ,d <= fv,d
Sqrt(0.19^2+5.53^2) = 5.53 <= 16 Comb: SLU, 71; Durata minima del carico nella combinazione: media
Tx = -6.7; Ty = -196.5

**Verifica pressoflessione D.M. 17-01-18 §4.4.8.1.8**

Sezione ad ascissa 0
Coefficiente parziale di sicurezza del materiale γ = 1.5
Kmod = 0.8; Kh = 1.084 (formula 11.7.1)
(Sc,0,d/fc,0,d)^2 + Sm,y,d/fm,y,d + Km*(Sm,z,d/fm,z,d) <= 1
(Sc,0,d/fc,0,d)^2 + Km*(Sm,y,d/fm,y,d) + Sm,z,d/fm,z,d <= 1
(3/85.3)^2+155.6/81+0.7*5.9/80.97=1.97 !> 1 [4.4.7a] Comb: SLU, 71; Durata minima del carico nella combinazione: media - NON SODDISFATTA
Mx = -20743.1; My = 632.6; N = -240.7

**Verifica taglio+torsione D.M. 17-01-18 §4.4.8.1.11**

Sezione ad ascissa 182.2
Coefficiente parziale di sicurezza del materiale γ = 1.5
Kmod = 0.8; Kh = 1.084 (formula 11.7.1); kcr = 0.67
τ,tor,d/(ksh*fv,d) + (τ,y,d/fv,d)^2 + (τ,z,d/fv,d)^2 <= 1
0.08+0+0.12 <= 1 Comb: SLU, 71; Durata minima del carico nella combinazione: media
Tx = -6.7; Ty = -196.5; Mt = 206.2

**Verifica torsione D.M. 17-01-18 §4.4.8.1.10**

Sezione ad ascissa 182.2
Coefficiente parziale di sicurezza del materiale γ = 1.5
Kmod = 0.8
τ,tor,d <= Ksh * fv,d
1.46 <= 19 Comb: SLU, 72; Durata minima del carico nella combinazione: media
Mt = 206.4

---

## Asta 381: Trave in legno a falda Falda 3 fili 47-48

Verifiche condotte secondo D.M. 17-01-18 (N.T.C.)

**Dati generali**

Lunghezza = 243.9

**Caratteristiche della sezione**

| Descrizione | Tipo | Base | Altezza | Area | Jx | Jy | Wx | Wy |
|---|---|---|---|---|---|---|---|---|
| R 8x10 | Rettangolare | 8 | 10 | 80 | 666.67 | 426.67 | 133.33 | 106.67 |

Materiale: C14 EN 338:2016

Rapporto luce/freccia elastica limite = 300
Rapporto luce/freccia elastica differita = 200
Mensola Y: Nessuno; Mensola X: Nessuno
Classe di servizio 1

**Verifica taglio D.M. 17-01-18 §4.4.8.1.9**

Sezione ad ascissa 243.9
Coefficiente parziale di sicurezza del materiale γ = 1.5
Kmod = 0.8; kcr = 0.67
τ,d <= fv,d
Sqrt(0.07^2+3.34^2) = 3.35 <= 16 Comb: SLU, 71; Durata minima del carico nella combinazione: media
Tx = -2.4; Ty = -118.9

**Verifica pressoflessione D.M. 17-01-18 §4.4.8.1.8**

Sezione ad ascissa 0
Coefficiente parziale di sicurezza del materiale γ = 1.5
Kmod = 0.8; Kh = 1.084 (formula 11.7.1)
(Sc,0,d/fc,0,d)^2 + Sm,y,d/fm,y,d + Km*(Sm,z,d/fm,z,d) <= 1
(Sc,0,d/fc,0,d)^2 + Km*(Sm,y,d/fm,y,d) + Sm,z,d/fm,z,d <= 1
(1.6/85.3)^2+147.1/81+0.7*3.6/80.97=1.85 !> 1 [4.4.7a] Comb: SLU, 80; Durata minima del carico nella combinazione: media - NON SODDISFATTA
Mx = -19613.8; My = 389.2; N = -126.2

**Verifica taglio+torsione D.M. 17-01-18 §4.4.8.1.11**

Sezione ad ascissa 243.9
Coefficiente parziale di sicurezza del materiale γ = 1.5
Kmod = 0.8; Kh = 1.084 (formula 11.7.1); kcr = 0.67
τ,tor,d/(ksh*fv,d) + (τ,y,d/fv,d)^2 + (τ,z,d/fv,d)^2 <= 1
0.02+0+0.04 <= 1 Comb: SLU, 71; Durata minima del carico nella combinazione: media
Tx = -2.4; Ty = -118.9; Mt = -51.6

**Verifica torsione D.M. 17-01-18 §4.4.8.1.10**

Sezione ad ascissa 243.9
Coefficiente parziale di sicurezza del materiale γ = 1.5
Kmod = 0.8
τ,tor,d <= Ksh * fv,d
0.36 <= 19 Comb: SLU, 71; Durata minima del carico nella combinazione: media
Mt = -51.6

---

## Asta 382: Trave in legno a falda Falda 3 fili 53-54

Verifiche condotte secondo D.M. 17-01-18 (N.T.C.)

**Dati generali**

Lunghezza = 243.9

**Caratteristiche della sezione**

| Descrizione | Tipo | Base | Altezza | Area | Jx | Jy | Wx | Wy |
|---|---|---|---|---|---|---|---|---|
| R 8x10 | Rettangolare | 8 | 10 | 80 | 666.67 | 426.67 | 133.33 | 106.67 |

Materiale: C14 EN 338:2016
Rapporto luce/freccia elastica limite = 300
Rapporto luce/freccia elastica differita = 200
Mensola Y: Nessuno; Mensola X: Nessuno
Classe di servizio 1

**Verifica taglio D.M. 17-01-18 §4.4.8.1.9**

Sezione ad ascissa 243.9
Coefficiente parziale di sicurezza del materiale γ = 1.5
Kmod = 0.8; kcr = 0.67
τ,d <= fv,d
Sqrt(0.21^2+3.36^2) = 3.37 <= 16 Comb: SLU, 71; Durata minima del carico nella combinazione: media
Tx = -7.6; Ty = -119.4

**Verifica pressoflessione D.M. 17-01-18 §4.4.8.1.8**

Sezione ad ascissa 0
Coefficiente parziale di sicurezza del materiale γ = 1.5
Kmod = 0.8; Kh = 1.084 (formula 11.7.1)
(Sc,0,d/fc,0,d)^2 + Sm,y,d/fm,y,d + Km*(Sm,z,d/fm,z,d) <= 1
(Sc,0,d/fc,0,d)^2 + Km*(Sm,y,d/fm,y,d) + Sm,z,d/fm,z,d <= 1
(1.9/85.3)^2+143.7/81+0.7*8.6/80.97=1.85 !> 1 [4.4.7a] Comb: SLU, 71; Durata minima del carico nella combinazione: media - NON SODDISFATTA
Mx = -19155.4; My = 920.7; N = -151.2

**Verifica taglio+torsione D.M. 17-01-18 §4.4.8.1.11**

Sezione ad ascissa 243.9
Coefficiente parziale di sicurezza del materiale γ = 1.5
Kmod = 0.8; Kh = 1.084 (formula 11.7.1); kcr = 0.67
τ,tor,d/(ksh*fv,d) + (τ,y,d/fv,d)^2 + (τ,z,d/fv,d)^2 <= 1
0.02+0+0.04 <= 1 Comb: SLU, 71; Durata minima del carico nella combinazione: media
Tx = -7.6; Ty = -119.4; Mt = 53.9

**Verifica torsione D.M. 17-01-18 §4.4.8.1.10**

Sezione ad ascissa 243.9
Coefficiente parziale di sicurezza del materiale γ = 1.5
Kmod = 0.8
τ,tor,d <= Ksh * fv,d
0.39 <= 19 Comb: SLU, 38; Durata minima del carico nella combinazione: media
Mt = 55.2

---

## Asta 383: Trave in legno a falda Falda 3 fili 41-42

Verifiche condotte secondo D.M. 17-01-18 (N.T.C.)

**Dati generali**

Lunghezza = 243.9

**Caratteristiche della sezione**

| Descrizione | Tipo | Base | Altezza | Area | Jx | Jy | Wx | Wy |
|---|---|---|---|---|---|---|---|---|
| R 8x10 | Rettangolare | 8 | 10 | 80 | 666.67 | 426.67 | 133.33 | 106.67 |

Materiale: C14 EN 338:2016
Rapporto luce/freccia elastica limite = 300
Rapporto luce/freccia elastica differita = 200
Mensola Y: Nessuno; Mensola X: Nessuno
Classe di servizio 1

**Verifica taglio D.M. 17-01-18 §4.4.8.1.9**

Sezione ad ascissa 243.9
Coefficiente parziale di sicurezza del materiale γ = 1.5
Kmod = 0.8; kcr = 0.67
τ,d <= fv,d
Sqrt(0.19^2+3.03^2) = 3.04 <= 16 Comb: SLU, 72; Durata minima del carico nella combinazione: media
Tx = 6.6; Ty = -107.7

**Verifica pressoflessione D.M. 17-01-18 §4.4.8.1.8**

Sezione ad ascissa 0
Coefficiente parziale di sicurezza del materiale γ = 1.5
Kmod = 0.8; Kh = 1.084 (formula 11.7.1)
(Sc,0,d/fc,0,d)^2 + Sm,y,d/fm,y,d + Km*(Sm,z,d/fm,z,d) <= 1
(Sc,0,d/fc,0,d)^2 + Km*(Sm,y,d/fm,y,d) + Sm,z,d/fm,z,d <= 1
(1.2/85.3)^2+138.2/81+0.7*7.8/80.97=1.77 !> 1 [4.4.7a] Comb: SLU, 71; Durata minima del carico nella combinazione: media - NON SODDISFATTA
Mx = -18425.1; My = -834.3; N = -94

**Verifica taglio+torsione D.M. 17-01-18 §4.4.8.1.11**

Sezione ad ascissa 243.9
Coefficiente parziale di sicurezza del materiale γ = 1.5
Kmod = 0.8; Kh = 1.084 (formula 11.7.1); kcr = 0.67
τ,tor,d/(ksh*fv,d) + (τ,y,d/fv,d)^2 + (τ,z,d/fv,d)^2 <= 1
0.05+0+0.04 <= 1 Comb: SLU, 71; Durata minima del carico nella combinazione: media
Tx = 7; Ty = -107.6; Mt = -139.1

**Verifica torsione D.M. 17-01-18 §4.4.8.1.10**

Sezione ad ascissa 243.9
Coefficiente parziale di sicurezza del materiale γ = 1.5
Kmod = 0.8
τ,tor,d <= Ksh * fv,d
0.98 <= 19 Comb: SLU, 71; Durata minima del carico nella combinazione: media
Mt = -139.1

---

## Asta 384: Trave in legno a falda Falda 1 fili 161-163

Verifiche condotte secondo D.M. 17-01-18 (N.T.C.)

Dati generali

Lunghezza = 222.6

Caratteristiche della sezione

| Descrizione | Tipo | Base | Altezza | Area | Jx | Jy | Wx | Wy |
|---|---|---|---|---|---|---|---|---|
| R 8x10 | Rettangolare | 8 | 10 | 80 | 666.67 | 426.67 | 133.33 | 106.67 |

Materiale: C14 EN 338:2016
Rapporto luce/freccia elastica limite = 300
Rapporto luce/freccia elastica differita = 200
Mensola Y: Nessuno; Mensola X: Nessuno
Classe di servizio 1

Verifica pressoflessione D.M. 17-01-18 §4.4.8.1.8

Sezione ad ascissa 222.6
Coefficiente parziale di sicurezza del materiale γ = 1.5
Kmod = 0.8; Kh = 1.084 (formula 11.7.1)
(Sc,0,d/fc,0,d)^2 + Sm,y,d/fm,y,d + Km*(Sm,z,d/fm,z,d) <= 1
(Sc,0,d/fc,0,d)^2 + Km*(Sm,y,d/fm,y,d) + Sm,z,d/fm,z,d <= 1
(18/85.3)^2+260/81+0.7*6/80.97=3.31 !> 1 [4.4.7a] Comb: SLU, 71; Durata minima del carico nella combinazione: media - NON SODDISFATTA
Mx = 34661.6; My = 642.1; N = -1443.4

Verifica taglio D.M. 17-01-18 §4.4.8.1.9

Sezione ad ascissa 222.6
Coefficiente parziale di sicurezza del materiale γ = 1.5
Kmod = 0.8; kcr = 0.67
τ,d <= fv,d
Sqrt(0.16^2+8.65^2) = 8.65 <= 16 Comb: SLU, 72; Durata minima del carico nella combinazione: media
Tx = 5.8; Ty = -307.5

Verifica taglio+torsione D.M. 17-01-18 §4.4.8.1.11

Sezione ad ascissa 222.6
Coefficiente parziale di sicurezza del materiale γ = 1.5
Kmod = 0.8; Kh = 1.084 (formula 11.7.1); kcr = 0.67
τ,tor,d/(ksh*fv,d) + (τ,y,d/fv,d)^2 + (τ,z,d/fv,d)^2 <= 1
0.03+0+0.29 <= 1 Comb: SLU, 71; Durata minima del carico nella combinazione: media
Tx = 6.4; Ty = -307.4; Mt = 69.6

Verifica torsione D.M. 17-01-18 §4.4.8.1.10

Sezione ad ascissa 222.6
Coefficiente parziale di sicurezza del materiale γ = 1.5
Kmod = 0.8
τ,tor,d <= Ksh * fv,d
0.49 <= 19 Comb: SLU, 71; Durata minima del carico nella combinazione: media
Mt = 69.6

Verifica della freccia istantanea totale D.M. 17-01-18 §C4.4.7 Circolare 7 21-01-19

Sezione ad ascissa 170.6
Kdef = 0
Uinst tot in x = -0.02
Uinst tot in y = 0.43
Uinst tot = 0.43
Luce/Uinst,tot > limite
222.6/0.43=519.3 > 300 Comb: SLE rara, 8

Verifica della freccia istantanea variabile D.M. 17-01-18 §4.4.7

Sezione ad ascissa 170.6
Kdef = 0
Uinst var in x = -0.01
Uinst var in y = 0.28
Uinst var = 0.28
Luce/Uinst,var > limite
222.6/0.28=799.2 > 300 Comb: SLE rara, 8

Verifica della freccia finale EC5 §4.4.7 - EC5 2.2.3 (3)

Sezione ad ascissa 170.6
Kdef = 0.6
Ufin in x = -0.02
Ufin in y = 0.52
Ufin = 0.52
Luce/Ufin > limite
222.6/0.52=429.1 > 200
Coefficienti combinatori impiegati:

Pesi strutturali = 1,000 + 0,600 = 1,600
Permanenti portati = 1,000 + 0,600 = 1,600
Neve = 0,500 + 0,500 = 1,000

## Asta 385: Trave in legno a falda Falda 1 fili 171-172

Verifiche condotte secondo D.M. 17-01-18 (N.T.C.)

### Dati generali

Lunghezza = 222.6

### Caratteristiche della sezione

| Descrizione | Tipo | Base | Altezza | Area | Jx | Jy | Wx | Wy |
|---|---|---|---|---|---|---|---|---|
| R 8x10 | Rettangolare | 8 | 10 | 80 | 666.67 | 426.67 | 133.33 | 106.67 |

Materiale: C14 EN 338:2016
Rapporto luce/freccia elastica limite = 300
Rapporto luce/freccia elastica differita = 200
Mensola Y: Nessuno; Mensola X: Nessuno
Classe di servizio 1

### Verifica taglio D.M. 17-01-18 §4.4.8.1.9

Sezione ad ascissa 222.6
Coefficiente parziale di sicurezza del materiale γ = 1.5
Kmod = 0.8; kcr = 0.67
τ,d <= fv,d
Sqrt(0.26^2+8.07^2) = 8.07 <= 16 Comb: SLU, 71; Durata minima del carico nella combinazione: media
Tx = 9.4; Ty = -286.8

### Verifica pressoflessione D.M. 17-01-18 §4.4.8.1.8

Sezione ad ascissa 0
Coefficiente parziale di sicurezza del materiale γ = 1.5
Kmod = 0.8; Kh = 1.084 (formula 11.7.1)
(Sc,0,d/fc,0,d)^2 + Sm,y,d/fm,y,d + Km*(Sm,z,d/fm,z,d) <= 1
(Sc,0,d/fc,0,d)^2 + Km*(Sm,y,d/fm,y,d) + Sm,z,d/fm,z,d <= 1
(12.9/85.3)^2+242.8/81+0.7*9/80.97=3.1 !> 1 [4.4.7a] Comb: SLU, 72; Durata minima del carico nella combinazione: media - NON SODDISFATTA
Mx = -32368.5; My = -956.8; N = -1033.1

### Verifica taglio+torsione D.M. 17-01-18 §4.4.8.1.11

Sezione ad ascissa 222.6
Coefficiente parziale di sicurezza del materiale γ = 1.5
Kmod = 0.8; Kh = 1.084 (formula 11.7.1); kcr = 0.67
τ,tor,d/(ksh*fv,d) + (τ,y,d/fv,d)^2 + (τ,z,d/fv,d)^2 <= 1
0.03+0+0.25 <= 1 Comb: SLU, 71; Durata minima del carico nella combinazione: media
Tx = 9.4; Ty = -286.8; Mt = 82.1

### Verifica torsione D.M. 17-01-18 §4.4.8.1.10

Sezione ad ascissa 222.6
Coefficiente parziale di sicurezza del materiale γ = 1.5
Kmod = 0.8
τ,tor,d <= Ksh * fv,d
0.58 <= 19 Comb: SLU, 71; Durata minima del carico nella combinazione: media
Mt = 82.1

## Asta 386: Trave in legno a falda Falda 1 fili 179-180

Verifiche condotte secondo D.M. 17-01-18 (N.T.C.)

### Dati generali

Lunghezza = 222.6

### Caratteristiche della sezione

| Descrizione | Tipo | Base | Altezza | Area | Jx | Jy | Wx | Wy |
|---|---|---|---|---|---|---|---|---|
| R 8x10 | Rettangolare | 8 | 10 | 80 | 666.67 | 426.67 | 133.33 | 106.67 |

Materiale: C14 EN 338:2016
Rapporto luce/freccia elastica limite = 300
Rapporto luce/freccia elastica differita = 200
Mensola Y: Nessuno; Mensola X: Nessuno
Classe di servizio 1

### Verifica tensoflessione D.M. 17-01-18 §4.4.8.1.7

Sezione ad ascissa 0

Coefficiente parziale di sicurezza del materiale γ = 1.5
Kmod = 0.8; Kh = 1.084 (formula 11.7.1)
St,0,d/ft,0,d + Sm,y,d/fm,y,d + Km*(Sm,z,d/fm,z,d) !> 1
St,0,d/ft,0,d + Km*(Sm,y,d/fm,y,d) + Sm,z,d/fm,z,d !> 1
1.4/41.6+238.5/81+0.7*13.5/81=3.1 !> 1 [4.4.6a] Comb: SLU, 72; Durata minima del carico nella combinazione: media - NON SODDISFATTA
Mx = -31799.9; My = -1441.7; N = 113.3

**Verifica taglio D.M. 17-01-18 §4.4.8.1.9**

Sezione ad ascissa 222.6
Coefficiente parziale di sicurezza del materiale γ = 1.5
Kmod = 0.8; kcr = 0.67
τ,d <= fv,d
Sqrt(0.36^2+7.85^2) = 7.86 <= 16 Comb: SLU, 71; Durata minima del carico nella combinazione: media
Tx = 12.7; Ty = -279.2

**Verifica taglio+torsione D.M. 17-01-18 §4.4.8.1.11**

Sezione ad ascissa 222.6
Coefficiente parziale di sicurezza del materiale γ = 1.5
Kmod = 0.8; Kh = 1.084 (formula 11.7.1); kcr = 0.67
τ,tor,d/(ksh*fv,d) + (τ,y,d/fv,d)^2 + (τ,z,d/fv,d)^2 <= 1
0.03+0+0.24 <= 1 Comb: SLU, 71; Durata minima del carico nella combinazione: media
Tx = 12.7; Ty = -279.2; Mt = 80.4

**Verifica torsione D.M. 17-01-18 §4.4.8.1.10**

Sezione ad ascissa 222.6
Coefficiente parziale di sicurezza del materiale γ = 1.5
Kmod = 0.8
τ,tor,d <= Ksh * fv,d
0.57 <= 19 Comb: SLU, 71; Durata minima del carico nella combinazione: media
Mt = 80.4

---

## Asta 387: Trave in legno a falda Falda 1 fili 185-186

Verifiche condotte secondo D.M. 17-01-18 (N.T.C.)

**Dati generali**

Lunghezza = 222.6

**Caratteristiche della sezione**

| Descrizione | Tipo | Base | Altezza | Area | Jx | Jy | Wx | Wy |
|---|---|---|---|---|---|---|---|---|
| R 8x10 | Rettangolare | 8 | 10 | 80 | 666.67 | 426.67 | 133.33 | 106.67 |

Materiale: C14 EN 338:2016
Rapporto luce/freccia elastica limite = 300
Rapporto luce/freccia elastica differita = 200
Mensola Y: Nessuno; Mensola X: Nessuno
Classe di servizio 1

**Verifica tensoflessione D.M. 17-01-18 §4.4.8.1.7**

Sezione ad ascissa 0
Coefficiente parziale di sicurezza del materiale γ = 1.5
Kmod = 0.8; Kh = 1.084 (formula 11.7.1)
St,0,d/ft,0,d + Sm,y,d/fm,y,d + Km*(Sm,z,d/fm,z,d) !> 1
St,0,d/ft,0,d + Km*(Sm,y,d/fm,y,d) + Sm,z,d/fm,z,d !> 1
2.3/41.6+227.2/81+0.7*11.9/81=2.96 !> 1 [4.4.6a] Comb: SLU, 72; Durata minima del carico nella combinazione: media - NON SODDISFATTA
Mx = -30297.5; My = -1272.9; N = 180

**Verifica taglio D.M. 17-01-18 §4.4.8.1.9**

Sezione ad ascissa 222.6
Coefficiente parziale di sicurezza del materiale γ = 1.5
Kmod = 0.8; kcr = 0.67
τ,d <= fv,d
Sqrt(0.32^2+7.33^2) = 7.34 <= 16 Comb: SLU, 72; Durata minima del carico nella combinazione: media
Tx = 11.4; Ty = -260.6

**Verifica taglio+torsione D.M. 17-01-18 §4.4.8.1.11**

Sezione ad ascissa 222.6
Coefficiente parziale di sicurezza del materiale γ = 1.5
Kmod = 0.8; Kh = 1.084 (formula 11.7.1); kcr = 0.67
τ,tor,d/(ksh*fv,d) + (τ,y,d/fv,d)^2 + (τ,z,d/fv,d)^2 <= 1
0.03+0+0.21 <= 1 Comb: SLU, 71; Durata minima del carico nella combinazione: media
Tx = 10.6; Ty = -260.6; Mt = 74.6

### Verifica torsione D.M. 17-01-18 §4.4.8.1.10

Sezione ad ascissa 222.6
Coefficiente parziale di sicurezza del materiale γ = 1.5
Kmod = 0.8
τ,tor,d <= Ksh * fv,d
0.53 <= 19 Comb: SLU, 79; Durata minima del carico nella combinazione: media
Mt = 75

---

## Asta 388: Trave in legno a falda Falda 1 fili 192-193

Verifiche condotte secondo D.M. 17-01-18 (N.T.C.)

### Dati generali

Lunghezza = 222.6

### Caratteristiche della sezione

| Descrizione | Tipo | Base | Altezza | Area | Jx | Jy | Wx | Wy |
|---|---|---|---|---|---|---|---|---|
| R 8x10 | Rettangolare | 8 | 10 | 80 | 666.67 | 426.67 | 133.33 | 106.67 |

Materiale: C14 EN 338:2016
Rapporto luce/freccia elastica limite = 300
Rapporto luce/freccia elastica differita = 200
Mensola Y: Nessuno; Mensola X: Nessuno
Classe di servizio 1

### Verifica tensoflessione D.M. 17-01-18 §4.4.8.1.7

Sezione ad ascissa 0
Coefficiente parziale di sicurezza del materiale γ = 1.5
Kmod = 0.8; Kh = 1.084 (formula 11.7.1)
St,0,d/ft,0,d + Sm,y,d/fm,y,d + Km*(Sm,z,d/fm,z,d) !> 1
St,0,d/ft,0,d + Km*(Sm,y,d/fm,y,d) + Sm,z,d/fm,z,d !> 1
1.5/41.6+220.7/81+0.7*7.1/81=2.82 !> 1 [4.4.6a] Comb: SLU, 80; Durata minima del carico nella combinazione: media - NON SODDISFATTA
Mx = -29424.7; My = -757.5; N = 117.7

### Verifica taglio D.M. 17-01-18 §4.4.8.1.9

Sezione ad ascissa 222.6
Coefficiente parziale di sicurezza del materiale γ = 1.5
Kmod = 0.8; kcr = 0.67
τ,d <= fv,d
Sqrt(0.19^2+7.08^2) = 7.08 <= 16 Comb: SLU, 72; Durata minima del carico nella combinazione: media
Tx = 6.7; Ty = -251.7

### Verifica taglio+torsione D.M. 17-01-18 §4.4.8.1.11

Sezione ad ascissa 222.6
Coefficiente parziale di sicurezza del materiale γ = 1.5
Kmod = 0.8; Kh = 1.084 (formula 11.7.1); kcr = 0.67
τ,tor,d/(ksh*fv,d) + (τ,y,d/fv,d)^2 + (τ,z,d/fv,d)^2 <= 1
0.03+0+0.2 <= 1 Comb: SLU, 71; Durata minima del carico nella combinazione: media
Tx = 6.3; Ty = -251.4; Mt = 69.6

### Verifica torsione D.M. 17-01-18 §4.4.8.1.10

Sezione ad ascissa 222.6
Coefficiente parziale di sicurezza del materiale γ = 1.5
Kmod = 0.8
τ,tor,d <= Ksh * fv,d
0.5 <= 19 Comb: SLU, 79; Durata minima del carico nella combinazione: media
Mt = 70.2

---

## Asta 389: Trave in legno a falda Falda 1 fili 202-203

Verifiche condotte secondo D.M. 17-01-18 (N.T.C.)

### Dati generali

Lunghezza = 222.6

### Caratteristiche della sezione

| Descrizione | Tipo | Base | Altezza | Area | Jx | Jy | Wx | Wy |
|---|---|---|---|---|---|---|---|---|
| R 8x10 | Rettangolare | 8 | 10 | 80 | 666.67 | 426.67 | 133.33 | 106.67 |

Materiale: C14 EN 338:2016
Rapporto luce/freccia elastica limite = 300
Rapporto luce/freccia elastica differita = 200

Mensola Y: Nessuno; Mensola X: Nessuno
Classe di servizio 1

**Verifica tensoflessione D.M. 17-01-18 §4.4.8.1.7**

Sezione ad ascissa 0
Coefficiente parziale di sicurezza del materiale γ = 1.5
Kmod = 0.8; Kh = 1.084 (formula 11.7.1)
St,0,d/ft,0,d + Sm,y,d/fm,y,d + Km*(Sm,z,d/fm,z,d) !> 1
St,0,d/ft,0,d + Km*(Sm,y,d/fm,y,d) + Sm,z,d/fm,z,d !> 1
3.4/41.6+215.5/81+0.7*1.9/81=2.76 !> 1 [4.4.6a] Comb: SLU, 71; Durata minima del carico nella combinazione: media - NON SODDISFATTA
Mx = -28739.8; My = -206.3; N = 275

**Verifica taglio D.M. 17-01-18 §4.4.8.1.9**

Sezione ad ascissa 222.6
Coefficiente parziale di sicurezza del materiale γ = 1.5
Kmod = 0.8; kcr = 0.67
τ,d <= fv,d
Sqrt(0.03^2+7.02^2) = 7.02 <= 16 Comb: SLU, 72; Durata minima del carico nella combinazione: media
Tx = 1.1; Ty = -249.6

**Verifica taglio+torsione D.M. 17-01-18 §4.4.8.1.11**

Sezione ad ascissa 222.6
Coefficiente parziale di sicurezza del materiale γ = 1.5
Kmod = 0.8; Kh = 1.084 (formula 11.7.1); kcr = 0.67
τ,tor,d/(ksh*fv,d) + (τ,y,d/fv,d)^2 + (τ,z,d/fv,d)^2 <= 1
0.02+0+0.19 <= 1 Comb: SLU, 72; Durata minima del carico nella combinazione: media
Tx = 1.1; Ty = -249.6; Mt = 65.2

**Verifica torsione D.M. 17-01-18 §4.4.8.1.10**

Sezione ad ascissa 222.6
Coefficiente parziale di sicurezza del materiale γ = 1.5
Kmod = 0.8
τ,tor,d <= Ksh * fv,d
0.49 <= 19 Comb: SLU, 79; Durata minima del carico nella combinazione: media
Mt = 68.9

---

## Asta 390: Trave in legno a falda Falda 1 fili 211-212

Verifiche condotte secondo D.M. 17-01-18 (N.T.C.)

**Dati generali**

Lunghezza = 222.7

**Caratteristiche della sezione**

| Descrizione | Tipo | Base | Altezza | Area | Jx | Jy | Wx | Wy |
|---|---|---|---|---|---|---|---|---|
| R 8x10 | Rettangolare | 8 | 10 | 80 | 666.67 | 426.67 | 133.33 | 106.67 |

Materiale: C14 EN 338:2016
Rapporto luce/freccia elastica limite = 300
Rapporto luce/freccia elastica differita = 200
Mensola Y: Nessuno; Mensola X: Nessuno
Classe di servizio 1

**Verifica tensoflessione D.M. 17-01-18 §4.4.8.1.7**

Sezione ad ascissa 0
Coefficiente parziale di sicurezza del materiale γ = 1.5
Kmod = 0.8; Kh = 1.084 (formula 11.7.1)
St,0,d/ft,0,d + Sm,y,d/fm,y,d + Km*(Sm,z,d/fm,z,d) !> 1
St,0,d/ft,0,d + Km*(Sm,y,d/fm,y,d) + Sm,z,d/fm,z,d !> 1
2.7/41.6+207.9/81+0.7*4.7/81=2.67 !> 1 [4.4.6a] Comb: SLU, 80; Durata minima del carico nella combinazione: media - NON SODDISFATTA
Mx = -27721.7; My = 501.5; N = 212.7

**Verifica taglio D.M. 17-01-18 §4.4.8.1.9**

Sezione ad ascissa 222.6
Coefficiente parziale di sicurezza del materiale γ = 1.5
Kmod = 0.8; kcr = 0.67
τ,d <= fv,d
Sqrt(0.11^2+6.87^2) = 6.87 <= 16 Comb: SLU, 72; Durata minima del carico nella combinazione: media
Tx = -3.8; Ty = -244.3

**Verifica taglio+torsione D.M. 17-01-18 §4.4.8.1.11**

Sezione ad ascissa 222.6
Coefficiente parziale di sicurezza del materiale γ = 1.5

Kmod = 0.8; Kh = 1.084 (formula 11.7.1); kcr = 0.67
τ,tor,d/(ksh*fv,d) + (τ,y,d/fv,d)^2 + (τ,z,d/fv,d)^2 <= 1
0.03+0+0.18 <= 1 Comb: SLU, 72; Durata minima del carico nella combinazione: media
Tx = -3.8; Ty = -244.3; Mt = 71.4

**Verifica torsione D.M. 17-01-18 §4.4.8.1.10**

Sezione ad ascissa 222.6
Coefficiente parziale di sicurezza del materiale γ = 1.5
Kmod = 0.8
τ,tor,d <= Ksh * fv,d
0.53 <= 19 Comb: SLU, 79; Durata minima del carico nella combinazione: media
Mt = 75.6

---

## Asta 391: Trave in legno a falda Falda 1 fili 217-218

Verifiche condotte secondo D.M. 17-01-18 (N.T.C.)

**Dati generali**

Lunghezza = 222.5

**Caratteristiche della sezione**

| Descrizione | Tipo | Base | Altezza | Area | Jx | Jy | Wx | Wy |
|---|---|---|---|---|---|---|---|---|
| R 8x10 | Rettangolare | 8 | 10 | 80 | 666.67 | 426.67 | 133.33 | 106.67 |

Materiale: C14 EN 338:2016
Rapporto luce/freccia elastica limite = 300
Rapporto luce/freccia elastica differita = 200
Mensola Y: Nessuno; Mensola X: Nessuno
Classe di servizio 1

**Verifica tensoflessione D.M. 17-01-18 §4.4.8.1.7**

Sezione ad ascissa 0
Coefficiente parziale di sicurezza del materiale γ = 1.5
Kmod = 0.8; Kh = 1.084 (formula 11.7.1)
St,0,d/ft,0,d + Sm,y,d/fm,y,d + Km*(Sm,z,d/fm,z,d) !> 1
St,0,d/ft,0,d + Km*(Sm,y,d/fm,y,d) + Sm,z,d/fm,z,d !> 1
11.6/41.6+202.7/81+0.7*3/81=2.81 !> 1 [4.4.6a] Comb: SLU, 80; Durata minima del carico nella combinazione: media - NON SODDISFATTA
Mx = -27030.5; My = 315.9; N = 925

**Verifica taglio D.M. 17-01-18 §4.4.8.1.9**

Sezione ad ascissa 222.6
Coefficiente parziale di sicurezza del materiale γ = 1.5
Kmod = 0.8; kcr = 0.67
τ,d <= fv,d
Sqrt(0.08^2+6.74^2) = 6.75 <= 16 Comb: SLU, 80; Durata minima del carico nella combinazione: media
Tx = -2.7; Ty = -239.8

**Verifica taglio+torsione D.M. 17-01-18 §4.4.8.1.11**

Sezione ad ascissa 222.6
Coefficiente parziale di sicurezza del materiale γ = 1.5
Kmod = 0.8; Kh = 1.084 (formula 11.7.1); kcr = 0.67
τ,tor,d/(ksh*fv,d) + (τ,y,d/fv,d)^2 + (τ,z,d/fv,d)^2 <= 1
0.03+0+0.18 <= 1 Comb: SLU, 80; Durata minima del carico nella combinazione: media
Tx = -2.7; Ty = -239.8; Mt = 89.3

**Verifica torsione D.M. 17-01-18 §4.4.8.1.10**

Sezione ad ascissa 222.6
Coefficiente parziale di sicurezza del materiale γ = 1.5
Kmod = 0.8
τ,tor,d <= Ksh * fv,d
0.66 <= 19 Comb: SLU, 79; Durata minima del carico nella combinazione: media
Mt = 92.8

---

## Asta 392: Trave in legno a falda Falda 1 fili 226-227

Verifiche condotte secondo D.M. 17-01-18 (N.T.C.)

**Dati generali**

Lunghezza = 222.5

**Caratteristiche della sezione**

| Descrizione | Tipo | Base | Altezza | Area | Jx | Jy | Wx | Wy |
|---|---|---|---|---|---|---|---|---|
| R 8x10 | Rettangolare | 8 | 10 | 80 | 666.67 | 426.67 | 133.33 | 106.67 |

Materiale: C14 EN 338:2016
Rapporto luce/freccia elastica limite = 300
Rapporto luce/freccia elastica differita = 200
Mensola Y: Nessuno; Mensola X: Nessuno
Classe di servizio 1

**Verifica tensoflessione D.M. 17-01-18 §4.4.8.1.7**

Sezione ad ascissa 222.6
Coefficiente parziale di sicurezza del materiale γ = 1.5
Kmod = 0.8; Kh = 1.084 (formula 11.7.1)
St,0,d/ft,0,d + Sm,y,d/fm,y,d + Km*(Sm,z,d/fm,z,d) !> 1
St,0,d/ft,0,d + Km*(Sm,y,d/fm,y,d) + Sm,z,d/fm,z,d !> 1
7.3/41.6+177.9/81+0.7*0.8/81=2.38 !> 1 [4.4.6a] Comb: SLU, 80; Durata minima del carico nella combinazione: media - NON SODDISFATTA
Mx = 23723.6; My = -84.2; N = 581.5

**Verifica taglio D.M. 17-01-18 §4.4.8.1.9**

Sezione ad ascissa 222.6
Coefficiente parziale di sicurezza del materiale γ = 1.5
Kmod = 0.8; kcr = 0.67
τ,d <= fv,d
Sqrt(0.01^2+6.1^2) = 6.1 <= 16 Comb: SLU, 80; Durata minima del carico nella combinazione: media
Tx = -0.3; Ty = -216.9

**Verifica taglio+torsione D.M. 17-01-18 §4.4.8.1.11**

Sezione ad ascissa 222.6
Coefficiente parziale di sicurezza del materiale γ = 1.5
Kmod = 0.8; Kh = 1.084 (formula 11.7.1); kcr = 0.67
τ,tor,d/(ksh*fv,d) + (τ,y,d/fv,d)^2 + (τ,z,d/fv,d)^2 <= 1
0.04+0+0.15 <= 1 Comb: SLU, 80; Durata minima del carico nella combinazione: media
Tx = -0.3; Ty = -216.9; Mt = 116.7

**Verifica torsione D.M. 17-01-18 §4.4.8.1.10**

Sezione ad ascissa 222.6
Coefficiente parziale di sicurezza del materiale γ = 1.5
Kmod = 0.8
τ,tor,d <= Ksh * fv,d
0.84 <= 19 Comb: SLU, 79; Durata minima del carico nella combinazione: media
Mt = 118.9

---

## Asta 393: Trave in legno a falda Falda 1 fili 237-238

Verifiche condotte secondo D.M. 17-01-18 (N.T.C.)

**Dati generali**

Lunghezza = 222.5

**Caratteristiche della sezione**

| Descrizione | Tipo | Base | Altezza | Area | Jx | Jy | Wx | Wy |
|---|---|---|---|---|---|---|---|---|
| R 8x10 | Rettangolare | 8 | 10 | 80 | 666.67 | 426.67 | 133.33 | 106.67 |

Materiale: C14 EN 338:2016
Rapporto luce/freccia elastica limite = 300
Rapporto luce/freccia elastica differita = 200
Mensola Y: Nessuno; Mensola X: Nessuno
Classe di servizio 1

**Verifica taglio D.M. 17-01-18 §4.4.8.1.9**

Sezione ad ascissa 222.6
Coefficiente parziale di sicurezza del materiale γ = 1.5
Kmod = 0.8; kcr = 0.67
τ,d <= fv,d
Sqrt(0.16^2+5.46^2) = 5.46 <= 16 Comb: SLU, 80; Durata minima del carico nella combinazione: media
Tx = -5.7; Ty = -194

**Verifica pressoflessione D.M. 17-01-18 §4.4.8.1.8**

Sezione ad ascissa 222.6
Coefficiente parziale di sicurezza del materiale γ = 1.5
Kmod = 0.8; Kh = 1.084 (formula 11.7.1)
(Sc,0,d/fc,0,d)^2 + Sm,y,d/fm,y,d + Km*(Sm,z,d/fm,z,d) <= 1
(Sc,0,d/fc,0,d)^2 + Km*(Sm,y,d/fm,y,d) + Sm,z,d/fm,z,d <= 1
(7.1/85.3)^2+164.1/81+0.7*9.4/80.97=2.12 !> 1 [4.4.7a] Comb: SLU, 80; Durata minima del carico nella combinazione: media - NON SODDISFATTA
Mx = 21881.1; My = -1006.6; N = -571.7

**Verifica taglio+torsione D.M. 17-01-18 §4.4.8.1.11**

Sezione ad ascissa 222.6
Coefficiente parziale di sicurezza del materiale γ = 1.5
Kmod = 0.8; Kh = 1.084 (formula 11.7.1); kcr = 0.67
τ,tor,d/(ksh*fv,d) + (τ,y,d/fv,d)^2 + (τ,z,d/fv,d)^2 <= 1
0.05+0+0.12 <= 1 Comb: SLU, 80; Durata minima del carico nella combinazione: media
Tx = -5.7; Ty = -194; Mt = 143.4

**Verifica torsione D.M. 17-01-18 §4.4.8.1.10**

Sezione ad ascissa 222.6
Coefficiente parziale di sicurezza del materiale γ = 1.5
Kmod = 0.8
τ,tor,d <= Ksh * fv,d
1.01 <= 19 Comb: SLU, 72; Durata minima del carico nella combinazione: media
Mt = 143.5

---

## Asta 394: Trave in legno a falda Falda 1 fili 243-244

Verifiche condotte secondo D.M. 17-01-18 (N.T.C.)

**Dati generali**

Lunghezza = 172.3

**Caratteristiche della sezione**

| Descrizione | Tipo | Base | Altezza | Area | Jx | Jy | Wx | Wy |
|---|---|---|---|---|---|---|---|---|
| R 8x10 | Rettangolare | 8 | 10 | 80 | 666.67 | 426.67 | 133.33 | 106.67 |

Materiale: C14 EN 338:2016
Rapporto luce/freccia elastica limite = 300
Rapporto luce/freccia elastica differita = 200
Mensola Y: Nessuno; Mensola X: Nessuno
Classe di servizio 1

**Verifica tensoflessione D.M. 17-01-18 §4.4.8.1.7**

Sezione ad ascissa 0
Coefficiente parziale di sicurezza del materiale γ = 1.5
Kmod = 0.8; Kh = 1.084 (formula 11.7.1)
St,0,d/ft,0,d + Sm,y,d/fm,y,d + Km*(Sm,z,d/fm,z,d) !> 1
St,0,d/ft,0,d + Km*(Sm,y,d/fm,y,d) + Sm,z,d/fm,z,d !> 1
8.5/41.6+152.6/81+0.7*20/81=2.26 !> 1 [4.4.6a] Comb: SLU, 80; Durata minima del carico nella combinazione: media - NON SODDISFATTA
Mx = -20348.1; My = 2134.4; N = 683.5

**Verifica taglio D.M. 17-01-18 §4.4.8.1.9**

Sezione ad ascissa 172.3
Coefficiente parziale di sicurezza del materiale γ = 1.5
Kmod = 0.8; kcr = 0.67
τ,d <= fv,d
Sqrt(0.9^2+6.49^2) = 6.55 <= 16 Comb: SLU, 72; Durata minima del carico nella combinazione: media
Tx = -32.1; Ty = -230.7

**Verifica taglio+torsione D.M. 17-01-18 §4.4.8.1.11**

Sezione ad ascissa 172.3
Coefficiente parziale di sicurezza del materiale γ = 1.5
Kmod = 0.8; Kh = 1.084 (formula 11.7.1); kcr = 0.67
τ,tor,d/(ksh*fv,d) + (τ,y,d/fv,d)^2 + (τ,z,d/fv,d)^2 <= 1
0.1+0+0.16 <= 1 Comb: SLU, 72; Durata minima del carico nella combinazione: media
Tx = -32.1; Ty = -230.7; Mt = 259.4

**Verifica torsione D.M. 17-01-18 §4.4.8.1.10**

Sezione ad ascissa 172.3
Coefficiente parziale di sicurezza del materiale γ = 1.5
Kmod = 0.8
τ,tor,d <= Ksh * fv,d
1.83 <= 19 Comb: SLU, 72; Durata minima del carico nella combinazione: media
Mt = 259.4

---

## Asta 395: Trave in legno a falda Falda 1 fili 249-250

Verifiche condotte secondo D.M. 17-01-18 (N.T.C.)

### Dati generali

Lunghezza = 102.4

### Caratteristiche della sezione

| Descrizione | Tipo | Base | Altezza | Area | Jx | Jy | Wx | Wy |
|---|---|---|---|---|---|---|---|---|
| R 8x10 | Rettangolare | 8 | 10 | 80 | 666.67 | 426.67 | 133.33 | 106.67 |

Materiale: C14 EN 338:2016
Rapporto luce/freccia elastica limite = 300
Rapporto luce/freccia elastica differita = 200
Mensola Y: Nessuno; Mensola X: Nessuno
Classe di servizio 1

### Verifica tensoflessione D.M. 17-01-18 §4.4.8.1.7

Sezione ad ascissa 0
Coefficiente parziale di sicurezza del materiale γ = 1.5
Kmod = 0.8; Kh = 1.084 (formula 11.7.1)
St,0,d/ft,0,d + Sm,y,d/fm,y,d + Km*(Sm,z,d/fm,z,d) !> 1
St,0,d/ft,0,d + Km*(Sm,y,d/fm,y,d) + Sm,z,d/fm,z,d !> 1
5.2/41.6+140.2/81+0.7*47.2/81=2.26 !> 1 [4.4.6a] Comb: SLU, 79; Durata minima del carico nella combinazione: media - NON SODDISFATTA
Mx = -18690.9; My = 5038.4; N = 416

### Verifica taglio D.M. 17-01-18 §4.4.8.1.9

Sezione ad ascissa 102.4
Coefficiente parziale di sicurezza del materiale γ = 1.5
Kmod = 0.8; kcr = 0.67
τ,d <= fv,d
Sqrt(2.92^2+8.28^2) = 8.78 <= 16 Comb: SLU, 72; Durata minima del carico nella combinazione: media
Tx = -103.9; Ty = -294.5

### Verifica taglio+torsione D.M. 17-01-18 §4.4.8.1.11

Sezione ad ascissa 102.4
Coefficiente parziale di sicurezza del materiale γ = 1.5
Kmod = 0.8; Kh = 1.084 (formula 11.7.1); kcr = 0.67
τ,tor,d/(ksh*fv,d) + (τ,y,d/fv,d)^2 + (τ,z,d/fv,d)^2 <= 1
0.13+0.03+0.27 <= 1 Comb: SLU, 72; Durata minima del carico nella combinazione: media
Tx = -103.9; Ty = -294.5; Mt = 356.7

### Verifica torsione D.M. 17-01-18 §4.4.8.1.10

Sezione ad ascissa 102.4
Coefficiente parziale di sicurezza del materiale γ = 1.5
Kmod = 0.8
τ,tor,d <= Ksh * fv,d
2.52 <= 19 Comb: SLU, 72; Durata minima del carico nella combinazione: media
Mt = 356.7

---

## Asta 396: Trave in legno a falda Falda 1 fili 255-256

Verifiche condotte secondo D.M. 17-01-18 (N.T.C.)

### Dati generali

Lunghezza = 40

### Caratteristiche della sezione

| Descrizione | Tipo | Base | Altezza | Area | Jx | Jy | Wx | Wy |
|---|---|---|---|---|---|---|---|---|
| R 8x10 | Rettangolare | 8 | 10 | 80 | 666.67 | 426.67 | 133.33 | 106.67 |

Materiale: C14 EN 338:2016
Rapporto luce/freccia elastica limite = 300
Rapporto luce/freccia elastica differita = 200
Mensola Y: Nessuno; Mensola X: Nessuno
Classe di servizio 1

### Verifica tensoflessione D.M. 17-01-18 §4.4.8.1.7

Sezione ad ascissa 0
Coefficiente parziale di sicurezza del materiale γ = 1.5
Kmod = 0.8; Kh = 1.084 (formula 11.7.1)
St,0,d/ft,0,d + Sm,y,d/fm,y,d + Km*(Sm,z,d/fm,z,d) !> 1
St,0,d/ft,0,d + Km*(Sm,y,d/fm,y,d) + Sm,z,d/fm,z,d !> 1
5.6/41.6+94.1/81+0.7*69.2/81=1.9 !> 1 [4.4.6a] Comb: SLU, 79; Durata minima del carico nella combinazione: media - NON SODDISFATTA
Mx = -12544.2; My = 7382.1; N = 449.2

### Verifica taglio D.M. 17-01-18 §4.4.8.1.9

Sezione ad ascissa 40

Coefficiente parziale di sicurezza del materiale γ = 1.5
Kmod = 0.8; kcr = 0.67
τ,d <= fv,d
Sqrt(9.05^2+10.19^2) = 13.63 <= 16 Comb: SLU, 72; Durata minima del carico nella combinazione: media
Tx = -321.9; Ty = -362.2

**Verifica taglio+torsione D.M. 17-01-18 §4.4.8.1.11**

Sezione ad ascissa 40
Coefficiente parziale di sicurezza del materiale γ = 1.5
Kmod = 0.8; Kh = 1.084 (formula 11.7.1); kcr = 0.67
τ,tor,d/(ksh*fv,d) + (τ,y,d/fv,d)^2 + (τ,z,d/fv,d)^2 <= 1
0.14+0.32+0.41 <= 1 Comb: SLU, 72; Durata minima del carico nella combinazione: media
Tx = -321.9; Ty = -362.2; Mt = 379.9

**Verifica torsione D.M. 17-01-18 §4.4.8.1.10**

Sezione ad ascissa 40
Coefficiente parziale di sicurezza del materiale γ = 1.5
Kmod = 0.8
τ,tor,d <= Ksh * fv,d
2.68 <= 19 Comb: SLU, 72; Durata minima del carico nella combinazione: media
Mt = 379.9

---

## Asta 397: Trave in legno a falda Falda 1 fili 133-134

Verifiche condotte secondo D.M. 17-01-18 (N.T.C.)

**Dati generali**

Lunghezza = 222.6

**Caratteristiche della sezione**

| Descrizione | Tipo | Base | Altezza | Area | Jx | Jy | Wx | Wy |
|---|---|---|---|---|---|---|---|---|
| R 8x10 | Rettangolare | 8 | 10 | 80 | 666.67 | 426.67 | 133.33 | 106.67 |

Materiale: C14 EN 338:2016
Rapporto luce/freccia elastica limite = 300
Rapporto luce/freccia elastica differita = 200
Mensola Y: Nessuno; Mensola X: Nessuno
Classe di servizio 1

**Verifica pressoflessione D.M. 17-01-18 §4.4.8.1.8**

Sezione ad ascissa 222.6
Coefficiente parziale di sicurezza del materiale γ = 1.5
Kmod = 0.8; Kh = 1.084 (formula 11.7.1)
(Sc,0,d/fc,0,d)^2 + Sm,y,d/fm,y,d + Km*(Sm,z,d/fm,z,d) <= 1
(Sc,0,d/fc,0,d)^2 + Km*(Sm,y,d/fm,y,d) + Sm,z,d/fm,z,d <= 1
(1.9/85.3)^2+275.2/81+0.7*0.3/80.97=3.4 !> 1 [4.4.7a] Comb: SLU, 71; Durata minima del carico nella combinazione: media - NON SODDISFATTA
Mx = 36690.6; My = -28.9; N = -148.7

**Verifica taglio D.M. 17-01-18 §4.4.8.1.9**

Sezione ad ascissa 222.6
Coefficiente parziale di sicurezza del materiale γ = 1.5
Kmod = 0.8; kcr = 0.67
τ,d <= fv,d
Sqrt(0^2+9.12^2) = 9.12 <= 16 Comb: SLU, 79; Durata minima del carico nella combinazione: media
Tx = 0; Ty = -324.2

**Verifica taglio+torsione D.M. 17-01-18 §4.4.8.1.11**

Sezione ad ascissa 222.6
Coefficiente parziale di sicurezza del materiale γ = 1.5
Kmod = 0.8; Kh = 1.084 (formula 11.7.1); kcr = 0.67
τ,tor,d/(ksh*fv,d) + (τ,y,d/fv,d)^2 + (τ,z,d/fv,d)^2 <= 1
0.01+0+0.32 <= 1 Comb: SLU, 79; Durata minima del carico nella combinazione: media
Tx = 0; Ty = -324.2; Mt = -15

**Verifica torsione D.M. 17-01-18 §4.4.8.1.10**

Sezione ad ascissa 222.6
Coefficiente parziale di sicurezza del materiale γ = 1.5
Kmod = 1.1
τ,tor,d <= Ksh * fv,d
0.16 <= 26.13 Comb: SLV, 10; Durata minima del carico nella combinazione: istantaneo
Mt = -22.5

**Verifica della freccia istantanea totale D.M. 17-01-18 §C4.4.7 Circolare 7 21-01-19**

Sezione ad ascissa 170.6
Kdef = 0
Uinst tot in x = 0
Uinst tot in y = 0.46
Uinst tot = 0.46
Luce/Uinst,tot > limite
222.6/0.46=483.1 > 300 Comb: SLE rara, 8

**Verifica della freccia istantanea variabile D.M. 17-01-18 §4.4.7**

Sezione ad ascissa 170.6
Kdef = 0
Uinst var in x = 0
Uinst var in y = 0.3
Uinst var = 0.3
Luce/Uinst,var > limite
222.6/0.3=749.3 > 300 Comb: SLE rara, 8

**Verifica della freccia finale EC5 §4.4.7 - EC5 2.2.3 (3)**

Sezione ad ascissa 170.6
Kdef = 0.6
Ufin in x = 0
Ufin in y = 0.56
Ufin = 0.56
Luce/Ufin > limite
222.6/0.56=398.2 > 200
Coefficienti combinatori impiegati:
Pesi strutturali = 1,000 + 0,600 = 1,600
Permanenti portati = 1,000 + 0,600 = 1,600
Neve = 0,500 + 0,500 = 1,000

---

## Asta 398: Trave in legno a falda Falda 1 fili 122-123

Verifiche condotte secondo D.M. 17-01-18 (N.T.C.)

**Dati generali**

Lunghezza = 222.6

**Caratteristiche della sezione**

| Descrizione | Tipo | Base | Altezza | Area | Jx | Jy | Wx | Wy |
|---|---|---|---|---|---|---|---|---|
| R 8x10 | Rettangolare | 8 | 10 | 80 | 666.67 | 426.67 | 133.33 | 106.67 |

Materiale: C14 EN 338:2016
Rapporto luce/freccia elastica limite = 300
Rapporto luce/freccia elastica differita = 200
Mensola Y: Nessuno; Mensola X: Nessuno
Classe di servizio 1

**Verifica taglio D.M. 17-01-18 §4.4.8.1.9**

Sezione ad ascissa 222.6
Coefficiente parziale di sicurezza del materiale γ = 1.5
Kmod = 0.8; kcr = 0.67
τ,d <= fv,d
Sqrt(0.39^2+8.71^2) = 8.72 <= 16 Comb: SLU, 71; Durata minima del carico nella combinazione: media
Tx = -14; Ty = -309.9

**Verifica pressoflessione D.M. 17-01-18 §4.4.8.1.8**

Sezione ad ascissa 0
Coefficiente parziale di sicurezza del materiale γ = 1.5
Kmod = 0.8; Kh = 1.084 (formula 11.7.1)
(Sc,0,d/fc,0,d)^2 + Sm,y,d/fm,y,d + Km*(Sm,z,d/fm,z,d) <= 1
(Sc,0,d/fc,0,d)^2 + Km*(Sm,y,d/fm,y,d) + Sm,z,d/fm,z,d <= 1
(5/85.3)^2+260.9/81+0.7*13.9/80.97=3.35 !> 1 [4.4.7a] Comb: SLU, 79; Durata minima del carico nella combinazione: media - NON SODDISFATTA
Mx = -34783.7; My = 1483.4; N = -399.7

**Verifica taglio+torsione D.M. 17-01-18 §4.4.8.1.11**

Sezione ad ascissa 222.6
Coefficiente parziale di sicurezza del materiale γ = 1.5
Kmod = 0.8; Kh = 1.084 (formula 11.7.1); kcr = 0.67
τ,tor,d/(ksh*fv,d) + (τ,y,d/fv,d)^2 + (τ,z,d/fv,d)^2 <= 1
0.01+0+0.3 <= 1 Comb: SLU, 71; Durata minima del carico nella combinazione: media
Tx = -14; Ty = -309.9; Mt = -13.9

**Verifica torsione D.M. 17-01-18 §4.4.8.1.10**

Sezione ad ascissa 222.6
Coefficiente parziale di sicurezza del materiale γ = 1.5
Kmod = 1.1
τ,tor,d <= Ksh * fv,d
0.14 <= 26.13 Comb: SLV, 10; Durata minima del carico nella combinazione: istantaneo
Mt = -20.5

---

## Asta 399: Trave in legno a falda Falda 1 fili 114-115

Verifiche condotte secondo D.M. 17-01-18 (N.T.C.)

**Dati generali**

Lunghezza = 222.6

**Caratteristiche della sezione**

| Descrizione | Tipo | Base | Altezza | Area | Jx | Jy | Wx | Wy |
|---|---|---|---|---|---|---|---|---|
| R 8x10 | Rettangolare | 8 | 10 | 80 | 666.67 | 426.67 | 133.33 | 106.67 |

Materiale: C14 EN 338:2016
Rapporto luce/freccia elastica limite = 300
Rapporto luce/freccia elastica differita = 200
Mensola Y: Nessuno; Mensola X: Nessuno
Classe di servizio 1

**Verifica tensoflessione D.M. 17-01-18 §4.4.8.1.7**

Sezione ad ascissa 0
Coefficiente parziale di sicurezza del materiale γ = 1.5
Kmod = 0.8; Kh = 1.084 (formula 11.7.1)
St,0,d/ft,0,d + Sm,y,d/fm,y,d + Km*(Sm,z,d/fm,z,d) !> 1
St,0,d/ft,0,d + Km*(Sm,y,d/fm,y,d) + Sm,z,d/fm,z,d !> 1
3.6/41.6+266.4/81+0.7*18.9/81=3.54 !> 1 [4.4.6a] Comb: SLU, 71; Durata minima del carico nella combinazione: media - NON SODDISFATTA
Mx = -35525.7; My = 2011.8; N = 289

**Verifica taglio D.M. 17-01-18 §4.4.8.1.9**

Sezione ad ascissa 222.6
Coefficiente parziale di sicurezza del materiale γ = 1.5
Kmod = 0.8; kcr = 0.67
τ,d <= fv,d
Sqrt(0.52^2+8.86^2) = 8.88 <= 16 Comb: SLU, 71; Durata minima del carico nella combinazione: media
Tx = -18.4; Ty = -315.2

**Verifica taglio+torsione D.M. 17-01-18 §4.4.8.1.11**

Sezione ad ascissa 222.6
Coefficiente parziale di sicurezza del materiale γ = 1.5
Kmod = 0.8; Kh = 1.084 (formula 11.7.1); kcr = 0.67
τ,tor,d/(ksh*fv,d) + (τ,y,d/fv,d)^2 + (τ,z,d/fv,d)^2 <= 1
0+0+0.31 <= 1 Comb: SLU, 71; Durata minima del carico nella combinazione: media
Tx = -18.4; Ty = -315.2; Mt = -2.6

**Verifica torsione D.M. 17-01-18 §4.4.8.1.10**

Sezione ad ascissa 222.6
Coefficiente parziale di sicurezza del materiale γ = 1.5
Kmod = 1.1
τ,tor,d <= Ksh * fv,d
0.15 <= 26.13 Comb: SLV, 12; Durata minima del carico nella combinazione: istantaneo
Mt = -21.9

---

## Asta 400: Trave in legno a falda Falda 1 fili 105-106

Verifiche condotte secondo D.M. 17-01-18 (N.T.C.)

**Dati generali**

Lunghezza = 222.6

**Caratteristiche della sezione**

| Descrizione | Tipo | Base | Altezza | Area | Jx | Jy | Wx | Wy |
|---|---|---|---|---|---|---|---|---|
| R 8x10 | Rettangolare | 8 | 10 | 80 | 666.67 | 426.67 | 133.33 | 106.67 |

Materiale: C14 EN 338:2016
Rapporto luce/freccia elastica limite = 300
Rapporto luce/freccia elastica differita = 200

Mensola Y: Nessuno; Mensola X: Nessuno
Classe di servizio 1

**Verifica tensoflessione D.M. 17-01-18 §4.4.8.1.7**

Sezione ad ascissa 0
Coefficiente parziale di sicurezza del materiale γ = 1.5
Kmod = 0.8; Kh = 1.084 (formula 11.7.1)
St,0,d/ft,0,d + Sm,y,d/fm,y,d + Km*(Sm,z,d/fm,z,d) !> 1
St,0,d/ft,0,d + Km*(Sm,y,d/fm,y,d) + Sm,z,d/fm,z,d !> 1
2.7/41.6+264.5/81+0.7*14.5/81=3.46 !> 1 [4.4.6a] Comb: SLU, 80; Durata minima del carico nella combinazione: media - NON SODDISFATTA
Mx = -35268.1; My = 1548.2; N = 212.6

**Verifica taglio D.M. 17-01-18 §4.4.8.1.9**

Sezione ad ascissa 222.6
Coefficiente parziale di sicurezza del materiale γ = 1.5
Kmod = 0.8; kcr = 0.67
τ,d <= fv,d
Sqrt(0.37^2+8.55^2) = 8.56 <= 16 Comb: SLU, 71; Durata minima del carico nella combinazione: media
Tx = -13.3; Ty = -304.2

**Verifica taglio+torsione D.M. 17-01-18 §4.4.8.1.11**

Sezione ad ascissa 222.6
Coefficiente parziale di sicurezza del materiale γ = 1.5
Kmod = 0.8; Kh = 1.084 (formula 11.7.1); kcr = 0.67
τ,tor,d/(ksh*fv,d) + (τ,y,d/fv,d)^2 + (τ,z,d/fv,d)^2 <= 1
0.01+0+0.29 <= 1 Comb: SLU, 72; Durata minima del carico nella combinazione: media
Tx = -13.5; Ty = -303.9; Mt = 21.4

**Verifica torsione D.M. 17-01-18 §4.4.8.1.10**

Sezione ad ascissa 222.6
Coefficiente parziale di sicurezza del materiale γ = 1.5
Kmod = 1.1
τ,tor,d <= Ksh * fv,d
0.28 <= 26.13 Comb: SLV, 6; Durata minima del carico nella combinazione: istantaneo
Mt = 39.9

---

## Asta 401: Trave in legno a falda Falda 1 fili 98-99

Verifiche condotte secondo D.M. 17-01-18 (N.T.C.)

**Dati generali**

Lunghezza = 222.6

**Caratteristiche della sezione**

| Descrizione | Tipo | Base | Altezza | Area | Jx | Jy | Wx | Wy |
|---|---|---|---|---|---|---|---|---|
| R 8x10 | Rettangolare | 8 | 10 | 80 | 666.67 | 426.67 | 133.33 | 106.67 |

Materiale: C14 EN 338:2016
Rapporto luce/freccia elastica limite = 300
Rapporto luce/freccia elastica differita = 200
Mensola Y: Nessuno; Mensola X: Nessuno
Classe di servizio 1

**Verifica tensoflessione D.M. 17-01-18 §4.4.8.1.7**

Sezione ad ascissa 0
Coefficiente parziale di sicurezza del materiale γ = 1.5
Kmod = 0.8; Kh = 1.084 (formula 11.7.1)
St,0,d/ft,0,d + Sm,y,d/fm,y,d + Km*(Sm,z,d/fm,z,d) !> 1
St,0,d/ft,0,d + Km*(Sm,y,d/fm,y,d) + Sm,z,d/fm,z,d !> 1
1.4/41.6+267.8/81+0.7*6.8/81=3.4 !> 1 [4.4.6a] Comb: SLU, 80; Durata minima del carico nella combinazione: media - NON SODDISFATTA
Mx = -35708; My = 721.6; N = 109.4

**Verifica taglio D.M. 17-01-18 §4.4.8.1.9**

Sezione ad ascissa 222.6
Coefficiente parziale di sicurezza del materiale γ = 1.5
Kmod = 0.8; kcr = 0.67
τ,d <= fv,d
Sqrt(0.17^2+8.52^2) = 8.53 <= 16 Comb: SLU, 72; Durata minima del carico nella combinazione: media
Tx = -6.1; Ty = -303.1

**Verifica taglio+torsione D.M. 17-01-18 §4.4.8.1.11**

Sezione ad ascissa 222.6
Coefficiente parziale di sicurezza del materiale γ = 1.5

Kmod = 0.8; Kh = 1.084 (formula 11.7.1); kcr = 0.67
τ,tor,d/(ksh*fv,d) + (τ,y,d/fv,d)^2 + (τ,z,d/fv,d)^2 <= 1
0.01+0+0.28 <= 1 Comb: SLU, 72; Durata minima del carico nella combinazione: media
Tx = -6.1; Ty = -303.1; Mt = 35.6

**Verifica torsione D.M. 17-01-18 §4.4.8.1.10**

Sezione ad ascissa 222.6
Coefficiente parziale di sicurezza del materiale γ = 1.5
Kmod = 1.1
τ,tor,d <= Ksh * fv,d
0.36 <= 26.13 Comb: SLV, 6; Durata minima del carico nella combinazione: istantaneo
Mt = 50.9

---

## Asta 402: Trave in legno a falda Falda 1 fili 90-91

Verifiche condotte secondo D.M. 17-01-18 (N.T.C.)

**Dati generali**

Lunghezza = 222.6

**Caratteristiche della sezione**

| Descrizione | Tipo | Base | Altezza | Area | Jx | Jy | Wx | Wy |
|---|---|---|---|---|---|---|---|---|
| R 8x10 | Rettangolare | 8 | 10 | 80 | 666.67 | 426.67 | 133.33 | 106.67 |

Materiale: C14 EN 338:2016
Rapporto luce/freccia elastica limite = 300
Rapporto luce/freccia elastica differita = 200
Mensola Y: Nessuno; Mensola X: Nessuno
Classe di servizio 1

**Verifica tensoflessione D.M. 17-01-18 §4.4.8.1.7**

Sezione ad ascissa 0
Coefficiente parziale di sicurezza del materiale γ = 1.5
Kmod = 0.8; Kh = 1.084 (formula 11.7.1)
St,0,d/ft,0,d + Sm,y,d/fm,y,d + Km*(Sm,z,d/fm,z,d) !> 1
St,0,d/ft,0,d + Km*(Sm,y,d/fm,y,d) + Sm,z,d/fm,z,d !> 1
2.5/41.6+275.5/81+0.7*1.3/81=3.47 !> 1 [4.4.6a] Comb: SLU, 72; Durata minima del carico nella combinazione: media - NON SODDISFATTA
Mx = -36735.2; My = -138.5; N = 200

**Verifica taglio D.M. 17-01-18 §4.4.8.1.9**

Sezione ad ascissa 222.6
Coefficiente parziale di sicurezza del materiale γ = 1.5
Kmod = 0.8; kcr = 0.67
τ,d <= fv,d
Sqrt(0.03^2+8.78^2) = 8.78 <= 16 Comb: SLU, 72; Durata minima del carico nella combinazione: media
Tx = 1.2; Ty = -312.1

**Verifica taglio+torsione D.M. 17-01-18 §4.4.8.1.11**

Sezione ad ascissa 222.6
Coefficiente parziale di sicurezza del materiale γ = 1.5
Kmod = 0.8; Kh = 1.084 (formula 11.7.1); kcr = 0.67
τ,tor,d/(ksh*fv,d) + (τ,y,d/fv,d)^2 + (τ,z,d/fv,d)^2 <= 1
0.01+0+0.3 <= 1 Comb: SLU, 72; Durata minima del carico nella combinazione: media
Tx = 1.2; Ty = -312.1; Mt = 33.5

**Verifica torsione D.M. 17-01-18 §4.4.8.1.10**

Sezione ad ascissa 222.6
Coefficiente parziale di sicurezza del materiale γ = 1.5
Kmod = 1.1
τ,tor,d <= Ksh * fv,d
0.36 <= 26.13 Comb: SLV, 6; Durata minima del carico nella combinazione: istantaneo
Mt = 50.6

---

## Asta 403: Trave in legno a falda Falda 1 fili 82-83

Verifiche condotte secondo D.M. 17-01-18 (N.T.C.)

**Dati generali**

Lunghezza = 222.5

**Caratteristiche della sezione**

| Descrizione | Tipo | Base | Altezza | Area | Jx | Jy | Wx | Wy |
|---|---|---|---|---|---|---|---|---|
| R 8x10 | Rettangolare | 8 | 10 | 80 | 666.67 | 426.67 | 133.33 | 106.67 |

Materiale: C14 EN 338:2016
Rapporto luce/freccia elastica limite = 300
Rapporto luce/freccia elastica differita = 200
Mensola Y: Nessuno; Mensola X: Nessuno
Classe di servizio 1

**Verifica tensoflessione D.M. 17-01-18 §4.4.8.1.7**

Sezione ad ascissa 0
Coefficiente parziale di sicurezza del materiale γ = 1.5
Kmod = 0.8; Kh = 1.084 (formula 11.7.1)
St,0,d/ft,0,d + Sm,y,d/fm,y,d + Km*(Sm,z,d/fm,z,d) !> 1
St,0,d/ft,0,d + Km*(Sm,y,d/fm,y,d) + Sm,z,d/fm,z,d !> 1
2.6/41.6+276.5/81+0.7*8.1/81=3.55 !> 1 [4.4.6a] Comb: SLU, 80; Durata minima del carico nella combinazione: media - NON SODDISFATTA
Mx = -36870.5; My = -859.4; N = 211.1

**Verifica taglio D.M. 17-01-18 §4.4.8.1.9**

Sezione ad ascissa 222.6
Coefficiente parziale di sicurezza del materiale γ = 1.5
Kmod = 0.8; kcr = 0.67
τ,d <= fv,d
Sqrt(0.2^2+8.92^2) = 8.92 <= 16 Comb: SLU, 72; Durata minima del carico nella combinazione: media
Tx = 7; Ty = -317.1

**Verifica taglio+torsione D.M. 17-01-18 §4.4.8.1.11**

Sezione ad ascissa 222.6
Coefficiente parziale di sicurezza del materiale γ = 1.5
Kmod = 0.8; Kh = 1.084 (formula 11.7.1); kcr = 0.67
τ,tor,d/(ksh*fv,d) + (τ,y,d/fv,d)^2 + (τ,z,d/fv,d)^2 <= 1
0+0+0.31 <= 1 Comb: SLU, 72; Durata minima del carico nella combinazione: media
Tx = 7; Ty = -317.1; Mt = 4.5

**Verifica torsione D.M. 17-01-18 §4.4.8.1.10**

Sezione ad ascissa 222.6
Coefficiente parziale di sicurezza del materiale γ = 1.5
Kmod = 1.1
τ,tor,d <= Ksh * fv,d
0.33 <= 26.13 Comb: SLV, 12; Durata minima del carico nella combinazione: istantaneo
Mt = -47.3

---

## Asta 404: Trave in legno a falda Falda 1 fili 74-76

Verifiche condotte secondo D.M. 17-01-18 (N.T.C.)

**Dati generali**

Lunghezza = 222.5

**Caratteristiche della sezione**

| Descrizione | Tipo | Base | Altezza | Area | Jx | Jy | Wx | Wy |
|---|---|---|---|---|---|---|---|---|
| R 8x10 | Rettangolare | 8 | 10 | 80 | 666.67 | 426.67 | 133.33 | 106.67 |

Materiale: C14 EN 338:2016
Rapporto luce/freccia elastica limite = 300
Rapporto luce/freccia elastica differita = 200
Mensola Y: Nessuno; Mensola X: Nessuno
Classe di servizio 1

**Verifica tensoflessione D.M. 17-01-18 §4.4.8.1.7**

Sezione ad ascissa 0
Coefficiente parziale di sicurezza del materiale γ = 1.5
Kmod = 0.8; Kh = 1.084 (formula 11.7.1)
St,0,d/ft,0,d + Sm,y,d/fm,y,d + Km*(Sm,z,d/fm,z,d) !> 1
St,0,d/ft,0,d + Km*(Sm,y,d/fm,y,d) + Sm,z,d/fm,z,d !> 1
13.8/41.6+276.7/81+0.7*4.5/81=3.79 !> 1 [4.4.6a] Comb: SLU, 80; Durata minima del carico nella combinazione: media - NON SODDISFATTA
Mx = -36893.5; My = -484.2; N = 1100.2

**Verifica taglio D.M. 17-01-18 §4.4.8.1.9**

Sezione ad ascissa 222.6
Coefficiente parziale di sicurezza del materiale γ = 1.5
Kmod = 0.8; kcr = 0.67
τ,d <= fv,d
Sqrt(0.11^2+8.96^2) = 8.96 <= 16 Comb: SLU, 72; Durata minima del carico nella combinazione: media
Tx = 3.8; Ty = -318.7

**Verifica taglio+torsione D.M. 17-01-18 §4.4.8.1.11**

Sezione ad ascissa 222.6
Coefficiente parziale di sicurezza del materiale γ = 1.5
Kmod = 0.8; Kh = 1.084 (formula 11.7.1); kcr = 0.67
τ,tor,d/(ksh*fv,d) + (τ,y,d/fv,d)^2 + (τ,z,d/fv,d)^2 <= 1
0.02+0+0.31 <= 1 Comb: SLU, 72; Durata minima del carico nella combinazione: media
Tx = 3.8; Ty = -318.7; Mt = -51.4

**Verifica torsione D.M. 17-01-18 §4.4.8.1.10**

Sezione ad ascissa 222.6
Coefficiente parziale di sicurezza del materiale γ = 1.5
Kmod = 0.8
τ,tor,d <= Ksh * fv,d
0.39 <= 19 Comb: SLU, 79; Durata minima del carico nella combinazione: media
Mt = -55.6

---

## Asta 405: Trave in legno a falda Falda 1 fili 66-67

Verifiche condotte secondo D.M. 17-01-18 (N.T.C.)

**Dati generali**

Lunghezza = 222.5

**Caratteristiche della sezione**

| Descrizione | Tipo | Base | Altezza | Area | Jx | Jy | Wx | Wy |
|---|---|---|---|---|---|---|---|---|
| R 8x10 | Rettangolare | 8 | 10 | 80 | 666.67 | 426.67 | 133.33 | 106.67 |

Materiale: C14 EN 338:2016
Rapporto luce/freccia elastica limite = 300
Rapporto luce/freccia elastica differita = 200
Mensola Y: Nessuno; Mensola X: Nessuno
Classe di servizio 1

**Verifica tensoflessione D.M. 17-01-18 §4.4.8.1.7**

Sezione ad ascissa 0
Coefficiente parziale di sicurezza del materiale γ = 1.5
Kmod = 0.8; Kh = 1.084 (formula 11.7.1)
St,0,d/ft,0,d + Sm,y,d/fm,y,d + Km*(Sm,z,d/fm,z,d) !> 1
St,0,d/ft,0,d + Km*(Sm,y,d/fm,y,d) + Sm,z,d/fm,z,d !> 1
6.9/41.6+249.7/81+0.7*2.6/81=3.27 !> 1 [4.4.6a] Comb: SLU, 72; Durata minima del carico nella combinazione: media - NON SODDISFATTA
Mx = -33290.3; My = 276.2; N = 553.9

**Verifica taglio D.M. 17-01-18 §4.4.8.1.9**

Sezione ad ascissa 222.6
Coefficiente parziale di sicurezza del materiale γ = 1.5
Kmod = 0.8; kcr = 0.67
τ,d <= fv,d
Sqrt(0.05^2+8.28^2) = 8.28 <= 16 Comb: SLU, 72; Durata minima del carico nella combinazione: media
Tx = -1.9; Ty = -294.4

**Verifica taglio+torsione D.M. 17-01-18 §4.4.8.1.11**

Sezione ad ascissa 222.6
Coefficiente parziale di sicurezza del materiale γ = 1.5
Kmod = 0.8; Kh = 1.084 (formula 11.7.1); kcr = 0.67
τ,tor,d/(ksh*fv,d) + (τ,y,d/fv,d)^2 + (τ,z,d/fv,d)^2 <= 1
0.05+0+0.27 <= 1 Comb: SLU, 80; Durata minima del carico nella combinazione: media
Tx = -1.6; Ty = -294.4; Mt = -126

**Verifica torsione D.M. 17-01-18 §4.4.8.1.10**

Sezione ad ascissa 222.6
Coefficiente parziale di sicurezza del materiale γ = 1.5
Kmod = 0.8
τ,tor,d <= Ksh * fv,d
0.91 <= 19 Comb: SLU, 79; Durata minima del carico nella combinazione: media
Mt = -128.3

---

## Asta 406: Trave in legno a falda Falda 1 fili 57-58

Verifiche condotte secondo D.M. 17-01-18 (N.T.C.)

### Dati generali

Lunghezza = 222.5

### Caratteristiche della sezione

| Descrizione | Tipo | Base | Altezza | Area | Jx | Jy | Wx | Wy |
|---|---|---|---|---|---|---|---|---|
| R 8x10 | Rettangolare | 8 | 10 | 80 | 666.67 | 426.67 | 133.33 | 106.67 |

Materiale: C14 EN 338:2016
Rapporto luce/freccia elastica limite = 300
Rapporto luce/freccia elastica differita = 200
Mensola Y: Nessuno; Mensola X: Nessuno
Classe di servizio 1

### Verifica taglio D.M. 17-01-18 §4.4.8.1.9

Sezione ad ascissa 222.6
Coefficiente parziale di sicurezza del materiale γ = 1.5
Kmod = 0.8; kcr = 0.67
τ,d <= fv,d
Sqrt(0.06^2+7.57^2) = 7.57 <= 16 Comb: SLU, 80; Durata minima del carico nella combinazione: media
Tx = 2; Ty = -269.3

### Verifica pressoflessione D.M. 17-01-18 §4.4.8.1.8

Sezione ad ascissa 222.6
Coefficiente parziale di sicurezza del materiale γ = 1.5
Kmod = 0.8; Kh = 1.084 (formula 11.7.1)
(Sc,0,d/fc,0,d)^2 + Sm,y,d/fm,y,d + Km*(Sm,z,d/fm,z,d) <= 1
(Sc,0,d/fc,0,d)^2 + Km*(Sm,y,d/fm,y,d) + Sm,z,d/fm,z,d <= 1
(7.7/85.3)^2+223.1/81+0.7*5.5/80.97=2.81 !> 1 [4.4.7a] Comb: SLU, 80; Durata minima del carico nella combinazione: media - NON SODDISFATTA
Mx = 29744; My = 588.7; N = -615.6

### Verifica taglio+torsione D.M. 17-01-18 §4.4.8.1.11

Sezione ad ascissa 222.6
Coefficiente parziale di sicurezza del materiale γ = 1.5
Kmod = 0.8; Kh = 1.084 (formula 11.7.1); kcr = 0.67
τ,tor,d/(ksh*fv,d) + (τ,y,d/fv,d)^2 + (τ,z,d/fv,d)^2 <= 1
0.08+0+0.22 <= 1 Comb: SLU, 80; Durata minima del carico nella combinazione: media
Tx = 2; Ty = -269.3; Mt = -204.3

### Verifica torsione D.M. 17-01-18 §4.4.8.1.10

Sezione ad ascissa 222.6
Coefficiente parziale di sicurezza del materiale γ = 1.5
Kmod = 0.8
τ,tor,d <= Ksh * fv,d
1.44 <= 19 Comb: SLU, 80; Durata minima del carico nella combinazione: media
Mt = -204.3

---

## Asta 407: Trave in legno a falda Falda 1 fili 50-51

Verifiche condotte secondo D.M. 17-01-18 (N.T.C.)

### Dati generali

Lunghezza = 187.4

### Caratteristiche della sezione

| Descrizione | Tipo | Base | Altezza | Area | Jx | Jy | Wx | Wy |
|---|---|---|---|---|---|---|---|---|
| R 8x10 | Rettangolare | 8 | 10 | 80 | 666.67 | 426.67 | 133.33 | 106.67 |

Materiale: C14 EN 338:2016
Rapporto luce/freccia elastica limite = 300
Rapporto luce/freccia elastica differita = 200
Mensola Y: Nessuno; Mensola X: Nessuno
Classe di servizio 1

### Verifica tensoflessione D.M. 17-01-18 §4.4.8.1.7

Sezione ad ascissa 187.4
Coefficiente parziale di sicurezza del materiale γ = 1.5
Kmod = 0.8; Kh = 1.084 (formula 11.7.1)
St,0,d/ft,0,d + Sm,y,d/fm,y,d + Km*(Sm,z,d/fm,z,d) !> 1
St,0,d/ft,0,d + Km*(Sm,y,d/fm,y,d) + Sm,z,d/fm,z,d !> 1
9.4/41.6+210.3/81+0.7*30.2/81=3.08 !> 1 [4.4.6a] Comb: SLU, 72; Durata minima del carico nella combinazione: media - NON SODDISFATTA
Mx = 28040; My = 3220.5; N = 749.5

### Verifica taglio D.M. 17-01-18 §4.4.8.1.9

Sezione ad ascissa 187.4

Coefficiente parziale di sicurezza del materiale γ = 1.5
Kmod = 0.8; kcr = 0.67
τ,d <= fv,d
Sqrt(0.72^2+8.56^2) = 8.59 <= 16 Comb: SLU, 80; Durata minima del carico nella combinazione: media
Tx = 25.6; Ty = -304.2

**Verifica taglio+torsione D.M. 17-01-18 §4.4.8.1.11**

Sezione ad ascissa 187.4
Coefficiente parziale di sicurezza del materiale γ = 1.5
Kmod = 0.8; Kh = 1.084 (formula 11.7.1); kcr = 0.67
τ,tor,d/(ksh*fv,d) + (τ,y,d/fv,d)^2 + (τ,z,d/fv,d)^2 <= 1
0.12+0+0.29 <= 1 Comb: SLU, 80; Durata minima del carico nella combinazione: media
Tx = 25.6; Ty = -304.2; Mt = -326

**Verifica torsione D.M. 17-01-18 §4.4.8.1.10**

Sezione ad ascissa 187.4
Coefficiente parziale di sicurezza del materiale γ = 1.5
Kmod = 0.8
τ,tor,d <= Ksh * fv,d
2.3 <= 19 Comb: SLU, 80; Durata minima del carico nella combinazione: media
Mt = -326

---

## Asta 408: Trave in legno a falda Falda 1 fili 44-45

Verifiche condotte secondo D.M. 17-01-18 (N.T.C.)

**Dati generali**

Lunghezza = 115

**Caratteristiche della sezione**

| Descrizione | Tipo | Base | Altezza | Area | Jx | Jy | Wx | Wy |
|---|---|---|---|---|---|---|---|---|
| R 8x10 | Rettangolare | 8 | 10 | 80 | 666.67 | 426.67 | 133.33 | 106.67 |

Materiale: C14 EN 338:2016
Rapporto luce/freccia elastica limite = 300
Rapporto luce/freccia elastica differita = 200
Mensola Y: Nessuno; Mensola X: Nessuno
Classe di servizio 1

**Verifica tensoflessione D.M. 17-01-18 §4.4.8.1.7**

Sezione ad ascissa 0
Coefficiente parziale di sicurezza del materiale γ = 1.5
Kmod = 0.8; Kh = 1.084 (formula 11.7.1)
St,0,d/ft,0,d + Sm,y,d/fm,y,d + Km*(Sm,z,d/fm,z,d) !> 1
St,0,d/ft,0,d + Km*(Sm,y,d/fm,y,d) + Sm,z,d/fm,z,d !> 1
9.7/41.6+208.6/81+0.7*55.6/81=3.29 !> 1 [4.4.6a] Comb: SLU, 71; Durata minima del carico nella combinazione: media - NON SODDISFATTA
Mx = -27809.7; My = -5932.4; N = 777.5

**Verifica taglio D.M. 17-01-18 §4.4.8.1.9**

Sezione ad ascissa 115
Coefficiente parziale di sicurezza del materiale γ = 1.5
Kmod = 0.8; kcr = 0.67
τ,d <= fv,d
Sqrt(3.21^2+11.94^2) = 12.36 <= 16 Comb: SLU, 72; Durata minima del carico nella combinazione: media
Tx = 114.1; Ty = -424.4

**Verifica taglio+torsione D.M. 17-01-18 §4.4.8.1.11**

Sezione ad ascissa 115
Coefficiente parziale di sicurezza del materiale γ = 1.5
Kmod = 0.8; Kh = 1.084 (formula 11.7.1); kcr = 0.67
τ,tor,d/(ksh*fv,d) + (τ,y,d/fv,d)^2 + (τ,z,d/fv,d)^2 <= 1
0.19+0.04+0.56 <= 1 Comb: SLU, 72; Durata minima del carico nella combinazione: media
Tx = 114.1; Ty = -424.4; Mt = -510.5

**Verifica torsione D.M. 17-01-18 §4.4.8.1.10**

Sezione ad ascissa 115
Coefficiente parziale di sicurezza del materiale γ = 1.5
Kmod = 0.8
τ,tor,d <= Ksh * fv,d
3.61 <= 19 Comb: SLU, 80; Durata minima del carico nella combinazione: media
Mt = -510.7

---

## Asta 409: Trave in legno a falda Falda 1 fili 38-39

Verifiche condotte secondo D.M. 17-01-18 (N.T.C.)

### Dati generali

Lunghezza = 51.4

### Caratteristiche della sezione

| Descrizione | Tipo | Base | Altezza | Area | Jx | Jy | Wx | Wy |
|---|---|---|---|---|---|---|---|---|
| R 8x10 | Rettangolare | 8 | 10 | 80 | 666.67 | 426.67 | 133.33 | 106.67 |

Materiale: C14 EN 338:2016
Rapporto luce/freccia elastica limite = 300
Rapporto luce/freccia elastica differita = 200
Mensola Y: Nessuno; Mensola X: Nessuno
Classe di servizio 1

### Verifica tensoflessione D.M. 17-01-18 §4.4.8.1.7

Sezione ad ascissa 0
Coefficiente parziale di sicurezza del materiale γ = 1.5
Kmod = 0.8; Kh = 1.084 (formula 11.7.1)
St,0,d/ft,0,d + Sm,y,d/fm,y,d + Km*(Sm,z,d/fm,z,d) !> 1
St,0,d/ft,0,d + Km*(Sm,y,d/fm,y,d) + Sm,z,d/fm,z,d !> 1
8.6/41.6+149.6/81+0.7*97.4/81=2.9 !> 1 [4.4.6a] Comb: SLU, 71; Durata minima del carico nella combinazione: media - NON SODDISFATTA
Mx = -19941.2; My = -10391.6; N = 687.8

### Verifica taglio D.M. 17-01-18 §4.4.8.1.9

Sezione ad ascissa 51.4
Coefficiente parziale di sicurezza del materiale γ = 1.5
Kmod = 0.8; kcr = 0.67
τ,d > fv,d
Sqrt(10.48^2+15.66^2) = 18.84 > 16 Comb: SLU, 72; Durata minima del carico nella combinazione: media - NON SODDISFATTA
Tx = 372.5; Ty = -556.7

### Verifica taglio+torsione D.M. 17-01-18 §4.4.8.1.11

Sezione ad ascissa 51.4
Coefficiente parziale di sicurezza del materiale γ = 1.5
Kmod = 0.8; Kh = 1.084 (formula 11.7.1); kcr = 0.67
τ,tor,d/(ksh*fv,d) + (τ,y,d/fv,d)^2 + (τ,z,d/fv,d)^2 > 1
0.21+0.43+0.96 > 1 Comb: SLU, 72; Durata minima del carico nella combinazione: media - NON SODDISFATTA
Tx = 372.5; Ty = -556.7; Mt = -576.2

### Verifica torsione D.M. 17-01-18 §4.4.8.1.10

Sezione ad ascissa 51.4
Coefficiente parziale di sicurezza del materiale γ = 1.5
Kmod = 0.8
τ,tor,d <= Ksh * fv,d
4.07 <= 19 Comb: SLU, 80; Durata minima del carico nella combinazione: media
Mt = -576.3

---

## Asta 410: Trave in legno a falda Falda 1 fili 149-150

Verifiche condotte secondo D.M. 17-01-18 (N.T.C.)

### Dati generali

Lunghezza = 222.5

### Caratteristiche della sezione

| Descrizione | Tipo | Base | Altezza | Area | Jx | Jy | Wx | Wy |
|---|---|---|---|---|---|---|---|---|
| R 8x10 | Rettangolare | 8 | 10 | 80 | 666.67 | 426.67 | 133.33 | 106.67 |

Materiale: C14 EN 338:2016
Rapporto luce/freccia elastica limite = 300
Rapporto luce/freccia elastica differita = 200
Mensola Y: Nessuno; Mensola X: Nessuno
Classe di servizio 1

### Verifica tensoflessione D.M. 17-01-18 §4.4.8.1.7

Sezione ad ascissa 222.6
Coefficiente parziale di sicurezza del materiale γ = 1.5
Kmod = 0.8; Kh = 1.084 (formula 11.7.1)
St,0,d/ft,0,d + Sm,y,d/fm,y,d + Km*(Sm,z,d/fm,z,d) !> 1
St,0,d/ft,0,d + Km*(Sm,y,d/fm,y,d) + Sm,z,d/fm,z,d !> 1
1.2/41.6+268.8/81+0.7*14.7/81=3.48 !> 1 [4.4.6a] Comb: SLU, 79; Durata minima del carico nella combinazione: media - NON SODDISFATTA

Mx = 35844.3; My = 1568.9; N = 95.1

**Verifica taglio D.M. 17-01-18 §4.4.8.1.9**

Sezione ad ascissa 222.6
Coefficiente parziale di sicurezza del materiale γ = 1.5
Kmod = 0.8; kcr = 0.67
τ,d <= fv,d
Sqrt(0.4^2+8.15^2) = 8.16 <= 16 Comb: SLU, 79; Durata minima del carico nella combinazione: media
Tx = 14.2; Ty = -289.8

**Verifica taglio+torsione D.M. 17-01-18 §4.4.8.1.11**

Sezione ad ascissa 222.6
Coefficiente parziale di sicurezza del materiale γ = 1.5
Kmod = 0.8; Kh = 1.084 (formula 11.7.1); kcr = 0.67
τ,tor,d/(ksh*fv,d) + (τ,y,d/fv,d)^2 + (τ,z,d/fv,d)^2 <= 1
0.01+0+0.26 <= 1 Comb: SLU, 79; Durata minima del carico nella combinazione: media
Tx = 14.2; Ty = -289.8; Mt = 26.1

**Verifica torsione D.M. 17-01-18 §4.4.8.1.10**

Sezione ad ascissa 222.6
Coefficiente parziale di sicurezza del materiale γ = 1.5
Kmod = 0.8
τ,tor,d <= Ksh * fv,d
0.18 <= 19 Comb: SLU, 80; Durata minima del carico nella combinazione: media
Mt = 26.2

---

## Asta 411: Trave in legno a falda Falda 1 fili 154-155

Verifiche condotte secondo D.M. 17-01-18 (N.T.C.)

**Dati generali**

Lunghezza = 222.5

**Caratteristiche della sezione**

| Descrizione | Tipo | Base | Altezza | Area | Jx | Jy | Wx | Wy |
|---|---|---|---|---|---|---|---|---|
| R 8x10 | Rettangolare | 8 | 10 | 80 | 666.67 | 426.67 | 133.33 | 106.67 |

Materiale: C14 EN 338:2016
Rapporto luce/freccia elastica limite = 300
Rapporto luce/freccia elastica differita = 200
Mensola Y: Nessuno; Mensola X: Nessuno
Classe di servizio 1

**Verifica taglio D.M. 17-01-18 §4.4.8.1.9**

Sezione ad ascissa 222.6
Coefficiente parziale di sicurezza del materiale γ = 1.5
Kmod = 0.8; kcr = 0.67
τ,d <= fv,d
Sqrt(0.34^2+8.21^2) = 8.21 <= 16 Comb: SLU, 72; Durata minima del carico nella combinazione: media
Tx = 11.9; Ty = -291.7

**Verifica pressoflessione D.M. 17-01-18 §4.4.8.1.8**

Sezione ad ascissa 222.6
Coefficiente parziale di sicurezza del materiale γ = 1.5
Kmod = 0.8; Kh = 1.084 (formula 11.7.1)
(Sc,0,d/fc,0,d)^2 + Sm,y,d/fm,y,d + Km*(Sm,z,d/fm,z,d) <= 1
(Sc,0,d/fc,0,d)^2 + Km*(Sm,y,d/fm,y,d) + Sm,z,d/fm,z,d <= 1
(3/85.3)^2+265.2/81+0.7*12.8/80.97=3.39 !> 1 [4.4.7a] Comb: SLU, 71; Durata minima del carico nella combinazione: media - NON SODDISFATTA
Mx = 35362.4; My = 1369; N = -239.2

**Verifica taglio+torsione D.M. 17-01-18 §4.4.8.1.11**

Sezione ad ascissa 222.6
Coefficiente parziale di sicurezza del materiale γ = 1.5
Kmod = 0.8; Kh = 1.084 (formula 11.7.1); kcr = 0.67
τ,tor,d/(ksh*fv,d) + (τ,y,d/fv,d)^2 + (τ,z,d/fv,d)^2 <= 1
0.02+0+0.26 <= 1 Comb: SLU, 71; Durata minima del carico nella combinazione: media
Tx = 12.8; Ty = -291.7; Mt = 51.4

**Verifica torsione D.M. 17-01-18 §4.4.8.1.10**

Sezione ad ascissa 222.6
Coefficiente parziale di sicurezza del materiale γ = 1.5
Kmod = 0.8
τ,tor,d <= Ksh * fv,d

0.36 <= 19 Comb: SLU, 79; Durata minima del carico nella combinazione: media
Mt = 51.6

## Asta 412: Trave in legno a falda Falda 1 fili 140-141

Verifiche condotte secondo D.M. 17-01-18 (N.T.C.)

### Dati generali

Lunghezza = 222.5

### Caratteristiche della sezione

| Descrizione | Tipo | Base | Altezza | Area | Jx | Jy | Wx | Wy |
|---|---|---|---|---|---|---|---|---|
| R 8x10 | Rettangolare | 8 | 10 | 80 | 666.67 | 426.67 | 133.33 | 106.67 |

Materiale: C14 EN 338:2016
Rapporto luce/freccia elastica limite = 300
Rapporto luce/freccia elastica differita = 200
Mensola Y: Nessuno; Mensola X: Nessuno
Classe di servizio 1

### Verifica tensoflessione D.M. 17-01-18 §4.4.8.1.7

Sezione ad ascissa 222.6
Coefficiente parziale di sicurezza del materiale γ = 1.5
Kmod = 0.8; Kh = 1.084 (formula 11.7.1)
St,0,d/ft,0,d + Sm,y,d/fm,y,d + Km*(Sm,z,d/fm,z,d) !> 1
St,0,d/ft,0,d + Km*(Sm,y,d/fm,y,d) + Sm,z,d/fm,z,d !> 1
0.5/41.6+271.1/81+0.7*10.2/81=3.45 !> 1 [4.4.6a] Comb: SLU, 79; Durata minima del carico nella combinazione: media - NON SODDISFATTA
Mx = 36144.8; My = 1085.4; N = 42.6

### Verifica taglio D.M. 17-01-18 §4.4.8.1.9

Sezione ad ascissa 222.6
Coefficiente parziale di sicurezza del materiale γ = 1.5
Kmod = 0.8; kcr = 0.67
τ,d <= fv,d
Sqrt(0.27^2+8.39^2) = 8.39 <= 16 Comb: SLU, 79; Durata minima del carico nella combinazione: media
Tx = 9.7; Ty = -298.3

### Verifica taglio+torsione D.M. 17-01-18 §4.4.8.1.11

Sezione ad ascissa 222.6
Coefficiente parziale di sicurezza del materiale γ = 1.5
Kmod = 0.8; Kh = 1.084 (formula 11.7.1); kcr = 0.67
τ,tor,d/(ksh*fv,d) + (τ,y,d/fv,d)^2 + (τ,z,d/fv,d)^2 <= 1
0+0+0.12 <= 1 Comb: SLU, 76; Durata minima del carico nella combinazione: media
Tx = 6.6; Ty = -200.6; Mt = 1.3

### Verifica torsione D.M. 17-01-18 §4.4.8.1.10

Sezione ad ascissa 222.6
Coefficiente parziale di sicurezza del materiale γ = 1.5
Kmod = 1.1
τ,tor,d <= Ksh * fv,d
0.13 <= 26.13 Comb: SLV, 6; Durata minima del carico nella combinazione: istantaneo
Mt = 18.6

## Asta 413: Trave in legno a falda Falda 6 fili 239-240

Verifiche condotte secondo D.M. 17-01-18 (N.T.C.)

### Dati generali

Lunghezza = 243.9

### Caratteristiche della sezione

| Descrizione | Tipo | Base | Altezza | Area | Jx | Jy | Wx | Wy |
|---|---|---|---|---|---|---|---|---|
| R 8x10 | Rettangolare | 8 | 10 | 80 | 666.67 | 426.67 | 133.33 | 106.67 |

Materiale: C14 EN 338:2016
Rapporto luce/freccia elastica limite = 300
Rapporto luce/freccia elastica differita = 200
Mensola Y: Nessuno; Mensola X: Nessuno
Classe di servizio 1

### Verifica tensoflessione D.M. 17-01-18 §4.4.8.1.7

Sezione ad ascissa 243.9
Coefficiente parziale di sicurezza del materiale γ = 1.5

Kmod = 0.8; Kh = 1.084 (formula 11.7.1)
St,0,d/ft,0,d + Sm,y,d/fm,y,d + Km*(Sm,z,d/fm,z,d) !> 1
St,0,d/ft,0,d + Km*(Sm,y,d/fm,y,d) + Sm,z,d/fm,z,d !> 1
14.1/41.6+202.6/81+0.7*2.4/81=2.86 !> 1 [4.4.6a] Comb: SLU, 80; Durata minima del carico nella combinazione: media - NON SODDISFATTA
Mx = 27013.8; My = 255.2; N = 1124.3

**Verifica taglio D.M. 17-01-18 §4.4.8.1.9**

Sezione ad ascissa 243.9
Coefficiente parziale di sicurezza del materiale γ = 1.5
Kmod = 0.8; kcr = 0.67
τ,d <= fv,d
Sqrt(0.08^2+6.17^2) = 6.18 <= 16 Comb: SLU, 71; Durata minima del carico nella combinazione: media
Tx = 2.9; Ty = -219.5

**Verifica taglio+torsione D.M. 17-01-18 §4.4.8.1.11**

Sezione ad ascissa 243.9
Coefficiente parziale di sicurezza del materiale γ = 1.5
Kmod = 0.8; Kh = 1.084 (formula 11.7.1); kcr = 0.67
τ,tor,d/(ksh*fv,d) + (τ,y,d/fv,d)^2 + (τ,z,d/fv,d)^2 <= 1
0.07+0+0.15 <= 1 Comb: SLU, 71; Durata minima del carico nella combinazione: media
Tx = 2.9; Ty = -219.5; Mt = -197.6

**Verifica torsione D.M. 17-01-18 §4.4.8.1.10**

Sezione ad ascissa 243.9
Coefficiente parziale di sicurezza del materiale γ = 1.5
Kmod = 0.8
τ,tor,d <= Ksh * fv,d
1.4 <= 19 Comb: SLU, 71; Durata minima del carico nella combinazione: media
Mt = -197.6

---

## Asta 414: Trave in legno a falda Falda 6 fili 258-259

Verifiche condotte secondo D.M. 17-01-18 (N.T.C.)

**Dati generali**

Lunghezza = 243.9

**Caratteristiche della sezione**

| Descrizione | Tipo | Base | Altezza | Area | Jx | Jy | Wx | Wy |
|---|---|---|---|---|---|---|---|---|
| R 8x10 | Rettangolare | 8 | 10 | 80 | 666.67 | 426.67 | 133.33 | 106.67 |

Materiale: C14 EN 338:2016
Rapporto luce/freccia elastica limite = 300
Rapporto luce/freccia elastica differita = 200
Mensola Y: Nessuno; Mensola X: Nessuno
Classe di servizio 1

**Verifica taglio D.M. 17-01-18 §4.4.8.1.9**

Sezione ad ascissa 243.9
Coefficiente parziale di sicurezza del materiale γ = 1.5
Kmod = 0.8; kcr = 0.67
τ,d <= fv,d
Sqrt(0.42^2+3.17^2) = 3.2 <= 16 Comb: SLU, 72; Durata minima del carico nella combinazione: media
Tx = -15; Ty = -112.8

**Verifica pressoflessione D.M. 17-01-18 §4.4.8.1.8**

Sezione ad ascissa 0
Coefficiente parziale di sicurezza del materiale γ = 1.5
Kmod = 0.8; Kh = 1.084 (formula 11.7.1)
(Sc,0,d/fc,0,d)^2 + Sm,y,d/fm,y,d + Km*(Sm,z,d/fm,z,d) <= 1
(Sc,0,d/fc,0,d)^2 + Km*(Sm,y,d/fm,y,d) + Sm,z,d/fm,z,d <= 1
(1.3/85.3)^2+144.5/81+0.7*16.9/80.97=1.93 !> 1 [4.4.7a] Comb: SLU, 71; Durata minima del carico nella combinazione: media - NON SODDISFATTA
Mx = -19263.3; My = 1797.5; N = -103

**Verifica taglio+torsione D.M. 17-01-18 §4.4.8.1.11**

Sezione ad ascissa 243.9
Coefficiente parziale di sicurezza del materiale γ = 1.5
Kmod = 0.8; Kh = 1.084 (formula 11.7.1); kcr = 0.67
τ,tor,d/(ksh*fv,d) + (τ,y,d/fv,d)^2 + (τ,z,d/fv,d)^2 <= 1
0.06+0+0.04 <= 1 Comb: SLU, 71; Durata minima del carico nella combinazione: media
Tx = -15.4; Ty = -112.6; Mt = 173.9

### Verifica torsione D.M. 17-01-18 §4.4.8.1.10

Sezione ad ascissa 243.9
Coefficiente parziale di sicurezza del materiale γ = 1.5
Kmod = 0.8
τ,tor,d <= Ksh * fv,d
1.23 <= 19 Comb: SLU, 71; Durata minima del carico nella combinazione: media
Mt = 173.9

---

## Asta 415: Trave in legno a falda Falda 6 fili 252-253

Verifiche condotte secondo D.M. 17-01-18 (N.T.C.)

### Dati generali

Lunghezza = 243.9

### Caratteristiche della sezione

| Descrizione | Tipo | Base | Altezza | Area | Jx | Jy | Wx | Wy |
|---|---|---|---|---|---|---|---|---|
| R 8x10 | Rettangolare | 8 | 10 | 80 | 666.67 | 426.67 | 133.33 | 106.67 |

Materiale: C14 EN 338:2016
Rapporto luce/freccia elastica limite = 300
Rapporto luce/freccia elastica differita = 200
Mensola Y: Nessuno; Mensola X: Nessuno
Classe di servizio 1

### Verifica taglio D.M. 17-01-18 §4.4.8.1.9

Sezione ad ascissa 243.9
Coefficiente parziale di sicurezza del materiale γ = 1.5
Kmod = 0.8; kcr = 0.67
τ,d <= fv,d
Sqrt(0.08^2+3.59^2) = 3.59 <= 16 Comb: SLU, 72; Durata minima del carico nella combinazione: media
Tx = -2.8; Ty = -127.5

### Verifica pressoflessione D.M. 17-01-18 §4.4.8.1.8

Sezione ad ascissa 0
Coefficiente parziale di sicurezza del materiale γ = 1.5
Kmod = 0.8; Kh = 1.084 (formula 11.7.1)
(Sc,0,d/fc,0,d)^2 + Sm,y,d/fm,y,d + Km*(Sm,z,d/fm,z,d) <= 1
(Sc,0,d/fc,0,d)^2 + Km*(Sm,y,d/fm,y,d) + Sm,z,d/fm,z,d <= 1
(1.9/85.3)^2+156.9/81+0.7*2.6/80.97=1.96 !> 1 [4.4.7a] Comb: SLU, 71; Durata minima del carico nella combinazione: media - NON SODDISFATTA
Mx = -20915.4; My = 277.1; N = -148.6

### Verifica taglio+torsione D.M. 17-01-18 §4.4.8.1.11

Sezione ad ascissa 243.9
Coefficiente parziale di sicurezza del materiale γ = 1.5
Kmod = 0.8; Kh = 1.084 (formula 11.7.1); kcr = 0.67
τ,tor,d/(ksh*fv,d) + (τ,y,d/fv,d)^2 + (τ,z,d/fv,d)^2 <= 1
0.03+0+0.05 <= 1 Comb: SLU, 71; Durata minima del carico nella combinazione: media
Tx = -3; Ty = -127.5; Mt = 76.9

### Verifica torsione D.M. 17-01-18 §4.4.8.1.10

Sezione ad ascissa 243.9
Coefficiente parziale di sicurezza del materiale γ = 1.5
Kmod = 0.8
τ,tor,d <= Ksh * fv,d
0.54 <= 19 Comb: SLU, 71; Durata minima del carico nella combinazione: media
Mt = 76.9

---

## Asta 416: Trave in legno a falda Falda 6 fili 246-247

Verifiche condotte secondo D.M. 17-01-18 (N.T.C.)

### Dati generali

Lunghezza = 243.9

### Caratteristiche della sezione

| Descrizione | Tipo | Base | Altezza | Area | Jx | Jy | Wx | Wy |
|---|---|---|---|---|---|---|---|---|
| R 8x10 | Rettangolare | 8 | 10 | 80 | 666.67 | 426.67 | 133.33 | 106.67 |

Materiale: C14 EN 338:2016
Rapporto luce/freccia elastica limite = 300
Rapporto luce/freccia elastica differita = 200

Mensola Y: Nessuno; Mensola X: Nessuno
Classe di servizio 1

**Verifica taglio D.M. 17-01-18 §4.4.8.1.9**

Sezione ad ascissa 243.9
Coefficiente parziale di sicurezza del materiale γ = 1.5
Kmod = 0.8; kcr = 0.67
τ,d <= fv,d
Sqrt(0.09^2+3.65^2) = 3.65 <= 16 Comb: SLU, 71; Durata minima del carico nella combinazione: media
Tx = 3.1; Ty = -129.7

**Verifica pressoflessione D.M. 17-01-18 §4.4.8.1.8**

Sezione ad ascissa 0
Coefficiente parziale di sicurezza del materiale γ = 1.5
Kmod = 0.8; Kh = 1.084 (formula 11.7.1)
(Sc,0,d/fc,0,d)^2 + Sm,y,d/fm,y,d + Km*(Sm,z,d/fm,z,d) <= 1
(Sc,0,d/fc,0,d)^2 + Km*(Sm,y,d/fm,y,d) + Sm,z,d/fm,z,d <= 1
(2/85.3)^2+153.5/81+0.7*4.3/80.97=1.93 !> 1 [4.4.7a] Comb: SLU, 71; Durata minima del carico nella combinazione: media - NON SODDISFATTA
Mx = -20464.9; My = -461; N = -156.3

**Verifica taglio+torsione D.M. 17-01-18 §4.4.8.1.11**

Sezione ad ascissa 243.9
Coefficiente parziale di sicurezza del materiale γ = 1.5
Kmod = 0.8; Kh = 1.084 (formula 11.7.1); kcr = 0.67
τ,tor,d/(ksh*fv,d) + (τ,y,d/fv,d)^2 + (τ,z,d/fv,d)^2 <= 1
0.02+0+0.05 <= 1 Comb: SLU, 71; Durata minima del carico nella combinazione: media
Tx = 3.1; Ty = -129.7; Mt = -52.3

**Verifica torsione D.M. 17-01-18 §4.4.8.1.10**

Sezione ad ascissa 243.9
Coefficiente parziale di sicurezza del materiale γ = 1.5
Kmod = 0.8
τ,tor,d <= Ksh * fv,d
0.38 <= 19 Comb: SLU, 38; Durata minima del carico nella combinazione: media
Mt = -53.5

---

## Asta 417: Trave in legno a falda Falda 6 fili 228-229

Verifiche condotte secondo D.M. 17-01-18 (N.T.C.)

**Dati generali**

Lunghezza = 189.7

**Caratteristiche della sezione**

| Descrizione | Tipo | Base | Altezza | Area | Jx | Jy | Wx | Wy |
|---|---|---|---|---|---|---|---|---|
| R 8x10 | Rettangolare | 8 | 10 | 80 | 666.67 | 426.67 | 133.33 | 106.67 |

Materiale: C14 EN 338:2016
Rapporto luce/freccia elastica limite = 300
Rapporto luce/freccia elastica differita = 200
Mensola Y: Nessuno; Mensola X: Nessuno
Classe di servizio 1

**Verifica tensoflessione D.M. 17-01-18 §4.4.8.1.7**

Sezione ad ascissa 0
Coefficiente parziale di sicurezza del materiale γ = 1.5
Kmod = 0.8; Kh = 1.084 (formula 11.7.1)
St,0,d/ft,0,d + Sm,y,d/fm,y,d + Km*(Sm,z,d/fm,z,d) !> 1
St,0,d/ft,0,d + Km*(Sm,y,d/fm,y,d) + Sm,z,d/fm,z,d !> 1
2.4/41.6+169.4/81+0.7*0.8/81=2.16 !> 1 [4.4.6a] Comb: SLU, 72; Durata minima del carico nella combinazione: media - NON SODDISFATTA
Mx = -22590; My = -90; N = 190.3

**Verifica taglio D.M. 17-01-18 §4.4.8.1.9**

Sezione ad ascissa 189.7
Coefficiente parziale di sicurezza del materiale γ = 1.5
Kmod = 0.8; kcr = 0.67
τ,d <= fv,d
Sqrt(0.06^2+6.18^2) = 6.18 <= 16 Comb: SLU, 71; Durata minima del carico nella combinazione: media
Tx = 2; Ty = -219.8

**Verifica taglio+torsione D.M. 17-01-18 §4.4.8.1.11**

Sezione ad ascissa 189.7
Coefficiente parziale di sicurezza del materiale γ = 1.5

Kmod = 0.8; Kh = 1.084 (formula 11.7.1); kcr = 0.67
τ,tor,d/(ksh*fv,d) + (τ,y,d/fv,d)^2 + (τ,z,d/fv,d)^2 <= 1
0.09+0+0.15 <= 1 Comb: SLU, 71; Durata minima del carico nella combinazione: media
Tx = 2; Ty = -219.8; Mt = -254.8

**Verifica torsione D.M. 17-01-18 §4.4.8.1.10**

Sezione ad ascissa 189.7
Coefficiente parziale di sicurezza del materiale γ = 1.5
Kmod = 0.8
τ,tor,d <= Ksh * fv,d
1.8 <= 19 Comb: SLU, 71; Durata minima del carico nella combinazione: media
Mt = -254.8

---

## Asta 418: Trave in legno a falda Falda 6 fili 219-220

Verifiche condotte secondo D.M. 17-01-18 (N.T.C.)

**Dati generali**

Lunghezza = 110.4

**Caratteristiche della sezione**

| Descrizione | Tipo | Base | Altezza | Area | Jx | Jy | Wx | Wy |
|---|---|---|---|---|---|---|---|---|
| R 8x10 | Rettangolare | 8 | 10 | 80 | 666.67 | 426.67 | 133.33 | 106.67 |

Materiale: C14 EN 338:2016
Rapporto luce/freccia elastica limite = 300
Rapporto luce/freccia elastica differita = 200
Mensola Y: Nessuno; Mensola X: Nessuno
Classe di servizio 1

**Verifica taglio D.M. 17-01-18 §4.4.8.1.9**

Sezione ad ascissa 110.4
Coefficiente parziale di sicurezza del materiale γ = 1.5
Kmod = 0.8; kcr = 0.67
τ,d <= fv,d
Sqrt(0.03^2+8.92^2) = 8.92 <= 16 Comb: SLU, 71; Durata minima del carico nella combinazione: media
Tx = 1.2; Ty = -317.1

**Verifica pressoflessione D.M. 17-01-18 §4.4.8.1.8**

Sezione ad ascissa 0
Coefficiente parziale di sicurezza del materiale γ = 1.5
Kmod = 0.8; Kh = 1.084 (formula 11.7.1)
(Sc,0,d/fc,0,d)^2 + Sm,y,d/fm,y,d + Km*(Sm,z,d/fm,z,d) <= 1
(Sc,0,d/fc,0,d)^2 + Km*(Sm,y,d/fm,y,d) + Sm,z,d/fm,z,d <= 1
(0.9/85.3)^2+165.6/81+0.7*0.2/80.97=2.05 !> 1 [4.4.7a] Comb: SLU, 71; Durata minima del carico nella combinazione: media - NON SODDISFATTA
Mx = -22082.8; My = -21.6; N = -70.4

**Verifica taglio+torsione D.M. 17-01-18 §4.4.8.1.11**

Sezione ad ascissa 110.4
Coefficiente parziale di sicurezza del materiale γ = 1.5
Kmod = 0.8; Kh = 1.084 (formula 11.7.1); kcr = 0.67
τ,tor,d/(ksh*fv,d) + (τ,y,d/fv,d)^2 + (τ,z,d/fv,d)^2 <= 1
0.13+0+0.31 <= 1 Comb: SLU, 71; Durata minima del carico nella combinazione: media
Tx = 1.2; Ty = -317.1; Mt = -355.6

**Verifica torsione D.M. 17-01-18 §4.4.8.1.10**

Sezione ad ascissa 110.4
Coefficiente parziale di sicurezza del materiale γ = 1.5
Kmod = 0.8
τ,tor,d <= Ksh * fv,d
2.51 <= 19 Comb: SLU, 72; Durata minima del carico nella combinazione: media
Mt = -355.6

# 1.3 Verifiche superelementi in legno

Le unità di misura elencate nel capitolo sono in [cm] ove non espressamente specificato.

***Descrizione***: *descrizione della sezione.*
***Tipo***: *tipo di sezione.*
***Base***: *base della sezione. [cm]*
***Altezza***: *altezza della sezione. [cm]*

*Area: area inerziale nel sistema geometrico centrato nel baricentro. [cm²]*
*Jx: momento d'inerzia attorno all'asse orizzontale baricentrico di definizione della sezione. [cm4]*
*Jy: momento d'inerzia attorno all'asse verticale baricentrico di definizione della sezione. [cm4]*
*Wx: modulo di resistenza elastico minimo relativo all'asse x. [cm³]*
*Wy: modulo di resistenza elastico minimo relativo all'asse y. [cm³]*

## Superelemento in legno a "Falda 1" 73-76

Verifiche condotte secondo D.M. 17-01-18 (N.T.C.)

### Dati generali

Superelemento di lunghezza complessiva L= 485.3 composto da:
asta 208: Trave in legno a falda Falda 1 fili 72-74 (L = 262.8)
asta 404: Trave in legno a falda Falda 1 fili 74-76 (L = 222.5)

### Caratteristiche della sezione

| Descrizione | Tipo | Base | Altezza | Area | Jx | Jy | Wx | Wy |
|---|---|---|---|---|---|---|---|---|
| R 8x10 | Rettangolare | 8 | 10 | 80 | 666.67 | 426.67 | 133.33 | 106.67 |

Materiale: C14 EN 338:2016
β,x = 0; β,y = 0
Rapporto luce/freccia elastica limite = 300
Rapporto luce/freccia elastica differita = 200
Mensola Y: Nessuno; Mensola X: Nessuno
Classe di servizio 1

### Verifica della freccia istantanea totale D.M. 17-01-18 §C4.4.7 Circolare 7 21-01-19

Sezione ad ascissa 254.1
Kdef = 0
Uinst tot in x = -0.05
Uinst tot in y = -6.48
Uinst tot = 6.48
Luce/Uinst,tot < limite
485.3/6.48=74.9 < 300 Comb: SLE rara, 17 - NON SODDISFATTA

### Verifica della freccia istantanea variabile D.M. 17-01-18 §4.4.7

Sezione ad ascissa 254.1
Kdef = 0
Uinst var in x = -0.02
Uinst var in y = -4.29
Uinst var = 4.29
Luce/Uinst,var < limite
485.3/4.29=113.1 < 300 Comb: SLE rara, 17 - NON SODDISFATTA

### Verifica della freccia finale EC5 §4.4.7 - EC5 2.2.3 (3)

Sezione ad ascissa 254.1
Kdef = 0.6
Ufin in x = -0.07
Ufin in y = -7.79
Ufin = 7.79
Luce/Ufin < limite
485.3/7.79=62.3 < 200 - NON SODDISFATTA
Coefficienti combinatori impiegati:
Pesi strutturali = 1,000 + 0,600 = 1,600
Permanenti portati = 1,000 + 0,600 = 1,600
Variabile A = 0,700 + 0,180 = 0,880
Neve = 0,500 + 0,500 = 1,000
Vento = 0,600 + 0,000 = 0,600

---

## Superelemento in legno a "Falda 1" 74-(-967; -97)

Verifiche condotte secondo D.M. 17-01-18 (N.T.C.)

### Dati generali

Superelemento di lunghezza complessiva L= 472.8 composto da:
asta 345: Trave in legno a falda Falda 1 fili 74-133 (L = 67.5)
asta 346: Trave in legno a falda Falda 1 fili 74-133 (L = 67.5)
asta 347: Trave in legno a falda Falda 1 fili 74-133 (L = 67.6)
asta 348: Trave in legno a falda Falda 1 fili 74-133 (L = 67.6)
asta 349: Trave in legno a falda Falda 1 fili 74-133 (L = 67.6)
asta 350: Trave in legno a falda Falda 1 fili 74-133 (L = 67.6)
asta 351: Trave in legno a falda Falda 1 fili 74-133 (L = 67.6)

### Caratteristiche della sezione

| Descrizione | Tipo | Base | Altezza | Area | Jx | Jy | Wx | Wy |
|---|---|---|---|---|---|---|---|---|
| R 18x23 | Rettangolare | 18 | 23 | 414 | 18250.5 | 11178 | 1587 | 1242 |

Materiale: C14 EN 338:2016
β,x = 0; β,y = 0
Rapporto luce/freccia elastica limite = 300
Rapporto luce/freccia elastica differita = 200
Mensola Y: Nessuno; Mensola X: Nessuno
Classe di servizio 1

### Verifica della freccia istantanea totale D.M. 17-01-18 §C4.4.7 Circolare 7 21-01-19

Sezione ad ascissa 155.3
Kdef = 0
Uinst tot in x = -0.2
Uinst tot in y = 0.12
Uinst tot = 0.2
Luce/Uinst,tot > limite
472.8/0.2=2324.7 > 300 Comb: SLE rara, 17

### Verifica della freccia istantanea variabile D.M. 17-01-18 §4.4.7

Sezione ad ascissa 153
Kdef = 0
Uinst var in x = -0.13
Uinst var in y = 0.09
Uinst var = 0.13
Luce/Uinst,var > limite
472.8/0.13=3595.8 > 300 Comb: SLE rara, 17

### Verifica della freccia finale EC5 §4.4.7 - EC5 2.2.3 (3)

Sezione ad ascissa 162.1
Kdef = 0.6
Ufin in x = -0.25
Ufin in y = 0.13
Ufin = 0.25
Luce/Ufin > limite
472.8/0.25=1873.9 > 200
Coefficienti combinatori impiegati:
Pesi strutturali = 1,000 + 0,600 = 1,600
Permanenti portati = 1,000 + 0,600 = 1,600
Variabile A = 0,700 + 0,180 = 0,880
Neve = 0,500 + 0,500 = 1,000
Vento = 0,600 + 0,000 = 0,600

---

## Superelemento in legno a "Falda 1" 89-91

Verifiche condotte secondo D.M. 17-01-18 (N.T.C.)

### Dati generali

Superelemento di lunghezza complessiva L= 667 composto da:
asta 202: Trave in legno a falda Falda 1 fili 89-90 (L = 41.6)
asta 203: Trave in legno a falda Falda 1 fili 89-90 (L = 41.6)
asta 204: Trave in legno a falda Falda 1 fili 89-90 (L = 41.6)
asta 205: Trave in legno a falda Falda 1 fili 89-90 (L = 41.6)
asta 206: Trave in legno a falda Falda 1 fili 89-90 (L = 278.2)
asta 402: Trave in legno a falda Falda 1 fili 90-91 (L = 222.6)

### Caratteristiche della sezione

| Descrizione | Tipo | Base | Altezza | Area | Jx | Jy | Wx | Wy |
|---|---|---|---|---|---|---|---|---|
| R 8x10 | Rettangolare | 8 | 10 | 80 | 666.67 | 426.67 | 133.33 | 106.67 |

Materiale: C14 EN 338:2016
β,x = 0; β,y = 0
Rapporto luce/freccia elastica limite = 300
Rapporto luce/freccia elastica differita = 200
Mensola Y: Nessuno; Mensola X: Nessuno
Classe di servizio 1

### Verifica della freccia istantanea totale D.M. 17-01-18 §C4.4.7 Circolare 7 21-01-19

Sezione ad ascissa 435.2
Kdef = 0
Uinst tot in x = 0.05
Uinst tot in y = -6.45

Uinst tot = 6.45
Luce/Uinst,tot < limite
667/6.45=103.5 < 300 Comb: SLE rara, 17 - NON SODDISFATTA

**Verifica della freccia istantanea variabile D.M. 17-01-18 §4.4.7**

Sezione ad ascissa 435.2
Kdef = 0
Uinst var in x = -0.05
Uinst var in y = -4.24
Uinst var = 4.24
Luce/Uinst,var < limite
667/4.24=157.3 < 300 Comb: SLE rara, 17 - NON SODDISFATTA

**Verifica della freccia finale EC5 §4.4.7 - EC5 2.2.3 (3)**

Sezione ad ascissa 440.8
Kdef = 0.6
Ufin in x = 0.09
Ufin in y = -7.77
Ufin = 7.77
Luce/Ufin < limite
667/7.77=85.8 < 200 - NON SODDISFATTA
Coefficienti combinatori impiegati:
Pesi strutturali = 1,000 + 0,600 = 1,600
Permanenti portati = 1,000 + 0,600 = 1,600
Variabile A = 0,700 + 0,180 = 0,880
Neve = 0,500 + 0,500 = 1,000
Vento = 0,600 + 0,000 = 0,600

---

## Superelemento in legno a "Falda 1" 133-(-896; -97)

Verifiche condotte secondo D.M. 17-01-18 (N.T.C.)

**Dati generali**

Superelemento di lunghezza complessiva L= 270.2 composto da:
asta 341: Trave in legno a falda Falda 1 fili 133-161 (L = 67.6)
asta 342: Trave in legno a falda Falda 1 fili 133-161 (L = 67.6)
asta 343: Trave in legno a falda Falda 1 fili 133-161 (L = 67.6)
asta 344: Trave in legno a falda Falda 1 fili 133-161 (L = 67.5)

**Caratteristiche della sezione**

| Descrizione | Tipo | Base | Altezza | Area | Jx | Jy | Wx | Wy |
|---|---|---|---|---|---|---|---|---|
| R 18x23 | Rettangolare | 18 | 23 | 414 | 18250.5 | 11178 | 1587 | 1242 |

Materiale: C14 EN 338:2016
β,x = 0; β,y = 0
Rapporto luce/freccia elastica limite = 300
Rapporto luce/freccia elastica differita = 200
Mensola Y: Nessuno; Mensola X: Nessuno
Classe di servizio 1

**Verifica della freccia istantanea totale D.M. 17-01-18 §C4.4.7 Circolare 7 21-01-19**

Sezione ad ascissa 141.9
Kdef = 0
Uinst tot in x = -0.03
Uinst tot in y = -0.14
Uinst tot = 0.14
Luce/Uinst,tot > limite
270.2/0.14=1931.9 > 300 Comb: SLE rara, 8

**Verifica della freccia istantanea variabile D.M. 17-01-18 §4.4.7**

Sezione ad ascissa 141.9
Kdef = 0
Uinst var in x = -0.02
Uinst var in y = -0.09
Uinst var = 0.09
Luce/Uinst,var > limite
270.2/0.09=3006.9 > 300 Comb: SLE rara, 8

**Verifica della freccia finale EC5 §4.4.7 - EC5 2.2.3 (3)**

Sezione ad ascissa 144.1
Kdef = 0.6
Ufin in x = -0.04
Ufin in y = -0.18

Ufin = 0.18
Luce/Ufin > limite
270.2/0.18=1540.8 > 200
Coefficienti combinatori impiegati:
Pesi strutturali = 1,000 + 0,600 = 1,600
Permanenti portati = 1,000 + 0,600 = 1,600
Neve = 0,500 + 0,500 = 1,000

## Superelemento in legno a "Falda 1" 161-(-225; -97)

Verifiche condotte secondo D.M. 17-01-18 (N.T.C.)

### Dati generali

Superelemento di lunghezza complessiva L= 472.9 composto da:
asta 334: Trave in legno a falda Falda 1 fili 161-217 (L = 67.6)
asta 335: Trave in legno a falda Falda 1 fili 161-217 (L = 67.6)
asta 336: Trave in legno a falda Falda 1 fili 161-217 (L = 67.6)
asta 337: Trave in legno a falda Falda 1 fili 161-217 (L = 67.6)
asta 338: Trave in legno a falda Falda 1 fili 161-217 (L = 67.6)
asta 339: Trave in legno a falda Falda 1 fili 161-217 (L = 67.6)
asta 340: Trave in legno a falda Falda 1 fili 161-217 (L = 67.6)

### Caratteristiche della sezione

| Descrizione | Tipo | Base | Altezza | Area | Jx | Jy | Wx | Wy |
|---|---|---|---|---|---|---|---|---|
| R 18x23 | Rettangolare | 18 | 23 | 414 | 18250.5 | 11178 | 1587 | 1242 |

Materiale: C14 EN 338:2016
β,x = 0; β,y = 0
Rapporto luce/freccia elastica limite = 300
Rapporto luce/freccia elastica differita = 200
Mensola Y: Nessuno; Mensola X: Nessuno
Classe di servizio 1

### Verifica della freccia istantanea totale D.M. 17-01-18 §C4.4.7 Circolare 7 21-01-19

Sezione ad ascissa 310.8
Kdef = 0
Uinst tot in x = -0.13
Uinst tot in y = 0.03
Uinst tot = 0.13
Luce/Uinst,tot > limite
472.9/0.13=3673.1 > 300 Comb: SLE rara, 17

### Verifica della freccia istantanea variabile D.M. 17-01-18 §4.4.7

Sezione ad ascissa 306.3
Kdef = 0
Uinst var in x = -0.09
Uinst var in y = 0.03
Uinst var = 0.09
Luce/Uinst,var > limite
472.9/0.09=5119.7 > 300 Comb: SLE rara, 17

### Verifica della freccia finale EC5 §4.4.7 - EC5 2.2.3 (3)

Sezione ad ascissa 322
Kdef = 0.6
Ufin in x = -0.16
Ufin in y = -0.06
Ufin = 0.16
Luce/Ufin > limite
472.9/0.16=2914 > 200
Coefficienti combinatori impiegati:
Pesi strutturali = 1,000 + 0,600 = 1,600
Permanenti portati = 1,000 + 0,600 = 1,600
Variabile A = 0,700 + 0,180 = 0,880
Neve = 0,500 + 0,500 = 1,000
Vento = 0,600 + 0,000 = 0,600

## Superelemento in legno a "Falda 1" 201-203

Verifiche condotte secondo D.M. 17-01-18 (N.T.C.)

### Dati generali

Superelemento di lunghezza complessiva L= 666.9 composto da:

asta 171: Trave in legno a falda Falda 1 fili 201-202 (L = 41.5)
asta 172: Trave in legno a falda Falda 1 fili 201-202 (L = 41.6)
asta 173: Trave in legno a falda Falda 1 fili 201-202 (L = 41.6)
asta 174: Trave in legno a falda Falda 1 fili 201-202 (L = 41.6)
asta 175: Trave in legno a falda Falda 1 fili 201-202 (L = 278.2)
asta 389: Trave in legno a falda Falda 1 fili 202-203 (L = 222.6)

**Caratteristiche della sezione**

| Descrizione | Tipo | Base | Altezza | Area | Jx | Jy | Wx | Wy |
|---|---|---|---|---|---|---|---|---|
| R 8x10 | Rettangolare | 8 | 10 | 80 | 666.67 | 426.67 | 133.33 | 106.67 |

Materiale: C14 EN 338:2016
β,x = 0; β,y = 0
Rapporto luce/freccia elastica limite = 300
Rapporto luce/freccia elastica differita = 200
Mensola Y: Nessuno; Mensola X: Nessuno
Classe di servizio 1

**Verifica della freccia istantanea totale D.M. 17-01-18 §C4.4.7 Circolare 7 21-01-19**

Sezione ad ascissa 435
Kdef = 0
Uinst tot in x = -0.05
Uinst tot in y = -5.03
Uinst tot = 5.03
Luce/Uinst,tot < limite
666.9/5.03=132.5 < 300 Comb: SLE rara, 17 - NON SODDISFATTA

**Verifica della freccia istantanea variabile D.M. 17-01-18 §4.4.7**

Sezione ad ascissa 435
Kdef = 0
Uinst var in x = -0.04
Uinst var in y = -3.27
Uinst var = 3.27
Luce/Uinst,var < limite
666.9/3.27=203.7 < 300 Comb: SLE rara, 17 - NON SODDISFATTA

**Verifica della freccia finale EC5 §4.4.7 - EC5 2.2.3 (3)**

Sezione ad ascissa 440.7
Kdef = 0.6
Ufin in x = -0.05
Ufin in y = -6.09
Ufin = 6.09
Luce/Ufin < limite
666.9/6.09=109.5 < 200 - NON SODDISFATTA
Coefficienti combinatori impiegati:
Pesi strutturali = 1,000 + 0,600 = 1,600
Permanenti portati = 1,000 + 0,600 = 1,600
Variabile A = 0,700 + 0,180 = 0,880
Neve = 0,500 + 0,500 = 1,000
Vento = 0,600 + 0,000 = 0,600

---

## Superelemento in legno a "Falda 1" 217-(85; -97)

Verifiche condotte secondo D.M. 17-01-18 (N.T.C.)

**Dati generali**

Superelemento di lunghezza complessiva L= 377.9 composto da:
asta 328: Trave in legno a falda Falda 1 fili 217-260 (L = 67.6)
asta 329: Trave in legno a falda Falda 1 fili 217-260 (L = 67.6)
asta 330: Trave in legno a falda Falda 1 fili 217-260 (L = 67.6)
asta 331: Trave in legno a falda Falda 1 fili 217-260 (L = 67.6)
asta 332: Trave in legno a falda Falda 1 fili 217-260 (L = 67.6)
asta 333: Trave in legno a falda Falda 1 fili 217-260 (L = 40.1)

**Caratteristiche della sezione**

| Descrizione | Tipo | Base | Altezza | Area | Jx | Jy | Wx | Wy |
|---|---|---|---|---|---|---|---|---|
| R 18x23 | Rettangolare | 18 | 23 | 414 | 18250.5 | 11178 | 1587 | 1242 |

Materiale: C14 EN 338:2016
β,x = 0; β,y = 0
Rapporto luce/freccia elastica limite = 300
Rapporto luce/freccia elastica differita = 200
Mensola Y: Nessuno; Mensola X: Nessuno
Classe di servizio 1

**Verifica della freccia istantanea totale D.M. 17-01-18 §C4.4.7 Circolare 7 21-01-19**

Sezione ad ascissa 164.4
Kdef = 0
Uinst tot in x = -0.18
Uinst tot in y = -0.29
Uinst tot = 0.29
Luce/Uinst,tot > limite
377.9/0.29=1321.2 > 300 Comb: SLE rara, 17

**Verifica della freccia istantanea variabile D.M. 17-01-18 §4.4.7**

Sezione ad ascissa 164.4
Kdef = 0
Uinst var in x = -0.13
Uinst var in y = -0.19
Uinst var = 0.19
Luce/Uinst,var > limite
377.9/0.19=1942 > 300 Comb: SLE rara, 17

**Verifica della freccia finale EC5 §4.4.7 - EC5 2.2.3 (3)**

Sezione ad ascissa 168.9
Kdef = 0.6
Ufin in x = -0.23
Ufin in y = -0.38
Ufin = 0.38
Luce/Ufin > limite
377.9/0.38=1005.8 > 200
Coefficienti combinatori impiegati:
Pesi strutturali = 1,000 + 0,600 = 1,600
Permanenti portati = 1,000 + 0,600 = 1,600
Variabile A = 0,700 + 0,180 = 0,880
Neve = 0,500 + 0,500 = 1,000
Vento = 0,600 + 0,000 = 0,600

---

## Superelemento in legno a "Falda 1" 223-218

Verifiche condotte secondo D.M. 17-01-18 (N.T.C.)

**Dati generali**

Superelemento di lunghezza complessiva L= 485.3 composto da:
asta 177: Trave in legno a falda Falda 1 fili 216-217 (L = 262.7)
asta 391: Trave in legno a falda Falda 1 fili 217-218 (L = 222.5)

**Caratteristiche della sezione**

| Descrizione | Tipo | Base | Altezza | Area | Jx | Jy | Wx | Wy |
|---|---|---|---|---|---|---|---|---|
| R 8x10 | Rettangolare | 8 | 10 | 80 | 666.67 | 426.67 | 133.33 | 106.67 |

Materiale: C14 EN 338:2016
β,x = 0; β,y = 0
Rapporto luce/freccia elastica limite = 300
Rapporto luce/freccia elastica differita = 200
Mensola Y: Nessuno; Mensola X: Nessuno
Classe di servizio 1

**Verifica della freccia istantanea totale D.M. 17-01-18 §C4.4.7 Circolare 7 21-01-19**

Sezione ad ascissa 254
Kdef = 0
Uinst tot in x = -0.05
Uinst tot in y = -4.65
Uinst tot = 4.65
Luce/Uinst,tot < limite
485.3/4.65=104.3 < 300 Comb: SLE rara, 17 - NON SODDISFATTA

**Verifica della freccia istantanea variabile D.M. 17-01-18 §4.4.7**

Sezione ad ascissa 254
Kdef = 0
Uinst var in x = -0.04
Uinst var in y = -3.04
Uinst var = 3.04
Luce/Uinst,var < limite
485.3/3.04=159.8 < 300 Comb: SLE rara, 17 - NON SODDISFATTA

**Verifica della freccia finale EC5 §4.4.7 - EC5 2.2.3 (3)**

Sezione ad ascissa 254
Kdef = 0.6
Ufin in x = -0.06
Ufin in y = -5.62
Ufin = 5.62
Luce/Ufin < limite
485.3/5.62=86.3 < 200 - NON SODDISFATTA
Coefficienti combinatori impiegati:
Pesi strutturali = 1,000 + 0,600 = 1,600
Permanenti portati = 1,000 + 0,600 = 1,600
Variabile A = 0,700 + 0,180 = 0,880
Neve = 0,500 + 0,500 = 1,000
Vento = 0,600 + 0,000 = 0,600

---

## Superelemento in legno a "Falda 1" (-88; -322)-(-88; -243)

Verifiche condotte secondo D.M. 17-01-18 (N.T.C.)

**Dati generali**

Superelemento di lunghezza complessiva L= 87 composto da:
Asta 185: Trave in legno a falda Falda 1 fili 270-271

**Caratteristiche della sezione**

| Descrizione | Tipo | Base | Altezza | Area | Jx | Jy | Wx | Wy |
|---|---|---|---|---|---|---|---|---|
| R 8x10 | Rettangolare | 8 | 10 | 80 | 666.67 | 426.67 | 133.33 | 106.67 |

Materiale: C14 EN 338:2016
β,x = 0; β,y = 0
Rapporto luce/freccia elastica limite = 300
Rapporto luce/freccia elastica differita = 200
Mensola Y: Nessuno; Mensola X: Nessuno
Classe di servizio 1

**Verifica della freccia istantanea totale D.M. 17-01-18 §C4.4.7 Circolare 7 21-01-19**

Sezione ad ascissa 55.1
Kdef = 0
Uinst tot in x = 0
Uinst tot in y = -0.05
Uinst tot = 0.05
Luce/Uinst,tot > limite
87/0.05=1674.3 > 300 Comb: SLE rara, 17

**Verifica della freccia istantanea variabile D.M. 17-01-18 §4.4.7**

Sezione ad ascissa 55.1
Kdef = 0
Uinst var in x = 0
Uinst var in y = -0.04
Uinst var = 0.04
Luce/Uinst,var > limite
87/0.04=2467.1 > 300 Comb: SLE rara, 17

**Verifica della freccia finale EC5 §4.4.7 - EC5 2.2.3 (3)**

Sezione ad ascissa 58
Kdef = 0.6
Ufin in x = 0.01
Ufin in y = -0.06
Ufin = 0.06
Luce/Ufin > limite
87/0.06=1402.9 > 200
Coefficienti combinatori impiegati:
Pesi strutturali = 1,000 + 0,600 = 1,600
Permanenti portati = 1,000 + 0,600 = 1,600
Variabile A = 0,700 + 0,180 = 0,880
Neve = 0,500 + 0,500 = 1,000
Vento = 0,600 + 0,000 = 0,600

---

## Superelemento in legno a "Falda 1" (-156; -322)-(-156; -178)

Verifiche condotte secondo D.M. 17-01-18 (N.T.C.)

### Dati generali

Superelemento di lunghezza complessiva L= 158.9 composto da:
Asta 184: Trave in legno a falda Falda 1 fili 266-267

### Caratteristiche della sezione

| Descrizione | Tipo | Base | Altezza | Area | Jx | Jy | Wx | Wy |
|---|---|---|---|---|---|---|---|---|
| R 8x10 | Rettangolare | 8 | 10 | 80 | 666.67 | 426.67 | 133.33 | 106.67 |

Materiale: C14 EN 338:2016
β,x = 0; β,y = 0
Rapporto luce/freccia elastica limite = 300
Rapporto luce/freccia elastica differita = 200
Mensola Y: Nessuno; Mensola X: Nessuno
Classe di servizio 1

### Verifica della freccia istantanea totale D.M. 17-01-18 §C4.4.7 Circolare 7 21-01-19

Sezione ad ascissa 100.6
Kdef = 0
Uinst tot in x = 0.01
Uinst tot in y = -0.19
Uinst tot = 0.19
Luce/Uinst,tot > limite
158.9/0.19=820 > 300 Comb: SLE rara, 17

### Verifica della freccia istantanea variabile D.M. 17-01-18 §4.4.7

Sezione ad ascissa 95.3
Kdef = 0
Uinst var in x = 0.01
Uinst var in y = -0.13
Uinst var = 0.13
Luce/Uinst,var > limite
158.9/0.13=1194.3 > 300 Comb: SLE rara, 17

### Verifica della freccia finale EC5 §4.4.7 - EC5 2.2.3 (3)

Sezione ad ascissa 100.6
Kdef = 0.6
Ufin in x = 0.02
Ufin in y = -0.23
Ufin = 0.23
Luce/Ufin > limite
158.9/0.23=689 > 200
Coefficienti combinatori impiegati:
Pesi strutturali = 1,000 + 0,600 = 1,600
Permanenti portati = 1,000 + 0,600 = 1,600
Variabile A = 0,700 + 0,180 = 0,880
Neve = 0,500 + 0,500 = 1,000
Vento = 0,600 + 0,000 = 0,600

---

## Superelemento in legno a "Falda 1" (-223; -322)-(-223; -112)

Verifiche condotte secondo D.M. 17-01-18 (N.T.C.)

### Dati generali

Superelemento di lunghezza complessiva L= 230.8 composto da:
Asta 183: Trave in legno a falda Falda 1 fili 261-262

### Caratteristiche della sezione

| Descrizione | Tipo | Base | Altezza | Area | Jx | Jy | Wx | Wy |
|---|---|---|---|---|---|---|---|---|
| R 8x10 | Rettangolare | 8 | 10 | 80 | 666.67 | 426.67 | 133.33 | 106.67 |

Materiale: C14 EN 338:2016
β,x = 0; β,y = 0
Rapporto luce/freccia elastica limite = 300
Rapporto luce/freccia elastica differita = 200
Mensola Y: Nessuno; Mensola X: Nessuno
Classe di servizio 1

### Verifica della freccia istantanea totale D.M. 17-01-18 §C4.4.7 Circolare 7 21-01-19

Sezione ad ascissa 138.5
Kdef = 0
Uinst tot in x = 0.03
Uinst tot in y = -0.53
Uinst tot = 0.53

Luce/Uinst,tot > limite
230.8/0.53=432.1 > 300 Comb: SLE rara, 17

**Verifica della freccia istantanea variabile D.M. 17-01-18 §4.4.7**

Sezione ad ascissa 130.8
Kdef = 0
Uinst var in x = 0.02
Uinst var in y = -0.36
Uinst var = 0.36
Luce/Uinst,var > limite
230.8/0.36=634.1 > 300 Comb: SLE rara, 17

**Verifica della freccia finale EC5 §4.4.7 - EC5 2.2.3 (3)**

Sezione ad ascissa 138.5
Kdef = 0.6
Ufin in x = 0.03
Ufin in y = -0.64
Ufin = 0.64
Luce/Ufin > limite
230.8/0.64=362.3 > 200
Coefficienti combinatori impiegati:
Pesi strutturali = 1,000 + 0,600 = 1,600
Permanenti portati = 1,000 + 0,600 = 1,600
Variabile A = 0,700 + 0,180 = 0,880
Neve = 0,500 + 0,500 = 1,000
Vento = 0,600 + 0,000 = 0,600

---

## Superelemento in legno a "Falda 1" (-291; -322)-256

Verifiche condotte secondo D.M. 17-01-18 (N.T.C.)

**Dati generali**

Superelemento di lunghezza complessiva L= 302.8 composto da:
asta 182: Trave in legno a falda Falda 1 fili 254-255 (L = 262.7)
asta 396: Trave in legno a falda Falda 1 fili 255-256 (L = 40)

**Caratteristiche della sezione**

| Descrizione | Tipo | Base | Altezza | Area | Jx | Jy | Wx | Wy |
|---|---|---|---|---|---|---|---|---|
| R 8x10 | Rettangolare | 8 | 10 | 80 | 666.67 | 426.67 | 133.33 | 106.67 |

Materiale: C14 EN 338:2016
β,x = 0; β,y = 0
Rapporto luce/freccia elastica limite = 300
Rapporto luce/freccia elastica differita = 200
Mensola Y: Nessuno; Mensola X: Nessuno
Classe di servizio 1

**Verifica della freccia istantanea totale D.M. 17-01-18 §C4.4.7 Circolare 7 21-01-19**

Sezione ad ascissa 175.2
Kdef = 0
Uinst tot in x = 0.05
Uinst tot in y = -1.28
Uinst tot = 1.28
Luce/Uinst,tot < limite
302.8/1.28=236.1 < 300 Comb: SLE rara, 17 - NON SODDISFATTA

**Verifica della freccia istantanea variabile D.M. 17-01-18 §4.4.7**

Sezione ad ascissa 175.2
Kdef = 0
Uinst var in x = 0.03
Uinst var in y = -0.86
Uinst var = 0.86
Luce/Uinst,var > limite
302.8/0.86=353.9 > 300 Comb: SLE rara, 17

**Verifica della freccia finale EC5 §4.4.7 - EC5 2.2.3 (3)**

Sezione ad ascissa 175.2
Kdef = 0.6
Ufin in x = 0.07
Ufin in y = -1.54
Ufin = 1.54
Luce/Ufin < limite
302.8/1.54=196.7 < 200 - NON SODDISFATTA

Coefficienti combinatori impiegati:
Pesi strutturali = 1,000 + 0,600 = 1,600
Permanenti portati = 1,000 + 0,600 = 1,600
Variabile A = 0,700 + 0,180 = 0,880
Neve = 0,500 + 0,500 = 1,000
Vento = 0,600 + 0,000 = 0,600

## Superelemento in legno a "Falda 1" (-359; -322)-250

Verifiche condotte secondo D.M. 17-01-18 (N.T.C.)

### Dati generali

Superelemento di lunghezza complessiva L= 365.1 composto da:
asta 181: Trave in legno a falda Falda 1 fili 248-249 (L = 262.7)
asta 395: Trave in legno a falda Falda 1 fili 249-250 (L = 102.4)

### Caratteristiche della sezione

| Descrizione | Tipo | Base | Altezza | Area | Jx | Jy | Wx | Wy |
|---|---|---|---|---|---|---|---|---|
| R 8x10 | Rettangolare | 8 | 10 | 80 | 666.67 | 426.67 | 133.33 | 106.67 |

Materiale: C14 EN 338:2016
β,x = 0; β,y = 0
Rapporto luce/freccia elastica limite = 300
Rapporto luce/freccia elastica differita = 200
Mensola Y: Nessuno; Mensola X: Nessuno
Classe di servizio 1

### Verifica della freccia istantanea totale D.M. 17-01-18 §C4.4.7 Circolare 7 21-01-19

Sezione ad ascissa 201.4
Kdef = 0
Uinst tot in x = 0.12
Uinst tot in y = -2.3
Uinst tot = 2.3
Luce/Uinst,tot < limite
365.1/2.3=158.7 < 300 Comb: SLE rara, 17 - NON SODDISFATTA

### Verifica della freccia istantanea variabile D.M. 17-01-18 §4.4.7

Sezione ad ascissa 201.4
Kdef = 0
Uinst var in x = 0.07
Uinst var in y = -1.52
Uinst var = 1.52
Luce/Uinst,var < limite
365.1/1.52=240.6 < 300 Comb: SLE rara, 17 - NON SODDISFATTA

### Verifica della freccia finale EC5 §4.4.7 - EC5 2.2.3 (3)

Sezione ad ascissa 201.4
Kdef = 0.6
Ufin in x = 0.15
Ufin in y = -2.77
Ufin = 2.77
Luce/Ufin < limite
365.1/2.77=131.8 < 200 - NON SODDISFATTA
Coefficienti combinatori impiegati:
Pesi strutturali = 1,000 + 0,600 = 1,600
Permanenti portati = 1,000 + 0,600 = 1,600
Variabile A = 0,700 + 0,180 = 0,880
Neve = 0,500 + 0,500 = 1,000
Vento = 0,600 + 0,000 = 0,600

## Superelemento in legno a "Falda 1" (-426; -322)-244

Verifiche condotte secondo D.M. 17-01-18 (N.T.C.)

### Dati generali

Superelemento di lunghezza complessiva L= 435 composto da:
asta 180: Trave in legno a falda Falda 1 fili 242-243 (L = 262.7)
asta 394: Trave in legno a falda Falda 1 fili 243-244 (L = 172.3)

### Caratteristiche della sezione

| Descrizione | Tipo | Base | Altezza | Area | Jx | Jy | Wx | Wy |
|---|---|---|---|---|---|---|---|---|
| R 8x10 | Rettangolare | 8 | 10 | 80 | 666.67 | 426.67 | 133.33 | 106.67 |

Materiale: C14 EN 338:2016
β,x = 0; β,y = 0
Rapporto luce/freccia elastica limite = 300
Rapporto luce/freccia elastica differita = 200
Mensola Y: Nessuno; Mensola X: Nessuno
Classe di servizio 1

**Verifica della freccia istantanea totale D.M. 17-01-18 §C4.4.7 Circolare 7 21-01-19**

Sezione ad ascissa 227.7
Kdef = 0
Uinst tot in x = 0.07
Uinst tot in y = -3.4
Uinst tot = 3.4
Luce/Uinst,tot < limite
435/3.4=128.1 < 300 Comb: SLE rara, 17 - NON SODDISFATTA

**Verifica della freccia istantanea variabile D.M. 17-01-18 §4.4.7**

Sezione ad ascissa 227.7
Kdef = 0
Uinst var in x = -0.04
Uinst var in y = -2.23
Uinst var = 2.23
Luce/Uinst,var < limite
435/2.23=195.5 < 300 Comb: SLE rara, 17 - NON SODDISFATTA

**Verifica della freccia finale EC5 §4.4.7 - EC5 2.2.3 (3)**

Sezione ad ascissa 227.7
Kdef = 0.6
Ufin in x = 0.09
Ufin in y = -4.1
Ufin = 4.1
Luce/Ufin < limite
435/4.1=106.1 < 200 - NON SODDISFATTA
Coefficienti combinatori impiegati:
Pesi strutturali = 1,000 + 0,600 = 1,600
Permanenti portati = 1,000 + 0,600 = 1,600
Variabile A = 0,700 + 0,180 = 0,880
Neve = 0,500 + 0,500 = 1,000
Vento = 0,600 + 0,000 = 0,600

---

## Superelemento in legno a "Falda 1" (-494; -322)-238

Verifiche condotte secondo D.M. 17-01-18 (N.T.C.)

**Dati generali**

Superelemento di lunghezza complessiva L= 485.3 composto da:
asta 179: Trave in legno a falda Falda 1 fili 236-237 (L = 262.7)
asta 393: Trave in legno a falda Falda 1 fili 237-238 (L = 222.5)

**Caratteristiche della sezione**

| Descrizione | Tipo | Base | Altezza | Area | Jx | Jy | Wx | Wy |
|---|---|---|---|---|---|---|---|---|
| R 8x10 | Rettangolare | 8 | 10 | 80 | 666.67 | 426.67 | 133.33 | 106.67 |

Materiale: C14 EN 338:2016
β,x = 0; β,y = 0
Rapporto luce/freccia elastica limite = 300
Rapporto luce/freccia elastica differita = 200
Mensola Y: Nessuno; Mensola X: Nessuno
Classe di servizio 1

**Verifica della freccia istantanea totale D.M. 17-01-18 §C4.4.7 Circolare 7 21-01-19**

Sezione ad ascissa 236.5
Kdef = 0
Uinst tot in x = -0.08
Uinst tot in y = -4.07
Uinst tot = 4.07
Luce/Uinst,tot < limite
485.3/4.07=119.4 < 300 Comb: SLE rara, 17 - NON SODDISFATTA

**Verifica della freccia istantanea variabile D.M. 17-01-18 §4.4.7**

Sezione ad ascissa 236.5
Kdef = 0
Uinst var in x = -0.05

Uinst var in y = -2.66
Uinst var = 2.66
Luce/Uinst,var < limite
485.3/2.66=182.6 < 300 Comb: SLE rara, 17 - NON SODDISFATTA

**Verifica della freccia finale EC5 §4.4.7 - EC5 2.2.3 (3)**

Sezione ad ascissa 236.5
Kdef = 0.6
Ufin in x = -0.09
Ufin in y = -4.91
Ufin = 4.91
Luce/Ufin < limite
485.3/4.91=98.8 < 200 - NON SODDISFATTA
Coefficienti combinatori impiegati:
Pesi strutturali = 1,000 + 0,600 = 1,600
Permanenti portati = 1,000 + 0,600 = 1,600
Variabile A = 0,700 + 0,180 = 0,880
Neve = 0,500 + 0,500 = 1,000
Vento = 0,600 + 0,000 = 0,600

---

## Superelemento in legno a "Falda 1" (-561; -322)-227

Verifiche condotte secondo D.M. 17-01-18 (N.T.C.)

**Dati generali**

Superelemento di lunghezza complessiva L= 485.3 composto da:
asta 178: Trave in legno a falda Falda 1 fili 225-226 (L = 262.7)
asta 392: Trave in legno a falda Falda 1 fili 226-227 (L = 222.5)

**Caratteristiche della sezione**

| Descrizione | Tipo | Base | Altezza | Area | Jx | Jy | Wx | Wy |
|---|---|---|---|---|---|---|---|---|
| R 8x10 | Rettangolare | 8 | 10 | 80 | 666.67 | 426.67 | 133.33 | 106.67 |

Materiale: C14 EN 338:2016
β,x = 0; β,y = 0
Rapporto luce/freccia elastica limite = 300
Rapporto luce/freccia elastica differita = 200
Mensola Y: Nessuno; Mensola X: Nessuno
Classe di servizio 1

**Verifica della freccia istantanea totale D.M. 17-01-18 §C4.4.7 Circolare 7 21-01-19**

Sezione ad ascissa 245.2
Kdef = 0
Uinst tot in x = -0.05
Uinst tot in y = -4.39
Uinst tot = 4.39
Luce/Uinst,tot < limite
485.3/4.39=110.4 < 300 Comb: SLE rara, 17 - NON SODDISFATTA

**Verifica della freccia istantanea variabile D.M. 17-01-18 §4.4.7**

Sezione ad ascissa 245.2
Kdef = 0
Uinst var in x = -0.04
Uinst var in y = -2.87
Uinst var = 2.87
Luce/Uinst,var < limite
485.3/2.87=169 < 300 Comb: SLE rara, 17 - NON SODDISFATTA

**Verifica della freccia finale EC5 §4.4.7 - EC5 2.2.3 (3)**

Sezione ad ascissa 245.2
Kdef = 0.6
Ufin in x = -0.06
Ufin in y = -5.31
Ufin = 5.31
Luce/Ufin < limite
485.3/5.31=91.4 < 200 - NON SODDISFATTA
Coefficienti combinatori impiegati:
Pesi strutturali = 1,000 + 0,600 = 1,600
Permanenti portati = 1,000 + 0,600 = 1,600
Variabile A = 0,700 + 0,180 = 0,880
Neve = 0,500 + 0,500 = 1,000
Vento = 0,600 + 0,000 = 0,600

## Superelemento in legno a "Falda 1" (-696; -322)-212

Verifiche condotte secondo D.M. 17-01-18 (N.T.C.)

### Dati generali

Superelemento di lunghezza complessiva L= 485.4 composto da:
asta 176: Trave in legno a falda Falda 1 fili 210-211 (L = 262.7)
asta 390: Trave in legno a falda Falda 1 fili 211-212 (L = 222.7)

### Caratteristiche della sezione

| Descrizione | Tipo | Base | Altezza | Area | Jx | Jy | Wx | Wy |
|---|---|---|---|---|---|---|---|---|
| R 8x10 | Rettangolare | 8 | 10 | 80 | 666.67 | 426.67 | 133.33 | 106.67 |

Materiale: C14 EN 338:2016
β,x = 0; β,y = 0
Rapporto luce/freccia elastica limite = 300
Rapporto luce/freccia elastica differita = 200
Mensola Y: Nessuno; Mensola X: Nessuno
Classe di servizio 1

### Verifica della freccia istantanea totale D.M. 17-01-18 §C4.4.7 Circolare 7 21-01-19

Sezione ad ascissa 245.2
Kdef = 0
Uinst tot in x = -0.06
Uinst tot in y = -4.85
Uinst tot = 4.85
Luce/Uinst,tot < limite
485.4/4.85=100.1 < 300 Comb: SLE rara, 17 - NON SODDISFATTA

### Verifica della freccia istantanea variabile D.M. 17-01-18 §4.4.7

Sezione ad ascissa 254
Kdef = 0
Uinst var in x = -0.05
Uinst var in y = -3.16
Uinst var = 3.16
Luce/Uinst,var < limite
485.4/3.16=153.6 < 300 Comb: SLE rara, 17 - NON SODDISFATTA

### Verifica della freccia finale EC5 §4.4.7 - EC5 2.2.3 (3)

Sezione ad ascissa 245.2
Kdef = 0.6
Ufin in x = -0.07
Ufin in y = -5.86
Ufin = 5.86
Luce/Ufin < limite
485.4/5.86=82.8 < 200 - NON SODDISFATTA
Coefficienti combinatori impiegati:
Pesi strutturali = 1,000 + 0,600 = 1,600
Permanenti portati = 1,000 + 0,600 = 1,600
Variabile A = 0,700 + 0,180 = 0,880
Neve = 0,500 + 0,500 = 1,000
Vento = 0,600 + 0,000 = 0,600

## Superelemento in legno a "Falda 1" (-832; -471)-193

Verifiche condotte secondo D.M. 17-01-18 (N.T.C.)

### Dati generali

Superelemento di lunghezza complessiva L= 650.5 composto da:
asta 169: Trave in legno a falda Falda 1 fili 191-192 (L = 165.2)
asta 170: Trave in legno a falda Falda 1 fili 191-192 (L = 262.7)
asta 388: Trave in legno a falda Falda 1 fili 192-193 (L = 222.6)

### Caratteristiche della sezione

| Descrizione | Tipo | Base | Altezza | Area | Jx | Jy | Wx | Wy |
|---|---|---|---|---|---|---|---|---|
| R 8x10 | Rettangolare | 8 | 10 | 80 | 666.67 | 426.67 | 133.33 | 106.67 |

Materiale: C14 EN 338:2016
β,x = 0; β,y = 0
Rapporto luce/freccia elastica limite = 300
Rapporto luce/freccia elastica differita = 200
Mensola Y: Nessuno; Mensola X: Nessuno

Classe di servizio 1

**Verifica della freccia istantanea totale D.M. 17-01-18 §C4.4.7 Circolare 7 21-01-19**

Sezione ad ascissa 419.2
Kdef = 0
Uinst tot in x = -0.05
Uinst tot in y = -5.21
Uinst tot = 5.21
Luce/Uinst,tot < limite
650.5/5.21=124.9 < 300 Comb: SLE rara, 17 - NON SODDISFATTA

**Verifica della freccia istantanea variabile D.M. 17-01-18 §4.4.7**

Sezione ad ascissa 419.2
Kdef = 0
Uinst var in x = -0.04
Uinst var in y = -3.39
Uinst var = 3.39
Luce/Uinst,var < limite
650.5/3.39=192.1 < 300 Comb: SLE rara, 17 - NON SODDISFATTA

**Verifica della freccia finale EC5 §4.4.7 - EC5 2.2.3 (3)**

Sezione ad ascissa 424.7
Kdef = 0.6
Ufin in x = -0.05
Ufin in y = -6.31
Ufin = 6.31
Luce/Ufin < limite
650.5/6.31=103.2 < 200 - NON SODDISFATTA
Coefficienti combinatori impiegati:
Pesi strutturali = 1,000 + 0,600 = 1,600
Permanenti portati = 1,000 + 0,600 = 1,600
Variabile A = 0,700 + 0,180 = 0,880
Neve = 0,500 + 0,500 = 1,000
Vento = 0,600 + 0,000 = 0,600

---

## Superelemento in legno a "Falda 1" (-899; -471)-186

Verifiche condotte secondo D.M. 17-01-18 (N.T.C.)

**Dati generali**

Superelemento di lunghezza complessiva L= 650.5 composto da:
asta 167: Trave in legno a falda Falda 1 fili 184-185 (L = 165.2)
asta 168: Trave in legno a falda Falda 1 fili 184-185 (L = 262.7)
asta 387: Trave in legno a falda Falda 1 fili 185-186 (L = 222.6)

**Caratteristiche della sezione**

| Descrizione | Tipo | Base | Altezza | Area | Jx | Jy | Wx | Wy |
|---|---|---|---|---|---|---|---|---|
| R 8x10 | Rettangolare | 8 | 10 | 80 | 666.67 | 426.67 | 133.33 | 106.67 |

Materiale: C14 EN 338:2016
β,x = 0; β,y = 0
Rapporto luce/freccia elastica limite = 300
Rapporto luce/freccia elastica differita = 200
Mensola Y: Nessuno; Mensola X: Nessuno
Classe di servizio 1

**Verifica della freccia istantanea totale D.M. 17-01-18 §C4.4.7 Circolare 7 21-01-19**

Sezione ad ascissa 419.2
Kdef = 0
Uinst tot in x = -0.06
Uinst tot in y = -5.4
Uinst tot = 5.4
Luce/Uinst,tot < limite
650.5/5.4=120.4 < 300 Comb: SLE rara, 17 - NON SODDISFATTA

**Verifica della freccia istantanea variabile D.M. 17-01-18 §4.4.7**

Sezione ad ascissa 419.2
Kdef = 0
Uinst var in x = -0.05
Uinst var in y = -3.51
Uinst var = 3.51
Luce/Uinst,var < limite
650.5/3.51=185.3 < 300 Comb: SLE rara, 17 - NON SODDISFATTA

**Verifica della freccia finale EC5 §4.4.7 - EC5 2.2.3 (3)**

Sezione ad ascissa 424.7
Kdef = 0.6
Ufin in x = -0.06
Ufin in y = -6.54
Ufin = 6.54
Luce/Ufin < limite
650.5/6.54=99.4 < 200 - NON SODDISFATTA
Coefficienti combinatori impiegati:
Pesi strutturali = 1,000 + 0,600 = 1,600
Permanenti portati = 1,000 + 0,600 = 1,600
Variabile A = 0,700 + 0,180 = 0,880
Neve = 0,500 + 0,500 = 1,000
Vento = 0,600 + 0,000 = 0,600

---

## Superelemento in legno a "Falda 1" (-967; -471)-180

Verifiche condotte secondo D.M. 17-01-18 (N.T.C.)

**Dati generali**

Superelemento di lunghezza complessiva L= 650.5 composto da:
asta 165: Trave in legno a falda Falda 1 fili 178-179 (L = 165.2)
asta 166: Trave in legno a falda Falda 1 fili 178-179 (L = 262.7)
asta 386: Trave in legno a falda Falda 1 fili 179-180 (L = 222.6)

**Caratteristiche della sezione**

| Descrizione | Tipo | Base | Altezza | Area | Jx | Jy | Wx | Wy |
|---|---|---|---|---|---|---|---|---|
| R 8x10 | Rettangolare | 8 | 10 | 80 | 666.67 | 426.67 | 133.33 | 106.67 |

Materiale: C14 EN 338:2016
β,x = 0; β,y = 0
Rapporto luce/freccia elastica limite = 300
Rapporto luce/freccia elastica differita = 200
Mensola Y: Nessuno; Mensola X: Nessuno
Classe di servizio 1

**Verifica della freccia istantanea totale D.M. 17-01-18 §C4.4.7 Circolare 7 21-01-19**

Sezione ad ascissa 419.2
Kdef = 0
Uinst tot in x = -0.06
Uinst tot in y = -5.62
Uinst tot = 5.62
Luce/Uinst,tot < limite
650.5/5.62=115.8 < 300 Comb: SLE rara, 17 - NON SODDISFATTA

**Verifica della freccia istantanea variabile D.M. 17-01-18 §4.4.7**

Sezione ad ascissa 419.2
Kdef = 0
Uinst var in x = -0.05
Uinst var in y = -3.65
Uinst var = 3.65
Luce/Uinst,var < limite
650.5/3.65=178.4 < 300 Comb: SLE rara, 17 - NON SODDISFATTA

**Verifica della freccia finale EC5 §4.4.7 - EC5 2.2.3 (3)**

Sezione ad ascissa 424.7
Kdef = 0.6
Ufin in x = -0.06
Ufin in y = -6.8
Ufin = 6.8
Luce/Ufin < limite
650.5/6.8=95.6 < 200 - NON SODDISFATTA
Coefficienti combinatori impiegati:
Pesi strutturali = 1,000 + 0,600 = 1,600
Permanenti portati = 1,000 + 0,600 = 1,600
Variabile A = 0,700 + 0,180 = 0,880
Neve = 0,500 + 0,500 = 1,000
Vento = 0,600 + 0,000 = 0,600

---

## Superelemento in legno a "Falda 1" (-1034; -471)-172

Verifiche condotte secondo D.M. 17-01-18 (N.T.C.)

### Dati generali

Superelemento di lunghezza complessiva L= 650.6 composto da:
asta 129: Trave in legno a falda Falda 1 fili 170-171 (L = 165.2)
asta 130: Trave in legno a falda Falda 1 fili 170-171 (L = 262.7)
asta 385: Trave in legno a falda Falda 1 fili 171-172 (L = 222.6)

### Caratteristiche della sezione

| Descrizione | Tipo | Base | Altezza | Area | Jx | Jy | Wx | Wy |
|---|---|---|---|---|---|---|---|---|
| R 8x10 | Rettangolare | 8 | 10 | 80 | 666.67 | 426.67 | 133.33 | 106.67 |

Materiale: C14 EN 338:2016
β,x = 0; β,y = 0
Rapporto luce/freccia elastica limite = 300
Rapporto luce/freccia elastica differita = 200
Mensola Y: Nessuno; Mensola X: Nessuno
Classe di servizio 1

### Verifica della freccia istantanea totale D.M. 17-01-18 §C4.4.7 Circolare 7 21-01-19

Sezione ad ascissa 410.5
Kdef = 0
Uinst tot in x = -0.05
Uinst tot in y = -5.85
Uinst tot = 5.85
Luce/Uinst,tot < limite
650.6/5.85=111.3 < 300 Comb: SLE rara, 17 - NON SODDISFATTA

### Verifica della freccia istantanea variabile D.M. 17-01-18 §4.4.7

Sezione ad ascissa 419.2
Kdef = 0
Uinst var in x = -0.04
Uinst var in y = -3.8
Uinst var = 3.8
Luce/Uinst,var < limite
650.6/3.8=171.4 < 300 Comb: SLE rara, 17 - NON SODDISFATTA

### Verifica della freccia finale EC5 §4.4.7 - EC5 2.2.3 (3)

Sezione ad ascissa 416
Kdef = 0.6
Ufin in x = -0.05
Ufin in y = -7.08
Ufin = 7.08
Luce/Ufin < limite
650.6/7.08=91.9 < 200 - NON SODDISFATTA
Coefficienti combinatori impiegati:
Pesi strutturali = 1,000 + 0,600 = 1,600
Permanenti portati = 1,000 + 0,600 = 1,600
Variabile A = 0,700 + 0,180 = 0,880
Neve = 0,500 + 0,500 = 1,000
Vento = 0,600 + 0,000 = 0,600

---

## Superelemento in legno a "Falda 1" (-1169; -471)-155

Verifiche condotte secondo D.M. 17-01-18 (N.T.C.)

### Dati generali

Superelemento di lunghezza complessiva L= 650.5 composto da:
asta 326: Trave in legno a falda Falda 1 fili 153-154 (L = 428)
asta 411: Trave in legno a falda Falda 1 fili 154-155 (L = 222.5)

### Caratteristiche della sezione

| Descrizione | Tipo | Base | Altezza | Area | Jx | Jy | Wx | Wy |
|---|---|---|---|---|---|---|---|---|
| R 8x10 | Rettangolare | 8 | 10 | 80 | 666.67 | 426.67 | 133.33 | 106.67 |

Materiale: C14 EN 338:2016
β,x = 0; β,y = 0
Rapporto luce/freccia elastica limite = 300
Rapporto luce/freccia elastica differita = 200
Mensola Y: Nessuno; Mensola X: Nessuno
Classe di servizio 1

**Verifica della freccia istantanea totale D.M. 17-01-18 §C4.4.7 Circolare 7 21-01-19**

Sezione ad ascissa 370.9
Kdef = 0
Uinst tot in x = -0.14
Uinst tot in y = -6.59
Uinst tot = 6.59
Luce/Uinst,tot < limite
650.5/6.59=98.8 < 300 Comb: SLE rara, 17 - NON SODDISFATTA

**Verifica della freccia istantanea variabile D.M. 17-01-18 §4.4.7**

Sezione ad ascissa 370.9
Kdef = 0
Uinst var in x = -0.09
Uinst var in y = -4.26
Uinst var = 4.26
Luce/Uinst,var < limite
650.5/4.26=152.7 < 300 Comb: SLE rara, 17 - NON SODDISFATTA

**Verifica della freccia finale EC5 §4.4.7 - EC5 2.2.3 (3)**

Sezione ad ascissa 370.9
Kdef = 0.6
Ufin in x = -0.18
Ufin in y = -7.99
Ufin = 7.99
Luce/Ufin < limite
650.5/7.99=81.4 < 200 - NON SODDISFATTA
Coefficienti combinatori impiegati:
Pesi strutturali = 1,000 + 0,600 = 1,600
Permanenti portati = 1,000 + 0,600 = 1,600
Variabile A = 0,700 + 0,180 = 0,880
Neve = 0,500 + 0,500 = 1,000
Vento = 0,600 + 0,000 = 0,600

---

## Superelemento in legno a "Falda 1" (-1237; -471)-150

Verifiche condotte secondo D.M. 17-01-18 (N.T.C.)

**Dati generali**

Superelemento di lunghezza complessiva L= 650.5 composto da:
asta 325: Trave in legno a falda Falda 1 fili 148-149 (L = 428)
asta 410: Trave in legno a falda Falda 1 fili 149-150 (L = 222.5)

**Caratteristiche della sezione**

| Descrizione | Tipo | Base | Altezza | Area | Jx | Jy | Wx | Wy |
|---|---|---|---|---|---|---|---|---|
| R 8x10 | Rettangolare | 8 | 10 | 80 | 666.67 | 426.67 | 133.33 | 106.67 |

Materiale: C14 EN 338:2016
β,x = 0; β,y = 0
Rapporto luce/freccia elastica limite = 300
Rapporto luce/freccia elastica differita = 200
Mensola Y: Nessuno; Mensola X: Nessuno
Classe di servizio 1

**Verifica della freccia istantanea totale D.M. 17-01-18 §C4.4.7 Circolare 7 21-01-19**

Sezione ad ascissa 370.9
Kdef = 0
Uinst tot in x = -0.07
Uinst tot in y = -6.79
Uinst tot = 6.79
Luce/Uinst,tot < limite
650.5/6.79=95.9 < 300 Comb: SLE rara, 16 - NON SODDISFATTA

**Verifica della freccia istantanea variabile D.M. 17-01-18 §4.4.7**

Sezione ad ascissa 370.9
Kdef = 0
Uinst var in x = -0.05
Uinst var in y = -4.38
Uinst var = 4.38
Luce/Uinst,var < limite
650.5/4.38=148.4 < 300 Comb: SLE rara, 16 - NON SODDISFATTA

**Verifica della freccia finale EC5 §4.4.7 - EC5 2.2.3 (3)**

Sezione ad ascissa 370.9
Kdef = 0.6
Ufin in x = -0.08
Ufin in y = -8.23
Ufin = 8.23
Luce/Ufin < limite
650.5/8.23=79 < 200 - NON SODDISFATTA
Coefficienti combinatori impiegati:
Pesi strutturali = 1,000 + 0,600 = 1,600
Permanenti portati = 1,000 + 0,600 = 1,600
Variabile A = 0,700 + 0,180 = 0,880
Neve = 0,500 + 0,500 = 1,000

---

## Superelemento in legno a "Falda 1" (-1304; -471)-141

Verifiche condotte secondo D.M. 17-01-18 (N.T.C.)

**Dati generali**

Superelemento di lunghezza complessiva L= 650.5 composto da:
asta 327: Trave in legno a falda Falda 1 fili 139-140 (L = 428)
asta 412: Trave in legno a falda Falda 1 fili 140-141 (L = 222.5)

**Caratteristiche della sezione**

| Descrizione | Tipo | Base | Altezza | Area | Jx | Jy | Wx | Wy |
|---|---|---|---|---|---|---|---|---|
| R 8x10 | Rettangolare | 8 | 10 | 80 | 666.67 | 426.67 | 133.33 | 106.67 |

Materiale: C14 EN 338:2016
β,x = 0; β,y = 0
Rapporto luce/freccia elastica limite = 300
Rapporto luce/freccia elastica differita = 200
Mensola Y: Nessuno; Mensola X: Nessuno
Classe di servizio 1

**Verifica della freccia istantanea totale D.M. 17-01-18 §C4.4.7 Circolare 7 21-01-19**

Sezione ad ascissa 370.9
Kdef = 0
Uinst tot in x = -0.05
Uinst tot in y = -6.75
Uinst tot = 6.75
Luce/Uinst,tot < limite
650.5/6.75=96.4 < 300 Comb: SLE rara, 17 - NON SODDISFATTA

**Verifica della freccia istantanea variabile D.M. 17-01-18 §4.4.7**

Sezione ad ascissa 370.9
Kdef = 0
Uinst var in x = -0.04
Uinst var in y = -4.36
Uinst var = 4.36
Luce/Uinst,var < limite
650.5/4.36=149.3 < 300 Comb: SLE rara, 17 - NON SODDISFATTA

**Verifica della freccia finale EC5 §4.4.7 - EC5 2.2.3 (3)**

Sezione ad ascissa 370.9
Kdef = 0.6
Ufin in x = -0.06
Ufin in y = -8.19
Ufin = 8.19
Luce/Ufin < limite
650.5/8.19=79.5 < 200 - NON SODDISFATTA
Coefficienti combinatori impiegati:
Pesi strutturali = 1,000 + 0,600 = 1,600
Permanenti portati = 1,000 + 0,600 = 1,600
Variabile A = 0,700 + 0,180 = 0,880
Neve = 0,500 + 0,500 = 1,000
Vento = 0,600 + 0,000 = 0,600

---

## Superelemento in legno a "Falda 1" (-1440; -471)-123

Verifiche condotte secondo D.M. 17-01-18 (N.T.C.)

### Dati generali

Superelemento di lunghezza complessiva L= 650.6 composto da:
asta 194: Trave in legno a falda Falda 1 fili 121-122 (L = 165.2)
asta 195: Trave in legno a falda Falda 1 fili 121-122 (L = 262.8)
asta 398: Trave in legno a falda Falda 1 fili 122-123 (L = 222.6)

### Caratteristiche della sezione

| Descrizione | Tipo | Base | Altezza | Area | Jx | Jy | Wx | Wy |
|---|---|---|---|---|---|---|---|---|
| R 8x10 | Rettangolare | 8 | 10 | 80 | 666.67 | 426.67 | 133.33 | 106.67 |

Materiale: C14 EN 338:2016
β,x = 0; β,y = 0
Rapporto luce/freccia elastica limite = 300
Rapporto luce/freccia elastica differita = 200
Mensola Y: Nessuno; Mensola X: Nessuno
Classe di servizio 1

### Verifica della freccia istantanea totale D.M. 17-01-18 §C4.4.7 Circolare 7 21-01-19

Sezione ad ascissa 410.5
Kdef = 0
Uinst tot in x = -0.08
Uinst tot in y = -6.29
Uinst tot = 6.29
Luce/Uinst,tot < limite
650.6/6.29=103.4 < 300 Comb: SLE rara, 17 - NON SODDISFATTA

### Verifica della freccia istantanea variabile D.M. 17-01-18 §4.4.7

Sezione ad ascissa 410.5
Kdef = 0
Uinst var in x = -0.07
Uinst var in y = -4.09
Uinst var = 4.09
Luce/Uinst,var < limite
650.6/4.09=159.2 < 300 Comb: SLE rara, 17 - NON SODDISFATTA

### Verifica della freccia finale EC5 §4.4.7 - EC5 2.2.3 (3)

Sezione ad ascissa 416
Kdef = 0.6
Ufin in x = -0.09
Ufin in y = -7.62
Ufin = 7.62
Luce/Ufin < limite
650.6/7.62=85.4 < 200 - NON SODDISFATTA
Coefficienti combinatori impiegati:
Pesi strutturali = 1,000 + 0,600 = 1,600
Permanenti portati = 1,000 + 0,600 = 1,600
Variabile A = 0,700 + 0,180 = 0,880
Neve = 0,500 + 0,500 = 1,000
Vento = 0,600 + 0,000 = 0,600

---

## Superelemento in legno a "Falda 1" (-1507; -471)-115

Verifiche condotte secondo D.M. 17-01-18 (N.T.C.)

### Dati generali

Superelemento di lunghezza complessiva L= 650.6 composto da:
asta 196: Trave in legno a falda Falda 1 fili 113-114 (L = 165.2)
asta 197: Trave in legno a falda Falda 1 fili 113-114 (L = 262.8)
asta 399: Trave in legno a falda Falda 1 fili 114-115 (L = 222.6)

### Caratteristiche della sezione

| Descrizione | Tipo | Base | Altezza | Area | Jx | Jy | Wx | Wy |
|---|---|---|---|---|---|---|---|---|
| R 8x10 | Rettangolare | 8 | 10 | 80 | 666.67 | 426.67 | 133.33 | 106.67 |

Materiale: C14 EN 338:2016
β,x = 0; β,y = 0
Rapporto luce/freccia elastica limite = 300
Rapporto luce/freccia elastica differita = 200
Mensola Y: Nessuno; Mensola X: Nessuno
Classe di servizio 1

### Verifica della freccia istantanea totale D.M. 17-01-18 §C4.4.7 Circolare 7 21-01-19

Sezione ad ascissa 419.2

Kdef = 0
Uinst tot in x = -0.09
Uinst tot in y = -6.25
Uinst tot = 6.25
Luce/Uinst,tot < limite
650.6/6.25=104.1 < 300 Comb: SLE rara, 17 - NON SODDISFATTA

**Verifica della freccia istantanea variabile D.M. 17-01-18 §4.4.7**

Sezione ad ascissa 419.2
Kdef = 0
Uinst var in x = -0.08
Uinst var in y = -4.07
Uinst var = 4.07
Luce/Uinst,var < limite
650.6/4.07=159.9 < 300 Comb: SLE rara, 17 - NON SODDISFATTA

**Verifica della freccia finale EC5 §4.4.7 - EC5 2.2.3 (3)**

Sezione ad ascissa 424.7
Kdef = 0.6
Ufin in x = -0.1
Ufin in y = -7.56
Ufin = 7.56
Luce/Ufin < limite
650.6/7.56=86.1 < 200 - NON SODDISFATTA
Coefficienti combinatori impiegati:
Pesi strutturali = 1,000 + 0,600 = 1,600
Permanenti portati = 1,000 + 0,600 = 1,600
Variabile A = 0,700 + 0,180 = 0,880
Neve = 0,500 + 0,500 = 1,000
Vento = 0,600 + 0,000 = 0,600

---

## Superelemento in legno a "Falda 1" (-1575; -471)-106

Verifiche condotte secondo D.M. 17-01-18 (N.T.C.)

**Dati generali**

Superelemento di lunghezza complessiva L= 650.6 composto da:
asta 198: Trave in legno a falda Falda 1 fili 104-105 (L = 165.2)
asta 199: Trave in legno a falda Falda 1 fili 104-105 (L = 262.8)
asta 400: Trave in legno a falda Falda 1 fili 105-106 (L = 222.6)

**Caratteristiche della sezione**

| Descrizione | Tipo | Base | Altezza | Area | Jx | Jy | Wx | Wy |
|---|---|---|---|---|---|---|---|---|
| R 8x10 | Rettangolare | 8 | 10 | 80 | 666.67 | 426.67 | 133.33 | 106.67 |

Materiale: C14 EN 338:2016
β,x = 0; β,y = 0
Rapporto luce/freccia elastica limite = 300
Rapporto luce/freccia elastica differita = 200
Mensola Y: Nessuno; Mensola X: Nessuno
Classe di servizio 1

**Verifica della freccia istantanea totale D.M. 17-01-18 §C4.4.7 Circolare 7 21-01-19**

Sezione ad ascissa 419.2
Kdef = 0
Uinst tot in x = -0.08
Uinst tot in y = -6.27
Uinst tot = 6.27
Luce/Uinst,tot < limite
650.6/6.27=103.8 < 300 Comb: SLE rara, 17 - NON SODDISFATTA

**Verifica della freccia istantanea variabile D.M. 17-01-18 §4.4.7**

Sezione ad ascissa 419.2
Kdef = 0
Uinst var in x = -0.07
Uinst var in y = -4.09
Uinst var = 4.09
Luce/Uinst,var < limite
650.6/4.09=158.9 < 300 Comb: SLE rara, 17 - NON SODDISFATTA

**Verifica della freccia finale EC5 §4.4.7 - EC5 2.2.3 (3)**

Sezione ad ascissa 424.7
Kdef = 0.6

Ufin in x = -0.09
Ufin in y = -7.58
Ufin = 7.58
Luce/Ufin < limite
650.6/7.58=85.9 < 200 - NON SODDISFATTA
Coefficienti combinatori impiegati:
Pesi strutturali = 1,000 + 0,600 = 1,600
Permanenti portati = 1,000 + 0,600 = 1,600
Variabile A = 0,700 + 0,180 = 0,880
Neve = 0,500 + 0,500 = 1,000
Vento = 0,600 + 0,000 = 0,600

## Superelemento in legno a "Falda 1" (-1642; -471)-99

Verifiche condotte secondo D.M. 17-01-18 (N.T.C.)

### Dati generali

Superelemento di lunghezza complessiva L= 650.5 composto da:
asta 200: Trave in legno a falda Falda 1 fili 97-98 (L = 165.2)
asta 201: Trave in legno a falda Falda 1 fili 97-98 (L = 262.8)
asta 401: Trave in legno a falda Falda 1 fili 98-99 (L = 222.6)

### Caratteristiche della sezione

| Descrizione | Tipo | Base | Altezza | Area | Jx | Jy | Wx | Wy |
|---|---|---|---|---|---|---|---|---|
| R 8x10 | Rettangolare | 8 | 10 | 80 | 666.67 | 426.67 | 133.33 | 106.67 |

Materiale: C14 EN 338:2016
β,x = 0; β,y = 0
Rapporto luce/freccia elastica limite = 300
Rapporto luce/freccia elastica differita = 200
Mensola Y: Nessuno; Mensola X: Nessuno
Classe di servizio 1

### Verifica della freccia istantanea totale D.M. 17-01-18 §C4.4.7 Circolare 7 21-01-19

Sezione ad ascissa 419.2
Kdef = 0
Uinst tot in x = -0.06
Uinst tot in y = -6.34
Uinst tot = 6.34
Luce/Uinst,tot < limite
650.5/6.34=102.6 < 300 Comb: SLE rara, 17 - NON SODDISFATTA

### Verifica della freccia istantanea variabile D.M. 17-01-18 §4.4.7

Sezione ad ascissa 419.2
Kdef = 0
Uinst var in x = -0.05
Uinst var in y = -4.16
Uinst var = 4.16
Luce/Uinst,var < limite
650.5/4.16=156.4 < 300 Comb: SLE rara, 17 - NON SODDISFATTA

### Verifica della freccia finale EC5 §4.4.7 - EC5 2.2.3 (3)

Sezione ad ascissa 424.7
Kdef = 0.6
Ufin in x = 0.08
Ufin in y = -7.66
Ufin = 7.66
Luce/Ufin < limite
650.5/7.66=85 < 200 - NON SODDISFATTA
Coefficienti combinatori impiegati:
Pesi strutturali = 1,000 + 0,600 = 1,600
Permanenti portati = 1,000 + 0,600 = 1,600
Variabile A = 0,700 + 0,180 = 0,880
Neve = 0,500 + 0,500 = 1,000
Vento = 0,600 + 0,000 = 0,600

## Superelemento in legno a "Falda 1" (-1777; -322)-83

Verifiche condotte secondo D.M. 17-01-18 (N.T.C.)

### Dati generali

Superelemento di lunghezza complessiva L= 485.3 composto da:

asta 207: Trave in legno a falda Falda 1 fili 81-82 (L = 262.8)
asta 403: Trave in legno a falda Falda 1 fili 82-83 (L = 222.5)

**Caratteristiche della sezione**

| Descrizione | Tipo | Base | Altezza | Area | Jx | Jy | Wx | Wy |
|---|---|---|---|---|---|---|---|---|
| R 8x10 | Rettangolare | 8 | 10 | 80 | 666.67 | 426.67 | 133.33 | 106.67 |

Materiale: C14 EN 338:2016
β,x = 0; β,y = 0
Rapporto luce/freccia elastica limite = 300
Rapporto luce/freccia elastica differita = 200
Mensola Y: Nessuno; Mensola X: Nessuno
Classe di servizio 1

**Verifica della freccia istantanea totale D.M. 17-01-18 §C4.4.7 Circolare 7 21-01-19**

Sezione ad ascissa 254.1
Kdef = 0
Uinst tot in x = -0.06
Uinst tot in y = -6.5
Uinst tot = 6.5
Luce/Uinst,tot < limite
485.3/6.5=74.7 < 300 Comb: SLE rara, 17 - NON SODDISFATTA

**Verifica della freccia istantanea variabile D.M. 17-01-18 §4.4.7**

Sezione ad ascissa 254.1
Kdef = 0
Uinst var in x = -0.03
Uinst var in y = -4.3
Uinst var = 4.3
Luce/Uinst,var < limite
485.3/4.3=112.9 < 300 Comb: SLE rara, 17 - NON SODDISFATTA

**Verifica della freccia finale EC5 §4.4.7 - EC5 2.2.3 (3)**

Sezione ad ascissa 254.1
Kdef = 0.6
Ufin in x = -0.09
Ufin in y = -7.82
Ufin = 7.82
Luce/Ufin < limite
485.3/7.82=62 < 200 - NON SODDISFATTA
Coefficienti combinatori impiegati:
Pesi strutturali = 1,000 + 0,600 = 1,600
Permanenti portati = 1,000 + 0,600 = 1,600
Variabile A = 0,700 + 0,180 = 0,880
Neve = 0,500 + 0,500 = 1,000
Vento = 0,600 + 0,000 = 0,600

## Superelemento in legno a "Falda 1" (-1912; -322)-67

Verifiche condotte secondo D.M. 17-01-18 (N.T.C.)

**Dati generali**

Superelemento di lunghezza complessiva L= 485.3 composto da:
asta 209: Trave in legno a falda Falda 1 fili 65-66 (L = 262.8)
asta 405: Trave in legno a falda Falda 1 fili 66-67 (L = 222.5)

**Caratteristiche della sezione**

| Descrizione | Tipo | Base | Altezza | Area | Jx | Jy | Wx | Wy |
|---|---|---|---|---|---|---|---|---|
| R 8x10 | Rettangolare | 8 | 10 | 80 | 666.67 | 426.67 | 133.33 | 106.67 |

Materiale: C14 EN 338:2016
β,x = 0; β,y = 0
Rapporto luce/freccia elastica limite = 300
Rapporto luce/freccia elastica differita = 200
Mensola Y: Nessuno; Mensola X: Nessuno
Classe di servizio 1

**Verifica della freccia istantanea totale D.M. 17-01-18 §C4.4.7 Circolare 7 21-01-19**

Sezione ad ascissa 245.3
Kdef = 0
Uinst tot in x = -0.07
Uinst tot in y = -6.26
Uinst tot = 6.26
Luce/Uinst,tot < limite

485.3/6.26=77.5 < 300 Comb: SLE rara, 17 - NON SODDISFATTA

**Verifica della freccia istantanea variabile D.M. 17-01-18 §4.4.7**

Sezione ad ascissa 245.3
Kdef = 0
Uinst var in x = -0.03
Uinst var in y = -4.16
Uinst var = 4.16
Luce/Uinst,var < limite
485.3/4.16=116.5 < 300 Comb: SLE rara, 17 - NON SODDISFATTA

**Verifica della freccia finale EC5 §4.4.7 - EC5 2.2.3 (3)**

Sezione ad ascissa 245.3
Kdef = 0.6
Ufin in x = -0.09
Ufin in y = -7.52
Ufin = 7.52
Luce/Ufin < limite
485.3/7.52=64.5 < 200 - NON SODDISFATTA
Coefficienti combinatori impiegati:
Pesi strutturali = 1,000 + 0,600 = 1,600
Permanenti portati = 1,000 + 0,600 = 1,600
Variabile A = 0,700 + 0,180 = 0,880
Neve = 0,500 + 0,500 = 1,000
Vento = 0,600 + 0,000 = 0,600

---

## Superelemento in legno a "Falda 1" (-1980; -322)-58

Verifiche condotte secondo D.M. 17-01-18 (N.T.C.)

**Dati generali**

Superelemento di lunghezza complessiva L= 485.3 composto da:
asta 210: Trave in legno a falda Falda 1 fili 56-57 (L = 262.8)
asta 406: Trave in legno a falda Falda 1 fili 57-58 (L = 222.5)

**Caratteristiche della sezione**

| Descrizione | Tipo | Base | Altezza | Area | Jx | Jy | Wx | Wy |
|---|---|---|---|---|---|---|---|---|
| R 8x10 | Rettangolare | 8 | 10 | 80 | 666.67 | 426.67 | 133.33 | 106.67 |

Materiale: C14 EN 338:2016
β,x = 0; β,y = 0
Rapporto luce/freccia elastica limite = 300
Rapporto luce/freccia elastica differita = 200
Mensola Y: Nessuno; Mensola X: Nessuno
Classe di servizio 1

**Verifica della freccia istantanea totale D.M. 17-01-18 §C4.4.7 Circolare 7 21-01-19**

Sezione ad ascissa 236.5
Kdef = 0
Uinst tot in x = -0.07
Uinst tot in y = -5.84
Uinst tot = 5.84
Luce/Uinst,tot < limite
485.3/5.84=83.1 < 300 Comb: SLE rara, 17 - NON SODDISFATTA

**Verifica della freccia istantanea variabile D.M. 17-01-18 §4.4.7**

Sezione ad ascissa 236.5
Kdef = 0
Uinst var in x = 0.03
Uinst var in y = -3.9
Uinst var = 3.9
Luce/Uinst,var < limite
485.3/3.9=124.5 < 300 Comb: SLE rara, 17 - NON SODDISFATTA

**Verifica della freccia finale EC5 §4.4.7 - EC5 2.2.3 (3)**

Sezione ad ascissa 236.5
Kdef = 0.6
Ufin in x = -0.1
Ufin in y = -7.01
Ufin = 7.01
Luce/Ufin < limite
485.3/7.01=69.2 < 200 - NON SODDISFATTA
Coefficienti combinatori impiegati:

Pesi strutturali = 1,000 + 0,600 = 1,600
Permanenti portati = 1,000 + 0,600 = 1,600
Variabile A = 0,700 + 0,180 = 0,880
Neve = 0,500 + 0,500 = 1,000
Vento = 0,600 + 0,000 = 0,600

## Superelemento in legno a "Falda 1" (-2048; -322)-51

Verifiche condotte secondo D.M. 17-01-18 (N.T.C.)

### Dati generali

Superelemento di lunghezza complessiva L= 450.2 composto da:
asta 211: Trave in legno a falda Falda 1 fili 49-50 (L = 262.8)
asta 407: Trave in legno a falda Falda 1 fili 50-51 (L = 187.4)

### Caratteristiche della sezione

| Descrizione | Tipo | Base | Altezza | Area | Jx | Jy | Wx | Wy |
|---|---|---|---|---|---|---|---|---|
| R 8x10 | Rettangolare | 8 | 10 | 80 | 666.67 | 426.67 | 133.33 | 106.67 |

Materiale: C14 EN 338:2016
β,x = 0; β,y = 0
Rapporto luce/freccia elastica limite = 300
Rapporto luce/freccia elastica differita = 200
Mensola Y: Nessuno; Mensola X: Nessuno
Classe di servizio 1

### Verifica della freccia istantanea totale D.M. 17-01-18 §C4.4.7 Circolare 7 21-01-19

Sezione ad ascissa 227.8
Kdef = 0
Uinst tot in x = -0.12
Uinst tot in y = -5.02
Uinst tot = 5.02
Luce/Uinst,tot < limite
450.2/5.02=89.7 < 300 Comb: SLE rara, 17 - NON SODDISFATTA

### Verifica della freccia istantanea variabile D.M. 17-01-18 §4.4.7

Sezione ad ascissa 227.8
Kdef = 0
Uinst var in x = -0.06
Uinst var in y = -3.35
Uinst var = 3.35
Luce/Uinst,var < limite
450.2/3.35=134.2 < 300 Comb: SLE rara, 17 - NON SODDISFATTA

### Verifica della freccia finale EC5 §4.4.7 - EC5 2.2.3 (3)

Sezione ad ascissa 227.8
Kdef = 0.6
Ufin in x = -0.16
Ufin in y = -6.02
Ufin = 6.02
Luce/Ufin < limite
450.2/6.02=74.8 < 200 - NON SODDISFATTA
Coefficienti combinatori impiegati:
Pesi strutturali = 1,000 + 0,600 = 1,600
Permanenti portati = 1,000 + 0,600 = 1,600
Variabile A = 0,700 + 0,180 = 0,880
Neve = 0,500 + 0,500 = 1,000
Vento = 0,600 + 0,000 = 0,600

## Superelemento in legno a "Falda 1" (-2115; -322)-45

Verifiche condotte secondo D.M. 17-01-18 (N.T.C.)

### Dati generali

Superelemento di lunghezza complessiva L= 377.8 composto da:
asta 212: Trave in legno a falda Falda 1 fili 43-44 (L = 262.8)
asta 408: Trave in legno a falda Falda 1 fili 44-45 (L = 115)

### Caratteristiche della sezione

| Descrizione | Tipo | Base | Altezza | Area | Jx | Jy | Wx | Wy |
|---|---|---|---|---|---|---|---|---|
| R 8x10 | Rettangolare | 8 | 10 | 80 | 666.67 | 426.67 | 133.33 | 106.67 |

Materiale: C14 EN 338:2016

β,x = 0; β,y = 0
Rapporto luce/freccia elastica limite = 300
Rapporto luce/freccia elastica differita = 200
Mensola Y: Nessuno; Mensola X: Nessuno
Classe di servizio 1

**Verifica della freccia istantanea totale D.M. 17-01-18 §C4.4.7 Circolare 7 21-01-19**

Sezione ad ascissa 210.3
Kdef = 0
Uinst tot in x = -0.19
Uinst tot in y = -3.52
Uinst tot = 3.52
Luce/Uinst,tot < limite
377.8/3.52=107.4 < 300 Comb: SLE rara, 17 - NON SODDISFATTA

**Verifica della freccia istantanea variabile D.M. 17-01-18 §4.4.7**

Sezione ad ascissa 210.3
Kdef = 0
Uinst var in x = -0.12
Uinst var in y = -2.36
Uinst var = 2.36
Luce/Uinst,var < limite
377.8/2.36=160.4 < 300 Comb: SLE rara, 17 - NON SODDISFATTA

**Verifica della freccia finale EC5 §4.4.7 - EC5 2.2.3 (3)**

Sezione ad ascissa 210.3
Kdef = 0.6
Ufin in x = -0.24
Ufin in y = -4.21
Ufin = 4.21
Luce/Ufin < limite
377.8/4.21=89.7 < 200 - NON SODDISFATTA
Coefficienti combinatori impiegati:
Pesi strutturali = 1,000 + 0,600 = 1,600
Permanenti portati = 1,000 + 0,600 = 1,600
Variabile A = 0,700 + 0,180 = 0,880
Neve = 0,500 + 0,500 = 1,000
Vento = 0,600 + 0,000 = 0,600

---

## Superelemento in legno a "Falda 1" (-2183; -322)-39

Verifiche condotte secondo D.M. 17-01-18 (N.T.C.)

**Dati generali**

Superelemento di lunghezza complessiva L= 314.2 composto da:
asta 213: Trave in legno a falda Falda 1 fili 37-38 (L = 262.8)
asta 409: Trave in legno a falda Falda 1 fili 38-39 (L = 51.4)

**Caratteristiche della sezione**

| Descrizione | Tipo | Base | Altezza | Area | Jx | Jy | Wx | Wy |
|---|---|---|---|---|---|---|---|---|
| R 8x10 | Rettangolare | 8 | 10 | 80 | 666.67 | 426.67 | 133.33 | 106.67 |

Materiale: C14 EN 338:2016
β,x = 0; β,y = 0
Rapporto luce/freccia elastica limite = 300
Rapporto luce/freccia elastica differita = 200
Mensola Y: Nessuno; Mensola X: Nessuno
Classe di servizio 1

**Verifica della freccia istantanea totale D.M. 17-01-18 §C4.4.7 Circolare 7 21-01-19**

Sezione ad ascissa 184
Kdef = 0
Uinst tot in x = -0.1
Uinst tot in y = -2.01
Uinst tot = 2.01
Luce/Uinst,tot < limite
314.2/2.01=156.2 < 300 Comb: SLE rara, 9 - NON SODDISFATTA

**Verifica della freccia istantanea variabile D.M. 17-01-18 §4.4.7**

Sezione ad ascissa 175.2
Kdef = 0
Uinst var in x = -0.06
Uinst var in y = -1.36

Uinst var = 1.36
Luce/Uinst,var < limite
314.2/1.36=231.4 < 300 Comb: SLE rara, 9 - NON SODDISFATTA

**Verifica della freccia finale EC5 §4.4.7 - EC5 2.2.3 (3)**

Sezione ad ascissa 184
Kdef = 0.6
Ufin in x = -0.13
Ufin in y = -2.4
Ufin = 2.4
Luce/Ufin < limite
314.2/2.4=130.7 < 200 - NON SODDISFATTA
Coefficienti combinatori impiegati:
Pesi strutturali = 1,000 + 0,600 = 1,600
Permanenti portati = 1,000 + 0,600 = 1,600
Neve = 0,500 + 0,500 = 1,000
Vento = 0,600 + 0,000 = 0,600

---

## Superelemento in legno a "Falda 1" (-2242; -97)-74

Verifiche condotte secondo D.M. 17-01-18 (N.T.C.)

**Dati generali**

Superelemento di lunghezza complessiva L= 387.1 composto da:
asta 138: Trave in legno a falda Falda 1 fili 36-74 (L = 49.3)
asta 139: Trave in legno a falda Falda 1 fili 36-74 (L = 67.6)
asta 140: Trave in legno a falda Falda 1 fili 36-74 (L = 67.6)
asta 141: Trave in legno a falda Falda 1 fili 36-74 (L = 67.6)
asta 142: Trave in legno a falda Falda 1 fili 36-74 (L = 67.6)
asta 143: Trave in legno a falda Falda 1 fili 36-74 (L = 67.6)

**Caratteristiche della sezione**

| Descrizione | Tipo | Base | Altezza | Area | Jx | Jy | Wx | Wy |
|---|---|---|---|---|---|---|---|---|
| R 18x23 | Rettangolare | 18 | 23 | 414 | 18250.5 | 11178 | 1587 | 1242 |

Materiale: C14 EN 338:2016
β,x = 0; β,y = 0
Rapporto luce/freccia elastica limite = 300
Rapporto luce/freccia elastica differita = 200
Mensola Y: Nessuno; Mensola X: Nessuno
Classe di servizio 1

**Verifica della freccia istantanea totale D.M. 17-01-18 §C4.4.7 Circolare 7 21-01-19**

Sezione ad ascissa 220.5
Kdef = 0
Uinst tot in x = -0.43
Uinst tot in y = -0.65
Uinst tot = 0.65
Luce/Uinst,tot > limite
387.1/0.65=591.4 > 300 Comb: SLE rara, 17

**Verifica della freccia istantanea variabile D.M. 17-01-18 §4.4.7**

Sezione ad ascissa 220.5
Kdef = 0
Uinst var in x = -0.28
Uinst var in y = -0.45
Uinst var = 0.45
Luce/Uinst,var > limite
387.1/0.45=851.6 > 300 Comb: SLE rara, 17

**Verifica della freccia finale EC5 §4.4.7 - EC5 2.2.3 (3)**

Sezione ad ascissa 228.9
Kdef = 0.6
Ufin in x = -0.5
Ufin in y = -0.71
Ufin = 0.71
Luce/Ufin > limite
387.1/0.71=548.8 > 200
Coefficienti combinatori impiegati:
Pesi strutturali = 1,000 + 0,600 = 1,600
Permanenti portati = 1,000 + 0,600 = 1,600
Variabile A = 0,700 + 0,180 = 0,880
Neve = 0,500 + 0,500 = 1,000

Vento = 0,600 + 0,000 = 0,600

## Superelemento in legno a "Falda 1" (-2250; -322)-(-2250; -104)

Verifiche condotte secondo D.M. 17-01-18 (N.T.C.)

### Dati generali

Superelemento di lunghezza complessiva L= 239.9 composto da:
Asta 214: Trave in legno a falda Falda 1 fili 32-33

### Caratteristiche della sezione

| Descrizione | Tipo | Base | Altezza | Area | Jx | Jy | Wx | Wy |
|---|---|---|---|---|---|---|---|---|
| R 8x10 | Rettangolare | 8 | 10 | 80 | 666.67 | 426.67 | 133.33 | 106.67 |

Materiale: C14 EN 338:2016
β,x = 0; β,y = 0
Rapporto luce/freccia elastica limite = 300
Rapporto luce/freccia elastica differita = 200
Mensola Y: Nessuno; Mensola X: Nessuno
Classe di servizio 1

### Verifica della freccia istantanea totale D.M. 17-01-18 §C4.4.7 Circolare 7 21-01-19

Sezione ad ascissa 144
Kdef = 0
Uinst tot in x = -0.05
Uinst tot in y = -0.81
Uinst tot = 0.81
Luce/Uinst,tot < limite
239.9/0.81=298 < 300 Comb: SLE rara, 9 - NON SODDISFATTA

### Verifica della freccia istantanea variabile D.M. 17-01-18 §4.4.7

Sezione ad ascissa 136
Kdef = 0
Uinst var in x = -0.03
Uinst var in y = -0.55
Uinst var = 0.55
Luce/Uinst,var > limite
239.9/0.55=432.7 > 300 Comb: SLE rara, 9

### Verifica della freccia finale EC5 §4.4.7 - EC5 2.2.3 (3)

Sezione ad ascissa 144
Kdef = 0.6
Ufin in x = -0.06
Ufin in y = -0.96
Ufin = 0.96
Luce/Ufin > limite
239.9/0.96=250.9 > 200
Coefficienti combinatori impiegati:
Pesi strutturali = 1,000 + 0,600 = 1,600
Permanenti portati = 1,000 + 0,600 = 1,600
Neve = 0,500 + 0,500 = 1,000
Vento = 0,600 + 0,000 = 0,600

## Superelemento in legno a "Falda 1" (-2318; -322)-(-2318; -172)

Verifiche condotte secondo D.M. 17-01-18 (N.T.C.)

### Dati generali

Superelemento di lunghezza complessiva L= 165.7 composto da:
Asta 215: Trave in legno a falda Falda 1 fili 27-28

### Caratteristiche della sezione

| Descrizione | Tipo | Base | Altezza | Area | Jx | Jy | Wx | Wy |
|---|---|---|---|---|---|---|---|---|
| R 8x10 | Rettangolare | 8 | 10 | 80 | 666.67 | 426.67 | 133.33 | 106.67 |

Materiale: C14 EN 338:2016
β,x = 0; β,y = 0
Rapporto luce/freccia elastica limite = 300
Rapporto luce/freccia elastica differita = 200
Mensola Y: Nessuno; Mensola X: Nessuno
Classe di servizio 1

**Verifica della freccia istantanea totale D.M. 17-01-18 §C4.4.7 Circolare 7 21-01-19**

Sezione ad ascissa 104.9
Kdef = 0
Uinst tot in x = -0.03
Uinst tot in y = -0.27
Uinst tot = 0.27
Luce/Uinst,tot > limite
165.7/0.27=611.1 > 300 Comb: SLE rara, 9

**Verifica della freccia istantanea variabile D.M. 17-01-18 §4.4.7**

Sezione ad ascissa 99.4
Kdef = 0
Uinst var in x = -0.02
Uinst var in y = -0.19
Uinst var = 0.19
Luce/Uinst,var > limite
165.7/0.19=875.9 > 300 Comb: SLE rara, 9

**Verifica della freccia finale EC5 §4.4.7 - EC5 2.2.3 (3)**

Sezione ad ascissa 104.9
Kdef = 0.6
Ufin in x = -0.03
Ufin in y = -0.32
Ufin = 0.32
Luce/Ufin > limite
165.7/0.32=517 > 200
Coefficienti combinatori impiegati:
Pesi strutturali = 1,000 + 0,600 = 1,600
Permanenti portati = 1,000 + 0,600 = 1,600
Neve = 0,500 + 0,500 = 1,000
Vento = 0,600 + 0,000 = 0,600

---

## Superelemento in legno a "Falda 1" (-2385; -322)-(-2385; -239)

Verifiche condotte secondo D.M. 17-01-18 (N.T.C.)

**Dati generali**

Superelemento di lunghezza complessiva L= 91.3 composto da:
Asta 216: Trave in legno a falda Falda 1 fili 23-24

**Caratteristiche della sezione**

| Descrizione | Tipo | Base | Altezza | Area | Jx | Jy | Wx | Wy |
|---|---|---|---|---|---|---|---|---|
| R 8x10 | Rettangolare | 8 | 10 | 80 | 666.67 | 426.67 | 133.33 | 106.67 |

Materiale: C14 EN 338:2016
β,x = 0; β,y = 0
Rapporto luce/freccia elastica limite = 300
Rapporto luce/freccia elastica differita = 200
Mensola Y: Nessuno; Mensola X: Nessuno
Classe di servizio 1

**Verifica della freccia istantanea totale D.M. 17-01-18 §C4.4.7 Circolare 7 21-01-19**

Sezione ad ascissa 60.9
Kdef = 0
Uinst tot in x = -0.01
Uinst tot in y = -0.07
Uinst tot = 0.07
Luce/Uinst,tot > limite
91.3/0.07=1333.1 > 300 Comb: SLE rara, 9

**Verifica della freccia istantanea variabile D.M. 17-01-18 §4.4.7**

Sezione ad ascissa 57.8
Kdef = 0
Uinst var in x = -0.01
Uinst var in y = -0.05
Uinst var = 0.05
Luce/Uinst,var > limite
91.3/0.05=1894.5 > 300 Comb: SLE rara, 9

**Verifica della freccia finale EC5 §4.4.7 - EC5 2.2.3 (3)**

Sezione ad ascissa 60.9
Kdef = 0.6

Ufin in x = -0.01
Ufin in y = -0.08
Ufin = 0.08
Luce/Ufin > limite
91.3/0.08=1130.7 > 200
Coefficienti combinatori impiegati:
Pesi strutturali = 1,000 + 0,600 = 1,600
Permanenti portati = 1,000 + 0,600 = 1,600
Neve = 0,500 + 0,500 = 1,000
Vento = 0,600 + 0,000 = 0,600

## Superelemento in legno a "Falda 2" 24-(-2468; -256)

Verifiche condotte secondo D.M. 17-01-18 (N.T.C.)

### Dati generali

Superelemento di lunghezza complessiva L= 92.5 composto da:
Asta 239: Trave in legno a falda Falda 2 fili 24-2

### Caratteristiche della sezione

| Descrizione | Tipo | Base | Altezza | Area | Jx | Jy | Wx | Wy |
|---|---|---|---|---|---|---|---|---|
| R 8x10 | Rettangolare | 8 | 10 | 80 | 666.67 | 426.67 | 133.33 | 106.67 |

Materiale: C14 EN 338:2016
β,x = 0; β,y = 0
Rapporto luce/freccia elastica limite = 300
Rapporto luce/freccia elastica differita = 200
Mensola Y: Nessuno; Mensola X: Nessuno
Classe di servizio 1

### Verifica della freccia istantanea totale D.M. 17-01-18 §C4.4.7 Circolare 7 21-01-19

Sezione ad ascissa 67.9
Kdef = 0
Uinst tot in x = 0.01
Uinst tot in y = 0.03
Uinst tot = 0.03
Luce/Uinst,tot > limite
92.5/0.03=3094.9 > 300 Comb: SLE rara, 17

### Verifica della freccia istantanea variabile D.M. 17-01-18 §4.4.7

Sezione ad ascissa 67.9
Kdef = 0
Uinst var in x = 0.01
Uinst var in y = 0.02
Uinst var = 0.02
Luce/Uinst,var > limite
92.5/0.02=4304.9 > 300 Comb: SLE rara, 17

### Verifica della freccia finale EC5 §4.4.7 - EC5 2.2.3 (3)

Sezione ad ascissa 67.9
Kdef = 0.6
Ufin in x = 0.01
Ufin in y = 0.03
Ufin = 0.03
Luce/Ufin > limite
92.5/0.03=2647.4 > 200
Coefficienti combinatori impiegati:
Pesi strutturali = 1,000 + 0,600 = 1,600
Permanenti portati = 1,000 + 0,600 = 1,600
Variabile A = 0,700 + 0,180 = 0,880
Neve = 0,500 + 0,500 = 1,000
Vento = 0,600 + 0,000 = 0,600

## Superelemento in legno a "Falda 2" 25-(-2469; 505)

Verifiche condotte secondo D.M. 17-01-18 (N.T.C.)

### Dati generali

Superelemento di lunghezza complessiva L= 92.2 composto da:
Asta 323: Trave in legno a falda Falda 2 fili 25-14

Caratteristiche della sezione

| Descrizione | Tipo | Base | Altezza | Area | Jx | Jy | Wx | Wy |
|---|---|---|---|---|---|---|---|---|
| R 8x10 | Rettangolare | 8 | 10 | 80 | 666.67 | 426.67 | 133.33 | 106.67 |

Materiale: C14 EN 338:2016
β,x = 0; β,y = 0
Rapporto luce/freccia elastica limite = 300
Rapporto luce/freccia elastica differita = 200
Mensola Y: Nessuno; Mensola X: Nessuno
Classe di servizio 1

Verifica della freccia istantanea totale D.M. 17-01-18 §C4.4.7 Circolare 7 21-01-19

Sezione ad ascissa 21.5
Kdef = 0
Uinst tot in x = -0.02
Uinst tot in y = -0.05
Uinst tot = 0.05
Luce/Uinst,tot > limite
92.2/0.05=1941 > 300 Comb: SLE rara, 9

Verifica della freccia istantanea variabile D.M. 17-01-18 §4.4.7

Sezione ad ascissa 21.5
Kdef = 0
Uinst var in x = -0.01
Uinst var in y = -0.03
Uinst var = 0.03
Luce/Uinst,var > limite
92.2/0.03=2901.5 > 300 Comb: SLE rara, 9

Verifica della freccia finale EC5 §4.4.7 - EC5 2.2.3 (3)

Sezione ad ascissa 21.5
Kdef = 0.6
Ufin in x = -0.02
Ufin in y = -0.06
Ufin = 0.06
Luce/Ufin > limite
92.2/0.06=1619.4 > 200
Coefficienti combinatori impiegati:
Pesi strutturali = 1,000 + 0,600 = 1,600
Permanenti portati = 1,000 + 0,600 = 1,600
Neve = 0,500 + 0,500 = 1,000
Vento = 0,600 + 0,000 = 0,600

## Superelemento in legno a "Falda 2" 28-(-2468; -190)

Verifiche condotte secondo D.M. 17-01-18 (N.T.C.)

Dati generali

Superelemento di lunghezza complessiva L= 169.7 composto da:
Asta 240: Trave in legno a falda Falda 2 fili 28-3

Caratteristiche della sezione

| Descrizione | Tipo | Base | Altezza | Area | Jx | Jy | Wx | Wy |
|---|---|---|---|---|---|---|---|---|
| R 8x10 | Rettangolare | 8 | 10 | 80 | 666.67 | 426.67 | 133.33 | 106.67 |

Materiale: C14 EN 338:2016
β,x = 0; β,y = 0
Rapporto luce/freccia elastica limite = 300
Rapporto luce/freccia elastica differita = 200
Mensola Y: Nessuno; Mensola X: Nessuno
Classe di servizio 1

Verifica della freccia istantanea totale D.M. 17-01-18 §C4.4.7 Circolare 7 21-01-19

Sezione ad ascissa 118.8
Kdef = 0
Uinst tot in x = 0.01
Uinst tot in y = 0.11
Uinst tot = 0.11
Luce/Uinst,tot > limite
169.7/0.11=1487.9 > 300 Comb: SLE rara, 17

Verifica della freccia istantanea variabile D.M. 17-01-18 §4.4.7

Sezione ad ascissa 118.8

Kdef = 0
Uinst var in x = 0
Uinst var in y = 0.08
Uinst var = 0.08
Luce/Uinst,var > limite
169.7/0.08=2068.3 > 300 Comb: SLE rara, 17

**Verifica della freccia finale EC5 §4.4.7 - EC5 2.2.3 (3)**

Sezione ad ascissa 118.8
Kdef = 0.6
Ufin in x = 0.01
Ufin in y = 0.13
Ufin = 0.13
Luce/Ufin > limite
169.7/0.13=1272.3 > 200
Coefficienti combinatori impiegati:
Pesi strutturali = 1,000 + 0,600 = 1,600
Permanenti portati = 1,000 + 0,600 = 1,600
Variabile A = 0,700 + 0,180 = 0,880
Neve = 0,500 + 0,500 = 1,000
Vento = 0,600 + 0,000 = 0,600

---

## Superelemento in legno a "Falda 2" 29-(-2469; 432)

Verifiche condotte secondo D.M. 17-01-18 (N.T.C.)

**Dati generali**

Superelemento di lunghezza complessiva L= 168.8 composto da:
Asta 322: Trave in legno a falda Falda 2 fili 29-13

**Caratteristiche della sezione**

| Descrizione | Tipo | Base | Altezza | Area | Jx | Jy | Wx | Wy |
|---|---|---|---|---|---|---|---|---|
| R 8x10 | Rettangolare | 8 | 10 | 80 | 666.67 | 426.67 | 133.33 | 106.67 |

Materiale: C14 EN 338:2016
β,x = 0; β,y = 0
Rapporto luce/freccia elastica limite = 300
Rapporto luce/freccia elastica differita = 200
Mensola Y: Nessuno; Mensola X: Nessuno
Classe di servizio 1

**Verifica della freccia istantanea totale D.M. 17-01-18 §C4.4.7 Circolare 7 21-01-19**

Sezione ad ascissa 39.4
Kdef = 0
Uinst tot in x = -0.04
Uinst tot in y = -0.14
Uinst tot = 0.14
Luce/Uinst,tot > limite
168.8/0.14=1202.7 > 300 Comb: SLE rara, 17

**Verifica della freccia istantanea variabile D.M. 17-01-18 §4.4.7**

Sezione ad ascissa 39.4
Kdef = 0
Uinst var in x = -0.03
Uinst var in y = -0.09
Uinst var = 0.09
Luce/Uinst,var > limite
168.8/0.09=1805.1 > 300 Comb: SLE rara, 17

**Verifica della freccia finale EC5 §4.4.7 - EC5 2.2.3 (3)**

Sezione ad ascissa 39.4
Kdef = 0.6
Ufin in x = -0.05
Ufin in y = -0.17
Ufin = 0.17
Luce/Ufin > limite
168.8/0.17=1001.9 > 200
Coefficienti combinatori impiegati:
Pesi strutturali = 1,000 + 0,600 = 1,600
Permanenti portati = 1,000 + 0,600 = 1,600
Variabile A = 0,700 + 0,180 = 0,880
Neve = 0,500 + 0,500 = 1,000
Vento = 0,600 + 0,000 = 0,600

## Superelemento in legno a "Falda 2" 33-(-2468; -125)

Verifiche condotte secondo D.M. 17-01-18 (N.T.C.)

### Dati generali

Superelemento di lunghezza complessiva L= 246.1 composto da:
Asta 241: Trave in legno a falda Falda 2 fili 33-4

### Caratteristiche della sezione

| Descrizione | Tipo | Base | Altezza | Area | Jx | Jy | Wx | Wy |
|---|---|---|---|---|---|---|---|---|
| R 8x10 | Rettangolare | 8 | 10 | 80 | 666.67 | 426.67 | 133.33 | 106.67 |

Materiale: C14 EN 338:2016
β,x = 0; β,y = 0
Rapporto luce/freccia elastica limite = 300
Rapporto luce/freccia elastica differita = 200
Mensola Y: Nessuno; Mensola X: Nessuno
Classe di servizio 1

### Verifica della freccia istantanea totale D.M. 17-01-18 §C4.4.7 Circolare 7 21-01-19

Sezione ad ascissa 155.9
Kdef = 0
Uinst tot in x = 0.07
Uinst tot in y = 0.28
Uinst tot = 0.28
Luce/Uinst,tot > limite
246.1/0.28=864.5 > 300 Comb: SLE rara, 17

### Verifica della freccia istantanea variabile D.M. 17-01-18 §4.4.7

Sezione ad ascissa 155.9
Kdef = 0
Uinst var in x = 0.04
Uinst var in y = 0.21
Uinst var = 0.21
Luce/Uinst,var > limite
246.1/0.21=1197.2 > 300 Comb: SLE rara, 17

### Verifica della freccia finale EC5 §4.4.7 - EC5 2.2.3 (3)

Sezione ad ascissa 155.9
Kdef = 0.6
Ufin in x = 0.08
Ufin in y = 0.33
Ufin = 0.33
Luce/Ufin > limite
246.1/0.33=740.2 > 200
Coefficienti combinatori impiegati:
Pesi strutturali = 1,000 + 0,600 = 1,600
Permanenti portati = 1,000 + 0,600 = 1,600
Variabile A = 0,700 + 0,180 = 0,880
Neve = 0,500 + 0,500 = 1,000
Vento = 0,600 + 0,000 = 0,600

## Superelemento in legno a "Falda 2" 34-(-2468; 359)

Verifiche condotte secondo D.M. 17-01-18 (N.T.C.)

### Dati generali

Superelemento di lunghezza complessiva L= 245.4 composto da:
Asta 321: Trave in legno a falda Falda 2 fili 34-12

### Caratteristiche della sezione

| Descrizione | Tipo | Base | Altezza | Area | Jx | Jy | Wx | Wy |
|---|---|---|---|---|---|---|---|---|
| R 8x10 | Rettangolare | 8 | 10 | 80 | 666.67 | 426.67 | 133.33 | 106.67 |

Materiale: C14 EN 338:2016
β,x = 0; β,y = 0
Rapporto luce/freccia elastica limite = 300
Rapporto luce/freccia elastica differita = 200
Mensola Y: Nessuno; Mensola X: Nessuno
Classe di servizio 1

**Verifica della freccia istantanea totale D.M. 17-01-18 §C4.4.7 Circolare 7 21-01-19**

Sezione ad ascissa 65.4
Kdef = 0
Uinst tot in x = -0.2
Uinst tot in y = -0.3
Uinst tot = 0.3
Luce/Uinst,tot > limite
245.4/0.3=831.3 > 300 Comb: SLE rara, 17

**Verifica della freccia istantanea variabile D.M. 17-01-18 §4.4.7**

Sezione ad ascissa 65.4
Kdef = 0
Uinst var in x = -0.13
Uinst var in y = -0.19
Uinst var = 0.19
Luce/Uinst,var > limite
245.4/0.19=1261.9 > 300 Comb: SLE rara, 17

**Verifica della freccia finale EC5 §4.4.7 - EC5 2.2.3 (3)**

Sezione ad ascissa 65.4
Kdef = 0.6
Ufin in x = -0.24
Ufin in y = -0.36
Ufin = 0.36
Luce/Ufin > limite
245.4/0.36=689.7 > 200
Coefficienti combinatori impiegati:
Pesi strutturali = 1,000 + 0,600 = 1,600
Permanenti portati = 1,000 + 0,600 = 1,600
Variabile A = 0,700 + 0,180 = 0,880
Neve = 0,500 + 0,500 = 1,000
Vento = 0,600 + 0,000 = 0,600

---

## Superelemento in legno a "Falda 2" 39-(-2468; -59)

Verifiche condotte secondo D.M. 17-01-18 (N.T.C.)

**Dati generali**

Superelemento di lunghezza complessiva L= 322.5 composto da:
Asta 242: Trave in legno a falda Falda 2 fili 39-5

**Caratteristiche della sezione**

| Descrizione | Tipo | Base | Altezza | Area | Jx | Jy | Wx | Wy |
|---|---|---|---|---|---|---|---|---|
| R 8x10 | Rettangolare | 8 | 10 | 80 | 666.67 | 426.67 | 133.33 | 106.67 |

Materiale: C14 EN 338:2016
β,x = 0; β,y = 0
Rapporto luce/freccia elastica limite = 300
Rapporto luce/freccia elastica differita = 200
Mensola Y: Nessuno; Mensola X: Nessuno
Classe di servizio 1

**Verifica della freccia istantanea totale D.M. 17-01-18 §C4.4.7 Circolare 7 21-01-19**

Sezione ad ascissa 204.3
Kdef = 0
Uinst tot in x = 0.24
Uinst tot in y = 0.3
Uinst tot = 0.3
Luce/Uinst,tot > limite
322.5/0.3=1092.6 > 300 Comb: SLE rara, 17

**Verifica della freccia istantanea variabile D.M. 17-01-18 §4.4.7**

Sezione ad ascissa 204.3
Kdef = 0
Uinst var in x = 0.16
Uinst var in y = 0.23
Uinst var = 0.23
Luce/Uinst,var > limite
322.5/0.23=1422.5 > 300 Comb: SLE rara, 17

**Verifica della freccia finale EC5 §4.4.7 - EC5 2.2.3 (3)**

Sezione ad ascissa 204.3

Kdef = 0.6
Ufin in x = 0.29
Ufin in y = 0.34
Ufin = 0.34
Luce/Ufin > limite
322.5/0.34=957.9 > 200
Coefficienti combinatori impiegati:
Pesi strutturali = 1,000 + 0,600 = 1,600
Permanenti portati = 1,000 + 0,600 = 1,600
Variabile A = 0,700 + 0,180 = 0,880
Neve = 0,500 + 0,500 = 1,000
Vento = 0,600 + 0,000 = 0,600

## Superelemento in legno a "Falda 2" 40-(-2468; 286)

Verifiche condotte secondo D.M. 17-01-18 (N.T.C.)

### Dati generali

Superelemento di lunghezza complessiva L= 322 composto da:
Asta 320: Trave in legno a falda Falda 2 fili 40-11

### Caratteristiche della sezione

| Descrizione | Tipo | Base | Altezza | Area | Jx | Jy | Wx | Wy |
|---|---|---|---|---|---|---|---|---|
| R 8x10 | Rettangolare | 8 | 10 | 80 | 666.67 | 426.67 | 133.33 | 106.67 |

Materiale: C14 EN 338:2016
β,x = 0; β,y = 0
Rapporto luce/freccia elastica limite = 300
Rapporto luce/freccia elastica differita = 200
Mensola Y: Nessuno; Mensola X: Nessuno
Classe di servizio 1

### Verifica della freccia istantanea totale D.M. 17-01-18 §C4.4.7 Circolare 7 21-01-19

Sezione ad ascissa 85.9
Kdef = 0
Uinst tot in x = -0.38
Uinst tot in y = -0.39
Uinst tot = 0.39
Luce/Uinst,tot > limite
322/0.39=834.3 > 300 Comb: SLE rara, 17

### Verifica della freccia istantanea variabile D.M. 17-01-18 §4.4.7

Sezione ad ascissa 75.1
Kdef = 0
Uinst var in x = -0.25
Uinst var in y = -0.24
Uinst var = 0.25
Luce/Uinst,var > limite
322/0.25=1286.7 > 300 Comb: SLE rara, 8

### Verifica della freccia finale EC5 §4.4.7 - EC5 2.2.3 (3)

Sezione ad ascissa 85.9
Kdef = 0.6
Ufin in x = -0.46
Ufin in y = -0.47
Ufin = 0.47
Luce/Ufin > limite
322/0.47=684.8 > 200
Coefficienti combinatori impiegati:
Pesi strutturali = 1,000 + 0,600 = 1,600
Permanenti portati = 1,000 + 0,600 = 1,600
Variabile A = 0,700 + 0,180 = 0,880
Neve = 0,500 + 0,500 = 1,000
Vento = 0,600 + 0,000 = 0,600

## Superelemento in legno a "Falda 2" 45-(-2468; 7)

Verifiche condotte secondo D.M. 17-01-18 (N.T.C.)

### Dati generali

Superelemento di lunghezza complessiva L= 399 composto da:
Asta 243: Trave in legno a falda Falda 2 fili 45-6

### Caratteristiche della sezione

| Descrizione | Tipo | Base | Altezza | Area | Jx | Jy | Wx | Wy |
|---|---|---|---|---|---|---|---|---|
| R 8x10 | Rettangolare | 8 | 10 | 80 | 666.67 | 426.67 | 133.33 | 106.67 |

Materiale: C14 EN 338:2016
β,x = 0; β,y = 0
Rapporto luce/freccia elastica limite = 300
Rapporto luce/freccia elastica differita = 200
Mensola Y: Nessuno; Mensola X: Nessuno
Classe di servizio 1

### Verifica della freccia istantanea totale D.M. 17-01-18 §C4.4.7 Circolare 7 21-01-19

Sezione ad ascissa 93.1
Kdef = 0
Uinst tot in x = 0.3
Uinst tot in y = -0.11
Uinst tot = 0.3
Luce/Uinst,tot > limite
399/0.3=1313.2 > 300 Comb: SLE rara, 16

### Verifica della freccia istantanea variabile D.M. 17-01-18 §4.4.7

Sezione ad ascissa 93.1
Kdef = 0
Uinst var in x = 0.2
Uinst var in y = -0.04
Uinst var = 0.2
Luce/Uinst,var > limite
399/0.2=2010.1 > 300 Comb: SLE rara, 16

### Verifica della freccia finale EC5 §4.4.7 - EC5 2.2.3 (3)

Sezione ad ascissa 93.1
Kdef = 0.6
Ufin in x = 0.37
Ufin in y = -0.15
Ufin = 0.37
Luce/Ufin > limite
399/0.37=1086.9 > 200
Coefficienti combinatori impiegati:
Pesi strutturali = 1,000 + 0,600 = 1,600
Permanenti portati = 1,000 + 0,600 = 1,600
Variabile A = 0,700 + 0,180 = 0,880
Neve = 0,500 + 0,500 = 1,000

---

## Superelemento in legno a "Falda 2" 51-(-2468; 73)

Verifiche condotte secondo D.M. 17-01-18 (N.T.C.)

### Dati generali

Superelemento di lunghezza complessiva L= 475.4 composto da:
Asta 244: Trave in legno a falda Falda 2 fili 51-7

### Caratteristiche della sezione

| Descrizione | Tipo | Base | Altezza | Area | Jx | Jy | Wx | Wy |
|---|---|---|---|---|---|---|---|---|
| R 8x10 | Rettangolare | 8 | 10 | 80 | 666.67 | 426.67 | 133.33 | 106.67 |

Materiale: C14 EN 338:2016
β,x = 0; β,y = 0
Rapporto luce/freccia elastica limite = 300
Rapporto luce/freccia elastica differita = 200
Mensola Y: Nessuno; Mensola X: Nessuno
Classe di servizio 1

### Verifica della freccia istantanea totale D.M. 17-01-18 §C4.4.7 Circolare 7 21-01-19

Sezione ad ascissa 269.4
Kdef = 0
Uinst tot in x = 0.14
Uinst tot in y = -0.45
Uinst tot = 0.45
Luce/Uinst,tot > limite
475.4/0.45=1061.6 > 300 Comb: SLE rara, 8

### Verifica della freccia istantanea variabile D.M. 17-01-18 §4.4.7

Sezione ad ascissa 269.4

Kdef = 0
Uinst var in x = 0.09
Uinst var in y = -0.22
Uinst var = 0.22
Luce/Uinst,var > limite
475.4/0.22=2164.3 > 300 Comb: SLE rara, 8

**Verifica della freccia finale EC5 §4.4.7 - EC5 2.2.3 (3)**

Sezione ad ascissa 269.4
Kdef = 0.6
Ufin in x = 0.17
Ufin in y = -0.58
Ufin = 0.58
Luce/Ufin > limite
475.4/0.58=813 > 200
Coefficienti combinatori impiegati:
Pesi strutturali = 1,000 + 0,600 = 1,600
Permanenti portati = 1,000 + 0,600 = 1,600
Neve = 0,500 + 0,500 = 1,000

---

## Superelemento in legno a "Falda 2" 52-(-2468; 140)

Verifiche condotte secondo D.M. 17-01-18 (N.T.C.)

**Dati generali**

Superelemento di lunghezza complessiva L= 475.2 composto da:
Asta 318: Trave in legno a falda Falda 2 fili 52-9

**Caratteristiche della sezione**

| Descrizione | Tipo | Base | Altezza | Area | Jx | Jy | Wx | Wy |
|---|---|---|---|---|---|---|---|---|
| R 8x10 | Rettangolare | 8 | 10 | 80 | 666.67 | 426.67 | 133.33 | 106.67 |

Materiale: C14 EN 338:2016
β,x = 0; β,y = 0
Rapporto luce/freccia elastica limite = 300
Rapporto luce/freccia elastica differita = 200
Mensola Y: Nessuno; Mensola X: Nessuno
Classe di servizio 1

**Verifica della freccia istantanea totale D.M. 17-01-18 §C4.4.7 Circolare 7 21-01-19**

Sezione ad ascissa 221.8
Kdef = 0
Uinst tot in x = -0.33
Uinst tot in y = -0.8
Uinst tot = 0.8
Luce/Uinst,tot > limite
475.2/0.8=595.1 > 300 Comb: SLE rara, 9

**Verifica della freccia istantanea variabile D.M. 17-01-18 §4.4.7**

Sezione ad ascissa 221.8
Kdef = 0
Uinst var in x = -0.22
Uinst var in y = -0.45
Uinst var = 0.45
Luce/Uinst,var > limite
475.2/0.45=1048.7 > 300 Comb: SLE rara, 9

**Verifica della freccia finale EC5 §4.4.7 - EC5 2.2.3 (3)**

Sezione ad ascissa 221.8
Kdef = 0.6
Ufin in x = -0.4
Ufin in y = -1.01
Ufin = 1.01
Luce/Ufin > limite
475.2/1.01=472.4 > 200
Coefficienti combinatori impiegati:
Pesi strutturali = 1,000 + 0,600 = 1,600
Permanenti portati = 1,000 + 0,600 = 1,600
Neve = 0,500 + 0,500 = 1,000
Vento = 0,600 + 0,000 = 0,600

---

## Superelemento in legno a "Falda 2" 55-(-2906; -763)

Verifiche condotte secondo D.M. 17-01-18 (N.T.C.)

### Dati generali

Superelemento di lunghezza complessiva L= 675.4 composto da:
asta 113: Trave in legno a falda Falda 2 fili 55-1 (L = 13.7)
asta 114: Trave in legno a falda Falda 2 fili 55-1 (L = 35)
asta 115: Trave in legno a falda Falda 2 fili 55-1 (L = 12.9)
asta 116: Trave in legno a falda Falda 2 fili 55-1 (L = 87.9)
asta 117: Trave in legno a falda Falda 2 fili 55-1 (L = 100.8)
asta 118: Trave in legno a falda Falda 2 fili 55-1 (L = 73.7)
asta 119: Trave in legno a falda Falda 2 fili 55-1 (L = 29.2)
asta 120: Trave in legno a falda Falda 2 fili 55-1 (L = 100.3)
asta 121: Trave in legno a falda Falda 2 fili 55-1 (L = 100.3)
asta 122: Trave in legno a falda Falda 2 fili 55-1 (L = 101.1)
asta 123: Trave in legno a falda Falda 2 fili 55-1 (L = 20.4)

### Caratteristiche della sezione

| Descrizione | Tipo | Base | Altezza | Area | Jx | Jy | Wx | Wy |
|---|---|---|---|---|---|---|---|---|
| R 18x23 | Rettangolare | 18 | 23 | 414 | 18250.5 | 11178 | 1587 | 1242 |

Materiale: C14 EN 338:2016
β,x = 0; β,y = 0
Rapporto luce/freccia elastica limite = 300
Rapporto luce/freccia elastica differita = 200
Mensola Y: Nessuno; Mensola X: Nessuno
Classe di servizio 1

### Verifica della freccia istantanea totale D.M. 17-01-18 §C4.4.7 Circolare 7 21-01-19

Sezione ad ascissa 311.8
Kdef = 0
Uinst tot in x = 0.53
Uinst tot in y = -2.5
Uinst tot = 2.5
Luce/Uinst,tot < limite
675.4/2.5=270.5 < 300 Comb: SLE rara, 9 - NON SODDISFATTA

### Verifica della freccia istantanea variabile D.M. 17-01-18 §4.4.7

Sezione ad ascissa 311.8
Kdef = 0
Uinst var in x = 0.32
Uinst var in y = -1.66
Uinst var = 1.66
Luce/Uinst,var > limite
675.4/1.66=406.5 > 300 Comb: SLE rara, 9

### Verifica della freccia finale EC5 §4.4.7 - EC5 2.2.3 (3)

Sezione ad ascissa 322.6
Kdef = 0.6
Ufin in x = 0.66
Ufin in y = -3
Ufin = 3
Luce/Ufin > limite
675.4/3=225.2 > 200
Coefficienti combinatori impiegati:
Pesi strutturali = 1,000 + 0,600 = 1,600
Permanenti portati = 1,000 + 0,600 = 1,600
Neve = 0,500 + 0,500 = 1,000
Vento = 0,600 + 0,000 = 0,600

---

## Superelemento in legno a "Falda 3" 21-(-1581; -365)

Verifiche condotte secondo D.M. 17-01-18 (N.T.C.)

### Dati generali

Superelemento di lunghezza complessiva L= 711.3 composto da:
asta 104: Trave in legno a falda Falda 3 fili 16-55 (L = 25.3)
asta 105: Trave in legno a falda Falda 3 fili 16-55 (L = 105.8)
asta 106: Trave in legno a falda Falda 3 fili 16-55 (L = 105.8)
asta 107: Trave in legno a falda Falda 3 fili 16-55 (L = 80)
asta 108: Trave in legno a falda Falda 3 fili 16-55 (L = 25.8)
asta 109: Trave in legno a falda Falda 3 fili 16-55 (L = 106.1)

asta 110: Trave in legno a falda Falda 3 fili 16-55 (L = 105.7)
asta 111: Trave in legno a falda Falda 3 fili 16-55 (L = 105.7)
asta 112: Trave in legno a falda Falda 3 fili 16-55 (L = 51.1)

**Caratteristiche della sezione**

| Descrizione | Tipo | Base | Altezza | Area | Jx | Jy | Wx | Wy |
|---|---|---|---|---|---|---|---|---|
| R 18x23 | Rettangolare | 18 | 23 | 414 | 18250.5 | 11178 | 1587 | 1242 |

Materiale: C14 EN 338:2016
β,x = 0; β,y = 0
Rapporto luce/freccia elastica limite = 300
Rapporto luce/freccia elastica differita = 200
Mensola Y: Nessuno; Mensola X: Nessuno
Classe di servizio 1

**Verifica della freccia istantanea totale D.M. 17-01-18 §C4.4.7 Circolare 7 21-01-19**

Sezione ad ascissa 367.4
Kdef = 0
Uinst tot in x = 1.18
Uinst tot in y = -4.01
Uinst tot = 4.01
Luce/Uinst,tot < limite
711.3/4.01=177.6 < 300 Comb: SLE rara, 9 - NON SODDISFATTA

**Verifica della freccia istantanea variabile D.M. 17-01-18 §4.4.7**

Sezione ad ascissa 367.4
Kdef = 0
Uinst var in x = 0.76
Uinst var in y = -2.64
Uinst var = 2.64
Luce/Uinst,var < limite
711.3/2.64=269.7 < 300 Comb: SLE rara, 9 - NON SODDISFATTA

**Verifica della freccia finale EC5 §4.4.7 - EC5 2.2.3 (3)**

Sezione ad ascissa 378.8
Kdef = 0.6
Ufin in x = 1.43
Ufin in y = -4.83
Ufin = 4.83
Luce/Ufin < limite
711.3/4.83=147.4 < 200 - NON SODDISFATTA
Coefficienti combinatori impiegati:
Pesi strutturali = 1,000 + 0,600 = 1,600
Permanenti portati = 1,000 + 0,600 = 1,600
Neve = 0,500 + 0,500 = 1,000
Vento = 0,600 + 0,000 = 0,600

---

## Superelemento in legno a "Falda 3" 25-(-2385; 595)

Verifiche condotte secondo D.M. 17-01-18 (N.T.C.)

**Dati generali**

Superelemento di lunghezza complessiva L= 100.9 composto da:
Asta 315: Trave in legno a falda Falda 3 fili 25-26

**Caratteristiche della sezione**

| Descrizione | Tipo | Base | Altezza | Area | Jx | Jy | Wx | Wy |
|---|---|---|---|---|---|---|---|---|
| R 8x10 | Rettangolare | 8 | 10 | 80 | 666.67 | 426.67 | 133.33 | 106.67 |

Materiale: C14 EN 338:2016
β,x = 0; β,y = 0
Rapporto luce/freccia elastica limite = 300
Rapporto luce/freccia elastica differita = 200
Mensola Y: Nessuno; Mensola X: Nessuno
Classe di servizio 1

**Verifica della freccia istantanea totale D.M. 17-01-18 §C4.4.7 Circolare 7 21-01-19**

Sezione ad ascissa 33.6
Kdef = 0
Uinst tot in x = -0.01
Uinst tot in y = -0.09
Uinst tot = 0.09
Luce/Uinst,tot > limite
100.9/0.09=1062.3 > 300 Comb: SLE rara, 8

**Verifica della freccia istantanea variabile D.M. 17-01-18 §4.4.7**

Sezione ad ascissa 33.6
Kdef = 0
Uinst var in x = -0.01
Uinst var in y = -0.06
Uinst var = 0.06
Luce/Uinst,var > limite
100.9/0.06=1611.6 > 300 Comb: SLE rara, 8

**Verifica della freccia finale EC5 §4.4.7 - EC5 2.2.3 (3)**

Sezione ad ascissa 33.6
Kdef = 0.6
Ufin in x = -0.02
Ufin in y = -0.11
Ufin = 0.11
Luce/Ufin > limite
100.9/0.11=881.9 > 200
Coefficienti combinatori impiegati:
Pesi strutturali = 1,000 + 0,600 = 1,600
Permanenti portati = 1,000 + 0,600 = 1,600
Neve = 0,500 + 0,500 = 1,000

---

## Superelemento in legno a "Falda 3" 29-(-2318; 595)

Verifiche condotte secondo D.M. 17-01-18 (N.T.C.)

**Dati generali**

Superelemento di lunghezza complessiva L= 182.3 composto da:
Asta 314: Trave in legno a falda Falda 3 fili 29-30

**Caratteristiche della sezione**

| Descrizione | Tipo | Base | Altezza | Area | Jx | Jy | Wx | Wy |
|---|---|---|---|---|---|---|---|---|
| R 8x10 | Rettangolare | 8 | 10 | 80 | 666.67 | 426.67 | 133.33 | 106.67 |

Materiale: C14 EN 338:2016
β,x = 0; β,y = 0
Rapporto luce/freccia elastica limite = 300
Rapporto luce/freccia elastica differita = 200
Mensola Y: Nessuno; Mensola X: Nessuno
Classe di servizio 1

**Verifica della freccia istantanea totale D.M. 17-01-18 §C4.4.7 Circolare 7 21-01-19**

Sezione ad ascissa 60.8
Kdef = 0
Uinst tot in x = -0.03
Uinst tot in y = -0.3
Uinst tot = 0.3
Luce/Uinst,tot > limite
182.3/0.3=605.8 > 300 Comb: SLE rara, 8

**Verifica della freccia istantanea variabile D.M. 17-01-18 §4.4.7**

Sezione ad ascissa 60.8
Kdef = 0
Uinst var in x = -0.02
Uinst var in y = -0.2
Uinst var = 0.2
Luce/Uinst,var > limite
182.3/0.2=928.9 > 300 Comb: SLE rara, 8

**Verifica della freccia finale EC5 §4.4.7 - EC5 2.2.3 (3)**

Sezione ad ascissa 60.8
Kdef = 0.6
Ufin in x = -0.04
Ufin in y = -0.36
Ufin = 0.36
Luce/Ufin > limite
182.3/0.36=501.2 > 200
Coefficienti combinatori impiegati:
Pesi strutturali = 1,000 + 0,600 = 1,600
Permanenti portati = 1,000 + 0,600 = 1,600
Neve = 0,500 + 0,500 = 1,000

---

## Superelemento in legno a "Falda 3" 31-(-1341; 377)

Verifiche condotte secondo D.M. 17-01-18 (N.T.C.)

### Dati generali

Superelemento di lunghezza complessiva L= 503.6 composto da:
asta 144: Trave in legno a falda Falda 3 fili 31-87 (L = 84)
asta 145: Trave in legno a falda Falda 3 fili 31-87 (L = 67.6)
asta 146: Trave in legno a falda Falda 3 fili 31-87 (L = 67.6)
asta 147: Trave in legno a falda Falda 3 fili 31-87 (L = 67.6)
asta 148: Trave in legno a falda Falda 3 fili 31-87 (L = 67.6)
asta 149: Trave in legno a falda Falda 3 fili 31-87 (L = 67.6)
asta 150: Trave in legno a falda Falda 3 fili 31-87 (L = 81.9)

### Caratteristiche della sezione

| Descrizione | Tipo | Base | Altezza | Area | Jx | Jy | Wx | Wy |
|---|---|---|---|---|---|---|---|---|
| R 18x23 | Rettangolare | 18 | 23 | 414 | 18250.5 | 11178 | 1587 | 1242 |

Materiale: C14 EN 338:2016
β,x = 0; β,y = 0
Rapporto luce/freccia elastica limite = 300
Rapporto luce/freccia elastica differita = 200
Mensola Y: Nessuno; Mensola X: Nessuno
Classe di servizio 1

### Verifica della freccia istantanea totale D.M. 17-01-18 §C4.4.7 Circolare 7 21-01-19

Sezione ad ascissa 230.4
Kdef = 0
Uinst tot in x = 0.64
Uinst tot in y = -1.41
Uinst tot = 1.41
Luce/Uinst,tot > limite
503.6/1.41=356 > 300 Comb: SLE rara, 17

### Verifica della freccia istantanea variabile D.M. 17-01-18 §4.4.7

Sezione ad ascissa 230.4
Kdef = 0
Uinst var in x = 0.44
Uinst var in y = -0.93
Uinst var = 0.93
Luce/Uinst,var > limite
503.6/0.93=541.1 > 300 Comb: SLE rara, 17

### Verifica della freccia finale EC5 §4.4.7 - EC5 2.2.3 (3)

Sezione ad ascissa 239.9
Kdef = 0.6
Ufin in x = 0.77
Ufin in y = -1.73
Ufin = 1.73
Luce/Ufin > limite
503.6/1.73=291.8 > 200
Coefficienti combinatori impiegati:
Pesi strutturali = 1,000 + 0,600 = 1,600
Permanenti portati = 1,000 + 0,600 = 1,600
Variabile A = 0,700 + 0,180 = 0,880
Neve = 0,500 + 0,500 = 1,000
Vento = 0,600 + 0,000 = 0,600

---

## Superelemento in legno a "Falda 3" 34-(-2250; 595)

Verifiche condotte secondo D.M. 17-01-18 (N.T.C.)

### Dati generali

Superelemento di lunghezza complessiva L= 263.8 composto da:
Asta 313: Trave in legno a falda Falda 3 fili 34-35

### Caratteristiche della sezione

| Descrizione | Tipo | Base | Altezza | Area | Jx | Jy | Wx | Wy |
|---|---|---|---|---|---|---|---|---|
| R 8x10 | Rettangolare | 8 | 10 | 80 | 666.67 | 426.67 | 133.33 | 106.67 |

Materiale: C14 EN 338:2016
β,x = 0; β,y = 0
Rapporto luce/freccia elastica limite = 300
Rapporto luce/freccia elastica differita = 200

Mensola Y: Nessuno; Mensola X: Nessuno
Classe di servizio 1

**Verifica della freccia istantanea totale D.M. 17-01-18 §C4.4.7 Circolare 7 21-01-19**

Sezione ad ascissa 96.7
Kdef = 0
Uinst tot in x = -0.04
Uinst tot in y = -0.79
Uinst tot = 0.79
Luce/Uinst,tot > limite
263.8/0.79=335.6 > 300 Comb: SLE rara, 8

**Verifica della freccia istantanea variabile D.M. 17-01-18 §4.4.7**

Sezione ad ascissa 96.7
Kdef = 0
Uinst var in x = -0.03
Uinst var in y = -0.51
Uinst var = 0.51
Luce/Uinst,var > limite
263.8/0.51=517.6 > 300 Comb: SLE rara, 8

**Verifica della freccia finale EC5 §4.4.7 - EC5 2.2.3 (3)**

Sezione ad ascissa 96.7
Kdef = 0.6
Ufin in x = -0.05
Ufin in y = -0.95
Ufin = 0.95
Luce/Ufin > limite
263.8/0.95=277.1 > 200
Coefficienti combinatori impiegati:
Pesi strutturali = 1,000 + 0,600 = 1,600
Permanenti portati = 1,000 + 0,600 = 1,600
Neve = 0,500 + 0,500 = 1,000

---

## Superelemento in legno a "Falda 3" 40-(-2183; 595)

Verifiche condotte secondo D.M. 17-01-18 (N.T.C.)

**Dati generali**

Superelemento di lunghezza complessiva L= 345.4 composto da:
asta 312: Trave in legno a falda Falda 3 fili 40-41 (L = 101.5)
asta 383: Trave in legno a falda Falda 3 fili 41-42 (L = 243.9)

**Caratteristiche della sezione**

| Descrizione | Tipo | Base | Altezza | Area | Jx | Jy | Wx | Wy |
|---|---|---|---|---|---|---|---|---|
| R 8x10 | Rettangolare | 8 | 10 | 80 | 666.67 | 426.67 | 133.33 | 106.67 |

Materiale: C14 EN 338:2016
β,x = 0; β,y = 0
Rapporto luce/freccia elastica limite = 300
Rapporto luce/freccia elastica differita = 200
Mensola Y: Nessuno; Mensola X: Nessuno
Classe di servizio 1

**Verifica della freccia istantanea totale D.M. 17-01-18 §C4.4.7 Circolare 7 21-01-19**

Sezione ad ascissa 142.2
Kdef = 0
Uinst tot in x = -0.1
Uinst tot in y = -2.19
Uinst tot = 2.19
Luce/Uinst,tot < limite
345.4/2.19=157.7 < 300 Comb: SLE rara, 8 - NON SODDISFATTA

**Verifica della freccia istantanea variabile D.M. 17-01-18 §4.4.7**

Sezione ad ascissa 142.2
Kdef = 0
Uinst var in x = -0.06
Uinst var in y = -1.43
Uinst var = 1.43
Luce/Uinst,var < limite
345.4/1.43=241.3 < 300 Comb: SLE rara, 8 - NON SODDISFATTA

### Verifica della freccia finale EC5 §4.4.7 - EC5 2.2.3 (3)

Sezione ad ascissa 145.6
Kdef = 0.6
Ufin in x = -0.12
Ufin in y = -2.69
Ufin = 2.69
Luce/Ufin < limite
345.4/2.69=128.4 < 200 - NON SODDISFATTA
Coefficienti combinatori impiegati:
Pesi strutturali = 1,000 + 0,600 = 1,600
Permanenti portati = 1,000 + 0,600 = 1,600
Neve = 0,500 + 0,500 = 1,000
Vento = 0,600 + 0,000 = 0,600

---

## Superelemento in legno a "Falda 3" 46-(-2115; 595)

Verifiche condotte secondo D.M. 17-01-18 (N.T.C.)

### Dati generali

Superelemento di lunghezza complessiva L= 426.8 composto da:
asta 310: Trave in legno a falda Falda 3 fili 46-47 (L = 182.9)
asta 381: Trave in legno a falda Falda 3 fili 47-48 (L = 243.9)

### Caratteristiche della sezione

| Descrizione | Tipo | Base | Altezza | Area | Jx | Jy | Wx | Wy |
|---|---|---|---|---|---|---|---|---|
| R 8x10 | Rettangolare | 8 | 10 | 80 | 666.67 | 426.67 | 133.33 | 106.67 |

Materiale: C14 EN 338:2016
β,x = 0; β,y = 0
Rapporto luce/freccia elastica limite = 300
Rapporto luce/freccia elastica differita = 200
Mensola Y: Nessuno; Mensola X: Nessuno
Classe di servizio 1

### Verifica della freccia istantanea totale D.M. 17-01-18 §C4.4.7 Circolare 7 21-01-19

Sezione ad ascissa 199.2
Kdef = 0
Uinst tot in x = -0.09
Uinst tot in y = -3.65
Uinst tot = 3.65
Luce/Uinst,tot < limite
426.8/3.65=117 < 300 Comb: SLE rara, 9 - NON SODDISFATTA

### Verifica della freccia istantanea variabile D.M. 17-01-18 §4.4.7

Sezione ad ascissa 199.2
Kdef = 0
Uinst var in x = -0.05
Uinst var in y = -2.38
Uinst var = 2.38
Luce/Uinst,var < limite
426.8/2.38=179 < 300 Comb: SLE rara, 9 - NON SODDISFATTA

### Verifica della freccia finale EC5 §4.4.7 - EC5 2.2.3 (3)

Sezione ad ascissa 205.3
Kdef = 0.6
Ufin in x = -0.11
Ufin in y = -4.45
Ufin = 4.45
Luce/Ufin < limite
426.8/4.45=95.9 < 200 - NON SODDISFATTA
Coefficienti combinatori impiegati:
Pesi strutturali = 1,000 + 0,600 = 1,600
Permanenti portati = 1,000 + 0,600 = 1,600
Neve = 0,500 + 0,500 = 1,000
Vento = 0,600 + 0,000 = 0,600

---

## Superelemento in legno a "Falda 3" 52-(-2048; 595)

Verifiche condotte secondo D.M. 17-01-18 (N.T.C.)

### Dati generali

Superelemento di lunghezza complessiva L= 508.1 composto da:
asta 311: Trave in legno a falda Falda 3 fili 52-53 (L = 264.2)
asta 382: Trave in legno a falda Falda 3 fili 53-54 (L = 243.9)

### Caratteristiche della sezione

| Descrizione | Tipo | Base | Altezza | Area | Jx | Jy | Wx | Wy |
|---|---|---|---|---|---|---|---|---|
| R 8x10 | Rettangolare | 8 | 10 | 80 | 666.67 | 426.67 | 133.33 | 106.67 |

Materiale: C14 EN 338:2016
β,x = 0; β,y = 0
Rapporto luce/freccia elastica limite = 300
Rapporto luce/freccia elastica differita = 200
Mensola Y: Nessuno; Mensola X: Nessuno
Classe di servizio 1

### Verifica della freccia istantanea totale D.M. 17-01-18 §C4.4.7 Circolare 7 21-01-19

Sezione ad ascissa 255.5
Kdef = 0
Uinst tot in x = 0.08
Uinst tot in y = -4.71
Uinst tot = 4.71
Luce/Uinst,tot < limite
508.1/4.71=107.8 < 300 Comb: SLE rara, 9 - NON SODDISFATTA

### Verifica della freccia istantanea variabile D.M. 17-01-18 §4.4.7

Sezione ad ascissa 264.3
Kdef = 0
Uinst var in x = 0.05
Uinst var in y = -3.07
Uinst var = 3.07
Luce/Uinst,var < limite
508.1/3.07=165.3 < 300 Comb: SLE rara, 9 - NON SODDISFATTA

### Verifica della freccia finale EC5 §4.4.7 - EC5 2.2.3 (3)

Sezione ad ascissa 273.1
Kdef = 0.6
Ufin in x = 0.09
Ufin in y = -5.71
Ufin = 5.71
Luce/Ufin < limite
508.1/5.71=89 < 200 - NON SODDISFATTA
Coefficienti combinatori impiegati:
Pesi strutturali = 1,000 + 0,600 = 1,600
Permanenti portati = 1,000 + 0,600 = 1,600
Neve = 0,500 + 0,500 = 1,000
Vento = 0,600 + 0,000 = 0,600

---

## Superelemento in legno a "Falda 3" 58-(-1980; 595)

Verifiche condotte secondo D.M. 17-01-18 (N.T.C.)

### Dati generali

Superelemento di lunghezza complessiva L= 547.5 composto da:
asta 304: Trave in legno a falda Falda 3 fili 58-59 (L = 303.6)
asta 379: Trave in legno a falda Falda 3 fili 59-60 (L = 243.9)

### Caratteristiche della sezione

| Descrizione | Tipo | Base | Altezza | Area | Jx | Jy | Wx | Wy |
|---|---|---|---|---|---|---|---|---|
| R 8x10 | Rettangolare | 8 | 10 | 80 | 666.67 | 426.67 | 133.33 | 106.67 |

Materiale: C14 EN 338:2016
β,x = 0; β,y = 0
Rapporto luce/freccia elastica limite = 300
Rapporto luce/freccia elastica differita = 200
Mensola Y: Nessuno; Mensola X: Nessuno
Classe di servizio 1

### Verifica della freccia istantanea totale D.M. 17-01-18 §C4.4.7 Circolare 7 21-01-19

Sezione ad ascissa 283.3
Kdef = 0
Uinst tot in x = 0.04
Uinst tot in y = -4.81

Uinst tot = 4.81
Luce/Uinst,tot < limite
547.5/4.81=113.9 < 300 Comb: SLE rara, 9 - NON SODDISFATTA

**Verifica della freccia istantanea variabile D.M. 17-01-18 §4.4.7**

Sezione ad ascissa 283.3
Kdef = 0
Uinst var in x = 0.04
Uinst var in y = -3.11
Uinst var = 3.11
Luce/Uinst,var < limite
547.5/3.11=175.8 < 300 Comb: SLE rara, 9 - NON SODDISFATTA

**Verifica della freccia finale EC5 §4.4.7 - EC5 2.2.3 (3)**

Sezione ad ascissa 283.3
Kdef = 0.6
Ufin in x = 0.04
Ufin in y = -5.82
Ufin = 5.82
Luce/Ufin < limite
547.5/5.82=94 < 200 - NON SODDISFATTA
Coefficienti combinatori impiegati:
Pesi strutturali = 1,000 + 0,600 = 1,600
Permanenti portati = 1,000 + 0,600 = 1,600
Neve = 0,500 + 0,500 = 1,000
Vento = 0,600 + 0,000 = 0,600

---

## Superelemento in legno a "Falda 3" 63-(-1113; -333)

Verifiche condotte secondo D.M. 17-01-18 (N.T.C.)

**Dati generali**

Superelemento di lunghezza complessiva L= 708.1 composto da:
asta 218: Trave in legno a falda Falda 3 fili 60-115 (L = 79.8)
asta 219: Trave in legno a falda Falda 3 fili 60-115 (L = 106.5)
asta 220: Trave in legno a falda Falda 3 fili 60-115 (L = 106.5)
asta 221: Trave in legno a falda Falda 3 fili 60-115 (L = 22.6)
asta 222: Trave in legno a falda Falda 3 fili 60-115 (L = 83.9)
asta 223: Trave in legno a falda Falda 3 fili 60-115 (L = 106.5)
asta 224: Trave in legno a falda Falda 3 fili 60-115 (L = 106.5)
asta 225: Trave in legno a falda Falda 3 fili 60-115 (L = 95.6)

**Caratteristiche della sezione**

| Descrizione | Tipo | Base | Altezza | Area | Jx | Jy | Wx | Wy |
|---|---|---|---|---|---|---|---|---|
| R 18x23 | Rettangolare | 18 | 23 | 414 | 18250.5 | 11178 | 1587 | 1242 |

Materiale: C14 EN 338:2016
β,x = 0; β,y = 0
Rapporto luce/freccia elastica limite = 300
Rapporto luce/freccia elastica differita = 200
Mensola Y: Nessuno; Mensola X: Nessuno
Classe di servizio 1

**Verifica della freccia istantanea totale D.M. 17-01-18 §C4.4.7 Circolare 7 21-01-19**

Sezione ad ascissa 335
Kdef = 0
Uinst tot in x = 0.8
Uinst tot in y = -2.59
Uinst tot = 2.59
Luce/Uinst,tot < limite
708.1/2.59=273.2 < 300 Comb: SLE rara, 8 - NON SODDISFATTA

**Verifica della freccia istantanea variabile D.M. 17-01-18 §4.4.7**

Sezione ad ascissa 332.2
Kdef = 0
Uinst var in x = 0.49
Uinst var in y = -1.64
Uinst var = 1.64
Luce/Uinst,var > limite
708.1/1.64=432.8 > 300 Comb: SLE rara, 8

**Verifica della freccia finale EC5 §4.4.7 - EC5 2.2.3 (3)**

Sezione ad ascissa 345.5

Kdef = 0.6
Ufin in x = 0.98
Ufin in y = -3.16
Ufin = 3.16
Luce/Ufin > limite
708.1/3.16=223.8 > 200
Coefficienti combinatori impiegati:
Pesi strutturali = 1,000 + 0,600 = 1,600
Permanenti portati = 1,000 + 0,600 = 1,600
Neve = 0,500 + 0,500 = 1,000

## Superelemento in legno a "Falda 3" 67-69

Verifiche condotte secondo D.M. 17-01-18 (N.T.C.)

### Dati generali

Superelemento di lunghezza complessiva L= 485.8 composto da:
asta 305: Trave in legno a falda Falda 3 fili 67-68 (L = 303.6)
asta 380: Trave in legno a falda Falda 3 fili 68-69 (L = 182.2)

### Caratteristiche della sezione

| Descrizione | Tipo | Base | Altezza | Area | Jx | Jy | Wx | Wy |
|---|---|---|---|---|---|---|---|---|
| R 8x10 | Rettangolare | 8 | 10 | 80 | 666.67 | 426.67 | 133.33 | 106.67 |

Materiale: C14 EN 338:2016
β,x = 0; β,y = 0
Rapporto luce/freccia elastica limite = 300
Rapporto luce/freccia elastica differita = 200
Mensola Y: Nessuno; Mensola X: Nessuno
Classe di servizio 1

### Verifica della freccia istantanea totale D.M. 17-01-18 §C4.4.7 Circolare 7 21-01-19

Sezione ad ascissa 273.2
Kdef = 0
Uinst tot in x = 0.04
Uinst tot in y = -3.9
Uinst tot = 3.9
Luce/Uinst,tot < limite
485.8/3.9=124.7 < 300 Comb: SLE rara, 9 - NON SODDISFATTA

### Verifica della freccia istantanea variabile D.M. 17-01-18 §4.4.7

Sezione ad ascissa 273.2
Kdef = 0
Uinst var in x = 0.04
Uinst var in y = -2.51
Uinst var = 2.51
Luce/Uinst,var < limite
485.8/2.51=193.6 < 300 Comb: SLE rara, 9 - NON SODDISFATTA

### Verifica della freccia finale EC5 §4.4.7 - EC5 2.2.3 (3)

Sezione ad ascissa 273.2
Kdef = 0.6
Ufin in x = 0.05
Ufin in y = -4.73
Ufin = 4.73
Luce/Ufin < limite
485.8/4.73=102.7 < 200 - NON SODDISFATTA
Coefficienti combinatori impiegati:
Pesi strutturali = 1,000 + 0,600 = 1,600
Permanenti portati = 1,000 + 0,600 = 1,600
Neve = 0,500 + 0,500 = 1,000
Vento = 0,600 + 0,000 = 0,600

## Superelemento in legno a "Falda 3" 76-78

Verifiche condotte secondo D.M. 17-01-18 (N.T.C.)

### Dati generali

Superelemento di lunghezza complessiva L= 403.4 composto da:
asta 306: Trave in legno a falda Falda 3 fili 76-77 (L = 303.6)
asta 378: Trave in legno a falda Falda 3 fili 77-78 (L = 99.8)

Caratteristiche della sezione

| Descrizione | Tipo | Base | Altezza | Area | Jx | Jy | Wx | Wy |
|---|---|---|---|---|---|---|---|---|
| R 8x10 | Rettangolare | 8 | 10 | 80 | 666.67 | 426.67 | 133.33 | 106.67 |

Materiale: C14 EN 338:2016
β,x = 0; β,y = 0
Rapporto luce/freccia elastica limite = 300
Rapporto luce/freccia elastica differita = 200
Mensola Y: Nessuno; Mensola X: Nessuno
Classe di servizio 1

Verifica della freccia istantanea totale D.M. 17-01-18 §C4.4.7 Circolare 7 21-01-19

Sezione ad ascissa 253
Kdef = 0
Uinst tot in x = 0.04
Uinst tot in y = -2.46
Uinst tot = 2.46
Luce/Uinst,tot < limite
403.4/2.46=163.7 < 300 Comb: SLE rara, 9 - NON SODDISFATTA

Verifica della freccia istantanea variabile D.M. 17-01-18 §4.4.7

Sezione ad ascissa 253
Kdef = 0
Uinst var in x = 0.03
Uinst var in y = -1.57
Uinst var = 1.57
Luce/Uinst,var < limite
403.4/1.57=256.3 < 300 Comb: SLE rara, 9 - NON SODDISFATTA

Verifica della freccia finale EC5 §4.4.7 - EC5 2.2.3 (3)

Sezione ad ascissa 242.9
Kdef = 0.6
Ufin in x = 0.04
Ufin in y = -3
Ufin = 3
Luce/Ufin < limite
403.4/3=134.5 < 200 - NON SODDISFATTA
Coefficienti combinatori impiegati:
Pesi strutturali = 1,000 + 0,600 = 1,600
Permanenti portati = 1,000 + 0,600 = 1,600
Neve = 0,500 + 0,500 = 1,000
Vento = 0,600 + 0,000 = 0,600

## Superelemento in legno a "Falda 3" 83-84

Verifiche condotte secondo D.M. 17-01-18 (N.T.C.)

Dati generali

Superelemento di lunghezza complessiva L= 321.1 composto da:
Asta 307: Trave in legno a falda Falda 3 fili 83-84

Caratteristiche della sezione

| Descrizione | Tipo | Base | Altezza | Area | Jx | Jy | Wx | Wy |
|---|---|---|---|---|---|---|---|---|
| R 8x10 | Rettangolare | 8 | 10 | 80 | 666.67 | 426.67 | 133.33 | 106.67 |

Materiale: C14 EN 338:2016
β,x = 0; β,y = 0
Rapporto luce/freccia elastica limite = 300
Rapporto luce/freccia elastica differita = 200
Mensola Y: Nessuno; Mensola X: Nessuno
Classe di servizio 1

Verifica della freccia istantanea totale D.M. 17-01-18 §C4.4.7 Circolare 7 21-01-19

Sezione ad ascissa 214
Kdef = 0
Uinst tot in x = 0.01
Uinst tot in y = -0.87
Uinst tot = 0.87
Luce/Uinst,tot > limite
321.1/0.87=368.9 > 300 Comb: SLE rara, 8

Verifica della freccia istantanea variabile D.M. 17-01-18 §4.4.7

Sezione ad ascissa 214

Kdef = 0
Uinst var in x = 0.01
Uinst var in y = -0.54
Uinst var = 0.54
Luce/Uinst,var > limite
321.1/0.54=599 > 300 Comb: SLE rara, 8

**Verifica della freccia finale EC5 §4.4.7 - EC5 2.2.3 (3)**

Sezione ad ascissa 214
Kdef = 0.6
Ufin in x = 0.01
Ufin in y = -1.07
Ufin = 1.07
Luce/Ufin > limite
321.1/1.07=299.8 > 200
Coefficienti combinatori impiegati:
Pesi strutturali = 1,000 + 0,600 = 1,600
Permanenti portati = 1,000 + 0,600 = 1,600
Neve = 0,500 + 0,500 = 1,000

---

## Superelemento in legno a "Falda 3" 91-92

Verifiche condotte secondo D.M. 17-01-18 (N.T.C.)

**Dati generali**

Superelemento di lunghezza complessiva L= 238.7 composto da:
Asta 308: Trave in legno a falda Falda 3 fili 91-92

**Caratteristiche della sezione**

| Descrizione | Tipo | Base | Altezza | Area | Jx | Jy | Wx | Wy |
|---|---|---|---|---|---|---|---|---|
| R 8x10 | Rettangolare | 8 | 10 | 80 | 666.67 | 426.67 | 133.33 | 106.67 |

Materiale: C14 EN 338:2016
β,x = 0; β,y = 0
Rapporto luce/freccia elastica limite = 300
Rapporto luce/freccia elastica differita = 200
Mensola Y: Nessuno; Mensola X: Nessuno
Classe di servizio 1

**Verifica della freccia istantanea totale D.M. 17-01-18 §C4.4.7 Circolare 7 21-01-19**

Sezione ad ascissa 175
Kdef = 0
Uinst tot in x = -0.02
Uinst tot in y = -0.29
Uinst tot = 0.29
Luce/Uinst,tot > limite
238.7/0.29=822.3 > 300 Comb: SLE rara, 8

**Verifica della freccia istantanea variabile D.M. 17-01-18 §4.4.7**

Sezione ad ascissa 175
Kdef = 0
Uinst var in x = -0.01
Uinst var in y = -0.18
Uinst var = 0.18
Luce/Uinst,var > limite
238.7/0.18=1323.2 > 300 Comb: SLE rara, 8

**Verifica della freccia finale EC5 §4.4.7 - EC5 2.2.3 (3)**

Sezione ad ascissa 175
Kdef = 0.6
Ufin in x = -0.03
Ufin in y = -0.36
Ufin = 0.36
Luce/Ufin > limite
238.7/0.36=670.1 > 200
Coefficienti combinatori impiegati:
Pesi strutturali = 1,000 + 0,600 = 1,600
Permanenti portati = 1,000 + 0,600 = 1,600
Neve = 0,500 + 0,500 = 1,000

---

## Superelemento in legno a "Falda 3" 99-100

Verifiche condotte secondo D.M. 17-01-18 (N.T.C.)

### Dati generali

Superelemento di lunghezza complessiva L= 156.3 composto da:
Asta 309: Trave in legno a falda Falda 3 fili 99-100

### Caratteristiche della sezione

| Descrizione | Tipo | Base | Altezza | Area | Jx | Jy | Wx | Wy |
|---|---|---|---|---|---|---|---|---|
| R 8x10 | Rettangolare | 8 | 10 | 80 | 666.67 | 426.67 | 133.33 | 106.67 |

Materiale: C14 EN 338:2016
β,x = 0; β,y = 0
Rapporto luce/freccia elastica limite = 300
Rapporto luce/freccia elastica differita = 200
Mensola Y: Nessuno; Mensola X: Nessuno
Classe di servizio 1

### Verifica della freccia istantanea totale D.M. 17-01-18 §C4.4.7 Circolare 7 21-01-19

Sezione ad ascissa 41.7
Kdef = 0
Uinst tot in x = -0.01
Uinst tot in y = 0.09
Uinst tot = 0.09
Luce/Uinst,tot > limite
156.3/0.09=1689.1 > 300 Comb: SLE rara, 17

### Verifica della freccia istantanea variabile D.M. 17-01-18 §4.4.7

Sezione ad ascissa 41.7
Kdef = 0
Uinst var in x = -0.01
Uinst var in y = 0.06
Uinst var = 0.06
Luce/Uinst,var > limite
156.3/0.06=2540.6 > 300 Comb: SLE rara, 17

### Verifica della freccia finale EC5 §4.4.7 - EC5 2.2.3 (3)

Sezione ad ascissa 41.7
Kdef = 0.6
Ufin in x = -0.01
Ufin in y = 0.11
Ufin = 0.11
Luce/Ufin > limite
156.3/0.11=1402.2 > 200
Coefficienti combinatori impiegati:
Pesi strutturali = 1,000 + 0,600 = 1,600
Permanenti portati = 1,000 + 0,600 = 1,600
Variabile A = 0,700 + 0,180 = 0,880
Neve = 0,500 + 0,500 = 1,000
Vento = 0,600 + 0,000 = 0,600

---

## Superelemento in legno a "Falda 3" 106-107

Verifiche condotte secondo D.M. 17-01-18 (N.T.C.)

### Dati generali

Superelemento di lunghezza complessiva L= 74 composto da:
Asta 303: Trave in legno a falda Falda 3 fili 106-107

### Caratteristiche della sezione

| Descrizione | Tipo | Base | Altezza | Area | Jx | Jy | Wx | Wy |
|---|---|---|---|---|---|---|---|---|
| R 8x10 | Rettangolare | 8 | 10 | 80 | 666.67 | 426.67 | 133.33 | 106.67 |

Materiale: C14 EN 338:2016
β,x = 0; β,y = 0
Rapporto luce/freccia elastica limite = 300
Rapporto luce/freccia elastica differita = 200
Mensola Y: Nessuno; Mensola X: Nessuno
Classe di servizio 1

### Verifica della freccia istantanea totale D.M. 17-01-18 §C4.4.7 Circolare 7 21-01-19

Sezione ad ascissa 24.7
Kdef = 0

Uinst tot in x = 0
Uinst tot in y = 0.03
Uinst tot = 0.03
Luce/Uinst,tot > limite
74/0.03=2155.5 > 300 Comb: SLE rara, 17

**Verifica della freccia istantanea variabile D.M. 17-01-18 §4.4.7**

Sezione ad ascissa 24.7
Kdef = 0
Uinst var in x = 0
Uinst var in y = 0.02
Uinst var = 0.02
Luce/Uinst,var > limite
74/0.02=3388.7 > 300 Comb: SLE rara, 17

**Verifica della freccia finale EC5 §4.4.7 - EC5 2.2.3 (3)**

Sezione ad ascissa 24.7
Kdef = 0.6
Ufin in x = 0
Ufin in y = 0.04
Ufin = 0.04
Luce/Ufin > limite
74/0.04=1784.3 > 200
Coefficienti combinatori impiegati:
Pesi strutturali = 1,000 + 0,600 = 1,600
Permanenti portati = 1,000 + 0,600 = 1,600
Variabile A = 0,700 + 0,180 = 0,880
Neve = 0,500 + 0,500 = 1,000
Vento = 0,600 + 0,000 = 0,600

---

## Superelemento in legno a "Falda 3"-"Falda 2" 46-(-2468; 213)

Verifiche condotte secondo D.M. 17-01-18 (N.T.C.)

**Dati generali**

Superelemento di lunghezza complessiva L= 398.7 composto da:
Asta 319: Trave in legno a falda Falda 2 fili 46-10

**Caratteristiche della sezione**

| Descrizione | Tipo | Base | Altezza | Area | Jx | Jy | Wx | Wy |
|---|---|---|---|---|---|---|---|---|
| R 8x10 | Rettangolare | 8 | 10 | 80 | 666.67 | 426.67 | 133.33 | 106.67 |

Materiale: C14 EN 338:2016
β,x = 0; β,y = 0
Rapporto luce/freccia elastica limite = 300
Rapporto luce/freccia elastica differita = 200
Mensola Y: Nessuno; Mensola X: Nessuno
Classe di servizio 1

**Verifica della freccia istantanea totale D.M. 17-01-18 §C4.4.7 Circolare 7 21-01-19**

Sezione ad ascissa 146.2
Kdef = 0
Uinst tot in x = -0.5
Uinst tot in y = -0.56
Uinst tot = 0.56
Luce/Uinst,tot > limite
398.7/0.56=717.7 > 300 Comb: SLE rara, 17

**Verifica della freccia istantanea variabile D.M. 17-01-18 §4.4.7**

Sezione ad ascissa 132.9
Kdef = 0
Uinst var in x = -0.33
Uinst var in y = -0.34
Uinst var = 0.34
Luce/Uinst,var > limite
398.7/0.34=1183.6 > 300 Comb: SLE rara, 17

**Verifica della freccia finale EC5 §4.4.7 - EC5 2.2.3 (3)**

Sezione ad ascissa 146.2
Kdef = 0.6
Ufin in x = -0.61
Ufin in y = -0.69
Ufin = 0.69

Luce/Ufin > limite
398.7/0.69=579.1 > 200
Coefficienti combinatori impiegati:
Pesi strutturali = 1,000 + 0,600 = 1,600
Permanenti portati = 1,000 + 0,600 = 1,600
Variabile A = 0,700 + 0,180 = 0,880
Neve = 0,500 + 0,500 = 1,000
Vento = 0,600 + 0,000 = 0,600

## Superelemento in legno a "Falda 3"-"Falda 2" 55-(-2468; 105)

Verifiche condotte secondo D.M. 17-01-18 (N.T.C.)

### Dati generali

Superelemento di lunghezza complessiva L= 512.3 composto da:
Asta 317: Trave in legno a falda Falda 2 fili 55-8

### Caratteristiche della sezione

| Descrizione | Tipo | Base | Altezza | Area | Jx | Jy | Wx | Wy |
|---|---|---|---|---|---|---|---|---|
| R 8x10 | Rettangolare | 8 | 10 | 80 | 666.67 | 426.67 | 133.33 | 106.67 |

Materiale: C14 EN 338:2016
β,x = 0; β,y = 0
Rapporto luce/freccia elastica limite = 300
Rapporto luce/freccia elastica differita = 200
Mensola Y: Nessuno; Mensola X: Nessuno
Classe di servizio 1

### Verifica della freccia istantanea totale D.M. 17-01-18 §C4.4.7 Circolare 7 21-01-19

Sezione ad ascissa 256.2
Kdef = 0
Uinst tot in x = 0.07
Uinst tot in y = -0.91
Uinst tot = 0.91
Luce/Uinst,tot > limite
512.3/0.91=562.8 > 300 Comb: SLE rara, 8

### Verifica della freccia istantanea variabile D.M. 17-01-18 §4.4.7

Sezione ad ascissa 256.2
Kdef = 0
Uinst var in x = 0.05
Uinst var in y = -0.51
Uinst var = 0.51
Luce/Uinst,var > limite
512.3/0.51=1002.8 > 300 Comb: SLE rara, 8

### Verifica della freccia finale EC5 §4.4.7 - EC5 2.2.3 (3)

Sezione ad ascissa 256.2
Kdef = 0.6
Ufin in x = 0.09
Ufin in y = -1.15
Ufin = 1.15
Luce/Ufin > limite
512.3/1.15=445.5 > 200
Coefficienti combinatori impiegati:
Pesi strutturali = 1,000 + 0,600 = 1,600
Permanenti portati = 1,000 + 0,600 = 1,600
Neve = 0,500 + 0,500 = 1,000

## Superelemento in legno a "Falda 4" 70-71

Verifiche condotte secondo D.M. 17-01-18 (N.T.C.)

### Dati generali

Superelemento di lunghezza complessiva L= 72.2 composto da:
asta 301: Trave in legno a falda Falda 4 fili 70-71 (L = 57.8)
asta 302: Trave in legno a falda Falda 4 fili 70-71 (L = 14.4)

### Caratteristiche della sezione

| Descrizione | Tipo | Base | Altezza | Area | Jx | Jy | Wx | Wy |
|---|---|---|---|---|---|---|---|---|
| R 8x10 | Rettangolare | 8 | 10 | 80 | 666.67 | 426.67 | 133.33 | 106.67 |

Materiale: C14 EN 338:2016

β,x = 0; β,y = 0
Rapporto luce/freccia elastica limite = 300
Rapporto luce/freccia elastica differita = 200
Mensola Y: Nessuno; Mensola X: Nessuno
Classe di servizio 1

**Verifica della freccia istantanea totale D.M. 17-01-18 §C4.4.7 Circolare 7 21-01-19**

Sezione ad ascissa 21.2
Kdef = 0
Uinst tot in x = 0.01
Uinst tot in y = -0.07
Uinst tot = 0.07
Luce/Uinst,tot > limite
72.2/0.07=1096.3 > 300 Comb: SLE rara, 8

**Verifica della freccia istantanea variabile D.M. 17-01-18 §4.4.7**

Sezione ad ascissa 21.2
Kdef = 0
Uinst var in x = 0.01
Uinst var in y = -0.04
Uinst var = 0.04
Luce/Uinst,var > limite
72.2/0.04=1667.2 > 300 Comb: SLE rara, 8

**Verifica della freccia finale EC5 §4.4.7 - EC5 2.2.3 (3)**

Sezione ad ascissa 21.2
Kdef = 0.6
Ufin in x = 0.01
Ufin in y = -0.08
Ufin = 0.08
Luce/Ufin > limite
72.2/0.08=908.1 > 200
Coefficienti combinatori impiegati:
Pesi strutturali = 1,000 + 0,600 = 1,600
Permanenti portati = 1,000 + 0,600 = 1,600
Neve = 0,500 + 0,500 = 1,000

---

## Superelemento in legno a "Falda 4" 79-80

Verifiche condotte secondo D.M. 17-01-18 (N.T.C.)

**Dati generali**

Superelemento di lunghezza complessiva L= 149.3 composto da:
asta 299: Trave in legno a falda Falda 4 fili 79-80 (L = 134.8)
asta 300: Trave in legno a falda Falda 4 fili 79-80 (L = 14.4)

**Caratteristiche della sezione**

| Descrizione | Tipo | Base | Altezza | Area | Jx | Jy | Wx | Wy |
|---|---|---|---|---|---|---|---|---|
| R 8x10 | Rettangolare | 8 | 10 | 80 | 666.67 | 426.67 | 133.33 | 106.67 |

Materiale: C14 EN 338:2016
β,x = 0; β,y = 0
Rapporto luce/freccia elastica limite = 300
Rapporto luce/freccia elastica differita = 200
Mensola Y: Nessuno; Mensola X: Nessuno
Classe di servizio 1

**Verifica della freccia istantanea totale D.M. 17-01-18 §C4.4.7 Circolare 7 21-01-19**

Sezione ad ascissa 40.4
Kdef = 0
Uinst tot in x = 0.03
Uinst tot in y = -0.14
Uinst tot = 0.14
Luce/Uinst,tot > limite
149.3/0.14=1038.7 > 300 Comb: SLE rara, 8

**Verifica della freccia istantanea variabile D.M. 17-01-18 §4.4.7**

Sezione ad ascissa 40.4
Kdef = 0
Uinst var in x = 0.02
Uinst var in y = -0.09
Uinst var = 0.09
Luce/Uinst,var > limite

149.3/0.09=1587 > 300 Comb: SLE rara, 8

**Verifica della freccia finale EC5 §4.4.7 - EC5 2.2.3 (3)**

Sezione ad ascissa 153.7
Kdef = 0.6
Ufin in x = 0.03
Ufin in y = -0.21
Ufin = 0.21
Luce/Ufin > limite
149.3/0.21=722.5 > 200
Coefficienti combinatori impiegati:
Pesi strutturali = 1,000 + 0,600 = 1,600
Permanenti portati = 1,000 + 0,600 = 1,600
Neve = 0,500 + 0,500 = 1,000

## Superelemento in legno a "Falda 4" 85-86

Verifiche condotte secondo D.M. 17-01-18 (N.T.C.)

**Dati generali**

Superelemento di lunghezza complessiva L= 226.3 composto da:
asta 297: Trave in legno a falda Falda 4 fili 85-86 (L = 211.8)
asta 298: Trave in legno a falda Falda 4 fili 85-86 (L = 14.4)

**Caratteristiche della sezione**

| Descrizione | Tipo | Base | Altezza | Area | Jx | Jy | Wx | Wy |
|---|---|---|---|---|---|---|---|---|
| R 8x10 | Rettangolare | 8 | 10 | 80 | 666.67 | 426.67 | 133.33 | 106.67 |

Materiale: C14 EN 338:2016
β,x = 0; β,y = 0
Rapporto luce/freccia elastica limite = 300
Rapporto luce/freccia elastica differita = 200
Mensola Y: Nessuno; Mensola X: Nessuno
Classe di servizio 1

**Verifica della freccia istantanea totale D.M. 17-01-18 §C4.4.7 Circolare 7 21-01-19**

Sezione ad ascissa 70.6
Kdef = 0
Uinst tot in x = 0.04
Uinst tot in y = -0.54
Uinst tot = 0.54
Luce/Uinst,tot > limite
226.3/0.54=420 > 300 Comb: SLE rara, 8

**Verifica della freccia istantanea variabile D.M. 17-01-18 §4.4.7**

Sezione ad ascissa 70.6
Kdef = 0
Uinst var in x = 0.03
Uinst var in y = -0.35
Uinst var = 0.35
Luce/Uinst,var > limite
226.3/0.35=642.6 > 300 Comb: SLE rara, 8

**Verifica della freccia finale EC5 §4.4.7 - EC5 2.2.3 (3)**

Sezione ad ascissa 70.6
Kdef = 0.6
Ufin in x = 0.05
Ufin in y = -0.65
Ufin = 0.65
Luce/Ufin > limite
226.3/0.65=347.7 > 200
Coefficienti combinatori impiegati:
Pesi strutturali = 1,000 + 0,600 = 1,600
Permanenti portati = 1,000 + 0,600 = 1,600
Neve = 0,500 + 0,500 = 1,000

## Superelemento in legno a "Falda 4" 93-94

Verifiche condotte secondo D.M. 17-01-18 (N.T.C.)

**Dati generali**

Superelemento di lunghezza complessiva L= 303.3 composto da:

asta 295: Trave in legno a falda Falda 4 fili 93-94 (L = 288.9)
asta 296: Trave in legno a falda Falda 4 fili 93-94 (L = 14.4)

**Caratteristiche della sezione**

| Descrizione | Tipo | Base | Altezza | Area | Jx | Jy | Wx | Wy |
|---|---|---|---|---|---|---|---|---|
| R 8x10 | Rettangolare | 8 | 10 | 80 | 666.67 | 426.67 | 133.33 | 106.67 |

Materiale: C14 EN 338:2016
β,x = 0; β,y = 0
Rapporto luce/freccia elastica limite = 300
Rapporto luce/freccia elastica differita = 200
Mensola Y: Nessuno; Mensola X: Nessuno
Classe di servizio 1

**Verifica della freccia istantanea totale D.M. 17-01-18 §C4.4.7 Circolare 7 21-01-19**

Sezione ad ascissa 105.9
Kdef = 0
Uinst tot in x = 0.07
Uinst tot in y = -1.63
Uinst tot = 1.63
Luce/Uinst,tot < limite
303.3/1.63=186.4 < 300 Comb: SLE rara, 8 - NON SODDISFATTA

**Verifica della freccia istantanea variabile D.M. 17-01-18 §4.4.7**

Sezione ad ascissa 105.9
Kdef = 0
Uinst var in x = 0.05
Uinst var in y = -1.06
Uinst var = 1.06
Luce/Uinst,var < limite
303.3/1.06=284.9 < 300 Comb: SLE rara, 8 - NON SODDISFATTA

**Verifica della freccia finale EC5 §4.4.7 - EC5 2.2.3 (3)**

Sezione ad ascissa 105.9
Kdef = 0.6
Ufin in x = 0.09
Ufin in y = -1.97
Ufin = 1.97
Luce/Ufin < limite
303.3/1.97=154.3 < 200 - NON SODDISFATTA
Coefficienti combinatori impiegati:
Pesi strutturali = 1,000 + 0,600 = 1,600
Permanenti portati = 1,000 + 0,600 = 1,600
Neve = 0,500 + 0,500 = 1,000

---

## Superelemento in legno a "Falda 4" 95-198

Verifiche condotte secondo D.M. 17-01-18 (N.T.C.)

**Dati generali**

Superelemento di lunghezza complessiva L= 893.5 composto da:
asta 151: Trave in legno a falda Falda 4 fili 95-198 (L = 43.4)
asta 152: Trave in legno a falda Falda 4 fili 95-198 (L = 67.6)
asta 153: Trave in legno a falda Falda 4 fili 95-198 (L = 67.6)
asta 154: Trave in legno a falda Falda 4 fili 95-198 (L = 67.6)
asta 155: Trave in legno a falda Falda 4 fili 95-198 (L = 67.6)
asta 156: Trave in legno a falda Falda 4 fili 95-198 (L = 67.6)
asta 157: Trave in legno a falda Falda 4 fili 95-198 (L = 67.6)
asta 158: Trave in legno a falda Falda 4 fili 95-198 (L = 67.6)
asta 159: Trave in legno a falda Falda 4 fili 95-198 (L = 67.6)
asta 160: Trave in legno a falda Falda 4 fili 95-198 (L = 67.6)
asta 161: Trave in legno a falda Falda 4 fili 95-198 (L = 67.6)
asta 162: Trave in legno a falda Falda 4 fili 95-198 (L = 67.6)
asta 163: Trave in legno a falda Falda 4 fili 95-198 (L = 67.6)
asta 164: Trave in legno a falda Falda 4 fili 95-198 (L = 39.5)

**Caratteristiche della sezione**

| Descrizione | Tipo | Base | Altezza | Area | Jx | Jy | Wx | Wy |
|---|---|---|---|---|---|---|---|---|
| R 18x23 | Rettangolare | 18 | 23 | 414 | 18250.5 | 11178 | 1587 | 1242 |

Materiale: C14 EN 338:2016
β,x = 0; β,y = 0
Rapporto luce/freccia elastica limite = 300
Rapporto luce/freccia elastica differita = 200

Mensola Y: Nessuno; Mensola X: Nessuno
Classe di servizio 1

**Verifica della freccia istantanea totale D.M. 17-01-18 §C4.4.7 Circolare 7 21-01-19**

Sezione ad ascissa 457.7
Kdef = 0
Uinst tot in x = 3.25
Uinst tot in y = -7.89
Uinst tot = 7.89
Luce/Uinst,tot < limite
893.5/7.89=113.3 < 300 Comb: SLE rara, 16 - NON SODDISFATTA

**Verifica della freccia istantanea variabile D.M. 17-01-18 §4.4.7**

Sezione ad ascissa 457.7
Kdef = 0
Uinst var in x = 2.15
Uinst var in y = -5.23
Uinst var = 5.23
Luce/Uinst,var < limite
893.5/5.23=170.7 < 300 Comb: SLE rara, 16 - NON SODDISFATTA

**Verifica della freccia finale EC5 §4.4.7 - EC5 2.2.3 (3)**

Sezione ad ascissa 472.7
Kdef = 0.6
Ufin in x = 3.92
Ufin in y = -9.48
Ufin = 9.48
Luce/Ufin < limite
893.5/9.48=94.3 < 200 - NON SODDISFATTA
Coefficienti combinatori impiegati:
Pesi strutturali = 1,000 + 0,600 = 1,600
Permanenti portati = 1,000 + 0,600 = 1,600
Variabile A = 0,700 + 0,180 = 0,880
Neve = 0,500 + 0,500 = 1,000

## Superelemento in legno a "Falda 4" 101-103

Verifiche condotte secondo D.M. 17-01-18 (N.T.C.)

**Dati generali**

Superelemento di lunghezza complessiva L= 380.3 composto da:
asta 294: Trave in legno a falda Falda 4 fili 101-102 (L = 49.4)
asta 376: Trave in legno a falda Falda 4 fili 102-103 (L = 316.5)
asta 377: Trave in legno a falda Falda 4 fili 102-103 (L = 14.4)

**Caratteristiche della sezione**

| Descrizione | Tipo | Base | Altezza | Area | Jx | Jy | Wx | Wy |
|---|---|---|---|---|---|---|---|---|
| R 8x10 | Rettangolare | 8 | 10 | 80 | 666.67 | 426.67 | 133.33 | 106.67 |

Materiale: C14 EN 338:2016
β,x = 0; β,y = 0
Rapporto luce/freccia elastica limite = 300
Rapporto luce/freccia elastica differita = 200
Mensola Y: Nessuno; Mensola X: Nessuno
Classe di servizio 1

**Verifica della freccia istantanea totale D.M. 17-01-18 §C4.4.7 Circolare 7 21-01-19**

Sezione ad ascissa 133.8
Kdef = 0
Uinst tot in x = -0.1
Uinst tot in y = -4.09
Uinst tot = 4.09
Luce/Uinst,tot < limite
380.3/4.09=92.9 < 300 Comb: SLE rara, 8 - NON SODDISFATTA

**Verifica della freccia istantanea variabile D.M. 17-01-18 §4.4.7**

Sezione ad ascissa 133.8
Kdef = 0
Uinst var in x = -0.07
Uinst var in y = -2.69
Uinst var = 2.69
Luce/Uinst,var < limite
380.3/2.69=141.3 < 300 Comb: SLE rara, 8 - NON SODDISFATTA

### Verifica della freccia finale EC5 §4.4.7 - EC5 2.2.3 (3)

Sezione ad ascissa 135.5
Kdef = 0.6
Ufin in x = -0.13
Ufin in y = -5
Ufin = 5
Luce/Ufin < limite
380.3/5=76.1 < 200 - NON SODDISFATTA
Coefficienti combinatori impiegati:
Pesi strutturali = 1,000 + 0,600 = 1,600
Permanenti portati = 1,000 + 0,600 = 1,600
Neve = 0,500 + 0,500 = 1,000

---

## Superelemento in legno a "Falda 4" 108-110

Verifiche condotte secondo D.M. 17-01-18 (N.T.C.)

### Dati generali

Superelemento di lunghezza complessiva L= 457.3 composto da:
asta 293: Trave in legno a falda Falda 4 fili 108-109 (L = 126.4)
asta 374: Trave in legno a falda Falda 4 fili 109-110 (L = 316.5)
asta 375: Trave in legno a falda Falda 4 fili 109-110 (L = 14.4)

### Caratteristiche della sezione

| Descrizione | Tipo | Base | Altezza | Area | Jx | Jy | Wx | Wy |
|---|---|---|---|---|---|---|---|---|
| R 8x10 | Rettangolare | 8 | 10 | 80 | 666.67 | 426.67 | 133.33 | 106.67 |

Materiale: C14 EN 338:2016
β,x = 0; β,y = 0
Rapporto luce/freccia elastica limite = 300
Rapporto luce/freccia elastica differita = 200
Mensola Y: Nessuno; Mensola X: Nessuno
Classe di servizio 1

### Verifica della freccia istantanea totale D.M. 17-01-18 §C4.4.7 Circolare 7 21-01-19

Sezione ad ascissa 168.6
Kdef = 0
Uinst tot in x = -0.2
Uinst tot in y = -8.02
Uinst tot = 8.02
Luce/Uinst,tot < limite
457.3/8.02=57 < 300 Comb: SLE rara, 8 - NON SODDISFATTA

### Verifica della freccia istantanea variabile D.M. 17-01-18 §4.4.7

Sezione ad ascissa 168.6
Kdef = 0
Uinst var in x = -0.14
Uinst var in y = -5.29
Uinst var = 5.29
Luce/Uinst,var < limite
457.3/5.29=86.5 < 300 Comb: SLE rara, 8 - NON SODDISFATTA

### Verifica della freccia finale EC5 §4.4.7 - EC5 2.2.3 (3)

Sezione ad ascissa 172.8
Kdef = 0.6
Ufin in x = -0.23
Ufin in y = -9.77
Ufin = 9.77
Luce/Ufin < limite
457.3/9.77=46.8 < 200 - NON SODDISFATTA
Coefficienti combinatori impiegati:
Pesi strutturali = 1,000 + 0,600 = 1,600
Permanenti portati = 1,000 + 0,600 = 1,600
Neve = 0,500 + 0,500 = 1,000

---

## Superelemento in legno a "Falda 4" 116-118

Verifiche condotte secondo D.M. 17-01-18 (N.T.C.)

### Dati generali

Superelemento di lunghezza complessiva L= 534.3 composto da:

asta 292: Trave in legno a falda Falda 4 fili 116-117 (L = 203.5)
asta 372: Trave in legno a falda Falda 4 fili 117-118 (L = 316.5)
asta 373: Trave in legno a falda Falda 4 fili 117-118 (L = 14.4)

**Caratteristiche della sezione**

| Descrizione | Tipo | Base | Altezza | Area | Jx | Jy | Wx | Wy |
|---|---|---|---|---|---|---|---|---|
| R 8x10 | Rettangolare | 8 | 10 | 80 | 666.67 | 426.67 | 133.33 | 106.67 |

Materiale: C14 EN 338:2016
β,x = 0; β,y = 0
Rapporto luce/freccia elastica limite = 300
Rapporto luce/freccia elastica differita = 200
Mensola Y: Nessuno; Mensola X: Nessuno
Classe di servizio 1

**Verifica della freccia istantanea totale D.M. 17-01-18 §C4.4.7 Circolare 7 21-01-19**

Sezione ad ascissa 214
Kdef = 0
Uinst tot in x = -0.19
Uinst tot in y = -12.48
Uinst tot = 12.48
Luce/Uinst,tot < limite
534.3/12.48=42.8 < 300 Comb: SLE rara, 8 - NON SODDISFATTA

**Verifica della freccia istantanea variabile D.M. 17-01-18 §4.4.7**

Sezione ad ascissa 214
Kdef = 0
Uinst var in x = -0.14
Uinst var in y = -8.23
Uinst var = 8.23
Luce/Uinst,var < limite
534.3/8.23=64.9 < 300 Comb: SLE rara, 8 - NON SODDISFATTA

**Verifica della freccia finale EC5 §4.4.7 - EC5 2.2.3 (3)**

Sezione ad ascissa 220.8
Kdef = 0.6
Ufin in x = -0.22
Ufin in y = -15.12
Ufin = 15.12
Luce/Ufin < limite
534.3/15.12=35.3 < 200 - NON SODDISFATTA
Coefficienti combinatori impiegati:
Pesi strutturali = 1,000 + 0,600 = 1,600
Permanenti portati = 1,000 + 0,600 = 1,600
Neve = 0,500 + 0,500 = 1,000

---

## Superelemento in legno a "Falda 4" 123-125

Verifiche condotte secondo D.M. 17-01-18 (N.T.C.)

**Dati generali**

Superelemento di lunghezza complessiva L= 627.5 composto da:
asta 280: Trave in legno a falda Falda 4 fili 123-124 (L = 296.6)
asta 364: Trave in legno a falda Falda 4 fili 124-125 (L = 316.5)
asta 365: Trave in legno a falda Falda 4 fili 124-125 (L = 14.4)

**Caratteristiche della sezione**

| Descrizione | Tipo | Base | Altezza | Area | Jx | Jy | Wx | Wy |
|---|---|---|---|---|---|---|---|---|
| R 8x10 | Rettangolare | 8 | 10 | 80 | 666.67 | 426.67 | 133.33 | 106.67 |

Materiale: C14 EN 338:2016
β,x = 0; β,y = 0
Rapporto luce/freccia elastica limite = 300
Rapporto luce/freccia elastica differita = 200
Mensola Y: Nessuno; Mensola X: Nessuno
Classe di servizio 1

**Verifica della freccia istantanea totale D.M. 17-01-18 §C4.4.7 Circolare 7 21-01-19**

Sezione ad ascissa 296.6
Kdef = 0
Uinst tot in x = -0.18
Uinst tot in y = -17.88
Uinst tot = 17.88
Luce/Uinst,tot < limite

627.5/17.88=35.1 < 300 Comb: SLE rara, 8 - NON SODDISFATTA

**Verifica della freccia istantanea variabile D.M. 17-01-18 §4.4.7**

Sezione ad ascissa 296.6
Kdef = 0
Uinst var in x = -0.16
Uinst var in y = -11.8
Uinst var = 11.8
Luce/Uinst,var < limite
627.5/11.8=53.2 < 300 Comb: SLE rara, 8 - NON SODDISFATTA

**Verifica della freccia finale EC5 §4.4.7 - EC5 2.2.3 (3)**

Sezione ad ascissa 306.4
Kdef = 0.6
Ufin in x = -0.19
Ufin in y = -21.55
Ufin = 21.55
Luce/Ufin < limite
627.5/21.55=29.1 < 200 - NON SODDISFATTA
Coefficienti combinatori impiegati:
Pesi strutturali = 1,000 + 0,600 = 1,600
Permanenti portati = 1,000 + 0,600 = 1,600
Neve = 0,500 + 0,500 = 1,000

---

## Superelemento in legno a "Falda 4" 126-61

Verifiche condotte secondo D.M. 17-01-18 (N.T.C.)

**Dati generali**

Superelemento di lunghezza complessiva L= 834.6 composto da:
asta 93: Trave in legno a falda Falda 4 fili 126-61 (L = 123.8)
asta 94: Trave in legno a falda Falda 4 fili 126-61 (L = 102.4)
asta 95: Trave in legno a falda Falda 4 fili 126-61 (L = 102.4)
asta 96: Trave in legno a falda Falda 4 fili 126-61 (L = 65.7)
asta 97: Trave in legno a falda Falda 4 fili 126-61 (L = 36.7)
asta 98: Trave in legno a falda Falda 4 fili 126-61 (L = 102.4)
asta 99: Trave in legno a falda Falda 4 fili 126-61 (L = 102.4)
asta 100: Trave in legno a falda Falda 4 fili 126-61 (L = 102.5)
asta 101: Trave in legno a falda Falda 4 fili 126-61 (L = 66.4)
asta 102: Trave in legno a falda Falda 4 fili 126-61 (L = 18.9)
asta 103: Trave in legno a falda Falda 4 fili 126-61 (L = 10.9)

**Caratteristiche della sezione**

| Descrizione | Tipo | Base | Altezza | Area | Jx | Jy | Wx | Wy |
|---|---|---|---|---|---|---|---|---|
| R 18x23 | Rettangolare | 18 | 23 | 414 | 18250.5 | 11178 | 1587 | 1242 |

Materiale: C14 EN 338:2016
β,x = 0; β,y = 0
Rapporto luce/freccia elastica limite = 300
Rapporto luce/freccia elastica differita = 200
Mensola Y: Nessuno; Mensola X: Nessuno
Classe di servizio 1

**Verifica della freccia istantanea totale D.M. 17-01-18 §C4.4.7 Circolare 7 21-01-19**

Sezione ad ascissa 357.2
Kdef = 0
Uinst tot in x = -3.53
Uinst tot in y = -11.25
Uinst tot = 11.25
Luce/Uinst,tot < limite
834.6/11.25=74.2 < 300 Comb: SLE rara, 8 - NON SODDISFATTA

**Verifica della freccia istantanea variabile D.M. 17-01-18 §4.4.7**

Sezione ad ascissa 357.2
Kdef = 0
Uinst var in x = -2.38
Uinst var in y = -7.39
Uinst var = 7.39
Luce/Uinst,var < limite
834.6/7.39=112.9 < 300 Comb: SLE rara, 8 - NON SODDISFATTA

**Verifica della freccia finale EC5 §4.4.7 - EC5 2.2.3 (3)**

Sezione ad ascissa 368.1

Kdef = 0.6
Ufin in x = -4.23
Ufin in y = -13.57
Ufin = 13.57
Luce/Ufin < limite
834.6/13.57=61.5 < 200 - NON SODDISFATTA
Coefficienti combinatori impiegati:
Pesi strutturali = 1,000 + 0,600 = 1,600
Permanenti portati = 1,000 + 0,600 = 1,600
Neve = 0,500 + 0,500 = 1,000

## Superelemento in legno a "Falda 4" 134-136

Verifiche condotte secondo D.M. 17-01-18 (N.T.C.)

### Dati generali

Superelemento di lunghezza complessiva L= 627.5 composto da:
asta 279: Trave in legno a falda Falda 4 fili 134-135 (L = 296.6)
asta 362: Trave in legno a falda Falda 4 fili 135-136 (L = 316.5)
asta 363: Trave in legno a falda Falda 4 fili 135-136 (L = 14.4)

### Caratteristiche della sezione

| Descrizione | Tipo | Base | Altezza | Area | Jx | Jy | Wx | Wy |
|---|---|---|---|---|---|---|---|---|
| R 8x10 | Rettangolare | 8 | 10 | 80 | 666.67 | 426.67 | 133.33 | 106.67 |

Materiale: C14 EN 338:2016
β,x = 0; β,y = 0
Rapporto luce/freccia elastica limite = 300
Rapporto luce/freccia elastica differita = 200
Mensola Y: Nessuno; Mensola X: Nessuno
Classe di servizio 1

### Verifica della freccia istantanea totale D.M. 17-01-18 §C4.4.7 Circolare 7 21-01-19

Sezione ad ascissa 307.1
Kdef = 0
Uinst tot in x = -0.22
Uinst tot in y = -19.26
Uinst tot = 19.26
Luce/Uinst,tot < limite
627.5/19.26=32.6 < 300 Comb: SLE rara, 8 - NON SODDISFATTA

### Verifica della freccia istantanea variabile D.M. 17-01-18 §4.4.7

Sezione ad ascissa 307.1
Kdef = 0
Uinst var in x = -0.18
Uinst var in y = -12.71
Uinst var = 12.71
Luce/Uinst,var < limite
627.5/12.71=49.4 < 300 Comb: SLE rara, 8 - NON SODDISFATTA

### Verifica della freccia finale EC5 §4.4.7 - EC5 2.2.3 (3)

Sezione ad ascissa 317
Kdef = 0.6
Ufin in x = -0.24
Ufin in y = -23.21
Ufin = 23.21
Luce/Ufin < limite
627.5/23.21=27 < 200 - NON SODDISFATTA
Coefficienti combinatori impiegati:
Pesi strutturali = 1,000 + 0,600 = 1,600
Permanenti portati = 1,000 + 0,600 = 1,600
Neve = 0,500 + 0,500 = 1,000

## Superelemento in legno a "Falda 4" 141-143

Verifiche condotte secondo D.M. 17-01-18 (N.T.C.)

### Dati generali

Superelemento di lunghezza complessiva L= 627.5 composto da:
asta 278: Trave in legno a falda Falda 4 fili 141-142 (L = 296.6)
asta 360: Trave in legno a falda Falda 4 fili 142-143 (L = 316.5)
asta 361: Trave in legno a falda Falda 4 fili 142-143 (L = 14.4)

### Caratteristiche della sezione

| Descrizione | Tipo | Base | Altezza | Area | Jx | Jy | Wx | Wy |
|---|---|---|---|---|---|---|---|---|
| R 8x10 | Rettangolare | 8 | 10 | 80 | 666.67 | 426.67 | 133.33 | 106.67 |

Materiale: C14 EN 338:2016
β,x = 0; β,y = 0
Rapporto luce/freccia elastica limite = 300
Rapporto luce/freccia elastica differita = 200
Mensola Y: Nessuno; Mensola X: Nessuno
Classe di servizio 1

### Verifica della freccia istantanea totale D.M. 17-01-18 §C4.4.7 Circolare 7 21-01-19

Sezione ad ascissa 307.1
Kdef = 0
Uinst tot in x = -0.23
Uinst tot in y = -20.22
Uinst tot = 20.22
Luce/Uinst,tot < limite
627.5/20.22=31 < 300 Comb: SLE rara, 8 - NON SODDISFATTA

### Verifica della freccia istantanea variabile D.M. 17-01-18 §4.4.7

Sezione ad ascissa 307.1
Kdef = 0
Uinst var in x = -0.18
Uinst var in y = -13.35
Uinst var = 13.35
Luce/Uinst,var < limite
627.5/13.35=47 < 300 Comb: SLE rara, 8 - NON SODDISFATTA

### Verifica della freccia finale EC5 §4.4.7 - EC5 2.2.3 (3)

Sezione ad ascissa 316.9
Kdef = 0.6
Ufin in x = -0.26
Ufin in y = -24.37
Ufin = 24.37
Luce/Ufin < limite
627.5/24.37=25.7 < 200 - NON SODDISFATTA
Coefficienti combinatori impiegati:
Pesi strutturali = 1,000 + 0,600 = 1,600
Permanenti portati = 1,000 + 0,600 = 1,600
Neve = 0,500 + 0,500 = 1,000

---

## Superelemento in legno a "Falda 4" 150-152

Verifiche condotte secondo D.M. 17-01-18 (N.T.C.)

### Dati generali

Superelemento di lunghezza complessiva L= 627.5 composto da:
asta 277: Trave in legno a falda Falda 4 fili 150-151 (L = 296.6)
asta 358: Trave in legno a falda Falda 4 fili 151-152 (L = 316.5)
asta 359: Trave in legno a falda Falda 4 fili 151-152 (L = 14.4)

### Caratteristiche della sezione

| Descrizione | Tipo | Base | Altezza | Area | Jx | Jy | Wx | Wy |
|---|---|---|---|---|---|---|---|---|
| R 8x10 | Rettangolare | 8 | 10 | 80 | 666.67 | 426.67 | 133.33 | 106.67 |

Materiale: C14 EN 338:2016
β,x = 0; β,y = 0
Rapporto luce/freccia elastica limite = 300
Rapporto luce/freccia elastica differita = 200
Mensola Y: Nessuno; Mensola X: Nessuno
Classe di servizio 1

### Verifica della freccia istantanea totale D.M. 17-01-18 §C4.4.7 Circolare 7 21-01-19

Sezione ad ascissa 307.1
Kdef = 0
Uinst tot in x = -0.21
Uinst tot in y = -20.59
Uinst tot = 20.59
Luce/Uinst,tot < limite
627.5/20.59=30.5 < 300 Comb: SLE rara, 8 - NON SODDISFATTA

**Verifica della freccia istantanea variabile D.M. 17-01-18 §4.4.7**

Sezione ad ascissa 307.1
Kdef = 0
Uinst var in x = -0.17
Uinst var in y = -13.58
Uinst var = 13.58
Luce/Uinst,var < limite
627.5/13.58=46.2 < 300 Comb: SLE rara, 8 - NON SODDISFATTA

**Verifica della freccia finale EC5 §4.4.7 - EC5 2.2.3 (3)**

Sezione ad ascissa 316.9
Kdef = 0.6
Ufin in x = -0.24
Ufin in y = -24.81
Ufin = 24.81
Luce/Ufin < limite
627.5/24.81=25.3 < 200 - NON SODDISFATTA
Coefficienti combinatori impiegati:
Pesi strutturali = 1,000 + 0,600 = 1,600
Permanenti portati = 1,000 + 0,600 = 1,600
Neve = 0,500 + 0,500 = 1,000

---

## Superelemento in legno a "Falda 4" 155-157

Verifiche condotte secondo D.M. 17-01-18 (N.T.C.)

**Dati generali**

Superelemento di lunghezza complessiva L= 627.5 composto da:
asta 276: Trave in legno a falda Falda 4 fili 155-156 (L = 296.6)
asta 356: Trave in legno a falda Falda 4 fili 156-157 (L = 316.5)
asta 357: Trave in legno a falda Falda 4 fili 156-157 (L = 14.4)

**Caratteristiche della sezione**

| Descrizione | Tipo | Base | Altezza | Area | Jx | Jy | Wx | Wy |
|---|---|---|---|---|---|---|---|---|
| R 8x10 | Rettangolare | 8 | 10 | 80 | 666.67 | 426.67 | 133.33 | 106.67 |

Materiale: C14 EN 338:2016
β,x = 0; β,y = 0
Rapporto luce/freccia elastica limite = 300
Rapporto luce/freccia elastica differita = 200
Mensola Y: Nessuno; Mensola X: Nessuno
Classe di servizio 1

**Verifica della freccia istantanea totale D.M. 17-01-18 §C4.4.7 Circolare 7 21-01-19**

Sezione ad ascissa 317.7
Kdef = 0
Uinst tot in x = -0.19
Uinst tot in y = -20.42
Uinst tot = 20.42
Luce/Uinst,tot < limite
627.5/20.42=30.7 < 300 Comb: SLE rara, 8 - NON SODDISFATTA

**Verifica della freccia istantanea variabile D.M. 17-01-18 §4.4.7**

Sezione ad ascissa 317.7
Kdef = 0
Uinst var in x = -0.16
Uinst var in y = -13.47
Uinst var = 13.47
Luce/Uinst,var < limite
627.5/13.47=46.6 < 300 Comb: SLE rara, 8 - NON SODDISFATTA

**Verifica della freccia finale EC5 §4.4.7 - EC5 2.2.3 (3)**

Sezione ad ascissa 327.5
Kdef = 0.6
Ufin in x = -0.21
Ufin in y = -24.61
Ufin = 24.61
Luce/Ufin < limite
627.5/24.61=25.5 < 200 - NON SODDISFATTA
Coefficienti combinatori impiegati:
Pesi strutturali = 1,000 + 0,600 = 1,600
Permanenti portati = 1,000 + 0,600 = 1,600

Neve = 0,500 + 0,500 = 1,000

## Superelemento in legno a "Falda 4" 163-165

Verifiche condotte secondo D.M. 17-01-18 (N.T.C.)

### Dati generali

Superelemento di lunghezza complessiva L= 627.5 composto da:
asta 275: Trave in legno a falda Falda 4 fili 163-164 (L = 296.6)
asta 354: Trave in legno a falda Falda 4 fili 164-165 (L = 316.5)
asta 355: Trave in legno a falda Falda 4 fili 164-165 (L = 14.4)

### Caratteristiche della sezione

| Descrizione | Tipo | Base | Altezza | Area | Jx | Jy | Wx | Wy |
|---|---|---|---|---|---|---|---|---|
| R 8x10 | Rettangolare | 8 | 10 | 80 | 666.67 | 426.67 | 133.33 | 106.67 |

Materiale: C14 EN 338:2016
β,x = 0; β,y = 0
Rapporto luce/freccia elastica limite = 300
Rapporto luce/freccia elastica differita = 200
Mensola Y: Nessuno; Mensola X: Nessuno
Classe di servizio 1

### Verifica della freccia istantanea totale D.M. 17-01-18 §C4.4.7 Circolare 7 21-01-19

Sezione ad ascissa 317.7
Kdef = 0
Uinst tot in x = -0.2
Uinst tot in y = -19.67
Uinst tot = 19.67
Luce/Uinst,tot < limite
627.5/19.67=31.9 < 300 Comb: SLE rara, 8 - NON SODDISFATTA

### Verifica della freccia istantanea variabile D.M. 17-01-18 §4.4.7

Sezione ad ascissa 317.7
Kdef = 0
Uinst var in x = -0.16
Uinst var in y = -12.97
Uinst var = 12.97
Luce/Uinst,var < limite
627.5/12.97=48.4 < 300 Comb: SLE rara, 8 - NON SODDISFATTA

### Verifica della freccia finale EC5 §4.4.7 - EC5 2.2.3 (3)

Sezione ad ascissa 327.5
Kdef = 0.6
Ufin in x = -0.22
Ufin in y = -23.71
Ufin = 23.71
Luce/Ufin < limite
627.5/23.71=26.5 < 200 - NON SODDISFATTA
Coefficienti combinatori impiegati:
Pesi strutturali = 1,000 + 0,600 = 1,600
Permanenti portati = 1,000 + 0,600 = 1,600
Neve = 0,500 + 0,500 = 1,000

## Superelemento in legno a "Falda 4" 169-233

Verifiche condotte secondo D.M. 17-01-18 (N.T.C.)

### Dati generali

Superelemento di lunghezza complessiva L= 834.7 composto da:
asta 82: Trave in legno a falda Falda 4 fili 169-233 (L = 129.7)
asta 83: Trave in legno a falda Falda 4 fili 169-233 (L = 102.4)
asta 84: Trave in legno a falda Falda 4 fili 169-233 (L = 102.4)
asta 85: Trave in legno a falda Falda 4 fili 169-233 (L = 59.9)
asta 86: Trave in legno a falda Falda 4 fili 169-233 (L = 42.6)
asta 87: Trave in legno a falda Falda 4 fili 169-233 (L = 102.4)
asta 88: Trave in legno a falda Falda 4 fili 169-233 (L = 102.5)
asta 89: Trave in legno a falda Falda 4 fili 169-233 (L = 102.5)
asta 90: Trave in legno a falda Falda 4 fili 169-233 (L = 60.5)
asta 91: Trave in legno a falda Falda 4 fili 169-233 (L = 18.9)
asta 92: Trave in legno a falda Falda 4 fili 169-233 (L = 10.9)

Caratteristiche della sezione

| Descrizione | Tipo | Base | Altezza | Area | Jx | Jy | Wx | Wy |
|---|---|---|---|---|---|---|---|---|
| R 18x23 | Rettangolare | 18 | 23 | 414 | 18250.5 | 11178 | 1587 | 1242 |

Materiale: C14 EN 338:2016
β,x = 0; β,y = 0
Rapporto luce/freccia elastica limite = 300
Rapporto luce/freccia elastica differita = 200
Mensola Y: Nessuno; Mensola X: Nessuno
Classe di servizio 1

Verifica della freccia istantanea totale D.M. 17-01-18 §C4.4.7 Circolare 7 21-01-19

Sezione ad ascissa 362.5
Kdef = 0
Uinst tot in x = 2.98
Uinst tot in y = -11.16
Uinst tot = 11.16
Luce/Uinst,tot < limite
834.7/11.16=74.8 < 300 Comb: SLE rara, 8 - NON SODDISFATTA

Verifica della freccia istantanea variabile D.M. 17-01-18 §4.4.7

Sezione ad ascissa 362.5
Kdef = 0
Uinst var in x = 1.9
Uinst var in y = -7.33
Uinst var = 7.33
Luce/Uinst,var < limite
834.7/7.33=113.8 < 300 Comb: SLE rara, 8 - NON SODDISFATTA

Verifica della freccia finale EC5 §4.4.7 - EC5 2.2.3 (3)

Sezione ad ascissa 373.6
Kdef = 0.6
Ufin in x = 3.62
Ufin in y = -13.47
Ufin = 13.47
Luce/Ufin < limite
834.7/13.47=62 < 200 - NON SODDISFATTA
Coefficienti combinatori impiegati:
Pesi strutturali = 1,000 + 0,600 = 1,600
Permanenti portati = 1,000 + 0,600 = 1,600
Neve = 0,500 + 0,500 = 1,000

## Superelemento in legno a "Falda 4" 172-174

Verifiche condotte secondo D.M. 17-01-18 (N.T.C.)

Dati generali

Superelemento di lunghezza complessiva L= 627.5 composto da:
asta 274: Trave in legno a falda Falda 4 fili 172-173 (L = 296.6)
asta 352: Trave in legno a falda Falda 4 fili 173-174 (L = 316.5)
asta 353: Trave in legno a falda Falda 4 fili 173-174 (L = 14.4)

Caratteristiche della sezione

| Descrizione | Tipo | Base | Altezza | Area | Jx | Jy | Wx | Wy |
|---|---|---|---|---|---|---|---|---|
| R 8x10 | Rettangolare | 8 | 10 | 80 | 666.67 | 426.67 | 133.33 | 106.67 |

Materiale: C14 EN 338:2016
β,x = 0; β,y = 0
Rapporto luce/freccia elastica limite = 300
Rapporto luce/freccia elastica differita = 200
Mensola Y: Nessuno; Mensola X: Nessuno
Classe di servizio 1

Verifica della freccia istantanea totale D.M. 17-01-18 §C4.4.7 Circolare 7 21-01-19

Sezione ad ascissa 317.7
Kdef = 0
Uinst tot in x = -0.19
Uinst tot in y = -18.43
Uinst tot = 18.43
Luce/Uinst,tot < limite
627.5/18.43=34 < 300 Comb: SLE rara, 8 - NON SODDISFATTA

**Verifica della freccia istantanea variabile D.M. 17-01-18 §4.4.7**

Sezione ad ascissa 317.7
Kdef = 0
Uinst var in x = -0.17
Uinst var in y = -12.15
Uinst var = 12.15
Luce/Uinst,var < limite
627.5/12.15=51.7 < 300 Comb: SLE rara, 8 - NON SODDISFATTA

**Verifica della freccia finale EC5 §4.4.7 - EC5 2.2.3 (3)**

Sezione ad ascissa 327.5
Kdef = 0.6
Ufin in x = -0.21
Ufin in y = -22.23
Ufin = 22.23
Luce/Ufin < limite
627.5/22.23=28.2 < 200 - NON SODDISFATTA
Coefficienti combinatori impiegati:
Pesi strutturali = 1,000 + 0,600 = 1,600
Permanenti portati = 1,000 + 0,600 = 1,600
Neve = 0,500 + 0,500 = 1,000

---

## Superelemento in legno a "Falda 4" 181-183

Verifiche condotte secondo D.M. 17-01-18 (N.T.C.)

**Dati generali**

Superelemento di lunghezza complessiva L= 529.9 composto da:
asta 291: Trave in legno a falda Falda 4 fili 181-182 (L = 199)
asta 370: Trave in legno a falda Falda 4 fili 182-183 (L = 316.5)
asta 371: Trave in legno a falda Falda 4 fili 182-183 (L = 14.4)

**Caratteristiche della sezione**

| Descrizione | Tipo | Base | Altezza | Area | Jx | Jy | Wx | Wy |
|---|---|---|---|---|---|---|---|---|
| R 8x10 | Rettangolare | 8 | 10 | 80 | 666.67 | 426.67 | 133.33 | 106.67 |

Materiale: C14 EN 338:2016
β,x = 0; β,y = 0
Rapporto luce/freccia elastica limite = 300
Rapporto luce/freccia elastica differita = 200
Mensola Y: Nessuno; Mensola X: Nessuno
Classe di servizio 1

**Verifica della freccia istantanea totale D.M. 17-01-18 §C4.4.7 Circolare 7 21-01-19**

Sezione ad ascissa 241.2
Kdef = 0
Uinst tot in x = -0.16
Uinst tot in y = -13.37
Uinst tot = 13.37
Luce/Uinst,tot < limite
529.9/13.37=39.6 < 300 Comb: SLE rara, 8 - NON SODDISFATTA

**Verifica della freccia istantanea variabile D.M. 17-01-18 §4.4.7**

Sezione ad ascissa 241.2
Kdef = 0
Uinst var in x = -0.13
Uinst var in y = -8.81
Uinst var = 8.81
Luce/Uinst,var < limite
529.9/8.81=60.1 < 300 Comb: SLE rara, 8 - NON SODDISFATTA

**Verifica della freccia finale EC5 §4.4.7 - EC5 2.2.3 (3)**

Sezione ad ascissa 247.9
Kdef = 0.6
Ufin in x = -0.17
Ufin in y = -16.21
Ufin = 16.21
Luce/Ufin < limite
529.9/16.21=32.7 < 200 - NON SODDISFATTA
Coefficienti combinatori impiegati:
Pesi strutturali = 1,000 + 0,600 = 1,600
Permanenti portati = 1,000 + 0,600 = 1,600

Neve = 0,500 + 0,500 = 1,000

## Superelemento in legno a "Falda 4" 188-190

Verifiche condotte secondo D.M. 17-01-18 (N.T.C.)

### Dati generali

Superelemento di lunghezza complessiva L= 452.9 composto da:
asta 290: Trave in legno a falda Falda 4 fili 188-189 (L = 122)
asta 368: Trave in legno a falda Falda 4 fili 189-190 (L = 316.5)
asta 369: Trave in legno a falda Falda 4 fili 189-190 (L = 14.4)

### Caratteristiche della sezione

| Descrizione | Tipo | Base | Altezza | Area | Jx | Jy | Wx | Wy |
|---|---|---|---|---|---|---|---|---|
| R 8x10 | Rettangolare | 8 | 10 | 80 | 666.67 | 426.67 | 133.33 | 106.67 |

Materiale: C14 EN 338:2016
β,x = 0; β,y = 0
Rapporto luce/freccia elastica limite = 300
Rapporto luce/freccia elastica differita = 200
Mensola Y: Nessuno; Mensola X: Nessuno
Classe di servizio 1

### Verifica della freccia istantanea totale D.M. 17-01-18 §C4.4.7 Circolare 7 21-01-19

Sezione ad ascissa 185.3
Kdef = 0
Uinst tot in x = -0.1
Uinst tot in y = -8.75
Uinst tot = 8.75
Luce/Uinst,tot < limite
452.9/8.75=51.8 < 300 Comb: SLE rara, 8 - NON SODDISFATTA

### Verifica della freccia istantanea variabile D.M. 17-01-18 §4.4.7

Sezione ad ascissa 185.3
Kdef = 0
Uinst var in x = -0.09
Uinst var in y = -5.76
Uinst var = 5.76
Luce/Uinst,var < limite
452.9/5.76=78.6 < 300 Comb: SLE rara, 8 - NON SODDISFATTA

### Verifica della freccia finale EC5 §4.4.7 - EC5 2.2.3 (3)

Sezione ad ascissa 189.4
Kdef = 0.6
Ufin in x = -0.11
Ufin in y = -10.65
Ufin = 10.65
Luce/Ufin < limite
452.9/10.65=42.5 < 200 - NON SODDISFATTA
Coefficienti combinatori impiegati:
Pesi strutturali = 1,000 + 0,600 = 1,600
Permanenti portati = 1,000 + 0,600 = 1,600
Neve = 0,500 + 0,500 = 1,000

## Superelemento in legno a "Falda 4" 195-197

Verifiche condotte secondo D.M. 17-01-18 (N.T.C.)

### Dati generali

Superelemento di lunghezza complessiva L= 375.9 composto da:
asta 289: Trave in legno a falda Falda 4 fili 195-196 (L = 45)
asta 366: Trave in legno a falda Falda 4 fili 196-197 (L = 316.5)
asta 367: Trave in legno a falda Falda 4 fili 196-197 (L = 14.4)

### Caratteristiche della sezione

| Descrizione | Tipo | Base | Altezza | Area | Jx | Jy | Wx | Wy |
|---|---|---|---|---|---|---|---|---|
| R 8x10 | Rettangolare | 8 | 10 | 80 | 666.67 | 426.67 | 133.33 | 106.67 |

Materiale: C14 EN 338:2016
β,x = 0; β,y = 0
Rapporto luce/freccia elastica limite = 300
Rapporto luce/freccia elastica differita = 200
Mensola Y: Nessuno; Mensola X: Nessuno

Classe di servizio 1

**Verifica della freccia istantanea totale D.M. 17-01-18 §C4.4.7 Circolare 7 21-01-19**

Sezione ad ascissa 150.5
Kdef = 0
Uinst tot in x = -0.05
Uinst tot in y = -4.67
Uinst tot = 4.67
Luce/Uinst,tot < limite
375.9/4.67=80.5 < 300 Comb: SLE rara, 8 - NON SODDISFATTA

**Verifica della freccia istantanea variabile D.M. 17-01-18 §4.4.7**

Sezione ad ascissa 150.5
Kdef = 0
Uinst var in x = -0.04
Uinst var in y = -3.07
Uinst var = 3.07
Luce/Uinst,var < limite
375.9/3.07=122.4 < 300 Comb: SLE rara, 8 - NON SODDISFATTA

**Verifica della freccia finale EC5 §4.4.7 - EC5 2.2.3 (3)**

Sezione ad ascissa 152
Kdef = 0.6
Ufin in x = -0.05
Ufin in y = -5.69
Ufin = 5.69
Luce/Ufin < limite
375.9/5.69=66 < 200 - NON SODDISFATTA
Coefficienti combinatori impiegati:
Pesi strutturali = 1,000 + 0,600 = 1,600
Permanenti portati = 1,000 + 0,600 = 1,600
Neve = 0,500 + 0,500 = 1,000

---

## Superelemento in legno a "Falda 4" 205-206

Verifiche condotte secondo D.M. 17-01-18 (N.T.C.)

**Dati generali**

Superelemento di lunghezza complessiva L= 298.9 composto da:
asta 287: Trave in legno a falda Falda 4 fili 205-206 (L = 284.4)
asta 288: Trave in legno a falda Falda 4 fili 205-206 (L = 14.4)

**Caratteristiche della sezione**

| Descrizione | Tipo | Base | Altezza | Area | Jx | Jy | Wx | Wy |
|---|---|---|---|---|---|---|---|---|
| R 8x10 | Rettangolare | 8 | 10 | 80 | 666.67 | 426.67 | 133.33 | 106.67 |

Materiale: C14 EN 338:2016
β,x = 0; β,y = 0
Rapporto luce/freccia elastica limite = 300
Rapporto luce/freccia elastica differita = 200
Mensola Y: Nessuno; Mensola X: Nessuno
Classe di servizio 1

**Verifica della freccia istantanea totale D.M. 17-01-18 §C4.4.7 Circolare 7 21-01-19**

Sezione ad ascissa 113.8
Kdef = 0
Uinst tot in x = -0.01
Uinst tot in y = -1.97
Uinst tot = 1.97
Luce/Uinst,tot < limite
298.9/1.97=151.9 < 300 Comb: SLE rara, 8 - NON SODDISFATTA

**Verifica della freccia istantanea variabile D.M. 17-01-18 §4.4.7**

Sezione ad ascissa 113.8
Kdef = 0
Uinst var in x = -0.01
Uinst var in y = -1.29
Uinst var = 1.29
Luce/Uinst,var < limite
298.9/1.29=232.1 < 300 Comb: SLE rara, 8 - NON SODDISFATTA

**Verifica della freccia finale EC5 §4.4.7 - EC5 2.2.3 (3)**

Sezione ad ascissa 113.8

Kdef = 0.6
Ufin in x = -0.01
Ufin in y = -2.38
Ufin = 2.38
Luce/Ufin < limite
298.9/2.38=125.8 < 200 - NON SODDISFATTA
Coefficienti combinatori impiegati:
Pesi strutturali = 1,000 + 0,600 = 1,600
Permanenti portati = 1,000 + 0,600 = 1,600
Neve = 0,500 + 0,500 = 1,000

## Superelemento in legno a "Falda 4" 214-215

Verifiche condotte secondo D.M. 17-01-18 (N.T.C.)

### Dati generali

Superelemento di lunghezza complessiva L= 221.9 composto da:
asta 285: Trave in legno a falda Falda 4 fili 214-215 (L = 207.4)
asta 286: Trave in legno a falda Falda 4 fili 214-215 (L = 14.4)

### Caratteristiche della sezione

| Descrizione | Tipo | Base | Altezza | Area | Jx | Jy | Wx | Wy |
|---|---|---|---|---|---|---|---|---|
| R 8x10 | Rettangolare | 8 | 10 | 80 | 666.67 | 426.67 | 133.33 | 106.67 |

Materiale: C14 EN 338:2016
β,x = 0; β,y = 0
Rapporto luce/freccia elastica limite = 300
Rapporto luce/freccia elastica differita = 200
Mensola Y: Nessuno; Mensola X: Nessuno
Classe di servizio 1

### Verifica della freccia istantanea totale D.M. 17-01-18 §C4.4.7 Circolare 7 21-01-19

Sezione ad ascissa 83
Kdef = 0
Uinst tot in x = -0.03
Uinst tot in y = -0.71
Uinst tot = 0.71
Luce/Uinst,tot > limite
221.9/0.71=314.3 > 300 Comb: SLE rara, 8

### Verifica della freccia istantanea variabile D.M. 17-01-18 §4.4.7

Sezione ad ascissa 83
Kdef = 0
Uinst var in x = -0.02
Uinst var in y = -0.46
Uinst var = 0.46
Luce/Uinst,var > limite
221.9/0.46=480.7 > 300 Comb: SLE rara, 8

### Verifica della freccia finale EC5 §4.4.7 - EC5 2.2.3 (3)

Sezione ad ascissa 83
Kdef = 0.6
Ufin in x = -0.03
Ufin in y = -0.85
Ufin = 0.85
Luce/Ufin > limite
221.9/0.85=260.2 > 200
Coefficienti combinatori impiegati:
Pesi strutturali = 1,000 + 0,600 = 1,600
Permanenti portati = 1,000 + 0,600 = 1,600
Neve = 0,500 + 0,500 = 1,000

## Superelemento in legno a "Falda 4" 221-222

Verifiche condotte secondo D.M. 17-01-18 (N.T.C.)

### Dati generali

Superelemento di lunghezza complessiva L= 144.8 composto da:
asta 283: Trave in legno a falda Falda 4 fili 221-222 (L = 130.4)
asta 284: Trave in legno a falda Falda 4 fili 221-222 (L = 14.4)

### Caratteristiche della sezione

| Descrizione | Tipo | Base | Altezza | Area | Jx | Jy | Wx | Wy |
|---|---|---|---|---|---|---|---|---|
| R 8x10 | Rettangolare | 8 | 10 | 80 | 666.67 | 426.67 | 133.33 | 106.67 |

Materiale: C14 EN 338:2016
β,x = 0; β,y = 0
Rapporto luce/freccia elastica limite = 300
Rapporto luce/freccia elastica differita = 200
Mensola Y: Nessuno; Mensola X: Nessuno
Classe di servizio 1

### Verifica della freccia istantanea totale D.M. 17-01-18 §C4.4.7 Circolare 7 21-01-19

Sezione ad ascissa 47.8
Kdef = 0
Uinst tot in x = -0.02
Uinst tot in y = -0.22
Uinst tot = 0.22
Luce/Uinst,tot > limite
144.8/0.22=649.1 > 300 Comb: SLE rara, 8

### Verifica della freccia istantanea variabile D.M. 17-01-18 §4.4.7

Sezione ad ascissa 47.8
Kdef = 0
Uinst var in x = -0.02
Uinst var in y = -0.15
Uinst var = 0.15
Luce/Uinst,var > limite
144.8/0.15=986.8 > 300 Comb: SLE rara, 8

### Verifica della freccia finale EC5 §4.4.7 - EC5 2.2.3 (3)

Sezione ad ascissa 47.8
Kdef = 0.6
Ufin in x = -0.03
Ufin in y = -0.27
Ufin = 0.27
Luce/Ufin > limite
144.8/0.27=538.2 > 200
Coefficienti combinatori impiegati:
Pesi strutturali = 1,000 + 0,600 = 1,600
Permanenti portati = 1,000 + 0,600 = 1,600
Neve = 0,500 + 0,500 = 1,000

---

## Superelemento in legno a "Falda 4" 230-231

Verifiche condotte secondo D.M. 17-01-18 (N.T.C.)

### Dati generali

Superelemento di lunghezza complessiva L= 67.8 composto da:
asta 281: Trave in legno a falda Falda 4 fili 230-231 (L = 53.4)
asta 282: Trave in legno a falda Falda 4 fili 230-231 (L = 14.4)

### Caratteristiche della sezione

| Descrizione | Tipo | Base | Altezza | Area | Jx | Jy | Wx | Wy |
|---|---|---|---|---|---|---|---|---|
| R 8x10 | Rettangolare | 8 | 10 | 80 | 666.67 | 426.67 | 133.33 | 106.67 |

Materiale: C14 EN 338:2016
β,x = 0; β,y = 0
Rapporto luce/freccia elastica limite = 300
Rapporto luce/freccia elastica differita = 200
Mensola Y: Nessuno; Mensola X: Nessuno
Classe di servizio 1

### Verifica della freccia istantanea totale D.M. 17-01-18 §C4.4.7 Circolare 7 21-01-19

Sezione ad ascissa 21.4
Kdef = 0
Uinst tot in x = -0.01
Uinst tot in y = -0.09
Uinst tot = 0.09
Luce/Uinst,tot > limite
67.8/0.09=715.5 > 300 Comb: SLE rara, 8

### Verifica della freccia istantanea variabile D.M. 17-01-18 §4.4.7

Sezione ad ascissa 21.4

Kdef = 0
Uinst var in x = -0.01
Uinst var in y = -0.06
Uinst var = 0.06
Luce/Uinst,var > limite
67.8/0.06=1076.1 > 300 Comb: SLE rara, 8

**Verifica della freccia finale EC5 §4.4.7 - EC5 2.2.3 (3)**

Sezione ad ascissa 23.1
Kdef = 0.6
Ufin in x = -0.02
Ufin in y = -0.11
Ufin = 0.11
Luce/Ufin > limite
67.8/0.11=594.9 > 200
Coefficienti combinatori impiegati:
Pesi strutturali = 1,000 + 0,600 = 1,600
Permanenti portati = 1,000 + 0,600 = 1,600
Neve = 0,500 + 0,500 = 1,000

---

## Superelemento in legno a "Falda 5" 241-287

Verifiche condotte secondo D.M. 17-01-18 (N.T.C.)

**Dati generali**

Superelemento di lunghezza complessiva L= 546.4 composto da:
asta 253: Trave in legno a falda Falda 5 fili 241-287 (L = 523.2)
asta 254: Trave in legno a falda Falda 5 fili 241-287 (L = 23.2)

**Caratteristiche della sezione**

| Descrizione | Tipo | Base | Altezza | Area | Jx | Jy | Wx | Wy |
|---|---|---|---|---|---|---|---|---|
| R 8x10 | Rettangolare | 8 | 10 | 80 | 666.67 | 426.67 | 133.33 | 106.67 |

Materiale: C14 EN 338:2016
β,x = 0; β,y = 0
Rapporto luce/freccia elastica limite = 300
Rapporto luce/freccia elastica differita = 200
Mensola Y: Nessuno; Mensola X: Nessuno
Classe di servizio 1

**Verifica della freccia istantanea totale D.M. 17-01-18 §C4.4.7 Circolare 7 21-01-19**

Sezione ad ascissa 191.8
Kdef = 0
Uinst tot in x = -0.13
Uinst tot in y = -0.66
Uinst tot = 0.66
Luce/Uinst,tot > limite
546.4/0.66=824.4 > 300 Comb: SLE rara, 17

**Verifica della freccia istantanea variabile D.M. 17-01-18 §4.4.7**

Sezione ad ascissa 174.4
Kdef = 0
Uinst var in x = -0.1
Uinst var in y = -0.37
Uinst var = 0.37
Luce/Uinst,var > limite
546.4/0.37=1470.6 > 300 Comb: SLE rara, 17

**Verifica della freccia finale EC5 §4.4.7 - EC5 2.2.3 (3)**

Sezione ad ascissa 191.8
Kdef = 0.6
Ufin in x = -0.16
Ufin in y = -0.84
Ufin = 0.84
Luce/Ufin > limite
546.4/0.84=650.9 > 200
Coefficienti combinatori impiegati:
Pesi strutturali = 1,000 + 0,600 = 1,600
Permanenti portati = 1,000 + 0,600 = 1,600
Variabile A = 0,700 + 0,180 = 0,880
Neve = 0,500 + 0,500 = 1,000
Vento = 0,600 + 0,000 = 0,600

## Superelemento in legno a "Falda 5" 241-(373; 989)

Verifiche condotte secondo D.M. 17-01-18 (N.T.C.)

### Dati generali

Superelemento di lunghezza complessiva L= 710.7 composto da:
asta 67: Trave in legno a falda Falda 5 fili 241-279 (L = 74.2)
asta 68: Trave in legno a falda Falda 5 fili 241-279 (L = 103.7)
asta 69: Trave in legno a falda Falda 5 fili 241-279 (L = 104.3)
asta 70: Trave in legno a falda Falda 5 fili 241-279 (L = 116.7)
asta 71: Trave in legno a falda Falda 5 fili 241-279 (L = 90.8)
asta 72: Trave in legno a falda Falda 5 fili 241-279 (L = 102.8)
asta 73: Trave in legno a falda Falda 5 fili 241-279 (L = 118.2)

### Caratteristiche della sezione

| Descrizione | Tipo | Base | Altezza | Area | Jx | Jy | Wx | Wy |
|---|---|---|---|---|---|---|---|---|
| R 18x23 | Rettangolare | 18 | 23 | 414 | 18250.5 | 11178 | 1587 | 1242 |

Materiale: C14 EN 338:2016
β,x = 0; β,y = 0
Rapporto luce/freccia elastica limite = 300
Rapporto luce/freccia elastica differita = 200
Mensola Y: Nessuno; Mensola X: Nessuno
Classe di servizio 1

### Verifica della freccia istantanea totale D.M. 17-01-18 §C4.4.7 Circolare 7 21-01-19

Sezione ad ascissa 336.6
Kdef = 0
Uinst tot in x = 1.18
Uinst tot in y = -4.05
Uinst tot = 4.05
Luce/Uinst,tot < limite
710.7/4.05=175.4 < 300 Comb: SLE rara, 9 - NON SODDISFATTA

### Verifica della freccia istantanea variabile D.M. 17-01-18 §4.4.7

Sezione ad ascissa 336.6
Kdef = 0
Uinst var in x = 0.77
Uinst var in y = -2.65
Uinst var = 2.65
Luce/Uinst,var < limite
710.7/2.65=267.8 < 300 Comb: SLE rara, 9 - NON SODDISFATTA

### Verifica della freccia finale EC5 §4.4.7 - EC5 2.2.3 (3)

Sezione ad ascissa 346.1
Kdef = 0.6
Ufin in x = 1.44
Ufin in y = -4.89
Ufin = 4.89
Luce/Ufin < limite
710.7/4.89=145.3 < 200 - NON SODDISFATTA
Coefficienti combinatori impiegati:
Pesi strutturali = 1,000 + 0,600 = 1,600
Permanenti portati = 1,000 + 0,600 = 1,600
Neve = 0,500 + 0,500 = 1,000
Vento = 0,600 + 0,000 = 0,600

## Superelemento in legno a "Falda 5" 244-286

Verifiche condotte secondo D.M. 17-01-18 (N.T.C.)

### Dati generali

Superelemento di lunghezza complessiva L= 491.5 composto da:
asta 236: Trave in legno a falda Falda 5 fili 244-286 (L = 468.2)
asta 237: Trave in legno a falda Falda 5 fili 244-286 (L = 23.2)

### Caratteristiche della sezione

| Descrizione | Tipo | Base | Altezza | Area | Jx | Jy | Wx | Wy |
|---|---|---|---|---|---|---|---|---|
| R 8x10 | Rettangolare | 8 | 10 | 80 | 666.67 | 426.67 | 133.33 | 106.67 |

Materiale: C14 EN 338:2016
β,x = 0; β,y = 0

Rapporto luce/freccia elastica limite = 300
Rapporto luce/freccia elastica differita = 200
Mensola Y: Nessuno; Mensola X: Nessuno
Classe di servizio 1

**Verifica della freccia istantanea totale D.M. 17-01-18 §C4.4.7 Circolare 7 21-01-19**

Sezione ad ascissa 171.7
Kdef = 0
Uinst tot in x = 0.18
Uinst tot in y = -0.22
Uinst tot = 0.22
Luce/Uinst,tot > limite
491.5/0.22=2231.7 > 300 Comb: SLE rara, 9

**Verifica della freccia istantanea variabile D.M. 17-01-18 §4.4.7**

Sezione ad ascissa 374.6
Kdef = 0
Uinst var in x = 0.12
Uinst var in y = -0.09
Uinst var = 0.12
Luce/Uinst,var > limite
491.5/0.12=4034.8 > 300 Comb: SLE rara, 16

**Verifica della freccia finale EC5 §4.4.7 - EC5 2.2.3 (3)**

Sezione ad ascissa 187.3
Kdef = 0.6
Ufin in x = 0.23
Ufin in y = -0.3
Ufin = 0.3
Luce/Ufin > limite
491.5/0.3=1658.4 > 200
Coefficienti combinatori impiegati:
Pesi strutturali = 1,000 + 0,600 = 1,600
Permanenti portati = 1,000 + 0,600 = 1,600
Neve = 0,500 + 0,500 = 1,000
Vento = 0,600 + 0,000 = 0,600

---

## Superelemento in legno a "Falda 5" 245-288

Verifiche condotte secondo D.M. 17-01-18 (N.T.C.)

**Dati generali**

Superelemento di lunghezza complessiva L= 491.8 composto da:
asta 255: Trave in legno a falda Falda 5 fili 245-288 (L = 468.6)
asta 256: Trave in legno a falda Falda 5 fili 245-288 (L = 23.2)

**Caratteristiche della sezione**

| Descrizione | Tipo | Base | Altezza | Area | Jx | Jy | Wx | Wy |
|---|---|---|---|---|---|---|---|---|
| R 8x10 | Rettangolare | 8 | 10 | 80 | 666.67 | 426.67 | 133.33 | 106.67 |

Materiale: C14 EN 338:2016
β,x = 0; β,y = 0
Rapporto luce/freccia elastica limite = 300
Rapporto luce/freccia elastica differita = 200
Mensola Y: Nessuno; Mensola X: Nessuno
Classe di servizio 1

**Verifica della freccia istantanea totale D.M. 17-01-18 §C4.4.7 Circolare 7 21-01-19**

Sezione ad ascissa 171.8
Kdef = 0
Uinst tot in x = -0.45
Uinst tot in y = -0.59
Uinst tot = 0.59
Luce/Uinst,tot > limite
491.8/0.59=836.2 > 300 Comb: SLE rara, 17

**Verifica della freccia istantanea variabile D.M. 17-01-18 §4.4.7**

Sezione ad ascissa 156.2
Kdef = 0
Uinst var in x = -0.3
Uinst var in y = -0.32
Uinst var = 0.32
Luce/Uinst,var > limite

491.8/0.32=1514.5 > 300 Comb: SLE rara, 17

**Verifica della freccia finale EC5 §4.4.7 - EC5 2.2.3 (3)**

Sezione ad ascissa 171.8
Kdef = 0.6
Ufin in x = -0.54
Ufin in y = -0.75
Ufin = 0.75
Luce/Ufin > limite
491.8/0.75=656.6 > 200
Coefficienti combinatori impiegati:
Pesi strutturali = 1,000 + 0,600 = 1,600
Permanenti portati = 1,000 + 0,600 = 1,600
Variabile A = 0,700 + 0,180 = 0,880
Neve = 0,500 + 0,500 = 1,000
Vento = 0,600 + 0,000 = 0,600

## Superelemento in legno a "Falda 5" 250-285

Verifiche condotte secondo D.M. 17-01-18 (N.T.C.)

**Dati generali**

Superelemento di lunghezza complessiva L= 415.2 composto da:
asta 234: Trave in legno a falda Falda 5 fili 250-285 (L = 392)
asta 235: Trave in legno a falda Falda 5 fili 250-285 (L = 23.2)

**Caratteristiche della sezione**

| Descrizione | Tipo | Base | Altezza | Area | Jx | Jy | Wx | Wy |
|---|---|---|---|---|---|---|---|---|
| R 8x10 | Rettangolare | 8 | 10 | 80 | 666.67 | 426.67 | 133.33 | 106.67 |

Materiale: C14 EN 338:2016
β,x = 0; β,y = 0
Rapporto luce/freccia elastica limite = 300
Rapporto luce/freccia elastica differita = 200
Mensola Y: Nessuno; Mensola X: Nessuno
Classe di servizio 1

**Verifica della freccia istantanea totale D.M. 17-01-18 §C4.4.7 Circolare 7 21-01-19**

Sezione ad ascissa 91.5
Kdef = 0
Uinst tot in x = -0.23
Uinst tot in y = 0.11
Uinst tot = 0.23
Luce/Uinst,tot > limite
415.2/0.23=1801.7 > 300 Comb: SLE rara, 16

**Verifica della freccia istantanea variabile D.M. 17-01-18 §4.4.7**

Sezione ad ascissa 91.5
Kdef = 0
Uinst var in x = -0.15
Uinst var in y = 0.1
Uinst var = 0.15
Luce/Uinst,var > limite
415.2/0.15=2843.1 > 300 Comb: SLE rara, 16

**Verifica della freccia finale EC5 §4.4.7 - EC5 2.2.3 (3)**

Sezione ad ascissa 91.5
Kdef = 0.6
Ufin in x = -0.28
Ufin in y = 0.13
Ufin = 0.28
Luce/Ufin > limite
415.2/0.28=1475.6 > 200
Coefficienti combinatori impiegati:
Pesi strutturali = 1,000 + 0,600 = 1,600
Permanenti portati = 1,000 + 0,600 = 1,600
Variabile A = 0,700 + 0,180 = 0,880
Neve = 0,500 + 0,500 = 1,000

## Superelemento in legno a "Falda 5" 251-289

Verifiche condotte secondo D.M. 17-01-18 (N.T.C.)

### Dati generali

Superelemento di lunghezza complessiva L= 415.6 composto da:
asta 257: Trave in legno a falda Falda 5 fili 251-289 (L = 392.4)
asta 258: Trave in legno a falda Falda 5 fili 251-289 (L = 23.2)

### Caratteristiche della sezione

| Descrizione | Tipo | Base | Altezza | Area | Jx | Jy | Wx | Wy |
|---|---|---|---|---|---|---|---|---|
| R 8x10 | Rettangolare | 8 | 10 | 80 | 666.67 | 426.67 | 133.33 | 106.67 |

Materiale: C14 EN 338:2016
β,x = 0; β,y = 0
Rapporto luce/freccia elastica limite = 300
Rapporto luce/freccia elastica differita = 200
Mensola Y: Nessuno; Mensola X: Nessuno
Classe di servizio 1

### Verifica della freccia istantanea totale D.M. 17-01-18 §C4.4.7 Circolare 7 21-01-19

Sezione ad ascissa 91.6
Kdef = 0
Uinst tot in x = 0.45
Uinst tot in y = -0.4
Uinst tot = 0.45
Luce/Uinst,tot > limite
415.6/0.45=920.5 > 300 Comb: SLE rara, 9

### Verifica della freccia istantanea variabile D.M. 17-01-18 §4.4.7

Sezione ad ascissa 91.6
Kdef = 0
Uinst var in x = 0.29
Uinst var in y = -0.23
Uinst var = 0.29
Luce/Uinst,var > limite
415.6/0.29=1411.3 > 300 Comb: SLE rara, 9

### Verifica della freccia finale EC5 §4.4.7 - EC5 2.2.3 (3)

Sezione ad ascissa 91.6
Kdef = 0.6
Ufin in x = 0.55
Ufin in y = -0.5
Ufin = 0.55
Luce/Ufin > limite
415.6/0.55=761.6 > 200
Coefficienti combinatori impiegati:
Pesi strutturali = 1,000 + 0,600 = 1,600
Permanenti portati = 1,000 + 0,600 = 1,600
Neve = 0,500 + 0,500 = 1,000
Vento = 0,600 + 0,000 = 0,600

---

## Superelemento in legno a "Falda 5" 256-284

Verifiche condotte secondo D.M. 17-01-18 (N.T.C.)

### Dati generali

Superelemento di lunghezza complessiva L= 338.9 composto da:
asta 232: Trave in legno a falda Falda 5 fili 256-284 (L = 315.8)
asta 233: Trave in legno a falda Falda 5 fili 256-284 (L = 23.2)

### Caratteristiche della sezione

| Descrizione | Tipo | Base | Altezza | Area | Jx | Jy | Wx | Wy |
|---|---|---|---|---|---|---|---|---|
| R 8x10 | Rettangolare | 8 | 10 | 80 | 666.67 | 426.67 | 133.33 | 106.67 |

Materiale: C14 EN 338:2016
β,x = 0; β,y = 0
Rapporto luce/freccia elastica limite = 300
Rapporto luce/freccia elastica differita = 200
Mensola Y: Nessuno; Mensola X: Nessuno
Classe di servizio 1

### Verifica della freccia istantanea totale D.M. 17-01-18 §C4.4.7 Circolare 7 21-01-19

Sezione ad ascissa 231.6
Kdef = 0
Uinst tot in x = -0.17
Uinst tot in y = 0.29

Uinst tot = 0.29
Luce/Uinst,tot > limite
338.9/0.29=1165.9 > 300 Comb: SLE rara, 17

**Verifica della freccia istantanea variabile D.M. 17-01-18 §4.4.7**

Sezione ad ascissa 221
Kdef = 0
Uinst var in x = -0.11
Uinst var in y = 0.22
Uinst var = 0.22
Luce/Uinst,var > limite
338.9/0.22=1569.2 > 300 Comb: SLE rara, 17

**Verifica della freccia finale EC5 §4.4.7 - EC5 2.2.3 (3)**

Sezione ad ascissa 231.6
Kdef = 0.6
Ufin in x = -0.21
Ufin in y = 0.34
Ufin = 0.34
Luce/Ufin > limite
338.9/0.34=1007.3 > 200
Coefficienti combinatori impiegati:
Pesi strutturali = 1,000 + 0,600 = 1,600
Permanenti portati = 1,000 + 0,600 = 1,600
Variabile A = 0,700 + 0,180 = 0,880
Neve = 0,500 + 0,500 = 1,000
Vento = 0,600 + 0,000 = 0,600

---

## Superelemento in legno a "Falda 5" 257-290

Verifiche condotte secondo D.M. 17-01-18 (N.T.C.)

**Dati generali**

Superelemento di lunghezza complessiva L= 340 composto da:
asta 259: Trave in legno a falda Falda 5 fili 257-290 (L = 316.8)
asta 260: Trave in legno a falda Falda 5 fili 257-290 (L = 23.2)

**Caratteristiche della sezione**

| Descrizione | Tipo | Base | Altezza | Area | Jx | Jy | Wx | Wy |
|---|---|---|---|---|---|---|---|---|
| R 8x10 | Rettangolare | 8 | 10 | 80 | 666.67 | 426.67 | 133.33 | 106.67 |

Materiale: C14 EN 338:2016
β,x = 0; β,y = 0
Rapporto luce/freccia elastica limite = 300
Rapporto luce/freccia elastica differita = 200
Mensola Y: Nessuno; Mensola X: Nessuno
Classe di servizio 1

**Verifica della freccia istantanea totale D.M. 17-01-18 §C4.4.7 Circolare 7 21-01-19**

Sezione ad ascissa 73.9
Kdef = 0
Uinst tot in x = 0.32
Uinst tot in y = 0.26
Uinst tot = 0.32
Luce/Uinst,tot > limite
340/0.32=1078.1 > 300 Comb: SLE rara, 8

**Verifica della freccia istantanea variabile D.M. 17-01-18 §4.4.7**

Sezione ad ascissa 73.9
Kdef = 0
Uinst var in x = 0.21
Uinst var in y = 0.19
Uinst var = 0.21
Luce/Uinst,var > limite
340/0.21=1655 > 300 Comb: SLE rara, 8

**Verifica della freccia finale EC5 §4.4.7 - EC5 2.2.3 (3)**

Sezione ad ascissa 73.9
Kdef = 0.6
Ufin in x = 0.38
Ufin in y = -0.32
Ufin = 0.38
Luce/Ufin > limite

340/0.38=891.4 > 200
Coefficienti combinatori impiegati:
Pesi strutturali = 1,000 + 0,600 = 1,600
Permanenti portati = 1,000 + 0,600 = 1,600
Neve = 0,500 + 0,500 = 1,000

## Superelemento in legno a "Falda 5" 262-283

Verifiche condotte secondo D.M. 17-01-18 (N.T.C.)

### Dati generali

Superelemento di lunghezza complessiva L= 262.6 composto da:
asta 230: Trave in legno a falda Falda 5 fili 262-283 (L = 239.4)
asta 231: Trave in legno a falda Falda 5 fili 262-283 (L = 23.2)

### Caratteristiche della sezione

| Descrizione | Tipo | Base | Altezza | Area | Jx | Jy | Wx | Wy |
|---|---|---|---|---|---|---|---|---|
| R 8x10 | Rettangolare | 8 | 10 | 80 | 666.67 | 426.67 | 133.33 | 106.67 |

Materiale: C14 EN 338:2016
β,x = 0; β,y = 0
Rapporto luce/freccia elastica limite = 300
Rapporto luce/freccia elastica differita = 200
Mensola Y: Nessuno; Mensola X: Nessuno
Classe di servizio 1

### Verifica della freccia istantanea totale D.M. 17-01-18 §C4.4.7 Circolare 7 21-01-19

Sezione ad ascissa 175.6
Kdef = 0
Uinst tot in x = -0.05
Uinst tot in y = 0.24
Uinst tot = 0.24
Luce/Uinst,tot > limite
262.6/0.24=1111.1 > 300 Comb: SLE rara, 17

### Verifica della freccia istantanea variabile D.M. 17-01-18 §4.4.7

Sezione ad ascissa 175.6
Kdef = 0
Uinst var in x = -0.03
Uinst var in y = 0.17
Uinst var = 0.17
Luce/Uinst,var > limite
262.6/0.17=1545.5 > 300 Comb: SLE rara, 17

### Verifica della freccia finale EC5 §4.4.7 - EC5 2.2.3 (3)

Sezione ad ascissa 175.6
Kdef = 0.6
Ufin in x = -0.06
Ufin in y = 0.28
Ufin = 0.28
Luce/Ufin > limite
262.6/0.28=948.8 > 200
Coefficienti combinatori impiegati:
Pesi strutturali = 1,000 + 0,600 = 1,600
Permanenti portati = 1,000 + 0,600 = 1,600
Variabile A = 0,700 + 0,180 = 0,880
Neve = 0,500 + 0,500 = 1,000
Vento = 0,600 + 0,000 = 0,600

## Superelemento in legno a "Falda 5" 263-291

Verifiche condotte secondo D.M. 17-01-18 (N.T.C.)

### Dati generali

Superelemento di lunghezza complessiva L= 264 composto da:
asta 261: Trave in legno a falda Falda 5 fili 263-291 (L = 240.7)
asta 262: Trave in legno a falda Falda 5 fili 263-291 (L = 23.3)

### Caratteristiche della sezione

| Descrizione | Tipo | Base | Altezza | Area | Jx | Jy | Wx | Wy |
|---|---|---|---|---|---|---|---|---|
| R 8x10 | Rettangolare | 8 | 10 | 80 | 666.67 | 426.67 | 133.33 | 106.67 |

Materiale: C14 EN 338:2016

β,x = 0; β,y = 0
Rapporto luce/freccia elastica limite = 300
Rapporto luce/freccia elastica differita = 200
Mensola Y: Nessuno; Mensola X: Nessuno
Classe di servizio 1

**Verifica della freccia istantanea totale D.M. 17-01-18 §C4.4.7 Circolare 7 21-01-19**

Sezione ad ascissa 200.6
Kdef = 0
Uinst tot in x = 0.12
Uinst tot in y = 0.27
Uinst tot = 0.27
Luce/Uinst,tot > limite
264/0.27=978.8 > 300 Comb: SLE rara, 8

**Verifica della freccia istantanea variabile D.M. 17-01-18 §4.4.7**

Sezione ad ascissa 200.6
Kdef = 0
Uinst var in x = 0.08
Uinst var in y = 0.18
Uinst var = 0.18
Luce/Uinst,var > limite
264/0.18=1443 > 300 Comb: SLE rara, 8

**Verifica della freccia finale EC5 §4.4.7 - EC5 2.2.3 (3)**

Sezione ad ascissa 200.6
Kdef = 0.6
Ufin in x = 0.15
Ufin in y = 0.32
Ufin = 0.32
Luce/Ufin > limite
264/0.32=820.5 > 200
Coefficienti combinatori impiegati:
Pesi strutturali = 1,000 + 0,600 = 1,600
Permanenti portati = 1,000 + 0,600 = 1,600
Neve = 0,500 + 0,500 = 1,000

---

## Superelemento in legno a "Falda 5" 267-282

Verifiche condotte secondo D.M. 17-01-18 (N.T.C.)

**Dati generali**

Superelemento di lunghezza complessiva L= 186.4 composto da:
asta 228: Trave in legno a falda Falda 5 fili 267-282 (L = 163.2)
asta 229: Trave in legno a falda Falda 5 fili 267-282 (L = 23.2)

**Caratteristiche della sezione**

| Descrizione | Tipo | Base | Altezza | Area | Jx | Jy | Wx | Wy |
|---|---|---|---|---|---|---|---|---|
| R 8x10 | Rettangolare | 8 | 10 | 80 | 666.67 | 426.67 | 133.33 | 106.67 |

Materiale: C14 EN 338:2016
β,x = 0; β,y = 0
Rapporto luce/freccia elastica limite = 300
Rapporto luce/freccia elastica differita = 200
Mensola Y: Nessuno; Mensola X: Nessuno
Classe di servizio 1

**Verifica della freccia istantanea totale D.M. 17-01-18 §C4.4.7 Circolare 7 21-01-19**

Sezione ad ascissa 130.6
Kdef = 0
Uinst tot in x = -0.01
Uinst tot in y = 0.12
Uinst tot = 0.12
Luce/Uinst,tot > limite
186.4/0.12=1559.8 > 300 Comb: SLE rara, 17

**Verifica della freccia istantanea variabile D.M. 17-01-18 §4.4.7**

Sezione ad ascissa 125.2
Kdef = 0
Uinst var in x = -0.01
Uinst var in y = 0.09
Uinst var = 0.09
Luce/Uinst,var > limite

186.4/0.09=2190.2 > 300 Comb: SLE rara, 17

**Verifica della freccia finale EC5 §4.4.7 - EC5 2.2.3 (3)**

Sezione ad ascissa 130.6
Kdef = 0.6
Ufin in x = -0.02
Ufin in y = 0.14
Ufin = 0.14
Luce/Ufin > limite
186.4/0.14=1327.4 > 200
Coefficienti combinatori impiegati:
Pesi strutturali = 1,000 + 0,600 = 1,600
Permanenti portati = 1,000 + 0,600 = 1,600
Variabile A = 0,700 + 0,180 = 0,880
Neve = 0,500 + 0,500 = 1,000
Vento = 0,600 + 0,000 = 0,600

## Superelemento in legno a "Falda 5" 268-292

Verifiche condotte secondo D.M. 17-01-18 (N.T.C.)

**Dati generali**

Superelemento di lunghezza complessiva L= 187.9 composto da:
asta 263: Trave in legno a falda Falda 5 fili 268-292 (L = 164.6)
asta 264: Trave in legno a falda Falda 5 fili 268-292 (L = 23.3)

**Caratteristiche della sezione**

| Descrizione | Tipo | Base | Altezza | Area | Jx | Jy | Wx | Wy |
|---|---|---|---|---|---|---|---|---|
| R 8x10 | Rettangolare | 8 | 10 | 80 | 666.67 | 426.67 | 133.33 | 106.67 |

Materiale: C14 EN 338:2016
β,x = 0; β,y = 0
Rapporto luce/freccia elastica limite = 300
Rapporto luce/freccia elastica differita = 200
Mensola Y: Nessuno; Mensola X: Nessuno
Classe di servizio 1

**Verifica della freccia istantanea totale D.M. 17-01-18 §C4.4.7 Circolare 7 21-01-19**

Sezione ad ascissa 137.2
Kdef = 0
Uinst tot in x = 0.03
Uinst tot in y = 0.16
Uinst tot = 0.16
Luce/Uinst,tot > limite
187.9/0.16=1148.1 > 300 Comb: SLE rara, 8

**Verifica della freccia istantanea variabile D.M. 17-01-18 §4.4.7**

Sezione ad ascissa 137.2
Kdef = 0
Uinst var in x = 0.02
Uinst var in y = 0.11
Uinst var = 0.11
Luce/Uinst,var > limite
187.9/0.11=1748.3 > 300 Comb: SLE rara, 8

**Verifica della freccia finale EC5 §4.4.7 - EC5 2.2.3 (3)**

Sezione ad ascissa 137.2
Kdef = 0.6
Ufin in x = 0.06
Ufin in y = 0.2
Ufin = 0.2
Luce/Ufin > limite
187.9/0.2=952 > 200
Coefficienti combinatori impiegati:
Pesi strutturali = 1,000 + 0,600 = 1,600
Permanenti portati = 1,000 + 0,600 = 1,600
Neve = 0,500 + 0,500 = 1,000

## Superelemento in legno a "Falda 5" 271-281

Verifiche condotte secondo D.M. 17-01-18 (N.T.C.)

### Dati generali

Superelemento di lunghezza complessiva L= 108.5 composto da:
asta 226: Trave in legno a falda Falda 5 fili 271-281 (L = 85.3)
asta 227: Trave in legno a falda Falda 5 fili 271-281 (L = 23.1)

### Caratteristiche della sezione

| Descrizione | Tipo | Base | Altezza | Area | Jx | Jy | Wx | Wy |
|---|---|---|---|---|---|---|---|---|
| R 8x10 | Rettangolare | 8 | 10 | 80 | 666.67 | 426.67 | 133.33 | 106.67 |

Materiale: C14 EN 338:2016
β,x = 0; β,y = 0
Rapporto luce/freccia elastica limite = 300
Rapporto luce/freccia elastica differita = 200
Mensola Y: Nessuno; Mensola X: Nessuno
Classe di servizio 1

### Verifica della freccia istantanea totale D.M. 17-01-18 §C4.4.7 Circolare 7 21-01-19

Sezione ad ascissa 74
Kdef = 0
Uinst tot in x = -0.01
Uinst tot in y = 0.05
Uinst tot = 0.05
Luce/Uinst,tot > limite
108.5/0.05=2220.7 > 300 Comb: SLE rara, 17

### Verifica della freccia istantanea variabile D.M. 17-01-18 §4.4.7

Sezione ad ascissa 71.1
Kdef = 0
Uinst var in x = -0.01
Uinst var in y = 0.03
Uinst var = 0.03
Luce/Uinst,var > limite
108.5/0.03=3203.3 > 300 Comb: SLE rara, 17

### Verifica della freccia finale EC5 §4.4.7 - EC5 2.2.3 (3)

Sezione ad ascissa 74
Kdef = 0.6
Ufin in x = -0.03
Ufin in y = 0.06
Ufin = 0.06
Luce/Ufin > limite
108.5/0.06=1872.9 > 200
Coefficienti combinatori impiegati:
Pesi strutturali = 1,000 + 0,600 = 1,600
Permanenti portati = 1,000 + 0,600 = 1,600
Variabile A = 0,700 + 0,180 = 0,880
Neve = 0,500 + 0,500 = 1,000
Vento = 0,600 + 0,000 = 0,600

---

## Superelemento in legno a "Falda 5" 272-293

Verifiche condotte secondo D.M. 17-01-18 (N.T.C.)

### Dati generali

Superelemento di lunghezza complessiva L= 111.8 composto da:
asta 265: Trave in legno a falda Falda 5 fili 272-293 (L = 88.5)
asta 266: Trave in legno a falda Falda 5 fili 272-293 (L = 23.3)

### Caratteristiche della sezione

| Descrizione | Tipo | Base | Altezza | Area | Jx | Jy | Wx | Wy |
|---|---|---|---|---|---|---|---|---|
| R 8x10 | Rettangolare | 8 | 10 | 80 | 666.67 | 426.67 | 133.33 | 106.67 |

Materiale: C14 EN 338:2016
β,x = 0; β,y = 0
Rapporto luce/freccia elastica limite = 300
Rapporto luce/freccia elastica differita = 200
Mensola Y: Nessuno; Mensola X: Nessuno
Classe di servizio 1

### Verifica della freccia istantanea totale D.M. 17-01-18 §C4.4.7 Circolare 7 21-01-19

Sezione ad ascissa 79.7
Kdef = 0
Uinst tot in x = 0.03

Uinst tot in y = 0.08
Uinst tot = 0.08
Luce/Uinst,tot > limite
111.8/0.08=1475.3 > 300 Comb: SLE rara, 16

**Verifica della freccia istantanea variabile D.M. 17-01-18 §4.4.7**

Sezione ad ascissa 79.7
Kdef = 0
Uinst var in x = 0.02
Uinst var in y = 0.05
Uinst var = 0.05
Luce/Uinst,var > limite
111.8/0.05=2330.2 > 300 Comb: SLE rara, 16

**Verifica della freccia finale EC5 §4.4.7 - EC5 2.2.3 (3)**

Sezione ad ascissa 79.7
Kdef = 0.6
Ufin in x = 0.06
Ufin in y = 0.09
Ufin = 0.09
Luce/Ufin > limite
111.8/0.09=1208 > 200
Coefficienti combinatori impiegati:
Pesi strutturali = 1,000 + 0,600 = 1,600
Permanenti portati = 1,000 + 0,600 = 1,600
Variabile A = 0,700 + 0,180 = 0,880
Neve = 0,500 + 0,500 = 1,000

---

## Superelemento in legno a "Falda 5" (-456; 87)-(375; -693)

Verifiche condotte secondo D.M. 17-01-18 (N.T.C.)

**Dati generali**

Superelemento di lunghezza complessiva L= 665.4 composto da:
asta 58: Trave in legno a falda Falda 5 fili 241-277 (L = 57.7)
asta 59: Trave in legno a falda Falda 5 fili 241-277 (L = 12.2)
asta 60: Trave in legno a falda Falda 5 fili 241-277 (L = 87)
asta 61: Trave in legno a falda Falda 5 fili 241-277 (L = 99.2)
asta 62: Trave in legno a falda Falda 5 fili 241-277 (L = 59)
asta 63: Trave in legno a falda Falda 5 fili 241-277 (L = 42)
asta 64: Trave in legno a falda Falda 5 fili 241-277 (L = 98.5)
asta 65: Trave in legno a falda Falda 5 fili 241-277 (L = 99.4)
asta 66: Trave in legno a falda Falda 5 fili 241-277 (L = 110.5)

**Caratteristiche della sezione**

| Descrizione | Tipo | Base | Altezza | Area | Jx | Jy | Wx | Wy |
|---|---|---|---|---|---|---|---|---|
| R 18x23 | Rettangolare | 18 | 23 | 414 | 18250.5 | 11178 | 1587 | 1242 |

Materiale: C14 EN 338:2016
β,x = 0; β,y = 0
Rapporto luce/freccia elastica limite = 300
Rapporto luce/freccia elastica differita = 200
Mensola Y: Nessuno; Mensola X: Nessuno
Classe di servizio 1

**Verifica della freccia istantanea totale D.M. 17-01-18 §C4.4.7 Circolare 7 21-01-19**

Sezione ad ascissa 307.2
Kdef = 0
Uinst tot in x = -0.46
Uinst tot in y = -1.98
Uinst tot = 1.98
Luce/Uinst,tot > limite
665.4/1.98=336.9 > 300 Comb: SLE rara, 17

**Verifica della freccia istantanea variabile D.M. 17-01-18 §4.4.7**

Sezione ad ascissa 307.2
Kdef = 0
Uinst var in x = -0.27
Uinst var in y = -1.27
Uinst var = 1.27
Luce/Uinst,var > limite
665.4/1.27=523.2 > 300 Comb: SLE rara, 17

**Verifica della freccia finale EC5 §4.4.7 - EC5 2.2.3 (3)**

Sezione ad ascissa 315.7
Kdef = 0.6
Ufin in x = -0.57
Ufin in y = -2.4
Ufin = 2.4
Luce/Ufin > limite
665.4/2.4=277.4 > 200
Coefficienti combinatori impiegati:
Pesi strutturali = 1,000 + 0,600 = 1,600
Permanenti portati = 1,000 + 0,600 = 1,600
Variabile A = 0,700 + 0,180 = 0,880
Neve = 0,500 + 0,500 = 1,000
Vento = 0,600 + 0,000 = 0,600

## Superelemento in legno a "Falda 6" 177-(-95; 1037)

Verifiche condotte secondo D.M. 17-01-18 (N.T.C.)

**Dati generali**

Superelemento di lunghezza complessiva L= 719.2 composto da:
asta 74: Trave in legno a falda Falda 6 fili 177-240 (L = 127.2)
asta 75: Trave in legno a falda Falda 6 fili 177-240 (L = 104.2)
asta 76: Trave in legno a falda Falda 6 fili 177-240 (L = 104.2)
asta 77: Trave in legno a falda Falda 6 fili 177-240 (L = 63.3)
asta 78: Trave in legno a falda Falda 6 fili 177-240 (L = 40.9)
asta 79: Trave in legno a falda Falda 6 fili 177-240 (L = 104.2)
asta 80: Trave in legno a falda Falda 6 fili 177-240 (L = 104.2)
asta 81: Trave in legno a falda Falda 6 fili 177-240 (L = 71.2)

**Caratteristiche della sezione**

| Descrizione | Tipo | Base | Altezza | Area | Jx | Jy | Wx | Wy |
|---|---|---|---|---|---|---|---|---|
| R 18x23 | Rettangolare | 18 | 23 | 414 | 18250.5 | 11178 | 1587 | 1242 |

Materiale: C14 EN 338:2016
β,x = 0; β,y = 0
Rapporto luce/freccia elastica limite = 300
Rapporto luce/freccia elastica differita = 200
Mensola Y: Nessuno; Mensola X: Nessuno
Classe di servizio 1

**Verifica della freccia istantanea totale D.M. 17-01-18 §C4.4.7 Circolare 7 21-01-19**

Sezione ad ascissa 379.8
Kdef = 0
Uinst tot in x = 0.88
Uinst tot in y = -2.79
Uinst tot = 2.79
Luce/Uinst,tot < limite
719.2/2.79=258 < 300 Comb: SLE rara, 8 - NON SODDISFATTA

**Verifica della freccia istantanea variabile D.M. 17-01-18 §4.4.7**

Sezione ad ascissa 381.9
Kdef = 0
Uinst var in x = 0.56
Uinst var in y = -1.78
Uinst var = 1.78
Luce/Uinst,var > limite
719.2/1.78=404.5 > 300 Comb: SLE rara, 8

**Verifica della freccia finale EC5 §4.4.7 - EC5 2.2.3 (3)**

Sezione ad ascissa 391
Kdef = 0.6
Ufin in x = 1.07
Ufin in y = -3.39
Ufin = 3.39
Luce/Ufin > limite
719.2/3.39=212 > 200
Coefficienti combinatori impiegati:
Pesi strutturali = 1,000 + 0,600 = 1,600
Permanenti portati = 1,000 + 0,600 = 1,600
Neve = 0,500 + 0,500 = 1,000

## Superelemento in legno a "Falda 6" 186-187

Verifiche condotte secondo D.M. 17-01-18 (N.T.C.)

### Dati generali

Superelemento di lunghezza complessiva L= 96.9 composto da:
Asta 273: Trave in legno a falda Falda 6 fili 186-187

### Caratteristiche della sezione

| Descrizione | Tipo | Base | Altezza | Area | Jx | Jy | Wx | Wy |
|---|---|---|---|---|---|---|---|---|
| R 8x10 | Rettangolare | 8 | 10 | 80 | 666.67 | 426.67 | 133.33 | 106.67 |

Materiale: C14 EN 338:2016
β,x = 0; β,y = 0
Rapporto luce/freccia elastica limite = 300
Rapporto luce/freccia elastica differita = 200
Mensola Y: Nessuno; Mensola X: Nessuno
Classe di servizio 1

### Verifica della freccia istantanea totale D.M. 17-01-18 §C4.4.7 Circolare 7 21-01-19

Sezione ad ascissa 29
Kdef = 0
Uinst tot in x = 0.01
Uinst tot in y = 0.06
Uinst tot = 0.06
Luce/Uinst,tot > limite
96.9/0.06=1699.8 > 300 Comb: SLE rara, 17

### Verifica della freccia istantanea variabile D.M. 17-01-18 §4.4.7

Sezione ad ascissa 29
Kdef = 0
Uinst var in x = 0
Uinst var in y = 0.04
Uinst var = 0.04
Luce/Uinst,var > limite
96.9/0.04=2761.7 > 300 Comb: SLE rara, 17

### Verifica della freccia finale EC5 §4.4.7 - EC5 2.2.3 (3)

Sezione ad ascissa 29
Kdef = 0.6
Ufin in x = 0.01
Ufin in y = 0.07
Ufin = 0.07
Luce/Ufin > limite
96.9/0.07=1381.9 > 200
Coefficienti combinatori impiegati:
Pesi strutturali = 1,000 + 0,600 = 1,600
Permanenti portati = 1,000 + 0,600 = 1,600
Variabile A = 0,700 + 0,180 = 0,880
Neve = 0,500 + 0,500 = 1,000
Vento = 0,600 + 0,000 = 0,600

---

## Superelemento in legno a "Falda 6" 193-194

Verifiche condotte secondo D.M. 17-01-18 (N.T.C.)

### Dati generali

Superelemento di lunghezza complessiva L= 176.1 composto da:
Asta 272: Trave in legno a falda Falda 6 fili 193-194

### Caratteristiche della sezione

| Descrizione | Tipo | Base | Altezza | Area | Jx | Jy | Wx | Wy |
|---|---|---|---|---|---|---|---|---|
| R 8x10 | Rettangolare | 8 | 10 | 80 | 666.67 | 426.67 | 133.33 | 106.67 |

Materiale: C14 EN 338:2016
β,x = 0; β,y = 0
Rapporto luce/freccia elastica limite = 300
Rapporto luce/freccia elastica differita = 200
Mensola Y: Nessuno; Mensola X: Nessuno
Classe di servizio 1

### Verifica della freccia istantanea totale D.M. 17-01-18 §C4.4.7 Circolare 7 21-01-19

Sezione ad ascissa 140.9
Kdef = 0

Uinst tot in x = 0.02
Uinst tot in y = -0.08
Uinst tot = 0.08
Luce/Uinst,tot > limite
176.1/0.08=2143.4 > 300 Comb: SLE rara, 8

**Verifica della freccia istantanea variabile D.M. 17-01-18 §4.4.7**

Sezione ad ascissa 135
Kdef = 0
Uinst var in x = 0.01
Uinst var in y = -0.05
Uinst var = 0.05
Luce/Uinst,var > limite
176.1/0.05=3329.8 > 300 Comb: SLE rara, 8

**Verifica della freccia finale EC5 §4.4.7 - EC5 2.2.3 (3)**

Sezione ad ascissa 140.9
Kdef = 0.6
Ufin in x = 0.02
Ufin in y = -0.1
Ufin = 0.1
Luce/Ufin > limite
176.1/0.1=1756.3 > 200
Coefficienti combinatori impiegati:
Pesi strutturali = 1,000 + 0,600 = 1,600
Permanenti portati = 1,000 + 0,600 = 1,600
Neve = 0,500 + 0,500 = 1,000

---

## Superelemento in legno a "Falda 6" 203-204

Verifiche condotte secondo D.M. 17-01-18 (N.T.C.)

**Dati generali**

Superelemento di lunghezza complessiva L= 255.4 composto da:
Asta 271: Trave in legno a falda Falda 6 fili 203-204

**Caratteristiche della sezione**

| Descrizione | Tipo | Base | Altezza | Area | Jx | Jy | Wx | Wy |
|---|---|---|---|---|---|---|---|---|
| R 8x10 | Rettangolare | 8 | 10 | 80 | 666.67 | 426.67 | 133.33 | 106.67 |

Materiale: C14 EN 338:2016
β,x = 0; β,y = 0
Rapporto luce/freccia elastica limite = 300
Rapporto luce/freccia elastica differita = 200
Mensola Y: Nessuno; Mensola X: Nessuno
Classe di servizio 1

**Verifica della freccia istantanea totale D.M. 17-01-18 §C4.4.7 Circolare 7 21-01-19**

Sezione ad ascissa 178.8
Kdef = 0
Uinst tot in x = 0.02
Uinst tot in y = -0.45
Uinst tot = 0.45
Luce/Uinst,tot > limite
255.4/0.45=566.7 > 300 Comb: SLE rara, 8

**Verifica della freccia istantanea variabile D.M. 17-01-18 §4.4.7**

Sezione ad ascissa 178.8
Kdef = 0
Uinst var in x = 0.02
Uinst var in y = -0.29
Uinst var = 0.29
Luce/Uinst,var > limite
255.4/0.29=894 > 300 Comb: SLE rara, 8

**Verifica della freccia finale EC5 §4.4.7 - EC5 2.2.3 (3)**

Sezione ad ascissa 178.8
Kdef = 0.6
Ufin in x = 0.03
Ufin in y = -0.55
Ufin = 0.55
Luce/Ufin > limite
255.4/0.55=464.4 > 200

Coefficienti combinatori impiegati:
Pesi strutturali = 1,000 + 0,600 = 1,600
Permanenti portati = 1,000 + 0,600 = 1,600
Neve = 0,500 + 0,500 = 1,000

## Superelemento in legno a "Falda 6" 209-(217; 377)

Verifiche condotte secondo D.M. 17-01-18 (N.T.C.)

### Dati generali

Superelemento di lunghezza complessiva L= 507.7 composto da:
asta 131: Trave in legno a falda Falda 6 fili 209-265 (L = 94.1)
asta 132: Trave in legno a falda Falda 6 fili 209-265 (L = 67.6)
asta 133: Trave in legno a falda Falda 6 fili 209-265 (L = 67.6)
asta 134: Trave in legno a falda Falda 6 fili 209-265 (L = 67.6)
asta 135: Trave in legno a falda Falda 6 fili 209-265 (L = 67.6)
asta 136: Trave in legno a falda Falda 6 fili 209-265 (L = 67.6)
asta 137: Trave in legno a falda Falda 6 fili 209-265 (L = 75.8)

### Caratteristiche della sezione

| Descrizione | Tipo | Base | Altezza | Area | Jx | Jy | Wx | Wy |
|---|---|---|---|---|---|---|---|---|
| R 18x23 | Rettangolare | 18 | 23 | 414 | 18250.5 | 11178 | 1587 | 1242 |

Materiale: C14 EN 338:2016
β,x = 0; β,y = 0
Rapporto luce/freccia elastica limite = 300
Rapporto luce/freccia elastica differita = 200
Mensola Y: Nessuno; Mensola X: Nessuno
Classe di servizio 1

### Verifica della freccia istantanea totale D.M. 17-01-18 §C4.4.7 Circolare 7 21-01-19

Sezione ad ascissa 276.5
Kdef = 0
Uinst tot in x = 0.74
Uinst tot in y = -1.69
Uinst tot = 1.69
Luce/Uinst,tot > limite
507.7/1.69=300.1 > 300 Comb: SLE rara, 17

### Verifica della freccia istantanea variabile D.M. 17-01-18 §4.4.7

Sezione ad ascissa 278.7
Kdef = 0
Uinst var in x = 0.5
Uinst var in y = -1.12
Uinst var = 1.12
Luce/Uinst,var > limite
507.7/1.12=452.4 > 300 Comb: SLE rara, 17

### Verifica della freccia finale EC5 §4.4.7 - EC5 2.2.3 (3)

Sezione ad ascissa 284.1
Kdef = 0.6
Ufin in x = 0.87
Ufin in y = -2.02
Ufin = 2.02
Luce/Ufin > limite
507.7/2.02=251.8 > 200
Coefficienti combinatori impiegati:
Pesi strutturali = 1,000 + 0,600 = 1,600
Permanenti portati = 1,000 + 0,600 = 1,600
Variabile A = 0,700 + 0,180 = 0,880
Neve = 0,500 + 0,500 = 1,000
Vento = 0,600 + 0,000 = 0,600

## Superelemento in legno a "Falda 6" 212-213

Verifiche condotte secondo D.M. 17-01-18 (N.T.C.)

### Dati generali

Superelemento di lunghezza complessiva L= 334.7 composto da:
Asta 270: Trave in legno a falda Falda 6 fili 212-213

### Caratteristiche della sezione

| Descrizione | Tipo | Base | Altezza | Area | Jx | Jy | Wx | Wy |
|---|---|---|---|---|---|---|---|---|
| R 8x10 | Rettangolare | 8 | 10 | 80 | 666.67 | 426.67 | 133.33 | 106.67 |

Materiale: C14 EN 338:2016
β,x = 0; β,y = 0
Rapporto luce/freccia elastica limite = 300
Rapporto luce/freccia elastica differita = 200
Mensola Y: Nessuno; Mensola X: Nessuno
Classe di servizio 1

### Verifica della freccia istantanea totale D.M. 17-01-18 §C4.4.7 Circolare 7 21-01-19

Sezione ad ascissa 223.1
Kdef = 0
Uinst tot in x = -0.01
Uinst tot in y = -1.05
Uinst tot = 1.05
Luce/Uinst,tot > limite
334.7/1.05=319.6 > 300 Comb: SLE rara, 9

### Verifica della freccia istantanea variabile D.M. 17-01-18 §4.4.7

Sezione ad ascissa 223.1
Kdef = 0
Uinst var in x = -0.01
Uinst var in y = -0.65
Uinst var = 0.65
Luce/Uinst,var > limite
334.7/0.65=511.5 > 300 Comb: SLE rara, 9

### Verifica della freccia finale EC5 §4.4.7 - EC5 2.2.3 (3)

Sezione ad ascissa 223.1
Kdef = 0.6
Ufin in x = -0.01
Ufin in y = -1.28
Ufin = 1.28
Luce/Ufin > limite
334.7/1.28=260.8 > 200
Coefficienti combinatori impiegati:
Pesi strutturali = 1,000 + 0,600 = 1,600
Permanenti portati = 1,000 + 0,600 = 1,600
Neve = 0,500 + 0,500 = 1,000
Vento = 0,600 + 0,000 = 0,600

---

## Superelemento in legno a "Falda 6" 218-220

Verifiche condotte secondo D.M. 17-01-18 (N.T.C.)

### Dati generali

Superelemento di lunghezza complessiva L= 414 composto da:
asta 269: Trave in legno a falda Falda 6 fili 218-219 (L = 303.6)
asta 418: Trave in legno a falda Falda 6 fili 219-220 (L = 110.4)

### Caratteristiche della sezione

| Descrizione | Tipo | Base | Altezza | Area | Jx | Jy | Wx | Wy |
|---|---|---|---|---|---|---|---|---|
| R 8x10 | Rettangolare | 8 | 10 | 80 | 666.67 | 426.67 | 133.33 | 106.67 |

Materiale: C14 EN 338:2016
β,x = 0; β,y = 0
Rapporto luce/freccia elastica limite = 300
Rapporto luce/freccia elastica differita = 200
Mensola Y: Nessuno; Mensola X: Nessuno
Classe di servizio 1

### Verifica della freccia istantanea totale D.M. 17-01-18 §C4.4.7 Circolare 7 21-01-19

Sezione ad ascissa 253
Kdef = 0
Uinst tot in x = -0.04
Uinst tot in y = -2.98
Uinst tot = 2.98
Luce/Uinst,tot < limite
414/2.98=138.9 < 300 Comb: SLE rara, 9 - NON SODDISFATTA

**Verifica della freccia istantanea variabile D.M. 17-01-18 §4.4.7**

Sezione ad ascissa 253
Kdef = 0
Uinst var in x = -0.03
Uinst var in y = -1.92
Uinst var = 1.92
Luce/Uinst,var < limite
414/1.92=216 < 300 Comb: SLE rara, 9 - NON SODDISFATTA

**Verifica della freccia finale EC5 §4.4.7 - EC5 2.2.3 (3)**

Sezione ad ascissa 242.8
Kdef = 0.6
Ufin in x = -0.04
Ufin in y = -3.62
Ufin = 3.62
Luce/Ufin < limite
414/3.62=114.3 < 200 - NON SODDISFATTA
Coefficienti combinatori impiegati:
Pesi strutturali = 1,000 + 0,600 = 1,600
Permanenti portati = 1,000 + 0,600 = 1,600
Neve = 0,500 + 0,500 = 1,000
Vento = 0,600 + 0,000 = 0,600

---

## Superelemento in legno a "Falda 6" 227-229

Verifiche condotte secondo D.M. 17-01-18 (N.T.C.)

**Dati generali**

Superelemento di lunghezza complessiva L= 493.3 composto da:
asta 268: Trave in legno a falda Falda 6 fili 227-228 (L = 303.6)
asta 417: Trave in legno a falda Falda 6 fili 228-229 (L = 189.7)

**Caratteristiche della sezione**

| Descrizione | Tipo | Base | Altezza | Area | Jx | Jy | Wx | Wy |
|---|---|---|---|---|---|---|---|---|
| R 8x10 | Rettangolare | 8 | 10 | 80 | 666.67 | 426.67 | 133.33 | 106.67 |

Materiale: C14 EN 338:2016
β,x = 0; β,y = 0
Rapporto luce/freccia elastica limite = 300
Rapporto luce/freccia elastica differita = 200
Mensola Y: Nessuno; Mensola X: Nessuno
Classe di servizio 1

**Verifica della freccia istantanea totale D.M. 17-01-18 §C4.4.7 Circolare 7 21-01-19**

Sezione ad ascissa 273.2
Kdef = 0
Uinst tot in x = -0.06
Uinst tot in y = -4.45
Uinst tot = 4.45
Luce/Uinst,tot < limite
493.3/4.45=110.8 < 300 Comb: SLE rara, 9 - NON SODDISFATTA

**Verifica della freccia istantanea variabile D.M. 17-01-18 §4.4.7**

Sezione ad ascissa 273.2
Kdef = 0
Uinst var in x = -0.04
Uinst var in y = -2.88
Uinst var = 2.88
Luce/Uinst,var < limite
493.3/2.88=171.4 < 300 Comb: SLE rara, 9 - NON SODDISFATTA

**Verifica della freccia finale EC5 §4.4.7 - EC5 2.2.3 (3)**

Sezione ad ascissa 273.2
Kdef = 0.6
Ufin in x = -0.07
Ufin in y = -5.4
Ufin = 5.4
Luce/Ufin < limite
493.3/5.4=91.4 < 200 - NON SODDISFATTA
Coefficienti combinatori impiegati:
Pesi strutturali = 1,000 + 0,600 = 1,600
Permanenti portati = 1,000 + 0,600 = 1,600

Neve = 0,500 + 0,500 = 1,000
Vento = 0,600 + 0,000 = 0,600

## Superelemento in legno a "Falda 6" 238-235

Verifiche condotte secondo D.M. 17-01-18 (N.T.C.)

### Dati generali

Superelemento di lunghezza complessiva L= 547.5 composto da:
asta 245: Trave in legno a falda Falda 6 fili 238-239 (L = 303.6)
asta 413: Trave in legno a falda Falda 6 fili 239-240 (L = 243.9)

### Caratteristiche della sezione

| Descrizione | Tipo | Base | Altezza | Area | Jx | Jy | Wx | Wy |
|---|---|---|---|---|---|---|---|---|
| R 8x10 | Rettangolare | 8 | 10 | 80 | 666.67 | 426.67 | 133.33 | 106.67 |

Materiale: C14 EN 338:2016
β,x = 0; β,y = 0
Rapporto luce/freccia elastica limite = 300
Rapporto luce/freccia elastica differita = 200
Mensola Y: Nessuno; Mensola X: Nessuno
Classe di servizio 1

### Verifica della freccia istantanea totale D.M. 17-01-18 §C4.4.7 Circolare 7 21-01-19

Sezione ad ascissa 283.3
Kdef = 0
Uinst tot in x = 0.3
Uinst tot in y = -5.31
Uinst tot = 5.31
Luce/Uinst,tot < limite
547.5/5.31=103.1 < 300 Comb: SLE rara, 9 - NON SODDISFATTA

### Verifica della freccia istantanea variabile D.M. 17-01-18 §4.4.7

Sezione ad ascissa 283.3
Kdef = 0
Uinst var in x = 0.13
Uinst var in y = -3.46
Uinst var = 3.46
Luce/Uinst,var < limite
547.5/3.46=158.4 < 300 Comb: SLE rara, 9 - NON SODDISFATTA

### Verifica della freccia finale EC5 §4.4.7 - EC5 2.2.3 (3)

Sezione ad ascissa 283.3
Kdef = 0.6
Ufin in x = 0.4
Ufin in y = -6.42
Ufin = 6.42
Luce/Ufin < limite
547.5/6.42=85.3 < 200 - NON SODDISFATTA
Coefficienti combinatori impiegati:
Pesi strutturali = 1,000 + 0,600 = 1,600
Permanenti portati = 1,000 + 0,600 = 1,600
Neve = 0,500 + 0,500 = 1,000
Vento = 0,600 + 0,000 = 0,600

## Superelemento in legno a "Falda 6" 245-(-426; 595)

Verifiche condotte secondo D.M. 17-01-18 (N.T.C.)

### Dati generali

Superelemento di lunghezza complessiva L= 490.1 composto da:
asta 252: Trave in legno a falda Falda 6 fili 245-246 (L = 246.2)
asta 416: Trave in legno a falda Falda 6 fili 246-247 (L = 243.9)

### Caratteristiche della sezione

| Descrizione | Tipo | Base | Altezza | Area | Jx | Jy | Wx | Wy |
|---|---|---|---|---|---|---|---|---|
| R 8x10 | Rettangolare | 8 | 10 | 80 | 666.67 | 426.67 | 133.33 | 106.67 |

Materiale: C14 EN 338:2016
β,x = 0; β,y = 0
Rapporto luce/freccia elastica limite = 300
Rapporto luce/freccia elastica differita = 200
Mensola Y: Nessuno; Mensola X: Nessuno

Classe di servizio 1

**Verifica della freccia istantanea totale D.M. 17-01-18 §C4.4.7 Circolare 7 21-01-19**

Sezione ad ascissa 246.2
Kdef = 0
Uinst tot in x = -0.07
Uinst tot in y = -4.86
Uinst tot = 4.86
Luce/Uinst,tot < limite
490.1/4.86=100.8 < 300 Comb: SLE rara, 9 - NON SODDISFATTA

**Verifica della freccia istantanea variabile D.M. 17-01-18 §4.4.7**

Sezione ad ascissa 246.2
Kdef = 0
Uinst var in x = -0.04
Uinst var in y = -3.18
Uinst var = 3.18
Luce/Uinst,var < limite
490.1/3.18=154 < 300 Comb: SLE rara, 9 - NON SODDISFATTA

**Verifica della freccia finale EC5 §4.4.7 - EC5 2.2.3 (3)**

Sezione ad ascissa 254.4
Kdef = 0.6
Ufin in x = -0.09
Ufin in y = -5.89
Ufin = 5.89
Luce/Ufin < limite
490.1/5.89=83.2 < 200 - NON SODDISFATTA
Coefficienti combinatori impiegati:
Pesi strutturali = 1,000 + 0,600 = 1,600
Permanenti portati = 1,000 + 0,600 = 1,600
Neve = 0,500 + 0,500 = 1,000
Vento = 0,600 + 0,000 = 0,600

---

## Superelemento in legno a "Falda 6" 251-(-359; 595)

Verifiche condotte secondo D.M. 17-01-18 (N.T.C.)

**Dati generali**

Superelemento di lunghezza complessiva L= 411.4 composto da:
asta 251: Trave in legno a falda Falda 6 fili 251-252 (L = 167.5)
asta 415: Trave in legno a falda Falda 6 fili 252-253 (L = 243.9)

**Caratteristiche della sezione**

| Descrizione | Tipo | Base | Altezza | Area | Jx | Jy | Wx | Wy |
|---|---|---|---|---|---|---|---|---|
| R 8x10 | Rettangolare | 8 | 10 | 80 | 666.67 | 426.67 | 133.33 | 106.67 |

Materiale: C14 EN 338:2016
β,x = 0; β,y = 0
Rapporto luce/freccia elastica limite = 300
Rapporto luce/freccia elastica differita = 200
Mensola Y: Nessuno; Mensola X: Nessuno
Classe di servizio 1

**Verifica della freccia istantanea totale D.M. 17-01-18 §C4.4.7 Circolare 7 21-01-19**

Sezione ad ascissa 183.7
Kdef = 0
Uinst tot in x = 0.1
Uinst tot in y = -3.61
Uinst tot = 3.61
Luce/Uinst,tot < limite
411.4/3.61=114.1 < 300 Comb: SLE rara, 9 - NON SODDISFATTA

**Verifica della freccia istantanea variabile D.M. 17-01-18 §4.4.7**

Sezione ad ascissa 183.7
Kdef = 0
Uinst var in x = 0.06
Uinst var in y = -2.36
Uinst var = 2.36
Luce/Uinst,var < limite
411.4/2.36=174.1 < 300 Comb: SLE rara, 9 - NON SODDISFATTA

**Verifica della freccia finale EC5 §4.4.7 - EC5 2.2.3 (3)**

Sezione ad ascissa 189.3
Kdef = 0.6
Ufin in x = 0.13
Ufin in y = -4.4
Ufin = 4.4
Luce/Ufin < limite
411.4/4.4=93.5 < 200 - NON SODDISFATTA
Coefficienti combinatori impiegati:
Pesi strutturali = 1,000 + 0,600 = 1,600
Permanenti portati = 1,000 + 0,600 = 1,600
Neve = 0,500 + 0,500 = 1,000
Vento = 0,600 + 0,000 = 0,600

## Superelemento in legno a "Falda 6" 257-(-291; 595)

Verifiche condotte secondo D.M. 17-01-18 (N.T.C.)

**Dati generali**

Superelemento di lunghezza complessiva L= 332.6 composto da:
asta 250: Trave in legno a falda Falda 6 fili 257-258 (L = 88.7)
asta 414: Trave in legno a falda Falda 6 fili 258-259 (L = 243.9)

**Caratteristiche della sezione**

| Descrizione | Tipo | Base | Altezza | Area | Jx | Jy | Wx | Wy |
|---|---|---|---|---|---|---|---|---|
| R 8x10 | Rettangolare | 8 | 10 | 80 | 666.67 | 426.67 | 133.33 | 106.67 |

Materiale: C14 EN 338:2016
β,x = 0; β,y = 0
Rapporto luce/freccia elastica limite = 300
Rapporto luce/freccia elastica differita = 200
Mensola Y: Nessuno; Mensola X: Nessuno
Classe di servizio 1

**Verifica della freccia istantanea totale D.M. 17-01-18 §C4.4.7 Circolare 7 21-01-19**

Sezione ad ascissa 137.5
Kdef = 0
Uinst tot in x = 0.12
Uinst tot in y = -2.07
Uinst tot = 2.07
Luce/Uinst,tot < limite
332.6/2.07=160.7 < 300 Comb: SLE rara, 8 - NON SODDISFATTA

**Verifica della freccia istantanea variabile D.M. 17-01-18 §4.4.7**

Sezione ad ascissa 137.5
Kdef = 0
Uinst var in x = 0.07
Uinst var in y = -1.35
Uinst var = 1.35
Luce/Uinst,var < limite
332.6/1.35=245.7 < 300 Comb: SLE rara, 8 - NON SODDISFATTA

**Verifica della freccia finale EC5 §4.4.7 - EC5 2.2.3 (3)**

Sezione ad ascissa 140.4
Kdef = 0.6
Ufin in x = 0.15
Ufin in y = -2.54
Ufin = 2.54
Luce/Ufin < limite
332.6/2.54=130.8 < 200 - NON SODDISFATTA
Coefficienti combinatori impiegati:
Pesi strutturali = 1,000 + 0,600 = 1,600
Permanenti portati = 1,000 + 0,600 = 1,600
Neve = 0,500 + 0,500 = 1,000

## Superelemento in legno a "Falda 6" 263-(-223; 596)

Verifiche condotte secondo D.M. 17-01-18 (N.T.C.)

**Dati generali**

Superelemento di lunghezza complessiva L= 253.8 composto da:

Asta 249: Trave in legno a falda Falda 6 fili 263-264

**Caratteristiche della sezione**

| Descrizione | Tipo | Base | Altezza | Area | Jx | Jy | Wx | Wy |
|---|---|---|---|---|---|---|---|---|
| R 8x10 | Rettangolare | 8 | 10 | 80 | 666.67 | 426.67 | 133.33 | 106.67 |

Materiale: C14 EN 338:2016
β,x = 0; β,y = 0
Rapporto luce/freccia elastica limite = 300
Rapporto luce/freccia elastica differita = 200
Mensola Y: Nessuno; Mensola X: Nessuno
Classe di servizio 1

**Verifica della freccia istantanea totale D.M. 17-01-18 §C4.4.7 Circolare 7 21-01-19**

Sezione ad ascissa 93.1
Kdef = 0
Uinst tot in x = 0.05
Uinst tot in y = -0.67
Uinst tot = 0.67
Luce/Uinst,tot > limite
253.8/0.67=379.8 > 300 Comb: SLE rara, 8

**Verifica della freccia istantanea variabile D.M. 17-01-18 §4.4.7**

Sezione ad ascissa 93.1
Kdef = 0
Uinst var in x = 0.03
Uinst var in y = -0.43
Uinst var = 0.43
Luce/Uinst,var > limite
253.8/0.43=586.7 > 300 Comb: SLE rara, 8

**Verifica della freccia finale EC5 §4.4.7 - EC5 2.2.3 (3)**

Sezione ad ascissa 93.1
Kdef = 0.6
Ufin in x = 0.07
Ufin in y = -0.81
Ufin = 0.81
Luce/Ufin > limite
253.8/0.81=313.5 > 200
Coefficienti combinatori impiegati:
Pesi strutturali = 1,000 + 0,600 = 1,600
Permanenti portati = 1,000 + 0,600 = 1,600
Neve = 0,500 + 0,500 = 1,000

---

## Superelemento in legno a "Falda 6" 268-(-156; 596)

Verifiche condotte secondo D.M. 17-01-18 (N.T.C.)

**Dati generali**

Superelemento di lunghezza complessiva L= 175.1 composto da:
Asta 248: Trave in legno a falda Falda 6 fili 268-269

**Caratteristiche della sezione**

| Descrizione | Tipo | Base | Altezza | Area | Jx | Jy | Wx | Wy |
|---|---|---|---|---|---|---|---|---|
| R 8x10 | Rettangolare | 8 | 10 | 80 | 666.67 | 426.67 | 133.33 | 106.67 |

Materiale: C14 EN 338:2016
β,x = 0; β,y = 0
Rapporto luce/freccia elastica limite = 300
Rapporto luce/freccia elastica differita = 200
Mensola Y: Nessuno; Mensola X: Nessuno
Classe di servizio 1

**Verifica della freccia istantanea totale D.M. 17-01-18 §C4.4.7 Circolare 7 21-01-19**

Sezione ad ascissa 58.4
Kdef = 0
Uinst tot in x = 0.03
Uinst tot in y = -0.26
Uinst tot = 0.26
Luce/Uinst,tot > limite
175.1/0.26=670.4 > 300 Comb: SLE rara, 8

**Verifica della freccia istantanea variabile D.M. 17-01-18 §4.4.7**

Sezione ad ascissa 58.4

Kdef = 0
Uinst var in x = 0.02
Uinst var in y = -0.17
Uinst var = 0.17
Luce/Uinst,var > limite
175.1/0.17=1039.5 > 300 Comb: SLE rara, 8

**Verifica della freccia finale EC5 §4.4.7 - EC5 2.2.3 (3)**

Sezione ad ascissa 58.4
Kdef = 0.6
Ufin in x = 0.04
Ufin in y = -0.32
Ufin = 0.32
Luce/Ufin > limite
175.1/0.32=552.7 > 200
Coefficienti combinatori impiegati:
Pesi strutturali = 1,000 + 0,600 = 1,600
Permanenti portati = 1,000 + 0,600 = 1,600
Neve = 0,500 + 0,500 = 1,000

---

## Superelemento in legno a "Falda 6" 272-(-88; 597)

Verifiche condotte secondo D.M. 17-01-18 (N.T.C.)

**Dati generali**

Superelemento di lunghezza complessiva L= 96.3 composto da:
Asta 247: Trave in legno a falda Falda 6 fili 272-273

**Caratteristiche della sezione**

| Descrizione | Tipo | Base | Altezza | Area | Jx | Jy | Wx | Wy |
|---|---|---|---|---|---|---|---|---|
| R 8x10 | Rettangolare | 8 | 10 | 80 | 666.67 | 426.67 | 133.33 | 106.67 |

Materiale: C14 EN 338:2016
β,x = 0; β,y = 0
Rapporto luce/freccia elastica limite = 300
Rapporto luce/freccia elastica differita = 200
Mensola Y: Nessuno; Mensola X: Nessuno
Classe di servizio 1

**Verifica della freccia istantanea totale D.M. 17-01-18 §C4.4.7 Circolare 7 21-01-19**

Sezione ad ascissa 28.9
Kdef = 0
Uinst tot in x = -0.01
Uinst tot in y = -0.07
Uinst tot = 0.07
Luce/Uinst,tot > limite
96.3/0.07=1328.5 > 300 Comb: SLE rara, 16

**Verifica della freccia istantanea variabile D.M. 17-01-18 §4.4.7**

Sezione ad ascissa 28.9
Kdef = 0
Uinst var in x = -0.01
Uinst var in y = -0.05
Uinst var = 0.05
Luce/Uinst,var > limite
96.3/0.05=2080 > 300 Comb: SLE rara, 16

**Verifica della freccia finale EC5 §4.4.7 - EC5 2.2.3 (3)**

Sezione ad ascissa 28.9
Kdef = 0.6
Ufin in x = 0.02
Ufin in y = -0.09
Ufin = 0.09
Luce/Ufin > limite
96.3/0.09=1091.4 > 200
Coefficienti combinatori impiegati:
Pesi strutturali = 1,000 + 0,600 = 1,600
Permanenti portati = 1,000 + 0,600 = 1,600
Variabile A = 0,700 + 0,180 = 0,880
Neve = 0,500 + 0,500 = 1,000

# 1.4 Verifica sismica globale

***Desc.**: descrizione.*
***Stato limite**: (muratura) V=Taglio; PF=Pressoflessione; PFFP=Pressoflessione fuori piano; R=Ribaltamento.*
***Molt.**: moltiplicatore minimo della azione sismica che produce lo stato limite.*
***Comb.**: combinazione.*
***PGA**: accelerazione al suolo.*
***iPGA (ζE)**: indicatore di rischio sismico in termini di PGA ovvero rapporto tra l'azione sismica massima sopportabile dall'elemento e l'azione sismica massima che si utilizzerebbe nel progetto nuovo (§C8.3).*
***TR**: tempo di ritorno.*
***(TR/TRrif)^.41**: indicatore di rischio sismico in termini di periodo di ritorno.*
***fa**: fattore di accelerazione.*
***Stato limite**: (muratura) V=Taglio; PF=Presso flessione; PFFP=Pressoflessione fuori piano; R=Ribaltamento.*
***Coeff.s.**: coefficiente minimo prodotto dallo stato limite.*
***Verifica**: stato di verifica.*
***Maschio**: maschio.*
***Stato limite**: (maschio muratura) V=Taglio; PF=Presso flessione; PFFP=Presso flessione fuori piano; R=Ribaltamento.*
***Trave**: trave di collegamento in muratura.*
***Stato limite**: (trave muratura) V=Taglio; F=Flessione.*
***S. L.**: stato limite di riferimento.*
***TR,C**: periodo di ritorno di capacità.*
***PGA,C**: accelerazione di aggancio di capacità.*
***TR,Rif**: periodo di ritorno di riferimento.*
***PGA,Rif**: accelerazione di aggancio di riferimento.*
***Tipo rottura**: tipo di rottura che fornisce il valore minimo degli elementi considerati.*
***PAM**: perdita media annua attesa.*
***Classe PAM**: classe di rischio PAM.*
***IS-V**: indice di sicurezza.*
***Classe IS-V**: classe di rischio IS-V.*

## Verifica di elementi dotati di indicatori di rischio sismico mediante analisi con fattore q

Verifiche condotte secondo D.M. 17-01-18 (N.T.C.) § C8.7.1

### Accelerazioni e tempi di ritorno

Accelerazione di aggancio SLO (ag/g_SLO*S*ST) PGA,SLOrif = 0.081
Accelerazione di aggancio SLD (ag/g_SLD*S*ST) PGA,SLDrif = 0.101
Accelerazione di aggancio SLV (ag/g_SLV*S*ST) PGA,SLVrif = 0.244
Tr,SLOrif = 30 anni
Tr,SLDrif = 50 anni
Tr,SLVrif = 475 anni

### Moltiplicatori minimi delle condizioni sismiche

(Il valore di ζE corrisponde al valore di I.R. PGA secondo quanto riportato nella Circolare 7 21-01-19 §C8.3)

**Rottura a taglio**

Moltiplicatore: 0
Maschio 19
Lunghezza: 30.4; altezza: 269; spessore: 30; sezione a quota: 171
Combinazione SLV 1 N= 18 V par.= 10 l'= 0 fvd= 0.83 Vt scorrimento= 0 Vt fess. diag.= 0
Tempo di ritorno 0 anni
Indicatore iTr=(Tr/Tr,SLVrif)^.41 = 0
PGA 0
Indicatore iPGA=PGA/PGA,SLVrif = 0
Fattore di accelerazione fa = 0

**Rottura a flessione**

Moltiplicatore: 0
Maschio 19
Lunghezza: 30.4; altezza: 269; spessore: 30 sezione a quota 171
Combinazione SLV 1 N = 18 M = -519 σ0 = 0 fd = 14.38 Mu = 0
Tempo di ritorno 0 anni
Indicatore iTr=(Tr/Tr,SLVrif)^.41 = 0
PGA 0
Indicatore iPGA=PGA/PGA,SLVrif = 0
Fattore di accelerazione fa = 0

**Rottura a pressoflessione nel piano ortogonale**

Moltiplicatore: 0
Maschio 193
Lunghezza: 327.1; altezza: 316; spessore: 28; sezione a quota: 1406
Combinazione SLV 1 fd= 14.38 Ta= 0.06 Wa= 0.05 N= 555 M= 0 Mc= 0

Tempo di ritorno 0 anni
Indicatore iTr=(Tr/Tr,SLVrif)^.41 = 0
PGA 0
Indicatore iPGA=PGA/PGA,SLVrif = 0
Fattore di accelerazione fa = 0

**Rottura per meccanismi locali di collasso**

Moltiplicatore: 0
Maschio 19
Lunghezza: 30.4; altezza: 269; spessore: 30 f.agg.= 0 a.lim.= 0
Combinazione SLV 1 N top= 18 N base= -222 T orto= -1 α0= 0 M*= 0 e*= 0 a0*= 0
Tempo di ritorno 0 anni
Indicatore iTr=(Tr/Tr,SLVrif)^.41 = 0
PGA 0
Indicatore iPGA=PGA/PGA,SLVrif = 0
Fattore di accelerazione fa = 0

**Indicatori minimi riferiti al solo materiale muratura**

| Desc. | Stato limite | Molt. | Comb. | PGA | iPGA (ζE) | TR | (TR/TRrif)^.41 | fa |
|---|---|---|---|---|---|---|---|---|
| Maschio 19 | PF | 0 | SLV 1 | 0 | 0 | 0 | 0 | 0 |
| Maschio 19 | V | 0 | SLV 1 | 0 | 0 | 0 | 0 | 0 |
| Maschio 193 | PFFP | 0 | SLV 1 | 0 | 0 | 0 | 0 | 0 |
| Maschio 19 | R | 0 | SLV 1 | 0 | 0 | 0 | 0 | 0 |
| Trave di accoppiamento 8 | PF | 0 | SLV 1 | 0 | 0 | 0 | 0 | 0 |
| Trave di accoppiamento 1 | V | 0 | SLV 1 | 0 | 0 | 0 | 0 | 0 |

**Coefficienti di sicurezza riferiti al solo materiale muratura**

| Desc. | Stato limite | Coeff.s. | Comb. | Verifica |
|---|---|---|---|---|
| Maschio 1 | PF SLU | 7.215 | SLU 76 | Si |
| Maschio 1 | V SLU | 4.522 | SLU 76 | Si |
| Maschio 1 | PF | 2.321 | SLV 11 | Si |
| Maschio 1 | V | 1.255 | SLV 11 | Si |
| Maschio 1 | PFFP | 9.521 | SLV 15 | Si |
| Maschio 1 | R | 0.267 | SLV 5 | No |
| Maschio 2 | PF SLU | 11.428 | SLU 81 | Si |
| Maschio 2 | V SLU | 4.662 | SLU 81 | Si |
| Maschio 2 | PF | 1.757 | SLV 9 | Si |
| Maschio 2 | V | 1.096 | SLV 9 | Si |
| Maschio 2 | PFFP | 9.91 | SLV 13 | Si |
| Maschio 2 | R | 0.271 | SLV 11 | No |
| Maschio 3 | PF SLU | 9.686 | SLU 48 | Si |
| Maschio 3 | V SLU | 3.518 | SLU 81 | Si |
| Maschio 3 | PF | 0 | SLV 10 | No |
| Maschio 3 | V | 0 | SLV 9 | No |
| Maschio 3 | PFFP | 7.49 | SLV 9 | Si |
| Maschio 3 | R | 0 | SLV 10 | No |
| Maschio 4 | PF SLU | 4.979 | SLU 78 | Si |
| Maschio 4 | V SLU | 2.388 | SLU 77 | Si |
| Maschio 4 | PF | 2.881 | SLV 13 | Si |
| Maschio 4 | V | 0.541 | SLV 9 | No |
| Maschio 4 | PFFP | 19.146 | SLV 9 | Si |
| Maschio 4 | R | 0.147 | SLV 9 | No |
| Maschio 5 | PF SLU | 16.905 | SLU 81 | Si |
| Maschio 5 | V SLU | 3.099 | SLU 77 | Si |
| Maschio 5 | PF | 1.261 | SLV 5 | Si |
| Maschio 5 | V | 0.613 | SLV 5 | No |
| Maschio 5 | PFFP | 32.621 | SLV 9 | Si |
| Maschio 5 | R | 0 | SLV 5 | No |
| Maschio 6 | PF SLU | 7.452 | SLU 79 | Si |
| Maschio 6 | V SLU | 9.138 | SLU 72 | Si |
| Maschio 6 | PF | 1.328 | SLV 9 | Si |
| Maschio 6 | V | 0.639 | SLV 9 | No |
| Maschio 6 | PFFP | 29.557 | SLV 13 | Si |
| Maschio 6 | R | 0.148 | SLV 7 | No |
| Maschio 7 | PF SLU | 0 | SLU 81 | No |
| Maschio 7 | V SLU | 1.267 | SLU 82 | Si |
| Maschio 7 | PF | 0.809 | SLV 11 | No |
| Maschio 7 | V | 0.951 | SLV 7 | No |
| Maschio 7 | PFFP | 24.941 | SLV 5 | Si |
| Maschio 7 | R | 0.128 | SLV 7 | No |
| Maschio 8 | PF SLU | 4.061 | SLU 68 | Si |
| Maschio 8 | V SLU | 2.627 | SLU 2 | Si |
| Maschio 8 | PF | 0 | SLV 12 | No |
| Maschio 8 | V | 0 | SLV 11 | No |
| Maschio 8 | PFFP | 9.709 | SLV 11 | Si |
| Maschio 8 | R | 0.19 | SLV 11 | No |
| Maschio 9 | PF SLU | 1.975 | SLU 73 | Si |
| Maschio 9 | V SLU | 1.324 | SLU 68 | Si |
| Maschio 9 | PF | 2.122 | SLV 13 | Si |
| Maschio 9 | V | 0.596 | SLV 5 | No |
| Maschio 9 | PFFP | 15.898 | SLV 11 | Si |
| Maschio 9 | R | 0.158 | SLV 11 | No |
| Maschio 10 | PF SLU | 0.314 | SLU 84 | No |
| Maschio 10 | V SLU | 1.232 | SLU 73 | Si |
| Maschio 10 | PF | 1.186 | SLV 9 | Si |
| Maschio 10 | V | 0.531 | SLV 13 | No |

| Desc. | Stato limite | Coeff.s. | Comb. | Verifica |
|---|---|---|---|---|
| Maschio 10 | PFFP | 35.194 | SLV 7 | Si |
| Maschio 10 | R | 0.062 | SLV 7 | No |
| Maschio 11 | PF SLU | 0.977 | SLU 82 | No |
| Maschio 11 | V SLU | 0.791 | SLU 82 | No |
| Maschio 11 | PF | 0 | SLV 11 | No |
| Maschio 11 | V | 0 | SLV 11 | No |
| Maschio 11 | PFFP | 41.747 | SLV 3 | Si |
| Maschio 11 | R | 0.175 | SLV 7 | No |
| Maschio 12 | PF SLU | 4.741 | SLU 77 | Si |
| Maschio 12 | V SLU | 2.34 | SLU 52 | Si |
| Maschio 12 | PF | 2.175 | SLV 7 | Si |
| Maschio 12 | V | 0.624 | SLV 5 | No |
| Maschio 12 | PFFP | 16.262 | SLV 7 | Si |
| Maschio 12 | R | 0.061 | SLV 9 | No |
| Maschio 13 | PF SLU | 0.879 | SLU 81 | No |
| Maschio 13 | V SLU | 1.158 | SLU 81 | Si |
| Maschio 13 | PF | 0 | SLV 12 | No |
| Maschio 13 | V | 0 | SLV 7 | No |
| Maschio 13 | PFFP | 5.235 | SLV 7 | Si |
| Maschio 13 | R | 0 | SLV 12 | No |
| Maschio 14 | PF SLU | 5.56 | SLU 84 | Si |
| Maschio 14 | V SLU | 2.511 | SLU 84 | Si |
| Maschio 14 | PF | 0 | SLV 16 | No |
| Maschio 14 | V | 0 | SLV 13 | No |
| Maschio 14 | PFFP | 2.892 | SLV 15 | Si |
| Maschio 14 | R | 0 | SLV 16 | No |
| Maschio 15 | PF SLU | 1.643 | SLU 84 | Si |
| Maschio 15 | V SLU | 3.242 | SLU 80 | Si |
| Maschio 15 | PF | 1.7 | SLV 11 | Si |
| Maschio 15 | V | 0.843 | SLV 11 | No |
| Maschio 15 | PFFP | 27.979 | SLV 7 | Si |
| Maschio 15 | R | 0.143 | SLV 9 | No |
| Maschio 16 | PF SLU | 2.316 | SLU 81 | Si |
| Maschio 16 | V SLU | 0.851 | SLU 81 | No |
| Maschio 16 | PF | 1.754 | SLV 15 | Si |
| Maschio 16 | V | 0.699 | SLV 9 | No |
| Maschio 16 | PFFP | 19.306 | SLV 11 | Si |
| Maschio 16 | R | 0.144 | SLV 11 | No |
| Maschio 18 | PF SLU | 4.369 | SLU 82 | Si |
| Maschio 18 | V SLU | 4.752 | SLU 82 | Si |
| Maschio 18 | PF | 4.31 | SLV 1 | Si |
| Maschio 18 | V | 1.274 | SLV 11 | Si |
| Maschio 18 | PFFP | 42.785 | SLV 1 | Si |
| Maschio 18 | R | 0.35 | SLV 5 | No |
| Maschio 19 | PF SLU | 0 | SLU 84 | No |
| Maschio 19 | V SLU | 0 | SLU 1 | No |
| Maschio 19 | PF | 0 | SLV 16 | No |
| Maschio 19 | V | 0 | SLD 1 | No |
| Maschio 19 | PFFP | 0 | SLV 12 | No |
| Maschio 19 | R | 0 | SLV 16 | No |
| Maschio 21 | PF SLU | 0 | SLU 84 | No |
| Maschio 21 | V SLU | 0 | SLU 1 | No |
| Maschio 21 | PF | 0 | SLV 16 | No |
| Maschio 21 | V | 0 | SLD 1 | No |
| Maschio 21 | PFFP | 8.168 | SLV 11 | Si |
| Maschio 21 | R | 0 | SLV 16 | No |
| Maschio 23 | PF SLU | 4.085 | SLU 42 | Si |
| Maschio 23 | V SLU | 2.06 | SLU 70 | Si |
| Maschio 23 | PF | 2.889 | SLV 11 | Si |
| Maschio 23 | V | 1.018 | SLV 11 | Si |
| Maschio 23 | PFFP | 15.45 | SLV 11 | Si |
| Maschio 23 | R | 0.717 | SLV 11 | No |
| Maschio 25 | PF SLU | 1.401 | SLU 49 | Si |
| Maschio 25 | V SLU | 1.839 | SLU 70 | Si |
| Maschio 25 | PF | 1.359 | SLV 13 | Si |
| Maschio 25 | V | 1.929 | SLV 13 | Si |
| Maschio 25 | PFFP | 9.532 | SLV 1 | Si |
| Maschio 25 | R | 0.024 | SLV 3 | No |
| Maschio 26 | PF SLU | 8.203 | SLU 84 | Si |
| Maschio 26 | V SLU | 1.47 | SLU 83 | Si |
| Maschio 26 | PF | 2.257 | SLV 3 | Si |
| Maschio 26 | V | 0.884 | SLV 1 | No |
| Maschio 26 | PFFP | 33.266 | SLV 15 | Si |
| Maschio 26 | R | 0.301 | SLV 5 | No |
| Maschio 27 | PF SLU | 7.381 | SLU 84 | Si |
| Maschio 27 | V SLU | 4.843 | SLU 82 | Si |
| Maschio 27 | PF | 1.862 | SLV 13 | Si |
| Maschio 27 | V | 0.91 | SLV 3 | No |
| Maschio 27 | PFFP | 42 | SLV 7 | Si |
| Maschio 27 | R | 0.157 | SLV 11 | No |
| Maschio 28 | PF SLU | 0 | SLU 82 | No |
| Maschio 28 | V SLU | 8.179 | SLU 84 | Si |
| Maschio 28 | PF | 1.091 | SLV 13 | Si |
| Maschio 28 | V | 1.982 | SLV 13 | Si |
| Maschio 28 | PFFP | 31.616 | SLV 3 | Si |
| Maschio 28 | R | 0.305 | SLV 11 | No |
| Maschio 29 | PF SLU | 3.305 | SLU 84 | Si |
| Maschio 29 | V SLU | 3.145 | SLU 84 | Si |
| Maschio 29 | PF | 0.954 | SLV 3 | No |

| Desc. | Stato limite | Coeff.s. | Comb. | Verifica |
|---|---|---|---|---|
| Maschio 29 | V | 0.835 | SLV 3 | No |
| Maschio 29 | PFFP | 24.164 | SLV 1 | Si |
| Maschio 29 | R | 0.238 | SLV 3 | No |
| Maschio 30 | PF SLU | 0 | SLU 81 | No |
| Maschio 30 | V SLU | 3.668 | SLU 84 | Si |
| Maschio 30 | PF | 1.223 | SLV 3 | Si |
| Maschio 30 | V | 2.035 | SLV 1 | Si |
| Maschio 30 | PFFP | 31.312 | SLV 9 | Si |
| Maschio 30 | R | 0.263 | SLV 9 | No |
| Maschio 31 | PF SLU | 4.042 | SLU 83 | Si |
| Maschio 31 | V SLU | 4.082 | SLU 82 | Si |
| Maschio 31 | PF | 1.252 | SLV 13 | Si |
| Maschio 31 | V | 0.654 | SLV 13 | No |
| Maschio 31 | PFFP | 39.293 | SLV 9 | Si |
| Maschio 31 | R | 0.313 | SLV 11 | No |
| Maschio 32 | PF SLU | 0.702 | SLU 83 | No |
| Maschio 32 | V SLU | 14.779 | SLU 84 | Si |
| Maschio 32 | PF | 1.559 | SLV 13 | Si |
| Maschio 32 | V | 3.372 | SLV 13 | Si |
| Maschio 32 | PFFP | 43.562 | SLV 5 | Si |
| Maschio 32 | R | 0.119 | SLV 9 | No |
| Maschio 33 | PF SLU | 9.156 | SLU 83 | Si |
| Maschio 33 | V SLU | 1.415 | SLU 83 | Si |
| Maschio 33 | PF | 2.285 | SLV 15 | Si |
| Maschio 33 | V | 0.731 | SLV 15 | No |
| Maschio 33 | PFFP | 36.963 | SLV 3 | Si |
| Maschio 33 | R | 0.281 | SLV 5 | No |
| Maschio 34 | PF SLU | 2.965 | SLU 82 | Si |
| Maschio 34 | V SLU | 12.439 | SLU 50 | Si |
| Maschio 34 | PF | 2.291 | SLV 1 | Si |
| Maschio 34 | V | 1.102 | SLV 1 | Si |
| Maschio 34 | PFFP | 16.469 | SLV 9 | Si |
| Maschio 34 | R | 0.142 | SLV 7 | No |
| Maschio 35 | PF SLU | 9.479 | SLU 82 | Si |
| Maschio 35 | V SLU | 4.208 | SLU 82 | Si |
| Maschio 35 | PF | 4.453 | SLV 3 | Si |
| Maschio 35 | V | 0.997 | SLV 1 | No |
| Maschio 35 | PFFP | 20.427 | SLV 9 | Si |
| Maschio 35 | R | 0.117 | SLV 5 | No |
| Maschio 36 | PF SLU | 9.377 | SLU 77 | Si |
| Maschio 36 | V SLU | 7.36 | SLU 77 | Si |
| Maschio 36 | PF | 4.693 | SLV 15 | Si |
| Maschio 36 | V | 1.097 | SLV 13 | Si |
| Maschio 36 | PFFP | 27.132 | SLV 5 | Si |
| Maschio 36 | R | 0.079 | SLV 11 | No |
| Maschio 37 | PF SLU | 5.512 | SLU 82 | Si |
| Maschio 37 | V SLU | 2.915 | SLU 82 | Si |
| Maschio 37 | PF | 1.75 | SLV 5 | Si |
| Maschio 37 | V | 0.987 | SLV 9 | No |
| Maschio 37 | PFFP | 11.024 | SLV 1 | Si |
| Maschio 37 | R | 0.256 | SLV 11 | No |
| Maschio 38 | PF SLU | 5.099 | SLU 82 | Si |
| Maschio 38 | V SLU | 1.259 | SLU 79 | Si |
| Maschio 38 | PF | 2.655 | SLV 11 | Si |
| Maschio 38 | V | 0.805 | SLV 5 | No |
| Maschio 38 | PFFP | 36.314 | SLV 11 | Si |
| Maschio 38 | R | 0.302 | SLV 5 | No |
| Maschio 39 | PF SLU | 3.528 | SLU 79 | Si |
| Maschio 39 | V SLU | 3.006 | SLU 79 | Si |
| Maschio 39 | PF | 3.066 | SLV 5 | Si |
| Maschio 39 | V | 1.099 | SLV 9 | Si |
| Maschio 39 | PFFP | 278.049 | SLV 11 | Si |
| Maschio 39 | R | 1.072 | SLV 5 | Si |
| Maschio 40 | PF SLU | 14.943 | SLU 82 | Si |
| Maschio 40 | V SLU | 3.126 | SLU 52 | Si |
| Maschio 40 | PF | 4.787 | SLV 11 | Si |
| Maschio 40 | V | 1.038 | SLV 7 | Si |
| Maschio 40 | PFFP | 36.96 | SLV 13 | Si |
| Maschio 40 | R | 0.216 | SLV 7 | No |
| Maschio 42 | PF SLU | 1.792 | SLU 82 | Si |
| Maschio 42 | V SLU | 1.136 | SLU 82 | Si |
| Maschio 42 | PF | 3.291 | SLV 7 | Si |
| Maschio 42 | V | 0.858 | SLV 7 | No |
| Maschio 42 | PFFP | 21.903 | SLV 9 | Si |
| Maschio 42 | R | 0.124 | SLV 7 | No |
| Maschio 43 | PF SLU | 9.39 | SLU 40 | Si |
| Maschio 43 | V SLU | 11.962 | SLU 77 | Si |
| Maschio 43 | PF | 1.044 | SLV 11 | Si |
| Maschio 43 | V | 0.406 | SLV 11 | No |
| Maschio 43 | PFFP | 7.114 | SLV 11 | Si |
| Maschio 43 | R | 0.166 | SLV 5 | No |
| Maschio 44 | PF SLU | 5.207 | SLU 38 | Si |
| Maschio 44 | V SLU | 2.424 | SLU 84 | Si |
| Maschio 44 | PF | 0 | SLV 3 | No |
| Maschio 44 | V | 0 | SLV 3 | No |
| Maschio 44 | PFFP | 4.612 | SLV 7 | Si |
| Maschio 44 | R | 0.129 | SLV 9 | No |
| Maschio 45 | PF SLU | 3.218 | SLU 41 | Si |
| Maschio 45 | V SLU | 3.833 | SLU 83 | Si |

| Desc. | Stato limite | Coeff.s. | Comb. | Verifica |
|---|---|---|---|---|
| Maschio 45 | PF | 0 | SLV 12 | No |
| Maschio 45 | V | 0 | SLV 3 | No |
| Maschio 45 | PFFP | 9.298 | SLV 7 | Si |
| Maschio 45 | R | 0 | SLV 12 | No |
| Maschio 46 | PF SLU | 3.545 | SLU 83 | Si |
| Maschio 46 | V SLU | 3.444 | SLU 2 | Si |
| Maschio 46 | PF | 2.309 | SLV 11 | Si |
| Maschio 46 | V | 1.112 | SLV 11 | Si |
| Maschio 46 | PFFP | 22.645 | SLV 11 | Si |
| Maschio 46 | R | 0.155 | SLV 5 | No |
| Maschio 47 | PF SLU | 1.263 | SLU 84 | Si |
| Maschio 47 | V SLU | 1.383 | SLU 84 | Si |
| Maschio 47 | PF | 0 | SLV 1 | No |
| Maschio 47 | V | 0 | SLV 1 | No |
| Maschio 47 | PFFP | 36.965 | SLV 15 | Si |
| Maschio 47 | R | 0.111 | SLV 11 | No |
| Maschio 48 | PF SLU | 1.024 | SLU 84 | Si |
| Maschio 48 | V SLU | 1.641 | SLU 73 | Si |
| Maschio 48 | PF | 1.356 | SLV 3 | Si |
| Maschio 48 | V | 0.938 | SLV 1 | No |
| Maschio 48 | PFFP | 27.554 | SLV 11 | Si |
| Maschio 48 | R | 0 | SLV 7 | No |
| Maschio 49 | PF SLU | 2.449 | SLU 47 | Si |
| Maschio 49 | V SLU | 1.589 | SLU 68 | Si |
| Maschio 49 | PF | 2.097 | SLV 3 | Si |
| Maschio 49 | V | 0.625 | SLV 9 | No |
| Maschio 49 | PFFP | 12.951 | SLV 7 | Si |
| Maschio 49 | R | 0.156 | SLV 7 | No |
| Maschio 50 | PF SLU | 3.878 | SLU 5 | Si |
| Maschio 50 | V SLU | 2.285 | SLU 44 | Si |
| Maschio 50 | PF | 1.072 | SLV 7 | Si |
| Maschio 50 | V | 0.139 | SLV 7 | No |
| Maschio 50 | PFFP | 6.425 | SLV 7 | Si |
| Maschio 50 | R | 0.199 | SLV 7 | No |
| Maschio 51 | PF SLU | 0 | SLU 77 | No |
| Maschio 51 | V SLU | 17.388 | SLU 37 | Si |
| Maschio 51 | PF | 1.537 | SLV 7 | Si |
| Maschio 51 | V | 1.21 | SLV 5 | Si |
| Maschio 51 | PFFP | 29.184 | SLV 9 | Si |
| Maschio 51 | R | 0.147 | SLV 7 | No |
| Maschio 52 | PF SLU | 4.593 | SLU 81 | Si |
| Maschio 52 | V SLU | 3.391 | SLU 81 | Si |
| Maschio 52 | PF | 0 | SLV 9 | No |
| Maschio 52 | V | 0 | SLV 9 | No |
| Maschio 52 | PFFP | 11.26 | SLV 9 | Si |
| Maschio 52 | R | 0.283 | SLV 7 | No |
| Maschio 53 | PF SLU | 11.932 | SLU 43 | Si |
| Maschio 53 | V SLU | 7.539 | SLU 50 | Si |
| Maschio 53 | PF | 0 | SLV 5 | No |
| Maschio 53 | V | 0 | SLV 5 | No |
| Maschio 53 | PFFP | 6.298 | SLV 5 | Si |
| Maschio 53 | R | 0.18 | SLV 5 | No |
| Maschio 54 | PF SLU | 7.784 | SLU 76 | Si |
| Maschio 54 | V SLU | 30.92 | SLU 5 | Si |
| Maschio 54 | PF | 2.13 | SLV 5 | Si |
| Maschio 54 | V | 1.373 | SLV 7 | Si |
| Maschio 54 | PFFP | 14.523 | SLV 1 | Si |
| Maschio 54 | R | 0.313 | SLV 9 | No |
| Maschio 55 | PF SLU | 3.993 | SLU 76 | Si |
| Maschio 55 | V SLU | 13.988 | SLU 34 | Si |
| Maschio 55 | PF | 1.72 | SLV 9 | Si |
| Maschio 55 | V | 1.225 | SLV 9 | Si |
| Maschio 55 | PFFP | 3.172 | SLV 15 | Si |
| Maschio 55 | R | 0.039 | SLV 5 | No |
| Maschio 56 | PF SLU | 2.541 | SLU 83 | Si |
| Maschio 56 | V SLU | 0.938 | SLU 84 | No |
| Maschio 56 | PF | 0 | SLV 9 | No |
| Maschio 56 | V | 0 | SLV 9 | No |
| Maschio 56 | PFFP | 0 | SLV 10 | No |
| Maschio 56 | R | 0 | SLV 10 | No |
| Maschio 57 | PF SLU | 1.91 | SLU 83 | Si |
| Maschio 57 | V SLU | 1.545 | SLU 83 | Si |
| Maschio 57 | PF | 0 | SLV 9 | No |
| Maschio 57 | V | 0 | SLV 9 | No |
| Maschio 57 | PFFP | 3.952 | SLV 5 | Si |
| Maschio 57 | R | 0.035 | SLV 9 | No |
| Maschio 58 | PF SLU | 1.398 | SLU 76 | Si |
| Maschio 58 | V SLU | 0.543 | SLU 76 | No |
| Maschio 58 | PF | 0 | SLV 15 | No |
| Maschio 58 | V | 0 | SLV 15 | No |
| Maschio 58 | PFFP | 0 | SLV 11 | No |
| Maschio 58 | R | 0 | SLV 12 | No |
| Maschio 59 | PF SLU | 1.711 | SLU 2 | Si |
| Maschio 59 | V SLU | 1.741 | SLU 52 | Si |
| Maschio 59 | PF | 1.272 | SLV 3 | Si |
| Maschio 59 | V | 0.5 | SLV 3 | No |
| Maschio 59 | PFFP | 5.942 | SLV 5 | Si |
| Maschio 59 | R | 0.039 | SLV 7 | No |
| Maschio 60 | PF SLU | 0 | SLU 75 | No |

| Desc. | Stato limite | Coeff.s. | Comb. | Verifica |
|---|---|---|---|---|
| Maschio 60 | V SLU | 4.502 | SLU 52 | Si |
| Maschio 60 | PF | 1.072 | SLV 13 | Si |
| Maschio 60 | V | 0.894 | SLV 13 | No |
| Maschio 60 | PFFP | 7.898 | SLV 7 | Si |
| Maschio 60 | R | 0.043 | SLV 5 | No |
| Maschio 61 | PF SLU | 0.098 | SLU 83 | No |
| Maschio 61 | V SLU | 2.091 | SLU 81 | Si |
| Maschio 61 | PF | 2.256 | SLV 15 | Si |
| Maschio 61 | V | 0.586 | SLV 7 | No |
| Maschio 61 | PFFP | 4.979 | SLV 9 | Si |
| Maschio 61 | R | 0.02 | SLV 7 | No |
| Maschio 62 | PF SLU | 0 | SLU 74 | No |
| Maschio 62 | V SLU | 0.759 | SLU 81 | No |
| Maschio 62 | PF | 1.049 | SLV 1 | Si |
| Maschio 62 | V | 0.083 | SLV 1 | No |
| Maschio 62 | PFFP | 6.667 | SLV 9 | Si |
| Maschio 62 | R | 0.032 | SLV 9 | No |
| Maschio 63 | PF SLU | 0 | SLU 52 | No |
| Maschio 63 | V SLU | 0.767 | SLU 84 | No |
| Maschio 63 | PF | 0 | SLV 7 | No |
| Maschio 63 | V | 0 | SLV 7 | No |
| Maschio 63 | PFFP | 10.258 | SLV 9 | Si |
| Maschio 63 | R | 0.04 | SLV 9 | No |
| Maschio 64 | PF SLU | 3.362 | SLU 73 | Si |
| Maschio 64 | V SLU | 2.788 | SLU 2 | Si |
| Maschio 64 | PF | 2.03 | SLV 9 | Si |
| Maschio 64 | V | 0.349 | SLV 11 | No |
| Maschio 64 | PFFP | 3.506 | SLV 15 | Si |
| Maschio 64 | R | 0.02 | SLV 1 | No |
| Maschio 65 | PF SLU | 1.331 | SLU 82 | Si |
| Maschio 65 | V SLU | 0.477 | SLU 82 | No |
| Maschio 65 | PF | 0 | SLV 1 | No |
| Maschio 65 | V | 0 | SLV 1 | No |
| Maschio 65 | PFFP | 2.434 | SLV 1 | Si |
| Maschio 65 | R | 0.027 | SLV 11 | No |
| Maschio 66 | PF SLU | 0.89 | SLU 83 | No |
| Maschio 66 | V SLU | 0.503 | SLU 83 | No |
| Maschio 66 | PF | 0 | SLV 16 | No |
| Maschio 66 | V | 0 | SLD 7 | No |
| Maschio 66 | PFFP | 0 | SLV 16 | No |
| Maschio 66 | R | 0 | SLV 5 | No |
| Maschio 67 | PF SLU | 0 | SLU 31 | No |
| Maschio 67 | V SLU | 3.291 | SLU 80 | Si |
| Maschio 67 | PF | 0.906 | SLV 7 | No |
| Maschio 67 | V | 0.567 | SLV 11 | No |
| Maschio 67 | PFFP | 5.058 | SLV 5 | Si |
| Maschio 67 | R | 0.02 | SLV 11 | No |
| Maschio 68 | PF SLU | 2.62 | SLU 81 | Si |
| Maschio 68 | V SLU | 2.276 | SLU 81 | Si |
| Maschio 68 | PF | 1.437 | SLV 15 | Si |
| Maschio 68 | V | 0.885 | SLV 13 | No |
| Maschio 68 | PFFP | 16.788 | SLV 11 | Si |
| Maschio 68 | R | 0.219 | SLV 7 | No |
| Maschio 69 | PF SLU | 1.04 | SLU 81 | Si |
| Maschio 69 | V SLU | 0.956 | SLU 81 | No |
| Maschio 69 | PF | 0 | SLV 12 | No |
| Maschio 69 | V | 0 | SLV 1 | No |
| Maschio 69 | PFFP | 15.577 | SLV 11 | Si |
| Maschio 69 | R | 0 | SLV 12 | No |
| Maschio 71 | PF SLU | 4.252 | SLU 84 | Si |
| Maschio 71 | V SLU | 4.651 | SLU 68 | Si |
| Maschio 71 | PF | 3.605 | SLV 11 | Si |
| Maschio 71 | V | 1.126 | SLV 7 | Si |
| Maschio 71 | PFFP | 9.812 | SLV 7 | Si |
| Maschio 71 | R | 0.111 | SLV 9 | No |
| Maschio 72 | PF SLU | 0 | SLU 1 | No |
| Maschio 72 | V SLU | 0 | SLU 1 | No |
| Maschio 72 | PF | 0 | SLD 1 | No |
| Maschio 72 | V | 0 | SLD 1 | No |
| Maschio 72 | PFFP | 9.072 | SLV 7 | Si |
| Maschio 72 | R | 0 | SLV 10 | No |
| Maschio 73 | PF SLU | 0 | SLU 73 | No |
| Maschio 73 | V SLU | 2.211 | SLU 77 | Si |
| Maschio 73 | PF | 0 | SLV 5 | No |
| Maschio 73 | V | 0 | SLV 5 | No |
| Maschio 73 | PFFP | 4.241 | SLV 1 | Si |
| Maschio 73 | R | 0.042 | SLV 9 | No |
| Maschio 74 | PF SLU | 1.956 | SLU 83 | Si |
| Maschio 74 | V SLU | 1.62 | SLU 83 | Si |
| Maschio 74 | PF | 1.517 | SLV 15 | Si |
| Maschio 74 | V | 0.806 | SLV 1 | No |
| Maschio 74 | PFFP | 8.159 | SLV 15 | Si |
| Maschio 74 | R | 0.038 | SLV 9 | No |
| Maschio 75 | PF SLU | 0.976 | SLU 83 | No |
| Maschio 75 | V SLU | 3.402 | SLU 82 | Si |
| Maschio 75 | PF | 2.21 | SLV 1 | Si |
| Maschio 75 | V | 0.843 | SLV 3 | No |
| Maschio 75 | PFFP | 10.761 | SLV 3 | Si |
| Maschio 75 | R | 0.029 | SLV 11 | No |

| Desc. | Stato limite | Coeff.s. | Comb. | Verifica |
|---|---|---|---|---|
| Maschio 76 | PF SLU | 9.108 | SLU 84 | Si |
| Maschio 76 | V SLU | 3.404 | SLU 82 | Si |
| Maschio 76 | PF | 4.192 | SLV 15 | Si |
| Maschio 76 | V | 0.828 | SLV 15 | No |
| Maschio 76 | PFFP | 9.277 | SLV 9 | Si |
| Maschio 76 | R | 0.037 | SLV 9 | No |
| Maschio 77 | PF SLU | 3.035 | SLU 83 | Si |
| Maschio 77 | V SLU | 1.375 | SLU 83 | Si |
| Maschio 77 | PF | 2.129 | SLV 3 | Si |
| Maschio 77 | V | 0.82 | SLV 13 | No |
| Maschio 77 | PFFP | 8.898 | SLV 3 | Si |
| Maschio 77 | R | 0.032 | SLV 7 | No |
| Maschio 78 | PF SLU | 2.836 | SLU 82 | Si |
| Maschio 78 | V SLU | 1.153 | SLU 82 | Si |
| Maschio 78 | PF | 1.867 | SLV 1 | Si |
| Maschio 78 | V | 0.598 | SLV 1 | No |
| Maschio 78 | PFFP | 5.557 | SLV 9 | Si |
| Maschio 78 | R | 0.042 | SLV 7 | No |
| Maschio 79 | PF SLU | 6.166 | SLU 82 | Si |
| Maschio 79 | V SLU | 3.311 | SLU 82 | Si |
| Maschio 79 | PF | 2.839 | SLV 3 | Si |
| Maschio 79 | V | 0.989 | SLV 1 | No |
| Maschio 79 | PFFP | 8.648 | SLV 9 | Si |
| Maschio 79 | R | 0.021 | SLV 9 | No |
| Maschio 80 | PF SLU | 6.499 | SLU 83 | Si |
| Maschio 80 | V SLU | 13.329 | SLU 80 | Si |
| Maschio 80 | PF | 2.78 | SLV 3 | Si |
| Maschio 80 | V | 1.242 | SLV 13 | Si |
| Maschio 80 | PFFP | 9.256 | SLV 1 | Si |
| Maschio 80 | R | 0.038 | SLV 9 | No |
| Maschio 81 | PF SLU | 1.861 | SLU 83 | Si |
| Maschio 81 | V SLU | 0.709 | SLU 84 | No |
| Maschio 81 | PF | 1.485 | SLV 15 | Si |
| Maschio 81 | V | 0.497 | SLV 15 | No |
| Maschio 81 | PFFP | 8.497 | SLV 1 | Si |
| Maschio 81 | R | 0.042 | SLV 11 | No |
| Maschio 82 | PF SLU | 1.199 | SLU 83 | Si |
| Maschio 82 | V SLU | 1.805 | SLU 79 | Si |
| Maschio 82 | PF | 1.957 | SLV 9 | Si |
| Maschio 82 | V | 1.004 | SLV 5 | Si |
| Maschio 82 | PFFP | 22.975 | SLV 11 | Si |
| Maschio 82 | R | 0.193 | SLV 7 | No |
| Maschio 83 | PF SLU | 2.468 | SLU 83 | Si |
| Maschio 83 | V SLU | 8.144 | SLU 52 | Si |
| Maschio 83 | PF | 2.935 | SLV 5 | Si |
| Maschio 83 | V | 0.992 | SLV 11 | No |
| Maschio 83 | PFFP | 16.848 | SLV 15 | Si |
| Maschio 83 | R | 0.094 | SLV 7 | No |
| Maschio 84 | PF SLU | 1.191 | SLU 82 | Si |
| Maschio 84 | V SLU | 0.755 | SLU 82 | No |
| Maschio 84 | PF | 0 | SLV 3 | No |
| Maschio 84 | V | 0 | SLV 3 | No |
| Maschio 84 | PFFP | 1.489 | SLV 15 | Si |
| Maschio 84 | R | 0.028 | SLV 7 | No |
| Maschio 85 | PF SLU | 0 | SLU 61 | No |
| Maschio 85 | V SLU | 2.918 | SLU 52 | Si |
| Maschio 85 | PF | 1.932 | SLV 5 | Si |
| Maschio 85 | V | 0.817 | SLV 11 | No |
| Maschio 85 | PFFP | 4.821 | SLV 11 | Si |
| Maschio 85 | R | 0.02 | SLV 3 | No |
| Maschio 86 | PF SLU | 0.641 | SLU 84 | No |
| Maschio 86 | V SLU | 0.919 | SLU 84 | No |
| Maschio 86 | PF | 0 | SLV 12 | No |
| Maschio 86 | V | 0 | SLV 7 | No |
| Maschio 86 | PFFP | 3.965 | SLV 7 | Si |
| Maschio 86 | R | 0.038 | SLV 11 | No |
| Maschio 87 | PF SLU | 0 | SLU 56 | No |
| Maschio 87 | V SLU | 2.074 | SLU 77 | Si |
| Maschio 87 | PF | 1.742 | SLV 7 | Si |
| Maschio 87 | V | 0.73 | SLV 11 | No |
| Maschio 87 | PFFP | 4.875 | SLV 9 | Si |
| Maschio 87 | R | 0.02 | SLV 3 | No |
| Maschio 88 | PF SLU | 0 | SLU 1 | No |
| Maschio 88 | V SLU | 0 | SLU 1 | No |
| Maschio 88 | PF | 0 | SLD 1 | No |
| Maschio 88 | V | 0 | SLD 1 | No |
| Maschio 88 | PFFP | 1.753 | SLV 9 | Si |
| Maschio 88 | R | 0.04 | SLV 7 | No |
| Maschio 89 | PF SLU | 0 | SLU 10 | No |
| Maschio 89 | V SLU | 0.406 | SLU 82 | No |
| Maschio 89 | PF | 0 | SLD 9 | No |
| Maschio 89 | V | 0 | SLD 9 | No |
| Maschio 89 | PFFP | 9.731 | SLV 1 | Si |
| Maschio 89 | R | 0 | SLV 14 | No |
| Maschio 90 | PF SLU | 0 | SLU 57 | No |
| Maschio 90 | V SLU | 1.915 | SLU 73 | Si |
| Maschio 90 | PF | 0 | SLV 3 | No |
| Maschio 90 | V | 0 | SLV 3 | No |
| Maschio 90 | PFFP | 6.518 | SLV 7 | Si |

| Desc. | Stato limite | Coeff.s. | Comb. | Verifica |
|---|---|---|---|---|
| Maschio 90 | R | 0.041 | SLV 11 | No |
| Maschio 91 | PF SLU | 1.539 | SLU 2 | Si |
| Maschio 91 | V SLU | 0.937 | SLU 52 | No |
| Maschio 91 | PF | 0.959 | SLV 15 | No |
| Maschio 91 | V | 0.109 | SLV 15 | No |
| Maschio 91 | PFFP | 5.819 | SLV 9 | Si |
| Maschio 91 | R | 0.04 | SLV 5 | No |
| Maschio 92 | PF SLU | 1.292 | SLU 2 | Si |
| Maschio 92 | V SLU | 0.511 | SLU 76 | No |
| Maschio 92 | PF | 0 | SLV 3 | No |
| Maschio 92 | V | 0 | SLV 3 | No |
| Maschio 92 | PFFP | 0 | SLV 8 | No |
| Maschio 92 | R | 0 | SLV 8 | No |
| Maschio 93 | PF SLU | 2.054 | SLU 77 | Si |
| Maschio 93 | V SLU | 1.398 | SLU 83 | Si |
| Maschio 93 | PF | 0 | SLV 5 | No |
| Maschio 93 | V | 0 | SLV 5 | No |
| Maschio 93 | PFFP | 3.417 | SLV 9 | Si |
| Maschio 93 | R | 0 | SLV 10 | No |
| Maschio 94 | PF SLU | 2.162 | SLU 81 | Si |
| Maschio 94 | V SLU | 0.787 | SLU 84 | No |
| Maschio 94 | PF | 0 | SLV 1 | No |
| Maschio 94 | V | 0 | SLV 1 | No |
| Maschio 94 | PFFP | 0 | SLV 6 | No |
| Maschio 94 | R | 0 | SLV 10 | No |
| Maschio 95 | PF SLU | 3.298 | SLU 76 | Si |
| Maschio 95 | V SLU | 25.426 | SLU 5 | Si |
| Maschio 95 | PF | 1.806 | SLV 5 | Si |
| Maschio 95 | V | 1.406 | SLV 5 | Si |
| Maschio 95 | PFFP | 4.658 | SLV 1 | Si |
| Maschio 95 | R | 0.042 | SLV 11 | No |
| Maschio 96 | PF SLU | 9.066 | SLU 81 | Si |
| Maschio 96 | V SLU | 3.701 | SLU 81 | Si |
| Maschio 96 | PF | 2.123 | SLV 11 | Si |
| Maschio 96 | V | 1.221 | SLV 11 | Si |
| Maschio 96 | PFFP | 2.28 | SLV 15 | Si |
| Maschio 96 | R | 0.044 | SLV 5 | No |
| Maschio 97 | PF SLU | 6.156 | SLU 76 | Si |
| Maschio 97 | V SLU | 2.297 | SLU 76 | Si |
| Maschio 97 | PF | 1.835 | SLV 9 | Si |
| Maschio 97 | V | 1.159 | SLV 9 | Si |
| Maschio 97 | PFFP | 1.83 | SLV 13 | Si |
| Maschio 97 | R | 0.043 | SLV 7 | No |
| Maschio 98 | PF SLU | 7.157 | SLU 82 | Si |
| Maschio 98 | V SLU | 2.322 | SLU 82 | Si |
| Maschio 98 | PF | 1.432 | SLV 13 | Si |
| Maschio 98 | V | 0.898 | SLV 13 | No |
| Maschio 98 | PFFP | 2.482 | SLV 9 | Si |
| Maschio 98 | R | 0.041 | SLV 11 | No |
| Maschio 99 | PF SLU | 12.731 | SLU 30 | Si |
| Maschio 99 | V SLU | 5.8 | SLU 82 | Si |
| Maschio 99 | PF | 1.897 | SLV 1 | Si |
| Maschio 99 | V | 0.786 | SLV 1 | No |
| Maschio 99 | PFFP | 3.645 | SLV 5 | Si |
| Maschio 99 | R | 0.004 | SLV 5 | No |
| Maschio 100 | PF SLU | 5.46 | SLU 34 | Si |
| Maschio 100 | V SLU | 1.151 | SLU 76 | Si |
| Maschio 100 | PF | 0 | SLV 15 | No |
| Maschio 100 | V | 0 | SLV 15 | No |
| Maschio 100 | PFFP | 1.875 | SLV 11 | Si |
| Maschio 100 | R | 0.037 | SLV 7 | No |
| Maschio 101 | PF SLU | 4.936 | SLU 73 | Si |
| Maschio 101 | V SLU | 3.228 | SLU 82 | Si |
| Maschio 101 | PF | 1.682 | SLV 3 | Si |
| Maschio 101 | V | 0.536 | SLV 15 | No |
| Maschio 101 | PFFP | 3.688 | SLV 7 | Si |
| Maschio 101 | R | 0.036 | SLV 11 | No |
| Maschio 102 | PF SLU | 2.339 | SLU 82 | Si |
| Maschio 102 | V SLU | 5.359 | SLU 82 | Si |
| Maschio 102 | PF | 0 | SLV 15 | No |
| Maschio 102 | V | 0 | SLV 15 | No |
| Maschio 102 | PFFP | 5.164 | SLV 11 | Si |
| Maschio 102 | R | 0.045 | SLV 7 | No |
| Maschio 103 | PF SLU | 5.48 | SLU 29 | Si |
| Maschio 103 | V SLU | 7.824 | SLU 51 | Si |
| Maschio 103 | PF | 5.7 | SLV 1 | Si |
| Maschio 103 | V | 0.704 | SLV 9 | No |
| Maschio 103 | PFFP | 3.317 | SLV 9 | Si |
| Maschio 103 | R | 0.017 | SLV 1 | No |
| Maschio 104 | PF SLU | 3.162 | SLU 82 | Si |
| Maschio 104 | V SLU | 2.193 | SLU 82 | Si |
| Maschio 104 | PF | 0 | SLV 6 | No |
| Maschio 104 | V | 0 | SLD 1 | No |
| Maschio 104 | PFFP | 3.139 | SLV 5 | Si |
| Maschio 104 | R | 0 | SLV 6 | No |
| Maschio 105 | PF SLU | 1.962 | SLU 82 | Si |
| Maschio 105 | V SLU | 4.236 | SLU 73 | Si |
| Maschio 105 | PF | 0 | SLV 3 | No |
| Maschio 105 | V | 0 | SLV 3 | No |

| Desc. | Stato limite | Coeff.s. | Comb. | Verifica |
|---|---|---|---|---|
| Maschio 105 | PFFP | 5.59 | SLV 7 | Si |
| Maschio 105 | R | 0.007 | SLV 7 | No |
| Maschio 106 | PF SLU | 6.316 | SLU 76 | Si |
| Maschio 106 | V SLU | 4.171 | SLU 71 | Si |
| Maschio 106 | PF | 4.63 | SLV 7 | Si |
| Maschio 106 | V | 0.59 | SLV 11 | No |
| Maschio 106 | PFFP | 3.187 | SLV 11 | Si |
| Maschio 106 | R | 0.019 | SLV 1 | No |
| Maschio 107 | PF SLU | 4.685 | SLU 82 | Si |
| Maschio 107 | V SLU | 110.741 | SLU 43 | Si |
| Maschio 107 | PFFP | 8.465 | SLV 3 | Si |
| Maschio 107 | R | 0.034 | SLV 9 | No |
| Maschio 108 | PF SLU | 0 | SLU 35 | No |
| Maschio 108 | V SLU | 0.586 | SLU 38 | No |
| Maschio 108 | PF | 0 | SLV 16 | No |
| Maschio 108 | V | 0 | SLD 7 | No |
| Maschio 108 | PFFP | 0 | SLV 12 | No |
| Maschio 108 | R | 0 | SLV 10 | No |
| Maschio 109 | PF SLU | 2.948 | SLU 81 | Si |
| Maschio 109 | V SLU | 12.464 | SLU 60 | Si |
| Maschio 109 | PF | 1.163 | SLV 5 | Si |
| Maschio 109 | V | 0.434 | SLV 5 | No |
| Maschio 109 | PFFP | 2.889 | SLV 5 | Si |
| Maschio 109 | R | 0.008 | SLV 9 | No |
| Maschio 110 | PF SLU | 0 | SLU 84 | No |
| Maschio 110 | V SLU | 0 | SLU 1 | No |
| Maschio 110 | PFFP | 0 | SLV 7 | No |
| Maschio 110 | R | 0 | SLV 16 | No |
| Maschio 112 | PF SLU | 1.998 | SLU 39 | Si |
| Maschio 112 | V SLU | 5.005 | SLU 76 | Si |
| Maschio 112 | PF | 0 | SLV 9 | No |
| Maschio 112 | V | 0 | SLV 9 | No |
| Maschio 112 | PFFP | 2.441 | SLV 11 | Si |
| Maschio 112 | R | 0 | SLV 5 | No |
| Maschio 113 | PF SLU | 0 | SLU 1 | No |
| Maschio 113 | V SLU | 0 | SLU 1 | No |
| Maschio 113 | PF | 0 | SLV 10 | No |
| Maschio 113 | V | 0 | SLD 1 | No |
| Maschio 113 | PFFP | 2.783 | SLV 7 | Si |
| Maschio 113 | R | 0 | SLV 10 | No |
| Maschio 114 | PF SLU | 0.175 | SLU 83 | No |
| Maschio 114 | V SLU | 1.018 | SLU 69 | Si |
| Maschio 114 | PF | 0 | SLD 5 | No |
| Maschio 114 | V | 0 | SLD 5 | No |
| Maschio 114 | PFFP | 3.813 | SLV 5 | Si |
| Maschio 114 | R | 0.04 | SLV 5 | No |
| Maschio 115 | PF SLU | 5.364 | SLU 82 | Si |
| Maschio 115 | V SLU | 4.99 | SLU 82 | Si |
| Maschio 115 | PF | 1.126 | SLV 13 | Si |
| Maschio 115 | V | 0.675 | SLV 13 | No |
| Maschio 115 | PFFP | 3.29 | SLV 13 | Si |
| Maschio 115 | R | 0.013 | SLV 9 | No |
| Maschio 116 | PF SLU | 10.825 | SLU 82 | Si |
| Maschio 116 | V SLU | 3.635 | SLU 82 | Si |
| Maschio 116 | PF | 3.264 | SLV 1 | Si |
| Maschio 116 | V | 1.063 | SLV 1 | Si |
| Maschio 116 | PFFP | 6.551 | SLV 9 | Si |
| Maschio 116 | R | 0.025 | SLV 9 | No |
| Maschio 117 | PF SLU | 11.138 | SLU 77 | Si |
| Maschio 117 | V SLU | 4.869 | SLU 80 | Si |
| Maschio 117 | PF | 3.13 | SLV 15 | Si |
| Maschio 117 | V | 1.159 | SLV 13 | Si |
| Maschio 117 | PFFP | 6.311 | SLV 3 | Si |
| Maschio 117 | R | 0.044 | SLV 9 | No |
| Maschio 118 | PF SLU | 3.317 | SLU 82 | Si |
| Maschio 118 | V SLU | 2.45 | SLU 82 | Si |
| Maschio 118 | PF | 1.992 | SLV 3 | Si |
| Maschio 118 | V | 1.406 | SLV 13 | Si |
| Maschio 118 | PFFP | 4.698 | SLV 1 | Si |
| Maschio 118 | R | 0.018 | SLV 5 | No |
| Maschio 119 | PF SLU | 4.532 | SLU 77 | Si |
| Maschio 119 | V SLU | 2.762 | SLU 35 | Si |
| Maschio 119 | PF | 2.371 | SLV 13 | Si |
| Maschio 119 | V | 0.85 | SLV 15 | No |
| Maschio 119 | PFFP | 5.149 | SLV 15 | Si |
| Maschio 119 | R | 0.024 | SLV 11 | No |
| Maschio 120 | PF SLU | 8.52 | SLU 83 | Si |
| Maschio 120 | V SLU | 5.883 | SLU 82 | Si |
| Maschio 120 | PF | 2.333 | SLV 3 | Si |
| Maschio 120 | V | 0.646 | SLV 3 | No |
| Maschio 120 | PFFP | 8.419 | SLV 3 | Si |
| Maschio 120 | R | 0.027 | SLV 11 | No |
| Maschio 121 | PF SLU | 5.204 | SLU 84 | Si |
| Maschio 121 | V SLU | 15.485 | SLU 44 | Si |
| Maschio 121 | PF | 0 | SLV 1 | No |
| Maschio 121 | V | 0 | SLV 1 | No |
| Maschio 121 | PFFP | 9.927 | SLV 5 | Si |
| Maschio 121 | R | 0 | SLV 5 | No |
| Maschio 122 | PF SLU | 2.794 | SLU 84 | Si |

| Desc. | Stato limite | Coeff.s. | Comb. | Verifica |
|---|---|---|---|---|
| Maschio 122 | V SLU | 5.618 | SLU 82 | Si |
| Maschio 122 | PF | 1.079 | SLV 15 | Si |
| Maschio 122 | V | 0.429 | SLV 15 | No |
| Maschio 122 | PFFP | 8.568 | SLV 13 | Si |
| Maschio 122 | R | 0.023 | SLV 9 | No |
| Maschio 123 | PF SLU | 3.631 | SLU 84 | Si |
| Maschio 123 | V SLU | 3.412 | SLU 77 | Si |
| Maschio 123 | PF | 0.944 | SLV 15 | No |
| Maschio 123 | V | 0.236 | SLV 15 | No |
| Maschio 123 | PFFP | 8.946 | SLV 9 | Si |
| Maschio 123 | R | 0.032 | SLV 5 | No |
| Maschio 124 | PF SLU | 5.151 | SLU 83 | Si |
| Maschio 124 | V SLU | 2.035 | SLU 83 | Si |
| Maschio 124 | PF | 2.018 | SLV 3 | Si |
| Maschio 124 | V | 0.774 | SLV 13 | No |
| Maschio 124 | PFFP | 5.906 | SLV 3 | Si |
| Maschio 124 | R | 0.027 | SLV 7 | No |
| Maschio 126 | PF SLU | 4.026 | SLU 82 | Si |
| Maschio 126 | V SLU | 2.124 | SLU 82 | Si |
| Maschio 126 | PF | 0 | SLV 3 | No |
| Maschio 126 | V | 0 | SLV 3 | No |
| Maschio 126 | PFFP | 3.811 | SLV 15 | Si |
| Maschio 126 | R | 0.007 | SLV 7 | No |
| Maschio 127 | PF SLU | 5.859 | SLU 76 | Si |
| Maschio 127 | V SLU | 4.587 | SLU 2 | Si |
| Maschio 127 | PF | 4.104 | SLV 1 | Si |
| Maschio 127 | V | 0.853 | SLV 11 | No |
| Maschio 127 | PFFP | 3.586 | SLV 7 | Si |
| Maschio 127 | R | 0.018 | SLV 15 | No |
| Maschio 128 | PF SLU | 3.138 | SLU 73 | Si |
| Maschio 128 | V SLU | 5.234 | SLU 65 | Si |
| Maschio 128 | PF | 0 | SLV 12 | No |
| Maschio 128 | V | 0 | SLV 1 | No |
| Maschio 128 | PFFP | 1.281 | SLV 7 | Si |
| Maschio 128 | R | 0 | SLV 12 | No |
| Maschio 129 | PF SLU | 7.836 | SLU 29 | Si |
| Maschio 129 | V SLU | 4.24 | SLU 77 | Si |
| Maschio 129 | PF | 5.324 | SLV 9 | Si |
| Maschio 129 | V | 0.726 | SLV 5 | No |
| Maschio 129 | PFFP | 3.158 | SLV 9 | Si |
| Maschio 129 | R | 0.017 | SLV 13 | No |
| Maschio 130 | PF SLU | 0 | SLU 18 | No |
| Maschio 130 | V SLU | 0 | SLU 10 | No |
| Maschio 130 | PF | 0 | SLV 14 | No |
| Maschio 130 | V | 0 | SLD 5 | No |
| Maschio 130 | PFFP | 0 | SLV 14 | No |
| Maschio 130 | R | 0 | SLV 10 | No |
| Maschio 131 | PF SLU | 0.71 | SLU 79 | No |
| Maschio 131 | V SLU | 10.911 | SLU 84 | Si |
| Maschio 131 | PF | 1.413 | SLV 13 | Si |
| Maschio 131 | V | 3.578 | SLV 13 | Si |
| Maschio 131 | PFFP | 4.719 | SLV 9 | Si |
| Maschio 131 | R | 0 | SLV 16 | No |
| Maschio 132 | PF SLU | 2.04 | SLU 82 | Si |
| Maschio 132 | V SLU | 4.956 | SLU 83 | Si |
| Maschio 132 | PF | 0 | SLV 1 | No |
| Maschio 132 | V | 0 | SLV 1 | No |
| Maschio 132 | PFFP | 3.163 | SLV 7 | Si |
| Maschio 132 | R | 0.042 | SLV 11 | No |
| Maschio 133 | PF SLU | 5.429 | SLU 73 | Si |
| Maschio 133 | V SLU | 3.827 | SLU 83 | Si |
| Maschio 133 | PF | 1.886 | SLV 15 | Si |
| Maschio 133 | V | 0.632 | SLV 3 | No |
| Maschio 133 | PFFP | 3.424 | SLV 11 | Si |
| Maschio 133 | R | 0.039 | SLV 9 | No |
| Maschio 134 | PF SLU | 5.737 | SLU 23 | Si |
| Maschio 134 | V SLU | 1.072 | SLU 73 | Si |
| Maschio 134 | PF | 1.126 | SLV 3 | Si |
| Maschio 134 | V | 0.394 | SLV 3 | No |
| Maschio 134 | PFFP | 2.094 | SLV 7 | Si |
| Maschio 134 | R | 0.033 | SLV 11 | No |
| Maschio 135 | PF SLU | 9.314 | SLU 30 | Si |
| Maschio 135 | V SLU | 9.407 | SLU 61 | Si |
| Maschio 135 | PF | 1.373 | SLV 13 | Si |
| Maschio 135 | V | 0.464 | SLV 13 | No |
| Maschio 135 | PFFP | 3.691 | SLV 13 | Si |
| Maschio 135 | R | 0.009 | SLV 9 | No |
| Maschio 136 | PF SLU | 7.798 | SLU 82 | Si |
| Maschio 136 | V SLU | 2.039 | SLU 82 | Si |
| Maschio 136 | PF | 1.373 | SLV 1 | Si |
| Maschio 136 | V | 0.891 | SLV 13 | No |
| Maschio 136 | PFFP | 2.402 | SLV 5 | Si |
| Maschio 136 | R | 0.042 | SLV 7 | No |
| Maschio 137 | PF SLU | 13.078 | SLU 26 | Si |
| Maschio 137 | V SLU | 25.283 | SLU 81 | Si |
| Maschio 137 | PF | 2.707 | SLV 5 | Si |
| Maschio 137 | V | 1.93 | SLV 7 | Si |
| Maschio 137 | PFFP | 3.507 | SLV 1 | Si |
| Maschio 137 | R | 0.044 | SLV 11 | No |

| Desc. | Stato limite | Coeff.s. | Comb. | Verifica |
|---|---|---|---|---|
| Maschio 138 | PF SLU | 13.562 | SLU 81 | Si |
| Maschio 138 | V SLU | 4.36 | SLU 80 | Si |
| Maschio 138 | PF | 2.991 | SLV 11 | Si |
| Maschio 138 | V | 1.627 | SLV 7 | Si |
| Maschio 138 | PFFP | 2.295 | SLV 11 | Si |
| Maschio 138 | R | 0.042 | SLV 5 | No |
| Maschio 139 | PF SLU | 11.624 | SLU 9 | Si |
| Maschio 139 | V SLU | 2.671 | SLU 68 | Si |
| Maschio 139 | PF | 2.63 | SLV 9 | Si |
| Maschio 139 | V | 1.71 | SLV 5 | Si |
| Maschio 139 | PFFP | 1.554 | SLV 13 | Si |
| Maschio 139 | R | 0.041 | SLV 7 | No |
| Maschio 140 | PF SLU | 10.441 | SLU 61 | Si |
| Maschio 140 | V SLU | 2.912 | SLU 82 | Si |
| Maschio 140 | PF | 0 | SLV 13 | No |
| Maschio 140 | V | 0 | SLV 13 | No |
| Maschio 140 | PFFP | 1.875 | SLV 9 | Si |
| Maschio 140 | R | 0.019 | SLV 9 | No |
| Maschio 141 | PF SLU | 0 | SLU 8 | No |
| Maschio 141 | V SLU | 0 | SLU 8 | No |
| Maschio 141 | PF | 0 | SLV 4 | No |
| Maschio 141 | V | 0 | SLV 1 | No |
| Maschio 141 | PFFP | 0 | SLV 1 | No |
| Maschio 141 | R | 0 | SLV 4 | No |
| Maschio 142 | PF SLU | 8.353 | SLU 40 | Si |
| Maschio 142 | V SLU | 2.295 | SLU 84 | Si |
| Maschio 142 | PF | 0 | SLV 15 | No |
| Maschio 142 | V | 0 | SLV 15 | No |
| Maschio 142 | PFFP | 1.652 | SLV 11 | Si |
| Maschio 142 | R | 0.039 | SLV 5 | No |
| Maschio 143 | PF SLU | 7.652 | SLU 9 | Si |
| Maschio 143 | V SLU | 5.829 | SLU 60 | Si |
| Maschio 143 | PF | 1.05 | SLV 3 | Si |
| Maschio 143 | V | 0.241 | SLV 3 | No |
| Maschio 143 | PFFP | 2.321 | SLV 3 | Si |
| Maschio 143 | R | 0.024 | SLV 7 | No |
| Maschio 144 | PF SLU | 4.05 | SLU 10 | Si |
| Maschio 144 | V SLU | 3.278 | SLU 50 | Si |
| Maschio 144 | PF | 0 | SLV 16 | No |
| Maschio 144 | V | 0 | SLV 1 | No |
| Maschio 144 | PFFP | 1.108 | SLV 11 | Si |
| Maschio 144 | R | 0 | SLV 13 | No |
| Maschio 145 | PF SLU | 3.611 | SLU 29 | Si |
| Maschio 145 | V SLU | 5.162 | SLU 9 | Si |
| Maschio 145 | PF | 2.945 | SLV 9 | Si |
| Maschio 145 | V | 0.811 | SLV 9 | No |
| Maschio 145 | PFFP | 1.822 | SLV 9 | Si |
| Maschio 145 | R | 0.019 | SLV 11 | No |
| Maschio 146 | PF SLU | 2.866 | SLU 71 | Si |
| Maschio 146 | V SLU | 4.515 | SLU 71 | Si |
| Maschio 146 | PF | 0 | SLV 10 | No |
| Maschio 146 | V | 0 | SLV 5 | No |
| Maschio 146 | PFFP | 1.064 | SLV 9 | Si |
| Maschio 146 | R | 0 | SLV 10 | No |
| Maschio 147 | PF SLU | 4.601 | SLU 31 | Si |
| Maschio 147 | V SLU | 2.443 | SLU 50 | Si |
| Maschio 147 | PF | 0 | SLV 12 | No |
| Maschio 147 | V | 0 | SLV 3 | No |
| Maschio 147 | PFFP | 0 | SLV 15 | No |
| Maschio 147 | R | 0 | SLV 8 | No |
| Maschio 148 | PF SLU | 5.574 | SLU 26 | Si |
| Maschio 148 | V SLU | 3.413 | SLU 71 | Si |
| Maschio 148 | PF | 3.868 | SLV 9 | Si |
| Maschio 148 | V | 0.685 | SLV 11 | No |
| Maschio 148 | PFFP | 1.921 | SLV 11 | Si |
| Maschio 148 | R | 0.019 | SLV 9 | No |
| Maschio 149 | PF SLU | 1.787 | SLU 78 | Si |
| Maschio 149 | V SLU | 916.396 | SLU 79 | Si |
| Maschio 149 | PFFP | 7.234 | SLV 11 | Si |
| Maschio 149 | R | 0 | SLV 7 | No |
| Maschio 150 | PF SLU | 0 | SLU 35 | No |
| Maschio 150 | V SLU | 0 | SLU 34 | No |
| Maschio 150 | PF | 0 | SLV 16 | No |
| Maschio 150 | V | 0 | SLD 7 | No |
| Maschio 150 | PFFP | 0 | SLV 16 | No |
| Maschio 150 | R | 0 | SLV 10 | No |
| Maschio 151 | PF SLU | 7.269 | SLU 72 | Si |
| Maschio 151 | V SLU | 10.664 | SLU 30 | Si |
| Maschio 151 | PF | 1.847 | SLV 5 | Si |
| Maschio 151 | V | 0.727 | SLV 5 | No |
| Maschio 151 | PFFP | 1.992 | SLV 5 | Si |
| Maschio 151 | R | 0.012 | SLV 13 | No |
| Maschio 152 | PF SLU | 1.525 | SLU 8 | Si |
| Maschio 152 | V SLU | 3.017 | SLU 30 | Si |
| Maschio 152 | PF | 0 | SLV 13 | No |
| Maschio 152 | V | 0 | SLV 13 | No |
| Maschio 152 | PFFP | 0 | SLV 13 | No |
| Maschio 152 | R | 0 | SLV 5 | No |
| Maschio 153 | PF SLU | 7.731 | SLU 30 | Si |

| Desc. | Stato limite | Coeff.s. | Comb. | Verifica |
|---|---|---|---|---|
| Maschio 153 | V SLU | 4.88 | SLU 84 | Si |
| Maschio 153 | PF | 2.442 | SLV 1 | Si |
| Maschio 153 | V | 1.144 | SLV 1 | Si |
| Maschio 153 | PFFP | 3.564 | SLV 13 | Si |
| Maschio 153 | R | 0.004 | SLV 9 | No |
| Maschio 154 | PF SLU | 12.411 | SLU 30 | Si |
| Maschio 154 | V SLU | 4.812 | SLU 30 | Si |
| Maschio 154 | PF | 2.817 | SLV 3 | Si |
| Maschio 154 | V | 1.246 | SLV 15 | Si |
| Maschio 154 | PFFP | 3.39 | SLV 7 | Si |
| Maschio 154 | R | 0.038 | SLV 5 | No |
| Maschio 155 | PF SLU | 3.525 | SLU 30 | Si |
| Maschio 155 | V SLU | 2.505 | SLU 80 | Si |
| Maschio 155 | PF | 2.003 | SLV 3 | Si |
| Maschio 155 | V | 1.853 | SLV 13 | Si |
| Maschio 155 | PFFP | 2.26 | SLV 3 | Si |
| Maschio 155 | R | 0.04 | SLV 9 | No |
| Maschio 156 | PF SLU | 5.285 | SLU 77 | Si |
| Maschio 156 | V SLU | 2.242 | SLU 35 | Si |
| Maschio 156 | PF | 2.018 | SLV 15 | Si |
| Maschio 156 | V | 0.804 | SLV 15 | No |
| Maschio 156 | PFFP | 2.341 | SLV 15 | Si |
| Maschio 156 | R | 0.013 | SLV 9 | No |
| Maschio 157 | PF SLU | 6.537 | SLU 77 | Si |
| Maschio 157 | V SLU | 7.249 | SLU 61 | Si |
| Maschio 157 | PF | 3.337 | SLV 3 | Si |
| Maschio 157 | V | 0.713 | SLV 3 | No |
| Maschio 157 | PFFP | 5.88 | SLV 13 | Si |
| Maschio 157 | R | 0.013 | SLV 11 | No |
| Maschio 158 | PF SLU | 3.901 | SLU 41 | Si |
| Maschio 158 | V SLU | 4.669 | SLU 37 | Si |
| Maschio 158 | PF | 0 | SLD 1 | No |
| Maschio 158 | V | 0 | SLD 1 | No |
| Maschio 158 | PFFP | 4.952 | SLV 11 | Si |
| Maschio 158 | R | 0 | SLV 3 | No |
| Maschio 159 | PF SLU | 5.499 | SLU 82 | Si |
| Maschio 159 | V SLU | 5.958 | SLU 61 | Si |
| Maschio 159 | PF | 1.192 | SLV 1 | Si |
| Maschio 159 | V | 0.661 | SLV 1 | No |
| Maschio 159 | PFFP | 5.725 | SLV 1 | Si |
| Maschio 159 | R | 0 | SLV 7 | No |
| Maschio 160 | PF SLU | 4.726 | SLU 77 | Si |
| Maschio 160 | V SLU | 3.334 | SLU 77 | Si |
| Maschio 160 | PF | 0.845 | SLV 15 | No |
| Maschio 160 | V | 0.074 | SLV 15 | No |
| Maschio 160 | PFFP | 5.77 | SLV 1 | Si |
| Maschio 160 | R | 0.016 | SLV 5 | No |
| Maschio 161 | PF SLU | 5.016 | SLU 77 | Si |
| Maschio 161 | V SLU | 1.983 | SLU 41 | Si |
| Maschio 161 | PF | 2.366 | SLV 1 | Si |
| Maschio 161 | V | 0.8 | SLV 15 | No |
| Maschio 161 | PFFP | 2.686 | SLV 1 | Si |
| Maschio 161 | R | 0.014 | SLV 5 | No |
| Maschio 162 | PF SLU | 0.893 | SLU 79 | No |
| Maschio 162 | V SLU | 2.242 | SLU 67 | Si |
| Maschio 162 | PF | 0 | SLD 1 | No |
| Maschio 162 | V | 0 | SLD 1 | No |
| Maschio 162 | PFFP | 0 | SLV 12 | No |
| Maschio 162 | R | 0 | SLV 5 | No |
| Maschio 163 | PF SLU | 15.114 | SLU 66 | Si |
| Maschio 163 | V SLU | 4.857 | SLU 61 | Si |
| Maschio 163 | PF | 6.359 | SLV 11 | Si |
| Maschio 163 | V | 1.01 | SLV 7 | Si |
| Maschio 163 | PFFP | 7.576 | SLV 7 | Si |
| Maschio 163 | R | 0 | SLV 1 | No |
| Maschio 165 | PF SLU | 11.531 | SLU 27 | Si |
| Maschio 165 | V SLU | 1.556 | SLU 71 | Si |
| Maschio 165 | PF | 4.287 | SLV 9 | Si |
| Maschio 165 | V | 1.079 | SLV 9 | Si |
| Maschio 165 | PFFP | 3.284 | SLV 3 | Si |
| Maschio 165 | R | 0.02 | SLV 11 | No |
| Maschio 166 | PF SLU | 1.038 | SLU 40 | Si |
| Maschio 166 | V SLU | 0.142 | SLU 40 | No |
| Maschio 166 | PF | 0 | SLV 3 | No |
| Maschio 166 | V | 0 | SLV 3 | No |
| Maschio 166 | PFFP | 1.434 | SLV 15 | Si |
| Maschio 166 | R | 0.001 | SLV 7 | No |
| Maschio 167 | PF SLU | 5.275 | SLU 26 | Si |
| Maschio 167 | V SLU | 3.853 | SLU 71 | Si |
| Maschio 167 | PF | 3.893 | SLV 7 | Si |
| Maschio 167 | V | 0.904 | SLV 7 | No |
| Maschio 167 | PFFP | 1.642 | SLV 3 | Si |
| Maschio 167 | R | 0.014 | SLV 7 | No |
| Maschio 168 | PF SLU | 2.701 | SLU 52 | Si |
| Maschio 168 | V SLU | 2.382 | SLU 82 | Si |
| Maschio 168 | PF | 0 | SLV 12 | No |
| Maschio 168 | V | 0 | SLV 1 | No |
| Maschio 168 | PFFP | 0 | SLV 8 | No |
| Maschio 168 | R | 0 | SLV 12 | No |

| Desc. | Stato limite | Coeff.s. | Comb. | Verifica |
|---|---|---|---|---|
| Maschio 169 | PF SLU | 3.858 | SLU 29 | Si |
| Maschio 169 | V SLU | 4.679 | SLU 37 | Si |
| Maschio 169 | PF | 3.006 | SLV 5 | Si |
| Maschio 169 | V | 0.835 | SLV 5 | No |
| Maschio 169 | PFFP | 1.736 | SLV 9 | Si |
| Maschio 169 | R | 0.018 | SLV 7 | No |
| Maschio 170 | PF SLU | 0 | SLU 27 | No |
| Maschio 170 | V SLU | 0.967 | SLU 79 | No |
| Maschio 170 | PF | 0 | SLV 5 | No |
| Maschio 170 | V | 0 | SLV 5 | No |
| Maschio 170 | PFFP | 0 | SLV 6 | No |
| Maschio 170 | R | 0 | SLV 10 | No |
| Maschio 171 | PF SLU | 0 | SLU 3 | No |
| Maschio 171 | V SLU | 583.407 | SLU 80 | Si |
| Maschio 171 | PF | 0 | SLV 5 | No |
| Maschio 171 | V | 0 | SLV 5 | No |
| Maschio 171 | PFFP | 0 | SLV 1 | No |
| Maschio 171 | R | 0 | SLV 14 | No |
| Maschio 172 | PF SLU | 2.64 | SLU 82 | Si |
| Maschio 172 | V SLU | 8.432 | SLU 29 | Si |
| Maschio 172 | PF | 0 | SLV 4 | No |
| Maschio 172 | V | 0 | SLV 1 | No |
| Maschio 172 | PFFP | 0 | SLV 7 | No |
| Maschio 172 | R | 0.039 | SLV 11 | No |
| Maschio 173 | PF SLU | 7.304 | SLU 65 | Si |
| Maschio 173 | V SLU | 6.524 | SLU 60 | Si |
| Maschio 173 | PF | 1.907 | SLV 13 | Si |
| Maschio 173 | V | 0.877 | SLV 3 | No |
| Maschio 173 | PFFP | 2.494 | SLV 11 | Si |
| Maschio 173 | R | 0.026 | SLV 11 | No |
| Maschio 174 | PF SLU | 5.796 | SLU 73 | Si |
| Maschio 174 | V SLU | 1.643 | SLU 73 | Si |
| Maschio 174 | PF | 1.904 | SLV 3 | Si |
| Maschio 174 | V | 0.96 | SLV 15 | No |
| Maschio 174 | PFFP | 1.851 | SLV 7 | Si |
| Maschio 174 | R | 0.039 | SLV 5 | No |
| Maschio 175 | PF SLU | 2.123 | SLU 9 | Si |
| Maschio 175 | V SLU | 6.688 | SLU 8 | Si |
| Maschio 175 | PF | 0 | SLV 16 | No |
| Maschio 175 | V | 0 | SLV 11 | No |
| Maschio 175 | PFFP | 0 | SLV 13 | No |
| Maschio 175 | R | 0 | SLV 16 | No |
| Maschio 176 | PF SLU | 8.682 | SLU 61 | Si |
| Maschio 176 | V SLU | 2.438 | SLU 82 | Si |
| Maschio 176 | PF | 0 | SLV 1 | No |
| Maschio 176 | V | 0 | SLV 1 | No |
| Maschio 176 | PFFP | 1.849 | SLV 5 | Si |
| Maschio 176 | R | 0.019 | SLV 5 | No |
| Maschio 177 | PF SLU | 22.857 | SLU 29 | Si |
| Maschio 177 | V SLU | 20.036 | SLU 81 | Si |
| Maschio 177 | PF | 3.675 | SLV 5 | Si |
| Maschio 177 | V | 2.195 | SLV 7 | Si |
| Maschio 177 | PFFP | 2.573 | SLV 1 | Si |
| Maschio 177 | R | 0.042 | SLV 11 | No |
| Maschio 178 | PF SLU | 2.323 | SLU 35 | Si |
| Maschio 178 | V SLU | 6.888 | SLU 78 | Si |
| Maschio 178 | PF | 1.705 | SLV 7 | Si |
| Maschio 178 | V | 1.817 | SLV 7 | Si |
| Maschio 178 | PFFP | 0 | SLV 7 | No |
| Maschio 178 | R | 0 | SLV 12 | No |
| Maschio 179 | PF SLU | 4.348 | SLU 30 | Si |
| Maschio 179 | V SLU | 3.783 | SLU 80 | Si |
| Maschio 179 | PF | 2.09 | SLV 9 | Si |
| Maschio 179 | V | 2.683 | SLV 5 | Si |
| Maschio 179 | PFFP | 0 | SLV 9 | No |
| Maschio 179 | R | 0 | SLV 10 | No |
| Maschio 180 | PF SLU | 1.393 | SLU 38 | Si |
| Maschio 180 | V SLU | 0.804 | SLU 38 | No |
| Maschio 180 | PF | 0 | SLV 1 | No |
| Maschio 180 | V | 0 | SLV 1 | No |
| Maschio 180 | PFFP | 1.283 | SLV 5 | Si |
| Maschio 180 | R | 0.016 | SLV 5 | No |
| Maschio 181 | PF SLU | 0 | SLU 84 | No |
| Maschio 181 | V SLU | 0 | SLU 1 | No |
| Maschio 181 | PF | 0 | SLV 16 | No |
| Maschio 181 | V | 0 | SLD 1 | No |
| Maschio 181 | PFFP | 0 | SLV 10 | No |
| Maschio 181 | R | 0 | SLV 16 | No |
| Maschio 182 | PF SLU | 1.889 | SLU 38 | Si |
| Maschio 182 | V SLU | 2.018 | SLU 38 | Si |
| Maschio 182 | PF | 1.659 | SLV 7 | Si |
| Maschio 182 | V | 1.797 | SLV 1 | Si |
| Maschio 182 | PFFP | 1.364 | SLV 7 | Si |
| Maschio 182 | R | 0 | SLV 1 | No |
| Maschio 183 | PF SLU | 6.363 | SLU 43 | Si |
| Maschio 183 | V SLU | 3.408 | SLU 50 | Si |
| Maschio 183 | PF | 1.294 | SLV 11 | Si |
| Maschio 183 | V | 1.397 | SLV 11 | Si |
| Maschio 183 | PFFP | 0 | SLV 7 | No |

| Desc. | Stato limite | Coeff.s. | Comb. | Verifica |
|---|---|---|---|---|
| Maschio 183 | R | 0 | SLV 5 | No |
| Maschio 184 | PF SLU | 0 | SLU 84 | No |
| Maschio 184 | V SLU | 0 | SLU 1 | No |
| Maschio 184 | PF | 0 | SLV 16 | No |
| Maschio 184 | V | 0 | SLD 3 | No |
| Maschio 184 | PFFP | 0 | SLV 16 | No |
| Maschio 184 | R | 0 | SLV 16 | No |
| Maschio 185 | PF SLU | 0 | SLU 1 | No |
| Maschio 185 | V SLU | 0 | SLU 1 | No |
| Maschio 185 | PF | 0 | SLV 16 | No |
| Maschio 185 | V | 0 | SLD 5 | No |
| Maschio 185 | PFFP | 0 | SLV 12 | No |
| Maschio 185 | R | 0 | SLV 16 | No |
| Maschio 186 | PF SLU | 1.206 | SLU 37 | Si |
| Maschio 186 | V SLU | 5.346 | SLU 51 | Si |
| Maschio 186 | PF | 0 | SLD 9 | No |
| Maschio 186 | V | 0 | SLD 9 | No |
| Maschio 186 | PFFP | 0 | SLV 1 | No |
| Maschio 186 | R | 0.02 | SLV 11 | No |
| Maschio 187 | PF SLU | 0.814 | SLU 80 | No |
| Maschio 187 | V SLU | 4.048 | SLU 80 | Si |
| Maschio 187 | PF | 1.627 | SLV 7 | Si |
| Maschio 187 | V | 0.77 | SLV 9 | No |
| Maschio 187 | PFFP | 2.442 | SLV 9 | Si |
| Maschio 187 | R | 0 | SLV 13 | No |
| Maschio 188 | PF SLU | 1.049 | SLU 38 | Si |
| Maschio 188 | V SLU | 0.307 | SLU 38 | No |
| Maschio 188 | PF | 0 | SLD 7 | No |
| Maschio 188 | V | 0 | SLD 7 | No |
| Maschio 188 | PFFP | 0 | SLV 1 | No |
| Maschio 188 | R | 0.023 | SLV 3 | No |
| Maschio 189 | PF SLU | 0 | SLU 84 | No |
| Maschio 189 | V SLU | 0 | SLU 1 | No |
| Maschio 189 | PF | 0 | SLV 16 | No |
| Maschio 189 | V | 0 | SLD 1 | No |
| Maschio 189 | PFFP | 0 | SLV 16 | No |
| Maschio 189 | R | 0 | SLV 10 | No |
| Maschio 190 | PF SLU | 3.72 | SLU 19 | Si |
| Maschio 190 | V SLU | 4.691 | SLU 81 | Si |
| Maschio 190 | PF | 1.4 | SLV 11 | Si |
| Maschio 190 | V | 1.073 | SLV 5 | Si |
| Maschio 190 | PFFP | 0 | SLV 5 | No |
| Maschio 190 | R | 0.026 | SLV 7 | No |
| Maschio 191 | PF SLU | 3.256 | SLU 43 | Si |
| Maschio 191 | V SLU | 4.886 | SLU 58 | Si |
| Maschio 191 | PF | 0 | SLV 10 | No |
| Maschio 191 | V | 0 | SLD 5 | No |
| Maschio 191 | PFFP | 0 | SLV 2 | No |
| Maschio 191 | R | 0 | SLV 10 | No |
| Maschio 193 | PF SLU | 0 | SLU 84 | No |
| Maschio 193 | V SLU | 0 | SLU 1 | No |
| Maschio 193 | PF | 0 | SLV 16 | No |
| Maschio 193 | V | 0 | SLD 1 | No |
| Maschio 193 | PFFP | 0 | SLV 16 | No |
| Maschio 193 | R | 0 | SLV 16 | No |
| Maschio 194 | PF SLU | 0 | SLU 1 | No |
| Maschio 194 | V SLU | 0 | SLU 1 | No |
| Maschio 194 | PFFP | 0 | SLV 10 | No |
| Maschio 194 | R | 0 | SLV 16 | No |
| Maschio 195 | PF SLU | 0 | SLU 84 | No |
| Maschio 195 | V SLU | 0 | SLU 1 | No |
| Maschio 195 | PF | 0 | SLV 16 | No |
| Maschio 195 | V | 0 | SLD 1 | No |
| Maschio 195 | PFFP | 0 | SLV 16 | No |
| Maschio 195 | R | 0 | SLV 16 | No |
| Maschio 196 | PF SLU | 0 | SLU 1 | No |
| Maschio 196 | V SLU | 0 | SLU 1 | No |
| Maschio 196 | PFFP | 0 | SLV 10 | No |
| Maschio 196 | R | 0 | SLV 16 | No |
| Maschio 197 | PF SLU | 0 | SLU 84 | No |
| Maschio 197 | V SLU | 0 | SLU 1 | No |
| Maschio 197 | PF | 0 | SLV 16 | No |
| Maschio 197 | V | 0 | SLD 1 | No |
| Maschio 197 | PFFP | 0 | SLV 14 | No |
| Maschio 197 | R | 0 | SLV 16 | No |
| Maschio 198 | PF SLU | 7.11 | SLU 37 | Si |
| Maschio 198 | V SLU | 9.293 | SLU 29 | Si |
| Maschio 198 | PF | 0 | SLV 3 | No |
| Maschio 198 | V | 0 | SLV 3 | No |
| Maschio 198 | PFFP | 1.214 | SLV 3 | Si |
| Maschio 198 | R | 0 | SLV 1 | No |
| Maschio 199 | PF SLU | 14.254 | SLU 30 | Si |
| Maschio 199 | V SLU | 10.335 | SLU 29 | Si |
| Maschio 199 | PF | 2.204 | SLV 15 | Si |
| Maschio 199 | V | 1.926 | SLV 15 | Si |
| Maschio 199 | PFFP | 1.125 | SLV 11 | Si |
| Maschio 199 | R | 0 | SLV 5 | No |
| Maschio 200 | PF SLU | 0 | SLU 84 | No |
| Maschio 200 | V SLU | 0 | SLU 1 | No |

| Desc. | Stato limite | Coeff.s. | Comb. | Verifica |
|---|---|---|---|---|
| Maschio 200 | PF | 0 | SLV 16 | No |
| Maschio 200 | V | 0 | SLD 1 | No |
| Maschio 200 | PFFP | 0 | SLV 10 | No |
| Maschio 200 | R | 0 | SLV 16 | No |
| Maschio 201 | PF SLU | 2.716 | SLU 9 | Si |
| Maschio 201 | V SLU | 2.424 | SLU 37 | Si |
| Maschio 201 | PF | 0 | SLV 13 | No |
| Maschio 201 | V | 0 | SLV 13 | No |
| Maschio 201 | PFFP | 0 | SLV 13 | No |
| Maschio 201 | R | 0.003 | SLV 9 | No |
| Maschio 202 | PF SLU | 6.661 | SLU 81 | Si |
| Maschio 202 | V SLU | 4.925 | SLU 81 | Si |
| Maschio 202 | PF | 1.678 | SLV 13 | Si |
| Maschio 202 | V | 1.026 | SLV 3 | Si |
| Maschio 202 | PFFP | 2.826 | SLV 13 | Si |
| Maschio 202 | R | 0 | SLV 5 | No |
| Maschio 203 | PF SLU | 2.305 | SLU 39 | Si |
| Maschio 203 | V SLU | 3.121 | SLU 37 | Si |
| Maschio 203 | PF | 0 | SLD 1 | No |
| Maschio 203 | V | 0 | SLD 1 | No |
| Maschio 203 | PFFP | 1.476 | SLV 7 | Si |
| Maschio 203 | R | 0.043 | SLV 5 | No |
| Maschio 204 | PF SLU | 4.619 | SLU 60 | Si |
| Maschio 204 | V SLU | 5.266 | SLU 61 | Si |
| Maschio 204 | PF | 0 | SLV 4 | No |
| Maschio 204 | V | 0 | SLD 1 | No |
| Maschio 204 | PFFP | 0 | SLV 1 | No |
| Maschio 204 | R | 0 | SLV 2 | No |
| Maschio 205 | PF SLU | 4.144 | SLU 60 | Si |
| Maschio 205 | V SLU | 2.69 | SLU 79 | Si |
| Maschio 205 | PF | 0 | SLV 1 | No |
| Maschio 205 | V | 0 | SLV 1 | No |
| Maschio 205 | PFFP | 2.845 | SLV 1 | Si |
| Maschio 205 | R | 0.019 | SLV 9 | No |
| Maschio 206 | PF SLU | 2.223 | SLU 37 | Si |
| Maschio 206 | V SLU | 1.732 | SLU 41 | Si |
| Maschio 206 | PF | 1.551 | SLV 1 | Si |
| Maschio 206 | V | 1.555 | SLV 15 | Si |
| Maschio 206 | PFFP | 0 | SLV 1 | No |
| Maschio 206 | R | 0.074 | SLV 5 | No |
| Maschio 207 | PF SLU | 0.996 | SLU 49 | No |
| Maschio 207 | V SLU | 1.058 | SLU 59 | Si |
| Maschio 207 | PF | 0 | SLV 12 | No |
| Maschio 207 | V | 0 | SLV 3 | No |
| Maschio 207 | PFFP | 0 | SLV 7 | No |
| Maschio 207 | R | 0 | SLV 12 | No |
| Maschio 208 | PF SLU | 1.666 | SLU 30 | Si |
| Maschio 208 | V SLU | 1.241 | SLU 30 | Si |
| Maschio 208 | PF | 0 | SLD 7 | No |
| Maschio 208 | V | 0 | SLD 7 | No |
| Maschio 208 | PFFP | 0 | SLV 1 | No |
| Maschio 208 | R | 0.028 | SLV 7 | No |
| Maschio 209 | PF SLU | 1.222 | SLU 30 | Si |
| Maschio 209 | V SLU | 1.182 | SLU 37 | Si |
| Maschio 209 | PF | 0 | SLD 5 | No |
| Maschio 209 | V | 0 | SLD 5 | No |
| Maschio 209 | PFFP | 0 | SLV 9 | No |
| Maschio 209 | R | 0.022 | SLV 5 | No |
| Maschio 210 | PF SLU | 0 | SLU 6 | No |
| Maschio 210 | V SLU | 0.359 | SLU 80 | No |
| Maschio 210 | PF | 0 | SLV 13 | No |
| Maschio 210 | V | 0 | SLV 13 | No |
| Maschio 210 | PFFP | 2.639 | SLV 5 | Si |
| Maschio 210 | R | 0 | SLV 4 | No |
| Maschio 211 | PF SLU | 0 | SLU 1 | No |
| Maschio 211 | V SLU | 23.442 | SLU 80 | Si |
| Maschio 211 | PF | 0 | SLD 7 | No |
| Maschio 211 | V | 50.591 | SLV 13 | Si |
| Maschio 211 | PFFP | 0 | SLV 1 | No |
| Maschio 211 | R | 0 | SLV 4 | No |
| Maschio 212 | PF SLU | 0 | SLU 84 | No |
| Maschio 212 | V SLU | 0 | SLU 1 | No |
| Maschio 212 | PF | 0 | SLV 14 | No |
| Maschio 212 | V | 0 | SLD 1 | No |
| Maschio 212 | PFFP | 0 | SLV 10 | No |
| Maschio 212 | R | 0 | SLV 10 | No |
| Maschio 213 | PF SLU | 1.547 | SLU 42 | Si |
| Maschio 213 | V SLU | 1.029 | SLU 38 | Si |
| Maschio 213 | PF | 0 | SLV 13 | No |
| Maschio 213 | V | 0 | SLV 13 | No |
| Maschio 213 | PFFP | 1.361 | SLV 9 | Si |
| Maschio 213 | R | 0.014 | SLV 9 | No |
| Maschio 214 | PF SLU | 5.06 | SLU 43 | Si |
| Maschio 214 | V SLU | 16.679 | SLU 81 | Si |
| Maschio 214 | PF | 1.37 | SLV 11 | Si |
| Maschio 214 | V | 2.076 | SLV 11 | Si |
| Maschio 214 | PFFP | 1.25 | SLV 1 | Si |
| Maschio 214 | R | 0.003 | SLV 1 | No |
| Maschio 215 | PF SLU | 3.055 | SLU 52 | Si |

| Desc. | Stato limite | Coeff.s. | Comb. | Verifica |
|---|---|---|---|---|
| Maschio 215 | V SLU | 3.122 | SLU 61 | Si |
| Maschio 215 | PF | 0 | SLV 16 | No |
| Maschio 215 | V | 0 | SLD 13 | No |
| Maschio 215 | PFFP | 0 | SLV 14 | No |
| Maschio 215 | R | 0 | SLV 12 | No |
| Maschio 216 | PF SLU | 4.445 | SLU 75 | Si |
| Maschio 216 | V SLU | 1.193 | SLU 50 | Si |
| Maschio 216 | PF | 0 | SLV 13 | No |
| Maschio 216 | V | 0 | SLV 13 | No |
| Maschio 216 | PFFP | 2.501 | SLV 15 | Si |
| Maschio 216 | R | 0 | SLV 1 | No |
| Maschio 217 | PF SLU | 3.182 | SLU 43 | Si |
| Maschio 217 | V SLU | 4.878 | SLU 58 | Si |
| Maschio 217 | PF | 0 | SLV 10 | No |
| Maschio 217 | V | 0 | SLD 5 | No |
| Maschio 217 | PFFP | 0 | SLV 2 | No |
| Maschio 217 | R | 0 | SLV 10 | No |
| Maschio 218 | PF SLU | 3.357 | SLU 65 | Si |
| Maschio 218 | V SLU | 2.61 | SLU 75 | Si |
| Maschio 218 | PF | 0 | SLV 3 | No |
| Maschio 218 | V | 0 | SLV 3 | No |
| Maschio 218 | PFFP | 0 | SLV 11 | No |
| Maschio 218 | R | 0 | SLV 3 | No |
| Maschio 219 | PF SLU | 4.379 | SLU 52 | Si |
| Maschio 219 | V SLU | 6.562 | SLU 29 | Si |
| Maschio 219 | PF | 0 | SLV 12 | No |
| Maschio 219 | V | 0 | SLV 1 | No |
| Maschio 219 | PFFP | 0 | SLV 3 | No |
| Maschio 219 | R | 0 | SLV 16 | No |
| Maschio 220 | PF SLU | 1.83 | SLU 23 | Si |
| Maschio 220 | V SLU | 2.186 | SLU 80 | Si |
| Maschio 220 | PF | 0 | SLV 12 | No |
| Maschio 220 | V | 0 | SLD 3 | No |
| Maschio 220 | PFFP | 0 | SLV 16 | No |
| Maschio 220 | R | 0 | SLV 16 | No |
| Maschio 221 | PF SLU | 8.707 | SLU 10 | Si |
| Maschio 221 | V SLU | 29.774 | SLU 16 | Si |
| Maschio 221 | PF | 1.88 | SLV 9 | Si |
| Maschio 221 | V | 2.055 | SLV 13 | Si |
| Maschio 221 | PFFP | 1.155 | SLV 7 | Si |
| Maschio 221 | R | 0 | SLV 5 | No |
| Maschio 222 | PF SLU | 2.424 | SLU 31 | Si |
| Maschio 222 | V SLU | 1.931 | SLU 78 | Si |
| Maschio 222 | PF | 1.124 | SLV 11 | Si |
| Maschio 222 | V | 0.974 | SLV 11 | No |
| Maschio 222 | PFFP | 1.069 | SLV 15 | Si |
| Maschio 222 | R | 0 | SLV 5 | No |
| Maschio 225 | PF SLU | 1.028 | SLU 84 | Si |
| Maschio 225 | V SLU | 0.924 | SLU 84 | No |
| Maschio 225 | PF | 0 | SLV 16 | No |
| Maschio 225 | V | 0 | SLD 15 | No |
| Maschio 225 | PFFP | 0 | SLV 15 | No |
| Maschio 225 | R | 0 | SLV 16 | No |
| Maschio 226 | PF SLU | 4.1 | SLU 84 | Si |
| Maschio 226 | V SLU | 2.163 | SLU 82 | Si |
| Maschio 226 | PF | 0 | SLV 4 | No |
| Maschio 226 | V | 0 | SLV 1 | No |
| Maschio 226 | PFFP | 9.753 | SLV 7 | Si |
| Maschio 226 | R | 0.131 | SLV 9 | No |
| Maschio 227 | PF SLU | 4.603 | SLU 80 | Si |
| Maschio 227 | V SLU | 4.596 | SLU 84 | Si |
| Maschio 227 | PF | 0 | SLV 16 | No |
| Maschio 227 | V | 0 | SLV 11 | No |
| Maschio 227 | PFFP | 1.442 | SLV 15 | Si |
| Maschio 227 | R | 0 | SLV 16 | No |
| Maschio 228 | PF SLU | 6.771 | SLU 60 | Si |
| Maschio 228 | V SLU | 9.232 | SLU 38 | Si |
| Maschio 228 | PF | 0 | SLV 4 | No |
| Maschio 228 | V | 0 | SLV 1 | No |
| Maschio 228 | PFFP | 4.156 | SLV 11 | Si |
| Maschio 228 | R | 0.055 | SLV 9 | No |
| Maschio 229 | PF SLU | 6.509 | SLU 80 | Si |
| Maschio 229 | V SLU | 9.104 | SLU 38 | Si |
| Maschio 229 | PF | 0 | SLV 16 | No |
| Maschio 229 | V | 0 | SLV 1 | No |
| Maschio 229 | PFFP | 5.691 | SLV 3 | Si |
| Maschio 229 | R | 0.043 | SLV 7 | No |
| Maschio 230 | PF SLU | 5.852 | SLU 44 | Si |
| Maschio 230 | V SLU | 7.282 | SLU 38 | Si |
| Maschio 230 | PF | 0 | SLV 16 | No |
| Maschio 230 | V | 0 | SLV 1 | No |
| Maschio 230 | PFFP | 1.747 | SLV 15 | Si |
| Maschio 230 | R | 0.045 | SLV 9 | No |
| Maschio 231 | PF SLU | 8.126 | SLU 37 | Si |
| Maschio 231 | V SLU | 18.743 | SLU 38 | Si |
| Maschio 231 | PF | 2.454 | SLV 11 | Si |
| Maschio 231 | V | 1.785 | SLV 15 | Si |
| Maschio 231 | PFFP | 15.063 | SLV 11 | Si |
| Maschio 231 | R | 0.347 | SLV 9 | No |

| Desc. | Stato limite | Coeff.s. | Comb. | Verifica |
|---|---|---|---|---|
| Maschio 232 | PF SLU | 3.212 | SLU 37 | Si |
| Maschio 232 | V SLU | 7.264 | SLU 44 | Si |
| Maschio 232 | PF | 0 | SLV 2 | No |
| Maschio 232 | V | 0 | SLV 1 | No |
| Maschio 232 | PFFP | 0 | SLV 2 | No |
| Maschio 232 | R | 0 | SLV 10 | No |
| Maschio 233 | PF SLU | 5.486 | SLU 44 | Si |
| Maschio 233 | V SLU | 11.011 | SLU 52 | Si |
| Maschio 233 | PF | 0 | SLV 16 | No |
| Maschio 233 | V | 0 | SLD 1 | No |
| Maschio 233 | PFFP | 1.08 | SLV 13 | Si |
| Maschio 233 | R | 0 | SLV 8 | No |
| Maschio 234 | PF SLU | 0 | SLU 79 | No |
| Maschio 234 | V SLU | 0 | SLU 1 | No |
| Maschio 234 | PF | 0 | SLV 12 | No |
| Maschio 234 | V | 0 | SLD 1 | No |
| Maschio 234 | PFFP | 0 | SLV 1 | No |
| Maschio 234 | R | 0 | SLV 16 | No |
| Maschio 235 | PF SLU | 0 | SLU 84 | No |
| Maschio 235 | V SLU | 0 | SLU 1 | No |
| Maschio 235 | PF | 0 | SLV 16 | No |
| Maschio 235 | V | 0 | SLD 1 | No |
| Maschio 235 | PFFP | 0 | SLV 1 | No |
| Maschio 235 | R | 0 | SLV 16 | No |
| Maschio 236 | PF SLU | 2.024 | SLU 31 | Si |
| Maschio 236 | V SLU | 9.019 | SLU 73 | Si |
| Maschio 236 | PF | 0 | SLV 10 | No |
| Maschio 236 | V | 0 | SLD 9 | No |
| Maschio 236 | PFFP | 0 | SLV 1 | No |
| Maschio 236 | R | 0 | SLV 14 | No |
| Maschio 237 | PF SLU | 1.469 | SLU 10 | Si |
| Maschio 237 | V SLU | 3.588 | SLU 52 | Si |
| Maschio 237 | PF | 0 | SLV 6 | No |
| Maschio 237 | V | 0 | SLD 1 | No |
| Maschio 237 | PFFP | 0 | SLV 1 | No |
| Maschio 237 | R | 0 | SLV 16 | No |
| Maschio 238 | PF SLU | 0 | SLU 1 | No |
| Maschio 238 | V SLU | 0 | SLU 1 | No |
| Maschio 238 | PFFP | 0 | SLV 11 | No |
| Maschio 238 | R | 0 | SLV 14 | No |
| Maschio 239 | PF SLU | 0 | SLU 1 | No |
| Maschio 239 | V SLU | 0 | SLU 1 | No |
| Maschio 239 | PF | 0 | SLV 16 | No |
| Maschio 239 | V | 0 | SLD 1 | No |
| Maschio 239 | PFFP | 0 | SLV 1 | No |
| Maschio 239 | R | 0 | SLV 16 | No |
| Maschio 240 | PF SLU | 2.211 | SLU 44 | Si |
| Maschio 240 | V SLU | 2.316 | SLU 37 | Si |
| Maschio 240 | PF | 0 | SLV 12 | No |
| Maschio 240 | V | 0 | SLD 7 | No |
| Maschio 240 | PFFP | 0 | SLV 1 | No |
| Maschio 240 | R | 0 | SLV 12 | No |
| Maschio 241 | PF SLU | 1.532 | SLU 83 | Si |
| Maschio 241 | V SLU | 3.032 | SLU 79 | Si |
| Maschio 241 | PF | 0 | SLV 7 | No |
| Maschio 241 | V | 0 | SLV 7 | No |
| Maschio 241 | PFFP | 2.646 | SLV 11 | Si |
| Maschio 241 | R | 0.027 | SLV 7 | No |
| Maschio 242 | PF SLU | 15.378 | SLU 69 | Si |
| Maschio 242 | V SLU | 7.393 | SLU 29 | Si |
| Maschio 242 | PF | 5.593 | SLV 11 | Si |
| Maschio 242 | V | 0.956 | SLV 7 | No |
| Maschio 242 | PFFP | 8.119 | SLV 7 | Si |
| Maschio 242 | R | 0.039 | SLV 7 | No |
| Maschio 243 | PF SLU | 2.761 | SLU 82 | Si |
| Maschio 243 | V SLU | 3.396 | SLU 29 | Si |
| Maschio 243 | PF | 3.025 | SLV 7 | Si |
| Maschio 243 | V | 1.123 | SLV 9 | Si |
| Maschio 243 | PFFP | 2.11 | SLV 5 | Si |
| Maschio 243 | R | 0.01 | SLV 1 | No |
| Maschio 244 | PF SLU | 1.402 | SLU 44 | Si |
| Maschio 244 | V SLU | 2.198 | SLU 44 | Si |
| Maschio 244 | PF | 0 | SLV 16 | No |
| Maschio 244 | V | 0 | SLD 1 | No |
| Maschio 244 | PFFP | 0 | SLV 1 | No |
| Maschio 244 | R | 0 | SLV 8 | No |
| Maschio 245 | PF SLU | 2.156 | SLU 2 | Si |
| Maschio 245 | V SLU | 6.942 | SLU 42 | Si |
| Maschio 245 | PF | 0 | SLV 10 | No |
| Maschio 245 | V | 0 | SLD 1 | No |
| Maschio 245 | PFFP | 0 | SLV 1 | No |
| Maschio 245 | R | 0 | SLV 14 | No |
| Maschio 246 | PF SLU | 0 | SLU 79 | No |
| Maschio 246 | V SLU | 0 | SLU 6 | No |
| Maschio 246 | PF | 0 | SLV 14 | No |
| Maschio 246 | V | 0 | SLD 1 | No |
| Maschio 246 | PFFP | 0 | SLV 1 | No |
| Maschio 246 | R | 0 | SLV 14 | No |
| Maschio 247 | PF SLU | 0 | SLU 84 | No |

| Desc. | Stato limite | Coeff.s. | Comb. | Verifica |
|---|---|---|---|---|
| Maschio 247 | V SLU | 0 | SLU 2 | No |
| Maschio 247 | PF | 0 | SLV 14 | No |
| Maschio 247 | V | 0 | SLD 1 | No |
| Maschio 247 | PFFP | 0 | SLV 1 | No |
| Maschio 247 | R | 0 | SLV 14 | No |

## Verifica maschi in muratura

| Maschio | Stato limite | Molt. | Comb. | PGA | iPGA (ζE) | TR | (TR/TRrif)^.41 | Verifica |
|---|---|---|---|---|---|---|---|---|
| 1 | PF | 1.124 | SLV 15 | 0.273 | 1.115 | 658 | 1.143 | Si |
| | V | 1.104 | SLV 11 | 0.269 | 1.1 | 631 | 1.123 | Si |
| | PFFP | 1.21 | SLV 15 | 0.292 | 1.194 | 808 | 1.243 | Si |
| | R | 0.271 | SLV 5 | 0.061 | 0.249 | 16 | 0.249 | No |
| 2 | PF | 1.181 | SLV 13 | 0.285 | 1.168 | 755 | 1.209 | Si |
| | V | 1.03 | SLV 9 | 0.251 | 1.029 | 517 | 1.035 | Si |
| | PFFP | 1.243 | SLV 13 | 0.299 | 1.225 | 871 | 1.282 | Si |
| | R | 0.28 | SLV 7 | 0.062 | 0.256 | 17 | 0.255 | No |
| 3 | PF | 0.829 | SLV 9 | 0.199 | 0.816 | 277 | 0.802 | No |
| | V | 0.627 | SLV 13 | 0.149 | 0.608 | 135 | 0.597 | No |
| | PFFP | 1.261 | SLV 9 | 0.305 | 1.25 | 926 | 1.315 | Si |
| | R | 0.185 | SLV 9 | 0.038 | 0.157 | 5 | 0.155 | No |
| 4 | PF | 1.565 | SLV 9 | 0.362 | 1.483 | 1618 | 1.653 | Si |
| | V | 0.473 | SLV 7 | 0.11 | 0.448 | 65 | 0.442 | No |
| | PFFP | 2.277 | SLV 9 | 0.362 | 1.483 | 1618 | 1.653 | Si |
| | R | 0.195 | SLV 9 | 0.041 | 0.169 | 6 | 0.167 | No |
| 5 | PF | 1.156 | SLV 5 | 0.281 | 1.149 | 719 | 1.185 | Si |
| | V | 0.829 | SLV 5 | 0.199 | 0.816 | 277 | 0.802 | No |
| | PFFP | 2.796 | SLV 9 | 0.362 | 1.483 | 1618 | 1.653 | Si |
| | R | 0.087 | SLV 11 | 0 | 0 | 0 | 0 | No |
| 6 | PF | 1.322 | SLV 9 | 0.32 | 1.31 | 1073 | 1.397 | Si |
| | V | 0.773 | SLV 9 | 0.185 | 0.758 | 228 | 0.74 | No |
| | PFFP | 1000 | SLV 1 | 0.362 | 1.483 | 1618 | 1.653 | Si |
| | R | 0.157 | SLV 7 | 0.031 | 0.127 | 3 | 0.125 | No |
| 7 | PF | 0.788 | SLV 11 | 0.189 | 0.773 | 239 | 0.755 | No |
| | V | 0.936 | SLV 7 | 0.227 | 0.93 | 392 | 0.924 | No |
| | PFFP | 2.448 | SLV 5 | 0.362 | 1.483 | 1618 | 1.653 | Si |
| | R | 0.134 | SLV 7 | 0.026 | 0.107 | 2 | 0.106 | No |
| 8 | PF | 0.875 | SLV 11 | 0.211 | 0.864 | 322 | 0.853 | No |
| | V | 0.623 | SLV 7 | 0.147 | 0.6 | 131 | 0.59 | No |
| | PFFP | 1.351 | SLV 11 | 0.327 | 1.338 | 1151 | 1.437 | Si |
| | R | 0.215 | SLV 11 | 0.047 | 0.191 | 8 | 0.187 | No |
| 9 | PF | 2.443 | SLV 7 | 0.362 | 1.483 | 1618 | 1.653 | Si |
| | V | 0.506 | SLV 5 | 0.117 | 0.479 | 77 | 0.474 | No |
| | PFFP | 2.002 | SLV 11 | 0.362 | 1.483 | 1618 | 1.653 | Si |
| | R | 0.177 | SLV 11 | 0.038 | 0.157 | 5 | 0.155 | No |
| 10 | PF | 1.599 | SLV 9 | 0.362 | 1.483 | 1618 | 1.653 | Si |
| | V | 0.436 | SLV 13 | 0.103 | 0.42 | 55 | 0.413 | No |
| | PFFP | 2.777 | SLV 7 | 0.362 | 1.483 | 1618 | 1.653 | Si |
| | R | 0.16 | SLV 7 | 0.035 | 0.143 | 4 | 0.141 | No |
| 11 | PF | 0.318 | SLV 15 | 0.074 | 0.303 | 25 | 0.299 | No |
| | V | 0.202 | SLV 15 | 0.047 | 0.191 | 8 | 0.187 | No |
| | PFFP | 3.497 | SLV 3 | 0.362 | 1.483 | 1618 | 1.653 | Si |
| | R | 0.218 | SLV 11 | 0.047 | 0.191 | 8 | 0.187 | No |
| 12 | PF | 2.469 | SLV 7 | 0.362 | 1.483 | 1618 | 1.653 | Si |
| | V | 0.59 | SLV 5 | 0.139 | 0.567 | 115 | 0.559 | No |
| | PFFP | 1000 | SLV 1 | 0.362 | 1.483 | 1618 | 1.653 | Si |
| | R | 0.08 | SLV 5 | 0 | 0 | 0 | 0 | No |
| 13 | PF | 0.451 | SLV 7 | 0.104 | 0.427 | 57 | 0.419 | No |
| | V | 0.517 | SLV 7 | 0.12 | 0.493 | 82 | 0.487 | No |
| | PFFP | 1.161 | SLV 7 | 0.282 | 1.154 | 729 | 1.192 | Si |
| | R | 0.291 | SLV 9 | 0.066 | 0.269 | 19 | 0.267 | No |
| 14 | PF | 0.649 | SLV 15 | 0.155 | 0.633 | 148 | 0.62 | No |
| | V | 0.628 | SLV 15 | 0.149 | 0.61 | 136 | 0.599 | No |
| | PFFP | 1.093 | SLV 15 | 0.265 | 1.086 | 608 | 1.107 | Si |
| | R | 0.231 | SLV 5 | 0.051 | 0.21 | 10 | 0.205 | No |
| 15 | PF | 1.54 | SLV 11 | 0.362 | 1.483 | 1618 | 1.653 | Si |
| | V | 0.895 | SLV 11 | 0.217 | 0.887 | 345 | 0.877 | No |
| | PFFP | 1000 | SLV 1 | 0.362 | 1.483 | 1618 | 1.653 | Si |
| | R | 0.154 | SLV 5 | 0.031 | 0.127 | 3 | 0.125 | No |
| 16 | PF | 1.624 | SLV 15 | 0.362 | 1.483 | 1618 | 1.653 | Si |
| | V | 0.53 | SLV 9 | 0.124 | 0.506 | 87 | 0.499 | No |
| | PFFP | 1.98 | SLV 11 | 0.362 | 1.483 | 1618 | 1.653 | Si |
| | R | 0.149 | SLV 9 | 0.031 | 0.127 | 3 | 0.125 | No |
| 18 | PF | 2.236 | SLV 1 | 0.362 | 1.483 | 1618 | 1.653 | Si |
| | V | 1.329 | SLV 11 | 0.322 | 1.316 | 1092 | 1.407 | Si |
| | PFFP | 2.709 | SLV 1 | 0.362 | 1.483 | 1618 | 1.653 | Si |
| | R | 0.366 | SLV 5 | 0.083 | 0.342 | 34 | 0.339 | No |
| 19 | PF | 0 | SLV 1 | 0 | 0 | 0 | 0 | No |
| | V | 0 | SLV 1 | 0 | 0 | 0 | 0 | No |
| | PFFP | 0.666 | SLV 11 | 0.157 | 0.644 | 154 | 0.63 | No |
| | R | 0 | SLV 1 | 0 | 0 | 0 | 0 | No |
| 21 | PF | 0 | SLV 1 | 0 | 0 | 0 | 0 | No |
| | V | 0 | SLV 1 | 0 | 0 | 0 | 0 | No |
| | PFFP | 4.08 | SLV 11 | 0.362 | 1.483 | 1618 | 1.653 | Si |
| | R | 0 | SLV 1 | 0 | 0 | 0 | 0 | No |
| 23 | PF | 3.191 | SLV 11 | 0.362 | 1.483 | 1618 | 1.653 | Si |
| | V | 1.016 | SLV 11 | 0.248 | 1.015 | 497 | 1.019 | Si |
| | PFFP | 1000 | SLV 1 | 0.362 | 1.483 | 1618 | 1.653 | Si |
| | R | 0.728 | SLV 11 | 0.173 | 0.71 | 192 | 0.69 | No |

| Maschio | Stato limite | Molt. | Comb. | PGA | iPGA (ζE) | TR | (TR/TRrif)^.41 | Verifica |
|---|---|---|---|---|---|---|---|---|
| 25 | PF | 1.198 | SLV 1 | 0.289 | 1.183 | 785 | 1.229 | Si |
| | V | 1.199 | SLV 1 | 0.289 | 1.184 | 787 | 1.23 | Si |
| | PFFP | 1.525 | SLV 1 | 0.362 | 1.483 | 1618 | 1.653 | Si |
| | R | 0.246 | SLV 9 | 0.055 | 0.226 | 12 | 0.221 | No |
| 26 | PF | 1.857 | SLV 13 | 0.362 | 1.483 | 1618 | 1.653 | Si |
| | V | 0.849 | SLV 1 | 0.206 | 0.843 | 302 | 0.831 | No |
| | PFFP | 3.254 | SLV 15 | 0.362 | 1.483 | 1618 | 1.653 | Si |
| | R | 0.313 | SLV 5 | 0.071 | 0.292 | 23 | 0.289 | No |
| 27 | PF | 1.753 | SLV 3 | 0.362 | 1.483 | 1618 | 1.653 | Si |
| | V | 0.937 | SLV 3 | 0.228 | 0.934 | 396 | 0.928 | No |
| | PFFP | 1000 | SLV 1 | 0.362 | 1.483 | 1618 | 1.653 | Si |
| | R | 0.272 | SLV 11 | 0.061 | 0.249 | 16 | 0.249 | No |
| 28 | PF | 1.097 | SLV 13 | 0.266 | 1.09 | 615 | 1.112 | Si |
| | V | 1.211 | SLV 3 | 0.292 | 1.195 | 809 | 1.244 | Si |
| | PFFP | 1.773 | SLV 3 | 0.362 | 1.483 | 1618 | 1.653 | Si |
| | R | 0.316 | SLV 11 | 0.071 | 0.292 | 23 | 0.289 | No |
| 29 | PF | 0.982 | SLV 3 | 0.24 | 0.982 | 452 | 0.98 | No |
| | V | 0.994 | SLV 3 | 0.243 | 0.993 | 466 | 0.992 | No |
| | PFFP | 1.588 | SLV 1 | 0.362 | 1.483 | 1618 | 1.653 | Si |
| | R | 0.311 | SLV 7 | 0.07 | 0.286 | 22 | 0.284 | No |
| 30 | PF | 1.181 | SLV 13 | 0.285 | 1.168 | 755 | 1.209 | Si |
| | V | 1.202 | SLV 13 | 0.29 | 1.187 | 793 | 1.234 | Si |
| | PFFP | 1.953 | SLV 9 | 0.362 | 1.483 | 1618 | 1.653 | Si |
| | R | 0.31 | SLV 7 | 0.07 | 0.286 | 22 | 0.284 | No |
| 31 | PF | 1.233 | SLV 13 | 0.297 | 1.216 | 851 | 1.27 | Si |
| | V | 0.805 | SLV 13 | 0.195 | 0.798 | 261 | 0.782 | No |
| | PFFP | 3.624 | SLV 9 | 0.362 | 1.483 | 1618 | 1.653 | Si |
| | R | 0.316 | SLV 7 | 0.071 | 0.292 | 23 | 0.289 | No |
| 32 | PF | 1.568 | SLV 13 | 0.362 | 1.483 | 1618 | 1.653 | Si |
| | V | 1.687 | SLV 13 | 0.362 | 1.483 | 1618 | 1.653 | Si |
| | PFFP | 1000 | SLV 1 | 0.362 | 1.483 | 1618 | 1.653 | Si |
| | R | 0.268 | SLV 5 | 0.059 | 0.242 | 14 | 0.236 | No |
| 33 | PF | 2.341 | SLV 15 | 0.362 | 1.483 | 1618 | 1.653 | Si |
| | V | 0.656 | SLV 15 | 0.156 | 0.639 | 151 | 0.625 | No |
| | PFFP | 1000 | SLV 1 | 0.362 | 1.483 | 1618 | 1.653 | Si |
| | R | 0.31 | SLV 5 | 0.07 | 0.286 | 22 | 0.284 | No |
| 34 | PF | 1.618 | SLV 5 | 0.362 | 1.483 | 1618 | 1.653 | Si |
| | V | 1.075 | SLV 1 | 0.261 | 1.07 | 581 | 1.086 | Si |
| | PFFP | 1.939 | SLV 9 | 0.362 | 1.483 | 1618 | 1.653 | Si |
| | R | 0.166 | SLV 7 | 0.035 | 0.143 | 4 | 0.141 | No |
| 35 | PF | 2.178 | SLV 9 | 0.362 | 1.483 | 1618 | 1.653 | Si |
| | V | 0.997 | SLV 1 | 0.243 | 0.997 | 470 | 0.996 | No |
| | PFFP | 2.328 | SLV 9 | 0.362 | 1.483 | 1618 | 1.653 | Si |
| | R | 0.138 | SLV 5 | 0.026 | 0.107 | 2 | 0.106 | No |
| 36 | PF | 1000 | SLV 1 | 0.362 | 1.483 | 1618 | 1.653 | Si |
| | V | 1.106 | SLV 13 | 0.268 | 1.098 | 628 | 1.121 | Si |
| | PFFP | 1000 | SLV 1 | 0.362 | 1.483 | 1618 | 1.653 | Si |
| | R | 0.108 | SLV 11 | 0.02 | 0.08 | 1 | 0.08 | No |
| 37 | PF | 1.591 | SLV 5 | 0.362 | 1.483 | 1618 | 1.653 | Si |
| | V | 0.99 | SLV 9 | 0.242 | 0.989 | 461 | 0.988 | No |
| | PFFP | 1.797 | SLV 1 | 0.362 | 1.483 | 1618 | 1.653 | Si |
| | R | 0.287 | SLV 11 | 0.064 | 0.262 | 18 | 0.261 | No |
| 38 | PF | 1.624 | SLV 11 | 0.362 | 1.483 | 1618 | 1.653 | Si |
| | V | 0.739 | SLV 5 | 0.176 | 0.722 | 200 | 0.701 | No |
| | PFFP | 2.07 | SLV 11 | 0.362 | 1.483 | 1618 | 1.653 | Si |
| | R | 0.309 | SLV 5 | 0.07 | 0.286 | 22 | 0.284 | No |
| 39 | PF | 1.494 | SLV 11 | 0.361 | 1.477 | 1594 | 1.643 | Si |
| | V | 1.069 | SLV 11 | 0.261 | 1.066 | 575 | 1.081 | Si |
| | PFFP | 2.182 | SLV 11 | 0.362 | 1.483 | 1618 | 1.653 | Si |
| | R | 1.07 | SLV 5 | 0.261 | 1.067 | 577 | 1.083 | Si |
| 40 | PF | 3.764 | SLV 9 | 0.362 | 1.483 | 1618 | 1.653 | Si |
| | V | 1.041 | SLV 7 | 0.254 | 1.039 | 533 | 1.048 | Si |
| | PFFP | 1000 | SLV 1 | 0.362 | 1.483 | 1618 | 1.653 | Si |
| | R | 0.221 | SLV 7 | 0.049 | 0.201 | 9 | 0.197 | No |
| 42 | PF | 1.659 | SLV 9 | 0.362 | 1.483 | 1618 | 1.653 | Si |
| | V | 0.79 | SLV 7 | 0.189 | 0.775 | 242 | 0.758 | No |
| | PFFP | 2.226 | SLV 9 | 0.362 | 1.483 | 1618 | 1.653 | Si |
| | R | 0.137 | SLV 7 | 0.026 | 0.107 | 2 | 0.106 | No |
| 43 | PF | 1.029 | SLV 11 | 0.251 | 1.028 | 515 | 1.034 | Si |
| | V | 0.835 | SLV 11 | 0.201 | 0.822 | 282 | 0.808 | No |
| | PFFP | 1.728 | SLV 11 | 0.362 | 1.483 | 1618 | 1.653 | Si |
| | R | 0.186 | SLV 5 | 0.041 | 0.169 | 6 | 0.167 | No |
| 44 | PF | 0.901 | SLV 3 | 0.219 | 0.896 | 355 | 0.887 | No |
| | V | 0.842 | SLV 3 | 0.204 | 0.836 | 295 | 0.823 | No |
| | PFFP | 1.19 | SLV 7 | 0.289 | 1.182 | 782 | 1.227 | Si |
| | R | 0.177 | SLV 9 | 0.038 | 0.157 | 5 | 0.155 | No |
| 45 | PF | 0.584 | SLV 7 | 0.137 | 0.56 | 111 | 0.551 | No |
| | V | 0.583 | SLV 7 | 0.137 | 0.56 | 111 | 0.551 | No |
| | PFFP | 1.349 | SLV 7 | 0.326 | 1.336 | 1146 | 1.435 | Si |
| | R | 0.313 | SLV 5 | 0.071 | 0.292 | 23 | 0.289 | No |
| 46 | PF | 2.389 | SLV 11 | 0.362 | 1.483 | 1618 | 1.653 | Si |
| | V | 1.084 | SLV 11 | 0.264 | 1.08 | 598 | 1.099 | Si |
| | PFFP | 1000 | SLV 1 | 0.362 | 1.483 | 1618 | 1.653 | Si |
| | R | 0.159 | SLV 5 | 0.035 | 0.143 | 4 | 0.141 | No |
| 47 | PF | 0.578 | SLV 3 | 0.137 | 0.56 | 111 | 0.551 | No |
| | V | 0.47 | SLV 3 | 0.11 | 0.451 | 66 | 0.445 | No |
| | PFFP | 2.639 | SLV 15 | 0.362 | 1.483 | 1618 | 1.653 | Si |
| | R | 0.215 | SLV 7 | 0.047 | 0.191 | 8 | 0.187 | No |
| 48 | PF | 1.753 | SLV 7 | 0.362 | 1.483 | 1618 | 1.653 | Si |

| Maschio | Stato limite | Molt. | Comb. | PGA | iPGA (ζE) | TR | (TR/TRrif)^.41 | Verifica |
|---|---|---|---|---|---|---|---|---|
| | V | 0.914 | SLV 1 | 0.223 | 0.911 | 370 | 0.903 | No |
| | PFFP | 2.776 | SLV 11 | 0.362 | 1.483 | 1618 | 1.653 | Si |
| | R | 0.192 | SLV 11 | 0.041 | 0.169 | 6 | 0.167 | No |
| 49 | PF | 1.815 | SLV 11 | 0.362 | 1.483 | 1618 | 1.653 | Si |
| | V | 0.561 | SLV 9 | 0.131 | 0.537 | 101 | 0.53 | No |
| | PFFP | 1.839 | SLV 7 | 0.362 | 1.483 | 1618 | 1.653 | Si |
| | R | 0.191 | SLV 7 | 0.041 | 0.169 | 6 | 0.167 | No |
| 50 | PF | 1.003 | SLV 7 | 0.245 | 1.003 | 479 | 1.003 | Si |
| | V | 0.604 | SLV 1 | 0.143 | 0.587 | 124 | 0.577 | No |
| | PFFP | 1.215 | SLV 7 | 0.295 | 1.206 | 830 | 1.257 | Si |
| | R | 0.237 | SLV 7 | 0.051 | 0.21 | 10 | 0.205 | No |
| 51 | PF | 1.738 | SLV 7 | 0.362 | 1.483 | 1618 | 1.653 | Si |
| | V | 1.198 | SLV 11 | 0.291 | 1.189 | 798 | 1.237 | Si |
| | PFFP | 3.838 | SLV 9 | 0.362 | 1.483 | 1618 | 1.653 | Si |
| | R | 0.153 | SLV 5 | 0.031 | 0.127 | 3 | 0.125 | No |
| 52 | PF | 0.897 | SLV 9 | 0.217 | 0.889 | 347 | 0.879 | No |
| | V | 0.486 | SLV 11 | 0.112 | 0.46 | 69 | 0.453 | No |
| | PFFP | 1.786 | SLV 9 | 0.362 | 1.483 | 1618 | 1.653 | Si |
| | R | 0.29 | SLV 7 | 0.066 | 0.269 | 19 | 0.267 | No |
| 53 | PF | 0.931 | SLV 5 | 0.226 | 0.925 | 386 | 0.918 | No |
| | V | 0.575 | SLV 9 | 0.135 | 0.551 | 107 | 0.543 | No |
| | PFFP | 1.217 | SLV 5 | 0.295 | 1.207 | 834 | 1.26 | Si |
| | R | 0.248 | SLV 5 | 0.055 | 0.226 | 12 | 0.221 | No |
| 54 | PF | 1.273 | SLV 3 | 0.306 | 1.253 | 931 | 1.318 | Si |
| | V | 1.225 | SLV 5 | 0.297 | 1.215 | 850 | 1.269 | Si |
| | PFFP | 1.43 | SLV 1 | 0.341 | 1.398 | 1330 | 1.525 | Si |
| | R | 0.318 | SLV 9 | 0.071 | 0.292 | 23 | 0.289 | No |
| 55 | PF | 1.131 | SLV 15 | 0.274 | 1.122 | 669 | 1.151 | Si |
| | V | 1.12 | SLV 15 | 0.272 | 1.112 | 651 | 1.138 | Si |
| | PFFP | 1.222 | SLV 15 | 0.294 | 1.205 | 830 | 1.257 | Si |
| | R | 0.043 | SLV 5 | 0 | 0 | 0 | 0 | No |
| 56 | PF | 0.921 | SLV 13 | 0.224 | 0.918 | 378 | 0.911 | No |
| | V | 0.415 | SLV 3 | 0.098 | 0.399 | 49 | 0.394 | No |
| | PFFP | 0.826 | SLV 9 | 0.199 | 0.813 | 274 | 0.798 | No |
| | R | 0.045 | SLV 7 | 0 | 0 | 0 | 0 | No |
| 57 | PF | 0.775 | SLV 9 | 0.186 | 0.759 | 229 | 0.741 | No |
| | V | 0.389 | SLV 9 | 0.089 | 0.364 | 39 | 0.359 | No |
| | PFFP | 1.391 | SLV 5 | 0.336 | 1.377 | 1265 | 1.494 | Si |
| | R | 0.044 | SLV 7 | 0 | 0 | 0 | 0 | No |
| 58 | PF | 0.929 | SLV 15 | 0.226 | 0.926 | 387 | 0.919 | No |
| | V | 0.216 | SLV 1 | 0.049 | 0.201 | 9 | 0.197 | No |
| | PFFP | 0.976 | SLV 11 | 0.238 | 0.973 | 441 | 0.97 | No |
| | R | 0.045 | SLV 5 | 0 | 0 | 0 | 0 | No |
| 59 | PF | 1.253 | SLV 3 | 0.302 | 1.234 | 891 | 1.294 | Si |
| | V | 0.581 | SLV 13 | 0.137 | 0.562 | 112 | 0.553 | No |
| | PFFP | 3.419 | SLV 5 | 0.362 | 1.483 | 1618 | 1.653 | Si |
| | R | 0.046 | SLV 5 | 0 | 0 | 0 | 0 | No |
| 60 | PF | 1.082 | SLV 13 | 0.263 | 1.076 | 591 | 1.094 | Si |
| | V | 0.933 | SLV 13 | 0.227 | 0.93 | 392 | 0.924 | No |
| | PFFP | 1.798 | SLV 7 | 0.362 | 1.483 | 1618 | 1.653 | Si |
| | R | 0.045 | SLV 5 | 0 | 0 | 0 | 0 | No |
| 61 | PF | 3.301 | SLV 13 | 0.362 | 1.483 | 1618 | 1.653 | Si |
| | V | 0.531 | SLV 7 | 0.124 | 0.506 | 87 | 0.499 | No |
| | PFFP | 3.112 | SLV 9 | 0.362 | 1.483 | 1618 | 1.653 | Si |
| | R | 0.021 | SLV 1 | 0 | 0 | 0 | 0 | No |
| 62 | PF | 1.005 | SLV 1 | 0.245 | 1.005 | 481 | 1.005 | Si |
| | V | 0.429 | SLV 3 | 0.101 | 0.414 | 53 | 0.407 | No |
| | PFFP | 1.713 | SLV 9 | 0.362 | 1.483 | 1618 | 1.653 | Si |
| | R | 0.044 | SLV 5 | 0 | 0 | 0 | 0 | No |
| 63 | PF | 0.865 | SLV 7 | 0.209 | 0.855 | 313 | 0.843 | No |
| | V | 0.515 | SLV 3 | 0.121 | 0.495 | 83 | 0.489 | No |
| | PFFP | 2.129 | SLV 9 | 0.362 | 1.483 | 1618 | 1.653 | Si |
| | R | 0.043 | SLV 5 | 0 | 0 | 0 | 0 | No |
| 64 | PF | 1.905 | SLV 7 | 0.362 | 1.483 | 1618 | 1.653 | Si |
| | V | 0.371 | SLV 11 | 0.085 | 0.346 | 35 | 0.343 | No |
| | PFFP | 2.157 | SLV 15 | 0.362 | 1.483 | 1618 | 1.653 | Si |
| | R | 0.022 | SLV 1 | 0 | 0 | 0 | 0 | No |
| 65 | PF | 0.636 | SLV 1 | 0.151 | 0.619 | 140 | 0.606 | No |
| | V | 0 | SLV 1 | 0 | 0 | 0 | 0 | No |
| | PFFP | 1.151 | SLV 1 | 0.279 | 1.14 | 702 | 1.174 | Si |
| | R | 0.041 | SLV 5 | 0 | 0 | 0 | 0 | No |
| 66 | PF | 0.069 | SLV 11 | 0 | 0 | 0 | 0 | No |
| | V | 0.055 | SLV 5 | 0 | 0 | 0 | 0 | No |
| | PFFP | 0.138 | SLV 11 | 0.026 | 0.107 | 2 | 0.106 | No |
| | R | 0.021 | SLV 1 | 0 | 0 | 0 | 0 | No |
| 67 | PF | 0.84 | SLV 7 | 0.202 | 0.827 | 287 | 0.813 | No |
| | V | 0.613 | SLV 11 | 0.144 | 0.589 | 125 | 0.578 | No |
| | PFFP | 2.667 | SLV 5 | 0.362 | 1.483 | 1618 | 1.653 | Si |
| | R | 0.021 | SLV 1 | 0 | 0 | 0 | 0 | No |
| 68 | PF | 1.409 | SLV 15 | 0.337 | 1.378 | 1270 | 1.497 | Si |
| | V | 0.878 | SLV 13 | 0.213 | 0.873 | 331 | 0.862 | No |
| | PFFP | 1.622 | SLV 11 | 0.362 | 1.483 | 1618 | 1.653 | Si |
| | R | 0.229 | SLV 7 | 0.051 | 0.21 | 10 | 0.205 | No |
| 69 | PF | 0.462 | SLV 11 | 0.107 | 0.436 | 61 | 0.431 | No |
| | V | 0.395 | SLV 11 | 0.091 | 0.372 | 41 | 0.366 | No |
| | PFFP | 1.681 | SLV 11 | 0.362 | 1.483 | 1618 | 1.653 | Si |
| | R | 0.293 | SLV 5 | 0.066 | 0.269 | 19 | 0.267 | No |
| 71 | PF | 2.498 | SLV 7 | 0.362 | 1.483 | 1618 | 1.653 | Si |
| | V | 1.122 | SLV 7 | 0.273 | 1.117 | 661 | 1.145 | Si |

| Maschio | Stato limite | Molt. | Comb. | PGA | iPGA (ζE) | TR | (TR/TRrif)^.41 | Verifica |
|---|---|---|---|---|---|---|---|---|
| | PFFP | 2.753 | SLV 7 | 0.362 | 1.483 | 1618 | 1.653 | Si |
| | R | 0.112 | SLV 5 | 0.02 | 0.08 | 1 | 0.08 | No |
| 72 | PF | 0 | SLV 1 | 0 | 0 | 0 | 0 | No |
| | V | 0 | SLV 1 | 0 | 0 | 0 | 0 | No |
| | PFFP | 2.284 | SLV 7 | 0.362 | 1.483 | 1618 | 1.653 | Si |
| | R | 0.016 | SLV 5 | 0 | 0 | 0 | 0 | No |
| 73 | PF | 0.858 | SLV 5 | 0.207 | 0.846 | 305 | 0.834 | No |
| | V | 0.806 | SLV 5 | 0.193 | 0.792 | 255 | 0.775 | No |
| | PFFP | 1.362 | SLV 1 | 0.326 | 1.335 | 1144 | 1.434 | Si |
| | R | 0.042 | SLV 5 | 0 | 0 | 0 | 0 | No |
| 74 | PF | 1.288 | SLV 15 | 0.309 | 1.267 | 963 | 1.336 | Si |
| | V | 0.763 | SLV 1 | 0.185 | 0.755 | 225 | 0.736 | No |
| | PFFP | 2.017 | SLV 15 | 0.362 | 1.483 | 1618 | 1.653 | Si |
| | R | 0.042 | SLV 5 | 0 | 0 | 0 | 0 | No |
| 75 | PF | 2.385 | SLV 3 | 0.362 | 1.483 | 1618 | 1.653 | Si |
| | V | 0.828 | SLV 3 | 0.201 | 0.821 | 281 | 0.806 | No |
| | PFFP | 1000 | SLV 1 | 0.362 | 1.483 | 1618 | 1.653 | Si |
| | R | 0.042 | SLV 5 | 0 | 0 | 0 | 0 | No |
| 76 | PF | 2.967 | SLV 9 | 0.362 | 1.483 | 1618 | 1.653 | Si |
| | V | 0.809 | SLV 15 | 0.196 | 0.803 | 265 | 0.787 | No |
| | PFFP | 3.905 | SLV 9 | 0.362 | 1.483 | 1618 | 1.653 | Si |
| | R | 0.043 | SLV 5 | 0 | 0 | 0 | 0 | No |
| 77 | PF | 1.952 | SLV 3 | 0.362 | 1.483 | 1618 | 1.653 | Si |
| | V | 0.769 | SLV 13 | 0.186 | 0.761 | 230 | 0.743 | No |
| | PFFP | 2.809 | SLV 3 | 0.362 | 1.483 | 1618 | 1.653 | Si |
| | R | 0.042 | SLV 5 | 0 | 0 | 0 | 0 | No |
| 78 | PF | 1.282 | SLV 13 | 0.308 | 1.261 | 950 | 1.329 | Si |
| | V | 0.544 | SLV 1 | 0.128 | 0.525 | 96 | 0.519 | No |
| | PFFP | 1.723 | SLV 9 | 0.362 | 1.483 | 1618 | 1.653 | Si |
| | R | 0.044 | SLV 5 | 0 | 0 | 0 | 0 | No |
| 79 | PF | 2.1 | SLV 9 | 0.362 | 1.483 | 1618 | 1.653 | Si |
| | V | 0.986 | SLV 1 | 0.241 | 0.986 | 457 | 0.984 | No |
| | PFFP | 3.273 | SLV 9 | 0.362 | 1.483 | 1618 | 1.653 | Si |
| | R | 0.043 | SLV 5 | 0 | 0 | 0 | 0 | No |
| 80 | PF | 2.797 | SLV 3 | 0.362 | 1.483 | 1618 | 1.653 | Si |
| | V | 1.231 | SLV 3 | 0.297 | 1.214 | 847 | 1.268 | Si |
| | PFFP | 1000 | SLV 1 | 0.362 | 1.483 | 1618 | 1.653 | Si |
| | R | 0.044 | SLV 5 | 0 | 0 | 0 | 0 | No |
| 81 | PF | 1.572 | SLV 1 | 0.362 | 1.483 | 1618 | 1.653 | Si |
| | V | 0.315 | SLV 15 | 0.074 | 0.303 | 25 | 0.299 | No |
| | PFFP | 2.932 | SLV 1 | 0.362 | 1.483 | 1618 | 1.653 | Si |
| | R | 0.043 | SLV 5 | 0 | 0 | 0 | 0 | No |
| 82 | PF | 1.504 | SLV 7 | 0.362 | 1.483 | 1618 | 1.653 | Si |
| | V | 1.004 | SLV 5 | 0.245 | 1.004 | 480 | 1.004 | Si |
| | PFFP | 1.792 | SLV 11 | 0.362 | 1.483 | 1618 | 1.653 | Si |
| | R | 0.224 | SLV 7 | 0.049 | 0.201 | 9 | 0.197 | No |
| 83 | PF | 2.31 | SLV 15 | 0.362 | 1.483 | 1618 | 1.653 | Si |
| | V | 0.992 | SLV 11 | 0.242 | 0.991 | 464 | 0.99 | No |
| | PFFP | 1000 | SLV 1 | 0.362 | 1.483 | 1618 | 1.653 | Si |
| | R | 0.098 | SLV 5 | 0.02 | 0.08 | 1 | 0.08 | No |
| 84 | PF | 0.431 | SLV 3 | 0.101 | 0.414 | 53 | 0.407 | No |
| | V | 0.113 | SLV 3 | 0.026 | 0.107 | 2 | 0.106 | No |
| | PFFP | 1.062 | SLV 15 | 0.258 | 1.058 | 561 | 1.071 | Si |
| | R | 0.044 | SLV 9 | 0 | 0 | 0 | 0 | No |
| 85 | PF | 1.911 | SLV 5 | 0.362 | 1.483 | 1618 | 1.653 | Si |
| | V | 0.818 | SLV 11 | 0.196 | 0.804 | 266 | 0.788 | No |
| | PFFP | 2.706 | SLV 11 | 0.362 | 1.483 | 1618 | 1.653 | Si |
| | R | 0.021 | SLV 1 | 0 | 0 | 0 | 0 | No |
| 86 | PF | 0.638 | SLV 11 | 0.15 | 0.614 | 138 | 0.602 | No |
| | V | 0.328 | SLV 13 | 0.077 | 0.313 | 27 | 0.309 | No |
| | PFFP | 1.252 | SLV 7 | 0.303 | 1.241 | 906 | 1.303 | Si |
| | R | 0.045 | SLV 5 | 0 | 0 | 0 | 0 | No |
| 87 | PF | 2.029 | SLV 7 | 0.362 | 1.483 | 1618 | 1.653 | Si |
| | V | 0.692 | SLV 11 | 0.164 | 0.671 | 169 | 0.655 | No |
| | PFFP | 2.538 | SLV 9 | 0.362 | 1.483 | 1618 | 1.653 | Si |
| | R | 0.021 | SLV 1 | 0 | 0 | 0 | 0 | No |
| 88 | PF | 0 | SLV 1 | 0 | 0 | 0 | 0 | No |
| | V | 0 | SLV 1 | 0 | 0 | 0 | 0 | No |
| | PFFP | 1.073 | SLV 9 | 0.261 | 1.07 | 581 | 1.086 | Si |
| | R | 0.045 | SLV 5 | 0 | 0 | 0 | 0 | No |
| 89 | PF | 0 | SLV 1 | 0 | 0 | 0 | 0 | No |
| | V | 0.016 | SLV 13 | 0 | 0 | 0 | 0 | No |
| | PFFP | 2.14 | SLV 1 | 0.362 | 1.483 | 1618 | 1.653 | Si |
| | R | 0.04 | SLV 11 | 0 | 0 | 0 | 0 | No |
| 90 | PF | 0.634 | SLV 3 | 0.151 | 0.617 | 139 | 0.604 | No |
| | V | 0.51 | SLV 3 | 0.12 | 0.493 | 82 | 0.487 | No |
| | PFFP | 1.614 | SLV 7 | 0.362 | 1.483 | 1618 | 1.653 | Si |
| | R | 0.045 | SLV 5 | 0 | 0 | 0 | 0 | No |
| 91 | PF | 0.967 | SLV 15 | 0.236 | 0.965 | 432 | 0.962 | No |
| | V | 0.35 | SLV 1 | 0.082 | 0.337 | 33 | 0.335 | No |
| | PFFP | 1000 | SLV 1 | 0.362 | 1.483 | 1618 | 1.653 | Si |
| | R | 0.047 | SLV 5 | 0 | 0 | 0 | 0 | No |
| 92 | PF | 0.841 | SLV 3 | 0.204 | 0.835 | 294 | 0.821 | No |
| | V | 0.166 | SLV 13 | 0.038 | 0.157 | 5 | 0.155 | No |
| | PFFP | 0.88 | SLV 7 | 0.213 | 0.871 | 329 | 0.86 | No |
| | R | 0.045 | SLV 5 | 0 | 0 | 0 | 0 | No |
| 93 | PF | 0.712 | SLV 5 | 0.169 | 0.692 | 182 | 0.675 | No |
| | V | 0.542 | SLV 1 | 0.128 | 0.523 | 95 | 0.517 | No |
| | PFFP | 1.292 | SLV 9 | 0.313 | 1.28 | 996 | 1.355 | Si |

| Maschio | Stato limite | Molt. | Comb. | PGA | iPGA (ζE) | TR | (TR/TRrif)^.41 | Verifica |
|---|---|---|---|---|---|---|---|---|
| | R | 0.044 | SLV 5 | 0 | 0 | 0 | 0 | No |
| 94 | PF | 0.887 | SLV 1 | 0.216 | 0.882 | 340 | 0.872 | No |
| | V | 0.27 | SLV 15 | 0.062 | 0.256 | 17 | 0.255 | No |
| | PFFP | 0.802 | SLV 5 | 0.192 | 0.787 | 251 | 0.77 | No |
| | R | 0.045 | SLV 9 | 0 | 0 | 0 | 0 | No |
| 95 | PF | 1.287 | SLV 3 | 0.309 | 1.266 | 960 | 1.334 | Si |
| | V | 1.191 | SLV 5 | 0.289 | 1.183 | 784 | 1.228 | Si |
| | PFFP | 1.383 | SLV 1 | 0.331 | 1.354 | 1199 | 1.462 | Si |
| | R | 0.044 | SLV 5 | 0 | 0 | 0 | 0 | No |
| 96 | PF | 1.121 | SLV 15 | 0.272 | 1.112 | 653 | 1.139 | Si |
| | V | 1.092 | SLV 11 | 0.266 | 1.088 | 611 | 1.109 | Si |
| | PFFP | 1.191 | SLV 15 | 0.288 | 1.177 | 773 | 1.221 | Si |
| | R | 0.046 | SLV 5 | 0 | 0 | 0 | 0 | No |
| 97 | PF | 1.208 | SLV 13 | 0.291 | 1.192 | 804 | 1.241 | Si |
| | V | 1.064 | SLV 9 | 0.259 | 1.062 | 567 | 1.075 | Si |
| | PFFP | 1.118 | SLV 13 | 0.271 | 1.11 | 648 | 1.136 | Si |
| | R | 0.046 | SLV 5 | 0 | 0 | 0 | 0 | No |
| 98 | PF | 1.194 | SLV 13 | 0.288 | 1.18 | 778 | 1.224 | Si |
| | V | 0.966 | SLV 13 | 0.236 | 0.964 | 431 | 0.961 | No |
| | PFFP | 1.265 | SLV 9 | 0.306 | 1.254 | 934 | 1.319 | Si |
| | R | 0.046 | SLV 7 | 0 | 0 | 0 | 0 | No |
| 99 | PF | 1.176 | SLV 1 | 0.284 | 1.163 | 746 | 1.203 | Si |
| | V | 0.821 | SLV 13 | 0.199 | 0.815 | 276 | 0.8 | No |
| | PFFP | 1.589 | SLV 5 | 0.362 | 1.483 | 1618 | 1.653 | Si |
| | R | 0.045 | SLV 7 | 0 | 0 | 0 | 0 | No |
| 100 | PF | 0.868 | SLV 15 | 0.211 | 0.863 | 321 | 0.852 | No |
| | V | 0.569 | SLV 1 | 0.135 | 0.551 | 107 | 0.543 | No |
| | PFFP | 1.142 | SLV 11 | 0.278 | 1.136 | 695 | 1.169 | Si |
| | R | 0.046 | SLV 9 | 0 | 0 | 0 | 0 | No |
| 101 | PF | 1.651 | SLV 3 | 0.362 | 1.483 | 1618 | 1.653 | Si |
| | V | 0.486 | SLV 15 | 0.114 | 0.468 | 72 | 0.461 | No |
| | PFFP | 1.723 | SLV 7 | 0.362 | 1.483 | 1618 | 1.653 | Si |
| | R | 0.047 | SLV 5 | 0 | 0 | 0 | 0 | No |
| 102 | PF | 0.743 | SLV 13 | 0.18 | 0.735 | 210 | 0.716 | No |
| | V | 0.492 | SLV 15 | 0.116 | 0.474 | 74 | 0.467 | No |
| | PFFP | 2.054 | SLV 11 | 0.362 | 1.483 | 1618 | 1.653 | Si |
| | R | 0.047 | SLV 7 | 0 | 0 | 0 | 0 | No |
| 103 | PF | 2.484 | SLV 9 | 0.362 | 1.483 | 1618 | 1.653 | Si |
| | V | 0.726 | SLV 9 | 0.173 | 0.706 | 190 | 0.687 | No |
| | PFFP | 2.349 | SLV 9 | 0.362 | 1.483 | 1618 | 1.653 | Si |
| | R | 0.02 | SLV 1 | 0 | 0 | 0 | 0 | No |
| 104 | PF | 0.38 | SLV 1 | 0.089 | 0.364 | 39 | 0.359 | No |
| | V | 0.313 | SLV 1 | 0.074 | 0.303 | 25 | 0.299 | No |
| | PFFP | 1.409 | SLV 5 | 0.341 | 1.394 | 1319 | 1.52 | Si |
| | R | 0.042 | SLV 9 | 0 | 0 | 0 | 0 | No |
| 105 | PF | 0.843 | SLV 3 | 0.205 | 0.837 | 296 | 0.824 | No |
| | V | 0.639 | SLV 13 | 0.152 | 0.623 | 142 | 0.61 | No |
| | PFFP | 1.714 | SLV 7 | 0.362 | 1.483 | 1618 | 1.653 | Si |
| | R | 0.044 | SLV 5 | 0 | 0 | 0 | 0 | No |
| 106 | PF | 3.731 | SLV 7 | 0.362 | 1.483 | 1618 | 1.653 | Si |
| | V | 0.589 | SLV 11 | 0.138 | 0.565 | 113 | 0.555 | No |
| | PFFP | 2.412 | SLV 11 | 0.362 | 1.483 | 1618 | 1.653 | Si |
| | R | 0.02 | SLV 1 | 0 | 0 | 0 | 0 | No |
| 107 | PFFP | 2.696 | SLV 3 | 0.362 | 1.483 | 1618 | 1.653 | Si |
| | R | 0.038 | SLV 5 | 0 | 0 | 0 | 0 | No |
| 108 | PF | 0.093 | SLV 11 | 0.02 | 0.08 | 1 | 0.08 | No |
| | V | 0.069 | SLV 11 | 0 | 0 | 0 | 0 | No |
| | PFFP | 0.584 | SLV 11 | 0.137 | 0.56 | 111 | 0.551 | No |
| | R | 0.019 | SLV 1 | 0 | 0 | 0 | 0 | No |
| 109 | PF | 1.134 | SLV 5 | 0.276 | 1.128 | 681 | 1.159 | Si |
| | V | 0.69 | SLV 5 | 0.163 | 0.669 | 168 | 0.653 | No |
| | PFFP | 1.743 | SLV 5 | 0.362 | 1.483 | 1618 | 1.653 | Si |
| | R | 0.02 | SLV 1 | 0 | 0 | 0 | 0 | No |
| 110 | PFFP | 0.738 | SLV 11 | 0.176 | 0.72 | 199 | 0.7 | No |
| | R | 0 | SLV 1 | 0 | 0 | 0 | 0 | No |
| 112 | PF | 0.548 | SLV 13 | 0.129 | 0.53 | 98 | 0.524 | No |
| | V | 0.541 | SLV 13 | 0.128 | 0.523 | 95 | 0.517 | No |
| | PFFP | 2.094 | SLV 11 | 0.362 | 1.483 | 1618 | 1.653 | Si |
| | R | 0.139 | SLV 5 | 0.026 | 0.107 | 2 | 0.106 | No |
| 113 | PF | 0 | SLV 1 | 0 | 0 | 0 | 0 | No |
| | V | 0 | SLV 1 | 0 | 0 | 0 | 0 | No |
| | PFFP | 1.258 | SLV 7 | 0.305 | 1.247 | 919 | 1.311 | Si |
| | R | 0.012 | SLV 5 | 0 | 0 | 0 | 0 | No |
| 114 | PF | 0.231 | SLV 9 | 0.051 | 0.21 | 10 | 0.205 | No |
| | V | 0.17 | SLV 9 | 0.035 | 0.143 | 4 | 0.141 | No |
| | PFFP | 1.576 | SLV 5 | 0.362 | 1.483 | 1618 | 1.653 | Si |
| | R | 0.047 | SLV 5 | 0 | 0 | 0 | 0 | No |
| 115 | PF | 1.053 | SLV 13 | 0.256 | 1.05 | 549 | 1.061 | Si |
| | V | 0.931 | SLV 13 | 0.227 | 0.928 | 389 | 0.921 | No |
| | PFFP | 1.391 | SLV 13 | 0.333 | 1.362 | 1221 | 1.473 | Si |
| | R | 0.045 | SLV 5 | 0 | 0 | 0 | 0 | No |
| 116 | PF | 2.838 | SLV 13 | 0.362 | 1.483 | 1618 | 1.653 | Si |
| | V | 1.075 | SLV 1 | 0.261 | 1.07 | 581 | 1.086 | Si |
| | PFFP | 3.486 | SLV 9 | 0.362 | 1.483 | 1618 | 1.653 | Si |
| | R | 0.044 | SLV 7 | 0 | 0 | 0 | 0 | No |
| 117 | PF | 2.861 | SLV 1 | 0.362 | 1.483 | 1618 | 1.653 | Si |
| | V | 1.183 | SLV 13 | 0.286 | 1.17 | 759 | 1.212 | Si |
| | PFFP | 3.722 | SLV 3 | 0.362 | 1.483 | 1618 | 1.653 | Si |
| | R | 0.045 | SLV 7 | 0 | 0 | 0 | 0 | No |

| Maschio | Stato limite | Molt. | Comb. | PGA | iPGA (ζE) | TR | (TR/TRrif)^.41 | Verifica |
|---|---|---|---|---|---|---|---|---|
| 118 | PF | 1.404 | SLV 3 | 0.336 | 1.374 | 1256 | 1.49 | Si |
| | V | 1.175 | SLV 3 | 0.284 | 1.162 | 744 | 1.202 | Si |
| | PFFP | 1.73 | SLV 1 | 0.362 | 1.483 | 1618 | 1.653 | Si |
| | R | 0.043 | SLV 7 | 0 | 0 | 0 | 0 | No |
| 119 | PF | 1.759 | SLV 15 | 0.362 | 1.483 | 1618 | 1.653 | Si |
| | V | 0.887 | SLV 15 | 0.216 | 0.882 | 340 | 0.872 | No |
| | PFFP | 1.784 | SLV 15 | 0.362 | 1.483 | 1618 | 1.653 | Si |
| | R | 0.043 | SLV 5 | 0 | 0 | 0 | 0 | No |
| 120 | PF | 2.164 | SLV 3 | 0.362 | 1.483 | 1618 | 1.653 | Si |
| | V | 0.641 | SLV 3 | 0.153 | 0.625 | 143 | 0.611 | No |
| | PFFP | 1000 | SLV 1 | 0.362 | 1.483 | 1618 | 1.653 | Si |
| | R | 0.042 | SLV 5 | 0 | 0 | 0 | 0 | No |
| 121 | PF | 0.586 | SLV 15 | 0.139 | 0.567 | 115 | 0.559 | No |
| | V | 0.573 | SLV 1 | 0.136 | 0.555 | 109 | 0.547 | No |
| | PFFP | 1000 | SLV 1 | 0.362 | 1.483 | 1618 | 1.653 | Si |
| | R | 0.042 | SLV 7 | 0 | 0 | 0 | 0 | No |
| 122 | PF | 1.073 | SLV 15 | 0.261 | 1.068 | 577 | 1.083 | Si |
| | V | 0.688 | SLV 15 | 0.165 | 0.674 | 171 | 0.658 | No |
| | PFFP | 3.548 | SLV 13 | 0.362 | 1.483 | 1618 | 1.653 | Si |
| | R | 0.042 | SLV 5 | 0 | 0 | 0 | 0 | No |
| 123 | PF | 0.943 | SLV 15 | 0.23 | 0.94 | 403 | 0.935 | No |
| | V | 0.528 | SLV 15 | 0.125 | 0.511 | 89 | 0.503 | No |
| | PFFP | 1000 | SLV 1 | 0.362 | 1.483 | 1618 | 1.653 | Si |
| | R | 0.043 | SLV 5 | 0 | 0 | 0 | 0 | No |
| 124 | PF | 1.826 | SLV 3 | 0.362 | 1.483 | 1618 | 1.653 | Si |
| | V | 0.722 | SLV 13 | 0.174 | 0.711 | 193 | 0.691 | No |
| | PFFP | 2.284 | SLV 3 | 0.362 | 1.483 | 1618 | 1.653 | Si |
| | R | 0.043 | SLV 5 | 0 | 0 | 0 | 0 | No |
| 126 | PF | 0.843 | SLV 3 | 0.205 | 0.837 | 296 | 0.824 | No |
| | V | 0.476 | SLV 3 | 0.112 | 0.457 | 68 | 0.451 | No |
| | PFFP | 1.558 | SLV 15 | 0.362 | 1.483 | 1618 | 1.653 | Si |
| | R | 0.042 | SLV 5 | 0 | 0 | 0 | 0 | No |
| 127 | PF | 3.969 | SLV 15 | 0.362 | 1.483 | 1618 | 1.653 | Si |
| | V | 0.855 | SLV 7 | 0.206 | 0.844 | 303 | 0.832 | No |
| | PFFP | 2.822 | SLV 7 | 0.362 | 1.483 | 1618 | 1.653 | Si |
| | R | 0.02 | SLV 1 | 0 | 0 | 0 | 0 | No |
| 128 | PF | 0.64 | SLV 11 | 0.151 | 0.617 | 139 | 0.604 | No |
| | V | 0.477 | SLV 3 | 0.112 | 0.46 | 69 | 0.453 | No |
| | PFFP | 1.031 | SLV 7 | 0.252 | 1.03 | 518 | 1.036 | Si |
| | R | 0.046 | SLV 5 | 0 | 0 | 0 | 0 | No |
| 129 | PF | 2.397 | SLV 5 | 0.362 | 1.483 | 1618 | 1.653 | Si |
| | V | 0.755 | SLV 5 | 0.18 | 0.738 | 212 | 0.718 | No |
| | PFFP | 2.053 | SLV 9 | 0.362 | 1.483 | 1618 | 1.653 | Si |
| | R | 0.02 | SLV 1 | 0 | 0 | 0 | 0 | No |
| 130 | PF | 0 | SLV 1 | 0 | 0 | 0 | 0 | No |
| | V | 0 | SLV 1 | 0 | 0 | 0 | 0 | No |
| | PFFP | 0.699 | SLV 13 | 0.167 | 0.685 | 177 | 0.667 | No |
| | R | 0.047 | SLV 9 | 0 | 0 | 0 | 0 | No |
| 131 | PF | 1.388 | SLV 1 | 0.332 | 1.359 | 1212 | 1.468 | Si |
| | V | 1.466 | SLV 1 | 0.349 | 1.43 | 1436 | 1.574 | Si |
| | PFFP | 1.951 | SLV 9 | 0.362 | 1.483 | 1618 | 1.653 | Si |
| | R | 0 | SLV 5 | 0 | 0 | 0 | 0 | No |
| 132 | PF | 0.615 | SLV 1 | 0.146 | 0.598 | 129 | 0.586 | No |
| | V | 0.467 | SLV 3 | 0.11 | 0.451 | 66 | 0.445 | No |
| | PFFP | 1.415 | SLV 7 | 0.342 | 1.4 | 1337 | 1.529 | Si |
| | R | 0.048 | SLV 7 | 0 | 0 | 0 | 0 | No |
| 133 | PF | 1.801 | SLV 7 | 0.362 | 1.483 | 1618 | 1.653 | Si |
| | V | 0.599 | SLV 3 | 0.142 | 0.583 | 122 | 0.573 | No |
| | PFFP | 1.645 | SLV 11 | 0.362 | 1.483 | 1618 | 1.653 | Si |
| | R | 0.047 | SLV 5 | 0 | 0 | 0 | 0 | No |
| 134 | PF | 1.028 | SLV 3 | 0.251 | 1.026 | 513 | 1.032 | Si |
| | V | 0.625 | SLV 13 | 0.148 | 0.606 | 134 | 0.595 | No |
| | PFFP | 1.191 | SLV 7 | 0.289 | 1.183 | 784 | 1.228 | Si |
| | R | 0.046 | SLV 5 | 0 | 0 | 0 | 0 | No |
| 135 | PF | 1.102 | SLV 13 | 0.267 | 1.095 | 622 | 1.117 | Si |
| | V | 0.805 | SLV 1 | 0.195 | 0.798 | 261 | 0.782 | No |
| | PFFP | 1.584 | SLV 13 | 0.362 | 1.483 | 1618 | 1.653 | Si |
| | R | 0.045 | SLV 7 | 0 | 0 | 0 | 0 | No |
| 136 | PF | 1.164 | SLV 1 | 0.281 | 1.152 | 725 | 1.189 | Si |
| | V | 0.869 | SLV 13 | 0.211 | 0.864 | 322 | 0.853 | No |
| | PFFP | 1.242 | SLV 5 | 0.301 | 1.232 | 885 | 1.291 | Si |
| | R | 0.046 | SLV 7 | 0 | 0 | 0 | 0 | No |
| 137 | PF | 1.393 | SLV 1 | 0.333 | 1.364 | 1226 | 1.475 | Si |
| | V | 1.37 | SLV 1 | 0.328 | 1.342 | 1164 | 1.444 | Si |
| | PFFP | 1.461 | SLV 1 | 0.348 | 1.426 | 1421 | 1.567 | Si |
| | R | 0.046 | SLV 5 | 0 | 0 | 0 | 0 | No |
| 138 | PF | 1.66 | SLV 15 | 0.362 | 1.483 | 1618 | 1.653 | Si |
| | V | 1.386 | SLV 11 | 0.335 | 1.372 | 1250 | 1.487 | Si |
| | PFFP | 1.561 | SLV 11 | 0.362 | 1.483 | 1618 | 1.653 | Si |
| | R | 0.046 | SLV 5 | 0 | 0 | 0 | 0 | No |
| 139 | PF | 1.393 | SLV 13 | 0.333 | 1.364 | 1226 | 1.475 | Si |
| | V | 1.297 | SLV 9 | 0.314 | 1.285 | 1009 | 1.362 | Si |
| | PFFP | 1.168 | SLV 13 | 0.282 | 1.156 | 732 | 1.194 | Si |
| | R | 0.046 | SLV 5 | 0 | 0 | 0 | 0 | No |
| 140 | PF | 0.937 | SLV 13 | 0.228 | 0.934 | 396 | 0.928 | No |
| | V | 0.799 | SLV 13 | 0.193 | 0.792 | 255 | 0.775 | No |
| | PFFP | 1.29 | SLV 9 | 0.312 | 1.278 | 991 | 1.352 | Si |
| | R | 0.044 | SLV 5 | 0 | 0 | 0 | 0 | No |
| 141 | PF | 0.575 | SLV 3 | 0.136 | 0.558 | 110 | 0.549 | No |

| Maschio | Stato limite | Molt. | Comb. | PGA | iPGA (ζE) | TR | (TR/TRrif)^.41 | Verifica |
|---|---|---|---|---|---|---|---|---|
| | V | 0.502 | SLV 3 | 0.118 | 0.485 | 79 | 0.479 | No |
| | PFFP | 0.846 | SLV 3 | 0.205 | 0.841 | 300 | 0.828 | No |
| | R | 0.047 | SLV 7 | 0 | 0 | 0 | 0 | No |
| 142 | PF | 0.895 | SLV 15 | 0.218 | 0.891 | 350 | 0.882 | No |
| | V | 0.771 | SLV 15 | 0.186 | 0.763 | 232 | 0.745 | No |
| | PFFP | 1.213 | SLV 11 | 0.294 | 1.204 | 826 | 1.255 | Si |
| | R | 0.045 | SLV 5 | 0 | 0 | 0 | 0 | No |
| 143 | PF | 1.035 | SLV 3 | 0.252 | 1.033 | 522 | 1.039 | Si |
| | V | 0.637 | SLV 1 | 0.152 | 0.621 | 141 | 0.608 | No |
| | PFFP | 1.663 | SLV 3 | 0.362 | 1.483 | 1618 | 1.653 | Si |
| | R | 0.046 | SLV 7 | 0 | 0 | 0 | 0 | No |
| 144 | PF | 0.486 | SLV 15 | 0.114 | 0.468 | 72 | 0.461 | No |
| | V | 0.388 | SLV 15 | 0.091 | 0.372 | 41 | 0.366 | No |
| | PFFP | 1.028 | SLV 11 | 0.251 | 1.027 | 514 | 1.033 | Si |
| | R | 0.046 | SLV 9 | 0 | 0 | 0 | 0 | No |
| 145 | PF | 1.951 | SLV 9 | 0.362 | 1.483 | 1618 | 1.653 | Si |
| | V | 0.823 | SLV 9 | 0.198 | 0.81 | 272 | 0.796 | No |
| | PFFP | 1.554 | SLV 9 | 0.362 | 1.483 | 1618 | 1.653 | Si |
| | R | 0.019 | SLV 1 | 0 | 0 | 0 | 0 | No |
| 146 | PF | 0.699 | SLV 9 | 0.166 | 0.68 | 174 | 0.662 | No |
| | V | 0.696 | SLV 9 | 0.165 | 0.674 | 171 | 0.658 | No |
| | PFFP | 1.011 | SLV 9 | 0.247 | 1.011 | 490 | 1.013 | Si |
| | R | 0.04 | SLV 5 | 0 | 0 | 0 | 0 | No |
| 147 | PF | 0.521 | SLV 15 | 0.123 | 0.503 | 86 | 0.496 | No |
| | V | 0.442 | SLV 15 | 0.104 | 0.427 | 57 | 0.419 | No |
| | PFFP | 0.995 | SLV 15 | 0.243 | 0.995 | 468 | 0.994 | No |
| | R | 0.044 | SLV 5 | 0 | 0 | 0 | 0 | No |
| 148 | PF | 1000 | SLV 1 | 0.362 | 1.483 | 1618 | 1.653 | Si |
| | V | 0.675 | SLV 11 | 0.16 | 0.654 | 159 | 0.638 | No |
| | PFFP | 1.786 | SLV 11 | 0.362 | 1.483 | 1618 | 1.653 | Si |
| | R | 0.02 | SLV 1 | 0 | 0 | 0 | 0 | No |
| 149 | PFFP | 3.578 | SLV 11 | 0.362 | 1.483 | 1618 | 1.653 | Si |
| | R | 0.036 | SLV 5 | 0 | 0 | 0 | 0 | No |
| 150 | PF | 0.083 | SLV 11 | 0 | 0 | 0 | 0 | No |
| | V | 0.065 | SLV 11 | 0 | 0 | 0 | 0 | No |
| | PFFP | 0.32 | SLV 11 | 0.073 | 0.298 | 24 | 0.294 | No |
| | R | 0.018 | SLV 1 | 0 | 0 | 0 | 0 | No |
| 151 | PF | 1.531 | SLV 5 | 0.362 | 1.483 | 1618 | 1.653 | Si |
| | V | 0.834 | SLV 5 | 0.201 | 0.821 | 281 | 0.806 | No |
| | PFFP | 1.641 | SLV 5 | 0.362 | 1.483 | 1618 | 1.653 | Si |
| | R | 0.019 | SLV 1 | 0 | 0 | 0 | 0 | No |
| 152 | PF | 0.946 | SLV 13 | 0.23 | 0.943 | 406 | 0.938 | No |
| | V | 0.896 | SLV 13 | 0.218 | 0.892 | 351 | 0.883 | No |
| | PFFP | 0.971 | SLV 13 | 0.237 | 0.97 | 437 | 0.966 | No |
| | R | 0.042 | SLV 7 | 0 | 0 | 0 | 0 | No |
| 153 | PF | 2.473 | SLV 13 | 0.362 | 1.483 | 1618 | 1.653 | Si |
| | V | 1.113 | SLV 1 | 0.27 | 1.105 | 640 | 1.13 | Si |
| | PFFP | 2.833 | SLV 13 | 0.362 | 1.483 | 1618 | 1.653 | Si |
| | R | 0.042 | SLV 7 | 0 | 0 | 0 | 0 | No |
| 154 | PF | 2.188 | SLV 3 | 0.362 | 1.483 | 1618 | 1.653 | Si |
| | V | 1.212 | SLV 3 | 0.292 | 1.196 | 811 | 1.245 | Si |
| | PFFP | 2.441 | SLV 7 | 0.362 | 1.483 | 1618 | 1.653 | Si |
| | R | 0.043 | SLV 5 | 0 | 0 | 0 | 0 | No |
| 155 | PF | 1.332 | SLV 3 | 0.319 | 1.307 | 1067 | 1.393 | Si |
| | V | 1.212 | SLV 3 | 0.292 | 1.196 | 811 | 1.245 | Si |
| | PFFP | 1.39 | SLV 3 | 0.332 | 1.361 | 1218 | 1.471 | Si |
| | R | 0.044 | SLV 5 | 0 | 0 | 0 | 0 | No |
| 156 | PF | 1.25 | SLV 15 | 0.301 | 1.231 | 885 | 1.291 | Si |
| | V | 0.925 | SLV 1 | 0.225 | 0.922 | 383 | 0.916 | No |
| | PFFP | 1.37 | SLV 15 | 0.328 | 1.342 | 1164 | 1.444 | Si |
| | R | 0.041 | SLV 5 | 0 | 0 | 0 | 0 | No |
| 157 | PF | 3.427 | SLV 13 | 0.362 | 1.483 | 1618 | 1.653 | Si |
| | V | 0.704 | SLV 3 | 0.169 | 0.692 | 182 | 0.675 | No |
| | PFFP | 1000 | SLV 1 | 0.362 | 1.483 | 1618 | 1.653 | Si |
| | R | 0.037 | SLV 7 | 0 | 0 | 0 | 0 | No |
| 158 | PF | 0.348 | SLV 1 | 0.082 | 0.337 | 33 | 0.335 | No |
| | V | 0.327 | SLV 1 | 0.077 | 0.313 | 27 | 0.309 | No |
| | PFFP | 2.273 | SLV 11 | 0.362 | 1.483 | 1618 | 1.653 | Si |
| | R | 0.038 | SLV 5 | 0 | 0 | 0 | 0 | No |
| 159 | PF | 1.091 | SLV 1 | 0.265 | 1.085 | 605 | 1.104 | Si |
| | V | 0.774 | SLV 15 | 0.187 | 0.767 | 235 | 0.749 | No |
| | PFFP | 1000 | SLV 1 | 0.362 | 1.483 | 1618 | 1.653 | Si |
| | R | 0.038 | SLV 9 | 0 | 0 | 0 | 0 | No |
| 160 | PF | 0.832 | SLV 15 | 0.202 | 0.826 | 286 | 0.812 | No |
| | V | 0.475 | SLV 15 | 0.112 | 0.457 | 68 | 0.451 | No |
| | PFFP | 1000 | SLV 1 | 0.362 | 1.483 | 1618 | 1.653 | Si |
| | R | 0.039 | SLV 5 | 0 | 0 | 0 | 0 | No |
| 161 | PF | 1.381 | SLV 1 | 0.33 | 1.353 | 1194 | 1.459 | Si |
| | V | 0.757 | SLV 15 | 0.183 | 0.748 | 220 | 0.729 | No |
| | PFFP | 1.537 | SLV 1 | 0.362 | 1.483 | 1618 | 1.653 | Si |
| | R | 0.041 | SLV 5 | 0 | 0 | 0 | 0 | No |
| 162 | PF | 0.142 | SLV 5 | 0.031 | 0.127 | 3 | 0.125 | No |
| | V | 0.188 | SLV 5 | 0.041 | 0.169 | 6 | 0.167 | No |
| | PFFP | 0.324 | SLV 7 | 0.073 | 0.298 | 24 | 0.294 | No |
| | R | 0.04 | SLV 5 | 0 | 0 | 0 | 0 | No |
| 163 | PF | 1000 | SLV 1 | 0.362 | 1.483 | 1618 | 1.653 | Si |
| | V | 1.01 | SLV 7 | 0.247 | 1.01 | 488 | 1.011 | Si |
| | PFFP | 3.729 | SLV 7 | 0.362 | 1.483 | 1618 | 1.653 | Si |
| | R | 0 | SLV 1 | 0 | 0 | 0 | 0 | No |

| Maschio | Stato limite | Molt. | Comb. | PGA | iPGA (ζE) | TR | (TR/TRrif)^.41 | Verifica |
|---|---|---|---|---|---|---|---|---|
| 165 | PF | 1.912 | SLV 7 | 0.362 | 1.483 | 1618 | 1.653 | Si |
| | V | 1.117 | SLV 9 | 0.272 | 1.112 | 652 | 1.139 | Si |
| | PFFP | 1.64 | SLV 3 | 0.362 | 1.483 | 1618 | 1.653 | Si |
| | R | 0.037 | SLV 7 | 0 | 0 | 0 | 0 | No |
| 166 | PF | 0.695 | SLV 3 | 0.167 | 0.682 | 175 | 0.664 | No |
| | V | 0 | SLV 1 | 0 | 0 | 0 | 0 | No |
| | PFFP | 1.102 | SLV 15 | 0.267 | 1.095 | 622 | 1.117 | Si |
| | R | 0.044 | SLV 5 | 0 | 0 | 0 | 0 | No |
| 167 | PF | 3.654 | SLV 1 | 0.362 | 1.483 | 1618 | 1.653 | Si |
| | V | 0.902 | SLV 7 | 0.218 | 0.894 | 352 | 0.884 | No |
| | PFFP | 1.401 | SLV 3 | 0.335 | 1.371 | 1248 | 1.486 | Si |
| | R | 0.02 | SLV 1 | 0 | 0 | 0 | 0 | No |
| 168 | PF | 0.432 | SLV 3 | 0.102 | 0.417 | 54 | 0.41 | No |
| | V | 0.324 | SLV 3 | 0.077 | 0.313 | 27 | 0.309 | No |
| | PFFP | 0.739 | SLV 7 | 0.176 | 0.722 | 200 | 0.701 | No |
| | R | 0.044 | SLV 7 | 0 | 0 | 0 | 0 | No |
| 169 | PF | 1.946 | SLV 5 | 0.362 | 1.483 | 1618 | 1.653 | Si |
| | V | 0.849 | SLV 5 | 0.205 | 0.837 | 296 | 0.824 | No |
| | PFFP | 1.44 | SLV 9 | 0.348 | 1.424 | 1415 | 1.564 | Si |
| | R | 0.019 | SLV 1 | 0 | 0 | 0 | 0 | No |
| 170 | PF | 0.823 | SLV 5 | 0.198 | 0.81 | 272 | 0.796 | No |
| | V | 0.814 | SLV 5 | 0.196 | 0.801 | 263 | 0.785 | No |
| | PFFP | 0.813 | SLV 5 | 0.195 | 0.799 | 262 | 0.784 | No |
| | R | 0.042 | SLV 5 | 0 | 0 | 0 | 0 | No |
| 171 | PF | 0.991 | SLV 5 | 0.242 | 0.99 | 462 | 0.989 | No |
| | V | 0.981 | SLV 5 | 0.239 | 0.979 | 448 | 0.976 | No |
| | PFFP | 0.471 | SLV 5 | 0.109 | 0.445 | 64 | 0.44 | No |
| | R | 0.05 | SLV 9 | 0 | 0 | 0 | 0 | No |
| 172 | PF | 0.483 | SLV 1 | 0.114 | 0.466 | 71 | 0.459 | No |
| | V | 0.423 | SLV 3 | 0.099 | 0.407 | 51 | 0.401 | No |
| | PFFP | 0.97 | SLV 7 | 0.236 | 0.967 | 435 | 0.965 | No |
| | R | 0.047 | SLV 11 | 0 | 0 | 0 | 0 | No |
| 173 | PF | 1.722 | SLV 7 | 0.362 | 1.483 | 1618 | 1.653 | Si |
| | V | 0.869 | SLV 3 | 0.211 | 0.864 | 322 | 0.853 | No |
| | PFFP | 1.733 | SLV 11 | 0.362 | 1.483 | 1618 | 1.653 | Si |
| | R | 0.045 | SLV 5 | 0 | 0 | 0 | 0 | No |
| 174 | PF | 1.231 | SLV 3 | 0.297 | 1.214 | 847 | 1.268 | Si |
| | V | 0.96 | SLV 15 | 0.234 | 0.959 | 424 | 0.954 | No |
| | PFFP | 1.287 | SLV 7 | 0.312 | 1.275 | 984 | 1.348 | Si |
| | R | 0.045 | SLV 5 | 0 | 0 | 0 | 0 | No |
| 175 | PF | 0.517 | SLV 15 | 0.122 | 0.498 | 84 | 0.491 | No |
| | V | 0.444 | SLV 15 | 0.104 | 0.427 | 57 | 0.419 | No |
| | PFFP | 0.809 | SLV 15 | 0.196 | 0.803 | 265 | 0.787 | No |
| | R | 0.047 | SLV 7 | 0 | 0 | 0 | 0 | No |
| 176 | PF | 0.921 | SLV 1 | 0.224 | 0.918 | 378 | 0.911 | No |
| | V | 0.778 | SLV 13 | 0.188 | 0.771 | 238 | 0.753 | No |
| | PFFP | 1.266 | SLV 5 | 0.307 | 1.255 | 936 | 1.321 | Si |
| | R | 0.044 | SLV 5 | 0 | 0 | 0 | 0 | No |
| 177 | PF | 1.761 | SLV 1 | 0.362 | 1.483 | 1618 | 1.653 | Si |
| | V | 1.717 | SLV 1 | 0.362 | 1.483 | 1618 | 1.653 | Si |
| | PFFP | 1.727 | SLV 1 | 0.362 | 1.483 | 1618 | 1.653 | Si |
| | R | 0.046 | SLV 5 | 0 | 0 | 0 | 0 | No |
| 178 | PF | 1.311 | SLV 7 | 0.317 | 1.299 | 1045 | 1.382 | Si |
| | V | 1.155 | SLV 7 | 0.281 | 1.148 | 718 | 1.185 | Si |
| | PFFP | 0.838 | SLV 7 | 0.201 | 0.825 | 285 | 0.811 | No |
| | R | 0.06 | SLV 9 | 0 | 0 | 0 | 0 | No |
| 179 | PF | 1.407 | SLV 9 | 0.34 | 1.392 | 1313 | 1.517 | Si |
| | V | 1.336 | SLV 9 | 0.323 | 1.323 | 1110 | 1.416 | Si |
| | PFFP | 0.902 | SLV 9 | 0.218 | 0.894 | 352 | 0.884 | No |
| | R | 0.04 | SLV 11 | 0 | 0 | 0 | 0 | No |
| 180 | PF | 0.609 | SLV 3 | 0.144 | 0.591 | 126 | 0.58 | No |
| | V | 0.432 | SLV 3 | 0.102 | 0.417 | 54 | 0.41 | No |
| | PFFP | 1.222 | SLV 5 | 0.296 | 1.212 | 844 | 1.266 | Si |
| | R | 0.037 | SLV 5 | 0 | 0 | 0 | 0 | No |
| 181 | PF | 0 | SLV 1 | 0 | 0 | 0 | 0 | No |
| | V | 0 | SLV 1 | 0 | 0 | 0 | 0 | No |
| | PFFP | 0.178 | SLV 5 | 0.038 | 0.157 | 5 | 0.155 | No |
| | R | 0 | SLV 1 | 0 | 0 | 0 | 0 | No |
| 182 | PF | 1.501 | SLV 7 | 0.362 | 1.483 | 1618 | 1.653 | Si |
| | V | 1.348 | SLV 1 | 0.323 | 1.322 | 1107 | 1.415 | Si |
| | PFFP | 1.32 | SLV 7 | 0.319 | 1.307 | 1068 | 1.394 | Si |
| | R | 0.047 | SLV 7 | 0 | 0 | 0 | 0 | No |
| 183 | PF | 1.335 | SLV 11 | 0.323 | 1.322 | 1107 | 1.415 | Si |
| | V | 1.097 | SLV 11 | 0.267 | 1.093 | 619 | 1.115 | Si |
| | PFFP | 0.962 | SLV 7 | 0.234 | 0.959 | 424 | 0.954 | No |
| | R | 0.063 | SLV 7 | 0 | 0 | 0 | 0 | No |
| 184 | PF | 0 | SLV 3 | 0 | 0 | 0 | 0 | No |
| | V | 0 | SLV 3 | 0 | 0 | 0 | 0 | No |
| | PFFP | 0.339 | SLV 11 | 0.077 | 0.313 | 27 | 0.309 | No |
| | R | 0 | SLV 1 | 0 | 0 | 0 | 0 | No |
| 185 | PF | 0.007 | SLV 13 | 0 | 0 | 0 | 0 | No |
| | V | 0 | SLV 13 | 0 | 0 | 0 | 0 | No |
| | PFFP | 0.575 | SLV 7 | 0.135 | 0.551 | 107 | 0.543 | No |
| | R | 0 | SLV 1 | 0 | 0 | 0 | 0 | No |
| 186 | PF | 0.365 | SLV 9 | 0.083 | 0.342 | 34 | 0.339 | No |
| | V | 0.265 | SLV 9 | 0.059 | 0.242 | 14 | 0.236 | No |
| | PFFP | 0.765 | SLV 7 | 0.183 | 0.748 | 220 | 0.729 | No |
| | R | 0.025 | SLV 5 | 0 | 0 | 0 | 0 | No |
| 187 | PF | 1.38 | SLV 13 | 0.33 | 1.352 | 1191 | 1.458 | Si |

| Maschio | Stato limite | Molt. | Comb. | PGA | iPGA (ζE) | TR | (TR/TRrif)^.41 | Verifica |
|---|---|---|---|---|---|---|---|---|
| | V | 0.784 | SLV 9 | 0.188 | 0.769 | 236 | 0.751 | No |
| | PFFP | 1.341 | SLV 9 | 0.324 | 1.328 | 1124 | 1.424 | Si |
| | R | 0.05 | SLV 7 | 0 | 0 | 0 | 0 | No |
| 188 | PF | 0.254 | SLV 7 | 0.057 | 0.234 | 13 | 0.229 | No |
| | V | 0.155 | SLV 7 | 0.031 | 0.127 | 3 | 0.125 | No |
| | PFFP | 0.818 | SLV 3 | 0.198 | 0.811 | 273 | 0.797 | No |
| | R | 0.027 | SLV 7 | 0 | 0 | 0 | 0 | No |
| 189 | PF | 0 | SLV 1 | 0 | 0 | 0 | 0 | No |
| | V | 0 | SLV 1 | 0 | 0 | 0 | 0 | No |
| | PFFP | 0.131 | SLV 11 | 0.026 | 0.107 | 2 | 0.106 | No |
| | R | 0.023 | SLV 7 | 0 | 0 | 0 | 0 | No |
| 190 | PF | 1.226 | SLV 5 | 0.297 | 1.216 | 852 | 1.271 | Si |
| | V | 1.016 | SLV 5 | 0.248 | 1.015 | 497 | 1.019 | Si |
| | PFFP | 0.856 | SLV 9 | 0.206 | 0.844 | 303 | 0.832 | No |
| | R | 0.028 | SLV 5 | 0 | 0 | 0 | 0 | No |
| 191 | PF | 0.281 | SLV 5 | 0.062 | 0.256 | 17 | 0.255 | No |
| | V | 0.28 | SLV 5 | 0.062 | 0.256 | 17 | 0.255 | No |
| | PFFP | 0.534 | SLV 1 | 0.126 | 0.516 | 91 | 0.508 | No |
| | R | 0.1 | SLV 5 | 0.02 | 0.08 | 1 | 0.08 | No |
| 193 | PF | 0 | SLV 1 | 0 | 0 | 0 | 0 | No |
| | V | 0 | SLV 1 | 0 | 0 | 0 | 0 | No |
| | PFFP | 0 | SLV 1 | 0 | 0 | 0 | 0 | No |
| | R | 0 | SLV 1 | 0 | 0 | 0 | 0 | No |
| 194 | PFFP | 0.184 | SLV 5 | 0.038 | 0.157 | 5 | 0.155 | No |
| | R | 0 | SLV 1 | 0 | 0 | 0 | 0 | No |
| 195 | PF | 0 | SLV 1 | 0 | 0 | 0 | 0 | No |
| | V | 0 | SLV 1 | 0 | 0 | 0 | 0 | No |
| | PFFP | 0 | SLV 1 | 0 | 0 | 0 | 0 | No |
| | R | 0 | SLV 1 | 0 | 0 | 0 | 0 | No |
| 196 | PFFP | 0.212 | SLV 5 | 0.047 | 0.191 | 8 | 0.187 | No |
| | R | 0 | SLV 1 | 0 | 0 | 0 | 0 | No |
| 197 | PF | 0 | SLV 1 | 0 | 0 | 0 | 0 | No |
| | V | 0 | SLV 1 | 0 | 0 | 0 | 0 | No |
| | PFFP | 0.182 | SLV 9 | 0.038 | 0.157 | 5 | 0.155 | No |
| | R | 0 | SLV 1 | 0 | 0 | 0 | 0 | No |
| 198 | PF | 0.925 | SLV 3 | 0.225 | 0.922 | 383 | 0.916 | No |
| | V | 0.847 | SLV 3 | 0.206 | 0.842 | 301 | 0.829 | No |
| | PFFP | 1.19 | SLV 3 | 0.287 | 1.176 | 771 | 1.22 | Si |
| | R | 0 | SLV 1 | 0 | 0 | 0 | 0 | No |
| 199 | PF | 1.831 | SLV 15 | 0.362 | 1.483 | 1618 | 1.653 | Si |
| | V | 1.372 | SLV 15 | 0.328 | 1.344 | 1170 | 1.447 | Si |
| | PFFP | 1.091 | SLV 11 | 0.266 | 1.087 | 610 | 1.108 | Si |
| | R | 0.061 | SLV 5 | 0 | 0 | 0 | 0 | No |
| 200 | PF | 0 | SLV 1 | 0 | 0 | 0 | 0 | No |
| | V | 0 | SLV 1 | 0 | 0 | 0 | 0 | No |
| | PFFP | 0.351 | SLV 5 | 0.08 | 0.328 | 31 | 0.327 | No |
| | R | 0 | SLV 1 | 0 | 0 | 0 | 0 | No |
| 201 | PF | 0.736 | SLV 15 | 0.177 | 0.727 | 203 | 0.706 | No |
| | V | 0.709 | SLV 15 | 0.17 | 0.698 | 185 | 0.679 | No |
| | PFFP | 0.772 | SLV 15 | 0.187 | 0.765 | 233 | 0.747 | No |
| | R | 0.073 | SLV 5 | 0 | 0 | 0 | 0 | No |
| 202 | PF | 1.308 | SLV 13 | 0.314 | 1.285 | 1009 | 1.362 | Si |
| | V | 1.028 | SLV 3 | 0.251 | 1.026 | 513 | 1.032 | Si |
| | PFFP | 1.91 | SLV 13 | 0.362 | 1.483 | 1618 | 1.653 | Si |
| | R | 0.025 | SLV 5 | 0 | 0 | 0 | 0 | No |
| 203 | PF | 0.19 | SLV 3 | 0.044 | 0.181 | 7 | 0.177 | No |
| | V | 0.179 | SLV 3 | 0.041 | 0.169 | 6 | 0.167 | No |
| | PFFP | 1.102 | SLV 7 | 0.268 | 1.098 | 628 | 1.121 | Si |
| | R | 0.052 | SLV 5 | 0 | 0 | 0 | 0 | No |
| 204 | PF | 0.397 | SLV 1 | 0.094 | 0.384 | 44 | 0.377 | No |
| | V | 0.381 | SLV 1 | 0.09 | 0.368 | 40 | 0.363 | No |
| | PFFP | 0.956 | SLV 3 | 0.233 | 0.954 | 419 | 0.95 | No |
| | R | 0.059 | SLV 11 | 0 | 0 | 0 | 0 | No |
| 205 | PF | 0.816 | SLV 15 | 0.198 | 0.809 | 271 | 0.794 | No |
| | V | 0.48 | SLV 15 | 0.113 | 0.463 | 70 | 0.456 | No |
| | PFFP | 1.925 | SLV 1 | 0.362 | 1.483 | 1618 | 1.653 | Si |
| | R | 0.054 | SLV 5 | 0 | 0 | 0 | 0 | No |
| 206 | PF | 1.143 | SLV 1 | 0.277 | 1.133 | 689 | 1.165 | Si |
| | V | 1.134 | SLV 1 | 0.275 | 1.124 | 674 | 1.154 | Si |
| | PFFP | 0.984 | SLV 1 | 0.24 | 0.984 | 454 | 0.982 | No |
| | R | 0.077 | SLV 5 | 0 | 0 | 0 | 0 | No |
| 207 | PF | 0.453 | SLV 11 | 0.104 | 0.427 | 57 | 0.419 | No |
| | V | 0.29 | SLV 11 | 0.066 | 0.269 | 19 | 0.267 | No |
| | PFFP | 0.948 | SLV 7 | 0.231 | 0.944 | 408 | 0.94 | No |
| | R | 0.082 | SLV 5 | 0 | 0 | 0 | 0 | No |
| 208 | PF | 0.374 | SLV 7 | 0.086 | 0.351 | 36 | 0.347 | No |
| | V | 0.295 | SLV 7 | 0.066 | 0.269 | 19 | 0.267 | No |
| | PFFP | 0.825 | SLV 1 | 0.2 | 0.819 | 279 | 0.804 | No |
| | R | 0.028 | SLV 5 | 0 | 0 | 0 | 0 | No |
| 209 | PF | 0.379 | SLV 5 | 0.087 | 0.355 | 37 | 0.351 | No |
| | V | 0.336 | SLV 5 | 0.077 | 0.313 | 27 | 0.309 | No |
| | PFFP | 0.915 | SLV 13 | 0.223 | 0.912 | 371 | 0.904 | No |
| | R | 0.026 | SLV 5 | 0 | 0 | 0 | 0 | No |
| 210 | PF | 0.073 | SLV 15 | 0 | 0 | 0 | 0 | No |
| | V | 0.048 | SLV 15 | 0 | 0 | 0 | 0 | No |
| | PFFP | 1.744 | SLV 5 | 0.362 | 1.483 | 1618 | 1.653 | Si |
| | R | 0.006 | SLV 5 | 0 | 0 | 0 | 0 | No |
| 211 | PF | 0 | SLV 1 | 0 | 0 | 0 | 0 | No |
| | V | 1.076 | SLV 1 | 0.262 | 1.071 | 582 | 1.087 | Si |

| Maschio | Stato limite | Molt. | Comb. | PGA | iPGA (ζE) | TR | (TR/TRrif)^.41 | Verifica |
|---|---|---|---|---|---|---|---|---|
| | PFFP | 0.789 | SLV 1 | 0.191 | 0.782 | 247 | 0.765 | No |
| | R | 0.053 | SLV 9 | 0 | 0 | 0 | 0 | No |
| 212 | PF | 0 | SLV 1 | 0 | 0 | 0 | 0 | No |
| | V | 0 | SLV 1 | 0 | 0 | 0 | 0 | No |
| | PFFP | 0.312 | SLV 9 | 0.07 | 0.286 | 22 | 0.284 | No |
| | R | 0 | SLV 1 | 0 | 0 | 0 | 0 | No |
| 213 | PF | 0.546 | SLV 15 | 0.129 | 0.528 | 97 | 0.521 | No |
| | V | 0.364 | SLV 15 | 0.086 | 0.351 | 36 | 0.347 | No |
| | PFFP | 1.296 | SLV 9 | 0.314 | 1.284 | 1006 | 1.36 | Si |
| | R | 0.048 | SLV 5 | 0 | 0 | 0 | 0 | No |
| 214 | PF | 1.456 | SLV 11 | 0.352 | 1.44 | 1467 | 1.588 | Si |
| | V | 1.207 | SLV 11 | 0.293 | 1.198 | 814 | 1.247 | Si |
| | PFFP | 1.244 | SLV 1 | 0.299 | 1.226 | 873 | 1.283 | Si |
| | R | 0.049 | SLV 5 | 0 | 0 | 0 | 0 | No |
| 215 | PF | 0.272 | SLV 13 | 0.064 | 0.262 | 18 | 0.261 | No |
| | V | 0.233 | SLV 13 | 0.053 | 0.218 | 11 | 0.214 | No |
| | PFFP | 0.672 | SLV 13 | 0.161 | 0.658 | 161 | 0.642 | No |
| | R | 0.053 | SLV 11 | 0 | 0 | 0 | 0 | No |
| 216 | PF | 0.752 | SLV 15 | 0.182 | 0.744 | 217 | 0.725 | No |
| | V | 0.677 | SLV 1 | 0.162 | 0.661 | 164 | 0.647 | No |
| | PFFP | 1.641 | SLV 15 | 0.362 | 1.483 | 1618 | 1.653 | Si |
| | R | 0.042 | SLV 11 | 0 | 0 | 0 | 0 | No |
| 217 | PF | 0.288 | SLV 5 | 0.064 | 0.262 | 18 | 0.261 | No |
| | V | 0.287 | SLV 5 | 0.064 | 0.262 | 18 | 0.261 | No |
| | PFFP | 0.538 | SLV 1 | 0.127 | 0.52 | 94 | 0.515 | No |
| | R | 0.102 | SLV 5 | 0.02 | 0.08 | 1 | 0.08 | No |
| 218 | PF | 0.682 | SLV 15 | 0.163 | 0.667 | 167 | 0.651 | No |
| | V | 0.513 | SLV 3 | 0.121 | 0.495 | 83 | 0.489 | No |
| | PFFP | 0.744 | SLV 15 | 0.18 | 0.735 | 210 | 0.716 | No |
| | R | 0.041 | SLV 7 | 0 | 0 | 0 | 0 | No |
| 219 | PF | 0.455 | SLV 11 | 0.105 | 0.43 | 58 | 0.422 | No |
| | V | 0.432 | SLV 11 | 0.099 | 0.407 | 51 | 0.401 | No |
| | PFFP | 0.859 | SLV 3 | 0.209 | 0.854 | 312 | 0.842 | No |
| | R | 0.068 | SLV 7 | 0 | 0 | 0 | 0 | No |
| 220 | PF | 0.249 | SLV 7 | 0.055 | 0.226 | 12 | 0.221 | No |
| | V | 0.249 | SLV 7 | 0.055 | 0.226 | 12 | 0.221 | No |
| | PFFP | 0.206 | SLV 11 | 0.044 | 0.181 | 7 | 0.177 | No |
| | R | 0 | SLV 1 | 0 | 0 | 0 | 0 | No |
| 221 | PF | 1.822 | SLV 13 | 0.362 | 1.483 | 1618 | 1.653 | Si |
| | V | 1.359 | SLV 13 | 0.325 | 1.332 | 1136 | 1.43 | Si |
| | PFFP | 1.126 | SLV 7 | 0.274 | 1.121 | 668 | 1.15 | Si |
| | R | 0.056 | SLV 7 | 0 | 0 | 0 | 0 | No |
| 222 | PF | 1.132 | SLV 11 | 0.275 | 1.126 | 678 | 1.157 | Si |
| | V | 0.994 | SLV 11 | 0.243 | 0.993 | 466 | 0.992 | No |
| | PFFP | 1.054 | SLV 15 | 0.257 | 1.05 | 549 | 1.061 | Si |
| | R | 0.059 | SLV 11 | 0 | 0 | 0 | 0 | No |
| 225 | PF | 0.394 | SLV 15 | 0.093 | 0.38 | 43 | 0.373 | No |
| | V | 0.229 | SLV 1 | 0.053 | 0.218 | 11 | 0.214 | No |
| | PFFP | 0.985 | SLV 15 | 0.24 | 0.984 | 455 | 0.983 | No |
| | R | 0.135 | SLV 5 | 0.026 | 0.107 | 2 | 0.106 | No |
| 226 | PF | 0.485 | SLV 3 | 0.114 | 0.466 | 71 | 0.459 | No |
| | V | 0.437 | SLV 3 | 0.103 | 0.42 | 55 | 0.413 | No |
| | PFFP | 1.511 | SLV 7 | 0.362 | 1.483 | 1618 | 1.653 | Si |
| | R | 0.136 | SLV 9 | 0.026 | 0.107 | 2 | 0.106 | No |
| 227 | PF | 0.423 | SLV 15 | 0.099 | 0.407 | 51 | 0.401 | No |
| | V | 0.37 | SLV 15 | 0.087 | 0.355 | 37 | 0.351 | No |
| | PFFP | 1.037 | SLV 15 | 0.253 | 1.035 | 526 | 1.043 | Si |
| | R | 0.059 | SLV 5 | 0 | 0 | 0 | 0 | No |
| 228 | PF | 0.57 | SLV 3 | 0.135 | 0.553 | 108 | 0.545 | No |
| | V | 0.445 | SLV 3 | 0.105 | 0.43 | 58 | 0.422 | No |
| | PFFP | 1.425 | SLV 11 | 0.344 | 1.41 | 1368 | 1.543 | Si |
| | R | 0.061 | SLV 5 | 0 | 0 | 0 | 0 | No |
| 229 | PF | 0.493 | SLV 15 | 0.116 | 0.474 | 74 | 0.467 | No |
| | V | 0.415 | SLV 15 | 0.098 | 0.399 | 49 | 0.394 | No |
| | PFFP | 1000 | SLV 1 | 0.362 | 1.483 | 1618 | 1.653 | Si |
| | R | 0.052 | SLV 5 | 0 | 0 | 0 | 0 | No |
| 230 | PF | 0.452 | SLV 1 | 0.107 | 0.436 | 61 | 0.431 | No |
| | V | 0.372 | SLV 1 | 0.088 | 0.359 | 38 | 0.355 | No |
| | PFFP | 1.143 | SLV 15 | 0.277 | 1.133 | 689 | 1.165 | Si |
| | R | 0.052 | SLV 9 | 0 | 0 | 0 | 0 | No |
| 231 | PF | 1.217 | SLV 11 | 0.295 | 1.207 | 834 | 1.26 | Si |
| | V | 1.196 | SLV 11 | 0.29 | 1.187 | 794 | 1.234 | Si |
| | PFFP | 1.431 | SLV 11 | 0.346 | 1.416 | 1387 | 1.552 | Si |
| | R | 0.403 | SLV 9 | 0.092 | 0.376 | 42 | 0.37 | No |
| 232 | PF | 0.446 | SLV 15 | 0.105 | 0.43 | 58 | 0.422 | No |
| | V | 0.398 | SLV 15 | 0.094 | 0.384 | 44 | 0.377 | No |
| | PFFP | 0.598 | SLV 1 | 0.142 | 0.58 | 121 | 0.571 | No |
| | R | 0.01 | SLV 7 | 0 | 0 | 0 | 0 | No |
| 233 | PF | 0.365 | SLV 1 | 0.086 | 0.351 | 36 | 0.347 | No |
| | V | 0.344 | SLV 1 | 0.081 | 0.332 | 31 | 0.327 | No |
| | PFFP | 1.065 | SLV 13 | 0.259 | 1.061 | 566 | 1.075 | Si |
| | R | 0.005 | SLV 5 | 0 | 0 | 0 | 0 | No |
| 234 | PF | 0 | SLV 1 | 0 | 0 | 0 | 0 | No |
| | V | 0 | SLV 1 | 0 | 0 | 0 | 0 | No |
| | PFFP | 0.185 | SLV 9 | 0.038 | 0.157 | 5 | 0.155 | No |
| | R | 0 | SLV 1 | 0 | 0 | 0 | 0 | No |
| 235 | PF | 0 | SLV 1 | 0 | 0 | 0 | 0 | No |
| | V | 0 | SLV 1 | 0 | 0 | 0 | 0 | No |
| | PFFP | 0.356 | SLV 5 | 0.081 | 0.332 | 31 | 0.327 | No |

| Maschio | Stato limite | Molt. | Comb. | PGA | iPGA (ζE) | TR | (TR/TRrif)^.41 | Verifica |
|---|---|---|---|---|---|---|---|---|
| | R | 0 | SLV 1 | 0 | 0 | 0 | 0 | No |
| 236 | PF | 0.212 | SLV 13 | 0.049 | 0.201 | 9 | 0.197 | No |
| | V | 0.2 | SLV 13 | 0.047 | 0.191 | 8 | 0.187 | No |
| | PFFP | 0.338 | SLV 9 | 0.077 | 0.313 | 27 | 0.309 | No |
| | R | 0.115 | SLV 9 | 0.02 | 0.08 | 1 | 0.08 | No |
| 237 | PF | 0.134 | SLV 9 | 0.026 | 0.107 | 2 | 0.106 | No |
| | V | 0.116 | SLV 13 | 0.026 | 0.107 | 2 | 0.106 | No |
| | PFFP | 0.394 | SLV 15 | 0.093 | 0.38 | 43 | 0.373 | No |
| | R | 0.114 | SLV 7 | 0.02 | 0.08 | 1 | 0.08 | No |
| 238 | PFFP | 0.796 | SLV 15 | 0.193 | 0.788 | 252 | 0.771 | No |
| | R | 0.041 | SLV 1 | 0 | 0 | 0 | 0 | No |
| 239 | PF | 0 | SLV 1 | 0 | 0 | 0 | 0 | No |
| | V | 0 | SLV 1 | 0 | 0 | 0 | 0 | No |
| | PFFP | 0.308 | SLV 7 | 0.07 | 0.286 | 22 | 0.284 | No |
| | R | 0.096 | SLV 13 | 0.02 | 0.08 | 1 | 0.08 | No |
| 240 | PF | 0.181 | SLV 11 | 0.038 | 0.157 | 5 | 0.155 | No |
| | V | 0.181 | SLV 11 | 0.038 | 0.157 | 5 | 0.155 | No |
| | PFFP | 0.374 | SLV 11 | 0.086 | 0.351 | 36 | 0.347 | No |
| | R | 0.131 | SLV 9 | 0.026 | 0.107 | 2 | 0.106 | No |
| 241 | PF | 0.528 | SLV 11 | 0.123 | 0.503 | 86 | 0.496 | No |
| | V | 0.49 | SLV 11 | 0.114 | 0.466 | 71 | 0.459 | No |
| | PFFP | 1.953 | SLV 11 | 0.362 | 1.483 | 1618 | 1.653 | Si |
| | R | 0.029 | SLV 3 | 0 | 0 | 0 | 0 | No |
| 242 | PF | 1000 | SLV 1 | 0.362 | 1.483 | 1618 | 1.653 | Si |
| | V | 0.956 | SLV 7 | 0.233 | 0.953 | 417 | 0.948 | No |
| | PFFP | 1000 | SLV 1 | 0.362 | 1.483 | 1618 | 1.653 | Si |
| | R | 0.042 | SLV 7 | 0 | 0 | 0 | 0 | No |
| 243 | PF | 1.852 | SLV 9 | 0.362 | 1.483 | 1618 | 1.653 | Si |
| | V | 1.099 | SLV 9 | 0.267 | 1.095 | 622 | 1.117 | Si |
| | PFFP | 1.793 | SLV 5 | 0.362 | 1.483 | 1618 | 1.653 | Si |
| | R | 0.026 | SLV 1 | 0 | 0 | 0 | 0 | No |
| 244 | PF | 0.163 | SLV 3 | 0.038 | 0.157 | 5 | 0.155 | No |
| | V | 0.165 | SLV 3 | 0.038 | 0.157 | 5 | 0.155 | No |
| | PFFP | 0.35 | SLV 7 | 0.08 | 0.328 | 31 | 0.327 | No |
| | R | 0.116 | SLV 9 | 0.02 | 0.08 | 1 | 0.08 | No |
| 245 | PF | 0.113 | SLV 5 | 0.02 | 0.08 | 1 | 0.08 | No |
| | V | 0.112 | SLV 5 | 0.02 | 0.08 | 1 | 0.08 | No |
| | PFFP | 0.3 | SLV 7 | 0.067 | 0.275 | 20 | 0.273 | No |
| | R | 0.11 | SLV 1 | 0.026 | 0.107 | 2 | 0.106 | No |
| 246 | PF | 0.072 | SLV 9 | 0 | 0 | 0 | 0 | No |
| | V | 0.073 | SLV 9 | 0 | 0 | 0 | 0 | No |
| | PFFP | 0.179 | SLV 5 | 0.038 | 0.157 | 5 | 0.155 | No |
| | R | 0.02 | SLV 9 | 0 | 0 | 0 | 0 | No |
| 247 | PF | 0 | SLV 1 | 0 | 0 | 0 | 0 | No |
| | V | 0 | SLV 1 | 0 | 0 | 0 | 0 | No |
| | PFFP | 0.279 | SLV 5 | 0.062 | 0.256 | 17 | 0.255 | No |
| | R | 0 | SLV 1 | 0 | 0 | 0 | 0 | No |

## Verifica travi di collegamento in muratura

| Trave | Stato limite | Molt. | Comb. | PGA | iPGA (ζE) | TR | (TR/TRrif)^.41 | Verifica |
|---|---|---|---|---|---|---|---|---|
| 1 | F | 0.853 | SLV 5 | 0.206 | 0.842 | 301 | 0.829 | No |
| | V | 0 | SLV 1 | 0 | 0 | 0 | 0 | No |
| 2 | F | 0.38 | SLV 7 | 0.087 | 0.355 | 37 | 0.351 | No |
| | V | 0 | SLV 1 | 0 | 0 | 0 | 0 | No |
| 3 | F | 0.096 | SLV 7 | 0.02 | 0.08 | 1 | 0.08 | No |
| | V | 0 | SLV 1 | 0 | 0 | 0 | 0 | No |
| 4 | F | 0.281 | SLV 7 | 0.062 | 0.256 | 17 | 0.255 | No |
| | V | 0 | SLV 1 | 0 | 0 | 0 | 0 | No |
| 5 | F | 0.785 | SLV 9 | 0.188 | 0.77 | 237 | 0.752 | No |
| | V | 0 | SLV 1 | 0 | 0 | 0 | 0 | No |
| 6 | F | 0.397 | SLV 7 | 0.091 | 0.372 | 41 | 0.366 | No |
| | V | 0 | SLV 1 | 0 | 0 | 0 | 0 | No |
| 7 | F | 0.189 | SLV 11 | 0.041 | 0.169 | 6 | 0.167 | No |
| | V | 0 | SLV 1 | 0 | 0 | 0 | 0 | No |
| 8 | F | 0 | SLV 1 | 0 | 0 | 0 | 0 | No |
| | V | 0 | SLV 1 | 0 | 0 | 0 | 0 | No |
| 9 | F | 0 | SLV 1 | 0 | 0 | 0 | 0 | No |
| | V | 0 | SLV 1 | 0 | 0 | 0 | 0 | No |
| 10 | F | 0 | SLV 1 | 0 | 0 | 0 | 0 | No |
| | V | 0 | SLV 1 | 0 | 0 | 0 | 0 | No |
| 11 | F | 0.445 | SLV 13 | 0.105 | 0.43 | 58 | 0.422 | No |
| | V | 0 | SLV 1 | 0 | 0 | 0 | 0 | No |
| 12 | F | 0.221 | SLV 3 | 0.051 | 0.21 | 10 | 0.205 | No |
| | V | 0 | SLV 1 | 0 | 0 | 0 | 0 | No |
| 13 | F | 1.066 | SLV 7 | 0.26 | 1.063 | 570 | 1.078 | Si |
| | V | 0 | SLV 1 | 0 | 0 | 0 | 0 | No |
| 14 | F | 0.314 | SLV 3 | 0.074 | 0.303 | 25 | 0.299 | No |
| | V | 0 | SLV 1 | 0 | 0 | 0 | 0 | No |
| 15 | F | 0.624 | SLV 15 | 0.148 | 0.606 | 134 | 0.595 | No |
| | V | 0 | SLV 1 | 0 | 0 | 0 | 0 | No |
| 16 | F | 0.396 | SLV 1 | 0.093 | 0.38 | 43 | 0.373 | No |
| | V | 0 | SLV 1 | 0 | 0 | 0 | 0 | No |
| 17 | F | 0.583 | SLV 15 | 0.138 | 0.565 | 113 | 0.555 | No |
| | V | 0 | SLV 1 | 0 | 0 | 0 | 0 | No |
| 18 | F | 0.274 | SLV 3 | 0.064 | 0.262 | 18 | 0.261 | No |
| | V | 0 | SLV 1 | 0 | 0 | 0 | 0 | No |
| 19 | F | 0.245 | SLV 3 | 0.057 | 0.234 | 13 | 0.229 | No |
| | V | 0 | SLV 1 | 0 | 0 | 0 | 0 | No |

| Trave | Stato limite | Molt. | Comb. | PGA | iPGA (ζE) | TR | (TR/TRrif)^.41 | Verifica |
|---|---|---|---|---|---|---|---|---|
| 20 | F | 1.408 | SLV 13 | 0.337 | 1.377 | 1268 | 1.496 | Si |
| | V | 0 | SLV 1 | 0 | 0 | 0 | 0 | No |
| 21 | F | 0.413 | SLV 5 | 0.095 | 0.388 | 45 | 0.381 | No |
| | V | 0 | SLV 1 | 0 | 0 | 0 | 0 | No |
| 22 | F | 0.454 | SLV 13 | 0.107 | 0.439 | 62 | 0.434 | No |
| | V | 0 | SLV 1 | 0 | 0 | 0 | 0 | No |
| 23 | F | 0.235 | SLV 15 | 0.055 | 0.226 | 12 | 0.221 | No |
| | V | 0 | SLV 1 | 0 | 0 | 0 | 0 | No |
| 24 | F | 0.15 | SLV 7 | 0.031 | 0.127 | 3 | 0.125 | No |
| | V | 0 | SLV 1 | 0 | 0 | 0 | 0 | No |
| 25 | F | 0.21 | SLV 1 | 0.049 | 0.201 | 9 | 0.197 | No |
| | V | 0 | SLV 1 | 0 | 0 | 0 | 0 | No |
| 26 | F | 0.076 | SLV 1 | 0 | 0 | 0 | 0 | No |
| | V | 0 | SLV 1 | 0 | 0 | 0 | 0 | No |
| 27 | F | 0.221 | SLV 1 | 0.051 | 0.21 | 10 | 0.205 | No |
| | V | 0 | SLV 1 | 0 | 0 | 0 | 0 | No |
| 28 | F | 0.374 | SLV 15 | 0.088 | 0.359 | 38 | 0.355 | No |
| | V | 0 | SLV 1 | 0 | 0 | 0 | 0 | No |
| 29 | F | 0.191 | SLV 7 | 0.041 | 0.169 | 6 | 0.167 | No |
| | V | 0 | SLV 1 | 0 | 0 | 0 | 0 | No |
| 30 | F | 0.265 | SLV 11 | 0.059 | 0.242 | 14 | 0.236 | No |
| | V | 0 | SLV 1 | 0 | 0 | 0 | 0 | No |
| 31 | F | 0.336 | SLV 9 | 0.077 | 0.313 | 27 | 0.309 | No |
| | V | 0 | SLV 1 | 0 | 0 | 0 | 0 | No |
| 32 | F | 0.247 | SLV 13 | 0.057 | 0.234 | 13 | 0.229 | No |
| | V | 0 | SLV 1 | 0 | 0 | 0 | 0 | No |
| 33 | F | 0.119 | SLV 7 | 0.02 | 0.08 | 1 | 0.08 | No |
| | V | 0 | SLV 1 | 0 | 0 | 0 | 0 | No |
| 34 | F | 0.662 | SLV 3 | 0.157 | 0.644 | 154 | 0.63 | No |
| | V | 0 | SLV 1 | 0 | 0 | 0 | 0 | No |
| 35 | F | 0.176 | SLV 1 | 0.041 | 0.169 | 6 | 0.167 | No |
| | V | 0 | SLV 1 | 0 | 0 | 0 | 0 | No |
| 36 | F | 0.493 | SLV 1 | 0.116 | 0.474 | 74 | 0.467 | No |
| | V | 0 | SLV 1 | 0 | 0 | 0 | 0 | No |
| 37 | F | 0.012 | SLV 13 | 0 | 0 | 0 | 0 | No |
| | V | 0 | SLV 1 | 0 | 0 | 0 | 0 | No |
| 38 | F | 1.127 | SLV 13 | 0.273 | 1.118 | 662 | 1.146 | Si |
| | V | 0 | SLV 1 | 0 | 0 | 0 | 0 | No |
| 39 | F | 0.175 | SLV 13 | 0.041 | 0.169 | 6 | 0.167 | No |
| | V | 0 | SLV 1 | 0 | 0 | 0 | 0 | No |
| 40 | F | 0.875 | SLV 9 | 0.211 | 0.864 | 322 | 0.853 | No |
| | V | 0 | SLV 1 | 0 | 0 | 0 | 0 | No |
| 41 | F | 0.188 | SLV 9 | 0.041 | 0.169 | 6 | 0.167 | No |
| | V | 0 | SLV 1 | 0 | 0 | 0 | 0 | No |
| 42 | F | 0.273 | SLV 1 | 0.064 | 0.262 | 18 | 0.261 | No |
| | V | 0 | SLV 1 | 0 | 0 | 0 | 0 | No |
| 43 | F | 0.138 | SLV 13 | 0.031 | 0.127 | 3 | 0.125 | No |
| | V | 0 | SLV 1 | 0 | 0 | 0 | 0 | No |
| 44 | F | 0.01 | SLV 11 | 0 | 0 | 0 | 0 | No |
| | V | 0 | SLV 1 | 0 | 0 | 0 | 0 | No |
| 45 | F | 0.076 | SLV 9 | 0 | 0 | 0 | 0 | No |
| | V | 0 | SLV 1 | 0 | 0 | 0 | 0 | No |
| 46 | F | 0.175 | SLV 1 | 0.041 | 0.169 | 6 | 0.167 | No |
| | V | 0 | SLV 1 | 0 | 0 | 0 | 0 | No |
| 47 | F | 0.221 | SLV 3 | 0.051 | 0.21 | 10 | 0.205 | No |
| | V | 0 | SLV 1 | 0 | 0 | 0 | 0 | No |
| 48 | F | 0.243 | SLV 13 | 0.057 | 0.234 | 13 | 0.229 | No |
| | V | 0 | SLV 1 | 0 | 0 | 0 | 0 | No |
| 49 | F | 0.32 | SLV 11 | 0.073 | 0.298 | 24 | 0.294 | No |
| | V | 0.016 | SLV 3 | 0 | 0 | 0 | 0 | No |
| 50 | F | 0.715 | SLV 3 | 0.172 | 0.703 | 188 | 0.684 | No |
| | V | 0 | SLV 1 | 0 | 0 | 0 | 0 | No |
| 51 | F | 0.3 | SLV 3 | 0.07 | 0.286 | 22 | 0.284 | No |
| | V | 0 | SLV 1 | 0 | 0 | 0 | 0 | No |
| 52 | F | 0.829 | SLV 3 | 0.201 | 0.822 | 282 | 0.808 | No |
| | V | 0 | SLV 1 | 0 | 0 | 0 | 0 | No |
| 53 | F | 0.343 | SLV 15 | 0.08 | 0.328 | 31 | 0.327 | No |
| | V | 0 | SLV 1 | 0 | 0 | 0 | 0 | No |
| 54 | F | 1.091 | SLV 3 | 0.265 | 1.085 | 605 | 1.104 | Si |
| | V | 0 | SLV 1 | 0 | 0 | 0 | 0 | No |
| 55 | F | 0.256 | SLV 13 | 0.059 | 0.242 | 14 | 0.236 | No |
| | V | 0 | SLV 1 | 0 | 0 | 0 | 0 | No |
| 56 | F | 0.22 | SLV 13 | 0.051 | 0.21 | 10 | 0.205 | No |
| | V | 0 | SLV 1 | 0 | 0 | 0 | 0 | No |
| 57 | F | 0.205 | SLV 5 | 0.044 | 0.181 | 7 | 0.177 | No |
| | V | 0 | SLV 1 | 0 | 0 | 0 | 0 | No |
| 58 | F | 0.19 | SLV 13 | 0.044 | 0.181 | 7 | 0.177 | No |
| | V | 0 | SLV 1 | 0 | 0 | 0 | 0 | No |
| 59 | F | 0.67 | SLV 13 | 0.16 | 0.654 | 159 | 0.638 | No |
| | V | 0 | SLV 1 | 0 | 0 | 0 | 0 | No |
| 60 | F | 0.131 | SLV 13 | 0.031 | 0.127 | 3 | 0.125 | No |
| | V | 0 | SLV 1 | 0 | 0 | 0 | 0 | No |
| 61 | F | 0.824 | SLV 11 | 0.198 | 0.81 | 272 | 0.796 | No |
| | V | 0 | SLV 1 | 0 | 0 | 0 | 0 | No |
| 62 | F | 0.138 | SLV 3 | 0.031 | 0.127 | 3 | 0.125 | No |
| | V | 0 | SLV 1 | 0 | 0 | 0 | 0 | No |
| 63 | F | 0.496 | SLV 1 | 0.116 | 0.477 | 75 | 0.469 | No |
| | V | 0 | SLV 1 | 0 | 0 | 0 | 0 | No |
| 64 | F | 0.272 | SLV 13 | 0.064 | 0.262 | 18 | 0.261 | No |

| Trave | Stato limite | Molt. | Comb. | PGA | iPGA (ζE) | TR | (TR/TRrif)^.41 | Verifica |
|---|---|---|---|---|---|---|---|---|
| | V | 0 | SLV 1 | 0 | 0 | 0 | 0 | No |
| 65 | F | 0.383 | SLV 13 | 0.09 | 0.368 | 40 | 0.363 | No |
| | V | 0 | SLV 1 | 0 | 0 | 0 | 0 | No |
| 66 | F | 0.244 | SLV 15 | 0.057 | 0.234 | 13 | 0.229 | No |
| | V | 0 | SLV 1 | 0 | 0 | 0 | 0 | No |
| 67 | F | 0.566 | SLV 15 | 0.134 | 0.548 | 106 | 0.541 | No |
| | V | 0 | SLV 1 | 0 | 0 | 0 | 0 | No |
| 68 | F | 0.863 | SLV 7 | 0.208 | 0.852 | 310 | 0.839 | No |
| | V | 0.075 | SLV 7 | 0 | 0 | 0 | 0 | No |
| 69 | F | 0.755 | SLV 3 | 0.183 | 0.747 | 219 | 0.728 | No |
| | V | 0 | SLV 1 | 0 | 0 | 0 | 0 | No |
| 70 | F | 1.162 | SLV 13 | 0.281 | 1.15 | 721 | 1.187 | Si |
| | V | 0 | SLV 1 | 0 | 0 | 0 | 0 | No |
| 71 | F | 0.393 | SLV 1 | 0.093 | 0.38 | 43 | 0.373 | No |
| | V | 0 | SLV 1 | 0 | 0 | 0 | 0 | No |
| 72 | F | 0.536 | SLV 1 | 0.127 | 0.518 | 93 | 0.512 | No |
| | V | 0 | SLV 1 | 0 | 0 | 0 | 0 | No |
| 73 | F | 0.789 | SLV 13 | 0.191 | 0.782 | 247 | 0.765 | No |
| | V | 0 | SLV 1 | 0 | 0 | 0 | 0 | No |
| 74 | F | 0.945 | SLV 15 | 0.23 | 0.942 | 405 | 0.937 | No |
| | V | 0 | SLV 1 | 0 | 0 | 0 | 0 | No |
| 75 | F | 0.493 | SLV 13 | 0.116 | 0.474 | 74 | 0.467 | No |
| | V | 0 | SLV 1 | 0 | 0 | 0 | 0 | No |
| 76 | F | 0.761 | SLV 3 | 0.184 | 0.753 | 223 | 0.733 | No |
| | V | 0 | SLV 1 | 0 | 0 | 0 | 0 | No |
| 77 | F | 0.051 | SLV 9 | 0 | 0 | 0 | 0 | No |
| | V | 0 | SLV 1 | 0 | 0 | 0 | 0 | No |
| 78 | F | 0.603 | SLV 13 | 0.143 | 0.585 | 123 | 0.575 | No |
| | V | 0.081 | SLV 15 | 0 | 0 | 0 | 0 | No |
| 79 | F | 0.097 | SLV 13 | 0.02 | 0.08 | 1 | 0.08 | No |
| | V | 0 | SLV 1 | 0 | 0 | 0 | 0 | No |
| 80 | F | 0.167 | SLV 11 | 0.035 | 0.143 | 4 | 0.141 | No |
| | V | 0 | SLV 1 | 0 | 0 | 0 | 0 | No |
| 81 | F | 0 | SLV 1 | 0 | 0 | 0 | 0 | No |
| | V | 0 | SLV 1 | 0 | 0 | 0 | 0 | No |
| 82 | F | 0.923 | SLV 1 | 0.225 | 0.92 | 380 | 0.913 | No |
| | V | 0 | SLV 1 | 0 | 0 | 0 | 0 | No |
| 83 | F | 0.934 | SLV 3 | 0.227 | 0.931 | 393 | 0.925 | No |
| | V | 0 | SLV 1 | 0 | 0 | 0 | 0 | No |
| 84 | F | 1.232 | SLV 3 | 0.297 | 1.214 | 849 | 1.269 | Si |
| | V | 0 | SLV 1 | 0 | 0 | 0 | 0 | No |
| 85 | F | 1.161 | SLV 3 | 0.281 | 1.15 | 720 | 1.186 | Si |
| | V | 0 | SLV 1 | 0 | 0 | 0 | 0 | No |
| 86 | F | 0.624 | SLV 13 | 0.148 | 0.606 | 134 | 0.595 | No |
| | V | 0 | SLV 1 | 0 | 0 | 0 | 0 | No |
| 87 | F | 0.738 | SLV 13 | 0.178 | 0.728 | 205 | 0.709 | No |
| | V | 0 | SLV 1 | 0 | 0 | 0 | 0 | No |
| 88 | F | 0.313 | SLV 1 | 0.074 | 0.303 | 25 | 0.299 | No |
| | V | 0 | SLV 1 | 0 | 0 | 0 | 0 | No |
| 89 | F | 0.185 | SLV 3 | 0.041 | 0.169 | 6 | 0.167 | No |
| | V | 0 | SLV 1 | 0 | 0 | 0 | 0 | No |
| 90 | F | 0.241 | SLV 1 | 0.055 | 0.226 | 12 | 0.221 | No |
| | V | 0 | SLV 1 | 0 | 0 | 0 | 0 | No |
| 91 | F | 0.259 | SLV 15 | 0.061 | 0.249 | 16 | 0.249 | No |
| | V | 0 | SLV 1 | 0 | 0 | 0 | 0 | No |
| 92 | F | 0.283 | SLV 15 | 0.066 | 0.269 | 19 | 0.267 | No |
| | V | 0 | SLV 1 | 0 | 0 | 0 | 0 | No |
| 93 | F | 0.206 | SLV 3 | 0.047 | 0.191 | 8 | 0.187 | No |
| | V | 0.025 | SLV 3 | 0 | 0 | 0 | 0 | No |
| 94 | F | 0.306 | SLV 3 | 0.071 | 0.292 | 23 | 0.289 | No |
| | V | 0 | SLV 1 | 0 | 0 | 0 | 0 | No |
| 95 | F | 0.165 | SLV 5 | 0.035 | 0.143 | 4 | 0.141 | No |
| | V | 0.025 | SLV 5 | 0 | 0 | 0 | 0 | No |
| 96 | F | 1000 | SLV 1 | 0.362 | 1.483 | 1618 | 1.653 | Si |
| | V | 0 | SLV 1 | 0 | 0 | 0 | 0 | No |
| 97 | F | 0.598 | SLV 15 | 0.142 | 0.58 | 121 | 0.571 | No |
| | V | 0 | SLV 1 | 0 | 0 | 0 | 0 | No |
| 98 | F | 0.603 | SLV 15 | 0.143 | 0.585 | 123 | 0.575 | No |
| | V | 0 | SLV 1 | 0 | 0 | 0 | 0 | No |
| 99 | F | 0.853 | SLV 15 | 0.207 | 0.848 | 306 | 0.835 | No |
| | V | 0 | SLV 1 | 0 | 0 | 0 | 0 | No |
| 100 | F | 1.073 | SLV 3 | 0.261 | 1.068 | 577 | 1.083 | Si |
| | V | 0 | SLV 1 | 0 | 0 | 0 | 0 | No |
| 101 | F | 0.792 | SLV 1 | 0.192 | 0.784 | 249 | 0.767 | No |
| | V | 0 | SLV 1 | 0 | 0 | 0 | 0 | No |
| 102 | F | 0.612 | SLV 13 | 0.145 | 0.593 | 127 | 0.582 | No |
| | V | 0 | SLV 1 | 0 | 0 | 0 | 0 | No |
| 103 | F | 0.557 | SLV 13 | 0.132 | 0.539 | 102 | 0.532 | No |
| | V | 0 | SLV 1 | 0 | 0 | 0 | 0 | No |
| 104 | F | 0.767 | SLV 15 | 0.186 | 0.759 | 229 | 0.741 | No |
| | V | 0 | SLV 1 | 0 | 0 | 0 | 0 | No |
| 105 | F | 0.858 | SLV 1 | 0.208 | 0.853 | 311 | 0.841 | No |
| | V | 0 | SLV 1 | 0 | 0 | 0 | 0 | No |
| 106 | F | 0.983 | SLV 7 | 0.24 | 0.982 | 452 | 0.98 | No |
| | V | 0.04 | SLV 7 | 0 | 0 | 0 | 0 | No |
| 107 | F | 1.365 | SLV 3 | 0.327 | 1.338 | 1151 | 1.437 | Si |
| | V | 0 | SLV 1 | 0 | 0 | 0 | 0 | No |
| 108 | F | 1.404 | SLV 3 | 0.336 | 1.374 | 1256 | 1.49 | Si |
| | V | 0 | SLV 1 | 0 | 0 | 0 | 0 | No |

| Trave | Stato limite | Molt. | Comb. | PGA | iPGA (ζE) | TR | (TR/TRrif)^.41 | Verifica |
|---|---|---|---|---|---|---|---|---|
| 109 | F | 0.597 | SLV 1 | 0.142 | 0.58 | 121 | 0.571 | No |
| | V | 0 | SLV 1 | 0 | 0 | 0 | 0 | No |
| 110 | F | 0.951 | SLV 15 | 0.232 | 0.949 | 413 | 0.944 | No |
| | V | 0 | SLV 1 | 0 | 0 | 0 | 0 | No |
| 111 | F | 1.43 | SLV 1 | 0.341 | 1.398 | 1330 | 1.525 | Si |
| | V | 0 | SLV 1 | 0 | 0 | 0 | 0 | No |
| 112 | F | 1.138 | SLV 1 | 0.276 | 1.128 | 681 | 1.159 | Si |
| | V | 0 | SLV 1 | 0 | 0 | 0 | 0 | No |
| 113 | F | 0.486 | SLV 3 | 0.114 | 0.468 | 72 | 0.461 | No |
| | V | 0 | SLV 1 | 0 | 0 | 0 | 0 | No |
| 114 | F | 0.69 | SLV 3 | 0.165 | 0.676 | 172 | 0.659 | No |
| | V | 0 | SLV 1 | 0 | 0 | 0 | 0 | No |
| 115 | F | 0.111 | SLV 9 | 0.02 | 0.08 | 1 | 0.08 | No |
| | V | 0 | SLV 1 | 0 | 0 | 0 | 0 | No |
| 116 | F | 0.171 | SLV 1 | 0.038 | 0.157 | 5 | 0.155 | No |
| | V | 0 | SLV 1 | 0 | 0 | 0 | 0 | No |
| 117 | F | 0.157 | SLV 13 | 0.035 | 0.143 | 4 | 0.141 | No |
| | V | 0 | SLV 1 | 0 | 0 | 0 | 0 | No |
| 118 | F | 0.207 | SLV 11 | 0.044 | 0.181 | 7 | 0.177 | No |
| | V | 0 | SLV 1 | 0 | 0 | 0 | 0 | No |
| 119 | F | 1.53 | SLV 3 | 0.362 | 1.483 | 1618 | 1.653 | Si |
| | V | 0 | SLV 1 | 0 | 0 | 0 | 0 | No |
| 120 | F | 1.935 | SLV 3 | 0.362 | 1.483 | 1618 | 1.653 | Si |
| | V | 0 | SLV 1 | 0 | 0 | 0 | 0 | No |
| 121 | F | 1.809 | SLV 15 | 0.362 | 1.483 | 1618 | 1.653 | Si |
| | V | 0 | SLV 1 | 0 | 0 | 0 | 0 | No |
| 122 | F | 1.644 | SLV 1 | 0.362 | 1.483 | 1618 | 1.653 | Si |
| | V | 0 | SLV 1 | 0 | 0 | 0 | 0 | No |
| 123 | F | 1.195 | SLV 13 | 0.288 | 1.181 | 780 | 1.226 | Si |
| | V | 0 | SLV 1 | 0 | 0 | 0 | 0 | No |
| 124 | F | 1.325 | SLV 13 | 0.318 | 1.301 | 1050 | 1.384 | Si |
| | V | 0 | SLV 1 | 0 | 0 | 0 | 0 | No |
| 125 | F | 0.476 | SLV 1 | 0.112 | 0.457 | 68 | 0.451 | No |
| | V | 0 | SLV 1 | 0 | 0 | 0 | 0 | No |
| 126 | F | 0.221 | SLV 13 | 0.051 | 0.21 | 10 | 0.205 | No |
| | V | 0 | SLV 1 | 0 | 0 | 0 | 0 | No |
| 127 | F | 0.253 | SLV 1 | 0.059 | 0.242 | 14 | 0.236 | No |
| | V | 0 | SLV 1 | 0 | 0 | 0 | 0 | No |
| 128 | F | 0.321 | SLV 15 | 0.075 | 0.308 | 26 | 0.304 | No |
| | V | 0 | SLV 1 | 0 | 0 | 0 | 0 | No |
| 129 | F | 0.395 | SLV 15 | 0.093 | 0.38 | 43 | 0.373 | No |
| | V | 0 | SLV 1 | 0 | 0 | 0 | 0 | No |
| 130 | F | 0.427 | SLV 3 | 0.1 | 0.41 | 52 | 0.404 | No |
| | V | 0 | SLV 1 | 0 | 0 | 0 | 0 | No |
| 131 | F | 0.403 | SLV 3 | 0.095 | 0.388 | 45 | 0.381 | No |
| | V | 0 | SLV 1 | 0 | 0 | 0 | 0 | No |
| 132 | F | 0.147 | SLV 9 | 0.031 | 0.127 | 3 | 0.125 | No |
| | V | 0.013 | SLV 9 | 0 | 0 | 0 | 0 | No |
| 133 | F | 2.01 | SLV 15 | 0.362 | 1.483 | 1618 | 1.653 | Si |
| | V | 0.293 | SLV 7 | 0.066 | 0.269 | 19 | 0.267 | No |
| 134 | F | 1000 | SLV 1 | 0.362 | 1.483 | 1618 | 1.653 | Si |
| | V | 0 | SLV 1 | 0 | 0 | 0 | 0 | No |
| 135 | F | 0.654 | SLV 1 | 0.156 | 0.637 | 150 | 0.623 | No |
| | V | 0 | SLV 1 | 0 | 0 | 0 | 0 | No |
| 136 | F | 1.222 | SLV 15 | 0.294 | 1.205 | 830 | 1.257 | Si |
| | V | 0 | SLV 1 | 0 | 0 | 0 | 0 | No |
| 137 | F | 1.487 | SLV 3 | 0.354 | 1.45 | 1500 | 1.602 | Si |
| | V | 0.036 | SLV 3 | 0 | 0 | 0 | 0 | No |
| 138 | F | 1.204 | SLV 3 | 0.29 | 1.189 | 796 | 1.236 | Si |
| | V | 0 | SLV 1 | 0 | 0 | 0 | 0 | No |
| 139 | F | 0.894 | SLV 13 | 0.217 | 0.889 | 348 | 0.88 | No |
| | V | 0 | SLV 1 | 0 | 0 | 0 | 0 | No |
| 140 | F | 1.103 | SLV 13 | 0.268 | 1.096 | 624 | 1.118 | Si |
| | V | 0 | SLV 1 | 0 | 0 | 0 | 0 | No |
| 141 | F | 0.879 | SLV 15 | 0.214 | 0.875 | 333 | 0.864 | No |
| | V | 0 | SLV 5 | 0 | 0 | 0 | 0 | No |
| 142 | F | 0.896 | SLV 15 | 0.218 | 0.892 | 351 | 0.883 | No |
| | V | 0 | SLV 1 | 0 | 0 | 0 | 0 | No |
| 143 | F | 2.21 | SLV 7 | 0.362 | 1.483 | 1618 | 1.653 | Si |
| | V | 0.232 | SLV 7 | 0.051 | 0.21 | 10 | 0.205 | No |
| 144 | F | 2.264 | SLV 3 | 0.362 | 1.483 | 1618 | 1.653 | Si |
| | V | 0.03 | SLV 3 | 0 | 0 | 0 | 0 | No |
| 145 | F | 1.054 | SLV 7 | 0.257 | 1.052 | 552 | 1.064 | Si |
| | V | 0 | SLV 1 | 0 | 0 | 0 | 0 | No |
| 146 | F | 1.771 | SLV 1 | 0.362 | 1.483 | 1618 | 1.653 | Si |
| | V | 0.169 | SLV 1 | 0.038 | 0.157 | 5 | 0.155 | No |
| 147 | F | 1.973 | SLV 1 | 0.362 | 1.483 | 1618 | 1.653 | Si |
| | V | 0 | SLV 1 | 0 | 0 | 0 | 0 | No |
| 148 | F | 2.168 | SLV 1 | 0.362 | 1.483 | 1618 | 1.653 | Si |
| | V | 0 | SLV 1 | 0 | 0 | 0 | 0 | No |
| 149 | F | 1.552 | SLV 7 | 0.362 | 1.483 | 1618 | 1.653 | Si |
| | V | 0 | SLV 1 | 0 | 0 | 0 | 0 | No |
| 150 | F | 1.824 | SLV 13 | 0.362 | 1.483 | 1618 | 1.653 | Si |
| | V | 0.133 | SLV 13 | 0.031 | 0.127 | 3 | 0.125 | No |
| 151 | F | 2.027 | SLV 5 | 0.362 | 1.483 | 1618 | 1.653 | Si |
| | V | 0 | SLV 1 | 0 | 0 | 0 | 0 | No |
| 152 | F | 0.488 | SLV 11 | 0.113 | 0.463 | 70 | 0.456 | No |
| | V | 0 | SLV 1 | 0 | 0 | 0 | 0 | No |
| 153 | F | 0 | SLV 1 | 0 | 0 | 0 | 0 | No |

| Trave | Stato limite | Molt. | Comb. | PGA | iPGA (ζE) | TR | (TR/TRrif)^.41 | Verifica |
|---|---|---|---|---|---|---|---|---|
| | V | 0 | SLV 1 | 0 | 0 | 0 | 0 | No |
| 154 | F | 0 | SLV 1 | 0 | 0 | 0 | 0 | No |
| | V | 0 | SLV 1 | 0 | 0 | 0 | 0 | No |
| 155 | F | 2.395 | SLV 13 | 0.362 | 1.483 | 1618 | 1.653 | Si |
| | V | 0.191 | SLV 3 | 0.044 | 0.181 | 7 | 0.177 | No |
| 156 | F | 1.414 | SLV 9 | 0.342 | 1.399 | 1334 | 1.527 | Si |
| | V | 0 | SLV 1 | 0 | 0 | 0 | 0 | No |
| 157 | F | 2.818 | SLV 13 | 0.362 | 1.483 | 1618 | 1.653 | Si |
| | V | 0 | SLV 1 | 0 | 0 | 0 | 0 | No |
| 158 | F | 1.434 | SLV 1 | 0.342 | 1.401 | 1341 | 1.53 | Si |
| | V | 0 | SLV 1 | 0 | 0 | 0 | 0 | No |
| 159 | F | 2.054 | SLV 15 | 0.362 | 1.483 | 1618 | 1.653 | Si |
| | V | 0 | SLV 1 | 0 | 0 | 0 | 0 | No |
| 160 | F | 0.943 | SLV 15 | 0.23 | 0.94 | 403 | 0.935 | No |
| | V | 0 | SLV 1 | 0 | 0 | 0 | 0 | No |
| 161 | F | 1.245 | SLV 1 | 0.3 | 1.227 | 875 | 1.285 | Si |
| | V | 0 | SLV 1 | 0 | 0 | 0 | 0 | No |
| 162 | F | 0.381 | SLV 3 | 0.09 | 0.368 | 40 | 0.363 | No |
| | V | 0 | SLV 1 | 0 | 0 | 0 | 0 | No |
| 163 | F | 0.52 | SLV 15 | 0.122 | 0.501 | 85 | 0.494 | No |
| | V | 0 | SLV 1 | 0 | 0 | 0 | 0 | No |
| 164 | F | 1.216 | SLV 15 | 0.293 | 1.2 | 818 | 1.25 | Si |
| | V | 0 | SLV 1 | 0 | 0 | 0 | 0 | No |
| 165 | F | 0.957 | SLV 15 | 0.233 | 0.955 | 420 | 0.951 | No |
| | V | 0 | SLV 1 | 0 | 0 | 0 | 0 | No |
| 166 | F | 1000 | SLV 1 | 0.362 | 1.483 | 1618 | 1.653 | Si |
| | V | 1.781 | SLV 11 | 0.362 | 1.483 | 1618 | 1.653 | Si |
| 167 | F | 0 | SLV 1 | 0 | 0 | 0 | 0 | No |
| | V | 0 | SLV 1 | 0 | 0 | 0 | 0 | No |
| 168 | F | 1.133 | SLV 15 | 0.275 | 1.124 | 673 | 1.154 | Si |
| | V | 0 | SLV 1 | 0 | 0 | 0 | 0 | No |
| 169 | F | 1.176 | SLV 15 | 0.284 | 1.163 | 746 | 1.203 | Si |
| | V | 0 | SLV 1 | 0 | 0 | 0 | 0 | No |
| 170 | F | 0.953 | SLV 9 | 0.232 | 0.949 | 413 | 0.944 | No |
| | V | 0 | SLV 1 | 0 | 0 | 0 | 0 | No |
| 171 | F | 0.873 | SLV 3 | 0.212 | 0.868 | 326 | 0.857 | No |
| | V | 0 | SLV 1 | 0 | 0 | 0 | 0 | No |
| 172 | F | 0.315 | SLV 13 | 0.074 | 0.303 | 25 | 0.299 | No |
| | V | 0 | SLV 1 | 0 | 0 | 0 | 0 | No |
| 173 | F | 0.783 | SLV 13 | 0.189 | 0.775 | 242 | 0.758 | No |
| | V | 0.464 | SLV 13 | 0.11 | 0.448 | 65 | 0.442 | No |
| 174 | F | 1.308 | SLV 3 | 0.314 | 1.285 | 1009 | 1.362 | Si |
| | V | 0 | SLV 1 | 0 | 0 | 0 | 0 | No |
| 175 | F | 1.062 | SLV 9 | 0.259 | 1.06 | 564 | 1.073 | Si |
| | V | 0 | SLV 1 | 0 | 0 | 0 | 0 | No |
| 176 | F | 1.39 | SLV 15 | 0.332 | 1.361 | 1218 | 1.471 | Si |
| | V | 0.101 | SLV 15 | 0.02 | 0.08 | 1 | 0.08 | No |
| 177 | F | 1.201 | SLV 11 | 0.291 | 1.192 | 803 | 1.24 | Si |
| | V | 0 | SLV 1 | 0 | 0 | 0 | 0 | No |
| 178 | F | 2.957 | SLV 3 | 0.362 | 1.483 | 1618 | 1.653 | Si |
| | V | 0.299 | SLV 7 | 0.067 | 0.275 | 20 | 0.273 | No |
| 179 | F | 1.017 | SLV 9 | 0.248 | 1.016 | 498 | 1.02 | Si |
| | V | 0.069 | SLV 7 | 0 | 0 | 0 | 0 | No |
| 180 | F | 1.833 | SLV 13 | 0.362 | 1.483 | 1618 | 1.653 | Si |
| | V | 0 | SLV 1 | 0 | 0 | 0 | 0 | No |
| 181 | F | 1.321 | SLV 13 | 0.317 | 1.297 | 1040 | 1.379 | Si |
| | V | 0 | SLV 1 | 0 | 0 | 0 | 0 | No |
| 182 | F | 0 | SLV 1 | 0 | 0 | 0 | 0 | No |
| | V | 0 | SLV 1 | 0 | 0 | 0 | 0 | No |
| 183 | F | 0.336 | SLV 1 | 0.079 | 0.323 | 30 | 0.322 | No |
| | V | 0.019 | SLV 1 | 0 | 0 | 0 | 0 | No |
| 184 | F | 0.337 | SLV 1 | 0.079 | 0.323 | 30 | 0.322 | No |
| | V | 0 | SLV 1 | 0 | 0 | 0 | 0 | No |
| 185 | F | 0.527 | SLV 1 | 0.124 | 0.508 | 88 | 0.501 | No |
| | V | 0.033 | SLV 1 | 0 | 0 | 0 | 0 | No |
| 186 | F | 0.606 | SLV 1 | 0.144 | 0.589 | 125 | 0.578 | No |
| | V | 0 | SLV 1 | 0 | 0 | 0 | 0 | No |
| 187 | F | 0.847 | SLV 15 | 0.206 | 0.842 | 301 | 0.829 | No |
| | V | 0.093 | SLV 15 | 0.02 | 0.08 | 1 | 0.08 | No |
| 188 | F | 1.628 | SLV 15 | 0.362 | 1.483 | 1618 | 1.653 | Si |
| | V | 0.179 | SLV 15 | 0.041 | 0.169 | 6 | 0.167 | No |

## Periodi di ritorno e accelerazioni di aggancio per gli Stati Limite

| S. L. | TR,C | PGA,C | TR,Rif | PGA,Rif | Tipo rottura |
|---|---|---|---|---|---|
| Stato limite di salvaguardia della vita | 0 | 0 | 475 | 0.244 | taglio maschio muratura |

## Coefficienti relativi alle Linee guida per la classificazione del rischio sismico delle costruzioni secondo il D.M. 24 09/01/2020

| TR,C | TR,Rif | PAM | Classe PAM | IS-V | Classe IS-V | Tipo rottura |
|---|---|---|---|---|---|---|
| 0 | 475 | 8.22 | G | 0 | F | taglio maschio muratura |

Classe PAM

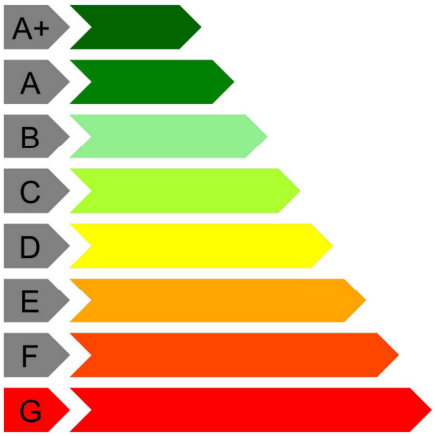


Classe IS-V

## 1.5 Verifiche maschi in muratura

Le unità di misura elencate nel capitolo sono in [cm, daN, s] ove non espressamente specificato.

***X ini.***: *coordinate del punto iniziale del maschio. [cm]*
***Y ini.***: *coordinate del punto iniziale del maschio. [cm]*
***X fin.***: *coordinate del punto finale del maschio. [cm]*
***Y fin.***: *coordinate del punto finale del maschio. [cm]*
***Quota i.***: *livello o falda inferiore.*
***Quota.s***: *livello o falda superiore.*
***l***: *lunghezza del maschio. [cm]*
***Sp.***: *spessore. [cm]*
***h netta***: *altezza netta (a filo solai). [cm]*
***h ini.***: *altezza nel modello al punto iniziale. [cm]*
***h fin.***: *altezza nel modello al punto finale. [cm]*
***a***: *distanza tra irrigidimenti laterali. [cm]*
***a.s.,sx***: *lunghezza di appoggio del solaio di sinistra. [cm]*
***a.s.,dx***: *lunghezza di appoggio del solaio di destra. [cm]*
***fb***: *resistenza normalizzata a compressione verticale dei blocchi. [daN/cm²]*
***fk***: *resistenza caratteristica a compressione della muratura utilizzata. [daN/cm²]*
***fvk0***: *resistenza caratteristica a taglio in assenza di carichi verticali. [daN/cm²]*
***fmedio***: *resistenza media a compressione della muratura utilizzata. [daN/cm²]*
***τ0***: *resistenza media a taglio in assenza di azioni normali [C8.7.1.16]. [daN/cm²]*
***fv0***: *resistenza media a taglio in assenza di azioni normali [C8.7.1.17]. [daN/cm²]*
***μ***: *coefficiente di attrito [C8.7.1.17].*
***φ***: *coefficiente di ammorsamento o ingranamento secondo Circolare 7 21-01-19 §C8.7.1.3.1.1.*
***fv,lim***: *valore massimo della resistenza a taglio che può essere impiegata nel calcolo. [daN/cm²]*
***E***: *modulo di elasticità longitudinale della muratura utilizzato. [daN/cm²]*
***G***: *modulo di elasticità tangenziale della muratura utilizzato. [daN/cm²]*
***FC***: *fattore di confidenza della muratura.*
***Comb.***: *combinazione.*
***Quota***: *quota della sezione di verifica. [cm]*
***N***: *sforzo normale. [daN]*
***M***: *momento flettente nel piano. [daN*cm]*

*σ0: tensione media di compressione. [daN/cm²]*
*Mu: momento flettente ultimo. [daN*cm]*
*c.s.: coefficiente di sicurezza.*
*Verifica: stato di verifica.*
*V par: taglio nel piano. [daN]*
*σN: tensione media di compressione sulla parte reagente. [daN/cm²]*
*l': lunghezza della parte compressa della parete. [cm]*
*fvd: resistenza a taglio di calcolo. [daN/cm²]*
*Vt scorr.: taglio ultimo per verifica a scorrimento. [daN]*
*Vt fess.diag.: taglio ultimo per verifica a fessurazione diagonale regolare [C8.7.1.17]. [daN]*
*Vt,lim: taglio limite [C8.7.1.18]. [daN]*
*c.s.: coefficiente di sicurezza a taglio.*
*fd: resistenza a compressione di calcolo. [daN/cm²]*
*Sa: accelerazione massima, adimensionalizzata rispetto a g, che l'elemento strutturale subisce durante il sisma.*
*M: momento flettente fuori piano. [daN*cm]*
*Mc: momento di collasso per azioni perpendicolari al piano. [daN*cm]*
*Coeff.s.: coefficiente di sicurezza.*
*N top: sforzo normale in sommità. [daN]*
*N base: sforzo normale al piede. [daN]*
*V orto: taglio fuori piano. [daN]*
*α0: moltiplicatore secondo [C8.7.1.1].*
*M*: massa partecipante al cinematismo. [daN/(cm/s²)]*
*e*: frazione di massa partecipante della muratura [C8.7.1.5].*
*a0*: accelerazione spettrale di attivazione del meccanismo [C8.7.1.8]. [cm/s²]*
*aLim: accelerazione limite [C7.2.11]. [cm/s²]*
*Stato limite: pF_SLU=Presso flessione per azioni non sismiche; V_SLU=Taglio per azioni non sismiche; PF_SLV=Presso flessione per azioni sismiche; V_SLV=Taglio per azioni sismiche; PFFP_SLV=Presso flessione fuori piano per azioni sismiche; R_SLV=Ribaltamento per azioni sismiche.*

## Maschio 1

Verifiche condotte secondo D.M. 17-01-18 (N.T.C.)

### Dati geometrici

| X ini. | Y ini. | X fin. | Y fin. | Quota i. | Quota.s | l | Sp. | h netta | h ini. | h fin. | a | a.s.,sx | a.s.,dx |
|---|---|---|---|---|---|---|---|---|---|---|---|---|---|
| -2465.3 | 127.1 | -2465.3 | -328.4 | L1 | L3 | 455.5 | 45 | 269 | 269 | 269 | | | |

### Caratteristiche del materiale

(Circolare 7 21-01-19 C8.5.I) Muratura in mattoni pieni e malta di calce LC2_Corti

| fb | fk | fvk0 | fmedio | τ0 | fv0 | μ | ϕ | fv,lim | E | G | FC |
|---|---|---|---|---|---|---|---|---|---|---|---|
| 60 | | | 34.5 | 0.9 | 2 | 0.58 | 0.77 | 3.25 | 32000 | 12800 | 1.2 |

### Verifica a pressoflessione nel piano secondo D.M. 17-01-18 NTC §7.8.2.2.1 in combinazioni non sismiche, γM = 3

| Comb. | Quota | N | M | σ0 | Mu | c.s. | Verifica |
|---|---|---|---|---|---|---|---|
| SLU 55 | -98 | -94982 | 57217 | 4.63 | 9326507 | 163.002 | Si |
| SLU 55 | 122 | -81429 | 1218894 | 3.97 | 9501047 | 7.795 | Si |
| SLU 73 | -98 | -101308 | -46825 | 4.94 | 9073505 | 193.773 | Si |
| SLU 73 | 122 | -87046 | 1241149 | 4.25 | 9489506 | 7.646 | Si |
| SLU 68 | -98 | -95424 | 113795 | 4.66 | 9312378 | 81.835 | Si |
| SLU 68 | 122 | -81993 | 1264225 | 4 | 9503776 | 7.517 | Si |
| SLU 78 | -98 | -105052 | -20626 | 5.13 | 8872345 | 430.16 | Si |
| SLU 78 | 122 | -89938 | 1269482 | 4.39 | 9450003 | 7.444 | Si |
| SLU 75 | -98 | -102893 | -77731 | 5.02 | 8992999 | 115.693 | Si |
| SLU 75 | 122 | -87889 | 1199002 | 4.29 | 9480356 | 7.907 | Si |
| SLU 76 | -98 | -103467 | 10280 | 5.05 | 8962186 | 871.778 | Si |
| SLU 76 | 122 | -89096 | 1311628 | 4.35 | 9463862 | 7.215 | Si |
| SLU 84 | -98 | -105752 | -106735 | 5.16 | 8830454 | 82.732 | Si |
| SLU 84 | 122 | -90387 | 1220685 | 4.41 | 9441826 | 7.735 | Si |
| SLU 70 | -98 | -97009 | 82889 | 4.73 | 9257318 | 111.683 | Si |
| SLU 70 | 122 | -82835 | 1222078 | 4.04 | 9506235 | 7.779 | Si |
| SLU 80 | -98 | -104464 | -5266 | 5.1 | 8906445 | 1000 | Si |
| SLU 80 | 122 | -89392 | 1270848 | 4.36 | 9459201 | 7.443 | Si |
| SLU 72 | -98 | -96421 | 98249 | 4.7 | 9278526 | 94.439 | Si |
| SLU 72 | 122 | -82290 | 1223445 | 4.01 | 9504863 | 7.769 | Si |

### Verifica a pressoflessione nel piano secondo D.M. 17-01-18 NTC §7.8.2.2.1 in combinazioni sismiche, γM = 2

| Comb. | Quota | N | M | σ0 | Mu | c.s. | Verifica |
|---|---|---|---|---|---|---|---|
| SLV 12 | -98 | -37984 | -3162507 | 1.85 | 7338929 | 2.321 | Si |
| SLV 12 | 122 | -23150 | -1007858 | 1.13 | 4785011 | 4.748 | Si |
| SLV 5 | -98 | -101901 | 2931770 | 4.97 | 13765435 | 4.695 | Si |
| SLV 5 | 122 | -93787 | 2402793 | 4.58 | 13361367 | 5.561 | Si |
| SLV 13 | -98 | -27006 | 1190469 | 1.32 | 5487343 | 4.609 | Si |
| SLV 13 | 122 | -21155 | 697675 | 1.03 | 4411085 | 6.323 | Si |
| SLV 7 | -98 | -66897 | -3378119 | 3.26 | 11166262 | 3.305 | Si |
| SLV 7 | 122 | -49522 | -726359 | 2.42 | 9048475 | 12.457 | Si |
| SLV 9 | -98 | -72988 | 3147383 | 3.56 | 11778719 | 3.742 | Si |
| SLV 9 | 122 | -67415 | 2121294 | 3.29 | 11221000 | 5.29 | Si |
| SLV 14 | -98 | -27006 | 1190469 | 1.32 | 5487343 | 4.609 | Si |
| SLV 14 | 122 | -21155 | 697675 | 1.03 | 4411085 | 6.323 | Si |
| SLV 8 | -98 | -66897 | -3378119 | 3.26 | 11166262 | 3.305 | Si |
| SLV 8 | 122 | -49522 | -726359 | 2.42 | 9048475 | 12.457 | Si |

| Comb. | Quota | N | M | σ0 | Mu | c.s. | Verifica |
|---|---|---|---|---|---|---|---|
| SLV 6 | -98 | -101901 | 2931770 | 4.97 | 13765435 | 4.695 | Si |
| SLV 6 | 122 | -93787 | 2402793 | 4.58 | 13361367 | 5.561 | Si |
| SLV 11 | -98 | -37984 | -3162507 | 1.85 | 7338929 | 2.321 | Si |
| SLV 11 | 122 | -23150 | -1007858 | 1.13 | 4785011 | 4.748 | Si |
| SLV 10 | -98 | -72988 | 3147383 | 3.56 | 11778719 | 3.742 | Si |
| SLV 10 | 122 | -67415 | 2121294 | 3.29 | 11221000 | 5.29 | Si |

## Verifica a taglio nel piano secondo D.M. 17-01-18 (N.T.C.) §7.8.2.2.2 con rottura per scorrimento in combinazioni non sismiche, γM = 3

| Comb. | Quota | N | V par | M | σ0 | σN | l' | fvd | Vt scorr. | Vt fess.diag. | Vt,lim | c.s. | Verifica |
|---|---|---|---|---|---|---|---|---|---|---|---|---|---|
| SLU 76 | -98 | -103467 | 4910 | 10280 | | 5.05 | 455.5 | 1.08 | 22206 | | | 4.52 | Si |
| SLU 76 | 122 | -89096 | 4436 | 1311628 | | 4.35 | 455.5 | 1.08 | 22206 | | | 5.01 | Si |
| SLU 80 | -98 | -104464 | 4685 | -5266 | | 5.1 | 455.5 | 1.08 | 22206 | | | 4.74 | Si |
| SLU 80 | 122 | -89392 | 4241 | 1270848 | | 4.36 | 455.5 | 1.08 | 22206 | | | 5.24 | Si |
| SLU 75 | -98 | -102893 | 4531 | -77731 | | 5.02 | 455.5 | 1.08 | 22206 | | | 4.9 | Si |
| SLU 75 | 122 | -87889 | 4102 | 1199002 | | 4.29 | 455.5 | 1.08 | 22206 | | | 5.41 | Si |
| SLU 65 | -98 | -93265 | 4377 | 56689 | | 4.55 | 455.5 | 1.08 | 22206 | | | 5.07 | Si |
| SLU 65 | 122 | -79944 | 3865 | 1193745 | | 3.9 | 455.5 | 1.08 | 22047 | | | 5.7 | Si |
| SLU 68 | -98 | -95424 | 4553 | 113795 | | 4.66 | 455.5 | 1.08 | 22206 | | | 4.88 | Si |
| SLU 68 | 122 | -81993 | 4030 | 1264225 | | 4 | 455.5 | 1.08 | 22206 | | | 5.51 | Si |
| SLU 82 | -98 | -103594 | 4485 | -163841 | | 5.05 | 455.5 | 1.08 | 22206 | | | 4.95 | Si |
| SLU 82 | 122 | -88337 | 4085 | 1150205 | | 4.31 | 455.5 | 1.08 | 22206 | | | 5.44 | Si |
| SLU 55 | -98 | -94982 | 4526 | 57217 | | 4.63 | 455.5 | 1.08 | 22206 | | | 4.91 | Si |
| SLU 55 | 122 | -81429 | 4024 | 1218894 | | 3.97 | 455.5 | 1.08 | 22206 | | | 5.52 | Si |
| SLU 73 | -98 | -101308 | 4734 | -46825 | | 4.94 | 455.5 | 1.08 | 22206 | | | 4.69 | Si |
| SLU 73 | 122 | -87046 | 4271 | 1241149 | | 4.25 | 455.5 | 1.08 | 22206 | | | 5.2 | Si |
| SLU 78 | -98 | -105052 | 4707 | -20626 | | 5.13 | 455.5 | 1.08 | 22206 | | | 4.72 | Si |
| SLU 78 | 122 | -89938 | 4267 | 1269482 | | 4.39 | 455.5 | 1.08 | 22206 | | | 5.2 | Si |
| SLU 84 | -98 | -105752 | 4662 | -106735 | | 5.16 | 455.5 | 1.08 | 22206 | | | 4.76 | Si |
| SLU 84 | 122 | -90387 | 4250 | 1220685 | | 4.41 | 455.5 | 1.08 | 22206 | | | 5.22 | Si |

## Verifica a taglio nel piano secondo D.M. 17-01-18 (N.T.C.) §7.8.2.2.2 con rottura per scorrimento in combinazioni sismiche, γM = 2

| Comb. | Quota | N | V par | M | σ0 | σN | l' | fvd | Vt scorr. | Vt fess.diag. | Vt,lim | c.s. | Verifica |
|---|---|---|---|---|---|---|---|---|---|---|---|---|---|
| SLV 7 | -98 | -66897 | -19249 | -3378119 | | 3.26 | 455.5 | 1.49 | 30461 | | | 1.58 | Si |
| SLV 7 | 122 | -49522 | -14973 | -726359 | | 2.42 | 455.5 | 1.32 | 26986 | | | 1.8 | Si |
| SLV 10 | -98 | -72988 | 24473 | 3147383 | | 3.56 | 455.5 | 1.55 | 31679 | | | 1.29 | Si |
| SLV 10 | 122 | -67415 | 19588 | 2121294 | | 3.29 | 455.5 | 1.49 | 30564 | | | 1.56 | Si |
| SLV 9 | -98 | -72988 | 24473 | 3147383 | | 3.56 | 455.5 | 1.55 | 31679 | | | 1.29 | Si |
| SLV 9 | 122 | -67415 | 19588 | 2121294 | | 3.29 | 455.5 | 1.49 | 30564 | | | 1.56 | Si |
| SLV 12 | -98 | -37984 | -19002 | -3162507 | | 1.95 | 433.48 | 1.22 | 23852 | | | 1.26 | Si |
| SLV 12 | 122 | -23150 | -16101 | -1007858 | | 1.13 | 455.5 | 1.06 | 21711 | | | 1.35 | Si |
| SLV 8 | -98 | -66897 | -19249 | -3378119 | | 3.26 | 455.5 | 1.49 | 30461 | | | 1.58 | Si |
| SLV 8 | 122 | -49522 | -14973 | -726359 | | 2.42 | 455.5 | 1.32 | 26986 | | | 1.8 | Si |
| SLV 6 | -98 | -101901 | 24226 | 2931770 | | 4.97 | 455.5 | 1.63 | 33308 | | | 1.37 | Si |
| SLV 6 | 122 | -93787 | 20716 | 2402793 | | 4.58 | 455.5 | 1.63 | 33308 | | | 1.61 | Si |
| SLV 11 | -98 | -37984 | -19002 | -3162507 | | 1.95 | 433.48 | 1.22 | 23852 | | | 1.26 | Si |
| SLV 11 | 122 | -23150 | -16101 | -1007858 | | 1.13 | 455.5 | 1.06 | 21711 | | | 1.35 | Si |
| SLV 14 | -98 | -27006 | 9545 | 1190469 | | 1.32 | 455.5 | 1.1 | 22482 | | | 2.36 | Si |
| SLV 14 | 122 | -21155 | 5781 | 697675 | | 1.03 | 455.5 | 1.04 | 21312 | | | 3.69 | Si |
| SLV 13 | -98 | -27006 | 9545 | 1190469 | | 1.32 | 455.5 | 1.1 | 22482 | | | 2.36 | Si |
| SLV 13 | 122 | -21155 | 5781 | 697675 | | 1.03 | 455.5 | 1.04 | 21312 | | | 3.69 | Si |
| SLV 5 | -98 | -101901 | 24226 | 2931770 | | 4.97 | 455.5 | 1.63 | 33308 | | | 1.37 | Si |
| SLV 5 | 122 | -93787 | 20716 | 2402793 | | 4.58 | 455.5 | 1.63 | 33308 | | | 1.61 | Si |

## Verifica a pressoflessione fuori piano D.M. 17-01-18 (N.T.C.)

quota 36.5 Wa 0.08 denominatore 8 γM = 2

| Comb. | fd | Sa | σ0 | N | M | Mc | Coeff.s. | Verifica |
|---|---|---|---|---|---|---|---|---|
| SLV 15 | 14 | 0.25 | 0.61 | -12469 | 28000 | 266580 | 9.52 | Si |
| SLV 16 | 14 | 0.25 | 0.61 | -12469 | 28000 | 266580 | 9.52 | Si |
| SLV 13 | 14 | 0.25 | 1.21 | -24787 | 28000 | 502512 | 17.95 | Si |
| SLV 14 | 14 | 0.25 | 1.21 | -24787 | 28000 | 502512 | 17.95 | Si |
| SLV 11 | 14 | 0.25 | 1.47 | -30179 | 28000 | 597201 | 21.33 | Si |
| SLV 12 | 14 | 0.25 | 1.47 | -30179 | 28000 | 597201 | 21.33 | Si |
| SLV 8 | 14 | 0.25 | 2.81 | -57677 | 28000 | 998877 | 35.67 | Si |
| SLV 7 | 14 | 0.25 | 2.81 | -57677 | 28000 | 998877 | 35.67 | Si |
| SLV 10 | 14 | 0.25 | 3.48 | -71240 | 28000 | 1146961 | 40.96 | Si |
| SLV 9 | 14 | 0.25 | 3.48 | -71240 | 28000 | 1146961 | 40.96 | Si |

## Verifica dei meccanismi locali di collasso con analisi cinematica lineare

forza di aggancio al piano = 0 quota mezzeria = 36.5 Wa = 0.08 Ta = 0.0269

| Comb. | N top | N base | V orto | α0 | M* | e* | a0* | aLim | Verifica |
|---|---|---|---|---|---|---|---|---|---|
| SLV 6 | -92080 | -101901 | 1268 | 0.075 | 101.518 | 0.976 | 111.433 | 417.584 | No |
| SLV 5 | -92080 | -101901 | 1268 | 0.075 | 101.518 | 0.976 | 111.433 | 417.584 | No |
| SLV 10 | -65643 | -72988 | 988 | 0.076 | 74.594 | 0.968 | 113.36 | 417.584 | No |
| SLV 9 | -65643 | -72988 | 988 | 0.076 | 74.594 | 0.968 | 113.36 | 417.584 | No |
| SLV 8 | -46832 | -66897 | 802 | 0.076 | 55.454 | 0.958 | 115.497 | 417.584 | No |
| SLV 7 | -46832 | -66897 | 802 | 0.076 | 55.454 | 0.958 | 115.497 | 417.584 | No |
| SLV 12 | -20394 | -37984 | 522 | 0.079 | 28.652 | 0.927 | 124.507 | 417.584 | No |
| SLV 11 | -20394 | -37984 | 522 | 0.079 | 28.652 | 0.927 | 124.507 | 417.584 | No |
| SLV 1 | -107087 | -123381 | 1431 | 0.075 | 116.806 | 0.979 | 110.675 | 332.581 | No |
| SLV 2 | -107087 | -123381 | 1431 | 0.075 | 116.806 | 0.979 | 110.675 | 332.581 | No |

## Tabella dei coefficienti di sicurezza minimi

| Stato limite | Coeff.s. | Comb. | Verifica |
|---|---|---|---|
| PF_SLU | 7.215 | SLU 76 | Si |
| V_SLU | 4.522 | SLU 76 | Si |
| PF_SLV | 2.321 | SLV 11 | Si |

| Stato limite | Coeff.s. | Comb. | Verifica |
|---|---|---|---|
| V_SLV | 1.255 | SLV 11 | Si |
| PFFP_SLV | 9.521 | SLV 15 | Si |
| R_SLV | 0.267 | SLV 5 | No |

## Maschio 2

Verifiche condotte secondo D.M. 17-01-18 (N.T.C.)

### Dati geometrici

| X ini. | Y ini. | X fin. | Y fin. | Quota i. | Quota.s | l | Sp. | h netta | h ini. | h fin. | a | a.s.,sx | a.s.,dx |
|---|---|---|---|---|---|---|---|---|---|---|---|---|---|
| -2465.3 | 587.6 | -2465.3 | 227.1 | L1 | L3 | 360.5 | 45 | 269 | 269 | 269 | | | |

### Caratteristiche del materiale

(Circolare 7 21-01-19 C8.5.I) Muratura in mattoni pieni e malta di calce LC2_Corti

| fb | fk | fvk0 | fmedio | τ0 | fv0 | μ | ϕ | fv,lim | E | G | FC |
|---|---|---|---|---|---|---|---|---|---|---|---|
| 60 | | | 34.5 | 0.9 | 2 | 0.58 | 0.77 | 3.25 | 32000 | 12800 | 1.2 |

### Verifica a pressoflessione nel piano secondo D.M. 17-01-18 NTC §7.8.2.2.1 in combinazioni non sismiche, γM = 3

| Comb. | Quota | N | M | σ0 | Mu | c.s. | Verifica |
|---|---|---|---|---|---|---|---|
| SLU 77 | -98 | -71157 | -129475 | 4.39 | 5919556 | 45.72 | Si |
| SLU 77 | 122 | -62156 | -470231 | 3.83 | 5933895 | 12.619 | Si |
| SLU 83 | -98 | -72290 | -168194 | 4.46 | 5902103 | 35.091 | Si |
| SLU 83 | 122 | -63272 | -501322 | 3.9 | 5944116 | 11.857 | Si |
| SLU 62 | -98 | -67214 | -149680 | 4.14 | 5953043 | 39.772 | Si |
| SLU 62 | 122 | -58336 | -472250 | 3.6 | 5873172 | 12.437 | Si |
| SLU 64 | -98 | -64277 | -140425 | 3.96 | 5950421 | 42.374 | Si |
| SLU 64 | 122 | -55529 | -457928 | 3.42 | 5803168 | 12.673 | Si |
| SLU 74 | -98 | -70550 | -156923 | 4.35 | 5927478 | 37.773 | Si |
| SLU 74 | 122 | -61611 | -488655 | 3.8 | 5927667 | 12.131 | Si |
| SLU 53 | -98 | -65474 | -138409 | 4.04 | 5954330 | 43.02 | Si |
| SLU 53 | 122 | -56676 | -459583 | 3.49 | 5834365 | 12.695 | Si |
| SLU 79 | -98 | -70676 | -124180 | 4.36 | 5925923 | 47.72 | Si |
| SLU 79 | 122 | -61657 | -464352 | 3.8 | 5928224 | 12.767 | Si |
| SLU 60 | -98 | -66606 | -177128 | 4.11 | 5954431 | 33.616 | Si |
| SLU 60 | 122 | -57791 | -490674 | 3.56 | 5861265 | 11.945 | Si |
| SLU 81 | -98 | -71682 | -195643 | 4.42 | 5911902 | 30.218 | Si |
| SLU 81 | 122 | -62727 | -519746 | 3.87 | 5939547 | 11.428 | Si |
| SLU 82 | -98 | -70696 | -87786 | 4.36 | 5925671 | 67.501 | Si |
| SLU 82 | 122 | -61528 | -461609 | 3.79 | 5926648 | 12.839 | Si |

### Verifica a pressoflessione nel piano secondo D.M. 17-01-18 NTC §7.8.2.2.1 in combinazioni sismiche, γM = 2

| Comb. | Quota | N | M | σ0 | Mu | c.s. | Verifica |
|---|---|---|---|---|---|---|---|
| SLV 7 | -98 | -74572 | -2475142 | 4.6 | 8384712 | 3.388 | Si |
| SLV 7 | 122 | -74124 | -1227466 | 4.57 | 8364565 | 6.814 | Si |
| SLV 5 | -98 | -43058 | 2076313 | 2.65 | 6075279 | 2.926 | Si |
| SLV 5 | 122 | -29402 | 391148 | 1.81 | 4513613 | 11.539 | Si |
| SLV 9 | -98 | -25047 | 2245154 | 1.54 | 3944286 | 1.757 | Si |
| SLV 9 | 122 | -12014 | 511014 | 0.74 | 2034308 | 3.981 | Si |
| SLV 6 | -98 | -43058 | 2076313 | 2.65 | 6075279 | 2.926 | Si |
| SLV 6 | 122 | -29402 | 391148 | 1.81 | 4513613 | 11.539 | Si |
| SLV 8 | -98 | -74572 | -2475142 | 4.6 | 8384712 | 3.388 | Si |
| SLV 8 | 122 | -74124 | -1227466 | 4.57 | 8364565 | 6.814 | Si |
| SLV 10 | -98 | -25047 | 2245154 | 1.54 | 3944286 | 1.757 | Si |
| SLV 10 | 122 | -12014 | 511014 | 0.74 | 2034308 | 3.981 | Si |
| SLV 13 | -98 | -15065 | 849127 | 0.93 | 2509040 | 2.955 | Si |
| SLV 13 | 122 | -7381 | 84342 | 0.45 | 1280906 | 15.187 | Si |
| SLV 14 | -98 | -15065 | 849127 | 0.93 | 2509040 | 2.955 | Si |
| SLV 14 | 122 | -7381 | 84342 | 0.45 | 1280906 | 15.187 | Si |
| SLV 11 | -98 | -56561 | -2306300 | 3.49 | 7285979 | 3.159 | Si |
| SLV 11 | 122 | -56736 | -1107601 | 3.5 | 7299524 | 6.59 | Si |
| SLV 12 | -98 | -56561 | -2306300 | 3.49 | 7285979 | 3.159 | Si |
| SLV 12 | 122 | -56736 | -1107601 | 3.5 | 7299524 | 6.59 | Si |

### Verifica a taglio nel piano secondo D.M. 17-01-18 (N.T.C.) §7.8.2.2.2 con rottura per scorrimento in combinazioni non sismiche, γM = 3

| Comb. | Quota | N | V par | M | σ0 | σN | l' | fvd | Vt scorr. | Vt fess.diag. | Vt,lim | c.s. | Verifica |
|---|---|---|---|---|---|---|---|---|---|---|---|---|---|
| SLU 82 | -98 | -70696 | -3298 | -87786 | | 4.36 | 360.5 | 1.08 | 17574 | | | 5.33 | Si |
| SLU 82 | 122 | -61528 | -1733 | -461609 | | 3.79 | 360.5 | 1.06 | 17216 | | | 9.93 | Si |
| SLU 60 | -98 | -66606 | -3454 | -177128 | | 4.11 | 360.5 | 1.08 | 17574 | | | 5.09 | Si |
| SLU 60 | 122 | -57791 | -2045 | -490674 | | 3.56 | 360.5 | 1.03 | 16718 | | | 8.18 | Si |
| SLU 56 | -98 | -66082 | -3306 | -110961 | | 4.07 | 360.5 | 1.08 | 17574 | | | 5.32 | Si |
| SLU 56 | 122 | -57221 | -1927 | -441159 | | 3.53 | 360.5 | 1.03 | 16642 | | | 8.64 | Si |
| SLU 53 | -98 | -65474 | -3333 | -138409 | | 4.04 | 360.5 | 1.08 | 17574 | | | 5.27 | Si |
| SLU 53 | 122 | -56676 | -1970 | -459583 | | 3.49 | 360.5 | 1.02 | 16569 | | | 8.41 | Si |
| SLU 79 | -98 | -70676 | -3565 | -124180 | | 4.36 | 360.5 | 1.08 | 17574 | | | 4.93 | Si |
| SLU 79 | 122 | -61657 | -2037 | -464352 | | 3.8 | 360.5 | 1.06 | 17233 | | | 8.46 | Si |
| SLU 83 | -98 | -72290 | -3742 | -168194 | | 4.46 | 360.5 | 1.08 | 17574 | | | 4.7 | Si |
| SLU 83 | 122 | -63272 | -2154 | -501322 | | 3.9 | 360.5 | 1.08 | 17449 | | | 8.1 | Si |
| SLU 62 | -98 | -67214 | -3427 | -149680 | | 4.14 | 360.5 | 1.08 | 17574 | | | 5.13 | Si |
| SLU 62 | 122 | -58336 | -2002 | -472250 | | 3.6 | 360.5 | 1.04 | 16791 | | | 8.39 | Si |
| SLU 77 | -98 | -71157 | -3621 | -129475 | | 4.39 | 360.5 | 1.08 | 17574 | | | 4.85 | Si |
| SLU 77 | 122 | -62156 | -2078 | -470231 | | 3.83 | 360.5 | 1.07 | 17300 | | | 8.32 | Si |
| SLU 74 | -98 | -70550 | -3648 | -156923 | | 4.35 | 360.5 | 1.08 | 17574 | | | 4.82 | Si |
| SLU 74 | 122 | -61611 | -2121 | -488655 | | 3.8 | 360.5 | 1.06 | 17227 | | | 8.12 | Si |
| SLU 81 | -98 | -71682 | -3769 | -195643 | | 4.42 | 360.5 | 1.08 | 17574 | | | 4.66 | Si |

| Comb. | Quota | N | V par | M | σ0 | σN | l' | fvd | Vt scorr. | Vt fess.diag. | Vt,lim | c.s. | Verifica |
|---|---|---|---|---|---|---|---|---|---|---|---|---|---|
| SLU 81 | 122 | -62727 | -2196 | -519746 | | 3.87 | 360.5 | 1.07 | 17376 | | | 7.91 | Si |

### Verifica a taglio nel piano secondo D.M. 17-01-18 (N.T.C.) §7.8.2.2.2 con rottura per scorrimento in combinazioni sismiche, γM = 2

| Comb. | Quota | N | V par | M | σ0 | σN | l' | fvd | Vt scorr. | Vt fess.diag. | Vt,lim | c.s. | Verifica |
|---|---|---|---|---|---|---|---|---|---|---|---|---|---|
| SLD 12 | -98 | -52604 | -9344 | -1048407 | | 3.24 | 360.5 | 1.48 | 24040 | | | 2.57 | Si |
| SLD 12 | 122 | -48814 | -6488 | -673043 | | 3.01 | 360.5 | 1.44 | 23281 | | | 3.59 | Si |
| SLV 11 | -98 | -56561 | -18323 | -2306300 | | 3.49 | 360.5 | 1.53 | 24831 | | | 1.36 | Si |
| SLV 11 | 122 | -56736 | -13213 | -1107601 | | 3.5 | 360.5 | 1.53 | 24866 | | | 1.88 | Si |
| SLV 7 | -98 | -74572 | -18967 | -2475142 | | 4.6 | 360.5 | 1.63 | 26362 | | | 1.39 | Si |
| SLV 7 | 122 | -74124 | -12138 | -1227466 | | 4.57 | 360.5 | 1.63 | 26362 | | | 2.17 | Si |
| SLV 6 | -98 | -43058 | 13232 | 2076313 | | 2.65 | 360.5 | 1.36 | 22130 | | | 1.67 | Si |
| SLV 6 | 122 | -29402 | 10181 | 391148 | | 1.81 | 360.5 | 1.2 | 19399 | | | 1.91 | Si |
| SLV 8 | -98 | -74572 | -18967 | -2475142 | | 4.6 | 360.5 | 1.63 | 26362 | | | 1.39 | Si |
| SLV 8 | 122 | -74124 | -12138 | -1227466 | | 4.57 | 360.5 | 1.63 | 26362 | | | 2.17 | Si |
| SLV 5 | -98 | -43058 | 13232 | 2076313 | | 2.65 | 360.5 | 1.36 | 22130 | | | 1.67 | Si |
| SLV 5 | 122 | -29402 | 10181 | 391148 | | 1.81 | 360.5 | 1.2 | 19399 | | | 1.91 | Si |
| SLV 9 | -98 | -25047 | 13877 | 2245154 | | 2.05 | 271.84 | 1.24 | 15203 | | | 1.1 | Si |
| SLV 9 | 122 | -12014 | 9106 | 511014 | | 0.74 | 360.5 | 0.98 | 15922 | | | 1.75 | Si |
| SLV 12 | -98 | -56561 | -18323 | -2306300 | | 3.49 | 360.5 | 1.53 | 24831 | | | 1.36 | Si |
| SLV 12 | 122 | -56736 | -13213 | -1107601 | | 3.5 | 360.5 | 1.53 | 24866 | | | 1.88 | Si |
| SLV 10 | -98 | -25047 | 13877 | 2245154 | | 2.05 | 271.84 | 1.24 | 15203 | | | 1.1 | Si |
| SLV 10 | 122 | -12014 | 9106 | 511014 | | 0.74 | 360.5 | 0.98 | 15922 | | | 1.75 | Si |
| SLD 11 | -98 | -52604 | -9344 | -1048407 | | 3.24 | 360.5 | 1.48 | 24040 | | | 2.57 | Si |
| SLD 11 | 122 | -48814 | -6488 | -673043 | | 3.01 | 360.5 | 1.44 | 23281 | | | 3.59 | Si |

### Verifica a pressoflessione fuori piano D.M. 17-01-18 (N.T.C.)

quota 36.5 Wa 0.08 denominatore 8 γM = 2

| Comb. | fd | Sa | σ0 | N | M | Mc | Coeff.s. | Verifica |
|---|---|---|---|---|---|---|---|---|
| SLV 13 | 14 | 0.25 | 0.63 | -10295 | 22160 | 219607 | 9.91 | Si |
| SLV 14 | 14 | 0.25 | 0.63 | -10295 | 22160 | 219607 | 9.91 | Si |
| SLV 9 | 14 | 0.25 | 0.89 | -14483 | 22160 | 302055 | 13.63 | Si |
| SLV 10 | 14 | 0.25 | 0.89 | -14483 | 22160 | 302055 | 13.63 | Si |
| SLV 16 | 14 | 0.25 | 1.52 | -24738 | 22160 | 487137 | 21.98 | Si |
| SLV 15 | 14 | 0.25 | 1.52 | -24738 | 22160 | 487137 | 21.98 | Si |
| SLV 5 | 14 | 0.25 | 2 | -32515 | 22160 | 611585 | 27.6 | Si |
| SLV 6 | 14 | 0.25 | 2 | -32515 | 22160 | 611585 | 27.6 | Si |
| SLV 11 | 14 | 0.25 | 3.86 | -62626 | 22160 | 963890 | 43.5 | Si |
| SLV 12 | 14 | 0.25 | 3.86 | -62626 | 22160 | 963890 | 43.5 | Si |

### Verifica dei meccanismi locali di collasso con analisi cinematica lineare

forza di aggancio al piano = 0 quota mezzeria = 36.5 Wa = 0.08 Ta = 0.0269

| Comb. | N top | N base | V orto | α0 | M* | e* | a0* | aLim | Verifica |
|---|---|---|---|---|---|---|---|---|---|
| SLV 11 | -55163 | -56561 | 804 | 0.076 | 62.305 | 0.97 | 113.286 | 417.584 | No |
| SLV 12 | -55163 | -56561 | 804 | 0.076 | 62.305 | 0.97 | 113.286 | 417.584 | No |
| SLV 8 | -72485 | -74572 | 884 | 0.076 | 79.947 | 0.976 | 113.699 | 417.584 | No |
| SLV 7 | -72485 | -74572 | 884 | 0.076 | 79.947 | 0.976 | 113.699 | 417.584 | No |
| SLV 6 | -26805 | -43058 | 270 | 0.086 | 33.466 | 0.947 | 131.244 | 417.584 | No |
| SLV 5 | -26805 | -43058 | 270 | 0.086 | 33.466 | 0.947 | 131.244 | 417.584 | No |
| SLV 4 | -76706 | -84554 | 763 | 0.078 | 84.247 | 0.977 | 116.359 | 332.581 | No |
| SLV 3 | -76706 | -84554 | 763 | 0.078 | 84.247 | 0.977 | 116.359 | 332.581 | No |
| SLV 16 | -18965 | -24519 | 495 | 0.076 | 25.526 | 0.934 | 118.902 | 332.581 | No |
| SLV 15 | -18965 | -24519 | 495 | 0.076 | 25.526 | 0.934 | 118.902 | 332.581 | No |

### Tabella dei coefficienti di sicurezza minimi

| Stato limite | Coeff.s. | Comb. | Verifica |
|---|---|---|---|
| PF_SLU | 11.428 | SLU 81 | Si |
| V_SLU | 4.662 | SLU 81 | Si |
| PF_SLV | 1.757 | SLV 9 | Si |
| V_SLV | 1.096 | SLV 9 | Si |
| PFFP_SLV | 9.91 | SLV 13 | Si |
| R_SLV | 0.271 | SLV 11 | No |

## Maschio 3

Verifiche condotte secondo D.M. 17-01-18 (N.T.C.)

### Dati geometrici

| X ini. | Y ini. | X fin. | Y fin. | Quota i. | Quota.s | l | Sp. | h netta | h ini. | h fin. | a | a.s.,sx | a.s.,dx |
|---|---|---|---|---|---|---|---|---|---|---|---|---|---|
| -2276.3 | 587.6 | -2465.3 | 587.6 | L1 | L3 | 189 | 45 | 269 | 269 | 269 | | | |

### Caratteristiche del materiale

(Circolare 7 21-01-19 C8.5.I) Muratura in mattoni pieni e malta di calce LC2_Corti

| fb | fk | fvk0 | fmedio | τ0 | fv0 | μ | ϕ | fv,lim | E | G | FC |
|---|---|---|---|---|---|---|---|---|---|---|---|
| 60 | | | 34.5 | 0.9 | 2 | 0.58 | 0.77 | 3.25 | 32000 | 12800 | 1.2 |

### Verifica a pressoflessione nel piano secondo D.M. 17-01-18 NTC §7.8.2.2.1 in combinazioni non sismiche, γM = 3

| Comb. | Quota | N | M | σ0 | Mu | c.s. | Verifica |
|---|---|---|---|---|---|---|---|
| SLU 49 | 102 | -19455 | 116924 | 2.29 | 1322217 | 11.308 | Si |
| SLU 49 | 142 | -17950 | 121361 | 2.11 | 1256762 | 10.356 | Si |
| SLU 46 | 102 | -19379 | 115197 | 2.28 | 1319074 | 11.451 | Si |
| SLU 46 | 142 | -17867 | 120520 | 2.1 | 1253001 | 10.397 | Si |
| SLU 51 | 102 | -19284 | 114912 | 2.27 | 1315078 | 11.444 | Si |
| SLU 51 | 142 | -17790 | 119197 | 2.09 | 1249470 | 10.482 | Si |

| Comb. | Quota | N | M | σ0 | Mu | c.s. | Verifica |
|---|---|---|---|---|---|---|---|
| SLU 71 | 102 | -22153 | 123637 | 2.6 | 1424065 | 11.518 | Si |
| SLU 71 | 142 | -20540 | 126427 | 2.42 | 1365549 | 10.801 | Si |
| SLU 48 | 102 | -19979 | 129056 | 2.35 | 1343561 | 10.411 | Si |
| SLU 48 | 142 | -18405 | 131863 | 2.16 | 1277223 | 9.686 | Si |
| SLU 43 | 102 | -19657 | 123590 | 2.31 | 1330511 | 10.766 | Si |
| SLU 43 | 142 | -18081 | 128016 | 2.13 | 1262722 | 9.864 | Si |
| SLU 45 | 102 | -19904 | 127329 | 2.34 | 1340526 | 10.528 | Si |
| SLU 45 | 142 | -18323 | 131022 | 2.15 | 1273564 | 9.72 | Si |
| SLU 50 | 102 | -19808 | 127044 | 2.33 | 1336667 | 10.521 | Si |
| SLU 50 | 142 | -18246 | 129699 | 2.15 | 1270129 | 9.793 | Si |
| SLU 69 | 102 | -22325 | 125649 | 2.62 | 1429863 | 11.38 | Si |
| SLU 69 | 142 | -20699 | 128591 | 2.43 | 1371645 | 10.667 | Si |
| SLU 66 | 102 | -22249 | 123922 | 2.62 | 1427312 | 11.518 | Si |
| SLU 66 | 142 | -20617 | 127749 | 2.42 | 1368502 | 10.712 | Si |

Verifica a pressoflessione nel piano secondo D.M. 17-01-18 NTC §7.8.2.2.1 in combinazioni sismiche, γM = 2

| Comb. | Quota | N | M | σ0 | Mu | c.s. | Verifica |
|---|---|---|---|---|---|---|---|
| SLV 10 | 102 | -2965 | -178620 | 0.35 | 272234 | 1.524 | Si |
| SLV 10 | 142 | 1660 | -169223 | 0 | 0 | 0 | No, Trazione |
| SLV 14 | 102 | -7980 | -405942 | 0.94 | 696167 | 1.715 | Si |
| SLV 14 | 142 | -5633 | -164224 | 0.66 | 503449 | 3.066 | Si |
| SLV 6 | 102 | -6221 | 95362 | 0.73 | 552663 | 5.795 | Si |
| SLV 6 | 142 | -1650 | -51054 | 0.19 | 153443 | 3.005 | Si |
| SLV 9 | 102 | -2965 | -178620 | 0.35 | 272234 | 1.524 | Si |
| SLV 9 | 142 | 1660 | -169223 | 0 | 0 | 0 | No, Trazione |
| SLV 5 | 102 | -6221 | 95362 | 0.73 | 552663 | 5.795 | Si |
| SLV 5 | 142 | -1650 | -51054 | 0.19 | 153443 | 3.005 | Si |
| SLV 1 | 102 | -18830 | 507332 | 2.21 | 1457033 | 2.872 | Si |
| SLV 1 | 142 | -16667 | 229672 | 1.96 | 1322456 | 5.758 | Si |
| SLV 3 | 102 | -26384 | 586468 | 3.1 | 1860254 | 3.172 | Si |
| SLV 3 | 142 | -26229 | 352127 | 3.08 | 1853057 | 5.262 | Si |
| SLV 2 | 102 | -18830 | 507332 | 2.21 | 1457033 | 2.872 | Si |
| SLV 2 | 142 | -16667 | 229672 | 1.96 | 1322456 | 5.758 | Si |
| SLV 4 | 102 | -26384 | 586468 | 3.1 | 1860254 | 3.172 | Si |
| SLV 4 | 142 | -26229 | 352127 | 3.08 | 1853057 | 5.262 | Si |
| SLV 13 | 102 | -7980 | -405942 | 0.94 | 696167 | 1.715 | Si |
| SLV 13 | 142 | -5633 | -164224 | 0.66 | 503449 | 3.066 | Si |

Verifica a taglio nel piano secondo D.M. 17-01-18 (N.T.C.) §7.8.2.2.2 con rottura per scorrimento in combinazioni non sismiche, γM = 3

| Comb. | Quota | N | V par | M | σ0 | σN | l' | fvd | Vt scorr. | Vt fess.diag. | Vt,lim | c.s. | Verifica |
|---|---|---|---|---|---|---|---|---|---|---|---|---|---|
| SLU 60 | 102 | -23519 | -2220 | 108917 | | 2.77 | 189 | 0.92 | 7861 | | | 3.54 | Si |
| SLU 60 | 142 | -21892 | -1946 | 114392 | | 2.57 | 189 | 0.9 | 7644 | | | 3.93 | Si |
| SLU 81 | 102 | -25864 | -2324 | 105510 | | 3.04 | 189 | 0.96 | 8174 | | | 3.52 | Si |
| SLU 81 | 142 | -24186 | -2025 | 111119 | | 2.84 | 189 | 0.93 | 7950 | | | 3.93 | Si |
| SLU 64 | 102 | -22002 | -2166 | 120183 | | 2.59 | 189 | 0.9 | 7659 | | | 3.54 | Si |
| SLU 64 | 142 | -20375 | -1904 | 124744 | | 2.4 | 189 | 0.87 | 7442 | | | 3.91 | Si |
| SLU 53 | 102 | -22607 | -2168 | 117058 | | 2.66 | 189 | 0.91 | 7739 | | | 3.57 | Si |
| SLU 53 | 142 | -20990 | -1900 | 121484 | | 2.47 | 189 | 0.88 | 7524 | | | 3.96 | Si |
| SLU 66 | 102 | -22249 | -2161 | 123922 | | 2.62 | 189 | 0.9 | 7692 | | | 3.56 | Si |
| SLU 66 | 142 | -20617 | -1895 | 127749 | | 2.42 | 189 | 0.88 | 7474 | | | 3.94 | Si |
| SLU 62 | 102 | -23595 | -2182 | 110644 | | 2.77 | 189 | 0.93 | 7871 | | | 3.61 | Si |
| SLU 62 | 142 | -21974 | -1906 | 115233 | | 2.58 | 189 | 0.9 | 7655 | | | 4.02 | Si |
| SLU 43 | 102 | -19657 | -2062 | 123590 | | 2.31 | 189 | 0.86 | 7346 | | | 3.56 | Si |
| SLU 43 | 142 | -18081 | -1824 | 128016 | | 2.13 | 189 | 0.84 | 7136 | | | 3.91 | Si |
| SLU 83 | 102 | -25940 | -2286 | 107237 | | 3.05 | 189 | 0.96 | 8184 | | | 3.58 | Si |
| SLU 83 | 142 | -24268 | -1986 | 111961 | | 2.85 | 189 | 0.94 | 7961 | | | 4.01 | Si |
| SLU 45 | 102 | -19904 | -2058 | 127329 | | 2.34 | 189 | 0.87 | 7379 | | | 3.59 | Si |
| SLU 45 | 142 | -18323 | -1815 | 131022 | | 2.15 | 189 | 0.84 | 7168 | | | 3.95 | Si |
| SLU 74 | 102 | -24953 | -2272 | 113651 | | 2.93 | 189 | 0.95 | 8052 | | | 3.54 | Si |
| SLU 74 | 142 | -23284 | -1980 | 118212 | | 2.74 | 189 | 0.92 | 7830 | | | 3.95 | Si |

Verifica a taglio nel piano secondo D.M. 17-01-18 (N.T.C.) §7.8.2.2.2 con rottura per scorrimento in combinazioni sismiche, γM = 2

| Comb. | Quota | N | V par | M | σ0 | σN | l' | fvd | Vt scorr. | Vt fess.diag. | Vt,lim | c.s. | Verifica |
|---|---|---|---|---|---|---|---|---|---|---|---|---|---|
| SLV 10 | 102 | -2965 | -4272 | -178620 | | 0.64 | 102.8 | 0.96 | 4448 | | | 1.04 | Si |
| SLV 10 | 142 | 1660 | -10039 | -169223 | | 0 | 0 | 0.83 | 0 | | | 0 | No, Vu<V |
| SLV 13 | 102 | -7980 | -10697 | -405942 | | 1.35 | 130.88 | 1.1 | 6504 | | | 0.61 | No, Vu<V |
| SLV 13 | 142 | -5633 | -13443 | -164224 | | 0.66 | 189 | 0.97 | 8214 | | | 0.61 | No, Vu<V |
| SLV 16 | 102 | -15533 | -10769 | -326807 | | 1.83 | 189 | 1.2 | 10194 | | | 0.95 | No, Vu<V |
| SLV 16 | 142 | -15195 | -10163 | -41770 | | 1.79 | 189 | 1.19 | 10126 | | | 1 | No, Vu<V |
| SLV 14 | 102 | -7980 | -10697 | -405942 | | 1.35 | 130.88 | 1.1 | 6504 | | | 0.61 | No, Vu<V |
| SLV 14 | 142 | -5633 | -13443 | -164224 | | 0.66 | 189 | 0.97 | 8214 | | | 0.61 | No, Vu<V |
| SLV 4 | 102 | -26384 | 7347 | 586468 | | 3.1 | 189 | 1.45 | 12364 | | | 1.68 | Si |
| SLV 4 | 142 | -26229 | 10501 | 352127 | | 3.08 | 189 | 1.45 | 12333 | | | 1.17 | Si |
| SLV 15 | 102 | -15533 | -10769 | -326807 | | 1.83 | 189 | 1.2 | 10194 | | | 0.95 | No, Vu<V |
| SLV 15 | 142 | -15195 | -10163 | -41770 | | 1.79 | 189 | 1.19 | 10126 | | | 1 | No, Vu<V |
| SLD 14 | 102 | -13301 | -5579 | -121771 | | 1.56 | 189 | 1.15 | 9748 | | | 1.75 | Si |
| SLD 14 | 142 | -11636 | -6527 | -13294 | | 1.37 | 189 | 1.11 | 9415 | | | 1.44 | Si |
| SLD 13 | 102 | -13301 | -5579 | -121771 | | 1.56 | 189 | 1.15 | 9748 | | | 1.75 | Si |
| SLD 13 | 142 | -11636 | -6527 | -13294 | | 1.37 | 189 | 1.11 | 9415 | | | 1.44 | Si |
| SLV 3 | 102 | -26384 | 7347 | 586468 | | 3.1 | 189 | 1.45 | 12364 | | | 1.68 | Si |
| SLV 3 | 142 | -26229 | 10501 | 352127 | | 3.08 | 189 | 1.45 | 12333 | | | 1.17 | Si |
| SLV 9 | 102 | -2965 | -4272 | -178620 | | 0.64 | 102.8 | 0.96 | 4448 | | | 1.04 | Si |
| SLV 9 | 142 | 1660 | -10039 | -169223 | | 0 | 0 | 0.83 | 0 | | | 0 | No, Vu<V |

Verifica a pressoflessione fuori piano D.M. 17-01-18 (N.T.C.)

quota 36.5 Wa 0.08 denominatore 8 γM = 2

| Comb. | fd | Sa | σ0 | N | M | Mc | Coeff.s. | Verifica |
|---|---|---|---|---|---|---|---|---|
| SLV 10 | 14 | 0.25 | 0.49 | -4179 | 12048 | 90246 | 7.49 | Si |
| SLV 9 | 14 | 0.25 | 0.49 | -4179 | 12048 | 90246 | 7.49 | Si |
| SLV 14 | 14 | 0.25 | 0.79 | -6738 | 12048 | 141779 | 11.77 | Si |
| SLV 13 | 14 | 0.25 | 0.79 | -6738 | 12048 | 141779 | 11.77 | Si |
| SLV 6 | 14 | 0.25 | 1.02 | -8663 | 12048 | 178677 | 14.83 | Si |
| SLV 5 | 14 | 0.25 | 1.02 | -8663 | 12048 | 178677 | 14.83 | Si |
| SLV 16 | 14 | 0.25 | 1.58 | -13416 | 12048 | 262894 | 21.82 | Si |
| SLV 15 | 14 | 0.25 | 1.58 | -13416 | 12048 | 262894 | 21.82 | Si |
| SLV 2 | 14 | 0.25 | 2.55 | -21686 | 12048 | 386117 | 32.05 | Si |
| SLV 1 | 14 | 0.25 | 2.55 | -21686 | 12048 | 386117 | 32.05 | Si |

### Verifica dei meccanismi locali di collasso con analisi cinematica lineare

forza di aggancio al piano = 0 quota mezzeria = 36.5 Wa = 0.08 Ta = 0.0269

| Comb. | N top | N base | V orto | α0 | M* | e* | a0* | aLim | Verifica |
|---|---|---|---|---|---|---|---|---|---|
| SLV 10 | 6186 | -3306 | 722 | 0 | 0 | 0 | 0 | 417.584 | No, Trazione |
| SLV 5 | 3624 | -9923 | 766 | 0 | 0 | 0 | 0 | 417.584 | No, Trazione |
| SLV 6 | 3624 | -9923 | 766 | 0 | 0 | 0 | 0 | 417.584 | No, Trazione |
| SLV 9 | 6186 | -3306 | 722 | 0 | 0 | 0 | 0 | 417.584 | No, Trazione |
| SLV 13 | -4139 | -4848 | 541 | 0.024 | 7.576 | 0.9 | 38.963 | 332.581 | No |
| SLV 14 | -4139 | -4848 | 541 | 0.024 | 7.576 | 0.9 | 38.963 | 332.581 | No |
| SLV 2 | -12677 | -26905 | 689 | 0.049 | 16.15 | 0.943 | 74.867 | 332.581 | No |
| SLV 1 | -12677 | -26905 | 689 | 0.049 | 16.15 | 0.943 | 74.867 | 332.581 | No |
| SLV 8 | -34413 | -36386 | 397 | 0.077 | 38.259 | 0.974 | 115.605 | 417.584 | No |
| SLV 7 | -34413 | -36386 | 397 | 0.077 | 38.259 | 0.974 | 115.605 | 417.584 | No |

### Tabella dei coefficienti di sicurezza minimi

| Stato limite | Coeff.s. | Comb. | Verifica |
|---|---|---|---|
| PF_SLU | 9.686 | SLU 48 | Si |
| V_SLU | 3.518 | SLU 81 | Si |
| PF_SLV | 0 | SLV 10 | No |
| V_SLV | 0 | SLV 9 | No |
| PFFP_SLV | 7.49 | SLV 9 | Si |
| R_SLV | 0 | SLV 10 | No |

## Maschio 4

Verifiche condotte secondo D.M. 17-01-18 (N.T.C.)

### Dati geometrici

| X ini. | Y ini. | X fin. | Y fin. | Quota i. | Quota.s | l | Sp. | h netta | h ini. | h fin. | a | a.s.,sx | a.s.,dx |
|---|---|---|---|---|---|---|---|---|---|---|---|---|---|
| -1961.8 | 587.6 | -2176.3 | 587.6 | L1 | L3 | 214.5 | 45 | 269 | 269 | 269 | | | |

### Caratteristiche del materiale

(Circolare 7 21-01-19 C8.5.I) Muratura in mattoni pieni e malta di calce LC2_Corti

| fb | fk | fvk0 | fmedio | τ0 | fv0 | μ | ϕ | fv,lim | E | G | FC |
|---|---|---|---|---|---|---|---|---|---|---|---|
| 60 | | | 34.5 | 0.9 | 2 | 0.58 | 0.77 | 3.25 | 32000 | 12800 | 1.2 |

### Verifica a pressoflessione nel piano secondo D.M. 17-01-18 NTC §7.8.2.2.1 in combinazioni non sismiche, γM = 3

| Comb. | Quota | N | M | σ0 | Mu | c.s. | Verifica |
|---|---|---|---|---|---|---|---|
| SLU 74 | 102 | -29647 | -181024 | 3.07 | 1980737 | 10.942 | Si |
| SLU 74 | 142 | -29463 | -393243 | 3.05 | 1975851 | 5.025 | Si |
| SLU 78 | 102 | -29721 | -185297 | 3.08 | 1982691 | 10.7 | Si |
| SLU 78 | 142 | -29544 | -397274 | 3.06 | 1978007 | 4.979 | Si |
| SLU 76 | 102 | -29272 | -184701 | 3.03 | 1970656 | 10.669 | Si |
| SLU 76 | 142 | -29086 | -390989 | 3.01 | 1965510 | 5.027 | Si |
| SLU 84 | 102 | -30833 | -184230 | 3.19 | 2010098 | 10.911 | Si |
| SLU 84 | 142 | -30673 | -399759 | 3.18 | 2006353 | 5.019 | Si |
| SLU 70 | 102 | -26214 | -178864 | 2.72 | 1874133 | 10.478 | Si |
| SLU 70 | 142 | -25972 | -372616 | 2.69 | 1865410 | 5.006 | Si |
| SLU 82 | 102 | -30672 | -184799 | 3.18 | 2006328 | 10.857 | Si |
| SLU 82 | 142 | -30508 | -398424 | 3.16 | 2002431 | 5.026 | Si |
| SLU 77 | 102 | -29808 | -180456 | 3.09 | 1984958 | 11 | Si |
| SLU 77 | 142 | -29628 | -394577 | 3.07 | 1980242 | 5.019 | Si |
| SLU 75 | 102 | -29560 | -185866 | 3.06 | 1978432 | 10.644 | Si |
| SLU 75 | 142 | -29379 | -395940 | 3.04 | 1973578 | 4.985 | Si |
| SLU 67 | 102 | -26053 | -179433 | 2.7 | 1868330 | 10.412 | Si |
| SLU 67 | 142 | -25807 | -371282 | 2.67 | 1859374 | 5.008 | Si |
| SLU 73 | 102 | -29111 | -185269 | 3.02 | 1966199 | 10.613 | Si |
| SLU 73 | 142 | -28921 | -389655 | 3 | 1960874 | 5.032 | Si |

### Verifica a pressoflessione nel piano secondo D.M. 17-01-18 NTC §7.8.2.2.1 in combinazioni sismiche, γM = 2

| Comb. | Quota | N | M | σ0 | Mu | c.s. | Verifica |
|---|---|---|---|---|---|---|---|
| SLD 16 | 102 | -20135 | -299693 | 2.09 | 1790830 | 5.976 | Si |
| SLD 16 | 142 | -19702 | -339608 | 2.04 | 1760087 | 5.183 | Si |
| SLV 12 | 102 | -30471 | -358811 | 3.16 | 2423714 | 6.755 | Si |
| SLV 12 | 142 | -26027 | -417836 | 2.7 | 2175427 | 5.206 | Si |
| SLV 13 | 102 | -13631 | -448777 | 1.41 | 1292933 | 2.881 | Si |
| SLV 13 | 142 | -15435 | -364017 | 1.6 | 1438764 | 3.952 | Si |
| SLD 13 | 102 | -17370 | -270327 | 1.8 | 1588547 | 5.876 | Si |
| SLD 13 | 142 | -18022 | -313845 | 1.87 | 1637490 | 5.218 | Si |
| SLD 14 | 102 | -17370 | -270327 | 1.8 | 1588547 | 5.876 | Si |
| SLD 14 | 142 | -18022 | -313845 | 1.87 | 1637490 | 5.218 | Si |
| SLD 15 | 102 | -20135 | -299693 | 2.09 | 1790830 | 5.976 | Si |
| SLD 15 | 142 | -19702 | -339608 | 2.04 | 1760087 | 5.183 | Si |

| Comb. | Quota | N | M | σ0 | Mu | c.s. | Verifica |
|---|---|---|---|---|---|---|---|
| SLV 15 | 102 | -20398 | -521816 | 2.11 | 1809324 | 3.467 | Si |
| SLV 15 | 142 | -19532 | -426891 | 2.02 | 1747908 | 4.095 | Si |
| SLV 16 | 102 | -20398 | -521816 | 2.11 | 1809324 | 3.467 | Si |
| SLV 16 | 142 | -19532 | -426891 | 2.02 | 1747908 | 4.095 | Si |
| SLV 14 | 102 | -13631 | -448777 | 1.41 | 1292933 | 2.881 | Si |
| SLV 14 | 142 | -15435 | -364017 | 1.6 | 1438764 | 3.952 | Si |
| SLV 11 | 102 | -30471 | -358811 | 3.16 | 2423714 | 6.755 | Si |
| SLV 11 | 142 | -26027 | -417836 | 2.7 | 2175427 | 5.206 | Si |

Verifica a taglio nel piano secondo D.M. 17-01-18 (N.T.C.) §7.8.2.2.2 con rottura per scorrimento in combinazioni non sismiche, γM = 3

| Comb. | Quota | N | V par | M | σ0 | σN | l' | fvd | Vt scorr. | Vt fess.diag. | Vt,lim | c.s. | Verifica |
|---|---|---|---|---|---|---|---|---|---|---|---|---|---|
| SLU 84 | 102 | -30833 | 3903 | -184230 | | 3.19 | 214.5 | 0.98 | 9474 | | | 2.43 | Si |
| SLU 84 | 142 | -30673 | 3492 | -399759 | | 3.18 | 214.5 | 0.98 | 9452 | | | 2.71 | Si |
| SLU 83 | 102 | -30920 | 3964 | -179389 | | 3.2 | 214.5 | 0.98 | 9485 | | | 2.39 | Si |
| SLU 83 | 142 | -30757 | 3554 | -397061 | | 3.19 | 214.5 | 0.98 | 9463 | | | 2.66 | Si |
| SLU 80 | 102 | -29491 | 3805 | -180905 | | 3.06 | 214.5 | 0.96 | 9295 | | | 2.44 | Si |
| SLU 80 | 142 | -29307 | 3409 | -390525 | | 3.04 | 214.5 | 0.96 | 9270 | | | 2.72 | Si |
| SLU 81 | 102 | -30759 | 3923 | -179957 | | 3.19 | 214.5 | 0.98 | 9464 | | | 2.41 | Si |
| SLU 81 | 142 | -30592 | 3515 | -395727 | | 3.17 | 214.5 | 0.98 | 9441 | | | 2.69 | Si |
| SLU 77 | 102 | -29808 | 3911 | -180456 | | 3.09 | 214.5 | 0.97 | 9337 | | | 2.39 | Si |
| SLU 77 | 142 | -29628 | 3510 | -394577 | | 3.07 | 214.5 | 0.96 | 9313 | | | 2.65 | Si |
| SLU 78 | 102 | -29721 | 3849 | -185297 | | 3.08 | 214.5 | 0.97 | 9325 | | | 2.42 | Si |
| SLU 78 | 142 | -29544 | 3449 | -397274 | | 3.06 | 214.5 | 0.96 | 9302 | | | 2.7 | Si |
| SLU 79 | 102 | -29578 | 3867 | -176063 | | 3.06 | 214.5 | 0.96 | 9306 | | | 2.41 | Si |
| SLU 79 | 142 | -29391 | 3471 | -387828 | | 3.04 | 214.5 | 0.96 | 9281 | | | 2.67 | Si |
| SLU 74 | 102 | -29647 | 3869 | -181024 | | 3.07 | 214.5 | 0.97 | 9315 | | | 2.41 | Si |
| SLU 74 | 142 | -29463 | 3471 | -393243 | | 3.05 | 214.5 | 0.96 | 9291 | | | 2.68 | Si |
| SLU 75 | 102 | -29560 | 3808 | -185866 | | 3.06 | 214.5 | 0.96 | 9304 | | | 2.44 | Si |
| SLU 75 | 142 | -29379 | 3410 | -395940 | | 3.04 | 214.5 | 0.96 | 9280 | | | 2.72 | Si |
| SLU 82 | 102 | -30672 | 3861 | -184799 | | 3.18 | 214.5 | 0.98 | 9452 | | | 2.45 | Si |
| SLU 82 | 142 | -30508 | 3453 | -398424 | | 3.16 | 214.5 | 0.98 | 9430 | | | 2.73 | Si |

Verifica a taglio nel piano secondo D.M. 17-01-18 (N.T.C.) §7.8.2.2.2 con rottura per scorrimento in combinazioni sismiche, γM = 2

| Comb. | Quota | N | V par | M | σ0 | σN | l' | fvd | Vt scorr. | Vt fess.diag. | Vt,lim | c.s. | Verifica |
|---|---|---|---|---|---|---|---|---|---|---|---|---|---|
| SLV 7 | 102 | -32338 | 19898 | -146053 | | 3.35 | 214.5 | 1.5 | 14511 | | | 0.73 | No, Vu<V |
| SLV 7 | 142 | -27498 | 24258 | -347199 | | 2.85 | 214.5 | 1.4 | 13543 | | | 0.56 | No, Vu<V |
| SLV 8 | 102 | -32338 | 19898 | -146053 | | 3.35 | 214.5 | 1.5 | 14511 | | | 0.73 | No, Vu<V |
| SLV 8 | 142 | -27498 | 24258 | -347199 | | 2.85 | 214.5 | 1.4 | 13543 | | | 0.56 | No, Vu<V |
| SLV 11 | 102 | -30471 | 13175 | -358811 | | 3.16 | 214.5 | 1.46 | 14138 | | | 1.07 | Si |
| SLV 11 | 142 | -26027 | 17375 | -417836 | | 2.7 | 214.5 | 1.37 | 13249 | | | 0.76 | No, Vu<V |
| SLV 9 | 102 | -7913 | -14540 | -115346 | | 0.82 | 214.5 | 1 | 9626 | | | 0.66 | No, Vu<V |
| SLV 9 | 142 | -12370 | -19447 | -208254 | | 1.28 | 214.5 | 1.09 | 10518 | | | 0.54 | No, Vu<V |
| SLV 10 | 102 | -7913 | -14540 | -115346 | | 0.82 | 214.5 | 1 | 9626 | | | 0.66 | No, Vu<V |
| SLV 10 | 142 | -12370 | -19447 | -208254 | | 1.28 | 214.5 | 1.09 | 10518 | | | 0.54 | No, Vu<V |
| SLV 14 | 102 | -13631 | -12683 | -448777 | | 1.41 | 214.5 | 1.12 | 10770 | | | 0.85 | No, Vu<V |
| SLV 14 | 142 | -15435 | -14589 | -364017 | | 1.6 | 214.5 | 1.15 | 11131 | | | 0.76 | No, Vu<V |
| SLV 4 | 102 | -26621 | 18040 | 187377 | | 2.76 | 214.5 | 1.38 | 13368 | | | 0.74 | No, Vu<V |
| SLV 4 | 142 | -24433 | 19400 | -191436 | | 2.53 | 214.5 | 1.34 | 12930 | | | 0.67 | No, Vu<V |
| SLV 12 | 102 | -30471 | 13175 | -358811 | | 3.16 | 214.5 | 1.46 | 14138 | | | 1.07 | Si |
| SLV 12 | 142 | -26027 | 17375 | -417836 | | 2.7 | 214.5 | 1.37 | 13249 | | | 0.76 | No, Vu<V |
| SLV 3 | 102 | -26621 | 18040 | 187377 | | 2.76 | 214.5 | 1.38 | 13368 | | | 0.74 | No, Vu<V |
| SLV 3 | 142 | -24433 | 19400 | -191436 | | 2.53 | 214.5 | 1.34 | 12930 | | | 0.67 | No, Vu<V |
| SLV 13 | 102 | -13631 | -12683 | -448777 | | 1.41 | 214.5 | 1.12 | 10770 | | | 0.85 | No, Vu<V |
| SLV 13 | 142 | -15435 | -14589 | -364017 | | 1.6 | 214.5 | 1.15 | 11131 | | | 0.76 | No, Vu<V |

Verifica a pressoflessione fuori piano D.M. 17-01-18 (N.T.C.)

quota 36.5 Wa 0.08 denominatore 8 γM = 2

| Comb. | fd | Sa | σ0 | N | M | Mc | Coeff.s. | Verifica |
|---|---|---|---|---|---|---|---|---|
| SLV 9 | 14 | 0.25 | 1.36 | -13088 | 13674 | 261803 | 19.15 | Si |
| SLV 10 | 14 | 0.25 | 1.36 | -13088 | 13674 | 261803 | 19.15 | Si |
| SLV 5 | 14 | 0.25 | 1.48 | -14319 | 13674 | 283060 | 20.7 | Si |
| SLV 6 | 14 | 0.25 | 1.48 | -14319 | 13674 | 283060 | 20.7 | Si |
| SLV 14 | 14 | 0.25 | 1.83 | -17622 | 13674 | 337256 | 24.66 | Si |
| SLV 13 | 14 | 0.25 | 1.83 | -17622 | 13674 | 337256 | 24.66 | Si |
| SLV 1 | 14 | 0.25 | 2.25 | -21725 | 13674 | 398767 | 29.16 | Si |
| SLV 2 | 14 | 0.25 | 2.25 | -21725 | 13674 | 398767 | 29.16 | Si |
| SLV 16 | 14 | 0.25 | 2.36 | -22739 | 13674 | 412990 | 30.2 | Si |
| SLV 15 | 14 | 0.25 | 2.36 | -22739 | 13674 | 412990 | 30.2 | Si |

Verifica dei meccanismi locali di collasso con analisi cinematica lineare

forza di aggancio al piano = 0 quota mezzeria = 36.5 Wa = 0.08 Ta = 0.0269

| Comb. | N top | N base | V orto | α0 | M* | e* | a0* | aLim | Verifica |
|---|---|---|---|---|---|---|---|---|---|
| SLV 10 | -15917 | -22735 | 994 | 0.04 | 19.88 | 0.947 | 61.188 | 417.584 | No |
| SLV 9 | -15917 | -22735 | 994 | 0.04 | 19.88 | 0.947 | 61.188 | 417.584 | No |
| SLV 5 | -17389 | -22057 | 1005 | 0.043 | 21.374 | 0.95 | 65.117 | 417.584 | No |
| SLV 6 | -17389 | -22057 | 1005 | 0.043 | 21.374 | 0.95 | 65.117 | 417.584 | No |
| SLV 13 | -15230 | -25412 | 809 | 0.049 | 19.183 | 0.945 | 74.86 | 332.581 | No |
| SLV 14 | -15230 | -25412 | 809 | 0.049 | 19.183 | 0.945 | 74.86 | 332.581 | No |
| SLV 1 | -20137 | -23151 | 846 | 0.055 | 24.165 | 0.955 | 83.186 | 332.581 | No |
| SLV 2 | -20137 | -23151 | 846 | 0.055 | 24.165 | 0.955 | 83.186 | 332.581 | No |
| SLV 11 | -18860 | -28124 | 502 | 0.069 | 22.868 | 0.953 | 105.449 | 417.584 | No |
| SLV 12 | -18860 | -28124 | 502 | 0.069 | 22.868 | 0.953 | 105.449 | 417.584 | No |

Tabella dei coefficienti di sicurezza minimi

| Stato limite | Coeff.s. | Comb. | Verifica |
|---|---|---|---|
| PF_SLU | 4.979 | SLU 78 | Si |

| Stato limite | Coeff.s. | Comb. | Verifica |
|---|---|---|---|
| V_SLU | 2.388 | SLU 77 | Si |
| PF_SLV | 2.881 | SLV 13 | Si |
| V_SLV | 0.541 | SLV 9 | No |
| PFFP_SLV | 19.146 | SLV 9 | Si |
| R_SLV | 0.147 | SLV 9 | No |

## Maschio 5

Verifiche condotte secondo D.M. 17-01-18 (N.T.C.)

### Dati geometrici

| X ini. | Y ini. | X fin. | Y fin. | Quota i. | Quota.s | l | Sp. | h netta | h ini. | h fin. | a | a.s.,sx | a.s.,dx |
|---|---|---|---|---|---|---|---|---|---|---|---|---|---|
| -1969.3 | 587.6 | -1969.3 | 657.6 | L1 | L3 | 70 | 45 | 269 | 269 | 269 | | | |

### Caratteristiche del materiale

(Circolare 7 21-01-19 C8.5.I) Muratura in mattoni pieni e malta di calce LC2_Corti

| fb | fk | fvk0 | fmedio | τ0 | fv0 | μ | ϕ | fv,lim | E | G | FC |
|---|---|---|---|---|---|---|---|---|---|---|---|
| 60 | | | 34.5 | 0.9 | 2 | 0.58 | 0.77 | 3.25 | 32000 | 12800 | 1.2 |

### Verifica a pressoflessione nel piano secondo D.M. 17-01-18 NTC §7.8.2.2.1 in combinazioni non sismiche, γM = 3

| Comb. | Quota | N | M | σ0 | Mu | c.s. | Verifica |
|---|---|---|---|---|---|---|---|
| SLU 76 | -98 | -17236 | 9187 | 5.47 | 198040 | 21.557 | Si |
| SLU 76 | 171 | -14934 | -6937 | 4.74 | 218477 | 31.493 | Si |
| SLU 73 | -98 | -17257 | 10471 | 5.48 | 197779 | 18.888 | Si |
| SLU 73 | 171 | -14906 | -5441 | 4.73 | 218640 | 40.184 | Si |
| SLU 81 | -98 | -17997 | 11126 | 5.71 | 188098 | 16.905 | Si |
| SLU 81 | 171 | -15658 | -6148 | 4.97 | 213607 | 34.746 | Si |
| SLU 61 | -98 | -16422 | 10308 | 5.21 | 206916 | 20.074 | Si |
| SLU 61 | 171 | -14091 | -4882 | 4.47 | 222349 | 45.547 | Si |
| SLU 82 | -98 | -18006 | 11075 | 5.72 | 187975 | 16.972 | Si |
| SLU 82 | 171 | -15649 | -5768 | 4.97 | 213675 | 37.045 | Si |
| SLU 74 | -98 | -17400 | 9722 | 5.52 | 196034 | 20.164 | Si |
| SLU 74 | 171 | -15110 | -7260 | 4.8 | 217427 | 29.947 | Si |
| SLU 83 | -98 | -17975 | 9842 | 5.71 | 188403 | 19.143 | Si |
| SLU 83 | 171 | -15687 | -7644 | 4.98 | 213385 | 27.915 | Si |
| SLU 60 | -98 | -16413 | 10359 | 5.21 | 207001 | 19.983 | Si |
| SLU 60 | 171 | -14100 | -5261 | 4.48 | 222319 | 42.254 | Si |
| SLU 84 | -98 | -17984 | 9791 | 5.71 | 188281 | 19.23 | Si |
| SLU 84 | 171 | -15678 | -7264 | 4.98 | 213453 | 29.384 | Si |
| SLU 75 | -98 | -17408 | 9671 | 5.53 | 195926 | 20.259 | Si |
| SLU 75 | 171 | -15101 | -6881 | 4.79 | 217482 | 31.607 | Si |

### Verifica a pressoflessione nel piano secondo D.M. 17-01-18 NTC §7.8.2.2.1 in combinazioni sismiche, γM = 2

| Comb. | Quota | N | M | σ0 | Mu | c.s. | Verifica |
|---|---|---|---|---|---|---|---|
| SLV 12 | -98 | -16736 | 180351 | 5.31 | 331058 | 1.836 | Si |
| SLV 12 | 171 | -14299 | -23178 | 4.54 | 314541 | 13.571 | Si |
| SLV 6 | -98 | -7393 | -165735 | 2.35 | 209059 | 1.261 | Si |
| SLV 6 | 171 | -6306 | 14390 | 2 | 184540 | 12.824 | Si |
| SLV 10 | -98 | -7661 | -164861 | 2.43 | 214761 | 1.303 | Si |
| SLV 10 | 171 | -5930 | -8570 | 1.88 | 175569 | 20.487 | Si |
| SLV 5 | -98 | -7393 | -165735 | 2.35 | 209059 | 1.261 | Si |
| SLV 5 | 171 | -6306 | 14390 | 2 | 184540 | 12.824 | Si |
| SLV 11 | -98 | -16736 | 180351 | 5.31 | 331058 | 1.836 | Si |
| SLV 11 | 171 | -14299 | -23178 | 4.54 | 314541 | 13.571 | Si |
| SLD 11 | -98 | -14033 | 80739 | 4.45 | 312078 | 3.865 | Si |
| SLD 11 | 171 | -11940 | -12511 | 3.79 | 288261 | 23.04 | Si |
| SLV 8 | -98 | -16469 | 179477 | 5.23 | 329773 | 1.837 | Si |
| SLV 8 | 171 | -14675 | -218 | 4.66 | 317793 | 1000 | Si |
| SLV 9 | -98 | -7661 | -164861 | 2.43 | 214761 | 1.303 | Si |
| SLV 9 | 171 | -5930 | -8570 | 1.88 | 175569 | 20.487 | Si |
| SLD 12 | -98 | -14033 | 80739 | 4.45 | 312078 | 3.865 | Si |
| SLD 12 | 171 | -11940 | -12511 | 3.79 | 288261 | 23.04 | Si |
| SLV 7 | -98 | -16469 | 179477 | 5.23 | 329773 | 1.837 | Si |
| SLV 7 | 171 | -14675 | -218 | 4.66 | 317793 | 1000 | Si |

### Verifica a taglio nel piano secondo D.M. 17-01-18 (N.T.C.) §7.8.2.2.2 con rottura per scorrimento in combinazioni non sismiche, γM = 3

| Comb. | Quota | N | V par | M | σ0 | σN | l' | fvd | Vt scorr. | Vt fess.diag. | Vt,lim | c.s. | Verifica |
|---|---|---|---|---|---|---|---|---|---|---|---|---|---|
| SLU 82 | -98 | -18006 | 333 | 11075 | | 5.72 | 70 | 1.08 | 3412 | | | 10.24 | Si |
| SLU 82 | 171 | -15649 | 1057 | -5768 | | 4.97 | 70 | 1.08 | 3412 | | | 3.23 | Si |
| SLU 79 | -98 | -17200 | 301 | 7987 | | 5.46 | 70 | 1.08 | 3412 | | | 11.35 | Si |
| SLU 79 | 171 | -14978 | 1098 | -9066 | | 4.75 | 70 | 1.08 | 3412 | | | 3.11 | Si |
| SLU 81 | -98 | -17997 | 334 | 11126 | | 5.71 | 70 | 1.08 | 3412 | | | 10.23 | Si |
| SLU 81 | 171 | -15658 | 1063 | -6148 | | 4.97 | 70 | 1.08 | 3412 | | | 3.21 | Si |
| SLU 80 | -98 | -17208 | 300 | 7936 | | 5.46 | 70 | 1.08 | 3412 | | | 11.36 | Si |
| SLU 80 | 171 | -14969 | 1093 | -8687 | | 4.75 | 70 | 1.08 | 3412 | | | 3.12 | Si |
| SLU 74 | -98 | -17400 | 311 | 9722 | | 5.52 | 70 | 1.08 | 3412 | | | 10.98 | Si |
| SLU 74 | 171 | -15110 | 1065 | -7260 | | 4.8 | 70 | 1.08 | 3412 | | | 3.21 | Si |
| SLU 78 | -98 | -17387 | 304 | 8386 | | 5.52 | 70 | 1.08 | 3412 | | | 11.22 | Si |
| SLU 78 | 171 | -15130 | 1095 | -8377 | | 4.8 | 70 | 1.08 | 3412 | | | 3.12 | Si |
| SLU 77 | -98 | -17378 | 305 | 8437 | | 5.52 | 70 | 1.08 | 3412 | | | 11.21 | Si |
| SLU 77 | 171 | -15139 | 1101 | -8757 | | 4.81 | 70 | 1.08 | 3412 | | | 3.1 | Si |
| SLU 84 | -98 | -17984 | 327 | 9791 | | 5.71 | 70 | 1.08 | 3412 | | | 10.43 | Si |
| SLU 84 | 171 | -15678 | 1093 | -7264 | | 4.98 | 70 | 1.08 | 3412 | | | 3.12 | Si |
| SLU 83 | -98 | -17975 | 327 | 9842 | | 5.71 | 70 | 1.08 | 3412 | | | 10.42 | Si |

| Comb. | Quota | N | V par | M | σ0 | σN | l' | fvd | Vt scorr. | Vt fess.diag. | Vt,lim | c.s. | Verifica |
|---|---|---|---|---|---|---|---|---|---|---|---|---|---|
| SLU 83 | 171 | -15687 | 1099 | -7644 | | 4.98 | 70 | 1.08 | 3412 | | | 3.11 | Si |
| SLU 75 | -98 | -17408 | 310 | 9671 | | 5.53 | 70 | 1.08 | 3412 | | | 10.99 | Si |
| SLU 75 | 171 | -15101 | 1059 | -6881 | | 4.79 | 70 | 1.08 | 3412 | | | 3.22 | Si |

### Verifica a taglio nel piano secondo D.M. 17-01-18 (N.T.C.) §7.8.2.2.2 con rottura per scorrimento in combinazioni sismiche, γM = 2

| Comb. | Quota | N | V par | M | σ0 | σN | l' | fvd | Vt scorr. | Vt fess.diag. | Vt,lim | c.s. | Verifica |
|---|---|---|---|---|---|---|---|---|---|---|---|---|---|
| SLV 9 | -98 | -7661 | -3393 | -164861 | | 4.21 | 40.44 | 1.63 | 2957 | | | 0.87 | No, Vu<V |
| SLV 9 | 171 | -5930 | -1518 | -8570 | | 1.88 | 70 | 1.21 | 3811 | | | 2.51 | Si |
| SLV 12 | -98 | -16736 | 4923 | 180351 | | 5.31 | 70 | 1.63 | 5119 | | | 1.04 | Si |
| SLV 12 | 171 | -14299 | 4747 | -23178 | | 4.54 | 70 | 1.63 | 5119 | | | 1.08 | Si |
| SLV 6 | -98 | -7393 | -4506 | -165735 | | 4.35 | 37.75 | 1.63 | 2760 | | | 0.61 | No, Vu<V |
| SLV 6 | 171 | -6306 | -3297 | 14390 | | 2 | 70 | 1.23 | 3886 | | | 1.18 | Si |
| SLV 7 | -98 | -16469 | 3810 | 179477 | | 5.23 | 70 | 1.63 | 5119 | | | 1.34 | Si |
| SLV 7 | 171 | -14675 | 2967 | -218 | | 4.66 | 70 | 1.63 | 5119 | | | 1.73 | Si |
| SLV 16 | -98 | -13872 | 3311 | 60546 | | 4.4 | 70 | 1.63 | 5119 | | | 1.55 | Si |
| SLV 16 | 171 | -10932 | 4630 | -44851 | | 3.47 | 70 | 1.53 | 4811 | | | 1.04 | Si |
| SLV 15 | -98 | -13872 | 3311 | 60546 | | 4.4 | 70 | 1.63 | 5119 | | | 1.55 | Si |
| SLV 15 | 171 | -10932 | 4630 | -44851 | | 3.47 | 70 | 1.53 | 4811 | | | 1.04 | Si |
| SLV 8 | -98 | -16469 | 3810 | 179477 | | 5.23 | 70 | 1.63 | 5119 | | | 1.34 | Si |
| SLV 8 | 171 | -14675 | 2967 | -218 | | 4.66 | 70 | 1.63 | 5119 | | | 1.73 | Si |
| SLV 5 | -98 | -7393 | -4506 | -165735 | | 4.35 | 37.75 | 1.63 | 2760 | | | 0.61 | No, Vu<V |
| SLV 5 | 171 | -6306 | -3297 | 14390 | | 2 | 70 | 1.23 | 3886 | | | 1.18 | Si |
| SLV 11 | -98 | -16736 | 4923 | 180351 | | 5.31 | 70 | 1.63 | 5119 | | | 1.04 | Si |
| SLV 11 | 171 | -14299 | 4747 | -23178 | | 4.54 | 70 | 1.63 | 5119 | | | 1.08 | Si |
| SLV 10 | -98 | -7661 | -3393 | -164861 | | 4.21 | 40.44 | 1.63 | 2957 | | | 0.87 | No, Vu<V |
| SLV 10 | 171 | -5930 | -1518 | -8570 | | 1.88 | 70 | 1.21 | 3811 | | | 2.51 | Si |

### Verifica a pressoflessione fuori piano D.M. 17-01-18 (N.T.C.)

quota 36.5 Wa 0.08 denominatore 8 γM = 2

| Comb. | fd | Sa | σ0 | N | M | Mc | Coeff.s. | Verifica |
|---|---|---|---|---|---|---|---|---|
| SLV 9 | 14 | 0.25 | 2.49 | -7832 | 4303 | 140366 | 32.62 | Si |
| SLV 10 | 14 | 0.25 | 2.49 | -7832 | 4303 | 140366 | 32.62 | Si |
| SLV 6 | 14 | 0.25 | 2.6 | -8204 | 4303 | 145247 | 33.75 | Si |
| SLV 5 | 14 | 0.25 | 2.6 | -8204 | 4303 | 145247 | 33.75 | Si |
| SLV 13 | 14 | 0.25 | 3.21 | -10109 | 4303 | 167713 | 38.98 | Si |
| SLV 14 | 14 | 0.25 | 3.21 | -10109 | 4303 | 167713 | 38.98 | Si |
| SLV 1 | 14 | 0.25 | 3.6 | -11349 | 4303 | 180055 | 41.84 | Si |
| SLV 2 | 14 | 0.25 | 3.6 | -11349 | 4303 | 180055 | 41.84 | Si |
| SLV 15 | 14 | 0.25 | 3.95 | -12432 | 4303 | 189373 | 44.01 | Si |
| SLV 16 | 14 | 0.25 | 3.95 | -12432 | 4303 | 189373 | 44.01 | Si |

### Verifica dei meccanismi locali di collasso con analisi cinematica lineare

forza di aggancio al piano = 0 quota mezzeria = 36.5 Wa = 0.08 Ta = 0.0269

| Comb. | N top | N base | V orto | α0 | M* | e* | a0* | aLim | Verifica |
|---|---|---|---|---|---|---|---|---|---|
| SLV 8 | -14675 | -16469 | 1842 | 0 | 16.135 | 0.977 | 0 | 417.584 | No |
| SLV 16 | -10932 | -13872 | 1598 | 0 | 12.323 | 0.97 | 0 | 332.581 | No |
| SLV 11 | -14299 | -16736 | 2184 | 0 | 15.752 | 0.977 | 0 | 417.584 | No |
| SLV 7 | -14675 | -16469 | 1842 | 0 | 16.135 | 0.977 | 0 | 417.584 | No |
| SLV 10 | -5930 | -7661 | -632 | 0 | 7.234 | 0.952 | 0 | 417.584 | No |
| SLV 6 | -6306 | -7393 | -974 | 0 | 7.616 | 0.954 | 0 | 417.584 | No |
| SLV 5 | -6306 | -7393 | -974 | 0 | 7.616 | 0.954 | 0 | 417.584 | No |
| SLV 9 | -5930 | -7661 | -632 | 0 | 7.234 | 0.952 | 0 | 417.584 | No |
| SLV 12 | -14299 | -16736 | 2184 | 0 | 15.752 | 0.977 | 0 | 417.584 | No |
| SLV 15 | -10932 | -13872 | 1598 | 0 | 12.323 | 0.97 | 0 | 332.581 | No |

### Tabella dei coefficienti di sicurezza minimi

| Stato limite | Coeff.s. | Comb. | Verifica |
|---|---|---|---|
| PF_SLU | 16.905 | SLU 81 | Si |
| V_SLU | 3.099 | SLU 77 | Si |
| PF_SLV | 1.261 | SLV 5 | Si |
| V_SLV | 0.613 | SLV 5 | No |
| PFFP_SLV | 32.621 | SLV 9 | Si |
| R_SLV | 0 | SLV 5 | No |

## Maschio 6

Verifiche condotte secondo D.M. 17-01-18 (N.T.C.)

### Dati geometrici

| X ini. | Y ini. | X fin. | Y fin. | Quota i. | Quota.s | l | Sp. | h netta | h ini. | h fin. | a | a.s.,sx | a.s.,dx |
|---|---|---|---|---|---|---|---|---|---|---|---|---|---|
| -1961.8 | 207.1 | -1961.8 | 485.1 | L1 | L3 | 278 | 30 | 269 | 269 | 269 | | | |

### Caratteristiche del materiale

(Circolare 7 21-01-19 C8.5.I) Muratura in mattoni pieni e malta di calce LC2_Corti

| fb | fk | fvk0 | fmedio | τ0 | fv0 | μ | ϕ | fv,lim | E | G | FC |
|---|---|---|---|---|---|---|---|---|---|---|---|
| 60 | | | 34.5 | 0.9 | 2 | 0.58 | 0.77 | 3.25 | 32000 | 12800 | 1.2 |

### Verifica a pressoflessione nel piano secondo D.M. 17-01-18 NTC §7.8.2.2.1 in combinazioni non sismiche, γM = 3

| Comb. | Quota | N | M | σ0 | Mu | c.s. | Verifica |
|---|---|---|---|---|---|---|---|
| SLU 80 | -98 | -56989 | -165581 | 6.83 | 1276448 | 7.709 | Si |
| SLU 80 | 102 | -53162 | 13345 | 6.37 | 1606977 | 120.417 | Si |
| SLU 84 | -98 | -58711 | -116715 | 7.04 | 1108192 | 9.495 | Si |
| SLU 84 | 102 | -54884 | 6953 | 6.58 | 1465680 | 210.796 | Si |

| Comb. | Quota | N | M | σ0 | Mu | c.s. | Verifica |
|---|---|---|---|---|---|---|---|
| SLU 77 | -98 | -57541 | -157040 | 6.9 | 1223812 | 7.793 | Si |
| SLU 77 | 102 | -53715 | 5543 | 6.44 | 1562986 | 281.95 | Si |
| SLU 78 | -98 | -57374 | -153468 | 6.88 | 1239925 | 8.079 | Si |
| SLU 78 | 102 | -53547 | 12888 | 6.42 | 1576474 | 122.326 | Si |
| SLU 79 | -98 | -57157 | -169153 | 6.85 | 1260599 | 7.452 | Si |
| SLU 79 | 102 | -53330 | 6001 | 6.39 | 1593753 | 265.576 | Si |
| SLU 37 | -98 | -48727 | -170249 | 5.84 | 1915114 | 11.249 | Si |
| SLU 37 | 102 | -45783 | -14703 | 5.49 | 2075162 | 141.135 | Si |
| SLU 72 | -98 | -50801 | -156292 | 6.09 | 1781042 | 11.396 | Si |
| SLU 72 | 102 | -46974 | 41499 | 5.63 | 2014670 | 48.548 | Si |
| SLU 38 | -98 | -48559 | -166678 | 5.82 | 1925181 | 11.55 | Si |
| SLU 38 | 102 | -45616 | -7359 | 5.47 | 2083209 | 283.069 | Si |
| SLU 83 | -98 | -58879 | -120287 | 7.06 | 1091162 | 9.071 | Si |
| SLU 83 | 102 | -55052 | -391 | 6.6 | 1451275 | 1000 | Si |
| SLU 71 | -98 | -50969 | -159864 | 6.11 | 1769437 | 11.068 | Si |
| SLU 71 | 102 | -47142 | 34155 | 5.65 | 2005691 | 58.724 | Si |

Verifica a pressoflessione nel piano secondo D.M. 17-01-18 NTC §7.8.2.2.1 in combinazioni sismiche, γM = 2

| Comb. | Quota | N | M | σ0 | Mu | c.s. | Verifica |
|---|---|---|---|---|---|---|---|
| SLV 5 | -98 | -37561 | -2176862 | 4.5 | 3296567 | 1.514 | Si |
| SLV 5 | 102 | -34729 | 612138 | 4.16 | 3182165 | 5.198 | Si |
| SLV 9 | -98 | -36230 | -2444156 | 4.34 | 3245533 | 1.328 | Si |
| SLV 9 | 102 | -33382 | 853608 | 4 | 3120071 | 3.655 | Si |
| SLV 6 | -98 | -37561 | -2176862 | 4.5 | 3296567 | 1.514 | Si |
| SLV 6 | 102 | -34729 | 612138 | 4.16 | 3182165 | 5.198 | Si |
| SLV 10 | -98 | -36230 | -2444156 | 4.34 | 3245533 | 1.328 | Si |
| SLV 10 | 102 | -33382 | 853608 | 4 | 3120071 | 3.655 | Si |
| SLV 8 | -98 | -40277 | 2367596 | 4.83 | 3385728 | 1.43 | Si |
| SLV 8 | 102 | -37238 | -790623 | 4.46 | 3284629 | 4.154 | Si |
| SLV 14 | -98 | -35628 | -1165439 | 4.27 | 3220859 | 2.764 | Si |
| SLV 14 | 102 | -32688 | 644356 | 3.92 | 3086179 | 4.79 | Si |
| SLV 11 | -98 | -38946 | 2100302 | 4.67 | 3344555 | 1.592 | Si |
| SLV 11 | 102 | -35891 | -549153 | 4.3 | 3231755 | 5.885 | Si |
| SLV 12 | -98 | -38946 | 2100302 | 4.67 | 3344555 | 1.592 | Si |
| SLV 12 | 102 | -35891 | -549153 | 4.3 | 3231755 | 5.885 | Si |
| SLV 7 | -98 | -40277 | 2367596 | 4.83 | 3385728 | 1.43 | Si |
| SLV 7 | 102 | -37238 | -790623 | 4.46 | 3284629 | 4.154 | Si |
| SLV 13 | -98 | -35628 | -1165439 | 4.27 | 3220859 | 2.764 | Si |
| SLV 13 | 102 | -32688 | 644356 | 3.92 | 3086179 | 4.79 | Si |

Verifica a taglio nel piano secondo D.M. 17-01-18 (N.T.C.) §7.8.2.2.2 con rottura per scorrimento in combinazioni non sismiche, γM = 3

| Comb. | Quota | N | V par | M | σ0 | σN | l' | fvd | Vt scorr. | Vt fess.diag. | Vt,lim | c.s. | Verifica |
|---|---|---|---|---|---|---|---|---|---|---|---|---|---|
| SLU 71 | -98 | -50969 | -970 | -159864 | | 6.11 | 278 | 1.08 | 9035 | | | 9.32 | Si |
| SLU 71 | 102 | -47142 | -970 | 34155 | | 5.65 | 278 | 1.08 | 9035 | | | 9.32 | Si |
| SLU 80 | -98 | -56989 | -894 | -165581 | | 6.83 | 278 | 1.08 | 9035 | | | 10.1 | Si |
| SLU 80 | 102 | -53162 | -894 | 13345 | | 6.37 | 278 | 1.08 | 9035 | | | 10.1 | Si |
| SLU 49 | -98 | -45316 | -892 | -116682 | | 5.43 | 278 | 1.08 | 9035 | | | 10.13 | Si |
| SLU 49 | 102 | -41489 | -892 | 61676 | | 4.97 | 278 | 1.08 | 9035 | | | 10.13 | Si |
| SLU 69 | -98 | -51353 | -907 | -147751 | | 6.16 | 278 | 1.08 | 9035 | | | 9.96 | Si |
| SLU 69 | 102 | -47527 | -907 | 33697 | | 5.7 | 278 | 1.08 | 9035 | | | 9.96 | Si |
| SLU 70 | -98 | -51186 | -926 | -144179 | | 6.14 | 278 | 1.08 | 9035 | | | 9.76 | Si |
| SLU 70 | 102 | -47359 | -926 | 41041 | | 5.68 | 278 | 1.08 | 9035 | | | 9.76 | Si |
| SLU 30 | -98 | -42371 | -891 | -157388 | | 5.08 | 278 | 1.08 | 9035 | | | 10.14 | Si |
| SLU 30 | 102 | -39428 | -891 | 20794 | | 4.73 | 278 | 1.08 | 9035 | | | 10.14 | Si |
| SLU 51 | -98 | -44931 | -954 | -128795 | | 5.39 | 278 | 1.08 | 9035 | | | 9.47 | Si |
| SLU 51 | 102 | -41104 | -954 | 62133 | | 4.93 | 278 | 1.08 | 9035 | | | 9.47 | Si |
| SLU 72 | -98 | -50801 | -989 | -156292 | | 6.09 | 278 | 1.08 | 9035 | | | 9.14 | Si |
| SLU 72 | 102 | -46974 | -989 | 41499 | | 5.63 | 278 | 1.08 | 9035 | | | 9.14 | Si |
| SLU 79 | -98 | -57157 | -876 | -169153 | | 6.85 | 278 | 1.08 | 9035 | | | 10.32 | Si |
| SLU 79 | 102 | -53330 | -876 | 6001 | | 6.39 | 278 | 1.08 | 9035 | | | 10.32 | Si |
| SLU 50 | -98 | -45099 | -936 | -132367 | | 5.41 | 278 | 1.08 | 9035 | | | 9.66 | Si |
| SLU 50 | 102 | -41272 | -936 | 54789 | | 4.95 | 278 | 1.08 | 9035 | | | 9.66 | Si |

Verifica a taglio nel piano secondo D.M. 17-01-18 (N.T.C.) §7.8.2.2.2 con rottura per scorrimento in combinazioni sismiche, γM = 2

| Comb. | Quota | N | V par | M | σ0 | σN | l' | fvd | Vt scorr. | Vt fess.diag. | Vt,lim | c.s. | Verifica |
|---|---|---|---|---|---|---|---|---|---|---|---|---|---|
| SLV 7 | -98 | -40277 | 15677 | 2367596 | | 5.58 | 240.65 | 1.63 | 11732 | | | 0.75 | No, Vu<V |
| SLV 7 | 102 | -37238 | 15296 | -790623 | | 4.46 | 278 | 1.63 | 13552 | | | 0.89 | No, Vu<V |
| SLV 11 | -98 | -38946 | 13354 | 2100302 | | 5.09 | 255.21 | 1.63 | 12442 | | | 0.93 | No, Vu<V |
| SLV 11 | 102 | -35891 | 12914 | -549153 | | 4.3 | 278 | 1.63 | 13552 | | | 1.05 | Si |
| SLV 6 | -98 | -37561 | -14051 | -2176862 | | 5.15 | 243.13 | 1.63 | 11853 | | | 0.84 | No, Vu<V |
| SLV 6 | 102 | -34729 | -13611 | 612138 | | 4.16 | 278 | 1.63 | 13552 | | | 1 | No, Vu<V |
| SLV 9 | -98 | -36230 | -16375 | -2444156 | | 5.63 | 214.61 | 1.63 | 10462 | | | 0.64 | No, Vu<V |
| SLV 9 | 102 | -33382 | -15993 | 853608 | | 4 | 278 | 1.63 | 13552 | | | 0.85 | No, Vu<V |
| SLV 8 | -98 | -40277 | 15677 | 2367596 | | 5.58 | 240.65 | 1.63 | 11732 | | | 0.75 | No, Vu<V |
| SLV 8 | 102 | -37238 | 15296 | -790623 | | 4.46 | 278 | 1.63 | 13552 | | | 0.89 | No, Vu<V |
| SLV 14 | -98 | -35628 | -8680 | -1165439 | | 4.27 | 278 | 1.63 | 13552 | | | 1.56 | Si |
| SLV 14 | 102 | -32688 | -8655 | 644356 | | 3.92 | 278 | 1.62 | 13488 | | | 1.56 | Si |
| SLV 12 | -98 | -38946 | 13354 | 2100302 | | 5.09 | 255.21 | 1.63 | 12442 | | | 0.93 | No, Vu<V |
| SLV 12 | 102 | -35891 | 12914 | -549153 | | 4.3 | 278 | 1.63 | 13552 | | | 1.05 | Si |
| SLV 10 | -98 | -36230 | -16375 | -2444156 | | 5.63 | 214.61 | 1.63 | 10462 | | | 0.64 | No, Vu<V |
| SLV 10 | 102 | -33382 | -15993 | 853608 | | 4 | 278 | 1.63 | 13552 | | | 0.85 | No, Vu<V |
| SLV 13 | -98 | -35628 | -8680 | -1165439 | | 4.27 | 278 | 1.63 | 13552 | | | 1.56 | Si |
| SLV 13 | 102 | -32688 | -8655 | 644356 | | 3.92 | 278 | 1.62 | 13488 | | | 1.56 | Si |
| SLV 5 | -98 | -37561 | -14051 | -2176862 | | 5.15 | 243.13 | 1.63 | 11853 | | | 0.84 | No, Vu<V |
| SLV 5 | 102 | -34729 | -13611 | 612138 | | 4.16 | 278 | 1.63 | 13552 | | | 1 | No, Vu<V |

### Verifica a pressoflessione fuori piano D.M. 17-01-18 (N.T.C.)

quota 36.5 Wa 0.05 denominatore 8 γM = 2

| Comb. | fd | Sa | σ0 | N | M | Mc | Coeff.s. | Verifica |
|---|---|---|---|---|---|---|---|---|
| SLV 13 | 14 | 0.25 | 4 | -33388 | 11393 | 336729 | 29.56 | Si |
| SLV 14 | 14 | 0.25 | 4 | -33388 | 11393 | 336729 | 29.56 | Si |
| SLV 9 | 14 | 0.25 | 4.02 | -33515 | 11393 | 337388 | 29.61 | Si |
| SLV 10 | 14 | 0.25 | 4.02 | -33515 | 11393 | 337388 | 29.61 | Si |
| SLV 16 | 14 | 0.25 | 4.16 | -34727 | 11393 | 343392 | 30.14 | Si |
| SLV 15 | 14 | 0.25 | 4.16 | -34727 | 11393 | 343392 | 30.14 | Si |
| SLV 6 | 14 | 0.25 | 4.19 | -34965 | 11393 | 344517 | 30.24 | Si |
| SLV 5 | 14 | 0.25 | 4.19 | -34965 | 11393 | 344517 | 30.24 | Si |
| SLV 12 | 14 | 0.25 | 4.55 | -37981 | 11393 | 357374 | 31.37 | Si |
| SLV 11 | 14 | 0.25 | 4.55 | -37981 | 11393 | 357374 | 31.37 | Si |

### Verifica dei meccanismi locali di collasso con analisi cinematica lineare

forza di aggancio al piano = 0 quota mezzeria = 36.5 Wa = 0.05 Ta = 0.0403

| Comb. | N top | N base | V orto | α0 | M* | e* | a0* | aLim | Verifica |
|---|---|---|---|---|---|---|---|---|---|
| SLV 7 | -29797 | -40277 | 119 | 0.056 | 33.495 | 0.971 | 83.133 | 562.86 | No |
| SLV 8 | -29797 | -40277 | 119 | 0.056 | 33.495 | 0.971 | 83.133 | 562.86 | No |
| SLV 10 | -24786 | -36230 | -116 | 0.056 | 28.394 | 0.966 | 83.648 | 562.86 | No |
| SLV 9 | -24786 | -36230 | -116 | 0.056 | 28.394 | 0.966 | 83.648 | 562.86 | No |
| SLV 12 | -28917 | -38946 | 66 | 0.057 | 32.599 | 0.97 | 85.752 | 562.86 | No |
| SLV 11 | -28917 | -38946 | 66 | 0.057 | 32.599 | 0.97 | 85.752 | 562.86 | No |
| SLV 5 | -25666 | -37561 | -63 | 0.058 | 29.29 | 0.967 | 86.448 | 562.86 | No |
| SLV 6 | -25666 | -37561 | -63 | 0.058 | 29.29 | 0.967 | 86.448 | 562.86 | No |
| SLV 3 | -29378 | -40879 | 117 | 0.056 | 33.069 | 0.971 | 83.261 | 392.678 | No |
| SLV 4 | -29378 | -40879 | 117 | 0.056 | 33.069 | 0.971 | 83.261 | 392.678 | No |

### Tabella dei coefficienti di sicurezza minimi

| Stato limite | Coeff.s. | Comb. | Verifica |
|---|---|---|---|
| PF_SLU | 7.452 | SLU 79 | Si |
| V_SLU | 9.138 | SLU 72 | Si |
| PF_SLV | 1.328 | SLV 9 | Si |
| V_SLV | 0.639 | SLV 9 | No |
| PFFP_SLV | 29.557 | SLV 13 | Si |
| R_SLV | 0.148 | SLV 7 | No |

## Maschio 7

Verifiche condotte secondo D.M. 17-01-18 (N.T.C.)

### Dati geometrici

| X ini. | Y ini. | X fin. | Y fin. | Quota i. | Quota.s | l | Sp. | h netta | h ini. | h fin. | a | a.s.,sx | a.s.,dx |
|---|---|---|---|---|---|---|---|---|---|---|---|---|---|
| -1961.8 | 565.1 | -1961.8 | 610.1 | L1 | L3 | 45 | 30 | 269 | 269 | 269 | | | |

### Caratteristiche del materiale

(Circolare 7 21-01-19 C8.5.I) Muratura in mattoni pieni e malta di calce LC2_Corti

| fb | fk | fvk0 | fmedio | τ0 | fv0 | μ | ϕ | fv,lim | E | G | FC |
|---|---|---|---|---|---|---|---|---|---|---|---|
| 60 | | | 34.5 | 0.9 | 2 | 0.58 | 0.77 | 3.25 | 32000 | 12800 | 1.2 |

### Verifica a pressoflessione nel piano secondo D.M. 17-01-18 NTC §7.8.2.2.1 in combinazioni non sismiche, γM = 3

| Comb. | Quota | N | M | σ0 | Mu | c.s. | Verifica |
|---|---|---|---|---|---|---|---|
| SLU 74 | -98 | -8053 | 8621 | 5.97 | 48502 | 5.626 | Si |
| SLU 74 | 102 | -10661 | -60232 | 7.9 | 7326 | 0.122 | No, M>Mu |
| SLU 77 | -98 | -8087 | 8342 | 5.99 | 48149 | 5.772 | Si |
| SLU 77 | 102 | -10700 | -60000 | 7.93 | 6491 | 0.108 | No, M>Mu |
| SLU 81 | -98 | -8300 | 9158 | 6.15 | 45804 | 5.002 | Si |
| SLU 81 | 102 | -11009 | -62684 | 8.15 | 0 | 0 | No, Rottura per schiacciamento |
| SLU 80 | -98 | -8020 | 8111 | 5.94 | 48850 | 6.023 | Si |
| SLU 80 | 102 | -10583 | -59169 | 7.84 | 8968 | 0.152 | No, M>Mu |
| SLU 82 | -98 | -8304 | 9111 | 6.15 | 45756 | 5.022 | Si |
| SLU 82 | 102 | -11002 | -62626 | 8.15 | 0 | 0 | No, Rottura per schiacciamento |
| SLU 79 | -98 | -8016 | 8158 | 5.94 | 48893 | 5.993 | Si |
| SLU 79 | 102 | -10590 | -59228 | 7.84 | 8815 | 0.149 | No, M>Mu |
| SLU 75 | -98 | -8057 | 8574 | 5.97 | 48459 | 5.652 | Si |
| SLU 75 | 102 | -10654 | -60173 | 7.89 | 7480 | 0.124 | No, M>Mu |
| SLU 78 | -98 | -8091 | 8296 | 5.99 | 48105 | 5.799 | Si |
| SLU 78 | 102 | -10693 | -59942 | 7.92 | 6647 | 0.111 | No, M>Mu |
| SLU 83 | -98 | -8333 | 8879 | 6.17 | 45417 | 5.115 | Si |
| SLU 83 | 102 | -11048 | -62453 | 8.18 | 0 | 0 | No, Rottura per schiacciamento |
| SLU 84 | -98 | -8337 | 8833 | 6.18 | 45369 | 5.137 | Si |
| SLU 84 | 102 | -11041 | -62395 | 8.18 | 0 | 0 | No, Rottura per schiacciamento |

### Verifica a pressoflessione nel piano secondo D.M. 17-01-18 NTC §7.8.2.2.1 in combinazioni sismiche, γM = 2

| Comb. | Quota | N | M | σ0 | Mu | c.s. | Verifica |
|---|---|---|---|---|---|---|---|
| SLV 8 | -98 | -4779 | 57214 | 3.54 | 76373 | 1.335 | Si |
| SLV 8 | 102 | -10867 | -90538 | 8.05 | 83428 | 0.921 | No, M>Mu |
| SLV 15 | -98 | -6612 | 26868 | 4.9 | 89135 | 3.318 | Si |
| SLV 15 | 102 | -9459 | -67978 | 7.01 | 90786 | 1.336 | Si |
| SLV 12 | -98 | -5489 | 60238 | 4.07 | 82409 | 1.368 | Si |

| Comb. | Quota | N | M | σ0 | Mu | c.s. | Verifica |
|---|---|---|---|---|---|---|---|
| SLV 12 | 102 | -11471 | -97142 | 8.5 | 78618 | 0.809 | No, M>Mu |
| SLD 11 | -98 | -5520 | 28796 | 4.09 | 82636 | 2.87 | Si |
| SLD 11 | 102 | -9031 | -64813 | 6.69 | 91949 | 1.419 | Si |
| SLV 16 | -98 | -6612 | 26868 | 4.9 | 89135 | 3.318 | Si |
| SLV 16 | 102 | -9459 | -67978 | 7.01 | 90786 | 1.336 | Si |
| SLD 7 | -98 | -5218 | 27463 | 3.86 | 80263 | 2.923 | Si |
| SLD 7 | 102 | -8777 | -61999 | 6.5 | 92404 | 1.49 | Si |
| SLD 8 | -98 | -5218 | 27463 | 3.86 | 80263 | 2.923 | Si |
| SLD 8 | 102 | -8777 | -61999 | 6.5 | 92404 | 1.49 | Si |
| SLD 12 | -98 | -5520 | 28796 | 4.09 | 82636 | 2.87 | Si |
| SLD 12 | 102 | -9031 | -64813 | 6.69 | 91949 | 1.419 | Si |
| SLV 7 | -98 | -4779 | 57214 | 3.54 | 76373 | 1.335 | Si |
| SLV 7 | 102 | -10867 | -90538 | 8.05 | 83428 | 0.921 | No, M>Mu |
| SLV 11 | -98 | -5489 | 60238 | 4.07 | 82409 | 1.368 | Si |
| SLV 11 | 102 | -11471 | -97142 | 8.5 | 78618 | 0.809 | No, M>Mu |

### Verifica a taglio nel piano secondo D.M. 17-01-18 (N.T.C.) §7.8.2.2.2 con rottura per scorrimento in combinazioni non sismiche, γM = 3

| Comb. | Quota | N | V par | M | σ0 | σN | l' | fvd | Vt scorr. | Vt fess.diag. | Vt,lim | c.s. | Verifica |
|---|---|---|---|---|---|---|---|---|---|---|---|---|---|
| SLU 74 | -98 | -8053 | 113 | 8621 | | 5.97 | 45 | 1.08 | 1462 | | | 12.93 | Si |
| SLU 74 | 102 | -10661 | 1102 | -60232 | | 7.9 | 45 | 1.08 | 1462 | | | 1.33 | Si |
| SLU 75 | -98 | -8057 | 112 | 8574 | | 5.97 | 45 | 1.08 | 1462 | | | 13.08 | Si |
| SLU 75 | 102 | -10654 | 1102 | -60173 | | 7.89 | 45 | 1.08 | 1462 | | | 1.33 | Si |
| SLU 78 | -98 | -8091 | 111 | 8296 | | 5.99 | 45 | 1.08 | 1462 | | | 13.21 | Si |
| SLU 78 | 102 | -10693 | 1091 | -59942 | | 7.92 | 45 | 1.08 | 1462 | | | 1.34 | Si |
| SLU 76 | -98 | -7989 | 109 | 8358 | | 5.92 | 45 | 1.08 | 1462 | | | 13.41 | Si |
| SLU 76 | 102 | -10538 | 1086 | -59362 | | 7.81 | 45 | 1.08 | 1462 | | | 1.35 | Si |
| SLU 83 | -98 | -8333 | 117 | 8879 | | 6.17 | 45 | 1.08 | 1462 | | | 12.49 | Si |
| SLU 83 | 102 | -11048 | 1142 | -62453 | | 8.18 | 45 | 1.08 | 1462 | | | 1.28 | Si |
| SLU 82 | -98 | -8304 | 117 | 9111 | | 6.15 | 45 | 1.08 | 1462 | | | 12.5 | Si |
| SLU 82 | 102 | -11002 | 1154 | -62626 | | 8.15 | 45 | 1.08 | 1462 | | | 1.27 | Si |
| SLU 81 | -98 | -8300 | 118 | 9158 | | 6.15 | 45 | 1.08 | 1462 | | | 12.37 | Si |
| SLU 81 | 102 | -11009 | 1154 | -62684 | | 8.15 | 45 | 1.08 | 1462 | | | 1.27 | Si |
| SLU 73 | -98 | -7955 | 110 | 8637 | | 5.89 | 45 | 1.08 | 1462 | | | 13.27 | Si |
| SLU 73 | 102 | -10499 | 1098 | -59593 | | 7.78 | 45 | 1.08 | 1462 | | | 1.33 | Si |
| SLU 84 | -98 | -8337 | 116 | 8833 | | 6.18 | 45 | 1.08 | 1462 | | | 12.63 | Si |
| SLU 84 | 102 | -11041 | 1142 | -62395 | | 8.18 | 45 | 1.08 | 1462 | | | 1.28 | Si |
| SLU 77 | -98 | -8087 | 112 | 8342 | | 5.99 | 45 | 1.08 | 1462 | | | 13.07 | Si |
| SLU 77 | 102 | -10700 | 1090 | -60000 | | 7.93 | 45 | 1.08 | 1462 | | | 1.34 | Si |

### Verifica a taglio nel piano secondo D.M. 17-01-18 (N.T.C.) §7.8.2.2.2 con rottura per scorrimento in combinazioni sismiche, γM = 2

| Comb. | Quota | N | V par | M | σ0 | σN | l' | fvd | Vt scorr. | Vt fess.diag. | Vt,lim | c.s. | Verifica |
|---|---|---|---|---|---|---|---|---|---|---|---|---|---|
| SLV 11 | -98 | -5489 | 714 | 60238 | | 5.29 | 34.58 | 1.63 | 1686 | | | 2.36 | Si |
| SLV 11 | 102 | -11471 | 2002 | -97142 | | 9.08 | 42.09 | 1.63 | 2052 | | | 1.03 | Si |
| SLV 7 | -98 | -4779 | 662 | 57214 | | 5.04 | 31.58 | 1.63 | 1540 | | | 2.33 | Si |
| SLV 7 | 102 | -10867 | 2179 | -90538 | | 8.52 | 42.51 | 1.63 | 2072 | | | 0.95 | No, Vu<V |
| SLV 4 | -98 | -4243 | 173 | 16789 | | 3.14 | 45 | 1.46 | 1974 | | | 11.42 | Si |
| SLV 4 | 102 | -7447 | 1452 | -45963 | | 5.52 | 45 | 1.63 | 2194 | | | 1.51 | Si |
| SLD 8 | -98 | -5218 | 323 | 27463 | | 3.86 | 45 | 1.61 | 2169 | | | 6.72 | Si |
| SLD 8 | 102 | -8777 | 1359 | -61999 | | 6.5 | 45 | 1.63 | 2194 | | | 1.61 | Si |
| SLD 11 | -98 | -5520 | 346 | 28796 | | 4.09 | 45 | 1.63 | 2194 | | | 6.34 | Si |
| SLD 11 | 102 | -9031 | 1282 | -64813 | | 6.69 | 45 | 1.63 | 2194 | | | 1.71 | Si |
| SLV 8 | -98 | -4779 | 662 | 57214 | | 5.04 | 31.58 | 1.63 | 1540 | | | 2.33 | Si |
| SLV 8 | 102 | -10867 | 2179 | -90538 | | 8.52 | 42.51 | 1.63 | 2072 | | | 0.95 | No, Vu<V |
| SLV 12 | -98 | -5489 | 714 | 60238 | | 5.29 | 34.58 | 1.63 | 1686 | | | 2.36 | Si |
| SLV 12 | 102 | -11471 | 2002 | -97142 | | 9.08 | 42.09 | 1.63 | 2052 | | | 1.03 | Si |
| SLV 3 | -98 | -4243 | 173 | 16789 | | 3.14 | 45 | 1.46 | 1974 | | | 11.42 | Si |
| SLV 3 | 102 | -7447 | 1452 | -45963 | | 5.52 | 45 | 1.63 | 2194 | | | 1.51 | Si |
| SLD 7 | -98 | -5218 | 323 | 27463 | | 3.86 | 45 | 1.61 | 2169 | | | 6.72 | Si |
| SLD 7 | 102 | -8777 | 1359 | -61999 | | 6.5 | 45 | 1.63 | 2194 | | | 1.61 | Si |
| SLD 12 | -98 | -5520 | 346 | 28796 | | 4.09 | 45 | 1.63 | 2194 | | | 6.34 | Si |
| SLD 12 | 102 | -9031 | 1282 | -64813 | | 6.69 | 45 | 1.63 | 2194 | | | 1.71 | Si |

### Verifica a pressoflessione fuori piano D.M. 17-01-18 (N.T.C.)

quota 36.5 Wa 0.05 denominatore 8 γM = 2

| Comb. | fd | Sa | σ0 | N | M | Mc | Coeff.s. | Verifica |
|---|---|---|---|---|---|---|---|---|
| SLV 5 | 14 | 0.25 | 3.02 | -4071 | 1844 | 45995 | 24.94 | Si |
| SLV 6 | 14 | 0.25 | 3.02 | -4071 | 1844 | 45995 | 24.94 | Si |
| SLV 9 | 14 | 0.25 | 3.38 | -4562 | 1844 | 49502 | 26.84 | Si |
| SLV 10 | 14 | 0.25 | 3.38 | -4562 | 1844 | 49502 | 26.84 | Si |
| SLV 2 | 14 | 0.25 | 3.81 | -5147 | 1844 | 53112 | 28.8 | Si |
| SLV 1 | 14 | 0.25 | 3.81 | -5147 | 1844 | 53112 | 28.8 | Si |
| SLV 4 | 14 | 0.25 | 4.86 | -6559 | 1844 | 59264 | 32.14 | Si |
| SLV 3 | 14 | 0.25 | 4.86 | -6559 | 1844 | 59264 | 32.14 | Si |
| SLV 14 | 14 | 0.25 | 5.02 | -6782 | 1844 | 59903 | 32.48 | Si |
| SLV 13 | 14 | 0.25 | 5.02 | -6782 | 1844 | 59903 | 32.48 | Si |

### Verifica dei meccanismi locali di collasso con analisi cinematica lineare

forza di aggancio al piano = 0 quota mezzeria = 36.5 Wa = 0.05 Ta = 0.0403

| Comb. | N top | N base | V orto | α0 | M* | e* | a0* | aLim | Verifica |
|---|---|---|---|---|---|---|---|---|---|
| SLV 8 | -9385 | -4779 | -87 | 0.049 | 10.07 | 0.984 | 71.885 | 562.86 | No |
| SLV 7 | -9385 | -4779 | -87 | 0.049 | 10.07 | 0.984 | 71.885 | 562.86 | No |
| SLV 11 | -9720 | -5489 | -72 | 0.05 | 10.411 | 0.985 | 74.483 | 562.86 | No |
| SLV 12 | -9720 | -5489 | -72 | 0.05 | 10.411 | 0.985 | 74.483 | 562.86 | No |
| SLV 6 | -3150 | -5616 | -23 | 0.054 | 3.719 | 0.959 | 82.577 | 562.86 | No |
| SLV 5 | -3150 | -5616 | -23 | 0.054 | 3.719 | 0.959 | 82.577 | 562.86 | No |
| SLV 10 | -3484 | -6327 | -7 | 0.059 | 4.059 | 0.962 | 88.643 | 562.86 | No |
| SLV 9 | -3484 | -6327 | -7 | 0.059 | 4.059 | 0.962 | 88.643 | 562.86 | No |

| Comb. | N top | N base | V orto | α0 | M* | e* | a0* | aLim | Verifica |
|---|---|---|---|---|---|---|---|---|---|
| SLV 3 | -6813 | -4243 | -83 | 0.047 | 7.448 | 0.979 | 69.403 | 392.678 | No |
| SLV 4 | -6813 | -4243 | -83 | 0.047 | 7.448 | 0.979 | 69.403 | 392.678 | No |

### Tabella dei coefficienti di sicurezza minimi

| Stato limite | Coeff.s. | Comb. | Verifica |
|---|---|---|---|
| PF_SLU | 0 | SLU 81 | No |
| V_SLU | 1.267 | SLU 82 | Si |
| PF_SLV | 0.809 | SLV 11 | No |
| V_SLV | 0.951 | SLV 7 | No |
| PFFP_SLV | 24.941 | SLV 5 | Si |
| R_SLV | 0.128 | SLV 7 | No |

## Maschio 8

Verifiche condotte secondo D.M. 17-01-18 (N.T.C.)

### Dati geometrici

| X ini. | Y ini. | X fin. | Y fin. | Quota i. | Quota.s | l | Sp. | h netta | h ini. | h fin. | a | a.s.,sx | a.s.,dx |
|---|---|---|---|---|---|---|---|---|---|---|---|---|---|
| -2254.3 | -328.4 | -2465.3 | -328.4 | L1 | L3 | 211 | 45 | 269 | 269 | 269 | | | |

### Caratteristiche del materiale

(Circolare 7 21-01-19 C8.5.I) Muratura in mattoni pieni e malta di calce LC2_Corti

| fb | fk | fvk0 | fmedio | τ0 | fv0 | μ | ϕ | fv,lim | E | G | FC |
|---|---|---|---|---|---|---|---|---|---|---|---|
| 60 | | | 34.5 | 0.9 | 2 | 0.58 | 0.77 | 3.25 | 32000 | 12800 | 1.2 |

### Verifica a pressoflessione nel piano secondo D.M. 17-01-18 NTC §7.8.2.2.1 in combinazioni non sismiche, γM = 3

| Comb. | Quota | N | M | σ0 | Mu | c.s. | Verifica |
|---|---|---|---|---|---|---|---|
| SLU 26 | 102 | -20699 | 378787 | 2.18 | 1599309 | 4.222 | Si |
| SLU 26 | 142 | -18682 | 341532 | 1.97 | 1494859 | 4.377 | Si |
| SLU 70 | 102 | -25919 | 428692 | 2.73 | 1818124 | 4.241 | Si |
| SLU 70 | 142 | -23701 | 356958 | 2.5 | 1734235 | 4.858 | Si |
| SLU 47 | 102 | -22265 | 411908 | 2.34 | 1672776 | 4.061 | Si |
| SLU 47 | 142 | -19931 | 372090 | 2.1 | 1560867 | 4.195 | Si |
| SLU 65 | 102 | -24485 | 416876 | 2.58 | 1765395 | 4.235 | Si |
| SLU 65 | 142 | -22112 | 372980 | 2.33 | 1665883 | 4.466 | Si |
| SLU 68 | 102 | -25057 | 440062 | 2.64 | 1787108 | 4.061 | Si |
| SLU 68 | 142 | -22655 | 389564 | 2.39 | 1689998 | 4.338 | Si |
| SLU 2 | 102 | -17334 | 327448 | 1.83 | 1418901 | 4.333 | Si |
| SLU 2 | 142 | -15415 | 307475 | 1.62 | 1302181 | 4.235 | Si |
| SLU 44 | 102 | -21693 | 388722 | 2.28 | 1646703 | 4.236 | Si |
| SLU 44 | 142 | -19388 | 355506 | 2.04 | 1532721 | 4.311 | Si |
| SLU 5 | 102 | -17907 | 350633 | 1.89 | 1451781 | 4.14 | Si |
| SLU 5 | 142 | -15958 | 324058 | 1.68 | 1336209 | 4.123 | Si |
| SLU 72 | 102 | -25783 | 426838 | 2.72 | 1813370 | 4.248 | Si |
| SLU 72 | 142 | -23573 | 355188 | 2.48 | 1728999 | 4.868 | Si |
| SLU 76 | 102 | -27967 | 447228 | 2.95 | 1883652 | 4.212 | Si |
| SLU 76 | 142 | -25513 | 390821 | 2.69 | 1803776 | 4.615 | Si |

### Verifica a pressoflessione nel piano secondo D.M. 17-01-18 NTC §7.8.2.2.1 in combinazioni sismiche, γM = 2

| Comb. | Quota | N | M | σ0 | Mu | c.s. | Verifica |
|---|---|---|---|---|---|---|---|
| SLV 8 | 102 | -7084 | 286237 | 0.75 | 701750 | 2.452 | Si |
| SLV 8 | 142 | -2816 | 6462 | 0.3 | 289896 | 44.863 | Si |
| SLV 12 | 102 | -3327 | -112049 | 0.35 | 340977 | 3.043 | Si |
| SLV 12 | 142 | 907 | -198020 | 0 | 0 | 0 | No, Trazione |
| SLV 4 | 102 | -21367 | 862498 | 2.25 | 1839041 | 2.132 | Si |
| SLV 4 | 142 | -19058 | 441868 | 2.01 | 1680341 | 3.803 | Si |
| SLV 1 | 102 | -29852 | 958151 | 3.14 | 2339034 | 2.441 | Si |
| SLV 1 | 142 | -29256 | 610592 | 3.08 | 2308182 | 3.78 | Si |
| SLV 2 | 102 | -29852 | 958151 | 3.14 | 2339034 | 2.441 | Si |
| SLV 2 | 142 | -29256 | 610592 | 3.08 | 2308182 | 3.78 | Si |
| SLV 11 | 102 | -3327 | -112049 | 0.35 | 340977 | 3.043 | Si |
| SLV 11 | 142 | 907 | -198020 | 0 | 0 | 0 | No, Trazione |
| SLV 16 | 102 | -8844 | -465121 | 0.93 | 861927 | 1.853 | Si |
| SLV 16 | 142 | -6646 | -239737 | 0.7 | 660966 | 2.757 | Si |
| SLV 3 | 102 | -21367 | 862498 | 2.25 | 1839041 | 2.132 | Si |
| SLV 3 | 142 | -19058 | 441868 | 2.01 | 1680341 | 3.803 | Si |
| SLV 7 | 102 | -7084 | 286237 | 0.75 | 701750 | 2.452 | Si |
| SLV 7 | 142 | -2816 | 6462 | 0.3 | 289896 | 44.863 | Si |
| SLV 15 | 102 | -8844 | -465121 | 0.93 | 861927 | 1.853 | Si |
| SLV 15 | 142 | -6646 | -239737 | 0.7 | 660966 | 2.757 | Si |

### Verifica a taglio nel piano secondo D.M. 17-01-18 (N.T.C.) §7.8.2.2.2 con rottura per scorrimento in combinazioni non sismiche, γM = 3

| Comb. | Quota | N | V par | M | σ0 | σN | l' | fvd | Vt scorr. | Vt fess.diag. | Vt,lim | c.s. | Verifica |
|---|---|---|---|---|---|---|---|---|---|---|---|---|---|
| SLU 23 | 102 | -20126 | -2809 | 355602 | | 2.12 | 211 | 0.84 | 7958 | | | 2.83 | Si |
| SLU 23 | 142 | -18139 | -2565 | 324948 | | 1.91 | 211 | 0.81 | 7694 | | | 3 | Si |
| SLU 5 | 102 | -17907 | -2804 | 350633 | | 1.89 | 211 | 0.81 | 7663 | | | 2.73 | Si |
| SLU 5 | 142 | -15958 | -2580 | 324058 | | 1.68 | 211 | 0.78 | 7403 | | | 2.87 | Si |
| SLU 10 | 102 | -20244 | -2882 | 334614 | | 2.13 | 211 | 0.84 | 7974 | | | 2.77 | Si |
| SLU 10 | 142 | -18274 | -2642 | 308732 | | 1.92 | 211 | 0.81 | 7712 | | | 2.92 | Si |
| SLU 13 | 102 | -20817 | -2799 | 357799 | | 2.19 | 211 | 0.85 | 8051 | | | 2.88 | Si |
| SLU 13 | 142 | -18817 | -2549 | 325315 | | 1.98 | 211 | 0.82 | 7784 | | | 3.05 | Si |
| SLU 2 | 102 | -17334 | -2887 | 327448 | | 1.83 | 211 | 0.8 | 7586 | | | 2.63 | Si |
| SLU 2 | 142 | -15415 | -2674 | 307475 | | 1.62 | 211 | 0.77 | 7330 | | | 2.74 | Si |
| SLU 44 | 102 | -21693 | -3068 | 388722 | | 2.28 | 211 | 0.86 | 8167 | | | 2.66 | Si |

| Comb. | Quota | N | V par | M | σ0 | σN | l' | fvd | Vt scorr. | Vt fess.diag. | Vt,lim | c.s. | Verifica |
|---|---|---|---|---|---|---|---|---|---|---|---|---|---|
| SLU 44 | 142 | -19388 | -2801 | 355506 | | 2.04 | 211 | 0.83 | 7860 | | | 2.81 | Si |
| SLU 47 | 102 | -22265 | -2984 | 411908 | | 2.34 | 211 | 0.87 | 8244 | | | 2.76 | Si |
| SLU 47 | 142 | -19931 | -2708 | 372090 | | 2.1 | 211 | 0.84 | 7932 | | | 2.93 | Si |
| SLU 65 | 102 | -24485 | -2990 | 416876 | | 2.58 | 211 | 0.9 | 8540 | | | 2.86 | Si |
| SLU 65 | 142 | -22112 | -2692 | 372980 | | 2.33 | 211 | 0.87 | 8223 | | | 3.05 | Si |
| SLU 55 | 102 | -25175 | -2980 | 419074 | | 2.65 | 211 | 0.91 | 8632 | | | 2.9 | Si |
| SLU 55 | 142 | -22790 | -2676 | 373347 | | 2.4 | 211 | 0.88 | 8314 | | | 3.11 | Si |
| SLU 52 | 102 | -24603 | -3063 | 395888 | | 2.59 | 211 | 0.9 | 8555 | | | 2.79 | Si |
| SLU 52 | 142 | -22247 | -2770 | 356763 | | 2.34 | 211 | 0.87 | 8241 | | | 2.98 | Si |

### Verifica a taglio nel piano secondo D.M. 17-01-18 (N.T.C.) §7.8.2.2.2 con rottura per scorrimento in combinazioni sismiche, γM = 2

| Comb. | Quota | N | V par | M | σ0 | σN | l' | fvd | Vt scorr. | Vt fess.diag. | Vt,lim | c.s. | Verifica |
|---|---|---|---|---|---|---|---|---|---|---|---|---|---|
| SLV 13 | 102 | -17330 | -12454 | -369468 | | 1.83 | 211 | 1.2 | 11378 | | | 0.91 | No, Vu<V |
| SLV 13 | 142 | -16844 | -15236 | -71013 | | 1.77 | 211 | 1.19 | 11281 | | | 0.74 | No, Vu<V |
| SLV 10 | 102 | -31612 | -14468 | 206793 | | 3.33 | 211 | 1.5 | 14235 | | | 0.98 | No, Vu<V |
| SLV 10 | 142 | -33086 | -16109 | 364393 | | 3.48 | 211 | 1.53 | 14530 | | | 0.9 | No, Vu<V |
| SLV 4 | 102 | -21367 | 11476 | 862498 | | 2.43 | 195.4 | 1.32 | 11601 | | | 1.01 | Si |
| SLV 4 | 142 | -19058 | 14716 | 441868 | | 2.01 | 211 | 1.23 | 11724 | | | 0.8 | No, Vu<V |
| SLV 14 | 102 | -17330 | -12454 | -369468 | | 1.83 | 211 | 1.2 | 11378 | | | 0.91 | No, Vu<V |
| SLV 14 | 142 | -16844 | -15236 | -71013 | | 1.77 | 211 | 1.19 | 11281 | | | 0.74 | No, Vu<V |
| SLV 8 | 102 | -7084 | 13490 | 286237 | | 0.81 | 195.29 | 0.99 | 8740 | | | 0.65 | No, Vu<V |
| SLV 8 | 142 | -2816 | 15589 | 6462 | | 0.3 | 211 | 0.89 | 8476 | | | 0.54 | No, Vu<V |
| SLV 11 | 102 | -3327 | 8366 | -112049 | | 0.35 | 211 | 0.9 | 8578 | | | 1.03 | Si |
| SLV 11 | 142 | 907 | 8850 | -198020 | | 0 | 0 | 0.83 | 0 | | | 0 | No, Vu<V |
| SLV 9 | 102 | -31612 | -14468 | 206793 | | 3.33 | 211 | 1.5 | 14235 | | | 0.98 | No, Vu<V |
| SLV 9 | 142 | -33086 | -16109 | 364393 | | 3.48 | 211 | 1.53 | 14530 | | | 0.9 | No, Vu<V |
| SLV 3 | 102 | -21367 | 11476 | 862498 | | 2.43 | 195.4 | 1.32 | 11601 | | | 1.01 | Si |
| SLV 3 | 142 | -19058 | 14716 | 441868 | | 2.01 | 211 | 1.23 | 11724 | | | 0.8 | No, Vu<V |
| SLV 12 | 102 | -3327 | 8366 | -112049 | | 0.35 | 211 | 0.9 | 8578 | | | 1.03 | Si |
| SLV 12 | 142 | 907 | 8850 | -198020 | | 0 | 0 | 0.83 | 0 | | | 0 | No, Vu<V |
| SLV 7 | 102 | -7084 | 13490 | 286237 | | 0.81 | 195.29 | 0.99 | 8740 | | | 0.65 | No, Vu<V |
| SLV 7 | 142 | -2816 | 15589 | 6462 | | 0.3 | 211 | 0.89 | 8476 | | | 0.54 | No, Vu<V |

### Verifica a pressoflessione fuori piano D.M. 17-01-18 (N.T.C.)

quota 36.5 Wa 0.08 denominatore 8 γM = 2

| Comb. | fd | Sa | σ0 | N | M | Mc | Coeff.s. | Verifica |
|---|---|---|---|---|---|---|---|---|
| SLV 12 | 14 | 0.25 | 0.62 | -5897 | 12970 | 125935 | 9.71 | Si |
| SLV 11 | 14 | 0.25 | 0.62 | -5897 | 12970 | 125935 | 9.71 | Si |
| SLV 15 | 14 | 0.25 | 0.89 | -8408 | 12970 | 175469 | 13.53 | Si |
| SLV 16 | 14 | 0.25 | 0.89 | -8408 | 12970 | 175469 | 13.53 | Si |
| SLV 8 | 14 | 0.25 | 1.15 | -10956 | 12970 | 223230 | 17.21 | Si |
| SLV 7 | 14 | 0.25 | 1.15 | -10956 | 12970 | 223230 | 17.21 | Si |
| SLV 13 | 14 | 0.25 | 1.65 | -15619 | 12970 | 304122 | 23.45 | Si |
| SLV 14 | 14 | 0.25 | 1.65 | -15619 | 12970 | 304122 | 23.45 | Si |
| SLV 4 | 14 | 0.25 | 2.66 | -25272 | 12970 | 444751 | 34.29 | Si |
| SLV 3 | 14 | 0.25 | 2.66 | -25272 | 12970 | 444751 | 34.29 | Si |

### Verifica dei meccanismi locali di collasso con analisi cinematica lineare

forza di aggancio al piano = 0 quota mezzeria = 36.5 Wa = 0.08 Ta = 0.0269

| Comb. | N top | N base | V orto | α0 | M* | e* | a0* | aLim | Verifica |
|---|---|---|---|---|---|---|---|---|---|
| SLV 12 | -13022 | -6581 | -687 | 0.051 | 16.884 | 0.94 | 79.416 | 417.584 | No |
| SLV 11 | -13022 | -6581 | -687 | 0.051 | 16.884 | 0.94 | 79.416 | 417.584 | No |
| SLV 8 | -16065 | -13827 | -715 | 0.055 | 19.969 | 0.948 | 84.543 | 417.584 | No |
| SLV 7 | -16065 | -13827 | -715 | 0.055 | 19.969 | 0.948 | 84.543 | 417.584 | No |
| SLV 9 | -15790 | -33206 | -524 | 0.065 | 19.69 | 0.947 | 100.18 | 417.584 | No |
| SLV 10 | -15790 | -33206 | -524 | 0.065 | 19.69 | 0.947 | 100.18 | 417.584 | No |
| SLV 5 | -18833 | -40451 | -553 | 0.067 | 22.78 | 0.954 | 101.468 | 417.584 | No |
| SLV 6 | -18833 | -40451 | -553 | 0.067 | 22.78 | 0.954 | 101.468 | 417.584 | No |
| SLV 16 | -10440 | -7446 | -596 | 0.052 | 14.274 | 0.931 | 81.057 | 332.581 | No |
| SLV 15 | -10440 | -7446 | -596 | 0.052 | 14.274 | 0.931 | 81.057 | 332.581 | No |

### Tabella dei coefficienti di sicurezza minimi

| Stato limite | Coeff.s. | Comb. | Verifica |
|---|---|---|---|
| PF_SLU | 4.061 | SLU 68 | Si |
| V_SLU | 2.627 | SLU 2 | Si |
| PF_SLV | 0 | SLV 12 | No |
| V_SLV | 0 | SLV 11 | No |
| PFFP_SLV | 9.709 | SLV 11 | Si |
| R_SLV | 0.19 | SLV 11 | No |

## Maschio 9

Verifiche condotte secondo D.M. 17-01-18 (N.T.C.)

### Dati geometrici

| X ini. | Y ini. | X fin. | Y fin. | Quota i. | Quota.s | l | Sp. | h netta | h ini. | h fin. | a | a.s.,sx | a.s.,dx |
|---|---|---|---|---|---|---|---|---|---|---|---|---|---|
| -1831.3 | -328.4 | -2154.3 | -328.4 | L1 | L3 | 323 | 45 | 269 | 269 | 269 | | | |

### Caratteristiche del materiale

(Circolare 7 21-01-19 C8.5.I) Muratura in mattoni pieni e malta di calce LC2_Corti

| fb | fk | fvk0 | fmedio | τ0 | fv0 | μ | ϕ | fv,lim | E | G | FC |
|---|---|---|---|---|---|---|---|---|---|---|---|
| 60 | | | 34.5 | 0.9 | 2 | 0.58 | 0.77 | 3.25 | 32000 | 12800 | 1.2 |

Verifica a pressoflessione nel piano secondo D.M. 17-01-18 NTC §7.8.2.2.1 in combinazioni non sismiche, γM = 3

| Comb. | Quota | N | M | σ0 | Mu | c.s. | Verifica |
|---|---|---|---|---|---|---|---|
| SLU 76 | 102 | -49200 | -1889867 | 3.38 | 4643977 | 2.457 | Si |
| SLU 76 | 142 | -47918 | -2320779 | 3.3 | 4606763 | 1.985 | Si |
| SLU 73 | 102 | -49023 | -1914754 | 3.37 | 4639119 | 2.423 | Si |
| SLU 73 | 142 | -47741 | -2330084 | 3.28 | 4601288 | 1.975 | Si |
| SLU 44 | 102 | -38715 | -1638088 | 2.66 | 4208025 | 2.569 | Si |
| SLU 44 | 142 | -37433 | -2008807 | 2.58 | 4134147 | 2.058 | Si |
| SLU 47 | 102 | -38892 | -1613201 | 2.68 | 4217847 | 2.615 | Si |
| SLU 47 | 142 | -37610 | -1999502 | 2.59 | 4144586 | 2.073 | Si |
| SLU 65 | 102 | -43460 | -1758269 | 2.99 | 4442465 | 2.527 | Si |
| SLU 65 | 142 | -42178 | -2156710 | 2.9 | 4385180 | 2.033 | Si |
| SLU 84 | 102 | -51985 | -1860528 | 3.58 | 4709381 | 2.531 | Si |
| SLU 84 | 142 | -50703 | -2242118 | 3.49 | 4681908 | 2.088 | Si |
| SLU 55 | 102 | -44455 | -1769686 | 3.06 | 4483827 | 2.534 | Si |
| SLU 55 | 142 | -43173 | -2172876 | 2.97 | 4430020 | 2.039 | Si |
| SLU 52 | 102 | -44278 | -1794573 | 3.05 | 4476684 | 2.495 | Si |
| SLU 52 | 142 | -42996 | -2182181 | 2.96 | 4422260 | 2.027 | Si |
| SLU 68 | 102 | -43637 | -1733382 | 3 | 4450002 | 2.567 | Si |
| SLU 68 | 142 | -42355 | -2147405 | 2.91 | 4393335 | 2.046 | Si |
| SLU 82 | 102 | -51808 | -1885415 | 3.56 | 4705864 | 2.496 | Si |
| SLU 82 | 142 | -50526 | -2251422 | 3.48 | 4677774 | 2.078 | Si |

Verifica a pressoflessione nel piano secondo D.M. 17-01-18 NTC §7.8.2.2.1 in combinazioni sismiche, γM = 2

| Comb. | Quota | N | M | σ0 | Mu | c.s. | Verifica |
|---|---|---|---|---|---|---|---|
| SLV 16 | 102 | -30434 | -1884259 | 2.09 | 4072869 | 2.162 | Si |
| SLV 16 | 142 | -31647 | -1584331 | 2.18 | 4200295 | 2.651 | Si |
| SLV 5 | 102 | -46865 | -1538028 | 3.22 | 5571441 | 3.622 | Si |
| SLV 5 | 142 | -39526 | -2006459 | 2.72 | 4962750 | 2.473 | Si |
| SLV 9 | 102 | -46416 | -2068548 | 3.19 | 5537071 | 2.677 | Si |
| SLV 9 | 142 | -39271 | -2263492 | 2.7 | 4939852 | 2.182 | Si |
| SLD 10 | 102 | -39543 | -1551934 | 2.72 | 4964334 | 3.199 | Si |
| SLD 10 | 142 | -36110 | -1748622 | 2.48 | 4646012 | 2.657 | Si |
| SLV 14 | 102 | -37569 | -2254980 | 2.58 | 4783943 | 2.122 | Si |
| SLV 14 | 142 | -35029 | -2036192 | 2.41 | 4541359 | 2.23 | Si |
| SLV 13 | 102 | -37569 | -2254980 | 2.58 | 4783943 | 2.122 | Si |
| SLV 13 | 142 | -35029 | -2036192 | 2.41 | 4541359 | 2.23 | Si |
| SLV 6 | 102 | -46865 | -1538028 | 3.22 | 5571441 | 3.622 | Si |
| SLV 6 | 142 | -39526 | -2006459 | 2.72 | 4962750 | 2.473 | Si |
| SLV 15 | 102 | -30434 | -1884259 | 2.09 | 4072869 | 2.162 | Si |
| SLV 15 | 142 | -31647 | -1584331 | 2.18 | 4200295 | 2.651 | Si |
| SLD 9 | 102 | -39543 | -1551934 | 2.72 | 4964334 | 3.199 | Si |
| SLD 9 | 142 | -36110 | -1748622 | 2.48 | 4646012 | 2.657 | Si |
| SLV 10 | 102 | -46416 | -2068548 | 3.19 | 5537071 | 2.677 | Si |
| SLV 10 | 142 | -39271 | -2263492 | 2.7 | 4939852 | 2.182 | Si |

Verifica a taglio nel piano secondo D.M. 17-01-18 (N.T.C.) §7.8.2.2.2 con rottura per scorrimento in combinazioni non sismiche, γM = 3

| Comb. | Quota | N | V par | M | σ0 | σN | l' | fvd | Vt scorr. | Vt fess.diag. | Vt,lim | c.s. | Verifica |
|---|---|---|---|---|---|---|---|---|---|---|---|---|---|
| SLU 26 | 102 | -35722 | 9219 | -1442675 | | 2.46 | 323 | 0.88 | 12838 | | | 1.39 | Si |
| SLU 26 | 142 | -34736 | 9219 | -1811091 | | 2.39 | 323 | 0.87 | 12706 | | | 1.38 | Si |
| SLU 5 | 102 | -30977 | 8526 | -1322495 | | 2.13 | 323 | 0.84 | 12205 | | | 1.43 | Si |
| SLU 5 | 142 | -29991 | 8526 | -1663188 | | 2.09 | 318.13 | 0.83 | 11952 | | | 1.4 | Si |
| SLU 34 | 102 | -41285 | 9642 | -1599160 | | 2.84 | 323 | 0.93 | 13580 | | | 1.41 | Si |
| SLU 34 | 142 | -40299 | 9642 | -1984465 | | 2.77 | 323 | 0.93 | 13448 | | | 1.39 | Si |
| SLU 44 | 102 | -38715 | 9280 | -1638088 | | 2.66 | 323 | 0.91 | 13237 | | | 1.43 | Si |
| SLU 44 | 142 | -37433 | 9280 | -2008807 | | 2.58 | 323 | 0.9 | 13066 | | | 1.41 | Si |
| SLU 73 | 102 | -49023 | 10395 | -1914754 | | 3.37 | 323 | 1.01 | 14611 | | | 1.41 | Si |
| SLU 73 | 142 | -47741 | 10395 | -2330084 | | 3.28 | 323 | 0.99 | 14440 | | | 1.39 | Si |
| SLU 65 | 102 | -43460 | 9973 | -1758269 | | 2.99 | 323 | 0.95 | 13870 | | | 1.39 | Si |
| SLU 65 | 142 | -42178 | 9973 | -2156710 | | 2.9 | 323 | 0.94 | 13699 | | | 1.37 | Si |
| SLU 47 | 102 | -38892 | 9669 | -1613201 | | 2.68 | 323 | 0.91 | 13261 | | | 1.37 | Si |
| SLU 47 | 142 | -37610 | 9669 | -1999502 | | 2.59 | 323 | 0.9 | 13090 | | | 1.35 | Si |
| SLU 55 | 102 | -44455 | 10091 | -1769686 | | 3.06 | 323 | 0.96 | 14002 | | | 1.39 | Si |
| SLU 55 | 142 | -43173 | 10091 | -2172876 | | 2.97 | 323 | 0.95 | 13831 | | | 1.37 | Si |
| SLU 68 | 102 | -43637 | 10362 | -1733382 | | 3 | 323 | 0.96 | 13893 | | | 1.34 | Si |
| SLU 68 | 142 | -42355 | 10362 | -2147405 | | 2.91 | 323 | 0.94 | 13722 | | | 1.32 | Si |
| SLU 76 | 102 | -49200 | 10784 | -1889867 | | 3.38 | 323 | 1.01 | 14635 | | | 1.36 | Si |
| SLU 76 | 142 | -47918 | 10784 | -2320779 | | 3.3 | 323 | 1 | 14464 | | | 1.34 | Si |

Verifica a taglio nel piano secondo D.M. 17-01-18 (N.T.C.) §7.8.2.2.2 con rottura per scorrimento in combinazioni sismiche, γM = 2

| Comb. | Quota | N | V par | M | σ0 | σN | l' | fvd | Vt scorr. | Vt fess.diag. | Vt,lim | c.s. | Verifica |
|---|---|---|---|---|---|---|---|---|---|---|---|---|---|
| SLV 1 | 102 | -39064 | 27461 | -486579 | | 2.69 | 323 | 1.37 | 19925 | | | 0.73 | No, Vu<V |
| SLV 1 | 142 | -35878 | 30175 | -1179416 | | 2.47 | 323 | 1.33 | 19288 | | | 0.64 | No, Vu<V |
| SLV 10 | 102 | -46416 | 14255 | -2068548 | | 3.19 | 323 | 1.47 | 21396 | | | 1.5 | Si |
| SLV 10 | 142 | -39271 | 22626 | -2263492 | | 2.8 | 311.59 | 1.39 | 19539 | | | 0.86 | No, Vu<V |
| SLV 15 | 102 | -30434 | -17621 | -1884259 | | 2.26 | 298.76 | 1.29 | 17291 | | | 0.98 | No, Vu<V |
| SLV 15 | 142 | -31647 | -20334 | -1584331 | | 2.18 | 323 | 1.27 | 18442 | | | 0.91 | No, Vu<V |
| SLV 11 | 102 | -22633 | -15281 | -832810 | | 1.56 | 323 | 1.14 | 16639 | | | 1.09 | Si |
| SLV 11 | 142 | -28000 | -23763 | -757288 | | 1.93 | 323 | 1.22 | 17712 | | | 0.75 | No, Vu<V |
| SLV 12 | 102 | -22633 | -15281 | -832810 | | 1.56 | 323 | 1.14 | 16639 | | | 1.09 | Si |
| SLV 12 | 142 | -28000 | -23763 | -757288 | | 1.93 | 323 | 1.22 | 17712 | | | 0.75 | No, Vu<V |
| SLV 16 | 102 | -30434 | -17621 | -1884259 | | 2.26 | 298.76 | 1.29 | 17291 | | | 0.98 | No, Vu<V |
| SLV 16 | 142 | -31647 | -20334 | -1584331 | | 2.18 | 323 | 1.27 | 18442 | | | 0.91 | No, Vu<V |
| SLV 6 | 102 | -46865 | 25122 | -1538028 | | 3.22 | 323 | 1.48 | 21485 | | | 0.86 | No, Vu<V |
| SLV 6 | 142 | -39526 | 33604 | -2006459 | | 2.72 | 323 | 1.38 | 20018 | | | 0.6 | No, Vu<V |
| SLV 5 | 102 | -46865 | 25122 | -1538028 | | 3.22 | 323 | 1.48 | 21485 | | | 0.86 | No, Vu<V |
| SLV 5 | 142 | -39526 | 33604 | -2006459 | | 2.72 | 323 | 1.38 | 20018 | | | 0.6 | No, Vu<V |
| SLV 2 | 102 | -39064 | 27461 | -486579 | | 2.69 | 323 | 1.37 | 19925 | | | 0.73 | No, Vu<V |

| Comb. | Quota | N | V par | M | σ0 | σN | l' | fvd | Vt scorr. | Vt fess.diag. | Vt,lim | c.s. | Verifica |
|---|---|---|---|---|---|---|---|---|---|---|---|---|---|
| SLV 2 | 142 | -35878 | 30175 | -1179416 | | 2.47 | 323 | 1.33 | 19288 | | | 0.64 | No, Vu<V |
| SLV 9 | 102 | -46416 | 14255 | -2068548 | | 3.19 | 323 | 1.47 | 21396 | | | 1.5 | Si |
| SLV 9 | 142 | -39271 | 22626 | -2263492 | | 2.8 | 311.59 | 1.39 | 19539 | | | 0.86 | No, Vu<V |

### Verifica a pressoflessione fuori piano D.M. 17-01-18 (N.T.C.)

quota 36.5 Wa 0.08 denominatore 8 γM = 2

| Comb. | fd | Sa | σ0 | N | M | Mc | Coeff.s. | Verifica |
|---|---|---|---|---|---|---|---|---|
| SLV 11 | 14 | 0.25 | 1.06 | -15357 | 19855 | 315649 | 15.9 | Si |
| SLV 12 | 14 | 0.25 | 1.06 | -15357 | 19855 | 315649 | 15.9 | Si |
| SLV 8 | 14 | 0.25 | 1.11 | -16161 | 19855 | 330542 | 16.65 | Si |
| SLV 7 | 14 | 0.25 | 1.11 | -16161 | 19855 | 330542 | 16.65 | Si |
| SLV 15 | 14 | 0.25 | 1.62 | -23613 | 19855 | 460647 | 23.2 | Si |
| SLV 16 | 14 | 0.25 | 1.62 | -23613 | 19855 | 460647 | 23.2 | Si |
| SLV 3 | 14 | 0.25 | 1.81 | -26295 | 19855 | 504042 | 25.39 | Si |
| SLV 4 | 14 | 0.25 | 1.81 | -26295 | 19855 | 504042 | 25.39 | Si |
| SLV 14 | 14 | 0.25 | 2.17 | -31494 | 19855 | 582953 | 29.36 | Si |
| SLV 13 | 14 | 0.25 | 2.17 | -31494 | 19855 | 582953 | 29.36 | Si |

### Verifica dei meccanismi locali di collasso con analisi cinematica lineare

forza di aggancio al piano = 0 quota mezzeria = 36.5 Wa = 0.08 Ta = 0.0269

| Comb. | N top | N base | V orto | α0 | M* | e* | a0* | aLim | Verifica |
|---|---|---|---|---|---|---|---|---|---|
| SLV 11 | -27295 | -15282 | -1544 | 0.043 | 33.313 | 0.952 | 65.796 | 417.584 | No |
| SLV 12 | -27295 | -15282 | -1544 | 0.043 | 33.313 | 0.952 | 65.796 | 417.584 | No |
| SLV 8 | -26450 | -16456 | -1496 | 0.044 | 32.455 | 0.951 | 66.578 | 417.584 | No |
| SLV 7 | -26450 | -16456 | -1496 | 0.044 | 32.455 | 0.951 | 66.578 | 417.584 | No |
| SLV 9 | -30382 | -41110 | -1247 | 0.056 | 36.449 | 0.956 | 84.487 | 417.584 | No |
| SLV 10 | -30382 | -41110 | -1247 | 0.056 | 36.449 | 0.956 | 84.487 | 417.584 | No |
| SLV 6 | -29537 | -42284 | -1199 | 0.056 | 35.591 | 0.955 | 85.693 | 417.584 | No |
| SLV 5 | -29537 | -42284 | -1199 | 0.056 | 35.591 | 0.955 | 85.693 | 417.584 | No |
| SLV 15 | -29361 | -22952 | -1496 | 0.047 | 35.412 | 0.954 | 71.719 | 332.581 | No |
| SLV 16 | -29361 | -22952 | -1496 | 0.047 | 35.412 | 0.954 | 71.719 | 332.581 | No |

### Tabella dei coefficienti di sicurezza minimi

| Stato limite | Coeff.s. | Comb. | Verifica |
|---|---|---|---|
| PF_SLU | 1.975 | SLU 73 | Si |
| V_SLU | 1.324 | SLU 68 | Si |
| PF_SLV | 2.122 | SLV 13 | Si |
| V_SLV | 0.596 | SLV 5 | No |
| PFFP_SLV | 15.898 | SLV 11 | Si |
| R_SLV | 0.158 | SLV 11 | No |

## Maschio 10

Verifiche condotte secondo D.M. 17-01-18 (N.T.C.)

### Dati geometrici

| X ini. | Y ini. | X fin. | Y fin. | Quota i. | Quota.s | l | Sp. | h netta | h ini. | h fin. | a | a.s.,sx | a.s.,dx |
|---|---|---|---|---|---|---|---|---|---|---|---|---|---|
| -1652.3 | -328.4 | -1731.3 | -328.4 | L1 | L3 | 79 | 45 | 269 | 269 | 269 | | | |

### Caratteristiche del materiale

(Circolare 7 21-01-19 C8.5.I) Muratura in mattoni pieni e malta di calce LC2_Corti

| fb | fk | fvk0 | fmedio | τ0 | fv0 | μ | ϕ | fv,lim | E | G | FC |
|---|---|---|---|---|---|---|---|---|---|---|---|
| 60 | | | 34.5 | 0.9 | 2 | 0.58 | 0.77 | 3.25 | 32000 | 12800 | 1.2 |

### Verifica a pressoflessione nel piano secondo D.M. 17-01-18 NTC §7.8.2.2.1 in combinazioni non sismiche, γM = 3

| Comb. | Quota | N | M | σ0 | Mu | c.s. | Verifica |
|---|---|---|---|---|---|---|---|
| SLU 82 | 102 | -27970 | 111426 | 7.87 | 37729 | 0.339 | No, M>Mu |
| SLU 82 | 142 | -23037 | 404038 | 6.48 | 186062 | 0.461 | No, M>Mu |
| SLU 78 | 102 | -27052 | 109694 | 7.61 | 70345 | 0.641 | No, M>Mu |
| SLU 78 | 142 | -22266 | 390616 | 6.26 | 203255 | 0.52 | No, M>Mu |
| SLU 76 | 102 | -27438 | 113222 | 7.72 | 56905 | 0.503 | No, M>Mu |
| SLU 76 | 142 | -22694 | 398096 | 6.38 | 193924 | 0.487 | No, M>Mu |
| SLU 81 | 102 | -27019 | 104668 | 7.6 | 71469 | 0.683 | No, M>Mu |
| SLU 81 | 142 | -22116 | 388017 | 6.22 | 206415 | 0.532 | No, M>Mu |
| SLU 83 | 102 | -27104 | 103548 | 7.62 | 68555 | 0.662 | No, M>Mu |
| SLU 83 | 142 | -22139 | 388178 | 6.23 | 205945 | 0.531 | No, M>Mu |
| SLU 75 | 102 | -26967 | 110815 | 7.59 | 73247 | 0.661 | No, M>Mu |
| SLU 75 | 142 | -22244 | 390455 | 6.26 | 203733 | 0.522 | No, M>Mu |
| SLU 73 | 102 | -27353 | 114343 | 7.69 | 59896 | 0.524 | No, M>Mu |
| SLU 73 | 142 | -22671 | 397935 | 6.38 | 194429 | 0.489 | No, M>Mu |
| SLU 77 | 102 | -26102 | 102937 | 7.34 | 101707 | 0.988 | No, M>Mu |
| SLU 77 | 142 | -21345 | 374595 | 6 | 221670 | 0.592 | No, M>Mu |
| SLU 80 | 102 | -26889 | 107597 | 7.56 | 75889 | 0.705 | No, M>Mu |
| SLU 80 | 142 | -22102 | 387577 | 6.22 | 206707 | 0.533 | No, M>Mu |
| SLU 84 | 102 | -28054 | 110305 | 7.89 | 34594 | 0.314 | No, M>Mu |
| SLU 84 | 142 | -23060 | 404199 | 6.49 | 185534 | 0.459 | No, M>Mu |

### Verifica a pressoflessione nel piano secondo D.M. 17-01-18 NTC §7.8.2.2.1 in combinazioni sismiche, γM = 2

| Comb. | Quota | N | M | σ0 | Mu | c.s. | Verifica |
|---|---|---|---|---|---|---|---|
| SLD 9 | 102 | -20513 | 113791 | 5.77 | 427624 | 3.758 | Si |
| SLD 9 | 142 | -17255 | 301345 | 4.85 | 410830 | 1.363 | Si |
| SLV 9 | 102 | -24260 | 168215 | 6.82 | 423074 | 2.515 | Si |
| SLV 9 | 142 | -20845 | 361004 | 5.86 | 428253 | 1.186 | Si |

| Comb. | Quota | N | M | σ0 | Mu | c.s. | Verifica |
|---|---|---|---|---|---|---|---|
| SLV 10 | 102 | -24260 | 168215 | 6.82 | 423074 | 2.515 | Si |
| SLV 10 | 142 | -20845 | 361004 | 5.86 | 428253 | 1.186 | Si |
| SLV 13 | 102 | -21277 | 180694 | 5.99 | 428769 | 2.373 | Si |
| SLV 13 | 142 | -19853 | 335356 | 5.58 | 425780 | 1.27 | Si |
| SLD 10 | 102 | -20513 | 113791 | 5.77 | 427624 | 3.758 | Si |
| SLD 10 | 142 | -17255 | 301345 | 4.85 | 410830 | 1.363 | Si |
| SLV 5 | 102 | -23292 | 117436 | 6.55 | 426696 | 3.633 | Si |
| SLV 5 | 142 | -18682 | 331075 | 5.26 | 420563 | 1.27 | Si |
| SLD 5 | 102 | -20104 | 91970 | 5.66 | 426577 | 4.638 | Si |
| SLD 5 | 142 | -16337 | 288623 | 4.6 | 402604 | 1.395 | Si |
| SLD 6 | 102 | -20104 | 91970 | 5.66 | 426577 | 4.638 | Si |
| SLD 6 | 142 | -16337 | 288623 | 4.6 | 402604 | 1.395 | Si |
| SLV 6 | 102 | -23292 | 117436 | 6.55 | 426696 | 3.633 | Si |
| SLV 6 | 142 | -18682 | 331075 | 5.26 | 420563 | 1.27 | Si |
| SLV 14 | 102 | -21277 | 180694 | 5.99 | 428769 | 2.373 | Si |
| SLV 14 | 142 | -19853 | 335356 | 5.58 | 425780 | 1.27 | Si |

Verifica a taglio nel piano secondo D.M. 17-01-18 (N.T.C.) §7.8.2.2.2 con rottura per scorrimento in combinazioni non sismiche, γM = 3

| Comb. | Quota | N | V par | M | σ0 | σN | l' | fvd | Vt scorr. | Vt fess.diag. | Vt,lim | c.s. | Verifica |
|---|---|---|---|---|---|---|---|---|---|---|---|---|---|
| SLU 52 | 102 | -25027 | -2965 | 107608 | | 7.04 | 79 | 1.08 | 3851 | | | 1.3 | Si |
| SLU 52 | 142 | -20802 | -572 | 365580 | | 7.03 | 65.78 | 1.08 | 3207 | | | 5.61 | Si |
| SLU 61 | 102 | -25644 | -2783 | 104691 | | 7.21 | 79 | 1.08 | 3851 | | | 1.38 | Si |
| SLU 61 | 142 | -21168 | -436 | 371684 | | 7.15 | 65.82 | 1.08 | 3209 | | | 7.36 | Si |
| SLU 65 | 102 | -24437 | -2981 | 110637 | | 6.87 | 79 | 1.08 | 3851 | | | 1.29 | Si |
| SLU 65 | 142 | -20383 | -543 | 358772 | | 6.89 | 65.7 | 1.08 | 3203 | | | 5.9 | Si |
| SLU 73 | 102 | -27353 | -3125 | 114343 | | 7.69 | 79 | 1.08 | 3851 | | | 1.23 | Si |
| SLU 73 | 142 | -22671 | -558 | 397935 | | 7.65 | 65.84 | 1.08 | 3210 | | | 5.76 | Si |
| SLU 44 | 102 | -22111 | -2820 | 103902 | | 6.22 | 79 | 1.08 | 3851 | | | 1.37 | Si |
| SLU 44 | 142 | -18514 | -557 | 326417 | | 6.27 | 65.61 | 1.08 | 3198 | | | 5.75 | Si |
| SLU 76 | 102 | -27438 | -2953 | 113222 | | 7.72 | 79 | 1.08 | 3851 | | | 1.3 | Si |
| SLU 76 | 142 | -22694 | -553 | 398096 | | 7.66 | 65.87 | 1.08 | 3211 | | | 5.81 | Si |
| SLU 82 | 102 | -27970 | -2943 | 111426 | | 7.87 | 79 | 1.08 | 3851 | | | 1.31 | Si |
| SLU 82 | 142 | -23037 | -422 | 404038 | | 7.77 | 65.88 | 1.08 | 3212 | | | 7.61 | Si |
| SLU 55 | 102 | -25112 | -2792 | 106487 | | 7.06 | 79 | 1.08 | 3851 | | | 1.38 | Si |
| SLU 55 | 142 | -20825 | -567 | 365742 | | 7.03 | 65.81 | 1.08 | 3208 | | | 5.66 | Si |
| SLU 68 | 102 | -24521 | -2809 | 109517 | | 6.9 | 79 | 1.08 | 3851 | | | 1.37 | Si |
| SLU 68 | 142 | -20406 | -538 | 358933 | | 6.9 | 65.73 | 1.08 | 3204 | | | 5.96 | Si |
| SLU 75 | 102 | -26967 | -2787 | 110815 | | 7.59 | 79 | 1.08 | 3851 | | | 1.38 | Si |
| SLU 75 | 142 | -22244 | -415 | 390455 | | 7.51 | 65.84 | 1.08 | 3210 | | | 7.74 | Si |

Verifica a taglio nel piano secondo D.M. 17-01-18 (N.T.C.) §7.8.2.2.2 con rottura per scorrimento in combinazioni sismiche, γM = 2

| Comb. | Quota | N | V par | M | σ0 | σN | l' | fvd | Vt scorr. | Vt fess.diag. | Vt,lim | c.s. | Verifica |
|---|---|---|---|---|---|---|---|---|---|---|---|---|---|
| SLV 3 | 102 | -14525 | 7221 | -28653 | | 4.09 | 79 | 1.63 | 5777 | | | 0.8 | No, Vu<V |
| SLV 3 | 142 | -9630 | 834 | 183679 | | 3.49 | 61.28 | 1.53 | 4224 | | | 5.06 | Si |
| SLV 16 | 102 | -17752 | -8282 | 140612 | | 4.99 | 79 | 1.63 | 5777 | | | 0.7 | No, Vu<V |
| SLV 16 | 142 | -16839 | -3 | 283442 | | 5.5 | 68 | 1.63 | 4973 | | | 1000 | Si |
| SLV 9 | 102 | -24260 | -8489 | 168215 | | 6.82 | 79 | 1.63 | 5777 | | | 0.68 | No, Vu<V |
| SLV 9 | 142 | -20845 | -2167 | 361004 | | 6.96 | 66.55 | 1.63 | 4866 | | | 2.25 | Si |
| SLD 14 | 102 | -19304 | -5696 | 120447 | | 5.43 | 79 | 1.63 | 5777 | | | 1.01 | Si |
| SLD 14 | 142 | -16889 | -572 | 291360 | | 5.62 | 66.75 | 1.63 | 4881 | | | 8.53 | Si |
| SLV 15 | 102 | -17752 | -8282 | 140612 | | 4.99 | 79 | 1.63 | 5777 | | | 0.7 | No, Vu<V |
| SLV 15 | 142 | -16839 | -3 | 283442 | | 5.5 | 68 | 1.63 | 4973 | | | 1000 | Si |
| SLV 14 | 102 | -21277 | -10882 | 180694 | | 5.99 | 79 | 1.63 | 5777 | | | 0.53 | No, Vu<V |
| SLV 14 | 142 | -19853 | -1137 | 335356 | | 6.5 | 67.82 | 1.63 | 4960 | | | 4.36 | Si |
| SLV 10 | 102 | -24260 | -8489 | 168215 | | 6.82 | 79 | 1.63 | 5777 | | | 0.68 | No, Vu<V |
| SLV 10 | 142 | -20845 | -2167 | 361004 | | 6.96 | 66.55 | 1.63 | 4866 | | | 2.25 | Si |
| SLD 13 | 102 | -19304 | -5696 | 120447 | | 5.43 | 79 | 1.63 | 5777 | | | 1.01 | Si |
| SLD 13 | 142 | -16889 | -572 | 291360 | | 5.62 | 66.75 | 1.63 | 4881 | | | 8.53 | Si |
| SLV 4 | 102 | -14525 | 7221 | -28653 | | 4.09 | 79 | 1.63 | 5777 | | | 0.8 | No, Vu<V |
| SLV 4 | 142 | -9630 | 834 | 183679 | | 3.49 | 61.28 | 1.53 | 4224 | | | 5.06 | Si |
| SLV 13 | 102 | -21277 | -10882 | 180694 | | 5.99 | 79 | 1.63 | 5777 | | | 0.53 | No, Vu<V |
| SLV 13 | 142 | -19853 | -1137 | 335356 | | 6.5 | 67.82 | 1.63 | 4960 | | | 4.36 | Si |

Verifica a pressoflessione fuori piano D.M. 17-01-18 (N.T.C.)

quota 36.5 Wa 0.08 denominatore 8 γM = 2

| Comb. | fd | Sa | σ0 | N | M | Mc | Coeff.s. | Verifica |
|---|---|---|---|---|---|---|---|---|
| SLV 7 | 14 | 0.25 | 2.76 | -9813 | 4856 | 170909 | 35.19 | Si |
| SLV 8 | 14 | 0.25 | 2.76 | -9813 | 4856 | 170909 | 35.19 | Si |
| SLV 4 | 14 | 0.25 | 2.92 | -10380 | 4856 | 177738 | 36.6 | Si |
| SLV 3 | 14 | 0.25 | 2.92 | -10380 | 4856 | 177738 | 36.6 | Si |
| SLV 11 | 14 | 0.25 | 3.33 | -11828 | 4856 | 193662 | 39.88 | Si |
| SLV 12 | 14 | 0.25 | 3.33 | -11828 | 4856 | 193662 | 39.88 | Si |
| SLV 2 | 14 | 0.25 | 3.62 | -12881 | 4856 | 203881 | 41.98 | Si |
| SLV 1 | 14 | 0.25 | 3.62 | -12881 | 4856 | 203881 | 41.98 | Si |
| SLV 15 | 14 | 0.25 | 4.81 | -17097 | 4856 | 233273 | 48.04 | Si |
| SLV 16 | 14 | 0.25 | 4.81 | -17097 | 4856 | 233273 | 48.04 | Si |

Verifica dei meccanismi locali di collasso con analisi cinematica lineare

forza di aggancio al piano = 0 quota mezzeria = 36.5 Wa = 0.08 Ta = 0.0269

| Comb. | N top | N base | V orto | α0 | M* | e* | a0* | aLim | Verifica |
|---|---|---|---|---|---|---|---|---|---|
| SLV 7 | -6763 | -7228 | -581 | 0.017 | 8.236 | 0.952 | 25.831 | 417.584 | No |
| SLV 8 | -6763 | -7228 | -581 | 0.017 | 8.236 | 0.952 | 25.831 | 417.584 | No |
| SLV 4 | -5448 | -4959 | -504 | 0.015 | 6.901 | 0.944 | 23.384 | 332.581 | No |
| SLV 3 | -5448 | -4959 | -504 | 0.015 | 6.901 | 0.944 | 23.384 | 332.581 | No |
| SLV 12 | -8718 | -12292 | -560 | 0.033 | 10.223 | 0.961 | 49.405 | 417.584 | No |
| SLV 11 | -8718 | -12292 | -560 | 0.033 | 10.223 | 0.961 | 49.405 | 417.584 | No |
| SLV 2 | -6276 | -8078 | -418 | 0.035 | 7.742 | 0.95 | 53.87 | 332.581 | No |

| Comb. | N top | N base | V orto | α0 | M* | e* | a0* | aLim | Verifica |
|---|---|---|---|---|---|---|---|---|---|
| SLV 1 | -6276 | -8078 | -418 | 0.035 | 7.742 | 0.95 | 53.87 | 332.581 | No |
| SLV 5 | -9523 | -17626 | -294 | 0.062 | 11.043 | 0.963 | 93.977 | 417.584 | No |
| SLV 6 | -9523 | -17626 | -294 | 0.062 | 11.043 | 0.963 | 93.977 | 417.584 | No |

### Tabella dei coefficienti di sicurezza minimi

| Stato limite | Coeff.s. | Comb. | Verifica |
|---|---|---|---|
| PF_SLU | 0.314 | SLU 84 | No |
| V_SLU | 1.232 | SLU 73 | Si |
| PF_SLV | 1.186 | SLV 9 | Si |
| V_SLV | 0.531 | SLV 13 | No |
| PFFP_SLV | 35.194 | SLV 7 | Si |
| R_SLV | 0.062 | SLV 7 | No |

## Maschio 11

Verifiche condotte secondo D.M. 17-01-18 (N.T.C.)

### Dati geometrici

| X ini. | Y ini. | X fin. | Y fin. | Quota i. | Quota.s | l | Sp. | h netta | h ini. | h fin. | a | a.s.,sx | a.s.,dx |
|---|---|---|---|---|---|---|---|---|---|---|---|---|---|
| -1376.3 | -328.4 | -1422.3 | -328.4 | L1 | L3 | 46 | 45 | 269 | 269 | 269 | | | |

### Caratteristiche del materiale

(Circolare 7 21-01-19 C8.5.I) Muratura in mattoni pieni e malta di calce LC2_Corti

| fb | fk | fvk0 | fmedio | τ0 | fv0 | μ | ϕ | fv,lim | E | G | FC |
|---|---|---|---|---|---|---|---|---|---|---|---|
| 60 | | | 34.5 | 0.9 | 2 | 0.58 | 0.77 | 3.25 | 32000 | 12800 | 1.2 |

### Verifica a pressoflessione nel piano secondo D.M. 17-01-18 NTC §7.8.2.2.1 in combinazioni non sismiche, γM = 3

| Comb. | Quota | N | M | σ0 | Mu | c.s. | Verifica |
|---|---|---|---|---|---|---|---|
| SLU 74 | -98 | -8476 | -92058 | 4.09 | 96953 | 1.053 | Si |
| SLU 74 | 112 | -10148 | 866 | 4.9 | 92932 | 107.312 | Si |
| SLU 82 | -98 | -8724 | -99103 | 4.21 | 96839 | 0.977 | No, M>Mu |
| SLU 82 | 112 | -10626 | 2531 | 5.13 | 90386 | 35.712 | Si |
| SLU 80 | -98 | -8513 | -92567 | 4.11 | 96947 | 1.047 | Si |
| SLU 80 | 112 | -10174 | 1407 | 4.92 | 92811 | 65.972 | Si |
| SLU 76 | -98 | -8370 | -95166 | 4.04 | 96951 | 1.019 | Si |
| SLU 76 | 112 | -10202 | 2066 | 4.93 | 92680 | 44.863 | Si |
| SLU 73 | -98 | -8267 | -96208 | 3.99 | 96919 | 1.007 | Si |
| SLU 73 | 112 | -10189 | 2233 | 4.92 | 92742 | 41.534 | Si |
| SLU 81 | -98 | -8783 | -96766 | 4.24 | 96787 | 1 | Si |
| SLU 81 | 112 | -10565 | 1793 | 5.1 | 90742 | 50.608 | Si |
| SLU 78 | -98 | -8520 | -93354 | 4.12 | 96945 | 1.038 | Si |
| SLU 78 | 112 | -10222 | 1437 | 4.94 | 92581 | 64.433 | Si |
| SLU 83 | -98 | -8886 | -95725 | 4.29 | 96673 | 1.01 | Si |
| SLU 83 | 112 | -10578 | 1626 | 5.11 | 90667 | 55.762 | Si |
| SLU 75 | -98 | -8417 | -94396 | 4.07 | 96956 | 1.027 | Si |
| SLU 75 | 112 | -10209 | 1604 | 4.93 | 92644 | 57.761 | Si |
| SLU 84 | -98 | -8827 | -98062 | 4.26 | 96742 | 0.987 | No, M>Mu |
| SLU 84 | 112 | -10639 | 2364 | 5.14 | 90308 | 38.203 | Si |

### Verifica a pressoflessione nel piano secondo D.M. 17-01-18 NTC §7.8.2.2.1 in combinazioni sismiche, γM = 2

| Comb. | Quota | N | M | σ0 | Mu | c.s. | Verifica |
|---|---|---|---|---|---|---|---|
| SLV 12 | -98 | -3684 | -87097 | 0 | 0 | 0 | No, e>l/2 |
| SLV 12 | 112 | -6077 | 14497 | 2.94 | 106194 | 7.325 | Si |
| SLV 11 | -98 | -3684 | -87097 | 0 | 0 | 0 | No, e>l/2 |
| SLV 11 | 112 | -6077 | 14497 | 2.94 | 106194 | 7.325 | Si |
| SLD 14 | -98 | -5092 | -103468 | 2.46 | 93535 | 0.904 | No, M>Mu |
| SLD 14 | 112 | -8221 | 4644 | 3.97 | 127622 | 27.479 | Si |
| SLV 16 | -98 | -3155 | -153363 | 0 | 0 | 0 | No, e>l/2 |
| SLV 16 | 112 | -8776 | 17107 | 4.24 | 131811 | 7.705 | Si |
| SLD 13 | -98 | -5092 | -103468 | 2.46 | 93535 | 0.904 | No, M>Mu |
| SLD 13 | 112 | -8221 | 4644 | 3.97 | 127622 | 27.479 | Si |
| SLV 15 | -98 | -3155 | -153363 | 0 | 0 | 0 | No, e>l/2 |
| SLV 15 | 112 | -8776 | 17107 | 4.24 | 131811 | 7.705 | Si |
| SLV 13 | -98 | -4065 | -155812 | 0 | 0 | 0 | No, e>l/2 |
| SLV 13 | 112 | -9763 | 10735 | 4.72 | 137875 | 12.844 | Si |
| SLV 14 | -98 | -4065 | -155812 | 0 | 0 | 0 | No, e>l/2 |
| SLV 14 | 112 | -9763 | 10735 | 4.72 | 137875 | 12.844 | Si |
| SLD 15 | -98 | -4706 | -102439 | 2.27 | 88099 | 0.86 | No, M>Mu |
| SLD 15 | 112 | -7801 | 7421 | 3.77 | 124081 | 16.72 | Si |
| SLD 16 | -98 | -4706 | -102439 | 2.27 | 88099 | 0.86 | No, M>Mu |
| SLD 16 | 112 | -7801 | 7421 | 3.77 | 124081 | 16.72 | Si |

### Verifica a taglio nel piano secondo D.M. 17-01-18 (N.T.C.) §7.8.2.2.2 con rottura per scorrimento in combinazioni non sismiche, γM = 3

| Comb. | Quota | N | V par | M | σ0 | σN | l' | fvd | Vt scorr. | Vt fess.diag. | Vt,lim | c.s. | Verifica |
|---|---|---|---|---|---|---|---|---|---|---|---|---|---|
| SLU 81 | -98 | -8783 | -2104 | -96766 | | 5.43 | 35.95 | 1.08 | 1752 | | | 0.83 | No, Vu<V |
| SLU 81 | 112 | -10565 | 409 | 1793 | | 5.1 | 46 | 1.08 | 2243 | | | 5.48 | Si |
| SLU 78 | -98 | -8520 | -2029 | -93354 | | 5.24 | 36.13 | 1.08 | 1761 | | | 0.87 | No, Vu<V |
| SLU 78 | 112 | -10222 | 410 | 1437 | | 4.94 | 46 | 1.08 | 2243 | | | 5.46 | Si |
| SLU 75 | -98 | -8417 | -2049 | -94396 | | 5.29 | 35.35 | 1.08 | 1724 | | | 0.84 | No, Vu<V |
| SLU 75 | 112 | -10209 | 407 | 1604 | | 4.93 | 46 | 1.08 | 2243 | | | 5.5 | Si |
| SLU 74 | -98 | -8476 | -2000 | -92058 | | 5.17 | 36.42 | 1.08 | 1775 | | | 0.89 | No, Vu<V |
| SLU 74 | 112 | -10148 | 395 | 866 | | 4.9 | 46 | 1.08 | 2243 | | | 5.68 | Si |
| SLU 80 | -98 | -8513 | -2014 | -92567 | | 5.2 | 36.38 | 1.08 | 1773 | | | 0.88 | No, Vu<V |
| SLU 80 | 112 | -10174 | 408 | 1407 | | 4.92 | 46 | 1.08 | 2243 | | | 5.49 | Si |

| Comb. | Quota | N | V par | M | σ0 | σN | l' | fvd | Vt scorr. | Vt fess.diag. | Vt,lim | c.s. | Verifica |
|---|---|---|---|---|---|---|---|---|---|---|---|---|---|
| SLU 83 | -98 | -8886 | -2085 | -95725 | | 5.38 | 36.68 | 1.08 | 1788 | | | 0.86 | No, Vu<V |
| SLU 83 | 112 | -10578 | 412 | 1626 | | 5.11 | 46 | 1.08 | 2243 | | | 5.45 | Si |
| SLU 76 | -98 | -8370 | -2065 | -95166 | | 5.33 | 34.89 | 1.08 | 1701 | | | 0.82 | No, Vu<V |
| SLU 76 | 112 | -10202 | 414 | 2066 | | 4.93 | 46 | 1.08 | 2243 | | | 5.42 | Si |
| SLU 82 | -98 | -8724 | -2152 | -99103 | | 5.55 | 34.92 | 1.08 | 1702 | | | 0.79 | No, Vu<V |
| SLU 82 | 112 | -10626 | 421 | 2531 | | 5.13 | 46 | 1.08 | 2243 | | | 5.32 | Si |
| SLU 84 | -98 | -8827 | -2133 | -98062 | | 5.5 | 35.67 | 1.08 | 1739 | | | 0.82 | No, Vu<V |
| SLU 84 | 112 | -10639 | 424 | 2364 | | 5.14 | 46 | 1.08 | 2243 | | | 5.29 | Si |
| SLU 73 | -98 | -8267 | -2084 | -96208 | | 5.39 | 34.09 | 1.08 | 1662 | | | 0.8 | No, Vu<V |
| SLU 73 | 112 | -10189 | 411 | 2233 | | 4.92 | 46 | 1.08 | 2243 | | | 5.46 | Si |

### Verifica a taglio nel piano secondo D.M. 17-01-18 (N.T.C.) §7.8.2.2.2 con rottura per scorrimento in combinazioni sismiche, γM = 2

| Comb. | Quota | N | V par | M | σ0 | σN | l' | fvd | Vt scorr. | Vt fess.diag. | Vt,lim | c.s. | Verifica |
|---|---|---|---|---|---|---|---|---|---|---|---|---|---|
| SLV 11 | -98 | -3684 | -1474 | -87097 | | 0 | 0 | 0.83 | 0 | | | 0 | No, Vu<V |
| SLV 11 | 112 | -6077 | -423 | 14497 | | 2.94 | 46 | 1.42 | 2940 | | | 6.95 | Si |
| SLV 15 | -98 | -3155 | -2765 | -153363 | | 0 | 0 | 0.83 | 0 | | | 0 | No, Vu<V |
| SLV 15 | 112 | -8776 | -637 | 17107 | | 4.24 | 46 | 1.63 | 3364 | | | 5.28 | Si |
| SLV 16 | -98 | -3155 | -2765 | -153363 | | 0 | 0 | 0.83 | 0 | | | 0 | No, Vu<V |
| SLV 16 | 112 | -8776 | -637 | 17107 | | 4.24 | 46 | 1.63 | 3364 | | | 5.28 | Si |
| SLD 15 | -98 | -4706 | -1985 | -102439 | | 28.29 | 3.7 | 1.63 | 270 | | | 0.14 | No, Vu<V |
| SLD 15 | 112 | -7801 | -118 | 7421 | | 3.77 | 46 | 1.59 | 3285 | | | 27.79 | Si |
| SLD 16 | -98 | -4706 | -1985 | -102439 | | 28.29 | 3.7 | 1.63 | 270 | | | 0.14 | No, Vu<V |
| SLD 16 | 112 | -7801 | -118 | 7421 | | 3.77 | 46 | 1.59 | 3285 | | | 27.79 | Si |
| SLD 13 | -98 | -5092 | -2073 | -103468 | | 14.08 | 8.04 | 1.63 | 588 | | | 0.28 | No, Vu<V |
| SLD 13 | 112 | -8221 | 1 | 4644 | | 3.97 | 46 | 1.63 | 3364 | | | 1000 | Si |
| SLD 14 | -98 | -5092 | -2073 | -103468 | | 14.08 | 8.04 | 1.63 | 588 | | | 0.28 | No, Vu<V |
| SLD 14 | 112 | -8221 | 1 | 4644 | | 3.97 | 46 | 1.63 | 3364 | | | 1000 | Si |
| SLV 13 | -98 | -4065 | -2978 | -155812 | | 0 | 0 | 0.83 | 0 | | | 0 | No, Vu<V |
| SLV 13 | 112 | -9763 | -356 | 10735 | | 4.72 | 46 | 1.63 | 3364 | | | 9.44 | Si |
| SLV 12 | -98 | -3684 | -1474 | -87097 | | 0 | 0 | 0.83 | 0 | | | 0 | No, Vu<V |
| SLV 12 | 112 | -6077 | -423 | 14497 | | 2.94 | 46 | 1.42 | 2940 | | | 6.95 | Si |
| SLV 14 | -98 | -4065 | -2978 | -155812 | | 0 | 0 | 0.83 | 0 | | | 0 | No, Vu<V |
| SLV 14 | 112 | -9763 | -356 | 10735 | | 4.72 | 46 | 1.63 | 3364 | | | 9.44 | Si |

### Verifica a pressoflessione fuori piano D.M. 17-01-18 (N.T.C.)

quota 36.5 Wa 0.08 denominatore 8 γM = 2

| Comb. | fd | Sa | σ0 | N | M | Mc | Coeff.s. | Verifica |
|---|---|---|---|---|---|---|---|---|
| SLV 4 | 14 | 0.25 | 3.59 | -7428 | 2828 | 118048 | 41.75 | Si |
| SLV 3 | 14 | 0.25 | 3.59 | -7428 | 2828 | 118048 | 41.75 | Si |
| SLV 8 | 14 | 0.25 | 3.67 | -7600 | 2828 | 119614 | 42.3 | Si |
| SLV 7 | 14 | 0.25 | 3.67 | -7600 | 2828 | 119614 | 42.3 | Si |
| SLV 1 | 14 | 0.25 | 4.16 | -8605 | 2828 | 127741 | 45.18 | Si |
| SLV 2 | 14 | 0.25 | 4.16 | -8605 | 2828 | 127741 | 45.18 | Si |
| SLV 12 | 14 | 0.25 | 4.31 | -8923 | 2828 | 129940 | 45.95 | Si |
| SLV 11 | 14 | 0.25 | 4.31 | -8923 | 2828 | 129940 | 45.95 | Si |
| SLV 6 | 14 | 0.25 | 5.57 | -11522 | 2828 | 141147 | 49.92 | Si |
| SLV 5 | 14 | 0.25 | 5.57 | -11522 | 2828 | 141147 | 49.92 | Si |

### Verifica dei meccanismi locali di collasso con analisi cinematica lineare

forza di aggancio al piano = 0 quota mezzeria = 36.5 Wa = 0.08 Ta = 0.0269

| Comb. | N top | N base | V orto | α0 | M* | e* | a0* | aLim | Verifica |
|---|---|---|---|---|---|---|---|---|---|
| SLV 8 | -4315 | -5047 | -214 | 0.048 | 5.179 | 0.955 | 73.002 | 417.584 | No |
| SLV 7 | -4315 | -5047 | -214 | 0.048 | 5.179 | 0.955 | 73.002 | 417.584 | No |
| SLV 11 | -5329 | -3684 | -245 | 0.049 | 6.21 | 0.962 | 73.688 | 417.584 | No |
| SLV 12 | -5329 | -3684 | -245 | 0.049 | 6.21 | 0.962 | 73.688 | 417.584 | No |
| SLV 15 | -6509 | -3155 | -225 | 0.058 | 7.411 | 0.968 | 86.402 | 332.581 | No |
| SLV 16 | -6509 | -3155 | -225 | 0.058 | 7.411 | 0.968 | 86.402 | 332.581 | No |
| SLV 10 | -5323 | -6715 | -82 | 0.077 | 6.204 | 0.962 | 115.869 | 417.584 | No |
| SLV 9 | -5323 | -6715 | -82 | 0.077 | 6.204 | 0.962 | 115.869 | 417.584 | No |
| SLV 3 | -3131 | -7698 | -120 | 0.062 | 3.977 | 0.944 | 95.747 | 332.581 | No |
| SLV 4 | -3131 | -7698 | -120 | 0.062 | 3.977 | 0.944 | 95.747 | 332.581 | No |

### Tabella dei coefficienti di sicurezza minimi

| Stato limite | Coeff.s. | Comb. | Verifica |
|---|---|---|---|
| PF_SLU | 0.977 | SLU 82 | No |
| V_SLU | 0.791 | SLU 82 | No |
| PF_SLV | 0 | SLV 11 | No |
| V_SLV | 0 | SLV 11 | No |
| PFFP_SLV | 41.747 | SLV 3 | Si |
| R_SLV | 0.175 | SLV 7 | No |

## Maschio 12

Verifiche condotte secondo D.M. 17-01-18 (N.T.C.)

### Dati geometrici

| X ini. | Y ini. | X fin. | Y fin. | Quota i. | Quota.s | l | Sp. | h netta | h ini. | h fin. | a | a.s.,sx | a.s.,dx |
|---|---|---|---|---|---|---|---|---|---|---|---|---|---|
| -1849.8 | 104.6 | -1849.8 | -328.4 | L1 | L3 | 433 | 30 | 269 | 269 | 269 | | | |

### Caratteristiche del materiale

(Circolare 7 21-01-19 C8.5.I) Muratura in mattoni pieni e malta di calce LC2_Corti

| fb | fk | fvk0 | fmedio | τ0 | fv0 | μ | ϕ | fv,lim | E | G | FC |
|---|---|---|---|---|---|---|---|---|---|---|---|
| 60 | | | 34.5 | 0.9 | 2 | 0.58 | 0.77 | 3.25 | 32000 | 12800 | 1.2 |

Verifica a pressoflessione nel piano secondo D.M. 17-01-18 NTC §7.8.2.2.1 in combinazioni non sismiche, γM = 3

| Comb. | Quota | N | M | σ0 | Mu | c.s. | Verifica |
|---|---|---|---|---|---|---|---|
| SLU 74 | -98 | -42486 | -1087049 | 3.27 | 5505016 | 5.064 | Si |
| SLU 74 | 171 | -22580 | 226166 | 1.74 | 3845332 | 17.002 | Si |
| SLU 37 | -98 | -35818 | -1049286 | 2.76 | 5129703 | 4.889 | Si |
| SLU 37 | 171 | -19207 | 134474 | 1.48 | 3403453 | 25.309 | Si |
| SLU 79 | -98 | -42688 | -1160296 | 3.29 | 5513547 | 4.752 | Si |
| SLU 79 | 171 | -22638 | 199064 | 1.74 | 3852609 | 19.354 | Si |
| SLU 81 | -98 | -43415 | -1070087 | 3.34 | 5542869 | 5.18 | Si |
| SLU 81 | 171 | -23148 | 246595 | 1.78 | 3915167 | 15.877 | Si |
| SLU 83 | -98 | -43917 | -1148565 | 3.38 | 5561847 | 4.842 | Si |
| SLU 83 | 171 | -23411 | 222411 | 1.8 | 3947138 | 17.747 | Si |
| SLU 32 | -98 | -35616 | -976040 | 2.74 | 5115492 | 5.241 | Si |
| SLU 32 | 171 | -19148 | 161576 | 1.47 | 3395352 | 21.014 | Si |
| SLU 69 | -98 | -38950 | -1009783 | 3 | 5328605 | 5.277 | Si |
| SLU 69 | 171 | -20424 | 203937 | 1.57 | 3568339 | 17.497 | Si |
| SLU 35 | -98 | -36118 | -1054518 | 2.78 | 5150488 | 4.884 | Si |
| SLU 35 | 171 | -19412 | 137391 | 1.49 | 3431638 | 24.977 | Si |
| SLU 77 | -98 | -42988 | -1165527 | 3.31 | 5525902 | 4.741 | Si |
| SLU 77 | 171 | -22843 | 201982 | 1.76 | 3877916 | 19.199 | Si |
| SLU 41 | -98 | -37047 | -1037555 | 2.85 | 5212553 | 5.024 | Si |
| SLU 41 | 171 | -19980 | 157821 | 1.54 | 3508837 | 22.233 | Si |

Verifica a pressoflessione nel piano secondo D.M. 17-01-18 NTC §7.8.2.2.1 in combinazioni sismiche, γM = 2

| Comb. | Quota | N | M | σ0 | Mu | c.s. | Verifica |
|---|---|---|---|---|---|---|---|
| SLV 12 | -98 | -26649 | -1677727 | 2.05 | 4800767 | 2.861 | Si |
| SLV 12 | 171 | -11983 | 258770 | 0.92 | 2398480 | 9.269 | Si |
| SLD 8 | -98 | -28702 | -1345635 | 2.21 | 5090306 | 3.783 | Si |
| SLD 8 | 171 | -14306 | 132881 | 1.1 | 2818119 | 21.208 | Si |
| SLD 7 | -98 | -28702 | -1345635 | 2.21 | 5090306 | 3.783 | Si |
| SLD 7 | 171 | -14306 | 132881 | 1.1 | 2818119 | 21.208 | Si |
| SLD 4 | -98 | -29946 | -1260780 | 2.31 | 5260078 | 4.172 | Si |
| SLD 4 | 171 | -15559 | 39495 | 1.2 | 3038334 | 76.929 | Si |
| SLD 3 | -98 | -29946 | -1260780 | 2.31 | 5260078 | 4.172 | Si |
| SLD 3 | 171 | -15559 | 39495 | 1.2 | 3038334 | 76.929 | Si |
| SLV 3 | -98 | -30808 | -2077663 | 2.37 | 5375228 | 2.587 | Si |
| SLV 3 | 171 | -15865 | -170081 | 1.22 | 3091435 | 18.176 | Si |
| SLV 8 | -98 | -27915 | -2290451 | 2.15 | 4980621 | 2.175 | Si |
| SLV 8 | 171 | -12825 | 47505 | 0.99 | 2552219 | 53.725 | Si |
| SLV 7 | -98 | -27915 | -2290451 | 2.15 | 4980621 | 2.175 | Si |
| SLV 7 | 171 | -12825 | 47505 | 0.99 | 2552219 | 53.725 | Si |
| SLV 11 | -98 | -26649 | -1677727 | 2.05 | 4800767 | 2.861 | Si |
| SLV 11 | 171 | -11983 | 258770 | 0.92 | 2398480 | 9.269 | Si |
| SLV 4 | -98 | -30808 | -2077663 | 2.37 | 5375228 | 2.587 | Si |
| SLV 4 | 171 | -15865 | -170081 | 1.22 | 3091435 | 18.176 | Si |

Verifica a taglio nel piano secondo D.M. 17-01-18 (N.T.C.) §7.8.2.2.2 con rottura per scorrimento in combinazioni non sismiche, γM = 3

| Comb. | Quota | N | V par | M | σ0 | σN | l' | fvd | Vt scorr. | Vt fess.diag. | Vt,lim | c.s. | Verifica |
|---|---|---|---|---|---|---|---|---|---|---|---|---|---|
| SLU 52 | -98 | -37944 | 2076 | -628763 | | 2.92 | 433 | 0.95 | 12276 | | | 5.91 | Si |
| SLU 52 | 171 | -20507 | 4252 | 304918 | | 1.58 | 433 | 0.77 | 9951 | | | 2.34 | Si |
| SLU 73 | -98 | -41620 | 1974 | -799821 | | 3.2 | 433 | 0.98 | 12766 | | | 6.47 | Si |
| SLU 73 | 171 | -22757 | 4352 | 290684 | | 1.75 | 433 | 0.79 | 10251 | | | 2.36 | Si |
| SLU 65 | -98 | -37581 | 1960 | -644076 | | 2.89 | 433 | 0.94 | 12227 | | | 6.24 | Si |
| SLU 65 | 171 | -20337 | 4115 | 292639 | | 1.57 | 433 | 0.76 | 9928 | | | 2.41 | Si |
| SLU 2 | -98 | -27036 | 2141 | -362009 | | 2.08 | 433 | 0.83 | 10821 | | | 5.06 | Si |
| SLU 2 | 171 | -14656 | 3699 | 242283 | | 1.13 | 433 | 0.71 | 9171 | | | 2.48 | Si |
| SLU 55 | -98 | -38446 | 1791 | -707241 | | 2.96 | 433 | 0.95 | 12343 | | | 6.89 | Si |
| SLU 55 | 171 | -20770 | 3977 | 280734 | | 1.6 | 433 | 0.77 | 9986 | | | 2.51 | Si |
| SLU 10 | -98 | -31074 | 2155 | -517753 | | 2.39 | 433 | 0.87 | 11360 | | | 5.27 | Si |
| SLU 10 | 171 | -17075 | 3936 | 240328 | | 1.31 | 433 | 0.73 | 9493 | | | 2.41 | Si |
| SLU 31 | -98 | -34750 | 2053 | -688811 | | 2.68 | 433 | 0.91 | 11850 | | | 5.77 | Si |
| SLU 31 | 171 | -19325 | 4036 | 226093 | | 1.49 | 433 | 0.75 | 9793 | | | 2.43 | Si |
| SLU 23 | -98 | -30711 | 2039 | -533067 | | 2.36 | 433 | 0.87 | 11311 | | | 5.55 | Si |
| SLU 23 | 171 | -16906 | 3799 | 228049 | | 1.3 | 433 | 0.73 | 9471 | | | 2.49 | Si |
| SLU 44 | -98 | -33906 | 2062 | -473018 | | 2.61 | 433 | 0.9 | 11737 | | | 5.69 | Si |
| SLU 44 | 171 | -18088 | 4016 | 306873 | | 1.39 | 433 | 0.74 | 9628 | | | 2.4 | Si |
| SLU 76 | -98 | -42122 | 1689 | -878299 | | 3.24 | 433 | 0.99 | 12833 | | | 7.6 | Si |
| SLU 76 | 171 | -23020 | 4077 | 266499 | | 1.77 | 433 | 0.79 | 10286 | | | 2.52 | Si |

Verifica a taglio nel piano secondo D.M. 17-01-18 (N.T.C.) §7.8.2.2.2 con rottura per scorrimento in combinazioni sismiche, γM = 2

| Comb. | Quota | N | V par | M | σ0 | σN | l' | fvd | Vt scorr. | Vt fess.diag. | Vt,lim | c.s. | Verifica |
|---|---|---|---|---|---|---|---|---|---|---|---|---|---|
| SLV 7 | -98 | -27915 | -17248 | -2290451 | | 2.31 | 403.34 | 1.29 | 15666 | | | 0.91 | No, Vu<V |
| SLV 7 | 171 | -12825 | -20175 | 47505 | | 0.99 | 433 | 1.03 | 13390 | | | 0.66 | No, Vu<V |
| SLV 11 | -98 | -26649 | -17483 | -1677727 | | 2.05 | 433 | 1.24 | 16155 | | | 0.92 | No, Vu<V |
| SLV 11 | 171 | -11983 | -20827 | 258770 | | 0.92 | 433 | 1.02 | 13222 | | | 0.63 | No, Vu<V |
| SLV 9 | -98 | -30695 | 16440 | 972653 | | 2.36 | 433 | 1.31 | 16964 | | | 1.03 | Si |
| SLV 9 | 171 | -17864 | 22703 | 341309 | | 1.38 | 433 | 1.11 | 14398 | | | 0.63 | No, Vu<V |
| SLV 10 | -98 | -30695 | 16440 | 972653 | | 2.36 | 433 | 1.31 | 16964 | | | 1.03 | Si |
| SLV 10 | 171 | -17864 | 22703 | 341309 | | 1.38 | 433 | 1.11 | 14398 | | | 0.63 | No, Vu<V |
| SLV 5 | -98 | -31960 | 16676 | 359929 | | 2.46 | 433 | 1.33 | 17217 | | | 1.03 | Si |
| SLV 5 | 171 | -18705 | 23355 | 130044 | | 1.44 | 433 | 1.12 | 14566 | | | 0.62 | No, Vu<V |
| SLV 6 | -98 | -31960 | 16676 | 359929 | | 2.46 | 433 | 1.33 | 17217 | | | 1.03 | Si |
| SLV 6 | 171 | -18705 | 23355 | 130044 | | 1.44 | 433 | 1.12 | 14566 | | | 0.62 | No, Vu<V |
| SLV 8 | -98 | -27915 | -17248 | -2290451 | | 2.31 | 403.34 | 1.29 | 15666 | | | 0.91 | No, Vu<V |
| SLV 8 | 171 | -12825 | -20175 | 47505 | | 0.99 | 433 | 1.03 | 13390 | | | 0.66 | No, Vu<V |
| SLD 6 | -98 | -30449 | 6745 | -233170 | | 2.34 | 433 | 1.3 | 16915 | | | 2.51 | Si |
| SLD 6 | 171 | -16729 | 10294 | 165963 | | 1.29 | 433 | 1.09 | 14171 | | | 1.38 | Si |
| SLD 5 | -98 | -30449 | 6745 | -233170 | | 2.34 | 433 | 1.3 | 16915 | | | 2.51 | Si |

| Comb. | Quota | N | V par | M | σ0 | σN | l' | fvd | Vt scorr. | Vt fess.diag. | Vt,lim | c.s. | Verifica |
|---|---|---|---|---|---|---|---|---|---|---|---|---|---|
| SLD 5 | 171 | -16729 | 10294 | 165963 | | 1.29 | 433 | 1.09 | 14171 | | | 1.38 | Si |
| SLV 12 | -98 | -26649 | -17483 | -1677727 | | 2.05 | 433 | 1.24 | 16155 | | | 0.92 | No, Vu<V |
| SLV 12 | 171 | -11983 | -20827 | 258770 | | 0.92 | 433 | 1.02 | 13222 | | | 0.63 | No, Vu<V |

### Verifica a pressoflessione fuori piano D.M. 17-01-18 (N.T.C.)

quota 36.5 Wa 0.05 denominatore 8 γM = 2

| Comb. | fd | Sa | σ0 | N | M | Mc | Coeff.s. | Verifica |
|---|---|---|---|---|---|---|---|---|
| SLV 8 | 14 | 0.25 | 1.72 | -22398 | 17745 | 288559 | 16.26 | Si |
| SLV 7 | 14 | 0.25 | 1.72 | -22398 | 17745 | 288559 | 16.26 | Si |
| SLV 11 | 14 | 0.25 | 1.72 | -22399 | 17745 | 288567 | 16.26 | Si |
| SLV 12 | 14 | 0.25 | 1.72 | -22399 | 17745 | 288567 | 16.26 | Si |
| SLV 3 | 14 | 0.25 | 1.83 | -23824 | 17745 | 303725 | 17.12 | Si |
| SLV 4 | 14 | 0.25 | 1.83 | -23824 | 17745 | 303725 | 17.12 | Si |
| SLV 16 | 14 | 0.25 | 1.83 | -23827 | 17745 | 303752 | 17.12 | Si |
| SLV 15 | 14 | 0.25 | 1.83 | -23827 | 17745 | 303752 | 17.12 | Si |
| SLV 2 | 14 | 0.25 | 1.93 | -25048 | 17745 | 316427 | 17.83 | Si |
| SLV 1 | 14 | 0.25 | 1.93 | -25048 | 17745 | 316427 | 17.83 | Si |

### Verifica dei meccanismi locali di collasso con analisi cinematica lineare

forza di aggancio al piano = 0 quota mezzeria = 36.5 Wa = 0.05 Ta = 0.0403

| Comb. | N top | N base | V orto | α0 | M* | e* | a0* | aLim | Verifica |
|---|---|---|---|---|---|---|---|---|---|
| SLV 10 | -17864 | -30695 | -877 | 0.022 | 23.148 | 0.94 | 34.577 | 562.86 | No |
| SLV 9 | -17864 | -30695 | -877 | 0.022 | 23.148 | 0.94 | 34.577 | 562.86 | No |
| SLV 5 | -18705 | -31960 | -885 | 0.023 | 24.001 | 0.942 | 35.955 | 562.86 | No |
| SLV 6 | -18705 | -31960 | -885 | 0.023 | 24.001 | 0.942 | 35.955 | 562.86 | No |
| SLV 13 | -14824 | -27802 | -711 | 0.026 | 20.073 | 0.933 | 40.429 | 392.678 | No |
| SLV 14 | -14824 | -27802 | -711 | 0.026 | 20.073 | 0.933 | 40.429 | 392.678 | No |
| SLV 11 | -11983 | -26649 | -429 | 0.039 | 17.21 | 0.924 | 61.37 | 562.86 | No |
| SLV 12 | -11983 | -26649 | -429 | 0.039 | 17.21 | 0.924 | 61.37 | 562.86 | No |
| SLV 8 | -12825 | -27915 | -436 | 0.039 | 18.057 | 0.927 | 61.818 | 562.86 | No |
| SLV 7 | -12825 | -27915 | -436 | 0.039 | 18.057 | 0.927 | 61.818 | 562.86 | No |

### Tabella dei coefficienti di sicurezza minimi

| Stato limite | Coeff.s. | Comb. | Verifica |
|---|---|---|---|
| PF_SLU | 4.741 | SLU 77 | Si |
| V_SLU | 2.34 | SLU 52 | Si |
| PF_SLV | 2.175 | SLV 7 | Si |
| V_SLV | 0.624 | SLV 5 | No |
| PFFP_SLV | 16.262 | SLV 7 | Si |
| R_SLV | 0.061 | SLV 9 | No |

## Maschio 13

Verifiche condotte secondo D.M. 17-01-18 (N.T.C.)

### Dati geometrici

| X ini. | Y ini. | X fin. | Y fin. | Quota i. | Quota.s | l | Sp. | h netta | h ini. | h fin. | a | a.s.,sx | a.s.,dx |
|---|---|---|---|---|---|---|---|---|---|---|---|---|---|
| -1705.3 | -500.9 | -1705.3 | -350.9 | L1 | L3 | 150 | 45 | 269 | 269 | 269 | | | |

### Caratteristiche del materiale

(Circolare 7 21-01-19 C8.5.I) Muratura in mattoni pieni e malta di calce LC2_Corti

| fb | fk | fvk0 | fmedio | τ0 | fv0 | μ | ϕ | fv,lim | E | G | FC |
|---|---|---|---|---|---|---|---|---|---|---|---|
| 60 | | | 34.5 | 0.9 | 2 | 0.58 | 0.77 | 3.25 | 32000 | 12800 | 1.2 |

### Verifica a pressoflessione nel piano secondo D.M. 17-01-18 NTC §7.8.2.2.1 in combinazioni non sismiche, γM = 3

| Comb. | Quota | N | M | σ0 | Mu | c.s. | Verifica |
|---|---|---|---|---|---|---|---|
| SLU 78 | -98 | -19799 | 358767 | 2.93 | 950220 | 2.649 | Si |
| SLU 78 | 171 | -14133 | 882928 | 2.09 | 787530 | 0.892 | No, M>Mu |
| SLU 82 | -98 | -20496 | 371738 | 3.04 | 964186 | 2.594 | Si |
| SLU 82 | 171 | -14778 | 920850 | 2.19 | 810476 | 0.88 | No, M>Mu |
| SLU 77 | -98 | -19876 | 324917 | 2.94 | 951833 | 2.929 | Si |
| SLU 77 | 171 | -14570 | 900751 | 2.16 | 803182 | 0.892 | No, M>Mu |
| SLU 84 | -98 | -20387 | 372974 | 3.02 | 962105 | 2.58 | Si |
| SLU 84 | 171 | -14692 | 916515 | 2.18 | 807474 | 0.881 | No, M>Mu |
| SLU 75 | -98 | -19907 | 357532 | 2.95 | 952475 | 2.664 | Si |
| SLU 75 | 171 | -14219 | 887263 | 2.11 | 790664 | 0.891 | No, M>Mu |
| SLU 73 | -98 | -19827 | 376453 | 2.94 | 950813 | 2.526 | Si |
| SLU 73 | 171 | -13861 | 870521 | 2.05 | 777513 | 0.893 | No, M>Mu |
| SLU 83 | -98 | -20465 | 339123 | 3.03 | 963594 | 2.841 | Si |
| SLU 83 | 171 | -15129 | 934338 | 2.24 | 822460 | 0.88 | No, M>Mu |
| SLU 74 | -98 | -19984 | 323682 | 2.96 | 954065 | 2.948 | Si |
| SLU 74 | 171 | -14656 | 905085 | 2.17 | 806213 | 0.891 | No, M>Mu |
| SLU 76 | -98 | -19719 | 377689 | 2.92 | 948535 | 2.511 | Si |
| SLU 76 | 171 | -13775 | 866186 | 2.04 | 774295 | 0.894 | No, M>Mu |
| SLU 81 | -98 | -20573 | 337888 | 3.05 | 965652 | 2.858 | Si |
| SLU 81 | 171 | -15215 | 938672 | 2.25 | 825360 | 0.879 | No, M>Mu |

### Verifica a pressoflessione nel piano secondo D.M. 17-01-18 NTC §7.8.2.2.1 in combinazioni sismiche, γM = 2

| Comb. | Quota | N | M | σ0 | Mu | c.s. | Verifica |
|---|---|---|---|---|---|---|---|
| SLV 8 | -98 | -1617 | 323555 | 0 | 0 | 0 | No, e>l/2 |
| SLV 8 | 171 | 2668 | -74343 | 0 | 0 | 0 | No, Trazione |
| SLV 11 | -98 | -1928 | 450322 | 0 | 0 | 0 | No, e>l/2 |
| SLV 11 | 171 | 451 | 56552 | 0 | 0 | 0 | No, Trazione |

| Comb. | Quota | N | M | σ0 | Mu | c.s. | Verifica |
|---|---|---|---|---|---|---|---|
| SLV 9 | -98 | -27193 | 113945 | 4.03 | 1367060 | 11.997 | Si |
| SLV 9 | 171 | -23181 | 1340539 | 3.43 | 1249914 | 0.932 | No, M>Mu |
| SLV 5 | -98 | -26882 | -12822 | 3.98 | 1359025 | 105.991 | Si |
| SLV 5 | 171 | -20964 | 1209644 | 3.11 | 1172641 | 0.969 | No, M>Mu |
| SLV 7 | -98 | -1617 | 323555 | 0 | 0 | 0 | No, e>l/2 |
| SLV 7 | 171 | 2668 | -74343 | 0 | 0 | 0 | No, Trazione |
| SLV 3 | -98 | -10097 | 57927 | 1.5 | 664555 | 11.472 | Si |
| SLV 3 | 171 | -3017 | 222341 | 0.45 | 217998 | 0.98 | No, M>Mu |
| SLV 4 | -98 | -10097 | 57927 | 1.5 | 664555 | 11.472 | Si |
| SLV 4 | 171 | -3017 | 222341 | 0.45 | 217998 | 0.98 | No, M>Mu |
| SLV 10 | -98 | -27193 | 113945 | 4.03 | 1367060 | 11.997 | Si |
| SLV 10 | 171 | -23181 | 1340539 | 3.43 | 1249914 | 0.932 | No, M>Mu |
| SLV 12 | -98 | -1928 | 450322 | 0 | 0 | 0 | No, e>l/2 |
| SLV 12 | 171 | 451 | 56552 | 0 | 0 | 0 | No, Trazione |
| SLV 6 | -98 | -26882 | -12822 | 3.98 | 1359025 | 105.991 | Si |
| SLV 6 | 171 | -20964 | 1209644 | 3.11 | 1172641 | 0.969 | No, M>Mu |

Verifica a taglio nel piano secondo D.M. 17-01-18 (N.T.C.) §7.8.2.2.2 con rottura per scorrimento in combinazioni non sismiche, γM = 3

| Comb. | Quota | N | V par | M | σ0 | σN | l' | fvd | Vt scorr. | Vt fess.diag. | Vt,lim | c.s. | Verifica |
|---|---|---|---|---|---|---|---|---|---|---|---|---|---|
| SLU 83 | -98 | -20465 | -447 | 339123 | | 3.03 | 150 | 0.96 | 6479 | | | 14.5 | Si |
| SLU 83 | 171 | -15129 | -1665 | 934338 | | 8.46 | 39.72 | 1.08 | 1936 | | | 1.16 | Si |
| SLU 77 | -98 | -19876 | -405 | 324917 | | 2.94 | 150 | 0.95 | 6400 | | | 15.82 | Si |
| SLU 77 | 171 | -14570 | -1598 | 900751 | | 8.19 | 39.53 | 1.08 | 1927 | | | 1.21 | Si |
| SLU 82 | -98 | -20496 | -214 | 371738 | | 3.04 | 150 | 0.96 | 6483 | | | 30.25 | Si |
| SLU 82 | 171 | -14778 | -1486 | 920850 | | 8.63 | 38.07 | 1.08 | 1856 | | | 1.25 | Si |
| SLU 75 | -98 | -19907 | -172 | 357532 | | 2.95 | 150 | 0.95 | 6404 | | | 37.2 | Si |
| SLU 75 | 171 | -14219 | -1419 | 887263 | | 8.36 | 37.81 | 1.08 | 1843 | | | 1.3 | Si |
| SLU 74 | -98 | -19984 | -422 | 323682 | | 2.96 | 150 | 0.95 | 6415 | | | 15.21 | Si |
| SLU 74 | 171 | -14656 | -1612 | 905085 | | 8.2 | 39.74 | 1.08 | 1937 | | | 1.2 | Si |
| SLU 81 | -98 | -20573 | -464 | 337888 | | 3.05 | 150 | 0.96 | 6493 | | | 14 | Si |
| SLU 81 | 171 | -15215 | -1680 | 938672 | | 8.47 | 39.92 | 1.08 | 1946 | | | 1.16 | Si |
| SLU 62 | -98 | -19331 | -382 | 305947 | | 2.86 | 150 | 0.94 | 6327 | | | 16.56 | Si |
| SLU 62 | 171 | -13949 | -1528 | 861506 | | 7.8 | 39.72 | 1.08 | 1936 | | | 1.27 | Si |
| SLU 60 | -98 | -19439 | -399 | 304711 | | 2.88 | 150 | 0.94 | 6342 | | | 15.89 | Si |
| SLU 60 | 171 | -14035 | -1543 | 865841 | | 7.81 | 39.93 | 1.08 | 1947 | | | 1.26 | Si |
| SLU 84 | -98 | -20387 | -197 | 372974 | | 3.02 | 150 | 0.96 | 6468 | | | 32.8 | Si |
| SLU 84 | 171 | -14692 | -1471 | 916515 | | 8.62 | 37.86 | 1.08 | 1845 | | | 1.25 | Si |
| SLU 79 | -98 | -19739 | -395 | 322507 | | 2.92 | 150 | 0.95 | 6382 | | | 16.17 | Si |
| SLU 79 | 171 | -14416 | -1578 | 891556 | | 8.12 | 39.47 | 1.08 | 1924 | | | 1.22 | Si |

Verifica a taglio nel piano secondo D.M. 17-01-18 (N.T.C.) §7.8.2.2.2 con rottura per scorrimento in combinazioni sismiche, γM = 2

| Comb. | Quota | N | V par | M | σ0 | σN | l' | fvd | Vt scorr. | Vt fess.diag. | Vt,lim | c.s. | Verifica |
|---|---|---|---|---|---|---|---|---|---|---|---|---|---|
| SLV 6 | -98 | -26882 | -3365 | -12822 | | 3.98 | 150 | 1.63 | 10969 | | | 3.26 | Si |
| SLV 6 | 171 | -20964 | -2907 | 1209644 | | 8.98 | 51.89 | 1.63 | 3795 | | | 1.31 | Si |
| SLV 12 | -98 | -1928 | 2813 | 450322 | | 0 | 0 | 0.83 | 0 | | | 0 | No, Vu<V |
| SLV 12 | 171 | 451 | 658 | 56552 | | 0 | 0 | 0.83 | 0 | | | 0 | No, Vu<V |
| SLV 5 | -98 | -26882 | -3365 | -12822 | | 3.98 | 150 | 1.63 | 10969 | | | 3.26 | Si |
| SLV 5 | 171 | -20964 | -2907 | 1209644 | | 8.98 | 51.89 | 1.63 | 3795 | | | 1.31 | Si |
| SLV 4 | -98 | -10097 | 1089 | 57927 | | 1.5 | 150 | 1.13 | 7644 | | | 7.02 | Si |
| SLV 4 | 171 | -3017 | 276 | 222341 | | 17.14 | 3.91 | 1.63 | 286 | | | 1.04 | Si |
| SLV 7 | -98 | -1617 | 3054 | 323555 | | 0 | 0 | 0.83 | 0 | | | 0 | No, Vu<V |
| SLV 7 | 171 | 2668 | 1135 | -74343 | | 0 | 0 | 0.83 | 0 | | | 0 | No, Vu<V |
| SLV 11 | -98 | -1928 | 2813 | 450322 | | 0 | 0 | 0.83 | 0 | | | 0 | No, Vu<V |
| SLV 11 | 171 | 451 | 658 | 56552 | | 0 | 0 | 0.83 | 0 | | | 0 | No, Vu<V |
| SLV 3 | -98 | -10097 | 1089 | 57927 | | 1.5 | 150 | 1.13 | 7644 | | | 7.02 | Si |
| SLV 3 | 171 | -3017 | 276 | 222341 | | 17.14 | 3.91 | 1.63 | 286 | | | 1.04 | Si |
| SLV 10 | -98 | -27193 | -3606 | 113945 | | 4.03 | 150 | 1.63 | 10969 | | | 3.04 | Si |
| SLV 10 | 171 | -23181 | -3384 | 1340539 | | 10 | 51.51 | 1.63 | 3767 | | | 1.11 | Si |
| SLV 9 | -98 | -27193 | -3606 | 113945 | | 4.03 | 150 | 1.63 | 10969 | | | 3.04 | Si |
| SLV 9 | 171 | -23181 | -3384 | 1340539 | | 10 | 51.51 | 1.63 | 3767 | | | 1.11 | Si |
| SLV 8 | -98 | -1617 | 3054 | 323555 | | 0 | 0 | 0.83 | 0 | | | 0 | No, Vu<V |
| SLV 8 | 171 | 2668 | 1135 | -74343 | | 0 | 0 | 0.83 | 0 | | | 0 | No, Vu<V |

Verifica a pressoflessione fuori piano D.M. 17-01-18 (N.T.C.)

quota 36.5 Wa 0.08 denominatore 8 γM = 2

| Comb. | fd | Sa | σ0 | N | M | Mc | Coeff.s. | Verifica |
|---|---|---|---|---|---|---|---|---|
| SLV 8 | 14 | 0.25 | 0.33 | -2204 | 9221 | 48271 | 5.24 | Si |
| SLV 7 | 14 | 0.25 | 0.33 | -2204 | 9221 | 48271 | 5.24 | Si |
| SLV 11 | 14 | 0.25 | 0.41 | -2783 | 9221 | 60514 | 6.56 | Si |
| SLV 12 | 14 | 0.25 | 0.41 | -2783 | 9221 | 60514 | 6.56 | Si |
| SLV 3 | 14 | 0.25 | 1.31 | -8818 | 9221 | 177199 | 19.22 | Si |
| SLV 4 | 14 | 0.25 | 1.31 | -8818 | 9221 | 177199 | 19.22 | Si |
| SLV 16 | 14 | 0.25 | 1.59 | -10749 | 9221 | 210331 | 22.81 | Si |
| SLV 15 | 14 | 0.25 | 1.59 | -10749 | 9221 | 210331 | 22.81 | Si |
| SLV 2 | 14 | 0.25 | 2.23 | -15067 | 9221 | 277073 | 30.05 | Si |
| SLV 1 | 14 | 0.25 | 2.23 | -15067 | 9221 | 277073 | 30.05 | Si |

Verifica dei meccanismi locali di collasso con analisi cinematica lineare

forza di aggancio al piano = 0 quota mezzeria = 36.5 Wa = 0.08 Ta = 0.0269

| Comb. | N top | N base | V orto | α0 | M* | e* | a0* | aLim | Verifica |
|---|---|---|---|---|---|---|---|---|---|
| SLV 7 | 2668 | -1617 | 73 | 0 | 0 | 0 | 0 | 417.584 | No, Trazione |
| SLV 11 | 451 | -1928 | -116 | 0 | 0 | 0 | 0 | 417.584 | No, Trazione |
| SLV 12 | 451 | -1928 | -116 | 0 | 0 | 0 | 0 | 417.584 | No, Trazione |
| SLV 8 | 2668 | -1617 | 73 | 0 | 0 | 0 | 0 | 417.584 | No, Trazione |
| SLV 10 | -23181 | -27193 | -341 | 0.075 | 26.157 | 0.97 | 112.981 | 417.584 | No |
| SLV 9 | -23181 | -27193 | -341 | 0.075 | 26.157 | 0.97 | 112.981 | 417.584 | No |
| SLV 15 | -10406 | -11134 | -415 | 0.061 | 13.167 | 0.945 | 93.124 | 332.581 | No |

| Comb. | N top | N base | V orto | α0 | M* | e* | a0* | aLim | Verifica |
|---|---|---|---|---|---|---|---|---|---|
| SLV 16 | -10406 | -11134 | -415 | 0.061 | 13.167 | 0.945 | 93.124 | 332.581 | No |
| SLV 14 | -17496 | -18713 | -483 | 0.066 | 20.371 | 0.962 | 99.012 | 332.581 | No |
| SLV 13 | -17496 | -18713 | -483 | 0.066 | 20.371 | 0.962 | 99.012 | 332.581 | No |

### Tabella dei coefficienti di sicurezza minimi

| Stato limite | Coeff.s. | Comb. | Verifica |
|---|---|---|---|
| PF_SLU | 0.879 | SLU 81 | No |
| V_SLU | 1.158 | SLU 81 | Si |
| PF_SLV | 0 | SLV 12 | No |
| V_SLV | 0 | SLV 7 | No |
| PFFP_SLV | 5.235 | SLV 7 | Si |
| R_SLV | 0 | SLV 12 | No |

## Maschio 14

Verifiche condotte secondo D.M. 17-01-18 (N.T.C.)

### Dati geometrici

| X ini. | Y ini. | X fin. | Y fin. | Quota i. | Quota.s | l | Sp. | h netta | h ini. | h fin. | a | a.s.,sx | a.s.,dx |
|---|---|---|---|---|---|---|---|---|---|---|---|---|---|
| -1376.3 | -478.4 | -1705.3 | -478.4 | L1 | L3 | 329 | 45 | 269 | 269 | 269 | | | |

### Caratteristiche del materiale

(Circolare 7 21-01-19 C8.5.I) Muratura in mattoni pieni e malta di calce LC2_Corti

| fb | fk | fvk0 | fmedio | τ0 | fv0 | μ | ϕ | fv,lim | E | G | FC |
|---|---|---|---|---|---|---|---|---|---|---|---|
| 60 | | | 34.5 | 0.9 | 2 | 0.58 | 0.77 | 3.25 | 32000 | 12800 | 1.2 |

### Verifica a pressoflessione nel piano secondo D.M. 17-01-18 NTC §7.8.2.2.1 in combinazioni non sismiche, γM = 3

| Comb. | Quota | N | M | σ0 | Mu | c.s. | Verifica |
|---|---|---|---|---|---|---|---|
| SLU 82 | -98 | -33624 | -702490 | 2.27 | 3989011 | 5.678 | Si |
| SLU 82 | 171 | -20194 | 182668 | 1.36 | 2765660 | 15.14 | Si |
| SLU 83 | -98 | -33844 | -706274 | 2.29 | 4004970 | 5.671 | Si |
| SLU 83 | 171 | -20013 | 132286 | 1.35 | 2745809 | 20.757 | Si |
| SLU 84 | -98 | -33676 | -718184 | 2.27 | 3992770 | 5.56 | Si |
| SLU 84 | 171 | -20188 | 152216 | 1.36 | 2765061 | 18.165 | Si |
| SLU 42 | -98 | -26867 | -611906 | 1.81 | 3435021 | 5.614 | Si |
| SLU 42 | 171 | -16205 | 94732 | 1.09 | 2307504 | 24.358 | Si |
| SLU 41 | -98 | -27036 | -599995 | 1.83 | 3450351 | 5.751 | Si |
| SLU 41 | 171 | -16029 | 74802 | 1.08 | 2286343 | 30.565 | Si |
| SLU 40 | -98 | -26815 | -596212 | 1.81 | 3430302 | 5.753 | Si |
| SLU 40 | 171 | -16210 | 125183 | 1.09 | 2308162 | 18.438 | Si |
| SLU 76 | -98 | -32809 | -683701 | 2.22 | 3928771 | 5.746 | Si |
| SLU 76 | 171 | -19851 | 183351 | 1.34 | 2727928 | 14.878 | Si |
| SLU 38 | -98 | -26164 | -585175 | 1.77 | 3370232 | 5.759 | Si |
| SLU 38 | 171 | -15744 | 82128 | 1.06 | 2251827 | 27.418 | Si |
| SLU 80 | -98 | -32973 | -691454 | 2.23 | 3941037 | 5.7 | Si |
| SLU 80 | 171 | -19728 | 139613 | 1.33 | 2714388 | 19.442 | Si |
| SLU 78 | -98 | -33024 | -689314 | 2.23 | 3944862 | 5.723 | Si |
| SLU 78 | 171 | -19781 | 147385 | 1.34 | 2720241 | 18.457 | Si |

### Verifica a pressoflessione nel piano secondo D.M. 17-01-18 NTC §7.8.2.2.1 in combinazioni sismiche, γM = 2

| Comb. | Quota | N | M | σ0 | Mu | c.s. | Verifica |
|---|---|---|---|---|---|---|---|
| SLV 12 | -98 | -8395 | -294938 | 0.57 | 1316931 | 4.465 | Si |
| SLV 12 | 171 | -2949 | 451955 | 0.2 | 477142 | 1.056 | Si |
| SLV 14 | -98 | -11231 | -586177 | 0.76 | 1732825 | 2.956 | Si |
| SLV 14 | 171 | -2310 | 788342 | 0 | 0 | 0 | No, e>l/2 |
| SLD 16 | -98 | -15938 | -454978 | 1.08 | 2390828 | 5.255 | Si |
| SLD 16 | 171 | -7442 | 455278 | 0.5 | 1173817 | 2.578 | Si |
| SLD 14 | -98 | -18765 | -503696 | 1.27 | 2766623 | 5.493 | Si |
| SLD 14 | 171 | -9243 | 426987 | 0.62 | 1442809 | 3.379 | Si |
| SLV 11 | -98 | -8395 | -294938 | 0.57 | 1316931 | 4.465 | Si |
| SLV 11 | 171 | -2949 | 451955 | 0.2 | 477142 | 1.056 | Si |
| SLV 16 | -98 | -4603 | -481560 | 0.31 | 738003 | 1.533 | Si |
| SLV 16 | 171 | 2000 | 844593 | 0 | 0 | 0 | No, Trazione |
| SLD 15 | -98 | -15938 | -454978 | 1.08 | 2390828 | 5.255 | Si |
| SLD 15 | 171 | -7442 | 455278 | 0.5 | 1173817 | 2.578 | Si |
| SLV 13 | -98 | -11231 | -586177 | 0.76 | 1732825 | 2.956 | Si |
| SLV 13 | 171 | -2310 | 788342 | 0 | 0 | 0 | No, e>l/2 |
| SLD 13 | -98 | -18765 | -503696 | 1.27 | 2766623 | 5.493 | Si |
| SLD 13 | 171 | -9243 | 426987 | 0.62 | 1442809 | 3.379 | Si |
| SLV 15 | -98 | -4603 | -481560 | 0.31 | 738003 | 1.533 | Si |
| SLV 15 | 171 | 2000 | 844593 | 0 | 0 | 0 | No, Trazione |

### Verifica a taglio nel piano secondo D.M. 17-01-18 (N.T.C.) §7.8.2.2.2 con rottura per scorrimento in combinazioni non sismiche, γM = 3

| Comb. | Quota | N | V par | M | σ0 | σN | l' | fvd | Vt scorr. | Vt fess.diag. | Vt,lim | c.s. | Verifica |
|---|---|---|---|---|---|---|---|---|---|---|---|---|---|
| SLU 84 | -98 | -33676 | 5064 | -718184 | | 2.27 | 329 | 0.86 | 12715 | | | 2.51 | Si |
| SLU 84 | 171 | -20188 | 2001 | 152216 | | 1.36 | 329 | 0.74 | 10917 | | | 5.45 | Si |
| SLU 79 | -98 | -33141 | 4873 | -679543 | | 2.24 | 329 | 0.85 | 12644 | | | 2.59 | Si |
| SLU 79 | 171 | -19552 | 1905 | 119683 | | 1.32 | 329 | 0.73 | 10832 | | | 5.69 | Si |
| SLU 82 | -98 | -33624 | 4982 | -702490 | | 2.27 | 329 | 0.86 | 12708 | | | 2.55 | Si |
| SLU 82 | 171 | -20194 | 1955 | 182668 | | 1.36 | 329 | 0.74 | 10918 | | | 5.58 | Si |
| SLU 77 | -98 | -33192 | 4865 | -677403 | | 2.24 | 329 | 0.85 | 12651 | | | 2.6 | Si |
| SLU 77 | 171 | -19605 | 1898 | 127454 | | 1.32 | 329 | 0.73 | 10839 | | | 5.71 | Si |
| SLU 63 | -98 | -32848 | 4858 | -676827 | | 2.22 | 329 | 0.85 | 12605 | | | 2.59 | Si |
| SLU 63 | 171 | -19610 | 1925 | 164755 | | 1.32 | 329 | 0.73 | 10840 | | | 5.63 | Si |

| Comb. | Quota | N | V par | M | σ0 | σN | l' | fvd | Vt scorr. | Vt fess.diag. | Vt,lim | c.s. | Verifica |
|---|---|---|---|---|---|---|---|---|---|---|---|---|---|
| SLU 81 | -98 | -33792 | 4917 | -690580 | | 2.28 | 329 | 0.86 | 12731 | | | 2.59 | Si |
| SLU 81 | 171 | -20018 | 1889 | 162738 | | 1.35 | 329 | 0.74 | 10894 | | | 5.77 | Si |
| SLU 78 | -98 | -33024 | 4930 | -689314 | | 2.23 | 329 | 0.85 | 12628 | | | 2.56 | Si |
| SLU 78 | 171 | -19781 | 1964 | 147385 | | 1.34 | 329 | 0.73 | 10862 | | | 5.53 | Si |
| SLU 80 | -98 | -32973 | 4937 | -691454 | | 2.23 | 329 | 0.85 | 12621 | | | 2.56 | Si |
| SLU 80 | 171 | -19728 | 1971 | 139613 | | 1.33 | 329 | 0.73 | 10855 | | | 5.51 | Si |
| SLU 76 | -98 | -32809 | 4899 | -683701 | | 2.22 | 329 | 0.85 | 12599 | | | 2.57 | Si |
| SLU 76 | 171 | -19851 | 1969 | 183351 | | 1.34 | 329 | 0.73 | 10872 | | | 5.52 | Si |
| SLU 83 | -98 | -33844 | 4999 | -706274 | | 2.29 | 329 | 0.86 | 12738 | | | 2.55 | Si |
| SLU 83 | 171 | -20013 | 1935 | 132286 | | 1.35 | 329 | 0.74 | 10893 | | | 5.63 | Si |

### Verifica a taglio nel piano secondo D.M. 17-01-18 (N.T.C.) §7.8.2.2.2 con rottura per scorrimento in combinazioni sismiche, γM = 2

| Comb. | Quota | N | V par | M | σ0 | σN | l' | fvd | Vt scorr. | Vt fess.diag. | Vt,lim | c.s. | Verifica |
|---|---|---|---|---|---|---|---|---|---|---|---|---|---|
| SLV 1 | -98 | -44157 | 12966 | -401697 | | 2.98 | 329 | 1.43 | 21169 | | | 1.63 | Si |
| SLV 1 | 171 | -30817 | 8355 | -520986 | | 2.08 | 329 | 1.25 | 18501 | | | 2.21 | Si |
| SLD 2 | -98 | -32823 | 7460 | -428278 | | 2.22 | 329 | 1.28 | 18902 | | | 2.53 | Si |
| SLD 2 | 171 | -21375 | 4301 | -131671 | | 1.44 | 329 | 1.12 | 16612 | | | 3.86 | Si |
| SLV 16 | -98 | -4603 | -6283 | -481560 | | 0.57 | 179.68 | 0.95 | 7659 | | | 1.22 | Si |
| SLV 16 | 171 | 2000 | -5772 | 844593 | | 0 | 0 | 0.83 | 0 | | | 0 | No, Vu<V |
| SLV 3 | -98 | -37529 | 12187 | -297080 | | 2.53 | 329 | 1.34 | 19843 | | | 1.63 | Si |
| SLV 3 | 171 | -26507 | 8482 | -464734 | | 1.79 | 329 | 1.19 | 17639 | | | 2.08 | Si |
| SLV 14 | -98 | -11231 | -5504 | -586177 | | 0.76 | 329 | 0.99 | 14584 | | | 2.65 | Si |
| SLV 14 | 171 | -2310 | -5900 | 788342 | | 0 | 0 | 0.83 | 0 | | | 0 | No, Vu<V |
| SLV 4 | -98 | -37529 | 12187 | -297080 | | 2.53 | 329 | 1.34 | 19843 | | | 1.63 | Si |
| SLV 4 | 171 | -26507 | 8482 | -464734 | | 1.79 | 329 | 1.19 | 17639 | | | 2.08 | Si |
| SLV 15 | -98 | -4603 | -6283 | -481560 | | 0.57 | 179.68 | 0.95 | 7659 | | | 1.22 | Si |
| SLV 15 | 171 | 2000 | -5772 | 844593 | | 0 | 0 | 0.83 | 0 | | | 0 | No, Vu<V |
| SLD 1 | -98 | -32823 | 7460 | -428278 | | 2.22 | 329 | 1.28 | 18902 | | | 2.53 | Si |
| SLD 1 | 171 | -21375 | 4301 | -131671 | | 1.44 | 329 | 1.12 | 16612 | | | 3.86 | Si |
| SLV 13 | -98 | -11231 | -5504 | -586177 | | 0.76 | 329 | 0.99 | 14584 | | | 2.65 | Si |
| SLV 13 | 171 | -2310 | -5900 | 788342 | | 0 | 0 | 0.83 | 0 | | | 0 | No, Vu<V |
| SLV 2 | -98 | -44157 | 12966 | -401697 | | 2.98 | 329 | 1.43 | 21169 | | | 1.63 | Si |
| SLV 2 | 171 | -30817 | 8355 | -520986 | | 2.08 | 329 | 1.25 | 18501 | | | 2.21 | Si |

### Verifica a pressoflessione fuori piano D.M. 17-01-18 (N.T.C.)

quota 36.5 Wa 0.08 denominatore 8 γM = 2

| Comb. | fd | Sa | σ0 | N | M | Mc | Coeff.s. | Verifica |
|---|---|---|---|---|---|---|---|---|
| SLV 16 | 14 | 0.25 | 0.18 | -2638 | 20224 | 58482 | 2.89 | Si |
| SLV 15 | 14 | 0.25 | 0.18 | -2638 | 20224 | 58482 | 2.89 | Si |
| SLV 11 | 14 | 0.25 | 0.48 | -7164 | 20224 | 154813 | 7.65 | Si |
| SLV 12 | 14 | 0.25 | 0.48 | -7164 | 20224 | 154813 | 7.65 | Si |
| SLV 13 | 14 | 0.25 | 0.53 | -7780 | 20224 | 167514 | 8.28 | Si |
| SLV 14 | 14 | 0.25 | 0.53 | -7780 | 20224 | 167514 | 8.28 | Si |
| SLV 7 | 14 | 0.25 | 1.09 | -16186 | 20224 | 331604 | 16.4 | Si |
| SLV 8 | 14 | 0.25 | 1.09 | -16186 | 20224 | 331604 | 16.4 | Si |
| SLV 10 | 14 | 0.25 | 1.64 | -24304 | 20224 | 473374 | 23.41 | Si |
| SLV 9 | 14 | 0.25 | 1.64 | -24304 | 20224 | 473374 | 23.41 | Si |

### Verifica dei meccanismi locali di collasso con analisi cinematica lineare

forza di aggancio al piano = 0 quota mezzeria = 36.5 Wa = 0.08 Ta = 0.0269

| Comb. | N top | N base | V orto | α0 | M* | e* | a0* | aLim | Verifica |
|---|---|---|---|---|---|---|---|---|---|
| SLV 16 | 2000 | -4603 | 395 | 0 | 0 | 0 | 0 | 332.581 | No, Trazione |
| SLV 15 | 2000 | -4603 | 395 | 0 | 0 | 0 | 0 | 332.581 | No, Trazione |
| SLV 4 | -26507 | -37529 | -1566 | 0.042 | 32.616 | 0.95 | 63.571 | 332.581 | No |
| SLV 3 | -26507 | -37529 | -1566 | 0.042 | 32.616 | 0.95 | 63.571 | 332.581 | No |
| SLV 1 | -30817 | -44157 | -1670 | 0.044 | 36.995 | 0.955 | 66.625 | 332.581 | No |
| SLV 2 | -30817 | -44157 | -1670 | 0.044 | 36.995 | 0.955 | 66.625 | 332.581 | No |
| SLV 8 | -11501 | -18273 | -758 | 0.053 | 17.45 | 0.917 | 84.427 | 417.584 | No |
| SLV 7 | -11501 | -18273 | -758 | 0.053 | 17.45 | 0.917 | 84.427 | 417.584 | No |
| SLV 6 | -25868 | -40365 | -1106 | 0.056 | 31.968 | 0.949 | 86.148 | 417.584 | No |
| SLV 5 | -25868 | -40365 | -1106 | 0.056 | 31.968 | 0.949 | 86.148 | 417.584 | No |

### Tabella dei coefficienti di sicurezza minimi

| Stato limite | Coeff.s. | Comb. | Verifica |
|---|---|---|---|
| PF_SLU | 5.56 | SLU 84 | Si |
| V_SLU | 2.511 | SLU 84 | Si |
| PF_SLV | 0 | SLV 16 | No |
| V_SLV | 0 | SLV 13 | No |
| PFFP_SLV | 2.892 | SLV 15 | Si |
| R_SLV | 0 | SLV 16 | No |

## Maschio 15

Verifiche condotte secondo D.M. 17-01-18 (N.T.C.)

### Dati geometrici

| X ini. | Y ini. | X fin. | Y fin. | Quota i. | Quota.s | l | Sp. | h netta | h ini. | h fin. | a | a.s.,sx | a.s.,dx |
|---|---|---|---|---|---|---|---|---|---|---|---|---|---|
| -1505.8 | 227.1 | -1505.8 | 657.6 | L1 | L3 | 430.5 | 30 | 269 | 269 | 269 | | | |

### Caratteristiche del materiale

(Circolare 7 21-01-19 C8.5.I) Muratura in mattoni pieni e malta di calce LC2_Corti

| fb | fk | fvk0 | fmedio | τ0 | fv0 | μ | ϕ | fv,lim | E | G | FC |
|---|---|---|---|---|---|---|---|---|---|---|---|
| 60 | | | 34.5 | 0.9 | 2 | 0.58 | 0.77 | 3.25 | 32000 | 12800 | 1.2 |

Verifica a pressoflessione nel piano secondo D.M. 17-01-18 NTC §7.8.2.2.1 in combinazioni non sismiche, γM = 3

| Comb. | Quota | N | M | σ0 | Mu | c.s. | Verifica |
|---|---|---|---|---|---|---|---|
| SLU 81 | -98 | -76447 | -81738 | 5.92 | 4497931 | 55.029 | Si |
| SLU 81 | 171 | -81359 | 2383373 | 6.3 | 3969225 | 1.665 | Si |
| SLU 84 | -98 | -76524 | -26592 | 5.93 | 4490348 | 168.862 | Si |
| SLU 84 | 171 | -81687 | 2392148 | 6.32 | 3930403 | 1.643 | Si |
| SLU 83 | -98 | -76578 | -32869 | 5.93 | 4485049 | 136.451 | Si |
| SLU 83 | 171 | -81730 | 2387967 | 6.33 | 3925281 | 1.644 | Si |
| SLU 77 | -98 | -73664 | 39493 | 5.7 | 4753595 | 120.364 | Si |
| SLU 77 | 171 | -78473 | 2315026 | 6.08 | 4291829 | 1.854 | Si |
| SLU 75 | -98 | -73478 | -3097 | 5.69 | 4769532 | 1000 | Si |
| SLU 75 | 171 | -78059 | 2314614 | 6.04 | 4335310 | 1.873 | Si |
| SLU 74 | -98 | -73532 | -9375 | 5.69 | 4764907 | 508.273 | Si |
| SLU 74 | 171 | -78102 | 2310433 | 6.05 | 4330827 | 1.874 | Si |
| SLU 78 | -98 | -73610 | 45771 | 5.7 | 4758250 | 103.958 | Si |
| SLU 78 | 171 | -78430 | 2319207 | 6.07 | 4296378 | 1.853 | Si |
| SLU 80 | -98 | -72926 | 51341 | 5.65 | 4816066 | 93.805 | Si |
| SLU 80 | 171 | -77654 | 2292132 | 6.01 | 4377128 | 1.91 | Si |
| SLU 82 | -98 | -76393 | -75460 | 5.92 | 4503201 | 59.677 | Si |
| SLU 82 | 171 | -81316 | 2387554 | 6.3 | 3974281 | 1.665 | Si |
| SLU 79 | -98 | -72980 | 45064 | 5.65 | 4811563 | 106.773 | Si |
| SLU 79 | 171 | -77697 | 2287951 | 6.02 | 4372716 | 1.911 | Si |

Verifica a pressoflessione nel piano secondo D.M. 17-01-18 NTC §7.8.2.2.1 in combinazioni sismiche, γM = 2

| Comb. | Quota | N | M | σ0 | Mu | c.s. | Verifica |
|---|---|---|---|---|---|---|---|
| SLV 9 | -98 | -59337 | -3610773 | 4.59 | 7969731 | 2.207 | Si |
| SLV 9 | 171 | -50575 | -350474 | 3.92 | 7397338 | 21.107 | Si |
| SLV 12 | -98 | -40164 | 3790230 | 3.11 | 6444962 | 1.7 | Si |
| SLV 12 | 171 | -55079 | 3395171 | 4.26 | 7717729 | 2.273 | Si |
| SLV 7 | -98 | -40798 | 3606346 | 3.16 | 6511371 | 1.806 | Si |
| SLV 7 | 171 | -53912 | 3520312 | 4.17 | 7639992 | 2.17 | Si |
| SLV 11 | -98 | -40164 | 3790230 | 3.11 | 6444962 | 1.7 | Si |
| SLV 11 | 171 | -55079 | 3395171 | 4.26 | 7717729 | 2.273 | Si |
| SLV 6 | -98 | -59971 | -3794657 | 4.64 | 8003001 | 2.109 | Si |
| SLV 6 | 171 | -49408 | -225333 | 3.83 | 7305255 | 32.42 | Si |
| SLV 8 | -98 | -40798 | 3606346 | 3.16 | 6511371 | 1.806 | Si |
| SLV 8 | 171 | -53912 | 3520312 | 4.17 | 7639992 | 2.17 | Si |
| SLV 10 | -98 | -59337 | -3610773 | 4.59 | 7969731 | 2.207 | Si |
| SLV 10 | 171 | -50575 | -350474 | 3.92 | 7397338 | 21.107 | Si |
| SLV 3 | -98 | -48248 | 801463 | 3.74 | 7210075 | 8.996 | Si |
| SLV 3 | 171 | -50973 | 2355333 | 3.95 | 7427878 | 3.154 | Si |
| SLV 4 | -98 | -48248 | 801463 | 3.74 | 7210075 | 8.996 | Si |
| SLV 4 | 171 | -50973 | 2355333 | 3.95 | 7427878 | 3.154 | Si |
| SLV 5 | -98 | -59971 | -3794657 | 4.64 | 8003001 | 2.109 | Si |
| SLV 5 | 171 | -49408 | -225333 | 3.83 | 7305255 | 32.42 | Si |

Verifica a taglio nel piano secondo D.M. 17-01-18 (N.T.C.) §7.8.2.2.2 con rottura per scorrimento in combinazioni non sismiche, γM = 3

| Comb. | Quota | N | V par | M | σ0 | σN | l' | fvd | Vt scorr. | Vt fess.diag. | Vt,lim | c.s. | Verifica |
|---|---|---|---|---|---|---|---|---|---|---|---|---|---|
| SLU 76 | -98 | -72759 | 903 | 6658 | | 5.63 | 430.5 | 1.08 | 13991 | | | 15.49 | Si |
| SLU 76 | 171 | -77254 | 3960 | 2290326 | | 5.98 | 430.5 | 1.08 | 13991 | | | 3.53 | Si |
| SLU 78 | -98 | -73610 | 1188 | 45771 | | 5.7 | 430.5 | 1.08 | 13991 | | | 11.77 | Si |
| SLU 78 | 171 | -78430 | 4296 | 2319207 | | 6.07 | 430.5 | 1.08 | 13991 | | | 3.26 | Si |
| SLU 72 | -98 | -64224 | 1225 | 119159 | | 4.97 | 430.5 | 1.08 | 13991 | | | 11.42 | Si |
| SLU 72 | 171 | -67378 | 3950 | 2048044 | | 5.22 | 430.5 | 1.08 | 13991 | | | 3.54 | Si |
| SLU 83 | -98 | -76578 | 884 | -32869 | | 5.93 | 430.5 | 1.08 | 13991 | | | 15.83 | Si |
| SLU 83 | 171 | -81730 | 4089 | 2387967 | | 6.33 | 430.5 | 1.08 | 13991 | | | 3.42 | Si |
| SLU 77 | -98 | -73664 | 1172 | 39493 | | 5.7 | 430.5 | 1.08 | 13991 | | | 11.94 | Si |
| SLU 77 | 171 | -78473 | 4279 | 2315026 | | 6.08 | 430.5 | 1.08 | 13991 | | | 3.27 | Si |
| SLU 71 | -98 | -64278 | 1208 | 112881 | | 4.98 | 430.5 | 1.08 | 13991 | | | 11.58 | Si |
| SLU 71 | 171 | -67421 | 3933 | 2043863 | | 5.22 | 430.5 | 1.08 | 13991 | | | 3.56 | Si |
| SLU 80 | -98 | -72926 | 1244 | 51341 | | 5.65 | 430.5 | 1.08 | 13991 | | | 11.25 | Si |
| SLU 80 | 171 | -77654 | 4316 | 2292132 | | 6.01 | 430.5 | 1.08 | 13991 | | | 3.24 | Si |
| SLU 79 | -98 | -72980 | 1227 | 45064 | | 5.65 | 430.5 | 1.08 | 13991 | | | 11.4 | Si |
| SLU 79 | 171 | -77697 | 4299 | 2287951 | | 6.02 | 430.5 | 1.08 | 13991 | | | 3.25 | Si |
| SLU 70 | -98 | -64908 | 1169 | 113589 | | 5.03 | 430.5 | 1.08 | 13991 | | | 11.97 | Si |
| SLU 70 | 171 | -68154 | 3929 | 2075119 | | 5.28 | 430.5 | 1.08 | 13991 | | | 3.56 | Si |
| SLU 84 | -98 | -76524 | 901 | -26592 | | 5.93 | 430.5 | 1.08 | 13991 | | | 15.54 | Si |
| SLU 84 | 171 | -81687 | 4106 | 2392148 | | 6.32 | 430.5 | 1.08 | 13991 | | | 3.41 | Si |

Verifica a taglio nel piano secondo D.M. 17-01-18 (N.T.C.) §7.8.2.2.2 con rottura per scorrimento in combinazioni sismiche, γM = 2

| Comb. | Quota | N | V par | M | σ0 | σN | l' | fvd | Vt scorr. | Vt fess.diag. | Vt,lim | c.s. | Verifica |
|---|---|---|---|---|---|---|---|---|---|---|---|---|---|
| SLV 12 | -98 | -40164 | 20291 | 3790230 | | 3.69 | 362.65 | 1.57 | 17099 | | | 0.84 | No, Vu<V |
| SLV 12 | 171 | -55079 | 20767 | 3395171 | | 4.26 | 430.5 | 1.63 | 20987 | | | 1.01 | Si |
| SLV 6 | -98 | -59971 | -19575 | -3794657 | | 4.64 | 430.5 | 1.63 | 20987 | | | 1.07 | Si |
| SLV 6 | 171 | -49408 | -15849 | -225333 | | 3.83 | 430.5 | 1.6 | 20644 | | | 1.3 | Si |
| SLV 10 | -98 | -59337 | -18402 | -3610773 | | 4.59 | 430.5 | 1.63 | 20987 | | | 1.14 | Si |
| SLV 10 | 171 | -50575 | -14681 | -350474 | | 3.92 | 430.5 | 1.62 | 20878 | | | 1.42 | Si |
| SLV 8 | -98 | -40798 | 19118 | 3606346 | | 3.57 | 380.56 | 1.55 | 17674 | | | 0.92 | No, Vu<V |
| SLV 8 | 171 | -53912 | 19598 | 3520312 | | 4.17 | 430.5 | 1.63 | 20987 | | | 1.07 | Si |
| SLV 5 | -98 | -59971 | -19575 | -3794657 | | 4.64 | 430.5 | 1.63 | 20987 | | | 1.07 | Si |
| SLV 5 | 171 | -49408 | -15849 | -225333 | | 3.83 | 430.5 | 1.6 | 20644 | | | 1.3 | Si |
| SLD 11 | -98 | -45947 | 8782 | 1577082 | | 3.56 | 430.5 | 1.54 | 19952 | | | 2.27 | Si |
| SLD 11 | 171 | -53431 | 10120 | 2325867 | | 4.14 | 430.5 | 1.63 | 20987 | | | 2.07 | Si |
| SLV 9 | -98 | -59337 | -18402 | -3610773 | | 4.59 | 430.5 | 1.63 | 20987 | | | 1.14 | Si |
| SLV 9 | 171 | -50575 | -14681 | -350474 | | 3.92 | 430.5 | 1.62 | 20878 | | | 1.42 | Si |
| SLD 12 | -98 | -45947 | 8782 | 1577082 | | 3.56 | 430.5 | 1.54 | 19952 | | | 2.27 | Si |
| SLD 12 | 171 | -53431 | 10120 | 2325867 | | 4.14 | 430.5 | 1.63 | 20987 | | | 2.07 | Si |
| SLV 7 | -98 | -40798 | 19118 | 3606346 | | 3.57 | 380.56 | 1.55 | 17674 | | | 0.92 | No, Vu<V |

| Comb. | Quota | N | V par | M | σ0 | σN | l' | fvd | Vt scorr. | Vt fess.diag. | Vt,lim | c.s. | Verifica |
|---|---|---|---|---|---|---|---|---|---|---|---|---|---|
| SLV 7 | 171 | -53912 | 19598 | 3520312 | | 4.17 | 430.5 | 1.63 | 20987 | | | 1.07 | Si |
| SLV 11 | -98 | -40164 | 20291 | 3790230 | | 3.69 | 362.65 | 1.57 | 17099 | | | 0.84 | No, Vu<V |
| SLV 11 | 171 | -55079 | 20767 | 3395171 | | 4.26 | 430.5 | 1.63 | 20987 | | | 1.01 | Si |

### Verifica a pressoflessione fuori piano D.M. 17-01-18 (N.T.C.)

quota 36.5 Wa 0.05 denominatore 8 γM = 2

| Comb. | fd | Sa | σ0 | N | M | Mc | Coeff.s. | Verifica |
|---|---|---|---|---|---|---|---|---|
| SLV 8 | 14 | 0.25 | 3.62 | -46767 | 17642 | 493608 | 27.98 | Si |
| SLV 7 | 14 | 0.25 | 3.62 | -46767 | 17642 | 493608 | 27.98 | Si |
| SLV 11 | 14 | 0.25 | 3.69 | -47669 | 17642 | 499042 | 28.29 | Si |
| SLV 12 | 14 | 0.25 | 3.69 | -47669 | 17642 | 499042 | 28.29 | Si |
| SLV 4 | 14 | 0.25 | 3.69 | -47712 | 17642 | 499293 | 28.3 | Si |
| SLV 3 | 14 | 0.25 | 3.69 | -47712 | 17642 | 499293 | 28.3 | Si |
| SLV 2 | 14 | 0.25 | 3.83 | -49423 | 17642 | 509164 | 28.86 | Si |
| SLV 1 | 14 | 0.25 | 3.83 | -49423 | 17642 | 509164 | 28.86 | Si |
| SLV 15 | 14 | 0.25 | 3.93 | -50719 | 17642 | 516264 | 29.26 | Si |
| SLV 16 | 14 | 0.25 | 3.93 | -50719 | 17642 | 516264 | 29.26 | Si |

### Verifica dei meccanismi locali di collasso con analisi cinematica lineare

forza di aggancio al piano = 0 quota mezzeria = 36.5 Wa = 0.05 Ta = 0.0403

| Comb. | N top | N base | V orto | α0 | M* | e* | a0* | aLim | Verifica |
|---|---|---|---|---|---|---|---|---|---|
| SLV 10 | -50575 | -59337 | -270 | 0.054 | 56.383 | 0.973 | 80.612 | 562.86 | No |
| SLV 9 | -50575 | -59337 | -270 | 0.054 | 56.383 | 0.973 | 80.612 | 562.86 | No |
| SLV 12 | -55079 | -40164 | -266 | 0.054 | 60.971 | 0.975 | 80.76 | 562.86 | No |
| SLV 11 | -55079 | -40164 | -266 | 0.054 | 60.971 | 0.975 | 80.76 | 562.86 | No |
| SLV 8 | -53912 | -40798 | 264 | 0.054 | 59.782 | 0.975 | 80.805 | 562.86 | No |
| SLV 7 | -53912 | -40798 | 264 | 0.054 | 59.782 | 0.975 | 80.805 | 562.86 | No |
| SLV 6 | -49408 | -59971 | 260 | 0.054 | 55.194 | 0.973 | 80.881 | 562.86 | No |
| SLV 5 | -49408 | -59971 | 260 | 0.054 | 55.194 | 0.973 | 80.881 | 562.86 | No |
| SLV 2 | -49622 | -53999 | 879 | 0.042 | 55.413 | 0.973 | 63.35 | 392.678 | No |
| SLV 1 | -49622 | -53999 | 879 | 0.042 | 55.413 | 0.973 | 63.35 | 392.678 | No |

### Tabella dei coefficienti di sicurezza minimi

| Stato limite | Coeff.s. | Comb. | Verifica |
|---|---|---|---|
| PF_SLU | 1.643 | SLU 84 | Si |
| V_SLU | 3.242 | SLU 80 | Si |
| PF_SLV | 1.7 | SLV 11 | Si |
| V_SLV | 0.843 | SLV 11 | No |
| PFFP_SLV | 27.979 | SLV 7 | Si |
| R_SLV | 0.143 | SLV 9 | No |

## Maschio 16

Verifiche condotte secondo D.M. 17-01-18 (N.T.C.)

### Dati geometrici

| X ini. | Y ini. | X fin. | Y fin. | Quota i. | Quota.s | l | Sp. | h netta | h ini. | h fin. | a | a.s.,sx | a.s.,dx |
|---|---|---|---|---|---|---|---|---|---|---|---|---|---|
| -1376.3 | -478.4 | -1376.3 | -331.4 | L1 | L3 | 147 | 30 | 269 | 269 | 269 | | | |

### Caratteristiche del materiale

(Circolare 7 21-01-19 C8.5.I) Muratura in mattoni pieni e malta di calce LC2_Corti

| fb | fk | fvk0 | fmedio | τ0 | fv0 | μ | ϕ | fv,lim | E | G | FC |
|---|---|---|---|---|---|---|---|---|---|---|---|
| 60 | | | 34.5 | 0.9 | 2 | 0.58 | 0.77 | 3.25 | 32000 | 12800 | 1.2 |

### Verifica a pressoflessione nel piano secondo D.M. 17-01-18 NTC §7.8.2.2.1 in combinazioni non sismiche, γM = 3

| Comb. | Quota | N | M | σ0 | Mu | c.s. | Verifica |
|---|---|---|---|---|---|---|---|
| SLU 82 | -98 | -23880 | 96173 | 5.42 | 588247 | 6.117 | Si |
| SLU 82 | 171 | -27854 | 197800 | 6.32 | 459662 | 2.324 | Si |
| SLU 84 | -98 | -23975 | 95801 | 5.44 | 585931 | 6.116 | Si |
| SLU 84 | 171 | -28051 | 193875 | 6.36 | 451596 | 2.329 | Si |
| SLU 79 | -98 | -23006 | 85798 | 5.22 | 607857 | 7.085 | Si |
| SLU 79 | 171 | -27208 | 178931 | 6.17 | 484967 | 2.71 | Si |
| SLU 77 | -98 | -23070 | 86919 | 5.23 | 606530 | 6.978 | Si |
| SLU 77 | 171 | -27266 | 181530 | 6.18 | 482760 | 2.659 | Si |
| SLU 75 | -98 | -23040 | 91100 | 5.22 | 607164 | 6.665 | Si |
| SLU 75 | 171 | -27098 | 184269 | 6.15 | 489129 | 2.654 | Si |
| SLU 78 | -98 | -23135 | 90728 | 5.25 | 605174 | 6.67 | Si |
| SLU 78 | 171 | -27295 | 180344 | 6.19 | 481674 | 2.671 | Si |
| SLU 73 | -98 | -22924 | 92892 | 5.2 | 609543 | 6.562 | Si |
| SLU 73 | 171 | -26861 | 184805 | 6.09 | 497854 | 2.694 | Si |
| SLU 74 | -98 | -22975 | 87291 | 5.21 | 608495 | 6.971 | Si |
| SLU 74 | 171 | -27069 | 185454 | 6.14 | 490192 | 2.643 | Si |
| SLU 81 | -98 | -23816 | 92364 | 5.4 | 589800 | 6.386 | Si |
| SLU 81 | 171 | -27826 | 198985 | 6.31 | 460813 | 2.316 | Si |
| SLU 83 | -98 | -23911 | 91992 | 5.42 | 587508 | 6.387 | Si |
| SLU 83 | 171 | -28023 | 195060 | 6.36 | 452770 | 2.321 | Si |

### Verifica a pressoflessione nel piano secondo D.M. 17-01-18 NTC §7.8.2.2.1 in combinazioni sismiche, γM = 2

| Comb. | Quota | N | M | σ0 | Mu | c.s. | Verifica |
|---|---|---|---|---|---|---|---|
| SLD 16 | -98 | -16580 | 81217 | 3.76 | 843561 | 10.387 | Si |
| SLD 16 | 171 | -16910 | 255526 | 3.83 | 852721 | 3.337 | Si |
| SLV 11 | -98 | -10397 | 149344 | 2.36 | 616683 | 4.129 | Si |
| SLV 11 | 171 | -10073 | 180333 | 2.28 | 601898 | 3.338 | Si |

| Comb. | Quota | N | M | σ0 | Mu | c.s. | Verifica |
|---|---|---|---|---|---|---|---|
| SLD 14 | -98 | -18293 | 59085 | 4.15 | 887963 | 15.029 | Si |
| SLD 14 | 171 | -19029 | 266367 | 4.32 | 904588 | 3.396 | Si |
| SLD 15 | -98 | -16580 | 81217 | 3.76 | 843561 | 10.387 | Si |
| SLD 15 | 171 | -16910 | 255526 | 3.83 | 852721 | 3.337 | Si |
| SLV 15 | -98 | -17111 | 111266 | 3.88 | 858183 | 7.713 | Si |
| SLV 15 | 171 | -13861 | 431413 | 3.14 | 756630 | 1.754 | Si |
| SLV 13 | -98 | -21098 | 61291 | 4.78 | 943396 | 15.392 | Si |
| SLV 13 | 171 | -18820 | 455857 | 4.27 | 900016 | 1.974 | Si |
| SLD 13 | -98 | -18293 | 59085 | 4.15 | 887963 | 15.029 | Si |
| SLD 13 | 171 | -19029 | 266367 | 4.32 | 904588 | 3.396 | Si |
| SLV 16 | -98 | -17111 | 111266 | 3.88 | 858183 | 7.713 | Si |
| SLV 16 | 171 | -13861 | 431413 | 3.14 | 756630 | 1.754 | Si |
| SLV 14 | -98 | -21098 | 61291 | 4.78 | 943396 | 15.392 | Si |
| SLV 14 | 171 | -18820 | 455857 | 4.27 | 900016 | 1.974 | Si |
| SLV 12 | -98 | -10397 | 149344 | 2.36 | 616683 | 4.129 | Si |
| SLV 12 | 171 | -10073 | 180333 | 2.28 | 601898 | 3.338 | Si |

### Verifica a taglio nel piano secondo D.M. 17-01-18 (N.T.C.) §7.8.2.2.2 con rottura per scorrimento in combinazioni non sismiche, γM = 3

| Comb. | Quota | N | V par | M | σ0 | σN | l' | fvd | Vt scorr. | Vt fess.diag. | Vt,lim | c.s. | Verifica |
|---|---|---|---|---|---|---|---|---|---|---|---|---|---|
| SLU 62 | -98 | -22699 | -5284 | 80070 | | 5.15 | 146.99 | 1.08 | 4777 | | | 0.9 | No, Vu<V |
| SLU 62 | 171 | -26702 | -2939 | 175866 | | 6.06 | 146.99 | 1.08 | 4777 | | | 1.63 | Si |
| SLU 77 | -98 | -23070 | -5320 | 86919 | | 5.23 | 146.99 | 1.08 | 4777 | | | 0.9 | No, Vu<V |
| SLU 77 | 171 | -27266 | -2836 | 181530 | | 6.18 | 146.99 | 1.08 | 4777 | | | 1.68 | Si |
| SLU 74 | -98 | -22975 | -5329 | 87291 | | 5.21 | 146.99 | 1.08 | 4777 | | | 0.9 | No, Vu<V |
| SLU 74 | 171 | -27069 | -2908 | 185454 | | 6.14 | 146.99 | 1.08 | 4777 | | | 1.64 | Si |
| SLU 79 | -98 | -23006 | -5298 | 85798 | | 5.22 | 146.99 | 1.08 | 4777 | | | 0.9 | No, Vu<V |
| SLU 79 | 171 | -27208 | -2816 | 178931 | | 6.17 | 146.99 | 1.08 | 4777 | | | 1.7 | Si |
| SLU 75 | -98 | -23040 | -5292 | 91100 | | 5.22 | 146.99 | 1.08 | 4777 | | | 0.9 | No, Vu<V |
| SLU 75 | 171 | -27098 | -2845 | 184269 | | 6.15 | 146.99 | 1.08 | 4777 | | | 1.68 | Si |
| SLU 84 | -98 | -23975 | -5569 | 95801 | | 5.44 | 146.99 | 1.08 | 4777 | | | 0.86 | No, Vu<V |
| SLU 84 | 171 | -28051 | -3063 | 193875 | | 6.36 | 146.99 | 1.08 | 4777 | | | 1.56 | Si |
| SLU 82 | -98 | -23880 | -5578 | 96173 | | 5.42 | 146.99 | 1.08 | 4777 | | | 0.86 | No, Vu<V |
| SLU 82 | 171 | -27854 | -3135 | 197800 | | 6.32 | 146.99 | 1.08 | 4777 | | | 1.52 | Si |
| SLU 83 | -98 | -23911 | -5606 | 91992 | | 5.42 | 146.99 | 1.08 | 4777 | | | 0.85 | No, Vu<V |
| SLU 83 | 171 | -28023 | -3126 | 195060 | | 6.36 | 146.99 | 1.08 | 4777 | | | 1.53 | Si |
| SLU 81 | -98 | -23816 | -5615 | 92364 | | 5.4 | 146.99 | 1.08 | 4777 | | | 0.85 | No, Vu<V |
| SLU 81 | 171 | -27826 | -3198 | 198985 | | 6.31 | 146.99 | 1.08 | 4777 | | | 1.49 | Si |
| SLU 60 | -98 | -22605 | -5293 | 80443 | | 5.13 | 146.99 | 1.08 | 4777 | | | 0.9 | No, Vu<V |
| SLU 60 | 171 | -26505 | -3011 | 179791 | | 6.01 | 146.99 | 1.08 | 4777 | | | 1.59 | Si |

### Verifica a taglio nel piano secondo D.M. 17-01-18 (N.T.C.) §7.8.2.2.2 con rottura per scorrimento in combinazioni sismiche, γM = 2

| Comb. | Quota | N | V par | M | σ0 | σN | l' | fvd | Vt scorr. | Vt fess.diag. | Vt,lim | c.s. | Verifica |
|---|---|---|---|---|---|---|---|---|---|---|---|---|---|
| SLD 9 | -98 | -19396 | -6526 | 24327 | | 4.4 | 146.99 | 1.63 | 7166 | | | 1.1 | Si |
| SLD 9 | 171 | -22359 | -4662 | 184335 | | 5.07 | 146.99 | 1.63 | 7166 | | | 1.54 | Si |
| SLV 10 | -98 | -23686 | -10250 | -17238 | | 5.37 | 146.99 | 1.63 | 7166 | | | 0.7 | No, Vu<V |
| SLV 10 | 171 | -26602 | -8244 | 261812 | | 6.03 | 146.99 | 1.63 | 7166 | | | 0.87 | No, Vu<V |
| SLV 14 | -98 | -21098 | -7073 | 61291 | | 4.78 | 146.99 | 1.63 | 7166 | | | 1.01 | Si |
| SLV 14 | 171 | -18820 | -6964 | 455857 | | 4.27 | 146.99 | 1.63 | 7166 | | | 1.03 | Si |
| SLD 5 | -98 | -18629 | -6120 | 16668 | | 4.22 | 146.99 | 1.63 | 7166 | | | 1.17 | Si |
| SLD 5 | 171 | -23093 | -3798 | 103180 | | 5.24 | 146.99 | 1.63 | 7166 | | | 1.89 | Si |
| SLD 6 | -98 | -18629 | -6120 | 16668 | | 4.22 | 146.99 | 1.63 | 7166 | | | 1.17 | Si |
| SLD 6 | 171 | -23093 | -3798 | 103180 | | 5.24 | 146.99 | 1.63 | 7166 | | | 1.89 | Si |
| SLD 10 | -98 | -19396 | -6526 | 24327 | | 4.4 | 146.99 | 1.63 | 7166 | | | 1.1 | Si |
| SLD 10 | 171 | -22359 | -4662 | 184335 | | 5.07 | 146.99 | 1.63 | 7166 | | | 1.54 | Si |
| SLV 13 | -98 | -21098 | -7073 | 61291 | | 4.78 | 146.99 | 1.63 | 7166 | | | 1.01 | Si |
| SLV 13 | 171 | -18820 | -6964 | 455857 | | 4.27 | 146.99 | 1.63 | 7166 | | | 1.03 | Si |
| SLV 6 | -98 | -21918 | -9313 | -34575 | | 4.97 | 146.99 | 1.63 | 7166 | | | 0.77 | No, Vu<V |
| SLV 6 | 171 | -28314 | -6191 | 71044 | | 6.42 | 146.99 | 1.63 | 7166 | | | 1.16 | Si |
| SLV 5 | -98 | -21918 | -9313 | -34575 | | 4.97 | 146.99 | 1.63 | 7166 | | | 0.77 | No, Vu<V |
| SLV 5 | 171 | -28314 | -6191 | 71044 | | 6.42 | 146.99 | 1.63 | 7166 | | | 1.16 | Si |
| SLV 9 | -98 | -23686 | -10250 | -17238 | | 5.37 | 146.99 | 1.63 | 7166 | | | 0.7 | No, Vu<V |
| SLV 9 | 171 | -26602 | -8244 | 261812 | | 6.03 | 146.99 | 1.63 | 7166 | | | 0.87 | No, Vu<V |

### Verifica a pressoflessione fuori piano D.M. 17-01-18 (N.T.C.)

quota 36.5 Wa 0.05 denominatore 8 γM = 2

| Comb. | fd | Sa | σ0 | N | M | Mc | Coeff.s. | Verifica |
|---|---|---|---|---|---|---|---|---|
| SLV 12 | 14 | 0.25 | 2.13 | -9389 | 6024 | 116291 | 19.31 | Si |
| SLV 11 | 14 | 0.25 | 2.13 | -9389 | 6024 | 116291 | 19.31 | Si |
| SLV 7 | 14 | 0.25 | 2.28 | -10072 | 6024 | 122839 | 20.39 | Si |
| SLV 8 | 14 | 0.25 | 2.28 | -10072 | 6024 | 122839 | 20.39 | Si |
| SLV 15 | 14 | 0.25 | 3.28 | -14479 | 6024 | 158820 | 26.37 | Si |
| SLV 16 | 14 | 0.25 | 3.28 | -14479 | 6024 | 158820 | 26.37 | Si |
| SLV 3 | 14 | 0.25 | 3.8 | -16756 | 6024 | 173178 | 28.75 | Si |
| SLV 4 | 14 | 0.25 | 3.8 | -16756 | 6024 | 173178 | 28.75 | Si |
| SLV 13 | 14 | 0.25 | 4.43 | -19525 | 6024 | 186742 | 31 | Si |
| SLV 14 | 14 | 0.25 | 4.43 | -19525 | 6024 | 186742 | 31 | Si |

### Verifica dei meccanismi locali di collasso con analisi cinematica lineare

forza di aggancio al piano = 0 quota mezzeria = 36.5 Wa = 0.05 Ta = 0.0403

| Comb. | N top | N base | V orto | α0 | M* | e* | a0* | aLim | Verifica |
|---|---|---|---|---|---|---|---|---|---|
| SLV 11 | -10073 | -10397 | -85 | 0.053 | 11.928 | 0.958 | 81.054 | 562.86 | No |
| SLV 12 | -10073 | -10397 | -85 | 0.053 | 11.928 | 0.958 | 81.054 | 562.86 | No |
| SLV 9 | -26602 | -23686 | -82 | 0.055 | 28.761 | 0.982 | 81.323 | 562.86 | No |
| SLV 10 | -26602 | -23686 | -82 | 0.055 | 28.761 | 0.982 | 81.323 | 562.86 | No |
| SLV 6 | -28314 | -21918 | 15 | 0.057 | 30.505 | 0.983 | 84.709 | 562.86 | No |
| SLV 5 | -28314 | -21918 | 15 | 0.057 | 30.505 | 0.983 | 84.709 | 562.86 | No |
| SLV 7 | -11785 | -8629 | 12 | 0.059 | 13.669 | 0.963 | 89.713 | 562.86 | No |

| Comb. | N top | N base | V orto | α0 | M* | e* | a0* | aLim | Verifica |
|---|---|---|---|---|---|---|---|---|---|
| SLV 8 | -11785 | -8629 | 12 | 0.059 | 13.669 | 0.963 | 89.713 | 562.86 | No |
| SLV 15 | -13861 | -17111 | -198 | 0.047 | 15.782 | 0.968 | 69.844 | 392.678 | No |
| SLV 16 | -13861 | -17111 | -198 | 0.047 | 15.782 | 0.968 | 69.844 | 392.678 | No |

### Tabella dei coefficienti di sicurezza minimi

| Stato limite | Coeff.s. | Comb. | Verifica |
|---|---|---|---|
| PF_SLU | 2.316 | SLU 81 | Si |
| V_SLU | 0.851 | SLU 81 | No |
| PF_SLV | 1.754 | SLV 15 | Si |
| V_SLV | 0.699 | SLV 9 | No |
| PFFP_SLV | 19.306 | SLV 11 | Si |
| R_SLV | 0.144 | SLV 11 | No |

## Maschio 18

Verifiche condotte secondo D.M. 17-01-18 (N.T.C.)

### Dati geometrici

| X ini. | Y ini. | X fin. | Y fin. | Quota i. | Quota.s | l | Sp. | h netta | h ini. | h fin. | a | a.s.,sx | a.s.,dx |
|---|---|---|---|---|---|---|---|---|---|---|---|---|---|
| -1376.3 | -331.4 | -1376.3 | 104.6 | Z medio 1 cm | L3 | 436 | 30 | 170 | 71 | 269 | | | |

### Caratteristiche del materiale

(Circolare 7 21-01-19 C8.5.I) Muratura in mattoni pieni e malta di calce LC2_Corti

| fb | fk | fvk0 | fmedio | τ0 | fv0 | μ | ϕ | fv,lim | E | G | FC |
|---|---|---|---|---|---|---|---|---|---|---|---|
| 60 | | | 34.5 | 0.9 | 2 | 0.58 | 0.77 | 3.25 | 32000 | 12800 | 1.2 |

### Verifica a pressoflessione nel piano secondo D.M. 17-01-18 NTC §7.8.2.2.1 in combinazioni non sismiche, γM = 3

| Comb. | Quota | N | M | σ0 | Mu | c.s. | Verifica |
|---|---|---|---|---|---|---|---|
| SLU 62 | 100 | -62249 | -539236 | 4.76 | 5642453 | 10.464 | Si |
| SLU 62 | 171 | -55655 | -1305397 | 4.25 | 5795615 | 4.44 | Si |
| SLU 73 | 100 | -63476 | -486719 | 4.85 | 5594315 | 11.494 | Si |
| SLU 73 | 171 | -56649 | -1281807 | 4.33 | 5783919 | 4.512 | Si |
| SLU 84 | 100 | -67464 | -423537 | 5.16 | 5395278 | 12.739 | Si |
| SLU 84 | 171 | -60378 | -1291240 | 4.62 | 5703978 | 4.417 | Si |
| SLU 63 | 100 | -62299 | -534834 | 4.76 | 5640611 | 10.546 | Si |
| SLU 63 | 171 | -55697 | -1309395 | 4.26 | 5795207 | 4.426 | Si |
| SLU 82 | 100 | -66864 | -447880 | 5.11 | 5429398 | 12.122 | Si |
| SLU 82 | 171 | -59848 | -1309088 | 4.58 | 5718807 | 4.369 | Si |
| SLU 52 | 100 | -58310 | -598016 | 4.46 | 5755337 | 9.624 | Si |
| SLU 52 | 171 | -51967 | -1299962 | 3.97 | 5803699 | 4.465 | Si |
| SLU 83 | 100 | -67414 | -427939 | 5.15 | 5398178 | 12.614 | Si |
| SLU 83 | 171 | -60337 | -1287242 | 4.61 | 5705184 | 4.432 | Si |
| SLU 81 | 100 | -66814 | -452281 | 5.11 | 5432175 | 12.011 | Si |
| SLU 81 | 171 | -59807 | -1305090 | 4.57 | 5719922 | 4.383 | Si |
| SLU 60 | 100 | -61648 | -563579 | 4.71 | 5663760 | 10.05 | Si |
| SLU 60 | 171 | -55125 | -1323245 | 4.21 | 5800201 | 4.383 | Si |
| SLU 61 | 100 | -61698 | -559177 | 4.72 | 5662041 | 10.126 | Si |
| SLU 61 | 171 | -55167 | -1327243 | 4.22 | 5799883 | 4.37 | Si |

### Verifica a pressoflessione nel piano secondo D.M. 17-01-18 NTC §7.8.2.2.1 in combinazioni sismiche, γM = 2

| Comb. | Quota | N | M | σ0 | Mu | c.s. | Verifica |
|---|---|---|---|---|---|---|---|
| SLV 5 | 100 | -38287 | -1346128 | 2.93 | 6347274 | 4.715 | Si |
| SLV 5 | 171 | -33425 | -1161672 | 2.56 | 5762943 | 4.961 | Si |
| SLD 2 | 100 | -37211 | -736177 | 2.84 | 6223547 | 8.454 | Si |
| SLD 2 | 171 | -32620 | -989943 | 2.49 | 5659924 | 5.717 | Si |
| SLV 2 | 100 | -28400 | -1111936 | 2.17 | 5091185 | 4.579 | Si |
| SLV 2 | 171 | -24173 | -1037890 | 1.85 | 4472898 | 4.31 | Si |
| SLV 6 | 100 | -38287 | -1346128 | 2.93 | 6347274 | 4.715 | Si |
| SLV 6 | 171 | -33425 | -1161672 | 2.56 | 5762943 | 4.961 | Si |
| SLV 9 | 100 | -47335 | -1087695 | 3.62 | 7263145 | 6.678 | Si |
| SLV 9 | 171 | -42030 | -1146092 | 3.21 | 6753243 | 5.892 | Si |
| SLV 4 | 100 | -28974 | -652769 | 2.22 | 5171414 | 7.922 | Si |
| SLV 4 | 171 | -24849 | -916211 | 1.9 | 4574931 | 4.993 | Si |
| SLD 1 | 100 | -37211 | -736177 | 2.84 | 6223547 | 8.454 | Si |
| SLD 1 | 171 | -32620 | -989943 | 2.49 | 5659924 | 5.717 | Si |
| SLV 1 | 100 | -28400 | -1111936 | 2.17 | 5091185 | 4.579 | Si |
| SLV 1 | 171 | -24173 | -1037890 | 1.85 | 4472898 | 4.31 | Si |
| SLV 3 | 100 | -28974 | -652769 | 2.22 | 5171414 | 7.922 | Si |
| SLV 3 | 171 | -24849 | -916211 | 1.9 | 4574931 | 4.993 | Si |
| SLV 10 | 100 | -47335 | -1087695 | 3.62 | 7263145 | 6.678 | Si |
| SLV 10 | 171 | -42030 | -1146092 | 3.21 | 6753243 | 5.892 | Si |

### Verifica a taglio nel piano secondo D.M. 17-01-18 (N.T.C.) §7.8.2.2.2 con rottura per scorrimento in combinazioni non sismiche, γM = 3

| Comb. | Quota | N | V par | M | σ0 | σN | l' | fvd | Vt scorr. | Vt fess.diag. | Vt,lim | c.s. | Verifica |
|---|---|---|---|---|---|---|---|---|---|---|---|---|---|
| SLU 83 | 100 | -67414 | 2699 | -427939 | | 5.15 | 436.01 | 1.08 | 14170 | | | 5.25 | Si |
| SLU 83 | 171 | -60337 | 2087 | -1287242 | | 4.61 | 436.01 | 1.08 | 14170 | | | 6.79 | Si |
| SLU 52 | 100 | -58310 | 2695 | -598016 | | 4.46 | 436.01 | 1.08 | 14170 | | | 5.26 | Si |
| SLU 52 | 171 | -51967 | 2144 | -1299962 | | 3.97 | 436.01 | 1.08 | 14170 | | | 6.61 | Si |
| SLU 75 | 100 | -64481 | 2675 | -451277 | | 4.93 | 436.01 | 1.08 | 14170 | | | 5.3 | Si |
| SLU 75 | 171 | -57545 | 2089 | -1255252 | | 4.4 | 436.01 | 1.08 | 14170 | | | 6.78 | Si |
| SLU 84 | 100 | -67464 | 2898 | -423537 | | 5.16 | 436.01 | 1.08 | 14170 | | | 4.89 | Si |
| SLU 84 | 171 | -60378 | 2267 | -1291240 | | 4.62 | 436.01 | 1.08 | 14170 | | | 6.25 | Si |
| SLU 73 | 100 | -63476 | 2872 | -486719 | | 4.85 | 436.01 | 1.08 | 14170 | | | 4.93 | Si |
| SLU 73 | 171 | -56649 | 2286 | -1281807 | | 4.33 | 436.01 | 1.08 | 14170 | | | 6.2 | Si |

| Comb. | Quota | N | V par | M | σ0 | σN | l' | fvd | Vt scorr. | Vt fess.diag. | Vt,lim | c.s. | Verifica |
|---|---|---|---|---|---|---|---|---|---|---|---|---|---|
| SLU 76 | 100 | -64076 | 2788 | -462376 | | 4.9 | 436.01 | 1.08 | 14170 | | | 5.08 | Si |
| SLU 76 | 171 | -57179 | 2189 | -1263959 | | 4.37 | 436.01 | 1.08 | 14170 | | | 6.47 | Si |
| SLU 63 | 100 | -62299 | 2721 | -534834 | | 4.76 | 436.01 | 1.08 | 14170 | | | 5.21 | Si |
| SLU 63 | 171 | -55697 | 2126 | -1309395 | | 4.26 | 436.01 | 1.08 | 14170 | | | 6.67 | Si |
| SLU 81 | 100 | -66814 | 2784 | -452281 | | 5.11 | 436.01 | 1.08 | 14170 | | | 5.09 | Si |
| SLU 81 | 171 | -59807 | 2184 | -1305090 | | 4.57 | 436.01 | 1.08 | 14170 | | | 6.49 | Si |
| SLU 82 | 100 | -66864 | 2982 | -447880 | | 5.11 | 436.01 | 1.08 | 14170 | | | 4.75 | Si |
| SLU 82 | 171 | -59848 | 2364 | -1309088 | | 4.58 | 436.01 | 1.08 | 14170 | | | 5.99 | Si |
| SLU 61 | 100 | -61698 | 2805 | -559177 | | 4.72 | 436.01 | 1.08 | 14170 | | | 5.05 | Si |
| SLU 61 | 171 | -55167 | 2223 | -1327243 | | 4.22 | 436.01 | 1.08 | 14170 | | | 6.38 | Si |

### Verifica a taglio nel piano secondo D.M. 17-01-18 (N.T.C.) §7.8.2.2.2 con rottura per scorrimento in combinazioni sismiche, γM = 2

| Comb. | Quota | N | V par | M | σ0 | σN | l' | fvd | Vt scorr. | Vt fess.diag. | Vt,lim | c.s. | Verifica |
|---|---|---|---|---|---|---|---|---|---|---|---|---|---|
| SLV 10 | 100 | -47335 | -11069 | -1087695 | | 3.62 | 436.01 | 1.56 | 20367 | | | 1.84 | Si |
| SLV 10 | 171 | -42030 | -8340 | -1146092 | | 3.21 | 436.01 | 1.48 | 19306 | | | 2.31 | Si |
| SLV 8 | 100 | -40200 | 14354 | 184431 | | 3.07 | 436.01 | 1.45 | 18940 | | | 1.32 | Si |
| SLV 8 | 171 | -35675 | 10885 | -756077 | | 2.73 | 436.01 | 1.38 | 18035 | | | 1.66 | Si |
| SLV 7 | 100 | -40200 | 14354 | 184431 | | 3.07 | 436.01 | 1.45 | 18940 | | | 1.32 | Si |
| SLV 7 | 171 | -35675 | 10885 | -756077 | | 2.73 | 436.01 | 1.38 | 18035 | | | 1.66 | Si |
| SLV 1 | 100 | -28400 | -5691 | -1111936 | | 2.17 | 436.01 | 1.27 | 16580 | | | 2.91 | Si |
| SLV 1 | 171 | -24173 | -7595 | -1037890 | | 1.85 | 436.01 | 1.2 | 15735 | | | 2.07 | Si |
| SLV 2 | 100 | -28400 | -5691 | -1111936 | | 2.17 | 436.01 | 1.27 | 16580 | | | 2.91 | Si |
| SLV 2 | 171 | -24173 | -7595 | -1037890 | | 1.85 | 436.01 | 1.2 | 15735 | | | 2.07 | Si |
| SLV 11 | 100 | -49249 | 16292 | 442863 | | 3.77 | 436.01 | 1.59 | 20750 | | | 1.27 | Si |
| SLV 11 | 171 | -44280 | 14179 | -740498 | | 3.39 | 436.01 | 1.51 | 19756 | | | 1.39 | Si |
| SLV 12 | 100 | -49249 | 16292 | 442863 | | 3.77 | 436.01 | 1.59 | 20750 | | | 1.27 | Si |
| SLV 12 | 171 | -44280 | 14179 | -740498 | | 3.39 | 436.01 | 1.51 | 19756 | | | 1.39 | Si |
| SLV 9 | 100 | -47335 | -11069 | -1087695 | | 3.62 | 436.01 | 1.56 | 20367 | | | 1.84 | Si |
| SLV 9 | 171 | -42030 | -8340 | -1146092 | | 3.21 | 436.01 | 1.48 | 19306 | | | 2.31 | Si |
| SLV 6 | 100 | -38287 | -13006 | -1346128 | | 2.93 | 436.01 | 1.42 | 18558 | | | 1.43 | Si |
| SLV 6 | 171 | -33425 | -11634 | -1161672 | | 2.56 | 436.01 | 1.34 | 17585 | | | 1.51 | Si |
| SLV 5 | 100 | -38287 | -13006 | -1346128 | | 2.93 | 436.01 | 1.42 | 18558 | | | 1.43 | Si |
| SLV 5 | 171 | -33425 | -11634 | -1161672 | | 2.56 | 436.01 | 1.34 | 17585 | | | 1.51 | Si |

### Verifica a pressoflessione fuori piano D.M. 17-01-18 (N.T.C.)

quota 135.5 Wa 0.05 denominatore 8 γM = 2

| Comb. | fd | Sa | σ0 | N | M | Mc | Coeff.s. | Verifica |
|---|---|---|---|---|---|---|---|---|
| SLV 2 | 14 | 0.27 | 2.01 | -26306 | 7705 | 329643 | 42.79 | Si |
| SLV 1 | 14 | 0.27 | 2.01 | -26306 | 7705 | 329643 | 42.79 | Si |
| SLV 4 | 14 | 0.27 | 2.03 | -26506 | 7705 | 331655 | 43.05 | Si |
| SLV 3 | 14 | 0.27 | 2.03 | -26506 | 7705 | 331655 | 43.05 | Si |
| SLV 6 | 14 | 0.27 | 2.77 | -36194 | 7705 | 419963 | 54.51 | Si |
| SLV 5 | 14 | 0.27 | 2.77 | -36194 | 7705 | 419963 | 54.51 | Si |
| SLV 8 | 14 | 0.27 | 2.82 | -36862 | 7705 | 425402 | 55.21 | Si |
| SLV 7 | 14 | 0.27 | 2.82 | -36862 | 7705 | 425402 | 55.21 | Si |
| SLV 10 | 14 | 0.27 | 3.43 | -44870 | 7705 | 484095 | 62.83 | Si |
| SLV 9 | 14 | 0.27 | 3.43 | -44870 | 7705 | 484095 | 62.83 | Si |

### Verifica dei meccanismi locali di collasso con analisi cinematica lineare

forza di aggancio al piano = 0 quota mezzeria = 135.5 Wa = 0.05 Ta = 0.0161

| Comb. | N top | N base | V orto | α0 | M* | e* | a0* | aLim | Verifica |
|---|---|---|---|---|---|---|---|---|---|
| SLV 6 | -33425 | -38287 | 385 | 0.082 | 37.162 | 0.974 | 122.894 | 351.105 | No |
| SLV 5 | -33425 | -38287 | 385 | 0.082 | 37.162 | 0.974 | 122.894 | 351.105 | No |
| SLV 9 | -42030 | -47335 | 227 | 0.087 | 45.928 | 0.979 | 129.321 | 351.105 | No |
| SLV 10 | -42030 | -47335 | 227 | 0.087 | 45.928 | 0.979 | 129.321 | 351.105 | No |
| SLV 1 | -24173 | -28400 | 475 | 0.077 | 27.742 | 0.966 | 115.635 | 308.53 | No |
| SLV 2 | -24173 | -28400 | 475 | 0.077 | 27.742 | 0.966 | 115.635 | 308.53 | No |
| SLV 8 | -35675 | -40200 | 116 | 0.09 | 39.454 | 0.975 | 133.852 | 351.105 | No |
| SLV 7 | -35675 | -40200 | 116 | 0.09 | 39.454 | 0.975 | 133.852 | 351.105 | No |
| SLV 11 | -44280 | -49249 | -42 | 0.091 | 48.221 | 0.98 | 135.215 | 351.105 | No |
| SLV 12 | -44280 | -49249 | -42 | 0.091 | 48.221 | 0.98 | 135.215 | 351.105 | No |

### Tabella dei coefficienti di sicurezza minimi

| Stato limite | Coeff.s. | Comb. | Verifica |
|---|---|---|---|
| PF_SLU | 4.369 | SLU 82 | Si |
| V_SLU | 4.752 | SLU 82 | Si |
| PF_SLV | 4.31 | SLV 1 | Si |
| V_SLV | 1.274 | SLV 11 | Si |
| PFFP_SLV | 42.785 | SLV 1 | Si |
| R_SLV | 0.35 | SLV 5 | No |

## Maschio 19

Verifiche condotte secondo D.M. 17-01-18 (N.T.C.)

### Dati geometrici

| X ini. | Y ini. | X fin. | Y fin. | Quota i. | Quota.s | l | Sp. | h netta | h ini. | h fin. | a | a.s.,sx | a.s.,dx |
|---|---|---|---|---|---|---|---|---|---|---|---|---|---|
| -1246.3 | -361.9 | -1246.3 | -331.5 | L1 | L3 | 30.4 | 30 | 269 | 269 | 269 | | | |

### Caratteristiche del materiale

(Circolare 7 21-01-19 C8.5.I) Muratura in mattoni pieni e malta di calce LC2_Corti

| fb | fk | fvk0 | fmedio | τ0 | fv0 | μ | ϕ | fv,lim | E | G | FC |
|---|---|---|---|---|---|---|---|---|---|---|---|
| 60 | | | 34.5 | 0.9 | 2 | 0.58 | 0.77 | 3.25 | 32000 | 12800 | 1.2 |

Verifica a pressoflessione nel piano secondo D.M. 17-01-18 NTC §7.8.2.2.1 in combinazioni non sismiche, γM = 3

| Comb. | Quota | N | M | σ0 | Mu | c.s. | Verifica |
|---|---|---|---|---|---|---|---|
| SLU 57 | -98 | -500 | 3238 | 0.55 | 7090 | 2.19 | Si |
| SLU 57 | 171 | 33 | -937 | 0 | 0 | 0 | No, Trazione |
| SLU 53 | -98 | -514 | 3195 | 0.56 | 7276 | 2.277 | Si |
| SLU 53 | 171 | 33 | -933 | 0 | 0 | 0 | No, Trazione |
| SLU 55 | -98 | -523 | 3168 | 0.57 | 7390 | 2.332 | Si |
| SLU 55 | 171 | 33 | -931 | 0 | 0 | 0 | No, Trazione |
| SLU 60 | -98 | -688 | 3440 | 0.75 | 9497 | 2.761 | Si |
| SLU 60 | 171 | 41 | -1142 | 0 | 0 | 0 | No, Trazione |
| SLU 1 | -98 | -132 | 1931 | 0.15 | 1977 | 1.024 | Si |
| SLU 1 | 171 | 12 | -351 | 0 | 0 | 0 | No, Trazione |
| SLU 58 | -98 | -510 | 3206 | 0.56 | 7226 | 2.254 | Si |
| SLU 58 | 171 | 33 | -934 | 0 | 0 | 0 | No, Trazione |
| SLU 59 | -98 | -510 | 3208 | 0.56 | 7218 | 2.25 | Si |
| SLU 59 | 171 | 33 | -934 | 0 | 0 | 0 | No, Trazione |
| SLU 56 | -98 | -501 | 3236 | 0.55 | 7098 | 2.193 | Si |
| SLU 56 | 171 | 33 | -936 | 0 | 0 | 0 | No, Trazione |
| SLU 61 | -98 | -688 | 3442 | 0.75 | 9489 | 2.757 | Si |
| SLU 61 | 171 | 41 | -1142 | 0 | 0 | 0 | No, Trazione |
| SLU 54 | -98 | -513 | 3197 | 0.56 | 7268 | 2.273 | Si |
| SLU 54 | 171 | 33 | -933 | 0 | 0 | 0 | No, Trazione |

Verifica a pressoflessione nel piano secondo D.M. 17-01-18 NTC §7.8.2.2.1 in combinazioni sismiche, γM = 2

| Comb. | Quota | N | M | σ0 | Mu | c.s. | Verifica |
|---|---|---|---|---|---|---|---|
| SLV 6 | -98 | -1813 | -4253 | 1.99 | 23088 | 5.428 | Si |
| SLV 6 | 171 | 2 | -45 | 0 | 0 | 0 | No, Trazione |
| SLV 14 | -98 | -333 | 1456 | 0.36 | 4906 | 3.37 | Si |
| SLV 14 | 171 | 18 | -523 | 0 | 0 | 0 | No, Trazione |
| SLV 10 | -98 | -1611 | -3614 | 1.77 | 20958 | 5.8 | Si |
| SLV 10 | 171 | 4 | -126 | 0 | 0 | 0 | No, Trazione |
| SLV 12 | -98 | 1369 | 8740 | 0 | 0 | 0 | No, Trazione |
| SLV 12 | 171 | 35 | -993 | 0 | 0 | 0 | No, Trazione |
| SLV 9 | -98 | -1611 | -3614 | 1.77 | 20958 | 5.8 | Si |
| SLV 9 | 171 | 4 | -126 | 0 | 0 | 0 | No, Trazione |
| SLD 1 | -98 | -557 | 1000 | 0.61 | 8043 | 8.045 | Si |
| SLD 1 | 171 | 14 | -407 | 0 | 0 | 0 | No, Trazione |
| SLV 13 | -98 | -333 | 1456 | 0.36 | 4906 | 3.37 | Si |
| SLV 13 | 171 | 18 | -523 | 0 | 0 | 0 | No, Trazione |
| SLV 11 | -98 | 1369 | 8740 | 0 | 0 | 0 | No, Trazione |
| SLV 11 | 171 | 35 | -993 | 0 | 0 | 0 | No, Trazione |
| SLV 8 | -98 | 1166 | 8100 | 0 | 0 | 0 | No, Trazione |
| SLV 8 | 171 | 32 | -912 | 0 | 0 | 0 | No, Trazione |
| SLV 7 | -98 | 1166 | 8100 | 0 | 0 | 0 | No, Trazione |
| SLV 7 | 171 | 32 | -912 | 0 | 0 | 0 | No, Trazione |

Verifica a taglio nel piano secondo D.M. 17-01-18 (N.T.C.) §7.8.2.2.2 con rottura per scorrimento in combinazioni non sismiche, γM = 3

| Comb. | Quota | N | V par | M | σ0 | σN | l' | fvd | Vt scorr. | Vt fess.diag. | Vt,lim | c.s. | Verifica |
|---|---|---|---|---|---|---|---|---|---|---|---|---|---|
| SLU 55 | -98 | -523 | 43 | 3168 | | 0.64 | 27.43 | 0.64 | 527 | | | 12.36 | Si |
| SLU 55 | 171 | 33 | 18 | -931 | | 0 | 0 | 0.56 | 0 | | | 0 | No, Vu<V |
| SLU 58 | -98 | -510 | 45 | 3206 | | 0.64 | 26.77 | 0.64 | 514 | | | 11.31 | Si |
| SLU 58 | 171 | 33 | 18 | -934 | | 0 | 0 | 0.56 | 0 | | | 0 | No, Vu<V |
| SLU 57 | -98 | -500 | 48 | 3238 | | 0.64 | 26.18 | 0.64 | 503 | | | 10.52 | Si |
| SLU 57 | 171 | 33 | 18 | -937 | | 0 | 0 | 0.56 | 0 | | | 0 | No, Vu<V |
| SLU 61 | -98 | -688 | 33 | 3442 | | 0.75 | 30.41 | 0.66 | 599 | | | 17.96 | Si |
| SLU 61 | 171 | 41 | 22 | -1142 | | 0 | 0 | 0.56 | 0 | | | 0 | No, Vu<V |
| SLU 56 | -98 | -501 | 48 | 3236 | | 0.64 | 26.22 | 0.64 | 504 | | | 10.57 | Si |
| SLU 56 | 171 | 33 | 18 | -936 | | 0 | 0 | 0.56 | 0 | | | 0 | No, Vu<V |
| SLU 54 | -98 | -513 | 45 | 3197 | | 0.64 | 26.93 | 0.64 | 517 | | | 11.56 | Si |
| SLU 54 | 171 | 33 | 18 | -933 | | 0 | 0 | 0.56 | 0 | | | 0 | No, Vu<V |
| SLU 53 | -98 | -514 | 45 | 3195 | | 0.64 | 26.97 | 0.64 | 518 | | | 11.61 | Si |
| SLU 53 | 171 | 33 | 18 | -933 | | 0 | 0 | 0.56 | 0 | | | 0 | No, Vu<V |
| SLU 59 | -98 | -510 | 46 | 3208 | | 0.64 | 26.73 | 0.64 | 514 | | | 11.26 | Si |
| SLU 59 | 171 | 33 | 18 | -934 | | 0 | 0 | 0.56 | 0 | | | 0 | No, Vu<V |
| SLU 60 | -98 | -688 | 33 | 3440 | | 0.75 | 30.41 | 0.66 | 599 | | | 18.04 | Si |
| SLU 60 | 171 | 41 | 22 | -1142 | | 0 | 0 | 0.56 | 0 | | | 0 | No, Vu<V |
| SLU 1 | -98 | -132 | 46 | 1931 | | 2.36 | 1.87 | 0.87 | 49 | | | 1.07 | Si |
| SLU 1 | 171 | 12 | 7 | -351 | | 0 | 0 | 0.56 | 0 | | | 0 | No, Vu<V |

Verifica a taglio nel piano secondo D.M. 17-01-18 (N.T.C.) §7.8.2.2.2 con rottura per scorrimento in combinazioni sismiche, γM = 2

| Comb. | Quota | N | V par | M | σ0 | σN | l' | fvd | Vt scorr. | Vt fess.diag. | Vt,lim | c.s. | Verifica |
|---|---|---|---|---|---|---|---|---|---|---|---|---|---|
| SLV 13 | -98 | -333 | 6 | 1456 | | 0.36 | 30.41 | 0.91 | 827 | | | 138.91 | Si |
| SLV 13 | 171 | 18 | 25 | -523 | | 0 | 0 | 0.83 | 0 | | | 0 | No, Vu<V |
| SLV 11 | -98 | 1369 | 470 | 8740 | | 0 | 0 | 0.83 | 0 | | | 0 | No, Vu<V |
| SLV 11 | 171 | 35 | -12 | -993 | | 0 | 0 | 0.83 | 0 | | | 0 | No, Vu<V |
| SLV 12 | -98 | 1369 | 470 | 8740 | | 0 | 0 | 0.83 | 0 | | | 0 | No, Vu<V |
| SLV 12 | 171 | 35 | -12 | -993 | | 0 | 0 | 0.83 | 0 | | | 0 | No, Vu<V |
| SLV 8 | -98 | 1166 | 423 | 8100 | | 0 | 0 | 0.83 | 0 | | | 0 | No, Vu<V |
| SLV 8 | 171 | 32 | -17 | -912 | | 0 | 0 | 0.83 | 0 | | | 0 | No, Vu<V |
| SLV 10 | -98 | -1611 | -329 | -3614 | | 1.77 | 30.41 | 1.19 | 1083 | | | 3.29 | Si |
| SLV 10 | 171 | 4 | 36 | -126 | | 0 | 0 | 0.83 | 0 | | | 0 | No, Vu<V |
| SLD 1 | -98 | -557 | -38 | 1000 | | 0.61 | 30.41 | 0.96 | 872 | | | 22.84 | Si |
| SLD 1 | 171 | 14 | 10 | -407 | | 0 | 0 | 0.83 | 0 | | | 0 | No, Vu<V |
| SLV 6 | -98 | -1813 | -377 | -4253 | | 1.99 | 30.41 | 1.23 | 1123 | | | 2.98 | Si |
| SLV 6 | 171 | 2 | 32 | -45 | | 0 | 0 | 0.83 | 0 | | | 0 | No, Vu<V |
| SLV 9 | -98 | -1611 | -329 | -3614 | | 1.77 | 30.41 | 1.19 | 1083 | | | 3.29 | Si |
| SLV 9 | 171 | 4 | 36 | -126 | | 0 | 0 | 0.83 | 0 | | | 0 | No, Vu<V |
| SLV 7 | -98 | 1166 | 423 | 8100 | | 0 | 0 | 0.83 | 0 | | | 0 | No, Vu<V |

| Comb. | Quota | N | V par | M | σ0 | σN | l' | fvd | Vt scorr. | Vt fess.diag. | Vt,lim | c.s. | Verifica |
|---|---|---|---|---|---|---|---|---|---|---|---|---|---|
| SLV 7 | 171 | 32 | -17 | -912 | | 0 | 0 | 0.83 | 0 | | | 0 | No, Vu<V |
| SLV 14 | -98 | -333 | 6 | 1456 | | 0.36 | 30.41 | 0.91 | 827 | | | 138.91 | Si |
| SLV 14 | 171 | 18 | 25 | -523 | | 0 | 0 | 0.83 | 0 | | | 0 | No, Vu<V |

### Verifica a pressoflessione fuori piano D.M. 17-01-18 (N.T.C.)

quota 36.5 Wa 0.05 denominatore 8 γM = 2

| Comb. | fd | Sa | σ0 | N | M | Mc | Coeff.s. | Verifica |
|---|---|---|---|---|---|---|---|---|
| SLV 12 | 14 | 0.25 | 0 | 78 | 1246 | 0 | 0 | No, Trazione |
| SLV 7 | 14 | 0.25 | 0 | 7 | 1246 | 0 | 0 | No, Trazione |
| SLV 8 | 14 | 0.25 | 0 | 7 | 1246 | 0 | 0 | No, Trazione |
| SLV 11 | 14 | 0.25 | 0 | 78 | 1246 | 0 | 0 | No, Trazione |
| SLV 15 | 14 | 0.25 | 0.1 | -95 | 1246 | 1412 | 1.13 | Si |
| SLV 16 | 14 | 0.25 | 0.1 | -95 | 1246 | 1412 | 1.13 | Si |
| SLV 14 | 14 | 0.25 | 0.34 | -314 | 1246 | 4577 | 3.67 | Si |
| SLV 13 | 14 | 0.25 | 0.34 | -314 | 1246 | 4577 | 3.67 | Si |
| SLV 4 | 14 | 0.25 | 0.36 | -332 | 1246 | 4830 | 3.88 | Si |
| SLV 3 | 14 | 0.25 | 0.36 | -332 | 1246 | 4830 | 3.88 | Si |

### Verifica dei meccanismi locali di collasso con analisi cinematica lineare

forza di aggancio al piano = 0 quota mezzeria = 36.5 Wa = 0.05 Ta = 0.0403

| Comb. | N top | N base | V orto | α0 | M* | e* | a0* | aLim | Verifica |
|---|---|---|---|---|---|---|---|---|---|
| SLV 10 | 4 | -1611 | -5 | 0 | 0 | 0 | 0 | 562.86 | No, Trazione |
| SLV 3 | 18 | -112 | 31 | 0 | 0 | 0 | 0 | 392.678 | No, Trazione |
| SLV 2 | 9 | -1006 | 35 | 0 | 0 | 0 | 0 | 392.678 | No, Trazione |
| SLV 7 | 32 | 1166 | 2 | 0 | 0 | 0 | 0 | 562.86 | No, Trazione |
| SLV 1 | 9 | -1006 | 35 | 0 | 0 | 0 | 0 | 392.678 | No, Trazione |
| SLV 4 | 18 | -112 | 31 | 0 | 0 | 0 | 0 | 392.678 | No, Trazione |
| SLV 6 | 2 | -1813 | 15 | 0 | 0 | 0 | 0 | 562.86 | No, Trazione |
| SLV 8 | 32 | 1166 | 2 | 0 | 0 | 0 | 0 | 562.86 | No, Trazione |
| SLV 5 | 2 | -1813 | 15 | 0 | 0 | 0 | 0 | 562.86 | No, Trazione |
| SLV 9 | 4 | -1611 | -5 | 0 | 0 | 0 | 0 | 562.86 | No, Trazione |

### Tabella dei coefficienti di sicurezza minimi

| Stato limite | Coeff.s. | Comb. | Verifica |
|---|---|---|---|
| PF_SLU | 0 | SLU 84 | No |
| V_SLU | 0 | SLU 1 | No |
| PF_SLV | 0 | SLV 16 | No |
| V_SLV | 0 | SLD 1 | No |
| PFFP_SLV | 0 | SLV 12 | No |
| R_SLV | 0 | SLV 16 | No |

## Maschio 21

Verifiche condotte secondo D.M. 17-01-18 (N.T.C.)

### Dati geometrici

| X ini. | Y ini. | X fin. | Y fin. | Quota i. | Quota.s | l | Sp. | h netta | h ini. | h fin. | a | a.s.,sx | a.s.,dx |
|---|---|---|---|---|---|---|---|---|---|---|---|---|---|
| -1246.3 | -331.5 | -1246.3 | -191.6 | L2 | L3 | 139.9 | 30 | 71 | 71 | 71 | | | |

### Caratteristiche del materiale

(Circolare 7 21-01-19 C8.5.I) Muratura in mattoni pieni e malta di calce LC2_Corti

| fb | fk | fvk0 | fmedio | τ0 | fv0 | μ | ϕ | fv,lim | E | G | FC |
|---|---|---|---|---|---|---|---|---|---|---|---|
| 60 | | | 34.5 | 0.9 | 2 | 0.58 | 0.77 | 3.25 | 32000 | 12800 | 1.2 |

### Verifica a pressoflessione nel piano secondo D.M. 17-01-18 NTC §7.8.2.2.1 in combinazioni non sismiche, γM = 3

| Comb. | Quota | N | M | σ0 | Mu | c.s. | Verifica |
|---|---|---|---|---|---|---|---|
| SLU 56 | 100 | -627 | 24094 | 0.15 | 43042 | 1.786 | Si |
| SLU 56 | 171 | 22 | -6063 | 0 | 0 | 0 | No, Trazione |
| SLU 61 | 100 | -668 | 26333 | 0.16 | 45784 | 1.739 | Si |
| SLU 61 | 171 | 13 | -6443 | 0 | 0 | 0 | No, Trazione |
| SLU 57 | 100 | -627 | 24104 | 0.15 | 43029 | 1.785 | Si |
| SLU 57 | 171 | 22 | -6067 | 0 | 0 | 0 | No, Trazione |
| SLU 58 | 100 | -630 | 23908 | 0.15 | 43256 | 1.809 | Si |
| SLU 58 | 171 | 21 | -6004 | 0 | 0 | 0 | No, Trazione |
| SLU 53 | 100 | -631 | 23835 | 0.15 | 43343 | 1.818 | Si |
| SLU 53 | 171 | 21 | -5979 | 0 | 0 | 0 | No, Trazione |
| SLU 54 | 100 | -631 | 23845 | 0.15 | 43330 | 1.817 | Si |
| SLU 54 | 171 | 21 | -5983 | 0 | 0 | 0 | No, Trazione |
| SLU 1 | 100 | -435 | 13393 | 0.1 | 30028 | 2.242 | Si |
| SLU 1 | 171 | 27 | -3592 | 0 | 0 | 0 | No, Trazione |
| SLU 55 | 100 | -634 | 23666 | 0.15 | 43535 | 1.84 | Si |
| SLU 55 | 171 | 20 | -5926 | 0 | 0 | 0 | No, Trazione |
| SLU 60 | 100 | -668 | 26323 | 0.16 | 45797 | 1.74 | Si |
| SLU 60 | 171 | 13 | -6439 | 0 | 0 | 0 | No, Trazione |
| SLU 59 | 100 | -630 | 23918 | 0.15 | 43243 | 1.808 | Si |
| SLU 59 | 171 | 21 | -6007 | 0 | 0 | 0 | No, Trazione |

### Verifica a pressoflessione nel piano secondo D.M. 17-01-18 NTC §7.8.2.2.1 in combinazioni sismiche, γM = 2

| Comb. | Quota | N | M | σ0 | Mu | c.s. | Verifica |
|---|---|---|---|---|---|---|---|
| SLD 1 | 100 | -545 | 11441 | 0.13 | 37745 | 3.299 | Si |
| SLD 1 | 171 | 9 | -2628 | 0 | 0 | 0 | No, Trazione |
| SLV 15 | 100 | -222 | 26982 | 0 | 0 | 0 | No, e>l/2 |
| SLV 15 | 171 | 59 | -7865 | 0 | 0 | 0 | No, Trazione |

| Comb. | Quota | N | M | σ0 | Mu | c.s. | Verifica |
|---|---|---|---|---|---|---|---|
| SLV 4 | 100 | -451 | 11793 | 0.11 | 31248 | 2.65 | Si |
| SLV 4 | 171 | 12 | -3350 | 0 | 0 | 0 | No, Trazione |
| SLV 12 | 100 | -41 | 29411 | 0 | 0 | 0 | No, e>l/2 |
| SLV 12 | 171 | 69 | -9583 | 0 | 0 | 0 | No, Trazione |
| SLV 13 | 100 | -447 | 20343 | 0.11 | 30980 | 1.523 | Si |
| SLV 13 | 171 | 36 | -5037 | 0 | 0 | 0 | No, Trazione |
| SLV 3 | 100 | -451 | 11793 | 0.11 | 31248 | 2.65 | Si |
| SLV 3 | 171 | 12 | -3350 | 0 | 0 | 0 | No, Trazione |
| SLV 14 | 100 | -447 | 20343 | 0.11 | 30980 | 1.523 | Si |
| SLV 14 | 171 | 36 | -5037 | 0 | 0 | 0 | No, Trazione |
| SLV 11 | 100 | -41 | 29411 | 0 | 0 | 0 | No, e>l/2 |
| SLV 11 | 171 | 69 | -9583 | 0 | 0 | 0 | No, Trazione |
| SLV 7 | 100 | -109 | 24854 | 0 | 0 | 0 | No, e>l/2 |
| SLV 7 | 171 | 55 | -8229 | 0 | 0 | 0 | No, Trazione |
| SLV 8 | 100 | -109 | 24854 | 0 | 0 | 0 | No, e>l/2 |
| SLV 8 | 171 | 55 | -8229 | 0 | 0 | 0 | No, Trazione |

Verifica a taglio nel piano secondo D.M. 17-01-18 (N.T.C.) §7.8.2.2.2 con rottura per scorrimento in combinazioni non sismiche, γM = 3

| Comb. | Quota | N | V par | M | σ0 | σN | l' | fvd | Vt scorr. | Vt fess.diag. | Vt,lim | c.s. | Verifica |
|---|---|---|---|---|---|---|---|---|---|---|---|---|---|
| SLU 1 | 100 | -435 | 622 | 13393 | | 0.12 | 117.45 | 0.57 | 2016 | | | 3.24 | Si |
| SLU 1 | 171 | 27 | 230 | -3592 | | 0 | 0 | 0.56 | 0 | | | 0 | No, Vu<V |
| SLU 61 | 100 | -668 | 1220 | 26333 | | 0.24 | 91.52 | 0.59 | 1614 | | | 1.32 | Si |
| SLU 61 | 171 | 13 | 423 | -6443 | | 0 | 0 | 0.56 | 0 | | | 0 | No, Vu<V |
| SLU 59 | 100 | -630 | 1111 | 23918 | | 0.22 | 95.92 | 0.58 | 1683 | | | 1.51 | Si |
| SLU 59 | 171 | 21 | 392 | -6007 | | 0 | 0 | 0.56 | 0 | | | 0 | No, Vu<V |
| SLU 58 | 100 | -630 | 1110 | 23908 | | 0.22 | 96.01 | 0.58 | 1684 | | | 1.52 | Si |
| SLU 58 | 171 | 21 | 391 | -6004 | | 0 | 0 | 0.56 | 0 | | | 0 | No, Vu<V |
| SLU 57 | 100 | -627 | 1121 | 24104 | | 0.22 | 94.46 | 0.59 | 1658 | | | 1.48 | Si |
| SLU 57 | 171 | 22 | 395 | -6067 | | 0 | 0 | 0.56 | 0 | | | 0 | No, Vu<V |
| SLU 55 | 100 | -634 | 1098 | 23666 | | 0.22 | 97.9 | 0.58 | 1716 | | | 1.56 | Si |
| SLU 55 | 171 | 20 | 386 | -5926 | | 0 | 0 | 0.56 | 0 | | | 0 | No, Vu<V |
| SLU 56 | 100 | -627 | 1120 | 24094 | | 0.22 | 94.54 | 0.59 | 1659 | | | 1.48 | Si |
| SLU 56 | 171 | 22 | 395 | -6063 | | 0 | 0 | 0.56 | 0 | | | 0 | No, Vu<V |
| SLU 60 | 100 | -668 | 1220 | 26323 | | 0.24 | 91.59 | 0.59 | 1616 | | | 1.32 | Si |
| SLU 60 | 171 | 13 | 423 | -6439 | | 0 | 0 | 0.56 | 0 | | | 0 | No, Vu<V |
| SLU 53 | 100 | -631 | 1106 | 23835 | | 0.22 | 96.59 | 0.58 | 1694 | | | 1.53 | Si |
| SLU 53 | 171 | 21 | 390 | -5979 | | 0 | 0 | 0.56 | 0 | | | 0 | No, Vu<V |
| SLU 54 | 100 | -631 | 1107 | 23845 | | 0.22 | 96.5 | 0.58 | 1693 | | | 1.53 | Si |
| SLU 54 | 171 | 21 | 390 | -5983 | | 0 | 0 | 0.56 | 0 | | | 0 | No, Vu<V |

Verifica a taglio nel piano secondo D.M. 17-01-18 (N.T.C.) §7.8.2.2.2 con rottura per scorrimento in combinazioni sismiche, γM = 2

| Comb. | Quota | N | V par | M | σ0 | σN | l' | fvd | Vt scorr. | Vt fess.diag. | Vt,lim | c.s. | Verifica |
|---|---|---|---|---|---|---|---|---|---|---|---|---|---|
| SLV 13 | 100 | -447 | 1073 | 20343 | | 0.2 | 73.26 | 0.87 | 1921 | | | 1.79 | Si |
| SLV 13 | 171 | 36 | 355 | -5037 | | 0 | 0 | 0.83 | 0 | | | 0 | No, Vu<V |
| SLV 14 | 100 | -447 | 1073 | 20343 | | 0.2 | 73.26 | 0.87 | 1921 | | | 1.79 | Si |
| SLV 14 | 171 | 36 | 355 | -5037 | | 0 | 0 | 0.83 | 0 | | | 0 | No, Vu<V |
| SLV 12 | 100 | -41 | 1378 | 29411 | | 0 | 0 | 0.83 | 0 | | | 0 | No, Vu<V |
| SLV 12 | 171 | 69 | 482 | -9583 | | 0 | 0 | 0.83 | 0 | | | 0 | No, Vu<V |
| SLV 7 | 100 | -109 | 1095 | 24854 | | 0 | 0 | 0.83 | 0 | | | 0 | No, Vu<V |
| SLV 7 | 171 | 55 | 401 | -8229 | | 0 | 0 | 0.83 | 0 | | | 0 | No, Vu<V |
| SLV 3 | 100 | -451 | 424 | 11793 | | 0.11 | 131.36 | 0.86 | 3374 | | | 7.96 | Si |
| SLV 3 | 171 | 12 | 187 | -3350 | | 0 | 0 | 0.83 | 0 | | | 0 | No, Vu<V |
| SLV 8 | 100 | -109 | 1095 | 24854 | | 0 | 0 | 0.83 | 0 | | | 0 | No, Vu<V |
| SLV 8 | 171 | 55 | 401 | -8229 | | 0 | 0 | 0.83 | 0 | | | 0 | No, Vu<V |
| SLV 4 | 100 | -451 | 424 | 11793 | | 0.11 | 131.36 | 0.86 | 3374 | | | 7.96 | Si |
| SLV 4 | 171 | 12 | 187 | -3350 | | 0 | 0 | 0.83 | 0 | | | 0 | No, Vu<V |
| SLV 11 | 100 | -41 | 1378 | 29411 | | 0 | 0 | 0.83 | 0 | | | 0 | No, Vu<V |
| SLV 11 | 171 | 69 | 482 | -9583 | | 0 | 0 | 0.83 | 0 | | | 0 | No, Vu<V |
| SLD 1 | 100 | -545 | 487 | 11441 | | 0.13 | 139.91 | 0.86 | 3607 | | | 7.41 | Si |
| SLD 1 | 171 | 9 | 191 | -2628 | | 0 | 0 | 0.83 | 0 | | | 0 | No, Vu<V |
| SLV 15 | 100 | -222 | 1366 | 26982 | | 0 | 0 | 0.83 | 0 | | | 0 | No, Vu<V |
| SLV 15 | 171 | 59 | 457 | -7865 | | 0 | 0 | 0.83 | 0 | | | 0 | No, Vu<V |

Verifica a pressoflessione fuori piano D.M. 17-01-18 (N.T.C.)

quota 135.5 Wa 0.05 denominatore 8 γM = 2

| Comb. | fd | Sa | σ0 | N | M | Mc | Coeff.s. | Verifica |
|---|---|---|---|---|---|---|---|---|
| SLV 11 | 14 | 0.27 | 0.06 | -236 | 431 | 3522 | 8.17 | Si |
| SLV 12 | 14 | 0.27 | 0.06 | -236 | 431 | 3522 | 8.17 | Si |
| SLV 16 | 14 | 0.27 | 0.06 | -242 | 431 | 3610 | 8.37 | Si |
| SLV 15 | 14 | 0.27 | 0.06 | -242 | 431 | 3610 | 8.37 | Si |
| SLV 8 | 14 | 0.27 | 0.06 | -250 | 431 | 3728 | 8.64 | Si |
| SLV 7 | 14 | 0.27 | 0.06 | -250 | 431 | 3728 | 8.64 | Si |
| SLV 13 | 14 | 0.27 | 0.06 | -261 | 431 | 3890 | 9.02 | Si |
| SLV 14 | 14 | 0.27 | 0.06 | -261 | 431 | 3890 | 9.02 | Si |
| SLV 3 | 14 | 0.27 | 0.07 | -288 | 431 | 4294 | 9.96 | Si |
| SLV 4 | 14 | 0.27 | 0.07 | -288 | 431 | 4294 | 9.96 | Si |

Verifica dei meccanismi locali di collasso con analisi cinematica lineare

forza di aggancio al piano = 0 quota mezzeria = 135.5 Wa = 0.05 Ta = 0.0028

| Comb. | N top | N base | V orto | α0 | M* | e* | a0* | aLim | Verifica |
|---|---|---|---|---|---|---|---|---|---|
| SLV 16 | 59 | -222 | -40 | 0 | 0 | 0 | 0 | 265.626 | No, Trazione |
| SLV 14 | 36 | -447 | -42 | 0 | 0 | 0 | 0 | 265.626 | No, Trazione |
| SLV 7 | 55 | -109 | 14 | 0 | 0 | 0 | 0 | 271.264 | No, Trazione |
| SLV 3 | 12 | -451 | 40 | 0 | 0 | 0 | 0 | 265.626 | No, Trazione |
| SLV 4 | 12 | -451 | 40 | 0 | 0 | 0 | 0 | 265.626 | No, Trazione |
| SLV 8 | 55 | -109 | 14 | 0 | 0 | 0 | 0 | 271.264 | No, Trazione |
| SLV 15 | 59 | -222 | -40 | 0 | 0 | 0 | 0 | 265.626 | No, Trazione |

| Comb. | N top | N base | V orto | α0 | M* | e* | a0* | aLim | Verifica |
|---|---|---|---|---|---|---|---|---|---|
| SLV 11 | 69 | -41 | -10 | 0 | 0 | 0 | 0 | 271.264 | No, Trazione |
| SLV 13 | 36 | -447 | -42 | 0 | 0 | 0 | 0 | 265.626 | No, Trazione |
| SLV 12 | 69 | -41 | -10 | 0 | 0 | 0 | 0 | 271.264 | No, Trazione |

### Tabella dei coefficienti di sicurezza minimi

| Stato limite | Coeff.s. | Comb. | Verifica |
|---|---|---|---|
| PF_SLU | 0 | SLU 84 | No |
| V_SLU | 0 | SLU 1 | No |
| PF_SLV | 0 | SLV 16 | No |
| V_SLV | 0 | SLD 1 | No |
| PFFP_SLV | 8.168 | SLV 11 | Si |
| R_SLV | 0 | SLV 16 | No |

## Maschio 23

Verifiche condotte secondo D.M. 17-01-18 (N.T.C.)

### Dati geometrici

| X ini. | Y ini. | X fin. | Y fin. | Quota i. | Quota.s | l | Sp. | h netta | h ini. | h fin. | a | a.s.,sx | a.s.,dx |
|---|---|---|---|---|---|---|---|---|---|---|---|---|---|
| -1246.3 | -191.6 | -1246.3 | -35.4 | Z medio 1 cm | Z medio 136 cm | 156.2 | 30 | 134.5 | 63.5 | 205.4 | | | |

### Caratteristiche del materiale

(Circolare 7 21-01-19 C8.5.I) Muratura in mattoni pieni e malta di calce LC2_Corti

| fb | fk | fvk0 | fmedio | τ0 | fv0 | μ | ϕ | fv,lim | E | G | FC |
|---|---|---|---|---|---|---|---|---|---|---|---|
| 60 | | | 34.5 | 0.9 | 2 | 0.58 | 0.77 | 3.25 | 32000 | 12800 | 1.2 |

### Verifica a pressoflessione nel piano secondo D.M. 17-01-18 NTC §7.8.2.2.1 in combinazioni non sismiche, γM = 3

| Comb. | Quota | N | M | σ0 | Mu | c.s. | Verifica |
|---|---|---|---|---|---|---|---|
| SLU 42 | 36 | -3826 | 28675 | 0.82 | 268848 | 9.376 | Si |
| SLU 42 | 100 | -2629 | 46803 | 0.56 | 191172 | 4.085 | Si |
| SLU 83 | 36 | -4353 | 33610 | 0.93 | 301147 | 8.96 | Si |
| SLU 83 | 100 | -2906 | 50543 | 0.62 | 209643 | 4.148 | Si |
| SLU 41 | 36 | -3826 | 28641 | 0.82 | 268823 | 9.386 | Si |
| SLU 41 | 100 | -2629 | 46788 | 0.56 | 191144 | 4.085 | Si |
| SLU 82 | 36 | -4349 | 32849 | 0.93 | 300943 | 9.161 | Si |
| SLU 82 | 100 | -2903 | 50396 | 0.62 | 209438 | 4.156 | Si |
| SLU 36 | 36 | -3329 | 29842 | 0.71 | 237311 | 7.952 | Si |
| SLU 36 | 100 | -2223 | 39119 | 0.47 | 163458 | 4.179 | Si |
| SLU 84 | 36 | -4353 | 33644 | 0.93 | 301171 | 8.952 | Si |
| SLU 84 | 100 | -2906 | 50557 | 0.62 | 209671 | 4.147 | Si |
| SLU 81 | 36 | -4349 | 32815 | 0.93 | 300919 | 9.17 | Si |
| SLU 81 | 100 | -2902 | 50382 | 0.62 | 209410 | 4.156 | Si |
| SLU 40 | 36 | -3823 | 27881 | 0.82 | 268611 | 9.634 | Si |
| SLU 40 | 100 | -2626 | 46641 | 0.56 | 190935 | 4.094 | Si |
| SLU 39 | 36 | -3822 | 27846 | 0.82 | 268586 | 9.645 | Si |
| SLU 39 | 100 | -2625 | 46627 | 0.56 | 190907 | 4.094 | Si |
| SLU 35 | 36 | -3329 | 29808 | 0.71 | 237285 | 7.96 | Si |
| SLU 35 | 100 | -2222 | 39104 | 0.47 | 163429 | 4.179 | Si |

### Verifica a pressoflessione nel piano secondo D.M. 17-01-18 NTC §7.8.2.2.1 in combinazioni sismiche, γM = 2

| Comb. | Quota | N | M | σ0 | Mu | c.s. | Verifica |
|---|---|---|---|---|---|---|---|
| SLV 9 | 36 | -2619 | 5417 | 0.56 | 195170 | 36.028 | Si |
| SLV 9 | 100 | -1375 | 23905 | 0.29 | 104767 | 4.383 | Si |
| SLV 10 | 36 | -2619 | 5417 | 0.56 | 195170 | 36.028 | Si |
| SLV 10 | 100 | -1375 | 23905 | 0.29 | 104767 | 4.383 | Si |
| SLV 15 | 36 | -2356 | 53383 | 0.5 | 176424 | 3.305 | Si |
| SLV 15 | 100 | -1501 | 26550 | 0.32 | 114115 | 4.298 | Si |
| SLV 13 | 36 | -2503 | 38385 | 0.53 | 186930 | 4.87 | Si |
| SLV 13 | 100 | -1464 | 26514 | 0.31 | 111395 | 4.201 | Si |
| SLV 12 | 36 | -2129 | 55413 | 0.45 | 160075 | 2.889 | Si |
| SLV 12 | 100 | -1497 | 24025 | 0.32 | 113847 | 4.739 | Si |
| SLV 14 | 36 | -2503 | 38385 | 0.53 | 186930 | 4.87 | Si |
| SLV 14 | 100 | -1464 | 26514 | 0.31 | 111395 | 4.201 | Si |
| SLV 8 | 36 | -2081 | 42155 | 0.44 | 156625 | 3.715 | Si |
| SLV 8 | 100 | -1457 | 21825 | 0.31 | 110898 | 5.081 | Si |
| SLV 7 | 36 | -2081 | 42155 | 0.44 | 156625 | 3.715 | Si |
| SLV 7 | 100 | -1457 | 21825 | 0.31 | 110898 | 5.081 | Si |
| SLV 16 | 36 | -2356 | 53383 | 0.5 | 176424 | 3.305 | Si |
| SLV 16 | 100 | -1501 | 26550 | 0.32 | 114115 | 4.298 | Si |
| SLV 11 | 36 | -2129 | 55413 | 0.45 | 160075 | 2.889 | Si |
| SLV 11 | 100 | -1497 | 24025 | 0.32 | 113847 | 4.739 | Si |

### Verifica a taglio nel piano secondo D.M. 17-01-18 (N.T.C.) §7.8.2.2.2 con rottura per scorrimento in combinazioni non sismiche, γM = 3

| Comb. | Quota | N | V par | M | σ0 | σN | l' | fvd | Vt scorr. | Vt fess.diag. | Vt,lim | c.s. | Verifica |
|---|---|---|---|---|---|---|---|---|---|---|---|---|---|
| SLU 66 | 36 | -2677 | 1410 | 33533 | | 0.57 | 156.18 | 0.63 | 2960 | | | 2.1 | Si |
| SLU 66 | 100 | -1533 | 1142 | 24111 | | 0.33 | 156.18 | 0.6 | 2807 | | | 2.46 | Si |
| SLU 77 | 36 | -3856 | 1453 | 34777 | | 0.82 | 156.18 | 0.67 | 3117 | | | 2.15 | Si |
| SLU 77 | 100 | -2499 | 1023 | 42859 | | 0.53 | 156.18 | 0.63 | 2936 | | | 2.87 | Si |
| SLU 78 | 36 | -3856 | 1454 | 34811 | | 0.82 | 156.18 | 0.67 | 3117 | | | 2.14 | Si |
| SLU 78 | 100 | -2500 | 1024 | 42874 | | 0.53 | 156.18 | 0.63 | 2936 | | | 2.87 | Si |
| SLU 67 | 36 | -2677 | 1411 | 33567 | | 0.57 | 156.18 | 0.63 | 2960 | | | 2.1 | Si |
| SLU 67 | 100 | -1533 | 1143 | 24125 | | 0.33 | 156.18 | 0.6 | 2807 | | | 2.46 | Si |
| SLU 68 | 36 | -2675 | 1392 | 33025 | | 0.57 | 156.18 | 0.63 | 2960 | | | 2.13 | Si |

| Comb. | Quota | N | V par | M | σ0 | σN | l' | fvd | Vt scorr. | Vt fess.diag. | Vt,lim | c.s. | Verifica |
|---|---|---|---|---|---|---|---|---|---|---|---|---|---|
| SLU 68 | 100 | -1531 | 1126 | 24015 | | 0.33 | 156.18 | 0.6 | 2807 | | | 2.49 | Si |
| SLU 71 | 36 | -2678 | 1417 | 33763 | | 0.57 | 156.18 | 0.63 | 2960 | | | 2.09 | Si |
| SLU 71 | 100 | -1533 | 1149 | 24151 | | 0.33 | 156.18 | 0.6 | 2807 | | | 2.44 | Si |
| SLU 70 | 36 | -2681 | 1437 | 34362 | | 0.57 | 156.18 | 0.63 | 2961 | | | 2.06 | Si |
| SLU 70 | 100 | -1537 | 1167 | 24287 | | 0.33 | 156.18 | 0.6 | 2808 | | | 2.41 | Si |
| SLU 69 | 36 | -2681 | 1436 | 34328 | | 0.57 | 156.18 | 0.63 | 2960 | | | 2.06 | Si |
| SLU 69 | 100 | -1536 | 1166 | 24272 | | 0.33 | 156.18 | 0.6 | 2808 | | | 2.41 | Si |
| SLU 72 | 36 | -2679 | 1418 | 33797 | | 0.57 | 156.18 | 0.63 | 2960 | | | 2.09 | Si |
| SLU 72 | 100 | -1534 | 1150 | 24166 | | 0.33 | 156.18 | 0.6 | 2808 | | | 2.44 | Si |
| SLU 65 | 36 | -2671 | 1366 | 32231 | | 0.57 | 156.18 | 0.63 | 2959 | | | 2.17 | Si |
| SLU 65 | 100 | -1527 | 1102 | 23853 | | 0.33 | 156.18 | 0.6 | 2807 | | | 2.55 | Si |

### Verifica a taglio nel piano secondo D.M. 17-01-18 (N.T.C.) §7.8.2.2.2 con rottura per scorrimento in combinazioni sismiche, γM = 2

| Comb. | Quota | N | V par | M | σ0 | σN | l' | fvd | Vt scorr. | Vt fess.diag. | Vt,lim | c.s. | Verifica |
|---|---|---|---|---|---|---|---|---|---|---|---|---|---|
| SLV 8 | 36 | -2081 | 3863 | 42155 | | 0.44 | 156.18 | 0.92 | 4321 | | | 1.12 | Si |
| SLV 8 | 100 | -1457 | 1803 | 21825 | | 0.31 | 156.18 | 0.9 | 4196 | | | 2.33 | Si |
| SLD 7 | 36 | -2236 | 2232 | 31667 | | 0.48 | 156.18 | 0.93 | 4352 | | | 1.95 | Si |
| SLD 7 | 100 | -1434 | 1217 | 22427 | | 0.31 | 156.18 | 0.89 | 4191 | | | 3.44 | Si |
| SLD 11 | 36 | -2256 | 2398 | 37299 | | 0.48 | 156.18 | 0.93 | 4356 | | | 1.82 | Si |
| SLD 11 | 100 | -1451 | 1383 | 23374 | | 0.31 | 156.18 | 0.9 | 4195 | | | 3.03 | Si |
| SLD 12 | 36 | -2256 | 2398 | 37299 | | 0.48 | 156.18 | 0.93 | 4356 | | | 1.82 | Si |
| SLD 12 | 100 | -1451 | 1383 | 23374 | | 0.31 | 156.18 | 0.9 | 4195 | | | 3.03 | Si |
| SLV 16 | 36 | -2356 | 2577 | 53383 | | 0.5 | 156.18 | 0.93 | 4376 | | | 1.7 | Si |
| SLV 16 | 100 | -1501 | 1791 | 26550 | | 0.32 | 156.18 | 0.9 | 4205 | | | 2.35 | Si |
| SLV 11 | 36 | -2129 | 4253 | 55413 | | 0.45 | 156.18 | 0.92 | 4330 | | | 1.02 | Si |
| SLV 11 | 100 | -1497 | 2191 | 24025 | | 0.32 | 156.18 | 0.9 | 4204 | | | 1.92 | Si |
| SLD 8 | 36 | -2236 | 2232 | 31667 | | 0.48 | 156.18 | 0.93 | 4352 | | | 1.95 | Si |
| SLD 8 | 100 | -1434 | 1217 | 22427 | | 0.31 | 156.18 | 0.89 | 4191 | | | 3.44 | Si |
| SLV 12 | 36 | -2129 | 4253 | 55413 | | 0.45 | 156.18 | 0.92 | 4330 | | | 1.02 | Si |
| SLV 12 | 100 | -1497 | 2191 | 24025 | | 0.32 | 156.18 | 0.9 | 4204 | | | 1.92 | Si |
| SLV 7 | 36 | -2081 | 3863 | 42155 | | 0.44 | 156.18 | 0.92 | 4321 | | | 1.12 | Si |
| SLV 7 | 100 | -1457 | 1803 | 21825 | | 0.31 | 156.18 | 0.9 | 4196 | | | 2.33 | Si |
| SLV 15 | 36 | -2356 | 2577 | 53383 | | 0.5 | 156.18 | 0.93 | 4376 | | | 1.7 | Si |
| SLV 15 | 100 | -1501 | 1791 | 26550 | | 0.32 | 156.18 | 0.9 | 4205 | | | 2.35 | Si |

### Verifica a pressoflessione fuori piano D.M. 17-01-18 (N.T.C.)

quota 68.2 Wa 0.05 denominatore 8 γM = 2

| Comb. | fd | Sa | σ0 | N | M | Mc | Coeff.s. | Verifica |
|---|---|---|---|---|---|---|---|---|
| SLV 11 | 14 | 0.26 | 0.37 | -1743 | 1640 | 25345 | 15.45 | Si |
| SLV 12 | 14 | 0.26 | 0.37 | -1743 | 1640 | 25345 | 15.45 | Si |
| SLV 7 | 14 | 0.26 | 0.37 | -1746 | 1640 | 25397 | 15.48 | Si |
| SLV 8 | 14 | 0.26 | 0.37 | -1746 | 1640 | 25397 | 15.48 | Si |
| SLV 15 | 14 | 0.26 | 0.38 | -1758 | 1640 | 25558 | 15.58 | Si |
| SLV 16 | 14 | 0.26 | 0.38 | -1758 | 1640 | 25558 | 15.58 | Si |
| SLV 3 | 14 | 0.26 | 0.38 | -1770 | 1640 | 25732 | 15.69 | Si |
| SLV 4 | 14 | 0.26 | 0.38 | -1770 | 1640 | 25732 | 15.69 | Si |
| SLV 13 | 14 | 0.26 | 0.38 | -1775 | 1640 | 25793 | 15.72 | Si |
| SLV 14 | 14 | 0.26 | 0.38 | -1775 | 1640 | 25793 | 15.72 | Si |

### Verifica dei meccanismi locali di collasso con analisi cinematica lineare

forza di aggancio al piano = 0 quota mezzeria = 68.2 Wa = 0.05 Ta = 0.0101

| Comb. | N top | N base | V orto | α0 | M* | e* | a0* | aLim | Verifica |
|---|---|---|---|---|---|---|---|---|---|
| SLV 12 | -1497 | -2129 | 15 | 0.135 | 2.439 | 0.909 | 215.683 | 300.705 | No |
| SLV 11 | -1497 | -2129 | 15 | 0.135 | 2.439 | 0.909 | 215.683 | 300.705 | No |
| SLV 7 | -1457 | -2081 | 8 | 0.139 | 2.4 | 0.908 | 221.81 | 300.705 | No |
| SLV 8 | -1457 | -2081 | 8 | 0.139 | 2.4 | 0.908 | 221.81 | 300.705 | No |
| SLV 6 | -1335 | -2571 | -12 | 0.139 | 2.278 | 0.905 | 222.752 | 300.705 | No |
| SLV 5 | -1335 | -2571 | -12 | 0.139 | 2.278 | 0.905 | 222.752 | 300.705 | No |
| SLV 9 | -1375 | -2619 | -5 | 0.142 | 2.318 | 0.906 | 226.99 | 300.705 | No |
| SLV 10 | -1375 | -2619 | -5 | 0.142 | 2.318 | 0.906 | 226.99 | 300.705 | No |
| SLV 15 | -1501 | -2356 | 16 | 0.135 | 2.443 | 0.909 | 215.098 | 278.041 | No |
| SLV 16 | -1501 | -2356 | 16 | 0.135 | 2.443 | 0.909 | 215.098 | 278.041 | No |

### Tabella dei coefficienti di sicurezza minimi

| Stato limite | Coeff.s. | Comb. | Verifica |
|---|---|---|---|
| PF_SLU | 4.085 | SLU 42 | Si |
| V_SLU | 2.06 | SLU 70 | Si |
| PF_SLV | 2.889 | SLV 11 | Si |
| V_SLV | 1.018 | SLV 11 | Si |
| PFFP_SLV | 15.45 | SLV 11 | Si |
| R_SLV | 0.717 | SLV 11 | No |

## Maschio 25

Verifiche condotte secondo D.M. 17-01-18 (N.T.C.)

### Dati geometrici

| X ini. | Y ini. | X fin. | Y fin. | Quota i. | Quota.s | l | Sp. | h netta | h ini. | h fin. | a | a.s.,sx | a.s.,dx |
|---|---|---|---|---|---|---|---|---|---|---|---|---|---|
| -1246.3 | -35.4 | -1246.3 | 104.6 | Z medio -66 cm | L3 | 140 | 30 | 237.2 | 205.4 | 269 | | | |

### Caratteristiche del materiale

(Circolare 7 21-01-19 C8.5.I) Muratura in mattoni pieni e malta di calce LC2_Corti

| fb | fk | fvk0 | fmedio | τ0 | fv0 | μ | ϕ | fv,lim | E | G | FC |
|---|---|---|---|---|---|---|---|---|---|---|---|
| 60 | | | 34.5 | 0.9 | 2 | 0.58 | 0.77 | 3.25 | 32000 | 12800 | 1.2 |

Verifica a pressoflessione nel piano secondo D.M. 17-01-18 NTC §7.8.2.2.1 in combinazioni non sismiche, γM = 3

| Comb. | Quota | N | M | σ0 | Mu | c.s. | Verifica |
|---|---|---|---|---|---|---|---|
| SLU 50 | -34 | -10891 | 180034 | 2.59 | 519677 | 2.887 | Si |
| SLU 50 | 171 | -2625 | 120320 | 0.62 | 169638 | 1.41 | Si |
| SLU 49 | -34 | -11023 | 182589 | 2.62 | 523005 | 2.864 | Si |
| SLU 49 | 171 | -2662 | 122634 | 0.63 | 171836 | 1.401 | Si |
| SLU 46 | -34 | -10846 | 179202 | 2.58 | 518531 | 2.894 | Si |
| SLU 46 | 171 | -2612 | 119452 | 0.62 | 168902 | 1.414 | Si |
| SLU 7 | -34 | -8950 | 149062 | 2.13 | 462612 | 3.103 | Si |
| SLU 7 | 171 | -2195 | 100218 | 0.52 | 143799 | 1.435 | Si |
| SLU 47 | -34 | -10726 | 176872 | 2.55 | 515420 | 2.914 | Si |
| SLU 47 | 171 | -2580 | 117367 | 0.61 | 166981 | 1.423 | Si |
| SLU 51 | -34 | -10898 | 180169 | 2.59 | 519860 | 2.885 | Si |
| SLU 51 | 171 | -2628 | 120457 | 0.63 | 169808 | 1.41 | Si |
| SLU 45 | -34 | -10839 | 179066 | 2.58 | 518347 | 2.895 | Si |
| SLU 45 | 171 | -2609 | 119315 | 0.62 | 168731 | 1.414 | Si |
| SLU 6 | -34 | -8943 | 148926 | 2.13 | 462373 | 3.105 | Si |
| SLU 6 | 171 | -2192 | 100081 | 0.52 | 143624 | 1.435 | Si |
| SLU 48 | -34 | -11016 | 182453 | 2.62 | 522826 | 2.866 | Si |
| SLU 48 | 171 | -2659 | 122497 | 0.63 | 171666 | 1.401 | Si |
| SLU 44 | -34 | -10548 | 173485 | 2.51 | 510731 | 2.944 | Si |
| SLU 44 | 171 | -2530 | 114185 | 0.6 | 164031 | 1.437 | Si |

Verifica a pressoflessione nel piano secondo D.M. 17-01-18 NTC §7.8.2.2.1 in combinazioni sismiche, γM = 2

| Comb. | Quota | N | M | σ0 | Mu | c.s. | Verifica |
|---|---|---|---|---|---|---|---|
| SLD 13 | -34 | -11038 | 186927 | 2.63 | 606467 | 3.244 | Si |
| SLD 13 | 171 | -3140 | 131601 | 0.75 | 206371 | 1.568 | Si |
| SLV 10 | -34 | -8159 | 150473 | 1.94 | 480353 | 3.192 | Si |
| SLV 10 | 171 | -2567 | 117483 | 0.61 | 170701 | 1.453 | Si |
| SLD 16 | -34 | -11717 | 194613 | 2.79 | 632922 | 3.252 | Si |
| SLD 16 | 171 | -3249 | 131919 | 0.77 | 213041 | 1.615 | Si |
| SLV 16 | -34 | -14773 | 248779 | 3.52 | 736422 | 2.96 | Si |
| SLV 16 | 171 | -4231 | 189739 | 1.01 | 271728 | 1.432 | Si |
| SLV 15 | -34 | -14773 | 248779 | 3.52 | 736422 | 2.96 | Si |
| SLV 15 | 171 | -4231 | 189739 | 1.01 | 271728 | 1.432 | Si |
| SLV 13 | -34 | -13189 | 231127 | 3.14 | 685955 | 2.968 | Si |
| SLV 13 | 171 | -3975 | 188893 | 0.95 | 256680 | 1.359 | Si |
| SLD 15 | -34 | -11717 | 194613 | 2.79 | 632922 | 3.252 | Si |
| SLD 15 | 171 | -3249 | 131919 | 0.77 | 213041 | 1.615 | Si |
| SLD 14 | -34 | -11038 | 186927 | 2.63 | 606467 | 3.244 | Si |
| SLD 14 | 171 | -3140 | 131601 | 0.75 | 206371 | 1.568 | Si |
| SLV 9 | -34 | -8159 | 150473 | 1.94 | 480353 | 3.192 | Si |
| SLV 9 | 171 | -2567 | 117483 | 0.61 | 170701 | 1.453 | Si |
| SLV 14 | -34 | -13189 | 231127 | 3.14 | 685955 | 2.968 | Si |
| SLV 14 | 171 | -3975 | 188893 | 0.95 | 256680 | 1.359 | Si |

Verifica a taglio nel piano secondo D.M. 17-01-18 (N.T.C.) §7.8.2.2.2 con rottura per scorrimento in combinazioni non sismiche, γM = 3

| Comb. | Quota | N | V par | M | σ0 | σN | l' | fvd | Vt scorr. | Vt fess.diag. | Vt,lim | c.s. | Verifica |
|---|---|---|---|---|---|---|---|---|---|---|---|---|---|
| SLU 66 | -34 | -12198 | -1184 | 203546 | | 2.9 | 140 | 0.94 | 3960 | | | 3.34 | Si |
| SLU 66 | 171 | -3050 | -904 | 134036 | | 1.3 | 78.14 | 0.73 | 1709 | | | 1.89 | Si |
| SLU 49 | -34 | -11023 | -1046 | 182589 | | 2.62 | 140 | 0.91 | 3803 | | | 3.64 | Si |
| SLU 49 | 171 | -2662 | -826 | 122634 | | 1.24 | 71.79 | 0.72 | 1551 | | | 1.88 | Si |
| SLU 50 | -34 | -10891 | -1028 | 180034 | | 2.59 | 140 | 0.9 | 3785 | | | 3.68 | Si |
| SLU 50 | 171 | -2625 | -813 | 120320 | | 1.21 | 72.48 | 0.72 | 1558 | | | 1.92 | Si |
| SLU 51 | -34 | -10898 | -1029 | 180169 | | 2.59 | 140 | 0.9 | 3786 | | | 3.68 | Si |
| SLU 51 | 171 | -2628 | -813 | 120457 | | 1.21 | 72.47 | 0.72 | 1558 | | | 1.92 | Si |
| SLU 48 | -34 | -11016 | -1045 | 182453 | | 2.62 | 140 | 0.91 | 3802 | | | 3.64 | Si |
| SLU 48 | 171 | -2659 | -826 | 122497 | | 1.23 | 71.8 | 0.72 | 1551 | | | 1.88 | Si |
| SLU 71 | -34 | -12250 | -1192 | 204514 | | 2.92 | 140 | 0.94 | 3967 | | | 3.33 | Si |
| SLU 71 | 171 | -3065 | -911 | 135041 | | 1.31 | 77.82 | 0.73 | 1706 | | | 1.87 | Si |
| SLU 72 | -34 | -12258 | -1192 | 204649 | | 2.92 | 140 | 0.94 | 3968 | | | 3.33 | Si |
| SLU 72 | 171 | -3068 | -911 | 135178 | | 1.31 | 77.81 | 0.73 | 1706 | | | 1.87 | Si |
| SLU 70 | -34 | -12383 | -1209 | 207069 | | 2.95 | 140 | 0.95 | 3984 | | | 3.3 | Si |
| SLU 70 | 171 | -3102 | -924 | 137354 | | 1.34 | 77.16 | 0.73 | 1700 | | | 1.84 | Si |
| SLU 69 | -34 | -12376 | -1208 | 206933 | | 2.95 | 140 | 0.95 | 3983 | | | 3.3 | Si |
| SLU 69 | 171 | -3099 | -924 | 137217 | | 1.34 | 77.17 | 0.73 | 1699 | | | 1.84 | Si |
| SLU 67 | -34 | -12206 | -1185 | 203682 | | 2.91 | 140 | 0.94 | 3961 | | | 3.34 | Si |
| SLU 67 | 171 | -3052 | -904 | 134173 | | 1.3 | 78.13 | 0.73 | 1709 | | | 1.89 | Si |

Verifica a taglio nel piano secondo D.M. 17-01-18 (N.T.C.) §7.8.2.2.2 con rottura per scorrimento in combinazioni sismiche, γM = 2

| Comb. | Quota | N | V par | M | σ0 | σN | l' | fvd | Vt scorr. | Vt fess.diag. | Vt,lim | c.s. | Verifica |
|---|---|---|---|---|---|---|---|---|---|---|---|---|---|
| SLV 8 | -34 | -10713 | -2071 | 157836 | | 2.55 | 140 | 1.34 | 5643 | | | 2.72 | Si |
| SLV 8 | 171 | -2469 | -198 | 59943 | | 0.6 | 137.17 | 0.95 | 3923 | | | 19.8 | Si |
| SLV 11 | -34 | -13440 | -2481 | 209315 | | 3.2 | 140 | 1.47 | 6188 | | | 2.49 | Si |
| SLV 11 | 171 | -3420 | -562 | 120305 | | 1.09 | 104.47 | 1.05 | 3296 | | | 5.86 | Si |
| SLV 16 | -34 | -14773 | -1983 | 248779 | | 3.52 | 140 | 1.54 | 6455 | | | 3.26 | Si |
| SLV 16 | 171 | -4231 | -1148 | 189739 | | 1.87 | 75.45 | 1.21 | 2732 | | | 2.38 | Si |
| SLV 13 | -34 | -13189 | -1146 | 231127 | | 3.14 | 140 | 1.46 | 6138 | | | 5.35 | Si |
| SLV 13 | 171 | -3975 | -1286 | 188893 | | 1.96 | 67.43 | 1.23 | 2481 | | | 1.93 | Si |
| SLV 14 | -34 | -13189 | -1146 | 231127 | | 3.14 | 140 | 1.46 | 6138 | | | 5.35 | Si |
| SLV 14 | 171 | -3975 | -1286 | 188893 | | 1.96 | 67.43 | 1.23 | 2481 | | | 1.93 | Si |
| SLV 10 | -34 | -8159 | 307 | 150473 | | 1.94 | 140 | 1.22 | 5132 | | | 16.71 | Si |
| SLV 10 | 171 | -2567 | -1023 | 117483 | | 1.18 | 72.7 | 1.07 | 2331 | | | 2.28 | Si |
| SLV 7 | -34 | -10713 | -2071 | 157836 | | 2.55 | 140 | 1.34 | 5643 | | | 2.72 | Si |
| SLV 7 | 171 | -2469 | -198 | 59943 | | 0.6 | 137.17 | 0.95 | 3923 | | | 19.8 | Si |

| Comb. | Quota | N | V par | M | σ0 | σN | l' | fvd | Vt scorr. | Vt fess.diag. | Vt,lim | c.s. | Verifica |
|---|---|---|---|---|---|---|---|---|---|---|---|---|---|
| SLV 12 | -34 | -13440 | -2481 | 209315 | | 3.2 | 140 | 1.47 | 6188 | | | 2.49 | Si |
| SLV 12 | 171 | -3420 | -562 | 120305 | | 1.09 | 104.47 | 1.05 | 3296 | | | 5.86 | Si |
| SLV 15 | -34 | -14773 | -1983 | 248779 | | 3.52 | 140 | 1.54 | 6455 | | | 3.26 | Si |
| SLV 15 | 171 | -4231 | -1148 | 189739 | | 1.87 | 75.45 | 1.21 | 2732 | | | 2.38 | Si |
| SLV 9 | -34 | -8159 | 307 | 150473 | | 1.94 | 140 | 1.22 | 5132 | | | 16.71 | Si |
| SLV 9 | 171 | -2567 | -1023 | 117483 | | 1.18 | 72.7 | 1.07 | 2331 | | | 2.28 | Si |

### Verifica a pressoflessione fuori piano D.M. 17-01-18 (N.T.C.)

quota 68.3 Wa 0.05 denominatore 8 γM = 2

| Comb. | fd | Sa | σ0 | N | M | Mc | Coeff.s. | Verifica |
|---|---|---|---|---|---|---|---|---|
| SLV 1 | 14 | 0.26 | 0.74 | -3094 | 4576 | 43618 | 9.53 | Si |
| SLV 2 | 14 | 0.26 | 0.74 | -3094 | 4576 | 43618 | 9.53 | Si |
| SLV 3 | 14 | 0.26 | 1.01 | -4230 | 4576 | 58220 | 12.72 | Si |
| SLV 4 | 14 | 0.26 | 1.01 | -4230 | 4576 | 58220 | 12.72 | Si |
| SLV 6 | 14 | 0.26 | 1.16 | -4867 | 4576 | 66079 | 14.44 | Si |
| SLV 5 | 14 | 0.26 | 1.16 | -4867 | 4576 | 66079 | 14.44 | Si |
| SLV 10 | 14 | 0.26 | 1.79 | -7521 | 4576 | 96286 | 21.04 | Si |
| SLV 9 | 14 | 0.26 | 1.79 | -7521 | 4576 | 96286 | 21.04 | Si |
| SLV 7 | 14 | 0.26 | 2.06 | -8652 | 4576 | 107898 | 23.58 | Si |
| SLV 8 | 14 | 0.26 | 2.06 | -8652 | 4576 | 107898 | 23.58 | Si |

### Verifica dei meccanismi locali di collasso con analisi cinematica lineare

forza di aggancio al piano = 0 quota mezzeria = 68.3 Wa = 0.05 Ta = 0.0313

| Comb. | N top | N base | V orto | α0 | M* | e* | a0* | aLim | Verifica |
|---|---|---|---|---|---|---|---|---|---|
| SLV 3 | -1062 | -5683 | 170 | 0.005 | 2.589 | 0.89 | 8.646 | 357.225 | No |
| SLV 4 | -1062 | -5683 | 170 | 0.005 | 2.589 | 0.89 | 8.646 | 357.225 | No |
| SLV 2 | -806 | -4099 | 155 | 0.006 | 2.356 | 0.889 | 9.318 | 357.225 | No |
| SLV 1 | -806 | -4099 | 155 | 0.006 | 2.356 | 0.889 | 9.318 | 357.225 | No |
| SLV 14 | -3975 | -13189 | -183 | 0.037 | 5.469 | 0.93 | 58.328 | 357.225 | No |
| SLV 13 | -3975 | -13189 | -183 | 0.037 | 5.469 | 0.93 | 58.328 | 357.225 | No |
| SLV 16 | -4231 | -14773 | -167 | 0.042 | 5.727 | 0.933 | 64.9 | 357.225 | No |
| SLV 15 | -4231 | -14773 | -167 | 0.042 | 5.727 | 0.933 | 64.9 | 357.225 | No |
| SLV 10 | -2567 | -8159 | -83 | 0.056 | 4.056 | 0.912 | 88.686 | 468.345 | No |
| SLV 9 | -2567 | -8159 | -83 | 0.056 | 4.056 | 0.912 | 88.686 | 468.345 | No |

### Tabella dei coefficienti di sicurezza minimi

| Stato limite | Coeff.s. | Comb. | Verifica |
|---|---|---|---|
| PF_SLU | 1.401 | SLU 49 | Si |
| V_SLU | 1.839 | SLU 70 | Si |
| PF_SLV | 1.359 | SLV 13 | Si |
| V_SLV | 1.929 | SLV 13 | Si |
| PFFP_SLV | 9.532 | SLV 1 | Si |
| R_SLV | 0.024 | SLV 3 | No |

## Maschio 26

Verifiche condotte secondo D.M. 17-01-18 (N.T.C.)

### Dati geometrici

| X ini. | Y ini. | X fin. | Y fin. | Quota i. | Quota.s | l | Sp. | h netta | h ini. | h fin. | a | a.s.,sx | a.s.,dx |
|---|---|---|---|---|---|---|---|---|---|---|---|---|---|
| -1963.8 | 104.6 | -2465.3 | 104.6 | L1 | L3 | 501.5 | 45 | 269 | 269 | 269 | | | |

### Caratteristiche del materiale

(Circolare 7 21-01-19 C8.5.I) Muratura in mattoni pieni e malta di calce LC2_Corti

| fb | fk | fvk0 | fmedio | τ0 | fv0 | μ | ϕ | fv,lim | E | G | FC |
|---|---|---|---|---|---|---|---|---|---|---|---|
| 60 | | | 34.5 | 0.9 | 2 | 0.58 | 0.77 | 3.25 | 32000 | 12800 | 1.2 |

### Verifica a pressoflessione nel piano secondo D.M. 17-01-18 NTC §7.8.2.2.1 in combinazioni non sismiche, γM = 3

| Comb. | Quota | N | M | σ0 | Mu | c.s. | Verifica |
|---|---|---|---|---|---|---|---|
| SLU 82 | -98 | -127216 | 1157269 | 5.64 | 9824198 | 8.489 | Si |
| SLU 82 | 112 | -121590 | -883434 | 5.39 | 10322822 | 11.685 | Si |
| SLU 75 | -98 | -124143 | 1159699 | 5.5 | 10107255 | 8.715 | Si |
| SLU 75 | 112 | -118324 | -855777 | 5.24 | 10572660 | 12.354 | Si |
| SLU 80 | -98 | -125361 | 1148976 | 5.55 | 9998147 | 8.702 | Si |
| SLU 80 | 112 | -119616 | -911716 | 5.3 | 10477299 | 11.492 | Si |
| SLU 79 | -98 | -125484 | 1139591 | 5.56 | 9986905 | 8.764 | Si |
| SLU 79 | 112 | -119812 | -967861 | 5.31 | 10462426 | 10.81 | Si |
| SLU 74 | -98 | -124266 | 1150314 | 5.51 | 10096421 | 8.777 | Si |
| SLU 74 | 112 | -118520 | -911921 | 5.25 | 10558478 | 11.578 | Si |
| SLU 78 | -98 | -126128 | 1176148 | 5.59 | 9927338 | 8.441 | Si |
| SLU 78 | 112 | -120434 | -913169 | 5.34 | 10414533 | 11.405 | Si |
| SLU 77 | -98 | -126251 | 1166764 | 5.59 | 9915838 | 8.499 | Si |
| SLU 77 | 112 | -120630 | -969313 | 5.35 | 10399222 | 10.728 | Si |
| SLU 83 | -98 | -129324 | 1164334 | 5.73 | 9615106 | 8.258 | Si |
| SLU 83 | 112 | -123896 | -996970 | 5.49 | 10128832 | 10.16 | Si |
| SLU 81 | -98 | -127339 | 1147885 | 5.64 | 9812333 | 8.548 | Si |
| SLU 81 | 112 | -121786 | -939578 | 5.4 | 10306893 | 10.97 | Si |
| SLU 84 | -98 | -129201 | 1173718 | 5.73 | 9627637 | 8.203 | Si |
| SLU 84 | 112 | -123700 | -940826 | 5.48 | 10145891 | 10.784 | Si |

### Verifica a pressoflessione nel piano secondo D.M. 17-01-18 NTC §7.8.2.2.1 in combinazioni sismiche, γM = 2

| Comb. | Quota | N | M | σ0 | Mu | c.s. | Verifica |
|---|---|---|---|---|---|---|---|
| SLD 3 | -98 | -90982 | 3502804 | 4.03 | 15286422 | 4.364 | Si |

| Comb. | Quota | N | M | σ0 | Mu | c.s. | Verifica |
|---|---|---|---|---|---|---|---|
| SLD 3 | 112 | -88978 | 216580 | 3.94 | 15111879 | 69.775 | Si |
| SLD 4 | -98 | -90982 | 3502804 | 4.03 | 15286422 | 4.364 | Si |
| SLD 4 | 112 | -88978 | 216580 | 3.94 | 15111879 | 69.775 | Si |
| SLV 16 | -98 | -66253 | -5062567 | 2.94 | 12621416 | 2.493 | Si |
| SLV 16 | 112 | -52131 | -2074865 | 2.31 | 10600583 | 5.109 | Si |
| SLV 1 | -98 | -101983 | 6627000 | 4.52 | 16114544 | 2.432 | Si |
| SLV 1 | 112 | -105825 | 1035431 | 4.69 | 16351888 | 15.792 | Si |
| SLV 14 | -98 | -68035 | -5521277 | 3.01 | 12850655 | 2.327 | Si |
| SLV 14 | 112 | -55650 | -2252048 | 2.47 | 11138095 | 4.946 | Si |
| SLV 13 | -98 | -68035 | -5521277 | 3.01 | 12850655 | 2.327 | Si |
| SLV 13 | 112 | -55650 | -2252048 | 2.47 | 11138095 | 4.946 | Si |
| SLV 4 | -98 | -100201 | 7085709 | 4.44 | 15995334 | 2.257 | Si |
| SLV 4 | 112 | -102306 | 1212615 | 4.53 | 16135509 | 13.306 | Si |
| SLV 3 | -98 | -100201 | 7085709 | 4.44 | 15995334 | 2.257 | Si |
| SLV 3 | 112 | -102306 | 1212615 | 4.53 | 16135509 | 13.306 | Si |
| SLV 15 | -98 | -66253 | -5062567 | 2.94 | 12621416 | 2.493 | Si |
| SLV 15 | 112 | -52131 | -2074865 | 2.31 | 10600583 | 5.109 | Si |
| SLV 2 | -98 | -101983 | 6627000 | 4.52 | 16114544 | 2.432 | Si |
| SLV 2 | 112 | -105825 | 1035431 | 4.69 | 16351888 | 15.792 | Si |

### Verifica a taglio nel piano secondo D.M. 17-01-18 (N.T.C.) §7.8.2.2.2 con rottura per scorrimento in combinazioni non sismiche, γM = 3

| Comb. | Quota | N | V par | M | σ0 | σN | l' | fvd | Vt scorr. | Vt fess.diag. | Vt,lim | c.s. | Verifica |
|---|---|---|---|---|---|---|---|---|---|---|---|---|---|
| SLU 77 | -98 | -126251 | 15860 | 1166764 | | 5.59 | 501.5 | 1.08 | 24448 | | | 1.54 | Si |
| SLU 77 | 112 | -120630 | 16282 | -969313 | | 5.35 | 501.5 | 1.08 | 24448 | | | 1.5 | Si |
| SLU 75 | -98 | -124143 | 15051 | 1159699 | | 5.5 | 501.5 | 1.08 | 24448 | | | 1.62 | Si |
| SLU 75 | 112 | -118324 | 15457 | -855777 | | 5.24 | 501.5 | 1.08 | 24448 | | | 1.58 | Si |
| SLU 74 | -98 | -124266 | 15361 | 1150314 | | 5.51 | 501.5 | 1.08 | 24448 | | | 1.59 | Si |
| SLU 74 | 112 | -118520 | 15775 | -911921 | | 5.25 | 501.5 | 1.08 | 24448 | | | 1.55 | Si |
| SLU 81 | -98 | -127339 | 15710 | 1147885 | | 5.64 | 501.5 | 1.08 | 24448 | | | 1.56 | Si |
| SLU 81 | 112 | -121786 | 16127 | -939578 | | 5.4 | 501.5 | 1.08 | 24448 | | | 1.52 | Si |
| SLU 84 | -98 | -129201 | 15900 | 1173718 | | 5.73 | 501.5 | 1.08 | 24448 | | | 1.54 | Si |
| SLU 84 | 112 | -123700 | 16318 | -940826 | | 5.48 | 501.5 | 1.08 | 24448 | | | 1.5 | Si |
| SLU 83 | -98 | -129324 | 16210 | 1164334 | | 5.73 | 501.5 | 1.08 | 24448 | | | 1.51 | Si |
| SLU 83 | 112 | -123896 | 16635 | -996970 | | 5.49 | 501.5 | 1.08 | 24448 | | | 1.47 | Si |
| SLU 82 | -98 | -127216 | 15401 | 1157269 | | 5.64 | 501.5 | 1.08 | 24448 | | | 1.59 | Si |
| SLU 82 | 112 | -121590 | 15810 | -883434 | | 5.39 | 501.5 | 1.08 | 24448 | | | 1.55 | Si |
| SLU 79 | -98 | -125484 | 15663 | 1139591 | | 5.56 | 501.5 | 1.08 | 24448 | | | 1.56 | Si |
| SLU 79 | 112 | -119812 | 16083 | -967861 | | 5.31 | 501.5 | 1.08 | 24448 | | | 1.52 | Si |
| SLU 80 | -98 | -125361 | 15354 | 1148976 | | 5.55 | 501.5 | 1.08 | 24448 | | | 1.59 | Si |
| SLU 80 | 112 | -119616 | 15765 | -911716 | | 5.3 | 501.5 | 1.08 | 24448 | | | 1.55 | Si |
| SLU 78 | -98 | -126128 | 15551 | 1176148 | | 5.59 | 501.5 | 1.08 | 24448 | | | 1.57 | Si |
| SLU 78 | 112 | -120434 | 15965 | -913169 | | 5.34 | 501.5 | 1.08 | 24448 | | | 1.53 | Si |

### Verifica a taglio nel piano secondo D.M. 17-01-18 (N.T.C.) §7.8.2.2.2 con rottura per scorrimento in combinazioni sismiche, γM = 2

| Comb. | Quota | N | V par | M | σ0 | σN | l' | fvd | Vt scorr. | Vt fess.diag. | Vt,lim | c.s. | Verifica |
|---|---|---|---|---|---|---|---|---|---|---|---|---|---|
| SLD 1 | -98 | -91694 | 23412 | 3311008 | | 4.06 | 501.5 | 1.63 | 36672 | | | 1.57 | Si |
| SLD 1 | 112 | -90410 | 22693 | 148177 | | 4.01 | 501.5 | 1.63 | 36672 | | | 1.62 | Si |
| SLV 1 | -98 | -101983 | 41471 | 6627000 | | 4.52 | 501.5 | 1.63 | 36672 | | | 0.88 | No, Vu<V |
| SLV 1 | 112 | -105825 | 39536 | 1035431 | | 4.69 | 501.5 | 1.63 | 36672 | | | 0.93 | No, Vu<V |
| SLV 14 | -98 | -68035 | -21372 | -5521277 | | 3.01 | 501.5 | 1.44 | 32413 | | | 1.52 | Si |
| SLV 14 | 112 | -55650 | -19993 | -2252048 | | 2.47 | 501.5 | 1.33 | 29936 | | | 1.5 | Si |
| SLV 15 | -98 | -66253 | -22255 | -5062567 | | 2.94 | 501.5 | 1.42 | 32057 | | | 1.44 | Si |
| SLV 15 | 112 | -52131 | -19747 | -2074865 | | 2.31 | 501.5 | 1.3 | 29232 | | | 1.48 | Si |
| SLV 4 | -98 | -100201 | 40588 | 7085709 | | 4.44 | 501.5 | 1.63 | 36672 | | | 0.9 | No, Vu<V |
| SLV 4 | 112 | -102306 | 39782 | 1212615 | | 4.53 | 501.5 | 1.63 | 36672 | | | 0.92 | No, Vu<V |
| SLV 13 | -98 | -68035 | -21372 | -5521277 | | 3.01 | 501.5 | 1.44 | 32413 | | | 1.52 | Si |
| SLV 13 | 112 | -55650 | -19993 | -2252048 | | 2.47 | 501.5 | 1.33 | 29936 | | | 1.5 | Si |
| SLD 2 | -98 | -91694 | 23412 | 3311008 | | 4.06 | 501.5 | 1.63 | 36672 | | | 1.57 | Si |
| SLD 2 | 112 | -90410 | 22693 | 148177 | | 4.01 | 501.5 | 1.63 | 36672 | | | 1.62 | Si |
| SLV 16 | -98 | -66253 | -22255 | -5062567 | | 2.94 | 501.5 | 1.42 | 32057 | | | 1.44 | Si |
| SLV 16 | 112 | -52131 | -19747 | -2074865 | | 2.31 | 501.5 | 1.3 | 29232 | | | 1.48 | Si |
| SLV 2 | -98 | -101983 | 41471 | 6627000 | | 4.52 | 501.5 | 1.63 | 36672 | | | 0.88 | No, Vu<V |
| SLV 2 | 112 | -105825 | 39536 | 1035431 | | 4.69 | 501.5 | 1.63 | 36672 | | | 0.93 | No, Vu<V |
| SLV 3 | -98 | -100201 | 40588 | 7085709 | | 4.44 | 501.5 | 1.63 | 36672 | | | 0.9 | No, Vu<V |
| SLV 3 | 112 | -102306 | 39782 | 1212615 | | 4.53 | 501.5 | 1.63 | 36672 | | | 0.92 | No, Vu<V |

### Verifica a pressoflessione fuori piano D.M. 17-01-18 (N.T.C.)

quota 36.5 Wa 0.08 denominatore 8 γM = 2

| Comb. | fd | Sa | σ0 | N | M | Mc | Coeff.s. | Verifica |
|---|---|---|---|---|---|---|---|---|
| SLV 16 | 14 | 0.25 | 2.55 | -57618 | 30828 | 1025517 | 33.27 | Si |
| SLV 15 | 14 | 0.25 | 2.55 | -57618 | 30828 | 1025517 | 33.27 | Si |
| SLV 13 | 14 | 0.25 | 2.69 | -60739 | 30828 | 1065595 | 34.57 | Si |
| SLV 14 | 14 | 0.25 | 2.69 | -60739 | 30828 | 1065595 | 34.57 | Si |
| SLV 12 | 14 | 0.25 | 3.07 | -69374 | 30828 | 1168215 | 37.89 | Si |
| SLV 11 | 14 | 0.25 | 3.07 | -69374 | 30828 | 1168215 | 37.89 | Si |
| SLV 10 | 14 | 0.25 | 3.54 | -79777 | 30828 | 1275669 | 41.38 | Si |
| SLV 9 | 14 | 0.25 | 3.54 | -79777 | 30828 | 1275669 | 41.38 | Si |
| SLV 7 | 14 | 0.25 | 3.66 | -82572 | 30828 | 1301533 | 42.22 | Si |
| SLV 8 | 14 | 0.25 | 3.66 | -82572 | 30828 | 1301533 | 42.22 | Si |

### Verifica dei meccanismi locali di collasso con analisi cinematica lineare

forza di aggancio al piano = 0 quota mezzeria = 36.5 Wa = 0.08 Ta = 0.0269

| Comb. | N top | N base | V orto | α0 | M* | e* | a0* | aLim | Verifica |
|---|---|---|---|---|---|---|---|---|---|
| SLV 6 | -80615 | -92181 | 419 | 0.084 | 90.621 | 0.971 | 125.829 | 417.584 | No |
| SLV 5 | -80615 | -92181 | 419 | 0.084 | 90.621 | 0.971 | 125.829 | 417.584 | No |
| SLV 10 | -68678 | -81996 | 423 | 0.084 | 78.469 | 0.967 | 126.4 | 417.584 | No |
| SLV 9 | -68678 | -81996 | 423 | 0.084 | 78.469 | 0.967 | 126.4 | 417.584 | No |

| Comb. | N top | N base | V orto | α0 | M* | e* | a0* | aLim | Verifica |
|---|---|---|---|---|---|---|---|---|---|
| SLV 7 | -72477 | -86240 | -345 | 0.085 | 82.336 | 0.968 | 127.682 | 417.584 | No |
| SLV 8 | -72477 | -86240 | -345 | 0.085 | 82.336 | 0.968 | 127.682 | 417.584 | No |
| SLV 11 | -60541 | -76056 | -341 | 0.085 | 70.188 | 0.963 | 128.821 | 417.584 | No |
| SLV 12 | -60541 | -76056 | -341 | 0.085 | 70.188 | 0.963 | 128.821 | 417.584 | No |
| SLV 2 | -91692 | -101983 | 148 | 0.087 | 101.903 | 0.974 | 129.538 | 332.581 | No |
| SLV 1 | -91692 | -101983 | 148 | 0.087 | 101.903 | 0.974 | 129.538 | 332.581 | No |

### Tabella dei coefficienti di sicurezza minimi

| Stato limite | Coeff.s. | Comb. | Verifica |
|---|---|---|---|
| PF_SLU | 8.203 | SLU 84 | Si |
| V_SLU | 1.47 | SLU 83 | Si |
| PF_SLV | 2.257 | SLV 3 | Si |
| V_SLV | 0.884 | SLV 1 | No |
| PFFP_SLV | 33.266 | SLV 15 | Si |
| R_SLV | 0.301 | SLV 5 | No |

## Maschio 27

Verifiche condotte secondo D.M. 17-01-18 (N.T.C.)

### Dati geometrici

| X ini. | Y ini. | X fin. | Y fin. | Quota i. | Quota.s | l | Sp. | h netta | h ini. | h fin. | a | a.s.,sx | a.s.,dx |
|---|---|---|---|---|---|---|---|---|---|---|---|---|---|
| -1506.3 | 104.6 | -1883.8 | 104.6 | L1 | L3 | 377.5 | 45 | 269 | 269 | 269 | | | |

### Caratteristiche del materiale

(Circolare 7 21-01-19 C8.5.I) Muratura in mattoni pieni e malta di calce LC2_Corti

| fb | fk | fvk0 | fmedio | τ0 | fv0 | μ | ϕ | fv,lim | E | G | FC |
|---|---|---|---|---|---|---|---|---|---|---|---|
| 60 | | | 34.5 | 0.9 | 2 | 0.58 | 0.77 | 3.25 | 32000 | 12800 | 1.2 |

### Verifica a pressoflessione nel piano secondo D.M. 17-01-18 NTC §7.8.2.2.1 in combinazioni non sismiche, γM = 3

| Comb. | Quota | N | M | σ0 | Mu | c.s. | Verifica |
|---|---|---|---|---|---|---|---|
| SLU 81 | -98 | -114487 | -424017 | 6.74 | 3730799 | 8.799 | Si |
| SLU 81 | 112 | -111306 | -390307 | 6.55 | 4110066 | 10.53 | Si |
| SLU 75 | -98 | -111102 | -468781 | 6.54 | 4133497 | 8.818 | Si |
| SLU 75 | 112 | -108087 | -364318 | 6.36 | 4465797 | 12.258 | Si |
| SLU 80 | -98 | -112597 | -461242 | 6.63 | 3959526 | 8.584 | Si |
| SLU 80 | 112 | -109529 | -309379 | 6.45 | 4309898 | 13.931 | Si |
| SLU 83 | -98 | -116853 | -417291 | 6.88 | 3430763 | 8.222 | Si |
| SLU 83 | 112 | -113688 | -353914 | 6.69 | 3828621 | 10.818 | Si |
| SLU 77 | -98 | -114533 | -396012 | 6.74 | 3725129 | 9.407 | Si |
| SLU 77 | 112 | -111148 | -293637 | 6.54 | 4128180 | 14.059 | Si |
| SLU 82 | -98 | -113422 | -490060 | 6.68 | 3860849 | 7.878 | Si |
| SLU 82 | 112 | -110627 | -424595 | 6.51 | 4187450 | 9.862 | Si |
| SLU 78 | -98 | -113468 | -462054 | 6.68 | 3855313 | 8.344 | Si |
| SLU 78 | 112 | -110469 | -327924 | 6.5 | 4205271 | 12.824 | Si |
| SLU 73 | -98 | -107154 | -518723 | 6.31 | 4563590 | 8.798 | Si |
| SLU 73 | 112 | -104313 | -405024 | 6.14 | 4846907 | 11.967 | Si |
| SLU 84 | -98 | -115788 | -483333 | 6.82 | 3567688 | 7.381 | Si |
| SLU 84 | 112 | -113009 | -388201 | 6.65 | 3910417 | 10.073 | Si |
| SLU 76 | -98 | -109520 | -511997 | 6.45 | 4310886 | 8.42 | Si |
| SLU 76 | 112 | -106695 | -368631 | 6.28 | 4610910 | 12.508 | Si |

### Verifica a pressoflessione nel piano secondo D.M. 17-01-18 NTC §7.8.2.2.1 in combinazioni sismiche, γM = 2

| Comb. | Quota | N | M | σ0 | Mu | c.s. | Verifica |
|---|---|---|---|---|---|---|---|
| SLV 16 | -98 | -82476 | -4355459 | 4.86 | 9381701 | 2.154 | Si |
| SLV 16 | 112 | -71836 | 501196 | 4.23 | 8866416 | 17.69 | Si |
| SLV 14 | -98 | -83251 | -5054098 | 4.9 | 9411156 | 1.862 | Si |
| SLV 14 | 112 | -76194 | 754678 | 4.49 | 9102377 | 12.061 | Si |
| SLV 9 | -98 | -78564 | -2778679 | 4.62 | 9216156 | 3.317 | Si |
| SLV 9 | 112 | -79674 | 461637 | 4.69 | 9265969 | 20.072 | Si |
| SLV 4 | -98 | -66504 | 4474531 | 3.91 | 8530797 | 1.907 | Si |
| SLV 4 | 112 | -67250 | -1181004 | 3.96 | 8580855 | 7.266 | Si |
| SLV 10 | -98 | -78564 | -2778679 | 4.62 | 9216156 | 3.317 | Si |
| SLV 10 | 112 | -79674 | 461637 | 4.69 | 9265969 | 20.072 | Si |
| SLV 3 | -98 | -66504 | 4474531 | 3.91 | 8530797 | 1.907 | Si |
| SLV 3 | 112 | -67250 | -1181004 | 3.96 | 8580855 | 7.266 | Si |
| SLV 2 | -98 | -67278 | 3775893 | 3.96 | 8582741 | 2.273 | Si |
| SLV 2 | 112 | -71609 | -927522 | 4.22 | 8853165 | 9.545 | Si |
| SLV 13 | -98 | -83251 | -5054098 | 4.9 | 9411156 | 1.862 | Si |
| SLV 13 | 112 | -76194 | 754678 | 4.49 | 9102377 | 12.061 | Si |
| SLV 1 | -98 | -67278 | 3775893 | 3.96 | 8582741 | 2.273 | Si |
| SLV 1 | 112 | -71609 | -927522 | 4.22 | 8853165 | 9.545 | Si |
| SLV 15 | -98 | -82476 | -4355459 | 4.86 | 9381701 | 2.154 | Si |
| SLV 15 | 112 | -71836 | 501196 | 4.23 | 8866416 | 17.69 | Si |

### Verifica a taglio nel piano secondo D.M. 17-01-18 (N.T.C.) §7.8.2.2.2 con rottura per scorrimento in combinazioni non sismiche, γM = 3

| Comb. | Quota | N | V par | M | σ0 | σN | l' | fvd | Vt scorr. | Vt fess.diag. | Vt,lim | c.s. | Verifica |
|---|---|---|---|---|---|---|---|---|---|---|---|---|---|
| SLU 84 | -98 | -115788 | 3671 | -483333 | | 6.82 | 377.5 | 1.08 | 18403 | | | 5.01 | Si |
| SLU 84 | 112 | -113009 | 3457 | -388201 | | 6.65 | 377.5 | 1.08 | 18403 | | | 5.32 | Si |
| SLU 82 | -98 | -113422 | 3800 | -490060 | | 6.68 | 377.5 | 1.08 | 18403 | | | 4.84 | Si |
| SLU 82 | 112 | -110627 | 3588 | -424595 | | 6.51 | 377.5 | 1.08 | 18403 | | | 5.13 | Si |
| SLU 81 | -98 | -114487 | 3668 | -424017 | | 6.74 | 377.5 | 1.08 | 18403 | | | 5.02 | Si |
| SLU 81 | 112 | -111306 | 3461 | -390307 | | 6.55 | 377.5 | 1.08 | 18403 | | | 5.32 | Si |
| SLU 83 | -98 | -116853 | 3539 | -417291 | | 6.88 | 377.5 | 1.08 | 18403 | | | 5.2 | Si |

| Comb. | Quota | N | V par | M | σ0 | σN | l' | fvd | Vt scorr. | Vt fess.diag. | Vt,lim | c.s. | Verifica |
|---|---|---|---|---|---|---|---|---|---|---|---|---|---|
| SLU 83 | 112 | -113688 | 3330 | -353914 | | 6.69 | 377.5 | 1.08 | 18403 | | | 5.53 | Si |
| SLU 76 | -98 | -109520 | 3405 | -511997 | | 6.45 | 377.5 | 1.08 | 18403 | | | 5.41 | Si |
| SLU 76 | 112 | -106695 | 3197 | -368631 | | 6.28 | 377.5 | 1.08 | 18403 | | | 5.76 | Si |
| SLU 78 | -98 | -113468 | 3323 | -462054 | | 6.68 | 377.5 | 1.08 | 18403 | | | 5.54 | Si |
| SLU 78 | 112 | -110469 | 3114 | -327924 | | 6.5 | 377.5 | 1.08 | 18403 | | | 5.91 | Si |
| SLU 75 | -98 | -111102 | 3452 | -468781 | | 6.54 | 377.5 | 1.08 | 18403 | | | 5.33 | Si |
| SLU 75 | 112 | -108087 | 3246 | -364318 | | 6.36 | 377.5 | 1.08 | 18403 | | | 5.67 | Si |
| SLU 40 | -98 | -97226 | 3439 | -420296 | | 5.72 | 377.5 | 1.08 | 18403 | | | 5.35 | Si |
| SLU 40 | 112 | -95695 | 3256 | -381939 | | 5.63 | 377.5 | 1.08 | 18403 | | | 5.65 | Si |
| SLU 61 | -98 | -101392 | 3370 | -457163 | | 5.97 | 377.5 | 1.08 | 18403 | | | 5.46 | Si |
| SLU 61 | 112 | -98000 | 3181 | -394711 | | 5.77 | 377.5 | 1.08 | 18403 | | | 5.79 | Si |
| SLU 73 | -98 | -107154 | 3533 | -518723 | | 6.31 | 377.5 | 1.08 | 18403 | | | 5.21 | Si |
| SLU 73 | 112 | -104313 | 3328 | -405024 | | 6.14 | 377.5 | 1.08 | 18403 | | | 5.53 | Si |

### Verifica a taglio nel piano secondo D.M. 17-01-18 (N.T.C.) §7.8.2.2.2 con rottura per scorrimento in combinazioni sismiche, γM = 2

| Comb. | Quota | N | V par | M | σ0 | σN | l' | fvd | Vt scorr. | Vt fess.diag. | Vt,lim | c.s. | Verifica |
|---|---|---|---|---|---|---|---|---|---|---|---|---|---|
| SLV 14 | -98 | -83251 | -25160 | -5054098 | | 4.9 | 377.5 | 1.63 | 27605 | | | 1.1 | Si |
| SLV 14 | 112 | -76194 | -24464 | 754678 | | 4.49 | 377.5 | 1.63 | 27605 | | | 1.13 | Si |
| SLD 3 | -98 | -71275 | 13840 | 1759808 | | 4.2 | 377.5 | 1.63 | 27605 | | | 1.99 | Si |
| SLD 3 | 112 | -69847 | 13325 | -634689 | | 4.11 | 377.5 | 1.63 | 27605 | | | 2.07 | Si |
| SLV 16 | -98 | -82476 | -22910 | -4355459 | | 4.86 | 377.5 | 1.63 | 27605 | | | 1.2 | Si |
| SLV 16 | 112 | -71836 | -22396 | 501196 | | 4.23 | 377.5 | 1.63 | 27605 | | | 1.23 | Si |
| SLV 3 | -98 | -66504 | 29267 | 4474531 | | 4.06 | 364.4 | 1.63 | 26647 | | | 0.91 | No, Vu<V |
| SLV 3 | 112 | -67250 | 28303 | -1181004 | | 3.96 | 377.5 | 1.63 | 27605 | | | 0.98 | No, Vu<V |
| SLV 13 | -98 | -83251 | -25160 | -5054098 | | 4.9 | 377.5 | 1.63 | 27605 | | | 1.1 | Si |
| SLV 13 | 112 | -76194 | -24464 | 754678 | | 4.49 | 377.5 | 1.63 | 27605 | | | 1.13 | Si |
| SLV 4 | -98 | -66504 | 29267 | 4474531 | | 4.06 | 364.4 | 1.63 | 26647 | | | 0.91 | No, Vu<V |
| SLV 4 | 112 | -67250 | 28303 | -1181004 | | 3.96 | 377.5 | 1.63 | 27605 | | | 0.98 | No, Vu<V |
| SLV 1 | -98 | -67278 | 27017 | 3775893 | | 3.96 | 377.5 | 1.63 | 27605 | | | 1.02 | Si |
| SLV 1 | 112 | -71609 | 26235 | -927522 | | 4.22 | 377.5 | 1.63 | 27605 | | | 1.05 | Si |
| SLV 15 | -98 | -82476 | -22910 | -4355459 | | 4.86 | 377.5 | 1.63 | 27605 | | | 1.2 | Si |
| SLV 15 | 112 | -71836 | -22396 | 501196 | | 4.23 | 377.5 | 1.63 | 27605 | | | 1.23 | Si |
| SLD 4 | -98 | -71275 | 13840 | 1759808 | | 4.2 | 377.5 | 1.63 | 27605 | | | 1.99 | Si |
| SLD 4 | 112 | -69847 | 13325 | -634689 | | 4.11 | 377.5 | 1.63 | 27605 | | | 2.07 | Si |
| SLV 2 | -98 | -67278 | 27017 | 3775893 | | 3.96 | 377.5 | 1.63 | 27605 | | | 1.02 | Si |
| SLV 2 | 112 | -71609 | 26235 | -927522 | | 4.22 | 377.5 | 1.63 | 27605 | | | 1.05 | Si |

### Verifica a pressoflessione fuori piano D.M. 17-01-18 (N.T.C.)

quota 36.5 Wa 0.08 denominatore 8 γM = 2

| Comb. | fd | Sa | σ0 | N | M | Mc | Coeff.s. | Verifica |
|---|---|---|---|---|---|---|---|---|
| SLV 8 | 14 | 0.25 | 3.63 | -61595 | 23205 | 974630 | 42 | Si |
| SLV 7 | 14 | 0.25 | 3.63 | -61595 | 23205 | 974630 | 42 | Si |
| SLV 11 | 14 | 0.25 | 3.8 | -64569 | 23205 | 1000865 | 43.13 | Si |
| SLV 12 | 14 | 0.25 | 3.8 | -64569 | 23205 | 1000865 | 43.13 | Si |
| SLV 4 | 14 | 0.25 | 3.81 | -64786 | 23205 | 1002705 | 43.21 | Si |
| SLV 3 | 14 | 0.25 | 3.81 | -64786 | 23205 | 1002705 | 43.21 | Si |
| SLV 1 | 14 | 0.25 | 4.15 | -70493 | 23205 | 1047430 | 45.14 | Si |
| SLV 2 | 14 | 0.25 | 4.15 | -70493 | 23205 | 1047430 | 45.14 | Si |
| SLV 15 | 14 | 0.25 | 4.4 | -74696 | 23205 | 1075848 | 46.36 | Si |
| SLV 16 | 14 | 0.25 | 4.4 | -74696 | 23205 | 1075848 | 46.36 | Si |

### Verifica dei meccanismi locali di collasso con analisi cinematica lineare

forza di aggancio al piano = 0 quota mezzeria = 36.5 Wa = 0.08 Ta = 0.0269

| Comb. | N top | N base | V orto | α0 | M* | e* | a0* | aLim | Verifica |
|---|---|---|---|---|---|---|---|---|---|
| SLV 12 | -56243 | -75983 | -2756 | 0.044 | 63.695 | 0.969 | 65.496 | 417.584 | No |
| SLV 11 | -56243 | -75983 | -2756 | 0.044 | 63.695 | 0.969 | 65.496 | 417.584 | No |
| SLV 8 | -54161 | -71191 | -2631 | 0.044 | 61.575 | 0.968 | 66.632 | 417.584 | No |
| SLV 7 | -54161 | -71191 | -2631 | 0.044 | 61.575 | 0.968 | 66.632 | 417.584 | No |
| SLV 6 | -69408 | -73772 | 2513 | 0.054 | 77.101 | 0.974 | 80.769 | 417.584 | No |
| SLV 5 | -69408 | -73772 | 2513 | 0.054 | 77.101 | 0.974 | 80.769 | 417.584 | No |
| SLV 10 | -71490 | -78564 | 2388 | 0.057 | 79.222 | 0.975 | 84.386 | 417.584 | No |
| SLV 9 | -71490 | -78564 | 2388 | 0.057 | 79.222 | 0.975 | 84.386 | 417.584 | No |
| SLV 16 | -64009 | -82476 | -1101 | 0.073 | 71.603 | 0.972 | 108.397 | 332.581 | No |
| SLV 15 | -64009 | -82476 | -1101 | 0.073 | 71.603 | 0.972 | 108.397 | 332.581 | No |

### Tabella dei coefficienti di sicurezza minimi

| Stato limite | Coeff.s. | Comb. | Verifica |
|---|---|---|---|
| PF_SLU | 7.381 | SLU 84 | Si |
| V_SLU | 4.843 | SLU 82 | Si |
| PF_SLV | 1.862 | SLV 13 | Si |
| V_SLV | 0.91 | SLV 3 | No |
| PFFP_SLV | 42 | SLV 7 | Si |
| R_SLV | 0.157 | SLV 11 | No |

## Maschio 28

Verifiche condotte secondo D.M. 17-01-18 (N.T.C.)

### Dati geometrici

| X ini. | Y ini. | X fin. | Y fin. | Quota i. | Quota.s | l | Sp. | h netta | h ini. | h fin. | a | a.s.,sx | a.s.,dx |
|---|---|---|---|---|---|---|---|---|---|---|---|---|---|
| -1358.3 | 104.6 | -1406.3 | 104.6 | L1 | L3 | 48 | 45 | 269 | 269 | 269 | | | |

### Caratteristiche del materiale

(Circolare 7 21-01-19 C8.5.I) Muratura in mattoni pieni e malta di calce LC2_Corti

| fb | fk | fvk0 | fmedio | τ0 | fv0 | μ | ϕ | fv,lim | E | G | FC |
|---|---|---|---|---|---|---|---|---|---|---|---|
| 60 | | | 34.5 | 0.9 | 2 | 0.58 | 0.77 | 3.25 | 32000 | 12800 | 1.2 |

Verifica a pressoflessione nel piano secondo D.M. 17-01-18 NTC §7.8.2.2.1 in combinazioni non sismiche, γM = 3

| Comb. | Quota | N | M | σ0 | Mu | c.s. | Verifica |
|---|---|---|---|---|---|---|---|
| SLU 74 | -98 | -17065 | -21631 | 7.9 | 12345 | 0.571 | No, M>Mu |
| SLU 74 | 118 | -13816 | -22813 | 6.4 | 71210 | 3.121 | Si |
| SLU 83 | -98 | -17831 | -22390 | 8.25 | 0 | 0 | No, Rottura per schiacciamento |
| SLU 83 | 118 | -14450 | -23928 | 6.69 | 61989 | 2.591 | Si |
| SLU 80 | -98 | -17176 | -22228 | 7.95 | 9808 | 0.441 | No, M>Mu |
| SLU 80 | 118 | -13897 | -22788 | 6.43 | 70094 | 3.076 | Si |
| SLU 78 | -98 | -17341 | -22285 | 8.03 | 6017 | 0.27 | No, M>Mu |
| SLU 78 | 118 | -14042 | -23066 | 6.5 | 68058 | 2.951 | Si |
| SLU 77 | -98 | -17314 | -22356 | 8.02 | 6635 | 0.297 | No, M>Mu |
| SLU 77 | 118 | -14060 | -23095 | 6.51 | 67798 | 2.936 | Si |
| SLU 84 | -98 | -17857 | -22320 | 8.27 | 0 | 0 | No, Rottura per schiacciamento |
| SLU 84 | 118 | -14432 | -23898 | 6.68 | 62267 | 2.606 | Si |
| SLU 82 | -98 | -17608 | -21595 | 8.15 | 0 | 0 | No, Rottura per schiacciamento |
| SLU 82 | 118 | -14189 | -23616 | 6.57 | 65927 | 2.792 | Si |
| SLU 75 | -98 | -17091 | -21560 | 7.91 | 11745 | 0.545 | No, M>Mu |
| SLU 75 | 118 | -13798 | -22783 | 6.39 | 71458 | 3.136 | Si |
| SLU 79 | -98 | -17150 | -22299 | 7.94 | 10414 | 0.467 | No, M>Mu |
| SLU 79 | 118 | -13915 | -22818 | 6.44 | 69842 | 3.061 | Si |
| SLU 81 | -98 | -17581 | -21665 | 8.14 | 328 | 0.015 | No, M>Mu |
| SLU 81 | 118 | -14207 | -23645 | 6.58 | 65660 | 2.777 | Si |

Verifica a pressoflessione nel piano secondo D.M. 17-01-18 NTC §7.8.2.2.1 in combinazioni sismiche, γM = 2

| Comb. | Quota | N | M | σ0 | Mu | c.s. | Verifica |
|---|---|---|---|---|---|---|---|
| SLV 15 | -98 | -15420 | -118250 | 7.14 | 153857 | 1.301 | Si |
| SLV 15 | 118 | -13469 | -3359 | 6.24 | 158287 | 47.129 | Si |
| SLV 9 | -98 | -10026 | -93556 | 4.64 | 149214 | 1.595 | Si |
| SLV 9 | 118 | -11237 | -12669 | 5.2 | 154865 | 12.224 | Si |
| SLV 10 | -98 | -10026 | -93556 | 4.64 | 149214 | 1.595 | Si |
| SLV 10 | 118 | -11237 | -12669 | 5.2 | 154865 | 12.224 | Si |
| SLV 3 | -98 | -8734 | 115485 | 4.04 | 140246 | 1.214 | Si |
| SLV 3 | 118 | -4295 | -26004 | 1.99 | 86311 | 3.319 | Si |
| SLV 2 | -98 | -7324 | 89125 | 3.39 | 126999 | 1.425 | Si |
| SLV 2 | 118 | -4747 | -26643 | 2.2 | 93439 | 3.507 | Si |
| SLV 16 | -98 | -15420 | -118250 | 7.14 | 153857 | 1.301 | Si |
| SLV 16 | 118 | -13469 | -3359 | 6.24 | 158287 | 47.129 | Si |
| SLV 1 | -98 | -7324 | 89125 | 3.39 | 126999 | 1.425 | Si |
| SLV 1 | 118 | -4747 | -26643 | 2.2 | 93439 | 3.507 | Si |
| SLV 4 | -98 | -8734 | 115485 | 4.04 | 140246 | 1.214 | Si |
| SLV 4 | 118 | -4295 | -26004 | 1.99 | 86311 | 3.319 | Si |
| SLV 14 | -98 | -14011 | -144610 | 6.49 | 157752 | 1.091 | Si |
| SLV 14 | 118 | -13921 | -3998 | 6.44 | 157877 | 39.491 | Si |
| SLV 13 | -98 | -14011 | -144610 | 6.49 | 157752 | 1.091 | Si |
| SLV 13 | 118 | -13921 | -3998 | 6.44 | 157877 | 39.491 | Si |

Verifica a taglio nel piano secondo D.M. 17-01-18 (N.T.C.) §7.8.2.2.2 con rottura per scorrimento in combinazioni non sismiche, γM = 3

| Comb. | Quota | N | V par | M | σ0 | σN | l' | fvd | Vt scorr. | Vt fess.diag. | Vt,lim | c.s. | Verifica |
|---|---|---|---|---|---|---|---|---|---|---|---|---|---|
| SLU 79 | -98 | -17150 | -282 | -22299 | | 7.94 | 48 | 1.08 | 2340 | | | 8.29 | Si |
| SLU 79 | 118 | -13915 | -268 | -22818 | | 6.44 | 48 | 1.08 | 2340 | | | 8.74 | Si |
| SLU 80 | -98 | -17176 | -280 | -22228 | | 7.95 | 48 | 1.08 | 2340 | | | 8.37 | Si |
| SLU 80 | 118 | -13897 | -270 | -22788 | | 6.43 | 48 | 1.08 | 2340 | | | 8.67 | Si |
| SLU 78 | -98 | -17341 | -281 | -22285 | | 8.03 | 48 | 1.08 | 2340 | | | 8.33 | Si |
| SLU 78 | 118 | -14042 | -275 | -23066 | | 6.5 | 48 | 1.08 | 2340 | | | 8.5 | Si |
| SLU 74 | -98 | -17065 | -274 | -21631 | | 7.9 | 48 | 1.08 | 2340 | | | 8.54 | Si |
| SLU 74 | 118 | -13816 | -270 | -22813 | | 6.4 | 48 | 1.08 | 2340 | | | 8.66 | Si |
| SLU 75 | -98 | -17091 | -272 | -21560 | | 7.91 | 48 | 1.08 | 2340 | | | 8.62 | Si |
| SLU 75 | 118 | -13798 | -272 | -22783 | | 6.39 | 48 | 1.08 | 2340 | | | 8.59 | Si |
| SLU 77 | -98 | -17314 | -283 | -22356 | | 8.02 | 48 | 1.08 | 2340 | | | 8.25 | Si |
| SLU 77 | 118 | -14060 | -273 | -23095 | | 6.51 | 48 | 1.08 | 2340 | | | 8.57 | Si |
| SLU 84 | -98 | -17857 | -281 | -22320 | | 8.27 | 48 | 1.08 | 2340 | | | 8.33 | Si |
| SLU 84 | 118 | -14432 | -286 | -23898 | | 6.68 | 48 | 1.08 | 2340 | | | 8.18 | Si |
| SLU 83 | -98 | -17831 | -284 | -22390 | | 8.25 | 48 | 1.08 | 2340 | | | 8.25 | Si |
| SLU 83 | 118 | -14450 | -284 | -23928 | | 6.69 | 48 | 1.08 | 2340 | | | 8.25 | Si |
| SLU 81 | -98 | -17581 | -274 | -21665 | | 8.14 | 48 | 1.08 | 2340 | | | 8.53 | Si |
| SLU 81 | 118 | -14207 | -281 | -23645 | | 6.58 | 48 | 1.08 | 2340 | | | 8.33 | Si |
| SLU 82 | -98 | -17608 | -272 | -21595 | | 8.15 | 48 | 1.08 | 2340 | | | 8.62 | Si |
| SLU 82 | 118 | -14189 | -283 | -23616 | | 6.57 | 48 | 1.08 | 2340 | | | 8.26 | Si |

Verifica a taglio nel piano secondo D.M. 17-01-18 (N.T.C.) §7.8.2.2.2 con rottura per scorrimento in combinazioni sismiche, γM = 2

| Comb. | Quota | N | V par | M | σ0 | σN | l' | fvd | Vt scorr. | Vt fess.diag. | Vt,lim | c.s. | Verifica |
|---|---|---|---|---|---|---|---|---|---|---|---|---|---|
| SLV 7 | -98 | -12719 | 943 | 64431 | | 5.89 | 48 | 1.63 | 3510 | | | 3.72 | Si |
| SLV 7 | 118 | -6979 | 49 | -17332 | | 3.23 | 48 | 1.48 | 3196 | | | 65.17 | Si |
| SLV 16 | -98 | -15420 | -1034 | -118250 | | 7.14 | 48 | 1.63 | 3510 | | | 3.39 | Si |
| SLV 16 | 118 | -13469 | -694 | -3359 | | 6.24 | 48 | 1.63 | 3510 | | | 5.06 | Si |
| SLV 9 | -98 | -10026 | -1310 | -93556 | | 5.06 | 44.01 | 1.63 | 3218 | | | 2.46 | Si |
| SLV 9 | 118 | -11237 | -394 | -12669 | | 5.2 | 48 | 1.63 | 3510 | | | 8.91 | Si |
| SLV 8 | -98 | -12719 | 943 | 64431 | | 5.89 | 48 | 1.63 | 3510 | | | 3.72 | Si |
| SLV 8 | 118 | -6979 | 49 | -17332 | | 3.23 | 48 | 1.48 | 3196 | | | 65.17 | Si |
| SLV 15 | -98 | -15420 | -1034 | -118250 | | 7.14 | 48 | 1.63 | 3510 | | | 3.39 | Si |
| SLV 15 | 118 | -13469 | -694 | -3359 | | 6.24 | 48 | 1.63 | 3510 | | | 5.06 | Si |
| SLV 14 | -98 | -14011 | -1514 | -144610 | | 7.59 | 41.04 | 1.63 | 3001 | | | 1.98 | Si |
| SLV 14 | 118 | -13921 | -729 | -3998 | | 6.44 | 48 | 1.63 | 3510 | | | 4.81 | Si |

| Comb. | Quota | N | V par | M | σ0 | σN | l' | fvd | Vt scorr. | Vt fess.diag. | Vt,lim | c.s. | Verifica |
|---|---|---|---|---|---|---|---|---|---|---|---|---|---|
| SLV 10 | -98 | -10026 | -1310 | -93556 | | 5.06 | 44.01 | 1.63 | 3218 | | | 2.46 | Si |
| SLV 10 | 118 | -11237 | -394 | -12669 | | 5.2 | 48 | 1.63 | 3510 | | | 8.91 | Si |
| SLV 13 | -98 | -14011 | -1514 | -144610 | | 7.59 | 41.04 | 1.63 | 3001 | | | 1.98 | Si |
| SLV 13 | 118 | -13921 | -729 | -3998 | | 6.44 | 48 | 1.63 | 3510 | | | 4.81 | Si |
| SLV 3 | -98 | -8734 | 1148 | 115485 | | 6 | 32.33 | 1.63 | 2364 | | | 2.06 | Si |
| SLV 3 | 118 | -4295 | 385 | -26004 | | 1.99 | 48 | 1.23 | 2659 | | | 6.91 | Si |
| SLV 4 | -98 | -8734 | 1148 | 115485 | | 6 | 32.33 | 1.63 | 2364 | | | 2.06 | Si |
| SLV 4 | 118 | -4295 | 385 | -26004 | | 1.99 | 48 | 1.23 | 2659 | | | 6.91 | Si |

### Verifica a pressoflessione fuori piano D.M. 17-01-18 (N.T.C.)

quota 36.5 Wa 0.08 denominatore 8 γM = 2

| Comb. | fd | Sa | σ0 | N | M | Mc | Coeff.s. | Verifica |
|---|---|---|---|---|---|---|---|---|
| SLV 4 | 14 | 0.25 | 2.39 | -5152 | 2951 | 93288 | 31.62 | Si |
| SLV 3 | 14 | 0.25 | 2.39 | -5152 | 2951 | 93288 | 31.62 | Si |
| SLV 2 | 14 | 0.25 | 2.67 | -5759 | 2951 | 101298 | 34.33 | Si |
| SLV 1 | 14 | 0.25 | 2.67 | -5759 | 2951 | 101298 | 34.33 | Si |
| SLV 13 | 14 | 0.25 | 8.27 | -17860 | 2951 | 129917 | 44.03 | Si |
| SLV 14 | 14 | 0.25 | 8.27 | -17860 | 2951 | 129917 | 44.03 | Si |
| SLV 7 | 14 | 0.25 | 4.02 | -8679 | 2951 | 131062 | 44.42 | Si |
| SLV 8 | 14 | 0.25 | 4.02 | -8679 | 2951 | 131062 | 44.42 | Si |
| SLV 15 | 14 | 0.25 | 7.99 | -17253 | 2951 | 134429 | 45.56 | Si |
| SLV 16 | 14 | 0.25 | 7.99 | -17253 | 2951 | 134429 | 45.56 | Si |

### Verifica dei meccanismi locali di collasso con analisi cinematica lineare

forza di aggancio al piano = 0 quota mezzeria = 36.5 Wa = 0.08 Ta = 0.0269

| Comb. | N top | N base | V orto | α0 | M* | e* | a0* | aLim | Verifica |
|---|---|---|---|---|---|---|---|---|---|
| SLV 11 | -7568 | -14725 | -31 | 0.085 | 8.523 | 0.971 | 127.517 | 417.584 | No |
| SLV 12 | -7568 | -14725 | -31 | 0.085 | 8.523 | 0.971 | 127.517 | 417.584 | No |
| SLV 10 | -7428 | -10026 | 29 | 0.086 | 8.38 | 0.97 | 128.144 | 417.584 | No |
| SLV 9 | -7428 | -10026 | 29 | 0.086 | 8.38 | 0.97 | 128.144 | 417.584 | No |
| SLV 6 | -5539 | -8020 | 31 | 0.086 | 6.458 | 0.962 | 129.536 | 417.584 | No |
| SLV 5 | -5539 | -8020 | 31 | 0.086 | 6.458 | 0.962 | 129.536 | 417.584 | No |
| SLV 7 | -5679 | -12719 | -29 | 0.086 | 6.6 | 0.963 | 129.823 | 417.584 | No |
| SLV 8 | -5679 | -12719 | -29 | 0.086 | 6.6 | 0.963 | 129.823 | 417.584 | No |
| SLV 15 | -9722 | -15420 | -13 | 0.087 | 10.717 | 0.976 | 128.953 | 332.581 | No |
| SLV 16 | -9722 | -15420 | -13 | 0.087 | 10.717 | 0.976 | 128.953 | 332.581 | No |

### Tabella dei coefficienti di sicurezza minimi

| Stato limite | Coeff.s. | Comb. | Verifica |
|---|---|---|---|
| PF_SLU | 0 | SLU 82 | No |
| V_SLU | 8.179 | SLU 84 | Si |
| PF_SLV | 1.091 | SLV 13 | Si |
| V_SLV | 1.982 | SLV 13 | Si |
| PFFP_SLV | 31.616 | SLV 3 | Si |
| R_SLV | 0.305 | SLV 11 | No |

## Maschio 29

Verifiche condotte secondo D.M. 17-01-18 (N.T.C.)

### Dati geometrici

| X ini. | Y ini. | X fin. | Y fin. | Quota i. | Quota.s | l | Sp. | h netta | h ini. | h fin. | a | a.s.,sx | a.s.,dx |
|---|---|---|---|---|---|---|---|---|---|---|---|---|---|
| -1223.8 | 104.6 | -1261.3 | 104.6 | L1 | L3 | 37.5 | 45 | 269 | 269 | 269 | | | |

### Caratteristiche del materiale

(Circolare 7 21-01-19 C8.5.I) Muratura in mattoni pieni e malta di calce LC2_Corti

| fb | fk | fvk0 | fmedio | τ0 | fv0 | μ | ϕ | fv,lim | E | G | FC |
|---|---|---|---|---|---|---|---|---|---|---|---|
| 60 | | | 34.5 | 0.9 | 2 | 0.58 | 0.77 | 3.25 | 32000 | 12800 | 1.2 |

### Verifica a pressoflessione nel piano secondo D.M. 17-01-18 NTC §7.8.2.2.1 in combinazioni non sismiche, γM = 3

| Comb. | Quota | N | M | σ0 | Mu | c.s. | Verifica |
|---|---|---|---|---|---|---|---|
| SLU 74 | -98 | -9921 | -13929 | 5.88 | 51759 | 3.716 | Si |
| SLU 74 | 118 | -7391 | -4783 | 4.38 | 64069 | 13.394 | Si |
| SLU 83 | -98 | -10367 | -14420 | 6.14 | 47782 | 3.314 | Si |
| SLU 83 | 118 | -7733 | -5041 | 4.58 | 63426 | 12.582 | Si |
| SLU 81 | -98 | -10232 | -13858 | 6.06 | 49044 | 3.539 | Si |
| SLU 81 | 118 | -7613 | -5072 | 4.51 | 63689 | 12.557 | Si |
| SLU 80 | -98 | -9968 | -14375 | 5.91 | 51367 | 3.573 | Si |
| SLU 80 | 118 | -7436 | -4694 | 4.41 | 64002 | 13.634 | Si |
| SLU 77 | -98 | -10056 | -14491 | 5.96 | 50612 | 3.493 | Si |
| SLU 77 | 118 | -7512 | -4752 | 4.45 | 63879 | 13.442 | Si |
| SLU 78 | -98 | -10062 | -14510 | 5.96 | 50561 | 3.485 | Si |
| SLU 78 | 118 | -7514 | -4753 | 4.45 | 63875 | 13.438 | Si |
| SLU 82 | -98 | -10238 | -13876 | 6.07 | 48990 | 3.53 | Si |
| SLU 82 | 118 | -7615 | -5073 | 4.51 | 63684 | 12.553 | Si |
| SLU 84 | -98 | -10373 | -14439 | 6.15 | 47726 | 3.305 | Si |
| SLU 84 | 118 | -7735 | -5042 | 4.58 | 63421 | 12.579 | Si |
| SLU 79 | -98 | -9962 | -14356 | 5.9 | 51417 | 3.582 | Si |
| SLU 79 | 118 | -7434 | -4693 | 4.41 | 64005 | 13.638 | Si |
| SLU 75 | -98 | -9927 | -13948 | 5.88 | 51710 | 3.707 | Si |
| SLU 75 | 118 | -7394 | -4784 | 4.38 | 64065 | 13.391 | Si |

Verifica a pressoflessione nel piano secondo D.M. 17-01-18 NTC §7.8.2.2.1 in combinazioni sismiche, γM = 2

| Comb. | Quota | N | M | σ0 | Mu | c.s. | Verifica |
|---|---|---|---|---|---|---|---|
| SLV 9 | -98 | -7987 | -56759 | 4.73 | 91745 | 1.616 | Si |
| SLV 9 | 118 | -5830 | 9536 | 3.45 | 78404 | 8.222 | Si |
| SLV 8 | -98 | -5274 | 38518 | 3.13 | 73590 | 1.911 | Si |
| SLV 8 | 118 | -3934 | -15895 | 2.33 | 59686 | 3.755 | Si |
| SLV 4 | -98 | -2403 | 41729 | 1.42 | 39801 | 0.954 | No, M>Mu |
| SLV 4 | 118 | -1460 | -14852 | 0.87 | 25434 | 1.713 | Si |
| SLV 3 | -98 | -2403 | 41729 | 1.42 | 39801 | 0.954 | No, M>Mu |
| SLV 3 | 118 | -1460 | -14852 | 0.87 | 25434 | 1.713 | Si |
| SLV 7 | -98 | -5274 | 38518 | 3.13 | 73590 | 1.911 | Si |
| SLV 7 | 118 | -3934 | -15895 | 2.33 | 59686 | 3.755 | Si |
| SLV 13 | -98 | -10857 | -59971 | 6.43 | 96379 | 1.607 | Si |
| SLV 13 | 118 | -8304 | 8493 | 4.92 | 92994 | 10.95 | Si |
| SLV 2 | -98 | -2461 | 20378 | 1.46 | 40636 | 1.994 | Si |
| SLV 2 | 118 | -1408 | -8777 | 0.83 | 24598 | 2.803 | Si |
| SLV 14 | -98 | -10857 | -59971 | 6.43 | 96379 | 1.607 | Si |
| SLV 14 | 118 | -8304 | 8493 | 4.92 | 92994 | 10.95 | Si |
| SLV 1 | -98 | -2461 | 20378 | 1.46 | 40636 | 1.994 | Si |
| SLV 1 | 118 | -1408 | -8777 | 0.83 | 24598 | 2.803 | Si |
| SLV 10 | -98 | -7987 | -56759 | 4.73 | 91745 | 1.616 | Si |
| SLV 10 | 118 | -5830 | 9536 | 3.45 | 78404 | 8.222 | Si |

Verifica a taglio nel piano secondo D.M. 17-01-18 (N.T.C.) §7.8.2.2.2 con rottura per scorrimento in combinazioni non sismiche, γM = 3

| Comb. | Quota | N | V par | M | σ0 | σN | l' | fvd | Vt scorr. | Vt fess.diag. | Vt,lim | c.s. | Verifica |
|---|---|---|---|---|---|---|---|---|---|---|---|---|---|
| SLU 84 | -98 | -10373 | -123 | -14439 | | 6.15 | 37.5 | 1.08 | 1828 | | | 14.82 | Si |
| SLU 84 | 118 | -7735 | -581 | -5042 | | 4.58 | 37.5 | 1.08 | 1828 | | | 3.15 | Si |
| SLU 82 | -98 | -10238 | -117 | -13876 | | 6.07 | 37.5 | 1.08 | 1828 | | | 15.56 | Si |
| SLU 82 | 118 | -7615 | -577 | -5073 | | 4.51 | 37.5 | 1.08 | 1828 | | | 3.17 | Si |
| SLU 75 | -98 | -9927 | -119 | -13948 | | 5.88 | 37.5 | 1.08 | 1828 | | | 15.36 | Si |
| SLU 75 | 118 | -7394 | -556 | -4784 | | 4.38 | 37.5 | 1.08 | 1828 | | | 3.29 | Si |
| SLU 80 | -98 | -9968 | -124 | -14375 | | 5.91 | 37.5 | 1.08 | 1828 | | | 14.77 | Si |
| SLU 80 | 118 | -7436 | -552 | -4694 | | 4.41 | 37.5 | 1.08 | 1828 | | | 3.31 | Si |
| SLU 79 | -98 | -9962 | -124 | -14356 | | 5.9 | 37.5 | 1.08 | 1828 | | | 14.77 | Si |
| SLU 79 | 118 | -7434 | -551 | -4693 | | 4.41 | 37.5 | 1.08 | 1828 | | | 3.32 | Si |
| SLU 74 | -98 | -9921 | -119 | -13929 | | 5.88 | 37.5 | 1.08 | 1828 | | | 15.36 | Si |
| SLU 74 | 118 | -7391 | -556 | -4783 | | 4.38 | 37.5 | 1.08 | 1828 | | | 3.29 | Si |
| SLU 78 | -98 | -10062 | -125 | -14510 | | 5.96 | 37.5 | 1.08 | 1828 | | | 14.64 | Si |
| SLU 78 | 118 | -7514 | -560 | -4753 | | 4.45 | 37.5 | 1.08 | 1828 | | | 3.26 | Si |
| SLU 77 | -98 | -10056 | -125 | -14491 | | 5.96 | 37.5 | 1.08 | 1828 | | | 14.64 | Si |
| SLU 77 | 118 | -7512 | -559 | -4752 | | 4.45 | 37.5 | 1.08 | 1828 | | | 3.27 | Si |
| SLU 83 | -98 | -10367 | -123 | -14420 | | 6.14 | 37.5 | 1.08 | 1828 | | | 14.82 | Si |
| SLU 83 | 118 | -7733 | -580 | -5041 | | 4.58 | 37.5 | 1.08 | 1828 | | | 3.15 | Si |
| SLU 81 | -98 | -10232 | -117 | -13858 | | 6.06 | 37.5 | 1.08 | 1828 | | | 15.56 | Si |
| SLU 81 | 118 | -7613 | -576 | -5072 | | 4.51 | 37.5 | 1.08 | 1828 | | | 3.17 | Si |

Verifica a taglio nel piano secondo D.M. 17-01-18 (N.T.C.) §7.8.2.2.2 con rottura per scorrimento in combinazioni sismiche, γM = 2

| Comb. | Quota | N | V par | M | σ0 | σN | l' | fvd | Vt scorr. | Vt fess.diag. | Vt,lim | c.s. | Verifica |
|---|---|---|---|---|---|---|---|---|---|---|---|---|---|
| SLD 3 | -98 | -4817 | 111 | 12675 | | 2.85 | 37.5 | 1.4 | 2370 | | | 21.29 | Si |
| SLD 3 | 118 | -3420 | -508 | -8189 | | 2.03 | 37.5 | 1.24 | 2090 | | | 4.12 | Si |
| SLV 7 | -98 | -5274 | 369 | 38518 | | 3.41 | 34.34 | 1.52 | 2342 | | | 6.35 | Si |
| SLV 7 | 118 | -3934 | -747 | -15895 | | 2.33 | 37.5 | 1.3 | 2193 | | | 2.93 | Si |
| SLV 2 | -98 | -2461 | 156 | 20378 | | 1.74 | 31.41 | 1.18 | 1670 | | | 10.68 | Si |
| SLV 2 | 118 | -1408 | -513 | -8777 | | 0.83 | 37.5 | 1 | 1688 | | | 3.29 | Si |
| SLV 12 | -98 | -7793 | 167 | 14413 | | 4.62 | 37.5 | 1.63 | 2742 | | | 16.46 | Si |
| SLV 12 | 118 | -6002 | -603 | -10714 | | 3.56 | 37.5 | 1.54 | 2607 | | | 4.32 | Si |
| SLV 1 | -98 | -2461 | 156 | 20378 | | 1.74 | 31.41 | 1.18 | 1670 | | | 10.68 | Si |
| SLV 1 | 118 | -1408 | -513 | -8777 | | 0.83 | 37.5 | 1 | 1688 | | | 3.29 | Si |
| SLD 4 | -98 | -4817 | 111 | 12675 | | 2.85 | 37.5 | 1.4 | 2370 | | | 21.29 | Si |
| SLD 4 | 118 | -3420 | -508 | -8189 | | 2.03 | 37.5 | 1.24 | 2090 | | | 4.12 | Si |
| SLV 3 | -98 | -2403 | 363 | 41729 | | 12.87 | 4.15 | 1.63 | 303 | | | 0.84 | No, Vu<V |
| SLV 3 | 118 | -1460 | -699 | -14852 | | 1.26 | 25.73 | 1.09 | 1257 | | | 1.8 | Si |
| SLV 8 | -98 | -5274 | 369 | 38518 | | 3.41 | 34.34 | 1.52 | 2342 | | | 6.35 | Si |
| SLV 8 | 118 | -3934 | -747 | -15895 | | 2.33 | 37.5 | 1.3 | 2193 | | | 2.93 | Si |
| SLV 4 | -98 | -2403 | 363 | 41729 | | 12.87 | 4.15 | 1.63 | 303 | | | 0.84 | No, Vu<V |
| SLV 4 | 118 | -1460 | -699 | -14852 | | 1.26 | 25.73 | 1.09 | 1257 | | | 1.8 | Si |
| SLV 11 | -98 | -7793 | 167 | 14413 | | 4.62 | 37.5 | 1.63 | 2742 | | | 16.46 | Si |
| SLV 11 | 118 | -6002 | -603 | -10714 | | 3.56 | 37.5 | 1.54 | 2607 | | | 4.32 | Si |

Verifica a pressoflessione fuori piano D.M. 17-01-18 (N.T.C.)

quota 36.5 Wa 0.08 denominatore 8 γM = 2

| Comb. | fd | Sa | σ0 | N | M | Mc | Coeff.s. | Verifica |
|---|---|---|---|---|---|---|---|---|
| SLV 2 | 14 | 0.25 | 1.7 | -2877 | 2305 | 55703 | 24.16 | Si |
| SLV 1 | 14 | 0.25 | 1.7 | -2877 | 2305 | 55703 | 24.16 | Si |
| SLV 3 | 14 | 0.25 | 2.15 | -3624 | 2305 | 67208 | 29.16 | Si |
| SLV 4 | 14 | 0.25 | 2.15 | -3624 | 2305 | 67208 | 29.16 | Si |
| SLV 6 | 14 | 0.25 | 2.94 | -4969 | 2305 | 84854 | 36.81 | Si |
| SLV 5 | 14 | 0.25 | 2.94 | -4969 | 2305 | 84854 | 36.81 | Si |
| SLV 8 | 14 | 0.25 | 4.42 | -7458 | 2305 | 107109 | 46.46 | Si |
| SLV 7 | 14 | 0.25 | 4.42 | -7458 | 2305 | 107109 | 46.46 | Si |
| SLV 10 | 14 | 0.25 | 4.45 | -7508 | 2305 | 107418 | 46.6 | Si |
| SLV 9 | 14 | 0.25 | 4.45 | -7508 | 2305 | 107418 | 46.6 | Si |

Verifica dei meccanismi locali di collasso con analisi cinematica lineare

forza di aggancio al piano = 0 quota mezzeria = 36.5 Wa = 0.08 Ta = 0.0269

| Comb. | N top | N base | V orto | α0 | M* | e* | a0* | aLim | Verifica |
|---|---|---|---|---|---|---|---|---|---|
| SLV 3 | -486 | -2403 | 66 | 0.049 | 1.182 | 0.89 | 79.316 | 332.581 | No |

| Comb. | N top | N base | V orto | α0 | M* | e* | a0* | aLim | Verifica |
|---|---|---|---|---|---|---|---|---|---|
| SLV 4 | -486 | -2403 | 66 | 0.049 | 1.182 | 0.89 | 79.316 | 332.581 | No |
| SLV 7 | -3357 | -5274 | 51 | 0.079 | 4.058 | 0.954 | 120.684 | 417.584 | No |
| SLV 8 | -3357 | -5274 | 51 | 0.079 | 4.058 | 0.954 | 120.684 | 417.584 | No |
| SLV 9 | -6385 | -7987 | -35 | 0.084 | 7.139 | 0.973 | 124.791 | 417.584 | No |
| SLV 10 | -6385 | -7987 | -35 | 0.084 | 7.139 | 0.973 | 124.791 | 417.584 | No |
| SLV 12 | -5948 | -7793 | 21 | 0.086 | 6.695 | 0.971 | 128.238 | 417.584 | No |
| SLV 11 | -5948 | -7793 | 21 | 0.086 | 6.695 | 0.971 | 128.238 | 417.584 | No |
| SLV 6 | -3793 | -5468 | -6 | 0.09 | 4.502 | 0.958 | 137.221 | 417.584 | No |
| SLV 5 | -3793 | -5468 | -6 | 0.09 | 4.502 | 0.958 | 137.221 | 417.584 | No |

### Tabella dei coefficienti di sicurezza minimi

| Stato limite | Coeff.s. | Comb. | Verifica |
|---|---|---|---|
| PF_SLU | 3.305 | SLU 84 | Si |
| V_SLU | 3.145 | SLU 84 | Si |
| PF_SLV | 0.954 | SLV 3 | No |
| V_SLV | 0.835 | SLV 3 | No |
| PFFP_SLV | 24.164 | SLV 1 | Si |
| R_SLV | 0.238 | SLV 3 | No |

## Maschio 30

Verifiche condotte secondo D.M. 17-01-18 (N.T.C.)

### Dati geometrici

| X ini. | Y ini. | X fin. | Y fin. | Quota i. | Quota.s | l | Sp. | h netta | h ini. | h fin. | a | a.s.,sx | a.s.,dx |
|---|---|---|---|---|---|---|---|---|---|---|---|---|---|
| -1071.3 | 104.6 | -1123.8 | 104.6 | L1 | L3 | 52.5 | 45 | 269 | 269 | 269 | | | |

### Caratteristiche del materiale

(Circolare 7 21-01-19 C8.5.I) Muratura in mattoni pieni e malta di calce LC2_Corti

| fb | fk | fvk0 | fmedio | τ0 | fv0 | μ | ϕ | fv,lim | E | G | FC |
|---|---|---|---|---|---|---|---|---|---|---|---|
| 60 | | | 34.5 | 0.9 | 2 | 0.58 | 0.77 | 3.25 | 32000 | 12800 | 1.2 |

### Verifica a pressoflessione nel piano secondo D.M. 17-01-18 NTC §7.8.2.2.1 in combinazioni non sismiche, γM = 3

| Comb. | Quota | N | M | σ0 | Mu | c.s. | Verifica |
|---|---|---|---|---|---|---|---|
| SLU 75 | -98 | -18548 | 24619 | 7.85 | 17628 | 0.716 | No, M>Mu |
| SLU 75 | 118 | -11421 | 24086 | 4.83 | 121879 | 5.06 | Si |
| SLU 74 | -98 | -18454 | 25002 | 7.81 | 19890 | 0.796 | No, M>Mu |
| SLU 74 | 118 | -11417 | 24050 | 4.83 | 121899 | 5.069 | Si |
| SLU 84 | -98 | -19386 | 26154 | 8.21 | 0 | 0 | No, Rottura per schiacciamento |
| SLU 84 | 118 | -11994 | 25186 | 5.08 | 118622 | 4.71 | Si |
| SLU 76 | -98 | -18390 | 24238 | 7.78 | 21441 | 0.885 | No, M>Mu |
| SLU 76 | 118 | -11298 | 23894 | 4.78 | 122464 | 5.125 | Si |
| SLU 73 | -98 | -18425 | 24302 | 7.8 | 20594 | 0.847 | No, M>Mu |
| SLU 73 | 118 | -11214 | 23259 | 4.75 | 122836 | 5.281 | Si |
| SLU 81 | -98 | -19328 | 26601 | 8.18 | 0 | 0 | No, Rottura per schiacciamento |
| SLU 81 | 118 | -11906 | 24515 | 5.04 | 119180 | 4.862 | Si |
| SLU 82 | -98 | -19421 | 26218 | 8.22 | 0 | 0 | No, Rottura per schiacciamento |
| SLU 82 | 118 | -11910 | 24551 | 5.04 | 119154 | 4.853 | Si |
| SLU 77 | -98 | -18419 | 24938 | 7.8 | 20740 | 0.832 | No, M>Mu |
| SLU 77 | 118 | -11501 | 24686 | 4.87 | 121480 | 4.921 | Si |
| SLU 83 | -98 | -19292 | 26537 | 8.17 | 0 | 0 | No, Rottura per schiacciamento |
| SLU 83 | 118 | -11989 | 25150 | 5.07 | 118649 | 4.718 | Si |
| SLU 78 | -98 | -18512 | 24555 | 7.84 | 18487 | 0.753 | No, M>Mu |
| SLU 78 | 118 | -11505 | 24722 | 4.87 | 121459 | 4.913 | Si |

### Verifica a pressoflessione nel piano secondo D.M. 17-01-18 NTC §7.8.2.2.1 in combinazioni sismiche, γM = 2

| Comb. | Quota | N | M | σ0 | Mu | c.s. | Verifica |
|---|---|---|---|---|---|---|---|
| SLV 1 | -98 | -12528 | 147126 | 5.3 | 186137 | 1.265 | Si |
| SLV 1 | 118 | -8670 | -33218 | 3.67 | 159235 | 4.794 | Si |
| SLV 16 | -98 | -12377 | -114092 | 5.24 | 185591 | 1.627 | Si |
| SLV 16 | 118 | -6416 | 64861 | 2.72 | 130988 | 2.02 | Si |
| SLV 15 | -98 | -12377 | -114092 | 5.24 | 185591 | 1.627 | Si |
| SLV 15 | 118 | -6416 | 64861 | 2.72 | 130988 | 2.02 | Si |
| SLV 3 | -98 | -16926 | 150248 | 7.16 | 183790 | 1.223 | Si |
| SLV 3 | 118 | -10148 | -35179 | 4.3 | 172741 | 4.91 | Si |
| SLV 6 | -98 | -5805 | 50964 | 2.46 | 121744 | 2.389 | Si |
| SLV 6 | 118 | -5639 | 4084 | 2.39 | 119115 | 29.165 | Si |
| SLV 13 | -98 | -7979 | -117214 | 3.38 | 151555 | 1.293 | Si |
| SLV 13 | 118 | -4938 | 66822 | 2.09 | 107449 | 1.608 | Si |
| SLV 5 | -98 | -5805 | 50964 | 2.46 | 121744 | 2.389 | Si |
| SLV 5 | 118 | -5639 | 4084 | 2.39 | 119115 | 29.165 | Si |
| SLV 4 | -98 | -16926 | 150248 | 7.16 | 183790 | 1.223 | Si |
| SLV 4 | 118 | -10148 | -35179 | 4.3 | 172741 | 4.91 | Si |
| SLV 14 | -98 | -7979 | -117214 | 3.38 | 151555 | 1.293 | Si |
| SLV 14 | 118 | -4938 | 66822 | 2.09 | 107449 | 1.608 | Si |
| SLV 2 | -98 | -12528 | 147126 | 5.3 | 186137 | 1.265 | Si |
| SLV 2 | 118 | -8670 | -33218 | 3.67 | 159235 | 4.794 | Si |

Verifica a taglio nel piano secondo D.M. 17-01-18 (N.T.C.) §7.8.2.2.2 con rottura per scorrimento in combinazioni non sismiche, γM = 3

| Comb. | Quota | N | V par | M | σ0 | σN | l' | fvd | Vt scorr. | Vt fess.diag. | Vt,lim | c.s. | Verifica |
|---|---|---|---|---|---|---|---|---|---|---|---|---|---|
| SLU 84 | -98 | -19386 | 434 | 26154 | | 8.21 | 52.5 | 1.08 | 2559 | | | 5.9 | Si |
| SLU 84 | 118 | -11994 | 698 | 25186 | | 5.08 | 52.5 | 1.08 | 2559 | | | 3.67 | Si |
| SLU 75 | -98 | -18548 | 410 | 24619 | | 7.85 | 52.5 | 1.08 | 2559 | | | 6.24 | Si |
| SLU 75 | 118 | -11421 | 666 | 24086 | | 4.83 | 52.5 | 1.08 | 2559 | | | 3.84 | Si |
| SLU 81 | -98 | -19328 | 436 | 26601 | | 8.18 | 52.5 | 1.08 | 2559 | | | 5.87 | Si |
| SLU 81 | 118 | -11906 | 687 | 24515 | | 5.04 | 52.5 | 1.08 | 2559 | | | 3.72 | Si |
| SLU 80 | -98 | -18292 | 411 | 24430 | | 7.74 | 52.5 | 1.08 | 2559 | | | 6.22 | Si |
| SLU 80 | 118 | -11379 | 665 | 24505 | | 4.82 | 52.5 | 1.08 | 2559 | | | 3.85 | Si |
| SLU 82 | -98 | -19421 | 430 | 26218 | | 8.22 | 52.5 | 1.08 | 2559 | | | 5.95 | Si |
| SLU 82 | 118 | -11910 | 689 | 24551 | | 5.04 | 52.5 | 1.08 | 2559 | | | 3.72 | Si |
| SLU 77 | -98 | -18419 | 420 | 24938 | | 7.8 | 52.5 | 1.08 | 2559 | | | 6.1 | Si |
| SLU 77 | 118 | -11501 | 674 | 24686 | | 4.87 | 52.5 | 1.08 | 2559 | | | 3.8 | Si |
| SLU 74 | -98 | -18454 | 416 | 25002 | | 7.81 | 52.5 | 1.08 | 2559 | | | 6.16 | Si |
| SLU 74 | 118 | -11417 | 665 | 24050 | | 4.83 | 52.5 | 1.08 | 2559 | | | 3.85 | Si |
| SLU 79 | -98 | -18199 | 417 | 24812 | | 7.7 | 52.5 | 1.08 | 2559 | | | 6.14 | Si |
| SLU 79 | 118 | -11374 | 664 | 24469 | | 4.81 | 52.5 | 1.08 | 2559 | | | 3.85 | Si |
| SLU 83 | -98 | -19292 | 440 | 26537 | | 8.17 | 52.5 | 1.08 | 2559 | | | 5.82 | Si |
| SLU 83 | 118 | -11989 | 697 | 25150 | | 5.07 | 52.5 | 1.08 | 2559 | | | 3.67 | Si |
| SLU 78 | -98 | -18512 | 414 | 24555 | | 7.84 | 52.5 | 1.08 | 2559 | | | 6.18 | Si |
| SLU 78 | 118 | -11505 | 675 | 24722 | | 4.87 | 52.5 | 1.08 | 2559 | | | 3.79 | Si |

Verifica a taglio nel piano secondo D.M. 17-01-18 (N.T.C.) §7.8.2.2.2 con rottura per scorrimento in combinazioni sismiche, γM = 2

| Comb. | Quota | N | V par | M | σ0 | σN | l' | fvd | Vt scorr. | Vt fess.diag. | Vt,lim | c.s. | Verifica |
|---|---|---|---|---|---|---|---|---|---|---|---|---|---|
| SLV 16 | -98 | -12377 | -1020 | -114092 | | 5.38 | 51.09 | 1.63 | 3736 | | | 3.66 | Si |
| SLV 16 | 118 | -6416 | 673 | 64861 | | 2.94 | 48.42 | 1.42 | 3099 | | | 4.61 | Si |
| SLV 2 | -98 | -12528 | 1564 | 147126 | | 6.4 | 43.52 | 1.63 | 3182 | | | 2.03 | Si |
| SLV 2 | 118 | -8670 | 186 | -33218 | | 3.67 | 52.5 | 1.57 | 3703 | | | 19.87 | Si |
| SLV 1 | -98 | -12528 | 1564 | 147126 | | 6.4 | 43.52 | 1.63 | 3182 | | | 2.03 | Si |
| SLV 1 | 118 | -8670 | 186 | -33218 | | 3.67 | 52.5 | 1.57 | 3703 | | | 19.87 | Si |
| SLV 4 | -98 | -16926 | 1563 | 150248 | | 7.22 | 52.12 | 1.63 | 3811 | | | 2.44 | Si |
| SLV 4 | 118 | -10148 | 238 | -35179 | | 4.3 | 52.5 | 1.63 | 3839 | | | 16.12 | Si |
| SLD 1 | -98 | -12487 | 830 | 72841 | | 5.29 | 52.5 | 1.63 | 3839 | | | 4.63 | Si |
| SLD 1 | 118 | -8032 | 325 | -5232 | | 3.4 | 52.5 | 1.51 | 3575 | | | 11.01 | Si |
| SLD 2 | -98 | -12487 | 830 | 72841 | | 5.29 | 52.5 | 1.63 | 3839 | | | 4.63 | Si |
| SLD 2 | 118 | -8032 | 325 | -5232 | | 3.4 | 52.5 | 1.51 | 3575 | | | 11.01 | Si |
| SLV 3 | -98 | -16926 | 1563 | 150248 | | 7.22 | 52.12 | 1.63 | 3811 | | | 2.44 | Si |
| SLV 3 | 118 | -10148 | 238 | -35179 | | 4.3 | 52.5 | 1.63 | 3839 | | | 16.12 | Si |
| SLV 15 | -98 | -12377 | -1020 | -114092 | | 5.38 | 51.09 | 1.63 | 3736 | | | 3.66 | Si |
| SLV 15 | 118 | -6416 | 673 | 64861 | | 2.94 | 48.42 | 1.42 | 3099 | | | 4.61 | Si |
| SLV 14 | -98 | -7979 | -1020 | -117214 | | 5.11 | 34.68 | 1.63 | 2536 | | | 2.49 | Si |
| SLV 14 | 118 | -4938 | 621 | 66822 | | 2.88 | 38.15 | 1.41 | 2418 | | | 3.89 | Si |
| SLV 13 | -98 | -7979 | -1020 | -117214 | | 5.11 | 34.68 | 1.63 | 2536 | | | 2.49 | Si |
| SLV 13 | 118 | -4938 | 621 | 66822 | | 2.88 | 38.15 | 1.41 | 2418 | | | 3.89 | Si |

Verifica a pressoflessione fuori piano D.M. 17-01-18 (N.T.C.)

quota 36.5 Wa 0.08 denominatore 8 γM = 2

| Comb. | fd | Sa | σ0 | N | M | Mc | Coeff.s. | Verifica |
|---|---|---|---|---|---|---|---|---|
| SLV 10 | 14 | 0.25 | 2.35 | -5563 | 3227 | 101053 | 31.31 | Si |
| SLV 9 | 14 | 0.25 | 2.35 | -5563 | 3227 | 101053 | 31.31 | Si |
| SLV 14 | 14 | 0.25 | 2.84 | -6701 | 3227 | 115775 | 35.87 | Si |
| SLV 13 | 14 | 0.25 | 2.84 | -6701 | 3227 | 115775 | 35.87 | Si |
| SLV 6 | 14 | 0.25 | 3.12 | -7370 | 3227 | 123490 | 38.26 | Si |
| SLV 5 | 14 | 0.25 | 3.12 | -7370 | 3227 | 123490 | 38.26 | Si |
| SLV 15 | 14 | 0.25 | 4.01 | -9483 | 3227 | 143274 | 44.4 | Si |
| SLV 16 | 14 | 0.25 | 4.01 | -9483 | 3227 | 143274 | 44.4 | Si |
| SLV 7 | 14 | 0.25 | 7.04 | -16643 | 3227 | 158571 | 49.14 | Si |
| SLV 8 | 14 | 0.25 | 7.04 | -16643 | 3227 | 158571 | 49.14 | Si |

Verifica dei meccanismi locali di collasso con analisi cinematica lineare

forza di aggancio al piano = 0 quota mezzeria = 36.5 Wa = 0.08 Ta = 0.0269

| Comb. | N top | N base | V orto | α0 | M* | e* | a0* | aLim | Verifica |
|---|---|---|---|---|---|---|---|---|---|
| SLV 10 | -3098 | -4441 | 95 | 0.071 | 4.058 | 0.938 | 109.712 | 417.584 | No |
| SLV 9 | -3098 | -4441 | 95 | 0.071 | 4.058 | 0.938 | 109.712 | 417.584 | No |
| SLV 8 | -9213 | -20464 | -93 | 0.079 | 10.274 | 0.973 | 118.069 | 417.584 | No |
| SLV 7 | -9213 | -20464 | -93 | 0.079 | 10.274 | 0.973 | 118.069 | 417.584 | No |
| SLV 11 | -7697 | -19099 | -58 | 0.082 | 8.731 | 0.969 | 123.652 | 417.584 | No |
| SLV 12 | -7697 | -19099 | -58 | 0.082 | 8.731 | 0.969 | 123.652 | 417.584 | No |
| SLV 5 | -4614 | -5805 | 60 | 0.081 | 5.595 | 0.953 | 123.917 | 417.584 | No |
| SLV 6 | -4614 | -5805 | 60 | 0.081 | 5.595 | 0.953 | 123.917 | 417.584 | No |
| SLV 13 | -2940 | -7979 | 82 | 0.074 | 3.897 | 0.936 | 114.771 | 332.581 | No |
| SLV 14 | -2940 | -7979 | 82 | 0.074 | 3.897 | 0.936 | 114.771 | 332.581 | No |

Tabella dei coefficienti di sicurezza minimi

| Stato limite | Coeff.s. | Comb. | Verifica |
|---|---|---|---|
| PF_SLU | 0 | SLU 81 | No |
| V_SLU | 3.668 | SLU 84 | Si |
| PF_SLV | 1.223 | SLV 3 | Si |
| V_SLV | 2.035 | SLV 1 | Si |
| PFFP_SLV | 31.312 | SLV 9 | Si |
| R_SLV | 0.263 | SLV 9 | No |

## Maschio 31

Verifiche condotte secondo D.M. 17-01-18 (N.T.C.)

### Dati geometrici

| X ini. | Y ini. | X fin. | Y fin. | Quota i. | Quota.s | l | Sp. | h netta | h ini. | h fin. | a | a.s.,sx | a.s.,dx |
|---|---|---|---|---|---|---|---|---|---|---|---|---|---|
| -742.8 | 104.6 | -971.3 | 104.6 | L1 | L3 | 228.5 | 45 | 269 | 269 | 269 | | | |

### Caratteristiche del materiale

(Circolare 7 21-01-19 C8.5.I) Muratura in mattoni pieni e malta di calce LC2_Corti

| fb | fk | fvk0 | fmedio | τ0 | fv0 | μ | ϕ | fv,lim | E | G | FC |
|---|---|---|---|---|---|---|---|---|---|---|---|
| 60 | | | 34.5 | 0.9 | 2 | 0.58 | 0.77 | 3.25 | 32000 | 12800 | 1.2 |

### Verifica a pressoflessione nel piano secondo D.M. 17-01-18 NTC §7.8.2.2.1 in combinazioni non sismiche, γM = 3

| Comb. | Quota | N | M | σ0 | Mu | c.s. | Verifica |
|---|---|---|---|---|---|---|---|
| SLU 84 | -98 | -74196 | -239156 | 7.22 | 967847 | 4.047 | Si |
| SLU 84 | 112 | -69335 | 325178 | 6.74 | 1364217 | 4.195 | Si |
| SLU 75 | -98 | -70905 | -229833 | 6.9 | 1243209 | 5.409 | Si |
| SLU 75 | 112 | -66044 | 304576 | 6.42 | 1595932 | 5.24 | Si |
| SLU 82 | -98 | -73476 | -235320 | 7.15 | 1030659 | 4.38 | Si |
| SLU 82 | 112 | -68614 | 337744 | 6.67 | 1417473 | 4.197 | Si |
| SLU 83 | -98 | -74518 | -232409 | 7.25 | 939358 | 4.042 | Si |
| SLU 83 | 112 | -69656 | 301506 | 6.77 | 1339993 | 4.444 | Si |
| SLU 81 | -98 | -73797 | -228572 | 7.18 | 1002803 | 4.387 | Si |
| SLU 81 | 112 | -68936 | 314072 | 6.7 | 1393881 | 4.438 | Si |
| SLU 77 | -98 | -71947 | -226922 | 7 | 1159216 | 5.108 | Si |
| SLU 77 | 112 | -67086 | 268339 | 6.52 | 1525759 | 5.686 | Si |
| SLU 74 | -98 | -71227 | -223085 | 6.93 | 1217608 | 5.458 | Si |
| SLU 74 | 112 | -66365 | 280905 | 6.45 | 1574595 | 5.605 | Si |
| SLU 73 | -98 | -69328 | -222689 | 6.74 | 1364743 | 6.128 | Si |
| SLU 73 | 112 | -64466 | 323962 | 6.27 | 1696541 | 5.237 | Si |
| SLU 76 | -98 | -70048 | -226526 | 6.81 | 1310085 | 5.783 | Si |
| SLU 76 | 112 | -65187 | 311396 | 6.34 | 1651438 | 5.303 | Si |
| SLU 78 | -98 | -71626 | -233670 | 6.97 | 1185450 | 5.073 | Si |
| SLU 78 | 112 | -66764 | 292011 | 6.49 | 1547728 | 5.3 | Si |

### Verifica a pressoflessione nel piano secondo D.M. 17-01-18 NTC §7.8.2.2.1 in combinazioni sismiche, γM = 2

| Comb. | Quota | N | M | σ0 | Mu | c.s. | Verifica |
|---|---|---|---|---|---|---|---|
| SLV 3 | -98 | -55352 | 2205058 | 5.38 | 3537859 | 1.604 | Si |
| SLV 3 | 112 | -51529 | -773913 | 5.01 | 3472655 | 4.487 | Si |
| SLV 15 | -98 | -46202 | -2524708 | 4.49 | 3337463 | 1.322 | Si |
| SLV 15 | 112 | -42513 | 1276958 | 4.13 | 3213576 | 2.517 | Si |
| SLV 2 | -98 | -48919 | 2249455 | 4.76 | 3412853 | 1.517 | Si |
| SLV 2 | 112 | -45129 | -919442 | 4.39 | 3303977 | 3.593 | Si |
| SLD 14 | -98 | -44257 | -1149254 | 4.3 | 3275252 | 2.85 | Si |
| SLD 14 | 112 | -40552 | 590460 | 3.94 | 3137658 | 5.314 | Si |
| SLV 1 | -98 | -48919 | 2249455 | 4.76 | 3412853 | 1.517 | Si |
| SLV 1 | 112 | -45129 | -919442 | 4.39 | 3303977 | 3.593 | Si |
| SLV 16 | -98 | -46202 | -2524708 | 4.49 | 3337463 | 1.322 | Si |
| SLV 16 | 112 | -42513 | 1276958 | 4.13 | 3213576 | 2.517 | Si |
| SLD 13 | -98 | -44257 | -1149254 | 4.3 | 3275252 | 2.85 | Si |
| SLD 13 | 112 | -40552 | 590460 | 3.94 | 3137658 | 5.314 | Si |
| SLV 4 | -98 | -55352 | 2205058 | 5.38 | 3537859 | 1.604 | Si |
| SLV 4 | 112 | -51529 | -773913 | 5.01 | 3472655 | 4.487 | Si |
| SLV 14 | -98 | -39769 | -2480311 | 3.87 | 3105405 | 1.252 | Si |
| SLV 14 | 112 | -36112 | 1131429 | 3.51 | 2939938 | 2.598 | Si |
| SLV 13 | -98 | -39769 | -2480311 | 3.87 | 3105405 | 1.252 | Si |
| SLV 13 | 112 | -36112 | 1131429 | 3.51 | 2939938 | 2.598 | Si |

### Verifica a taglio nel piano secondo D.M. 17-01-18 (N.T.C.) §7.8.2.2.2 con rottura per scorrimento in combinazioni non sismiche, γM = 3

| Comb. | Quota | N | V par | M | σ0 | σN | l' | fvd | Vt scorr. | Vt fess.diag. | Vt,lim | c.s. | Verifica |
|---|---|---|---|---|---|---|---|---|---|---|---|---|---|
| SLU 83 | -98 | -74518 | -2543 | -232409 | | 7.25 | 228.5 | 1.08 | 11139 | | | 4.38 | Si |
| SLU 83 | 112 | -69656 | -2543 | 301506 | | 6.77 | 228.5 | 1.08 | 11139 | | | 4.38 | Si |
| SLU 75 | -98 | -70905 | -2545 | -229833 | | 6.9 | 228.5 | 1.08 | 11139 | | | 4.38 | Si |
| SLU 75 | 112 | -66044 | -2545 | 304576 | | 6.42 | 228.5 | 1.08 | 11139 | | | 4.38 | Si |
| SLU 73 | -98 | -69328 | -2603 | -222689 | | 6.74 | 228.5 | 1.08 | 11139 | | | 4.28 | Si |
| SLU 73 | 112 | -64466 | -2603 | 323962 | | 6.27 | 228.5 | 1.08 | 11139 | | | 4.28 | Si |
| SLU 84 | -98 | -74196 | -2687 | -239156 | | 7.22 | 228.5 | 1.08 | 11139 | | | 4.15 | Si |
| SLU 84 | 112 | -69335 | -2687 | 325178 | | 6.74 | 228.5 | 1.08 | 11139 | | | 4.15 | Si |
| SLU 81 | -98 | -73797 | -2584 | -228572 | | 7.18 | 228.5 | 1.08 | 11139 | | | 4.31 | Si |
| SLU 81 | 112 | -68936 | -2584 | 314072 | | 6.7 | 228.5 | 1.08 | 11139 | | | 4.31 | Si |
| SLU 61 | -98 | -65547 | -2459 | -209398 | | 6.37 | 228.5 | 1.08 | 11139 | | | 4.53 | Si |
| SLU 61 | 112 | -60685 | -2459 | 307069 | | 5.9 | 228.5 | 1.08 | 11139 | | | 4.53 | Si |
| SLU 82 | -98 | -73476 | -2729 | -235320 | | 7.15 | 228.5 | 1.08 | 11139 | | | 4.08 | Si |
| SLU 82 | 112 | -68614 | -2729 | 337744 | | 6.67 | 228.5 | 1.08 | 11139 | | | 4.08 | Si |
| SLU 78 | -98 | -71626 | -2503 | -233670 | | 6.97 | 228.5 | 1.08 | 11139 | | | 4.45 | Si |
| SLU 78 | 112 | -66764 | -2503 | 292011 | | 6.49 | 228.5 | 1.08 | 11139 | | | 4.45 | Si |
| SLU 40 | -98 | -63393 | -2437 | -208567 | | 6.17 | 228.5 | 1.08 | 11139 | | | 4.57 | Si |
| SLU 40 | 112 | -59653 | -2437 | 303175 | | 5.8 | 228.5 | 1.08 | 11139 | | | 4.57 | Si |
| SLU 76 | -98 | -70048 | -2562 | -226526 | | 6.81 | 228.5 | 1.08 | 11139 | | | 4.35 | Si |
| SLU 76 | 112 | -65187 | -2562 | 311396 | | 6.34 | 228.5 | 1.08 | 11139 | | | 4.35 | Si |

### Verifica a taglio nel piano secondo D.M. 17-01-18 (N.T.C.) §7.8.2.2.2 con rottura per scorrimento in combinazioni sismiche, γM = 2

| Comb. | Quota | N | V par | M | σ0 | σN | l' | fvd | Vt scorr. | Vt fess.diag. | Vt,lim | c.s. | Verifica |
|---|---|---|---|---|---|---|---|---|---|---|---|---|---|
| SLV 1 | -98 | -48919 | 15106 | 2249455 | | 5.31 | 204.8 | 1.63 | 14976 | | | 0.99 | No, Vu<V |
| SLV 1 | 112 | -45129 | 15064 | -919442 | | 4.39 | 228.5 | 1.63 | 16709 | | | 1.11 | Si |
| SLD 15 | -98 | -46961 | -8678 | -1167707 | | 4.57 | 228.5 | 1.63 | 16709 | | | 1.93 | Si |

| Comb. | Quota | N | V par | M | σ0 | σN | l' | fvd | Vt scorr. | Vt fess.diag. | Vt,lim | c.s. | Verifica |
|---|---|---|---|---|---|---|---|---|---|---|---|---|---|
| SLD 15 | 112 | -43239 | -8645 | 652375 | | 4.21 | 228.5 | 1.63 | 16709 | | | 1.93 | Si |
| SLV 16 | -98 | -46202 | -18119 | -2524708 | | 5.74 | 178.82 | 1.63 | 13076 | | | 0.72 | No, Vu<V |
| SLV 16 | 112 | -42513 | -18078 | 1276958 | | 4.13 | 228.5 | 1.63 | 16709 | | | 0.92 | No, Vu<V |
| SLV 2 | -98 | -48919 | 15106 | 2249455 | | 5.31 | 204.8 | 1.63 | 14976 | | | 0.99 | No, Vu<V |
| SLV 2 | 112 | -45129 | 15064 | -919442 | | 4.39 | 228.5 | 1.63 | 16709 | | | 1.11 | Si |
| SLD 16 | -98 | -46961 | -8678 | -1167707 | | 4.57 | 228.5 | 1.63 | 16709 | | | 1.93 | Si |
| SLD 16 | 112 | -43239 | -8645 | 652375 | | 4.21 | 228.5 | 1.63 | 16709 | | | 1.93 | Si |
| SLV 3 | -98 | -55352 | 14391 | 2205058 | | 5.51 | 223.24 | 1.63 | 16324 | | | 1.13 | Si |
| SLV 3 | 112 | -51529 | 14065 | -773913 | | 5.01 | 228.5 | 1.63 | 16709 | | | 1.19 | Si |
| SLV 15 | -98 | -46202 | -18119 | -2524708 | | 5.74 | 178.82 | 1.63 | 13076 | | | 0.72 | No, Vu<V |
| SLV 15 | 112 | -42513 | -18078 | 1276958 | | 4.13 | 228.5 | 1.63 | 16709 | | | 0.92 | No, Vu<V |
| SLV 4 | -98 | -55352 | 14391 | 2205058 | | 5.51 | 223.24 | 1.63 | 16324 | | | 1.13 | Si |
| SLV 4 | 112 | -51529 | 14065 | -773913 | | 5.01 | 228.5 | 1.63 | 16709 | | | 1.19 | Si |
| SLV 14 | -98 | -39769 | -17404 | -2480311 | | 5.68 | 155.65 | 1.63 | 11382 | | | 0.65 | No, Vu<V |
| SLV 14 | 112 | -36112 | -17078 | 1131429 | | 3.51 | 228.5 | 1.54 | 15791 | | | 0.92 | No, Vu<V |
| SLV 13 | -98 | -39769 | -17404 | -2480311 | | 5.68 | 155.65 | 1.63 | 11382 | | | 0.65 | No, Vu<V |
| SLV 13 | 112 | -36112 | -17078 | 1131429 | | 3.51 | 228.5 | 1.54 | 15791 | | | 0.92 | No, Vu<V |

### Verifica a pressoflessione fuori piano D.M. 17-01-18 (N.T.C.)

quota 36.5 Wa 0.08 denominatore 8 γM = 2

| Comb. | fd | Sa | σ0 | N | M | Mc | Coeff.s. | Verifica |
|---|---|---|---|---|---|---|---|---|
| SLV 9 | 14 | 0.25 | 3.25 | -33418 | 14046 | 551916 | 39.29 | Si |
| SLV 10 | 14 | 0.25 | 3.25 | -33418 | 14046 | 551916 | 39.29 | Si |
| SLV 5 | 14 | 0.25 | 3.5 | -35961 | 14046 | 577534 | 41.12 | Si |
| SLV 6 | 14 | 0.25 | 3.5 | -35961 | 14046 | 577534 | 41.12 | Si |
| SLV 13 | 14 | 0.25 | 3.68 | -37862 | 14046 | 595171 | 42.37 | Si |
| SLV 14 | 14 | 0.25 | 3.68 | -37862 | 14046 | 595171 | 42.37 | Si |
| SLV 15 | 14 | 0.25 | 4.3 | -44213 | 14046 | 644722 | 45.9 | Si |
| SLV 16 | 14 | 0.25 | 4.3 | -44213 | 14046 | 644722 | 45.9 | Si |
| SLV 2 | 14 | 0.25 | 4.51 | -46338 | 14046 | 658072 | 46.85 | Si |
| SLV 1 | 14 | 0.25 | 4.51 | -46338 | 14046 | 658072 | 46.85 | Si |

### Verifica dei meccanismi locali di collasso con analisi cinematica lineare

forza di aggancio al piano = 0 quota mezzeria = 36.5 Wa = 0.08 Ta = 0.0269

| Comb. | N top | N base | V orto | α0 | M* | e* | a0* | aLim | Verifica |
|---|---|---|---|---|---|---|---|---|---|
| SLV 12 | -40167 | -56910 | -38 | 0.088 | 44.79 | 0.973 | 130.873 | 417.584 | No |
| SLV 11 | -40167 | -56910 | -38 | 0.088 | 44.79 | 0.973 | 130.873 | 417.584 | No |
| SLV 7 | -42613 | -59655 | 4 | 0.088 | 47.28 | 0.975 | 131.484 | 417.584 | No |
| SLV 8 | -42613 | -59655 | 4 | 0.088 | 47.28 | 0.975 | 131.484 | 417.584 | No |
| SLV 6 | -27016 | -38211 | 93 | 0.088 | 31.401 | 0.963 | 132.16 | 417.584 | No |
| SLV 5 | -27016 | -38211 | 93 | 0.088 | 31.401 | 0.963 | 132.16 | 417.584 | No |
| SLV 10 | -24570 | -35466 | 51 | 0.089 | 28.914 | 0.96 | 135.423 | 417.584 | No |
| SLV 9 | -24570 | -35466 | 51 | 0.089 | 28.914 | 0.96 | 135.423 | 417.584 | No |
| SLV 1 | -35328 | -48919 | 110 | 0.086 | 39.862 | 0.97 | 129.179 | 332.581 | No |
| SLV 2 | -35328 | -48919 | 110 | 0.086 | 39.862 | 0.97 | 129.179 | 332.581 | No |

### Tabella dei coefficienti di sicurezza minimi

| Stato limite | Coeff.s. | Comb. | Verifica |
|---|---|---|---|
| PF_SLU | 4.042 | SLU 83 | Si |
| V_SLU | 4.082 | SLU 82 | Si |
| PF_SLV | 1.252 | SLV 13 | Si |
| V_SLV | 0.654 | SLV 13 | No |
| PFFP_SLV | 39.293 | SLV 9 | Si |
| R_SLV | 0.313 | SLV 11 | No |

## Maschio 32

Verifiche condotte secondo D.M. 17-01-18 (N.T.C.)

### Dati geometrici

| X ini. | Y ini. | X fin. | Y fin. | Quota i. | Quota.s | l | Sp. | h netta | h ini. | h fin. | a | a.s.,sx | a.s.,dx |
|---|---|---|---|---|---|---|---|---|---|---|---|---|---|
| -598.8 | 104.6 | -652.8 | 104.6 | L1 | L3 | 54 | 45 | 269 | 269 | 269 | | | |

### Caratteristiche del materiale

(Circolare 7 21-01-19 C8.5.I) Muratura in mattoni pieni e malta di calce LC2_Corti

| fb | fk | fvk0 | fmedio | τ0 | fv0 | μ | ϕ | fv,lim | E | G | FC |
|---|---|---|---|---|---|---|---|---|---|---|---|
| 60 | | | 34.5 | 0.9 | 2 | 0.58 | 0.77 | 3.25 | 32000 | 12800 | 1.2 |

### Verifica a pressoflessione nel piano secondo D.M. 17-01-18 NTC §7.8.2.2.1 in combinazioni non sismiche, γM = 3

| Comb. | Quota | N | M | σ0 | Mu | c.s. | Verifica |
|---|---|---|---|---|---|---|---|
| SLU 74 | -98 | -17640 | -18309 | 7.26 | 51833 | 2.831 | Si |
| SLU 74 | 112 | -18395 | 18808 | 7.57 | 35103 | 1.866 | Si |
| SLU 75 | -98 | -17145 | -18462 | 7.06 | 61969 | 3.357 | Si |
| SLU 75 | 112 | -18227 | 19035 | 7.5 | 38967 | 2.047 | Si |
| SLU 82 | -98 | -17565 | -19035 | 7.23 | 53404 | 2.806 | Si |
| SLU 82 | 112 | -18826 | 19691 | 7.75 | 24875 | 1.263 | Si |
| SLU 77 | -98 | -17976 | -18703 | 7.4 | 44584 | 2.384 | Si |
| SLU 77 | 112 | -18666 | 19180 | 7.68 | 28733 | 1.498 | Si |
| SLU 78 | -98 | -17480 | -18855 | 7.19 | 55174 | 2.926 | Si |
| SLU 78 | 112 | -18497 | 19407 | 7.61 | 32722 | 1.686 | Si |
| SLU 83 | -98 | -18397 | -19276 | 7.57 | 35065 | 1.819 | Si |
| SLU 83 | 112 | -19264 | 19836 | 7.93 | 13924 | 0.702 | No, M>Mu |
| SLU 84 | -98 | -17901 | -19429 | 7.37 | 46224 | 2.379 | Si |
| SLU 84 | 112 | -19096 | 20063 | 7.86 | 18188 | 0.907 | No, M>Mu |

| Comb. | Quota | N | M | σ0 | Mu | c.s. | Verifica |
|---|---|---|---|---|---|---|---|
| SLU 79 | -98 | -17851 | -18163 | 7.35 | 47315 | 2.605 | Si |
| SLU 79 | 112 | -18507 | 18622 | 7.62 | 32509 | 1.746 | Si |
| SLU 80 | -98 | -17356 | -18316 | 7.14 | 57736 | 3.152 | Si |
| SLU 80 | 112 | -18338 | 18849 | 7.55 | 36424 | 1.932 | Si |
| SLU 81 | -98 | -18061 | -18883 | 7.43 | 42700 | 2.261 | Si |
| SLU 81 | 112 | -18994 | 19464 | 7.82 | 20735 | 1.065 | Si |

Verifica a pressoflessione nel piano secondo D.M. 17-01-18 NTC §7.8.2.2.1 in combinazioni sismiche, γM = 2

| Comb. | Quota | N | M | σ0 | Mu | c.s. | Verifica |
|---|---|---|---|---|---|---|---|
| SLV 4 | -98 | -12888 | 96321 | 5.3 | 196933 | 2.045 | Si |
| SLV 4 | 112 | -12288 | -72479 | 5.06 | 194467 | 2.683 | Si |
| SLV 2 | -98 | -10357 | 102636 | 4.26 | 182096 | 1.774 | Si |
| SLV 2 | 112 | -11783 | -91470 | 4.85 | 191889 | 2.098 | Si |
| SLV 12 | -98 | -16061 | -54801 | 6.61 | 199075 | 3.633 | Si |
| SLV 12 | 112 | -13056 | 71046 | 5.37 | 197504 | 2.78 | Si |
| SLV 3 | -98 | -12888 | 96321 | 5.3 | 196933 | 2.045 | Si |
| SLV 3 | 112 | -12288 | -72479 | 5.06 | 194467 | 2.683 | Si |
| SLV 11 | -98 | -16061 | -54801 | 6.61 | 199075 | 3.633 | Si |
| SLV 11 | 112 | -13056 | 71046 | 5.37 | 197504 | 2.78 | Si |
| SLV 15 | -98 | -13226 | -124840 | 5.44 | 198033 | 1.586 | Si |
| SLV 15 | 112 | -12564 | 114243 | 5.17 | 195684 | 1.713 | Si |
| SLV 13 | -98 | -10695 | -118525 | 4.4 | 184753 | 1.559 | Si |
| SLV 13 | 112 | -12060 | 95253 | 4.96 | 193359 | 2.03 | Si |
| SLV 1 | -98 | -10357 | 102636 | 4.26 | 182096 | 1.774 | Si |
| SLV 1 | 112 | -11783 | -91470 | 4.85 | 191889 | 2.098 | Si |
| SLV 16 | -98 | -13226 | -124840 | 5.44 | 198033 | 1.586 | Si |
| SLV 16 | 112 | -12564 | 114243 | 5.17 | 195684 | 1.713 | Si |
| SLV 14 | -98 | -10695 | -118525 | 4.4 | 184753 | 1.559 | Si |
| SLV 14 | 112 | -12060 | 95253 | 4.96 | 193359 | 2.03 | Si |

Verifica a taglio nel piano secondo D.M. 17-01-18 (N.T.C.) §7.8.2.2.2 con rottura per scorrimento in combinazioni non sismiche, γM = 3

| Comb. | Quota | N | V par | M | σ0 | σN | l' | fvd | Vt scorr. | Vt fess.diag. | Vt,lim | c.s. | Verifica |
|---|---|---|---|---|---|---|---|---|---|---|---|---|---|
| SLU 83 | -98 | -18397 | -176 | -19276 | | 7.57 | 54 | 1.08 | 2633 | | | 14.98 | Si |
| SLU 83 | 112 | -19264 | -177 | 19836 | | 7.93 | 54 | 1.08 | 2633 | | | 14.83 | Si |
| SLU 81 | -98 | -18061 | -172 | -18883 | | 7.43 | 54 | 1.08 | 2633 | | | 15.32 | Si |
| SLU 81 | 112 | -18994 | -173 | 19464 | | 7.82 | 54 | 1.08 | 2633 | | | 15.17 | Si |
| SLU 77 | -98 | -17976 | -171 | -18703 | | 7.4 | 54 | 1.08 | 2633 | | | 15.42 | Si |
| SLU 77 | 112 | -18666 | -172 | 19180 | | 7.68 | 54 | 1.08 | 2633 | | | 15.27 | Si |
| SLU 75 | -98 | -17145 | -167 | -18462 | | 7.06 | 54 | 1.08 | 2633 | | | 15.81 | Si |
| SLU 75 | 112 | -18227 | -169 | 19035 | | 7.5 | 54 | 1.08 | 2633 | | | 15.57 | Si |
| SLU 84 | -98 | -17901 | -175 | -19429 | | 7.37 | 54 | 1.08 | 2633 | | | 15 | Si |
| SLU 84 | 112 | -19096 | -178 | 20063 | | 7.86 | 54 | 1.08 | 2633 | | | 14.78 | Si |
| SLU 74 | -98 | -17640 | -167 | -18309 | | 7.26 | 54 | 1.08 | 2633 | | | 15.78 | Si |
| SLU 74 | 112 | -18395 | -168 | 18808 | | 7.57 | 54 | 1.08 | 2633 | | | 15.63 | Si |
| SLU 79 | -98 | -17851 | -166 | -18163 | | 7.35 | 54 | 1.08 | 2633 | | | 15.88 | Si |
| SLU 79 | 112 | -18507 | -167 | 18622 | | 7.62 | 54 | 1.08 | 2633 | | | 15.73 | Si |
| SLU 78 | -98 | -17480 | -170 | -18855 | | 7.19 | 54 | 1.08 | 2633 | | | 15.44 | Si |
| SLU 78 | 112 | -18497 | -173 | 19407 | | 7.61 | 54 | 1.08 | 2633 | | | 15.21 | Si |
| SLU 82 | -98 | -17565 | -172 | -19035 | | 7.23 | 54 | 1.08 | 2633 | | | 15.35 | Si |
| SLU 82 | 112 | -18826 | -174 | 19691 | | 7.75 | 54 | 1.08 | 2633 | | | 15.12 | Si |
| SLU 80 | -98 | -17356 | -165 | -18316 | | 7.14 | 54 | 1.08 | 2633 | | | 15.92 | Si |
| SLU 80 | 112 | -18338 | -168 | 18849 | | 7.55 | 54 | 1.08 | 2633 | | | 15.67 | Si |

Verifica a taglio nel piano secondo D.M. 17-01-18 (N.T.C.) §7.8.2.2.2 con rottura per scorrimento in combinazioni sismiche, γM = 2

| Comb. | Quota | N | V par | M | σ0 | σN | l' | fvd | Vt scorr. | Vt fess.diag. | Vt,lim | c.s. | Verifica |
|---|---|---|---|---|---|---|---|---|---|---|---|---|---|
| SLV 16 | -98 | -13226 | -1116 | -124840 | | 5.58 | 52.68 | 1.63 | 3853 | | | 3.45 | Si |
| SLV 16 | 112 | -12564 | -959 | 114243 | | 5.2 | 53.72 | 1.63 | 3928 | | | 4.1 | Si |
| SLV 2 | -98 | -10357 | 915 | 102636 | | 4.49 | 51.27 | 1.63 | 3749 | | | 4.1 | Si |
| SLV 2 | 112 | -11783 | 756 | -91470 | | 4.85 | 54 | 1.63 | 3949 | | | 5.22 | Si |
| SLD 15 | -98 | -12396 | -542 | -60222 | | 5.1 | 54 | 1.63 | 3949 | | | 7.28 | Si |
| SLD 15 | 112 | -12338 | -470 | 55612 | | 5.08 | 54 | 1.63 | 3949 | | | 8.4 | Si |
| SLV 1 | -98 | -10357 | 915 | 102636 | | 4.49 | 51.27 | 1.63 | 3749 | | | 4.1 | Si |
| SLV 1 | 112 | -11783 | 756 | -91470 | | 4.85 | 54 | 1.63 | 3949 | | | 5.22 | Si |
| SLV 4 | -98 | -12888 | 835 | 96321 | | 5.3 | 54 | 1.63 | 3949 | | | 4.73 | Si |
| SLV 4 | 112 | -12288 | 689 | -72479 | | 5.06 | 54 | 1.63 | 3949 | | | 5.73 | Si |
| SLV 15 | -98 | -13226 | -1116 | -124840 | | 5.58 | 52.68 | 1.63 | 3853 | | | 3.45 | Si |
| SLV 15 | 112 | -12564 | -959 | 114243 | | 5.2 | 53.72 | 1.63 | 3928 | | | 4.1 | Si |
| SLV 13 | -98 | -10695 | -1036 | -118525 | | 4.98 | 47.75 | 1.63 | 3492 | | | 3.37 | Si |
| SLV 13 | 112 | -12060 | -892 | 95253 | | 4.96 | 54 | 1.63 | 3949 | | | 4.43 | Si |
| SLV 3 | -98 | -12888 | 835 | 96321 | | 5.3 | 54 | 1.63 | 3949 | | | 4.73 | Si |
| SLV 3 | 112 | -12288 | 689 | -72479 | | 5.06 | 54 | 1.63 | 3949 | | | 5.73 | Si |
| SLV 14 | -98 | -10695 | -1036 | -118525 | | 4.98 | 47.75 | 1.63 | 3492 | | | 3.37 | Si |
| SLV 14 | 112 | -12060 | -892 | 95253 | | 4.96 | 54 | 1.63 | 3949 | | | 4.43 | Si |
| SLD 16 | -98 | -12396 | -542 | -60222 | | 5.1 | 54 | 1.63 | 3949 | | | 7.28 | Si |
| SLD 16 | 112 | -12338 | -470 | 55612 | | 5.08 | 54 | 1.63 | 3949 | | | 8.4 | Si |

Verifica a pressoflessione fuori piano D.M. 17-01-18 (N.T.C.)

quota 36.5 Wa 0.08 denominatore 8 γM = 2

| Comb. | fd | Sa | σ0 | N | M | Mc | Coeff.s. | Verifica |
|---|---|---|---|---|---|---|---|---|
| SLV 6 | 14 | 0.25 | 3.87 | -9407 | 3319 | 144601 | 43.56 | Si |
| SLV 5 | 14 | 0.25 | 3.87 | -9407 | 3319 | 144601 | 43.56 | Si |
| SLV 9 | 14 | 0.25 | 3.88 | -9422 | 3319 | 144725 | 43.6 | Si |
| SLV 10 | 14 | 0.25 | 3.88 | -9422 | 3319 | 144725 | 43.6 | Si |
| SLV 1 | 14 | 0.25 | 4.42 | -10730 | 3319 | 154176 | 46.45 | Si |
| SLV 2 | 14 | 0.25 | 4.42 | -10730 | 3319 | 154176 | 46.45 | Si |
| SLV 13 | 14 | 0.25 | 4.44 | -10780 | 3319 | 154486 | 46.54 | Si |
| SLV 14 | 14 | 0.25 | 4.44 | -10780 | 3319 | 154486 | 46.54 | Si |

| Comb. | fd | Sa | σ0 | N | M | Mc | Coeff.s. | Verifica |
|---|---|---|---|---|---|---|---|---|
| SLV 3 | 14 | 0.25 | 4.89 | -11878 | 3319 | 160341 | 48.3 | Si |
| SLV 4 | 14 | 0.25 | 4.89 | -11878 | 3319 | 160341 | 48.3 | Si |

### Verifica dei meccanismi locali di collasso con analisi cinematica lineare

forza di aggancio al piano = 0 quota mezzeria = 36.5 Wa = 0.08 Ta = 0.0269

| Comb. | N top | N base | V orto | α0 | M* | e* | a0* | aLim | Verifica |
|---|---|---|---|---|---|---|---|---|---|
| SLV 9 | -5666 | -7624 | 367 | 0.033 | 6.69 | 0.959 | 49.824 | 417.584 | No |
| SLV 10 | -5666 | -7624 | 367 | 0.033 | 6.69 | 0.959 | 49.824 | 417.584 | No |
| SLV 5 | -5743 | -7523 | 366 | 0.034 | 6.769 | 0.96 | 50.848 | 417.584 | No |
| SLV 6 | -5743 | -7523 | 366 | 0.034 | 6.769 | 0.96 | 50.848 | 417.584 | No |
| SLV 12 | -5607 | -16061 | -332 | 0.038 | 6.63 | 0.959 | 57.593 | 417.584 | No |
| SLV 11 | -5607 | -16061 | -332 | 0.038 | 6.63 | 0.959 | 57.593 | 417.584 | No |
| SLV 8 | -5684 | -15959 | -332 | 0.038 | 6.709 | 0.959 | 58.305 | 417.584 | No |
| SLV 7 | -5684 | -15959 | -332 | 0.038 | 6.709 | 0.959 | 58.305 | 417.584 | No |
| SLV 14 | -5556 | -10695 | 123 | 0.072 | 6.578 | 0.959 | 108.691 | 332.581 | No |
| SLV 13 | -5556 | -10695 | 123 | 0.072 | 6.578 | 0.959 | 108.691 | 332.581 | No |

### Tabella dei coefficienti di sicurezza minimi

| Stato limite | Coeff.s. | Comb. | Verifica |
|---|---|---|---|
| PF_SLU | 0.702 | SLU 83 | No |
| V_SLU | 14.779 | SLU 84 | Si |
| PF_SLV | 1.559 | SLV 13 | Si |
| V_SLV | 3.372 | SLV 13 | Si |
| PFFP_SLV | 43.562 | SLV 5 | Si |
| R_SLV | 0.119 | SLV 9 | No |

## Maschio 33

Verifiche condotte secondo D.M. 17-01-18 (N.T.C.)

### Dati geometrici

| X ini. | Y ini. | X fin. | Y fin. | Quota i. | Quota.s | l | Sp. | h netta | h ini. | h fin. | a | a.s.,sx | a.s.,dx |
|---|---|---|---|---|---|---|---|---|---|---|---|---|---|
| -12.3 | 104.6 | -508.8 | 104.6 | L1 | L3 | 496.5 | 45 | 269 | 269 | 269 | | | |

### Caratteristiche del materiale

(Circolare 7 21-01-19 C8.5.I) Muratura in mattoni pieni e malta di calce LC2_Corti

| fb | fk | fvk0 | fmedio | τ0 | fv0 | μ | ϕ | fv,lim | E | G | FC |
|---|---|---|---|---|---|---|---|---|---|---|---|
| 60 | | | 34.5 | 0.9 | 2 | 0.58 | 0.77 | 3.25 | 32000 | 12800 | 1.2 |

### Verifica a pressoflessione nel piano secondo D.M. 17-01-18 NTC §7.8.2.2.1 in combinazioni non sismiche, γM = 3

| Comb. | Quota | N | M | σ0 | Mu | c.s. | Verifica |
|---|---|---|---|---|---|---|---|
| SLU 74 | -98 | -108209 | -467808 | 4.84 | 10891274 | 23.281 | Si |
| SLU 74 | 112 | -105431 | 1064329 | 4.72 | 11011172 | 10.346 | Si |
| SLU 82 | -98 | -111580 | -451602 | 4.99 | 10717509 | 23.732 | Si |
| SLU 82 | 112 | -109046 | 1076842 | 4.88 | 10851020 | 10.077 | Si |
| SLU 39 | -98 | -94747 | -318150 | 4.24 | 11276106 | 35.443 | Si |
| SLU 39 | 112 | -93813 | 1089753 | 4.2 | 11284469 | 10.355 | Si |
| SLU 78 | -98 | -109323 | -519937 | 4.89 | 10837290 | 20.843 | Si |
| SLU 78 | 112 | -106588 | 1019280 | 4.77 | 10963809 | 10.756 | Si |
| SLU 41 | -98 | -95727 | -336173 | 4.28 | 11264779 | 33.509 | Si |
| SLU 41 | 112 | -94918 | 1118456 | 4.25 | 11274323 | 10.08 | Si |
| SLU 84 | -98 | -112560 | -469625 | 5.04 | 10661194 | 22.701 | Si |
| SLU 84 | 112 | -110151 | 1105545 | 4.93 | 10794959 | 9.764 | Si |
| SLU 81 | -98 | -111446 | -417496 | 4.99 | 10725014 | 25.689 | Si |
| SLU 81 | 112 | -108994 | 1150594 | 4.88 | 10853566 | 9.433 | Si |
| SLU 83 | -98 | -112426 | -435519 | 5.03 | 10669057 | 24.497 | Si |
| SLU 83 | 112 | -110099 | 1179297 | 4.93 | 10797660 | 9.156 | Si |
| SLU 79 | -98 | -108482 | -460891 | 4.86 | 10878377 | 23.603 | Si |
| SLU 79 | 112 | -105743 | 1089079 | 4.73 | 10998742 | 10.099 | Si |
| SLU 77 | -98 | -109189 | -485831 | 4.89 | 10843969 | 22.32 | Si |
| SLU 77 | 112 | -106536 | 1093032 | 4.77 | 10966007 | 10.033 | Si |

### Verifica a pressoflessione nel piano secondo D.M. 17-01-18 NTC §7.8.2.2.1 in combinazioni sismiche, γM = 2

| Comb. | Quota | N | M | σ0 | Mu | c.s. | Verifica |
|---|---|---|---|---|---|---|---|
| SLV 4 | -98 | -73468 | 5060392 | 3.29 | 13330225 | 2.634 | Si |
| SLV 4 | 112 | -59897 | 1570859 | 2.68 | 11607031 | 7.389 | Si |
| SLV 16 | -98 | -73303 | -5824995 | 3.28 | 13311266 | 2.285 | Si |
| SLV 16 | 112 | -80425 | -215506 | 3.6 | 14083712 | 65.352 | Si |
| SLV 15 | -98 | -73303 | -5824995 | 3.28 | 13311266 | 2.285 | Si |
| SLV 15 | 112 | -80425 | -215506 | 3.6 | 14083712 | 65.352 | Si |
| SLD 15 | -98 | -73693 | -2704475 | 3.3 | 13355950 | 4.938 | Si |
| SLD 15 | 112 | -75004 | 257924 | 3.36 | 13504122 | 52.357 | Si |
| SLV 13 | -98 | -74651 | -5728223 | 3.34 | 13464507 | 2.351 | Si |
| SLV 13 | 112 | -81934 | -352630 | 3.67 | 14235513 | 40.37 | Si |
| SLV 14 | -98 | -74651 | -5728223 | 3.34 | 13464507 | 2.351 | Si |
| SLV 14 | 112 | -81934 | -352630 | 3.67 | 14235513 | 40.37 | Si |
| SLV 2 | -98 | -74816 | 5157164 | 3.35 | 13483061 | 2.614 | Si |
| SLV 2 | 112 | -61406 | 1433735 | 2.75 | 11815164 | 8.241 | Si |
| SLV 1 | -98 | -74816 | 5157164 | 3.35 | 13483061 | 2.614 | Si |
| SLV 1 | 112 | -61406 | 1433735 | 2.75 | 11815164 | 8.241 | Si |
| SLV 3 | -98 | -73468 | 5060392 | 3.29 | 13330225 | 2.634 | Si |
| SLV 3 | 112 | -59897 | 1570859 | 2.68 | 11607031 | 7.389 | Si |
| SLD 16 | -98 | -73693 | -2704475 | 3.3 | 13355950 | 4.938 | Si |
| SLD 16 | 112 | -75004 | 257924 | 3.36 | 13504122 | 52.357 | Si |

Verifica a taglio nel piano secondo D.M. 17-01-18 (N.T.C.) §7.8.2.2.2 con rottura per scorrimento in combinazioni non sismiche, γM = 3

| Comb. | Quota | N | V par | M | σ0 | σN | l' | fvd | Vt scorr. | Vt fess.diag. | Vt,lim | c.s. | Verifica |
|---|---|---|---|---|---|---|---|---|---|---|---|---|---|
| SLU 82 | -98 | -111580 | -16366 | -451602 | | 4.99 | 496.5 | 1.08 | 24204 | | | 1.48 | Si |
| SLU 82 | 112 | -109046 | -16444 | 1076842 | | 4.88 | 496.5 | 1.08 | 24204 | | | 1.47 | Si |
| SLU 80 | -98 | -108616 | -15943 | -494997 | | 4.86 | 496.5 | 1.08 | 24204 | | | 1.52 | Si |
| SLU 80 | 112 | -105795 | -16019 | 1015326 | | 4.74 | 496.5 | 1.08 | 24204 | | | 1.51 | Si |
| SLU 81 | -98 | -111446 | -16650 | -417496 | | 4.99 | 496.5 | 1.08 | 24204 | | | 1.45 | Si |
| SLU 81 | 112 | -108994 | -16731 | 1150594 | | 4.88 | 496.5 | 1.08 | 24204 | | | 1.45 | Si |
| SLU 74 | -98 | -108209 | -16095 | -467808 | | 4.84 | 496.5 | 1.08 | 24204 | | | 1.5 | Si |
| SLU 74 | 112 | -105431 | -16173 | 1064329 | | 4.72 | 496.5 | 1.08 | 24204 | | | 1.5 | Si |
| SLU 78 | -98 | -109323 | -16181 | -519937 | | 4.89 | 496.5 | 1.08 | 24204 | | | 1.5 | Si |
| SLU 78 | 112 | -106588 | -16258 | 1019280 | | 4.77 | 496.5 | 1.08 | 24204 | | | 1.49 | Si |
| SLU 83 | -98 | -112426 | -17019 | -435519 | | 5.03 | 496.5 | 1.08 | 24204 | | | 1.42 | Si |
| SLU 83 | 112 | -110099 | -17101 | 1179297 | | 4.93 | 496.5 | 1.08 | 24204 | | | 1.42 | Si |
| SLU 75 | -98 | -108343 | -15811 | -501914 | | 4.85 | 496.5 | 1.08 | 24204 | | | 1.53 | Si |
| SLU 75 | 112 | -105483 | -15887 | 990577 | | 4.72 | 496.5 | 1.08 | 24204 | | | 1.52 | Si |
| SLU 77 | -98 | -109189 | -16465 | -485831 | | 4.89 | 496.5 | 1.08 | 24204 | | | 1.47 | Si |
| SLU 77 | 112 | -106536 | -16544 | 1093032 | | 4.77 | 496.5 | 1.08 | 24204 | | | 1.46 | Si |
| SLU 79 | -98 | -108482 | -16227 | -460891 | | 4.86 | 496.5 | 1.08 | 24204 | | | 1.49 | Si |
| SLU 79 | 112 | -105743 | -16305 | 1089079 | | 4.73 | 496.5 | 1.08 | 24204 | | | 1.48 | Si |
| SLU 84 | -98 | -112560 | -16735 | -469625 | | 5.04 | 496.5 | 1.08 | 24204 | | | 1.45 | Si |
| SLU 84 | 112 | -110151 | -16815 | 1105545 | | 4.93 | 496.5 | 1.08 | 24204 | | | 1.44 | Si |

Verifica a taglio nel piano secondo D.M. 17-01-18 (N.T.C.) §7.8.2.2.2 con rottura per scorrimento in combinazioni sismiche, γM = 2

| Comb. | Quota | N | V par | M | σ0 | σN | l' | fvd | Vt scorr. | Vt fess.diag. | Vt,lim | c.s. | Verifica |
|---|---|---|---|---|---|---|---|---|---|---|---|---|---|
| SLV 1 | -98 | -74816 | 25358 | 5157164 | | 3.35 | 496.5 | 1.5 | 33582 | | | 1.32 | Si |
| SLV 1 | 112 | -61406 | 22965 | 1433735 | | 2.75 | 496.5 | 1.38 | 30900 | | | 1.35 | Si |
| SLD 14 | -98 | -74271 | -24584 | -2663366 | | 3.32 | 496.5 | 1.5 | 33473 | | | 1.36 | Si |
| SLD 14 | 112 | -75639 | -23991 | 201722 | | 3.39 | 496.5 | 1.51 | 33747 | | | 1.41 | Si |
| SLD 13 | -98 | -74271 | -24584 | -2663366 | | 3.32 | 496.5 | 1.5 | 33473 | | | 1.36 | Si |
| SLD 13 | 112 | -75639 | -23991 | 201722 | | 3.39 | 496.5 | 1.51 | 33747 | | | 1.41 | Si |
| SLD 16 | -98 | -73693 | -25431 | -2704475 | | 3.3 | 496.5 | 1.49 | 33357 | | | 1.31 | Si |
| SLD 16 | 112 | -75004 | -24435 | 257924 | | 3.36 | 496.5 | 1.5 | 33620 | | | 1.38 | Si |
| SLV 14 | -98 | -74651 | -43479 | -5728223 | | 3.34 | 496.5 | 1.5 | 33549 | | | 0.77 | No, Vu<V |
| SLV 14 | 112 | -81934 | -42151 | -352630 | | 3.67 | 496.5 | 1.57 | 35006 | | | 0.83 | No, Vu<V |
| SLV 13 | -98 | -74651 | -43479 | -5728223 | | 3.34 | 496.5 | 1.5 | 33549 | | | 0.77 | No, Vu<V |
| SLV 13 | 112 | -81934 | -42151 | -352630 | | 3.67 | 496.5 | 1.57 | 35006 | | | 0.83 | No, Vu<V |
| SLD 15 | -98 | -73693 | -25431 | -2704475 | | 3.3 | 496.5 | 1.49 | 33357 | | | 1.31 | Si |
| SLD 15 | 112 | -75004 | -24435 | 257924 | | 3.36 | 496.5 | 1.5 | 33620 | | | 1.38 | Si |
| SLV 2 | -98 | -74816 | 25358 | 5157164 | | 3.35 | 496.5 | 1.5 | 33582 | | | 1.32 | Si |
| SLV 2 | 112 | -61406 | 22965 | 1433735 | | 2.75 | 496.5 | 1.38 | 30900 | | | 1.35 | Si |
| SLV 15 | -98 | -73303 | -45510 | -5824995 | | 3.28 | 496.5 | 1.49 | 33279 | | | 0.73 | No, Vu<V |
| SLV 15 | 112 | -80425 | -43223 | -215506 | | 3.6 | 496.5 | 1.55 | 34704 | | | 0.8 | No, Vu<V |
| SLV 16 | -98 | -73303 | -45510 | -5824995 | | 3.28 | 496.5 | 1.49 | 33279 | | | 0.73 | No, Vu<V |
| SLV 16 | 112 | -80425 | -43223 | -215506 | | 3.6 | 496.5 | 1.55 | 34704 | | | 0.8 | No, Vu<V |

Verifica a pressoflessione fuori piano D.M. 17-01-18 (N.T.C.)

quota 36.5 Wa 0.08 denominatore 8 γM = 2

| Comb. | fd | Sa | σ0 | N | M | Mc | Coeff.s. | Verifica |
|---|---|---|---|---|---|---|---|---|
| SLV 3 | 14 | 0.25 | 2.96 | -66184 | 30520 | 1128121 | 36.96 | Si |
| SLV 4 | 14 | 0.25 | 2.96 | -66184 | 30520 | 1128121 | 36.96 | Si |
| SLV 1 | 14 | 0.25 | 3.02 | -67415 | 30520 | 1142260 | 37.43 | Si |
| SLV 2 | 14 | 0.25 | 3.02 | -67415 | 30520 | 1142260 | 37.43 | Si |
| SLV 7 | 14 | 0.25 | 3.07 | -68640 | 30520 | 1156090 | 37.88 | Si |
| SLV 8 | 14 | 0.25 | 3.07 | -68640 | 30520 | 1156090 | 37.88 | Si |
| SLV 11 | 14 | 0.25 | 3.22 | -71976 | 30520 | 1192486 | 39.07 | Si |
| SLV 12 | 14 | 0.25 | 3.22 | -71976 | 30520 | 1192486 | 39.07 | Si |
| SLV 5 | 14 | 0.25 | 3.26 | -72742 | 30520 | 1200589 | 39.34 | Si |
| SLV 6 | 14 | 0.25 | 3.26 | -72742 | 30520 | 1200589 | 39.34 | Si |

Verifica dei meccanismi locali di collasso con analisi cinematica lineare

forza di aggancio al piano = 0 quota mezzeria = 36.5 Wa = 0.08 Ta = 0.0269

| Comb. | N top | N base | V orto | α0 | M* | e* | a0* | aLim | Verifica |
|---|---|---|---|---|---|---|---|---|---|
| SLV 6 | -62819 | -76331 | 836 | 0.078 | 72.42 | 0.965 | 117.53 | 417.584 | No |
| SLV 5 | -62819 | -76331 | 836 | 0.078 | 72.42 | 0.965 | 117.53 | 417.584 | No |
| SLV 10 | -67263 | -76281 | 833 | 0.078 | 76.943 | 0.967 | 117.882 | 417.584 | No |
| SLV 9 | -67263 | -76281 | 833 | 0.078 | 76.943 | 0.967 | 117.882 | 417.584 | No |
| SLV 8 | -57321 | -71838 | -788 | 0.078 | 66.826 | 0.962 | 118.282 | 417.584 | No |
| SLV 7 | -57321 | -71838 | -788 | 0.078 | 66.826 | 0.962 | 118.282 | 417.584 | No |
| SLV 11 | -61764 | -71789 | -791 | 0.079 | 71.347 | 0.964 | 118.47 | 417.584 | No |
| SLV 12 | -61764 | -71789 | -791 | 0.079 | 71.347 | 0.964 | 118.47 | 417.584 | No |
| SLV 14 | -70522 | -74651 | 261 | 0.086 | 80.261 | 0.968 | 129.375 | 332.581 | No |
| SLV 13 | -70522 | -74651 | 261 | 0.086 | 80.261 | 0.968 | 129.375 | 332.581 | No |

Tabella dei coefficienti di sicurezza minimi

| Stato limite | Coeff.s. | Comb. | Verifica |
|---|---|---|---|
| PF_SLU | 9.156 | SLU 83 | Si |
| V_SLU | 1.415 | SLU 83 | Si |
| PF_SLV | 2.285 | SLV 15 | Si |
| V_SLV | 0.731 | SLV 15 | No |
| PFFP_SLV | 36.963 | SLV 3 | Si |
| R_SLV | 0.281 | SLV 5 | No |

## Maschio 34

Verifiche condotte secondo D.M. 17-01-18 (N.T.C.)

### Dati geometrici

| X ini. | Y ini. | X fin. | Y fin. | Quota i. | Quota.s | l | Sp. | h netta | h ini. | h fin. | a | a.s.,sx | a.s.,dx |
|---|---|---|---|---|---|---|---|---|---|---|---|---|---|
| -1969.3 | 657.6 | -1776.8 | 657.6 | L1 | L3 | 192.5 | 45 | 269 | 269 | 269 | | | |

### Caratteristiche del materiale

(Circolare 7 21-01-19 C8.5.I) Muratura in mattoni pieni e malta di calce LC2_Corti

| fb | fk | fvk0 | fmedio | τ0 | fv0 | μ | ϕ | fv,lim | E | G | FC |
|---|---|---|---|---|---|---|---|---|---|---|---|
| 60 | | | 34.5 | 0.9 | 2 | 0.58 | 0.77 | 3.25 | 32000 | 12800 | 1.2 |

### Verifica a pressoflessione nel piano secondo D.M. 17-01-18 NTC §7.8.2.2.1 in combinazioni non sismiche, γM = 3

| Comb. | Quota | N | M | σ0 | Mu | c.s. | Verifica |
|---|---|---|---|---|---|---|---|
| SLU 77 | 102 | -24330 | -404483 | 2.81 | 1534331 | 3.793 | Si |
| SLU 77 | 142 | -24533 | -505536 | 2.83 | 1540340 | 3.047 | Si |
| SLU 83 | 102 | -25072 | -425734 | 2.89 | 1555747 | 3.654 | Si |
| SLU 83 | 142 | -25318 | -524720 | 2.92 | 1562508 | 2.978 | Si |
| SLU 82 | 102 | -25039 | -432415 | 2.89 | 1554828 | 3.596 | Si |
| SLU 82 | 142 | -25304 | -526929 | 2.92 | 1562144 | 2.965 | Si |
| SLU 78 | 102 | -24333 | -405165 | 2.81 | 1534409 | 3.787 | Si |
| SLU 78 | 142 | -24538 | -505910 | 2.83 | 1540487 | 3.045 | Si |
| SLU 81 | 102 | -25036 | -431734 | 2.89 | 1554755 | 3.601 | Si |
| SLU 81 | 142 | -25299 | -526554 | 2.92 | 1562008 | 2.966 | Si |
| SLU 84 | 102 | -25075 | -426416 | 2.89 | 1555819 | 3.649 | Si |
| SLU 84 | 142 | -25323 | -525094 | 2.92 | 1562644 | 2.976 | Si |
| SLU 73 | 102 | -24005 | -411406 | 2.77 | 1524472 | 3.706 | Si |
| SLU 73 | 142 | -24228 | -503420 | 2.8 | 1531274 | 3.042 | Si |
| SLU 75 | 102 | -24297 | -411164 | 2.8 | 1533345 | 3.729 | Si |
| SLU 75 | 142 | -24520 | -507745 | 2.83 | 1539948 | 3.033 | Si |
| SLU 74 | 102 | -24294 | -410483 | 2.8 | 1533267 | 3.735 | Si |
| SLU 74 | 142 | -24515 | -507370 | 2.83 | 1539801 | 3.035 | Si |
| SLU 76 | 102 | -24040 | -405406 | 2.78 | 1525564 | 3.763 | Si |
| SLU 76 | 142 | -24247 | -501586 | 2.8 | 1531827 | 3.054 | Si |

### Verifica a pressoflessione nel piano secondo D.M. 17-01-18 NTC §7.8.2.2.1 in combinazioni sismiche, γM = 2

| Comb. | Quota | N | M | σ0 | Mu | c.s. | Verifica |
|---|---|---|---|---|---|---|---|
| SLD 2 | 102 | -15736 | -385655 | 1.82 | 1289447 | 3.344 | Si |
| SLD 2 | 142 | -16102 | -371881 | 1.86 | 1314032 | 3.533 | Si |
| SLV 1 | 102 | -14257 | -518284 | 1.65 | 1187376 | 2.291 | Si |
| SLV 1 | 142 | -14962 | -399155 | 1.73 | 1236537 | 3.098 | Si |
| SLD 1 | 102 | -15736 | -385655 | 1.82 | 1289447 | 3.344 | Si |
| SLD 1 | 142 | -16102 | -371881 | 1.86 | 1314032 | 3.533 | Si |
| SLV 4 | 102 | -18898 | -522920 | 2.18 | 1494159 | 2.857 | Si |
| SLV 4 | 142 | -20017 | -438961 | 2.31 | 1562295 | 3.559 | Si |
| SLV 9 | 102 | -9134 | -202683 | 1.05 | 803273 | 3.963 | Si |
| SLV 9 | 142 | -8300 | -261461 | 0.96 | 736243 | 2.816 | Si |
| SLV 5 | 102 | -8999 | -345848 | 1.04 | 792528 | 2.292 | Si |
| SLV 5 | 142 | -8653 | -303578 | 1 | 764761 | 2.519 | Si |
| SLV 3 | 102 | -18898 | -522920 | 2.18 | 1494159 | 2.857 | Si |
| SLV 3 | 142 | -20017 | -438961 | 2.31 | 1562295 | 3.559 | Si |
| SLV 10 | 102 | -9134 | -202683 | 1.05 | 803273 | 3.963 | Si |
| SLV 10 | 142 | -8300 | -261461 | 0.96 | 736243 | 2.816 | Si |
| SLV 6 | 102 | -8999 | -345848 | 1.04 | 792528 | 2.292 | Si |
| SLV 6 | 142 | -8653 | -303578 | 1 | 764761 | 2.519 | Si |
| SLV 2 | 102 | -14257 | -518284 | 1.65 | 1187376 | 2.291 | Si |
| SLV 2 | 142 | -14962 | -399155 | 1.73 | 1236537 | 3.098 | Si |

### Verifica a taglio nel piano secondo D.M. 17-01-18 (N.T.C.) §7.8.2.2.2 con rottura per scorrimento in combinazioni non sismiche, γM = 3

| Comb. | Quota | N | V par | M | σ0 | σN | l' | fvd | Vt scorr. | Vt fess.diag. | Vt,lim | c.s. | Verifica |
|---|---|---|---|---|---|---|---|---|---|---|---|---|---|
| SLU 69 | 102 | -21913 | 177 | -354399 | | 2.53 | 192.5 | 0.89 | 7734 | | | 43.7 | Si |
| SLU 69 | 142 | -22014 | 574 | -450101 | | 2.54 | 192.5 | 0.89 | 7748 | | | 13.51 | Si |
| SLU 9 | 102 | -15546 | 235 | -244170 | | 1.79 | 192.5 | 0.79 | 6885 | | | 29.27 | Si |
| SLU 9 | 142 | -15560 | 515 | -315298 | | 1.8 | 192.5 | 0.8 | 6887 | | | 13.37 | Si |
| SLU 29 | 102 | -17780 | 219 | -286176 | | 2.05 | 192.5 | 0.83 | 7183 | | | 32.73 | Si |
| SLU 29 | 142 | -17880 | 542 | -365432 | | 2.06 | 192.5 | 0.83 | 7196 | | | 13.29 | Si |
| SLU 72 | 102 | -21657 | 203 | -348868 | | 2.5 | 192.5 | 0.89 | 7700 | | | 37.86 | Si |
| SLU 72 | 142 | -21743 | 595 | -444067 | | 2.51 | 192.5 | 0.89 | 7712 | | | 12.97 | Si |
| SLU 48 | 102 | -19677 | 206 | -311712 | | 2.27 | 192.5 | 0.86 | 7436 | | | 36.04 | Si |
| SLU 48 | 142 | -19689 | 560 | -399593 | | 2.27 | 192.5 | 0.86 | 7438 | | | 13.27 | Si |
| SLU 71 | 102 | -21655 | 217 | -348186 | | 2.5 | 192.5 | 0.89 | 7700 | | | 35.49 | Si |
| SLU 71 | 142 | -21738 | 608 | -443692 | | 2.51 | 192.5 | 0.89 | 7711 | | | 12.68 | Si |
| SLU 8 | 102 | -15543 | 249 | -243488 | | 1.79 | 192.5 | 0.79 | 6885 | | | 27.68 | Si |
| SLU 8 | 142 | -15555 | 528 | -314924 | | 1.8 | 192.5 | 0.79 | 6886 | | | 13.03 | Si |
| SLU 49 | 102 | -19679 | 193 | -312394 | | 2.27 | 192.5 | 0.86 | 7436 | | | 38.58 | Si |
| SLU 49 | 142 | -19694 | 547 | -399968 | | 2.27 | 192.5 | 0.86 | 7438 | | | 13.6 | Si |
| SLU 51 | 102 | -19421 | 233 | -306181 | | 2.24 | 192.5 | 0.85 | 7402 | | | 31.81 | Si |
| SLU 51 | 142 | -19418 | 582 | -393559 | | 2.24 | 192.5 | 0.85 | 7402 | | | 12.73 | Si |
| SLU 50 | 102 | -19418 | 246 | -305499 | | 2.24 | 192.5 | 0.85 | 7402 | | | 30.06 | Si |
| SLU 50 | 142 | -19413 | 595 | -393185 | | 2.24 | 192.5 | 0.85 | 7401 | | | 12.44 | Si |

### Verifica a taglio nel piano secondo D.M. 17-01-18 (N.T.C.) §7.8.2.2.2 con rottura per scorrimento in combinazioni sismiche, γM = 2

| Comb. | Quota | N | V par | M | σ0 | σN | l' | fvd | Vt scorr. | Vt fess.diag. | Vt,lim | c.s. | Verifica |
|---|---|---|---|---|---|---|---|---|---|---|---|---|---|
| SLV 1 | 102 | -14257 | -8702 | -518284 | | 1.76 | 179.69 | 1.19 | 9590 | | | 1.1 | Si |
| SLV 1 | 142 | -14962 | -8301 | -399155 | | 1.73 | 192.5 | 1.18 | 10211 | | | 1.23 | Si |
| SLV 14 | 102 | -14706 | 7295 | -41066 | | 1.7 | 192.5 | 1.17 | 10160 | | | 1.39 | Si |

| Comb. | Quota | N | V par | M | σ0 | σN | l' | fvd | Vt scorr. | Vt fess.diag. | Vt,lim | c.s. | Verifica |
|---|---|---|---|---|---|---|---|---|---|---|---|---|---|
| SLV 14 | 142 | -13786 | 7635 | -258763 | | 1.59 | 192.5 | 1.15 | 9976 | | | 1.31 | Si |
| SLV 4 | 102 | -18898 | -7465 | -522920 | | 2.18 | 192.5 | 1.27 | 10998 | | | 1.47 | Si |
| SLV 4 | 142 | -20017 | -7197 | -438961 | | 2.31 | 192.5 | 1.3 | 11222 | | | 1.56 | Si |
| SLV 16 | 102 | -19347 | 8531 | -45703 | | 2.23 | 192.5 | 1.28 | 11088 | | | 1.3 | Si |
| SLV 16 | 142 | -18841 | 8738 | -298569 | | 2.18 | 192.5 | 1.27 | 10987 | | | 1.26 | Si |
| SLV 6 | 102 | -8999 | -4546 | -345848 | | 1.15 | 173.46 | 1.06 | 8304 | | | 1.83 | Si |
| SLV 6 | 142 | -8653 | -4010 | -303578 | | 1.05 | 183.5 | 1.04 | 8612 | | | 2.15 | Si |
| SLV 15 | 102 | -19347 | 8531 | -45703 | | 2.23 | 192.5 | 1.28 | 11088 | | | 1.3 | Si |
| SLV 15 | 142 | -18841 | 8738 | -298569 | | 2.18 | 192.5 | 1.27 | 10987 | | | 1.26 | Si |
| SLV 5 | 102 | -8999 | -4546 | -345848 | | 1.15 | 173.46 | 1.06 | 8304 | | | 1.83 | Si |
| SLV 5 | 142 | -8653 | -4010 | -303578 | | 1.05 | 183.5 | 1.04 | 8612 | | | 2.15 | Si |
| SLV 2 | 102 | -14257 | -8702 | -518284 | | 1.76 | 179.69 | 1.19 | 9590 | | | 1.1 | Si |
| SLV 2 | 142 | -14962 | -8301 | -399155 | | 1.73 | 192.5 | 1.18 | 10211 | | | 1.23 | Si |
| SLV 3 | 102 | -18898 | -7465 | -522920 | | 2.18 | 192.5 | 1.27 | 10998 | | | 1.47 | Si |
| SLV 3 | 142 | -20017 | -7197 | -438961 | | 2.31 | 192.5 | 1.3 | 11222 | | | 1.56 | Si |
| SLV 13 | 102 | -14706 | 7295 | -41066 | | 1.7 | 192.5 | 1.17 | 10160 | | | 1.39 | Si |
| SLV 13 | 142 | -13786 | 7635 | -258763 | | 1.59 | 192.5 | 1.15 | 9976 | | | 1.31 | Si |

### Verifica a pressoflessione fuori piano D.M. 17-01-18 (N.T.C.)

quota 36.5 Wa 0.08 denominatore 8 γM = 2

| Comb. | fd | Sa | σ0 | N | M | Mc | Coeff.s. | Verifica |
|---|---|---|---|---|---|---|---|---|
| SLV 9 | 14 | 0.25 | 1.1 | -9517 | 11833 | 194881 | 16.47 | Si |
| SLV 10 | 14 | 0.25 | 1.1 | -9517 | 11833 | 194881 | 16.47 | Si |
| SLV 6 | 14 | 0.25 | 1.11 | -9617 | 11833 | 196717 | 16.62 | Si |
| SLV 5 | 14 | 0.25 | 1.11 | -9617 | 11833 | 196717 | 16.62 | Si |
| SLV 14 | 14 | 0.25 | 1.81 | -15690 | 11833 | 300692 | 25.41 | Si |
| SLV 13 | 14 | 0.25 | 1.81 | -15690 | 11833 | 300692 | 25.41 | Si |
| SLV 2 | 14 | 0.25 | 1.85 | -16022 | 11833 | 305925 | 25.85 | Si |
| SLV 1 | 14 | 0.25 | 1.85 | -16022 | 11833 | 305925 | 25.85 | Si |
| SLV 16 | 14 | 0.25 | 2.43 | -21080 | 11833 | 379844 | 32.1 | Si |
| SLV 15 | 14 | 0.25 | 2.43 | -21080 | 11833 | 379844 | 32.1 | Si |

### Verifica dei meccanismi locali di collasso con analisi cinematica lineare

forza di aggancio al piano = 0 quota mezzeria = 36.5 Wa = 0.08 Ta = 0.0269

| Comb. | N top | N base | V orto | α0 | M* | e* | a0* | aLim | Verifica |
|---|---|---|---|---|---|---|---|---|---|
| SLV 8 | -24269 | -35831 | -1344 | 0.039 | 27.99 | 0.965 | 59.248 | 417.584 | No |
| SLV 7 | -24269 | -35831 | -1344 | 0.039 | 27.99 | 0.965 | 59.248 | 417.584 | No |
| SLV 11 | -24386 | -34834 | -1284 | 0.042 | 28.109 | 0.965 | 62.919 | 417.584 | No |
| SLV 12 | -24386 | -34834 | -1284 | 0.042 | 28.109 | 0.965 | 62.919 | 417.584 | No |
| SLV 4 | -17745 | -27523 | -1058 | 0.039 | 21.356 | 0.955 | 59.583 | 332.581 | No |
| SLV 3 | -17745 | -27523 | -1058 | 0.039 | 21.356 | 0.955 | 59.583 | 332.581 | No |
| SLV 2 | -12272 | -19404 | -754 | 0.043 | 15.8 | 0.941 | 66.958 | 332.581 | No |
| SLV 1 | -12272 | -19404 | -754 | 0.043 | 15.8 | 0.941 | 66.958 | 332.581 | No |
| SLV 16 | -18137 | -24198 | -860 | 0.05 | 21.754 | 0.956 | 75.751 | 332.581 | No |
| SLV 15 | -18137 | -24198 | -860 | 0.05 | 21.754 | 0.956 | 75.751 | 332.581 | No |

### Tabella dei coefficienti di sicurezza minimi

| Stato limite | Coeff.s. | Comb. | Verifica |
|---|---|---|---|
| PF_SLU | 2.965 | SLU 82 | Si |
| V_SLU | 12.439 | SLU 50 | Si |
| PF_SLV | 2.291 | SLV 1 | Si |
| V_SLV | 1.102 | SLV 1 | Si |
| PFFP_SLV | 16.469 | SLV 9 | Si |
| R_SLV | 0.142 | SLV 7 | No |

## Maschio 35

Verifiche condotte secondo D.M. 17-01-18 (N.T.C.)

### Dati geometrici

| X ini. | Y ini. | X fin. | Y fin. | Quota i. | Quota.s | l | Sp. | h netta | h ini. | h fin. | a | a.s.,sx | a.s.,dx |
|---|---|---|---|---|---|---|---|---|---|---|---|---|---|
| -1676.8 | 657.6 | -1288.8 | 657.6 | L1 | L3 | 388 | 45 | 269 | 269 | 269 | | | |

### Caratteristiche del materiale

(Circolare 7 21-01-19 C8.5.I) Muratura in mattoni pieni e malta di calce LC2_Corti

| fb | fk | fvk0 | fmedio | τ0 | fv0 | μ | ϕ | fv,lim | E | G | FC |
|---|---|---|---|---|---|---|---|---|---|---|---|
| 60 | | | 34.5 | 0.9 | 2 | 0.58 | 0.77 | 3.25 | 32000 | 12800 | 1.2 |

### Verifica a pressoflessione nel piano secondo D.M. 17-01-18 NTC §7.8.2.2.1 in combinazioni non sismiche, γM = 3

| Comb. | Quota | N | M | σ0 | Mu | c.s. | Verifica |
|---|---|---|---|---|---|---|---|
| SLU 74 | 102 | -59016 | -675381 | 3.38 | 6698362 | 9.918 | Si |
| SLU 74 | 142 | -53941 | -448823 | 3.09 | 6495724 | 14.473 | Si |
| SLU 77 | 102 | -59316 | -663770 | 3.4 | 6708124 | 10.106 | Si |
| SLU 77 | 142 | -54193 | -447213 | 3.1 | 6507468 | 14.551 | Si |
| SLU 78 | 102 | -59320 | -665328 | 3.4 | 6708269 | 10.083 | Si |
| SLU 78 | 142 | -54195 | -448057 | 3.1 | 6507574 | 14.524 | Si |
| SLU 73 | 102 | -58095 | -679204 | 3.33 | 6666826 | 9.816 | Si |
| SLU 73 | 142 | -53093 | -446356 | 3.04 | 6455029 | 14.462 | Si |
| SLU 84 | 102 | -61095 | -700779 | 3.5 | 6761080 | 9.648 | Si |
| SLU 84 | 142 | -55859 | -464725 | 3.2 | 6580594 | 14.16 | Si |
| SLU 75 | 102 | -59021 | -676938 | 3.38 | 6698511 | 9.895 | Si |
| SLU 75 | 142 | -53943 | -449667 | 3.09 | 6495831 | 14.446 | Si |
| SLU 81 | 102 | -60791 | -710832 | 3.48 | 6752645 | 9.5 | Si |
| SLU 81 | 142 | -55604 | -465491 | 3.18 | 6569901 | 14.114 | Si |

| Comb. | Quota | N | M | σ0 | Mu | c.s. | Verifica |
|---|---|---|---|---|---|---|---|
| SLU 83 | 102 | -61091 | -699221 | 3.5 | 6760957 | 9.669 | Si |
| SLU 83 | 142 | -55857 | -463881 | 3.2 | 6580498 | 14.186 | Si |
| SLU 76 | 102 | -58395 | -667594 | 3.34 | 6677340 | 10.002 | Si |
| SLU 76 | 142 | -53345 | -444745 | 3.06 | 6467357 | 14.542 | Si |
| SLU 82 | 102 | -60796 | -712389 | 3.48 | 6752772 | 9.479 | Si |
| SLU 82 | 142 | -55607 | -466335 | 3.18 | 6569997 | 14.089 | Si |

Verifica a pressoflessione nel piano secondo D.M. 17-01-18 NTC §7.8.2.2.1 in combinazioni sismiche, γM = 2

| Comb. | Quota | N | M | σ0 | Mu | c.s. | Verifica |
|---|---|---|---|---|---|---|---|
| SLV 11 | 102 | -55021 | -647896 | 3.15 | 7921221 | 12.226 | Si |
| SLV 11 | 142 | -48325 | -1229612 | 2.77 | 7251468 | 5.897 | Si |
| SLV 7 | 102 | -55404 | -1218605 | 3.17 | 7957066 | 6.53 | Si |
| SLV 7 | 142 | -48767 | -1360591 | 2.79 | 7298134 | 5.364 | Si |
| SLV 10 | 102 | -25306 | 284352 | 1.45 | 4327062 | 15.217 | Si |
| SLV 10 | 142 | -24853 | 741586 | 1.42 | 4259865 | 5.744 | Si |
| SLV 8 | 102 | -55404 | -1218605 | 3.17 | 7957066 | 6.53 | Si |
| SLV 8 | 142 | -48767 | -1360591 | 2.79 | 7298134 | 5.364 | Si |
| SLV 2 | 102 | -36536 | -1278471 | 2.09 | 5874166 | 4.595 | Si |
| SLV 2 | 142 | -34025 | -232121 | 1.95 | 5548102 | 23.902 | Si |
| SLV 9 | 102 | -25306 | 284352 | 1.45 | 4327062 | 15.217 | Si |
| SLV 9 | 142 | -24853 | 741586 | 1.42 | 4259865 | 5.744 | Si |
| SLV 4 | 102 | -45451 | -1558146 | 2.6 | 6938959 | 4.453 | Si |
| SLV 4 | 142 | -41067 | -823480 | 2.35 | 6433334 | 7.812 | Si |
| SLV 1 | 102 | -36536 | -1278471 | 2.09 | 5874166 | 4.595 | Si |
| SLV 1 | 142 | -34025 | -232121 | 1.95 | 5548102 | 23.902 | Si |
| SLV 3 | 102 | -45451 | -1558146 | 2.6 | 6938959 | 4.453 | Si |
| SLV 3 | 142 | -41067 | -823480 | 2.35 | 6433334 | 7.812 | Si |
| SLV 12 | 102 | -55021 | -647896 | 3.15 | 7921221 | 12.226 | Si |
| SLV 12 | 142 | -48325 | -1229612 | 2.77 | 7251468 | 5.897 | Si |

Verifica a taglio nel piano secondo D.M. 17-01-18 (N.T.C.) §7.8.2.2.2 con rottura per scorrimento in combinazioni non sismiche, γM = 3

| Comb. | Quota | N | V par | M | σ0 | σN | l' | fvd | Vt scorr. | Vt fess.diag. | Vt,lim | c.s. | Verifica |
|---|---|---|---|---|---|---|---|---|---|---|---|---|---|
| SLU 61 | 102 | -54981 | -3708 | -645370 | | 3.15 | 388 | 0.98 | 17031 | | | 4.59 | Si |
| SLU 61 | 142 | -50194 | -3713 | -422694 | | 2.87 | 388 | 0.94 | 16393 | | | 4.41 | Si |
| SLU 84 | 102 | -61095 | -3784 | -700779 | | 3.5 | 388 | 1.02 | 17846 | | | 4.72 | Si |
| SLU 84 | 142 | -55859 | -3790 | -464725 | | 3.2 | 388 | 0.98 | 17148 | | | 4.53 | Si |
| SLU 40 | 102 | -51722 | -3483 | -607819 | | 2.96 | 388 | 0.95 | 16596 | | | 4.77 | Si |
| SLU 40 | 142 | -47386 | -3487 | -396296 | | 2.71 | 388 | 0.92 | 16018 | | | 4.59 | Si |
| SLU 83 | 102 | -61091 | -3768 | -699221 | | 3.5 | 388 | 1.02 | 17845 | | | 4.74 | Si |
| SLU 83 | 142 | -55857 | -3773 | -463881 | | 3.2 | 388 | 0.98 | 17148 | | | 4.54 | Si |
| SLU 52 | 102 | -52281 | -3485 | -612185 | | 2.99 | 388 | 0.95 | 16671 | | | 4.78 | Si |
| SLU 52 | 142 | -47680 | -3490 | -402715 | | 2.73 | 388 | 0.92 | 16057 | | | 4.6 | Si |
| SLU 75 | 102 | -59021 | -3656 | -676938 | | 3.38 | 388 | 1.01 | 17569 | | | 4.81 | Si |
| SLU 75 | 142 | -53943 | -3661 | -449667 | | 3.09 | 388 | 0.97 | 16892 | | | 4.61 | Si |
| SLU 81 | 102 | -60791 | -4045 | -710832 | | 3.48 | 388 | 1.02 | 17805 | | | 4.4 | Si |
| SLU 81 | 142 | -55604 | -4050 | -465491 | | 3.18 | 388 | 0.98 | 17114 | | | 4.23 | Si |
| SLU 60 | 102 | -54976 | -3692 | -643813 | | 3.15 | 388 | 0.98 | 17030 | | | 4.61 | Si |
| SLU 60 | 142 | -50192 | -3697 | -421850 | | 2.87 | 388 | 0.94 | 16392 | | | 4.43 | Si |
| SLU 73 | 102 | -58095 | -3838 | -679204 | | 3.33 | 388 | 1 | 17446 | | | 4.55 | Si |
| SLU 73 | 142 | -53093 | -3843 | -446356 | | 3.04 | 388 | 0.96 | 16779 | | | 4.37 | Si |
| SLU 82 | 102 | -60796 | -4061 | -712389 | | 3.48 | 388 | 1.02 | 17806 | | | 4.38 | Si |
| SLU 82 | 142 | -55607 | -4067 | -466335 | | 3.18 | 388 | 0.98 | 17114 | | | 4.21 | Si |

Verifica a taglio nel piano secondo D.M. 17-01-18 (N.T.C.) §7.8.2.2.2 con rottura per scorrimento in combinazioni sismiche, γM = 2

| Comb. | Quota | N | V par | M | σ0 | σN | l' | fvd | Vt scorr. | Vt fess.diag. | Vt,lim | c.s. | Verifica |
|---|---|---|---|---|---|---|---|---|---|---|---|---|---|
| SLD 1 | 102 | -38792 | -10152 | -823559 | | 2.22 | 388 | 1.28 | 22308 | | | 2.2 | Si |
| SLD 1 | 142 | -35674 | -10561 | -282838 | | 2.04 | 388 | 1.24 | 21685 | | | 2.05 | Si |
| SLV 1 | 102 | -36536 | -19991 | -1278471 | | 2.09 | 388 | 1.25 | 21857 | | | 1.09 | Si |
| SLV 1 | 142 | -34025 | -21410 | -232121 | | 1.95 | 388 | 1.22 | 21355 | | | 1 | No, Vu<V |
| SLV 14 | 102 | -35260 | 14510 | 623892 | | 2.02 | 388 | 1.24 | 21602 | | | 1.49 | Si |
| SLV 14 | 142 | -32554 | 15422 | 204476 | | 1.86 | 388 | 1.21 | 21061 | | | 1.37 | Si |
| SLV 15 | 102 | -44174 | 14812 | 344218 | | 2.53 | 388 | 1.34 | 23385 | | | 1.58 | Si |
| SLV 15 | 142 | -39595 | 16224 | -386884 | | 2.27 | 388 | 1.29 | 22469 | | | 1.38 | Si |
| SLV 2 | 102 | -36536 | -19991 | -1278471 | | 2.09 | 388 | 1.25 | 21857 | | | 1.09 | Si |
| SLV 2 | 142 | -34025 | -21410 | -232121 | | 1.95 | 388 | 1.22 | 21355 | | | 1 | No, Vu<V |
| SLD 2 | 102 | -38792 | -10152 | -823559 | | 2.22 | 388 | 1.28 | 22308 | | | 2.2 | Si |
| SLD 2 | 142 | -35674 | -10561 | -282838 | | 2.04 | 388 | 1.24 | 21685 | | | 2.05 | Si |
| SLV 4 | 102 | -45451 | -19690 | -1558146 | | 2.6 | 388 | 1.35 | 23640 | | | 1.2 | Si |
| SLV 4 | 142 | -41067 | -20608 | -823480 | | 2.35 | 388 | 1.3 | 22763 | | | 1.1 | Si |
| SLV 16 | 102 | -44174 | 14812 | 344218 | | 2.53 | 388 | 1.34 | 23385 | | | 1.58 | Si |
| SLV 16 | 142 | -39595 | 16224 | -386884 | | 2.27 | 388 | 1.29 | 22469 | | | 1.38 | Si |
| SLV 13 | 102 | -35260 | 14510 | 623892 | | 2.02 | 388 | 1.24 | 21602 | | | 1.49 | Si |
| SLV 13 | 142 | -32554 | 15422 | 204476 | | 1.86 | 388 | 1.21 | 21061 | | | 1.37 | Si |
| SLV 3 | 102 | -45451 | -19690 | -1558146 | | 2.6 | 388 | 1.35 | 23640 | | | 1.2 | Si |
| SLV 3 | 142 | -41067 | -20608 | -823480 | | 2.35 | 388 | 1.3 | 22763 | | | 1.1 | Si |

Verifica a pressoflessione fuori piano D.M. 17-01-18 (N.T.C.)

quota 36.5 Wa 0.08 denominatore 8 γM = 2

| Comb. | fd | Sa | σ0 | N | M | Mc | Coeff.s. | Verifica |
|---|---|---|---|---|---|---|---|---|
| SLV 10 | 14 | 0.25 | 1.4 | -24457 | 23851 | 487197 | 20.43 | Si |
| SLV 9 | 14 | 0.25 | 1.4 | -24457 | 23851 | 487197 | 20.43 | Si |
| SLV 6 | 14 | 0.25 | 1.41 | -24658 | 23851 | 490685 | 20.57 | Si |
| SLV 5 | 14 | 0.25 | 1.41 | -24658 | 23851 | 490685 | 20.57 | Si |
| SLV 13 | 14 | 0.25 | 2.05 | -35718 | 23851 | 669111 | 28.05 | Si |
| SLV 14 | 14 | 0.25 | 2.05 | -35718 | 23851 | 669111 | 28.05 | Si |
| SLV 1 | 14 | 0.25 | 2.08 | -36390 | 23851 | 679110 | 28.47 | Si |
| SLV 2 | 14 | 0.25 | 2.08 | -36390 | 23851 | 679110 | 28.47 | Si |

| Comb. | fd | Sa | σ0 | N | M | Mc | Coeff.s. | Verifica |
|---|---|---|---|---|---|---|---|---|
| SLV 15 | 14 | 0.25 | 2.61 | -45573 | 23851 | 806345 | 33.81 | Si |
| SLV 16 | 14 | 0.25 | 2.61 | -45573 | 23851 | 806345 | 33.81 | Si |

### Verifica dei meccanismi locali di collasso con analisi cinematica lineare

forza di aggancio al piano = 0 quota mezzeria = 36.5 Wa = 0.08 Ta = 0.0269

| Comb. | N top | N base | V orto | α0 | M* | e* | a0* | aLim | Verifica |
|---|---|---|---|---|---|---|---|---|---|
| SLV 6 | -20894 | -24282 | -1667 | 0.031 | 27.96 | 0.935 | 48.78 | 417.584 | No |
| SLV 5 | -20894 | -24282 | -1667 | 0.031 | 27.96 | 0.935 | 48.78 | 417.584 | No |
| SLV 10 | -20395 | -24204 | -1628 | 0.032 | 27.455 | 0.934 | 49.659 | 417.584 | No |
| SLV 9 | -20395 | -24204 | -1628 | 0.032 | 27.455 | 0.934 | 49.659 | 417.584 | No |
| SLV 7 | -47975 | -62401 | -2529 | 0.042 | 55.458 | 0.964 | 63.27 | 417.584 | No |
| SLV 8 | -47975 | -62401 | -2529 | 0.042 | 55.458 | 0.964 | 63.27 | 417.584 | No |
| SLV 11 | -47475 | -62323 | -2490 | 0.042 | 54.95 | 0.964 | 63.826 | 417.584 | No |
| SLV 12 | -47475 | -62323 | -2490 | 0.042 | 54.95 | 0.964 | 63.826 | 417.584 | No |
| SLV 2 | -30955 | -37715 | -2014 | 0.036 | 38.155 | 0.95 | 55.762 | 332.581 | No |
| SLV 1 | -30955 | -37715 | -2014 | 0.036 | 38.155 | 0.95 | 55.762 | 332.581 | No |

### Tabella dei coefficienti di sicurezza minimi

| Stato limite | Coeff.s. | Comb. | Verifica |
|---|---|---|---|
| PF_SLU | 9.479 | SLU 82 | Si |
| V_SLU | 4.208 | SLU 82 | Si |
| PF_SLV | 4.453 | SLV 3 | Si |
| V_SLV | 0.997 | SLV 1 | No |
| PFFP_SLV | 20.427 | SLV 9 | Si |
| R_SLV | 0.117 | SLV 5 | No |

## Maschio 36

Verifiche condotte secondo D.M. 17-01-18 (N.T.C.)

### Dati geometrici

| X ini. | Y ini. | X fin. | Y fin. | Quota i. | Quota.s | l | Sp. | h netta | h ini. | h fin. | a | a.s.,sx | a.s.,dx |
|---|---|---|---|---|---|---|---|---|---|---|---|---|---|
| -1188.8 | 657.6 | -800.8 | 657.6 | L1 | L3 | 388 | 45 | 269 | 269 | 269 | | | |

### Caratteristiche del materiale

(Circolare 7 21-01-19 C8.5.I) Muratura in mattoni pieni e malta di calce LC2_Corti

| fb | fk | fvk0 | fmedio | τ0 | fv0 | μ | ϕ | fv,lim | E | G | FC |
|---|---|---|---|---|---|---|---|---|---|---|---|
| 60 | | | 34.5 | 0.9 | 2 | 0.58 | 0.77 | 3.25 | 32000 | 12800 | 1.2 |

### Verifica a pressoflessione nel piano secondo D.M. 17-01-18 NTC §7.8.2.2.1 in combinazioni non sismiche, γM = 3

| Comb. | Quota | N | M | σ0 | Mu | c.s. | Verifica |
|---|---|---|---|---|---|---|---|
| SLU 84 | 102 | -63165 | 721240 | 3.62 | 6811807 | 9.445 | Si |
| SLU 84 | 142 | -61996 | 634036 | 3.55 | 6784581 | 10.701 | Si |
| SLU 81 | 102 | -62477 | 692766 | 3.58 | 6796248 | 9.81 | Si |
| SLU 81 | 142 | -61297 | 610790 | 3.51 | 6766541 | 11.078 | Si |
| SLU 75 | 102 | -60902 | 690832 | 3.49 | 6755749 | 9.779 | Si |
| SLU 75 | 142 | -59749 | 608730 | 3.42 | 6721831 | 11.042 | Si |
| SLU 74 | 102 | -60958 | 692564 | 3.49 | 6757315 | 9.757 | Si |
| SLU 74 | 142 | -59807 | 610392 | 3.43 | 6723605 | 11.015 | Si |
| SLU 79 | 102 | -61097 | 718869 | 3.5 | 6761123 | 9.405 | Si |
| SLU 79 | 142 | -59947 | 631685 | 3.43 | 6727917 | 10.651 | Si |
| SLU 76 | 102 | -60259 | 685777 | 3.45 | 6737264 | 9.824 | Si |
| SLU 76 | 142 | -59096 | 604006 | 3.38 | 6700993 | 11.094 | Si |
| SLU 83 | 102 | -63221 | 722972 | 3.62 | 6813025 | 9.424 | Si |
| SLU 83 | 142 | -62053 | 635698 | 3.55 | 6786003 | 10.675 | Si |
| SLU 80 | 102 | -61040 | 717137 | 3.5 | 6759578 | 9.426 | Si |
| SLU 80 | 142 | -59890 | 630023 | 3.43 | 6726166 | 10.676 | Si |
| SLU 77 | 102 | -61702 | 722769 | 3.53 | 6777175 | 9.377 | Si |
| SLU 77 | 142 | -60563 | 635300 | 3.47 | 6746139 | 10.619 | Si |
| SLU 78 | 102 | -61646 | 721037 | 3.53 | 6775724 | 9.397 | Si |
| SLU 78 | 142 | -60505 | 633638 | 3.47 | 6744484 | 10.644 | Si |

### Verifica a pressoflessione nel piano secondo D.M. 17-01-18 NTC §7.8.2.2.1 in combinazioni sismiche, γM = 2

| Comb. | Quota | N | M | σ0 | Mu | c.s. | Verifica |
|---|---|---|---|---|---|---|---|
| SLV 16 | 102 | -43197 | 1424268 | 2.47 | 6683380 | 4.693 | Si |
| SLV 16 | 142 | -42866 | 752751 | 2.46 | 6645064 | 8.828 | Si |
| SLV 12 | 102 | -40761 | 785828 | 2.33 | 6396743 | 8.14 | Si |
| SLV 12 | 142 | -40556 | 790329 | 2.32 | 6372134 | 8.063 | Si |
| SLD 14 | 102 | -42402 | 861102 | 2.43 | 6591087 | 7.654 | Si |
| SLD 14 | 142 | -41597 | 472830 | 2.38 | 6496345 | 13.739 | Si |
| SLV 11 | 102 | -40761 | 785828 | 2.33 | 6396743 | 8.14 | Si |
| SLV 11 | 142 | -40556 | 790329 | 2.32 | 6372134 | 8.063 | Si |
| SLV 14 | 102 | -43900 | 1395347 | 2.51 | 6764133 | 4.848 | Si |
| SLV 14 | 142 | -43226 | 564930 | 2.48 | 6686713 | 11.836 | Si |
| SLV 15 | 102 | -43197 | 1424268 | 2.47 | 6683380 | 4.693 | Si |
| SLV 15 | 142 | -42866 | 752751 | 2.46 | 6645064 | 8.828 | Si |
| SLD 15 | 102 | -42103 | 873422 | 2.41 | 6555987 | 7.506 | Si |
| SLD 15 | 142 | -41450 | 552583 | 2.37 | 6478908 | 11.725 | Si |
| SLD 13 | 102 | -42402 | 861102 | 2.43 | 6591087 | 7.654 | Si |
| SLD 13 | 142 | -41597 | 472830 | 2.38 | 6496345 | 13.739 | Si |
| SLV 13 | 102 | -43900 | 1395347 | 2.51 | 6764133 | 4.848 | Si |
| SLV 13 | 142 | -43226 | 564930 | 2.48 | 6686713 | 11.836 | Si |
| SLD 16 | 102 | -42103 | 873422 | 2.41 | 6555987 | 7.506 | Si |
| SLD 16 | 142 | -41450 | 552583 | 2.37 | 6478908 | 11.725 | Si |

Verifica a taglio nel piano secondo D.M. 17-01-18 (N.T.C.) §7.8.2.2.2 con rottura per scorrimento in combinazioni non sismiche, γM = 3

| Comb. | Quota | N | V par | M | σ0 | σN | l' | fvd | Vt scorr. | Vt fess.diag. | Vt,lim | c.s. | Verifica |
|---|---|---|---|---|---|---|---|---|---|---|---|---|---|
| SLU 84 | 102 | -63165 | 2391 | 721240 | | 3.62 | 388 | 1.04 | 18122 | | | 7.58 | Si |
| SLU 84 | 142 | -61996 | 2392 | 634036 | | 3.55 | 388 | 1.03 | 17966 | | | 7.51 | Si |
| SLU 37 | 102 | -51980 | 2140 | 626452 | | 2.98 | 388 | 0.95 | 16631 | | | 7.77 | Si |
| SLU 37 | 142 | -51101 | 2141 | 547797 | | 2.93 | 388 | 0.95 | 16514 | | | 7.71 | Si |
| SLU 79 | 102 | -61097 | 2401 | 718869 | | 3.5 | 388 | 1.02 | 17846 | | | 7.43 | Si |
| SLU 79 | 142 | -59947 | 2403 | 631685 | | 3.43 | 388 | 1.01 | 17693 | | | 7.36 | Si |
| SLU 36 | 102 | -52529 | 2150 | 628620 | | 3.01 | 388 | 0.96 | 16704 | | | 7.77 | Si |
| SLU 36 | 142 | -51659 | 2151 | 549750 | | 2.96 | 388 | 0.95 | 16588 | | | 7.71 | Si |
| SLU 80 | 102 | -61040 | 2399 | 717137 | | 3.5 | 388 | 1.02 | 17839 | | | 7.44 | Si |
| SLU 80 | 142 | -59890 | 2400 | 630023 | | 3.43 | 388 | 1.01 | 17685 | | | 7.37 | Si |
| SLU 35 | 102 | -52586 | 2152 | 630352 | | 3.01 | 388 | 0.96 | 16711 | | | 7.77 | Si |
| SLU 35 | 142 | -51716 | 2153 | 551413 | | 2.96 | 388 | 0.95 | 16596 | | | 7.71 | Si |
| SLU 83 | 102 | -63221 | 2393 | 722972 | | 3.62 | 388 | 1.04 | 18130 | | | 7.58 | Si |
| SLU 83 | 142 | -62053 | 2394 | 635698 | | 3.55 | 388 | 1.03 | 17974 | | | 7.51 | Si |
| SLU 38 | 102 | -51924 | 2137 | 624720 | | 2.97 | 388 | 0.95 | 16623 | | | 7.78 | Si |
| SLU 38 | 142 | -51044 | 2139 | 546135 | | 2.92 | 388 | 0.95 | 16506 | | | 7.72 | Si |
| SLU 78 | 102 | -61646 | 2411 | 721037 | | 3.53 | 388 | 1.03 | 17919 | | | 7.43 | Si |
| SLU 78 | 142 | -60505 | 2413 | 633638 | | 3.47 | 388 | 1.02 | 17767 | | | 7.36 | Si |
| SLU 77 | 102 | -61702 | 2414 | 722769 | | 3.53 | 388 | 1.03 | 17927 | | | 7.43 | Si |
| SLU 77 | 142 | -60563 | 2415 | 635300 | | 3.47 | 388 | 1.02 | 17775 | | | 7.36 | Si |

Verifica a taglio nel piano secondo D.M. 17-01-18 (N.T.C.) §7.8.2.2.2 con rottura per scorrimento in combinazioni sismiche, γM = 2

| Comb. | Quota | N | V par | M | σ0 | σN | l' | fvd | Vt scorr. | Vt fess.diag. | Vt,lim | c.s. | Verifica |
|---|---|---|---|---|---|---|---|---|---|---|---|---|---|
| SLV 3 | 102 | -38581 | -17088 | -496247 | | 2.21 | 388 | 1.28 | 22266 | | | 1.3 | Si |
| SLV 3 | 142 | -37465 | -18310 | 234045 | | 2.15 | 388 | 1.26 | 22043 | | | 1.2 | Si |
| SLV 16 | 102 | -43197 | 18777 | 1424268 | | 2.47 | 388 | 1.33 | 23189 | | | 1.23 | Si |
| SLV 16 | 142 | -42866 | 20438 | 752751 | | 2.46 | 388 | 1.32 | 23123 | | | 1.13 | Si |
| SLV 13 | 102 | -43900 | 19920 | 1395347 | | 2.51 | 388 | 1.34 | 23330 | | | 1.17 | Si |
| SLV 13 | 142 | -43226 | 21143 | 564930 | | 2.48 | 388 | 1.33 | 23195 | | | 1.1 | Si |
| SLD 13 | 102 | -42402 | 9459 | 861102 | | 2.43 | 388 | 1.32 | 23030 | | | 2.43 | Si |
| SLD 13 | 142 | -41597 | 9850 | 472830 | | 2.38 | 388 | 1.31 | 22869 | | | 2.32 | Si |
| SLV 14 | 102 | -43900 | 19920 | 1395347 | | 2.51 | 388 | 1.34 | 23330 | | | 1.17 | Si |
| SLV 14 | 142 | -43226 | 21143 | 564930 | | 2.48 | 388 | 1.33 | 23195 | | | 1.1 | Si |
| SLV 15 | 102 | -43197 | 18777 | 1424268 | | 2.47 | 388 | 1.33 | 23189 | | | 1.23 | Si |
| SLV 15 | 142 | -42866 | 20438 | 752751 | | 2.46 | 388 | 1.32 | 23123 | | | 1.13 | Si |
| SLV 2 | 102 | -39284 | -15945 | -525167 | | 2.25 | 388 | 1.28 | 22407 | | | 1.41 | Si |
| SLV 2 | 142 | -37825 | -17604 | 46225 | | 2.17 | 388 | 1.27 | 22115 | | | 1.26 | Si |
| SLV 4 | 102 | -38581 | -17088 | -496247 | | 2.21 | 388 | 1.28 | 22266 | | | 1.3 | Si |
| SLV 4 | 142 | -37465 | -18310 | 234045 | | 2.15 | 388 | 1.26 | 22043 | | | 1.2 | Si |
| SLV 1 | 102 | -39284 | -15945 | -525167 | | 2.25 | 388 | 1.28 | 22407 | | | 1.41 | Si |
| SLV 1 | 142 | -37825 | -17604 | 46225 | | 2.17 | 388 | 1.27 | 22115 | | | 1.26 | Si |
| SLD 14 | 102 | -42402 | 9459 | 861102 | | 2.43 | 388 | 1.32 | 23030 | | | 2.43 | Si |
| SLD 14 | 142 | -41597 | 9850 | 472830 | | 2.38 | 388 | 1.31 | 22869 | | | 2.32 | Si |

Verifica a pressoflessione fuori piano D.M. 17-01-18 (N.T.C.)

quota 36.5 Wa 0.08 denominatore 8 γM = 2

| Comb. | fd | Sa | σ0 | N | M | Mc | Coeff.s. | Verifica |
|---|---|---|---|---|---|---|---|---|
| SLV 5 | 14 | 0.25 | 1.96 | -34264 | 23851 | 647119 | 27.13 | Si |
| SLV 6 | 14 | 0.25 | 1.96 | -34264 | 23851 | 647119 | 27.13 | Si |
| SLV 2 | 14 | 0.25 | 2.01 | -35012 | 23851 | 658490 | 27.61 | Si |
| SLV 1 | 14 | 0.25 | 2.01 | -35012 | 23851 | 658490 | 27.61 | Si |
| SLV 9 | 14 | 0.25 | 2.01 | -35090 | 23851 | 659670 | 27.66 | Si |
| SLV 10 | 14 | 0.25 | 2.01 | -35090 | 23851 | 659670 | 27.66 | Si |
| SLV 4 | 14 | 0.25 | 2.09 | -36480 | 23851 | 680451 | 28.53 | Si |
| SLV 3 | 14 | 0.25 | 2.09 | -36480 | 23851 | 680451 | 28.53 | Si |
| SLV 13 | 14 | 0.25 | 2.16 | -37767 | 23851 | 699332 | 29.32 | Si |
| SLV 14 | 14 | 0.25 | 2.16 | -37767 | 23851 | 699332 | 29.32 | Si |

Verifica dei meccanismi locali di collasso con analisi cinematica lineare

forza di aggancio al piano = 0 quota mezzeria = 36.5 Wa = 0.08 Ta = 0.0269

| Comb. | N top | N base | V orto | α0 | M* | e* | a0* | aLim | Verifica |
|---|---|---|---|---|---|---|---|---|---|
| SLV 11 | -38842 | -46851 | -3019 | 0.022 | 46.169 | 0.958 | 33.001 | 417.584 | No |
| SLV 12 | -38842 | -46851 | -3019 | 0.022 | 46.169 | 0.958 | 33.001 | 417.584 | No |
| SLV 8 | -37413 | -46328 | -2894 | 0.023 | 44.716 | 0.956 | 34.391 | 417.584 | No |
| SLV 7 | -37413 | -46328 | -2894 | 0.023 | 44.716 | 0.956 | 34.391 | 417.584 | No |
| SLV 15 | -40177 | -40413 | -2888 | 0.027 | 47.527 | 0.959 | 40.271 | 332.581 | No |
| SLV 16 | -40177 | -40413 | -2888 | 0.027 | 47.527 | 0.959 | 40.271 | 332.581 | No |
| SLV 4 | -35414 | -38668 | -2470 | 0.03 | 42.685 | 0.955 | 46.055 | 332.581 | No |
| SLV 3 | -35414 | -38668 | -2470 | 0.03 | 42.685 | 0.955 | 46.055 | 332.581 | No |
| SLV 9 | -37894 | -26711 | -2226 | 0.039 | 45.205 | 0.957 | 59.52 | 417.584 | No |
| SLV 10 | -37894 | -26711 | -2226 | 0.039 | 45.205 | 0.957 | 59.52 | 417.584 | No |

Tabella dei coefficienti di sicurezza minimi

| Stato limite | Coeff.s. | Comb. | Verifica |
|---|---|---|---|
| PF_SLU | 9.377 | SLU 77 | Si |
| V_SLU | 7.36 | SLU 77 | Si |
| PF_SLV | 4.693 | SLV 15 | Si |
| V_SLV | 1.097 | SLV 13 | Si |
| PFFP_SLV | 27.132 | SLV 5 | Si |
| R_SLV | 0.079 | SLV 11 | No |

## Maschio 37

Verifiche condotte secondo D.M. 17-01-18 (N.T.C.)

### Dati geometrici

| X ini. | Y ini. | X fin. | Y fin. | Quota i. | Quota.s | l | Sp. | h netta | h ini. | h fin. | a | a.s.,sx | a.s.,dx |
|---|---|---|---|---|---|---|---|---|---|---|---|---|---|
| -700.8 | 657.6 | -530.8 | 657.6 | L1 | L3 | 170 | 45 | 269 | 269 | 269 | | | |

### Caratteristiche del materiale

(Circolare 7 21-01-19 C8.5.I) Muratura in mattoni pieni e malta di calce LC2_Corti

| fb | fk | fvk0 | fmedio | τ0 | fv0 | μ | ϕ | fv,lim | E | G | FC |
|---|---|---|---|---|---|---|---|---|---|---|---|
| 60 | | | 34.5 | 0.9 | 2 | 0.58 | 0.77 | 3.25 | 32000 | 12800 | 1.2 |

### Verifica a pressoflessione nel piano secondo D.M. 17-01-18 NTC §7.8.2.2.1 in combinazioni non sismiche, γM = 3

| Comb. | Quota | N | M | σ0 | Mu | c.s. | Verifica |
|---|---|---|---|---|---|---|---|
| SLU 60 | 102 | -14687 | -88023 | 1.92 | 954145 | 10.84 | Si |
| SLU 60 | 142 | -14001 | -164094 | 1.83 | 922719 | 5.623 | Si |
| SLU 73 | 102 | -15565 | -91192 | 2.03 | 992568 | 10.884 | Si |
| SLU 73 | 142 | -14880 | -172666 | 1.95 | 962784 | 5.576 | Si |
| SLU 61 | 102 | -14652 | -87714 | 1.92 | 952602 | 10.86 | Si |
| SLU 61 | 142 | -13967 | -163987 | 1.83 | 921112 | 5.617 | Si |
| SLU 74 | 102 | -16172 | -93318 | 2.11 | 1017897 | 10.908 | Si |
| SLU 74 | 142 | -15487 | -175704 | 2.02 | 989248 | 5.63 | Si |
| SLU 81 | 102 | -16302 | -93910 | 2.13 | 1023181 | 10.895 | Si |
| SLU 81 | 142 | -15617 | -180316 | 2.04 | 994775 | 5.517 | Si |
| SLU 84 | 102 | -16710 | -94746 | 2.18 | 1039476 | 10.971 | Si |
| SLU 84 | 142 | -16025 | -181047 | 2.09 | 1011832 | 5.589 | Si |
| SLU 82 | 102 | -16268 | -93601 | 2.13 | 1021789 | 10.916 | Si |
| SLU 82 | 142 | -15583 | -180208 | 2.04 | 993319 | 5.512 | Si |
| SLU 83 | 102 | -16744 | -95055 | 2.19 | 1040826 | 10.95 | Si |
| SLU 83 | 142 | -16059 | -181154 | 2.1 | 1013246 | 5.593 | Si |
| SLU 76 | 102 | -16007 | -92337 | 2.09 | 1011103 | 10.95 | Si |
| SLU 76 | 142 | -15322 | -173504 | 2 | 982145 | 5.661 | Si |
| SLU 75 | 102 | -16138 | -93009 | 2.11 | 1016493 | 10.929 | Si |
| SLU 75 | 142 | -15453 | -175597 | 2.02 | 987780 | 5.625 | Si |

### Verifica a pressoflessione nel piano secondo D.M. 17-01-18 NTC §7.8.2.2.1 in combinazioni sismiche, γM = 2

| Comb. | Quota | N | M | σ0 | Mu | c.s. | Verifica |
|---|---|---|---|---|---|---|---|
| SLV 4 | 102 | -10405 | -302400 | 1.36 | 785961 | 2.599 | Si |
| SLV 4 | 142 | -9470 | -40355 | 1.24 | 723412 | 17.926 | Si |
| SLV 9 | 102 | -7688 | 15376 | 1 | 599730 | 39.005 | Si |
| SLV 9 | 142 | -8452 | -343385 | 1.1 | 653479 | 1.903 | Si |
| SLV 5 | 102 | -6730 | -123740 | 0.88 | 530894 | 4.29 | Si |
| SLV 5 | 142 | -7481 | -334232 | 0.98 | 585025 | 1.75 | Si |
| SLV 1 | 102 | -8193 | -294850 | 1.07 | 635388 | 2.155 | Si |
| SLV 1 | 142 | -8030 | -171062 | 1.05 | 623883 | 3.647 | Si |
| SLV 10 | 102 | -7688 | 15376 | 1 | 599730 | 39.005 | Si |
| SLV 10 | 142 | -8452 | -343385 | 1.1 | 653479 | 1.903 | Si |
| SLV 2 | 102 | -8193 | -294850 | 1.07 | 635388 | 2.155 | Si |
| SLV 2 | 142 | -8030 | -171062 | 1.05 | 623883 | 3.647 | Si |
| SLD 5 | 102 | -9110 | -91691 | 1.19 | 698858 | 7.622 | Si |
| SLD 5 | 142 | -9131 | -211351 | 1.19 | 700336 | 3.314 | Si |
| SLV 3 | 102 | -10405 | -302400 | 1.36 | 785961 | 2.599 | Si |
| SLV 3 | 142 | -9470 | -40355 | 1.24 | 723412 | 17.926 | Si |
| SLD 6 | 102 | -9110 | -91691 | 1.19 | 698858 | 7.622 | Si |
| SLD 6 | 142 | -9131 | -211351 | 1.19 | 700336 | 3.314 | Si |
| SLV 6 | 102 | -6730 | -123740 | 0.88 | 530894 | 4.29 | Si |
| SLV 6 | 142 | -7481 | -334232 | 0.98 | 585025 | 1.75 | Si |

### Verifica a taglio nel piano secondo D.M. 17-01-18 (N.T.C.) §7.8.2.2.2 con rottura per scorrimento in combinazioni non sismiche, γM = 3

| Comb. | Quota | N | V par | M | σ0 | σN | l' | fvd | Vt scorr. | Vt fess.diag. | Vt,lim | c.s. | Verifica |
|---|---|---|---|---|---|---|---|---|---|---|---|---|---|
| SLU 75 | 102 | -16138 | 2070 | -93009 | | 2.11 | 170 | 0.84 | 6402 | | | 3.09 | Si |
| SLU 75 | 142 | -15453 | 2070 | -175597 | | 2.02 | 170 | 0.82 | 6310 | | | 3.05 | Si |
| SLU 76 | 102 | -16007 | 2034 | -92337 | | 2.09 | 170 | 0.83 | 6384 | | | 3.14 | Si |
| SLU 76 | 142 | -15322 | 2034 | -173504 | | 2 | 170 | 0.82 | 6293 | | | 3.09 | Si |
| SLU 77 | 102 | -16614 | 2057 | -94463 | | 2.17 | 170 | 0.85 | 6465 | | | 3.14 | Si |
| SLU 77 | 142 | -15929 | 2057 | -176543 | | 2.08 | 170 | 0.83 | 6374 | | | 3.1 | Si |
| SLU 81 | 102 | -16302 | 2165 | -93910 | | 2.13 | 170 | 0.84 | 6424 | | | 2.97 | Si |
| SLU 81 | 142 | -15617 | 2165 | -180316 | | 2.04 | 170 | 0.83 | 6332 | | | 2.92 | Si |
| SLU 74 | 102 | -16172 | 2065 | -93318 | | 2.11 | 170 | 0.84 | 6406 | | | 3.1 | Si |
| SLU 74 | 142 | -15487 | 2065 | -175704 | | 2.02 | 170 | 0.83 | 6315 | | | 3.06 | Si |
| SLU 73 | 102 | -15565 | 2042 | -91192 | | 2.03 | 170 | 0.83 | 6325 | | | 3.1 | Si |
| SLU 73 | 142 | -14880 | 2042 | -172666 | | 1.95 | 170 | 0.81 | 6234 | | | 3.05 | Si |
| SLU 83 | 102 | -16744 | 2158 | -95055 | | 2.19 | 170 | 0.85 | 6483 | | | 3 | Si |
| SLU 83 | 142 | -16059 | 2158 | -181154 | | 2.1 | 170 | 0.84 | 6391 | | | 2.96 | Si |
| SLU 84 | 102 | -16710 | 2163 | -94746 | | 2.18 | 170 | 0.85 | 6478 | | | 3 | Si |
| SLU 84 | 142 | -16025 | 2163 | -181047 | | 2.09 | 170 | 0.83 | 6387 | | | 2.95 | Si |
| SLU 82 | 102 | -16268 | 2170 | -93601 | | 2.13 | 170 | 0.84 | 6419 | | | 2.96 | Si |
| SLU 82 | 142 | -15583 | 2170 | -180208 | | 2.04 | 170 | 0.83 | 6328 | | | 2.92 | Si |
| SLU 78 | 102 | -16580 | 2062 | -94154 | | 2.17 | 170 | 0.84 | 6461 | | | 3.13 | Si |
| SLU 78 | 142 | -15895 | 2062 | -176435 | | 2.08 | 170 | 0.83 | 6369 | | | 3.09 | Si |

### Verifica a taglio nel piano secondo D.M. 17-01-18 (N.T.C.) §7.8.2.2.2 con rottura per scorrimento in combinazioni sismiche, γM = 2

| Comb. | Quota | N | V par | M | σ0 | σN | l' | fvd | Vt scorr. | Vt fess.diag. | Vt,lim | c.s. | Verifica |
|---|---|---|---|---|---|---|---|---|---|---|---|---|---|
| SLV 13 | 102 | -11385 | 8558 | 168870 | | 1.49 | 170 | 1.13 | 8652 | | | 1.01 | Si |
| SLV 13 | 142 | -11266 | 8578 | -201573 | | 1.47 | 170 | 1.13 | 8628 | | | 1.01 | Si |
| SLD 14 | 102 | -11116 | 4489 | 35634 | | 1.45 | 170 | 1.12 | 8598 | | | 1.92 | Si |

| Comb. | Quota | N | V par | M | σ0 | σN | l' | fvd | Vt scorr. | Vt fess.diag. | Vt,lim | c.s. | Verifica |
|---|---|---|---|---|---|---|---|---|---|---|---|---|---|
| SLD 14 | 142 | -10764 | 4491 | -155687 | | 1.41 | 170 | 1.11 | 8528 | | | 1.9 | Si |
| SLD 13 | 102 | -11116 | 4489 | 35634 | | 1.45 | 170 | 1.12 | 8598 | | | 1.92 | Si |
| SLD 13 | 142 | -10764 | 4491 | -155687 | | 1.41 | 170 | 1.11 | 8528 | | | 1.9 | Si |
| SLV 9 | 102 | -7688 | 6669 | 15376 | | 1 | 170 | 1.03 | 7913 | | | 1.19 | Si |
| SLV 9 | 142 | -8452 | 6772 | -343385 | | 1.41 | 133.12 | 1.12 | 6682 | | | 0.99 | No, Vu<V |
| SLV 4 | 102 | -10405 | -5840 | -302400 | | 1.38 | 167.81 | 1.11 | 8374 | | | 1.43 | Si |
| SLV 4 | 142 | -9470 | -5860 | -40355 | | 1.24 | 170 | 1.08 | 8269 | | | 1.41 | Si |
| SLV 10 | 102 | -7688 | 6669 | 15376 | | 1 | 170 | 1.03 | 7913 | | | 1.19 | Si |
| SLV 10 | 142 | -8452 | 6772 | -343385 | | 1.41 | 133.12 | 1.12 | 6682 | | | 0.99 | No, Vu<V |
| SLV 14 | 102 | -11385 | 8558 | 168870 | | 1.49 | 170 | 1.13 | 8652 | | | 1.01 | Si |
| SLV 14 | 142 | -11266 | 8578 | -201573 | | 1.47 | 170 | 1.13 | 8628 | | | 1.01 | Si |
| SLV 16 | 102 | -13597 | 6481 | 161321 | | 1.78 | 170 | 1.19 | 9094 | | | 1.4 | Si |
| SLV 16 | 142 | -12706 | 6438 | -70866 | | 1.66 | 170 | 1.17 | 8916 | | | 1.39 | Si |
| SLV 3 | 102 | -10405 | -5840 | -302400 | | 1.38 | 167.81 | 1.11 | 8374 | | | 1.43 | Si |
| SLV 3 | 142 | -9470 | -5860 | -40355 | | 1.24 | 170 | 1.08 | 8269 | | | 1.41 | Si |
| SLV 15 | 102 | -13597 | 6481 | 161321 | | 1.78 | 170 | 1.19 | 9094 | | | 1.4 | Si |
| SLV 15 | 142 | -12706 | 6438 | -70866 | | 1.66 | 170 | 1.17 | 8916 | | | 1.39 | Si |

### Verifica a pressoflessione fuori piano D.M. 17-01-18 (N.T.C.)

quota 36.5 Wa 0.08 denominatore 8 γM = 2

| Comb. | fd | Sa | σ0 | N | M | Mc | Coeff.s. | Verifica |
|---|---|---|---|---|---|---|---|---|
| SLV 2 | 14 | 0.25 | 0.71 | -5436 | 10450 | 115205 | 11.02 | Si |
| SLV 1 | 14 | 0.25 | 0.71 | -5436 | 10450 | 115205 | 11.02 | Si |
| SLV 6 | 14 | 0.25 | 0.76 | -5843 | 10450 | 123255 | 11.79 | Si |
| SLV 5 | 14 | 0.25 | 0.76 | -5843 | 10450 | 123255 | 11.79 | Si |
| SLV 3 | 14 | 0.25 | 1.02 | -7828 | 10450 | 161375 | 15.44 | Si |
| SLV 4 | 14 | 0.25 | 1.02 | -7828 | 10450 | 161375 | 15.44 | Si |
| SLV 9 | 14 | 0.25 | 1.12 | -8583 | 10450 | 175392 | 16.78 | Si |
| SLV 10 | 14 | 0.25 | 1.12 | -8583 | 10450 | 175392 | 16.78 | Si |
| SLV 8 | 14 | 0.25 | 1.81 | -13814 | 10450 | 264889 | 25.35 | Si |
| SLV 7 | 14 | 0.25 | 1.81 | -13814 | 10450 | 264889 | 25.35 | Si |

### Verifica dei meccanismi locali di collasso con analisi cinematica lineare

forza di aggancio al piano = 0 quota mezzeria = 36.5 Wa = 0.08 Ta = 0.0269

| Comb. | N top | N base | V orto | α0 | M* | e* | a0* | aLim | Verifica |
|---|---|---|---|---|---|---|---|---|---|
| SLV 12 | -11978 | -20483 | -350 | 0.07 | 15.109 | 0.945 | 106.899 | 417.584 | No |
| SLV 11 | -11978 | -20483 | -350 | 0.07 | 15.109 | 0.945 | 106.899 | 417.584 | No |
| SLV 7 | -11607 | -14752 | -330 | 0.071 | 14.733 | 0.944 | 108.794 | 417.584 | No |
| SLV 8 | -11607 | -14752 | -330 | 0.071 | 14.733 | 0.944 | 108.794 | 417.584 | No |
| SLV 15 | -10221 | -24765 | -260 | 0.075 | 13.329 | 0.939 | 115.962 | 332.581 | No |
| SLV 16 | -10221 | -24765 | -260 | 0.075 | 13.329 | 0.939 | 115.962 | 332.581 | No |
| SLV 3 | -8984 | -5661 | -191 | 0.08 | 12.078 | 0.934 | 124.927 | 332.581 | No |
| SLV 4 | -8984 | -5661 | -191 | 0.08 | 12.078 | 0.934 | 124.927 | 332.581 | No |
| SLV 10 | -5722 | -13613 | -24 | 0.101 | 8.796 | 0.915 | 160.179 | 417.584 | No |
| SLV 9 | -5722 | -13613 | -24 | 0.101 | 8.796 | 0.915 | 160.179 | 417.584 | No |

### Tabella dei coefficienti di sicurezza minimi

| Stato limite | Coeff.s. | Comb. | Verifica |
|---|---|---|---|
| PF_SLU | 5.512 | SLU 82 | Si |
| V_SLU | 2.915 | SLU 82 | Si |
| PF_SLV | 1.75 | SLV 5 | Si |
| V_SLV | 0.987 | SLV 9 | No |
| PFFP_SLV | 11.024 | SLV 1 | Si |
| R_SLV | 0.256 | SLV 11 | No |

## Maschio 38

Verifiche condotte secondo D.M. 17-01-18 (N.T.C.)

### Dati geometrici

| X ini. | Y ini. | X fin. | Y fin. | Quota i. | Quota.s | l | Sp. | h netta | h ini. | h fin. | a | a.s.,sx | a.s.,dx |
|---|---|---|---|---|---|---|---|---|---|---|---|---|---|
| -1101.3 | -478.4 | -1101.3 | -191.6 | L1 | L2 | 286.8 | 30 | 198 | 198 | 198 | | | |

### Caratteristiche del materiale

(Circolare 7 21-01-19 C8.5.I) Muratura in mattoni pieni e malta di calce LC2_Corti

| fb | fk | fvk0 | fmedio | τ0 | fv0 | μ | ϕ | fv,lim | E | G | FC |
|---|---|---|---|---|---|---|---|---|---|---|---|
| 60 | | | 34.5 | 0.9 | 2 | 0.58 | 0.77 | 3.25 | 32000 | 12800 | 1.2 |

### Verifica a pressoflessione nel piano secondo D.M. 17-01-18 NTC §7.8.2.2.1 in combinazioni non sismiche, γM = 3

| Comb. | Quota | N | M | σ0 | Mu | c.s. | Verifica |
|---|---|---|---|---|---|---|---|
| SLU 83 | -98 | -53889 | 336140 | 6.26 | 1786495 | 5.315 | Si |
| SLU 83 | 100 | -53157 | 129192 | 6.18 | 1841780 | 14.256 | Si |
| SLU 74 | -98 | -51606 | 319463 | 6 | 1951825 | 6.11 | Si |
| SLU 74 | 100 | -50788 | 113402 | 5.9 | 2005886 | 17.688 | Si |
| SLU 75 | -98 | -51573 | 329847 | 5.99 | 1954068 | 5.924 | Si |
| SLU 75 | 100 | -50610 | 117079 | 5.88 | 2017330 | 17.231 | Si |
| SLU 84 | -98 | -53855 | 346524 | 6.26 | 1789047 | 5.163 | Si |
| SLU 84 | 100 | -52979 | 132869 | 6.16 | 1854957 | 13.961 | Si |
| SLU 81 | -98 | -52730 | 357416 | 6.13 | 1873093 | 5.241 | Si |
| SLU 81 | 100 | -51818 | 142646 | 6.02 | 1937393 | 13.582 | Si |
| SLU 82 | -98 | -52697 | 367800 | 6.12 | 1875488 | 5.099 | Si |
| SLU 82 | 100 | -51639 | 146322 | 6 | 1949591 | 13.324 | Si |
| SLU 78 | -98 | -52732 | 308571 | 6.13 | 1872955 | 6.07 | Si |
| SLU 78 | 100 | -51949 | 103625 | 6.04 | 1928341 | 18.609 | Si |

| Comb. | Quota | N | M | σ0 | Mu | c.s. | Verifica |
|---|---|---|---|---|---|---|---|
| SLU 73 | -98 | -50313 | 348272 | 5.85 | 2036026 | 5.846 | Si |
| SLU 73 | 100 | -49094 | 122903 | 5.71 | 2109138 | 17.161 | Si |
| SLU 77 | -98 | -52765 | 298187 | 6.13 | 1870555 | 6.273 | Si |
| SLU 77 | 100 | -52128 | 99949 | 6.06 | 1915917 | 19.169 | Si |
| SLU 76 | -98 | -51472 | 326996 | 5.98 | 1960887 | 5.997 | Si |
| SLU 76 | 100 | -50434 | 109450 | 5.86 | 2028455 | 18.533 | Si |

Verifica a pressoflessione nel piano secondo D.M. 17-01-18 NTC §7.8.2.2.1 in combinazioni sismiche, γM = 2

| Comb. | Quota | N | M | σ0 | Mu | c.s. | Verifica |
|---|---|---|---|---|---|---|---|
| SLD 11 | -98 | -28628 | 488155 | 3.33 | 2987620 | 6.12 | Si |
| SLD 11 | 100 | -27012 | 191926 | 3.14 | 2878505 | 14.998 | Si |
| SLV 11 | -98 | -19536 | 859048 | 2.27 | 2281060 | 2.655 | Si |
| SLV 11 | 100 | -16767 | 388116 | 1.95 | 2021076 | 5.207 | Si |
| SLV 8 | -98 | -25433 | 845312 | 2.96 | 2765017 | 3.271 | Si |
| SLV 8 | 100 | -22967 | 395800 | 2.67 | 2574192 | 6.504 | Si |
| SLV 15 | -98 | -21639 | 429402 | 2.51 | 2464561 | 5.74 | Si |
| SLV 15 | 100 | -19780 | 140312 | 2.3 | 2303015 | 16.414 | Si |
| SLD 8 | -98 | -31152 | 482543 | 3.62 | 3143763 | 6.515 | Si |
| SLD 8 | 100 | -29640 | 194820 | 3.44 | 3052317 | 15.667 | Si |
| SLV 7 | -98 | -25433 | 845312 | 2.96 | 2765017 | 3.271 | Si |
| SLV 7 | 100 | -22967 | 395800 | 2.67 | 2574192 | 6.504 | Si |
| SLD 7 | -98 | -31152 | 482543 | 3.62 | 3143763 | 6.515 | Si |
| SLD 7 | 100 | -29640 | 194820 | 3.44 | 3052317 | 15.667 | Si |
| SLD 12 | -98 | -28628 | 488155 | 3.33 | 2987620 | 6.12 | Si |
| SLD 12 | 100 | -27012 | 191926 | 3.14 | 2878505 | 14.998 | Si |
| SLV 16 | -98 | -21639 | 429402 | 2.51 | 2464561 | 5.74 | Si |
| SLV 16 | 100 | -19780 | 140312 | 2.3 | 2303015 | 16.414 | Si |
| SLV 12 | -98 | -19536 | 859048 | 2.27 | 2281060 | 2.655 | Si |
| SLV 12 | 100 | -16767 | 388116 | 1.95 | 2021076 | 5.207 | Si |

Verifica a taglio nel piano secondo D.M. 17-01-18 (N.T.C.) §7.8.2.2.2 con rottura per scorrimento in combinazioni non sismiche, γM = 3

| Comb. | Quota | N | V par | M | σ0 | σN | l' | fvd | Vt scorr. | Vt fess.diag. | Vt,lim | c.s. | Verifica |
|---|---|---|---|---|---|---|---|---|---|---|---|---|---|
| SLU 77 | -98 | -52765 | -7369 | 298187 | | 6.13 | 286.82 | 1.08 | 9322 | | | 1.26 | Si |
| SLU 77 | 100 | -52128 | -3522 | 99949 | | 6.06 | 286.82 | 1.08 | 9322 | | | 2.65 | Si |
| SLU 74 | -98 | -51606 | -6826 | 319463 | | 6 | 286.82 | 1.08 | 9322 | | | 1.37 | Si |
| SLU 74 | 100 | -50788 | -3033 | 113402 | | 5.9 | 286.82 | 1.08 | 9322 | | | 3.07 | Si |
| SLU 79 | -98 | -52686 | -7403 | 288414 | | 6.12 | 286.82 | 1.08 | 9322 | | | 1.26 | Si |
| SLU 79 | 100 | -52071 | -3575 | 89869 | | 6.05 | 286.82 | 1.08 | 9322 | | | 2.61 | Si |
| SLU 58 | -98 | -49211 | -6750 | 246374 | | 5.72 | 286.82 | 1.08 | 9322 | | | 1.38 | Si |
| SLU 58 | 100 | -48651 | -3236 | 44902 | | 5.65 | 286.82 | 1.08 | 9322 | | | 2.88 | Si |
| SLU 71 | -98 | -47176 | -6659 | 226696 | | 5.48 | 286.82 | 1.08 | 9322 | | | 1.4 | Si |
| SLU 71 | 100 | -46411 | -3221 | 29505 | | 5.39 | 286.82 | 1.08 | 9322 | | | 2.89 | Si |
| SLU 80 | -98 | -52653 | -7197 | 298797 | | 6.12 | 286.82 | 1.08 | 9322 | | | 1.3 | Si |
| SLU 80 | 100 | -51893 | -3370 | 93545 | | 6.03 | 286.82 | 1.08 | 9322 | | | 2.77 | Si |
| SLU 78 | -98 | -52732 | -7163 | 308571 | | 6.13 | 286.82 | 1.08 | 9322 | | | 1.3 | Si |
| SLU 78 | 100 | -51949 | -3317 | 103625 | | 6.04 | 286.82 | 1.08 | 9322 | | | 2.81 | Si |
| SLU 84 | -98 | -53855 | -6973 | 346524 | | 6.26 | 286.82 | 1.08 | 9322 | | | 1.34 | Si |
| SLU 84 | 100 | -52979 | -3033 | 132869 | | 6.16 | 286.82 | 1.08 | 9322 | | | 3.07 | Si |
| SLU 56 | -98 | -49290 | -6716 | 256147 | | 5.73 | 286.82 | 1.08 | 9322 | | | 1.39 | Si |
| SLU 56 | 100 | -48707 | -3183 | 54982 | | 5.66 | 286.82 | 1.08 | 9322 | | | 2.93 | Si |
| SLU 83 | -98 | -53889 | -7179 | 336140 | | 6.26 | 286.82 | 1.08 | 9322 | | | 1.3 | Si |
| SLU 83 | 100 | -53157 | -3237 | 129192 | | 6.18 | 286.82 | 1.08 | 9322 | | | 2.88 | Si |

Verifica a taglio nel piano secondo D.M. 17-01-18 (N.T.C.) §7.8.2.2.2 con rottura per scorrimento in combinazioni sismiche, γM = 2

| Comb. | Quota | N | V par | M | σ0 | σN | l' | fvd | Vt scorr. | Vt fess.diag. | Vt,lim | c.s. | Verifica |
|---|---|---|---|---|---|---|---|---|---|---|---|---|---|
| SLV 11 | -98 | -19536 | 8653 | 859048 | | 2.27 | 286.82 | 1.29 | 11078 | | | 1.28 | Si |
| SLV 11 | 100 | -16767 | 10206 | 388116 | | 1.95 | 286.82 | 1.22 | 10524 | | | 1.03 | Si |
| SLD 6 | -98 | -42006 | -9912 | -57139 | | 4.88 | 286.82 | 1.63 | 13982 | | | 1.41 | Si |
| SLD 6 | 100 | -41999 | -6850 | -90410 | | 4.88 | 286.82 | 1.63 | 13982 | | | 2.04 | Si |
| SLV 10 | -98 | -45201 | -16481 | -414296 | | 5.25 | 286.82 | 1.63 | 13982 | | | 0.85 | No, Vu<V |
| SLV 10 | 100 | -46044 | -13123 | -294284 | | 5.35 | 286.82 | 1.63 | 13982 | | | 1.07 | Si |
| SLV 8 | -98 | -25433 | 7771 | 845312 | | 2.96 | 286.82 | 1.42 | 12257 | | | 1.58 | Si |
| SLV 8 | 100 | -22967 | 9618 | 395800 | | 2.67 | 286.82 | 1.37 | 11764 | | | 1.22 | Si |
| SLV 12 | -98 | -19536 | 8653 | 859048 | | 2.27 | 286.82 | 1.29 | 11078 | | | 1.28 | Si |
| SLV 12 | 100 | -16767 | 10206 | 388116 | | 1.95 | 286.82 | 1.22 | 10524 | | | 1.03 | Si |
| SLV 7 | -98 | -25433 | 7771 | 845312 | | 2.96 | 286.82 | 1.42 | 12257 | | | 1.58 | Si |
| SLV 7 | 100 | -22967 | 9618 | 395800 | | 2.67 | 286.82 | 1.37 | 11764 | | | 1.22 | Si |
| SLV 6 | -98 | -51098 | -17363 | -428031 | | 5.94 | 286.82 | 1.63 | 13982 | | | 0.81 | No, Vu<V |
| SLV 6 | 100 | -52244 | -13711 | -286601 | | 6.07 | 286.82 | 1.63 | 13982 | | | 1.02 | Si |
| SLD 5 | -98 | -42006 | -9912 | -57139 | | 4.88 | 286.82 | 1.63 | 13982 | | | 1.41 | Si |
| SLD 5 | 100 | -41999 | -6850 | -90410 | | 4.88 | 286.82 | 1.63 | 13982 | | | 2.04 | Si |
| SLV 5 | -98 | -51098 | -17363 | -428031 | | 5.94 | 286.82 | 1.63 | 13982 | | | 0.81 | No, Vu<V |
| SLV 5 | 100 | -52244 | -13711 | -286601 | | 6.07 | 286.82 | 1.63 | 13982 | | | 1.02 | Si |
| SLV 9 | -98 | -45201 | -16481 | -414296 | | 5.25 | 286.82 | 1.63 | 13982 | | | 0.85 | No, Vu<V |
| SLV 9 | 100 | -46044 | -13123 | -294284 | | 5.35 | 286.82 | 1.63 | 13982 | | | 1.07 | Si |

Verifica a pressoflessione fuori piano D.M. 17-01-18 (N.T.C.)

quota 1 Wa 0.05 denominatore 8 γM = 2

| Comb. | fd | Sa | σ0 | N | M | Mc | Coeff.s. | Verifica |
|---|---|---|---|---|---|---|---|---|
| SLV 11 | 14 | 0.24 | 2.1 | -18089 | 6186 | 224649 | 36.31 | Si |
| SLV 12 | 14 | 0.24 | 2.1 | -18089 | 6186 | 224649 | 36.31 | Si |
| SLV 16 | 14 | 0.24 | 2.33 | -20078 | 6186 | 243652 | 39.39 | Si |
| SLV 15 | 14 | 0.24 | 2.33 | -20078 | 6186 | 243652 | 39.39 | Si |
| SLV 7 | 14 | 0.24 | 2.81 | -24212 | 6186 | 279542 | 45.19 | Si |
| SLV 8 | 14 | 0.24 | 2.81 | -24212 | 6186 | 279542 | 45.19 | Si |
| SLV 14 | 14 | 0.24 | 3.24 | -27905 | 6186 | 307481 | 49.7 | Si |
| SLV 13 | 14 | 0.24 | 3.24 | -27905 | 6186 | 307481 | 49.7 | Si |

| Comb. | fd | Sa | σ0 | N | M | Mc | Coeff.s. | Verifica |
|---|---|---|---|---|---|---|---|---|
| SLV 3 | 14 | 0.24 | 4.71 | -40488 | 6186 | 373442 | 60.37 | Si |
| SLV 4 | 14 | 0.24 | 4.71 | -40488 | 6186 | 373442 | 60.37 | Si |

### Verifica dei meccanismi locali di collasso con analisi cinematica lineare

forza di aggancio al piano = 0 quota mezzeria = 1 Wa = 0.05 Ta = 0.0218

| Comb. | N top | N base | V orto | α0 | M* | e* | a0* | aLim | Verifica |
|---|---|---|---|---|---|---|---|---|---|
| SLV 6 | -52244 | -51098 | 130 | 0.076 | 55.612 | 0.986 | 111.258 | 367.925 | No |
| SLV 5 | -52244 | -51098 | 130 | 0.076 | 55.612 | 0.986 | 111.258 | 367.925 | No |
| SLV 10 | -46044 | -45201 | 85 | 0.076 | 49.293 | 0.985 | 112.788 | 367.925 | No |
| SLV 9 | -46044 | -45201 | 85 | 0.076 | 49.293 | 0.985 | 112.788 | 367.925 | No |
| SLV 12 | -16767 | -19536 | -82 | 0.078 | 19.47 | 0.963 | 117.12 | 367.925 | No |
| SLV 11 | -16767 | -19536 | -82 | 0.078 | 19.47 | 0.963 | 117.12 | 367.925 | No |
| SLV 7 | -22967 | -25433 | -38 | 0.079 | 25.782 | 0.972 | 118.127 | 367.925 | No |
| SLV 8 | -22967 | -25433 | -38 | 0.079 | 25.782 | 0.972 | 118.127 | 367.925 | No |
| SLV 1 | -49230 | -48995 | 123 | 0.076 | 52.54 | 0.986 | 111.509 | 307.148 | No |
| SLV 2 | -49230 | -48995 | 123 | 0.076 | 52.54 | 0.986 | 111.509 | 307.148 | No |

### Tabella dei coefficienti di sicurezza minimi

| Stato limite | Coeff.s. | Comb. | Verifica |
|---|---|---|---|
| PF_SLU | 5.099 | SLU 82 | Si |
| V_SLU | 1.259 | SLU 79 | Si |
| PF_SLV | 2.655 | SLV 11 | Si |
| V_SLV | 0.805 | SLV 5 | No |
| PFFP_SLV | 36.314 | SLV 11 | Si |
| R_SLV | 0.302 | SLV 5 | No |

## Maschio 39

Verifiche condotte secondo D.M. 17-01-18 (N.T.C.)

### Dati geometrici

| X ini. | Y ini. | X fin. | Y fin. | Quota i. | Quota.s | l | Sp. | h netta | h ini. | h fin. | a | a.s.,sx | a.s.,dx |
|---|---|---|---|---|---|---|---|---|---|---|---|---|---|
| -1101.3 | -478.4 | -1101.3 | -191.6 | L2 | L3 | 286.8 | 30 | 71 | 71 | 71 | | | |

### Caratteristiche del materiale

(Circolare 7 21-01-19 C8.5.I) Muratura in mattoni pieni e malta di calce LC2_Corti

| fb | fk | fvk0 | fmedio | τ0 | fv0 | μ | ϕ | fv,lim | E | G | FC |
|---|---|---|---|---|---|---|---|---|---|---|---|
| 60 | | | 34.5 | 0.9 | 2 | 0.58 | 0.77 | 3.25 | 32000 | 12800 | 1.2 |

### Verifica a pressoflessione nel piano secondo D.M. 17-01-18 NTC §7.8.2.2.1 in combinazioni non sismiche, γM = 3

| Comb. | Quota | N | M | σ0 | Mu | c.s. | Verifica |
|---|---|---|---|---|---|---|---|
| SLU 62 | 100 | -52763 | -449808 | 6.13 | 1870703 | 4.159 | Si |
| SLU 62 | 171 | -53010 | -241375 | 6.16 | 1852676 | 7.676 | Si |
| SLU 77 | 100 | -55415 | -459908 | 6.44 | 1664060 | 3.618 | Si |
| SLU 77 | 171 | -55713 | -223593 | 6.47 | 1639019 | 7.33 | Si |
| SLU 79 | 100 | -55363 | -472921 | 6.43 | 1668401 | 3.528 | Si |
| SLU 79 | 171 | -55652 | -234503 | 6.47 | 1644178 | 7.011 | Si |
| SLU 58 | 100 | -51787 | -481002 | 6.02 | 1939506 | 4.032 | Si |
| SLU 58 | 171 | -51959 | -261390 | 6.04 | 1927650 | 7.375 | Si |
| SLU 84 | 100 | -56157 | -428944 | 6.53 | 1601098 | 3.733 | Si |
| SLU 84 | 171 | -56545 | -210640 | 6.57 | 1567241 | 7.44 | Si |
| SLU 59 | 100 | -51605 | -468218 | 6 | 1951897 | 4.169 | Si |
| SLU 59 | 171 | -51802 | -257543 | 6.02 | 1938505 | 7.527 | Si |
| SLU 56 | 100 | -51839 | -467989 | 6.02 | 1935928 | 4.137 | Si |
| SLU 56 | 171 | -52020 | -250480 | 6.05 | 1923414 | 7.679 | Si |
| SLU 80 | 100 | -55181 | -460137 | 6.41 | 1683453 | 3.659 | Si |
| SLU 80 | 171 | -55494 | -230655 | 6.45 | 1657413 | 7.186 | Si |
| SLU 78 | 100 | -55233 | -447125 | 6.42 | 1679151 | 3.755 | Si |
| SLU 78 | 171 | -55555 | -219745 | 6.46 | 1652294 | 7.519 | Si |
| SLU 83 | 100 | -56338 | -441727 | 6.55 | 1585320 | 3.589 | Si |
| SLU 83 | 171 | -56702 | -214487 | 6.59 | 1553327 | 7.242 | Si |

### Verifica a pressoflessione nel piano secondo D.M. 17-01-18 NTC §7.8.2.2.1 in combinazioni sismiche, γM = 2

| Comb. | Quota | N | M | σ0 | Mu | c.s. | Verifica |
|---|---|---|---|---|---|---|---|
| SLD 5 | 100 | -44853 | -681336 | 5.21 | 3688219 | 5.413 | Si |
| SLD 5 | 171 | -44312 | -336472 | 5.15 | 3676436 | 10.926 | Si |
| SLV 1 | 100 | -53574 | -800666 | 6.23 | 3768043 | 4.706 | Si |
| SLV 1 | 171 | -50088 | -56306 | 5.82 | 3761030 | 66.796 | Si |
| SLV 12 | 100 | -17855 | 652286 | 2.08 | 2125739 | 3.259 | Si |
| SLV 12 | 171 | -19382 | 279516 | 2.25 | 2267176 | 8.111 | Si |
| SLV 5 | 100 | -55832 | -1224717 | 6.49 | 3754892 | 3.066 | Si |
| SLV 5 | 171 | -54467 | -587627 | 6.33 | 3764506 | 6.406 | Si |
| SLV 11 | 100 | -17855 | 652286 | 2.08 | 2125739 | 3.259 | Si |
| SLV 11 | 171 | -19382 | 279516 | 2.25 | 2267176 | 8.111 | Si |
| SLV 6 | 100 | -55832 | -1224717 | 6.49 | 3754892 | 3.066 | Si |
| SLV 6 | 171 | -54467 | -587627 | 6.33 | 3764506 | 6.406 | Si |
| SLV 10 | 100 | -48557 | -1071156 | 5.64 | 3747475 | 3.499 | Si |
| SLV 10 | 171 | -49258 | -737839 | 5.72 | 3754470 | 5.088 | Si |
| SLV 2 | 100 | -53574 | -800666 | 6.23 | 3768043 | 4.706 | Si |
| SLV 2 | 171 | -50088 | -56306 | 5.82 | 3761030 | 66.796 | Si |
| SLD 6 | 100 | -44853 | -681336 | 5.21 | 3688219 | 5.413 | Si |
| SLD 6 | 171 | -44312 | -336472 | 5.15 | 3676436 | 10.926 | Si |
| SLV 9 | 100 | -48557 | -1071156 | 5.64 | 3747475 | 3.499 | Si |
| SLV 9 | 171 | -49258 | -737839 | 5.72 | 3754470 | 5.088 | Si |

Verifica a taglio nel piano secondo D.M. 17-01-18 (N.T.C.) §7.8.2.2.2 con rottura per scorrimento in combinazioni non sismiche, γM = 3

| Comb. | Quota | N | V par | M | σ0 | σN | l' | fvd | Vt scorr. | Vt fess.diag. | Vt,lim | c.s. | Verifica |
|---|---|---|---|---|---|---|---|---|---|---|---|---|---|
| SLU 78 | 100 | -55233 | -2718 | -447125 | | 6.42 | 286.82 | 1.08 | 9322 | | | 3.43 | Si |
| SLU 78 | 171 | -55555 | -2854 | -219745 | | 6.46 | 286.82 | 1.08 | 9322 | | | 3.27 | Si |
| SLU 80 | 100 | -55181 | -2770 | -460137 | | 6.41 | 286.82 | 1.08 | 9322 | | | 3.37 | Si |
| SLU 80 | 171 | -55494 | -2905 | -230655 | | 6.45 | 286.82 | 1.08 | 9322 | | | 3.21 | Si |
| SLU 71 | 100 | -49712 | -2677 | -445484 | | 5.78 | 286.82 | 1.08 | 9322 | | | 3.48 | Si |
| SLU 71 | 171 | -49799 | -2832 | -233236 | | 5.79 | 286.82 | 1.08 | 9322 | | | 3.29 | Si |
| SLU 69 | 100 | -49764 | -2626 | -432472 | | 5.78 | 286.82 | 1.08 | 9322 | | | 3.55 | Si |
| SLU 69 | 171 | -49860 | -2781 | -222326 | | 5.79 | 286.82 | 1.08 | 9322 | | | 3.35 | Si |
| SLU 35 | 100 | -46378 | -2660 | -372932 | | 5.39 | 286.82 | 1.08 | 9322 | | | 3.5 | Si |
| SLU 35 | 171 | -46720 | -2764 | -165961 | | 5.43 | 286.82 | 1.08 | 9322 | | | 3.37 | Si |
| SLU 77 | 100 | -55415 | -2915 | -459908 | | 6.44 | 286.82 | 1.08 | 9322 | | | 3.2 | Si |
| SLU 77 | 171 | -55713 | -3051 | -223593 | | 6.47 | 286.82 | 1.08 | 9322 | | | 3.06 | Si |
| SLU 37 | 100 | -46326 | -2712 | -385944 | | 5.38 | 286.82 | 1.08 | 9322 | | | 3.44 | Si |
| SLU 37 | 171 | -46659 | -2815 | -176872 | | 5.42 | 286.82 | 1.08 | 9322 | | | 3.31 | Si |
| SLU 58 | 100 | -51787 | -2671 | -481002 | | 6.02 | 286.82 | 1.08 | 9322 | | | 3.49 | Si |
| SLU 58 | 171 | -51959 | -2806 | -261390 | | 6.04 | 286.82 | 1.08 | 9322 | | | 3.32 | Si |
| SLU 79 | 100 | -55363 | -2967 | -472921 | | 6.43 | 286.82 | 1.08 | 9322 | | | 3.14 | Si |
| SLU 79 | 171 | -55652 | -3101 | -234503 | | 6.47 | 286.82 | 1.08 | 9322 | | | 3.01 | Si |
| SLU 56 | 100 | -51839 | -2620 | -467989 | | 6.02 | 286.82 | 1.08 | 9322 | | | 3.56 | Si |
| SLU 56 | 171 | -52020 | -2755 | -250480 | | 6.05 | 286.82 | 1.08 | 9322 | | | 3.38 | Si |

Verifica a taglio nel piano secondo D.M. 17-01-18 (N.T.C.) §7.8.2.2.2 con rottura per scorrimento in combinazioni sismiche, γM = 2

| Comb. | Quota | N | V par | M | σ0 | σN | l' | fvd | Vt scorr. | Vt fess.diag. | Vt,lim | c.s. | Verifica |
|---|---|---|---|---|---|---|---|---|---|---|---|---|---|
| SLV 6 | 100 | -55832 | -12413 | -1224717 | | 6.49 | 286.82 | 1.63 | 13982 | | | 1.13 | Si |
| SLV 6 | 171 | -54467 | -12340 | -587627 | | 6.33 | 286.82 | 1.63 | 13982 | | | 1.13 | Si |
| SLV 12 | 100 | -17855 | 9703 | 652286 | | 2.08 | 286.82 | 1.25 | 10742 | | | 1.11 | Si |
| SLV 12 | 171 | -19382 | 9429 | 279516 | | 2.25 | 286.82 | 1.28 | 11047 | | | 1.17 | Si |
| SLV 9 | 100 | -48557 | -12404 | -1071156 | | 5.64 | 286.82 | 1.63 | 13982 | | | 1.13 | Si |
| SLV 9 | 171 | -49258 | -12728 | -737839 | | 5.72 | 286.82 | 1.63 | 13982 | | | 1.1 | Si |
| SLD 10 | 100 | -41768 | -6061 | -616020 | | 4.85 | 286.82 | 1.63 | 13982 | | | 2.31 | Si |
| SLD 10 | 171 | -42110 | -6240 | -398784 | | 4.89 | 286.82 | 1.63 | 13982 | | | 2.24 | Si |
| SLD 9 | 100 | -41768 | -6061 | -616020 | | 4.85 | 286.82 | 1.63 | 13982 | | | 2.31 | Si |
| SLD 9 | 171 | -42110 | -6240 | -398784 | | 4.89 | 286.82 | 1.63 | 13982 | | | 2.24 | Si |
| SLV 10 | 100 | -48557 | -12404 | -1071156 | | 5.64 | 286.82 | 1.63 | 13982 | | | 1.13 | Si |
| SLV 10 | 171 | -49258 | -12728 | -737839 | | 5.72 | 286.82 | 1.63 | 13982 | | | 1.1 | Si |
| SLV 7 | 100 | -25130 | 9694 | 498725 | | 2.92 | 286.82 | 1.42 | 12197 | | | 1.26 | Si |
| SLV 7 | 171 | -24592 | 9817 | 429728 | | 2.86 | 286.82 | 1.4 | 12089 | | | 1.23 | Si |
| SLV 8 | 100 | -25130 | 9694 | 498725 | | 2.92 | 286.82 | 1.42 | 12197 | | | 1.26 | Si |
| SLV 8 | 171 | -24592 | 9817 | 429728 | | 2.86 | 286.82 | 1.4 | 12089 | | | 1.23 | Si |
| SLV 11 | 100 | -17855 | 9703 | 652286 | | 2.08 | 286.82 | 1.25 | 10742 | | | 1.11 | Si |
| SLV 11 | 171 | -19382 | 9429 | 279516 | | 2.25 | 286.82 | 1.28 | 11047 | | | 1.17 | Si |
| SLV 5 | 100 | -55832 | -12413 | -1224717 | | 6.49 | 286.82 | 1.63 | 13982 | | | 1.13 | Si |
| SLV 5 | 171 | -54467 | -12340 | -587627 | | 6.33 | 286.82 | 1.63 | 13982 | | | 1.13 | Si |

Verifica a pressoflessione fuori piano D.M. 17-01-18 (N.T.C.)

quota 135.5 Wa 0.05 denominatore 8 γM = 2

| Comb. | fd | Sa | σ0 | N | M | Mc | Coeff.s. | Verifica |
|---|---|---|---|---|---|---|---|---|
| SLV 11 | 14 | 0.27 | 2.36 | -20311 | 884 | 245811 | 278.05 | Si |
| SLV 12 | 14 | 0.27 | 2.36 | -20311 | 884 | 245811 | 278.05 | Si |
| SLV 16 | 14 | 0.27 | 2.8 | -24051 | 884 | 278238 | 314.73 | Si |
| SLV 15 | 14 | 0.27 | 2.8 | -24051 | 884 | 278238 | 314.73 | Si |
| SLV 8 | 14 | 0.27 | 2.99 | -25722 | 884 | 291440 | 329.66 | Si |
| SLV 7 | 14 | 0.27 | 2.99 | -25722 | 884 | 291440 | 329.66 | Si |
| SLV 13 | 14 | 0.27 | 3.8 | -32668 | 884 | 337762 | 382.06 | Si |
| SLV 14 | 14 | 0.27 | 3.8 | -32668 | 884 | 337762 | 382.06 | Si |
| SLV 3 | 14 | 0.27 | 4.89 | -42089 | 884 | 378595 | 428.25 | Si |
| SLV 4 | 14 | 0.27 | 4.89 | -42089 | 884 | 378595 | 428.25 | Si |

Verifica dei meccanismi locali di collasso con analisi cinematica lineare

forza di aggancio al piano = 0 quota mezzeria = 135.5 Wa = 0.05 Ta = 0.0028

| Comb. | N top | N base | V orto | α0 | M* | e* | a0* | aLim | Verifica |
|---|---|---|---|---|---|---|---|---|---|
| SLV 6 | -54467 | -55832 | 782 | 0.199 | 56.364 | 0.995 | 290.893 | 271.264 | Si |
| SLV 5 | -54467 | -55832 | 782 | 0.199 | 56.364 | 0.995 | 290.893 | 271.264 | Si |
| SLV 10 | -49258 | -48557 | 685 | 0.2 | 51.054 | 0.995 | 292.044 | 271.264 | Si |
| SLV 9 | -49258 | -48557 | 685 | 0.2 | 51.054 | 0.995 | 292.044 | 271.264 | Si |
| SLV 1 | -50088 | -53574 | 613 | 0.201 | 51.901 | 0.995 | 294.353 | 265.626 | Si |
| SLV 2 | -50088 | -53574 | 613 | 0.201 | 51.901 | 0.995 | 294.353 | 265.626 | Si |
| SLV 4 | -41126 | -44364 | 371 | 0.205 | 42.765 | 0.994 | 300.083 | 265.626 | Si |
| SLV 3 | -41126 | -44364 | 371 | 0.205 | 42.765 | 0.994 | 300.083 | 265.626 | Si |
| SLV 14 | -32724 | -29324 | 289 | 0.206 | 34.201 | 0.992 | 301.92 | 265.626 | Si |
| SLV 13 | -32724 | -29324 | 289 | 0.206 | 34.201 | 0.992 | 301.92 | 265.626 | Si |

Tabella dei coefficienti di sicurezza minimi

| Stato limite | Coeff.s. | Comb. | Verifica |
|---|---|---|---|
| PF_SLU | 3.528 | SLU 79 | Si |
| V_SLU | 3.006 | SLU 79 | Si |
| PF_SLV | 3.066 | SLV 5 | Si |
| V_SLV | 1.099 | SLV 9 | Si |
| PFFP_SLV | 278.049 | SLV 11 | Si |
| R_SLV | 1.072 | SLV 5 | Si |

## Maschio 40

Verifiche condotte secondo D.M. 17-01-18 (N.T.C.)

### Dati geometrici

| X ini. | Y ini. | X fin. | Y fin. | Quota i. | Quota.s | l | Sp. | h netta | h ini. | h fin. | a | a.s.,sx | a.s.,dx |
|---|---|---|---|---|---|---|---|---|---|---|---|---|---|
| -1101.3 | -191.6 | -1101.3 | -35.4 | L1 | Z medio 136 cm | 156.2 | 30 | 233.5 | 198 | 269 | | | |

### Caratteristiche del materiale

(Circolare 7 21-01-19 C8.5.I) Muratura in mattoni pieni e malta di calce LC2_Corti

| fb | fk | fvk0 | fmedio | τ0 | fv0 | μ | ϕ | fv,lim | E | G | FC |
|---|---|---|---|---|---|---|---|---|---|---|---|
| 60 | | | 34.5 | 0.9 | 2 | 0.58 | 0.77 | 3.25 | 32000 | 12800 | 1.2 |

### Verifica a pressoflessione nel piano secondo D.M. 17-01-18 NTC §7.8.2.2.1 in combinazioni non sismiche, γM = 3

| Comb. | Quota | N | M | σ0 | Mu | c.s. | Verifica |
|---|---|---|---|---|---|---|---|
| SLU 40 | -98 | -26231 | 28709 | 5.6 | 640589 | 22.313 | Si |
| SLU 40 | 100 | -25119 | 6700 | 5.36 | 670571 | 100.086 | Si |
| SLU 75 | -98 | -29952 | 22629 | 6.39 | 503425 | 22.247 | Si |
| SLU 75 | 100 | -28418 | 9065 | 6.07 | 566835 | 62.533 | Si |
| SLU 31 | -98 | -24687 | 28029 | 5.27 | 680867 | 24.291 | Si |
| SLU 31 | 100 | -23528 | 6821 | 5.02 | 704692 | 103.317 | Si |
| SLU 84 | -98 | -31310 | 23077 | 6.68 | 439239 | 19.034 | Si |
| SLU 84 | 100 | -29809 | 6803 | 6.36 | 509729 | 74.925 | Si |
| SLU 82 | -98 | -30945 | 30599 | 6.6 | 457240 | 14.943 | Si |
| SLU 82 | 100 | -29428 | 4954 | 6.28 | 526137 | 106.204 | Si |
| SLU 83 | -98 | -31288 | 20011 | 6.68 | 440353 | 22.006 | Si |
| SLU 83 | 100 | -29791 | 8370 | 6.36 | 510527 | 60.998 | Si |
| SLU 61 | -98 | -28472 | 25810 | 6.08 | 564743 | 21.881 | Si |
| SLU 61 | 100 | -26912 | -3432 | 5.74 | 619693 | 180.579 | Si |
| SLU 73 | -98 | -29401 | 29919 | 6.27 | 527301 | 17.624 | Si |
| SLU 73 | 100 | -27837 | 5075 | 5.94 | 588320 | 115.931 | Si |
| SLU 81 | -98 | -30922 | 27533 | 6.6 | 458320 | 16.646 | Si |
| SLU 81 | 100 | -29410 | 6520 | 6.28 | 526908 | 80.809 | Si |
| SLU 76 | -98 | -29766 | 22397 | 6.35 | 511608 | 22.843 | Si |
| SLU 76 | 100 | -28218 | 6924 | 6.02 | 574390 | 82.958 | Si |

### Verifica a pressoflessione nel piano secondo D.M. 17-01-18 NTC §7.8.2.2.1 in combinazioni sismiche, γM = 2

| Comb. | Quota | N | M | σ0 | Mu | c.s. | Verifica |
|---|---|---|---|---|---|---|---|
| SLV 9 | -98 | -17930 | -178656 | 3.83 | 961648 | 5.383 | Si |
| SLV 9 | 100 | -16789 | 71879 | 3.58 | 926579 | 12.891 | Si |
| SLV 7 | -98 | -22641 | 208572 | 4.83 | 1068815 | 5.124 | Si |
| SLV 7 | 100 | -21267 | -61112 | 4.54 | 1043808 | 17.08 | Si |
| SLV 5 | -98 | -20120 | -184532 | 4.29 | 1019001 | 5.522 | Si |
| SLV 5 | 100 | -18894 | 61962 | 4.03 | 988505 | 15.953 | Si |
| SLD 11 | -98 | -20361 | 99882 | 4.35 | 1024518 | 10.257 | Si |
| SLD 11 | 100 | -19090 | -19042 | 4.07 | 993661 | 52.182 | Si |
| SLV 8 | -98 | -22641 | 208572 | 4.83 | 1068815 | 5.124 | Si |
| SLV 8 | 100 | -21267 | -61112 | 4.54 | 1043808 | 17.08 | Si |
| SLD 12 | -98 | -20361 | 99882 | 4.35 | 1024518 | 10.257 | Si |
| SLD 12 | 100 | -19090 | -19042 | 4.07 | 993661 | 52.182 | Si |
| SLV 10 | -98 | -17930 | -178656 | 3.83 | 961648 | 5.383 | Si |
| SLV 10 | 100 | -16789 | 71879 | 3.58 | 926579 | 12.891 | Si |
| SLV 6 | -98 | -20120 | -184532 | 4.29 | 1019001 | 5.522 | Si |
| SLV 6 | 100 | -18894 | 61962 | 4.03 | 988505 | 15.953 | Si |
| SLV 12 | -98 | -20451 | 214447 | 4.36 | 1026521 | 4.787 | Si |
| SLV 12 | 100 | -19162 | -51196 | 4.09 | 995508 | 19.445 | Si |
| SLV 11 | -98 | -20451 | 214447 | 4.36 | 1026521 | 4.787 | Si |
| SLV 11 | 100 | -19162 | -51196 | 4.09 | 995508 | 19.445 | Si |

### Verifica a taglio nel piano secondo D.M. 17-01-18 (N.T.C.) §7.8.2.2.2 con rottura per scorrimento in combinazioni non sismiche, γM = 3

| Comb. | Quota | N | V par | M | σ0 | σN | l' | fvd | Vt scorr. | Vt fess.diag. | Vt,lim | c.s. | Verifica |
|---|---|---|---|---|---|---|---|---|---|---|---|---|---|
| SLU 81 | -98 | -30922 | 1479 | 27533 | | 6.6 | 156.18 | 1.08 | 5076 | | | 3.43 | Si |
| SLU 81 | 100 | -29410 | 1029 | 6520 | | 6.28 | 156.18 | 1.08 | 5076 | | | 4.93 | Si |
| SLU 52 | -98 | -26928 | 1624 | 25130 | | 5.75 | 156.18 | 1.08 | 5076 | | | 3.13 | Si |
| SLU 52 | 100 | -25321 | 1167 | -3311 | | 5.4 | 156.18 | 1.08 | 5076 | | | 4.35 | Si |
| SLU 44 | -98 | -23291 | 1447 | 18773 | | 4.97 | 156.18 | 1.08 | 5076 | | | 3.51 | Si |
| SLU 44 | 100 | -21580 | 954 | -593 | | 4.61 | 156.18 | 1.08 | 5076 | | | 5.32 | Si |
| SLU 63 | -98 | -28837 | 1428 | 18287 | | 6.15 | 156.18 | 1.08 | 5076 | | | 3.55 | Si |
| SLU 63 | 100 | -27293 | 943 | -1583 | | 5.83 | 156.18 | 1.08 | 5076 | | | 5.38 | Si |
| SLU 61 | -98 | -28472 | 1624 | 25810 | | 6.08 | 156.18 | 1.08 | 5076 | | | 3.13 | Si |
| SLU 61 | 100 | -26912 | 1178 | -3432 | | 5.74 | 156.18 | 1.08 | 5076 | | | 4.31 | Si |
| SLU 55 | -98 | -27294 | 1428 | 17607 | | 5.83 | 156.18 | 1.08 | 5076 | | | 3.55 | Si |
| SLU 55 | 100 | -25702 | 932 | -1462 | | 5.49 | 156.18 | 1.08 | 5076 | | | 5.44 | Si |
| SLU 65 | -98 | -25764 | 1417 | 23563 | | 5.5 | 156.18 | 1.08 | 5076 | | | 3.58 | Si |
| SLU 65 | 100 | -24096 | 925 | 7793 | | 5.14 | 156.18 | 1.08 | 5076 | | | 5.48 | Si |
| SLU 73 | -98 | -29401 | 1593 | 29919 | | 6.27 | 156.18 | 1.08 | 5076 | | | 3.19 | Si |
| SLU 73 | 100 | -27837 | 1138 | 5075 | | 5.94 | 156.18 | 1.08 | 5076 | | | 4.46 | Si |
| SLU 60 | -98 | -28450 | 1510 | 22743 | | 6.07 | 156.18 | 1.08 | 5076 | | | 3.36 | Si |
| SLU 60 | 100 | -26894 | 1057 | -1865 | | 5.74 | 156.18 | 1.08 | 5076 | | | 4.8 | Si |
| SLU 82 | -98 | -30945 | 1593 | 30599 | | 6.6 | 156.18 | 1.08 | 5076 | | | 3.19 | Si |
| SLU 82 | 100 | -29428 | 1149 | 4954 | | 6.28 | 156.18 | 1.08 | 5076 | | | 4.42 | Si |

### Verifica a taglio nel piano secondo D.M. 17-01-18 (N.T.C.) §7.8.2.2.2 con rottura per scorrimento in combinazioni sismiche, γM = 2

| Comb. | Quota | N | V par | M | σ0 | σN | l' | fvd | Vt scorr. | Vt fess.diag. | Vt,lim | c.s. | Verifica |
|---|---|---|---|---|---|---|---|---|---|---|---|---|---|
| SLV 12 | -98 | -20451 | 7145 | 214447 | | 4.36 | 156.18 | 1.63 | 7614 | | | 1.07 | Si |
| SLV 12 | 100 | -19162 | 6504 | -51196 | | 4.09 | 156.18 | 1.63 | 7614 | | | 1.17 | Si |

| Comb. | Quota | N | V par | M | σ0 | σN | l' | fvd | Vt scorr. | Vt fess.diag. | Vt,lim | c.s. | Verifica |
|---|---|---|---|---|---|---|---|---|---|---|---|---|---|
| SLV 5 | -98 | -20120 | -5143 | -184532 | | 4.29 | 156.18 | 1.63 | 7614 | | | 1.48 | Si |
| SLV 5 | 100 | -18894 | -5254 | 61962 | | 4.03 | 156.18 | 1.63 | 7614 | | | 1.45 | Si |
| SLV 3 | -98 | -24314 | 2989 | 64130 | | 5.19 | 156.18 | 1.63 | 7614 | | | 2.55 | Si |
| SLV 3 | 100 | -22892 | 3900 | -29605 | | 4.89 | 156.18 | 1.63 | 7614 | | | 1.95 | Si |
| SLV 9 | -98 | -17930 | -5223 | -178656 | | 3.83 | 156.18 | 1.6 | 7491 | | | 1.43 | Si |
| SLV 9 | 100 | -16789 | -6087 | 71879 | | 3.58 | 156.18 | 1.55 | 7262 | | | 1.19 | Si |
| SLV 11 | -98 | -20451 | 7145 | 214447 | | 4.36 | 156.18 | 1.63 | 7614 | | | 1.07 | Si |
| SLV 11 | 100 | -19162 | 6504 | -51196 | | 4.09 | 156.18 | 1.63 | 7614 | | | 1.17 | Si |
| SLV 8 | -98 | -22641 | 7224 | 208572 | | 4.83 | 156.18 | 1.63 | 7614 | | | 1.05 | Si |
| SLV 8 | 100 | -21267 | 7336 | -61112 | | 4.54 | 156.18 | 1.63 | 7614 | | | 1.04 | Si |
| SLV 6 | -98 | -20120 | -5143 | -184532 | | 4.29 | 156.18 | 1.63 | 7614 | | | 1.48 | Si |
| SLV 6 | 100 | -18894 | -5254 | 61962 | | 4.03 | 156.18 | 1.63 | 7614 | | | 1.45 | Si |
| SLV 7 | -98 | -22641 | 7224 | 208572 | | 4.83 | 156.18 | 1.63 | 7614 | | | 1.05 | Si |
| SLV 7 | 100 | -21267 | 7336 | -61112 | | 4.54 | 156.18 | 1.63 | 7614 | | | 1.04 | Si |
| SLV 10 | -98 | -17930 | -5223 | -178656 | | 3.83 | 156.18 | 1.6 | 7491 | | | 1.43 | Si |
| SLV 10 | 100 | -16789 | -6087 | 71879 | | 3.58 | 156.18 | 1.55 | 7262 | | | 1.19 | Si |
| SLV 4 | -98 | -24314 | 2989 | 64130 | | 5.19 | 156.18 | 1.63 | 7614 | | | 2.55 | Si |
| SLV 4 | 100 | -22892 | 3900 | -29605 | | 4.89 | 156.18 | 1.63 | 7614 | | | 1.95 | Si |

### Verifica a pressoflessione fuori piano D.M. 17-01-18 (N.T.C.)

quota 1 Wa 0.05 denominatore 8 γM = 2

| Comb. | fd | Sa | σ0 | N | M | Mc | Coeff.s. | Verifica |
|---|---|---|---|---|---|---|---|---|
| SLV 13 | 14 | 0.24 | 3.42 | -16034 | 4685 | 173153 | 36.96 | Si |
| SLV 14 | 14 | 0.24 | 3.42 | -16034 | 4685 | 173153 | 36.96 | Si |
| SLV 15 | 14 | 0.24 | 3.58 | -16777 | 4685 | 177910 | 37.98 | Si |
| SLV 16 | 14 | 0.24 | 3.58 | -16777 | 4685 | 177910 | 37.98 | Si |
| SLV 9 | 14 | 0.24 | 3.78 | -17733 | 4685 | 183606 | 39.19 | Si |
| SLV 10 | 14 | 0.24 | 3.78 | -17733 | 4685 | 183606 | 39.19 | Si |
| SLV 6 | 14 | 0.24 | 4.25 | -19933 | 4685 | 194891 | 41.6 | Si |
| SLV 5 | 14 | 0.24 | 4.25 | -19933 | 4685 | 194891 | 41.6 | Si |
| SLV 11 | 14 | 0.24 | 4.31 | -20210 | 4685 | 196134 | 41.87 | Si |
| SLV 12 | 14 | 0.24 | 4.31 | -20210 | 4685 | 196134 | 41.87 | Si |

### Verifica dei meccanismi locali di collasso con analisi cinematica lineare

forza di aggancio al piano = 0 quota mezzeria = 1 Wa = 0.05 Ta = 0.0303

| Comb. | N top | N base | V orto | α0 | M* | e* | a0* | aLim | Verifica |
|---|---|---|---|---|---|---|---|---|---|
| SLV 8 | -21267 | -22641 | 62 | 0.064 | 23.195 | 0.979 | 95.397 | 441.983 | No |
| SLV 7 | -21267 | -22641 | 62 | 0.064 | 23.195 | 0.979 | 95.397 | 441.983 | No |
| SLV 6 | -18894 | -20120 | 40 | 0.065 | 20.778 | 0.977 | 97.269 | 441.983 | No |
| SLV 5 | -18894 | -20120 | 40 | 0.065 | 20.778 | 0.977 | 97.269 | 441.983 | No |
| SLV 12 | -19162 | -20451 | 8 | 0.067 | 21.051 | 0.977 | 99.604 | 441.983 | No |
| SLV 11 | -19162 | -20451 | 8 | 0.067 | 21.051 | 0.977 | 99.604 | 441.983 | No |
| SLV 10 | -16789 | -17930 | -14 | 0.067 | 18.634 | 0.975 | 99.95 | 441.983 | No |
| SLV 9 | -16789 | -17930 | -14 | 0.067 | 18.634 | 0.975 | 99.95 | 441.983 | No |
| SLV 4 | -22892 | -24314 | 118 | 0.062 | 24.852 | 0.981 | 91.813 | 340.343 | No |
| SLV 3 | -22892 | -24314 | 118 | 0.062 | 24.852 | 0.981 | 91.813 | 340.343 | No |

### Tabella dei coefficienti di sicurezza minimi

| Stato limite | Coeff.s. | Comb. | Verifica |
|---|---|---|---|
| PF_SLU | 14.943 | SLU 82 | Si |
| V_SLU | 3.126 | SLU 52 | Si |
| PF_SLV | 4.787 | SLV 11 | Si |
| V_SLV | 1.038 | SLV 7 | Si |
| PFFP_SLV | 36.96 | SLV 13 | Si |
| R_SLV | 0.216 | SLV 7 | No |

## Maschio 42

Verifiche condotte secondo D.M. 17-01-18 (N.T.C.)

### Dati geometrici

| X ini. | Y ini. | X fin. | Y fin. | Quota i. | Quota.s | l | Sp. | h netta | h ini. | h fin. | a | a.s.,sx | a.s.,dx |
|---|---|---|---|---|---|---|---|---|---|---|---|---|---|
| -1101.3 | -35.4 | -1101.3 | 104.6 | L1 | L3 | 140 | 30 | 269 | 269 | 269 | | | |

### Caratteristiche del materiale

(Circolare 7 21-01-19 C8.5.I) Muratura in mattoni pieni e malta di calce LC2_Corti

| fb | fk | fvk0 | fmedio | τ0 | fv0 | μ | ϕ | fv,lim | E | G | FC |
|---|---|---|---|---|---|---|---|---|---|---|---|
| 60 | | | 34.5 | 0.9 | 2 | 0.58 | 0.77 | 3.25 | 32000 | 12800 | 1.2 |

### Verifica a pressoflessione nel piano secondo D.M. 17-01-18 NTC §7.8.2.2.1 in combinazioni non sismiche, γM = 3

| Comb. | Quota | N | M | σ0 | Mu | c.s. | Verifica |
|---|---|---|---|---|---|---|---|
| SLU 78 | -98 | -29193 | 116284 | 6.95 | 299840 | 2.579 | Si |
| SLU 78 | 171 | -25069 | -51927 | 5.97 | 469011 | 9.032 | Si |
| SLU 81 | -98 | -30230 | 131354 | 7.2 | 246315 | 1.875 | Si |
| SLU 81 | 171 | -25881 | -54536 | 6.16 | 441198 | 8.09 | Si |
| SLU 73 | -98 | -28768 | 128783 | 6.85 | 320458 | 2.488 | Si |
| SLU 73 | 171 | -24452 | -51836 | 5.82 | 488316 | 9.42 | Si |
| SLU 82 | -98 | -30321 | 134703 | 7.22 | 241440 | 1.792 | Si |
| SLU 82 | 171 | -25927 | -55184 | 6.17 | 439531 | 7.965 | Si |
| SLU 74 | -98 | -29009 | 119462 | 6.91 | 308844 | 2.585 | Si |
| SLU 74 | 171 | -24843 | -50871 | 5.92 | 476243 | 9.362 | Si |
| SLU 76 | -98 | -28861 | 122256 | 6.87 | 316003 | 2.585 | Si |
| SLU 76 | 171 | -24631 | -52244 | 5.86 | 482874 | 9.243 | Si |
| SLU 75 | -98 | -29100 | 122811 | 6.93 | 304421 | 2.479 | Si |

| Comb. | Quota | N | M | σ0 | Mu | c.s. | Verifica |
|---|---|---|---|---|---|---|---|
| SLU 75 | 171 | -24890 | -51519 | 5.93 | 474773 | 9.215 | Si |
| SLU 77 | -98 | -29102 | 112935 | 6.93 | 304296 | 2.694 | Si |
| SLU 77 | 171 | -25022 | -51279 | 5.96 | 470515 | 9.176 | Si |
| SLU 83 | -98 | -30323 | 124827 | 7.22 | 241303 | 1.933 | Si |
| SLU 83 | 171 | -26060 | -54944 | 6.2 | 434711 | 7.912 | Si |
| SLU 84 | -98 | -30414 | 128176 | 7.24 | 236394 | 1.844 | Si |
| SLU 84 | 171 | -26106 | -55592 | 6.22 | 433010 | 7.789 | Si |

Verifica a pressoflessione nel piano secondo D.M. 17-01-18 NTC §7.8.2.2.1 in combinazioni sismiche, γM = 2

| Comb. | Quota | N | M | σ0 | Mu | c.s. | Verifica |
|---|---|---|---|---|---|---|---|
| SLV 3 | -98 | -26180 | 173042 | 6.23 | 897715 | 5.188 | Si |
| SLV 3 | 171 | -22169 | -32184 | 5.28 | 881463 | 27.388 | Si |
| SLV 10 | -98 | -9845 | -101688 | 2.34 | 556945 | 5.477 | Si |
| SLV 10 | 171 | -10053 | -50794 | 2.39 | 565843 | 11.14 | Si |
| SLV 7 | -98 | -29322 | 267291 | 6.98 | 879787 | 3.291 | Si |
| SLV 7 | 171 | -22895 | -19377 | 5.45 | 887659 | 45.811 | Si |
| SLV 11 | -98 | -26899 | 244284 | 6.4 | 895988 | 3.668 | Si |
| SLV 11 | 171 | -20410 | -18182 | 4.86 | 860497 | 47.326 | Si |
| SLV 8 | -98 | -29322 | 267291 | 6.98 | 879787 | 3.291 | Si |
| SLV 8 | 171 | -22895 | -19377 | 5.45 | 887659 | 45.811 | Si |
| SLD 7 | -98 | -23725 | 161207 | 5.65 | 892982 | 5.539 | Si |
| SLD 7 | 171 | -19177 | -28374 | 4.57 | 840762 | 29.631 | Si |
| SLV 9 | -98 | -9845 | -101688 | 2.34 | 556945 | 5.477 | Si |
| SLV 9 | 171 | -10053 | -50794 | 2.39 | 565843 | 11.14 | Si |
| SLV 12 | -98 | -26899 | 244284 | 6.4 | 895988 | 3.668 | Si |
| SLV 12 | 171 | -20410 | -18182 | 4.86 | 860497 | 47.326 | Si |
| SLV 4 | -98 | -26180 | 173042 | 6.23 | 897715 | 5.188 | Si |
| SLV 4 | 171 | -22169 | -32184 | 5.28 | 881463 | 27.388 | Si |
| SLD 8 | -98 | -23725 | 161207 | 5.65 | 892982 | 5.539 | Si |
| SLD 8 | 171 | -19177 | -28374 | 4.57 | 840762 | 29.631 | Si |

Verifica a taglio nel piano secondo D.M. 17-01-18 (N.T.C.) §7.8.2.2.2 con rottura per scorrimento in combinazioni non sismiche, γM = 3

| Comb. | Quota | N | V par | M | σ0 | σN | I' | fvd | Vt scorr. | Vt fess.diag. | Vt,lim | c.s. | Verifica |
|---|---|---|---|---|---|---|---|---|---|---|---|---|---|
| SLU 84 | -98 | -30414 | 3865 | 128176 | | 7.24 | 140 | 1.08 | 4550 | | | 1.18 | Si |
| SLU 84 | 171 | -26106 | -196 | -55592 | | 6.22 | 140 | 1.08 | 4550 | | | 23.18 | Si |
| SLU 82 | -98 | -30321 | 4004 | 134703 | | 7.22 | 140 | 1.08 | 4550 | | | 1.14 | Si |
| SLU 82 | 171 | -25927 | -14 | -55184 | | 6.17 | 140 | 1.08 | 4550 | | | 333.96 | Si |
| SLU 60 | -98 | -27453 | 3691 | 118743 | | 6.54 | 140 | 1.08 | 4550 | | | 1.23 | Si |
| SLU 60 | 171 | -23253 | 32 | -55935 | | 5.54 | 140 | 1.08 | 4550 | | | 140.92 | Si |
| SLU 76 | -98 | -28861 | 3720 | 122256 | | 6.87 | 140 | 1.08 | 4550 | | | 1.22 | Si |
| SLU 76 | 171 | -24631 | -152 | -52244 | | 5.86 | 140 | 1.08 | 4550 | | | 30.01 | Si |
| SLU 63 | -98 | -27636 | 3648 | 115565 | | 6.58 | 140 | 1.08 | 4550 | | | 1.25 | Si |
| SLU 63 | 171 | -23478 | -61 | -56992 | | 5.59 | 140 | 1.08 | 4550 | | | 74.2 | Si |
| SLU 61 | -98 | -27543 | 3787 | 122092 | | 6.56 | 140 | 1.08 | 4550 | | | 1.2 | Si |
| SLU 61 | 171 | -23299 | 121 | -56584 | | 5.55 | 140 | 1.08 | 4550 | | | 37.49 | Si |
| SLU 81 | -98 | -30230 | 3908 | 131354 | | 7.2 | 140 | 1.08 | 4550 | | | 1.16 | Si |
| SLU 81 | 171 | -25881 | -103 | -54536 | | 6.16 | 140 | 1.08 | 4550 | | | 44.3 | Si |
| SLU 73 | -98 | -28768 | 3859 | 128783 | | 6.85 | 140 | 1.08 | 4550 | | | 1.18 | Si |
| SLU 73 | 171 | -24452 | 31 | -51836 | | 5.82 | 140 | 1.08 | 4550 | | | 146.49 | Si |
| SLU 83 | -98 | -30323 | 3769 | 124827 | | 7.22 | 140 | 1.08 | 4550 | | | 1.21 | Si |
| SLU 83 | 171 | -26060 | -285 | -54944 | | 6.2 | 140 | 1.08 | 4550 | | | 15.94 | Si |
| SLU 75 | -98 | -29100 | 3712 | 122811 | | 6.93 | 140 | 1.08 | 4550 | | | 1.23 | Si |
| SLU 75 | 171 | -24890 | -175 | -51519 | | 5.93 | 140 | 1.08 | 4550 | | | 25.95 | Si |

Verifica a taglio nel piano secondo D.M. 17-01-18 (N.T.C.) §7.8.2.2.2 con rottura per scorrimento in combinazioni sismiche, γM = 2

| Comb. | Quota | N | V par | M | σ0 | σN | I' | fvd | Vt scorr. | Vt fess.diag. | Vt,lim | c.s. | Verifica |
|---|---|---|---|---|---|---|---|---|---|---|---|---|---|
| SLV 7 | -98 | -29322 | 7959 | 267291 | | 6.98 | 140 | 1.63 | 6825 | | | 0.86 | No, Vu<V |
| SLV 7 | 171 | -22895 | 4289 | -19377 | | 5.45 | 140 | 1.63 | 6825 | | | 1.59 | Si |
| SLV 12 | -98 | -26899 | 7911 | 244284 | | 6.4 | 140 | 1.63 | 6825 | | | 0.86 | No, Vu<V |
| SLV 12 | 171 | -20410 | 4454 | -18182 | | 4.86 | 140 | 1.63 | 6825 | | | 1.53 | Si |
| SLV 10 | -98 | -9845 | -2837 | -101688 | | 2.34 | 140 | 1.3 | 5469 | | | 1.93 | Si |
| SLV 10 | 171 | -10053 | -4444 | -50794 | | 2.39 | 140 | 1.31 | 5511 | | | 1.24 | Si |
| SLV 6 | -98 | -12268 | -2789 | -78681 | | 2.92 | 140 | 1.42 | 5954 | | | 2.13 | Si |
| SLV 6 | 171 | -12537 | -4609 | -51989 | | 2.99 | 140 | 1.43 | 6007 | | | 1.3 | Si |
| SLV 8 | -98 | -29322 | 7959 | 267291 | | 6.98 | 140 | 1.63 | 6825 | | | 0.86 | No, Vu<V |
| SLV 8 | 171 | -22895 | 4289 | -19377 | | 5.45 | 140 | 1.63 | 6825 | | | 1.59 | Si |
| SLV 11 | -98 | -26899 | 7911 | 244284 | | 6.4 | 140 | 1.63 | 6825 | | | 0.86 | No, Vu<V |
| SLV 11 | 171 | -20410 | 4454 | -18182 | | 4.86 | 140 | 1.63 | 6825 | | | 1.53 | Si |
| SLV 9 | -98 | -9845 | -2837 | -101688 | | 2.34 | 140 | 1.3 | 5469 | | | 1.93 | Si |
| SLV 9 | 171 | -10053 | -4444 | -50794 | | 2.39 | 140 | 1.31 | 5511 | | | 1.24 | Si |
| SLD 7 | -98 | -23725 | 4868 | 161207 | | 5.65 | 140 | 1.63 | 6825 | | | 1.4 | Si |
| SLD 7 | 171 | -19177 | 1775 | -28374 | | 4.57 | 140 | 1.63 | 6825 | | | 3.84 | Si |
| SLV 5 | -98 | -12268 | -2789 | -78681 | | 2.92 | 140 | 1.42 | 5954 | | | 2.13 | Si |
| SLV 5 | 171 | -12537 | -4609 | -51989 | | 2.99 | 140 | 1.43 | 6007 | | | 1.3 | Si |
| SLD 8 | -98 | -23725 | 4868 | 161207 | | 5.65 | 140 | 1.63 | 6825 | | | 1.4 | Si |
| SLD 8 | 171 | -19177 | 1775 | -28374 | | 4.57 | 140 | 1.63 | 6825 | | | 3.84 | Si |

Verifica a pressoflessione fuori piano D.M. 17-01-18 (N.T.C.)

quota 36.5 Wa 0.05 denominatore 8 γM = 2

| Comb. | fd | Sa | σ0 | N | M | Mc | Coeff.s. | Verifica |
|---|---|---|---|---|---|---|---|---|
| SLV 10 | 14 | 0.25 | 2.51 | -10544 | 5737 | 125665 | 21.9 | Si |
| SLV 9 | 14 | 0.25 | 2.51 | -10544 | 5737 | 125665 | 21.9 | Si |
| SLV 5 | 14 | 0.25 | 3 | -12617 | 5737 | 142728 | 24.88 | Si |
| SLV 6 | 14 | 0.25 | 3 | -12617 | 5737 | 142728 | 24.88 | Si |
| SLV 14 | 14 | 0.25 | 3.08 | -12921 | 5737 | 145015 | 25.28 | Si |
| SLV 13 | 14 | 0.25 | 3.08 | -12921 | 5737 | 145015 | 25.28 | Si |
| SLV 15 | 14 | 0.25 | 4.06 | -17031 | 5737 | 170686 | 29.75 | Si |

| Comb. | fd | Sa | σ0 | N | M | Mc | Coeff.s. | Verifica |
|---|---|---|---|---|---|---|---|---|
| SLV 16 | 14 | 0.25 | 4.06 | -17031 | 5737 | 170686 | 29.75 | Si |
| SLV 2 | 14 | 0.25 | 4.72 | -19832 | 5737 | 182518 | 31.81 | Si |
| SLV 1 | 14 | 0.25 | 4.72 | -19832 | 5737 | 182518 | 31.81 | Si |

### Verifica dei meccanismi locali di collasso con analisi cinematica lineare

forza di aggancio al piano = 0 quota mezzeria = 36.5 Wa = 0.05 Ta = 0.0403

| Comb. | N top | N base | V orto | α0 | M* | e* | a0* | aLim | Verifica |
|---|---|---|---|---|---|---|---|---|---|
| SLV 7 | -22895 | -29322 | 263 | 0.047 | 24.904 | 0.98 | 69.919 | 562.86 | No |
| SLV 8 | -22895 | -29322 | 263 | 0.047 | 24.904 | 0.98 | 69.919 | 562.86 | No |
| SLV 12 | -20410 | -26899 | 157 | 0.051 | 22.373 | 0.978 | 75.913 | 562.86 | No |
| SLV 11 | -20410 | -26899 | 157 | 0.051 | 22.373 | 0.978 | 75.913 | 562.86 | No |
| SLV 9 | -10053 | -9845 | -60 | 0.055 | 11.827 | 0.96 | 83.981 | 562.86 | No |
| SLV 10 | -10053 | -9845 | -60 | 0.055 | 11.827 | 0.96 | 83.981 | 562.86 | No |
| SLV 6 | -12537 | -12268 | 46 | 0.057 | 14.355 | 0.966 | 85.076 | 562.86 | No |
| SLV 5 | -12537 | -12268 | 46 | 0.057 | 14.355 | 0.966 | 85.076 | 562.86 | No |
| SLV 3 | -22169 | -26180 | 310 | 0.045 | 24.164 | 0.979 | 66.537 | 392.678 | No |
| SLV 4 | -22169 | -26180 | 310 | 0.045 | 24.164 | 0.979 | 66.537 | 392.678 | No |

### Tabella dei coefficienti di sicurezza minimi

| Stato limite | Coeff.s. | Comb. | Verifica |
|---|---|---|---|
| PF_SLU | 1.792 | SLU 82 | Si |
| V_SLU | 1.136 | SLU 82 | Si |
| PF_SLV | 3.291 | SLV 7 | Si |
| V_SLV | 0.858 | SLV 7 | No |
| PFFP_SLV | 21.903 | SLV 9 | Si |
| R_SLV | 0.124 | SLV 7 | No |

## Maschio 43

Verifiche condotte secondo D.M. 17-01-18 (N.T.C.)

### Dati geometrici

| X ini. | Y ini. | X fin. | Y fin. | Quota i. | Quota.s | l | Sp. | h netta | h ini. | h fin. | a | a.s.,sx | a.s.,dx |
|---|---|---|---|---|---|---|---|---|---|---|---|---|---|
| -972.8 | 220.1 | -972.8 | 657.6 | L1 | L3 | 437.5 | 30 | 269 | 269 | 269 | | | |

### Caratteristiche del materiale

(Circolare 7 21-01-19 C8.5.I) Muratura in mattoni pieni e malta di calce LC2_Corti

| fb | fk | fvk0 | fmedio | τ0 | fv0 | μ | ϕ | fv,lim | E | G | FC |
|---|---|---|---|---|---|---|---|---|---|---|---|
| 60 | | | 34.5 | 0.9 | 2 | 0.58 | 0.77 | 3.25 | 32000 | 12800 | 1.2 |

### Verifica a pressoflessione nel piano secondo D.M. 17-01-18 NTC §7.8.2.2.1 in combinazioni non sismiche, γM = 3

| Comb. | Quota | N | M | σ0 | Mu | c.s. | Verifica |
|---|---|---|---|---|---|---|---|
| SLU 34 | -98 | -28686 | -203485 | 2.19 | 4591376 | 22.564 | Si |
| SLU 34 | 122 | -19148 | -337023 | 1.46 | 3438410 | 10.202 | Si |
| SLU 81 | -98 | -35302 | -243056 | 2.69 | 5172443 | 21.281 | Si |
| SLU 81 | 122 | -23259 | -407299 | 1.77 | 3981059 | 9.774 | Si |
| SLU 83 | -98 | -35362 | -224271 | 2.69 | 5176902 | 23.083 | Si |
| SLU 83 | 122 | -23254 | -402107 | 1.77 | 3980375 | 9.899 | Si |
| SLU 31 | -98 | -28626 | -222269 | 2.18 | 4585275 | 20.629 | Si |
| SLU 31 | 122 | -19153 | -342215 | 1.46 | 3439186 | 10.05 | Si |
| SLU 84 | -98 | -35356 | -225587 | 2.69 | 5176455 | 22.947 | Si |
| SLU 84 | 122 | -23253 | -402460 | 1.77 | 3980334 | 9.89 | Si |
| SLU 40 | -98 | -30950 | -300446 | 2.36 | 4810408 | 16.011 | Si |
| SLU 40 | 122 | -21205 | -396010 | 1.62 | 3718617 | 9.39 | Si |
| SLU 39 | -98 | -30956 | -299130 | 2.36 | 4810964 | 16.083 | Si |
| SLU 39 | 122 | -21206 | -395657 | 1.62 | 3718661 | 9.399 | Si |
| SLU 82 | -98 | -35295 | -244371 | 2.69 | 5171994 | 21.164 | Si |
| SLU 82 | 122 | -23259 | -407652 | 1.77 | 3981017 | 9.766 | Si |
| SLU 41 | -98 | -31016 | -280345 | 2.36 | 4816492 | 17.181 | Si |
| SLU 41 | 122 | -21200 | -390465 | 1.62 | 3717931 | 9.522 | Si |
| SLU 42 | -98 | -31010 | -281661 | 2.36 | 4815938 | 17.098 | Si |
| SLU 42 | 122 | -21200 | -390818 | 1.62 | 3717887 | 9.513 | Si |

### Verifica a pressoflessione nel piano secondo D.M. 17-01-18 NTC §7.8.2.2.1 in combinazioni sismiche, γM = 2

| Comb. | Quota | N | M | σ0 | Mu | c.s. | Verifica |
|---|---|---|---|---|---|---|---|
| SLV 8 | -98 | -14779 | 2588539 | 1.13 | 2934918 | 1.134 | Si |
| SLV 8 | 122 | -9998 | -140965 | 0.76 | 2050724 | 14.548 | Si |
| SLV 6 | -98 | -29154 | -2802994 | 2.22 | 5218046 | 1.862 | Si |
| SLV 6 | 122 | -16370 | -275168 | 1.25 | 3215487 | 11.686 | Si |
| SLV 7 | -98 | -14779 | 2588539 | 1.13 | 2934918 | 1.134 | Si |
| SLV 7 | 122 | -9998 | -140965 | 0.76 | 2050724 | 14.548 | Si |
| SLD 11 | -98 | -18739 | 1179412 | 1.43 | 3620256 | 3.07 | Si |
| SLD 11 | 122 | -11891 | -156014 | 0.91 | 2408253 | 15.436 | Si |
| SLV 9 | -98 | -28934 | -2616825 | 2.2 | 5187346 | 1.982 | Si |
| SLV 9 | 122 | -16456 | -244352 | 1.25 | 3230426 | 13.22 | Si |
| SLV 12 | -98 | -14559 | 2774708 | 1.11 | 2895589 | 1.044 | Si |
| SLV 12 | 122 | -10084 | -110149 | 0.77 | 2067156 | 18.767 | Si |
| SLV 10 | -98 | -28934 | -2616825 | 2.2 | 5187346 | 1.982 | Si |
| SLV 10 | 122 | -16456 | -244352 | 1.25 | 3230426 | 13.22 | Si |
| SLV 11 | -98 | -14559 | 2774708 | 1.11 | 2895589 | 1.044 | Si |
| SLV 11 | 122 | -10084 | -110149 | 0.77 | 2067156 | 18.767 | Si |
| SLV 5 | -98 | -29154 | -2802994 | 2.22 | 5218046 | 1.862 | Si |
| SLV 5 | 122 | -16370 | -275168 | 1.25 | 3215487 | 11.686 | Si |
| SLD 12 | -98 | -18739 | 1179412 | 1.43 | 3620256 | 3.07 | Si |

| Comb. | Quota | N | M | σ0 | Mu | c.s. | Verifica |
|---|---|---|---|---|---|---|---|
| SLD 12 | 122 | -11891 | -156014 | 0.91 | 2408253 | 15.436 | Si |

### Verifica a taglio nel piano secondo D.M. 17-01-18 (N.T.C.) §7.8.2.2.2 con rottura per scorrimento in combinazioni non sismiche, γM = 3

| Comb. | Quota | N | V par | M | σ0 | σN | I' | fvd | Vt scorr. | Vt fess.diag. | Vt,lim | c.s. | Verifica |
|---|---|---|---|---|---|---|---|---|---|---|---|---|---|
| SLU 75 | -98 | -33085 | 659 | -133694 | | 2.52 | 437.5 | 0.89 | 11703 | | | 17.75 | Si |
| SLU 75 | 122 | -21203 | 824 | -344024 | | 1.62 | 437.5 | 0.77 | 10119 | | | 12.28 | Si |
| SLU 77 | -98 | -33151 | 670 | -113593 | | 2.53 | 437.5 | 0.89 | 11712 | | | 17.48 | Si |
| SLU 77 | 122 | -21198 | 846 | -338479 | | 1.62 | 437.5 | 0.77 | 10118 | | | 11.96 | Si |
| SLU 72 | -98 | -27681 | 577 | 56709 | | 2.11 | 437.5 | 0.84 | 10982 | | | 19.03 | Si |
| SLU 72 | 122 | -16409 | 770 | -217165 | | 1.25 | 437.5 | 0.72 | 9479 | | | 12.31 | Si |
| SLU 70 | -98 | -27731 | 584 | 69549 | | 2.11 | 437.5 | 0.84 | 10989 | | | 18.81 | Si |
| SLU 70 | 122 | -16410 | 780 | -212760 | | 1.25 | 437.5 | 0.72 | 9480 | | | 12.16 | Si |
| SLU 78 | -98 | -33145 | 669 | -114909 | | 2.53 | 437.5 | 0.89 | 11711 | | | 17.52 | Si |
| SLU 78 | 122 | -21198 | 845 | -338832 | | 1.62 | 437.5 | 0.77 | 10118 | | | 11.98 | Si |
| SLU 74 | -98 | -33091 | 661 | -132378 | | 2.52 | 437.5 | 0.89 | 11704 | | | 17.71 | Si |
| SLU 74 | 122 | -21204 | 825 | -343671 | | 1.62 | 437.5 | 0.77 | 10119 | | | 12.27 | Si |
| SLU 80 | -98 | -33095 | 661 | -127749 | | 2.52 | 437.5 | 0.89 | 11704 | | | 17.7 | Si |
| SLU 80 | 122 | -21196 | 835 | -343237 | | 1.61 | 437.5 | 0.77 | 10118 | | | 12.11 | Si |
| SLU 71 | -98 | -27687 | 578 | 58025 | | 2.11 | 437.5 | 0.84 | 10983 | | | 18.99 | Si |
| SLU 71 | 122 | -16409 | 771 | -216811 | | 1.25 | 437.5 | 0.72 | 9480 | | | 12.29 | Si |
| SLU 69 | -98 | -27737 | 586 | 70865 | | 2.11 | 437.5 | 0.84 | 10990 | | | 18.76 | Si |
| SLU 69 | 122 | -16411 | 781 | -212407 | | 1.25 | 437.5 | 0.72 | 9480 | | | 12.14 | Si |
| SLU 79 | -98 | -33101 | 663 | -126433 | | 2.52 | 437.5 | 0.89 | 11705 | | | 17.67 | Si |
| SLU 79 | 122 | -21196 | 836 | -342884 | | 1.61 | 437.5 | 0.77 | 10118 | | | 12.1 | Si |

### Verifica a taglio nel piano secondo D.M. 17-01-18 (N.T.C.) §7.8.2.2.2 con rottura per scorrimento in combinazioni sismiche, γM = 2

| Comb. | Quota | N | V par | M | σ0 | σN | I' | fvd | Vt scorr. | Vt fess.diag. | Vt,lim | c.s. | Verifica |
|---|---|---|---|---|---|---|---|---|---|---|---|---|---|
| SLV 9 | -98 | -28934 | -9287 | -2616825 | | 2.51 | 384.92 | 1.33 | 15410 | | | 1.66 | Si |
| SLV 9 | 122 | -16456 | -8940 | -244352 | | 1.25 | 437.5 | 1.08 | 14229 | | | 1.59 | Si |
| SLV 11 | -98 | -14559 | 10150 | 2774708 | | 5.74 | 84.48 | 1.63 | 4119 | | | 0.41 | No, Vu<V |
| SLV 11 | 122 | -10084 | 10644 | -110149 | | 0.77 | 437.5 | 0.99 | 12954 | | | 1.22 | Si |
| SLV 12 | -98 | -14559 | 10150 | 2774708 | | 5.74 | 84.48 | 1.63 | 4119 | | | 0.41 | No, Vu<V |
| SLV 12 | 122 | -10084 | 10644 | -110149 | | 0.77 | 437.5 | 0.99 | 12954 | | | 1.22 | Si |
| SLV 6 | -98 | -29154 | -9273 | -2802994 | | 2.64 | 367.81 | 1.36 | 15026 | | | 1.62 | Si |
| SLV 6 | 122 | -16370 | -9519 | -275168 | | 1.25 | 437.5 | 1.08 | 14212 | | | 1.49 | Si |
| SLV 7 | -98 | -14779 | 10164 | 2588539 | | 3.77 | 130.79 | 1.59 | 6225 | | | 0.61 | No, Vu<V |
| SLV 7 | 122 | -9998 | 10064 | -140965 | | 0.76 | 437.5 | 0.99 | 12937 | | | 1.29 | Si |
| SLD 12 | -98 | -18739 | 4594 | 1179412 | | 1.43 | 437.5 | 1.12 | 14685 | | | 3.2 | Si |
| SLD 12 | 122 | -11891 | 4869 | -156014 | | 0.91 | 437.5 | 1.01 | 13316 | | | 2.73 | Si |
| SLV 5 | -98 | -29154 | -9273 | -2802994 | | 2.64 | 367.81 | 1.36 | 15026 | | | 1.62 | Si |
| SLV 5 | 122 | -16370 | -9519 | -275168 | | 1.25 | 437.5 | 1.08 | 14212 | | | 1.49 | Si |
| SLD 11 | -98 | -18739 | 4594 | 1179412 | | 1.43 | 437.5 | 1.12 | 14685 | | | 3.2 | Si |
| SLD 11 | 122 | -11891 | 4869 | -156014 | | 0.91 | 437.5 | 1.01 | 13316 | | | 2.73 | Si |
| SLV 8 | -98 | -14779 | 10164 | 2588539 | | 3.77 | 130.79 | 1.59 | 6225 | | | 0.61 | No, Vu<V |
| SLV 8 | 122 | -9998 | 10064 | -140965 | | 0.76 | 437.5 | 0.99 | 12937 | | | 1.29 | Si |
| SLV 10 | -98 | -28934 | -9287 | -2616825 | | 2.51 | 384.92 | 1.33 | 15410 | | | 1.66 | Si |
| SLV 10 | 122 | -16456 | -8940 | -244352 | | 1.25 | 437.5 | 1.08 | 14229 | | | 1.59 | Si |

### Verifica a pressoflessione fuori piano D.M. 17-01-18 (N.T.C.)

quota 36.5 Wa 0.05 denominatore 8 γM = 2

| Comb. | fd | Sa | σ0 | N | M | Mc | Coeff.s. | Verifica |
|---|---|---|---|---|---|---|---|---|
| SLV 12 | 14 | 0.25 | 0.69 | -9010 | 17929 | 127555 | 7.11 | Si |
| SLV 11 | 14 | 0.25 | 0.69 | -9010 | 17929 | 127555 | 7.11 | Si |
| SLV 8 | 14 | 0.25 | 0.69 | -9031 | 17929 | 127840 | 7.13 | Si |
| SLV 7 | 14 | 0.25 | 0.69 | -9031 | 17929 | 127840 | 7.13 | Si |
| SLV 15 | 14 | 0.25 | 1.19 | -15627 | 17929 | 211562 | 11.8 | Si |
| SLV 16 | 14 | 0.25 | 1.19 | -15627 | 17929 | 211562 | 11.8 | Si |
| SLV 3 | 14 | 0.25 | 1.2 | -15698 | 17929 | 212423 | 11.85 | Si |
| SLV 4 | 14 | 0.25 | 1.2 | -15698 | 17929 | 212423 | 11.85 | Si |
| SLV 13 | 14 | 0.25 | 1.62 | -21320 | 17929 | 277285 | 15.47 | Si |
| SLV 14 | 14 | 0.25 | 1.62 | -21320 | 17929 | 277285 | 15.47 | Si |

### Verifica dei meccanismi locali di collasso con analisi cinematica lineare

forza di aggancio al piano = 0 quota mezzeria = 36.5 Wa = 0.05 Ta = 0.0403

| Comb. | N top | N base | V orto | α0 | M* | e* | a0* | aLim | Verifica |
|---|---|---|---|---|---|---|---|---|---|
| SLV 5 | -11623 | -29154 | 125 | 0.059 | 16.901 | 0.922 | 93.459 | 562.86 | No |
| SLV 6 | -11623 | -29154 | 125 | 0.059 | 16.901 | 0.922 | 93.459 | 562.86 | No |
| SLV 11 | -10525 | -14559 | -124 | 0.06 | 15.8 | 0.918 | 94.408 | 562.86 | No |
| SLV 12 | -10525 | -14559 | -124 | 0.06 | 15.8 | 0.918 | 94.408 | 562.86 | No |
| SLV 9 | -11579 | -28934 | -68 | 0.063 | 16.857 | 0.922 | 99.549 | 562.86 | No |
| SLV 10 | -11579 | -28934 | -68 | 0.063 | 16.857 | 0.922 | 99.549 | 562.86 | No |
| SLV 8 | -10569 | -14779 | 69 | 0.064 | 15.844 | 0.918 | 100.722 | 562.86 | No |
| SLV 7 | -10569 | -14779 | 69 | 0.064 | 15.844 | 0.918 | 100.722 | 562.86 | No |
| SLV 16 | -10843 | -19333 | -329 | 0.045 | 16.118 | 0.919 | 71.002 | 392.678 | No |
| SLV 15 | -10843 | -19333 | -329 | 0.045 | 16.118 | 0.919 | 71.002 | 392.678 | No |

### Tabella dei coefficienti di sicurezza minimi

| Stato limite | Coeff.s. | Comb. | Verifica |
|---|---|---|---|
| PF_SLU | 9.39 | SLU 40 | Si |
| V_SLU | 11.962 | SLU 77 | Si |
| PF_SLV | 1.044 | SLV 11 | Si |
| V_SLV | 0.406 | SLV 11 | No |
| PFFP_SLV | 7.114 | SLV 11 | Si |
| R_SLV | 0.166 | SLV 5 | No |

## Maschio 44

Verifiche condotte secondo D.M. 17-01-18 (N.T.C.)

### Dati geometrici

| X ini. | Y ini. | X fin. | Y fin. | Quota i. | Quota.s | l | Sp. | h netta | h ini. | h fin. | a | a.s.,sx | a.s.,dx |
|---|---|---|---|---|---|---|---|---|---|---|---|---|---|
| -772.3 | -478.4 | -1101.3 | -478.4 | L1 | L3 | 329 | 45 | 269 | 269 | 269 | | | |

### Caratteristiche del materiale

(Circolare 7 21-01-19 C8.5.I) Muratura in mattoni pieni e malta di calce LC2_Corti

| fb | fk | fvk0 | fmedio | τ0 | fv0 | μ | ϕ | fv,lim | E | G | FC |
|---|---|---|---|---|---|---|---|---|---|---|---|
| 60 | | | 34.5 | 0.9 | 2 | 0.58 | 0.77 | 3.25 | 32000 | 12800 | 1.2 |

### Verifica a pressoflessione nel piano secondo D.M. 17-01-18 NTC §7.8.2.2.1 in combinazioni non sismiche, γM = 3

| Comb. | Quota | N | M | σ0 | Mu | c.s. | Verifica |
|---|---|---|---|---|---|---|---|
| SLU 42 | -98 | -29346 | 693584 | 1.98 | 3652774 | 5.267 | Si |
| SLU 42 | 171 | -15757 | -57525 | 1.06 | 2253417 | 39.173 | Si |
| SLU 36 | -98 | -29112 | 692317 | 1.97 | 3632911 | 5.247 | Si |
| SLU 36 | 171 | -15576 | -49842 | 1.05 | 2231321 | 44.768 | Si |
| SLU 76 | -98 | -35073 | 744514 | 2.37 | 4091570 | 5.496 | Si |
| SLU 76 | 171 | -18850 | -156263 | 1.27 | 2616159 | 16.742 | Si |
| SLU 37 | -98 | -29778 | 667729 | 2.01 | 3688974 | 5.525 | Si |
| SLU 37 | 171 | -15701 | -40303 | 1.06 | 2246549 | 55.742 | Si |
| SLU 35 | -98 | -29723 | 661472 | 2.01 | 3684405 | 5.57 | Si |
| SLU 35 | 171 | -15678 | -45650 | 1.06 | 2243764 | 49.151 | Si |
| SLU 80 | -98 | -36232 | 781309 | 2.45 | 4169523 | 5.337 | Si |
| SLU 80 | 171 | -19285 | -116656 | 1.3 | 2665093 | 22.846 | Si |
| SLU 34 | -98 | -28008 | 661778 | 1.89 | 3537273 | 5.345 | Si |
| SLU 34 | 171 | -15164 | -84101 | 1.02 | 2180802 | 25.931 | Si |
| SLU 78 | -98 | -36177 | 775052 | 2.44 | 4165919 | 5.375 | Si |
| SLU 78 | 171 | -19262 | -122004 | 1.3 | 2662532 | 21.823 | Si |
| SLU 84 | -98 | -36411 | 776319 | 2.46 | 4181266 | 5.386 | Si |
| SLU 84 | 171 | -19444 | -129687 | 1.31 | 2682803 | 20.687 | Si |
| SLU 38 | -98 | -29167 | 698574 | 1.97 | 3637572 | 5.207 | Si |
| SLU 38 | 171 | -15599 | -44494 | 1.05 | 2234112 | 50.211 | Si |

### Verifica a pressoflessione nel piano secondo D.M. 17-01-18 NTC §7.8.2.2.1 in combinazioni sismiche, γM = 2

| Comb. | Quota | N | M | σ0 | Mu | c.s. | Verifica |
|---|---|---|---|---|---|---|---|
| SLD 3 | -98 | -19801 | 856467 | 1.34 | 2900780 | 3.387 | Si |
| SLD 3 | 171 | -8716 | -336580 | 0.59 | 1364746 | 4.055 | Si |
| SLV 1 | -98 | -23494 | 1424863 | 1.59 | 3362816 | 2.36 | Si |
| SLV 1 | 171 | -7327 | -453761 | 0.49 | 1156455 | 2.549 | Si |
| SLV 7 | -98 | -3268 | 773502 | 0 | 0 | 0 | No, e>l/2 |
| SLV 7 | 171 | -2127 | -440311 | 0 | 0 | 0 | No, e>l/2 |
| SLD 2 | -98 | -24827 | 847789 | 1.68 | 3523577 | 4.156 | Si |
| SLD 2 | 171 | -10923 | -292680 | 0.74 | 1688329 | 5.769 | Si |
| SLD 1 | -98 | -24827 | 847789 | 1.68 | 3523577 | 4.156 | Si |
| SLD 1 | 171 | -10923 | -292680 | 0.74 | 1688329 | 5.769 | Si |
| SLV 4 | -98 | -11444 | 1455802 | 0.77 | 1763477 | 1.211 | Si |
| SLV 4 | 171 | -2045 | -552895 | 0 | 0 | 0 | No, e>l/2 |
| SLV 2 | -98 | -23494 | 1424863 | 1.59 | 3362816 | 2.36 | Si |
| SLV 2 | 171 | -7327 | -453761 | 0.49 | 1156455 | 2.549 | Si |
| SLD 4 | -98 | -19801 | 856467 | 1.34 | 2900780 | 3.387 | Si |
| SLD 4 | 171 | -8716 | -336580 | 0.59 | 1364746 | 4.055 | Si |
| SLV 3 | -98 | -11444 | 1455802 | 0.77 | 1763477 | 1.211 | Si |
| SLV 3 | 171 | -2045 | -552895 | 0 | 0 | 0 | No, e>l/2 |
| SLV 8 | -98 | -3268 | 773502 | 0 | 0 | 0 | No, e>l/2 |
| SLV 8 | 171 | -2127 | -440311 | 0 | 0 | 0 | No, e>l/2 |

### Verifica a taglio nel piano secondo D.M. 17-01-18 (N.T.C.) §7.8.2.2.2 con rottura per scorrimento in combinazioni non sismiche, γM = 3

| Comb. | Quota | N | V par | M | σ0 | σN | l' | fvd | Vt scorr. | Vt fess.diag. | Vt,lim | c.s. | Verifica |
|---|---|---|---|---|---|---|---|---|---|---|---|---|---|
| SLU 80 | -98 | -36232 | -5369 | 781309 | | 2.45 | 329 | 0.88 | 13056 | | | 2.43 | Si |
| SLU 80 | 171 | -19285 | -2041 | -116656 | | 1.3 | 329 | 0.73 | 10796 | | | 5.29 | Si |
| SLU 77 | -98 | -36788 | -5316 | 744208 | | 2.48 | 329 | 0.89 | 13130 | | | 2.47 | Si |
| SLU 77 | 171 | -19364 | -2000 | -117812 | | 1.31 | 329 | 0.73 | 10807 | | | 5.4 | Si |
| SLU 83 | -98 | -37023 | -5364 | 745475 | | 2.5 | 329 | 0.89 | 13161 | | | 2.45 | Si |
| SLU 83 | 171 | -19546 | -2004 | -125495 | | 1.32 | 329 | 0.73 | 10831 | | | 5.41 | Si |
| SLU 76 | -98 | -35073 | -5184 | 744514 | | 2.37 | 329 | 0.87 | 12901 | | | 2.49 | Si |
| SLU 76 | 171 | -18850 | -1989 | -156263 | | 1.27 | 329 | 0.73 | 10738 | | | 5.4 | Si |
| SLU 75 | -98 | -35425 | -5142 | 717694 | | 2.39 | 329 | 0.87 | 12948 | | | 2.52 | Si |
| SLU 75 | 171 | -18895 | -1960 | -158816 | | 1.28 | 329 | 0.73 | 10744 | | | 5.48 | Si |
| SLU 78 | -98 | -36177 | -5348 | 775052 | | 2.44 | 329 | 0.88 | 13049 | | | 2.44 | Si |
| SLU 78 | 171 | -19262 | -2033 | -122004 | | 1.3 | 329 | 0.73 | 10793 | | | 5.31 | Si |
| SLU 84 | -98 | -36411 | -5396 | 776319 | | 2.46 | 329 | 0.88 | 13080 | | | 2.42 | Si |
| SLU 84 | 171 | -19444 | -2036 | -129687 | | 1.31 | 329 | 0.73 | 10817 | | | 5.31 | Si |
| SLU 82 | -98 | -35660 | -5190 | 718961 | | 2.41 | 329 | 0.88 | 12980 | | | 2.5 | Si |
| SLU 82 | 171 | -19077 | -1963 | -166499 | | 1.29 | 329 | 0.73 | 10769 | | | 5.49 | Si |
| SLU 63 | -98 | -35221 | -5104 | 703969 | | 2.38 | 329 | 0.87 | 12921 | | | 2.53 | Si |
| SLU 63 | 171 | -18765 | -1938 | -162878 | | 1.27 | 329 | 0.72 | 10727 | | | 5.53 | Si |
| SLU 79 | -98 | -36843 | -5337 | 750465 | | 2.49 | 329 | 0.89 | 13137 | | | 2.46 | Si |
| SLU 79 | 171 | -19387 | -2008 | -112464 | | 1.31 | 329 | 0.73 | 10810 | | | 5.38 | Si |

### Verifica a taglio nel piano secondo D.M. 17-01-18 (N.T.C.) §7.8.2.2.2 con rottura per scorrimento in combinazioni sismiche, γM = 2

| Comb. | Quota | N | V par | M | σ0 | σN | l' | fvd | Vt scorr. | Vt fess.diag. | Vt,lim | c.s. | Verifica |
|---|---|---|---|---|---|---|---|---|---|---|---|---|---|
| SLD 13 | -98 | -31942 | -7788 | -28358 | | 2.16 | 329 | 1.26 | 18726 | | | 2.4 | Si |
| SLD 13 | 171 | -18497 | -4464 | -17959 | | 1.25 | 329 | 1.08 | 16037 | | | 3.59 | Si |
| SLV 16 | -98 | -28250 | -12547 | -596755 | | 1.91 | 329 | 1.21 | 17987 | | | 1.43 | Si |

| Comb. | Quota | N | V par | M | σ0 | σN | l' | fvd | Vt scorr. | Vt fess.diag. | Vt,lim | c.s. | Verifica |
|---|---|---|---|---|---|---|---|---|---|---|---|---|---|
| SLV 16 | 171 | -19886 | -7889 | 99222 | | 1.34 | 329 | 1.1 | 16315 | | | 2.07 | Si |
| SLD 14 | -98 | -31942 | -7788 | -28358 | | 2.16 | 329 | 1.26 | 18726 | | | 2.4 | Si |
| SLD 14 | 171 | -18497 | -4464 | -17959 | | 1.25 | 329 | 1.08 | 16037 | | | 3.59 | Si |
| SLV 8 | -98 | -3268 | 1114 | 773502 | | 0 | 0 | 0.83 | 0 | | | 0 | No, Vu<V |
| SLV 8 | 171 | -2127 | 2062 | -440311 | | 0 | 0 | 0.83 | 0 | | | 0 | No, Vu<V |
| SLV 13 | -98 | -40299 | -13565 | -627693 | | 2.72 | 329 | 1.38 | 20397 | | | 1.5 | Si |
| SLV 13 | 171 | -25169 | -8674 | 198356 | | 1.7 | 329 | 1.17 | 17371 | | | 2 | Si |
| SLV 15 | -98 | -28250 | -12547 | -596755 | | 1.91 | 329 | 1.21 | 17987 | | | 1.43 | Si |
| SLV 15 | 171 | -19886 | -7889 | 99222 | | 1.34 | 329 | 1.1 | 16315 | | | 2.07 | Si |
| SLV 7 | -98 | -3268 | 1114 | 773502 | | 0 | 0 | 0.83 | 0 | | | 0 | No, Vu<V |
| SLV 7 | 171 | -2127 | 2062 | -440311 | | 0 | 0 | 0.83 | 0 | | | 0 | No, Vu<V |
| SLV 3 | -98 | -11444 | 6643 | 1455802 | | 2.27 | 111.87 | 1.29 | 6484 | | | 0.98 | No, Vu<V |
| SLV 3 | 171 | -2045 | 6010 | -552895 | | 0 | 0 | 0.83 | 0 | | | 0 | No, Vu<V |
| SLV 14 | -98 | -40299 | -13565 | -627693 | | 2.72 | 329 | 1.38 | 20397 | | | 1.5 | Si |
| SLV 14 | 171 | -25169 | -8674 | 198356 | | 1.7 | 329 | 1.17 | 17371 | | | 2 | Si |
| SLV 4 | -98 | -11444 | 6643 | 1455802 | | 2.27 | 111.87 | 1.29 | 6484 | | | 0.98 | No, Vu<V |
| SLV 4 | 171 | -2045 | 6010 | -552895 | | 0 | 0 | 0.83 | 0 | | | 0 | No, Vu<V |

### Verifica a pressoflessione fuori piano D.M. 17-01-18 (N.T.C.)

quota 36.5 Wa 0.08 denominatore 8 γM = 2

| Comb. | fd | Sa | σ0 | N | M | Mc | Coeff.s. | Verifica |
|---|---|---|---|---|---|---|---|---|
| SLV 7 | 14 | 0.25 | 0.29 | -4245 | 20224 | 93280 | 4.61 | Si |
| SLV 8 | 14 | 0.25 | 0.29 | -4245 | 20224 | 93280 | 4.61 | Si |
| SLV 12 | 14 | 0.25 | 0.55 | -8107 | 20224 | 174240 | 8.62 | Si |
| SLV 11 | 14 | 0.25 | 0.55 | -8107 | 20224 | 174240 | 8.62 | Si |
| SLV 4 | 14 | 0.25 | 0.68 | -10041 | 20224 | 213390 | 10.55 | Si |
| SLV 3 | 14 | 0.25 | 0.68 | -10041 | 20224 | 213390 | 10.55 | Si |
| SLV 2 | 14 | 0.25 | 1.27 | -18871 | 20224 | 380309 | 18.8 | Si |
| SLV 1 | 14 | 0.25 | 1.27 | -18871 | 20224 | 380309 | 18.8 | Si |
| SLV 16 | 14 | 0.25 | 1.55 | -22914 | 20224 | 450267 | 22.26 | Si |
| SLV 15 | 14 | 0.25 | 1.55 | -22914 | 20224 | 450267 | 22.26 | Si |

### Verifica dei meccanismi locali di collasso con analisi cinematica lineare

forza di aggancio al piano = 0 quota mezzeria = 36.5 Wa = 0.08 Ta = 0.0269

| Comb. | N top | N base | V orto | α0 | M* | e* | a0* | aLim | Verifica |
|---|---|---|---|---|---|---|---|---|---|
| SLV 10 | -25087 | -48475 | -1687 | 0.035 | 31.175 | 0.948 | 54.046 | 417.584 | No |
| SLV 9 | -25087 | -48475 | -1687 | 0.035 | 31.175 | 0.948 | 54.046 | 417.584 | No |
| SLV 6 | -19734 | -43434 | -1325 | 0.04 | 25.749 | 0.939 | 61.422 | 417.584 | No |
| SLV 5 | -19734 | -43434 | -1325 | 0.04 | 25.749 | 0.939 | 61.422 | 417.584 | No |
| SLV 13 | -25169 | -40299 | -1648 | 0.037 | 31.258 | 0.948 | 56.311 | 332.581 | No |
| SLV 14 | -25169 | -40299 | -1648 | 0.037 | 31.258 | 0.948 | 56.311 | 332.581 | No |
| SLV 15 | -19886 | -28250 | -1253 | 0.043 | 25.903 | 0.939 | 66.577 | 332.581 | No |
| SLV 16 | -19886 | -28250 | -1253 | 0.043 | 25.903 | 0.939 | 66.577 | 332.581 | No |
| SLV 11 | -7479 | -8310 | -370 | 0.077 | 13.458 | 0.901 | 124.714 | 417.584 | No |
| SLV 12 | -7479 | -8310 | -370 | 0.077 | 13.458 | 0.901 | 124.714 | 417.584 | No |

### Tabella dei coefficienti di sicurezza minimi

| Stato limite | Coeff.s. | Comb. | Verifica |
|---|---|---|---|
| PF_SLU | 5.207 | SLU 38 | Si |
| V_SLU | 2.424 | SLU 84 | Si |
| PF_SLV | 0 | SLV 3 | No |
| V_SLV | 0 | SLV 3 | No |
| PFFP_SLV | 4.612 | SLV 7 | Si |
| R_SLV | 0.129 | SLV 9 | No |

## Maschio 45

Verifiche condotte secondo D.M. 17-01-18 (N.T.C.)

### Dati geometrici

| X ini. | Y ini. | X fin. | Y fin. | Quota i. | Quota.s | l | Sp. | h netta | h ini. | h fin. | a | a.s.,sx | a.s.,dx |
|---|---|---|---|---|---|---|---|---|---|---|---|---|---|
| -772.3 | -328.4 | -772.3 | -478.4 | L1 | L3 | 150 | 45 | 269 | 269 | 269 | | | |

### Caratteristiche del materiale

(Circolare 7 21-01-19 C8.5.I) Muratura in mattoni pieni e malta di calce LC2_Corti

| fb | fk | fvk0 | fmedio | τ0 | fv0 | μ | ϕ | fv,lim | E | G | FC |
|---|---|---|---|---|---|---|---|---|---|---|---|
| 60 | | | 34.5 | 0.9 | 2 | 0.58 | 0.77 | 3.25 | 32000 | 12800 | 1.2 |

### Verifica a pressoflessione nel piano secondo D.M. 17-01-18 NTC §7.8.2.2.1 in combinazioni non sismiche, γM = 3

| Comb. | Quota | N | M | σ0 | Mu | c.s. | Verifica |
|---|---|---|---|---|---|---|---|
| SLU 77 | -98 | -20902 | -168197 | 3.1 | 971785 | 5.778 | Si |
| SLU 77 | 171 | -12342 | -216166 | 1.83 | 717920 | 3.321 | Si |
| SLU 32 | -98 | -16959 | -147122 | 2.51 | 879678 | 5.979 | Si |
| SLU 32 | 171 | -10205 | -187874 | 1.51 | 623362 | 3.318 | Si |
| SLU 35 | -98 | -17079 | -150755 | 2.53 | 883098 | 5.858 | Si |
| SLU 35 | 171 | -10314 | -189627 | 1.53 | 628472 | 3.314 | Si |
| SLU 74 | -98 | -20783 | -164564 | 3.08 | 969614 | 5.892 | Si |
| SLU 74 | 171 | -12234 | -214414 | 1.81 | 713411 | 3.327 | Si |
| SLU 39 | -98 | -17435 | -155373 | 2.58 | 893053 | 5.748 | Si |
| SLU 39 | 171 | -10565 | -198733 | 1.57 | 640150 | 3.221 | Si |
| SLU 41 | -98 | -17555 | -159006 | 2.6 | 896317 | 5.637 | Si |
| SLU 41 | 171 | -10674 | -200486 | 1.58 | 645154 | 3.218 | Si |
| SLU 81 | -98 | -21259 | -172816 | 3.15 | 978022 | 5.659 | Si |
| SLU 81 | 171 | -12593 | -225272 | 1.87 | 728209 | 3.233 | Si |

| Comb. | Quota | N | M | σ0 | Mu | c.s. | Verifica |
|---|---|---|---|---|---|---|---|
| SLU 79 | -98 | -20832 | -167025 | 3.09 | 970506 | 5.811 | Si |
| SLU 79 | 171 | -12272 | -213753 | 1.82 | 715008 | 3.345 | Si |
| SLU 37 | -98 | -17008 | -149583 | 2.52 | 881080 | 5.89 | Si |
| SLU 37 | 171 | -10244 | -187213 | 1.52 | 625172 | 3.339 | Si |
| SLU 83 | -98 | -21379 | -176449 | 3.17 | 980037 | 5.554 | Si |
| SLU 83 | 171 | -12702 | -227025 | 1.88 | 732611 | 3.227 | Si |

Verifica a pressoflessione nel piano secondo D.M. 17-01-18 NTC §7.8.2.2.1 in combinazioni sismiche, γM = 2

| Comb. | Quota | N | M | σ0 | Mu | c.s. | Verifica |
|---|---|---|---|---|---|---|---|
| SLV 3 | -98 | -10767 | -432852 | 1.6 | 702121 | 1.622 | Si |
| SLV 3 | 171 | -1910 | -166108 | 0 | 0 | 0 | No, e>l/2 |
| SLV 6 | -98 | -24340 | -51386 | 3.61 | 1286846 | 25.043 | Si |
| SLV 6 | 171 | -21260 | -457430 | 3.15 | 1183558 | 2.587 | Si |
| SLV 11 | -98 | -5330 | -153918 | 0.79 | 373915 | 2.429 | Si |
| SLV 11 | 171 | 4342 | 180221 | 0 | 0 | 0 | No, Trazione |
| SLV 4 | -98 | -10767 | -432852 | 1.6 | 702121 | 1.622 | Si |
| SLV 4 | 171 | -1910 | -166108 | 0 | 0 | 0 | No, e>l/2 |
| SLV 7 | -98 | -4660 | -327214 | 0.69 | 329767 | 1.008 | Si |
| SLV 7 | 171 | 5833 | 112431 | 0 | 0 | 0 | No, Trazione |
| SLV 8 | -98 | -4660 | -327214 | 0.69 | 329767 | 1.008 | Si |
| SLV 8 | 171 | 5833 | 112431 | 0 | 0 | 0 | No, Trazione |
| SLV 2 | -98 | -16671 | -350104 | 2.47 | 997635 | 2.85 | Si |
| SLV 2 | 171 | -10038 | -337066 | 1.49 | 661272 | 1.962 | Si |
| SLV 1 | -98 | -16671 | -350104 | 2.47 | 997635 | 2.85 | Si |
| SLV 1 | 171 | -10038 | -337066 | 1.49 | 661272 | 1.962 | Si |
| SLV 12 | -98 | -5330 | -153918 | 0.79 | 373915 | 2.429 | Si |
| SLV 12 | 171 | 4342 | 180221 | 0 | 0 | 0 | No, Trazione |
| SLV 5 | -98 | -24340 | -51386 | 3.61 | 1286846 | 25.043 | Si |
| SLV 5 | 171 | -21260 | -457430 | 3.15 | 1183558 | 2.587 | Si |

Verifica a taglio nel piano secondo D.M. 17-01-18 (N.T.C.) §7.8.2.2.2 con rottura per scorrimento in combinazioni non sismiche, γM = 3

| Comb. | Quota | N | V par | M | σ0 | σN | l' | fvd | Vt scorr. | Vt fess.diag. | Vt,lim | c.s. | Verifica |
|---|---|---|---|---|---|---|---|---|---|---|---|---|---|
| SLU 60 | -98 | -20107 | 162 | -147751 | | 2.98 | 150.01 | 0.95 | 6431 | | | 39.76 | Si |
| SLU 60 | 171 | -11656 | 1317 | -197186 | | 1.73 | 150.01 | 0.79 | 5304 | | | 4.03 | Si |
| SLU 53 | -98 | -19631 | 133 | -139499 | | 2.91 | 150.01 | 0.94 | 6368 | | | 48.02 | Si |
| SLU 53 | 171 | -11296 | 1270 | -186327 | | 1.67 | 150.01 | 0.78 | 5256 | | | 4.14 | Si |
| SLU 62 | -98 | -20227 | 152 | -151383 | | 3 | 150.01 | 0.96 | 6447 | | | 42.43 | Si |
| SLU 62 | 171 | -11765 | 1324 | -198939 | | 1.74 | 150.01 | 0.79 | 5319 | | | 4.02 | Si |
| SLU 83 | -98 | -21379 | 186 | -176449 | | 3.17 | 150.01 | 0.98 | 6601 | | | 35.47 | Si |
| SLU 83 | 171 | -12702 | 1420 | -227025 | | 1.88 | 150.01 | 0.81 | 5444 | | | 3.83 | Si |
| SLU 74 | -98 | -20783 | 167 | -164564 | | 3.08 | 150.01 | 0.97 | 6521 | | | 39.11 | Si |
| SLU 74 | 171 | -12234 | 1366 | -214414 | | 1.81 | 150.01 | 0.8 | 5381 | | | 3.94 | Si |
| SLU 77 | -98 | -20902 | 157 | -168197 | | 3.1 | 150.01 | 0.97 | 6537 | | | 41.66 | Si |
| SLU 77 | 171 | -12342 | 1373 | -216166 | | 1.83 | 150.01 | 0.8 | 5396 | | | 3.93 | Si |
| SLU 56 | -98 | -19751 | 123 | -143132 | | 2.93 | 150.01 | 0.95 | 6384 | | | 51.99 | Si |
| SLU 56 | 171 | -11405 | 1276 | -188080 | | 1.69 | 150.01 | 0.78 | 5271 | | | 4.13 | Si |
| SLU 79 | -98 | -20832 | 153 | -167025 | | 3.09 | 150.01 | 0.97 | 6528 | | | 42.8 | Si |
| SLU 79 | 171 | -12272 | 1365 | -213753 | | 1.82 | 150.01 | 0.8 | 5386 | | | 3.95 | Si |
| SLU 81 | -98 | -21259 | 196 | -172816 | | 3.15 | 150.01 | 0.98 | 6585 | | | 33.62 | Si |
| SLU 81 | 171 | -12593 | 1414 | -225272 | | 1.87 | 150.01 | 0.8 | 5429 | | | 3.84 | Si |
| SLU 58 | -98 | -19680 | 118 | -141960 | | 2.92 | 150.01 | 0.94 | 6374 | | | 53.84 | Si |
| SLU 58 | 171 | -11335 | 1269 | -185666 | | 1.68 | 150.01 | 0.78 | 5261 | | | 4.15 | Si |

Verifica a taglio nel piano secondo D.M. 17-01-18 (N.T.C.) §7.8.2.2.2 con rottura per scorrimento in combinazioni sismiche, γM = 2

| Comb. | Quota | N | V par | M | σ0 | σN | l' | fvd | Vt scorr. | Vt fess.diag. | Vt,lim | c.s. | Verifica |
|---|---|---|---|---|---|---|---|---|---|---|---|---|---|
| SLV 9 | -98 | -25010 | 3647 | 121909 | | 3.71 | 150.01 | 1.57 | 10627 | | | 2.91 | Si |
| SLV 9 | 171 | -22751 | 4084 | -389641 | | 3.37 | 150.01 | 1.51 | 10175 | | | 2.49 | Si |
| SLV 14 | -98 | -18903 | 1294 | 227548 | | 2.8 | 150.01 | 1.39 | 9406 | | | 7.27 | Si |
| SLV 14 | 171 | -15008 | 3369 | -111102 | | 2.22 | 150.01 | 1.28 | 8627 | | | 2.56 | Si |
| SLV 10 | -98 | -25010 | 3647 | 121909 | | 3.71 | 150.01 | 1.57 | 10627 | | | 2.91 | Si |
| SLV 10 | 171 | -22751 | 4084 | -389641 | | 3.37 | 150.01 | 1.51 | 10175 | | | 2.49 | Si |
| SLV 11 | -98 | -5330 | -3364 | -153918 | | 0.86 | 138.37 | 1 | 6255 | | | 1.86 | Si |
| SLV 11 | 171 | 4342 | -1211 | 180221 | | 0 | 0 | 0.83 | 0 | | | 0 | No, Vu<V |
| SLV 8 | -98 | -4660 | -3450 | -327214 | | 7.21 | 14.36 | 1.63 | 1050 | | | 0.3 | No, Vu<V |
| SLV 8 | 171 | 5833 | -2186 | 112431 | | 0 | 0 | 0.83 | 0 | | | 0 | No, Vu<V |
| SLV 4 | -98 | -10767 | -1098 | -432852 | | 2.29 | 104.4 | 1.29 | 6068 | | | 5.53 | Si |
| SLV 4 | 171 | -1910 | -1471 | -166108 | | 0 | 0 | 0.83 | 0 | | | 0 | No, Vu<V |
| SLV 12 | -98 | -5330 | -3364 | -153918 | | 0.86 | 138.37 | 1 | 6255 | | | 1.86 | Si |
| SLV 12 | 171 | 4342 | -1211 | 180221 | | 0 | 0 | 0.83 | 0 | | | 0 | No, Vu<V |
| SLV 3 | -98 | -10767 | -1098 | -432852 | | 2.29 | 104.4 | 1.29 | 6068 | | | 5.53 | Si |
| SLV 3 | 171 | -1910 | -1471 | -166108 | | 0 | 0 | 0.83 | 0 | | | 0 | No, Vu<V |
| SLV 13 | -98 | -18903 | 1294 | 227548 | | 2.8 | 150.01 | 1.39 | 9406 | | | 7.27 | Si |
| SLV 13 | 171 | -15008 | 3369 | -111102 | | 2.22 | 150.01 | 1.28 | 8627 | | | 2.56 | Si |
| SLV 7 | -98 | -4660 | -3450 | -327214 | | 7.21 | 14.36 | 1.63 | 1050 | | | 0.3 | No, Vu<V |
| SLV 7 | 171 | 5833 | -2186 | 112431 | | 0 | 0 | 0.83 | 0 | | | 0 | No, Vu<V |

Verifica a pressoflessione fuori piano D.M. 17-01-18 (N.T.C.)

quota 36.5 Wa 0.08 denominatore 8 γM = 2

| Comb. | fd | Sa | σ0 | N | M | Mc | Coeff.s. | Verifica |
|---|---|---|---|---|---|---|---|---|
| SLV 7 | 14 | 0.25 | 0.59 | -4005 | 9221 | 85736 | 9.3 | Si |
| SLV 8 | 14 | 0.25 | 0.59 | -4005 | 9221 | 85736 | 9.3 | Si |
| SLV 12 | 14 | 0.25 | 0.74 | -4980 | 9221 | 105280 | 11.42 | Si |
| SLV 11 | 14 | 0.25 | 0.74 | -4980 | 9221 | 105280 | 11.42 | Si |
| SLV 4 | 14 | 0.25 | 1.4 | -9427 | 9221 | 187867 | 20.37 | Si |
| SLV 3 | 14 | 0.25 | 1.4 | -9427 | 9221 | 187867 | 20.37 | Si |
| SLV 16 | 14 | 0.25 | 1.88 | -12677 | 9221 | 241386 | 26.18 | Si |
| SLV 15 | 14 | 0.25 | 1.88 | -12677 | 9221 | 241386 | 26.18 | Si |

| Comb. | fd | Sa | σ0 | N | M | Mc | Coeff.s. | Verifica |
|---|---|---|---|---|---|---|---|---|
| SLV 2 | 14 | 0.25 | 2.23 | -15050 | 9221 | 276829 | 30.02 | Si |
| SLV 1 | 14 | 0.25 | 2.23 | -15050 | 9221 | 276829 | 30.02 | Si |

### Verifica dei meccanismi locali di collasso con analisi cinematica lineare

forza di aggancio al piano = 0 quota mezzeria = 36.5 Wa = 0.08 Ta = 0.0269

| Comb. | N top | N base | V orto | α0 | M* | e* | a0* | aLim | Verifica |
|---|---|---|---|---|---|---|---|---|---|
| SLV 8 | 5833 | -4660 | 27 | 0 | 0 | 0 | 0 | 417.584 | No, Trazione |
| SLV 12 | 4342 | -5330 | 24 | 0 | 0 | 0 | 0 | 417.584 | No, Trazione |
| SLV 7 | 5833 | -4660 | 27 | 0 | 0 | 0 | 0 | 417.584 | No, Trazione |
| SLV 11 | 4342 | -5330 | 24 | 0 | 0 | 0 | 0 | 417.584 | No, Trazione |
| SLV 9 | -22751 | -25010 | -175 | 0.082 | 25.719 | 0.97 | 122.992 | 417.584 | No |
| SLV 10 | -22751 | -25010 | -175 | 0.082 | 25.719 | 0.97 | 122.992 | 417.584 | No |
| SLV 5 | -21260 | -24340 | -172 | 0.082 | 24.202 | 0.968 | 123.268 | 417.584 | No |
| SLV 6 | -21260 | -24340 | -172 | 0.082 | 24.202 | 0.968 | 123.268 | 417.584 | No |
| SLV 14 | -15008 | -18903 | -109 | 0.085 | 17.84 | 0.958 | 129.458 | 332.581 | No |
| SLV 13 | -15008 | -18903 | -109 | 0.085 | 17.84 | 0.958 | 129.458 | 332.581 | No |

### Tabella dei coefficienti di sicurezza minimi

| Stato limite | Coeff.s. | Comb. | Verifica |
|---|---|---|---|
| PF_SLU | 3.218 | SLU 41 | Si |
| V_SLU | 3.833 | SLU 83 | Si |
| PF_SLV | 0 | SLV 12 | No |
| V_SLV | 0 | SLV 3 | No |
| PFFP_SLV | 9.298 | SLV 7 | Si |
| R_SLV | 0 | SLV 12 | No |

## Maschio 46

Verifiche condotte secondo D.M. 17-01-18 (N.T.C.)

### Dati geometrici

| X ini. | Y ini. | X fin. | Y fin. | Quota i. | Quota.s | l | Sp. | h netta | h ini. | h fin. | a | a.s.,sx | a.s.,dx |
|---|---|---|---|---|---|---|---|---|---|---|---|---|---|
| -626.8 | 104.6 | -626.8 | -328.4 | L1 | L3 | 433 | 30 | 269 | 269 | 269 | | | |

### Caratteristiche del materiale

(Circolare 7 21-01-19 C8.5.I) Muratura in mattoni pieni e malta di calce LC2_Corti

| fb | fk | fvk0 | fmedio | τ0 | fv0 | μ | ϕ | fv,lim | E | G | FC |
|---|---|---|---|---|---|---|---|---|---|---|---|
| 60 | | | 34.5 | 0.9 | 2 | 0.58 | 0.77 | 3.25 | 32000 | 12800 | 1.2 |

### Verifica a pressoflessione nel piano secondo D.M. 17-01-18 NTC §7.8.2.2.1 in combinazioni non sismiche, γM = 3

| Comb. | Quota | N | M | σ0 | Mu | c.s. | Verifica |
|---|---|---|---|---|---|---|---|
| SLU 81 | -98 | -64595 | -1466942 | 4.97 | 5447515 | 3.714 | Si |
| SLU 81 | 171 | -56347 | 797693 | 4.34 | 5702833 | 7.149 | Si |
| SLU 78 | -98 | -63987 | -1339229 | 4.93 | 5475842 | 4.089 | Si |
| SLU 78 | 171 | -56628 | 906687 | 4.36 | 5698706 | 6.285 | Si |
| SLU 79 | -98 | -63330 | -1495142 | 4.88 | 5504763 | 3.682 | Si |
| SLU 79 | 171 | -55161 | 777569 | 4.25 | 5716652 | 7.352 | Si |
| SLU 80 | -98 | -63542 | -1329211 | 4.89 | 5495623 | 4.134 | Si |
| SLU 80 | 171 | -56169 | 904714 | 4.32 | 5705274 | 6.306 | Si |
| SLU 83 | -98 | -65342 | -1526083 | 5.03 | 5410651 | 3.545 | Si |
| SLU 83 | 171 | -57042 | 792466 | 4.39 | 5692053 | 7.183 | Si |
| SLU 82 | -98 | -64807 | -1301011 | 4.99 | 5437276 | 4.179 | Si |
| SLU 82 | 171 | -57355 | 924838 | 4.42 | 5686563 | 6.149 | Si |
| SLU 77 | -98 | -63775 | -1505159 | 4.91 | 5485368 | 3.644 | Si |
| SLU 77 | 171 | -55620 | 779542 | 4.28 | 5711980 | 7.327 | Si |
| SLU 41 | -98 | -55455 | -1366613 | 4.27 | 5713759 | 4.181 | Si |
| SLU 41 | 171 | -48756 | 615560 | 3.75 | 5691798 | 9.247 | Si |
| SLU 84 | -98 | -65554 | -1360153 | 5.05 | 5399765 | 3.97 | Si |
| SLU 84 | 171 | -58050 | 919611 | 4.47 | 5672914 | 6.169 | Si |
| SLU 74 | -98 | -63028 | -1446018 | 4.85 | 5517443 | 3.816 | Si |
| SLU 74 | 171 | -54925 | 784769 | 4.23 | 5718714 | 7.287 | Si |

### Verifica a pressoflessione nel piano secondo D.M. 17-01-18 NTC §7.8.2.2.1 in combinazioni sismiche, γM = 2

| Comb. | Quota | N | M | σ0 | Mu | c.s. | Verifica |
|---|---|---|---|---|---|---|---|
| SLV 8 | -98 | -40726 | -2596633 | 3.14 | 6554698 | 2.524 | Si |
| SLV 8 | 171 | -31486 | -199978 | 2.42 | 5464354 | 27.325 | Si |
| SLV 12 | -98 | -37203 | -2671038 | 2.86 | 6166395 | 2.309 | Si |
| SLV 12 | 171 | -27468 | -346239 | 2.11 | 4917663 | 14.203 | Si |
| SLV 16 | -98 | -36032 | -1550255 | 2.77 | 6029962 | 3.89 | Si |
| SLV 16 | 171 | -28215 | 91064 | 2.17 | 5022564 | 55.154 | Si |
| SLV 11 | -98 | -37203 | -2671038 | 2.86 | 6166395 | 2.309 | Si |
| SLV 11 | 171 | -27468 | -346239 | 2.11 | 4917663 | 14.203 | Si |
| SLD 12 | -98 | -40646 | -1658306 | 3.13 | 6546194 | 3.948 | Si |
| SLD 12 | 171 | -33145 | 201864 | 2.55 | 5677328 | 28.125 | Si |
| SLV 15 | -98 | -36032 | -1550255 | 2.77 | 6029962 | 3.89 | Si |
| SLV 15 | 171 | -28215 | 91064 | 2.17 | 5022564 | 55.154 | Si |
| SLV 7 | -98 | -40726 | -2596633 | 3.14 | 6554698 | 2.524 | Si |
| SLV 7 | 171 | -31486 | -199978 | 2.42 | 5464354 | 27.325 | Si |
| SLD 11 | -98 | -40646 | -1658306 | 3.13 | 6546194 | 3.948 | Si |
| SLD 11 | 171 | -33145 | 201864 | 2.55 | 5677328 | 28.125 | Si |
| SLD 7 | -98 | -42117 | -1623651 | 3.24 | 6698613 | 4.126 | Si |
| SLD 7 | 171 | -34833 | 265286 | 2.68 | 5886164 | 22.188 | Si |
| SLD 8 | -98 | -42117 | -1623651 | 3.24 | 6698613 | 4.126 | Si |
| SLD 8 | 171 | -34833 | 265286 | 2.68 | 5886164 | 22.188 | Si |

Verifica a taglio nel piano secondo D.M. 17-01-18 (N.T.C.) §7.8.2.2.2 con rottura per scorrimento in combinazioni non sismiche, γM = 3

| Comb. | Quota | N | V par | M | σ0 | σN | l' | fvd | Vt scorr. | Vt fess.diag. | Vt,lim | c.s. | Verifica |
|---|---|---|---|---|---|---|---|---|---|---|---|---|---|
| SLU 52 | -98 | -56330 | 2399 | -878348 | | 4.34 | 432.99 | 1.08 | 14072 | | | 5.87 | Si |
| SLU 52 | 171 | -49921 | 3910 | 1000462 | | 3.84 | 432.99 | 1.07 | 13873 | | | 3.55 | Si |
| SLU 5 | -98 | -40752 | 2030 | -567827 | | 3.14 | 432.99 | 0.97 | 12650 | | | 6.23 | Si |
| SLU 5 | 171 | -36317 | 3134 | 795763 | | 2.8 | 432.99 | 0.93 | 12059 | | | 3.85 | Si |
| SLU 31 | -98 | -52303 | 2314 | -940838 | | 4.03 | 432.99 | 1.08 | 14072 | | | 6.08 | Si |
| SLU 31 | 171 | -47163 | 3678 | 823024 | | 3.63 | 432.99 | 1.04 | 13505 | | | 3.67 | Si |
| SLU 23 | -98 | -45865 | 2287 | -730646 | | 3.53 | 432.99 | 1.03 | 13332 | | | 5.83 | Si |
| SLU 23 | 171 | -41151 | 3505 | 800459 | | 3.17 | 432.99 | 0.98 | 12703 | | | 3.62 | Si |
| SLU 65 | -98 | -55752 | 2274 | -890117 | | 4.29 | 432.99 | 1.08 | 14072 | | | 6.19 | Si |
| SLU 65 | 171 | -49437 | 3766 | 977365 | | 3.81 | 432.99 | 1.06 | 13808 | | | 3.67 | Si |
| SLU 2 | -98 | -40006 | 2386 | -508686 | | 3.08 | 432.99 | 0.97 | 12551 | | | 5.26 | Si |
| SLU 2 | 171 | -35621 | 3475 | 800990 | | 2.74 | 432.99 | 0.92 | 11966 | | | 3.44 | Si |
| SLU 10 | -98 | -46443 | 2412 | -718878 | | 3.58 | 432.99 | 1.03 | 13409 | | | 5.56 | Si |
| SLU 10 | 171 | -41634 | 3648 | 823555 | | 3.21 | 432.99 | 0.98 | 12768 | | | 3.5 | Si |
| SLU 47 | -98 | -50639 | 2017 | -727298 | | 3.9 | 432.99 | 1.08 | 13968 | | | 6.93 | Si |
| SLU 47 | 171 | -44603 | 3396 | 972670 | | 3.43 | 432.99 | 1.01 | 13164 | | | 3.88 | Si |
| SLU 73 | -98 | -62190 | 2300 | -1100309 | | 4.79 | 432.99 | 1.08 | 14072 | | | 6.12 | Si |
| SLU 73 | 171 | -55450 | 3940 | 999930 | | 4.27 | 432.99 | 1.08 | 14072 | | | 3.57 | Si |
| SLU 44 | -98 | -49892 | 2372 | -668156 | | 3.84 | 432.99 | 1.07 | 13869 | | | 5.85 | Si |
| SLU 44 | 171 | -43908 | 3736 | 977897 | | 3.38 | 432.99 | 1.01 | 13071 | | | 3.5 | Si |

Verifica a taglio nel piano secondo D.M. 17-01-18 (N.T.C.) §7.8.2.2.2 con rottura per scorrimento in combinazioni sismiche, γM = 2

| Comb. | Quota | N | V par | M | σ0 | σN | l' | fvd | Vt scorr. | Vt fess.diag. | Vt,lim | c.s. | Verifica |
|---|---|---|---|---|---|---|---|---|---|---|---|---|---|
| SLV 12 | -98 | -37203 | -16430 | -2671038 | | 2.86 | 432.99 | 1.41 | 18265 | | | 1.11 | Si |
| SLV 12 | 171 | -27468 | -14012 | -346239 | | 2.11 | 432.99 | 1.26 | 16319 | | | 1.16 | Si |
| SLV 5 | -98 | -49128 | 16076 | 853620 | | 3.78 | 432.99 | 1.59 | 20651 | | | 1.28 | Si |
| SLV 5 | 171 | -47010 | 15941 | 1536993 | | 3.62 | 432.99 | 1.56 | 20227 | | | 1.27 | Si |
| SLV 10 | -98 | -45605 | 15761 | 779215 | | 3.51 | 432.99 | 1.54 | 19946 | | | 1.27 | Si |
| SLV 10 | 171 | -42992 | 14625 | 1390732 | | 3.31 | 432.99 | 1.5 | 19423 | | | 1.33 | Si |
| SLV 9 | -98 | -45605 | 15761 | 779215 | | 3.51 | 432.99 | 1.54 | 19946 | | | 1.27 | Si |
| SLV 9 | 171 | -42992 | 14625 | 1390732 | | 3.31 | 432.99 | 1.5 | 19423 | | | 1.33 | Si |
| SLD 6 | -98 | -45685 | 6756 | -159112 | | 3.52 | 432.99 | 1.54 | 19962 | | | 2.95 | Si |
| SLD 6 | 171 | -41333 | 7292 | 988891 | | 3.18 | 432.99 | 1.47 | 19091 | | | 2.62 | Si |
| SLV 11 | -98 | -37203 | -16430 | -2671038 | | 2.86 | 432.99 | 1.41 | 18265 | | | 1.11 | Si |
| SLV 11 | 171 | -27468 | -14012 | -346239 | | 2.11 | 432.99 | 1.26 | 16319 | | | 1.16 | Si |
| SLD 5 | -98 | -45685 | 6756 | -159112 | | 3.52 | 432.99 | 1.54 | 19962 | | | 2.95 | Si |
| SLD 5 | 171 | -41333 | 7292 | 988891 | | 3.18 | 432.99 | 1.47 | 19091 | | | 2.62 | Si |
| SLV 7 | -98 | -40726 | -16116 | -2596633 | | 3.14 | 432.99 | 1.46 | 18970 | | | 1.18 | Si |
| SLV 7 | 171 | -31486 | -12696 | -199978 | | 2.42 | 432.99 | 1.32 | 17122 | | | 1.35 | Si |
| SLV 8 | -98 | -40726 | -16116 | -2596633 | | 3.14 | 432.99 | 1.46 | 18970 | | | 1.18 | Si |
| SLV 8 | 171 | -31486 | -12696 | -199978 | | 2.42 | 432.99 | 1.32 | 17122 | | | 1.35 | Si |
| SLV 6 | -98 | -49128 | 16076 | 853620 | | 3.78 | 432.99 | 1.59 | 20651 | | | 1.28 | Si |
| SLV 6 | 171 | -47010 | 15941 | 1536993 | | 3.62 | 432.99 | 1.56 | 20227 | | | 1.27 | Si |

Verifica a pressoflessione fuori piano D.M. 17-01-18 (N.T.C.)

quota 36.5 Wa 0.05 denominatore 8 γM = 2

| Comb. | fd | Sa | σ0 | N | M | Mc | Coeff.s. | Verifica |
|---|---|---|---|---|---|---|---|---|
| SLV 11 | 14 | 0.25 | 2.63 | -34124 | 17744 | 401815 | 22.64 | Si |
| SLV 12 | 14 | 0.25 | 2.63 | -34124 | 17744 | 401815 | 22.64 | Si |
| SLV 16 | 14 | 0.25 | 2.64 | -34267 | 17744 | 403035 | 22.71 | Si |
| SLV 15 | 14 | 0.25 | 2.64 | -34267 | 17744 | 403035 | 22.71 | Si |
| SLV 8 | 14 | 0.25 | 2.9 | -37626 | 17744 | 430594 | 24.27 | Si |
| SLV 7 | 14 | 0.25 | 2.9 | -37626 | 17744 | 430594 | 24.27 | Si |
| SLV 14 | 14 | 0.25 | 2.92 | -37891 | 17744 | 432680 | 24.38 | Si |
| SLV 13 | 14 | 0.25 | 2.92 | -37891 | 17744 | 432680 | 24.38 | Si |
| SLV 4 | 14 | 0.25 | 3.54 | -45939 | 17744 | 489638 | 27.59 | Si |
| SLV 3 | 14 | 0.25 | 3.54 | -45939 | 17744 | 489638 | 27.59 | Si |

Verifica dei meccanismi locali di collasso con analisi cinematica lineare

forza di aggancio al piano = 0 quota mezzeria = 36.5 Wa = 0.05 Ta = 0.0403

| Comb. | N top | N base | V orto | α0 | M* | e* | a0* | aLim | Verifica |
|---|---|---|---|---|---|---|---|---|---|
| SLV 6 | -47010 | -49128 | -45 | 0.058 | 52.781 | 0.971 | 87.323 | 562.86 | No |
| SLV 5 | -47010 | -49128 | -45 | 0.058 | 52.781 | 0.971 | 87.323 | 562.86 | No |
| SLV 9 | -42992 | -45605 | -21 | 0.059 | 48.69 | 0.969 | 88.617 | 562.86 | No |
| SLV 10 | -42992 | -45605 | -21 | 0.059 | 48.69 | 0.969 | 88.617 | 562.86 | No |
| SLV 7 | -31486 | -40726 | -6 | 0.061 | 36.98 | 0.96 | 91.796 | 562.86 | No |
| SLV 8 | -31486 | -40726 | -6 | 0.061 | 36.98 | 0.96 | 91.796 | 562.86 | No |
| SLV 12 | -27468 | -37203 | 17 | 0.061 | 32.896 | 0.956 | 92.623 | 562.86 | No |
| SLV 11 | -27468 | -37203 | 17 | 0.061 | 32.896 | 0.956 | 92.623 | 562.86 | No |
| SLV 1 | -46263 | -50299 | -58 | 0.058 | 52.021 | 0.971 | 87.01 | 392.678 | No |
| SLV 2 | -46263 | -50299 | -58 | 0.058 | 52.021 | 0.971 | 87.01 | 392.678 | No |

Tabella dei coefficienti di sicurezza minimi

| Stato limite | Coeff.s. | Comb. | Verifica |
|---|---|---|---|
| PF_SLU | 3.545 | SLU 83 | Si |
| V_SLU | 3.444 | SLU 2 | Si |
| PF_SLV | 2.309 | SLV 11 | Si |
| V_SLV | 1.112 | SLV 11 | Si |
| PFFP_SLV | 22.645 | SLV 11 | Si |
| R_SLV | 0.155 | SLV 5 | No |

## Maschio 47

Verifiche condotte secondo D.M. 17-01-18 (N.T.C.)

### Dati geometrici

| X ini. | Y ini. | X fin. | Y fin. | Quota i. | Quota.s | l | Sp. | h netta | h ini. | h fin. | a | a.s.,sx | a.s.,dx |
|---|---|---|---|---|---|---|---|---|---|---|---|---|---|
| -1101.3 | -328.4 | -1055.3 | -328.4 | L1 | L3 | 46 | 45 | 269 | 269 | 269 | | | |

### Caratteristiche del materiale

(Circolare 7 21-01-19 C8.5.I) Muratura in mattoni pieni e malta di calce LC2_Corti

| fb | fk | fvk0 | fmedio | τ0 | fv0 | μ | ϕ | fv,lim | E | G | FC |
|---|---|---|---|---|---|---|---|---|---|---|---|
| 60 | | | 34.5 | 0.9 | 2 | 0.58 | 0.77 | 3.25 | 32000 | 12800 | 1.2 |

### Verifica a pressoflessione nel piano secondo D.M. 17-01-18 NTC §7.8.2.2.1 in combinazioni non sismiche, γM = 3

| Comb. | Quota | N | M | σ0 | Mu | c.s. | Verifica |
|---|---|---|---|---|---|---|---|
| SLU 75 | -98 | -9761 | -70058 | 4.72 | 94544 | 1.35 | Si |
| SLU 75 | 107 | -10252 | -1375 | 4.95 | 92431 | 67.221 | Si |
| SLU 80 | -98 | -10010 | -70030 | 4.84 | 93553 | 1.336 | Si |
| SLU 80 | 107 | -10429 | -1772 | 5.04 | 91509 | 51.638 | Si |
| SLU 73 | -98 | -9452 | -70659 | 4.57 | 95534 | 1.352 | Si |
| SLU 73 | 107 | -10054 | -582 | 4.86 | 93364 | 160.496 | Si |
| SLU 77 | -98 | -10086 | -68596 | 4.87 | 93218 | 1.359 | Si |
| SLU 77 | 107 | -10422 | -2410 | 5.03 | 91546 | 37.989 | Si |
| SLU 78 | -98 | -10017 | -70317 | 4.84 | 93525 | 1.33 | Si |
| SLU 78 | 107 | -10449 | -1750 | 5.05 | 91401 | 52.217 | Si |
| SLU 83 | -98 | -10249 | -71759 | 4.95 | 92447 | 1.288 | Si |
| SLU 83 | 107 | -10724 | -1895 | 5.18 | 89782 | 47.382 | Si |
| SLU 81 | -98 | -9993 | -71500 | 4.83 | 93628 | 1.309 | Si |
| SLU 81 | 107 | -10528 | -1519 | 5.09 | 90959 | 59.863 | Si |
| SLU 82 | -98 | -9923 | -73221 | 4.79 | 93918 | 1.283 | Si |
| SLU 82 | 107 | -10554 | -860 | 5.1 | 90807 | 105.58 | Si |
| SLU 84 | -98 | -10180 | -73480 | 4.92 | 92785 | 1.263 | Si |
| SLU 84 | 107 | -10751 | -1235 | 5.19 | 89616 | 72.535 | Si |
| SLU 76 | -98 | -9708 | -70918 | 4.69 | 94731 | 1.336 | Si |
| SLU 76 | 107 | -10250 | -957 | 4.95 | 92441 | 96.582 | Si |

### Verifica a pressoflessione nel piano secondo D.M. 17-01-18 NTC §7.8.2.2.1 in combinazioni sismiche, γM = 2

| Comb. | Quota | N | M | σ0 | Mu | c.s. | Verifica |
|---|---|---|---|---|---|---|---|
| SLD 3 | -98 | -5776 | -85050 | 2.79 | 102514 | 1.205 | Si |
| SLD 3 | 107 | -7717 | -1899 | 3.73 | 123339 | 64.96 | Si |
| SLD 4 | -98 | -5776 | -85050 | 2.79 | 102514 | 1.205 | Si |
| SLD 4 | 107 | -7717 | -1899 | 3.73 | 123339 | 64.96 | Si |
| SLV 7 | -98 | -4097 | -68441 | 1.98 | 78974 | 1.154 | Si |
| SLV 7 | 107 | -5962 | 1632 | 2.88 | 104800 | 64.212 | Si |
| SLD 2 | -98 | -6323 | -86409 | 3.05 | 109077 | 1.262 | Si |
| SLD 2 | 107 | -8139 | -2905 | 3.93 | 126957 | 43.698 | Si |
| SLV 8 | -98 | -4097 | -68441 | 1.98 | 78974 | 1.154 | Si |
| SLV 8 | 107 | -5962 | 1632 | 2.88 | 104800 | 64.212 | Si |
| SLV 2 | -98 | -5794 | -139261 | 0 | 0 | 0 | No, e>l/2 |
| SLV 2 | 107 | -9742 | -5131 | 4.71 | 137763 | 26.851 | Si |
| SLV 1 | -98 | -5794 | -139261 | 0 | 0 | 0 | No, e>l/2 |
| SLV 1 | 107 | -9742 | -5131 | 4.71 | 137763 | 26.851 | Si |
| SLV 3 | -98 | -4491 | -136013 | 0 | 0 | 0 | No, e>l/2 |
| SLV 3 | 107 | -8740 | -2782 | 4.22 | 131557 | 47.29 | Si |
| SLV 4 | -98 | -4491 | -136013 | 0 | 0 | 0 | No, e>l/2 |
| SLV 4 | 107 | -8740 | -2782 | 4.22 | 131557 | 47.29 | Si |
| SLD 1 | -98 | -6323 | -86409 | 3.05 | 109077 | 1.262 | Si |
| SLD 1 | 107 | -8139 | -2905 | 3.93 | 126957 | 43.698 | Si |

### Verifica a taglio nel piano secondo D.M. 17-01-18 (N.T.C.) §7.8.2.2.2 con rottura per scorrimento in combinazioni non sismiche, γM = 3

| Comb. | Quota | N | V par | M | σ0 | σN | l' | fvd | Vt scorr. | Vt fess.diag. | Vt,lim | c.s. | Verifica |
|---|---|---|---|---|---|---|---|---|---|---|---|---|---|
| SLU 82 | -98 | -9923 | -1616 | -73221 | | 4.79 | 46 | 1.08 | 2242 | | | 1.39 | Si |
| SLU 82 | 107 | -10554 | 202 | -860 | | 5.1 | 46 | 1.08 | 2242 | | | 11.1 | Si |
| SLU 80 | -98 | -10010 | -1545 | -70030 | | 4.84 | 46 | 1.08 | 2242 | | | 1.45 | Si |
| SLU 80 | 107 | -10429 | 221 | -1772 | | 5.04 | 46 | 1.08 | 2242 | | | 10.17 | Si |
| SLU 78 | -98 | -10017 | -1551 | -70317 | | 4.84 | 46 | 1.08 | 2242 | | | 1.45 | Si |
| SLU 78 | 107 | -10449 | 222 | -1750 | | 5.05 | 46 | 1.08 | 2242 | | | 10.1 | Si |
| SLU 83 | -98 | -10249 | -1584 | -71759 | | 4.95 | 46 | 1.08 | 2242 | | | 1.42 | Si |
| SLU 83 | 107 | -10724 | 204 | -1895 | | 5.18 | 46 | 1.08 | 2242 | | | 11.02 | Si |
| SLU 81 | -98 | -9993 | -1578 | -71500 | | 4.83 | 46 | 1.08 | 2242 | | | 1.42 | Si |
| SLU 81 | 107 | -10528 | 194 | -1519 | | 5.09 | 46 | 1.08 | 2242 | | | 11.58 | Si |
| SLU 84 | -98 | -10180 | -1622 | -73480 | | 4.92 | 46 | 1.08 | 2242 | | | 1.38 | Si |
| SLU 84 | 107 | -10751 | 212 | -1235 | | 5.19 | 46 | 1.08 | 2242 | | | 10.58 | Si |
| SLU 77 | -98 | -10086 | -1513 | -68596 | | 4.87 | 46 | 1.08 | 2242 | | | 1.48 | Si |
| SLU 77 | 107 | -10422 | 214 | -2410 | | 5.03 | 46 | 1.08 | 2242 | | | 10.5 | Si |
| SLU 73 | -98 | -9452 | -1558 | -70659 | | 4.57 | 46 | 1.08 | 2242 | | | 1.44 | Si |
| SLU 73 | 107 | -10054 | 207 | -582 | | 4.86 | 46 | 1.08 | 2242 | | | 10.85 | Si |
| SLU 75 | -98 | -9761 | -1545 | -70058 | | 4.72 | 46 | 1.08 | 2242 | | | 1.45 | Si |
| SLU 75 | 107 | -10252 | 212 | -1375 | | 4.95 | 46 | 1.08 | 2242 | | | 10.57 | Si |
| SLU 76 | -98 | -9708 | -1564 | -70918 | | 4.69 | 46 | 1.08 | 2242 | | | 1.43 | Si |
| SLU 76 | 107 | -10250 | 216 | -957 | | 4.95 | 46 | 1.08 | 2242 | | | 10.36 | Si |

### Verifica a taglio nel piano secondo D.M. 17-01-18 (N.T.C.) §7.8.2.2.2 con rottura per scorrimento in combinazioni sismiche, γM = 2

| Comb. | Quota | N | V par | M | σ0 | σN | l' | fvd | Vt scorr. | Vt fess.diag. | Vt,lim | c.s. | Verifica |
|---|---|---|---|---|---|---|---|---|---|---|---|---|---|
| SLV 7 | -98 | -4097 | -1409 | -68441 | | 4.82 | 18.89 | 1.63 | 1381 | | | 0.98 | No, Vu<V |
| SLV 7 | 107 | -5962 | -311 | 1632 | | 2.88 | 46 | 1.41 | 2917 | | | 9.39 | Si |
| SLD 1 | -98 | -6323 | -1583 | -86409 | | 5.02 | 28 | 1.63 | 2048 | | | 1.29 | Si |

| Comb. | Quota | N | V par | M | σ0 | σN | l' | fvd | Vt scorr. | Vt fess.diag. | Vt,lim | c.s. | Verifica |
|---|---|---|---|---|---|---|---|---|---|---|---|---|---|
| SLD 1 | 107 | -8139 | 175 | -2905 | | 3.93 | 46 | 1.62 | 3353 | | | 19.18 | Si |
| SLV 4 | -98 | -4491 | -2308 | -136013 | | 0 | 0 | 0.83 | 0 | | | 0 | No, Vu<V |
| SLV 4 | 107 | -8740 | -51 | -2782 | | 4.22 | 46 | 1.63 | 3364 | | | 66 | Si |
| SLD 4 | -98 | -5776 | -1582 | -85050 | | 5.17 | 24.83 | 1.63 | 1816 | | | 1.15 | Si |
| SLD 4 | 107 | -7717 | 63 | -1899 | | 3.73 | 46 | 1.58 | 3268 | | | 51.6 | Si |
| SLD 3 | -98 | -5776 | -1582 | -85050 | | 5.17 | 24.83 | 1.63 | 1816 | | | 1.15 | Si |
| SLD 3 | 107 | -7717 | 63 | -1899 | | 3.73 | 46 | 1.58 | 3268 | | | 51.6 | Si |
| SLV 1 | -98 | -5794 | -2309 | -139261 | | 0 | 0 | 0.83 | 0 | | | 0 | No, Vu<V |
| SLV 1 | 107 | -9742 | 212 | -5131 | | 4.71 | 46 | 1.63 | 3364 | | | 15.89 | Si |
| SLV 3 | -98 | -4491 | -2308 | -136013 | | 0 | 0 | 0.83 | 0 | | | 0 | No, Vu<V |
| SLV 3 | 107 | -8740 | -51 | -2782 | | 4.22 | 46 | 1.63 | 3364 | | | 66 | Si |
| SLD 2 | -98 | -6323 | -1583 | -86409 | | 5.02 | 28 | 1.63 | 2048 | | | 1.29 | Si |
| SLD 2 | 107 | -8139 | 175 | -2905 | | 3.93 | 46 | 1.62 | 3353 | | | 19.18 | Si |
| SLV 8 | -98 | -4097 | -1409 | -68441 | | 4.82 | 18.89 | 1.63 | 1381 | | | 0.98 | No, Vu<V |
| SLV 8 | 107 | -5962 | -311 | 1632 | | 2.88 | 46 | 1.41 | 2917 | | | 9.39 | Si |
| SLV 2 | -98 | -5794 | -2309 | -139261 | | 0 | 0 | 0.83 | 0 | | | 0 | No, Vu<V |
| SLV 2 | 107 | -9742 | 212 | -5131 | | 4.71 | 46 | 1.63 | 3364 | | | 15.89 | Si |

### Verifica a pressoflessione fuori piano D.M. 17-01-18 (N.T.C.)

quota 36.5 Wa 0.08 denominatore 8 γM = 2

| Comb. | fd | Sa | σ0 | N | M | Mc | Coeff.s. | Verifica |
|---|---|---|---|---|---|---|---|---|
| SLV 16 | 14 | 0.25 | 2.96 | -6132 | 2828 | 104524 | 36.96 | Si |
| SLV 15 | 14 | 0.25 | 2.96 | -6132 | 2828 | 104524 | 36.96 | Si |
| SLV 12 | 14 | 0.25 | 3.02 | -6256 | 2828 | 105944 | 37.47 | Si |
| SLV 11 | 14 | 0.25 | 3.02 | -6256 | 2828 | 105944 | 37.47 | Si |
| SLV 13 | 14 | 0.25 | 3.71 | -7683 | 2828 | 120358 | 42.56 | Si |
| SLV 14 | 14 | 0.25 | 3.71 | -7683 | 2828 | 120358 | 42.56 | Si |
| SLV 7 | 14 | 0.25 | 3.82 | -7913 | 2828 | 122340 | 43.27 | Si |
| SLV 8 | 14 | 0.25 | 3.82 | -7913 | 2828 | 122340 | 43.27 | Si |
| SLV 9 | 14 | 0.25 | 5.52 | -11426 | 2828 | 140946 | 49.85 | Si |
| SLV 10 | 14 | 0.25 | 5.52 | -11426 | 2828 | 140946 | 49.85 | Si |

### Verifica dei meccanismi locali di collasso con analisi cinematica lineare

forza di aggancio al piano = 0 quota mezzeria = 36.5 Wa = 0.08 Ta = 0.0269

| Comb. | N top | N base | V orto | α0 | M* | e* | a0* | aLim | Verifica |
|---|---|---|---|---|---|---|---|---|---|
| SLV 11 | -2204 | -5063 | 188 | 0.03 | 3.039 | 0.93 | 46.205 | 417.584 | No |
| SLV 12 | -2204 | -5063 | 188 | 0.03 | 3.039 | 0.93 | 46.205 | 417.584 | No |
| SLV 8 | -3325 | -4097 | 222 | 0.037 | 4.174 | 0.946 | 56.083 | 417.584 | No |
| SLV 7 | -3325 | -4097 | 222 | 0.037 | 4.174 | 0.946 | 56.083 | 417.584 | No |
| SLV 4 | -6085 | -4491 | 222 | 0.056 | 6.98 | 0.966 | 84.721 | 332.581 | No |
| SLV 3 | -6085 | -4491 | 222 | 0.056 | 6.98 | 0.966 | 84.721 | 332.581 | No |
| SLV 5 | -7473 | -8441 | 108 | 0.075 | 8.393 | 0.971 | 112.786 | 417.584 | No |
| SLV 6 | -7473 | -8441 | 108 | 0.075 | 8.393 | 0.971 | 112.786 | 417.584 | No |
| SLV 15 | -2348 | -7710 | 108 | 0.06 | 3.184 | 0.932 | 93.988 | 332.581 | No |
| SLV 16 | -2348 | -7710 | 108 | 0.06 | 3.184 | 0.932 | 93.988 | 332.581 | No |

### Tabella dei coefficienti di sicurezza minimi

| Stato limite | Coeff.s. | Comb. | Verifica |
|---|---|---|---|
| PF_SLU | 1.263 | SLU 84 | Si |
| V_SLU | 1.383 | SLU 84 | Si |
| PF_SLV | 0 | SLV 1 | No |
| V_SLV | 0 | SLV 1 | No |
| PFFP_SLV | 36.965 | SLV 15 | Si |
| R_SLV | 0.111 | SLV 11 | No |

## Maschio 48

Verifiche condotte secondo D.M. 17-01-18 (N.T.C.)

### Dati geometrici

| X ini. | Y ini. | X fin. | Y fin. | Quota i. | Quota.s | l | Sp. | h netta | h ini. | h fin. | a | a.s.,sx | a.s.,dx |
|---|---|---|---|---|---|---|---|---|---|---|---|---|---|
| -825.3 | -328.4 | -746.3 | -328.4 | L1 | L3 | 79 | 45 | 269 | 269 | 269 | | | |

### Caratteristiche del materiale

(Circolare 7 21-01-19 C8.5.I) Muratura in mattoni pieni e malta di calce LC2_Corti

| fb | fk | fvk0 | fmedio | τ0 | fv0 | μ | ϕ | fv,lim | E | G | FC |
|---|---|---|---|---|---|---|---|---|---|---|---|
| 60 | | | 34.5 | 0.9 | 2 | 0.58 | 0.77 | 3.25 | 32000 | 12800 | 1.2 |

### Verifica a pressoflessione nel piano secondo D.M. 17-01-18 NTC §7.8.2.2.1 in combinazioni non sismiche, γM = 3

| Comb. | Quota | N | M | σ0 | Mu | c.s. | Verifica |
|---|---|---|---|---|---|---|---|
| SLU 77 | 102 | -17272 | 139095 | 4.86 | 275328 | 1.979 | Si |
| SLU 77 | 142 | -15912 | 250703 | 4.48 | 283165 | 1.129 | Si |
| SLU 75 | 102 | -17708 | 140371 | 4.98 | 271744 | 1.936 | Si |
| SLU 75 | 142 | -16389 | 259412 | 4.61 | 280991 | 1.083 | Si |
| SLU 78 | 102 | -17933 | 143019 | 5.04 | 269697 | 1.886 | Si |
| SLU 78 | 142 | -16597 | 262259 | 4.67 | 279849 | 1.067 | Si |
| SLU 73 | 102 | -17857 | 139798 | 5.02 | 270398 | 1.934 | Si |
| SLU 73 | 142 | -16569 | 263038 | 4.66 | 280008 | 1.065 | Si |
| SLU 82 | 102 | -18248 | 143771 | 5.13 | 266592 | 1.854 | Si |
| SLU 82 | 142 | -16887 | 267216 | 4.75 | 278059 | 1.041 | Si |
| SLU 76 | 102 | -18082 | 142446 | 5.09 | 268260 | 1.883 | Si |
| SLU 76 | 142 | -16777 | 265885 | 4.72 | 278763 | 1.048 | Si |
| SLU 81 | 102 | -17587 | 139847 | 4.95 | 272791 | 1.951 | Si |
| SLU 81 | 142 | -16202 | 255660 | 4.56 | 281917 | 1.103 | Si |

| Comb. | Quota | N | M | σ0 | Mu | c.s. | Verifica |
|---|---|---|---|---|---|---|---|
| SLU 80 | 102 | -17866 | 142478 | 5.03 | 270319 | 1.897 | Si |
| SLU 80 | 142 | -16528 | 261028 | 4.65 | 280237 | 1.074 | Si |
| SLU 84 | 102 | -18472 | 146419 | 5.2 | 264215 | 1.805 | Si |
| SLU 84 | 142 | -17095 | 270064 | 4.81 | 276634 | 1.024 | Si |
| SLU 83 | 102 | -17811 | 142495 | 5.01 | 270818 | 1.901 | Si |
| SLU 83 | 142 | -16410 | 258508 | 4.62 | 280880 | 1.087 | Si |

Verifica a pressoflessione nel piano secondo D.M. 17-01-18 NTC §7.8.2.2.1 in combinazioni sismiche, γM = 2

| Comb. | Quota | N | M | σ0 | Mu | c.s. | Verifica |
|---|---|---|---|---|---|---|---|
| SLV 7 | 102 | -6442 | -14130 | 1.81 | 216708 | 15.337 | Si |
| SLV 7 | 142 | -7734 | 170845 | 2.18 | 251099 | 1.47 | Si |
| SLD 4 | 102 | -10802 | 52285 | 3.04 | 320574 | 6.131 | Si |
| SLD 4 | 142 | -10528 | 194705 | 2.96 | 315066 | 1.618 | Si |
| SLD 3 | 102 | -10802 | 52285 | 3.04 | 320574 | 6.131 | Si |
| SLD 3 | 142 | -10528 | 194705 | 2.96 | 315066 | 1.618 | Si |
| SLV 1 | 102 | -12660 | 48507 | 3.56 | 354321 | 7.304 | Si |
| SLV 1 | 142 | -12129 | 239021 | 3.41 | 345318 | 1.445 | Si |
| SLD 2 | 102 | -12036 | 72963 | 3.39 | 343688 | 4.71 | Si |
| SLD 2 | 142 | -11282 | 198954 | 3.17 | 329900 | 1.658 | Si |
| SLV 4 | 102 | -9637 | -2858 | 2.71 | 296216 | 103.656 | Si |
| SLV 4 | 142 | -10267 | 228366 | 2.89 | 309684 | 1.356 | Si |
| SLV 2 | 102 | -12660 | 48507 | 3.56 | 354321 | 7.304 | Si |
| SLV 2 | 142 | -12129 | 239021 | 3.41 | 345318 | 1.445 | Si |
| SLV 3 | 102 | -9637 | -2858 | 2.71 | 296216 | 103.656 | Si |
| SLV 3 | 142 | -10267 | 228366 | 2.89 | 309684 | 1.356 | Si |
| SLV 8 | 102 | -6442 | -14130 | 1.81 | 216708 | 15.337 | Si |
| SLV 8 | 142 | -7734 | 170845 | 2.18 | 251099 | 1.47 | Si |
| SLD 1 | 102 | -12036 | 72963 | 3.39 | 343688 | 4.71 | Si |
| SLD 1 | 142 | -11282 | 198954 | 3.17 | 329900 | 1.658 | Si |

Verifica a taglio nel piano secondo D.M. 17-01-18 (N.T.C.) §7.8.2.2.2 con rottura per scorrimento in combinazioni non sismiche, γM = 3

| Comb. | Quota | N | V par | M | σ0 | σN | I' | fvd | Vt scorr. | Vt fess.diag. | Vt,lim | c.s. | Verifica |
|---|---|---|---|---|---|---|---|---|---|---|---|---|---|
| SLU 84 | 102 | -18472 | -2267 | 146419 | | 5.2 | 79 | 1.08 | 3851 | | | 1.7 | Si |
| SLU 84 | 142 | -17095 | -927 | 270064 | | 5.34 | 71.11 | 1.08 | 3466 | | | 3.74 | Si |
| SLU 80 | 102 | -17866 | -2169 | 142478 | | 5.03 | 79 | 1.08 | 3851 | | | 1.78 | Si |
| SLU 80 | 142 | -16528 | -897 | 261028 | | 5.16 | 71.12 | 1.08 | 3467 | | | 3.87 | Si |
| SLU 52 | 102 | -16351 | -2183 | 127319 | | 4.6 | 79 | 1.08 | 3851 | | | 1.76 | Si |
| SLU 52 | 142 | -15157 | -1018 | 241039 | | 4.76 | 70.79 | 1.08 | 3451 | | | 3.39 | Si |
| SLU 78 | 102 | -17933 | -2190 | 143019 | | 5.04 | 79 | 1.08 | 3851 | | | 1.76 | Si |
| SLU 78 | 142 | -16597 | -909 | 262259 | | 5.19 | 71.09 | 1.08 | 3466 | | | 3.81 | Si |
| SLU 76 | 102 | -18082 | -2331 | 142446 | | 5.09 | 79 | 1.08 | 3851 | | | 1.65 | Si |
| SLU 76 | 142 | -16777 | -1049 | 265885 | | 5.25 | 70.96 | 1.08 | 3459 | | | 3.3 | Si |
| SLU 82 | 102 | -18248 | -2283 | 143771 | | 5.13 | 79 | 1.08 | 3851 | | | 1.69 | Si |
| SLU 82 | 142 | -16887 | -937 | 267216 | | 5.28 | 71.03 | 1.08 | 3463 | | | 3.69 | Si |
| SLU 65 | 102 | -15918 | -2153 | 124424 | | 4.48 | 79 | 1.08 | 3851 | | | 1.79 | Si |
| SLU 65 | 142 | -14762 | -1012 | 235311 | | 4.64 | 70.68 | 1.08 | 3446 | | | 3.4 | Si |
| SLU 75 | 102 | -17708 | -2206 | 140371 | | 4.98 | 79 | 1.08 | 3851 | | | 1.75 | Si |
| SLU 75 | 142 | -16389 | -919 | 259412 | | 5.13 | 71.01 | 1.08 | 3462 | | | 3.77 | Si |
| SLU 55 | 102 | -16576 | -2168 | 129967 | | 4.66 | 79 | 1.08 | 3851 | | | 1.78 | Si |
| SLU 55 | 142 | -15365 | -1008 | 243887 | | 4.82 | 70.88 | 1.08 | 3456 | | | 3.43 | Si |
| SLU 73 | 102 | -17857 | -2347 | 139798 | | 5.02 | 79 | 1.08 | 3851 | | | 1.64 | Si |
| SLU 73 | 142 | -16569 | -1060 | 263038 | | 5.2 | 70.87 | 1.08 | 3455 | | | 3.26 | Si |

Verifica a taglio nel piano secondo D.M. 17-01-18 (N.T.C.) §7.8.2.2.2 con rottura per scorrimento in combinazioni sismiche, γM = 2

| Comb. | Quota | N | V par | M | σ0 | σN | I' | fvd | Vt scorr. | Vt fess.diag. | Vt,lim | c.s. | Verifica |
|---|---|---|---|---|---|---|---|---|---|---|---|---|---|
| SLD 1 | 102 | -12036 | -3307 | 72963 | | 3.39 | 79 | 1.51 | 5370 | | | 1.62 | Si |
| SLD 1 | 142 | -11282 | -1726 | 198954 | | 3.82 | 65.6 | 1.6 | 4716 | | | 2.73 | Si |
| SLD 2 | 102 | -12036 | -3307 | 72963 | | 3.39 | 79 | 1.51 | 5370 | | | 1.62 | Si |
| SLD 2 | 142 | -11282 | -1726 | 198954 | | 3.82 | 65.6 | 1.6 | 4716 | | | 2.73 | Si |
| SLV 1 | 102 | -12660 | -5855 | 48507 | | 3.56 | 79 | 1.55 | 5494 | | | 0.94 | No, Vu<V |
| SLV 1 | 142 | -12129 | -3356 | 239021 | | 4.54 | 59.38 | 1.63 | 4342 | | | 1.29 | Si |
| SLV 3 | 102 | -9637 | -4336 | -2858 | | 2.71 | 79 | 1.38 | 4890 | | | 1.13 | Si |
| SLV 3 | 142 | -10267 | -2684 | 228366 | | 4.41 | 51.77 | 1.63 | 3786 | | | 1.41 | Si |
| SLV 15 | 102 | -10581 | 3072 | 136153 | | 2.98 | 79 | 1.43 | 5079 | | | 1.65 | Si |
| SLV 15 | 142 | -9238 | 2337 | 99540 | | 2.6 | 79 | 1.35 | 4810 | | | 2.06 | Si |
| SLV 16 | 102 | -10581 | 3072 | 136153 | | 2.98 | 79 | 1.43 | 5079 | | | 1.65 | Si |
| SLV 16 | 142 | -9238 | 2337 | 99540 | | 2.6 | 79 | 1.35 | 4810 | | | 2.06 | Si |
| SLV 6 | 102 | -16517 | -5035 | 157087 | | 4.65 | 79 | 1.63 | 5777 | | | 1.15 | Si |
| SLV 6 | 142 | -13942 | -2382 | 206363 | | 4.18 | 74.09 | 1.63 | 5418 | | | 2.27 | Si |
| SLV 2 | 102 | -12660 | -5855 | 48507 | | 3.56 | 79 | 1.55 | 5494 | | | 0.94 | No, Vu<V |
| SLV 2 | 142 | -12129 | -3356 | 239021 | | 4.54 | 59.38 | 1.63 | 4342 | | | 1.29 | Si |
| SLV 5 | 102 | -16517 | -5035 | 157087 | | 4.65 | 79 | 1.63 | 5777 | | | 1.15 | Si |
| SLV 5 | 142 | -13942 | -2382 | 206363 | | 4.18 | 74.09 | 1.63 | 5418 | | | 2.27 | Si |
| SLV 4 | 102 | -9637 | -4336 | -2858 | | 2.71 | 79 | 1.38 | 4890 | | | 1.13 | Si |
| SLV 4 | 142 | -10267 | -2684 | 228366 | | 4.41 | 51.77 | 1.63 | 3786 | | | 1.41 | Si |

Verifica a pressoflessione fuori piano D.M. 17-01-18 (N.T.C.)

quota 36.5 Wa 0.08 denominatore 8 γM = 2

| Comb. | fd | Sa | σ0 | N | M | Mc | Coeff.s. | Verifica |
|---|---|---|---|---|---|---|---|---|
| SLV 12 | 14 | 0.25 | 2 | -7111 | 4856 | 133808 | 27.55 | Si |
| SLV 11 | 14 | 0.25 | 2 | -7111 | 4856 | 133808 | 27.55 | Si |
| SLV 15 | 14 | 0.25 | 2.19 | -7775 | 4856 | 143631 | 29.58 | Si |
| SLV 16 | 14 | 0.25 | 2.19 | -7775 | 4856 | 143631 | 29.58 | Si |
| SLV 8 | 14 | 0.25 | 2.35 | -8363 | 4856 | 151937 | 31.29 | Si |
| SLV 7 | 14 | 0.25 | 2.35 | -8363 | 4856 | 151937 | 31.29 | Si |
| SLV 13 | 14 | 0.25 | 2.7 | -9596 | 4856 | 168217 | 34.64 | Si |
| SLV 14 | 14 | 0.25 | 2.7 | -9596 | 4856 | 168217 | 34.64 | Si |

| Comb. | fd | Sa | σ0 | N | M | Mc | Coeff.s. | Verifica |
|---|---|---|---|---|---|---|---|---|
| SLV 3 | 14 | 0.25 | 3.36 | -11947 | 4856 | 194879 | 40.13 | Si |
| SLV 4 | 14 | 0.25 | 3.36 | -11947 | 4856 | 194879 | 40.13 | Si |

### Verifica dei meccanismi locali di collasso con analisi cinematica lineare

forza di aggancio al piano = 0 quota mezzeria = 36.5 Wa = 0.08 Ta = 0.0269

| Comb. | N top | N base | V orto | α0 | M* | e* | a0* | aLim | Verifica |
|---|---|---|---|---|---|---|---|---|---|
| SLV 11 | -3240 | -4884 | 608 | 0 | 4.671 | 0.923 | 0 | 417.584 | No |
| SLV 8 | -2413 | -9041 | 348 | 0 | 3.842 | 0.912 | 0 | 417.584 | No |
| SLV 12 | -3240 | -4884 | 608 | 0 | 4.671 | 0.923 | 0 | 417.584 | No |
| SLV 7 | -2413 | -9041 | 348 | 0 | 3.842 | 0.912 | 0 | 417.584 | No |
| SLV 16 | -7746 | -3093 | 748 | 0.005 | 9.235 | 0.957 | 7.734 | 332.581 | No |
| SLV 15 | -7746 | -3093 | 748 | 0.005 | 9.235 | 0.957 | 7.734 | 332.581 | No |
| SLV 13 | -10781 | -5715 | 608 | 0.038 | 12.322 | 0.967 | 56.489 | 332.581 | No |
| SLV 14 | -10781 | -5715 | 608 | 0.038 | 12.322 | 0.967 | 56.489 | 332.581 | No |
| SLV 9 | -13356 | -13623 | 142 | 0.079 | 14.944 | 0.972 | 117.655 | 417.584 | No |
| SLV 10 | -13356 | -13623 | 142 | 0.079 | 14.944 | 0.972 | 117.655 | 417.584 | No |

### Tabella dei coefficienti di sicurezza minimi

| Stato limite | Coeff.s. | Comb. | Verifica |
|---|---|---|---|
| PF_SLU | 1.024 | SLU 84 | Si |
| V_SLU | 1.641 | SLU 73 | Si |
| PF_SLV | 1.356 | SLV 3 | Si |
| V_SLV | 0.938 | SLV 1 | No |
| PFFP_SLV | 27.554 | SLV 11 | Si |
| R_SLV | 0 | SLV 7 | No |

## Maschio 49

Verifiche condotte secondo D.M. 17-01-18 (N.T.C.)

### Dati geometrici

| X ini. | Y ini. | X fin. | Y fin. | Quota i. | Quota.s | l | Sp. | h netta | h ini. | h fin. | a | a.s.,sx | a.s.,dx |
|---|---|---|---|---|---|---|---|---|---|---|---|---|---|
| -646.3 | -328.4 | -323.3 | -328.4 | L1 | L3 | 323 | 45 | 269 | 269 | 269 | | | |

### Caratteristiche del materiale

(Circolare 7 21-01-19 C8.5.I) Muratura in mattoni pieni e malta di calce LC2_Corti

| fb | fk | fvk0 | fmedio | τ0 | fv0 | μ | ϕ | fv,lim | E | G | FC |
|---|---|---|---|---|---|---|---|---|---|---|---|
| 60 | | | 34.5 | 0.9 | 2 | 0.58 | 0.77 | 3.25 | 32000 | 12800 | 1.2 |

### Verifica a pressoflessione nel piano secondo D.M. 17-01-18 NTC §7.8.2.2.1 in combinazioni non sismiche, γM = 3

| Comb. | Quota | N | M | σ0 | Mu | c.s. | Verifica |
|---|---|---|---|---|---|---|---|
| SLU 44 | 102 | -30463 | -1158363 | 2.1 | 3653960 | 3.154 | Si |
| SLU 44 | 142 | -29171 | -1448748 | 2.01 | 3550405 | 2.451 | Si |
| SLU 65 | 102 | -34356 | -1237010 | 2.36 | 3938476 | 3.184 | Si |
| SLU 65 | 142 | -33064 | -1544583 | 2.27 | 3848640 | 2.492 | Si |
| SLU 73 | 102 | -39060 | -1340972 | 2.69 | 4227124 | 3.152 | Si |
| SLU 73 | 142 | -37768 | -1662260 | 2.6 | 4153868 | 2.499 | Si |
| SLU 55 | 102 | -35460 | -1266203 | 2.44 | 4011674 | 3.168 | Si |
| SLU 55 | 142 | -34168 | -1577251 | 2.35 | 3925731 | 2.489 | Si |
| SLU 2 | 102 | -24149 | -959525 | 1.66 | 3104629 | 3.236 | Si |
| SLU 2 | 142 | -23156 | -1218332 | 1.59 | 3008258 | 2.469 | Si |
| SLU 47 | 102 | -30756 | -1162241 | 2.12 | 3676830 | 3.164 | Si |
| SLU 47 | 142 | -29464 | -1459573 | 2.03 | 3574308 | 2.449 | Si |
| SLU 76 | 102 | -39353 | -1344850 | 2.71 | 4243117 | 3.155 | Si |
| SLU 76 | 142 | -38061 | -1673086 | 2.62 | 4170894 | 2.493 | Si |
| SLU 52 | 102 | -35167 | -1262325 | 2.42 | 3992568 | 3.163 | Si |
| SLU 52 | 142 | -33875 | -1566425 | 2.33 | 3905591 | 2.493 | Si |
| SLU 5 | 102 | -24443 | -963403 | 1.68 | 3132549 | 3.252 | Si |
| SLU 5 | 142 | -23449 | -1229157 | 1.61 | 3036973 | 2.471 | Si |
| SLU 68 | 102 | -34649 | -1240888 | 2.38 | 3958232 | 3.19 | Si |
| SLU 68 | 142 | -33357 | -1555408 | 2.29 | 3869430 | 2.488 | Si |

### Verifica a pressoflessione nel piano secondo D.M. 17-01-18 NTC §7.8.2.2.1 in combinazioni sismiche, γM = 2

| Comb. | Quota | N | M | σ0 | Mu | c.s. | Verifica |
|---|---|---|---|---|---|---|---|
| SLV 3 | 102 | -23176 | -1551588 | 1.59 | 3254446 | 2.097 | Si |
| SLV 3 | 142 | -24104 | -951164 | 1.66 | 3364496 | 3.537 | Si |
| SLV 10 | 102 | -41249 | -1107747 | 2.84 | 5114487 | 4.617 | Si |
| SLV 10 | 142 | -31381 | -1497243 | 2.16 | 4172571 | 2.787 | Si |
| SLD 2 | 102 | -29195 | -1273610 | 2.01 | 3939947 | 3.094 | Si |
| SLD 2 | 142 | -26769 | -1102800 | 1.84 | 3671525 | 3.329 | Si |
| SLV 1 | 102 | -30999 | -1899007 | 2.13 | 4132546 | 2.176 | Si |
| SLV 1 | 142 | -26457 | -1322001 | 1.82 | 3636311 | 2.751 | Si |
| SLV 9 | 102 | -41249 | -1107747 | 2.84 | 5114487 | 4.617 | Si |
| SLV 9 | 142 | -31381 | -1497243 | 2.16 | 4172571 | 2.787 | Si |
| SLV 5 | 102 | -40731 | -1660015 | 2.8 | 5069453 | 3.054 | Si |
| SLV 5 | 142 | -30376 | -1616044 | 2.09 | 4066628 | 2.516 | Si |
| SLV 4 | 102 | -23176 | -1551588 | 1.59 | 3254446 | 2.097 | Si |
| SLV 4 | 142 | -24104 | -951164 | 1.66 | 3364496 | 3.537 | Si |
| SLV 6 | 102 | -40731 | -1660015 | 2.8 | 5069453 | 3.054 | Si |
| SLV 6 | 142 | -30376 | -1616044 | 2.09 | 4066628 | 2.516 | Si |
| SLV 2 | 102 | -30999 | -1899007 | 2.13 | 4132546 | 2.176 | Si |
| SLV 2 | 142 | -26457 | -1322001 | 1.82 | 3636311 | 2.751 | Si |
| SLD 1 | 102 | -29195 | -1273610 | 2.01 | 3939947 | 3.094 | Si |
| SLD 1 | 142 | -26769 | -1102800 | 1.84 | 3671525 | 3.329 | Si |

Verifica a taglio nel piano secondo D.M. 17-01-18 (N.T.C.) §7.8.2.2.2 con rottura per scorrimento in combinazioni non sismiche, γM = 3

| Comb. | Quota | N | V par | M | σ0 | σN | l' | fvd | Vt scorr. | Vt fess.diag. | Vt,lim | c.s. | Verifica |
|---|---|---|---|---|---|---|---|---|---|---|---|---|---|
| SLU 55 | 102 | -35460 | 7792 | -1266203 | | 2.44 | 323 | 0.88 | 12803 | | | 1.64 | Si |
| SLU 55 | 142 | -34168 | 7792 | -1577251 | | 2.35 | 323 | 0.87 | 12631 | | | 1.62 | Si |
| SLU 76 | 102 | -39353 | 8221 | -1344850 | | 2.71 | 323 | 0.92 | 13322 | | | 1.62 | Si |
| SLU 76 | 142 | -38061 | 8221 | -1673086 | | 2.62 | 323 | 0.9 | 13150 | | | 1.6 | Si |
| SLU 47 | 102 | -30756 | 7449 | -1162241 | | 2.12 | 323 | 0.84 | 12176 | | | 1.63 | Si |
| SLU 47 | 142 | -29464 | 7449 | -1459573 | | 2.03 | 323 | 0.83 | 12004 | | | 1.61 | Si |
| SLU 26 | 102 | -28335 | 7085 | -1042049 | | 1.95 | 323 | 0.82 | 11853 | | | 1.67 | Si |
| SLU 26 | 142 | -27342 | 7085 | -1324992 | | 1.88 | 323 | 0.81 | 11721 | | | 1.65 | Si |
| SLU 52 | 102 | -35167 | 7618 | -1262325 | | 2.42 | 323 | 0.88 | 12764 | | | 1.68 | Si |
| SLU 52 | 142 | -33875 | 7618 | -1566425 | | 2.33 | 323 | 0.87 | 12592 | | | 1.65 | Si |
| SLU 68 | 102 | -34649 | 7878 | -1240888 | | 2.38 | 323 | 0.87 | 12695 | | | 1.61 | Si |
| SLU 68 | 142 | -33357 | 7878 | -1555408 | | 2.29 | 323 | 0.86 | 12523 | | | 1.59 | Si |
| SLU 65 | 102 | -34356 | 7705 | -1237010 | | 2.36 | 323 | 0.87 | 12656 | | | 1.64 | Si |
| SLU 65 | 142 | -33064 | 7705 | -1544583 | | 2.27 | 323 | 0.86 | 12484 | | | 1.62 | Si |
| SLU 44 | 102 | -30463 | 7275 | -1158363 | | 2.1 | 323 | 0.83 | 12137 | | | 1.67 | Si |
| SLU 44 | 142 | -29171 | 7275 | -1448748 | | 2.01 | 323 | 0.82 | 11964 | | | 1.64 | Si |
| SLU 34 | 102 | -33040 | 7428 | -1146011 | | 2.27 | 323 | 0.86 | 12480 | | | 1.68 | Si |
| SLU 34 | 142 | -32046 | 7428 | -1442670 | | 2.2 | 323 | 0.85 | 12348 | | | 1.66 | Si |
| SLU 73 | 102 | -39060 | 8048 | -1340972 | | 2.69 | 323 | 0.91 | 13283 | | | 1.65 | Si |
| SLU 73 | 142 | -37768 | 8048 | -1662260 | | 2.6 | 323 | 0.9 | 13111 | | | 1.63 | Si |

Verifica a taglio nel piano secondo D.M. 17-01-18 (N.T.C.) §7.8.2.2.2 con rottura per scorrimento in combinazioni sismiche, γM = 2

| Comb. | Quota | N | V par | M | σ0 | σN | l' | fvd | Vt scorr. | Vt fess.diag. | Vt,lim | c.s. | Verifica |
|---|---|---|---|---|---|---|---|---|---|---|---|---|---|
| SLV 4 | 102 | -23176 | -19581 | -1551588 | | 1.82 | 283.65 | 1.2 | 15272 | | | 0.78 | No, Vu<V |
| SLV 4 | 142 | -24104 | -22088 | -951164 | | 1.66 | 323 | 1.17 | 16933 | | | 0.77 | No, Vu<V |
| SLV 14 | 102 | -32726 | 26291 | -58113 | | 2.25 | 323 | 1.28 | 18658 | | | 0.71 | No, Vu<V |
| SLV 14 | 142 | -29810 | 28798 | -925999 | | 2.05 | 323 | 1.24 | 18074 | | | 0.63 | No, Vu<V |
| SLV 9 | 102 | -41249 | 22117 | -1107747 | | 2.84 | 323 | 1.4 | 20362 | | | 0.92 | No, Vu<V |
| SLV 9 | 142 | -31381 | 29405 | -1497243 | | 2.16 | 323 | 1.27 | 18389 | | | 0.63 | No, Vu<V |
| SLV 15 | 102 | -24902 | 18457 | 289306 | | 1.71 | 323 | 1.18 | 17093 | | | 0.93 | No, Vu<V |
| SLV 15 | 142 | -27457 | 16655 | -555161 | | 1.89 | 323 | 1.21 | 17604 | | | 1.06 | Si |
| SLV 8 | 102 | -14652 | -15407 | -501954 | | 1.01 | 323 | 1.03 | 15043 | | | 0.98 | No, Vu<V |
| SLV 8 | 142 | -22533 | -22695 | -379920 | | 1.55 | 323 | 1.14 | 16619 | | | 0.73 | No, Vu<V |
| SLV 3 | 102 | -23176 | -19581 | -1551588 | | 1.82 | 283.65 | 1.2 | 15272 | | | 0.78 | No, Vu<V |
| SLV 3 | 142 | -24104 | -22088 | -951164 | | 1.66 | 323 | 1.17 | 16933 | | | 0.77 | No, Vu<V |
| SLV 13 | 102 | -32726 | 26291 | -58113 | | 2.25 | 323 | 1.28 | 18658 | | | 0.71 | No, Vu<V |
| SLV 13 | 142 | -29810 | 28798 | -925999 | | 2.05 | 323 | 1.24 | 18074 | | | 0.63 | No, Vu<V |
| SLV 10 | 102 | -41249 | 22117 | -1107747 | | 2.84 | 323 | 1.4 | 20362 | | | 0.92 | No, Vu<V |
| SLV 10 | 142 | -31381 | 29405 | -1497243 | | 2.16 | 323 | 1.27 | 18389 | | | 0.63 | No, Vu<V |
| SLV 16 | 102 | -24902 | 18457 | 289306 | | 1.71 | 323 | 1.18 | 17093 | | | 0.93 | No, Vu<V |
| SLV 16 | 142 | -27457 | 16655 | -555161 | | 1.89 | 323 | 1.21 | 17604 | | | 1.06 | Si |
| SLV 7 | 102 | -14652 | -15407 | -501954 | | 1.01 | 323 | 1.03 | 15043 | | | 0.98 | No, Vu<V |
| SLV 7 | 142 | -22533 | -22695 | -379920 | | 1.55 | 323 | 1.14 | 16619 | | | 0.73 | No, Vu<V |

Verifica a pressoflessione fuori piano D.M. 17-01-18 (N.T.C.)

quota 36.5 Wa 0.08 denominatore 8 γM = 2

| Comb. | fd | Sa | σ0 | N | M | Mc | Coeff.s. | Verifica |
|---|---|---|---|---|---|---|---|---|
| SLV 8 | 14 | 0.25 | 0.84 | -12277 | 19855 | 257143 | 12.95 | Si |
| SLV 7 | 14 | 0.25 | 0.84 | -12277 | 19855 | 257143 | 12.95 | Si |
| SLV 12 | 14 | 0.25 | 0.89 | -12950 | 19855 | 270134 | 13.61 | Si |
| SLV 11 | 14 | 0.25 | 0.89 | -12950 | 19855 | 270134 | 13.61 | Si |
| SLV 3 | 14 | 0.25 | 1.39 | -20134 | 19855 | 401649 | 20.23 | Si |
| SLV 4 | 14 | 0.25 | 1.39 | -20134 | 19855 | 401649 | 20.23 | Si |
| SLV 16 | 14 | 0.25 | 1.54 | -22377 | 19855 | 440041 | 22.16 | Si |
| SLV 15 | 14 | 0.25 | 1.54 | -22377 | 19855 | 440041 | 22.16 | Si |
| SLV 2 | 14 | 0.25 | 1.89 | -27540 | 19855 | 523568 | 26.37 | Si |
| SLV 1 | 14 | 0.25 | 1.89 | -27540 | 19855 | 523568 | 26.37 | Si |

Verifica dei meccanismi locali di collasso con analisi cinematica lineare

forza di aggancio al piano = 0 quota mezzeria = 36.5 Wa = 0.08 Ta = 0.0269

| Comb. | N top | N base | V orto | α0 | M* | e* | a0* | aLim | Verifica |
|---|---|---|---|---|---|---|---|---|---|
| SLV 8 | -22033 | -13734 | 1348 | 0.042 | 27.973 | 0.944 | 65.287 | 417.584 | No |
| SLV 7 | -22033 | -13734 | 1348 | 0.042 | 27.973 | 0.944 | 65.287 | 417.584 | No |
| SLV 11 | -22733 | -14736 | 1295 | 0.046 | 28.683 | 0.945 | 70.002 | 417.584 | No |
| SLV 12 | -22733 | -14736 | 1295 | 0.046 | 28.683 | 0.945 | 70.002 | 417.584 | No |
| SLV 3 | -21255 | -21126 | 1229 | 0.046 | 27.184 | 0.943 | 70.822 | 332.581 | No |
| SLV 4 | -21255 | -21126 | 1229 | 0.046 | 27.184 | 0.943 | 70.822 | 332.581 | No |
| SLV 5 | -22143 | -38197 | 830 | 0.063 | 28.084 | 0.944 | 96.628 | 417.584 | No |
| SLV 6 | -22143 | -38197 | 830 | 0.063 | 28.084 | 0.944 | 96.628 | 417.584 | No |
| SLV 9 | -22843 | -39199 | 777 | 0.065 | 28.794 | 0.945 | 100.451 | 417.584 | No |
| SLV 10 | -22843 | -39199 | 777 | 0.065 | 28.794 | 0.945 | 100.451 | 417.584 | No |

Tabella dei coefficienti di sicurezza minimi

| Stato limite | Coeff.s. | Comb. | Verifica |
|---|---|---|---|
| PF_SLU | 2.449 | SLU 47 | Si |
| V_SLU | 1.589 | SLU 68 | Si |
| PF_SLV | 2.097 | SLV 3 | Si |
| V_SLV | 0.625 | SLV 9 | No |
| PFFP_SLV | 12.951 | SLV 7 | Si |
| R_SLV | 0.156 | SLV 7 | No |

## Maschio 50

Verifiche condotte secondo D.M. 17-01-18 (N.T.C.)

### Dati geometrici

| X ini. | Y ini. | X fin. | Y fin. | Quota i. | Quota.s | l | Sp. | h netta | h ini. | h fin. | a | a.s.,sx | a.s.,dx |
|---|---|---|---|---|---|---|---|---|---|---|---|---|---|
| -223.3 | -328.4 | -12.3 | -328.4 | L1 | L3 | 211 | 45 | 269 | 269 | 269 | | | |

### Caratteristiche del materiale

(Circolare 7 21-01-19 C8.5.I) Muratura in mattoni pieni e malta di calce LC2_Corti

| fb | fk | fvk0 | fmedio | τ0 | fv0 | μ | ϕ | fv,lim | E | G | FC |
|---|---|---|---|---|---|---|---|---|---|---|---|
| 60 | | | 34.5 | 0.9 | 2 | 0.58 | 0.77 | 3.25 | 32000 | 12800 | 1.2 |

### Verifica a pressoflessione nel piano secondo D.M. 17-01-18 NTC §7.8.2.2.1 in combinazioni non sismiche, γM = 3

| Comb. | Quota | N | M | σ0 | Mu | c.s. | Verifica |
|---|---|---|---|---|---|---|---|
| SLU 47 | 102 | -18865 | 357328 | 1.99 | 1504817 | 4.211 | Si |
| SLU 47 | 142 | -16649 | 341823 | 1.75 | 1378350 | 4.032 | Si |
| SLU 23 | 102 | -17210 | 313560 | 1.81 | 1411635 | 4.502 | Si |
| SLU 23 | 142 | -15327 | 303565 | 1.61 | 1296544 | 4.271 | Si |
| SLU 5 | 102 | -15092 | 303482 | 1.59 | 1281524 | 4.223 | Si |
| SLU 5 | 142 | -13261 | 298906 | 1.4 | 1159193 | 3.878 | Si |
| SLU 65 | 102 | -20983 | 367406 | 2.21 | 1613131 | 4.391 | Si |
| SLU 65 | 142 | -18714 | 346482 | 1.97 | 1496617 | 4.319 | Si |
| SLU 26 | 102 | -17493 | 322578 | 1.84 | 1428086 | 4.427 | Si |
| SLU 26 | 142 | -15591 | 310093 | 1.64 | 1313312 | 4.235 | Si |
| SLU 68 | 102 | -21266 | 376424 | 2.24 | 1626671 | 4.321 | Si |
| SLU 68 | 142 | -18979 | 353009 | 2 | 1510938 | 4.28 | Si |
| SLU 55 | 102 | -21404 | 359666 | 2.25 | 1633224 | 4.541 | Si |
| SLU 55 | 142 | -19139 | 338574 | 2.02 | 1519535 | 4.488 | Si |
| SLU 13 | 102 | -17631 | 305820 | 1.86 | 1436065 | 4.696 | Si |
| SLU 13 | 142 | -15752 | 295657 | 1.66 | 1323394 | 4.476 | Si |
| SLU 44 | 102 | -18582 | 348310 | 1.96 | 1489425 | 4.276 | Si |
| SLU 44 | 142 | -16384 | 335296 | 1.73 | 1362346 | 4.063 | Si |
| SLU 2 | 102 | -14809 | 294464 | 1.56 | 1263221 | 4.29 | Si |
| SLU 2 | 142 | -12997 | 292379 | 1.37 | 1140743 | 3.902 | Si |

### Verifica a pressoflessione nel piano secondo D.M. 17-01-18 NTC §7.8.2.2.1 in combinazioni sismiche, γM = 2

| Comb. | Quota | N | M | σ0 | Mu | c.s. | Verifica |
|---|---|---|---|---|---|---|---|
| SLV 11 | 102 | -4885 | 256646 | 0.51 | 493692 | 1.924 | Si |
| SLV 11 | 142 | -10765 | -66448 | 1.13 | 1030355 | 15.506 | Si |
| SLV 14 | 102 | -27333 | 837178 | 2.88 | 2204275 | 2.633 | Si |
| SLV 14 | 142 | -23758 | 512623 | 2.5 | 1993204 | 3.888 | Si |
| SLV 13 | 102 | -27333 | 837178 | 2.88 | 2204275 | 2.633 | Si |
| SLV 13 | 142 | -23758 | 512623 | 2.5 | 1993204 | 3.888 | Si |
| SLV 12 | 102 | -4885 | 256646 | 0.51 | 493692 | 1.924 | Si |
| SLV 12 | 142 | -10765 | -66448 | 1.13 | 1030355 | 15.506 | Si |
| SLV 3 | 102 | -6130 | -422311 | 0.65 | 612522 | 1.45 | Si |
| SLV 3 | 142 | -6903 | -196405 | 0.73 | 684978 | 3.488 | Si |
| SLV 15 | 102 | -19062 | 760273 | 2.01 | 1680592 | 2.211 | Si |
| SLV 15 | 142 | -19853 | 330470 | 2.09 | 1736105 | 5.253 | Si |
| SLV 16 | 102 | -19062 | 760273 | 2.01 | 1680592 | 2.211 | Si |
| SLV 16 | 142 | -19853 | 330470 | 2.09 | 1736105 | 5.253 | Si |
| SLV 7 | 102 | -1006 | -98129 | 0.11 | 105182 | 1.072 | Si |
| SLV 7 | 142 | -6880 | -224511 | 0.72 | 682829 | 3.041 | Si |
| SLV 8 | 102 | -1006 | -98129 | 0.11 | 105182 | 1.072 | Si |
| SLV 8 | 142 | -6880 | -224511 | 0.72 | 682829 | 3.041 | Si |
| SLV 4 | 102 | -6130 | -422311 | 0.65 | 612522 | 1.45 | Si |
| SLV 4 | 142 | -6903 | -196405 | 0.73 | 684978 | 3.488 | Si |

### Verifica a taglio nel piano secondo D.M. 17-01-18 (N.T.C.) §7.8.2.2.2 con rottura per scorrimento in combinazioni non sismiche, γM = 3

| Comb. | Quota | N | V par | M | σ0 | σN | l' | fvd | Vt scorr. | Vt fess.diag. | Vt,lim | c.s. | Verifica |
|---|---|---|---|---|---|---|---|---|---|---|---|---|---|
| SLU 65 | 102 | -20983 | -3216 | 367406 | | 2.21 | 211 | 0.85 | 8073 | | | 2.51 | Si |
| SLU 65 | 142 | -18714 | -3252 | 346482 | | 1.97 | 211 | 0.82 | 7770 | | | 2.39 | Si |
| SLU 2 | 102 | -14809 | -3000 | 294464 | | 1.56 | 211 | 0.76 | 7250 | | | 2.42 | Si |
| SLU 2 | 142 | -12997 | -3034 | 292379 | | 1.37 | 211 | 0.74 | 7008 | | | 2.31 | Si |
| SLU 5 | 102 | -15092 | -2985 | 303482 | | 1.59 | 211 | 0.77 | 7287 | | | 2.44 | Si |
| SLU 5 | 142 | -13261 | -3019 | 298906 | | 1.4 | 211 | 0.74 | 7043 | | | 2.33 | Si |
| SLU 44 | 102 | -18582 | -3229 | 348310 | | 1.96 | 211 | 0.82 | 7753 | | | 2.4 | Si |
| SLU 44 | 142 | -16384 | -3264 | 335296 | | 1.73 | 211 | 0.79 | 7460 | | | 2.29 | Si |
| SLU 10 | 102 | -17348 | -2987 | 296802 | | 1.83 | 211 | 0.8 | 7588 | | | 2.54 | Si |
| SLU 10 | 142 | -15487 | -3021 | 289130 | | 1.63 | 211 | 0.77 | 7340 | | | 2.43 | Si |
| SLU 52 | 102 | -21121 | -3216 | 350648 | | 2.22 | 211 | 0.85 | 8091 | | | 2.52 | Si |
| SLU 52 | 142 | -18874 | -3252 | 332047 | | 1.99 | 211 | 0.82 | 7792 | | | 2.4 | Si |
| SLU 47 | 102 | -18865 | -3214 | 357328 | | 1.99 | 211 | 0.82 | 7790 | | | 2.42 | Si |
| SLU 47 | 142 | -16649 | -3250 | 341823 | | 1.75 | 211 | 0.79 | 7495 | | | 2.31 | Si |
| SLU 55 | 102 | -21404 | -3201 | 359666 | | 2.25 | 211 | 0.86 | 8129 | | | 2.54 | Si |
| SLU 55 | 142 | -19139 | -3237 | 338574 | | 2.02 | 211 | 0.82 | 7827 | | | 2.42 | Si |
| SLU 68 | 102 | -21266 | -3201 | 376424 | | 2.24 | 211 | 0.85 | 8110 | | | 2.53 | Si |
| SLU 68 | 142 | -18979 | -3237 | 353009 | | 2 | 211 | 0.82 | 7805 | | | 2.41 | Si |
| SLU 23 | 102 | -17210 | -2987 | 313560 | | 1.81 | 211 | 0.8 | 7570 | | | 2.53 | Si |
| SLU 23 | 142 | -15327 | -3021 | 303565 | | 1.61 | 211 | 0.77 | 7319 | | | 2.42 | Si |

### Verifica a taglio nel piano secondo D.M. 17-01-18 (N.T.C.) §7.8.2.2.2 con rottura per scorrimento in combinazioni sismiche, γM = 2

| Comb. | Quota | N | V par | M | σ0 | σN | l' | fvd | Vt scorr. | Vt fess.diag. | Vt,lim | c.s. | Verifica |
|---|---|---|---|---|---|---|---|---|---|---|---|---|---|
| SLV 2 | 102 | -14401 | -14364 | -345406 | | 1.52 | 211 | 1.14 | 10793 | | | 0.75 | No, Vu<V |
| SLV 2 | 142 | -10808 | -16752 | -14253 | | 1.14 | 211 | 1.06 | 10074 | | | 0.6 | No, Vu<V |
| SLV 5 | 102 | -28578 | -15421 | 158221 | | 3.01 | 211 | 1.44 | 13628 | | | 0.88 | No, Vu<V |

| Comb. | Quota | N | V par | M | σ0 | σN | l' | fvd | Vt scorr. | Vt fess.diag. | Vt,lim | c.s. | Verifica |
|---|---|---|---|---|---|---|---|---|---|---|---|---|---|
| SLV 5 | 142 | -19896 | -16923 | 382665 | | 2.1 | 211 | 1.25 | 11892 | | | 0.7 | No, Vu<V |
| SLV 1 | 102 | -14401 | -14364 | -345406 | | 1.52 | 211 | 1.14 | 10793 | | | 0.75 | No, Vu<V |
| SLV 1 | 142 | -10808 | -16752 | -14253 | | 1.14 | 211 | 1.06 | 10074 | | | 0.6 | No, Vu<V |
| SLV 11 | 102 | -4885 | 13939 | 256646 | | 0.68 | 158.9 | 0.97 | 6936 | | | 0.5 | No, Vu<V |
| SLV 11 | 142 | -10765 | 15427 | -66448 | | 1.13 | 211 | 1.06 | 10066 | | | 0.65 | No, Vu<V |
| SLV 12 | 102 | -4885 | 13939 | 256646 | | 0.68 | 158.9 | 0.97 | 6936 | | | 0.5 | No, Vu<V |
| SLV 12 | 142 | -10765 | 15427 | -66448 | | 1.13 | 211 | 1.06 | 10066 | | | 0.65 | No, Vu<V |
| SLV 3 | 102 | -6130 | -7379 | -422311 | | 1.24 | 109.81 | 1.08 | 5344 | | | 0.72 | No, Vu<V |
| SLV 3 | 142 | -6903 | -9253 | -196405 | | 0.73 | 211 | 0.98 | 9293 | | | 1 | Si |
| SLV 4 | 102 | -6130 | -7379 | -422311 | | 1.24 | 109.81 | 1.08 | 5344 | | | 0.72 | No, Vu<V |
| SLV 4 | 142 | -6903 | -9253 | -196405 | | 0.73 | 211 | 0.98 | 9293 | | | 1 | Si |
| SLV 6 | 102 | -28578 | -15421 | 158221 | | 3.01 | 211 | 1.44 | 13628 | | | 0.88 | No, Vu<V |
| SLV 6 | 142 | -19896 | -16923 | 382665 | | 2.1 | 211 | 1.25 | 11892 | | | 0.7 | No, Vu<V |
| SLV 8 | 102 | -1006 | 7861 | -98129 | | 0.94 | 23.78 | 1.02 | 1093 | | | 0.14 | No, Vu<V |
| SLV 8 | 142 | -6880 | 8074 | -224511 | | 0.72 | 211 | 0.98 | 9289 | | | 1.15 | Si |
| SLV 7 | 102 | -1006 | 7861 | -98129 | | 0.94 | 23.78 | 1.02 | 1093 | | | 0.14 | No, Vu<V |
| SLV 7 | 142 | -6880 | 8074 | -224511 | | 0.72 | 211 | 0.98 | 9289 | | | 1.15 | Si |

### Verifica a pressoflessione fuori piano D.M. 17-01-18 (N.T.C.)

quota 36.5 Wa 0.08 denominatore 8 γM = 2

| Comb. | fd | Sa | σ0 | N | M | Mc | Coeff.s. | Verifica |
|---|---|---|---|---|---|---|---|---|
| SLV 8 | 14 | 0.25 | 0.4 | -3830 | 12970 | 83333 | 6.42 | Si |
| SLV 7 | 14 | 0.25 | 0.4 | -3830 | 12970 | 83333 | 6.42 | Si |
| SLV 3 | 14 | 0.25 | 0.61 | -5795 | 12970 | 123872 | 9.55 | Si |
| SLV 4 | 14 | 0.25 | 0.61 | -5795 | 12970 | 123872 | 9.55 | Si |
| SLV 12 | 14 | 0.25 | 0.97 | -9239 | 12970 | 191320 | 14.75 | Si |
| SLV 11 | 14 | 0.25 | 0.97 | -9239 | 12970 | 191320 | 14.75 | Si |
| SLV 1 | 14 | 0.25 | 1.36 | -12888 | 12970 | 257761 | 19.87 | Si |
| SLV 2 | 14 | 0.25 | 1.36 | -12888 | 12970 | 257761 | 19.87 | Si |
| SLV 16 | 14 | 0.25 | 2.51 | -23824 | 12970 | 425963 | 32.84 | Si |
| SLV 15 | 14 | 0.25 | 2.51 | -23824 | 12970 | 425963 | 32.84 | Si |

### Verifica dei meccanismi locali di collasso con analisi cinematica lineare

forza di aggancio al piano = 0 quota mezzeria = 36.5 Wa = 0.08 Ta = 0.0269

| Comb. | N top | N base | V orto | α0 | M* | e* | a0* | aLim | Verifica |
|---|---|---|---|---|---|---|---|---|---|
| SLV 8 | -10908 | -4937 | 593 | 0.053 | 14.746 | 0.933 | 83.045 | 417.584 | No |
| SLV 7 | -10908 | -4937 | 593 | 0.053 | 14.746 | 0.933 | 83.045 | 417.584 | No |
| SLV 12 | -13985 | -12851 | 652 | 0.055 | 17.86 | 0.943 | 85.446 | 417.584 | No |
| SLV 11 | -13985 | -12851 | 652 | 0.055 | 17.86 | 0.943 | 85.446 | 417.584 | No |
| SLV 10 | -15338 | -38828 | 312 | 0.077 | 19.232 | 0.946 | 118.003 | 417.584 | No |
| SLV 9 | -15338 | -38828 | 312 | 0.077 | 19.232 | 0.946 | 118.003 | 417.584 | No |
| SLV 16 | -18049 | -31177 | 601 | 0.064 | 21.983 | 0.952 | 96.965 | 332.581 | No |
| SLV 15 | -18049 | -31177 | 601 | 0.064 | 21.983 | 0.952 | 96.965 | 332.581 | No |
| SLV 5 | -12261 | -30913 | 253 | 0.079 | 16.114 | 0.938 | 123.125 | 417.584 | No |
| SLV 6 | -12261 | -30913 | 253 | 0.079 | 16.114 | 0.938 | 123.125 | 417.584 | No |

### Tabella dei coefficienti di sicurezza minimi

| Stato limite | Coeff.s. | Comb. | Verifica |
|---|---|---|---|
| PF_SLU | 3.878 | SLU 5 | Si |
| V_SLU | 2.285 | SLU 44 | Si |
| PF_SLV | 1.072 | SLV 7 | Si |
| V_SLV | 0.139 | SLV 7 | No |
| PFFP_SLV | 6.425 | SLV 7 | Si |
| R_SLV | 0.199 | SLV 7 | No |

## Maschio 51

Verifiche condotte secondo D.M. 17-01-18 (N.T.C.)

### Dati geometrici

| X ini. | Y ini. | X fin. | Y fin. | Quota i. | Quota.s | l | Sp. | h netta | h ini. | h fin. | a | a.s.,sx | a.s.,dx |
|---|---|---|---|---|---|---|---|---|---|---|---|---|---|
| -515.8 | 207.1 | -515.8 | 680.1 | L1 | L3 | 473 | 30 | 269 | 269 | 269 | | | |

### Caratteristiche del materiale

(Circolare 7 21-01-19 C8.5.I) Muratura in mattoni pieni e malta di calce LC2_Corti

| fb | fk | fvk0 | fmedio | τ0 | fv0 | μ | ϕ | fv,lim | E | G | FC |
|---|---|---|---|---|---|---|---|---|---|---|---|
| 60 | | | 34.5 | 0.9 | 2 | 0.58 | 0.77 | 3.25 | 32000 | 12800 | 1.2 |

### Verifica a pressoflessione nel piano secondo D.M. 17-01-18 NTC §7.8.2.2.1 in combinazioni non sismiche, γM = 3

| Comb. | Quota | N | M | σ0 | Mu | c.s. | Verifica |
|---|---|---|---|---|---|---|---|
| SLU 79 | -98 | -117108 | 3899155 | 8.25 | 0 | 0 | No, Rottura per schiacciamento |
| SLU 79 | 112 | -110302 | 3760485 | 7.77 | 1193254 | 0.317 | No, M>Mu |
| SLU 82 | -98 | -115204 | 3563526 | 8.12 | 90734 | 0.025 | No, M>Mu |
| SLU 82 | 112 | -108399 | 3579736 | 7.64 | 1594759 | 0.445 | No, M>Mu |
| SLU 83 | -98 | -118942 | 3809252 | 8.38 | 0 | 0 | No, Rottura per schiacciamento |
| SLU 83 | 112 | -112137 | 3736662 | 7.9 | 792157 | 0.212 | No, M>Mu |
| SLU 77 | -98 | -117721 | 3910427 | 8.3 | 0 | 0 | No, Rottura per schiacciamento |
| SLU 77 | 112 | -110915 | 3778773 | 7.82 | 1060719 | 0.281 | No, M>Mu |
| SLU 80 | -98 | -116691 | 3891338 | 8.22 | 0 | 0 | No, Rottura per schiacciamento |
| SLU 80 | 112 | -109886 | 3767480 | 7.74 | 1282368 | 0.34 | No, M>Mu |

| Comb. | Quota | N | M | σ0 | Mu | c.s. | Verifica |
|---|---|---|---|---|---|---|---|
| SLU 78 | -98 | -117304 | 3902610 | 8.27 | 0 | 0 | No, Rottura per schiacciamento |
| SLU 78 | 112 | -110499 | 3785768 | 7.79 | 1150878 | 0.304 | No, M>Mu |
| SLU 75 | -98 | -113983 | 3664701 | 8.03 | 374629 | 0.102 | No, M>Mu |
| SLU 75 | 112 | -107177 | 3621847 | 7.55 | 1844639 | 0.509 | No, M>Mu |
| SLU 84 | -98 | -118526 | 3801435 | 8.35 | 0 | 0 | No, Rottura per schiacciamento |
| SLU 84 | 112 | -111720 | 3743657 | 7.87 | 884397 | 0.236 | No, M>Mu |
| SLU 81 | -98 | -115621 | 3571343 | 8.15 | 0 | 0 | No, Rottura per schiacciamento |
| SLU 81 | 112 | -108815 | 3572741 | 7.67 | 1508179 | 0.422 | No, M>Mu |
| SLU 74 | -98 | -114399 | 3672518 | 8.06 | 278533 | 0.076 | No, M>Mu |
| SLU 74 | 112 | -107594 | 3614852 | 7.58 | 1760139 | 0.487 | No, M>Mu |

Verifica a pressoflessione nel piano secondo D.M. 17-01-18 NTC §7.8.2.2.1 in combinazioni sismiche, γM = 2

| Comb. | Quota | N | M | σ0 | Mu | c.s. | Verifica |
|---|---|---|---|---|---|---|---|
| SLV 12 | -98 | -87583 | 6458982 | 6.17 | 10250249 | 1.587 | Si |
| SLV 12 | 112 | -86706 | 3236653 | 6.11 | 10251332 | 3.167 | Si |
| SLD 11 | -98 | -81162 | 4117480 | 5.72 | 10209612 | 2.48 | Si |
| SLD 11 | 112 | -77787 | 2748525 | 5.48 | 10143158 | 3.69 | Si |
| SLV 7 | -98 | -93005 | 6635550 | 6.55 | 10196963 | 1.537 | Si |
| SLV 7 | 112 | -88889 | 3407547 | 6.26 | 10244746 | 3.006 | Si |
| SLV 11 | -98 | -87583 | 6458982 | 6.17 | 10250249 | 1.587 | Si |
| SLV 11 | 112 | -86706 | 3236653 | 6.11 | 10251332 | 3.167 | Si |
| SLD 7 | -98 | -83456 | 4191644 | 5.88 | 10237045 | 2.442 | Si |
| SLD 7 | 112 | -78701 | 2820371 | 5.55 | 10164231 | 3.604 | Si |
| SLD 8 | -98 | -83456 | 4191644 | 5.88 | 10237045 | 2.442 | Si |
| SLD 8 | 112 | -78701 | 2820371 | 5.55 | 10164231 | 3.604 | Si |
| SLD 12 | -98 | -81162 | 4117480 | 5.72 | 10209612 | 2.48 | Si |
| SLD 12 | 112 | -77787 | 2748525 | 5.48 | 10143158 | 3.69 | Si |
| SLV 4 | -98 | -89663 | 3921289 | 6.32 | 10239292 | 2.611 | Si |
| SLV 4 | 112 | -79851 | 2962725 | 5.63 | 10187500 | 3.439 | Si |
| SLV 8 | -98 | -93005 | 6635550 | 6.55 | 10196963 | 1.537 | Si |
| SLV 8 | 112 | -88889 | 3407547 | 6.26 | 10244746 | 3.006 | Si |
| SLV 3 | -98 | -89663 | 3921289 | 6.32 | 10239292 | 2.611 | Si |
| SLV 3 | 112 | -79851 | 2962725 | 5.63 | 10187500 | 3.439 | Si |

Verifica a taglio nel piano secondo D.M. 17-01-18 (N.T.C.) §7.8.2.2.2 con rottura per scorrimento in combinazioni non sismiche, γM = 3

| Comb. | Quota | N | V par | M | σ0 | σN | l' | fvd | Vt scorr. | Vt fess.diag. | Vt,lim | c.s. | Verifica |
|---|---|---|---|---|---|---|---|---|---|---|---|---|---|
| SLU 77 | -98 | -117721 | 735 | 3910427 | | 8.3 | 473 | 1.08 | 15373 | | | 20.91 | Si |
| SLU 77 | 112 | -110915 | 735 | 3778773 | | 7.82 | 473 | 1.08 | 15373 | | | 20.91 | Si |
| SLU 27 | -98 | -88989 | 763 | 3059266 | | 6.27 | 473 | 1.08 | 15373 | | | 20.15 | Si |
| SLU 27 | 112 | -83754 | 763 | 2916556 | | 5.9 | 473 | 1.08 | 15373 | | | 20.15 | Si |
| SLU 38 | -98 | -99990 | 814 | 3385524 | | 7.05 | 473 | 1.08 | 15373 | | | 18.9 | Si |
| SLU 38 | 112 | -94755 | 814 | 3232159 | | 6.68 | 473 | 1.08 | 15373 | | | 18.9 | Si |
| SLU 30 | -98 | -87959 | 726 | 3040178 | | 6.2 | 473 | 1.08 | 15373 | | | 21.18 | Si |
| SLU 30 | 112 | -82724 | 726 | 2905263 | | 5.83 | 473 | 1.08 | 15373 | | | 21.18 | Si |
| SLU 36 | -98 | -100603 | 780 | 3396796 | | 7.09 | 473 | 1.08 | 15373 | | | 19.71 | Si |
| SLU 36 | 112 | -95368 | 780 | 3250447 | | 6.72 | 473 | 1.08 | 15373 | | | 19.71 | Si |
| SLU 29 | -98 | -88375 | 796 | 3047994 | | 6.23 | 473 | 1.08 | 15373 | | | 19.31 | Si |
| SLU 29 | 112 | -83140 | 796 | 2898268 | | 5.86 | 473 | 1.08 | 15373 | | | 19.31 | Si |
| SLU 35 | -98 | -101020 | 851 | 3404613 | | 7.12 | 473 | 1.08 | 15373 | | | 18.07 | Si |
| SLU 35 | 112 | -95785 | 851 | 3243452 | | 6.75 | 473 | 1.08 | 15373 | | | 18.07 | Si |
| SLU 37 | -98 | -100406 | 884 | 3393341 | | 7.08 | 473 | 1.08 | 15373 | | | 17.39 | Si |
| SLU 37 | 112 | -95171 | 884 | 3225164 | | 6.71 | 473 | 1.08 | 15373 | | | 17.39 | Si |
| SLU 79 | -98 | -117108 | 769 | 3899155 | | 8.25 | 473 | 1.08 | 15373 | | | 20 | Si |
| SLU 79 | 112 | -110302 | 769 | 3760485 | | 7.77 | 473 | 1.08 | 15373 | | | 20 | Si |
| SLU 80 | -98 | -116691 | 698 | 3891338 | | 8.22 | 473 | 1.08 | 15373 | | | 22.02 | Si |
| SLU 80 | 112 | -109886 | 698 | 3767480 | | 7.74 | 473 | 1.08 | 15373 | | | 22.02 | Si |

Verifica a taglio nel piano secondo D.M. 17-01-18 (N.T.C.) §7.8.2.2.2 con rottura per scorrimento in combinazioni sismiche, γM = 2

| Comb. | Quota | N | V par | M | σ0 | σN | l' | fvd | Vt scorr. | Vt fess.diag. | Vt,lim | c.s. | Verifica |
|---|---|---|---|---|---|---|---|---|---|---|---|---|---|
| SLV 8 | -98 | -93005 | 17776 | 6635550 | | 6.55 | 473 | 1.63 | 23059 | | | 1.3 | Si |
| SLV 8 | 112 | -88889 | 16407 | 3407547 | | 6.26 | 473 | 1.63 | 23059 | | | 1.41 | Si |
| SLD 5 | -98 | -71804 | -8197 | 633461 | | 5.06 | 473 | 1.63 | 23059 | | | 2.81 | Si |
| SLD 5 | 112 | -64709 | -7724 | 2055108 | | 4.56 | 473 | 1.63 | 23059 | | | 2.99 | Si |
| SLV 6 | -98 | -65382 | -19054 | -1708041 | | 4.61 | 473 | 1.63 | 23059 | | | 1.21 | Si |
| SLV 6 | 112 | -55789 | -17988 | 1566980 | | 3.93 | 473 | 1.62 | 22983 | | | 1.28 | Si |
| SLD 6 | -98 | -71804 | -8197 | 633461 | | 5.06 | 473 | 1.63 | 23059 | | | 2.81 | Si |
| SLD 6 | 112 | -64709 | -7724 | 2055108 | | 4.56 | 473 | 1.63 | 23059 | | | 2.99 | Si |
| SLV 12 | -98 | -87583 | 18969 | 6458982 | | 6.17 | 473 | 1.63 | 23059 | | | 1.22 | Si |
| SLV 12 | 112 | -86706 | 17904 | 3236653 | | 6.11 | 473 | 1.63 | 23059 | | | 1.29 | Si |
| SLV 10 | -98 | -59960 | -17861 | -1884609 | | 4.23 | 473 | 1.63 | 23059 | | | 1.29 | Si |
| SLV 10 | 112 | -53606 | -16492 | 1396086 | | 3.78 | 473 | 1.59 | 22546 | | | 1.37 | Si |
| SLV 7 | -98 | -93005 | 17776 | 6635550 | | 6.55 | 473 | 1.63 | 23059 | | | 1.3 | Si |
| SLV 7 | 112 | -88889 | 16407 | 3407547 | | 6.26 | 473 | 1.63 | 23059 | | | 1.41 | Si |
| SLV 5 | -98 | -65382 | -19054 | -1708041 | | 4.61 | 473 | 1.63 | 23059 | | | 1.21 | Si |
| SLV 5 | 112 | -55789 | -17988 | 1566980 | | 3.93 | 473 | 1.62 | 22983 | | | 1.28 | Si |
| SLV 9 | -98 | -59960 | -17861 | -1884609 | | 4.23 | 473 | 1.63 | 23059 | | | 1.29 | Si |
| SLV 9 | 112 | -53606 | -16492 | 1396086 | | 3.78 | 473 | 1.59 | 22546 | | | 1.37 | Si |
| SLV 11 | -98 | -87583 | 18969 | 6458982 | | 6.17 | 473 | 1.63 | 23059 | | | 1.22 | Si |
| SLV 11 | 112 | -86706 | 17904 | 3236653 | | 6.11 | 473 | 1.63 | 23059 | | | 1.29 | Si |

Verifica a pressoflessione fuori piano D.M. 17-01-18 (N.T.C.)

quota 36.5 Wa 0.05 denominatore 8 γM = 2

| Comb. | fd | Sa | σ0 | N | M | Mc | Coeff.s. | Verifica |
|---|---|---|---|---|---|---|---|---|
| SLV 10 | 14 | 0.25 | 3.91 | -55440 | 19384 | 565694 | 29.18 | Si |

| Comb. | fd | Sa | σ0 | N | M | Mc | Coeff.s. | Verifica |
|---|---|---|---|---|---|---|---|---|
| SLV 9 | 14 | 0.25 | 3.91 | -55440 | 19384 | 565694 | 29.18 | Si |
| SLV 5 | 14 | 0.25 | 4.25 | -60352 | 19384 | 590167 | 30.45 | Si |
| SLV 6 | 14 | 0.25 | 4.25 | -60352 | 19384 | 590167 | 30.45 | Si |
| SLV 14 | 14 | 0.25 | 4.26 | -60405 | 19384 | 590411 | 30.46 | Si |
| SLV 13 | 14 | 0.25 | 4.26 | -60405 | 19384 | 590411 | 30.46 | Si |
| SLV 15 | 14 | 0.25 | 4.9 | -69573 | 19384 | 624837 | 32.23 | Si |
| SLV 16 | 14 | 0.25 | 4.9 | -69573 | 19384 | 624837 | 32.23 | Si |
| SLV 1 | 14 | 0.25 | 5.41 | -76778 | 19384 | 641687 | 33.1 | Si |
| SLV 2 | 14 | 0.25 | 5.41 | -76778 | 19384 | 641687 | 33.1 | Si |

### Verifica dei meccanismi locali di collasso con analisi cinematica lineare

forza di aggancio al piano = 0 quota mezzeria = 36.5 Wa = 0.05 Ta = 0.0403

| Comb. | N top | N base | V orto | α0 | M* | e* | a0* | aLim | Verifica |
|---|---|---|---|---|---|---|---|---|---|
| SLV 8 | -82686 | -93005 | -181 | 0.056 | 89.576 | 0.981 | 82.781 | 562.86 | No |
| SLV 7 | -82686 | -93005 | -181 | 0.056 | 89.576 | 0.981 | 82.781 | 562.86 | No |
| SLV 12 | -82062 | -87583 | -176 | 0.056 | 88.94 | 0.981 | 82.87 | 562.86 | No |
| SLV 11 | -82062 | -87583 | -176 | 0.056 | 88.94 | 0.981 | 82.87 | 562.86 | No |
| SLV 10 | -51627 | -59960 | 188 | 0.056 | 57.936 | 0.972 | 83.499 | 562.86 | No |
| SLV 9 | -51627 | -59960 | 188 | 0.056 | 57.936 | 0.972 | 83.499 | 562.86 | No |
| SLV 6 | -52251 | -65382 | 184 | 0.056 | 58.571 | 0.972 | 83.592 | 562.86 | No |
| SLV 5 | -52251 | -65382 | 184 | 0.056 | 58.571 | 0.972 | 83.592 | 562.86 | No |
| SLV 4 | -72762 | -89663 | -58 | 0.058 | 79.464 | 0.979 | 85.384 | 392.678 | No |
| SLV 3 | -72762 | -89663 | -58 | 0.058 | 79.464 | 0.979 | 85.384 | 392.678 | No |

### Tabella dei coefficienti di sicurezza minimi

| Stato limite | Coeff.s. | Comb. | Verifica |
|---|---|---|---|
| PF_SLU | 0 | SLU 77 | No |
| V_SLU | 17.388 | SLU 37 | Si |
| PF_SLV | 1.537 | SLV 7 | Si |
| V_SLV | 1.21 | SLV 5 | Si |
| PFFP_SLV | 29.184 | SLV 9 | Si |
| R_SLV | 0.147 | SLV 7 | No |

## Maschio 52

Verifiche condotte secondo D.M. 17-01-18 (N.T.C.)

### Dati geometrici

| X ini. | Y ini. | X fin. | Y fin. | Quota i. | Quota.s | l | Sp. | h netta | h ini. | h fin. | a | a.s.,sx | a.s.,dx |
|---|---|---|---|---|---|---|---|---|---|---|---|---|---|
| -500.8 | 587.6 | -301.3 | 587.6 | L1 | L3 | 199.5 | 45 | 269 | 269 | 269 | | | |

### Caratteristiche del materiale

(Circolare 7 21-01-19 C8.5.I) Muratura in mattoni pieni e malta di calce LC2_Corti

| fb | fk | fvk0 | fmedio | τ0 | fv0 | μ | ϕ | fv,lim | E | G | FC |
|---|---|---|---|---|---|---|---|---|---|---|---|
| 60 | | | 34.5 | 0.9 | 2 | 0.58 | 0.77 | 3.25 | 32000 | 12800 | 1.2 |

### Verifica a pressoflessione nel piano secondo D.M. 17-01-18 NTC §7.8.2.2.1 in combinazioni non sismiche, γM = 3

| Comb. | Quota | N | M | σ0 | Mu | c.s. | Verifica |
|---|---|---|---|---|---|---|---|
| SLU 60 | 102 | -20416 | 304651 | 2.27 | 1467971 | 4.819 | Si |
| SLU 60 | 142 | -19614 | 218922 | 2.18 | 1431725 | 6.54 | Si |
| SLU 84 | 102 | -23401 | 338036 | 2.61 | 1587291 | 4.696 | Si |
| SLU 84 | 142 | -22598 | 245222 | 2.52 | 1557581 | 6.352 | Si |
| SLU 73 | 102 | -21623 | 314179 | 2.41 | 1519119 | 4.835 | Si |
| SLU 73 | 142 | -20820 | 226762 | 2.32 | 1485515 | 6.551 | Si |
| SLU 77 | 102 | -22921 | 326047 | 2.55 | 1569763 | 4.815 | Si |
| SLU 77 | 142 | -22119 | 232554 | 2.46 | 1539003 | 6.618 | Si |
| SLU 74 | 102 | -22394 | 325251 | 2.49 | 1549738 | 4.765 | Si |
| SLU 74 | 142 | -21591 | 232535 | 2.4 | 1517823 | 6.527 | Si |
| SLU 75 | 102 | -22303 | 320383 | 2.48 | 1546218 | 4.826 | Si |
| SLU 75 | 142 | -21500 | 229493 | 2.39 | 1514104 | 6.598 | Si |
| SLU 79 | 102 | -22829 | 323885 | 2.54 | 1566328 | 4.836 | Si |
| SLU 79 | 142 | -22027 | 231870 | 2.45 | 1535367 | 6.622 | Si |
| SLU 83 | 102 | -23491 | 342905 | 2.62 | 1590540 | 4.638 | Si |
| SLU 83 | 142 | -22689 | 248264 | 2.53 | 1561029 | 6.288 | Si |
| SLU 82 | 102 | -22873 | 337240 | 2.55 | 1567957 | 4.649 | Si |
| SLU 82 | 142 | -22070 | 245203 | 2.46 | 1537091 | 6.269 | Si |
| SLU 81 | 102 | -22964 | 342109 | 2.56 | 1571336 | 4.593 | Si |
| SLU 81 | 142 | -22161 | 248245 | 2.47 | 1540669 | 6.206 | Si |

### Verifica a pressoflessione nel piano secondo D.M. 17-01-18 NTC §7.8.2.2.1 in combinazioni sismiche, γM = 2

| Comb. | Quota | N | M | σ0 | Mu | c.s. | Verifica |
|---|---|---|---|---|---|---|---|
| SLV 10 | 102 | -2907 | 417245 | 0 | 0 | 0 | No, e>l/2 |
| SLV 10 | 142 | -6426 | 399163 | 0.72 | 603443 | 1.512 | Si |
| SLV 15 | 102 | -19268 | 608875 | 2.15 | 1584398 | 2.602 | Si |
| SLV 15 | 142 | -17152 | 114846 | 1.91 | 1443417 | 12.568 | Si |
| SLV 14 | 102 | -11966 | 654261 | 1.33 | 1063374 | 1.625 | Si |
| SLV 14 | 142 | -12374 | 256507 | 1.38 | 1095095 | 4.269 | Si |
| SLV 9 | 102 | -2907 | 417245 | 0 | 0 | 0 | No, e>l/2 |
| SLV 9 | 142 | -6426 | 399163 | 0.72 | 603443 | 1.512 | Si |
| SLV 16 | 102 | -19268 | 608875 | 2.15 | 1584398 | 2.602 | Si |
| SLV 16 | 142 | -17152 | 114846 | 1.91 | 1443417 | 12.568 | Si |
| SLD 14 | 102 | -13728 | 405326 | 1.53 | 1198000 | 2.956 | Si |
| SLD 14 | 142 | -13527 | 195763 | 1.51 | 1182906 | 6.043 | Si |
| SLV 6 | 102 | -2445 | 168702 | 0.27 | 238420 | 1.413 | Si |

| Comb. | Quota | N | M | σ0 | Mu | c.s. | Verifica |
|---|---|---|---|---|---|---|---|
| SLV 6 | 142 | -6106 | 379779 | 0.68 | 575127 | 1.514 | Si |
| SLV 13 | 102 | -11966 | 654261 | 1.33 | 1063374 | 1.625 | Si |
| SLV 13 | 142 | -12374 | 256507 | 1.38 | 1095095 | 4.269 | Si |
| SLV 5 | 102 | -2445 | 168702 | 0.27 | 238420 | 1.413 | Si |
| SLV 5 | 142 | -6106 | 379779 | 0.68 | 575127 | 1.514 | Si |
| SLD 13 | 102 | -13728 | 405326 | 1.53 | 1198000 | 2.956 | Si |
| SLD 13 | 142 | -13527 | 195763 | 1.51 | 1182906 | 6.043 | Si |

Verifica a taglio nel piano secondo D.M. 17-01-18 (N.T.C.) §7.8.2.2.2 con rottura per scorrimento in combinazioni non sismiche, γM = 3

| Comb. | Quota | N | V par | M | σ0 | σN | l' | fvd | Vt scorr. | Vt fess.diag. | Vt,lim | c.s. | Verifica |
|---|---|---|---|---|---|---|---|---|---|---|---|---|---|
| SLU 78 | 102 | -22831 | 2287 | 321179 | | 2.54 | 199.5 | 0.89 | 8032 | | | 3.51 | Si |
| SLU 78 | 142 | -22028 | 2287 | 229512 | | 2.45 | 199.5 | 0.88 | 7925 | | | 3.46 | Si |
| SLU 77 | 102 | -22921 | 2333 | 326047 | | 2.55 | 199.5 | 0.9 | 8044 | | | 3.45 | Si |
| SLU 77 | 142 | -22119 | 2333 | 232554 | | 2.46 | 199.5 | 0.88 | 7937 | | | 3.4 | Si |
| SLU 74 | 102 | -22394 | 2314 | 325251 | | 2.49 | 199.5 | 0.89 | 7973 | | | 3.45 | Si |
| SLU 74 | 142 | -21591 | 2314 | 232535 | | 2.4 | 199.5 | 0.88 | 7866 | | | 3.4 | Si |
| SLU 80 | 102 | -22739 | 2250 | 319016 | | 2.53 | 199.5 | 0.89 | 8019 | | | 3.56 | Si |
| SLU 80 | 142 | -21936 | 2250 | 228828 | | 2.44 | 199.5 | 0.88 | 7912 | | | 3.52 | Si |
| SLU 81 | 102 | -22964 | 2342 | 342109 | | 2.56 | 199.5 | 0.9 | 8049 | | | 3.44 | Si |
| SLU 81 | 142 | -22161 | 2342 | 248245 | | 2.47 | 199.5 | 0.88 | 7942 | | | 3.39 | Si |
| SLU 82 | 102 | -22873 | 2297 | 337240 | | 2.55 | 199.5 | 0.9 | 8037 | | | 3.5 | Si |
| SLU 82 | 142 | -22070 | 2297 | 245203 | | 2.46 | 199.5 | 0.88 | 7930 | | | 3.45 | Si |
| SLU 83 | 102 | -23491 | 2362 | 342905 | | 2.62 | 199.5 | 0.9 | 8120 | | | 3.44 | Si |
| SLU 83 | 142 | -22689 | 2362 | 248264 | | 2.53 | 199.5 | 0.89 | 8013 | | | 3.39 | Si |
| SLU 79 | 102 | -22829 | 2296 | 323885 | | 2.54 | 199.5 | 0.89 | 8031 | | | 3.5 | Si |
| SLU 79 | 142 | -22027 | 2296 | 231870 | | 2.45 | 199.5 | 0.88 | 7924 | | | 3.45 | Si |
| SLU 84 | 102 | -23401 | 2316 | 338036 | | 2.61 | 199.5 | 0.9 | 8108 | | | 3.5 | Si |
| SLU 84 | 142 | -22598 | 2316 | 245222 | | 2.52 | 199.5 | 0.89 | 8001 | | | 3.45 | Si |
| SLU 75 | 102 | -22303 | 2268 | 320383 | | 2.48 | 199.5 | 0.89 | 7961 | | | 3.51 | Si |
| SLU 75 | 142 | -21500 | 2268 | 229493 | | 2.39 | 199.5 | 0.87 | 7854 | | | 3.46 | Si |

Verifica a taglio nel piano secondo D.M. 17-01-18 (N.T.C.) §7.8.2.2.2 con rottura per scorrimento in combinazioni sismiche, γM = 2

| Comb. | Quota | N | V par | M | σ0 | σN | l' | fvd | Vt scorr. | Vt fess.diag. | Vt,lim | c.s. | Verifica |
|---|---|---|---|---|---|---|---|---|---|---|---|---|---|
| SLV 9 | 102 | -2907 | -9338 | 417245 | | 0 | 0 | 0.83 | 0 | | | 0 | No, Vu<V |
| SLV 9 | 142 | -6426 | -12354 | 399163 | | 1.26 | 112.9 | 1.09 | 5519 | | | 0.45 | No, Vu<V |
| SLV 10 | 102 | -2907 | -9338 | 417245 | | 0 | 0 | 0.83 | 0 | | | 0 | No, Vu<V |
| SLV 10 | 142 | -6426 | -12354 | 399163 | | 1.26 | 112.9 | 1.09 | 5519 | | | 0.45 | No, Vu<V |
| SLV 15 | 102 | -19268 | 14870 | 608875 | | 2.15 | 199.5 | 1.26 | 11335 | | | 0.76 | No, Vu<V |
| SLV 15 | 142 | -17152 | 15946 | 114846 | | 1.91 | 199.5 | 1.22 | 10912 | | | 0.68 | No, Vu<V |
| SLV 2 | 102 | -10425 | -11679 | -174216 | | 1.16 | 199.5 | 1.07 | 9566 | | | 0.82 | No, Vu<V |
| SLV 2 | 142 | -11306 | -12754 | 191893 | | 1.26 | 199.5 | 1.09 | 9742 | | | 0.76 | No, Vu<V |
| SLV 11 | 102 | -27249 | 18031 | 265957 | | 3.04 | 199.5 | 1.44 | 12931 | | | 0.72 | No, Vu<V |
| SLV 11 | 142 | -22353 | 21140 | -73040 | | 2.49 | 199.5 | 1.33 | 11952 | | | 0.57 | No, Vu<V |
| SLV 12 | 102 | -27249 | 18031 | 265957 | | 3.04 | 199.5 | 1.44 | 12931 | | | 0.72 | No, Vu<V |
| SLV 12 | 142 | -22353 | 21140 | -73040 | | 2.49 | 199.5 | 1.33 | 11952 | | | 0.57 | No, Vu<V |
| SLV 6 | 102 | -2445 | -14840 | 168702 | | 0.59 | 92.23 | 0.95 | 3947 | | | 0.27 | No, Vu<V |
| SLV 6 | 142 | -6106 | -17949 | 379779 | | 1.2 | 112.64 | 1.07 | 5445 | | | 0.3 | No, Vu<V |
| SLV 16 | 102 | -19268 | 14870 | 608875 | | 2.15 | 199.5 | 1.26 | 11335 | | | 0.76 | No, Vu<V |
| SLV 16 | 142 | -17152 | 15946 | 114846 | | 1.91 | 199.5 | 1.22 | 10912 | | | 0.68 | No, Vu<V |
| SLV 1 | 102 | -10425 | -11679 | -174216 | | 1.16 | 199.5 | 1.07 | 9566 | | | 0.82 | No, Vu<V |
| SLV 1 | 142 | -11306 | -12754 | 191893 | | 1.26 | 199.5 | 1.09 | 9742 | | | 0.76 | No, Vu<V |
| SLV 5 | 102 | -2445 | -14840 | 168702 | | 0.59 | 92.23 | 0.95 | 3947 | | | 0.27 | No, Vu<V |
| SLV 5 | 142 | -6106 | -17949 | 379779 | | 1.2 | 112.64 | 1.07 | 5445 | | | 0.3 | No, Vu<V |

Verifica a pressoflessione fuori piano D.M. 17-01-18 (N.T.C.)

quota 36.5 Wa 0.08 denominatore 8 γM = 2

| Comb. | fd | Sa | σ0 | N | M | Mc | Coeff.s. | Verifica |
|---|---|---|---|---|---|---|---|---|
| SLV 10 | 14 | 0.25 | 0.73 | -6525 | 12264 | 138087 | 11.26 | Si |
| SLV 9 | 14 | 0.25 | 0.73 | -6525 | 12264 | 138087 | 11.26 | Si |
| SLV 13 | 14 | 0.25 | 0.94 | -8422 | 12264 | 174937 | 14.26 | Si |
| SLV 14 | 14 | 0.25 | 0.94 | -8422 | 12264 | 174937 | 14.26 | Si |
| SLV 5 | 14 | 0.25 | 0.95 | -8529 | 12264 | 176983 | 14.43 | Si |
| SLV 6 | 14 | 0.25 | 0.95 | -8529 | 12264 | 176983 | 14.43 | Si |
| SLV 16 | 14 | 0.25 | 1.34 | -12051 | 12264 | 241351 | 19.68 | Si |
| SLV 15 | 14 | 0.25 | 1.34 | -12051 | 12264 | 241351 | 19.68 | Si |
| SLV 2 | 14 | 0.25 | 1.68 | -15101 | 12264 | 292990 | 23.89 | Si |
| SLV 1 | 14 | 0.25 | 1.68 | -15101 | 12264 | 292990 | 23.89 | Si |

Verifica dei meccanismi locali di collasso con analisi cinematica lineare

forza di aggancio al piano = 0 quota mezzeria = 36.5 Wa = 0.08 Ta = 0.0269

| Comb. | N top | N base | V orto | α0 | M* | e* | a0* | aLim | Verifica |
|---|---|---|---|---|---|---|---|---|---|
| SLV 7 | -16327 | -16837 | -301 | 0.077 | 20.036 | 0.951 | 118.04 | 417.584 | No |
| SLV 8 | -16327 | -16837 | -301 | 0.077 | 20.036 | 0.951 | 118.04 | 417.584 | No |
| SLV 11 | -17207 | -10907 | -285 | 0.078 | 20.93 | 0.953 | 119.488 | 417.584 | No |
| SLV 12 | -17207 | -10907 | -285 | 0.078 | 20.93 | 0.953 | 119.488 | 417.584 | No |
| SLV 5 | -7765 | -17376 | -196 | 0.082 | 11.374 | 0.921 | 129.71 | 417.584 | No |
| SLV 6 | -7765 | -17376 | -196 | 0.082 | 11.374 | 0.921 | 129.71 | 417.584 | No |
| SLV 9 | -8644 | -11446 | -180 | 0.084 | 12.259 | 0.926 | 131.547 | 417.584 | No |
| SLV 10 | -8644 | -11446 | -180 | 0.084 | 12.259 | 0.926 | 131.547 | 417.584 | No |
| SLV 3 | -12304 | -23944 | -282 | 0.077 | 15.955 | 0.94 | 118.587 | 332.581 | No |
| SLV 4 | -12304 | -23944 | -282 | 0.077 | 15.955 | 0.94 | 118.587 | 332.581 | No |

Tabella dei coefficienti di sicurezza minimi

| Stato limite | Coeff.s. | Comb. | Verifica |
|---|---|---|---|
| PF_SLU | 4.593 | SLU 81 | Si |
| V_SLU | 3.391 | SLU 81 | Si |

| Stato limite | Coeff.s. | Comb. | Verifica |
|---|---|---|---|
| PF_SLV | 0 | SLV 9 | No |
| V_SLV | 0 | SLV 9 | No |
| PFFP_SLV | 11.26 | SLV 9 | Si |
| R_SLV | 0.283 | SLV 7 | No |

## Maschio 53

Verifiche condotte secondo D.M. 17-01-18 (N.T.C.)

### Dati geometrici

| X ini. | Y ini. | X fin. | Y fin. | Quota i. | Quota.s | l | Sp. | h netta | h ini. | h fin. | a | a.s.,sx | a.s.,dx |
|---|---|---|---|---|---|---|---|---|---|---|---|---|---|
| -201.3 | 587.6 | -12.3 | 587.6 | L1 | L3 | 189 | 45 | 269 | 269 | 269 | | | |

### Caratteristiche del materiale

(Circolare 7 21-01-19 C8.5.I) Muratura in mattoni pieni e malta di calce LC2_Corti

| fb | fk | fvk0 | fmedio | τ0 | fv0 | μ | ϕ | fv,lim | E | G | FC |
|---|---|---|---|---|---|---|---|---|---|---|---|
| 60 | | | 34.5 | 0.9 | 2 | 0.58 | 0.77 | 3.25 | 32000 | 12800 | 1.2 |

### Verifica a pressoflessione nel piano secondo D.M. 17-01-18 NTC §7.8.2.2.1 in combinazioni non sismiche, γM = 3

| Comb. | Quota | N | M | σ0 | Mu | c.s. | Verifica |
|---|---|---|---|---|---|---|---|
| SLU 49 | 102 | -16914 | 72430 | 1.99 | 1208135 | 16.68 | Si |
| SLU 49 | 142 | -15961 | 79318 | 1.88 | 1160827 | 14.635 | Si |
| SLU 45 | 102 | -17230 | 88642 | 2.03 | 1223301 | 13.8 | Si |
| SLU 45 | 142 | -16252 | 96069 | 1.91 | 1175544 | 12.236 | Si |
| SLU 50 | 102 | -17247 | 80685 | 2.03 | 1224119 | 15.172 | Si |
| SLU 50 | 142 | -16267 | 89105 | 1.91 | 1176277 | 13.201 | Si |
| SLU 3 | 102 | -13890 | 65926 | 1.63 | 1049425 | 15.918 | Si |
| SLU 3 | 142 | -13136 | 71512 | 1.54 | 1006009 | 14.068 | Si |
| SLU 64 | 102 | -19085 | 82952 | 2.24 | 1306725 | 15.753 | Si |
| SLU 64 | 142 | -18118 | 89323 | 2.13 | 1264416 | 14.155 | Si |
| SLU 46 | 102 | -16757 | 77176 | 1.97 | 1200525 | 15.556 | Si |
| SLU 46 | 142 | -15810 | 83416 | 1.86 | 1153078 | 13.823 | Si |
| SLU 48 | 102 | -17387 | 83895 | 2.04 | 1230709 | 14.67 | Si |
| SLU 48 | 142 | -16404 | 91972 | 1.93 | 1183110 | 12.864 | Si |
| SLU 43 | 102 | -16934 | 90179 | 1.99 | 1209116 | 13.408 | Si |
| SLU 43 | 142 | -15964 | 97300 | 1.88 | 1160968 | 11.932 | Si |
| SLU 1 | 102 | -13594 | 67462 | 1.6 | 1032542 | 15.305 | Si |
| SLU 1 | 142 | -12848 | 72742 | 1.51 | 988982 | 13.596 | Si |
| SLU 66 | 102 | -19382 | 81416 | 2.28 | 1319171 | 16.203 | Si |
| SLU 66 | 142 | -18407 | 88093 | 2.16 | 1277297 | 14.499 | Si |

### Verifica a pressoflessione nel piano secondo D.M. 17-01-18 NTC §7.8.2.2.1 in combinazioni sismiche, γM = 2

| Comb. | Quota | N | M | σ0 | Mu | c.s. | Verifica |
|---|---|---|---|---|---|---|---|
| SLV 13 | 102 | -16006 | 501399 | 1.88 | 1279616 | 2.552 | Si |
| SLV 13 | 142 | -15778 | 252825 | 1.86 | 1264641 | 5.002 | Si |
| SLV 1 | 102 | -6491 | -461021 | 0.76 | 575077 | 1.247 | Si |
| SLV 1 | 142 | -5349 | -187448 | 0.63 | 479439 | 2.558 | Si |
| SLV 3 | 102 | -13840 | -376996 | 1.63 | 1133691 | 3.007 | Si |
| SLV 3 | 142 | -12588 | -118993 | 1.48 | 1045453 | 8.786 | Si |
| SLV 14 | 102 | -16006 | 501399 | 1.88 | 1279616 | 2.552 | Si |
| SLV 14 | 142 | -15778 | 252825 | 1.86 | 1264641 | 5.002 | Si |
| SLV 15 | 102 | -23355 | 585423 | 2.75 | 1711051 | 2.923 | Si |
| SLV 15 | 142 | -23017 | 321280 | 2.71 | 1693348 | 5.271 | Si |
| SLV 6 | 102 | -1247 | -222202 | 0 | 0 | 0 | No, e>l/2 |
| SLV 6 | 142 | -553 | -113217 | 0 | 0 | 0 | No, e>l/2 |
| SLV 5 | 102 | -1247 | -222202 | 0 | 0 | 0 | No, e>l/2 |
| SLV 5 | 142 | -553 | -113217 | 0 | 0 | 0 | No, e>l/2 |
| SLV 16 | 102 | -23355 | 585423 | 2.75 | 1711051 | 2.923 | Si |
| SLV 16 | 142 | -23017 | 321280 | 2.71 | 1693348 | 5.271 | Si |
| SLV 4 | 102 | -13840 | -376996 | 1.63 | 1133691 | 3.007 | Si |
| SLV 4 | 142 | -12588 | -118993 | 1.48 | 1045453 | 8.786 | Si |
| SLV 2 | 102 | -6491 | -461021 | 0.76 | 575077 | 1.247 | Si |
| SLV 2 | 142 | -5349 | -187448 | 0.63 | 479439 | 2.558 | Si |

### Verifica a taglio nel piano secondo D.M. 17-01-18 (N.T.C.) §7.8.2.2.2 con rottura per scorrimento in combinazioni non sismiche, γM = 3

| Comb. | Quota | N | V par | M | σ0 | σN | l' | fvd | Vt scorr. | Vt fess.diag. | Vt,lim | c.s. | Verifica |
|---|---|---|---|---|---|---|---|---|---|---|---|---|---|
| SLU 45 | 102 | -17230 | -787 | 88642 | | 2.03 | 189 | 0.83 | 7022 | | | 8.92 | Si |
| SLU 45 | 142 | -16252 | -882 | 96069 | | 1.91 | 189 | 0.81 | 6892 | | | 7.82 | Si |
| SLU 58 | 102 | -19749 | -764 | 69497 | | 2.32 | 189 | 0.87 | 7358 | | | 9.63 | Si |
| SLU 58 | 142 | -18784 | -869 | 76689 | | 2.21 | 189 | 0.85 | 7229 | | | 8.32 | Si |
| SLU 48 | 102 | -17387 | -818 | 83895 | | 2.04 | 189 | 0.83 | 7043 | | | 8.61 | Si |
| SLU 48 | 142 | -16404 | -914 | 91972 | | 1.93 | 189 | 0.81 | 6912 | | | 7.56 | Si |
| SLU 69 | 102 | -19538 | -802 | 76669 | | 2.3 | 189 | 0.86 | 7330 | | | 9.14 | Si |
| SLU 69 | 142 | -18558 | -908 | 83995 | | 2.18 | 189 | 0.85 | 7199 | | | 7.92 | Si |
| SLU 66 | 102 | -19382 | -771 | 81416 | | 2.28 | 189 | 0.86 | 7309 | | | 9.48 | Si |
| SLU 66 | 142 | -18407 | -876 | 88093 | | 2.16 | 189 | 0.84 | 7179 | | | 8.19 | Si |
| SLU 43 | 102 | -16934 | -758 | 90179 | | 1.99 | 189 | 0.82 | 6983 | | | 9.21 | Si |
| SLU 43 | 142 | -15964 | -850 | 97300 | | 1.88 | 189 | 0.81 | 6854 | | | 8.06 | Si |
| SLU 71 | 102 | -19399 | -804 | 73459 | | 2.28 | 189 | 0.86 | 7312 | | | 9.1 | Si |
| SLU 71 | 142 | -18421 | -909 | 81128 | | 2.17 | 189 | 0.84 | 7181 | | | 7.9 | Si |
| SLU 50 | 102 | -17247 | -820 | 80685 | | 2.03 | 189 | 0.83 | 7025 | | | 8.57 | Si |
| SLU 50 | 142 | -16267 | -914 | 89105 | | 1.91 | 189 | 0.81 | 6894 | | | 7.54 | Si |
| SLU 56 | 102 | -19889 | -762 | 72707 | | 2.34 | 189 | 0.87 | 7377 | | | 9.68 | Si |
| SLU 56 | 142 | -18920 | -869 | 79556 | | 2.22 | 189 | 0.85 | 7248 | | | 8.34 | Si |

| Comb. | Quota | N | V par | M | σ0 | σN | l' | fvd | Vt scorr. | Vt fess.diag. | Vt,lim | c.s. | Verifica |
|---|---|---|---|---|---|---|---|---|---|---|---|---|---|
| SLU 51 | 102 | -16774 | -715 | 69220 | | 1.97 | 189 | 0.82 | 6962 | | | 9.73 | Si |
| SLU 51 | 142 | -15824 | -810 | 76451 | | 1.86 | 189 | 0.8 | 6835 | | | 8.44 | Si |

### Verifica a taglio nel piano secondo D.M. 17-01-18 (N.T.C.) §7.8.2.2.2 con rottura per scorrimento in combinazioni sismiche, γM = 2

| Comb. | Quota | N | V par | M | σ0 | σN | l' | fvd | Vt scorr. | Vt fess.diag. | Vt,lim | c.s. | Verifica |
|---|---|---|---|---|---|---|---|---|---|---|---|---|---|
| SLV 3 | 102 | -13840 | -13730 | -376996 | | 1.63 | 189 | 1.16 | 9855 | | | 0.72 | No, Vu<V |
| SLV 3 | 142 | -12588 | -14282 | -118993 | | 1.48 | 189 | 1.13 | 9605 | | | 0.67 | No, Vu<V |
| SLV 8 | 102 | -25744 | -14347 | 57879 | | 3.03 | 189 | 1.44 | 12236 | | | 0.85 | No, Vu<V |
| SLV 8 | 142 | -24683 | -16891 | 114967 | | 2.9 | 189 | 1.41 | 12024 | | | 0.71 | No, Vu<V |
| SLV 1 | 102 | -6491 | -7244 | -461021 | | 2.05 | 70.42 | 1.24 | 3939 | | | 0.54 | No, Vu<V |
| SLV 1 | 142 | -5349 | -6264 | -187448 | | 0.67 | 178.36 | 0.97 | 7758 | | | 1.24 | Si |
| SLV 4 | 102 | -13840 | -13730 | -376996 | | 1.63 | 189 | 1.16 | 9855 | | | 0.72 | No, Vu<V |
| SLV 4 | 142 | -12588 | -14282 | -118993 | | 1.48 | 189 | 1.13 | 9605 | | | 0.67 | No, Vu<V |
| SLV 7 | 102 | -25744 | -14347 | 57879 | | 3.03 | 189 | 1.44 | 12236 | | | 0.85 | No, Vu<V |
| SLV 7 | 142 | -24683 | -16891 | 114967 | | 2.9 | 189 | 1.41 | 12024 | | | 0.71 | No, Vu<V |
| SLV 2 | 102 | -6491 | -7244 | -461021 | | 2.05 | 70.42 | 1.24 | 3939 | | | 0.54 | No, Vu<V |
| SLV 2 | 142 | -5349 | -6264 | -187448 | | 0.67 | 178.36 | 0.97 | 7758 | | | 1.24 | Si |
| SLV 10 | 102 | -4102 | 13230 | 66523 | | 0.48 | 189 | 0.93 | 7908 | | | 0.6 | No, Vu<V |
| SLV 10 | 142 | -3682 | 15616 | 18865 | | 0.43 | 189 | 0.92 | 7824 | | | 0.5 | No, Vu<V |
| SLV 6 | 102 | -1247 | 7273 | -222202 | | 0 | 0 | 0.83 | 0 | | | 0 | No, Vu<V |
| SLV 6 | 142 | -553 | 9834 | -113217 | | 0 | 0 | 0.83 | 0 | | | 0 | No, Vu<V |
| SLV 5 | 102 | -1247 | 7273 | -222202 | | 0 | 0 | 0.83 | 0 | | | 0 | No, Vu<V |
| SLV 5 | 142 | -553 | 9834 | -113217 | | 0 | 0 | 0.83 | 0 | | | 0 | No, Vu<V |
| SLV 9 | 102 | -4102 | 13230 | 66523 | | 0.48 | 189 | 0.93 | 7908 | | | 0.6 | No, Vu<V |
| SLV 9 | 142 | -3682 | 15616 | 18865 | | 0.43 | 189 | 0.92 | 7824 | | | 0.5 | No, Vu<V |

### Verifica a pressoflessione fuori piano D.M. 17-01-18 (N.T.C.)

quota 36.5 Wa 0.08 denominatore 8 γM = 2

| Comb. | fd | Sa | σ0 | N | M | Mc | Coeff.s. | Verifica |
|---|---|---|---|---|---|---|---|---|
| SLV 6 | 14 | 0.25 | 0.4 | -3361 | 11618 | 73171 | 6.3 | Si |
| SLV 5 | 14 | 0.25 | 0.4 | -3361 | 11618 | 73171 | 6.3 | Si |
| SLV 2 | 14 | 0.25 | 0.66 | -5622 | 11618 | 119650 | 10.3 | Si |
| SLV 1 | 14 | 0.25 | 0.66 | -5622 | 11618 | 119650 | 10.3 | Si |
| SLV 9 | 14 | 0.25 | 0.9 | -7661 | 11618 | 159658 | 13.74 | Si |
| SLV 10 | 14 | 0.25 | 0.9 | -7661 | 11618 | 159658 | 13.74 | Si |
| SLV 4 | 14 | 0.25 | 1.39 | -11860 | 11618 | 236395 | 20.35 | Si |
| SLV 3 | 14 | 0.25 | 1.39 | -11860 | 11618 | 236395 | 20.35 | Si |
| SLV 13 | 14 | 0.25 | 2.35 | -19955 | 11618 | 362771 | 31.22 | Si |
| SLV 14 | 14 | 0.25 | 2.35 | -19955 | 11618 | 362771 | 31.22 | Si |

### Verifica dei meccanismi locali di collasso con analisi cinematica lineare

forza di aggancio al piano = 0 quota mezzeria = 36.5 Wa = 0.08 Ta = 0.0269

| Comb. | N top | N base | V orto | α0 | M* | e* | a0* | aLim | Verifica |
|---|---|---|---|---|---|---|---|---|---|
| SLV 6 | -8092 | -4146 | -536 | 0.048 | 11.515 | 0.925 | 75.103 | 417.584 | No |
| SLV 5 | -8092 | -4146 | -536 | 0.048 | 11.515 | 0.925 | 75.103 | 417.584 | No |
| SLV 9 | -10660 | -9959 | -565 | 0.053 | 14.107 | 0.936 | 81.868 | 417.584 | No |
| SLV 10 | -10660 | -9959 | -565 | 0.053 | 14.107 | 0.936 | 81.868 | 417.584 | No |
| SLV 1 | -7200 | -5236 | -361 | 0.063 | 10.619 | 0.92 | 99.959 | 332.581 | No |
| SLV 2 | -7200 | -5236 | -361 | 0.063 | 10.619 | 0.92 | 99.959 | 332.581 | No |
| SLV 12 | -16674 | -32450 | -161 | 0.084 | 20.206 | 0.953 | 128.405 | 417.584 | No |
| SLV 11 | -16674 | -32450 | -161 | 0.084 | 20.206 | 0.953 | 128.405 | 417.584 | No |
| SLV 14 | -15761 | -24613 | -458 | 0.068 | 19.279 | 0.951 | 103.294 | 332.581 | No |
| SLV 13 | -15761 | -24613 | -458 | 0.068 | 19.279 | 0.951 | 103.294 | 332.581 | No |

### Tabella dei coefficienti di sicurezza minimi

| Stato limite | Coeff.s. | Comb. | Verifica |
|---|---|---|---|
| PF_SLU | 11.932 | SLU 43 | Si |
| V_SLU | 7.539 | SLU 50 | Si |
| PF_SLV | 0 | SLV 5 | No |
| V_SLV | 0 | SLV 5 | No |
| PFFP_SLV | 6.298 | SLV 5 | Si |
| R_SLV | 0.18 | SLV 5 | No |

## Maschio 54

Verifiche condotte secondo D.M. 17-01-18 (N.T.C.)

### Dati geometrici

| X ini. | Y ini. | X fin. | Y fin. | Quota i. | Quota.s | l | Sp. | h netta | h ini. | h fin. | a | a.s.,sx | a.s.,dx |
|---|---|---|---|---|---|---|---|---|---|---|---|---|---|
| -12.3 | 610.1 | -12.3 | -328.4 | L1 | L3 | 938.5 | 45 | 269 | 269 | 269 | | | |

### Caratteristiche del materiale

(Circolare 7 21-01-19 C8.5.I) Muratura in mattoni pieni e malta di calce LC2_Corti

| fb | fk | fvk0 | fmedio | τ0 | fv0 | μ | ϕ | fv,lim | E | G | FC |
|---|---|---|---|---|---|---|---|---|---|---|---|
| 60 | | | 34.5 | 0.9 | 2 | 0.58 | 0.77 | 3.25 | 32000 | 12800 | 1.2 |

### Verifica a pressoflessione nel piano secondo D.M. 17-01-18 NTC §7.8.2.2.1 in combinazioni non sismiche, γM = 3

| Comb. | Quota | N | M | σ0 | Mu | c.s. | Verifica |
|---|---|---|---|---|---|---|---|
| SLU 55 | -98 | -181460 | 3206460 | 4.3 | 40235361 | 12.548 | Si |
| SLU 55 | 171 | -155590 | 4795993 | 3.68 | 39989514 | 8.338 | Si |
| SLU 47 | -98 | -165711 | 3147390 | 3.92 | 40303125 | 12.805 | Si |
| SLU 47 | 171 | -141089 | 4681681 | 3.34 | 39053238 | 8.342 | Si |
| SLU 76 | -98 | -197148 | 3500633 | 4.67 | 39495149 | 11.282 | Si |

| Comb. | Quota | N | M | σ0 | Mu | c.s. | Verifica |
|---|---|---|---|---|---|---|---|
| SLU 76 | 171 | -170368 | 5183875 | 4.03 | 40353552 | 7.784 | Si |
| SLU 5 | -98 | -132247 | 2941828 | 3.13 | 38200794 | 12.985 | Si |
| SLU 5 | 171 | -113431 | 4265140 | 2.69 | 35676890 | 8.365 | Si |
| SLU 68 | -98 | -181399 | 3441563 | 4.3 | 40236944 | 11.691 | Si |
| SLU 68 | 171 | -155868 | 5069564 | 3.69 | 40001884 | 7.891 | Si |
| SLU 73 | -98 | -195362 | 3290239 | 4.63 | 39613307 | 12.04 | Si |
| SLU 73 | 171 | -168636 | 4958752 | 3.99 | 40341705 | 8.135 | Si |
| SLU 34 | -98 | -163685 | 3295070 | 3.88 | 40262717 | 12.219 | Si |
| SLU 34 | 171 | -142710 | 4767333 | 3.38 | 39186377 | 8.22 | Si |
| SLU 23 | -98 | -146149 | 3025607 | 3.46 | 39445087 | 13.037 | Si |
| SLU 23 | 171 | -126477 | 4427899 | 2.99 | 37529506 | 8.476 | Si |
| SLU 26 | -98 | -147935 | 3236001 | 3.5 | 39566752 | 12.227 | Si |
| SLU 26 | 171 | -128210 | 4653022 | 3.04 | 37740630 | 8.111 | Si |
| SLU 65 | -98 | -179612 | 3231169 | 4.25 | 40278352 | 12.466 | Si |
| SLU 65 | 171 | -154135 | 4844441 | 3.65 | 39921496 | 8.241 | Si |

Verifica a pressoflessione nel piano secondo D.M. 17-01-18 NTC §7.8.2.2.1 in combinazioni sismiche, γM = 2

| Comb. | Quota | N | M | σ0 | Mu | c.s. | Verifica |
|---|---|---|---|---|---|---|---|
| SLV 7 | -98 | -114363 | -16627056 | 2.71 | 41771247 | 2.512 | Si |
| SLV 7 | 171 | -93324 | -13901722 | 2.21 | 35872248 | 2.58 | Si |
| SLV 12 | -98 | -167752 | -15449036 | 3.97 | 53127393 | 3.439 | Si |
| SLV 12 | 171 | -142274 | -12790070 | 3.37 | 48354644 | 3.781 | Si |
| SLV 8 | -98 | -114363 | -16627056 | 2.71 | 41771247 | 2.512 | Si |
| SLV 8 | 171 | -93324 | -13901722 | 2.21 | 35872248 | 2.58 | Si |
| SLV 1 | -98 | -48693 | 4307077 | 1.15 | 20693151 | 4.804 | Si |
| SLV 1 | 171 | -35762 | 4718842 | 0.85 | 15618108 | 3.31 | Si |
| SLV 2 | -98 | -48693 | 4307077 | 1.15 | 20693151 | 4.804 | Si |
| SLV 2 | 171 | -35762 | 4718842 | 0.85 | 15618108 | 3.31 | Si |
| SLV 10 | -98 | -162548 | 18871718 | 3.85 | 52248516 | 2.769 | Si |
| SLV 10 | 171 | -141574 | 17852222 | 3.35 | 48206852 | 2.7 | Si |
| SLV 11 | -98 | -167752 | -15449036 | 3.97 | 53127393 | 3.439 | Si |
| SLV 11 | 171 | -142274 | -12790070 | 3.37 | 48354644 | 3.781 | Si |
| SLV 9 | -98 | -162548 | 18871718 | 3.85 | 52248516 | 2.769 | Si |
| SLV 9 | 171 | -141574 | 17852222 | 3.35 | 48206852 | 2.7 | Si |
| SLV 5 | -98 | -109159 | 17693698 | 2.58 | 40387082 | 2.283 | Si |
| SLV 5 | 171 | -92624 | 16740571 | 2.19 | 35662139 | 2.13 | Si |
| SLV 6 | -98 | -109159 | 17693698 | 2.58 | 40387082 | 2.283 | Si |
| SLV 6 | 171 | -92624 | 16740571 | 2.19 | 35662139 | 2.13 | Si |

Verifica a taglio nel piano secondo D.M. 17-01-18 (N.T.C.) §7.8.2.2.2 con rottura per scorrimento in combinazioni non sismiche, γM = 3

| Comb. | Quota | N | V par | M | σ0 | σN | I' | fvd | Vt scorr. | Vt fess.diag. | Vt,lim | c.s. | Verifica |
|---|---|---|---|---|---|---|---|---|---|---|---|---|---|
| SLU 13 | -98 | -147997 | 1116 | 3000898 | | 3.5 | 938.49 | 1.02 | 43195 | | | 38.71 | Si |
| SLU 13 | 171 | -127932 | 1172 | 4379451 | | 3.03 | 938.49 | 0.96 | 40520 | | | 34.57 | Si |
| SLU 23 | -98 | -146149 | 1066 | 3025607 | | 3.46 | 938.49 | 1.02 | 42949 | | | 40.29 | Si |
| SLU 23 | 171 | -126477 | 1126 | 4427899 | | 2.99 | 938.49 | 0.95 | 40326 | | | 35.81 | Si |
| SLU 10 | -98 | -146211 | 1096 | 2790504 | | 3.46 | 938.49 | 1.02 | 42957 | | | 39.18 | Si |
| SLU 10 | 171 | -126199 | 1151 | 4154328 | | 2.99 | 938.49 | 0.95 | 40289 | | | 35.01 | Si |
| SLU 44 | -98 | -163925 | 1027 | 2936997 | | 3.88 | 938.49 | 1.07 | 45319 | | | 44.11 | Si |
| SLU 44 | 171 | -139357 | 1088 | 4456559 | | 3.3 | 938.49 | 1 | 42043 | | | 38.66 | Si |
| SLU 34 | -98 | -163685 | 1014 | 3295070 | | 3.88 | 938.49 | 1.07 | 45287 | | | 44.66 | Si |
| SLU 34 | 171 | -142710 | 1072 | 4767333 | | 3.38 | 938.49 | 1.01 | 42490 | | | 39.64 | Si |
| SLU 47 | -98 | -165711 | 1047 | 3147390 | | 3.92 | 938.49 | 1.08 | 45557 | | | 43.5 | Si |
| SLU 47 | 171 | -141089 | 1109 | 4681681 | | 3.34 | 938.49 | 1 | 42274 | | | 38.11 | Si |
| SLU 31 | -98 | -161898 | 994 | 3084677 | | 3.83 | 938.49 | 1.07 | 45049 | | | 45.31 | Si |
| SLU 31 | 171 | -140978 | 1050 | 4542210 | | 3.34 | 938.49 | 1 | 42259 | | | 40.24 | Si |
| SLU 26 | -98 | -147935 | 1086 | 3236001 | | 3.5 | 938.49 | 1.02 | 43187 | | | 39.77 | Si |
| SLU 26 | 171 | -128210 | 1148 | 4653022 | | 3.04 | 938.49 | 0.96 | 40557 | | | 35.34 | Si |
| SLU 2 | -98 | -130461 | 1168 | 2731435 | | 3.09 | 938.49 | 0.97 | 40857 | | | 34.98 | Si |
| SLU 2 | 171 | -111699 | 1226 | 4040017 | | 2.64 | 938.49 | 0.91 | 38356 | | | 31.27 | Si |
| SLU 5 | -98 | -132247 | 1188 | 2941828 | | 3.13 | 938.49 | 0.97 | 41095 | | | 34.6 | Si |
| SLU 5 | 171 | -113431 | 1248 | 4265140 | | 2.69 | 938.49 | 0.91 | 38587 | | | 30.92 | Si |

Verifica a taglio nel piano secondo D.M. 17-01-18 (N.T.C.) §7.8.2.2.2 con rottura per scorrimento in combinazioni sismiche, γM = 2

| Comb. | Quota | N | V par | M | σ0 | σN | I' | fvd | Vt scorr. | Vt fess.diag. | Vt,lim | c.s. | Verifica |
|---|---|---|---|---|---|---|---|---|---|---|---|---|---|
| SLV 7 | -98 | -114363 | -42299 | -16627056 | | 2.71 | 938.49 | 1.37 | 58066 | | | 1.37 | Si |
| SLV 7 | 171 | -93324 | -31791 | -13901722 | | 2.21 | 938.49 | 1.28 | 53858 | | | 1.69 | Si |
| SLV 12 | -98 | -167752 | -41797 | -15449036 | | 3.97 | 938.49 | 1.63 | 68627 | | | 1.64 | Si |
| SLV 12 | 171 | -142274 | -31641 | -12790070 | | 3.37 | 938.49 | 1.51 | 63648 | | | 2.01 | Si |
| SLV 4 | -98 | -50255 | -13895 | -5989149 | | 1.19 | 938.49 | 1.07 | 45244 | | | 3.26 | Si |
| SLV 4 | 171 | -35972 | -10204 | -4473846 | | 0.85 | 938.49 | 1 | 42388 | | | 4.15 | Si |
| SLV 6 | -98 | -109159 | 40527 | 17693698 | | 2.63 | 921.47 | 1.36 | 56387 | | | 1.39 | Si |
| SLV 6 | 171 | -92624 | 30386 | 16740571 | | 2.38 | 865.53 | 1.31 | 50982 | | | 1.68 | Si |
| SLV 9 | -98 | -162548 | 41029 | 18871718 | | 3.85 | 938.49 | 1.6 | 67703 | | | 1.65 | Si |
| SLV 9 | 171 | -141574 | 30535 | 17852222 | | 3.35 | 938.49 | 1.5 | 63508 | | | 2.08 | Si |
| SLV 8 | -98 | -114363 | -42299 | -16627056 | | 2.71 | 938.49 | 1.37 | 58066 | | | 1.37 | Si |
| SLV 8 | 171 | -93324 | -31791 | -13901722 | | 2.21 | 938.49 | 1.28 | 53858 | | | 1.69 | Si |
| SLV 5 | -98 | -109159 | 40527 | 17693698 | | 2.63 | 921.47 | 1.36 | 56387 | | | 1.39 | Si |
| SLV 5 | 171 | -92624 | 30386 | 16740571 | | 2.38 | 865.53 | 1.31 | 50982 | | | 1.68 | Si |
| SLV 3 | -98 | -50255 | -13895 | -5989149 | | 1.19 | 938.49 | 1.07 | 45244 | | | 3.26 | Si |
| SLV 3 | 171 | -35972 | -10204 | -4473846 | | 0.85 | 938.49 | 1 | 42388 | | | 4.15 | Si |
| SLV 10 | -98 | -162548 | 41029 | 18871718 | | 3.85 | 938.49 | 1.6 | 67703 | | | 1.65 | Si |
| SLV 10 | 171 | -141574 | 30535 | 17852222 | | 3.35 | 938.49 | 1.5 | 63508 | | | 2.08 | Si |
| SLV 11 | -98 | -167752 | -41797 | -15449036 | | 3.97 | 938.49 | 1.63 | 68627 | | | 1.64 | Si |
| SLV 11 | 171 | -142274 | -31641 | -12790070 | | 3.37 | 938.49 | 1.51 | 63648 | | | 2.01 | Si |

Verifica a pressoflessione fuori piano D.M. 17-01-18 (N.T.C.)

quota 36.5 Wa 0.08 denominatore 8 γM = 2

| Comb. | fd | Sa | σ0 | N | M | Mc | Coeff.s. | Verifica |
|---|---|---|---|---|---|---|---|---|
| SLV 2 | 14 | 0.25 | 0.96 | -40401 | 57690 | 837861 | 14.52 | Si |
| SLV 1 | 14 | 0.25 | 0.96 | -40401 | 57690 | 837861 | 14.52 | Si |
| SLV 3 | 14 | 0.25 | 0.98 | -41199 | 57690 | 852976 | 14.79 | Si |
| SLV 4 | 14 | 0.25 | 0.98 | -41199 | 57690 | 852976 | 14.79 | Si |
| SLV 5 | 14 | 0.25 | 2.34 | -98884 | 57690 | 1798548 | 31.18 | Si |
| SLV 6 | 14 | 0.25 | 2.34 | -98884 | 57690 | 1798548 | 31.18 | Si |
| SLV 7 | 14 | 0.25 | 2.4 | -101544 | 57690 | 1835151 | 31.81 | Si |
| SLV 8 | 14 | 0.25 | 2.4 | -101544 | 57690 | 1835151 | 31.81 | Si |
| SLV 10 | 14 | 0.25 | 3.55 | -149811 | 57690 | 2392158 | 41.47 | Si |
| SLV 9 | 14 | 0.25 | 3.55 | -149811 | 57690 | 2392158 | 41.47 | Si |

### Verifica dei meccanismi locali di collasso con analisi cinematica lineare

forza di aggancio al piano = 0 quota mezzeria = 36.5 Wa = 0.08 Ta = 0.0269

| Comb. | N top | N base | V orto | α0 | M* | e* | a0* | aLim | Verifica |
|---|---|---|---|---|---|---|---|---|---|
| SLV 10 | -141574 | -162548 | 327 | 0.087 | 160.131 | 0.97 | 130.594 | 417.584 | No |
| SLV 9 | -141574 | -162548 | 327 | 0.087 | 160.131 | 0.97 | 130.594 | 417.584 | No |
| SLV 12 | -142274 | -167752 | 169 | 0.088 | 160.844 | 0.97 | 132.108 | 417.584 | No |
| SLV 11 | -142274 | -167752 | 169 | 0.088 | 160.844 | 0.97 | 132.108 | 417.584 | No |
| SLV 6 | -92624 | -109159 | 98 | 0.091 | 110.324 | 0.957 | 138.177 | 417.584 | No |
| SLV 5 | -92624 | -109159 | 98 | 0.091 | 110.324 | 0.957 | 138.177 | 417.584 | No |
| SLV 8 | -93324 | -114363 | -60 | 0.091 | 111.036 | 0.957 | 138.63 | 417.584 | No |
| SLV 7 | -93324 | -114363 | -60 | 0.091 | 111.036 | 0.957 | 138.63 | 417.584 | No |
| SLV 13 | -198926 | -226657 | 539 | 0.085 | 218.543 | 0.977 | 126.637 | 332.581 | No |
| SLV 14 | -198926 | -226657 | 539 | 0.085 | 218.543 | 0.977 | 126.637 | 332.581 | No |

### Tabella dei coefficienti di sicurezza minimi

| Stato limite | Coeff.s. | Comb. | Verifica |
|---|---|---|---|
| PF_SLU | 7.784 | SLU 76 | Si |
| V_SLU | 30.92 | SLU 5 | Si |
| PF_SLV | 2.13 | SLV 5 | Si |
| V_SLV | 1.373 | SLV 7 | Si |
| PFFP_SLV | 14.523 | SLV 1 | Si |
| R_SLV | 0.313 | SLV 9 | No |

## Maschio 55

Verifiche condotte secondo D.M. 17-01-18 (N.T.C.)

### Dati geometrici

| X ini. | Y ini. | X fin. | Y fin. | Quota i. | Quota.s | l | Sp. | h netta | h ini. | h fin. | a | a.s.,sx | a.s.,dx |
|---|---|---|---|---|---|---|---|---|---|---|---|---|---|
| -2467.8 | -335.9 | -2467.8 | 595.1 | L3 | L4 | 931.1 | 28 | 373 | 373 | 373 | | | |

### Caratteristiche del materiale

(Circolare 7 21-01-19 C8.5.I) Muratura in mattoni pieni e malta di calce LC2_Corti

| fb | fk | fvk0 | fmedio | τ0 | fv0 | μ | ϕ | fv,lim | E | G | FC |
|---|---|---|---|---|---|---|---|---|---|---|---|
| 60 | | | 34.5 | 0.9 | 2 | 0.58 | 0.77 | 3.25 | 32000 | 12800 | 1.2 |

### Verifica a pressoflessione nel piano secondo D.M. 17-01-18 NTC §7.8.2.2.1 in combinazioni non sismiche, γM = 3

| Comb. | Quota | N | M | σ0 | Mu | c.s. | Verifica |
|---|---|---|---|---|---|---|---|
| SLU 75 | 171 | -149142 | -4149935 | 5.72 | 20669431 | 4.981 | Si |
| SLU 75 | 544 | -101051 | -2051874 | 3.88 | 24657704 | 12.017 | Si |
| SLU 80 | 171 | -150683 | -4596351 | 5.78 | 20373799 | 4.433 | Si |
| SLU 80 | 544 | -102254 | -2321427 | 3.92 | 24681590 | 10.632 | Si |
| SLU 34 | 171 | -125170 | -4886729 | 4.8 | 23924896 | 4.896 | Si |
| SLU 34 | 544 | -85453 | -2448480 | 3.28 | 23773517 | 9.709 | Si |
| SLU 84 | 171 | -153076 | -4258269 | 5.87 | 19894314 | 4.672 | Si |
| SLU 84 | 544 | -104095 | -2129916 | 3.99 | 24705857 | 11.599 | Si |
| SLU 78 | 171 | -151748 | -4570296 | 5.82 | 20163639 | 4.412 | Si |
| SLU 78 | 544 | -103185 | -2308657 | 3.96 | 24695719 | 10.697 | Si |
| SLU 55 | 171 | -137171 | -4738713 | 5.26 | 22610026 | 4.771 | Si |
| SLU 55 | 544 | -91280 | -2250805 | 3.5 | 24228695 | 10.764 | Si |
| SLU 73 | 171 | -146872 | -4739727 | 5.63 | 21085700 | 4.449 | Si |
| SLU 73 | 544 | -98764 | -2273969 | 3.79 | 24594820 | 10.816 | Si |
| SLU 68 | 171 | -137813 | -4968105 | 5.29 | 22521936 | 4.533 | Si |
| SLU 68 | 544 | -91623 | -2378450 | 3.51 | 24250811 | 10.196 | Si |
| SLU 76 | 171 | -149478 | -5160088 | 5.73 | 20605847 | 3.993 | Si |
| SLU 76 | 544 | -100898 | -2530752 | 3.87 | 24654228 | 9.742 | Si |
| SLU 65 | 171 | -135206 | -4547744 | 5.19 | 22868495 | 5.029 | Si |
| SLU 65 | 544 | -89489 | -2121667 | 3.43 | 24104615 | 11.361 | Si |

### Verifica a pressoflessione nel piano secondo D.M. 17-01-18 NTC §7.8.2.2.1 in combinazioni sismiche, γM = 2

| Comb. | Quota | N | M | σ0 | Mu | c.s. | Verifica |
|---|---|---|---|---|---|---|---|
| SLV 15 | 171 | -32170 | 5001361 | 1.23 | 13463837 | 2.692 | Si |
| SLV 15 | 544 | -14415 | 2872151 | 0.55 | 6407155 | 2.231 | Si |
| SLV 12 | 171 | -81991 | 14256451 | 3.15 | 28344900 | 1.988 | Si |
| SLV 12 | 544 | -50918 | 7096386 | 1.95 | 19914975 | 2.806 | Si |
| SLV 9 | 171 | -79833 | -16191133 | 3.06 | 27850640 | 1.72 | Si |
| SLV 9 | 544 | -52940 | -7710460 | 2.03 | 20549554 | 2.665 | Si |
| SLV 11 | 171 | -81991 | 14256451 | 3.15 | 28344900 | 1.988 | Si |
| SLV 11 | 544 | -50918 | 7096386 | 1.95 | 19914975 | 2.806 | Si |
| SLV 10 | 171 | -79833 | -16191133 | 3.06 | 27850640 | 1.72 | Si |
| SLV 10 | 544 | -52940 | -7710460 | 2.03 | 20549554 | 2.665 | Si |
| SLV 8 | 171 | -124046 | 13055109 | 4.76 | 35259760 | 2.701 | Si |
| SLV 8 | 544 | -82812 | 6275105 | 3.18 | 28529504 | 4.546 | Si |

| Comb. | Quota | N | M | σ0 | Mu | c.s. | Verifica |
|---|---|---|---|---|---|---|---|
| SLV 5 | 171 | -121888 | -17392475 | 4.68 | 35030772 | 2.014 | Si |
| SLV 5 | 544 | -84835 | -8531741 | 3.25 | 28975531 | 3.396 | Si |
| SLV 16 | 171 | -32170 | 5001361 | 1.23 | 13463837 | 2.692 | Si |
| SLV 16 | 544 | -14415 | 2872151 | 0.55 | 6407155 | 2.231 | Si |
| SLV 7 | 171 | -124046 | 13055109 | 4.76 | 35259760 | 2.701 | Si |
| SLV 7 | 544 | -82812 | 6275105 | 3.18 | 28529504 | 4.546 | Si |
| SLV 6 | 171 | -121888 | -17392475 | 4.68 | 35030772 | 2.014 | Si |
| SLV 6 | 544 | -84835 | -8531741 | 3.25 | 28975531 | 3.396 | Si |

Verifica a taglio nel piano secondo D.M. 17-01-18 (N.T.C.) §7.8.2.2.2 con rottura per scorrimento in combinazioni non sismiche, γM = 3

| Comb. | Quota | N | V par | M | σ0 | σN | l' | fvd | Vt scorr. | Vt fess.diag. | Vt,lim | c.s. | Verifica |
|---|---|---|---|---|---|---|---|---|---|---|---|---|---|
| SLU 26 | 171 | -113505 | -2014 | -4694746 | | 4.35 | 931.07 | 1.08 | 28242 | | | 14.02 | Si |
| SLU 26 | 544 | -76177 | -1696 | -2296179 | | 2.92 | 931.07 | 0.95 | 24640 | | | 14.53 | Si |
| SLU 13 | 171 | -112863 | -1943 | -4465354 | | 4.33 | 931.07 | 1.08 | 28242 | | | 14.53 | Si |
| SLU 13 | 544 | -75835 | -1630 | -2168533 | | 2.91 | 931.07 | 0.94 | 24595 | | | 15.09 | Si |
| SLU 31 | 171 | -122564 | -1805 | -4466368 | | 4.7 | 931.07 | 1.08 | 28242 | | | 15.64 | Si |
| SLU 31 | 544 | -83319 | -1491 | -2191697 | | 3.2 | 931.07 | 0.98 | 25592 | | | 17.16 | Si |
| SLU 34 | 171 | -125170 | -2019 | -4886729 | | 4.8 | 931.07 | 1.08 | 28242 | | | 13.99 | Si |
| SLU 34 | 544 | -85453 | -1695 | -2448480 | | 3.28 | 931.07 | 0.99 | 25877 | | | 15.26 | Si |
| SLU 55 | 171 | -137171 | -1934 | -4738713 | | 5.26 | 931.07 | 1.08 | 28242 | | | 14.61 | Si |
| SLU 55 | 544 | -91280 | -1611 | -2250805 | | 3.5 | 931.07 | 1.02 | 26654 | | | 16.55 | Si |
| SLU 5 | 171 | -101198 | -1939 | -4273371 | | 3.88 | 931.07 | 1.07 | 27976 | | | 14.43 | Si |
| SLU 5 | 544 | -66559 | -1630 | -2016232 | | 2.55 | 931.07 | 0.9 | 23358 | | | 14.33 | Si |
| SLU 76 | 171 | -149478 | -2009 | -5160088 | | 5.73 | 931.07 | 1.08 | 28242 | | | 14.06 | Si |
| SLU 76 | 544 | -100898 | -1676 | -2530752 | | 3.87 | 931.07 | 1.07 | 27936 | | | 16.67 | Si |
| SLU 23 | 171 | -110899 | -1801 | -4274385 | | 4.25 | 931.07 | 1.08 | 28242 | | | 15.68 | Si |
| SLU 23 | 544 | -74043 | -1492 | -2039396 | | 2.84 | 931.07 | 0.93 | 24356 | | | 16.33 | Si |
| SLU 47 | 171 | -125506 | -1929 | -4546730 | | 4.81 | 931.07 | 1.08 | 28242 | | | 14.64 | Si |
| SLU 47 | 544 | -82005 | -1611 | -2098503 | | 3.15 | 931.07 | 0.97 | 25417 | | | 15.77 | Si |
| SLU 68 | 171 | -137813 | -2005 | -4968105 | | 5.29 | 931.07 | 1.08 | 28242 | | | 14.09 | Si |
| SLU 68 | 544 | -91623 | -1677 | -2378450 | | 3.51 | 931.07 | 1.02 | 26700 | | | 15.92 | Si |

Verifica a taglio nel piano secondo D.M. 17-01-18 (N.T.C.) §7.8.2.2.2 con rottura per scorrimento in combinazioni sismiche, γM = 2

| Comb. | Quota | N | V par | M | σ0 | σN | l' | fvd | Vt scorr. | Vt fess.diag. | Vt,lim | c.s. | Verifica |
|---|---|---|---|---|---|---|---|---|---|---|---|---|---|
| SLV 12 | 171 | -81991 | 27456 | 14256451 | | 3.35 | 874.97 | 1.5 | 36814 | | | 1.34 | Si |
| SLV 12 | 544 | -50918 | 16993 | 7096386 | | 1.95 | 931.07 | 1.22 | 31908 | | | 1.88 | Si |
| SLV 10 | 171 | -79833 | -28056 | -16191133 | | 3.62 | 788.16 | 1.56 | 34357 | | | 1.22 | Si |
| SLV 10 | 544 | -52940 | -17413 | -7710460 | | 2.03 | 931.07 | 1.24 | 32313 | | | 1.86 | Si |
| SLV 7 | 171 | -124046 | 27902 | 13055109 | | 4.76 | 931.07 | 1.63 | 42364 | | | 1.52 | Si |
| SLV 7 | 544 | -82812 | 17354 | 6275105 | | 3.18 | 931.07 | 1.47 | 38287 | | | 2.21 | Si |
| SLV 6 | 171 | -121888 | -27610 | -17392475 | | 4.68 | 931.07 | 1.63 | 42364 | | | 1.53 | Si |
| SLV 6 | 544 | -84835 | -17052 | -8531741 | | 3.25 | 931.07 | 1.48 | 38692 | | | 2.27 | Si |
| SLV 9 | 171 | -79833 | -28056 | -16191133 | | 3.62 | 788.16 | 1.56 | 34357 | | | 1.22 | Si |
| SLV 9 | 544 | -52940 | -17413 | -7710460 | | 2.03 | 931.07 | 1.24 | 32313 | | | 1.86 | Si |
| SLV 14 | 171 | -31523 | -9148 | -4132914 | | 1.21 | 931.07 | 1.08 | 28030 | | | 3.06 | Si |
| SLV 14 | 544 | -15022 | -5792 | -1569903 | | 0.58 | 931.07 | 0.95 | 24729 | | | 4.27 | Si |
| SLV 5 | 171 | -121888 | -27610 | -17392475 | | 4.68 | 931.07 | 1.63 | 42364 | | | 1.53 | Si |
| SLV 5 | 544 | -84835 | -17052 | -8531741 | | 3.25 | 931.07 | 1.48 | 38692 | | | 2.27 | Si |
| SLV 13 | 171 | -31523 | -9148 | -4132914 | | 1.21 | 931.07 | 1.08 | 28030 | | | 3.06 | Si |
| SLV 13 | 544 | -15022 | -5792 | -1569903 | | 0.58 | 931.07 | 0.95 | 24729 | | | 4.27 | Si |
| SLV 8 | 171 | -124046 | 27902 | 13055109 | | 4.76 | 931.07 | 1.63 | 42364 | | | 1.52 | Si |
| SLV 8 | 544 | -82812 | 17354 | 6275105 | | 3.18 | 931.07 | 1.47 | 38287 | | | 2.21 | Si |
| SLV 11 | 171 | -81991 | 27456 | 14256451 | | 3.35 | 874.97 | 1.5 | 36814 | | | 1.34 | Si |
| SLV 11 | 544 | -50918 | 16993 | 7096386 | | 1.95 | 931.07 | 1.22 | 31908 | | | 1.88 | Si |

Verifica a pressoflessione fuori piano D.M. 17-01-18 (N.T.C.)

quota 357.5 Wa 0.05 denominatore 8 γM = 2

| Comb. | fd | Sa | σ0 | N | M | Mc | Coeff.s. | Verifica |
|---|---|---|---|---|---|---|---|---|
| SLV 15 | 14 | 0.32 | 0.82 | -21423 | 88204 | 279751 | 3.17 | Si |
| SLV 16 | 14 | 0.32 | 0.82 | -21423 | 88204 | 279751 | 3.17 | Si |
| SLV 14 | 14 | 0.32 | 0.83 | -21595 | 88204 | 281835 | 3.2 | Si |
| SLV 13 | 14 | 0.32 | 0.83 | -21595 | 88204 | 281835 | 3.2 | Si |
| SLV 12 | 14 | 0.32 | 2.44 | -63688 | 88204 | 713363 | 8.09 | Si |
| SLV 11 | 14 | 0.32 | 2.44 | -63688 | 88204 | 713363 | 8.09 | Si |
| SLV 10 | 14 | 0.32 | 2.46 | -64262 | 88204 | 718168 | 8.14 | Si |
| SLV 9 | 14 | 0.32 | 2.46 | -64262 | 88204 | 718168 | 8.14 | Si |
| SLV 7 | 14 | 0.32 | 3.84 | -100087 | 88204 | 960952 | 10.89 | Si |
| SLV 8 | 14 | 0.32 | 3.84 | -100087 | 88204 | 960952 | 10.89 | Si |

Verifica dei meccanismi locali di collasso con analisi cinematica lineare

forza di aggancio al piano = 0 quota mezzeria = 357.5 Wa = 0.05 Ta = 0.083

| Comb. | N top | N base | V orto | α0 | M* | e* | a0* | aLim | Verifica |
|---|---|---|---|---|---|---|---|---|---|
| SLV 5 | -84835 | -121888 | -429 | 0.036 | 100.078 | 0.959 | 55.24 | 1417.879 | No |
| SLV 6 | -84835 | -121888 | -429 | 0.036 | 100.078 | 0.959 | 55.24 | 1417.879 | No |
| SLV 16 | -14415 | -32170 | 745 | 0.02 | 29.115 | 0.895 | 31.765 | 813.056 | No |
| SLV 15 | -14415 | -32170 | 745 | 0.02 | 29.115 | 0.895 | 31.765 | 813.056 | No |
| SLV 8 | -82812 | -124046 | -210 | 0.039 | 98.022 | 0.959 | 58.862 | 1417.879 | No |
| SLV 7 | -82812 | -124046 | -210 | 0.039 | 98.022 | 0.959 | 58.862 | 1417.879 | No |
| SLV 11 | -50918 | -81991 | 266 | 0.039 | 65.639 | 0.941 | 59.585 | 1417.879 | No |
| SLV 12 | -50918 | -81991 | 266 | 0.039 | 65.639 | 0.941 | 59.585 | 1417.879 | No |
| SLV 13 | -15022 | -31523 | 679 | 0.023 | 29.701 | 0.896 | 36.942 | 813.056 | No |
| SLV 14 | -15022 | -31523 | 679 | 0.023 | 29.701 | 0.896 | 36.942 | 813.056 | No |

Tabella dei coefficienti di sicurezza minimi

| Stato limite | Coeff.s. | Comb. | Verifica |
|---|---|---|---|
| PF_SLU | 3.993 | SLU 76 | Si |

| Stato limite | Coeff.s. | Comb. | Verifica |
|---|---|---|---|
| V_SLU | 13.988 | SLU 34 | Si |
| PF_SLV | 1.72 | SLV 9 | Si |
| V_SLV | 1.225 | SLV 9 | Si |
| PFFP_SLV | 3.172 | SLV 15 | Si |
| R_SLV | 0.039 | SLV 5 | No |

## Maschio 56

Verifiche condotte secondo D.M. 17-01-18 (N.T.C.)

### Dati geometrici

| X ini. | Y ini. | X fin. | Y fin. | Quota i. | Quota.s | l | Sp. | h netta | h ini. | h fin. | a | a.s.,sx | a.s.,dx |
|---|---|---|---|---|---|---|---|---|---|---|---|---|---|
| -2276.3 | 595.1 | -2467.8 | 595.1 | L3 | L4 | 191.5 | 28 | 373 | 373 | 373 | | | |

### Caratteristiche del materiale

(Circolare 7 21-01-19 C8.5.I) Muratura in mattoni pieni e malta di calce LC2_Corti

| fb | fk | fvk0 | fmedio | τ0 | fv0 | μ | ϕ | fv,lim | E | G | FC |
|---|---|---|---|---|---|---|---|---|---|---|---|
| 60 | | | 34.5 | 0.9 | 2 | 0.58 | 0.77 | 3.25 | 32000 | 12800 | 1.2 |

### Verifica a pressoflessione nel piano secondo D.M. 17-01-18 NTC §7.8.2.2.1 in combinazioni non sismiche, γM = 3

| Comb. | Quota | N | M | σ0 | Mu | c.s. | Verifica |
|---|---|---|---|---|---|---|---|
| SLU 78 | 261 | -16622 | 378341 | 3.1 | 985877 | 2.606 | Si |
| SLU 78 | 451 | -20092 | -82088 | 3.75 | 1038847 | 12.655 | Si |
| SLU 80 | 261 | -16455 | 375369 | 3.07 | 981990 | 2.616 | Si |
| SLU 80 | 451 | -19890 | -82750 | 3.71 | 1037215 | 12.534 | Si |
| SLU 75 | 261 | -16558 | 374807 | 3.09 | 984415 | 2.626 | Si |
| SLU 75 | 451 | -19935 | -72748 | 3.72 | 1037596 | 14.263 | Si |
| SLU 84 | 261 | -17042 | 385171 | 3.18 | 995107 | 2.584 | Si |
| SLU 84 | 451 | -20655 | -80099 | 3.85 | 1042469 | 13.015 | Si |
| SLU 83 | 261 | -17494 | 395213 | 3.26 | 1004159 | 2.541 | Si |
| SLU 83 | 451 | -21090 | -71959 | 3.93 | 1044312 | 14.513 | Si |
| SLU 82 | 261 | -16979 | 381637 | 3.17 | 993761 | 2.604 | Si |
| SLU 82 | 451 | -20499 | -70759 | 3.82 | 1041604 | 14.72 | Si |
| SLU 77 | 261 | -17074 | 388384 | 3.18 | 995762 | 2.564 | Si |
| SLU 77 | 451 | -20526 | -73948 | 3.83 | 1041765 | 14.088 | Si |
| SLU 79 | 261 | -16906 | 385411 | 3.15 | 992206 | 2.574 | Si |
| SLU 79 | 451 | -20325 | -74610 | 3.79 | 1040517 | 13.946 | Si |
| SLU 81 | 261 | -17431 | 391679 | 3.25 | 1002939 | 2.561 | Si |
| SLU 81 | 451 | -20934 | -62619 | 3.9 | 1043745 | 16.668 | Si |
| SLU 74 | 261 | -17010 | 384849 | 3.17 | 994425 | 2.584 | Si |
| SLU 74 | 451 | -20370 | -64608 | 3.8 | 1040811 | 16.11 | Si |

### Verifica a pressoflessione nel piano secondo D.M. 17-01-18 NTC §7.8.2.2.1 in combinazioni sismiche, γM = 2

| Comb. | Quota | N | M | σ0 | Mu | c.s. | Verifica |
|---|---|---|---|---|---|---|---|
| SLV 4 | 261 | -18070 | 885438 | 3.37 | 1253008 | 1.415 | Si |
| SLV 4 | 451 | -26876 | -263662 | 5.01 | 1517742 | 5.756 | Si |
| SLV 1 | 261 | -14397 | 614707 | 2.68 | 1075582 | 1.75 | Si |
| SLV 1 | 451 | -20561 | -201505 | 3.83 | 1350866 | 6.704 | Si |
| SLV 9 | 261 | -4425 | -326208 | 0.83 | 395040 | 1.211 | Si |
| SLV 9 | 451 | -448 | 132367 | 0 | 0 | 0 | No, e>l/2 |
| SLV 14 | 261 | -5648 | -346927 | 1.05 | 494178 | 1.424 | Si |
| SLV 14 | 451 | -954 | 200581 | 0 | 0 | 0 | No, e>l/2 |
| SLV 7 | 261 | -19294 | 864719 | 3.6 | 1303348 | 1.507 | Si |
| SLV 7 | 451 | -27382 | -195448 | 5.11 | 1526066 | 7.808 | Si |
| SLV 2 | 261 | -14397 | 614707 | 2.68 | 1075582 | 1.75 | Si |
| SLV 2 | 451 | -20561 | -201505 | 3.83 | 1350866 | 6.704 | Si |
| SLV 10 | 261 | -4425 | -326208 | 0.83 | 395040 | 1.211 | Si |
| SLV 10 | 451 | -448 | 132367 | 0 | 0 | 0 | No, e>l/2 |
| SLV 3 | 261 | -18070 | 885438 | 3.37 | 1253008 | 1.415 | Si |
| SLV 3 | 451 | -26876 | -263662 | 5.01 | 1517742 | 5.756 | Si |
| SLV 13 | 261 | -5648 | -346927 | 1.05 | 494178 | 1.424 | Si |
| SLV 13 | 451 | -954 | 200581 | 0 | 0 | 0 | No, e>l/2 |
| SLV 8 | 261 | -19294 | 864719 | 3.6 | 1303348 | 1.507 | Si |
| SLV 8 | 451 | -27382 | -195448 | 5.11 | 1526066 | 7.808 | Si |

### Verifica a taglio nel piano secondo D.M. 17-01-18 (N.T.C.) §7.8.2.2.2 con rottura per scorrimento in combinazioni non sismiche, γM = 3

| Comb. | Quota | N | V par | M | σ0 | σN | l' | fvd | Vt scorr. | Vt fess.diag. | Vt,lim | c.s. | Verifica |
|---|---|---|---|---|---|---|---|---|---|---|---|---|---|
| SLU 79 | 261 | -16906 | 5471 | 385411 | | 3.15 | 191.5 | 0.98 | 5233 | | | 0.96 | No, Vu<V |
| SLU 79 | 451 | -20325 | 5315 | -74610 | | 3.79 | 191.5 | 1.06 | 5689 | | | 1.07 | Si |
| SLU 78 | 261 | -16622 | 5498 | 378341 | | 3.1 | 191.5 | 0.97 | 5195 | | | 0.94 | No, Vu<V |
| SLU 78 | 451 | -20092 | 5342 | -82088 | | 3.75 | 191.5 | 1.06 | 5658 | | | 1.06 | Si |
| SLU 82 | 261 | -16979 | 5482 | 381637 | | 3.17 | 191.5 | 0.98 | 5243 | | | 0.96 | No, Vu<V |
| SLU 82 | 451 | -20499 | 5325 | -70759 | | 3.82 | 191.5 | 1.07 | 5712 | | | 1.07 | Si |
| SLU 83 | 261 | -17494 | 5601 | 395213 | | 3.26 | 191.5 | 0.99 | 5311 | | | 0.95 | No, Vu<V |
| SLU 83 | 451 | -21090 | 5440 | -71959 | | 3.93 | 191.5 | 1.08 | 5791 | | | 1.06 | Si |
| SLU 75 | 261 | -16558 | 5383 | 374807 | | 3.09 | 191.5 | 0.97 | 5187 | | | 0.96 | No, Vu<V |
| SLU 75 | 451 | -19935 | 5228 | -72748 | | 3.72 | 191.5 | 1.05 | 5637 | | | 1.08 | Si |
| SLU 77 | 261 | -17074 | 5501 | 388384 | | 3.18 | 191.5 | 0.98 | 5255 | | | 0.96 | No, Vu<V |
| SLU 77 | 451 | -20526 | 5344 | -73948 | | 3.83 | 191.5 | 1.07 | 5716 | | | 1.07 | Si |
| SLU 76 | 261 | -16090 | 5350 | 365140 | | 3 | 191.5 | 0.96 | 5124 | | | 0.96 | No, Vu<V |
| SLU 76 | 451 | -19444 | 5198 | -78836 | | 3.63 | 191.5 | 1.04 | 5571 | | | 1.07 | Si |
| SLU 80 | 261 | -16455 | 5468 | 375369 | | 3.07 | 191.5 | 0.96 | 5173 | | | 0.95 | No, Vu<V |
| SLU 80 | 451 | -19890 | 5313 | -82750 | | 3.71 | 191.5 | 1.05 | 5631 | | | 1.06 | Si |
| SLU 81 | 261 | -17431 | 5486 | 391679 | | 3.25 | 191.5 | 0.99 | 5303 | | | 0.97 | No, Vu<V |

| Comb. | Quota | N | V par | M | σ0 | σN | l' | fvd | Vt scorr. | Vt fess.diag. | Vt,lim | c.s. | Verifica |
|---|---|---|---|---|---|---|---|---|---|---|---|---|---|
| SLU 81 | 451 | -20934 | 5326 | -62619 | | 3.9 | 191.5 | 1.08 | 5770 | | | 1.08 | Si |
| SLU 84 | 261 | -17042 | 5598 | 385171 | | 3.18 | 191.5 | 0.98 | 5251 | | | 0.94 | No, Vu<V |
| SLU 84 | 451 | -20655 | 5439 | -80099 | | 3.85 | 191.5 | 1.07 | 5733 | | | 1.05 | Si |

### Verifica a taglio nel piano secondo D.M. 17-01-18 (N.T.C.) §7.8.2.2.2 con rottura per scorrimento in combinazioni sismiche, γM = 2

| Comb. | Quota | N | V par | M | σ0 | σN | l' | fvd | Vt scorr. | Vt fess.diag. | Vt,lim | c.s. | Verifica |
|---|---|---|---|---|---|---|---|---|---|---|---|---|---|
| SLV 8 | 261 | -19294 | 12281 | 864719 | | 4.51 | 152.79 | 1.63 | 6952 | | | 0.57 | No, Vu<V |
| SLV 8 | 451 | -27382 | 9637 | -195448 | | 5.11 | 191.5 | 1.63 | 8713 | | | 0.9 | No, Vu<V |
| SLV 13 | 261 | -5648 | -4579 | -346927 | | 1.96 | 102.98 | 1.23 | 3532 | | | 0.77 | No, Vu<V |
| SLV 13 | 451 | -954 | -3731 | 200581 | | 0 | 0 | 0.83 | 0 | | | 0 | No, Vu<V |
| SLV 1 | 261 | -14397 | 7759 | 614707 | | 3.23 | 159.16 | 1.48 | 6593 | | | 0.85 | No, Vu<V |
| SLV 1 | 451 | -20561 | 8173 | -201505 | | 3.83 | 191.5 | 1.6 | 8580 | | | 1.05 | Si |
| SLV 4 | 261 | -18070 | 11839 | 885438 | | 4.6 | 140.25 | 1.63 | 6381 | | | 0.54 | No, Vu<V |
| SLV 4 | 451 | -26876 | 10772 | -263662 | | 5.01 | 191.5 | 1.63 | 8713 | | | 0.81 | No, Vu<V |
| SLV 7 | 261 | -19294 | 12281 | 864719 | | 4.51 | 152.79 | 1.63 | 6952 | | | 0.57 | No, Vu<V |
| SLV 7 | 451 | -27382 | 9637 | -195448 | | 5.11 | 191.5 | 1.63 | 8713 | | | 0.9 | No, Vu<V |
| SLV 3 | 261 | -18070 | 11839 | 885438 | | 4.6 | 140.25 | 1.63 | 6381 | | | 0.54 | No, Vu<V |
| SLV 3 | 451 | -26876 | 10772 | -263662 | | 5.01 | 191.5 | 1.63 | 8713 | | | 0.81 | No, Vu<V |
| SLV 14 | 261 | -5648 | -4579 | -346927 | | 1.96 | 102.98 | 1.23 | 3532 | | | 0.77 | No, Vu<V |
| SLV 14 | 451 | -954 | -3731 | 200581 | | 0 | 0 | 0.83 | 0 | | | 0 | No, Vu<V |
| SLV 9 | 261 | -4425 | -5021 | -326208 | | 2.39 | 66.07 | 1.31 | 2427 | | | 0.48 | No, Vu<V |
| SLV 9 | 451 | -448 | -2596 | 132367 | | 0 | 0 | 0.83 | 0 | | | 0 | No, Vu<V |
| SLV 2 | 261 | -14397 | 7759 | 614707 | | 3.23 | 159.16 | 1.48 | 6593 | | | 0.85 | No, Vu<V |
| SLV 2 | 451 | -20561 | 8173 | -201505 | | 3.83 | 191.5 | 1.6 | 8580 | | | 1.05 | Si |
| SLV 10 | 261 | -4425 | -5021 | -326208 | | 2.39 | 66.07 | 1.31 | 2427 | | | 0.48 | No, Vu<V |
| SLV 10 | 451 | -448 | -2596 | 132367 | | 0 | 0 | 0.83 | 0 | | | 0 | No, Vu<V |

### Verifica a pressoflessione fuori piano D.M. 17-01-18 (N.T.C.)

quota 357.5 Wa 0.05 denominatore 8 γM = 2

| Comb. | fd | Sa | σ0 | N | M | Mc | Coeff.s. | Verifica |
|---|---|---|---|---|---|---|---|---|
| SLV 9 | 14 | 0.32 | 0 | 1490 | 18142 | 0 | 0 | No, Trazione |
| SLV 10 | 14 | 0.32 | 0 | 1490 | 18142 | 0 | 0 | No, Trazione |
| SLV 13 | 14 | 0.32 | 0.45 | -2437 | 18142 | 32852 | 1.81 | Si |
| SLV 14 | 14 | 0.32 | 0.45 | -2437 | 18142 | 32852 | 1.81 | Si |
| SLV 5 | 14 | 0.32 | 0.52 | -2775 | 18142 | 37203 | 2.05 | Si |
| SLV 6 | 14 | 0.32 | 0.52 | -2775 | 18142 | 37203 | 2.05 | Si |
| SLV 15 | 14 | 0.32 | 1.88 | -10069 | 18142 | 119303 | 6.58 | Si |
| SLV 16 | 14 | 0.32 | 1.88 | -10069 | 18142 | 119303 | 6.58 | Si |
| SLV 2 | 14 | 0.32 | 3.11 | -16655 | 18142 | 173895 | 9.59 | Si |
| SLV 1 | 14 | 0.32 | 3.11 | -16655 | 18142 | 173895 | 9.59 | Si |

### Verifica dei meccanismi locali di collasso con analisi cinematica lineare

forza di aggancio al piano = 0 quota mezzeria = 357.5 Wa = 0.05 Ta = 0.083

| Comb. | N top | N base | V orto | α0 | M* | e* | a0* | aLim | Verifica |
|---|---|---|---|---|---|---|---|---|---|
| SLV 10 | -2433 | 2076 | 97 | 0 | 0 | 0 | 0 | 1417.879 | No, Trazione |
| SLV 9 | -2433 | 2076 | 97 | 0 | 0 | 0 | 0 | 1417.879 | No, Trazione |
| SLV 6 | -6106 | -1137 | 102 | 0.033 | 9.095 | 0.919 | 52.363 | 1417.879 | No |
| SLV 5 | -6106 | -1137 | 102 | 0.033 | 9.095 | 0.919 | 52.363 | 1417.879 | No |
| SLV 11 | -17091 | -19416 | -106 | 0.036 | 20.221 | 0.959 | 53.846 | 1417.879 | No |
| SLV 12 | -17091 | -19416 | -106 | 0.036 | 20.221 | 0.959 | 53.846 | 1417.879 | No |
| SLV 8 | -20765 | -22628 | -100 | 0.036 | 23.957 | 0.965 | 54.374 | 1417.879 | No |
| SLV 7 | -20765 | -22628 | -100 | 0.036 | 23.957 | 0.965 | 54.374 | 1417.879 | No |
| SLV 2 | -15522 | -12407 | 38 | 0.039 | 18.625 | 0.956 | 59.692 | 813.056 | No |
| SLV 1 | -15522 | -12407 | 38 | 0.039 | 18.625 | 0.956 | 59.692 | 813.056 | No |

### Tabella dei coefficienti di sicurezza minimi

| Stato limite | Coeff.s. | Comb. | Verifica |
|---|---|---|---|
| PF_SLU | 2.541 | SLU 83 | Si |
| V_SLU | 0.938 | SLU 84 | No |
| PF_SLV | 0 | SLV 9 | No |
| V_SLV | 0 | SLV 9 | No |
| PFFP_SLV | 0 | SLV 10 | No |
| R_SLV | 0 | SLV 10 | No |

## Maschio 57

Verifiche condotte secondo D.M. 17-01-18 (N.T.C.)

### Dati geometrici

| X ini. | Y ini. | X fin. | Y fin. | Quota i. | Quota.s | l | Sp. | h netta | h ini. | h fin. | a | a.s.,sx | a.s.,dx |
|---|---|---|---|---|---|---|---|---|---|---|---|---|---|
| -1961.8 | 595.1 | -2176.3 | 595.1 | L3 | L4 | 214.5 | 28 | 373 | 373 | 373 | | | |

### Caratteristiche del materiale

(Circolare 7 21-01-19 C8.5.I) Muratura in mattoni pieni e malta di calce LC2_Corti

| fb | fk | fvk0 | fmedio | τ0 | fv0 | μ | ϕ | fv,lim | E | G | FC |
|---|---|---|---|---|---|---|---|---|---|---|---|
| 60 | | | 34.5 | 0.9 | 2 | 0.58 | 0.77 | 3.25 | 32000 | 12800 | 1.2 |

### Verifica a pressoflessione nel piano secondo D.M. 17-01-18 NTC §7.8.2.2.1 in combinazioni non sismiche, γM = 3

| Comb. | Quota | N | M | σ0 | Mu | c.s. | Verifica |
|---|---|---|---|---|---|---|---|
| SLU 83 | 261 | -25874 | -684388 | 4.31 | 1307399 | 1.91 | Si |
| SLU 83 | 451 | -25998 | -189380 | 4.33 | 1306599 | 6.899 | Si |
| SLU 82 | 261 | -25483 | -681438 | 4.24 | 1309485 | 1.922 | Si |
| SLU 82 | 451 | -25341 | -178895 | 4.22 | 1310076 | 7.323 | Si |

| Comb. | Quota | N | M | σ0 | Mu | c.s. | Verifica |
|---|---|---|---|---|---|---|---|
| SLU 84 | 261 | -25796 | -683139 | 4.29 | 1307873 | 1.915 | Si |
| SLU 84 | 451 | -25870 | -195337 | 4.31 | 1307428 | 6.693 | Si |
| SLU 78 | 261 | -25287 | -665751 | 4.21 | 1310278 | 1.968 | Si |
| SLU 78 | 451 | -25467 | -207951 | 4.24 | 1309557 | 6.297 | Si |
| SLU 74 | 261 | -25054 | -665299 | 4.17 | 1311004 | 1.971 | Si |
| SLU 74 | 451 | -25067 | -185553 | 4.17 | 1310968 | 7.065 | Si |
| SLU 79 | 261 | -25116 | -659587 | 4.18 | 1310834 | 1.987 | Si |
| SLU 79 | 451 | -25380 | -202124 | 4.23 | 1309924 | 6.481 | Si |
| SLU 80 | 261 | -25037 | -658339 | 4.17 | 1311046 | 1.991 | Si |
| SLU 80 | 451 | -25252 | -208081 | 4.2 | 1310404 | 6.298 | Si |
| SLU 75 | 261 | -24975 | -664050 | 4.16 | 1311194 | 1.975 | Si |
| SLU 75 | 451 | -24939 | -191510 | 4.15 | 1311273 | 6.847 | Si |
| SLU 81 | 261 | -25562 | -682687 | 4.26 | 1309119 | 1.918 | Si |
| SLU 81 | 451 | -25470 | -172939 | 4.24 | 1309545 | 7.572 | Si |
| SLU 77 | 261 | -25366 | -667000 | 4.22 | 1309980 | 1.964 | Si |
| SLU 77 | 451 | -25595 | -201995 | 4.26 | 1308955 | 6.48 | Si |

Verifica a pressoflessione nel piano secondo D.M. 17-01-18 NTC §7.8.2.2.1 in combinazioni sismiche, γM = 2

| Comb. | Quota | N | M | σ0 | Mu | c.s. | Verifica |
|---|---|---|---|---|---|---|---|
| SLV 5 | 261 | -5758 | -510665 | 0.96 | 569086 | 1.114 | Si |
| SLV 5 | 451 | -7040 | -224426 | 1.17 | 682639 | 3.042 | Si |
| SLV 15 | 261 | -17475 | -757746 | 2.91 | 1427920 | 1.884 | Si |
| SLV 15 | 451 | -23608 | 152681 | 3.93 | 1717439 | 11.249 | Si |
| SLD 9 | 261 | -11639 | -566400 | 1.94 | 1050286 | 1.854 | Si |
| SLD 9 | 451 | -13860 | -96749 | 2.31 | 1205743 | 12.463 | Si |
| SLV 14 | 261 | -10082 | -848545 | 1.68 | 932771 | 1.099 | Si |
| SLV 14 | 451 | -18498 | 139478 | 3.08 | 1483858 | 10.639 | Si |
| SLV 9 | 261 | -3773 | -715501 | 0 | 0 | 0 | No, e>l/2 |
| SLV 9 | 451 | -9577 | -63580 | 1.59 | 893114 | 14.047 | Si |
| SLV 16 | 261 | -17475 | -757746 | 2.91 | 1427920 | 1.884 | Si |
| SLV 16 | 451 | -23608 | 152681 | 3.93 | 1717439 | 11.249 | Si |
| SLV 13 | 261 | -10082 | -848545 | 1.68 | 932771 | 1.099 | Si |
| SLV 13 | 451 | -18498 | 139478 | 3.08 | 1483858 | 10.639 | Si |
| SLV 10 | 261 | -3773 | -715501 | 0 | 0 | 0 | No, e>l/2 |
| SLV 10 | 451 | -9577 | -63580 | 1.59 | 893114 | 14.047 | Si |
| SLD 10 | 261 | -11639 | -566400 | 1.94 | 1050286 | 1.854 | Si |
| SLD 10 | 451 | -13860 | -96749 | 2.31 | 1205743 | 12.463 | Si |
| SLV 6 | 261 | -5758 | -510665 | 0.96 | 569086 | 1.114 | Si |
| SLV 6 | 451 | -7040 | -224426 | 1.17 | 682639 | 3.042 | Si |

Verifica a taglio nel piano secondo D.M. 17-01-18 (N.T.C.) §7.8.2.2.2 con rottura per scorrimento in combinazioni non sismiche, γM = 3

| Comb. | Quota | N | V par | M | σ0 | σN | l' | fvd | Vt scorr. | Vt fess.diag. | Vt,lim | c.s. | Verifica |
|---|---|---|---|---|---|---|---|---|---|---|---|---|---|
| SLU 83 | 261 | -25874 | -4202 | -684388 | | 4.31 | 214.5 | 1.08 | 6506 | | | 1.55 | Si |
| SLU 83 | 451 | -25998 | -4212 | -189380 | | 4.33 | 214.5 | 1.08 | 6506 | | | 1.54 | Si |
| SLU 80 | 261 | -25037 | -4017 | -658339 | | 4.17 | 214.5 | 1.08 | 6506 | | | 1.62 | Si |
| SLU 80 | 451 | -25252 | -4028 | -208081 | | 4.2 | 214.5 | 1.08 | 6506 | | | 1.62 | Si |
| SLU 75 | 261 | -24975 | -3994 | -664050 | | 4.16 | 214.5 | 1.08 | 6506 | | | 1.63 | Si |
| SLU 75 | 451 | -24939 | -4003 | -191510 | | 4.15 | 214.5 | 1.08 | 6506 | | | 1.63 | Si |
| SLU 77 | 261 | -25366 | -4103 | -667000 | | 4.22 | 214.5 | 1.08 | 6506 | | | 1.59 | Si |
| SLU 77 | 451 | -25595 | -4115 | -201995 | | 4.26 | 214.5 | 1.08 | 6506 | | | 1.58 | Si |
| SLU 79 | 261 | -25116 | -4083 | -659587 | | 4.18 | 214.5 | 1.08 | 6506 | | | 1.59 | Si |
| SLU 79 | 451 | -25380 | -4095 | -202124 | | 4.23 | 214.5 | 1.08 | 6506 | | | 1.59 | Si |
| SLU 74 | 261 | -25054 | -4060 | -665299 | | 4.17 | 214.5 | 1.08 | 6506 | | | 1.6 | Si |
| SLU 74 | 451 | -25067 | -4069 | -185553 | | 4.17 | 214.5 | 1.08 | 6506 | | | 1.6 | Si |
| SLU 78 | 261 | -25287 | -4038 | -665751 | | 4.21 | 214.5 | 1.08 | 6506 | | | 1.61 | Si |
| SLU 78 | 451 | -25467 | -4048 | -207951 | | 4.24 | 214.5 | 1.08 | 6506 | | | 1.61 | Si |
| SLU 82 | 261 | -25483 | -4093 | -681438 | | 4.24 | 214.5 | 1.08 | 6506 | | | 1.59 | Si |
| SLU 82 | 451 | -25341 | -4100 | -178895 | | 4.22 | 214.5 | 1.08 | 6506 | | | 1.59 | Si |
| SLU 81 | 261 | -25562 | -4159 | -682687 | | 4.26 | 214.5 | 1.08 | 6506 | | | 1.56 | Si |
| SLU 81 | 451 | -25470 | -4167 | -172939 | | 4.24 | 214.5 | 1.08 | 6506 | | | 1.56 | Si |
| SLU 84 | 261 | -25796 | -4137 | -683139 | | 4.29 | 214.5 | 1.08 | 6506 | | | 1.57 | Si |
| SLU 84 | 451 | -25870 | -4145 | -195337 | | 4.31 | 214.5 | 1.08 | 6506 | | | 1.57 | Si |

Verifica a taglio nel piano secondo D.M. 17-01-18 (N.T.C.) §7.8.2.2.2 con rottura per scorrimento in combinazioni sismiche, γM = 2

| Comb. | Quota | N | V par | M | σ0 | σN | l' | fvd | Vt scorr. | Vt fess.diag. | Vt,lim | c.s. | Verifica |
|---|---|---|---|---|---|---|---|---|---|---|---|---|---|
| SLV 6 | 261 | -5758 | -8024 | -510665 | | 3.69 | 55.68 | 1.57 | 2451 | | | 0.31 | No, Vu<V |
| SLV 6 | 451 | -7040 | -4370 | -224426 | | 1.17 | 214.5 | 1.07 | 6413 | | | 1.47 | Si |
| SLD 10 | 261 | -11639 | -6782 | -566400 | | 2.37 | 175.75 | 1.31 | 6429 | | | 0.95 | No, Vu<V |
| SLD 10 | 451 | -13860 | -5281 | -96749 | | 2.31 | 214.5 | 1.29 | 7777 | | | 1.47 | Si |
| SLV 13 | 261 | -10082 | -12506 | -848545 | | 5.2 | 69.27 | 1.63 | 3152 | | | 0.25 | No, Vu<V |
| SLV 13 | 451 | -18498 | -11202 | 139478 | | 3.08 | 214.5 | 1.45 | 8705 | | | 0.78 | No, Vu<V |
| SLV 9 | 261 | -3773 | -12500 | -715501 | | 0 | 0 | 0.83 | 0 | | | 0 | No, Vu<V |
| SLV 9 | 451 | -9577 | -8729 | -63580 | | 1.59 | 214.5 | 1.15 | 6920 | | | 0.79 | No, Vu<V |
| SLV 10 | 261 | -3773 | -12500 | -715501 | | 0 | 0 | 0.83 | 0 | | | 0 | No, Vu<V |
| SLV 10 | 451 | -9577 | -8729 | -63580 | | 1.59 | 214.5 | 1.15 | 6920 | | | 0.79 | No, Vu<V |
| SLV 16 | 261 | -17475 | -8036 | -757746 | | 3.26 | 191.67 | 1.48 | 7967 | | | 0.99 | No, Vu<V |
| SLV 16 | 451 | -23608 | -8962 | 152681 | | 3.93 | 214.5 | 1.62 | 9727 | | | 1.09 | Si |
| SLV 14 | 261 | -10082 | -12506 | -848545 | | 5.2 | 69.27 | 1.63 | 3152 | | | 0.25 | No, Vu<V |
| SLV 14 | 451 | -18498 | -11202 | 139478 | | 3.08 | 214.5 | 1.45 | 8705 | | | 0.78 | No, Vu<V |
| SLD 9 | 261 | -11639 | -6782 | -566400 | | 2.37 | 175.75 | 1.31 | 6429 | | | 0.95 | No, Vu<V |
| SLD 9 | 451 | -13860 | -5281 | -96749 | | 2.31 | 214.5 | 1.29 | 7777 | | | 1.47 | Si |
| SLV 15 | 261 | -17475 | -8036 | -757746 | | 3.26 | 191.67 | 1.48 | 7967 | | | 0.99 | No, Vu<V |
| SLV 15 | 451 | -23608 | -8962 | 152681 | | 3.93 | 214.5 | 1.62 | 9727 | | | 1.09 | Si |
| SLV 5 | 261 | -5758 | -8024 | -510665 | | 3.69 | 55.68 | 1.57 | 2451 | | | 0.31 | No, Vu<V |
| SLV 5 | 451 | -7040 | -4370 | -224426 | | 1.17 | 214.5 | 1.07 | 6413 | | | 1.47 | Si |

### Verifica a pressoflessione fuori piano D.M. 17-01-18 (N.T.C.)

quota 357.5 Wa 0.05 denominatore 8 γM = 2

| Comb. | fd | Sa | σ0 | N | M | Mc | Coeff.s. | Verifica |
|---|---|---|---|---|---|---|---|---|
| SLV 6 | 14 | 0.32 | 1.04 | -6273 | 20320 | 80316 | 3.95 | Si |
| SLV 5 | 14 | 0.32 | 1.04 | -6273 | 20320 | 80316 | 3.95 | Si |
| SLV 10 | 14 | 0.32 | 1.18 | -7082 | 20320 | 89576 | 4.41 | Si |
| SLV 9 | 14 | 0.32 | 1.18 | -7082 | 20320 | 89576 | 4.41 | Si |
| SLV 1 | 14 | 0.32 | 2.09 | -12556 | 20320 | 145712 | 7.17 | Si |
| SLV 2 | 14 | 0.32 | 2.09 | -12556 | 20320 | 145712 | 7.17 | Si |
| SLV 14 | 14 | 0.32 | 2.54 | -15252 | 20320 | 169147 | 8.32 | Si |
| SLV 13 | 14 | 0.32 | 2.54 | -15252 | 20320 | 169147 | 8.32 | Si |
| SLV 4 | 14 | 0.32 | 3.12 | -18751 | 20320 | 195436 | 9.62 | Si |
| SLV 3 | 14 | 0.32 | 3.12 | -18751 | 20320 | 195436 | 9.62 | Si |

### Verifica dei meccanismi locali di collasso con analisi cinematica lineare

forza di aggancio al piano = 0 quota mezzeria = 357.5 Wa = 0.05 Ta = 0.083

| Comb. | N top | N base | V orto | α0 | M* | e* | a0* | aLim | Verifica |
|---|---|---|---|---|---|---|---|---|---|
| SLV 10 | -9608 | -1943 | 141 | 0.032 | 12.975 | 0.933 | 49.764 | 1417.879 | No |
| SLV 9 | -9608 | -1943 | 141 | 0.032 | 12.975 | 0.933 | 49.764 | 1417.879 | No |
| SLV 8 | -19785 | -32052 | -141 | 0.035 | 23.301 | 0.96 | 52.319 | 1417.879 | No |
| SLV 7 | -19785 | -32052 | -141 | 0.035 | 23.301 | 0.96 | 52.319 | 1417.879 | No |
| SLV 12 | -21297 | -31153 | -92 | 0.037 | 24.839 | 0.962 | 55.635 | 1417.879 | No |
| SLV 11 | -21297 | -31153 | -92 | 0.037 | 24.839 | 0.962 | 55.635 | 1417.879 | No |
| SLV 5 | -8097 | -2842 | 92 | 0.036 | 11.45 | 0.926 | 56.369 | 1417.879 | No |
| SLV 6 | -8097 | -2842 | 92 | 0.036 | 11.45 | 0.926 | 56.369 | 1417.879 | No |
| SLV 3 | -13931 | -22878 | -116 | 0.035 | 17.353 | 0.948 | 53.689 | 813.056 | No |
| SLV 4 | -13931 | -22878 | -116 | 0.035 | 17.353 | 0.948 | 53.689 | 813.056 | No |

### Tabella dei coefficienti di sicurezza minimi

| Stato limite | Coeff.s. | Comb. | Verifica |
|---|---|---|---|
| PF_SLU | 1.91 | SLU 83 | Si |
| V_SLU | 1.545 | SLU 83 | Si |
| PF_SLV | 0 | SLV 9 | No |
| V_SLV | 0 | SLV 9 | No |
| PFFP_SLV | 3.952 | SLV 5 | Si |
| R_SLV | 0.035 | SLV 9 | No |

## Maschio 58

Verifiche condotte secondo D.M. 17-01-18 (N.T.C.)

### Dati geometrici

| X ini. | Y ini. | X fin. | Y fin. | Quota i. | Quota.s | l | Sp. | h netta | h ini. | h fin. | a | a.s.,sx | a.s.,dx |
|---|---|---|---|---|---|---|---|---|---|---|---|---|---|
| -2254.3 | -335.9 | -2467.8 | -335.9 | L3 | L4 | 213.5 | 28 | 373 | 373 | 373 | | | |

### Caratteristiche del materiale

(Circolare 7 21-01-19 C8.5.I) Muratura in mattoni pieni e malta di calce LC2_Corti

| fb | fk | fvk0 | fmedio | τ0 | fv0 | μ | ϕ | fv,lim | E | G | FC |
|---|---|---|---|---|---|---|---|---|---|---|---|
| 60 | | | 34.5 | 0.9 | 2 | 0.58 | 0.77 | 3.25 | 32000 | 12800 | 1.2 |

### Verifica a pressoflessione nel piano secondo D.M. 17-01-18 NTC §7.8.2.2.1 in combinazioni non sismiche, γM = 3

| Comb. | Quota | N | M | σ0 | Mu | c.s. | Verifica |
|---|---|---|---|---|---|---|---|
| SLU 34 | 261 | -14756 | 760619 | 2.47 | 1097873 | 1.443 | Si |
| SLU 34 | 451 | -19996 | 11624 | 3.34 | 1258043 | 108.232 | Si |
| SLU 26 | 261 | -13078 | 711249 | 2.19 | 1021134 | 1.436 | Si |
| SLU 26 | 451 | -17639 | 30331 | 2.95 | 1200897 | 39.593 | Si |
| SLU 65 | 261 | -15633 | 790868 | 2.62 | 1133083 | 1.433 | Si |
| SLU 65 | 451 | -20535 | 23910 | 3.44 | 1267697 | 53.02 | Si |
| SLU 5 | 261 | -11261 | 649808 | 1.88 | 924145 | 1.422 | Si |
| SLU 5 | 451 | -15120 | 48185 | 2.53 | 1112911 | 23.097 | Si |
| SLU 47 | 261 | -14345 | 752119 | 2.4 | 1080202 | 1.436 | Si |
| SLU 47 | 451 | -18721 | 42148 | 3.13 | 1230156 | 29.187 | Si |
| SLU 76 | 261 | -17839 | 862930 | 2.98 | 1206694 | 1.398 | Si |
| SLU 76 | 451 | -23596 | 5586 | 3.95 | 1298330 | 232.426 | Si |
| SLU 55 | 261 | -16022 | 801490 | 2.68 | 1147623 | 1.432 | Si |
| SLU 55 | 451 | -21077 | 23440 | 3.53 | 1276122 | 54.442 | Si |
| SLU 2 | 261 | -10734 | 627117 | 1.8 | 893254 | 1.424 | Si |
| SLU 2 | 451 | -14416 | 47801 | 2.41 | 1083324 | 22.663 | Si |
| SLU 73 | 261 | -17311 | 840238 | 2.9 | 1191023 | 1.417 | Si |
| SLU 73 | 451 | -22892 | 5202 | 3.83 | 1294920 | 248.922 | Si |
| SLU 68 | 261 | -16161 | 813559 | 2.7 | 1152637 | 1.417 | Si |
| SLU 68 | 451 | -21239 | 24293 | 3.55 | 1278386 | 52.623 | Si |

### Verifica a pressoflessione nel piano secondo D.M. 17-01-18 NTC §7.8.2.2.1 in combinazioni sismiche, γM = 2

| Comb. | Quota | N | M | σ0 | Mu | c.s. | Verifica |
|---|---|---|---|---|---|---|---|
| SLV 6 | 261 | -19966 | 1219577 | 3.34 | 1548780 | 1.27 | Si |
| SLV 6 | 451 | -30017 | -149154 | 5.02 | 1887519 | 12.655 | Si |
| SLV 1 | 261 | -20972 | 1284603 | 3.51 | 1595972 | 1.242 | Si |
| SLV 1 | 451 | -31770 | -314740 | 5.31 | 1916351 | 6.089 | Si |
| SLV 4 | 261 | -18118 | 939005 | 3.03 | 1454349 | 1.549 | Si |
| SLV 4 | 451 | -25773 | -302180 | 4.31 | 1780495 | 5.892 | Si |
| SLV 15 | 261 | -5731 | -398779 | 0.96 | 563764 | 1.414 | Si |
| SLV 15 | 451 | -776 | 212788 | 0 | 0 | 0 | No, e>l/2 |
| SLV 2 | 261 | -20972 | 1284603 | 3.51 | 1595972 | 1.242 | Si |

| Comb. | Quota | N | M | σ0 | Mu | c.s. | Verifica |
|---|---|---|---|---|---|---|---|
| SLV 2 | 451 | -31770 | -314740 | 5.31 | 1916351 | 6.089 | Si |
| SLV 3 | 261 | -18118 | 939005 | 3.03 | 1454349 | 1.549 | Si |
| SLV 3 | 451 | -25773 | -302180 | 4.31 | 1780495 | 5.892 | Si |
| SLV 9 | 261 | -16250 | 818242 | 2.72 | 1348772 | 1.648 | Si |
| SLV 9 | 451 | -22518 | 5336 | 3.77 | 1662755 | 311.606 | Si |
| SLV 10 | 261 | -16250 | 818242 | 2.72 | 1348772 | 1.648 | Si |
| SLV 10 | 451 | -22518 | 5336 | 3.77 | 1662755 | 311.606 | Si |
| SLV 5 | 261 | -19966 | 1219577 | 3.34 | 1548780 | 1.27 | Si |
| SLV 5 | 451 | -30017 | -149154 | 5.02 | 1887519 | 12.655 | Si |
| SLV 16 | 261 | -5731 | -398779 | 0.96 | 563764 | 1.414 | Si |
| SLV 16 | 451 | -776 | 212788 | 0 | 0 | 0 | No, e>l/2 |

Verifica a taglio nel piano secondo D.M. 17-01-18 (N.T.C.) §7.8.2.2.2 con rottura per scorrimento in combinazioni non sismiche, γM = 3

| Comb. | Quota | N | V par | M | σ0 | σN | l' | fvd | Vt scorr. | Vt fess.diag. | Vt,lim | c.s. | Verifica |
|---|---|---|---|---|---|---|---|---|---|---|---|---|---|
| SLU 26 | 261 | -13078 | 7435 | 711249 | | 2.97 | 157.09 | 0.95 | 4187 | | | 0.56 | No, Vu<V |
| SLU 26 | 451 | -17639 | 7255 | 30331 | | 2.95 | 213.5 | 0.95 | 5673 | | | 0.78 | No, Vu<V |
| SLU 52 | 261 | -15495 | 8345 | 778798 | | 3.27 | 169.46 | 0.99 | 4702 | | | 0.56 | No, Vu<V |
| SLU 52 | 451 | -20373 | 8143 | 23056 | | 3.41 | 213.5 | 1.01 | 6038 | | | 0.74 | No, Vu<V |
| SLU 73 | 261 | -17311 | 9186 | 840238 | | 3.54 | 174.64 | 1.03 | 5025 | | | 0.55 | No, Vu<V |
| SLU 73 | 451 | -22892 | 8967 | 5202 | | 3.83 | 213.5 | 1.07 | 6373 | | | 0.71 | No, Vu<V |
| SLU 55 | 261 | -16022 | 8565 | 801490 | | 3.36 | 170.18 | 1 | 4784 | | | 0.56 | No, Vu<V |
| SLU 55 | 451 | -21077 | 8358 | 23440 | | 3.53 | 213.5 | 1.03 | 6131 | | | 0.73 | No, Vu<V |
| SLU 31 | 261 | -14228 | 7965 | 737928 | | 3.09 | 164.66 | 0.97 | 4458 | | | 0.56 | No, Vu<V |
| SLU 31 | 451 | -19291 | 7775 | 11240 | | 3.23 | 213.5 | 0.99 | 5893 | | | 0.76 | No, Vu<V |
| SLU 34 | 261 | -14756 | 8185 | 760619 | | 3.18 | 165.61 | 0.98 | 4544 | | | 0.56 | No, Vu<V |
| SLU 34 | 451 | -19996 | 7990 | 11624 | | 3.34 | 213.5 | 1 | 5987 | | | 0.75 | No, Vu<V |
| SLU 68 | 261 | -16161 | 8656 | 813559 | | 3.41 | 169.23 | 1.01 | 4787 | | | 0.55 | No, Vu<V |
| SLU 68 | 451 | -21239 | 8448 | 24293 | | 3.55 | 213.5 | 1.03 | 6153 | | | 0.73 | No, Vu<V |
| SLU 23 | 261 | -12550 | 7216 | 688557 | | 2.88 | 155.66 | 0.94 | 4095 | | | 0.57 | No, Vu<V |
| SLU 23 | 451 | -16934 | 7040 | 29947 | | 2.83 | 213.5 | 0.93 | 5579 | | | 0.79 | No, Vu<V |
| SLU 65 | 261 | -15633 | 8437 | 790868 | | 3.31 | 168.48 | 1 | 4705 | | | 0.56 | No, Vu<V |
| SLU 65 | 451 | -20535 | 8233 | 23910 | | 3.44 | 213.5 | 1.01 | 6059 | | | 0.74 | No, Vu<V |
| SLU 76 | 261 | -17839 | 9405 | 862930 | | 3.64 | 175.13 | 1.04 | 5103 | | | 0.54 | No, Vu<V |
| SLU 76 | 451 | -23596 | 9183 | 5586 | | 3.95 | 213.5 | 1.08 | 6467 | | | 0.7 | No, Vu<V |

Verifica a taglio nel piano secondo D.M. 17-01-18 (N.T.C.) §7.8.2.2.2 con rottura per scorrimento in combinazioni sismiche, γM = 2

| Comb. | Quota | N | V par | M | σ0 | σN | l' | fvd | Vt scorr. | Vt fess.diag. | Vt,lim | c.s. | Verifica |
|---|---|---|---|---|---|---|---|---|---|---|---|---|---|
| SLD 2 | 261 | -16568 | 9539 | 798832 | | 3.37 | 175.61 | 1.51 | 7411 | | | 0.78 | No, Vu<V |
| SLD 2 | 451 | -22834 | 9357 | -162399 | | 3.82 | 213.5 | 1.6 | 9548 | | | 1.02 | Si |
| SLV 6 | 261 | -19966 | 12358 | 1219577 | | 5.2 | 137 | 1.63 | 6234 | | | 0.5 | No, Vu<V |
| SLV 6 | 451 | -30017 | 11535 | -149154 | | 5.02 | 213.5 | 1.63 | 9714 | | | 0.84 | No, Vu<V |
| SLV 1 | 261 | -20972 | 15043 | 1284603 | | 5.49 | 136.49 | 1.63 | 6210 | | | 0.41 | No, Vu<V |
| SLV 1 | 451 | -31770 | 14746 | -314740 | | 5.31 | 213.5 | 1.63 | 9714 | | | 0.66 | No, Vu<V |
| SLV 3 | 261 | -18118 | 12402 | 939005 | | 3.93 | 164.77 | 1.62 | 7468 | | | 0.6 | No, Vu<V |
| SLV 3 | 451 | -25773 | 12533 | -302180 | | 4.31 | 213.5 | 1.63 | 9714 | | | 0.78 | No, Vu<V |
| SLV 2 | 261 | -20972 | 15043 | 1284603 | | 5.49 | 136.49 | 1.63 | 6210 | | | 0.41 | No, Vu<V |
| SLV 2 | 451 | -31770 | 14746 | -314740 | | 5.31 | 213.5 | 1.63 | 9714 | | | 0.66 | No, Vu<V |
| SLV 5 | 261 | -19966 | 12358 | 1219577 | | 5.2 | 137 | 1.63 | 6234 | | | 0.5 | No, Vu<V |
| SLV 5 | 451 | -30017 | 11535 | -149154 | | 5.02 | 213.5 | 1.63 | 9714 | | | 0.84 | No, Vu<V |
| SLV 4 | 261 | -18118 | 12402 | 939005 | | 3.93 | 164.77 | 1.62 | 7468 | | | 0.6 | No, Vu<V |
| SLV 4 | 451 | -25773 | 12533 | -302180 | | 4.31 | 213.5 | 1.63 | 9714 | | | 0.78 | No, Vu<V |
| SLD 1 | 261 | -16568 | 9539 | 798832 | | 3.37 | 175.61 | 1.51 | 7411 | | | 0.78 | No, Vu<V |
| SLD 1 | 451 | -22834 | 9357 | -162399 | | 3.82 | 213.5 | 1.6 | 9548 | | | 1.02 | Si |
| SLV 15 | 261 | -5731 | -4075 | -398779 | | 1.84 | 111.49 | 1.2 | 3748 | | | 0.92 | No, Vu<V |
| SLV 15 | 451 | -776 | -4018 | 212788 | | 0 | 0 | 0.83 | 0 | | | 0 | No, Vu<V |
| SLV 16 | 261 | -5731 | -4075 | -398779 | | 1.84 | 111.49 | 1.2 | 3748 | | | 0.92 | No, Vu<V |
| SLV 16 | 451 | -776 | -4018 | 212788 | | 0 | 0 | 0.83 | 0 | | | 0 | No, Vu<V |

Verifica a pressoflessione fuori piano D.M. 17-01-18 (N.T.C.)

quota 357.5 Wa 0.05 denominatore 8 γM = 2

| Comb. | fd | Sa | σ0 | N | M | Mc | Coeff.s. | Verifica |
|---|---|---|---|---|---|---|---|---|
| SLV 11 | 14 | 0.32 | 0 | -1098 | 20226 | 0 | 0 | No, e>t/2 |
| SLV 12 | 14 | 0.32 | 0 | -1098 | 20226 | 0 | 0 | No, e>t/2 |
| SLV 16 | 14 | 0.32 | 0.43 | -2548 | 20226 | 34430 | 1.7 | Si |
| SLV 15 | 14 | 0.32 | 0.43 | -2548 | 20226 | 34430 | 1.7 | Si |
| SLV 8 | 14 | 0.32 | 1.13 | -6739 | 20226 | 85645 | 4.23 | Si |
| SLV 7 | 14 | 0.32 | 1.13 | -6739 | 20226 | 85645 | 4.23 | Si |
| SLV 14 | 14 | 0.32 | 1.58 | -9432 | 20226 | 114994 | 5.69 | Si |
| SLV 13 | 14 | 0.32 | 1.58 | -9432 | 20226 | 114994 | 5.69 | Si |
| SLV 4 | 14 | 0.32 | 3.57 | -21351 | 20226 | 211541 | 10.46 | Si |
| SLV 3 | 14 | 0.32 | 3.57 | -21351 | 20226 | 211541 | 10.46 | Si |

Verifica dei meccanismi locali di collasso con analisi cinematica lineare

forza di aggancio al piano = 0 quota mezzeria = 357.5 Wa = 0.05 Ta = 0.083

| Comb. | N top | N base | V orto | α0 | M* | e* | a0* | aLim | Verifica |
|---|---|---|---|---|---|---|---|---|---|
| SLV 11 | -3058 | 987 | -51 | 0 | 0 | 0 | 0 | 1417.879 | No, Trazione |
| SLV 12 | -3058 | 987 | -51 | 0 | 0 | 0 | 0 | 1417.879 | No, Trazione |
| SLV 9 | -18742 | -21173 | 69 | 0.038 | 22.226 | 0.958 | 57.424 | 1417.879 | No |
| SLV 10 | -18742 | -21173 | 69 | 0.038 | 22.226 | 0.958 | 57.424 | 1417.879 | No |
| SLV 5 | -23613 | -25428 | 50 | 0.039 | 27.18 | 0.965 | 58.006 | 1417.879 | No |
| SLV 6 | -23613 | -25428 | 50 | 0.039 | 27.18 | 0.965 | 58.006 | 1417.879 | No |
| SLV 8 | -7928 | -3268 | -69 | 0.038 | 11.265 | 0.925 | 59.922 | 1417.879 | No |
| SLV 7 | -7928 | -3268 | -69 | 0.038 | 11.265 | 0.925 | 59.922 | 1417.879 | No |
| SLV 4 | -19099 | -15987 | -49 | 0.039 | 22.589 | 0.959 | 58.778 | 813.056 | No |
| SLV 3 | -19099 | -15987 | -49 | 0.039 | 22.589 | 0.959 | 58.778 | 813.056 | No |

### Tabella dei coefficienti di sicurezza minimi

| Stato limite | Coeff.s. | Comb. | Verifica |
|---|---|---|---|
| PF_SLU | 1.398 | SLU 76 | Si |
| V_SLU | 0.543 | SLU 76 | No |
| PF_SLV | 0 | SLV 15 | No |
| V_SLV | 0 | SLV 15 | No |
| PFFP_SLV | 0 | SLV 11 | No |
| R_SLV | 0 | SLV 12 | No |

## Maschio 59

Verifiche condotte secondo D.M. 17-01-18 (N.T.C.)

### Dati geometrici

| X ini. | Y ini. | X fin. | Y fin. | Quota i. | Quota.s | l | Sp. | h netta | h ini. | h fin. | a | a.s.,sx | a.s.,dx |
|---|---|---|---|---|---|---|---|---|---|---|---|---|---|
| -1936.8 | -335.9 | -2154.3 | -335.9 | L3 | L4 | 217.5 | 28 | 373 | 373 | 373 | | | |

### Caratteristiche del materiale

(Circolare 7 21-01-19 C8.5.I) Muratura in mattoni pieni e malta di calce LC2_Corti

| fb | fk | fvk0 | fmedio | τ0 | fv0 | μ | ϕ | fv,lim | E | G | FC |
|---|---|---|---|---|---|---|---|---|---|---|---|
| 60 | | | 34.5 | 0.9 | 2 | 0.58 | 0.77 | 3.25 | 32000 | 12800 | 1.2 |

### Verifica a pressoflessione nel piano secondo D.M. 17-01-18 NTC §7.8.2.2.1 in combinazioni non sismiche, γM = 3

| Comb. | Quota | N | M | σ0 | Mu | c.s. | Verifica |
|---|---|---|---|---|---|---|---|
| SLU 68 | 371 | -15650 | -662071 | 2.57 | 1165003 | 1.76 | Si |
| SLU 68 | 451 | -14561 | -449303 | 2.39 | 1118699 | 2.49 | Si |
| SLU 76 | 371 | -17936 | -720415 | 2.95 | 1245302 | 1.729 | Si |
| SLU 76 | 451 | -16847 | -482854 | 2.77 | 1209912 | 2.506 | Si |
| SLU 52 | 371 | -15774 | -676885 | 2.59 | 1169957 | 1.728 | Si |
| SLU 52 | 451 | -14699 | -438459 | 2.41 | 1124866 | 2.565 | Si |
| SLU 44 | 371 | -13488 | -618541 | 2.21 | 1067990 | 1.727 | Si |
| SLU 44 | 451 | -12413 | -404908 | 2.04 | 1012126 | 2.5 | Si |
| SLU 5 | 371 | -10388 | -513211 | 1.71 | 893107 | 1.74 | Si |
| SLU 5 | 451 | -9557 | -345260 | 1.57 | 839100 | 2.43 | Si |
| SLU 47 | 371 | -13618 | -614470 | 2.24 | 1074414 | 1.749 | Si |
| SLU 47 | 451 | -12543 | -410932 | 2.06 | 1019164 | 2.48 | Si |
| SLU 55 | 371 | -15904 | -672814 | 2.61 | 1175075 | 1.747 | Si |
| SLU 55 | 451 | -14829 | -444483 | 2.43 | 1130599 | 2.544 | Si |
| SLU 2 | 371 | -10257 | -517282 | 1.68 | 884839 | 1.711 | Si |
| SLU 2 | 451 | -9427 | -339236 | 1.55 | 830357 | 2.448 | Si |
| SLU 73 | 371 | -17805 | -724486 | 2.92 | 1241343 | 1.713 | Si |
| SLU 73 | 451 | -16716 | -476830 | 2.74 | 1205332 | 2.528 | Si |
| SLU 65 | 371 | -15519 | -666142 | 2.55 | 1159739 | 1.741 | Si |
| SLU 65 | 451 | -14430 | -443279 | 2.37 | 1112814 | 2.51 | Si |

### Verifica a pressoflessione nel piano secondo D.M. 17-01-18 NTC §7.8.2.2.1 in combinazioni sismiche, γM = 2

| Comb. | Quota | N | M | σ0 | Mu | c.s. | Verifica |
|---|---|---|---|---|---|---|---|
| SLV 6 | 371 | -15264 | -920797 | 2.51 | 1319451 | 1.433 | Si |
| SLV 6 | 451 | -19023 | -641889 | 3.12 | 1539877 | 2.399 | Si |
| SLV 3 | 371 | -11823 | 45797 | 1.94 | 1081464 | 23.615 | Si |
| SLV 3 | 451 | -9444 | -704910 | 1.55 | 896721 | 1.272 | Si |
| SLV 13 | 371 | -16824 | -890200 | 2.76 | 1415928 | 1.591 | Si |
| SLV 13 | 451 | -17533 | 138292 | 2.88 | 1457464 | 10.539 | Si |
| SLV 9 | 371 | -16485 | -1096074 | 2.71 | 1395581 | 1.273 | Si |
| SLV 9 | 451 | -20335 | -350600 | 3.34 | 1607111 | 4.584 | Si |
| SLV 14 | 371 | -16824 | -890200 | 2.76 | 1415928 | 1.591 | Si |
| SLV 14 | 451 | -17533 | 138292 | 2.88 | 1457464 | 10.539 | Si |
| SLV 4 | 371 | -11823 | 45797 | 1.94 | 1081464 | 23.615 | Si |
| SLV 4 | 451 | -9444 | -704910 | 1.55 | 896721 | 1.272 | Si |
| SLV 1 | 371 | -12754 | -305944 | 2.09 | 1149247 | 3.756 | Si |
| SLV 1 | 451 | -13159 | -832671 | 2.16 | 1177943 | 1.415 | Si |
| SLV 2 | 371 | -12754 | -305944 | 2.09 | 1149247 | 3.756 | Si |
| SLV 2 | 451 | -13159 | -832671 | 2.16 | 1177943 | 1.415 | Si |
| SLV 10 | 371 | -16485 | -1096074 | 2.71 | 1395581 | 1.273 | Si |
| SLV 10 | 451 | -20335 | -350600 | 3.34 | 1607111 | 4.584 | Si |
| SLV 5 | 371 | -15264 | -920797 | 2.51 | 1319451 | 1.433 | Si |
| SLV 5 | 451 | -19023 | -641889 | 3.12 | 1539877 | 2.399 | Si |

### Verifica a taglio nel piano secondo D.M. 17-01-18 (N.T.C.) §7.8.2.2.2 con rottura per scorrimento in combinazioni non sismiche, γM = 3

| Comb. | Quota | N | V par | M | σ0 | σN | l' | fvd | Vt scorr. | Vt fess.diag. | Vt,lim | c.s. | Verifica |
|---|---|---|---|---|---|---|---|---|---|---|---|---|---|
| SLU 31 | 371 | -14575 | -2647 | -623227 | | 2.63 | 197.97 | 0.91 | 5023 | | | 1.9 | Si |
| SLU 31 | 451 | -13730 | -2647 | -411158 | | 2.25 | 217.5 | 0.86 | 5214 | | | 1.97 | Si |
| SLU 65 | 371 | -15519 | -2779 | -666142 | | 2.81 | 197.48 | 0.93 | 5141 | | | 1.85 | Si |
| SLU 65 | 451 | -14430 | -2779 | -443279 | | 2.37 | 217.5 | 0.87 | 5307 | | | 1.91 | Si |
| SLU 2 | 371 | -10257 | -2220 | -517282 | | 2.09 | 174.96 | 0.83 | 4089 | | | 1.84 | Si |
| SLU 2 | 451 | -9427 | -2220 | -339236 | | 1.55 | 217.5 | 0.76 | 4640 | | | 2.09 | Si |
| SLU 10 | 371 | -12543 | -2530 | -575626 | | 2.38 | 188.58 | 0.87 | 4606 | | | 1.82 | Si |
| SLU 10 | 451 | -11713 | -2530 | -372787 | | 1.92 | 217.5 | 0.81 | 4945 | | | 1.95 | Si |
| SLU 47 | 371 | -13618 | -2536 | -614470 | | 2.55 | 190.88 | 0.9 | 4785 | | | 1.89 | Si |
| SLU 47 | 451 | -12543 | -2536 | -410932 | | 2.06 | 217.5 | 0.83 | 5056 | | | 1.99 | Si |
| SLU 55 | 371 | -15904 | -2846 | -672814 | | 2.85 | 199.34 | 0.94 | 5221 | | | 1.83 | Si |
| SLU 55 | 451 | -14829 | -2846 | -444483 | | 2.43 | 217.5 | 0.88 | 5361 | | | 1.88 | Si |
| SLU 52 | 371 | -15774 | -2972 | -676885 | | 2.85 | 197.51 | 0.94 | 5176 | | | 1.74 | Si |
| SLU 52 | 451 | -14699 | -2972 | -438459 | | 2.41 | 217.5 | 0.88 | 5343 | | | 1.8 | Si |
| SLU 44 | 371 | -13488 | -2662 | -618541 | | 2.55 | 188.67 | 0.9 | 4733 | | | 1.78 | Si |

| Comb. | Quota | N | V par | M | σ0 | σN | l' | fvd | Vt scorr. | Vt fess.diag. | Vt,lim | c.s. | Verifica |
|---|---|---|---|---|---|---|---|---|---|---|---|---|---|
| SLU 44 | 451 | -12413 | -2662 | -404908 | | 2.04 | 217.5 | 0.83 | 5038 | | | 1.89 | Si |
| SLU 76 | 371 | -17936 | -2963 | -720415 | | 3.11 | 205.75 | 0.97 | 5592 | | | 1.89 | Si |
| SLU 76 | 451 | -16847 | -2963 | -482854 | | 2.77 | 217.5 | 0.92 | 5630 | | | 1.9 | Si |
| SLU 73 | 371 | -17805 | -3089 | -724486 | | 3.11 | 204.18 | 0.97 | 5550 | | | 1.8 | Si |
| SLU 73 | 451 | -16716 | -3089 | -476830 | | 2.74 | 217.5 | 0.92 | 5612 | | | 1.82 | Si |

### Verifica a taglio nel piano secondo D.M. 17-01-18 (N.T.C.) §7.8.2.2.2 con rottura per scorrimento in combinazioni sismiche, γM = 2

| Comb. | Quota | N | V par | M | σ0 | σN | l' | fvd | Vt scorr. | Vt fess.diag. | Vt,lim | c.s. | Verifica |
|---|---|---|---|---|---|---|---|---|---|---|---|---|---|
| SLV 1 | 371 | -12754 | 6795 | -305944 | | 2.09 | 217.5 | 1.25 | 7626 | | | 1.12 | Si |
| SLV 1 | 451 | -13159 | 7020 | -832671 | | 3.45 | 136.41 | 1.52 | 5815 | | | 0.83 | No, Vu<V |
| SLV 3 | 371 | -11823 | 8509 | 45797 | | 1.94 | 217.5 | 1.22 | 7440 | | | 0.87 | No, Vu<V |
| SLV 3 | 451 | -9444 | 8551 | -704910 | | 3.3 | 102.34 | 1.49 | 4277 | | | 0.5 | No, Vu<V |
| SLV 14 | 371 | -16824 | -11971 | -890200 | | 3.59 | 167.51 | 1.55 | 7273 | | | 0.61 | No, Vu<V |
| SLV 14 | 451 | -17533 | -12013 | 138292 | | 2.88 | 217.5 | 1.41 | 8582 | | | 0.71 | No, Vu<V |
| SLV 9 | 371 | -16485 | -7402 | -1096074 | | 4.64 | 126.78 | 1.63 | 5769 | | | 0.78 | No, Vu<V |
| SLV 9 | 451 | -20335 | -7138 | -350600 | | 3.34 | 217.5 | 1.5 | 9142 | | | 1.28 | Si |
| SLV 16 | 371 | -15893 | -10257 | -538460 | | 2.61 | 217.5 | 1.36 | 8254 | | | 0.8 | No, Vu<V |
| SLV 16 | 451 | -13819 | -10481 | 266053 | | 2.27 | 217.5 | 1.29 | 7839 | | | 0.75 | No, Vu<V |
| SLV 2 | 371 | -12754 | 6795 | -305944 | | 2.09 | 217.5 | 1.25 | 7626 | | | 1.12 | Si |
| SLV 2 | 451 | -13159 | 7020 | -832671 | | 3.45 | 136.41 | 1.52 | 5815 | | | 0.83 | No, Vu<V |
| SLV 13 | 371 | -16824 | -11971 | -890200 | | 3.59 | 167.51 | 1.55 | 7273 | | | 0.61 | No, Vu<V |
| SLV 13 | 451 | -17533 | -12013 | 138292 | | 2.88 | 217.5 | 1.41 | 8582 | | | 0.71 | No, Vu<V |
| SLV 15 | 371 | -15893 | -10257 | -538460 | | 2.61 | 217.5 | 1.36 | 8254 | | | 0.8 | No, Vu<V |
| SLV 15 | 451 | -13819 | -10481 | 266053 | | 2.27 | 217.5 | 1.29 | 7839 | | | 0.75 | No, Vu<V |
| SLV 4 | 371 | -11823 | 8509 | 45797 | | 1.94 | 217.5 | 1.22 | 7440 | | | 0.87 | No, Vu<V |
| SLV 4 | 451 | -9444 | 8551 | -704910 | | 3.3 | 102.34 | 1.49 | 4277 | | | 0.5 | No, Vu<V |
| SLV 10 | 371 | -16485 | -7402 | -1096074 | | 4.64 | 126.78 | 1.63 | 5769 | | | 0.78 | No, Vu<V |
| SLV 10 | 451 | -20335 | -7138 | -350600 | | 3.34 | 217.5 | 1.5 | 9142 | | | 1.28 | Si |

### Verifica a pressoflessione fuori piano D.M. 17-01-18 (N.T.C.)

quota 357.5 Wa 0.05 denominatore 8 γM = 2

| Comb. | fd | Sa | σ0 | N | M | Mc | Coeff.s. | Verifica |
|---|---|---|---|---|---|---|---|---|
| SLV 5 | 14 | 0.32 | 1.66 | -10123 | 20605 | 122442 | 5.94 | Si |
| SLV 6 | 14 | 0.32 | 1.66 | -10123 | 20605 | 122442 | 5.94 | Si |
| SLV 9 | 14 | 0.32 | 1.7 | -10332 | 20605 | 124559 | 6.05 | Si |
| SLV 10 | 14 | 0.32 | 1.7 | -10332 | 20605 | 124559 | 6.05 | Si |
| SLV 1 | 14 | 0.32 | 1.83 | -11165 | 20605 | 132855 | 6.45 | Si |
| SLV 2 | 14 | 0.32 | 1.83 | -11165 | 20605 | 132855 | 6.45 | Si |
| SLV 14 | 14 | 0.32 | 1.95 | -11860 | 20605 | 139578 | 6.77 | Si |
| SLV 13 | 14 | 0.32 | 1.95 | -11860 | 20605 | 139578 | 6.77 | Si |
| SLV 3 | 14 | 0.32 | 2.01 | -12266 | 20605 | 143422 | 6.96 | Si |
| SLV 4 | 14 | 0.32 | 2.01 | -12266 | 20605 | 143422 | 6.96 | Si |

### Verifica dei meccanismi locali di collasso con analisi cinematica lineare

forza di aggancio al piano = 0 quota mezzeria = 357.5 Wa = 0.05 Ta = 0.083

| Comb. | N top | N base | V orto | α0 | M* | e* | a0* | aLim | Verifica |
|---|---|---|---|---|---|---|---|---|---|
| SLV 7 | -5358 | -9466 | -97 | 0.035 | 8.755 | 0.909 | 55.588 | 1417.879 | No |
| SLV 8 | -5358 | -9466 | -97 | 0.035 | 8.755 | 0.909 | 55.588 | 1417.879 | No |
| SLV 9 | -17257 | -11456 | 95 | 0.037 | 20.776 | 0.955 | 55.696 | 1417.879 | No |
| SLV 10 | -17257 | -11456 | 95 | 0.037 | 20.776 | 0.955 | 55.696 | 1417.879 | No |
| SLV 6 | -17391 | -12000 | 87 | 0.037 | 20.912 | 0.955 | 56.309 | 1417.879 | No |
| SLV 5 | -17391 | -12000 | 87 | 0.037 | 20.912 | 0.955 | 56.309 | 1417.879 | No |
| SLV 12 | -5224 | -8922 | -89 | 0.036 | 8.622 | 0.908 | 57.303 | 1417.879 | No |
| SLV 11 | -5224 | -8922 | -89 | 0.036 | 8.622 | 0.908 | 57.303 | 1417.879 | No |
| SLV 13 | -12890 | -9935 | 40 | 0.04 | 16.342 | 0.944 | 61.589 | 813.056 | No |
| SLV 14 | -12890 | -9935 | 40 | 0.04 | 16.342 | 0.944 | 61.589 | 813.056 | No |

### Tabella dei coefficienti di sicurezza minimi

| Stato limite | Coeff.s. | Comb. | Verifica |
|---|---|---|---|
| PF_SLU | 1.711 | SLU 2 | Si |
| V_SLU | 1.741 | SLU 52 | Si |
| PF_SLV | 1.272 | SLV 3 | Si |
| V_SLV | 0.5 | SLV 3 | No |
| PFFP_SLV | 5.942 | SLV 5 | Si |
| R_SLV | 0.039 | SLV 7 | No |

## Maschio 60

Verifiche condotte secondo D.M. 17-01-18 (N.T.C.)

### Dati geometrici

| X ini. | Y ini. | X fin. | Y fin. | Quota i. | Quota.s | l | Sp. | h netta | h ini. | h fin. | a | a.s.,sx | a.s.,dx |
|---|---|---|---|---|---|---|---|---|---|---|---|---|---|
| -1831.3 | -335.9 | -1886.8 | -335.9 | L3 | L4 | 55.5 | 28 | 373 | 373 | 373 | | | |

### Caratteristiche del materiale

(Circolare 7 21-01-19 C8.5.I) Muratura in mattoni pieni e malta di calce LC2_Corti

| fb | fk | fvk0 | fmedio | τ0 | fv0 | μ | ϕ | fv,lim | E | G | FC |
|---|---|---|---|---|---|---|---|---|---|---|---|
| 60 | | | 34.5 | 0.9 | 2 | 0.58 | 0.77 | 3.25 | 32000 | 12800 | 1.2 |

### Verifica a pressoflessione nel piano secondo D.M. 17-01-18 NTC §7.8.2.2.1 in combinazioni non sismiche, γM = 3

| Comb. | Quota | N | M | σ0 | Mu | c.s. | Verifica |
|---|---|---|---|---|---|---|---|
| SLU 82 | 371 | -13029 | 2124 | 8.38 | 0 | 0 | No, Rottura per schiacciamento |

| Comb. | Quota | N | M | σ0 | Mu | c.s. | Verifica |
|---|---|---|---|---|---|---|---|
| SLU 82 | 451 | -12899 | 26447 | 8.3 | 0 | 0 | No, Rottura per schiacciamento |
| SLU 73 | 371 | -12644 | -284 | 8.14 | 397 | 1.399 | Si |
| SLU 73 | 451 | -12477 | 27487 | 8.03 | 4972 | 0.181 | No, M>Mu |
| SLU 84 | 371 | -13110 | 3332 | 8.44 | 0 | 0 | No, Rottura per schiacciamento |
| SLU 84 | 451 | -12987 | 24287 | 8.36 | 0 | 0 | No, Rottura per schiacciamento |
| SLU 76 | 371 | -12725 | 924 | 8.19 | 0 | 0 | No, Rottura per schiacciamento |
| SLU 76 | 451 | -12565 | 25327 | 8.09 | 2575 | 0.102 | No, M>Mu |
| SLU 83 | 371 | -12897 | 6838 | 8.3 | 0 | 0 | No, Rottura per schiacciamento |
| SLU 83 | 451 | -12806 | 20810 | 8.24 | 0 | 0 | No, Rottura per schiacciamento |
| SLU 77 | 371 | -12572 | 7913 | 8.09 | 2394 | 0.303 | No, M>Mu |
| SLU 77 | 451 | -12469 | 18000 | 8.02 | 5193 | 0.289 | No, M>Mu |
| SLU 81 | 371 | -12817 | 5630 | 8.25 | 0 | 0 | No, Rottura per schiacciamento |
| SLU 81 | 451 | -12718 | 22970 | 8.18 | 0 | 0 | No, Rottura per schiacciamento |
| SLU 80 | 371 | -12663 | 4468 | 8.15 | 0 | 0 | No, Rottura per schiacciamento |
| SLU 80 | 451 | -12533 | 20849 | 8.06 | 3463 | 0.166 | No, M>Mu |
| SLU 78 | 371 | -12784 | 4407 | 8.23 | 0 | 0 | No, Rottura per schiacciamento |
| SLU 78 | 451 | -12650 | 21477 | 8.14 | 243 | 0.011 | No, M>Mu |
| SLU 75 | 371 | -12704 | 3200 | 8.18 | 0 | 0 | No, Rottura per schiacciamento |
| SLU 75 | 451 | -12562 | 23637 | 8.08 | 2672 | 0.113 | No, M>Mu |

Verifica a pressoflessione nel piano secondo D.M. 17-01-18 NTC §7.8.2.2.1 in combinazioni sismiche, γM = 2

| Comb. | Quota | N | M | σ0 | Mu | c.s. | Verifica |
|---|---|---|---|---|---|---|---|
| SLV 4 | 371 | -8084 | 72654 | 5.2 | 128825 | 1.773 | Si |
| SLV 4 | 451 | -7729 | -92721 | 4.97 | 127178 | 1.372 | Si |
| SLV 2 | 371 | -10113 | 66266 | 6.51 | 131168 | 1.979 | Si |
| SLV 2 | 451 | -9197 | -67083 | 5.92 | 131600 | 1.962 | Si |
| SLV 15 | 371 | -7112 | -58460 | 4.58 | 123440 | 2.112 | Si |
| SLV 15 | 451 | -7807 | 97146 | 5.02 | 127572 | 1.313 | Si |
| SLV 10 | 371 | -11848 | -26410 | 7.62 | 123628 | 4.681 | Si |
| SLV 10 | 451 | -10960 | 86242 | 7.05 | 128589 | 1.491 | Si |
| SLV 16 | 371 | -7112 | -58460 | 4.58 | 123440 | 2.112 | Si |
| SLV 16 | 451 | -7807 | 97146 | 5.02 | 127572 | 1.313 | Si |
| SLV 3 | 371 | -8084 | 72654 | 5.2 | 128825 | 1.773 | Si |
| SLV 3 | 451 | -7729 | -92721 | 4.97 | 127178 | 1.372 | Si |
| SLV 13 | 371 | -9141 | -64848 | 5.88 | 131547 | 2.029 | Si |
| SLV 13 | 451 | -9275 | 122784 | 5.97 | 131659 | 1.072 | Si |
| SLV 1 | 371 | -10113 | 66266 | 6.51 | 131168 | 1.979 | Si |
| SLV 1 | 451 | -9197 | -67083 | 5.92 | 131600 | 1.962 | Si |
| SLV 14 | 371 | -9141 | -64848 | 5.88 | 131547 | 2.029 | Si |
| SLV 14 | 451 | -9275 | 122784 | 5.97 | 131659 | 1.072 | Si |
| SLV 9 | 371 | -11848 | -26410 | 7.62 | 123628 | 4.681 | Si |
| SLV 9 | 451 | -10960 | 86242 | 7.05 | 128589 | 1.491 | Si |

Verifica a taglio nel piano secondo D.M. 17-01-18 (N.T.C.) §7.8.2.2.2 con rottura per scorrimento in combinazioni non sismiche, γM = 3

| Comb. | Quota | N | V par | M | σ0 | σN | I' | fvd | Vt scorr. | Vt fess.diag. | Vt,lim | c.s. | Verifica |
|---|---|---|---|---|---|---|---|---|---|---|---|---|---|
| SLU 61 | 371 | -11906 | -335 | 785 | | 7.66 | 55.5 | 1.08 | 1684 | | | 5.02 | Si |
| SLU 61 | 451 | -11760 | -316 | 25483 | | 7.57 | 55.5 | 1.08 | 1684 | | | 5.33 | Si |
| SLU 76 | 371 | -12725 | -331 | 924 | | 8.19 | 55.5 | 1.08 | 1684 | | | 5.08 | Si |
| SLU 76 | 451 | -12565 | -308 | 25327 | | 8.09 | 55.5 | 1.08 | 1684 | | | 5.47 | Si |
| SLU 44 | 371 | -10293 | -333 | -1787 | | 6.62 | 55.5 | 1.08 | 1684 | | | 5.06 | Si |
| SLU 44 | 451 | -10071 | -312 | 23540 | | 6.48 | 55.5 | 1.08 | 1684 | | | 5.4 | Si |
| SLU 65 | 371 | -11415 | -331 | -448 | | 7.35 | 55.5 | 1.08 | 1684 | | | 5.09 | Si |
| SLU 65 | 451 | -11210 | -309 | 24504 | | 7.21 | 55.5 | 1.08 | 1684 | | | 5.45 | Si |
| SLU 10 | 371 | -9524 | -329 | -2206 | | 6.13 | 55.5 | 1.08 | 1684 | | | 5.11 | Si |
| SLU 10 | 451 | -9384 | -310 | 22683 | | 6.04 | 55.5 | 1.08 | 1684 | | | 5.44 | Si |
| SLU 82 | 371 | -13029 | -333 | 2124 | | 8.38 | 55.5 | 1.08 | 1684 | | | 5.05 | Si |
| SLU 82 | 451 | -12899 | -312 | 26447 | | 8.3 | 55.5 | 1.08 | 1684 | | | 5.39 | Si |
| SLU 52 | 371 | -11521 | -374 | -1622 | | 7.41 | 55.5 | 1.08 | 1684 | | | 4.5 | Si |
| SLU 52 | 451 | -11338 | -352 | 26523 | | 7.3 | 55.5 | 1.08 | 1684 | | | 4.79 | Si |
| SLU 55 | 371 | -11602 | -333 | -415 | | 7.47 | 55.5 | 1.08 | 1684 | | | 5.05 | Si |
| SLU 55 | 451 | -11426 | -311 | 24363 | | 7.35 | 55.5 | 1.08 | 1684 | | | 5.41 | Si |
| SLU 73 | 371 | -12644 | -372 | -284 | | 8.14 | 55.5 | 1.08 | 1684 | | | 4.52 | Si |
| SLU 73 | 451 | -12477 | -349 | 27487 | | 8.03 | 55.5 | 1.08 | 1684 | | | 4.83 | Si |
| SLU 31 | 371 | -10647 | -327 | -867 | | 6.85 | 55.5 | 1.08 | 1684 | | | 5.14 | Si |
| SLU 31 | 451 | -10523 | -306 | 23646 | | 6.77 | 55.5 | 1.08 | 1684 | | | 5.5 | Si |

Verifica a taglio nel piano secondo D.M. 17-01-18 (N.T.C.) §7.8.2.2.2 con rottura per scorrimento in combinazioni sismiche, γM = 2

| Comb. | Quota | N | V par | M | σ0 | σN | I' | fvd | Vt scorr. | Vt fess.diag. | Vt,lim | c.s. | Verifica |
|---|---|---|---|---|---|---|---|---|---|---|---|---|---|
| SLV 4 | 371 | -8084 | 2022 | 72654 | | 5.2 | 55.5 | 1.63 | 2525 | | | 1.25 | Si |
| SLV 4 | 451 | -7729 | 1920 | -92721 | | 5.84 | 47.26 | 1.63 | 2150 | | | 1.12 | Si |
| SLV 16 | 371 | -7112 | -1956 | -58460 | | 4.58 | 55.5 | 1.63 | 2525 | | | 1.29 | Si |
| SLV 16 | 451 | -7807 | -2076 | 97146 | | 6.07 | 45.92 | 1.63 | 2089 | | | 1.01 | Si |
| SLV 9 | 371 | -11848 | -1391 | -26410 | | 7.62 | 55.5 | 1.63 | 2525 | | | 1.81 | Si |
| SLV 9 | 451 | -10960 | -977 | 86242 | | 7.05 | 55.5 | 1.63 | 2525 | | | 2.58 | Si |
| SLV 13 | 371 | -9141 | -2338 | -64848 | | 5.88 | 55.5 | 1.63 | 2525 | | | 1.08 | Si |
| SLV 13 | 451 | -9275 | -2215 | 122784 | | 7.61 | 43.54 | 1.63 | 1981 | | | 0.89 | No, Vu<V |
| SLV 10 | 371 | -11848 | -1391 | -26410 | | 7.62 | 55.5 | 1.63 | 2525 | | | 1.81 | Si |

| Comb. | Quota | N | V par | M | σ0 | σN | l' | fvd | Vt scorr. | Vt fess.diag. | Vt,lim | c.s. | Verifica |
|---|---|---|---|---|---|---|---|---|---|---|---|---|---|
| SLV 10 | 451 | -10960 | -977 | 86242 | | 7.05 | 55.5 | 1.63 | 2525 | | | 2.58 | Si |
| SLV 3 | 371 | -8084 | 2022 | 72654 | | 5.2 | 55.5 | 1.63 | 2525 | | | 1.25 | Si |
| SLV 3 | 451 | -7729 | 1920 | -92721 | | 5.84 | 47.26 | 1.63 | 2150 | | | 1.12 | Si |
| SLV 14 | 371 | -9141 | -2338 | -64848 | | 5.88 | 55.5 | 1.63 | 2525 | | | 1.08 | Si |
| SLV 14 | 451 | -9275 | -2215 | 122784 | | 7.61 | 43.54 | 1.63 | 1981 | | | 0.89 | No, Vu<V |
| SLV 15 | 371 | -7112 | -1956 | -58460 | | 4.58 | 55.5 | 1.63 | 2525 | | | 1.29 | Si |
| SLV 15 | 451 | -7807 | -2076 | 97146 | | 6.07 | 45.92 | 1.63 | 2089 | | | 1.01 | Si |
| SLV 1 | 371 | -10113 | 1640 | 66266 | | 6.51 | 55.5 | 1.63 | 2525 | | | 1.54 | Si |
| SLV 1 | 451 | -9197 | 1782 | -67083 | | 5.92 | 55.5 | 1.63 | 2525 | | | 1.42 | Si |
| SLV 2 | 371 | -10113 | 1640 | 66266 | | 6.51 | 55.5 | 1.63 | 2525 | | | 1.54 | Si |
| SLV 2 | 451 | -9197 | 1782 | -67083 | | 5.92 | 55.5 | 1.63 | 2525 | | | 1.42 | Si |

### Verifica a pressoflessione fuori piano D.M. 17-01-18 (N.T.C.)

quota 357.5 Wa 0.05 denominatore 8 γM = 2

| Comb. | fd | Sa | σ0 | N | M | Mc | Coeff.s. | Verifica |
|---|---|---|---|---|---|---|---|---|
| SLV 8 | 14 | 0.32 | 2.37 | -3679 | 5258 | 41525 | 7.9 | Si |
| SLV 7 | 14 | 0.32 | 2.37 | -3679 | 5258 | 41525 | 7.9 | Si |
| SLV 12 | 14 | 0.32 | 2.61 | -4063 | 5258 | 44710 | 8.5 | Si |
| SLV 11 | 14 | 0.32 | 2.61 | -4063 | 5258 | 44710 | 8.5 | Si |
| SLV 3 | 14 | 0.32 | 3.67 | -5706 | 5258 | 55877 | 10.63 | Si |
| SLV 4 | 14 | 0.32 | 3.67 | -5706 | 5258 | 55877 | 10.63 | Si |
| SLV 15 | 14 | 0.32 | 4.5 | -6986 | 5258 | 61821 | 11.76 | Si |
| SLV 16 | 14 | 0.32 | 4.5 | -6986 | 5258 | 61821 | 11.76 | Si |
| SLV 1 | 14 | 0.32 | 5.04 | -7827 | 5258 | 64410 | 12.25 | Si |
| SLV 2 | 14 | 0.32 | 5.04 | -7827 | 5258 | 64410 | 12.25 | Si |

### Verifica dei meccanismi locali di collasso con analisi cinematica lineare

forza di aggancio al piano = 0 quota mezzeria = 357.5 Wa = 0.05 Ta = 0.083

| Comb. | N top | N base | V orto | α0 | M* | e* | a0* | aLim | Verifica |
|---|---|---|---|---|---|---|---|---|---|
| SLV 5 | -4557 | -12647 | 5 | 0.04 | 5.458 | 0.956 | 61.473 | 1417.879 | No |
| SLV 6 | -4557 | -12647 | 5 | 0.04 | 5.458 | 0.956 | 61.473 | 1417.879 | No |
| SLV 10 | -4845 | -13404 | -2 | 0.041 | 5.75 | 0.958 | 62.04 | 1417.879 | No |
| SLV 9 | -4845 | -13404 | -2 | 0.041 | 5.75 | 0.958 | 62.04 | 1417.879 | No |
| SLV 7 | -2436 | -4261 | 4 | 0.043 | 3.306 | 0.932 | 66.565 | 1417.879 | No |
| SLV 8 | -2436 | -4261 | 4 | 0.043 | 3.306 | 0.932 | 66.565 | 1417.879 | No |
| SLV 11 | -2724 | -5018 | -2 | 0.043 | 3.597 | 0.937 | 66.59 | 1417.879 | No |
| SLV 12 | -2724 | -5018 | -2 | 0.043 | 3.597 | 0.937 | 66.59 | 1417.879 | No |
| SLV 14 | -4438 | -11352 | -9 | 0.04 | 5.337 | 0.955 | 60.302 | 813.056 | No |
| SLV 13 | -4438 | -11352 | -9 | 0.04 | 5.337 | 0.955 | 60.302 | 813.056 | No |

### Tabella dei coefficienti di sicurezza minimi

| Stato limite | Coeff.s. | Comb. | Verifica |
|---|---|---|---|
| PF_SLU | 0 | SLU 75 | No |
| V_SLU | 4.502 | SLU 52 | Si |
| PF_SLV | 1.072 | SLV 13 | Si |
| V_SLV | 0.894 | SLV 13 | No |
| PFFP_SLV | 7.898 | SLV 7 | Si |
| R_SLV | 0.043 | SLV 5 | No |

## Maschio 61

Verifiche condotte secondo D.M. 17-01-18 (N.T.C.)

### Dati geometrici

| X ini. | Y ini. | X fin. | Y fin. | Quota i. | Quota.s | l | Sp. | h netta | h ini. | h fin. | a | a.s.,sx | a.s.,dx |
|---|---|---|---|---|---|---|---|---|---|---|---|---|---|
| -1961.8 | 104.6 | -1961.8 | 581.1 | L3 | L4 | 476.5 | 14 | 373 | 373 | 373 | | | |

### Caratteristiche del materiale

(Circolare 7 21-01-19 C8.5.I) Muratura in mattoni pieni e malta di calce LC2_Corti

| fb | fk | fvk0 | fmedio | τ0 | fv0 | μ | ϕ | fv,lim | E | G | FC |
|---|---|---|---|---|---|---|---|---|---|---|---|
| 60 | | | 34.5 | 0.9 | 2 | 0.58 | 0.77 | 3.25 | 32000 | 12800 | 1.2 |

### Verifica a pressoflessione nel piano secondo D.M. 17-01-18 NTC §7.8.2.2.1 in combinazioni non sismiche, γM = 3

| Comb. | Quota | N | M | σ0 | Mu | c.s. | Verifica |
|---|---|---|---|---|---|---|---|
| SLU 83 | 171 | -53429 | 2188080 | 8.01 | 213986 | 0.098 | No, M>Mu |
| SLU 83 | 544 | -38771 | -142400 | 5.81 | 2646910 | 18.588 | Si |
| SLU 79 | 171 | -52428 | 2091695 | 7.86 | 440031 | 0.21 | No, M>Mu |
| SLU 79 | 544 | -38812 | -98629 | 5.82 | 2642772 | 26.795 | Si |
| SLU 74 | 171 | -51852 | 2108252 | 7.77 | 566296 | 0.269 | No, M>Mu |
| SLU 74 | 544 | -37479 | -134317 | 5.62 | 2771034 | 20.63 | Si |
| SLU 82 | 171 | -52160 | 2196719 | 7.82 | 499224 | 0.227 | No, M>Mu |
| SLU 82 | 544 | -37078 | -161000 | 5.56 | 2806579 | 17.432 | Si |
| SLU 81 | 171 | -52351 | 2187568 | 7.85 | 457029 | 0.209 | No, M>Mu |
| SLU 81 | 544 | -37154 | -164096 | 5.57 | 2799955 | 17.063 | Si |
| SLU 78 | 171 | -52737 | 2117914 | 7.91 | 371144 | 0.175 | No, M>Mu |
| SLU 78 | 544 | -39021 | -109526 | 5.85 | 2621295 | 23.933 | Si |
| SLU 80 | 171 | -52236 | 2100845 | 7.83 | 482355 | 0.23 | No, M>Mu |
| SLU 80 | 544 | -38736 | -95534 | 5.81 | 2650499 | 27.744 | Si |
| SLU 75 | 171 | -51660 | 2117402 | 7.74 | 607650 | 0.287 | No, M>Mu |
| SLU 75 | 544 | -37403 | -131222 | 5.61 | 2777874 | 21.169 | Si |
| SLU 77 | 171 | -52929 | 2108764 | 7.93 | 327977 | 0.156 | No, M>Mu |
| SLU 77 | 544 | -39097 | -112622 | 5.86 | 2613378 | 23.205 | Si |
| SLU 84 | 171 | -53237 | 2197231 | 7.98 | 257994 | 0.117 | No, M>Mu |
| SLU 84 | 544 | -38695 | -139305 | 5.8 | 2654611 | 19.056 | Si |

Verifica a pressoflessione nel piano secondo D.M. 17-01-18 NTC §7.8.2.2.1 in combinazioni sismiche, γM = 2

| Comb. | Quota | N | M | σ0 | Mu | c.s. | Verifica |
|---|---|---|---|---|---|---|---|
| SLV 12 | 171 | -42115 | 1988340 | 6.31 | 4849935 | 2.439 | Si |
| SLV 12 | 544 | -28066 | 58163 | 4.21 | 4384547 | 75.383 | Si |
| SLV 14 | 171 | -28835 | 1860391 | 4.32 | 4439863 | 2.387 | Si |
| SLV 14 | 544 | -21373 | 557052 | 3.2 | 3757062 | 6.745 | Si |
| SLV 11 | 171 | -42115 | 1988340 | 6.31 | 4849935 | 2.439 | Si |
| SLV 11 | 544 | -28066 | 58163 | 4.21 | 4384547 | 75.383 | Si |
| SLD 16 | 171 | -34524 | 1719731 | 5.18 | 4741782 | 2.757 | Si |
| SLD 16 | 544 | -24288 | 180963 | 3.64 | 4062531 | 22.45 | Si |
| SLV 13 | 171 | -28835 | 1860391 | 4.32 | 4439863 | 2.387 | Si |
| SLV 13 | 544 | -21373 | 557052 | 3.2 | 3757062 | 6.745 | Si |
| SLD 13 | 171 | -32491 | 1631040 | 4.87 | 4655616 | 2.854 | Si |
| SLD 13 | 544 | -23269 | 193404 | 3.49 | 3961406 | 20.483 | Si |
| SLD 14 | 171 | -32491 | 1631040 | 4.87 | 4655616 | 2.854 | Si |
| SLD 14 | 544 | -23269 | 193404 | 3.49 | 3961406 | 20.483 | Si |
| SLD 15 | 171 | -34524 | 1719731 | 5.18 | 4741782 | 2.757 | Si |
| SLD 15 | 544 | -24288 | 180963 | 3.64 | 4062531 | 22.45 | Si |
| SLV 16 | 171 | -33697 | 2087438 | 5.05 | 4709638 | 2.256 | Si |
| SLV 16 | 544 | -23787 | 526919 | 3.57 | 4013628 | 7.617 | Si |
| SLV 15 | 171 | -33697 | 2087438 | 5.05 | 4709638 | 2.256 | Si |
| SLV 15 | 544 | -23787 | 526919 | 3.57 | 4013628 | 7.617 | Si |

Verifica a taglio nel piano secondo D.M. 17-01-18 (N.T.C.) §7.8.2.2.2 con rottura per scorrimento in combinazioni non sismiche, γM = 3

| Comb. | Quota | N | V par | M | σ0 | σN | l' | fvd | Vt scorr. | Vt fess.diag. | Vt,lim | c.s. | Verifica |
|---|---|---|---|---|---|---|---|---|---|---|---|---|---|
| SLU 83 | 171 | -53429 | 3168 | 2188080 | | 8.01 | 476.52 | 1.08 | 7227 | | | 2.28 | Si |
| SLU 83 | 544 | -38771 | 604 | -142400 | | 5.81 | 476.52 | 1.08 | 7227 | | | 11.97 | Si |
| SLU 81 | 171 | -52351 | 3457 | 2187568 | | 7.85 | 476.52 | 1.08 | 7227 | | | 2.09 | Si |
| SLU 81 | 544 | -37154 | 1036 | -164096 | | 5.57 | 476.52 | 1.08 | 7227 | | | 6.98 | Si |
| SLU 75 | 171 | -51660 | 3043 | 2117402 | | 7.74 | 476.52 | 1.08 | 7227 | | | 2.37 | Si |
| SLU 75 | 544 | -37403 | 559 | -131222 | | 5.61 | 476.52 | 1.08 | 7227 | | | 12.93 | Si |
| SLU 60 | 171 | -47170 | 3132 | 1983037 | | 7.07 | 476.52 | 1.08 | 7227 | | | 2.31 | Si |
| SLU 60 | 544 | -32966 | 942 | -132703 | | 4.94 | 476.52 | 1.08 | 7227 | | | 7.67 | Si |
| SLU 61 | 171 | -46978 | 3108 | 1992187 | | 7.04 | 476.52 | 1.08 | 7227 | | | 2.33 | Si |
| SLU 61 | 544 | -32890 | 925 | -129608 | | 4.93 | 476.52 | 1.08 | 7227 | | | 7.82 | Si |
| SLU 73 | 171 | -49953 | 3197 | 2105921 | | 7.49 | 476.52 | 1.08 | 7227 | | | 2.26 | Si |
| SLU 73 | 544 | -35451 | 856 | -136862 | | 5.31 | 476.52 | 1.08 | 7227 | | | 8.44 | Si |
| SLU 84 | 171 | -53237 | 3144 | 2197231 | | 7.98 | 476.52 | 1.08 | 7227 | | | 2.3 | Si |
| SLU 84 | 544 | -38695 | 586 | -139305 | | 5.8 | 476.52 | 1.08 | 7227 | | | 12.33 | Si |
| SLU 39 | 171 | -44432 | 2989 | 1858423 | | 6.66 | 476.52 | 1.08 | 7227 | | | 2.42 | Si |
| SLU 39 | 544 | -31864 | 959 | -158732 | | 4.78 | 476.52 | 1.08 | 7227 | | | 7.54 | Si |
| SLU 82 | 171 | -52160 | 3433 | 2196719 | | 7.82 | 476.52 | 1.08 | 7227 | | | 2.11 | Si |
| SLU 82 | 544 | -37078 | 1018 | -161000 | | 5.56 | 476.52 | 1.08 | 7227 | | | 7.1 | Si |
| SLU 74 | 171 | -51852 | 3067 | 2108252 | | 7.77 | 476.52 | 1.08 | 7227 | | | 2.36 | Si |
| SLU 74 | 544 | -37479 | 577 | -134317 | | 5.62 | 476.52 | 1.08 | 7227 | | | 12.53 | Si |

Verifica a taglio nel piano secondo D.M. 17-01-18 (N.T.C.) §7.8.2.2.2 con rottura per scorrimento in combinazioni sismiche, γM = 2

| Comb. | Quota | N | V par | M | σ0 | σN | l' | fvd | Vt scorr. | Vt fess.diag. | Vt,lim | c.s. | Verifica |
|---|---|---|---|---|---|---|---|---|---|---|---|---|---|
| SLV 7 | 171 | -44468 | 18485 | 1676353 | | 6.67 | 476.52 | 1.63 | 10841 | | | 0.59 | No, Vu<V |
| SLV 7 | 544 | -29318 | 13382 | -313493 | | 4.39 | 476.52 | 1.63 | 10841 | | | 0.81 | No, Vu<V |
| SLV 12 | 171 | -42115 | 15623 | 1988340 | | 6.31 | 476.52 | 1.63 | 10841 | | | 0.69 | No, Vu<V |
| SLV 12 | 544 | -28066 | 10107 | 58163 | | 4.21 | 476.52 | 1.63 | 10841 | | | 1.07 | Si |
| SLV 3 | 171 | -41541 | 11404 | 1047480 | | 6.23 | 476.52 | 1.63 | 10841 | | | 0.95 | No, Vu<V |
| SLV 3 | 544 | -27963 | 9326 | -711937 | | 4.19 | 476.52 | 1.63 | 10841 | | | 1.16 | Si |
| SLV 8 | 171 | -44468 | 18485 | 1676353 | | 6.67 | 476.52 | 1.63 | 10841 | | | 0.59 | No, Vu<V |
| SLV 8 | 544 | -29318 | 13382 | -313493 | | 4.39 | 476.52 | 1.63 | 10841 | | | 0.81 | No, Vu<V |
| SLV 4 | 171 | -41541 | 11404 | 1047480 | | 6.23 | 476.52 | 1.63 | 10841 | | | 0.95 | No, Vu<V |
| SLV 4 | 544 | -27963 | 9326 | -711937 | | 4.19 | 476.52 | 1.63 | 10841 | | | 1.16 | Si |
| SLV 9 | 171 | -25907 | -14145 | 1231518 | | 3.88 | 476.52 | 1.61 | 10741 | | | 0.76 | No, Vu<V |
| SLV 9 | 544 | -20017 | -12400 | 158609 | | 3 | 476.52 | 1.43 | 9563 | | | 0.77 | No, Vu<V |
| SLV 10 | 171 | -25907 | -14145 | 1231518 | | 3.88 | 476.52 | 1.61 | 10741 | | | 0.76 | No, Vu<V |
| SLV 10 | 544 | -20017 | -12400 | 158609 | | 3 | 476.52 | 1.43 | 9563 | | | 0.77 | No, Vu<V |
| SLV 11 | 171 | -42115 | 15623 | 1988340 | | 6.31 | 476.52 | 1.63 | 10841 | | | 0.69 | No, Vu<V |
| SLV 11 | 544 | -28066 | 10107 | 58163 | | 4.21 | 476.52 | 1.63 | 10841 | | | 1.07 | Si |
| SLV 5 | 171 | -28260 | -11284 | 919531 | | 4.24 | 476.52 | 1.63 | 10841 | | | 0.96 | No, Vu<V |
| SLV 5 | 544 | -21270 | -9125 | -213048 | | 3.19 | 476.52 | 1.47 | 9813 | | | 1.08 | Si |
| SLV 6 | 171 | -28260 | -11284 | 919531 | | 4.24 | 476.52 | 1.63 | 10841 | | | 0.96 | No, Vu<V |
| SLV 6 | 544 | -21270 | -9125 | -213048 | | 3.19 | 476.52 | 1.47 | 9813 | | | 1.08 | Si |

Verifica a pressoflessione fuori piano D.M. 17-01-18 (N.T.C.)

quota 357.5 Wa 0.03 denominatore 8 γM = 2

| Comb. | fd | Sa | σ0 | N | M | Mc | Coeff.s. | Verifica |
|---|---|---|---|---|---|---|---|---|
| SLV 10 | 14 | 0.32 | 3.69 | -24596 | 24146 | 120220 | 4.98 | Si |
| SLV 9 | 14 | 0.32 | 3.69 | -24596 | 24146 | 120220 | 4.98 | Si |
| SLV 6 | 14 | 0.32 | 3.85 | -25709 | 24146 | 123203 | 5.1 | Si |
| SLV 5 | 14 | 0.32 | 3.85 | -25709 | 24146 | 123203 | 5.1 | Si |
| SLV 13 | 14 | 0.32 | 4.02 | -26843 | 24146 | 126025 | 5.22 | Si |
| SLV 14 | 14 | 0.32 | 4.02 | -26843 | 24146 | 126025 | 5.22 | Si |
| SLV 15 | 14 | 0.32 | 4.48 | -29883 | 24146 | 132496 | 5.49 | Si |
| SLV 16 | 14 | 0.32 | 4.48 | -29883 | 24146 | 132496 | 5.49 | Si |
| SLV 2 | 14 | 0.32 | 4.58 | -30554 | 24146 | 133709 | 5.54 | Si |
| SLV 1 | 14 | 0.32 | 4.58 | -30554 | 24146 | 133709 | 5.54 | Si |

Verifica dei meccanismi locali di collasso con analisi cinematica lineare

forza di aggancio al piano = 0 quota mezzeria = 357.5 Wa = 0.03 Ta = 0.166

| Comb. | N top | N base | V orto | α0 | M* | e* | a0* | aLim | Verifica |
|---|---|---|---|---|---|---|---|---|---|
| SLV 7 | -29318 | -44468 | 41 | 0.019 | 33.353 | 0.968 | 28.228 | 1399.295 | No |

| Comb. | N top | N base | V orto | α0 | M* | e* | a0* | aLim | Verifica |
|---|---|---|---|---|---|---|---|---|---|
| SLV 8 | -29318 | -44468 | 41 | 0.019 | 33.353 | 0.968 | 28.228 | 1399.295 | No |
| SLV 4 | -27963 | -41541 | 26 | 0.019 | 31.973 | 0.967 | 29.032 | 1435.066 | No |
| SLV 3 | -27963 | -41541 | 26 | 0.019 | 31.973 | 0.967 | 29.032 | 1435.066 | No |
| SLV 9 | -20017 | -25907 | -42 | 0.019 | 23.89 | 0.957 | 28.501 | 1399.295 | No |
| SLV 10 | -20017 | -25907 | -42 | 0.019 | 23.89 | 0.957 | 28.501 | 1399.295 | No |
| SLV 14 | -21373 | -28835 | -27 | 0.019 | 25.268 | 0.959 | 29.423 | 1435.066 | No |
| SLV 13 | -21373 | -28835 | -27 | 0.019 | 25.268 | 0.959 | 29.423 | 1435.066 | No |
| SLV 11 | -28066 | -42115 | 32 | 0.019 | 32.078 | 0.967 | 28.713 | 1399.295 | No |
| SLV 12 | -28066 | -42115 | 32 | 0.019 | 32.078 | 0.967 | 28.713 | 1399.295 | No |

### Tabella dei coefficienti di sicurezza minimi

| Stato limite | Coeff.s. | Comb. | Verifica |
|---|---|---|---|
| PF_SLU | 0.098 | SLU 83 | No |
| V_SLU | 2.091 | SLU 81 | Si |
| PF_SLV | 2.256 | SLV 15 | Si |
| V_SLV | 0.586 | SLV 7 | No |
| PFFP_SLV | 4.979 | SLV 9 | Si |
| R_SLV | 0.02 | SLV 7 | No |

## Maschio 62

Verifiche condotte secondo D.M. 17-01-18 (N.T.C.)

### Dati geometrici

| X ini. | Y ini. | X fin. | Y fin. | Quota i. | Quota.s | l | Sp. | h netta | h ini. | h fin. | a | a.s.,sx | a.s.,dx |
|---|---|---|---|---|---|---|---|---|---|---|---|---|---|
| -1961.8 | 595.1 | -1961.8 | 666.1 | L3 | L4 | 71 | 28 | 373 | 373 | 373 | | | |

### Caratteristiche del materiale

(Circolare 7 21-01-19 C8.5.I) Muratura in mattoni pieni e malta di calce LC2_Corti

| fb | fk | fvk0 | fmedio | τ0 | fv0 | μ | ϕ | fv,lim | E | G | FC |
|---|---|---|---|---|---|---|---|---|---|---|---|
| 60 | | | 34.5 | 0.9 | 2 | 0.58 | 0.77 | 3.25 | 32000 | 12800 | 1.2 |

### Verifica a pressoflessione nel piano secondo D.M. 17-01-18 NTC §7.8.2.2.1 in combinazioni non sismiche, γM = 3

| Comb. | Quota | N | M | σ0 | Mu | c.s. | Verifica |
|---|---|---|---|---|---|---|---|
| SLU 78 | 171 | -16424 | -100526 | 8.26 | 0 | 0 | No, Rottura per schiacciamento |
| SLU 78 | 544 | -8220 | -4392 | 4.13 | 143688 | 32.715 | Si |
| SLU 84 | 171 | -16900 | -103800 | 8.5 | 0 | 0 | No, Rottura per schiacciamento |
| SLU 84 | 544 | -7954 | -1880 | 4 | 143676 | 76.423 | Si |
| SLU 81 | 171 | -16852 | -104055 | 8.48 | 0 | 0 | No, Rottura per schiacciamento |
| SLU 81 | 544 | -7441 | 359 | 3.74 | 142779 | 397.777 | Si |
| SLU 79 | 171 | -16243 | -99406 | 8.17 | 0 | 0 | No, Rottura per schiacciamento |
| SLU 79 | 544 | -8240 | -4875 | 4.14 | 143676 | 29.472 | Si |
| SLU 75 | 171 | -16371 | -100602 | 8.24 | 0 | 0 | No, Rottura per schiacciamento |
| SLU 75 | 544 | -7691 | -2089 | 3.87 | 143361 | 68.614 | Si |
| SLU 82 | 171 | -16848 | -103876 | 8.47 | 0 | 0 | No, Rottura per schiacciamento |
| SLU 82 | 544 | -7425 | 423 | 3.74 | 142732 | 337.69 | Si |
| SLU 80 | 171 | -16238 | -99227 | 8.17 | 0 | 0 | No, Rottura per schiacciamento |
| SLU 80 | 544 | -8224 | -4811 | 4.14 | 143686 | 29.864 | Si |
| SLU 74 | 171 | -16376 | -100781 | 8.24 | 0 | 0 | No, Rottura per schiacciamento |
| SLU 74 | 544 | -7708 | -2153 | 3.88 | 143389 | 66.596 | Si |
| SLU 77 | 171 | -16429 | -100705 | 8.26 | 0 | 0 | No, Rottura per schiacciamento |
| SLU 77 | 544 | -8236 | -4456 | 4.14 | 143679 | 32.245 | Si |
| SLU 83 | 171 | -16905 | -103979 | 8.5 | 0 | 0 | No, Rottura per schiacciamento |
| SLU 83 | 544 | -7970 | -1944 | 4.01 | 143686 | 73.922 | Si |

### Verifica a pressoflessione nel piano secondo D.M. 17-01-18 NTC §7.8.2.2.1 in combinazioni sismiche, γM = 2

| Comb. | Quota | N | M | σ0 | Mu | c.s. | Verifica |
|---|---|---|---|---|---|---|---|
| SLV 5 | 171 | -6624 | -82961 | 3.33 | 171029 | 2.062 | Si |
| SLV 5 | 544 | -883 | 15856 | 0.44 | 30222 | 1.906 | Si |
| SLV 3 | 171 | -13435 | -133992 | 6.76 | 213151 | 1.591 | Si |
| SLV 3 | 544 | -2517 | 14462 | 1.27 | 80103 | 5.539 | Si |
| SLD 3 | 171 | -12179 | -97001 | 6.13 | 215580 | 2.222 | Si |
| SLD 3 | 544 | -3954 | 5637 | 1.99 | 117512 | 20.845 | Si |
| SLV 4 | 171 | -13435 | -133992 | 6.76 | 213151 | 1.591 | Si |
| SLV 4 | 544 | -2517 | 14462 | 1.27 | 80103 | 5.539 | Si |
| SLV 2 | 171 | -10524 | -130796 | 5.29 | 211739 | 1.619 | Si |
| SLV 2 | 544 | -642 | 21153 | 0.32 | 22193 | 1.049 | Si |
| SLD 4 | 171 | -12179 | -97001 | 6.13 | 215580 | 2.222 | Si |
| SLD 4 | 544 | -3954 | 5637 | 1.99 | 117512 | 20.845 | Si |
| SLV 1 | 171 | -10524 | -130796 | 5.29 | 211739 | 1.619 | Si |
| SLV 1 | 544 | -642 | 21153 | 0.32 | 22193 | 1.049 | Si |
| SLV 8 | 171 | -16328 | -93614 | 8.21 | 190011 | 2.03 | Si |
| SLV 8 | 544 | -7134 | -6450 | 3.59 | 178878 | 27.733 | Si |
| SLV 7 | 171 | -16328 | -93614 | 8.21 | 190011 | 2.03 | Si |
| SLV 7 | 544 | -7134 | -6450 | 3.59 | 178878 | 27.733 | Si |

| Comb. | Quota | N | M | σ0 | Mu | c.s. | Verifica |
|---|---|---|---|---|---|---|---|
| SLV 6 | 171 | -6624 | -82961 | 3.33 | 171029 | 2.062 | Si |
| SLV 6 | 544 | -883 | 15856 | 0.44 | 30222 | 1.906 | Si |

Verifica a taglio nel piano secondo D.M. 17-01-18 (N.T.C.) §7.8.2.2.2 con rottura per scorrimento in combinazioni non sismiche, γM = 3

| Comb. | Quota | N | V par | M | σ0 | σN | l' | fvd | Vt scorr. | Vt fess.diag. | Vt,lim | c.s. | Verifica |
|---|---|---|---|---|---|---|---|---|---|---|---|---|---|
| SLU 73 | 171 | -16130 | -2707 | -99260 | | 8.11 | 71 | 1.08 | 2154 | | | 0.8 | No, Vu<V |
| SLU 73 | 544 | -7156 | -1124 | -163 | | 3.6 | 71 | 1.04 | 2059 | | | 1.83 | Si |
| SLU 78 | 171 | -16424 | -2668 | -100526 | | 8.26 | 71 | 1.08 | 2154 | | | 0.81 | No, Vu<V |
| SLU 78 | 544 | -8220 | -815 | -4392 | | 4.13 | 71 | 1.08 | 2154 | | | 2.64 | Si |
| SLU 76 | 171 | -16183 | -2665 | -99184 | | 8.14 | 71 | 1.08 | 2154 | | | 0.81 | No, Vu<V |
| SLU 76 | 544 | -7685 | -945 | -2466 | | 3.87 | 71 | 1.07 | 2129 | | | 2.25 | Si |
| SLU 81 | 171 | -16852 | -2839 | -104055 | | 8.48 | 71 | 1.08 | 2154 | | | 0.76 | No, Vu<V |
| SLU 81 | 544 | -7441 | -1202 | 359 | | 3.74 | 71 | 1.05 | 2097 | | | 1.74 | Si |
| SLU 84 | 171 | -16900 | -2795 | -103800 | | 8.5 | 71 | 1.08 | 2154 | | | 0.77 | No, Vu<V |
| SLU 84 | 544 | -7954 | -1031 | -1880 | | 4 | 71 | 1.08 | 2154 | | | 2.09 | Si |
| SLU 74 | 171 | -16376 | -2712 | -100781 | | 8.24 | 71 | 1.08 | 2154 | | | 0.79 | No, Vu<V |
| SLU 74 | 544 | -7708 | -986 | -2153 | | 3.88 | 71 | 1.07 | 2132 | | | 2.16 | Si |
| SLU 82 | 171 | -16848 | -2837 | -103876 | | 8.47 | 71 | 1.08 | 2154 | | | 0.76 | No, Vu<V |
| SLU 82 | 544 | -7425 | -1211 | 423 | | 3.74 | 71 | 1.05 | 2094 | | | 1.73 | Si |
| SLU 77 | 171 | -16429 | -2670 | -100705 | | 8.26 | 71 | 1.08 | 2154 | | | 0.81 | No, Vu<V |
| SLU 77 | 544 | -8236 | -806 | -4456 | | 4.14 | 71 | 1.08 | 2154 | | | 2.67 | Si |
| SLU 83 | 171 | -16905 | -2797 | -103979 | | 8.5 | 71 | 1.08 | 2154 | | | 0.77 | No, Vu<V |
| SLU 83 | 544 | -7970 | -1023 | -1944 | | 4.01 | 71 | 1.08 | 2154 | | | 2.11 | Si |
| SLU 75 | 171 | -16371 | -2710 | -100602 | | 8.24 | 71 | 1.08 | 2154 | | | 0.79 | No, Vu<V |
| SLU 75 | 544 | -7691 | -994 | -2089 | | 3.87 | 71 | 1.07 | 2130 | | | 2.14 | Si |

Verifica a taglio nel piano secondo D.M. 17-01-18 (N.T.C.) §7.8.2.2.2 con rottura per scorrimento in combinazioni sismiche, γM = 2

| Comb. | Quota | N | V par | M | σ0 | σN | l' | fvd | Vt scorr. | Vt fess.diag. | Vt,lim | c.s. | Verifica |
|---|---|---|---|---|---|---|---|---|---|---|---|---|---|
| SLV 12 | 171 | -15897 | -3230 | -55808 | | 8 | 71 | 1.63 | 3230 | | | 1 | Si |
| SLV 12 | 544 | -9216 | 1507 | -17683 | | 4.64 | 71 | 1.63 | 3230 | | | 2.14 | Si |
| SLV 4 | 171 | -13435 | -5018 | -133992 | | 6.76 | 71 | 1.63 | 3230 | | | 0.64 | No, Vu<V |
| SLV 4 | 544 | -2517 | -2794 | 14462 | | 1.27 | 71 | 1.09 | 2160 | | | 0.77 | No, Vu<V |
| SLV 2 | 171 | -10524 | -3758 | -130796 | | 5.43 | 69.21 | 1.63 | 3149 | | | 0.84 | No, Vu<V |
| SLV 2 | 544 | -642 | -3683 | 21153 | | 2.99 | 7.67 | 1.43 | 307 | | | 0.08 | No, Vu<V |
| SLV 11 | 171 | -15897 | -3230 | -55808 | | 8 | 71 | 1.63 | 3230 | | | 1 | Si |
| SLV 11 | 544 | -9216 | 1507 | -17683 | | 4.64 | 71 | 1.63 | 3230 | | | 2.14 | Si |
| SLV 7 | 171 | -16328 | -4733 | -93614 | | 8.21 | 71 | 1.63 | 3230 | | | 0.68 | No, Vu<V |
| SLV 7 | 544 | -7134 | 1 | -6450 | | 3.59 | 71 | 1.55 | 3083 | | | 1000 | Si |
| SLV 6 | 171 | -6624 | -536 | -82961 | | 3.43 | 68.93 | 1.52 | 2933 | | | 5.48 | Si |
| SLV 6 | 544 | -883 | -2963 | 15856 | | 0.6 | 52.66 | 0.95 | 1405 | | | 0.47 | No, Vu<V |
| SLV 1 | 171 | -10524 | -3758 | -130796 | | 5.43 | 69.21 | 1.63 | 3149 | | | 0.84 | No, Vu<V |
| SLV 1 | 544 | -642 | -3683 | 21153 | | 2.99 | 7.67 | 1.43 | 307 | | | 0.08 | No, Vu<V |
| SLV 3 | 171 | -13435 | -5018 | -133992 | | 6.76 | 71 | 1.63 | 3230 | | | 0.64 | No, Vu<V |
| SLV 3 | 544 | -2517 | -2794 | 14462 | | 1.27 | 71 | 1.09 | 2160 | | | 0.77 | No, Vu<V |
| SLV 8 | 171 | -16328 | -4733 | -93614 | | 8.21 | 71 | 1.63 | 3230 | | | 0.68 | No, Vu<V |
| SLV 8 | 544 | -7134 | 1 | -6450 | | 3.59 | 71 | 1.55 | 3083 | | | 1000 | Si |
| SLV 5 | 171 | -6624 | -536 | -82961 | | 3.43 | 68.93 | 1.52 | 2933 | | | 5.48 | Si |
| SLV 5 | 544 | -883 | -2963 | 15856 | | 0.6 | 52.66 | 0.95 | 1405 | | | 0.47 | No, Vu<V |

Verifica a pressoflessione fuori piano D.M. 17-01-18 (N.T.C.)

quota 357.5 Wa 0.05 denominatore 8 γM = 2

| Comb. | fd | Sa | σ0 | N | M | Mc | Coeff.s. | Verifica |
|---|---|---|---|---|---|---|---|---|
| SLV 9 | 14 | 0.32 | 1.96 | -3906 | 6883 | 45887 | 6.67 | Si |
| SLV 10 | 14 | 0.32 | 1.96 | -3906 | 6883 | 45887 | 6.67 | Si |
| SLV 5 | 14 | 0.32 | 2 | -3980 | 6883 | 46595 | 6.77 | Si |
| SLV 6 | 14 | 0.32 | 2 | -3980 | 6883 | 46595 | 6.77 | Si |
| SLV 13 | 14 | 0.32 | 3.4 | -6767 | 6883 | 68343 | 9.93 | Si |
| SLV 14 | 14 | 0.32 | 3.4 | -6767 | 6883 | 68343 | 9.93 | Si |
| SLV 2 | 14 | 0.32 | 3.53 | -7016 | 6883 | 69855 | 10.15 | Si |
| SLV 1 | 14 | 0.32 | 3.53 | -7016 | 6883 | 69855 | 10.15 | Si |
| SLV 15 | 14 | 0.32 | 4.67 | -9294 | 6883 | 80331 | 11.67 | Si |
| SLV 16 | 14 | 0.32 | 4.67 | -9294 | 6883 | 80331 | 11.67 | Si |

Verifica dei meccanismi locali di collasso con analisi cinematica lineare

forza di aggancio al piano = 0 quota mezzeria = 357.5 Wa = 0.05 Ta = 0.083

| Comb. | N top | N base | V orto | α0 | M* | e* | a0* | aLim | Verifica |
|---|---|---|---|---|---|---|---|---|---|
| SLV 10 | -2965 | -6193 | -57 | 0.029 | 4.078 | 0.93 | 44.946 | 1417.879 | No |
| SLV 9 | -2965 | -6193 | -57 | 0.029 | 4.078 | 0.93 | 44.946 | 1417.879 | No |
| SLV 6 | -883 | -6624 | -38 | 0.029 | 2.014 | 0.891 | 47.286 | 1417.879 | No |
| SLV 5 | -883 | -6624 | -38 | 0.029 | 2.014 | 0.891 | 47.286 | 1417.879 | No |
| SLV 8 | -7134 | -16328 | 52 | 0.034 | 8.308 | 0.962 | 51.543 | 1417.879 | No |
| SLV 7 | -7134 | -16328 | 52 | 0.034 | 8.308 | 0.962 | 51.543 | 1417.879 | No |
| SLV 12 | -9216 | -15897 | 33 | 0.037 | 10.427 | 0.969 | 55.057 | 1417.879 | No |
| SLV 11 | -9216 | -15897 | 33 | 0.037 | 10.427 | 0.969 | 55.057 | 1417.879 | No |
| SLV 4 | -2517 | -13435 | 42 | 0.032 | 3.626 | 0.924 | 50.785 | 813.056 | No |
| SLV 3 | -2517 | -13435 | 42 | 0.032 | 3.626 | 0.924 | 50.785 | 813.056 | No |

Tabella dei coefficienti di sicurezza minimi

| Stato limite | Coeff.s. | Comb. | Verifica |
|---|---|---|---|
| PF_SLU | 0 | SLU 74 | No |
| V_SLU | 0.759 | SLU 81 | No |
| PF_SLV | 1.049 | SLV 1 | Si |
| V_SLV | 0.083 | SLV 1 | No |
| PFFP_SLV | 6.667 | SLV 9 | Si |
| R_SLV | 0.032 | SLV 9 | No |

## Maschio 63

Verifiche condotte secondo D.M. 17-01-18 (N.T.C.)

### Dati geometrici

| X ini. | Y ini. | X fin. | Y fin. | Quota i. | Quota.s | l | Sp. | h netta | h ini. | h fin. | a | a.s.,sx | a.s.,dx |
|---|---|---|---|---|---|---|---|---|---|---|---|---|---|
| -1638.3 | -335.9 | -1731.3 | -335.9 | L3 | L4 | 93 | 28 | 373 | 373 | 373 | | | |

### Caratteristiche del materiale

(Circolare 7 21-01-19 C8.5.I) Muratura in mattoni pieni e malta di calce LC2_Corti

| fb | fk | fvk0 | fmedio | τ0 | fv0 | μ | ϕ | fv,lim | E | G | FC |
|---|---|---|---|---|---|---|---|---|---|---|---|
| 60 | | | 34.5 | 0.9 | 2 | 0.58 | 0.77 | 3.25 | 32000 | 12800 | 1.2 |

### Verifica a pressoflessione nel piano secondo D.M. 17-01-18 NTC §7.8.2.2.1 in combinazioni non sismiche, γM = 3

| Comb. | Quota | N | M | σ0 | Mu | c.s. | Verifica |
|---|---|---|---|---|---|---|---|
| SLU 61 | 261 | -22175 | 242501 | 8.52 | 0 | 0 | No, Rottura per schiacciamento |
| SLU 61 | 451 | -15824 | 123338 | 6.08 | 186904 | 1.515 | Si |
| SLU 55 | 261 | -21883 | 254029 | 8.4 | 0 | 0 | No, Rottura per schiacciamento |
| SLU 55 | 451 | -14843 | 110018 | 5.7 | 207235 | 1.884 | Si |
| SLU 63 | 261 | -22325 | 249680 | 8.57 | 0 | 0 | No, Rottura per schiacciamento |
| SLU 63 | 451 | -15726 | 120669 | 6.04 | 189122 | 1.567 | Si |
| SLU 84 | 261 | -24204 | 270326 | 9.29 | 0 | 0 | No, Rottura per schiacciamento |
| SLU 84 | 451 | -17224 | 131747 | 6.61 | 150572 | 1.143 | Si |
| SLU 54 | 261 | -21587 | 241557 | 8.29 | 0 | 0 | No, Rottura per schiacciamento |
| SLU 54 | 451 | -15137 | 116254 | 5.81 | 201571 | 1.734 | Si |
| SLU 62 | 261 | -21602 | 230036 | 8.3 | 0 | 0 | No, Rottura per schiacciamento |
| SLU 62 | 451 | -15865 | 126901 | 6.09 | 185964 | 1.465 | Si |
| SLU 59 | 261 | -21551 | 248112 | 8.28 | 0 | 0 | No, Rottura per schiacciamento |
| SLU 59 | 451 | -14837 | 111504 | 5.7 | 207334 | 1.859 | Si |
| SLU 57 | 261 | -21736 | 248737 | 8.35 | 0 | 0 | No, Rottura per schiacciamento |
| SLU 57 | 451 | -15040 | 113585 | 5.78 | 203494 | 1.792 | Si |
| SLU 65 | 261 | -21458 | 247083 | 8.24 | 0 | 0 | No, Rottura per schiacciamento |
| SLU 65 | 451 | -14594 | 108610 | 5.6 | 211718 | 1.949 | Si |
| SLU 60 | 261 | -21453 | 222856 | 8.24 | 0 | 0 | No, Rottura per schiacciamento |
| SLU 60 | 451 | -15962 | 129570 | 6.13 | 183686 | 1.418 | Si |

### Verifica a pressoflessione nel piano secondo D.M. 17-01-18 NTC §7.8.2.2.1 in combinazioni sismiche, γM = 2

| Comb. | Quota | N | M | σ0 | Mu | c.s. | Verifica |
|---|---|---|---|---|---|---|---|
| SLV 3 | 261 | -13938 | 372358 | 5.35 | 364203 | 0.978 | No, M>Mu |
| SLV 3 | 451 | -2572 | -44410 | 0.99 | 109941 | 2.476 | Si |
| SLD 4 | 261 | -15013 | 253222 | 5.77 | 368707 | 1.456 | Si |
| SLD 4 | 451 | -7835 | 36423 | 3.01 | 274607 | 7.539 | Si |
| SLV 4 | 261 | -13938 | 372358 | 5.35 | 364203 | 0.978 | No, M>Mu |
| SLV 4 | 451 | -2572 | -44410 | 0.99 | 109941 | 2.476 | Si |
| SLV 8 | 261 | -12120 | 300404 | 4.65 | 348904 | 1.161 | Si |
| SLV 8 | 451 | -196 | -102309 | 0 | 0 | 0 | No, e>l/2 |
| SLV 1 | 261 | -15988 | 324638 | 6.14 | 369871 | 1.139 | Si |
| SLV 1 | 451 | -8307 | 57384 | 3.19 | 285421 | 4.974 | Si |
| SLD 3 | 261 | -15013 | 253222 | 5.77 | 368707 | 1.456 | Si |
| SLD 3 | 451 | -7835 | 36423 | 3.01 | 274607 | 7.539 | Si |
| SLV 7 | 261 | -12120 | 300404 | 4.65 | 348904 | 1.161 | Si |
| SLV 7 | 451 | -196 | -102309 | 0 | 0 | 0 | No, e>l/2 |
| SLV 10 | 261 | -19446 | 31943 | 7.47 | 351599 | 11.007 | Si |
| SLV 10 | 451 | -23008 | 289173 | 8.84 | 296221 | 1.024 | Si |
| SLV 9 | 261 | -19446 | 31943 | 7.47 | 351599 | 11.007 | Si |
| SLV 9 | 451 | -23008 | 289173 | 8.84 | 296221 | 1.024 | Si |
| SLV 2 | 261 | -15988 | 324638 | 6.14 | 369871 | 1.139 | Si |
| SLV 2 | 451 | -8307 | 57384 | 3.19 | 285421 | 4.974 | Si |

### Verifica a taglio nel piano secondo D.M. 17-01-18 (N.T.C.) §7.8.2.2.2 con rottura per scorrimento in combinazioni non sismiche, γM = 3

| Comb. | Quota | N | V par | M | σ0 | σN | l' | fvd | Vt scorr. | Vt fess.diag. | Vt,lim | c.s. | Verifica |
|---|---|---|---|---|---|---|---|---|---|---|---|---|---|
| SLU 76 | 261 | -23762 | 3593 | 274675 | | 9.13 | 93 | 1.08 | 2821 | | | 0.79 | No, Vu<V |
| SLU 76 | 451 | -16341 | -92 | 121097 | | 6.28 | 93 | 1.08 | 2821 | | | 30.6 | Si |
| SLU 75 | 261 | -23466 | 3547 | 262203 | | 9.01 | 93 | 1.08 | 2821 | | | 0.8 | No, Vu<V |
| SLU 75 | 451 | -16636 | -97 | 127332 | | 6.39 | 93 | 1.08 | 2821 | | | 29.2 | Si |
| SLU 82 | 261 | -24054 | 3556 | 263147 | | 9.24 | 93 | 1.08 | 2821 | | | 0.79 | No, Vu<V |
| SLU 82 | 451 | -17322 | -165 | 134417 | | 6.65 | 93 | 1.08 | 2821 | | | 17.08 | Si |
| SLU 79 | 261 | -22707 | 3597 | 249114 | | 8.72 | 93 | 1.08 | 2821 | | | 0.78 | No, Vu<V |
| SLU 79 | 451 | -16474 | -7 | 128814 | | 6.33 | 93 | 1.08 | 2821 | | | 376.78 | Si |
| SLU 77 | 261 | -22893 | 3599 | 249738 | | 8.79 | 93 | 1.08 | 2821 | | | 0.78 | No, Vu<V |
| SLU 77 | 451 | -16676 | -19 | 130895 | | 6.4 | 93 | 1.08 | 2821 | | | 147.84 | Si |
| SLU 80 | 261 | -23430 | 3668 | 268758 | | 9 | 93 | 1.08 | 2821 | | | 0.77 | No, Vu<V |
| SLU 80 | 451 | -16335 | -18 | 122582 | | 6.27 | 93 | 1.08 | 2821 | | | 154.73 | Si |
| SLU 84 | 261 | -24204 | 3678 | 270326 | | 9.29 | 93 | 1.08 | 2821 | | | 0.77 | No, Vu<V |
| SLU 84 | 451 | -17224 | -98 | 131747 | | 6.61 | 93 | 1.08 | 2821 | | | 28.69 | Si |
| SLU 78 | 261 | -23615 | 3669 | 269383 | | 9.07 | 93 | 1.08 | 2821 | | | 0.77 | No, Vu<V |
| SLU 78 | 451 | -16538 | -30 | 124663 | | 6.35 | 93 | 1.08 | 2821 | | | 94.58 | Si |
| SLU 83 | 261 | -23481 | 3607 | 250682 | | 9.02 | 93 | 1.08 | 2821 | | | 0.78 | No, Vu<V |

| Comb. | Quota | N | V par | M | σ0 | σN | l' | fvd | Vt scorr. | Vt fess.diag. | Vt,lim | c.s. | Verifica |
|---|---|---|---|---|---|---|---|---|---|---|---|---|---|
| SLU 83 | 451 | -17363 | -88 | 137979 | | 6.67 | 93 | 1.08 | 2821 | | | 32.21 | Si |
| SLU 81 | 261 | -23332 | 3486 | 243502 | | 8.96 | 93 | 1.08 | 2821 | | | 0.81 | No, Vu<V |
| SLU 81 | 451 | -17461 | -154 | 140649 | | 6.71 | 93 | 1.08 | 2821 | | | 18.27 | Si |

### Verifica a taglio nel piano secondo D.M. 17-01-18 (N.T.C.) §7.8.2.2.2 con rottura per scorrimento in combinazioni sismiche, γM = 2

| Comb. | Quota | N | V par | M | σ0 | σN | l' | fvd | Vt scorr. | Vt fess.diag. | Vt,lim | c.s. | Verifica |
|---|---|---|---|---|---|---|---|---|---|---|---|---|---|
| SLV 7 | 261 | -12120 | 2631 | 300404 | | 6.64 | 65.14 | 1.63 | 2964 | | | 1.13 | Si |
| SLV 7 | 451 | -196 | 2286 | -102309 | | 0 | 0 | 0.83 | 0 | | | 0 | No, Vu<V |
| SLV 2 | 261 | -15988 | 5613 | 324638 | | 7.27 | 78.58 | 1.63 | 3576 | | | 0.64 | No, Vu<V |
| SLV 2 | 451 | -8307 | 1342 | 57384 | | 3.19 | 93 | 1.47 | 3831 | | | 2.85 | Si |
| SLD 3 | 261 | -15013 | 3594 | 253222 | | 6.03 | 88.9 | 1.63 | 4045 | | | 1.13 | Si |
| SLD 3 | 451 | -7835 | 965 | 36423 | | 3.01 | 93 | 1.44 | 3737 | | | 3.87 | Si |
| SLV 3 | 261 | -13938 | 5222 | 372358 | | 8.39 | 59.35 | 1.63 | 2701 | | | 0.52 | No, Vu<V |
| SLV 3 | 451 | -2572 | 2419 | -44410 | | 1.05 | 87.7 | 1.04 | 2561 | | | 1.06 | Si |
| SLV 4 | 261 | -13938 | 5222 | 372358 | | 8.39 | 59.35 | 1.63 | 2701 | | | 0.52 | No, Vu<V |
| SLV 4 | 451 | -2572 | 2419 | -44410 | | 1.05 | 87.7 | 1.04 | 2561 | | | 1.06 | Si |
| SLV 1 | 261 | -15988 | 5613 | 324638 | | 7.27 | 78.58 | 1.63 | 3576 | | | 0.64 | No, Vu<V |
| SLV 1 | 451 | -8307 | 1342 | 57384 | | 3.19 | 93 | 1.47 | 3831 | | | 2.85 | Si |
| SLV 8 | 261 | -12120 | 2631 | 300404 | | 6.64 | 65.14 | 1.63 | 2964 | | | 1.13 | Si |
| SLV 8 | 451 | -196 | 2286 | -102309 | | 0 | 0 | 0.83 | 0 | | | 0 | No, Vu<V |
| SLV 5 | 261 | -18954 | 3934 | 141338 | | 7.28 | 93 | 1.63 | 4232 | | | 1.08 | Si |
| SLV 5 | 451 | -19311 | -1302 | 237006 | | 7.42 | 93 | 1.63 | 4232 | | | 3.25 | Si |
| SLV 6 | 261 | -18954 | 3934 | 141338 | | 7.28 | 93 | 1.63 | 4232 | | | 1.08 | Si |
| SLV 6 | 451 | -19311 | -1302 | 237006 | | 7.42 | 93 | 1.63 | 4232 | | | 3.25 | Si |
| SLD 4 | 261 | -15013 | 3594 | 253222 | | 6.03 | 88.9 | 1.63 | 4045 | | | 1.13 | Si |
| SLD 4 | 451 | -7835 | 965 | 36423 | | 3.01 | 93 | 1.44 | 3737 | | | 3.87 | Si |

### Verifica a pressoflessione fuori piano D.M. 17-01-18 (N.T.C.)

quota 357.5 Wa 0.05 denominatore 8 γM = 2

| Comb. | fd | Sa | σ0 | N | M | Mc | Coeff.s. | Verifica |
|---|---|---|---|---|---|---|---|---|
| SLV 10 | 14 | 0.32 | 8.76 | -22816 | 8810 | 90372 | 10.26 | Si |
| SLV 9 | 14 | 0.32 | 8.76 | -22816 | 8810 | 90372 | 10.26 | Si |
| SLV 7 | 14 | 0.32 | 3.6 | -9368 | 8810 | 92537 | 10.5 | Si |
| SLV 8 | 14 | 0.32 | 3.6 | -9368 | 8810 | 92537 | 10.5 | Si |
| SLV 5 | 14 | 0.32 | 8.53 | -22214 | 8810 | 93869 | 10.65 | Si |
| SLV 6 | 14 | 0.32 | 8.53 | -22214 | 8810 | 93869 | 10.65 | Si |
| SLV 12 | 14 | 0.32 | 3.83 | -9969 | 8810 | 95840 | 10.88 | Si |
| SLV 11 | 14 | 0.32 | 3.83 | -9969 | 8810 | 95840 | 10.88 | Si |
| SLV 13 | 14 | 0.32 | 7.3 | -19021 | 8810 | 107100 | 12.16 | Si |
| SLV 14 | 14 | 0.32 | 7.3 | -19021 | 8810 | 107100 | 12.16 | Si |

### Verifica dei meccanismi locali di collasso con analisi cinematica lineare

forza di aggancio al piano = 0 quota mezzeria = 357.5 Wa = 0.05 Ta = 0.083

| Comb. | N top | N base | V orto | α0 | M* | e* | a0* | aLim | Verifica |
|---|---|---|---|---|---|---|---|---|---|
| SLV 10 | -14202 | -17105 | -31 | 0.038 | 15.827 | 0.973 | 56.176 | 1417.879 | No |
| SLV 9 | -14202 | -17105 | -31 | 0.038 | 15.827 | 0.973 | 56.176 | 1417.879 | No |
| SLV 5 | -11307 | -14836 | -19 | 0.039 | 12.879 | 0.968 | 58.088 | 1417.879 | No |
| SLV 6 | -11307 | -14836 | -19 | 0.039 | 12.879 | 0.968 | 58.088 | 1417.879 | No |
| SLV 7 | -2941 | -6473 | 34 | 0.037 | 4.393 | 0.919 | 58.836 | 1417.879 | No |
| SLV 8 | -2941 | -6473 | 34 | 0.037 | 4.393 | 0.919 | 58.836 | 1417.879 | No |
| SLV 12 | -5837 | -8742 | 21 | 0.039 | 7.317 | 0.946 | 60.228 | 1417.879 | No |
| SLV 11 | -5837 | -8742 | 21 | 0.039 | 7.317 | 0.946 | 60.228 | 1417.879 | No |
| SLV 13 | -14652 | -16826 | -28 | 0.038 | 16.285 | 0.974 | 56.499 | 813.056 | No |
| SLV 14 | -14652 | -16826 | -28 | 0.038 | 16.285 | 0.974 | 56.499 | 813.056 | No |

### Tabella dei coefficienti di sicurezza minimi

| Stato limite | Coeff.s. | Comb. | Verifica |
|---|---|---|---|
| PF_SLU | 0 | SLU 52 | No |
| V_SLU | 0.767 | SLU 84 | No |
| PF_SLV | 0 | SLV 7 | No |
| V_SLV | 0 | SLV 7 | No |
| PFFP_SLV | 10.258 | SLV 9 | Si |
| R_SLV | 0.04 | SLV 9 | No |

## Maschio 64

Verifiche condotte secondo D.M. 17-01-18 (N.T.C.)

### Dati geometrici

| X ini. | Y ini. | X fin. | Y fin. | Quota i. | Quota.s | l | Sp. | h netta | h ini. | h fin. | a | a.s.,sx | a.s.,dx |
|---|---|---|---|---|---|---|---|---|---|---|---|---|---|
| -1844.8 | -335.9 | -1844.8 | 104.6 | L3 | L4 | 440.6 | 14 | 373 | 373 | 373 | | | |

### Caratteristiche del materiale

(Circolare 7 21-01-19 C8.5.I) Muratura in mattoni pieni e malta di calce LC2_Corti

| fb | fk | fvk0 | fmedio | τ0 | fv0 | μ | ϕ | fv,lim | E | G | FC |
|---|---|---|---|---|---|---|---|---|---|---|---|
| 60 | | | 34.5 | 0.9 | 2 | 0.58 | 0.77 | 3.25 | 32000 | 12800 | 1.2 |

### Verifica a pressoflessione nel piano secondo D.M. 17-01-18 NTC §7.8.2.2.1 in combinazioni non sismiche, γM = 3

| Comb. | Quota | N | M | σ0 | Mu | c.s. | Verifica |
|---|---|---|---|---|---|---|---|
| SLU 65 | 171 | -22415 | -784687 | 3.63 | 2734825 | 3.485 | Si |
| SLU 65 | 544 | -23496 | 154606 | 3.81 | 2755365 | 17.822 | Si |
| SLU 76 | 171 | -25180 | -790203 | 4.08 | 2766939 | 3.502 | Si |
| SLU 76 | 544 | -26881 | 243652 | 4.36 | 2753377 | 11.3 | Si |

| Comb. | Quota | N | M | σ0 | Mu | c.s. | Verifica |
|---|---|---|---|---|---|---|---|
| SLU 82 | 171 | -25619 | -767127 | 4.15 | 2765869 | 3.605 | Si |
| SLU 82 | 544 | -27334 | 250198 | 4.43 | 2745502 | 10.973 | Si |
| SLU 47 | 171 | -20333 | -732784 | 3.3 | 2666398 | 3.639 | Si |
| SLU 47 | 544 | -21202 | 116316 | 3.44 | 2699596 | 23.209 | Si |
| SLU 44 | 171 | -20070 | -765481 | 3.25 | 2655060 | 3.468 | Si |
| SLU 44 | 544 | -20714 | 86788 | 3.36 | 2681777 | 30.9 | Si |
| SLU 52 | 171 | -22573 | -803694 | 3.66 | 2738471 | 3.407 | Si |
| SLU 52 | 544 | -23611 | 146307 | 3.83 | 2756955 | 18.844 | Si |
| SLU 61 | 171 | -23274 | -747921 | 3.77 | 2751993 | 3.68 | Si |
| SLU 61 | 544 | -24552 | 182380 | 3.98 | 2765530 | 15.164 | Si |
| SLU 55 | 171 | -22836 | -770997 | 3.7 | 2744041 | 3.559 | Si |
| SLU 55 | 544 | -24100 | 175834 | 3.91 | 2762374 | 15.71 | Si |
| SLU 68 | 171 | -22677 | -751990 | 3.68 | 2740761 | 3.645 | Si |
| SLU 68 | 544 | -23984 | 184134 | 3.89 | 2761279 | 14.996 | Si |
| SLU 73 | 171 | -24918 | -822900 | 4.04 | 2766772 | 3.362 | Si |
| SLU 73 | 544 | -26393 | 214125 | 4.28 | 2759863 | 12.889 | Si |

Verifica a pressoflessione nel piano secondo D.M. 17-01-18 NTC §7.8.2.2.1 in combinazioni sismiche, γM = 2

| Comb. | Quota | N | M | σ0 | Mu | c.s. | Verifica |
|---|---|---|---|---|---|---|---|
| SLV 7 | 171 | -12661 | 690455 | 2.05 | 2320453 | 3.361 | Si |
| SLV 7 | 544 | -15377 | 88574 | 2.49 | 2696202 | 30.44 | Si |
| SLV 5 | 171 | -21577 | -1360866 | 3.5 | 3392295 | 2.493 | Si |
| SLV 5 | 544 | -20987 | 295607 | 3.4 | 3335707 | 11.284 | Si |
| SLV 9 | 171 | -20795 | -1633561 | 3.37 | 3316882 | 2.03 | Si |
| SLV 9 | 544 | -20044 | 194115 | 3.25 | 3241033 | 16.696 | Si |
| SLV 13 | 171 | -16762 | -1233742 | 2.72 | 2871194 | 2.327 | Si |
| SLV 13 | 544 | -16980 | 3247 | 2.75 | 2897644 | 892.269 | Si |
| SLD 9 | 171 | -18390 | -949589 | 2.98 | 3062580 | 3.225 | Si |
| SLD 9 | 544 | -18643 | 161657 | 3.02 | 3090849 | 19.12 | Si |
| SLV 10 | 171 | -20795 | -1633561 | 3.37 | 3316882 | 2.03 | Si |
| SLV 10 | 544 | -20044 | 194115 | 3.25 | 3241033 | 16.696 | Si |
| SLD 10 | 171 | -18390 | -949589 | 2.98 | 3062580 | 3.225 | Si |
| SLD 10 | 544 | -18643 | 161657 | 3.02 | 3090849 | 19.12 | Si |
| SLV 6 | 171 | -21577 | -1360866 | 3.5 | 3392295 | 2.493 | Si |
| SLV 6 | 544 | -20987 | 295607 | 3.4 | 3335707 | 11.284 | Si |
| SLV 14 | 171 | -16762 | -1233742 | 2.72 | 2871194 | 2.327 | Si |
| SLV 14 | 544 | -16980 | 3247 | 2.75 | 2897644 | 892.269 | Si |
| SLV 8 | 171 | -12661 | 690455 | 2.05 | 2320453 | 3.361 | Si |
| SLV 8 | 544 | -15377 | 88574 | 2.49 | 2696202 | 30.44 | Si |

Verifica a taglio nel piano secondo D.M. 17-01-18 (N.T.C.) §7.8.2.2.2 con rottura per scorrimento in combinazioni non sismiche, γM = 3

| Comb. | Quota | N | V par | M | σ0 | σN | l' | fvd | Vt scorr. | Vt fess.diag. | Vt,lim | c.s. | Verifica |
|---|---|---|---|---|---|---|---|---|---|---|---|---|---|
| SLU 23 | 171 | -18616 | -1929 | -654728 | | 3.02 | 440.57 | 0.96 | 5909 | | | 3.06 | Si |
| SLU 23 | 544 | -19623 | -1065 | 146369 | | 3.18 | 440.57 | 0.98 | 6043 | | | 5.67 | Si |
| SLU 5 | 171 | -16534 | -1717 | -602825 | | 2.68 | 440.57 | 0.91 | 5631 | | | 3.28 | Si |
| SLU 5 | 544 | -17329 | -900 | 108079 | | 2.81 | 440.57 | 0.93 | 5737 | | | 6.37 | Si |
| SLU 10 | 171 | -18774 | -2053 | -673734 | | 3.04 | 440.57 | 0.96 | 5930 | | | 2.89 | Si |
| SLU 10 | 544 | -19739 | -1185 | 138070 | | 3.2 | 440.57 | 0.98 | 6059 | | | 5.11 | Si |
| SLU 65 | 171 | -22415 | -1901 | -784687 | | 3.63 | 440.57 | 1.04 | 6415 | | | 3.37 | Si |
| SLU 65 | 544 | -23496 | -938 | 154606 | | 3.81 | 440.57 | 1.06 | 6559 | | | 6.99 | Si |
| SLU 13 | 171 | -19037 | -1763 | -641038 | | 3.09 | 440.57 | 0.97 | 5965 | | | 3.38 | Si |
| SLU 13 | 544 | -20227 | -891 | 167598 | | 3.28 | 440.57 | 0.99 | 6124 | | | 6.87 | Si |
| SLU 73 | 171 | -24918 | -1948 | -822900 | | 4.04 | 440.57 | 1.08 | 6682 | | | 3.43 | Si |
| SLU 73 | 544 | -26393 | -929 | 214125 | | 4.28 | 440.57 | 1.08 | 6682 | | | 7.19 | Si |
| SLU 2 | 171 | -16271 | -2007 | -635521 | | 2.64 | 440.57 | 0.91 | 5596 | | | 2.79 | Si |
| SLU 2 | 544 | -16841 | -1194 | 78551 | | 2.73 | 440.57 | 0.92 | 5672 | | | 4.75 | Si |
| SLU 52 | 171 | -22573 | -2026 | -803694 | | 3.66 | 440.57 | 1.04 | 6436 | | | 3.18 | Si |
| SLU 52 | 544 | -23611 | -1058 | 146307 | | 3.83 | 440.57 | 1.07 | 6575 | | | 6.21 | Si |
| SLU 44 | 171 | -20070 | -1980 | -765481 | | 3.25 | 440.57 | 0.99 | 6103 | | | 3.08 | Si |
| SLU 44 | 544 | -20714 | -1067 | 86788 | | 3.36 | 440.57 | 1 | 6189 | | | 5.8 | Si |
| SLU 31 | 171 | -21119 | -1975 | -692941 | | 3.42 | 440.57 | 1.01 | 6242 | | | 3.16 | Si |
| SLU 31 | 544 | -22521 | -1056 | 205888 | | 3.65 | 440.57 | 1.04 | 6429 | | | 6.09 | Si |

Verifica a taglio nel piano secondo D.M. 17-01-18 (N.T.C.) §7.8.2.2.2 con rottura per scorrimento in combinazioni sismiche, γM = 2

| Comb. | Quota | N | V par | M | σ0 | σN | l' | fvd | Vt scorr. | Vt fess.diag. | Vt,lim | c.s. | Verifica |
|---|---|---|---|---|---|---|---|---|---|---|---|---|---|
| SLV 6 | 171 | -21577 | -21157 | -1360866 | | 3.5 | 440.57 | 1.53 | 9455 | | | 0.45 | No, Vu<V |
| SLV 6 | 544 | -20987 | -12882 | 295607 | | 3.4 | 440.57 | 1.51 | 9337 | | | 0.72 | No, Vu<V |
| SLV 7 | 171 | -12661 | 21315 | 690455 | | 2.05 | 440.57 | 1.24 | 7672 | | | 0.36 | No, Vu<V |
| SLV 7 | 544 | -15377 | 12749 | 88574 | | 2.49 | 440.57 | 1.33 | 8215 | | | 0.64 | No, Vu<V |
| SLV 9 | 171 | -20795 | -20935 | -1633561 | | 3.49 | 425.19 | 1.53 | 9120 | | | 0.44 | No, Vu<V |
| SLV 9 | 544 | -20044 | -11529 | 194115 | | 3.25 | 440.57 | 1.48 | 9149 | | | 0.79 | No, Vu<V |
| SLD 11 | 171 | -14743 | 8940 | -109214 | | 2.39 | 440.57 | 1.31 | 8089 | | | 0.9 | No, Vu<V |
| SLD 11 | 544 | -16387 | 6182 | 78698 | | 2.66 | 440.57 | 1.36 | 8417 | | | 1.36 | Si |
| SLV 11 | 171 | -11879 | 21537 | 417760 | | 1.93 | 440.57 | 1.22 | 7516 | | | 0.35 | No, Vu<V |
| SLV 11 | 544 | -14434 | 14103 | -12917 | | 2.34 | 440.57 | 1.3 | 8027 | | | 0.57 | No, Vu<V |
| SLV 12 | 171 | -11879 | 21537 | 417760 | | 1.93 | 440.57 | 1.22 | 7516 | | | 0.35 | No, Vu<V |
| SLV 12 | 544 | -14434 | 14103 | -12917 | | 2.34 | 440.57 | 1.3 | 8027 | | | 0.57 | No, Vu<V |
| SLD 12 | 171 | -14743 | 8940 | -109214 | | 2.39 | 440.57 | 1.31 | 8089 | | | 0.9 | No, Vu<V |
| SLD 12 | 544 | -16387 | 6182 | 78698 | | 2.66 | 440.57 | 1.36 | 8417 | | | 1.36 | Si |
| SLV 5 | 171 | -21577 | -21157 | -1360866 | | 3.5 | 440.57 | 1.53 | 9455 | | | 0.45 | No, Vu<V |
| SLV 5 | 544 | -20987 | -12882 | 295607 | | 3.4 | 440.57 | 1.51 | 9337 | | | 0.72 | No, Vu<V |
| SLV 8 | 171 | -12661 | 21315 | 690455 | | 2.05 | 440.57 | 1.24 | 7672 | | | 0.36 | No, Vu<V |
| SLV 8 | 544 | -15377 | 12749 | 88574 | | 2.49 | 440.57 | 1.33 | 8215 | | | 0.64 | No, Vu<V |
| SLV 10 | 171 | -20795 | -20935 | -1633561 | | 3.49 | 425.19 | 1.53 | 9120 | | | 0.44 | No, Vu<V |
| SLV 10 | 544 | -20044 | -11529 | 194115 | | 3.25 | 440.57 | 1.48 | 9149 | | | 0.79 | No, Vu<V |

### Verifica a pressoflessione fuori piano D.M. 17-01-18 (N.T.C.)

quota 357.5 Wa 0.03 denominatore 8 γM = 2

| Comb. | fd | Sa | σ0 | N | M | Mc | Coeff.s. | Verifica |
|---|---|---|---|---|---|---|---|---|
| SLV 16 | 14 | 0.32 | 2.21 | -13658 | 22324 | 78279 | 3.51 | Si |
| SLV 15 | 14 | 0.32 | 2.21 | -13658 | 22324 | 78279 | 3.51 | Si |
| SLV 11 | 14 | 0.32 | 2.28 | -14065 | 22324 | 80079 | 3.59 | Si |
| SLV 12 | 14 | 0.32 | 2.28 | -14065 | 22324 | 80079 | 3.59 | Si |
| SLV 14 | 14 | 0.32 | 2.56 | -15781 | 22324 | 87336 | 3.91 | Si |
| SLV 13 | 14 | 0.32 | 2.56 | -15781 | 22324 | 87336 | 3.91 | Si |
| SLV 7 | 14 | 0.32 | 2.68 | -16536 | 22324 | 90356 | 4.05 | Si |
| SLV 8 | 14 | 0.32 | 2.68 | -16536 | 22324 | 90356 | 4.05 | Si |
| SLV 9 | 14 | 0.32 | 3.43 | -21142 | 22324 | 106477 | 4.77 | Si |
| SLV 10 | 14 | 0.32 | 3.43 | -21142 | 22324 | 106477 | 4.77 | Si |

### Verifica dei meccanismi locali di collasso con analisi cinematica lineare

forza di aggancio al piano = 0 quota mezzeria = 357.5 Wa = 0.03 Ta = 0.166

| Comb. | N top | N base | V orto | α0 | M* | e* | a0* | aLim | Verifica |
|---|---|---|---|---|---|---|---|---|---|
| SLV 2 | -20124 | -19369 | 41 | 0.019 | 23.732 | 0.959 | 28.252 | 1435.066 | No |
| SLV 1 | -20124 | -19369 | 41 | 0.019 | 23.732 | 0.959 | 28.252 | 1435.066 | No |
| SLV 4 | -18441 | -16694 | 36 | 0.019 | 22.02 | 0.957 | 28.713 | 1435.066 | No |
| SLV 3 | -18441 | -16694 | 36 | 0.019 | 22.02 | 0.957 | 28.713 | 1435.066 | No |
| SLV 15 | -15297 | -14087 | -38 | 0.019 | 18.826 | 0.95 | 28.751 | 1435.066 | No |
| SLV 16 | -15297 | -14087 | -38 | 0.019 | 18.826 | 0.95 | 28.751 | 1435.066 | No |
| SLV 14 | -16980 | -16762 | -33 | 0.019 | 20.535 | 0.954 | 29.06 | 1435.066 | No |
| SLV 13 | -16980 | -16762 | -33 | 0.019 | 20.535 | 0.954 | 29.06 | 1435.066 | No |
| SLV 5 | -20987 | -21577 | 22 | 0.02 | 24.609 | 0.961 | 29.525 | 1399.295 | No |
| SLV 6 | -20987 | -21577 | 22 | 0.02 | 24.609 | 0.961 | 29.525 | 1399.295 | No |

### Tabella dei coefficienti di sicurezza minimi

| Stato limite | Coeff.s. | Comb. | Verifica |
|---|---|---|---|
| PF_SLU | 3.362 | SLU 73 | Si |
| V_SLU | 2.788 | SLU 2 | Si |
| PF_SLV | 2.03 | SLV 9 | Si |
| V_SLV | 0.349 | SLV 11 | No |
| PFFP_SLV | 3.506 | SLV 15 | Si |
| R_SLV | 0.02 | SLV 1 | No |

## Maschio 65

Verifiche condotte secondo D.M. 17-01-18 (N.T.C.)

### Dati geometrici

| X ini. | Y ini. | X fin. | Y fin. | Quota i. | Quota.s | l | Sp. | h netta | h ini. | h fin. | a | a.s.,sx | a.s.,dx |
|---|---|---|---|---|---|---|---|---|---|---|---|---|---|
| -1375.3 | -335.9 | -1548.3 | -335.9 | L3 | L4 | 173 | 28 | 373 | 373 | 373 | | | |

### Caratteristiche del materiale

(Circolare 7 21-01-19 C8.5.I) Muratura in mattoni pieni e malta di calce LC2_Corti

| fb | fk | fvk0 | fmedio | τ0 | fv0 | μ | ϕ | fv,lim | E | G | FC |
|---|---|---|---|---|---|---|---|---|---|---|---|
| 60 | | | 34.5 | 0.9 | 2 | 0.58 | 0.77 | 3.25 | 32000 | 12800 | 1.2 |

### Verifica a pressoflessione nel piano secondo D.M. 17-01-18 NTC §7.8.2.2.1 in combinazioni non sismiche, γM = 3

| Comb. | Quota | N | M | σ0 | Mu | c.s. | Verifica |
|---|---|---|---|---|---|---|---|
| SLU 83 | 171 | -12167 | -536189 | 2.51 | 727940 | 1.358 | Si |
| SLU 83 | 381 | -21990 | -140096 | 4.54 | 842082 | 6.011 | Si |
| SLU 74 | 171 | -11792 | -516060 | 2.43 | 715179 | 1.386 | Si |
| SLU 74 | 381 | -21272 | -131586 | 4.39 | 848071 | 6.445 | Si |
| SLU 76 | 171 | -11818 | -520849 | 2.44 | 716083 | 1.375 | Si |
| SLU 76 | 381 | -21372 | -110163 | 4.41 | 847370 | 7.692 | Si |
| SLU 84 | 171 | -12226 | -541460 | 2.52 | 729881 | 1.348 | Si |
| SLU 84 | 381 | -22169 | -123897 | 4.58 | 840241 | 6.782 | Si |
| SLU 82 | 171 | -12181 | -547410 | 2.51 | 728398 | 1.331 | Si |
| SLU 82 | 381 | -22251 | -107150 | 4.59 | 839343 | 7.833 | Si |
| SLU 61 | 171 | -11517 | -510686 | 2.38 | 705439 | 1.381 | Si |
| SLU 61 | 381 | -20645 | -113769 | 4.26 | 851448 | 7.484 | Si |
| SLU 81 | 171 | -12123 | -542139 | 2.5 | 726445 | 1.34 | Si |
| SLU 81 | 381 | -22073 | -123349 | 4.56 | 841249 | 6.82 | Si |
| SLU 75 | 171 | -11851 | -521331 | 2.45 | 717217 | 1.376 | Si |
| SLU 75 | 381 | -21451 | -115387 | 4.43 | 846793 | 7.339 | Si |
| SLU 73 | 171 | -11773 | -526799 | 2.43 | 714519 | 1.356 | Si |
| SLU 73 | 381 | -21455 | -93416 | 4.43 | 846760 | 9.064 | Si |
| SLU 60 | 171 | -11458 | -505415 | 2.37 | 703315 | 1.392 | Si |
| SLU 60 | 381 | -20467 | -129968 | 4.23 | 852096 | 6.556 | Si |

### Verifica a pressoflessione nel piano secondo D.M. 17-01-18 NTC §7.8.2.2.1 in combinazioni sismiche, γM = 2

| Comb. | Quota | N | M | σ0 | Mu | c.s. | Verifica |
|---|---|---|---|---|---|---|---|
| SLV 2 | 171 | -7522 | -37537 | 1.55 | 567940 | 15.13 | Si |
| SLV 2 | 381 | -3233 | -835405 | 0 | 0 | 0 | No, e>l/2 |
| SLV 12 | 171 | -4941 | -464920 | 0 | 0 | 0 | No, e>l/2 |
| SLV 12 | 381 | -18552 | 461504 | 3.83 | 1101761 | 2.387 | Si |
| SLV 3 | 171 | -5127 | -40203 | 1.06 | 405076 | 10.076 | Si |
| SLV 3 | 381 | -3342 | -618557 | 0 | 0 | 0 | No, e>l/2 |
| SLV 15 | 171 | -9138 | -688829 | 1.89 | 668402 | 0.97 | No, M>Mu |
| SLV 15 | 381 | -26545 | 653862 | 5.48 | 1266347 | 1.937 | Si |
| SLV 4 | 171 | -5127 | -40203 | 1.06 | 405076 | 10.076 | Si |

| Comb. | Quota | N | M | σ0 | Mu | c.s. | Verifica |
|---|---|---|---|---|---|---|---|
| SLV 4 | 381 | -3342 | -618557 | 0 | 0 | 0 | No, e>l/2 |
| SLV 8 | 171 | -3737 | -270332 | 0.77 | 302860 | 1.12 | Si |
| SLV 8 | 381 | -11592 | 79779 | 2.39 | 806307 | 10.107 | Si |
| SLV 16 | 171 | -9138 | -688829 | 1.89 | 668402 | 0.97 | No, M>Mu |
| SLV 16 | 381 | -26545 | 653862 | 5.48 | 1266347 | 1.937 | Si |
| SLV 7 | 171 | -3737 | -270332 | 0.77 | 302860 | 1.12 | Si |
| SLV 7 | 381 | -11592 | 79779 | 2.39 | 806307 | 10.107 | Si |
| SLV 1 | 171 | -7522 | -37537 | 1.55 | 567940 | 15.13 | Si |
| SLV 1 | 381 | -3233 | -835405 | 0 | 0 | 0 | No, e>l/2 |
| SLV 11 | 171 | -4941 | -464920 | 0 | 0 | 0 | No, e>l/2 |
| SLV 11 | 381 | -18552 | 461504 | 3.83 | 1101761 | 2.387 | Si |

Verifica a taglio nel piano secondo D.M. 17-01-18 (N.T.C.) §7.8.2.2.2 con rottura per scorrimento in combinazioni non sismiche, γM = 3

| Comb. | Quota | N | V par | M | σ0 | σN | l' | fvd | Vt scorr. | Vt fess.diag. | Vt,lim | c.s. | Verifica |
|---|---|---|---|---|---|---|---|---|---|---|---|---|---|
| SLU 83 | 171 | -12167 | -7161 | -536189 | | 3.41 | 127.3 | 1.01 | 3603 | | | 0.5 | No, Vu<V |
| SLU 83 | 381 | -21990 | -7174 | -140096 | | 4.54 | 173 | 1.08 | 5248 | | | 0.73 | No, Vu<V |
| SLU 75 | 171 | -11851 | -7114 | -521331 | | 3.32 | 127.53 | 1 | 3564 | | | 0.5 | No, Vu<V |
| SLU 75 | 381 | -21451 | -7080 | -115387 | | 4.43 | 173 | 1.08 | 5248 | | | 0.74 | No, Vu<V |
| SLU 81 | 171 | -12123 | -7320 | -542139 | | 3.45 | 125.34 | 1.02 | 3566 | | | 0.49 | No, Vu<V |
| SLU 81 | 381 | -22073 | -7355 | -123349 | | 4.56 | 173 | 1.08 | 5248 | | | 0.71 | No, Vu<V |
| SLU 76 | 171 | -11818 | -7116 | -520849 | | 3.32 | 127.28 | 1 | 3556 | | | 0.5 | No, Vu<V |
| SLU 76 | 381 | -21372 | -7083 | -110163 | | 4.41 | 173 | 1.08 | 5248 | | | 0.74 | No, Vu<V |
| SLU 40 | 171 | -10057 | -6315 | -459019 | | 2.93 | 122.57 | 0.95 | 3248 | | | 0.51 | No, Vu<V |
| SLU 40 | 381 | -18656 | -6394 | -77668 | | 3.85 | 173 | 1.07 | 5179 | | | 0.81 | No, Vu<V |
| SLU 82 | 171 | -12181 | -7469 | -547410 | | 3.49 | 124.68 | 1.02 | 3564 | | | 0.48 | No, Vu<V |
| SLU 82 | 381 | -22251 | -7512 | -107150 | | 4.59 | 173 | 1.08 | 5248 | | | 0.7 | No, Vu<V |
| SLU 84 | 171 | -12226 | -7311 | -541460 | | 3.45 | 126.64 | 1.02 | 3600 | | | 0.49 | No, Vu<V |
| SLU 84 | 381 | -22169 | -7331 | -123897 | | 4.58 | 173 | 1.08 | 5248 | | | 0.72 | No, Vu<V |
| SLU 73 | 171 | -11773 | -7274 | -526799 | | 3.36 | 125.26 | 1 | 3518 | | | 0.48 | No, Vu<V |
| SLU 73 | 381 | -21455 | -7265 | -93416 | | 4.43 | 173 | 1.08 | 5248 | | | 0.72 | No, Vu<V |
| SLU 61 | 171 | -11517 | -6848 | -510686 | | 3.25 | 126.47 | 0.99 | 3503 | | | 0.51 | No, Vu<V |
| SLU 61 | 381 | -20645 | -6889 | -113769 | | 4.26 | 173 | 1.08 | 5248 | | | 0.76 | No, Vu<V |
| SLU 74 | 171 | -11792 | -6964 | -516060 | | 3.28 | 128.21 | 0.99 | 3567 | | | 0.51 | No, Vu<V |
| SLU 74 | 381 | -21272 | -6923 | -131586 | | 4.39 | 173 | 1.08 | 5248 | | | 0.76 | No, Vu<V |

Verifica a taglio nel piano secondo D.M. 17-01-18 (N.T.C.) §7.8.2.2.2 con rottura per scorrimento in combinazioni sismiche, γM = 2

| Comb. | Quota | N | V par | M | σ0 | σN | l' | fvd | Vt scorr. | Vt fess.diag. | Vt,lim | c.s. | Verifica |
|---|---|---|---|---|---|---|---|---|---|---|---|---|---|
| SLV 15 | 171 | -9138 | -14879 | -688829 | | 9.78 | 33.36 | 1.63 | 1518 | | | 0.1 | No, Vu<V |
| SLV 15 | 381 | -26545 | -13804 | 653862 | | 5.48 | 173 | 1.63 | 7871 | | | 0.57 | No, Vu<V |
| SLV 14 | 171 | -11533 | -14358 | -686163 | | 5.08 | 81.01 | 1.63 | 3686 | | | 0.26 | No, Vu<V |
| SLV 14 | 381 | -26435 | -11686 | 437015 | | 5.46 | 173 | 1.63 | 7871 | | | 0.67 | No, Vu<V |
| SLV 11 | 171 | -4941 | -8708 | -464920 | | 0 | 0 | 0.83 | 0 | | | 0 | No, Vu<V |
| SLV 11 | 381 | -18552 | -10751 | 461504 | | 3.83 | 173 | 1.6 | 7747 | | | 0.72 | No, Vu<V |
| SLV 13 | 171 | -11533 | -14358 | -686163 | | 5.08 | 81.01 | 1.63 | 3686 | | | 0.26 | No, Vu<V |
| SLV 13 | 381 | -26435 | -11686 | 437015 | | 5.46 | 173 | 1.63 | 7871 | | | 0.67 | No, Vu<V |
| SLV 16 | 171 | -9138 | -14879 | -688829 | | 9.78 | 33.36 | 1.63 | 1518 | | | 0.1 | No, Vu<V |
| SLV 16 | 381 | -26545 | -13804 | 653862 | | 5.48 | 173 | 1.63 | 7871 | | | 0.57 | No, Vu<V |
| SLV 1 | 171 | -7522 | 5011 | -37537 | | 1.55 | 173 | 1.14 | 5541 | | | 1.11 | Si |
| SLV 1 | 381 | -3233 | 4097 | -835405 | | 0 | 0 | 0.83 | 0 | | | 0 | No, Vu<V |
| SLV 3 | 171 | -5127 | 4490 | -40203 | | 1.06 | 173 | 1.05 | 5062 | | | 1.13 | Si |
| SLV 3 | 381 | -3342 | 1979 | -618557 | | 0 | 0 | 0.83 | 0 | | | 0 | No, Vu<V |
| SLV 12 | 171 | -4941 | -8708 | -464920 | | 0 | 0 | 0.83 | 0 | | | 0 | No, Vu<V |
| SLV 12 | 381 | -18552 | -10751 | 461504 | | 3.83 | 173 | 1.6 | 7747 | | | 0.72 | No, Vu<V |
| SLV 4 | 171 | -5127 | 4490 | -40203 | | 1.06 | 173 | 1.05 | 5062 | | | 1.13 | Si |
| SLV 4 | 381 | -3342 | 1979 | -618557 | | 0 | 0 | 0.83 | 0 | | | 0 | No, Vu<V |
| SLV 2 | 171 | -7522 | 5011 | -37537 | | 1.55 | 173 | 1.14 | 5541 | | | 1.11 | Si |
| SLV 2 | 381 | -3233 | 4097 | -835405 | | 0 | 0 | 0.83 | 0 | | | 0 | No, Vu<V |

Verifica a pressoflessione fuori piano D.M. 17-01-18 (N.T.C.)

quota 357.5 Wa 0.05 denominatore 8 γM = 2

| Comb. | fd | Sa | σ0 | N | M | Mc | Coeff.s. | Verifica |
|---|---|---|---|---|---|---|---|---|
| SLV 1 | 14 | 0.32 | 0.62 | -3001 | 16389 | 39888 | 2.43 | Si |
| SLV 2 | 14 | 0.32 | 0.62 | -3001 | 16389 | 39888 | 2.43 | Si |
| SLV 3 | 14 | 0.32 | 0.78 | -3767 | 16389 | 49380 | 3.01 | Si |
| SLV 4 | 14 | 0.32 | 0.78 | -3767 | 16389 | 49380 | 3.01 | Si |
| SLV 5 | 14 | 0.32 | 1.92 | -9298 | 16389 | 109724 | 6.69 | Si |
| SLV 6 | 14 | 0.32 | 1.92 | -9298 | 16389 | 109724 | 6.69 | Si |
| SLV 7 | 14 | 0.32 | 2.45 | -11850 | 16389 | 132685 | 8.1 | Si |
| SLV 8 | 14 | 0.32 | 2.45 | -11850 | 16389 | 132685 | 8.1 | Si |
| SLV 9 | 14 | 0.32 | 3.19 | -15461 | 16389 | 159911 | 9.76 | Si |
| SLV 10 | 14 | 0.32 | 3.19 | -15461 | 16389 | 159911 | 9.76 | Si |

Verifica dei meccanismi locali di collasso con analisi cinematica lineare

forza di aggancio al piano = 0 quota mezzeria = 357.5 Wa = 0.05 Ta = 0.083

| Comb. | N top | N base | V orto | α0 | M* | e* | a0* | aLim | Verifica |
|---|---|---|---|---|---|---|---|---|---|
| SLV 11 | -17407 | -4941 | -288 | 0.026 | 20.267 | 0.962 | 38.651 | 1417.879 | No |
| SLV 12 | -17407 | -4941 | -288 | 0.026 | 20.267 | 0.962 | 38.651 | 1417.879 | No |
| SLV 6 | -22438 | -11719 | 307 | 0.027 | 25.388 | 0.969 | 40.968 | 1417.879 | No |
| SLV 5 | -22438 | -11719 | 307 | 0.027 | 25.388 | 0.969 | 40.968 | 1417.879 | No |
| SLV 8 | -15567 | -3737 | -237 | 0.027 | 18.396 | 0.959 | 41.402 | 1417.879 | No |
| SLV 7 | -15567 | -3737 | -237 | 0.027 | 18.396 | 0.959 | 41.402 | 1417.879 | No |
| SLV 9 | -24278 | -12922 | 255 | 0.03 | 27.261 | 0.971 | 44.948 | 1417.879 | No |
| SLV 10 | -24278 | -12922 | 255 | 0.03 | 27.261 | 0.971 | 44.948 | 1417.879 | No |
| SLV 2 | -17887 | -7522 | 177 | 0.032 | 20.756 | 0.963 | 47.693 | 813.056 | No |
| SLV 1 | -17887 | -7522 | 177 | 0.032 | 20.756 | 0.963 | 47.693 | 813.056 | No |

Tabella dei coefficienti di sicurezza minimi

| Stato limite | Coeff.s. | Comb. | Verifica |
|---|---|---|---|
| PF_SLU | 1.331 | SLU 82 | Si |
| V_SLU | 0.477 | SLU 82 | No |
| PF_SLV | 0 | SLV 1 | No |
| V_SLV | 0 | SLV 1 | No |
| PFFP_SLV | 2.434 | SLV 1 | Si |
| R_SLV | 0.027 | SLV 11 | No |

## Maschio 66

Verifiche condotte secondo D.M. 17-01-18 (N.T.C.)

### Dati geometrici

| X ini. | Y ini. | X fin. | Y fin. | Quota i. | Quota.s | l | Sp. | h netta | h ini. | h fin. | a | a.s.,sx | a.s.,dx |
|---|---|---|---|---|---|---|---|---|---|---|---|---|---|
| -1505.8 | 104.6 | -1505.8 | 140.6 | L3 | L4 | 36 | 14 | 373 | 373 | 373 | | | |

### Caratteristiche del materiale

(Circolare 7 21-01-19 C8.5.I) Muratura in mattoni pieni e malta di calce LC2_Corti

| fb | fk | fvk0 | fmedio | τ0 | fv0 | μ | ϕ | fv,lim | E | G | FC |
|---|---|---|---|---|---|---|---|---|---|---|---|
| 60 | | | 34.5 | 0.9 | 2 | 0.58 | 0.77 | 3.25 | 32000 | 12800 | 1.2 |

### Verifica a pressoflessione nel piano secondo D.M. 17-01-18 NTC §7.8.2.2.1 in combinazioni non sismiche, γM = 3

| Comb. | Quota | N | M | σ0 | Mu | c.s. | Verifica |
|---|---|---|---|---|---|---|---|
| SLU 79 | 171 | -882 | -13871 | 1.75 | 12464 | 0.899 | No, M>Mu |
| SLU 79 | 381 | -1764 | -6109 | 3.5 | 18109 | 2.964 | Si |
| SLU 84 | 171 | -911 | -14321 | 1.81 | 12759 | 0.891 | No, M>Mu |
| SLU 84 | 381 | -1831 | -6229 | 3.63 | 18259 | 2.931 | Si |
| SLU 74 | 171 | -878 | -13799 | 1.74 | 12424 | 0.9 | No, M>Mu |
| SLU 74 | 381 | -1764 | -5905 | 3.5 | 18110 | 3.067 | Si |
| SLU 82 | 171 | -896 | -14079 | 1.78 | 12609 | 0.896 | No, M>Mu |
| SLU 82 | 381 | -1805 | -5980 | 3.58 | 18206 | 3.044 | Si |
| SLU 77 | 171 | -893 | -14041 | 1.77 | 12576 | 0.896 | No, M>Mu |
| SLU 77 | 381 | -1790 | -6154 | 3.55 | 18173 | 2.953 | Si |
| SLU 83 | 171 | -913 | -14359 | 1.81 | 12782 | 0.89 | No, M>Mu |
| SLU 83 | 381 | -1841 | -6182 | 3.65 | 18279 | 2.957 | Si |
| SLU 80 | 171 | -880 | -13833 | 1.75 | 12440 | 0.899 | No, M>Mu |
| SLU 80 | 381 | -1754 | -6156 | 3.48 | 18083 | 2.937 | Si |
| SLU 78 | 171 | -890 | -14004 | 1.77 | 12552 | 0.896 | No, M>Mu |
| SLU 78 | 381 | -1780 | -6201 | 3.53 | 18149 | 2.927 | Si |
| SLU 75 | 171 | -876 | -13761 | 1.74 | 12400 | 0.901 | No, M>Mu |
| SLU 75 | 381 | -1754 | -5952 | 3.48 | 18084 | 3.038 | Si |
| SLU 81 | 171 | -898 | -14116 | 1.78 | 12633 | 0.895 | No, M>Mu |
| SLU 81 | 381 | -1815 | -5933 | 3.6 | 18227 | 3.072 | Si |

### Verifica a pressoflessione nel piano secondo D.M. 17-01-18 NTC §7.8.2.2.1 in combinazioni sismiche, γM = 2

| Comb. | Quota | N | M | σ0 | Mu | c.s. | Verifica |
|---|---|---|---|---|---|---|---|
| SLV 10 | 171 | -983 | -14016 | 1.95 | 14875 | 1.061 | Si |
| SLV 10 | 381 | -9007 | 67538 | 17.87 | 0 | 0 | No, Rottura per schiacciamento |
| SLV 8 | 171 | -180 | -4247 | 0 | 0 | 0 | No, e>l/2 |
| SLV 8 | 381 | 6702 | -75115 | 0 | 0 | 0 | No, Trazione |
| SLV 7 | 171 | -180 | -4247 | 0 | 0 | 0 | No, e>l/2 |
| SLV 7 | 381 | 6702 | -75115 | 0 | 0 | 0 | No, Trazione |
| SLV 12 | 171 | -73 | -2621 | 0 | 0 | 0 | No, e>l/2 |
| SLV 12 | 381 | 7156 | -83575 | 0 | 0 | 0 | No, Trazione |
| SLV 4 | 171 | -623 | -10132 | 1.24 | 10084 | 0.995 | No, M>Mu |
| SLV 4 | 381 | 515 | -12357 | 0 | 0 | 0 | No, Trazione |
| SLV 9 | 171 | -983 | -14016 | 1.95 | 14875 | 1.061 | Si |
| SLV 9 | 381 | -9007 | 67538 | 17.87 | 0 | 0 | No, Rottura per schiacciamento |
| SLV 6 | 171 | -1090 | -15641 | 2.16 | 16151 | 1.033 | Si |
| SLV 6 | 381 | -9462 | 75997 | 18.77 | 0 | 0 | No, Rottura per schiacciamento |
| SLV 11 | 171 | -73 | -2621 | 0 | 0 | 0 | No, e>l/2 |
| SLV 11 | 381 | 7156 | -83575 | 0 | 0 | 0 | No, Trazione |
| SLV 5 | 171 | -1090 | -15641 | 2.16 | 16151 | 1.033 | Si |
| SLV 5 | 381 | -9462 | 75997 | 18.77 | 0 | 0 | No, Rottura per schiacciamento |
| SLD 16 | 171 | -450 | -7269 | 0.89 | 7503 | 1.032 | Si |
| SLD 16 | 381 | 149 | -18941 | 0 | 0 | 0 | No, Trazione |

### Verifica a taglio nel piano secondo D.M. 17-01-18 (N.T.C.) §7.8.2.2.2 con rottura per scorrimento in combinazioni non sismiche, γM = 3

| Comb. | Quota | N | V par | M | σ0 | σN | l' | fvd | Vt scorr. | Vt fess.diag. | Vt,lim | c.s. | Verifica |
|---|---|---|---|---|---|---|---|---|---|---|---|---|---|
| SLU 77 | 171 | -893 | -201 | -14041 | | 9.35 | 6.82 | 1.08 | 103 | | | 0.52 | No, Vu<V |
| SLU 77 | 381 | -1790 | -111 | -6154 | | 3.55 | 36 | 1.03 | 519 | | | 4.69 | Si |
| SLU 80 | 171 | -880 | -197 | -13833 | | 9.22 | 6.81 | 1.08 | 103 | | | 0.52 | No, Vu<V |
| SLU 80 | 381 | -1754 | -108 | -6156 | | 3.48 | 36 | 1.02 | 514 | | | 4.78 | Si |
| SLU 78 | 171 | -890 | -200 | -14004 | | 9.32 | 6.82 | 1.08 | 103 | | | 0.52 | No, Vu<V |
| SLU 78 | 381 | -1780 | -109 | -6201 | | 3.53 | 36 | 1.03 | 517 | | | 4.74 | Si |
| SLU 75 | 171 | -876 | -198 | -13761 | | 9.13 | 6.85 | 1.08 | 104 | | | 0.53 | No, Vu<V |
| SLU 75 | 381 | -1754 | -109 | -5952 | | 3.48 | 36 | 1.02 | 514 | | | 4.72 | Si |
| SLU 82 | 171 | -896 | -203 | -14079 | | 9.32 | 6.87 | 1.08 | 104 | | | 0.51 | No, Vu<V |
| SLU 82 | 381 | -1805 | -113 | -5980 | | 3.58 | 36 | 1.03 | 521 | | | 4.61 | Si |
| SLU 79 | 171 | -882 | -198 | -13871 | | 9.25 | 6.81 | 1.08 | 103 | | | 0.52 | No, Vu<V |

| Comb. | Quota | N | V par | M | σ0 | σN | l' | fvd | Vt scorr. | Vt fess.diag. | Vt,lim | c.s. | Verifica |
|---|---|---|---|---|---|---|---|---|---|---|---|---|---|
| SLU 79 | 381 | -1764 | -109 | -6109 | | 3.5 | 36 | 1.02 | 515 | | | 4.73 | Si |
| SLU 81 | 171 | -898 | -204 | -14116 | | 9.35 | 6.86 | 1.08 | 104 | | | 0.51 | No, Vu<V |
| SLU 81 | 381 | -1815 | -114 | -5933 | | 3.6 | 36 | 1.04 | 522 | | | 4.57 | Si |
| SLU 74 | 171 | -878 | -199 | -13799 | | 9.16 | 6.85 | 1.08 | 104 | | | 0.52 | No, Vu<V |
| SLU 74 | 381 | -1764 | -110 | -5905 | | 3.5 | 36 | 1.02 | 515 | | | 4.67 | Si |
| SLU 84 | 171 | -911 | -205 | -14321 | | 9.52 | 6.84 | 1.08 | 104 | | | 0.51 | No, Vu<V |
| SLU 84 | 381 | -1831 | -113 | -6229 | | 3.63 | 36 | 1.04 | 524 | | | 4.63 | Si |
| SLU 83 | 171 | -913 | -206 | -14359 | | 9.55 | 6.83 | 1.08 | 104 | | | 0.5 | No, Vu<V |
| SLU 83 | 381 | -1841 | -115 | -6182 | | 3.65 | 36 | 1.04 | 525 | | | 4.59 | Si |

### Verifica a taglio nel piano secondo D.M. 17-01-18 (N.T.C.) §7.8.2.2.2 con rottura per scorrimento in combinazioni sismiche, γM = 2

| Comb. | Quota | N | V par | M | σ0 | σN | l' | fvd | Vt scorr. | Vt fess.diag. | Vt,lim | c.s. | Verifica |
|---|---|---|---|---|---|---|---|---|---|---|---|---|---|
| SLV 7 | 171 | -180 | 407 | -4247 | | 0 | 0 | 0.83 | 0 | | | 0 | No, Vu<V |
| SLV 7 | 381 | 6702 | -1542 | -75115 | | 0 | 0 | 0.83 | 0 | | | 0 | No, Vu<V |
| SLV 4 | 171 | -623 | -57 | -10132 | | 8.5 | 5.24 | 1.63 | 119 | | | 2.07 | Si |
| SLV 4 | 381 | 515 | -287 | -12357 | | 0 | 0 | 0.83 | 0 | | | 0 | No, Vu<V |
| SLV 12 | 171 | -73 | 463 | -2621 | | 0 | 0 | 0.83 | 0 | | | 0 | No, Vu<V |
| SLV 12 | 381 | 7156 | -1693 | -83575 | | 0 | 0 | 0.83 | 0 | | | 0 | No, Vu<V |
| SLD 15 | 171 | -450 | -35 | -7269 | | 5.84 | 5.5 | 1.63 | 125 | | | 3.59 | Si |
| SLD 15 | 381 | 149 | -367 | -18941 | | 0 | 0 | 0.83 | 0 | | | 0 | No, Vu<V |
| SLV 11 | 171 | -73 | 463 | -2621 | | 0 | 0 | 0.83 | 0 | | | 0 | No, Vu<V |
| SLV 11 | 381 | 7156 | -1693 | -83575 | | 0 | 0 | 0.83 | 0 | | | 0 | No, Vu<V |
| SLD 12 | 171 | -375 | 106 | -6482 | | 12.85 | 2.08 | 1.63 | 47 | | | 0.45 | No, Vu<V |
| SLD 12 | 381 | 2212 | -729 | -36105 | | 0 | 0 | 0.83 | 0 | | | 0 | No, Vu<V |
| SLV 15 | 171 | -267 | 132 | -4713 | | 18.22 | 1.05 | 1.63 | 24 | | | 0.18 | No, Vu<V |
| SLV 15 | 381 | 2029 | -788 | -40554 | | 0 | 0 | 0.83 | 0 | | | 0 | No, Vu<V |
| SLD 16 | 171 | -450 | -35 | -7269 | | 5.84 | 5.5 | 1.63 | 125 | | | 3.59 | Si |
| SLD 16 | 381 | 149 | -367 | -18941 | | 0 | 0 | 0.83 | 0 | | | 0 | No, Vu<V |
| SLV 3 | 171 | -623 | -57 | -10132 | | 8.5 | 5.24 | 1.63 | 119 | | | 2.07 | Si |
| SLV 3 | 381 | 515 | -287 | -12357 | | 0 | 0 | 0.83 | 0 | | | 0 | No, Vu<V |
| SLV 8 | 171 | -180 | 407 | -4247 | | 0 | 0 | 0.83 | 0 | | | 0 | No, Vu<V |
| SLV 8 | 381 | 6702 | -1542 | -75115 | | 0 | 0 | 0.83 | 0 | | | 0 | No, Vu<V |

### Verifica a pressoflessione fuori piano D.M. 17-01-18 (N.T.C.)

quota 357.5 Wa 0.03 denominatore 8 γM = 2

| Comb. | fd | Sa | σ0 | N | M | Mc | Coeff.s. | Verifica |
|---|---|---|---|---|---|---|---|---|
| SLV 10 | 14 | 0.32 | 17.89 | -9018 | 1824 | 0 | 0 | No, Rottura per schiacciamento |
| SLV 7 | 14 | 0.32 | 0 | 6650 | 1824 | 0 | 0 | No, Trazione |
| SLV 4 | 14 | 0.32 | 0 | 473 | 1824 | 0 | 0 | No, Trazione |
| SLV 12 | 14 | 0.32 | 0 | 7106 | 1824 | 0 | 0 | No, Trazione |
| SLV 3 | 14 | 0.32 | 0 | 473 | 1824 | 0 | 0 | No, Trazione |
| SLV 8 | 14 | 0.32 | 0 | 6650 | 1824 | 0 | 0 | No, Trazione |
| SLV 9 | 14 | 0.32 | 17.89 | -9018 | 1824 | 0 | 0 | No, Rottura per schiacciamento |
| SLV 5 | 14 | 0.32 | 18.8 | -9475 | 1824 | 0 | 0 | No, Rottura per schiacciamento |
| SLV 11 | 14 | 0.32 | 0 | 7106 | 1824 | 0 | 0 | No, Trazione |
| SLV 6 | 14 | 0.32 | 18.8 | -9475 | 1824 | 0 | 0 | No, Rottura per schiacciamento |

### Verifica dei meccanismi locali di collasso con analisi cinematica lineare

forza di aggancio al piano = 0 quota mezzeria = 357.5 Wa = 0.03 Ta = 0.166

| Comb. | N top | N base | V orto | α0 | M* | e* | a0* | aLim | Verifica |
|---|---|---|---|---|---|---|---|---|---|
| SLV 6 | -48 | -1090 | 25 | 0 | 0.363 | 0.921 | 0 | 1399.295 | No |
| SLV 10 | -254 | -983 | 24 | 0 | 0.539 | 0.893 | 0 | 1399.295 | No |
| SLV 9 | -254 | -983 | 24 | 0 | 0.539 | 0.893 | 0 | 1399.295 | No |
| SLV 5 | -48 | -1090 | 25 | 0 | 0.363 | 0.921 | 0 | 1399.295 | No |
| SLV 7 | -4083 | -180 | -24 | 0.014 | 4.422 | 0.981 | 20.504 | 1399.295 | No |
| SLV 8 | -4083 | -180 | -24 | 0.014 | 4.422 | 0.981 | 20.504 | 1399.295 | No |
| SLV 11 | -4289 | -73 | -25 | 0.014 | 4.632 | 0.982 | 20.529 | 1399.295 | No |
| SLV 12 | -4289 | -73 | -25 | 0.014 | 4.632 | 0.982 | 20.529 | 1399.295 | No |
| SLV 2 | -1219 | -896 | 9 | 0.015 | 1.507 | 0.949 | 22.442 | 1435.066 | No |
| SLV 1 | -1219 | -896 | 9 | 0.015 | 1.507 | 0.949 | 22.442 | 1435.066 | No |

### Tabella dei coefficienti di sicurezza minimi

| Stato limite | Coeff.s. | Comb. | Verifica |
|---|---|---|---|
| PF_SLU | 0.89 | SLU 83 | No |
| V_SLU | 0.503 | SLU 83 | No |
| PF_SLV | 0 | SLV 16 | No |
| V_SLV | 0 | SLD 7 | No |
| PFFP_SLV | 0 | SLV 16 | No |
| R_SLV | 0 | SLV 5 | No |

## Maschio 67

Verifiche condotte secondo D.M. 17-01-18 (N.T.C.)

### Dati geometrici

| X ini. | Y ini. | X fin. | Y fin. | Quota i. | Quota.s | l | Sp. | h netta | h ini. | h fin. | a | a.s.,sx | a.s.,dx |
|---|---|---|---|---|---|---|---|---|---|---|---|---|---|
| -1505.8 | 220.6 | -1505.8 | 666.1 | L3 | L4 | 445.5 | 14 | 373 | 373 | 373 | | | |

### Caratteristiche del materiale

(Circolare 7 21-01-19 C8.5.I) Muratura in mattoni pieni e malta di calce LC2_Corti

| fb | fk | fvk0 | fmedio | τ0 | fv0 | μ | ϕ | fv,lim | E | G | FC |
|---|---|---|---|---|---|---|---|---|---|---|---|
| 60 | | | 34.5 | 0.9 | 2 | 0.58 | 0.77 | 3.25 | 32000 | 12800 | 1.2 |

Verifica a pressoflessione nel piano secondo D.M. 17-01-18 NTC §7.8.2.2.1 in combinazioni non sismiche, γM = 3

| Comb. | Quota | N | M | σ0 | Mu | c.s. | Verifica |
|---|---|---|---|---|---|---|---|
| SLU 55 | 171 | -56351 | 2604814 | 9.03 | 0 | 0 | No, Rottura per schiacciamento |
| SLU 55 | 381 | -41041 | -207988 | 6.58 | 1756994 | 8.448 | Si |
| SLU 62 | 171 | -59108 | 2737780 | 9.48 | 0 | 0 | No, Rottura per schiacciamento |
| SLU 62 | 381 | -43121 | -221324 | 6.91 | 1452822 | 6.564 | Si |
| SLU 42 | 171 | -55382 | 2605365 | 8.88 | 0 | 0 | No, Rottura per schiacciamento |
| SLU 42 | 381 | -40745 | -216873 | 6.53 | 1797283 | 8.287 | Si |
| SLU 63 | 171 | -59068 | 2742481 | 9.47 | 0 | 0 | No, Rottura per schiacciamento |
| SLU 63 | 381 | -43090 | -217951 | 6.91 | 1457689 | 6.688 | Si |
| SLU 57 | 171 | -57601 | 2647054 | 9.24 | 0 | 0 | No, Rottura per schiacciamento |
| SLU 57 | 381 | -42192 | -248384 | 6.76 | 1593428 | 6.415 | Si |
| SLU 61 | 171 | -58649 | 2728329 | 9.4 | 0 | 0 | No, Rottura per schiacciamento |
| SLU 61 | 381 | -42565 | -181075 | 6.82 | 1537895 | 8.493 | Si |
| SLU 56 | 171 | -57642 | 2642353 | 9.24 | 0 | 0 | No, Rottura per schiacciamento |
| SLU 56 | 381 | -42223 | -251757 | 6.77 | 1588808 | 6.311 | Si |
| SLU 60 | 171 | -58689 | 2723627 | 9.41 | 0 | 0 | No, Rottura per schiacciamento |
| SLU 60 | 381 | -42596 | -184448 | 6.83 | 1533173 | 8.312 | Si |
| SLU 58 | 171 | -56838 | 2611131 | 9.11 | 0 | 0 | No, Rottura per schiacciamento |
| SLU 58 | 381 | -41618 | -250485 | 6.67 | 1676382 | 6.693 | Si |
| SLU 59 | 171 | -56797 | 2615832 | 9.11 | 0 | 0 | No, Rottura per schiacciamento |
| SLU 59 | 381 | -41587 | -247112 | 6.67 | 1680836 | 6.802 | Si |

Verifica a pressoflessione nel piano secondo D.M. 17-01-18 NTC §7.8.2.2.1 in combinazioni sismiche, γM = 2

| Comb. | Quota | N | M | σ0 | Mu | c.s. | Verifica |
|---|---|---|---|---|---|---|---|
| SLV 4 | 171 | -42438 | 2894520 | 6.8 | 4188960 | 1.447 | Si |
| SLV 4 | 381 | -31738 | 106330 | 5.09 | 4125404 | 38.798 | Si |
| SLD 12 | 171 | -45346 | 2953582 | 7.27 | 4090583 | 1.385 | Si |
| SLD 12 | 381 | -34994 | -179905 | 5.61 | 4215585 | 23.432 | Si |
| SLV 8 | 171 | -46736 | 4444274 | 7.49 | 4026082 | 0.906 | No, M>Mu |
| SLV 8 | 381 | -38681 | -74139 | 6.2 | 4242879 | 57.229 | Si |
| SLV 12 | 171 | -48043 | 4335426 | 7.7 | 3955122 | 0.912 | No, M>Mu |
| SLV 12 | 381 | -39942 | -224775 | 6.4 | 4233976 | 18.837 | Si |
| SLD 7 | 171 | -44795 | 2999928 | 7.18 | 4113009 | 1.371 | Si |
| SLD 7 | 381 | -34462 | -115787 | 5.53 | 4205074 | 36.317 | Si |
| SLD 11 | 171 | -45346 | 2953582 | 7.27 | 4090583 | 1.385 | Si |
| SLD 11 | 381 | -34994 | -179905 | 5.61 | 4215585 | 23.432 | Si |
| SLD 8 | 171 | -44795 | 2999928 | 7.18 | 4113009 | 1.371 | Si |
| SLD 8 | 381 | -34462 | -115787 | 5.53 | 4205074 | 36.317 | Si |
| SLV 7 | 171 | -46736 | 4444274 | 7.49 | 4026082 | 0.906 | No, M>Mu |
| SLV 7 | 381 | -38681 | -74139 | 6.2 | 4242879 | 57.229 | Si |
| SLV 3 | 171 | -42438 | 2894520 | 6.8 | 4188960 | 1.447 | Si |
| SLV 3 | 381 | -31738 | 106330 | 5.09 | 4125404 | 38.798 | Si |
| SLV 11 | 171 | -48043 | 4335426 | 7.7 | 3955122 | 0.912 | No, M>Mu |
| SLV 11 | 381 | -39942 | -224775 | 6.4 | 4233976 | 18.837 | Si |

Verifica a taglio nel piano secondo D.M. 17-01-18 (N.T.C.) §7.8.2.2.2 con rottura per scorrimento in combinazioni non sismiche, γM = 3

| Comb. | Quota | N | V par | M | σ0 | σN | l' | fvd | Vt scorr. | Vt fess.diag. | Vt,lim | c.s. | Verifica |
|---|---|---|---|---|---|---|---|---|---|---|---|---|---|
| SLU 72 | 171 | -56684 | 1945 | 2590447 | | 9.09 | 445.5 | 1.08 | 6757 | | | 3.47 | Si |
| SLU 72 | 381 | -41545 | 886 | -257244 | | 6.66 | 445.5 | 1.08 | 6757 | | | 7.62 | Si |
| SLU 80 | 171 | -62960 | 2053 | 2918984 | | 10.09 | 445.5 | 1.08 | 6757 | | | 3.29 | Si |
| SLU 80 | 381 | -46276 | 859 | -275244 | | 7.42 | 445.5 | 1.08 | 6757 | | | 7.87 | Si |
| SLU 70 | 171 | -57488 | 1898 | 2621669 | | 9.22 | 445.5 | 1.08 | 6757 | | | 3.56 | Si |
| SLU 70 | 381 | -42149 | 825 | -258516 | | 6.76 | 445.5 | 1.08 | 6757 | | | 8.19 | Si |
| SLU 71 | 171 | -56725 | 1928 | 2585745 | | 9.09 | 445.5 | 1.08 | 6757 | | | 3.5 | Si |
| SLU 71 | 381 | -41576 | 870 | -260617 | | 6.67 | 445.5 | 1.08 | 6757 | | | 7.77 | Si |
| SLU 79 | 171 | -63001 | 2037 | 2914283 | | 10.1 | 445.5 | 1.08 | 6757 | | | 3.32 | Si |
| SLU 79 | 381 | -46307 | 843 | -278617 | | 7.42 | 445.5 | 1.08 | 6757 | | | 8.02 | Si |
| SLU 38 | 171 | -53111 | 1895 | 2478716 | | 8.52 | 445.5 | 1.08 | 6757 | | | 3.57 | Si |
| SLU 38 | 381 | -39242 | 882 | -246033 | | 6.29 | 445.5 | 1.08 | 6757 | | | 7.66 | Si |
| SLU 78 | 171 | -63764 | 2006 | 2950206 | | 10.22 | 445.5 | 1.08 | 6757 | | | 3.37 | Si |
| SLU 78 | 381 | -46880 | 797 | -276517 | | 7.52 | 445.5 | 1.08 | 6757 | | | 8.47 | Si |
| SLU 69 | 171 | -57529 | 1881 | 2616967 | | 9.22 | 445.5 | 1.08 | 6757 | | | 3.59 | Si |
| SLU 69 | 381 | -42181 | 809 | -261889 | | 6.76 | 445.5 | 1.08 | 6757 | | | 8.36 | Si |
| SLU 77 | 171 | -63805 | 1990 | 2945504 | | 10.23 | 445.5 | 1.08 | 6757 | | | 3.4 | Si |
| SLU 77 | 381 | -46912 | 781 | -279890 | | 7.52 | 445.5 | 1.08 | 6757 | | | 8.65 | Si |
| SLU 37 | 171 | -53152 | 1879 | 2474014 | | 8.52 | 445.5 | 1.08 | 6757 | | | 3.6 | Si |
| SLU 37 | 381 | -39273 | 866 | -249406 | | 6.3 | 445.5 | 1.08 | 6757 | | | 7.8 | Si |

Verifica a taglio nel piano secondo D.M. 17-01-18 (N.T.C.) §7.8.2.2.2 con rottura per scorrimento in combinazioni sismiche, γM = 2

| Comb. | Quota | N | V par | M | σ0 | σN | l' | fvd | Vt scorr. | Vt fess.diag. | Vt,lim | c.s. | Verifica |
|---|---|---|---|---|---|---|---|---|---|---|---|---|---|
| SLV 5 | 171 | -38813 | -14122 | -346421 | | 6.22 | 445.5 | 1.63 | 10135 | | | 0.72 | No, Vu<V |
| SLV 5 | 381 | -23048 | -14798 | -60631 | | 3.7 | 445.5 | 1.57 | 9807 | | | 0.66 | No, Vu<V |
| SLV 12 | 171 | -48043 | 15941 | 4335426 | | 8.63 | 397.53 | 1.63 | 9044 | | | 0.57 | No, Vu<V |
| SLV 12 | 381 | -39942 | 14977 | -224775 | | 6.4 | 445.5 | 1.63 | 10135 | | | 0.68 | No, Vu<V |
| SLV 6 | 171 | -38813 | -14122 | -346421 | | 6.22 | 445.5 | 1.63 | 10135 | | | 0.72 | No, Vu<V |

| Comb. | Quota | N | V par | M | σ0 | σN | l' | fvd | Vt scorr. | Vt fess.diag. | Vt,lim | c.s. | Verifica |
|---|---|---|---|---|---|---|---|---|---|---|---|---|---|
| SLV 6 | 381 | -23048 | -14798 | -60631 | | 3.7 | 445.5 | 1.57 | 9807 | | | 0.66 | No, Vu<V |
| SLV 15 | 171 | -46795 | 7239 | 2531694 | | 7.5 | 445.5 | 1.63 | 10135 | | | 1.4 | Si |
| SLV 15 | 381 | -35942 | 6077 | -395788 | | 5.76 | 445.5 | 1.63 | 10135 | | | 1.67 | Si |
| SLV 10 | 171 | -40121 | -12922 | -455269 | | 6.43 | 445.5 | 1.63 | 10135 | | | 0.78 | No, Vu<V |
| SLV 10 | 381 | -24309 | -13795 | -211266 | | 3.9 | 445.5 | 1.61 | 10059 | | | 0.73 | No, Vu<V |
| SLV 11 | 171 | -48043 | 15941 | 4335426 | | 8.63 | 397.53 | 1.63 | 9044 | | | 0.57 | No, Vu<V |
| SLV 11 | 381 | -39942 | 14977 | -224775 | | 6.4 | 445.5 | 1.63 | 10135 | | | 0.68 | No, Vu<V |
| SLV 7 | 171 | -46736 | 14742 | 4444274 | | 8.72 | 382.97 | 1.63 | 8713 | | | 0.59 | No, Vu<V |
| SLV 7 | 381 | -38681 | 13974 | -74139 | | 6.2 | 445.5 | 1.63 | 10135 | | | 0.73 | No, Vu<V |
| SLV 8 | 171 | -46736 | 14742 | 4444274 | | 8.72 | 382.97 | 1.63 | 8713 | | | 0.59 | No, Vu<V |
| SLV 8 | 381 | -38681 | 13974 | -74139 | | 6.2 | 445.5 | 1.63 | 10135 | | | 0.73 | No, Vu<V |
| SLV 9 | 171 | -40121 | -12922 | -455269 | | 6.43 | 445.5 | 1.63 | 10135 | | | 0.78 | No, Vu<V |
| SLV 9 | 381 | -24309 | -13795 | -211266 | | 3.9 | 445.5 | 1.61 | 10059 | | | 0.73 | No, Vu<V |
| SLV 16 | 171 | -46795 | 7239 | 2531694 | | 7.5 | 445.5 | 1.63 | 10135 | | | 1.4 | Si |
| SLV 16 | 381 | -35942 | 6077 | -395788 | | 5.76 | 445.5 | 1.63 | 10135 | | | 1.67 | Si |

### Verifica a pressoflessione fuori piano D.M. 17-01-18 (N.T.C.)

quota 357.5 Wa 0.03 denominatore 8 γM = 2

| Comb. | fd | Sa | σ0 | N | M | Mc | Coeff.s. | Verifica |
|---|---|---|---|---|---|---|---|---|
| SLV 5 | 14 | 0.32 | 3.79 | -23654 | 22574 | 114184 | 5.06 | Si |
| SLV 6 | 14 | 0.32 | 3.79 | -23654 | 22574 | 114184 | 5.06 | Si |
| SLV 9 | 14 | 0.32 | 4 | -24937 | 22574 | 117439 | 5.2 | Si |
| SLV 10 | 14 | 0.32 | 4 | -24937 | 22574 | 117439 | 5.2 | Si |
| SLV 2 | 14 | 0.32 | 4.41 | -27489 | 22574 | 123015 | 5.45 | Si |
| SLV 1 | 14 | 0.32 | 4.41 | -27489 | 22574 | 123015 | 5.45 | Si |
| SLV 13 | 14 | 0.32 | 5.09 | -31766 | 22574 | 129675 | 5.74 | Si |
| SLV 14 | 14 | 0.32 | 5.09 | -31766 | 22574 | 129675 | 5.74 | Si |
| SLV 4 | 14 | 0.32 | 5.14 | -32060 | 22574 | 130009 | 5.76 | Si |
| SLV 3 | 14 | 0.32 | 5.14 | -32060 | 22574 | 130009 | 5.76 | Si |

### Verifica dei meccanismi locali di collasso con analisi cinematica lineare

forza di aggancio al piano = 0 quota mezzeria = 357.5 Wa = 0.03 Ta = 0.166

| Comb. | N top | N base | V orto | α0 | M* | e* | a0* | aLim | Verifica |
|---|---|---|---|---|---|---|---|---|---|
| SLV 11 | -28870 | -48043 | 34 | 0.019 | 32.668 | 0.969 | 28.381 | 1399.295 | No |
| SLV 12 | -28870 | -48043 | 34 | 0.019 | 32.668 | 0.969 | 28.381 | 1399.295 | No |
| SLV 16 | -26002 | -46795 | 18 | 0.02 | 29.748 | 0.967 | 29.334 | 1435.066 | No |
| SLV 15 | -26002 | -46795 | 18 | 0.02 | 29.748 | 0.967 | 29.334 | 1435.066 | No |
| SLV 8 | -27987 | -46736 | 29 | 0.019 | 31.769 | 0.969 | 28.667 | 1399.295 | No |
| SLV 7 | -27987 | -46736 | 29 | 0.019 | 31.769 | 0.969 | 28.667 | 1399.295 | No |
| SLV 6 | -16849 | -38813 | -33 | 0.019 | 20.439 | 0.953 | 29.106 | 1399.295 | No |
| SLV 5 | -16849 | -38813 | -33 | 0.019 | 20.439 | 0.953 | 29.106 | 1399.295 | No |
| SLV 1 | -19717 | -40061 | -17 | 0.02 | 23.355 | 0.958 | 29.981 | 1435.066 | No |
| SLV 2 | -19717 | -40061 | -17 | 0.02 | 23.355 | 0.958 | 29.981 | 1435.066 | No |

### Tabella dei coefficienti di sicurezza minimi

| Stato limite | Coeff.s. | Comb. | Verifica |
|---|---|---|---|
| PF_SLU | 0 | SLU 31 | No |
| V_SLU | 3.291 | SLU 80 | Si |
| PF_SLV | 0.906 | SLV 7 | No |
| V_SLV | 0.567 | SLV 11 | No |
| PFFP_SLV | 5.058 | SLV 5 | Si |
| R_SLV | 0.02 | SLV 11 | No |

## Maschio 68

Verifiche condotte secondo D.M. 17-01-18 (N.T.C.)

### Dati geometrici

| X ini. | Y ini. | X fin. | Y fin. | Quota i. | Quota.s | l | Sp. | h netta | h ini. | h fin. | a | a.s.,sx | a.s.,dx |
|---|---|---|---|---|---|---|---|---|---|---|---|---|---|
| -1375.3 | -485.9 | -1375.3 | -331.4 | L3 | Z medio 373 cm | 154.5 | 28 | 202 | 202 | 202 | | | |

### Caratteristiche del materiale

(Circolare 7 21-01-19 C8.5.I) Muratura in mattoni pieni e malta di calce LC2_Corti

| fb | fk | fvk0 | fmedio | τ0 | fv0 | μ | ϕ | fv,lim | E | G | FC |
|---|---|---|---|---|---|---|---|---|---|---|---|
| 60 | | | 34.5 | 0.9 | 2 | 0.58 | 0.77 | 3.25 | 32000 | 12800 | 1.2 |

### Verifica a pressoflessione nel piano secondo D.M. 17-01-18 NTC §7.8.2.2.1 in combinazioni non sismiche, γM = 3

| Comb. | Quota | N | M | σ0 | Mu | c.s. | Verifica |
|---|---|---|---|---|---|---|---|
| SLU 39 | 171 | -22185 | -29652 | 5.13 | 634850 | 21.41 | Si |
| SLU 39 | 373 | -11023 | 217688 | 2.55 | 585165 | 2.688 | Si |
| SLU 83 | 171 | -27329 | -44966 | 6.32 | 473887 | 10.539 | Si |
| SLU 83 | 373 | -13473 | 239940 | 3.11 | 642861 | 2.679 | Si |
| SLU 61 | 171 | -25976 | -48636 | 6 | 527450 | 10.845 | Si |
| SLU 61 | 373 | -12834 | 224113 | 2.97 | 630351 | 2.813 | Si |
| SLU 84 | 171 | -27384 | -45548 | 6.33 | 471521 | 10.352 | Si |
| SLU 84 | 373 | -13434 | 234472 | 3.11 | 642156 | 2.739 | Si |
| SLU 41 | 171 | -22397 | -31923 | 5.18 | 630514 | 19.751 | Si |
| SLU 41 | 373 | -11079 | 212635 | 2.56 | 586781 | 2.76 | Si |
| SLU 60 | 171 | -25921 | -48054 | 5.99 | 529475 | 11.018 | Si |
| SLU 60 | 373 | -12873 | 229580 | 2.98 | 631157 | 2.749 | Si |
| SLU 81 | 171 | -27117 | -42695 | 6.27 | 482800 | 11.308 | Si |
| SLU 81 | 373 | -13417 | 244993 | 3.1 | 641834 | 2.62 | Si |
| SLU 82 | 171 | -27173 | -43276 | 6.28 | 480486 | 11.103 | Si |

| Comb. | Quota | N | M | σ0 | Mu | c.s. | Verifica |
|---|---|---|---|---|---|---|---|
| SLU 82 | 373 | -13378 | 239525 | 3.09 | 641119 | 2.677 | Si |
| SLU 40 | 171 | -22241 | -30233 | 5.14 | 633734 | 20.962 | Si |
| SLU 40 | 373 | -10984 | 212221 | 2.54 | 584046 | 2.752 | Si |
| SLU 18 | 171 | -20989 | -35011 | 4.85 | 655659 | 18.727 | Si |
| SLU 18 | 373 | -10479 | 202276 | 2.42 | 568777 | 2.812 | Si |

Verifica a pressoflessione nel piano secondo D.M. 17-01-18 NTC §7.8.2.2.1 in combinazioni sismiche, γM = 2

| Comb. | Quota | N | M | σ0 | Mu | c.s. | Verifica |
|---|---|---|---|---|---|---|---|
| SLV 13 | 171 | -14872 | 239888 | 3.44 | 825615 | 3.442 | Si |
| SLV 13 | 373 | -8803 | 391392 | 2.03 | 566799 | 1.448 | Si |
| SLV 15 | 171 | -9780 | 284213 | 2.26 | 615727 | 2.166 | Si |
| SLV 15 | 373 | -6570 | 309241 | 1.52 | 444475 | 1.437 | Si |
| SLV 14 | 171 | -14872 | 239888 | 3.44 | 825615 | 3.442 | Si |
| SLV 14 | 373 | -8803 | 391392 | 2.03 | 566799 | 1.448 | Si |
| SLD 15 | 171 | -14939 | 100916 | 3.45 | 827872 | 8.204 | Si |
| SLD 15 | 373 | -8040 | 207305 | 1.86 | 526596 | 2.54 | Si |
| SLD 14 | 171 | -17113 | 81887 | 3.96 | 893996 | 10.917 | Si |
| SLD 14 | 373 | -8989 | 242572 | 2.08 | 576301 | 2.376 | Si |
| SLD 13 | 171 | -17113 | 81887 | 3.96 | 893996 | 10.917 | Si |
| SLD 13 | 373 | -8989 | 242572 | 2.08 | 576301 | 2.376 | Si |
| SLD 16 | 171 | -14939 | 100916 | 3.45 | 827872 | 8.204 | Si |
| SLD 16 | 373 | -8040 | 207305 | 1.86 | 526596 | 2.54 | Si |
| SLV 16 | 171 | -9780 | 284213 | 2.26 | 615727 | 2.166 | Si |
| SLV 16 | 373 | -6570 | 309241 | 1.52 | 444475 | 1.437 | Si |
| SLV 9 | 171 | -25333 | -20005 | 5.86 | 1019071 | 50.94 | Si |
| SLV 9 | 373 | -12420 | 334247 | 2.87 | 734016 | 2.196 | Si |
| SLV 10 | 171 | -25333 | -20005 | 5.86 | 1019071 | 50.94 | Si |
| SLV 10 | 373 | -12420 | 334247 | 2.87 | 734016 | 2.196 | Si |

Verifica a taglio nel piano secondo D.M. 17-01-18 (N.T.C.) §7.8.2.2.2 con rottura per scorrimento in combinazioni non sismiche, γM = 3

| Comb. | Quota | N | V par | M | σ0 | σN | l' | fvd | Vt scorr. | Vt fess.diag. | Vt,lim | c.s. | Verifica |
|---|---|---|---|---|---|---|---|---|---|---|---|---|---|
| SLU 83 | 171 | -27329 | -1958 | -44966 | | 6.32 | 154.5 | 1.08 | 4687 | | | 2.39 | Si |
| SLU 83 | 373 | -13473 | -1341 | 239940 | | 3.11 | 154.5 | 0.97 | 4200 | | | 3.13 | Si |
| SLU 62 | 171 | -26133 | -1815 | -50326 | | 6.04 | 154.5 | 1.08 | 4687 | | | 2.58 | Si |
| SLU 62 | 373 | -12929 | -1261 | 224527 | | 2.99 | 154.5 | 0.95 | 4127 | | | 3.27 | Si |
| SLU 63 | 171 | -26188 | -1743 | -50908 | | 6.05 | 154.5 | 1.08 | 4687 | | | 2.69 | Si |
| SLU 63 | 373 | -12890 | -1211 | 219060 | | 2.98 | 154.5 | 0.95 | 4122 | | | 3.4 | Si |
| SLU 82 | 171 | -27173 | -1987 | -43276 | | 6.28 | 154.5 | 1.08 | 4687 | | | 2.36 | Si |
| SLU 82 | 373 | -13378 | -1368 | 239525 | | 3.09 | 154.5 | 0.97 | 4187 | | | 3.06 | Si |
| SLU 60 | 171 | -25921 | -1915 | -48054 | | 5.99 | 154.5 | 1.08 | 4687 | | | 2.45 | Si |
| SLU 60 | 373 | -12873 | -1338 | 229580 | | 2.98 | 154.5 | 0.95 | 4120 | | | 3.08 | Si |
| SLU 81 | 171 | -27117 | -2059 | -42695 | | 6.27 | 154.5 | 1.08 | 4687 | | | 2.28 | Si |
| SLU 81 | 373 | -13417 | -1418 | 244993 | | 3.1 | 154.5 | 0.97 | 4192 | | | 2.96 | Si |
| SLU 61 | 171 | -25976 | -1844 | -48636 | | 6 | 154.5 | 1.08 | 4687 | | | 2.54 | Si |
| SLU 61 | 373 | -12834 | -1288 | 224113 | | 2.97 | 154.5 | 0.95 | 4115 | | | 3.19 | Si |
| SLU 39 | 171 | -22185 | -1808 | -29652 | | 5.13 | 154.5 | 1.08 | 4687 | | | 2.59 | Si |
| SLU 39 | 373 | -11023 | -1266 | 217688 | | 2.55 | 154.5 | 0.9 | 3873 | | | 3.06 | Si |
| SLU 84 | 171 | -27384 | -1887 | -45548 | | 6.33 | 154.5 | 1.08 | 4687 | | | 2.48 | Si |
| SLU 84 | 373 | -13434 | -1291 | 234472 | | 3.11 | 154.5 | 0.97 | 4195 | | | 3.25 | Si |
| SLU 74 | 171 | -26419 | -1781 | -44110 | | 6.11 | 154.5 | 1.08 | 4687 | | | 2.63 | Si |
| SLU 74 | 373 | -12922 | -1177 | 213088 | | 2.99 | 154.5 | 0.95 | 4126 | | | 3.51 | Si |

Verifica a taglio nel piano secondo D.M. 17-01-18 (N.T.C.) §7.8.2.2.2 con rottura per scorrimento in combinazioni sismiche, γM = 2

| Comb. | Quota | N | V par | M | σ0 | σN | l' | fvd | Vt scorr. | Vt fess.diag. | Vt,lim | c.s. | Verifica |
|---|---|---|---|---|---|---|---|---|---|---|---|---|---|
| SLV 13 | 171 | -14872 | -7432 | 239888 | | 3.44 | 154.5 | 1.52 | 6579 | | | 0.89 | No, Vu<V |
| SLV 13 | 373 | -8803 | -3988 | 391392 | | 3.2 | 98.37 | 1.47 | 4056 | | | 1.02 | Si |
| SLV 10 | 171 | -25333 | -7337 | -20005 | | 5.86 | 154.5 | 1.63 | 7030 | | | 0.96 | No, Vu<V |
| SLV 10 | 373 | -12420 | -4162 | 334247 | | 2.94 | 151.02 | 1.42 | 6008 | | | 1.44 | Si |
| SLV 15 | 171 | -9780 | -4607 | 284213 | | 2.42 | 144.57 | 1.32 | 5329 | | | 1.16 | Si |
| SLV 15 | 373 | -6570 | -2374 | 309241 | | 2.59 | 90.55 | 1.35 | 3427 | | | 1.44 | Si |
| SLV 7 | 171 | -12237 | 4989 | -50698 | | 2.83 | 154.5 | 1.4 | 6052 | | | 1.21 | Si |
| SLV 7 | 373 | -5844 | 2683 | -70724 | | 1.35 | 154.5 | 1.1 | 4774 | | | 1.78 | Si |
| SLV 14 | 171 | -14872 | -7432 | 239888 | | 3.44 | 154.5 | 1.52 | 6579 | | | 0.89 | No, Vu<V |
| SLV 14 | 373 | -8803 | -3988 | 391392 | | 3.2 | 98.37 | 1.47 | 4056 | | | 1.02 | Si |
| SLV 8 | 171 | -12237 | 4989 | -50698 | | 2.83 | 154.5 | 1.4 | 6052 | | | 1.21 | Si |
| SLV 8 | 373 | -5844 | 2683 | -70724 | | 1.35 | 154.5 | 1.1 | 4774 | | | 1.78 | Si |
| SLV 9 | 171 | -25333 | -7337 | -20005 | | 5.86 | 154.5 | 1.63 | 7030 | | | 0.96 | No, Vu<V |
| SLV 9 | 373 | -12420 | -4162 | 334247 | | 2.94 | 151.02 | 1.42 | 6008 | | | 1.44 | Si |
| SLV 16 | 171 | -9780 | -4607 | 284213 | | 2.42 | 144.57 | 1.32 | 5329 | | | 1.16 | Si |
| SLV 16 | 373 | -6570 | -2374 | 309241 | | 2.59 | 90.55 | 1.35 | 3427 | | | 1.44 | Si |
| SLV 4 | 171 | -22698 | 5085 | -310592 | | 5.25 | 154.5 | 1.63 | 7030 | | | 1.38 | Si |
| SLV 4 | 373 | -9461 | 2509 | -127869 | | 2.19 | 154.5 | 1.27 | 5497 | | | 2.19 | Si |
| SLV 3 | 171 | -22698 | 5085 | -310592 | | 5.25 | 154.5 | 1.63 | 7030 | | | 1.38 | Si |
| SLV 3 | 373 | -9461 | 2509 | -127869 | | 2.19 | 154.5 | 1.27 | 5497 | | | 2.19 | Si |

Verifica a pressoflessione fuori piano D.M. 17-01-18 (N.T.C.)

quota 272 Wa 0.05 denominatore 8 γM = 2

| Comb. | fd | Sa | σ0 | N | M | Mc | Coeff.s. | Verifica |
|---|---|---|---|---|---|---|---|---|
| SLV 12 | 14 | 0.3 | 1.29 | -5565 | 4152 | 69707 | 16.79 | Si |
| SLV 11 | 14 | 0.3 | 1.29 | -5565 | 4152 | 69707 | 16.79 | Si |
| SLV 15 | 14 | 0.3 | 1.56 | -6737 | 4152 | 82301 | 19.82 | Si |
| SLV 16 | 14 | 0.3 | 1.56 | -6737 | 4152 | 82301 | 19.82 | Si |
| SLV 7 | 14 | 0.3 | 1.98 | -8554 | 4152 | 100379 | 24.17 | Si |
| SLV 8 | 14 | 0.3 | 1.98 | -8554 | 4152 | 100379 | 24.17 | Si |
| SLV 13 | 14 | 0.3 | 2.48 | -10732 | 4152 | 119740 | 28.84 | Si |
| SLV 14 | 14 | 0.3 | 2.48 | -10732 | 4152 | 119740 | 28.84 | Si |
| SLV 4 | 14 | 0.3 | 3.86 | -16702 | 4152 | 159943 | 38.52 | Si |

| Comb. | fd | Sa | σ0 | N | M | Mc | Coeff.s. | Verifica |
|---|---|---|---|---|---|---|---|---|
| SLV 3 | 14 | 0.3 | 3.86 | -16702 | 4152 | 159943 | 38.52 | Si |

### Verifica dei meccanismi locali di collasso con analisi cinematica lineare

forza di aggancio al piano = 0 quota mezzeria = 272 Wa = 0.05 Ta = 0.0243

| Comb. | N top | N base | V orto | α0 | M* | e* | a0* | aLim | Verifica |
|---|---|---|---|---|---|---|---|---|---|
| SLV 8 | -5844 | -12237 | 91 | 0.064 | 7.185 | 0.95 | 97.559 | 446.085 | No |
| SLV 7 | -5844 | -12237 | 91 | 0.064 | 7.185 | 0.95 | 97.559 | 446.085 | No |
| SLV 11 | -4977 | -8361 | 87 | 0.064 | 6.305 | 0.944 | 97.854 | 446.085 | No |
| SLV 12 | -4977 | -8361 | 87 | 0.064 | 6.305 | 0.944 | 97.854 | 446.085 | No |
| SLV 5 | -13287 | -29209 | 35 | 0.071 | 14.759 | 0.974 | 105.402 | 446.085 | No |
| SLV 6 | -13287 | -29209 | 35 | 0.071 | 14.759 | 0.974 | 105.402 | 446.085 | No |
| SLV 10 | -12420 | -25333 | 32 | 0.071 | 13.876 | 0.973 | 106.106 | 446.085 | No |
| SLV 9 | -12420 | -25333 | 32 | 0.071 | 13.876 | 0.973 | 106.106 | 446.085 | No |
| SLV 4 | -9461 | -22698 | 76 | 0.067 | 10.863 | 0.966 | 101.171 | 363.828 | No |
| SLV 3 | -9461 | -22698 | 76 | 0.067 | 10.863 | 0.966 | 101.171 | 363.828 | No |

### Tabella dei coefficienti di sicurezza minimi

| Stato limite | Coeff.s. | Comb. | Verifica |
|---|---|---|---|
| PF_SLU | 2.62 | SLU 81 | Si |
| V_SLU | 2.276 | SLU 81 | Si |
| PF_SLV | 1.437 | SLV 15 | Si |
| V_SLV | 0.885 | SLV 13 | No |
| PFFP_SLV | 16.788 | SLV 11 | Si |
| R_SLV | 0.219 | SLV 7 | No |

## Maschio 69

Verifiche condotte secondo D.M. 17-01-18 (N.T.C.)

### Dati geometrici

| X ini. | Y ini. | X fin. | Y fin. | Quota i. | Quota.s | l | Sp. | h netta | h ini. | h fin. | a | a.s.,sx | a.s.,dx |
|---|---|---|---|---|---|---|---|---|---|---|---|---|---|
| -1375.3 | -349.9 | -1375.3 | -331.4 | Z medio 373 cm | L4 | 18.6 | 28 | 171 | 171 | 171 | | | |

### Caratteristiche del materiale

(Circolare 7 21-01-19 C8.5.I) Muratura in mattoni pieni e malta di calce LC2_Corti

| fb | fk | fvk0 | fmedio | τ0 | fv0 | μ | ϕ | fv,lim | E | G | FC |
|---|---|---|---|---|---|---|---|---|---|---|---|
| 60 | | | 34.5 | 0.9 | 2 | 0.58 | 0.77 | 3.25 | 32000 | 12800 | 1.2 |

### Verifica a pressoflessione nel piano secondo D.M. 17-01-18 NTC §7.8.2.2.1 in combinazioni non sismiche, γM = 3

| Comb. | Quota | N | M | σ0 | Mu | c.s. | Verifica |
|---|---|---|---|---|---|---|---|
| SLU 83 | 373 | -2959 | -7639 | 5.69 | 8277 | 1.083 | Si |
| SLU 83 | 544 | -728 | 2744 | 1.4 | 5600 | 2.041 | Si |
| SLU 63 | 373 | -2804 | -6963 | 5.39 | 8796 | 1.263 | Si |
| SLU 63 | 544 | -719 | 3219 | 1.38 | 5539 | 1.721 | Si |
| SLU 84 | 373 | -2924 | -7437 | 5.62 | 8404 | 1.13 | Si |
| SLU 84 | 544 | -718 | 2591 | 1.38 | 5538 | 2.137 | Si |
| SLU 82 | 373 | -2918 | -7777 | 5.61 | 8426 | 1.083 | Si |
| SLU 82 | 544 | -719 | 2663 | 1.38 | 5544 | 2.082 | Si |
| SLU 61 | 373 | -2798 | -7303 | 5.38 | 8815 | 1.207 | Si |
| SLU 61 | 544 | -720 | 3291 | 1.38 | 5545 | 1.685 | Si |
| SLU 40 | 373 | -2345 | -7381 | 4.51 | 9716 | 1.316 | Si |
| SLU 40 | 544 | -591 | 1937 | 1.14 | 4720 | 2.437 | Si |
| SLU 62 | 373 | -2839 | -7165 | 5.46 | 8688 | 1.212 | Si |
| SLU 62 | 544 | -729 | 3372 | 1.4 | 5600 | 1.661 | Si |
| SLU 81 | 373 | -2952 | -7979 | 5.68 | 8301 | 1.04 | Si |
| SLU 81 | 544 | -729 | 2816 | 1.4 | 5606 | 1.991 | Si |
| SLU 39 | 373 | -2380 | -7584 | 4.58 | 9679 | 1.276 | Si |
| SLU 39 | 544 | -601 | 2090 | 1.16 | 4787 | 2.291 | Si |
| SLU 60 | 373 | -2833 | -7505 | 5.45 | 8708 | 1.16 | Si |
| SLU 60 | 544 | -730 | 3444 | 1.4 | 5607 | 1.628 | Si |

### Verifica a pressoflessione nel piano secondo D.M. 17-01-18 NTC §7.8.2.2.1 in combinazioni sismiche, γM = 2

| Comb. | Quota | N | M | σ0 | Mu | c.s. | Verifica |
|---|---|---|---|---|---|---|---|
| SLV 2 | 373 | -2140 | 4569 | 4.12 | 13175 | 2.884 | Si |
| SLV 2 | 544 | -750 | 8735 | 0 | 0 | 0 | No, e>l/2 |
| SLV 3 | 373 | -1259 | 10446 | 2.42 | 9371 | 0.897 | No, M>Mu |
| SLV 3 | 544 | -475 | 4731 | 0 | 0 | 0 | No, e>l/2 |
| SLV 8 | 373 | -527 | 9916 | 0 | 0 | 0 | No, e>l/2 |
| SLV 8 | 544 | -48 | -3445 | 0 | 0 | 0 | No, e>l/2 |
| SLV 6 | 373 | -3465 | -9676 | 6.67 | 14622 | 1.511 | Si |
| SLV 6 | 544 | -967 | 9903 | 0 | 0 | 0 | No, e>l/2 |
| SLV 12 | 373 | -781 | 3584 | 1.5 | 6362 | 1.775 | Si |
| SLV 12 | 544 | 42 | -6449 | 0 | 0 | 0 | No, Trazione |
| SLV 5 | 373 | -3465 | -9676 | 6.67 | 14622 | 1.511 | Si |
| SLV 5 | 544 | -967 | 9903 | 0 | 0 | 0 | No, e>l/2 |
| SLV 16 | 373 | -2107 | -10661 | 4.05 | 13072 | 1.226 | Si |
| SLV 16 | 544 | -175 | -5281 | 0 | 0 | 0 | No, e>l/2 |
| SLV 11 | 373 | -781 | 3584 | 1.5 | 6362 | 1.775 | Si |
| SLV 11 | 544 | 42 | -6449 | 0 | 0 | 0 | No, Trazione |
| SLV 7 | 373 | -527 | 9916 | 0 | 0 | 0 | No, e>l/2 |
| SLV 7 | 544 | -48 | -3445 | 0 | 0 | 0 | No, e>l/2 |
| SLV 4 | 373 | -1259 | 10446 | 2.42 | 9371 | 0.897 | No, M>Mu |
| SLV 4 | 544 | -475 | 4731 | 0 | 0 | 0 | No, e>l/2 |

Verifica a taglio nel piano secondo D.M. 17-01-18 (N.T.C.) §7.8.2.2.2 con rottura per scorrimento in combinazioni non sismiche, γM = 3

| Comb. | Quota | N | V par | M | σ0 | σN | l' | fvd | Vt scorr. | Vt fess.diag. | Vt,lim | c.s. | Verifica |
|---|---|---|---|---|---|---|---|---|---|---|---|---|---|
| SLU 84 | 373 | -2924 | -552 | -7437 | | 5.62 | 18.57 | 1.08 | 563 | | | 1.02 | Si |
| SLU 84 | 544 | -718 | 325 | 2591 | | 1.51 | 17.03 | 0.76 | 361 | | | 1.11 | Si |
| SLU 83 | 373 | -2959 | -569 | -7639 | | 5.69 | 18.57 | 1.08 | 563 | | | 0.99 | No, Vu<V |
| SLU 83 | 544 | -728 | 322 | 2744 | | 1.57 | 16.55 | 0.77 | 355 | | | 1.1 | Si |
| SLU 63 | 373 | -2804 | -526 | -6963 | | 5.39 | 18.57 | 1.08 | 563 | | | 1.07 | Si |
| SLU 63 | 544 | -719 | 287 | 3219 | | 1.78 | 14.41 | 0.79 | 320 | | | 1.11 | Si |
| SLU 60 | 373 | -2833 | -564 | -7505 | | 5.45 | 18.57 | 1.08 | 563 | | | 1 | No, Vu<V |
| SLU 60 | 544 | -730 | 280 | 3444 | | 1.9 | 13.69 | 0.81 | 310 | | | 1.11 | Si |
| SLU 82 | 373 | -2918 | -572 | -7777 | | 5.61 | 18.57 | 1.08 | 563 | | | 0.98 | No, Vu<V |
| SLU 82 | 544 | -719 | 321 | 2663 | | 1.53 | 16.75 | 0.76 | 356 | | | 1.11 | Si |
| SLU 40 | 373 | -2345 | -507 | -7381 | | 4.55 | 18.41 | 1.08 | 558 | | | 1.1 | Si |
| SLU 40 | 544 | -591 | 278 | 1937 | | 1.17 | 18.02 | 0.71 | 359 | | | 1.29 | Si |
| SLU 39 | 373 | -2380 | -524 | -7584 | | 4.65 | 18.29 | 1.08 | 555 | | | 1.06 | Si |
| SLU 39 | 544 | -601 | 275 | 2090 | | 1.23 | 17.42 | 0.72 | 351 | | | 1.28 | Si |
| SLU 81 | 373 | -2952 | -589 | -7979 | | 5.68 | 18.57 | 1.08 | 563 | | | 0.96 | No, Vu<V |
| SLU 81 | 544 | -729 | 318 | 2816 | | 1.6 | 16.27 | 0.77 | 350 | | | 1.1 | Si |
| SLU 62 | 373 | -2839 | -544 | -7165 | | 5.46 | 18.57 | 1.08 | 563 | | | 1.04 | Si |
| SLU 62 | 544 | -729 | 284 | 3372 | | 1.86 | 13.97 | 0.8 | 314 | | | 1.11 | Si |
| SLU 61 | 373 | -2798 | -546 | -7303 | | 5.38 | 18.57 | 1.08 | 563 | | | 1.03 | Si |
| SLU 61 | 544 | -720 | 283 | 3291 | | 1.82 | 14.13 | 0.8 | 316 | | | 1.12 | Si |

Verifica a taglio nel piano secondo D.M. 17-01-18 (N.T.C.) §7.8.2.2.2 con rottura per scorrimento in combinazioni sismiche, γM = 2

| Comb. | Quota | N | V par | M | σ0 | σN | l' | fvd | Vt scorr. | Vt fess.diag. | Vt,lim | c.s. | Verifica |
|---|---|---|---|---|---|---|---|---|---|---|---|---|---|
| SLV 4 | 373 | -1259 | 455 | 10446 | | 15.21 | 2.96 | 1.63 | 135 | | | 0.3 | No, Vu<V |
| SLV 4 | 544 | -475 | 139 | 4731 | | 0 | 0 | 0.83 | 0 | | | 0 | No, Vu<V |
| SLV 2 | 373 | -2140 | -22 | 4569 | | 4.12 | 18.57 | 1.63 | 845 | | | 37.68 | Si |
| SLV 2 | 544 | -750 | 18 | 8735 | | 0 | 0 | 0.83 | 0 | | | 0 | No, Vu<V |
| SLV 3 | 373 | -1259 | 455 | 10446 | | 15.21 | 2.96 | 1.63 | 135 | | | 0.3 | No, Vu<V |
| SLV 3 | 544 | -475 | 139 | 4731 | | 0 | 0 | 0.83 | 0 | | | 0 | No, Vu<V |
| SLV 15 | 373 | -2107 | -585 | -10661 | | 5.94 | 12.67 | 1.63 | 576 | | | 0.99 | No, Vu<V |
| SLV 15 | 544 | -175 | 398 | -5281 | | 0 | 0 | 0.83 | 0 | | | 0 | No, Vu<V |
| SLV 1 | 373 | -2140 | -22 | 4569 | | 4.12 | 18.57 | 1.63 | 845 | | | 37.68 | Si |
| SLV 1 | 544 | -750 | 18 | 8735 | | 0 | 0 | 0.83 | 0 | | | 0 | No, Vu<V |
| SLV 5 | 373 | -3465 | -943 | -9676 | | 6.67 | 18.57 | 1.63 | 845 | | | 0.9 | No, Vu<V |
| SLV 5 | 544 | -967 | -33 | 9903 | | 0 | 0 | 0.83 | 0 | | | 0 | No, Vu<V |
| SLV 16 | 373 | -2107 | -585 | -10661 | | 5.94 | 12.67 | 1.63 | 576 | | | 0.99 | No, Vu<V |
| SLV 16 | 544 | -175 | 398 | -5281 | | 0 | 0 | 0.83 | 0 | | | 0 | No, Vu<V |
| SLV 7 | 373 | -527 | 648 | 9916 | | 0 | 0 | 0.83 | 0 | | | 0 | No, Vu<V |
| SLV 7 | 544 | -48 | 371 | -3445 | | 0 | 0 | 0.83 | 0 | | | 0 | No, Vu<V |
| SLV 8 | 373 | -527 | 648 | 9916 | | 0 | 0 | 0.83 | 0 | | | 0 | No, Vu<V |
| SLV 8 | 544 | -48 | 371 | -3445 | | 0 | 0 | 0.83 | 0 | | | 0 | No, Vu<V |
| SLV 6 | 373 | -3465 | -943 | -9676 | | 6.67 | 18.57 | 1.63 | 845 | | | 0.9 | No, Vu<V |
| SLV 6 | 544 | -967 | -33 | 9903 | | 0 | 0 | 0.83 | 0 | | | 0 | No, Vu<V |

Verifica a pressoflessione fuori piano D.M. 17-01-18 (N.T.C.)

quota 458.5 Wa 0.05 denominatore 8 γM = 2

| Comb. | fd | Sa | σ0 | N | M | Mc | Coeff.s. | Verifica |
|---|---|---|---|---|---|---|---|---|
| SLV 12 | 14 | 0.34 | 0.93 | -485 | 403 | 6273 | 15.58 | Si |
| SLV 11 | 14 | 0.34 | 0.93 | -485 | 403 | 6273 | 15.58 | Si |
| SLV 7 | 14 | 0.34 | 1.17 | -609 | 403 | 7712 | 19.15 | Si |
| SLV 8 | 14 | 0.34 | 1.17 | -609 | 403 | 7712 | 19.15 | Si |
| SLV 16 | 14 | 0.34 | 1.43 | -745 | 403 | 9206 | 22.86 | Si |
| SLV 15 | 14 | 0.34 | 1.43 | -745 | 403 | 9206 | 22.86 | Si |
| SLV 13 | 14 | 0.34 | 2.1 | -1092 | 403 | 12658 | 31.43 | Si |
| SLV 14 | 14 | 0.34 | 2.1 | -1092 | 403 | 12658 | 31.43 | Si |
| SLV 4 | 14 | 0.34 | 2.23 | -1159 | 403 | 13264 | 32.94 | Si |
| SLV 3 | 14 | 0.34 | 2.23 | -1159 | 403 | 13264 | 32.94 | Si |

Verifica dei meccanismi locali di collasso con analisi cinematica lineare

forza di aggancio al piano = 0 quota mezzeria = 458.5 Wa = 0.05 Ta = 0.0174

| Comb. | N top | N base | V orto | α0 | M* | e* | a0* | aLim | Verifica |
|---|---|---|---|---|---|---|---|---|---|
| SLV 12 | 42 | -781 | 12 | 0 | 0 | 0 | 0 | 420.834 | No, Trazione |
| SLV 11 | 42 | -781 | 12 | 0 | 0 | 0 | 0 | 420.834 | No, Trazione |
| SLV 8 | -48 | -527 | 11 | 0.045 | 0.19 | 0.895 | 73.114 | 420.834 | No |
| SLV 7 | -48 | -527 | 11 | 0.045 | 0.19 | 0.895 | 73.114 | 420.834 | No |
| SLV 5 | -967 | -3465 | -18 | 0.071 | 1.11 | 0.966 | 107.147 | 420.834 | No |
| SLV 6 | -967 | -3465 | -18 | 0.071 | 1.11 | 0.966 | 107.147 | 420.834 | No |
| SLV 9 | -878 | -3720 | -17 | 0.071 | 1.019 | 0.963 | 107.193 | 420.834 | No |
| SLV 10 | -878 | -3720 | -17 | 0.071 | 1.019 | 0.963 | 107.193 | 420.834 | No |
| SLV 2 | -750 | -2140 | -8 | 0.08 | 0.889 | 0.958 | 120.621 | 365.446 | No |
| SLV 1 | -750 | -2140 | -8 | 0.08 | 0.889 | 0.958 | 120.621 | 365.446 | No |

Tabella dei coefficienti di sicurezza minimi

| Stato limite | Coeff.s. | Comb. | Verifica |
|---|---|---|---|
| PF_SLU | 1.04 | SLU 81 | Si |
| V_SLU | 0.956 | SLU 81 | No |
| PF_SLV | 0 | SLV 12 | No |
| V_SLV | 0 | SLV 1 | No |
| PFFP_SLV | 15.577 | SLV 11 | Si |
| R_SLV | 0 | SLV 12 | No |

## Maschio 71

Verifiche condotte secondo D.M. 17-01-18 (N.T.C.)

### Dati geometrici

| X ini. | Y ini. | X fin. | Y fin. | Quota i. | Quota.s | l | Sp. | h netta | h ini. | h fin. | a | a.s.,sx | a.s.,dx |
|---|---|---|---|---|---|---|---|---|---|---|---|---|---|
| -1375.3 | -331.4 | -1375.3 | -35.4 | Z medio 272 cm | L4 | 296 | 28 | 272 | 0 | 373 | | | |

### Caratteristiche del materiale

(Circolare 7 21-01-19 C8.5.I) Muratura in mattoni pieni e malta di calce LC2_Corti

| fb | fk | fvk0 | fmedio | τ0 | fv0 | μ | ϕ | fv,lim | E | G | FC |
|---|---|---|---|---|---|---|---|---|---|---|---|
| 60 | | | 34.5 | 0.9 | 2 | 0.58 | 0.77 | 3.25 | 32000 | 12800 | 1.2 |

### Verifica a pressoflessione nel piano secondo D.M. 17-01-18 NTC §7.8.2.2.1 in combinazioni non sismiche, γM = 3

| Comb. | Quota | N | M | σ0 | Mu | c.s. | Verifica |
|---|---|---|---|---|---|---|---|
| SLU 78 | 373 | -34977 | 561166 | 4.22 | 2494694 | 4.446 | Si |
| SLU 78 | 544 | -22107 | 284537 | 2.67 | 2200455 | 7.733 | Si |
| SLU 84 | 373 | -36293 | 584118 | 4.38 | 2483852 | 4.252 | Si |
| SLU 84 | 544 | -23295 | 298890 | 2.81 | 2258050 | 7.555 | Si |
| SLU 42 | 373 | -30736 | 541650 | 3.71 | 2477962 | 4.575 | Si |
| SLU 42 | 544 | -19889 | 286309 | 2.4 | 2076410 | 7.252 | Si |
| SLU 83 | 373 | -36373 | 580070 | 4.39 | 2482953 | 4.28 | Si |
| SLU 83 | 544 | -23368 | 293814 | 2.82 | 2261398 | 7.697 | Si |
| SLU 77 | 373 | -35057 | 557118 | 4.23 | 2494255 | 4.477 | Si |
| SLU 77 | 544 | -22180 | 279461 | 2.68 | 2204185 | 7.887 | Si |
| SLU 82 | 373 | -35905 | 566775 | 4.33 | 2487837 | 4.389 | Si |
| SLU 82 | 544 | -23071 | 289520 | 2.78 | 2247647 | 7.763 | Si |
| SLU 81 | 373 | -35985 | 562726 | 4.34 | 2487073 | 4.42 | Si |
| SLU 81 | 544 | -23144 | 284444 | 2.79 | 2251067 | 7.914 | Si |
| SLU 75 | 373 | -34589 | 543823 | 4.17 | 2496441 | 4.591 | Si |
| SLU 75 | 544 | -21882 | 275167 | 2.64 | 2188883 | 7.955 | Si |
| SLU 79 | 373 | -34858 | 546174 | 4.21 | 2495298 | 4.569 | Si |
| SLU 79 | 544 | -22075 | 271808 | 2.66 | 2198814 | 8.09 | Si |
| SLU 80 | 373 | -34779 | 550222 | 4.2 | 2495669 | 4.536 | Si |
| SLU 80 | 544 | -22001 | 276884 | 2.65 | 2195051 | 7.928 | Si |

### Verifica a pressoflessione nel piano secondo D.M. 17-01-18 NTC §7.8.2.2.1 in combinazioni sismiche, γM = 2

| Comb. | Quota | N | M | σ0 | Mu | c.s. | Verifica |
|---|---|---|---|---|---|---|---|
| SLV 15 | 373 | -27680 | 542646 | 3.34 | 2976882 | 5.486 | Si |
| SLV 15 | 544 | -15456 | 354196 | 1.86 | 1938344 | 5.473 | Si |
| SLV 12 | 373 | -20901 | 543990 | 2.52 | 2454927 | 4.513 | Si |
| SLV 12 | 544 | -11695 | 424729 | 1.41 | 1530985 | 3.605 | Si |
| SLV 16 | 373 | -27680 | 542646 | 3.34 | 2976882 | 5.486 | Si |
| SLV 16 | 544 | -15456 | 354196 | 1.86 | 1938344 | 5.473 | Si |
| SLD 11 | 373 | -22386 | 410793 | 2.7 | 2580775 | 6.282 | Si |
| SLD 11 | 544 | -13363 | 262839 | 1.61 | 1716781 | 6.532 | Si |
| SLV 11 | 373 | -20901 | 543990 | 2.52 | 2454927 | 4.513 | Si |
| SLV 11 | 544 | -11695 | 424729 | 1.41 | 1530985 | 3.605 | Si |
| SLD 8 | 373 | -21004 | 366501 | 2.53 | 2463857 | 6.723 | Si |
| SLD 8 | 544 | -12878 | 227778 | 1.55 | 1663545 | 7.303 | Si |
| SLD 12 | 373 | -22386 | 410793 | 2.7 | 2580775 | 6.282 | Si |
| SLD 12 | 544 | -13363 | 262839 | 1.61 | 1716781 | 6.532 | Si |
| SLV 8 | 373 | -17632 | 438875 | 2.13 | 2155136 | 4.911 | Si |
| SLV 8 | 544 | -10548 | 342781 | 1.27 | 1398472 | 4.08 | Si |
| SLV 7 | 373 | -17632 | 438875 | 2.13 | 2155136 | 4.911 | Si |
| SLV 7 | 544 | -10548 | 342781 | 1.27 | 1398472 | 4.08 | Si |
| SLD 7 | 373 | -21004 | 366501 | 2.53 | 2463857 | 6.723 | Si |
| SLD 7 | 544 | -12878 | 227778 | 1.55 | 1663545 | 7.303 | Si |

### Verifica a taglio nel piano secondo D.M. 17-01-18 (N.T.C.) §7.8.2.2.2 con rottura per scorrimento in combinazioni non sismiche, γM = 3

| Comb. | Quota | N | V par | M | σ0 | σN | l' | fvd | Vt scorr. | Vt fess.diag. | Vt,lim | c.s. | Verifica |
|---|---|---|---|---|---|---|---|---|---|---|---|---|---|
| SLU 65 | 373 | -29511 | 1416 | 398678 | | 3.56 | 296 | 1.03 | 8539 | | | 6.03 | Si |
| SLU 65 | 544 | -17962 | 1476 | 188320 | | 2.17 | 296 | 0.84 | 6999 | | | 4.74 | Si |
| SLU 71 | 373 | -30419 | 1126 | 426617 | | 3.67 | 296 | 1.04 | 8660 | | | 7.69 | Si |
| SLU 71 | 544 | -18533 | 1398 | 198599 | | 2.24 | 296 | 0.85 | 7075 | | | 5.06 | Si |
| SLU 66 | 373 | -30230 | 1150 | 420217 | | 3.65 | 296 | 1.04 | 8635 | | | 7.51 | Si |
| SLU 66 | 544 | -18414 | 1384 | 196882 | | 2.22 | 296 | 0.85 | 7060 | | | 5.1 | Si |
| SLU 67 | 373 | -30150 | 1311 | 424266 | | 3.64 | 296 | 1.04 | 8624 | | | 6.58 | Si |
| SLU 67 | 544 | -18340 | 1473 | 201958 | | 2.21 | 296 | 0.85 | 7050 | | | 4.79 | Si |
| SLU 72 | 373 | -30340 | 1287 | 430665 | | 3.66 | 296 | 1.04 | 8650 | | | 6.72 | Si |
| SLU 72 | 544 | -18459 | 1487 | 203675 | | 2.23 | 296 | 0.85 | 7066 | | | 4.75 | Si |
| SLU 68 | 373 | -29899 | 1405 | 416021 | | 3.61 | 296 | 1.04 | 8591 | | | 6.12 | Si |
| SLU 68 | 544 | -18186 | 1511 | 197689 | | 2.19 | 296 | 0.85 | 7029 | | | 4.65 | Si |
| SLU 70 | 373 | -30538 | 1299 | 441609 | | 3.68 | 296 | 1.05 | 8676 | | | 6.68 | Si |
| SLU 70 | 544 | -18565 | 1509 | 211328 | | 2.24 | 296 | 0.85 | 7080 | | | 4.69 | Si |
| SLU 47 | 373 | -27303 | 1277 | 319000 | | 3.29 | 296 | 0.99 | 8245 | | | 6.45 | Si |
| SLU 47 | 544 | -16634 | 1342 | 139196 | | 2.01 | 296 | 0.82 | 6822 | | | 5.08 | Si |
| SLU 26 | 373 | -24341 | 1203 | 373553 | | 2.94 | 296 | 0.95 | 7850 | | | 6.53 | Si |
| SLU 26 | 544 | -14780 | 1289 | 185109 | | 1.78 | 296 | 0.79 | 6575 | | | 5.1 | Si |
| SLU 69 | 373 | -30617 | 1139 | 437561 | | 3.69 | 296 | 1.05 | 8687 | | | 7.63 | Si |
| SLU 69 | 544 | -18638 | 1420 | 206252 | | 2.25 | 296 | 0.86 | 7090 | | | 4.99 | Si |

### Verifica a taglio nel piano secondo D.M. 17-01-18 (N.T.C.) §7.8.2.2.2 con rottura per scorrimento in combinazioni sismiche, γM = 2

| Comb. | Quota | N | V par | M | σ0 | σN | l' | fvd | Vt scorr. | Vt fess.diag. | Vt,lim | c.s. | Verifica |
|---|---|---|---|---|---|---|---|---|---|---|---|---|---|
| SLV 5 | 373 | -26100 | -7422 | 84652 | | 3.15 | 296 | 1.46 | 12127 | | | 1.63 | Si |
| SLV 5 | 544 | -17468 | -3307 | -131900 | | 2.11 | 296 | 1.25 | 10400 | | | 3.14 | Si |

| Comb. | Quota | N | V par | M | σ0 | σN | l' | fvd | Vt scorr. | Vt fess.diag. | Vt,lim | c.s. | Verifica |
|---|---|---|---|---|---|---|---|---|---|---|---|---|---|
| SLV 12 | 373 | -20901 | 9272 | 543990 | | 2.52 | 296 | 1.34 | 11087 | | | 1.2 | Si |
| SLV 12 | 544 | -11695 | 5200 | 424729 | | 1.41 | 296 | 1.12 | 9246 | | | 1.78 | Si |
| SLD 8 | 373 | -21004 | 4519 | 366501 | | 2.53 | 296 | 1.34 | 11107 | | | 2.46 | Si |
| SLD 8 | 544 | -12878 | 2662 | 227778 | | 1.55 | 296 | 1.14 | 9482 | | | 3.56 | Si |
| SLV 11 | 373 | -20901 | 9272 | 543990 | | 2.52 | 296 | 1.34 | 11087 | | | 1.2 | Si |
| SLV 11 | 544 | -11695 | 5200 | 424729 | | 1.41 | 296 | 1.12 | 9246 | | | 1.78 | Si |
| SLD 7 | 373 | -21004 | 4519 | 366501 | | 2.53 | 296 | 1.34 | 11107 | | | 2.46 | Si |
| SLD 7 | 544 | -12878 | 2662 | 227778 | | 1.55 | 296 | 1.14 | 9482 | | | 3.56 | Si |
| SLV 10 | 373 | -29369 | -7420 | 189767 | | 3.54 | 296 | 1.54 | 12781 | | | 1.72 | Si |
| SLV 10 | 544 | -18615 | -3074 | -49952 | | 2.25 | 296 | 1.28 | 10630 | | | 3.46 | Si |
| SLV 7 | 373 | -17632 | 9269 | 438875 | | 2.13 | 296 | 1.26 | 10433 | | | 1.13 | Si |
| SLV 7 | 544 | -10548 | 4967 | 342781 | | 1.27 | 296 | 1.09 | 9016 | | | 1.82 | Si |
| SLV 9 | 373 | -29369 | -7420 | 189767 | | 3.54 | 296 | 1.54 | 12781 | | | 1.72 | Si |
| SLV 9 | 544 | -18615 | -3074 | -49952 | | 2.25 | 296 | 1.28 | 10630 | | | 3.46 | Si |
| SLV 8 | 373 | -17632 | 9269 | 438875 | | 2.13 | 296 | 1.26 | 10433 | | | 1.13 | Si |
| SLV 8 | 544 | -10548 | 4967 | 342781 | | 1.27 | 296 | 1.09 | 9016 | | | 1.82 | Si |
| SLV 6 | 373 | -26100 | -7422 | 84652 | | 3.15 | 296 | 1.46 | 12127 | | | 1.63 | Si |
| SLV 6 | 544 | -17468 | -3307 | -131900 | | 2.11 | 296 | 1.25 | 10400 | | | 3.14 | Si |

### Verifica a pressoflessione fuori piano D.M. 17-01-18 (N.T.C.)

quota 458.5 Wa 0.05 denominatore 8 γM = 2

| Comb. | fd | Sa | σ0 | N | M | Mc | Coeff.s. | Verifica |
|---|---|---|---|---|---|---|---|---|
| SLV 8 | 14 | 0.34 | 1.58 | -13072 | 16243 | 159387 | 9.81 | Si |
| SLV 7 | 14 | 0.34 | 1.58 | -13072 | 16243 | 159387 | 9.81 | Si |
| SLV 4 | 14 | 0.34 | 1.71 | -14209 | 16243 | 171015 | 10.53 | Si |
| SLV 3 | 14 | 0.34 | 1.71 | -14209 | 16243 | 171015 | 10.53 | Si |
| SLV 12 | 14 | 0.34 | 1.8 | -14893 | 16243 | 177841 | 10.95 | Si |
| SLV 11 | 14 | 0.34 | 1.8 | -14893 | 16243 | 177841 | 10.95 | Si |
| SLV 2 | 14 | 0.34 | 2.05 | -17005 | 16243 | 198089 | 12.2 | Si |
| SLV 1 | 14 | 0.34 | 2.05 | -17005 | 16243 | 198089 | 12.2 | Si |
| SLV 15 | 14 | 0.34 | 2.45 | -20279 | 16243 | 227056 | 13.98 | Si |
| SLV 16 | 14 | 0.34 | 2.45 | -20279 | 16243 | 227056 | 13.98 | Si |

### Verifica dei meccanismi locali di collasso con analisi cinematica lineare

forza di aggancio al piano = 0 quota mezzeria = 458.5 Wa = 0.05 Ta = 0.0441

| Comb. | N top | N base | V orto | α0 | M* | e* | a0* | aLim | Verifica |
|---|---|---|---|---|---|---|---|---|---|
| SLV 10 | -18615 | -29369 | 32 | 0.055 | 22.132 | 0.958 | 83.414 | 754.721 | No |
| SLV 9 | -18615 | -29369 | 32 | 0.055 | 22.132 | 0.958 | 83.414 | 754.721 | No |
| SLV 6 | -17468 | -26100 | 33 | 0.055 | 20.965 | 0.955 | 83.9 | 754.721 | No |
| SLV 5 | -17468 | -26100 | 33 | 0.055 | 20.965 | 0.955 | 83.9 | 754.721 | No |
| SLV 11 | -11695 | -20901 | 45 | 0.056 | 15.106 | 0.941 | 86.219 | 754.721 | No |
| SLV 12 | -11695 | -20901 | 45 | 0.056 | 15.106 | 0.941 | 86.219 | 754.721 | No |
| SLV 8 | -10548 | -17632 | 45 | 0.056 | 13.945 | 0.937 | 87.195 | 754.721 | No |
| SLV 7 | -10548 | -17632 | 45 | 0.056 | 13.945 | 0.937 | 87.195 | 754.721 | No |
| SLV 14 | -17532 | -30220 | 37 | 0.055 | 21.03 | 0.956 | 83.554 | 506.653 | No |
| SLV 13 | -17532 | -30220 | 37 | 0.055 | 21.03 | 0.956 | 83.554 | 506.653 | No |

### Tabella dei coefficienti di sicurezza minimi

| Stato limite | Coeff.s. | Comb. | Verifica |
|---|---|---|---|
| PF_SLU | 4.252 | SLU 84 | Si |
| V_SLU | 4.651 | SLU 68 | Si |
| PF_SLV | 3.605 | SLV 11 | Si |
| V_SLV | 1.126 | SLV 7 | Si |
| PFFP_SLV | 9.812 | SLV 7 | Si |
| R_SLV | 0.111 | SLV 9 | No |

## Maschio 72

Verifiche condotte secondo D.M. 17-01-18 (N.T.C.)

### Dati geometrici

| X ini. | Y ini. | X fin. | Y fin. | Quota i. | Quota.s | l | Sp. | h netta | h ini. | h fin. | a | a.s.,sx | a.s.,dx |
|---|---|---|---|---|---|---|---|---|---|---|---|---|---|
| -1375.3 | -35.4 | -1375.3 | -22.8 | L3 | L4 | 12.6 | 28 | 373 | 373 | 373 | | | |

### Caratteristiche del materiale

(Circolare 7 21-01-19 C8.5.I) Muratura in mattoni pieni e malta di calce LC2_Corti

| fb | fk | fvk0 | fmedio | τ0 | fv0 | μ | ϕ | fv,lim | E | G | FC |
|---|---|---|---|---|---|---|---|---|---|---|---|
| 60 | | | 34.5 | 0.9 | 2 | 0.58 | 0.77 | 3.25 | 32000 | 12800 | 1.2 |

### Verifica a pressoflessione nel piano secondo D.M. 17-01-18 NTC §7.8.2.2.1 in combinazioni non sismiche, γM = 3

| Comb. | Quota | N | M | σ0 | Mu | c.s. | Verifica |
|---|---|---|---|---|---|---|---|
| SLU 55 | 171 | -1668 | -467 | 4.74 | 4384 | 9.394 | Si |
| SLU 55 | 381 | -539 | -9238 | 0 | 0 | 0 | No, e>l/2 |
| SLU 59 | 171 | -1676 | -573 | 4.76 | 4375 | 7.637 | Si |
| SLU 59 | 381 | -554 | -9461 | 0 | 0 | 0 | No, e>l/2 |
| SLU 60 | 171 | -1732 | -368 | 4.92 | 4309 | 11.708 | Si |
| SLU 60 | 381 | -568 | -9732 | 0 | 0 | 0 | No, e>l/2 |
| SLU 1 | 171 | -1105 | -669 | 3.14 | 4269 | 6.381 | Si |
| SLU 1 | 381 | -368 | -6229 | 0 | 0 | 0 | No, e>l/2 |
| SLU 53 | 171 | -1661 | -582 | 4.72 | 4391 | 7.547 | Si |
| SLU 53 | 381 | -552 | -9421 | 0 | 0 | 0 | No, e>l/2 |
| SLU 61 | 171 | -1746 | -305 | 4.96 | 4290 | 14.045 | Si |
| SLU 61 | 381 | -564 | -9682 | 0 | 0 | 0 | No, e>l/2 |
| SLU 57 | 171 | -1692 | -584 | 4.81 | 4358 | 7.464 | Si |

| Comb. | Quota | N | M | σ0 | Mu | c.s. | Verifica |
|---|---|---|---|---|---|---|---|
| SLU 57 | 381 | -560 | -9561 | 0 | 0 | 0 | No, e>l/2 |
| SLU 54 | 171 | -1675 | -519 | 4.76 | 4377 | 8.429 | Si |
| SLU 54 | 381 | -548 | -9372 | 0 | 0 | 0 | No, e>l/2 |
| SLU 56 | 171 | -1679 | -646 | 4.77 | 4373 | 6.765 | Si |
| SLU 56 | 381 | -564 | -9611 | 0 | 0 | 0 | No, e>l/2 |
| SLU 58 | 171 | -1662 | -635 | 4.72 | 4390 | 6.908 | Si |
| SLU 58 | 381 | -558 | -9510 | 0 | 0 | 0 | No, e>l/2 |

Verifica a pressoflessione nel piano secondo D.M. 17-01-18 NTC §7.8.2.2.1 in combinazioni sismiche, γM = 2

| Comb. | Quota | N | M | σ0 | Mu | c.s. | Verifica |
|---|---|---|---|---|---|---|---|
| SLV 8 | 171 | -1817 | 2596 | 5.16 | 6595 | 2.54 | Si |
| SLV 8 | 381 | -155 | -3814 | 0 | 0 | 0 | No, e>l/2 |
| SLV 7 | 171 | -1817 | 2596 | 5.16 | 6595 | 2.54 | Si |
| SLV 7 | 381 | -155 | -3814 | 0 | 0 | 0 | No, e>l/2 |
| SLD 1 | 171 | -768 | -1317 | 2.18 | 3965 | 3.012 | Si |
| SLD 1 | 381 | -387 | -6564 | 0 | 0 | 0 | No, e>l/2 |
| SLV 11 | 171 | -2309 | 2971 | 6.56 | 6720 | 2.262 | Si |
| SLV 11 | 381 | -226 | -4827 | 0 | 0 | 0 | No, e>l/2 |
| SLV 9 | 171 | -630 | -3815 | 1.79 | 3380 | 0.886 | No, M>Mu |
| SLV 9 | 381 | -663 | -10055 | 0 | 0 | 0 | No, e>l/2 |
| SLV 14 | 171 | -1792 | -1003 | 5.09 | 6569 | 6.549 | Si |
| SLV 14 | 381 | -593 | -9407 | 0 | 0 | 0 | No, e>l/2 |
| SLV 12 | 171 | -2309 | 2971 | 6.56 | 6720 | 2.262 | Si |
| SLV 12 | 381 | -226 | -4827 | 0 | 0 | 0 | No, e>l/2 |
| SLV 13 | 171 | -1792 | -1003 | 5.09 | 6569 | 6.549 | Si |
| SLV 13 | 381 | -593 | -9407 | 0 | 0 | 0 | No, e>l/2 |
| SLV 6 | 171 | -138 | -4190 | 0 | 0 | 0 | No, e>l/2 |
| SLV 6 | 381 | -592 | -9042 | 0 | 0 | 0 | No, e>l/2 |
| SLV 10 | 171 | -630 | -3815 | 1.79 | 3380 | 0.886 | No, M>Mu |
| SLV 10 | 381 | -663 | -10055 | 0 | 0 | 0 | No, e>l/2 |

Verifica a taglio nel piano secondo D.M. 17-01-18 (N.T.C.) §7.8.2.2.2 con rottura per scorrimento in combinazioni non sismiche, γM = 3

| Comb. | Quota | N | V par | M | σ0 | σN | l' | fvd | Vt scorr. | Vt fess.diag. | Vt,lim | c.s. | Verifica |
|---|---|---|---|---|---|---|---|---|---|---|---|---|---|
| SLU 61 | 171 | -1746 | 145 | -305 | | 4.96 | 12.57 | 1.08 | 381 | | | 2.62 | Si |
| SLU 61 | 381 | -564 | -285 | -9682 | | 0 | 0 | 0.56 | 0 | | | 0 | No, Vu<V |
| SLU 59 | 171 | -1676 | 125 | -573 | | 4.76 | 12.57 | 1.08 | 381 | | | 3.06 | Si |
| SLU 59 | 381 | -554 | -293 | -9461 | | 0 | 0 | 0.56 | 0 | | | 0 | No, Vu<V |
| SLU 1 | 171 | -1105 | 68 | -669 | | 3.14 | 12.57 | 0.97 | 343 | | | 5.03 | Si |
| SLU 1 | 381 | -368 | -212 | -6229 | | 0 | 0 | 0.56 | 0 | | | 0 | No, Vu<V |
| SLU 56 | 171 | -1679 | 120 | -646 | | 4.77 | 12.57 | 1.08 | 381 | | | 3.16 | Si |
| SLU 56 | 381 | -564 | -305 | -9611 | | 0 | 0 | 0.56 | 0 | | | 0 | No, Vu<V |
| SLU 53 | 171 | -1661 | 123 | -582 | | 4.72 | 12.57 | 1.08 | 381 | | | 3.11 | Si |
| SLU 53 | 381 | -552 | -297 | -9421 | | 0 | 0 | 0.56 | 0 | | | 0 | No, Vu<V |
| SLU 55 | 171 | -1668 | 130 | -467 | | 4.74 | 12.57 | 1.08 | 381 | | | 2.93 | Si |
| SLU 55 | 381 | -539 | -279 | -9238 | | 0 | 0 | 0.56 | 0 | | | 0 | No, Vu<V |
| SLU 58 | 171 | -1662 | 120 | -635 | | 4.72 | 12.57 | 1.08 | 381 | | | 3.19 | Si |
| SLU 58 | 381 | -558 | -301 | -9510 | | 0 | 0 | 0.56 | 0 | | | 0 | No, Vu<V |
| SLU 57 | 171 | -1692 | 126 | -584 | | 4.81 | 12.57 | 1.08 | 381 | | | 3.04 | Si |
| SLU 57 | 381 | -560 | -297 | -9561 | | 0 | 0 | 0.56 | 0 | | | 0 | No, Vu<V |
| SLU 54 | 171 | -1675 | 128 | -519 | | 4.76 | 12.57 | 1.08 | 381 | | | 2.99 | Si |
| SLU 54 | 381 | -548 | -289 | -9372 | | 0 | 0 | 0.56 | 0 | | | 0 | No, Vu<V |
| SLU 60 | 171 | -1732 | 140 | -368 | | 4.92 | 12.57 | 1.08 | 381 | | | 2.72 | Si |
| SLU 60 | 381 | -568 | -293 | -9732 | | 0 | 0 | 0.56 | 0 | | | 0 | No, Vu<V |

Verifica a taglio nel piano secondo D.M. 17-01-18 (N.T.C.) §7.8.2.2.2 con rottura per scorrimento in combinazioni sismiche, γM = 2

| Comb. | Quota | N | V par | M | σ0 | σN | l' | fvd | Vt scorr. | Vt fess.diag. | Vt,lim | c.s. | Verifica |
|---|---|---|---|---|---|---|---|---|---|---|---|---|---|
| SLV 7 | 171 | -1817 | 437 | 2596 | | 5.16 | 12.57 | 1.63 | 572 | | | 1.31 | Si |
| SLV 7 | 381 | -155 | 230 | -3814 | | 0 | 0 | 0.83 | 0 | | | 0 | No, Vu<V |
| SLV 8 | 171 | -1817 | 437 | 2596 | | 5.16 | 12.57 | 1.63 | 572 | | | 1.31 | Si |
| SLV 8 | 381 | -155 | 230 | -3814 | | 0 | 0 | 0.83 | 0 | | | 0 | No, Vu<V |
| SLV 9 | 171 | -630 | -274 | -3815 | | 32.73 | 0.69 | 1.63 | 31 | | | 0.11 | No, Vu<V |
| SLV 9 | 381 | -663 | -691 | -10055 | | 0 | 0 | 0.83 | 0 | | | 0 | No, Vu<V |
| SLV 13 | 171 | -1792 | -246 | -1003 | | 5.09 | 12.57 | 1.63 | 572 | | | 2.32 | Si |
| SLV 13 | 381 | -593 | -504 | -9407 | | 0 | 0 | 0.83 | 0 | | | 0 | No, Vu<V |
| SLV 6 | 171 | -138 | -129 | -4190 | | 0 | 0 | 0.83 | 0 | | | 0 | No, Vu<V |
| SLV 6 | 381 | -592 | -602 | -9042 | | 0 | 0 | 0.83 | 0 | | | 0 | No, Vu<V |
| SLV 11 | 171 | -2309 | 292 | 2971 | | 6.56 | 12.57 | 1.63 | 572 | | | 1.96 | Si |
| SLV 11 | 381 | -226 | 141 | -4827 | | 0 | 0 | 0.83 | 0 | | | 0 | No, Vu<V |
| SLV 10 | 171 | -630 | -274 | -3815 | | 32.73 | 0.69 | 1.63 | 31 | | | 0.11 | No, Vu<V |
| SLV 10 | 381 | -663 | -691 | -10055 | | 0 | 0 | 0.83 | 0 | | | 0 | No, Vu<V |
| SLV 14 | 171 | -1792 | -246 | -1003 | | 5.09 | 12.57 | 1.63 | 572 | | | 2.32 | Si |
| SLV 14 | 381 | -593 | -504 | -9407 | | 0 | 0 | 0.83 | 0 | | | 0 | No, Vu<V |
| SLD 1 | 171 | -768 | 144 | -1317 | | 2.18 | 12.57 | 1.27 | 447 | | | 3.1 | Si |
| SLD 1 | 381 | -387 | -222 | -6564 | | 0 | 0 | 0.83 | 0 | | | 0 | No, Vu<V |
| SLV 12 | 171 | -2309 | 292 | 2971 | | 6.56 | 12.57 | 1.63 | 572 | | | 1.96 | Si |
| SLV 12 | 381 | -226 | 141 | -4827 | | 0 | 0 | 0.83 | 0 | | | 0 | No, Vu<V |

Verifica a pressoflessione fuori piano D.M. 17-01-18 (N.T.C.)

quota 357.5 Wa 0.05 denominatore 8 γM = 2

| Comb. | fd | Sa | σ0 | N | M | Mc | Coeff.s. | Verifica |
|---|---|---|---|---|---|---|---|---|
| SLV 7 | 14 | 0.32 | 2.96 | -1042 | 1218 | 11054 | 9.07 | Si |
| SLV 8 | 14 | 0.32 | 2.96 | -1042 | 1218 | 11054 | 9.07 | Si |
| SLV 3 | 14 | 0.32 | 2.97 | -1045 | 1218 | 11075 | 9.09 | Si |
| SLV 4 | 14 | 0.32 | 2.97 | -1045 | 1218 | 11075 | 9.09 | Si |
| SLV 11 | 14 | 0.32 | 3.81 | -1339 | 1218 | 12911 | 10.6 | Si |
| SLV 12 | 14 | 0.32 | 3.81 | -1339 | 1218 | 12911 | 10.6 | Si |
| SLV 2 | 14 | 0.32 | 3.82 | -1345 | 1218 | 12939 | 10.62 | Si |

| Comb. | fd | Sa | σ0 | N | M | Mc | Coeff.s. | Verifica |
|---|---|---|---|---|---|---|---|---|
| SLV 1 | 14 | 0.32 | 3.82 | -1345 | 1218 | 12939 | 10.62 | Si |
| SLV 9 | 14 | 0.32 | 6.64 | -2339 | 1218 | 14936 | 12.26 | Si |
| SLV 10 | 14 | 0.32 | 6.64 | -2339 | 1218 | 14936 | 12.26 | Si |

### Verifica dei meccanismi locali di collasso con analisi cinematica lineare

forza di aggancio al piano = 0 quota mezzeria = 357.5 Wa = 0.05 Ta = 0.083

| Comb. | N top | N base | V orto | α0 | M* | e* | a0* | aLim | Verifica |
|---|---|---|---|---|---|---|---|---|---|
| SLV 3 | -1299 | -655 | 290 | 0 | 1.507 | 0.963 | 0 | 813.056 | No |
| SLV 9 | 76 | -630 | -32 | 0 | 0 | 0 | 0 | 1417.879 | No, Trazione |
| SLV 1 | -809 | -151 | 306 | 0 | 1.009 | 0.947 | 0 | 813.056 | No |
| SLV 7 | -1702 | -1817 | 78 | 0 | 1.917 | 0.971 | 0 | 1417.879 | No |
| SLV 5 | -68 | -138 | 133 | 0 | 0.278 | 0.896 | 0 | 1417.879 | No |
| SLV 8 | -1702 | -1817 | 78 | 0 | 1.917 | 0.971 | 0 | 1417.879 | No |
| SLV 4 | -1299 | -655 | 290 | 0 | 1.507 | 0.963 | 0 | 813.056 | No |
| SLV 10 | 76 | -630 | -32 | 0 | 0 | 0 | 0 | 1417.879 | No, Trazione |
| SLV 6 | -68 | -138 | 133 | 0 | 0.278 | 0.896 | 0 | 1417.879 | No |
| SLV 2 | -809 | -151 | 306 | 0 | 1.009 | 0.947 | 0 | 813.056 | No |

### Tabella dei coefficienti di sicurezza minimi

| Stato limite | Coeff.s. | Comb. | Verifica |
|---|---|---|---|
| PF_SLU | 0 | SLU 1 | No |
| V_SLU | 0 | SLU 1 | No |
| PF_SLV | 0 | SLD 1 | No |
| V_SLV | 0 | SLD 1 | No |
| PFFP_SLV | 9.072 | SLV 7 | Si |
| R_SLV | 0 | SLV 10 | No |

## Maschio 73

Verifiche condotte secondo D.M. 17-01-18 (N.T.C.)

### Dati geometrici

| X ini. | Y ini. | X fin. | Y fin. | Quota i. | Quota.s | l | Sp. | h netta | h ini. | h fin. | a | a.s.,sx | a.s.,dx |
|---|---|---|---|---|---|---|---|---|---|---|---|---|---|
| -1375.3 | 67.2 | -1375.3 | 104.6 | L3 | L4 | 37.4 | 28 | 373 | 373 | 373 | | | |

### Caratteristiche del materiale

(Circolare 7 21-01-19 C8.5.I) Muratura in mattoni pieni e malta di calce LC2_Corti

| fb | fk | fvk0 | fmedio | τ0 | fv0 | μ | ϕ | fv,lim | E | G | FC |
|---|---|---|---|---|---|---|---|---|---|---|---|
| 60 | | | 34.5 | 0.9 | 2 | 0.58 | 0.77 | 3.25 | 32000 | 12800 | 1.2 |

### Verifica a pressoflessione nel piano secondo D.M. 17-01-18 NTC §7.8.2.2.1 in combinazioni non sismiche, γM = 3

| Comb. | Quota | N | M | σ0 | Mu | c.s. | Verifica |
|---|---|---|---|---|---|---|---|
| SLU 75 | 171 | -9064 | -28977 | 8.65 | 0 | 0 | No, Rottura per schiacciamento |
| SLU 75 | 381 | -5471 | 14704 | 5.22 | 36776 | 2.501 | Si |
| SLU 73 | 171 | -8771 | -27803 | 8.37 | 0 | 0 | No, Rottura per schiacciamento |
| SLU 73 | 381 | -5319 | 13772 | 5.08 | 37525 | 2.725 | Si |
| SLU 81 | 171 | -9301 | -29646 | 8.87 | 0 | 0 | No, Rottura per schiacciamento |
| SLU 81 | 381 | -5645 | 14752 | 5.39 | 35794 | 2.426 | Si |
| SLU 83 | 171 | -9471 | -30256 | 9.04 | 0 | 0 | No, Rottura per schiacciamento |
| SLU 83 | 381 | -5746 | 15210 | 5.48 | 35159 | 2.312 | Si |
| SLU 84 | 171 | -9436 | -29832 | 9 | 0 | 0 | No, Rottura per schiacciamento |
| SLU 84 | 381 | -5775 | 14749 | 5.51 | 34972 | 2.371 | Si |
| SLU 76 | 171 | -8941 | -28413 | 8.53 | 0 | 0 | No, Rottura per schiacciamento |
| SLU 76 | 381 | -5421 | 14230 | 5.17 | 37036 | 2.603 | Si |
| SLU 80 | 171 | -9134 | -29306 | 8.72 | 0 | 0 | No, Rottura per schiacciamento |
| SLU 80 | 381 | -5503 | 14995 | 5.25 | 36604 | 2.441 | Si |
| SLU 79 | 171 | -9169 | -29730 | 8.75 | 0 | 0 | No, Rottura per schiacciamento |
| SLU 79 | 381 | -5475 | 15455 | 5.22 | 36757 | 2.378 | Si |
| SLU 74 | 171 | -9099 | -29401 | 8.68 | 0 | 0 | No, Rottura per schiacciamento |
| SLU 74 | 381 | -5442 | 15164 | 5.19 | 36925 | 2.435 | Si |
| SLU 77 | 171 | -9269 | -30011 | 8.84 | 0 | 0 | No, Rottura per schiacciamento |
| SLU 77 | 381 | -5544 | 15622 | 5.29 | 36380 | 2.329 | Si |

### Verifica a pressoflessione nel piano secondo D.M. 17-01-18 NTC §7.8.2.2.1 in combinazioni sismiche, γM = 2

| Comb. | Quota | N | M | σ0 | Mu | c.s. | Verifica |
|---|---|---|---|---|---|---|---|
| SLV 13 | 171 | -9113 | -37056 | 8.7 | 49184 | 1.327 | Si |
| SLV 13 | 381 | -4863 | 14939 | 4.64 | 56449 | 3.779 | Si |
| SLD 10 | 171 | -7033 | -32384 | 6.71 | 59337 | 1.832 | Si |
| SLD 10 | 381 | -2993 | 17574 | 2.86 | 42925 | 2.443 | Si |
| SLV 6 | 171 | -6800 | -43103 | 6.49 | 59687 | 1.385 | Si |
| SLV 6 | 381 | -1196 | 27519 | 0 | 0 | 0 | No, e>l/2 |
| SLD 9 | 171 | -7033 | -32384 | 6.71 | 59337 | 1.832 | Si |
| SLD 9 | 381 | -2993 | 17574 | 2.86 | 42925 | 2.443 | Si |
| SLV 14 | 171 | -9113 | -37056 | 8.7 | 49184 | 1.327 | Si |

| Comb. | Quota | N | M | σ0 | Mu | c.s. | Verifica |
|---|---|---|---|---|---|---|---|
| SLV 14 | 381 | -4863 | 14939 | 4.64 | 56449 | 3.779 | Si |
| SLV 9 | 171 | -8368 | -48712 | 7.98 | 54274 | 1.114 | Si |
| SLV 9 | 381 | -2328 | 27156 | 2.22 | 35647 | 1.313 | Si |
| SLV 10 | 171 | -8368 | -48712 | 7.98 | 54274 | 1.114 | Si |
| SLV 10 | 381 | -2328 | 27156 | 2.22 | 35647 | 1.313 | Si |
| SLV 5 | 171 | -6800 | -43103 | 6.49 | 59687 | 1.385 | Si |
| SLV 5 | 381 | -1196 | 27519 | 0 | 0 | 0 | No, e>l/2 |
| SLV 1 | 171 | -3885 | -18359 | 3.71 | 50651 | 2.759 | Si |
| SLV 1 | 381 | -1088 | 16149 | 1.04 | 18639 | 1.154 | Si |
| SLV 2 | 171 | -3885 | -18359 | 3.71 | 50651 | 2.759 | Si |
| SLV 2 | 381 | -1088 | 16149 | 1.04 | 18639 | 1.154 | Si |

Verifica a taglio nel piano secondo D.M. 17-01-18 (N.T.C.) §7.8.2.2.2 con rottura per scorrimento in combinazioni non sismiche, γM = 3

| Comb. | Quota | N | V par | M | σ0 | σN | l' | fvd | Vt scorr. | Vt fess.diag. | Vt,lim | c.s. | Verifica |
|---|---|---|---|---|---|---|---|---|---|---|---|---|---|
| SLU 80 | 171 | -9134 | -498 | -29306 | | 8.72 | 37.43 | 1.08 | 1135 | | | 2.28 | Si |
| SLU 80 | 381 | -5503 | -487 | 14995 | | 5.25 | 37.43 | 1.08 | 1135 | | | 2.33 | Si |
| SLU 74 | 171 | -9099 | -502 | -29401 | | 8.68 | 37.43 | 1.08 | 1135 | | | 2.26 | Si |
| SLU 74 | 381 | -5442 | -490 | 15164 | | 5.19 | 37.43 | 1.08 | 1135 | | | 2.32 | Si |
| SLU 75 | 171 | -9064 | -492 | -28977 | | 8.65 | 37.43 | 1.08 | 1135 | | | 2.31 | Si |
| SLU 75 | 381 | -5471 | -480 | 14704 | | 5.22 | 37.43 | 1.08 | 1135 | | | 2.36 | Si |
| SLU 82 | 171 | -9266 | -492 | -29222 | | 8.84 | 37.43 | 1.08 | 1135 | | | 2.31 | Si |
| SLU 82 | 381 | -5673 | -479 | 14292 | | 5.41 | 37.43 | 1.08 | 1135 | | | 2.37 | Si |
| SLU 84 | 171 | -9436 | -503 | -29832 | | 9 | 37.43 | 1.08 | 1135 | | | 2.26 | Si |
| SLU 84 | 381 | -5775 | -490 | 14749 | | 5.51 | 37.43 | 1.08 | 1135 | | | 2.32 | Si |
| SLU 78 | 171 | -9234 | -503 | -29587 | | 8.81 | 37.43 | 1.08 | 1135 | | | 2.26 | Si |
| SLU 78 | 381 | -5572 | -492 | 15162 | | 5.32 | 37.43 | 1.08 | 1135 | | | 2.31 | Si |
| SLU 83 | 171 | -9471 | -513 | -30256 | | 9.04 | 37.43 | 1.08 | 1135 | | | 2.21 | Si |
| SLU 83 | 381 | -5746 | -500 | 15210 | | 5.48 | 37.43 | 1.08 | 1135 | | | 2.27 | Si |
| SLU 81 | 171 | -9301 | -502 | -29646 | | 8.87 | 37.43 | 1.08 | 1135 | | | 2.26 | Si |
| SLU 81 | 381 | -5645 | -488 | 14752 | | 5.39 | 37.43 | 1.08 | 1135 | | | 2.32 | Si |
| SLU 79 | 171 | -9169 | -508 | -29730 | | 8.75 | 37.43 | 1.08 | 1135 | | | 2.23 | Si |
| SLU 79 | 381 | -5475 | -497 | 15455 | | 5.22 | 37.43 | 1.08 | 1135 | | | 2.29 | Si |
| SLU 77 | 171 | -9269 | -513 | -30011 | | 8.84 | 37.43 | 1.08 | 1135 | | | 2.21 | Si |
| SLU 77 | 381 | -5544 | -501 | 15622 | | 5.29 | 37.43 | 1.08 | 1135 | | | 2.26 | Si |

Verifica a taglio nel piano secondo D.M. 17-01-18 (N.T.C.) §7.8.2.2.2 con rottura per scorrimento in combinazioni sismiche, γM = 2

| Comb. | Quota | N | V par | M | σ0 | σN | l' | fvd | Vt scorr. | Vt fess.diag. | Vt,lim | c.s. | Verifica |
|---|---|---|---|---|---|---|---|---|---|---|---|---|---|
| SLV 10 | 171 | -8368 | -1371 | -48712 | | 7.98 | 37.43 | 1.63 | 1703 | | | 1.24 | Si |
| SLV 10 | 381 | -2328 | -749 | 27156 | | 3.93 | 21.15 | 1.62 | 959 | | | 1.28 | Si |
| SLD 9 | 171 | -7033 | -787 | -32384 | | 6.71 | 37.43 | 1.63 | 1703 | | | 2.16 | Si |
| SLD 9 | 381 | -2993 | -506 | 17574 | | 2.86 | 37.43 | 1.4 | 1472 | | | 2.91 | Si |
| SLV 14 | 171 | -9113 | -1044 | -37056 | | 8.7 | 37.43 | 1.63 | 1703 | | | 1.63 | Si |
| SLV 14 | 381 | -4863 | -703 | 14939 | | 4.64 | 37.43 | 1.63 | 1703 | | | 2.42 | Si |
| SLV 13 | 171 | -9113 | -1044 | -37056 | | 8.7 | 37.43 | 1.63 | 1703 | | | 1.63 | Si |
| SLV 13 | 381 | -4863 | -703 | 14939 | | 4.64 | 37.43 | 1.63 | 1703 | | | 2.42 | Si |
| SLD 10 | 171 | -7033 | -787 | -32384 | | 6.71 | 37.43 | 1.63 | 1703 | | | 2.16 | Si |
| SLD 10 | 381 | -2993 | -506 | 17574 | | 2.86 | 37.43 | 1.4 | 1472 | | | 2.91 | Si |
| SLV 8 | 171 | -3700 | 687 | 8897 | | 3.53 | 37.43 | 1.54 | 1613 | | | 2.35 | Si |
| SLV 8 | 381 | -4663 | 80 | -6178 | | 4.45 | 37.43 | 1.63 | 1703 | | | 21.32 | Si |
| SLV 9 | 171 | -8368 | -1371 | -48712 | | 7.98 | 37.43 | 1.63 | 1703 | | | 1.24 | Si |
| SLV 9 | 381 | -2328 | -749 | 27156 | | 3.93 | 21.15 | 1.62 | 959 | | | 1.28 | Si |
| SLV 6 | 171 | -6800 | -1113 | -43103 | | 6.54 | 37.13 | 1.63 | 1689 | | | 1.52 | Si |
| SLV 6 | 381 | -1196 | -588 | 27519 | | 0 | 0 | 0.83 | 0 | | | 0 | No, Vu<V |
| SLV 5 | 171 | -6800 | -1113 | -43103 | | 6.54 | 37.13 | 1.63 | 1689 | | | 1.52 | Si |
| SLV 5 | 381 | -1196 | -588 | 27519 | | 0 | 0 | 0.83 | 0 | | | 0 | No, Vu<V |
| SLV 7 | 171 | -3700 | 687 | 8897 | | 3.53 | 37.43 | 1.54 | 1613 | | | 2.35 | Si |
| SLV 7 | 381 | -4663 | 80 | -6178 | | 4.45 | 37.43 | 1.63 | 1703 | | | 21.32 | Si |

Verifica a pressoflessione fuori piano D.M. 17-01-18 (N.T.C.)

quota 357.5 Wa 0.05 denominatore 8 γM = 2

| Comb. | fd | Sa | σ0 | N | M | Mc | Coeff.s. | Verifica |
|---|---|---|---|---|---|---|---|---|
| SLV 2 | 14 | 0.32 | 1.16 | -1214 | 3628 | 15387 | 4.24 | Si |
| SLV 1 | 14 | 0.32 | 1.16 | -1214 | 3628 | 15387 | 4.24 | Si |
| SLV 5 | 14 | 0.32 | 1.23 | -1289 | 3628 | 16226 | 4.47 | Si |
| SLV 6 | 14 | 0.32 | 1.23 | -1289 | 3628 | 16226 | 4.47 | Si |
| SLV 4 | 14 | 0.32 | 2.15 | -2249 | 3628 | 25952 | 7.15 | Si |
| SLV 3 | 14 | 0.32 | 2.15 | -2249 | 3628 | 25952 | 7.15 | Si |
| SLV 9 | 14 | 0.32 | 2.28 | -2387 | 3628 | 27188 | 7.49 | Si |
| SLV 10 | 14 | 0.32 | 2.28 | -2387 | 3628 | 27188 | 7.49 | Si |
| SLV 7 | 14 | 0.32 | 4.52 | -4737 | 3628 | 41785 | 11.52 | Si |
| SLV 8 | 14 | 0.32 | 4.52 | -4737 | 3628 | 41785 | 11.52 | Si |

Verifica dei meccanismi locali di collasso con analisi cinematica lineare

forza di aggancio al piano = 0 quota mezzeria = 357.5 Wa = 0.05 Ta = 0.083

| Comb. | N top | N base | V orto | α0 | M* | e* | a0* | aLim | Verifica |
|---|---|---|---|---|---|---|---|---|---|
| SLV 9 | -5147 | -8368 | 3 | 0.039 | 5.791 | 0.971 | 59.039 | 1417.879 | No |
| SLV 10 | -5147 | -8368 | 3 | 0.039 | 5.791 | 0.971 | 59.039 | 1417.879 | No |
| SLV 6 | -4714 | -6800 | 4 | 0.039 | 5.35 | 0.969 | 59.154 | 1417.879 | No |
| SLV 5 | -4714 | -6800 | 4 | 0.039 | 5.35 | 0.969 | 59.154 | 1417.879 | No |
| SLV 12 | -2916 | -5269 | -8 | 0.039 | 3.52 | 0.954 | 59.766 | 1417.879 | No |
| SLV 11 | -2916 | -5269 | -8 | 0.039 | 3.52 | 0.954 | 59.766 | 1417.879 | No |
| SLV 7 | -2483 | -3700 | -7 | 0.04 | 3.081 | 0.948 | 61.011 | 1417.879 | No |
| SLV 8 | -2483 | -3700 | -7 | 0.04 | 3.081 | 0.948 | 61.011 | 1417.879 | No |
| SLV 16 | -4202 | -8183 | -5 | 0.039 | 4.829 | 0.966 | 59.184 | 813.056 | No |
| SLV 15 | -4202 | -8183 | -5 | 0.039 | 4.829 | 0.966 | 59.184 | 813.056 | No |

Tabella dei coefficienti di sicurezza minimi

| Stato limite | Coeff.s. | Comb. | Verifica |
|---|---|---|---|
| PF_SLU | 0 | SLU 73 | No |
| V_SLU | 2.211 | SLU 77 | Si |
| PF_SLV | 0 | SLV 5 | No |
| V_SLV | 0 | SLV 5 | No |
| PFFP_SLV | 4.241 | SLV 1 | Si |
| R_SLV | 0.042 | SLV 9 | No |

## Maschio 74

Verifiche condotte secondo D.M. 17-01-18 (N.T.C.)

### Dati geometrici

| X ini. | Y ini. | X fin. | Y fin. | Quota i. | Quota.s | l | Sp. | h netta | h ini. | h fin. | a | a.s.,sx | a.s.,dx |
|---|---|---|---|---|---|---|---|---|---|---|---|---|---|
| -2066.8 | 104.6 | -2465.3 | 104.6 | L3 | L4 | 398.5 | 28 | 373 | 373 | 373 | | | |

### Caratteristiche del materiale

(Circolare 7 21-01-19 C8.5.I) Muratura in mattoni pieni e malta di calce LC2_Corti

| fb | fk | fvk0 | fmedio | τ0 | fv0 | μ | ϕ | fv,lim | E | G | FC |
|---|---|---|---|---|---|---|---|---|---|---|---|
| 60 | | | 34.5 | 0.9 | 2 | 0.58 | 0.77 | 3.25 | 32000 | 12800 | 1.2 |

### Verifica a pressoflessione nel piano secondo D.M. 17-01-18 NTC §7.8.2.2.1 in combinazioni non sismiche, γM = 3

| Comb. | Quota | N | M | σ0 | Mu | c.s. | Verifica |
|---|---|---|---|---|---|---|---|
| SLU 79 | 171 | -81317 | 393817 | 7.29 | 1706652 | 4.334 | Si |
| SLU 79 | 381 | -75592 | -1118191 | 6.77 | 2535249 | 2.267 | Si |
| SLU 80 | 171 | -81241 | 375389 | 7.28 | 1718673 | 4.578 | Si |
| SLU 80 | 381 | -75516 | -1100303 | 6.77 | 2545349 | 2.313 | Si |
| SLU 83 | 171 | -83318 | 409733 | 7.47 | 1383158 | 3.376 | Si |
| SLU 83 | 381 | -77593 | -1156302 | 6.95 | 2261985 | 1.956 | Si |
| SLU 74 | 171 | -80440 | 384283 | 7.21 | 1843023 | 4.796 | Si |
| SLU 74 | 381 | -74714 | -1080776 | 6.7 | 2649584 | 2.452 | Si |
| SLU 77 | 171 | -82025 | 403585 | 7.35 | 1594318 | 3.95 | Si |
| SLU 77 | 381 | -76299 | -1130574 | 6.84 | 2440669 | 2.159 | Si |
| SLU 82 | 171 | -81657 | 372003 | 7.32 | 1653014 | 4.444 | Si |
| SLU 82 | 381 | -75931 | -1088616 | 6.81 | 2490132 | 2.287 | Si |
| SLU 75 | 171 | -80363 | 365855 | 7.2 | 1854749 | 5.07 | Si |
| SLU 75 | 381 | -74638 | -1062888 | 6.69 | 2659390 | 2.502 | Si |
| SLU 78 | 171 | -81948 | 385157 | 7.34 | 1606576 | 4.171 | Si |
| SLU 78 | 381 | -76223 | -1112686 | 6.83 | 2451007 | 2.203 | Si |
| SLU 84 | 171 | -83242 | 391305 | 7.46 | 1395850 | 3.567 | Si |
| SLU 84 | 381 | -77517 | -1138414 | 6.95 | 2272757 | 1.996 | Si |
| SLU 81 | 171 | -81733 | 390431 | 7.33 | 1640854 | 4.203 | Si |
| SLU 81 | 381 | -76008 | -1106504 | 6.81 | 2479892 | 2.241 | Si |

### Verifica a pressoflessione nel piano secondo D.M. 17-01-18 NTC §7.8.2.2.1 in combinazioni sismiche, γM = 2

| Comb. | Quota | N | M | σ0 | Mu | c.s. | Verifica |
|---|---|---|---|---|---|---|---|
| SLV 13 | 171 | -34895 | -3156894 | 3.13 | 5173292 | 1.639 | Si |
| SLV 13 | 381 | -29001 | -500377 | 2.6 | 4549316 | 9.092 | Si |
| SLD 2 | 171 | -63235 | 1708601 | 5.67 | 6755704 | 3.954 | Si |
| SLD 2 | 381 | -59500 | -737366 | 5.33 | 6681462 | 9.061 | Si |
| SLV 14 | 171 | -34895 | -3156894 | 3.13 | 5173292 | 1.639 | Si |
| SLV 14 | 381 | -29001 | -500377 | 2.6 | 4549316 | 9.092 | Si |
| SLD 1 | 171 | -63235 | 1708601 | 5.67 | 6755704 | 3.954 | Si |
| SLD 1 | 381 | -59500 | -737366 | 5.33 | 6681462 | 9.061 | Si |
| SLV 4 | 171 | -73523 | 3590307 | 6.59 | 6749375 | 1.88 | Si |
| SLV 4 | 381 | -70669 | -783366 | 6.33 | 6782138 | 8.658 | Si |
| SLV 1 | 171 | -75479 | 3713939 | 6.76 | 6713160 | 1.808 | Si |
| SLV 1 | 381 | -72604 | -857308 | 6.51 | 6762522 | 7.888 | Si |
| SLV 16 | 171 | -32939 | -3280526 | 2.95 | 4977421 | 1.517 | Si |
| SLV 16 | 381 | -27066 | -426435 | 2.43 | 4322321 | 10.136 | Si |
| SLV 3 | 171 | -73523 | 3590307 | 6.59 | 6749375 | 1.88 | Si |
| SLV 3 | 381 | -70669 | -783366 | 6.33 | 6782138 | 8.658 | Si |
| SLV 15 | 171 | -32939 | -3280526 | 2.95 | 4977421 | 1.517 | Si |
| SLV 15 | 381 | -27066 | -426435 | 2.43 | 4322321 | 10.136 | Si |
| SLV 2 | 171 | -75479 | 3713939 | 6.76 | 6713160 | 1.808 | Si |
| SLV 2 | 381 | -72604 | -857308 | 6.51 | 6762522 | 7.888 | Si |

### Verifica a taglio nel piano secondo D.M. 17-01-18 (N.T.C.) §7.8.2.2.2 con rottura per scorrimento in combinazioni non sismiche, γM = 3

| Comb. | Quota | N | V par | M | σ0 | σN | l' | fvd | Vt scorr. | Vt fess.diag. | Vt,lim | c.s. | Verifica |
|---|---|---|---|---|---|---|---|---|---|---|---|---|---|
| SLU 80 | 171 | -81241 | 7033 | 375389 | | 7.28 | 398.5 | 1.08 | 12088 | | | 1.72 | Si |
| SLU 80 | 381 | -75516 | 7033 | -1100303 | | 6.77 | 398.5 | 1.08 | 12088 | | | 1.72 | Si |
| SLU 84 | 171 | -83242 | 7291 | 391305 | | 7.46 | 398.5 | 1.08 | 12088 | | | 1.66 | Si |
| SLU 84 | 381 | -77517 | 7291 | -1138414 | | 6.95 | 398.5 | 1.08 | 12088 | | | 1.66 | Si |
| SLU 78 | 171 | -81948 | 7139 | 385157 | | 7.34 | 398.5 | 1.08 | 12088 | | | 1.69 | Si |
| SLU 78 | 381 | -76223 | 7139 | -1112686 | | 6.83 | 398.5 | 1.08 | 12088 | | | 1.69 | Si |
| SLU 83 | 171 | -83318 | 7464 | 409733 | | 7.47 | 398.5 | 1.08 | 12088 | | | 1.62 | Si |
| SLU 83 | 381 | -77593 | 7464 | -1156302 | | 6.95 | 398.5 | 1.08 | 12088 | | | 1.62 | Si |
| SLU 74 | 171 | -80440 | 6983 | 384283 | | 7.21 | 398.5 | 1.08 | 12088 | | | 1.73 | Si |
| SLU 74 | 381 | -74714 | 6983 | -1080776 | | 6.7 | 398.5 | 1.08 | 12088 | | | 1.73 | Si |
| SLU 77 | 171 | -82025 | 7312 | 403585 | | 7.35 | 398.5 | 1.08 | 12088 | | | 1.65 | Si |
| SLU 77 | 381 | -76299 | 7312 | -1130574 | | 6.84 | 398.5 | 1.08 | 12088 | | | 1.65 | Si |
| SLU 79 | 171 | -81317 | 7206 | 393817 | | 7.29 | 398.5 | 1.08 | 12088 | | | 1.68 | Si |
| SLU 79 | 381 | -75592 | 7206 | -1118191 | | 6.77 | 398.5 | 1.08 | 12088 | | | 1.68 | Si |
| SLU 41 | 171 | -71396 | 6903 | 384526 | | 6.4 | 398.5 | 1.08 | 12088 | | | 1.75 | Si |

| Comb. | Quota | N | V par | M | σ0 | σN | l' | fvd | Vt scorr. | Vt fess.diag. | Vt,lim | c.s. | Verifica |
|---|---|---|---|---|---|---|---|---|---|---|---|---|---|
| SLU 41 | 381 | -66924 | 6903 | -1064168 | | 6 | 398.5 | 1.08 | 12088 | | | 1.75 | Si |
| SLU 81 | 171 | -81733 | 7135 | 390431 | | 7.33 | 398.5 | 1.08 | 12088 | | | 1.69 | Si |
| SLU 81 | 381 | -76008 | 7135 | -1106504 | | 6.81 | 398.5 | 1.08 | 12088 | | | 1.69 | Si |
| SLU 82 | 171 | -81657 | 6962 | 372003 | | 7.32 | 398.5 | 1.08 | 12088 | | | 1.74 | Si |
| SLU 82 | 381 | -75931 | 6962 | -1088616 | | 6.81 | 398.5 | 1.08 | 12088 | | | 1.74 | Si |

### Verifica a taglio nel piano secondo D.M. 17-01-18 (N.T.C.) §7.8.2.2.2 con rottura per scorrimento in combinazioni sismiche, γM = 2

| Comb. | Quota | N | V par | M | σ0 | σN | l' | fvd | Vt scorr. | Vt fess.diag. | Vt,lim | c.s. | Verifica |
|---|---|---|---|---|---|---|---|---|---|---|---|---|---|
| SLV 3 | 171 | -73523 | 21146 | 3590307 | | 6.59 | 398.5 | 1.63 | 18132 | | | 0.86 | No, Vu<V |
| SLV 3 | 381 | -70669 | 21366 | -783366 | | 6.33 | 398.5 | 1.63 | 18132 | | | 0.85 | No, Vu<V |
| SLV 16 | 171 | -32939 | -14101 | -3280526 | | 3.93 | 298.97 | 1.62 | 13564 | | | 0.96 | No, Vu<V |
| SLV 16 | 381 | -27066 | -14302 | -426435 | | 2.43 | 398.5 | 1.32 | 14712 | | | 1.03 | Si |
| SLD 2 | 171 | -63235 | 11881 | 1708601 | | 5.67 | 398.5 | 1.63 | 18132 | | | 1.53 | Si |
| SLD 2 | 381 | -59500 | 11954 | -737366 | | 5.33 | 398.5 | 1.63 | 18132 | | | 1.52 | Si |
| SLD 1 | 171 | -63235 | 11881 | 1708601 | | 5.67 | 398.5 | 1.63 | 18132 | | | 1.53 | Si |
| SLD 1 | 381 | -59500 | 11954 | -737366 | | 5.33 | 398.5 | 1.63 | 18132 | | | 1.52 | Si |
| SLV 13 | 171 | -34895 | -12959 | -3156894 | | 3.82 | 326.35 | 1.6 | 14594 | | | 1.13 | Si |
| SLV 13 | 381 | -29001 | -13178 | -500377 | | 2.6 | 398.5 | 1.35 | 15099 | | | 1.15 | Si |
| SLV 14 | 171 | -34895 | -12959 | -3156894 | | 3.82 | 326.35 | 1.6 | 14594 | | | 1.13 | Si |
| SLV 14 | 381 | -29001 | -13178 | -500377 | | 2.6 | 398.5 | 1.35 | 15099 | | | 1.15 | Si |
| SLV 4 | 171 | -73523 | 21146 | 3590307 | | 6.59 | 398.5 | 1.63 | 18132 | | | 0.86 | No, Vu<V |
| SLV 4 | 381 | -70669 | 21366 | -783366 | | 6.33 | 398.5 | 1.63 | 18132 | | | 0.85 | No, Vu<V |
| SLV 2 | 171 | -75479 | 22288 | 3713939 | | 6.76 | 398.5 | 1.63 | 18132 | | | 0.81 | No, Vu<V |
| SLV 2 | 381 | -72604 | 22489 | -857308 | | 6.51 | 398.5 | 1.63 | 18132 | | | 0.81 | No, Vu<V |
| SLV 1 | 171 | -75479 | 22288 | 3713939 | | 6.76 | 398.5 | 1.63 | 18132 | | | 0.81 | No, Vu<V |
| SLV 1 | 381 | -72604 | 22489 | -857308 | | 6.51 | 398.5 | 1.63 | 18132 | | | 0.81 | No, Vu<V |
| SLV 15 | 171 | -32939 | -14101 | -3280526 | | 3.93 | 298.97 | 1.62 | 13564 | | | 0.96 | No, Vu<V |
| SLV 15 | 381 | -27066 | -14302 | -426435 | | 2.43 | 398.5 | 1.32 | 14712 | | | 1.03 | Si |

### Verifica a pressoflessione fuori piano D.M. 17-01-18 (N.T.C.)

quota 357.5 Wa 0.05 denominatore 8 γM = 2

| Comb. | fd | Sa | σ0 | N | M | Mc | Coeff.s. | Verifica |
|---|---|---|---|---|---|---|---|---|
| SLV 15 | 14 | 0.32 | 2.55 | -28447 | 38629 | 315159 | 8.16 | Si |
| SLV 16 | 14 | 0.32 | 2.55 | -28447 | 38629 | 315159 | 8.16 | Si |
| SLV 13 | 14 | 0.32 | 2.73 | -30452 | 38629 | 331106 | 8.57 | Si |
| SLV 14 | 14 | 0.32 | 2.73 | -30452 | 38629 | 331106 | 8.57 | Si |
| SLV 11 | 14 | 0.32 | 3.67 | -40987 | 38629 | 401311 | 10.39 | Si |
| SLV 12 | 14 | 0.32 | 3.67 | -40987 | 38629 | 401311 | 10.39 | Si |
| SLV 10 | 14 | 0.32 | 4.27 | -47671 | 38629 | 434038 | 11.24 | Si |
| SLV 9 | 14 | 0.32 | 4.27 | -47671 | 38629 | 434038 | 11.24 | Si |
| SLV 7 | 14 | 0.32 | 4.82 | -53741 | 38629 | 455804 | 11.8 | Si |
| SLV 8 | 14 | 0.32 | 4.82 | -53741 | 38629 | 455804 | 11.8 | Si |

### Verifica dei meccanismi locali di collasso con analisi cinematica lineare

forza di aggancio al piano = 0 quota mezzeria = 357.5 Wa = 0.05 Ta = 0.083

| Comb. | N top | N base | V orto | α0 | M* | e* | a0* | aLim | Verifica |
|---|---|---|---|---|---|---|---|---|---|
| SLV 9 | -39834 | -51382 | 225 | 0.036 | 46.419 | 0.962 | 53.758 | 1417.879 | No |
| SLV 10 | -39834 | -51382 | 225 | 0.036 | 46.419 | 0.962 | 53.758 | 1417.879 | No |
| SLV 12 | -38162 | -44861 | -222 | 0.036 | 44.718 | 0.961 | 53.819 | 1417.879 | No |
| SLV 11 | -38162 | -44861 | -222 | 0.036 | 44.718 | 0.961 | 53.819 | 1417.879 | No |
| SLV 7 | -44013 | -57036 | -223 | 0.036 | 50.671 | 0.965 | 53.912 | 1417.879 | No |
| SLV 8 | -44013 | -57036 | -223 | 0.036 | 50.671 | 0.965 | 53.912 | 1417.879 | No |
| SLV 5 | -45685 | -63558 | 224 | 0.036 | 52.372 | 0.966 | 53.914 | 1417.879 | No |
| SLV 6 | -45685 | -63558 | 224 | 0.036 | 52.372 | 0.966 | 53.914 | 1417.879 | No |
| SLV 4 | -51424 | -73523 | -68 | 0.039 | 58.215 | 0.969 | 58.252 | 813.056 | No |
| SLV 3 | -51424 | -73523 | -68 | 0.039 | 58.215 | 0.969 | 58.252 | 813.056 | No |

### Tabella dei coefficienti di sicurezza minimi

| Stato limite | Coeff.s. | Comb. | Verifica |
|---|---|---|---|
| PF_SLU | 1.956 | SLU 83 | Si |
| V_SLU | 1.62 | SLU 83 | Si |
| PF_SLV | 1.517 | SLV 15 | Si |
| V_SLV | 0.806 | SLV 1 | No |
| PFFP_SLV | 8.159 | SLV 15 | Si |
| R_SLV | 0.038 | SLV 9 | No |

## Maschio 75

Verifiche condotte secondo D.M. 17-01-18 (N.T.C.)

### Dati geometrici

| X ini. | Y ini. | X fin. | Y fin. | Quota i. | Quota.s | l | Sp. | h netta | h ini. | h fin. | a | a.s.,sx | a.s.,dx |
|---|---|---|---|---|---|---|---|---|---|---|---|---|---|
| -1228.3 | 104.6 | -1986.8 | 104.6 | L3 | L4 | 758.5 | 28 | 373 | 373 | 373 | | | |

### Caratteristiche del materiale

(Circolare 7 21-01-19 C8.5.I) Muratura in mattoni pieni e malta di calce LC2_Corti

| fb | fk | fvk0 | fmedio | τ0 | fv0 | μ | ϕ | fv,lim | E | G | FC |
|---|---|---|---|---|---|---|---|---|---|---|---|
| 60 | | | 34.5 | 0.9 | 2 | 0.58 | 0.77 | 3.25 | 32000 | 12800 | 1.2 |

### Verifica a pressoflessione nel piano secondo D.M. 17-01-18 NTC §7.8.2.2.1 in combinazioni non sismiche, γM = 3

| Comb. | Quota | N | M | σ0 | Mu | c.s. | Verifica |
|---|---|---|---|---|---|---|---|
| SLU 74 | 171 | -155603 | 3857917 | 7.33 | 5934772 | 1.538 | Si |
| SLU 74 | 421 | -136146 | -632688 | 6.41 | 10999615 | 17.386 | Si |

| Comb. | Quota | N | M | σ0 | Mu | c.s. | Verifica |
|---|---|---|---|---|---|---|---|
| SLU 84 | 171 | -161387 | 3854722 | 7.6 | 4108999 | 1.066 | Si |
| SLU 84 | 421 | -142070 | -740364 | 6.69 | 9633290 | 13.012 | Si |
| SLU 77 | 171 | -159292 | 4105738 | 7.5 | 4787207 | 1.166 | Si |
| SLU 77 | 421 | -139332 | -534305 | 6.56 | 10284020 | 19.247 | Si |
| SLU 81 | 171 | -158398 | 3726493 | 7.46 | 5070640 | 1.361 | Si |
| SLU 81 | 421 | -139161 | -812333 | 6.55 | 10323442 | 12.708 | Si |
| SLU 78 | 171 | -158591 | 3986146 | 7.47 | 5009762 | 1.257 | Si |
| SLU 78 | 421 | -139055 | -560720 | 6.55 | 10347914 | 18.455 | Si |
| SLU 83 | 171 | -162088 | 3974314 | 7.63 | 3877855 | 0.976 | No, M>Mu |
| SLU 83 | 421 | -142347 | -713950 | 6.7 | 9565740 | 13.398 | Si |
| SLU 82 | 171 | -157698 | 3606901 | 7.43 | 5290450 | 1.467 | Si |
| SLU 82 | 421 | -138885 | -838748 | 6.54 | 10387130 | 12.384 | Si |
| SLU 79 | 171 | -157720 | 4106186 | 7.43 | 5283352 | 1.287 | Si |
| SLU 79 | 421 | -137713 | -488351 | 6.48 | 10653334 | 21.815 | Si |
| SLU 80 | 171 | -157020 | 3986594 | 7.39 | 5501079 | 1.38 | Si |
| SLU 80 | 421 | -137436 | -514766 | 6.47 | 10715264 | 20.816 | Si |
| SLU 75 | 171 | -154902 | 3738325 | 7.29 | 6145993 | 1.644 | Si |
| SLU 75 | 421 | -135870 | -659103 | 6.4 | 11059647 | 16.78 | Si |

Verifica a pressoflessione nel piano secondo D.M. 17-01-18 NTC §7.8.2.2.1 in combinazioni sismiche, γM = 2

| Comb. | Quota | N | M | σ0 | Mu | c.s. | Verifica |
|---|---|---|---|---|---|---|---|
| SLD 4 | 171 | -96796 | 5555927 | 4.56 | 23016849 | 4.143 | Si |
| SLD 4 | 421 | -85152 | 24019 | 4.01 | 21697051 | 903.312 | Si |
| SLV 5 | 171 | -107553 | 5929891 | 5.06 | 23883881 | 4.028 | Si |
| SLV 5 | 421 | -92055 | 695508 | 4.33 | 22527285 | 32.39 | Si |
| SLV 3 | 171 | -88772 | 9575094 | 4.18 | 22149787 | 2.313 | Si |
| SLV 3 | 421 | -80454 | 565579 | 3.79 | 21052416 | 37.223 | Si |
| SLV 2 | 171 | -93766 | 10276031 | 4.42 | 22711569 | 2.21 | Si |
| SLV 2 | 421 | -83741 | 996541 | 3.94 | 21510197 | 21.585 | Si |
| SLD 1 | 171 | -98810 | 5839026 | 4.65 | 23204897 | 3.974 | Si |
| SLD 1 | 421 | -86425 | 206060 | 4.07 | 21860714 | 106.089 | Si |
| SLD 2 | 171 | -98810 | 5839026 | 4.65 | 23204897 | 3.974 | Si |
| SLD 2 | 421 | -86425 | 206060 | 4.07 | 21860714 | 106.089 | Si |
| SLD 3 | 171 | -96796 | 5555927 | 4.56 | 23016849 | 4.143 | Si |
| SLD 3 | 421 | -85152 | 24019 | 4.01 | 21697051 | 903.312 | Si |
| SLV 1 | 171 | -93766 | 10276031 | 4.42 | 22711569 | 2.21 | Si |
| SLV 1 | 421 | -83741 | 996541 | 3.94 | 21510197 | 21.585 | Si |
| SLV 4 | 171 | -88772 | 9575094 | 4.18 | 22149787 | 2.313 | Si |
| SLV 4 | 421 | -80454 | 565579 | 3.79 | 21052416 | 37.223 | Si |
| SLV 6 | 171 | -107553 | 5929891 | 5.06 | 23883881 | 4.028 | Si |
| SLV 6 | 421 | -92055 | 695508 | 4.33 | 22527285 | 32.39 | Si |

Verifica a taglio nel piano secondo D.M. 17-01-18 (N.T.C.) §7.8.2.2.2 con rottura per scorrimento in combinazioni non sismiche, γM = 3

| Comb. | Quota | N | V par | M | σ0 | σN | l' | fvd | Vt scorr. | Vt fess.diag. | Vt,lim | c.s. | Verifica |
|---|---|---|---|---|---|---|---|---|---|---|---|---|---|
| SLU 74 | 171 | -155603 | 5764 | 3857917 | | 7.33 | 758.5 | 1.08 | 23008 | | | 3.99 | Si |
| SLU 74 | 421 | -136146 | 6075 | -632688 | | 6.41 | 758.5 | 1.08 | 23008 | | | 3.79 | Si |
| SLU 61 | 171 | -139870 | 5636 | 3161148 | | 6.59 | 758.5 | 1.08 | 23008 | | | 4.08 | Si |
| SLU 61 | 421 | -121990 | 6126 | -764892 | | 5.74 | 758.5 | 1.08 | 23008 | | | 3.76 | Si |
| SLU 76 | 171 | -152863 | 5676 | 3659046 | | 7.2 | 758.5 | 1.08 | 23008 | | | 4.05 | Si |
| SLU 76 | 421 | -134066 | 6076 | -630759 | | 6.31 | 758.5 | 1.08 | 23008 | | | 3.79 | Si |
| SLU 75 | 171 | -154902 | 5842 | 3738325 | | 7.29 | 758.5 | 1.08 | 23008 | | | 3.94 | Si |
| SLU 75 | 421 | -135870 | 6208 | -659103 | | 6.4 | 758.5 | 1.08 | 23008 | | | 3.71 | Si |
| SLU 82 | 171 | -157698 | 6298 | 3606901 | | 7.43 | 758.5 | 1.08 | 23008 | | | 3.65 | Si |
| SLU 82 | 421 | -138885 | 6763 | -838748 | | 6.54 | 758.5 | 1.08 | 23008 | | | 3.4 | Si |
| SLU 84 | 171 | -161387 | 6173 | 3854722 | | 7.6 | 758.5 | 1.08 | 23008 | | | 3.73 | Si |
| SLU 84 | 421 | -142070 | 6549 | -740364 | | 6.69 | 758.5 | 1.08 | 23008 | | | 3.51 | Si |
| SLU 73 | 171 | -149174 | 5801 | 3411225 | | 7.02 | 758.5 | 1.08 | 23008 | | | 3.97 | Si |
| SLU 73 | 421 | -130881 | 6290 | -729143 | | 6.16 | 758.5 | 1.08 | 23008 | | | 3.66 | Si |
| SLU 81 | 171 | -158398 | 6220 | 3726493 | | 7.46 | 758.5 | 1.08 | 23008 | | | 3.7 | Si |
| SLU 81 | 421 | -139161 | 6630 | -812333 | | 6.55 | 758.5 | 1.08 | 23008 | | | 3.47 | Si |
| SLU 83 | 171 | -162088 | 6095 | 3974314 | | 7.63 | 758.5 | 1.08 | 23008 | | | 3.77 | Si |
| SLU 83 | 421 | -142347 | 6416 | -713950 | | 6.7 | 758.5 | 1.08 | 23008 | | | 3.59 | Si |
| SLU 78 | 171 | -158591 | 5717 | 3986146 | | 7.47 | 758.5 | 1.08 | 23008 | | | 4.02 | Si |
| SLU 78 | 421 | -139055 | 5994 | -560720 | | 6.55 | 758.5 | 1.08 | 23008 | | | 3.84 | Si |

Verifica a taglio nel piano secondo D.M. 17-01-18 (N.T.C.) §7.8.2.2.2 con rottura per scorrimento in combinazioni sismiche, γM = 2

| Comb. | Quota | N | V par | M | σ0 | σN | l' | fvd | Vt scorr. | Vt fess.diag. | Vt,lim | c.s. | Verifica |
|---|---|---|---|---|---|---|---|---|---|---|---|---|---|
| SLV 2 | 171 | -93766 | 37584 | 10276031 | | 4.42 | 758.5 | 1.63 | 34512 | | | 0.92 | No, Vu<V |
| SLV 2 | 421 | -83741 | 35289 | 996541 | | 3.94 | 758.5 | 1.62 | 34446 | | | 0.98 | No, Vu<V |
| SLV 1 | 171 | -93766 | 37584 | 10276031 | | 4.42 | 758.5 | 1.63 | 34512 | | | 0.92 | No, Vu<V |
| SLV 1 | 421 | -83741 | 35289 | 996541 | | 3.94 | 758.5 | 1.62 | 34446 | | | 0.98 | No, Vu<V |
| SLV 13 | 171 | -116508 | -33742 | -4477971 | | 5.49 | 758.5 | 1.63 | 34512 | | | 1.02 | Si |
| SLV 13 | 421 | -96540 | -30631 | -1300094 | | 4.55 | 758.5 | 1.63 | 34512 | | | 1.13 | Si |
| SLV 16 | 171 | -111514 | -30390 | -5178909 | | 5.25 | 758.5 | 1.63 | 34512 | | | 1.14 | Si |
| SLV 16 | 421 | -93253 | -27497 | -1731056 | | 4.39 | 758.5 | 1.63 | 34512 | | | 1.26 | Si |
| SLV 4 | 171 | -88772 | 40936 | 9575094 | | 4.18 | 758.5 | 1.63 | 34512 | | | 0.84 | No, Vu<V |
| SLV 4 | 421 | -80454 | 38423 | 565579 | | 3.79 | 758.5 | 1.59 | 33789 | | | 0.88 | No, Vu<V |
| SLV 15 | 171 | -111514 | -30390 | -5178909 | | 5.25 | 758.5 | 1.63 | 34512 | | | 1.14 | Si |
| SLV 15 | 421 | -93253 | -27497 | -1731056 | | 4.39 | 758.5 | 1.63 | 34512 | | | 1.26 | Si |
| SLV 14 | 171 | -116508 | -33742 | -4477971 | | 5.49 | 758.5 | 1.63 | 34512 | | | 1.02 | Si |
| SLV 14 | 421 | -96540 | -30631 | -1300094 | | 4.55 | 758.5 | 1.63 | 34512 | | | 1.13 | Si |
| SLV 3 | 171 | -88772 | 40936 | 9575094 | | 4.18 | 758.5 | 1.63 | 34512 | | | 0.84 | No, Vu<V |
| SLV 3 | 421 | -80454 | 38423 | 565579 | | 3.79 | 758.5 | 1.59 | 33789 | | | 0.88 | No, Vu<V |
| SLV 8 | 171 | -90904 | 19883 | 3593432 | | 4.28 | 758.5 | 1.63 | 34512 | | | 1.74 | Si |
| SLV 8 | 421 | -81099 | 19007 | -741032 | | 3.82 | 758.5 | 1.6 | 33918 | | | 1.78 | Si |
| SLV 7 | 171 | -90904 | 19883 | 3593432 | | 4.28 | 758.5 | 1.63 | 34512 | | | 1.74 | Si |
| SLV 7 | 421 | -81099 | 19007 | -741032 | | 3.82 | 758.5 | 1.6 | 33918 | | | 1.78 | Si |

### Verifica a pressoflessione fuori piano D.M. 17-01-18 (N.T.C.)

quota 357.5 Wa 0.05 denominatore 8 γM = 2

| Comb. | fd | Sa | σ0 | N | M | Mc | Coeff.s. | Verifica |
|---|---|---|---|---|---|---|---|---|
| SLV 4 | 14 | 0.32 | 3.92 | -83177 | 73527 | 791234 | 10.76 | Si |
| SLV 3 | 14 | 0.32 | 3.92 | -83177 | 73527 | 791234 | 10.76 | Si |
| SLV 7 | 14 | 0.32 | 3.96 | -84166 | 73527 | 796152 | 10.83 | Si |
| SLV 8 | 14 | 0.32 | 3.96 | -84166 | 73527 | 796152 | 10.83 | Si |
| SLV 2 | 14 | 0.32 | 4.1 | -87072 | 73527 | 809987 | 11.02 | Si |
| SLV 1 | 14 | 0.32 | 4.1 | -87072 | 73527 | 809987 | 11.02 | Si |
| SLV 11 | 14 | 0.32 | 4.19 | -88909 | 73527 | 818264 | 11.13 | Si |
| SLV 12 | 14 | 0.32 | 4.19 | -88909 | 73527 | 818264 | 11.13 | Si |
| SLV 5 | 14 | 0.32 | 4.57 | -97148 | 73527 | 850912 | 11.57 | Si |
| SLV 6 | 14 | 0.32 | 4.57 | -97148 | 73527 | 850912 | 11.57 | Si |

### Verifica dei meccanismi locali di collasso con analisi cinematica lineare

forza di aggancio al piano = 0 quota mezzeria = 357.5 Wa = 0.05 Ta = 0.083

| Comb. | N top | N base | V orto | α0 | M* | e* | a0* | aLim | Verifica |
|---|---|---|---|---|---|---|---|---|---|
| SLV 12 | -80444 | -97727 | -1141 | 0.028 | 93.058 | 0.964 | 41.55 | 1417.879 | No |
| SLV 11 | -80444 | -97727 | -1141 | 0.028 | 93.058 | 0.964 | 41.55 | 1417.879 | No |
| SLV 7 | -77663 | -90904 | -1105 | 0.028 | 90.228 | 0.963 | 41.74 | 1417.879 | No |
| SLV 8 | -77663 | -90904 | -1105 | 0.028 | 90.228 | 0.963 | 41.74 | 1417.879 | No |
| SLV 5 | -86006 | -107553 | 1136 | 0.028 | 98.718 | 0.966 | 42.439 | 1417.879 | No |
| SLV 6 | -86006 | -107553 | 1136 | 0.028 | 98.718 | 0.966 | 42.439 | 1417.879 | No |
| SLV 9 | -88788 | -114376 | 1101 | 0.029 | 101.55 | 0.967 | 43.371 | 1417.879 | No |
| SLV 10 | -88788 | -114376 | 1101 | 0.029 | 101.55 | 0.967 | 43.371 | 1417.879 | No |
| SLV 15 | -86610 | -111514 | -398 | 0.036 | 99.333 | 0.966 | 54.365 | 813.056 | No |
| SLV 16 | -86610 | -111514 | -398 | 0.036 | 99.333 | 0.966 | 54.365 | 813.056 | No |

### Tabella dei coefficienti di sicurezza minimi

| Stato limite | Coeff.s. | Comb. | Verifica |
|---|---|---|---|
| PF_SLU | 0.976 | SLU 83 | No |
| V_SLU | 3.402 | SLU 82 | Si |
| PF_SLV | 2.21 | SLV 1 | Si |
| V_SLV | 0.843 | SLV 3 | No |
| PFFP_SLV | 10.761 | SLV 3 | Si |
| R_SLV | 0.029 | SLV 11 | No |

## Maschio 76

Verifiche condotte secondo D.M. 17-01-18 (N.T.C.)

### Dati geometrici

| X ini. | Y ini. | X fin. | Y fin. | Quota i. | Quota.s | l | Sp. | h netta | h ini. | h fin. | a | a.s.,sx | a.s.,dx |
|---|---|---|---|---|---|---|---|---|---|---|---|---|---|
| -496.8 | 104.6 | -1116.3 | 104.6 | L3 | L4 | 619.5 | 28 | 373 | 373 | 373 | | | |

### Caratteristiche del materiale

(Circolare 7 21-01-19 C8.5.I) Muratura in mattoni pieni e malta di calce LC2_Corti

| fb | fk | fvk0 | fmedio | τ0 | fv0 | μ | ϕ | fv,lim | E | G | FC |
|---|---|---|---|---|---|---|---|---|---|---|---|
| 60 | | | 34.5 | 0.9 | 2 | 0.58 | 0.77 | 3.25 | 32000 | 12800 | 1.2 |

### Verifica a pressoflessione nel piano secondo D.M. 17-01-18 NTC §7.8.2.2.1 in combinazioni non sismiche, γM = 3

| Comb. | Quota | N | M | σ0 | Mu | c.s. | Verifica |
|---|---|---|---|---|---|---|---|
| SLU 84 | 171 | -107506 | 256532 | 6.2 | 7963806 | 31.044 | Si |
| SLU 84 | 421 | -100328 | 989278 | 5.78 | 9010796 | 9.108 | Si |
| SLU 73 | 171 | -100032 | 301438 | 5.77 | 9049123 | 30.02 | Si |
| SLU 73 | 421 | -92667 | 903221 | 5.34 | 9878917 | 10.937 | Si |
| SLU 83 | 171 | -108047 | 188675 | 6.23 | 7875645 | 41.742 | Si |
| SLU 83 | 421 | -100462 | 985274 | 5.79 | 8993216 | 9.128 | Si |
| SLU 77 | 171 | -105035 | 89510 | 6.06 | 8349723 | 93.283 | Si |
| SLU 77 | 421 | -97333 | 883180 | 5.61 | 9380797 | 10.622 | Si |
| SLU 75 | 171 | -103031 | 214734 | 5.94 | 8642948 | 40.25 | Si |
| SLU 75 | 421 | -95563 | 908202 | 5.51 | 9581000 | 10.549 | Si |
| SLU 78 | 171 | -104493 | 157367 | 6.02 | 8430730 | 53.574 | Si |
| SLU 78 | 421 | -97198 | 887184 | 5.6 | 9396527 | 10.591 | Si |
| SLU 74 | 171 | -103573 | 146877 | 5.97 | 8565411 | 58.317 | Si |
| SLU 74 | 421 | -95698 | 904198 | 5.52 | 9566236 | 10.58 | Si |
| SLU 76 | 171 | -101493 | 244070 | 5.85 | 8856131 | 36.285 | Si |
| SLU 76 | 421 | -94303 | 882203 | 5.44 | 9715202 | 11.012 | Si |
| SLU 82 | 171 | -106044 | 313899 | 6.11 | 8195331 | 26.108 | Si |
| SLU 82 | 421 | -98692 | 1010296 | 5.69 | 9217703 | 9.124 | Si |
| SLU 81 | 171 | -106586 | 246042 | 6.14 | 8110641 | 32.964 | Si |
| SLU 81 | 421 | -98827 | 1006292 | 5.7 | 9201090 | 9.144 | Si |

### Verifica a pressoflessione nel piano secondo D.M. 17-01-18 NTC §7.8.2.2.1 in combinazioni sismiche, γM = 2

| Comb. | Quota | N | M | σ0 | Mu | c.s. | Verifica |
|---|---|---|---|---|---|---|---|
| SLV 14 | 171 | -60626 | -2505773 | 3.5 | 13407337 | 5.351 | Si |
| SLV 14 | 421 | -55602 | 2809124 | 3.21 | 12704491 | 4.523 | Si |
| SLV 13 | 171 | -60626 | -2505773 | 3.5 | 13407337 | 5.351 | Si |
| SLV 13 | 421 | -55602 | 2809124 | 3.21 | 12704491 | 4.523 | Si |
| SLV 7 | 171 | -83060 | 2462265 | 4.79 | 15645339 | 6.354 | Si |
| SLV 7 | 421 | -72469 | 480457 | 4.18 | 14772053 | 30.746 | Si |
| SLV 9 | 171 | -54155 | -2306475 | 3.12 | 12488462 | 5.415 | Si |
| SLV 9 | 421 | -51539 | 601963 | 2.97 | 12082148 | 20.071 | Si |
| SLV 8 | 171 | -83060 | 2462265 | 4.79 | 15645339 | 6.354 | Si |

| Comb. | Quota | N | M | σ0 | Mu | c.s. | Verifica |
|---|---|---|---|---|---|---|---|
| SLV 8 | 421 | -72469 | 480457 | 4.18 | 14772053 | 30.746 | Si |
| SLV 4 | 171 | -76589 | 2661563 | 4.42 | 15150777 | 5.692 | Si |
| SLV 4 | 421 | -68406 | -1726704 | 3.94 | 14350024 | 8.311 | Si |
| SLV 15 | 171 | -68577 | -1444716 | 3.95 | 14368741 | 9.946 | Si |
| SLV 15 | 421 | -61236 | 3217666 | 3.53 | 13487562 | 4.192 | Si |
| SLV 3 | 171 | -76589 | 2661563 | 4.42 | 15150777 | 5.692 | Si |
| SLV 3 | 421 | -68406 | -1726704 | 3.94 | 14350024 | 8.311 | Si |
| SLV 16 | 171 | -68577 | -1444716 | 3.95 | 14368741 | 9.946 | Si |
| SLV 16 | 421 | -61236 | 3217666 | 3.53 | 13487562 | 4.192 | Si |
| SLV 10 | 171 | -54155 | -2306475 | 3.12 | 12488462 | 5.415 | Si |
| SLV 10 | 421 | -51539 | 601963 | 2.97 | 12082148 | 20.071 | Si |

### Verifica a taglio nel piano secondo D.M. 17-01-18 (N.T.C.) §7.8.2.2.2 con rottura per scorrimento in combinazioni non sismiche, γM = 3

| Comb. | Quota | N | V par | M | σ0 | σN | l' | fvd | Vt scorr. | Vt fess.diag. | Vt,lim | c.s. | Verifica |
|---|---|---|---|---|---|---|---|---|---|---|---|---|---|
| SLU 76 | 171 | -101493 | -4927 | 244070 | | 5.85 | 619.5 | 1.08 | 18791 | | | 3.81 | Si |
| SLU 76 | 421 | -94303 | -5133 | 882203 | | 5.44 | 619.5 | 1.08 | 18791 | | | 3.66 | Si |
| SLU 84 | 171 | -107506 | -5269 | 256532 | | 6.2 | 619.5 | 1.08 | 18791 | | | 3.57 | Si |
| SLU 84 | 421 | -100328 | -5427 | 989278 | | 5.78 | 619.5 | 1.08 | 18791 | | | 3.46 | Si |
| SLU 74 | 171 | -103573 | -4874 | 146877 | | 5.97 | 619.5 | 1.08 | 18791 | | | 3.86 | Si |
| SLU 74 | 421 | -95698 | -4964 | 904198 | | 5.52 | 619.5 | 1.08 | 18791 | | | 3.79 | Si |
| SLU 81 | 171 | -106586 | -5186 | 246042 | | 6.14 | 619.5 | 1.08 | 18791 | | | 3.62 | Si |
| SLU 81 | 421 | -98827 | -5319 | 1006292 | | 5.7 | 619.5 | 1.08 | 18791 | | | 3.53 | Si |
| SLU 75 | 171 | -103031 | -5013 | 214734 | | 5.94 | 619.5 | 1.08 | 18791 | | | 3.75 | Si |
| SLU 75 | 421 | -95563 | -5164 | 908202 | | 5.51 | 619.5 | 1.08 | 18791 | | | 3.64 | Si |
| SLU 83 | 171 | -108047 | -5130 | 188675 | | 6.23 | 619.5 | 1.08 | 18791 | | | 3.66 | Si |
| SLU 83 | 421 | -100462 | -5226 | 985274 | | 5.79 | 619.5 | 1.08 | 18791 | | | 3.6 | Si |
| SLU 73 | 171 | -100032 | -4983 | 301438 | | 5.77 | 619.5 | 1.08 | 18791 | | | 3.77 | Si |
| SLU 73 | 421 | -92667 | -5226 | 903221 | | 5.34 | 619.5 | 1.08 | 18791 | | | 3.6 | Si |
| SLU 82 | 171 | -106044 | -5325 | 313899 | | 6.11 | 619.5 | 1.08 | 18791 | | | 3.53 | Si |
| SLU 82 | 421 | -98692 | -5520 | 1010296 | | 5.69 | 619.5 | 1.08 | 18791 | | | 3.4 | Si |
| SLU 78 | 171 | -104493 | -4956 | 157367 | | 6.02 | 619.5 | 1.08 | 18791 | | | 3.79 | Si |
| SLU 78 | 421 | -97198 | -5071 | 887184 | | 5.6 | 619.5 | 1.08 | 18791 | | | 3.71 | Si |
| SLU 61 | 171 | -93950 | -4804 | 305310 | | 5.42 | 619.5 | 1.08 | 18791 | | | 3.91 | Si |
| SLU 61 | 421 | -86154 | -5025 | 898240 | | 4.97 | 619.5 | 1.08 | 18791 | | | 3.74 | Si |

### Verifica a taglio nel piano secondo D.M. 17-01-18 (N.T.C.) §7.8.2.2.2 con rottura per scorrimento in combinazioni sismiche, γM = 2

| Comb. | Quota | N | V par | M | σ0 | σN | l' | fvd | Vt scorr. | Vt fess.diag. | Vt,lim | c.s. | Verifica |
|---|---|---|---|---|---|---|---|---|---|---|---|---|---|
| SLV 16 | 171 | -68577 | -33991 | -1444716 | | 3.95 | 619.5 | 1.62 | 28170 | | | 0.83 | No, Vu<V |
| SLV 16 | 421 | -61236 | -32259 | 3217666 | | 3.53 | 619.5 | 1.54 | 26702 | | | 0.83 | No, Vu<V |
| SLD 16 | 171 | -68571 | -16291 | -578899 | | 3.95 | 619.5 | 1.62 | 28169 | | | 1.73 | Si |
| SLD 16 | 421 | -61644 | -15595 | 1683734 | | 3.55 | 619.5 | 1.54 | 26784 | | | 1.72 | Si |
| SLV 2 | 171 | -68639 | 27891 | 1600506 | | 3.96 | 619.5 | 1.62 | 28183 | | | 1.01 | Si |
| SLV 2 | 421 | -62772 | 25915 | -2135245 | | 3.62 | 619.5 | 1.56 | 27009 | | | 1.04 | Si |
| SLV 15 | 171 | -68577 | -33991 | -1444716 | | 3.95 | 619.5 | 1.62 | 28170 | | | 0.83 | No, Vu<V |
| SLV 15 | 421 | -61236 | -32259 | 3217666 | | 3.53 | 619.5 | 1.54 | 26702 | | | 0.83 | No, Vu<V |
| SLD 15 | 171 | -68571 | -16291 | -578899 | | 3.95 | 619.5 | 1.62 | 28169 | | | 1.73 | Si |
| SLD 15 | 421 | -61644 | -15595 | 1683734 | | 3.55 | 619.5 | 1.54 | 26784 | | | 1.72 | Si |
| SLV 4 | 171 | -76589 | 25327 | 2661563 | | 4.42 | 619.5 | 1.63 | 28187 | | | 1.11 | Si |
| SLV 4 | 421 | -68406 | 23295 | -1726704 | | 3.94 | 619.5 | 1.62 | 28136 | | | 1.21 | Si |
| SLV 3 | 171 | -76589 | 25327 | 2661563 | | 4.42 | 619.5 | 1.63 | 28187 | | | 1.11 | Si |
| SLV 3 | 421 | -68406 | 23295 | -1726704 | | 3.94 | 619.5 | 1.62 | 28136 | | | 1.21 | Si |
| SLV 13 | 171 | -60626 | -31427 | -2505773 | | 3.5 | 619.5 | 1.53 | 26580 | | | 0.85 | No, Vu<V |
| SLV 13 | 421 | -55602 | -29638 | 2809124 | | 3.21 | 619.5 | 1.47 | 25575 | | | 0.86 | No, Vu<V |
| SLV 1 | 171 | -68639 | 27891 | 1600506 | | 3.96 | 619.5 | 1.62 | 28183 | | | 1.01 | Si |
| SLV 1 | 421 | -62772 | 25915 | -2135245 | | 3.62 | 619.5 | 1.56 | 27009 | | | 1.04 | Si |
| SLV 14 | 171 | -60626 | -31427 | -2505773 | | 3.5 | 619.5 | 1.53 | 26580 | | | 0.85 | No, Vu<V |
| SLV 14 | 421 | -55602 | -29638 | 2809124 | | 3.21 | 619.5 | 1.47 | 25575 | | | 0.86 | No, Vu<V |

### Verifica a pressoflessione fuori piano D.M. 17-01-18 (N.T.C.)

quota 357.5 Wa 0.05 denominatore 8 γM = 2

| Comb. | fd | Sa | σ0 | N | M | Mc | Coeff.s. | Verifica |
|---|---|---|---|---|---|---|---|---|
| SLV 9 | 14 | 0.32 | 3.06 | -53090 | 60052 | 557084 | 9.28 | Si |
| SLV 10 | 14 | 0.32 | 3.06 | -53090 | 60052 | 557084 | 9.28 | Si |
| SLV 13 | 14 | 0.32 | 3.25 | -56388 | 60052 | 579406 | 9.65 | Si |
| SLV 14 | 14 | 0.32 | 3.25 | -56388 | 60052 | 579406 | 9.65 | Si |
| SLV 6 | 14 | 0.32 | 3.25 | -56436 | 60052 | 579718 | 9.65 | Si |
| SLV 5 | 14 | 0.32 | 3.25 | -56436 | 60052 | 579718 | 9.65 | Si |
| SLV 15 | 14 | 0.32 | 3.61 | -62561 | 60052 | 617323 | 10.28 | Si |
| SLV 16 | 14 | 0.32 | 3.61 | -62561 | 60052 | 617323 | 10.28 | Si |
| SLV 2 | 14 | 0.32 | 3.89 | -67540 | 60052 | 644245 | 10.73 | Si |
| SLV 1 | 14 | 0.32 | 3.89 | -67540 | 60052 | 644245 | 10.73 | Si |

### Verifica dei meccanismi locali di collasso con analisi cinematica lineare

forza di aggancio al piano = 0 quota mezzeria = 357.5 Wa = 0.05 Ta = 0.083

| Comb. | N top | N base | V orto | α0 | M* | e* | a0* | aLim | Verifica |
|---|---|---|---|---|---|---|---|---|---|
| SLV 10 | -49725 | -54155 | 405 | 0.034 | 59.756 | 0.955 | 52.014 | 1417.879 | No |
| SLV 9 | -49725 | -54155 | 405 | 0.034 | 59.756 | 0.955 | 52.014 | 1417.879 | No |
| SLV 8 | -65338 | -83060 | -408 | 0.035 | 75.634 | 0.964 | 52.576 | 1417.879 | No |
| SLV 7 | -65338 | -83060 | -408 | 0.035 | 75.634 | 0.964 | 52.576 | 1417.879 | No |
| SLV 6 | -51726 | -56559 | 384 | 0.035 | 61.79 | 0.957 | 52.653 | 1417.879 | No |
| SLV 5 | -51726 | -56559 | 384 | 0.035 | 61.79 | 0.957 | 52.653 | 1417.879 | No |
| SLV 12 | -63337 | -80656 | -388 | 0.035 | 73.598 | 0.963 | 52.951 | 1417.879 | No |
| SLV 11 | -63337 | -80656 | -388 | 0.035 | 73.598 | 0.963 | 52.951 | 1417.879 | No |
| SLV 4 | -62908 | -76589 | -155 | 0.038 | 73.161 | 0.963 | 58.07 | 813.056 | No |
| SLV 3 | -62908 | -76589 | -155 | 0.038 | 73.161 | 0.963 | 58.07 | 813.056 | No |

### Tabella dei coefficienti di sicurezza minimi

| Stato limite | Coeff.s. | Comb. | Verifica |
|---|---|---|---|
| PF_SLU | 9.108 | SLU 84 | Si |
| V_SLU | 3.404 | SLU 82 | Si |
| PF_SLV | 4.192 | SLV 15 | Si |
| V_SLV | 0.828 | SLV 15 | No |
| PFFP_SLV | 9.277 | SLV 9 | Si |
| R_SLV | 0.037 | SLV 9 | No |

## Maschio 77

Verifiche condotte secondo D.M. 17-01-18 (N.T.C.)

### Dati geometrici

| X ini. | Y ini. | X fin. | Y fin. | Quota i. | Quota.s | l | Sp. | h netta | h ini. | h fin. | a | a.s.,sx | a.s.,dx |
|---|---|---|---|---|---|---|---|---|---|---|---|---|---|
| -12.3 | 104.6 | -416.8 | 104.6 | L3 | L4 | 404.5 | 28 | 373 | 373 | 373 | | | |

### Caratteristiche del materiale

(Circolare 7 21-01-19 C8.5.I) Muratura in mattoni pieni e malta di calce LC2_Corti

| fb | fk | fvk0 | fmedio | τ0 | fv0 | μ | ϕ | fv,lim | E | G | FC |
|---|---|---|---|---|---|---|---|---|---|---|---|
| 60 | | | 34.5 | 0.9 | 2 | 0.58 | 0.77 | 3.25 | 32000 | 12800 | 1.2 |

### Verifica a pressoflessione nel piano secondo D.M. 17-01-18 NTC §7.8.2.2.1 in combinazioni non sismiche, γM = 3

| Comb. | Quota | N | M | σ0 | Mu | c.s. | Verifica |
|---|---|---|---|---|---|---|---|
| SLU 81 | 171 | -70096 | 271291 | 6.19 | 3405784 | 12.554 | Si |
| SLU 81 | 381 | -68976 | 1096311 | 6.09 | 3520652 | 3.211 | Si |
| SLU 79 | 171 | -68972 | 243409 | 6.09 | 3521130 | 14.466 | Si |
| SLU 79 | 381 | -67591 | 1072630 | 5.97 | 3655162 | 3.408 | Si |
| SLU 77 | 171 | -69624 | 238911 | 6.15 | 3454887 | 14.461 | Si |
| SLU 77 | 381 | -68308 | 1084541 | 6.03 | 3586570 | 3.307 | Si |
| SLU 78 | 171 | -69883 | 231100 | 6.17 | 3428062 | 14.834 | Si |
| SLU 78 | 381 | -68483 | 1048471 | 6.05 | 3569494 | 3.404 | Si |
| SLU 74 | 171 | -68778 | 239292 | 6.07 | 3540437 | 14.795 | Si |
| SLU 74 | 381 | -67371 | 1052553 | 5.95 | 3675801 | 3.492 | Si |
| SLU 75 | 171 | -69037 | 231481 | 6.1 | 3514572 | 15.183 | Si |
| SLU 75 | 381 | -67546 | 1016483 | 5.96 | 3659443 | 3.6 | Si |
| SLU 83 | 171 | -70941 | 270910 | 6.26 | 3315348 | 12.238 | Si |
| SLU 83 | 381 | -69914 | 1128299 | 6.17 | 3424823 | 3.035 | Si |
| SLU 84 | 171 | -71200 | 263099 | 6.29 | 3287026 | 12.494 | Si |
| SLU 84 | 381 | -70089 | 1092229 | 6.19 | 3406516 | 3.119 | Si |
| SLU 80 | 171 | -69231 | 235597 | 6.11 | 3495045 | 14.835 | Si |
| SLU 80 | 381 | -67766 | 1036560 | 5.98 | 3638635 | 3.51 | Si |
| SLU 82 | 171 | -70355 | 263480 | 6.21 | 3378422 | 12.822 | Si |
| SLU 82 | 381 | -69151 | 1060241 | 6.11 | 3503063 | 3.304 | Si |

### Verifica a pressoflessione nel piano secondo D.M. 17-01-18 NTC §7.8.2.2.1 in combinazioni sismiche, γM = 2

| Comb. | Quota | N | M | σ0 | Mu | c.s. | Verifica |
|---|---|---|---|---|---|---|---|
| SLV 13 | 171 | -53971 | -2420215 | 4.77 | 6658627 | 2.751 | Si |
| SLV 13 | 381 | -59336 | 390142 | 5.24 | 6855282 | 17.571 | Si |
| SLV 4 | 171 | -40220 | 2710423 | 3.55 | 5770403 | 2.129 | Si |
| SLV 4 | 381 | -31114 | 880149 | 2.75 | 4878012 | 5.542 | Si |
| SLV 2 | 171 | -41325 | 2621061 | 3.65 | 5862197 | 2.237 | Si |
| SLV 2 | 381 | -32499 | 933188 | 2.87 | 5029307 | 5.389 | Si |
| SLV 1 | 171 | -41325 | 2621061 | 3.65 | 5862197 | 2.237 | Si |
| SLV 1 | 381 | -32499 | 933188 | 2.87 | 5029307 | 5.389 | Si |
| SLD 4 | 171 | -44166 | 1242442 | 3.9 | 6081800 | 4.895 | Si |
| SLD 4 | 381 | -39197 | 739706 | 3.46 | 5682247 | 7.682 | Si |
| SLV 14 | 171 | -53971 | -2420215 | 4.77 | 6658627 | 2.751 | Si |
| SLV 14 | 381 | -59336 | 390142 | 5.24 | 6855282 | 17.571 | Si |
| SLD 3 | 171 | -44166 | 1242442 | 3.9 | 6081800 | 4.895 | Si |
| SLD 3 | 381 | -39197 | 739706 | 3.46 | 5682247 | 7.682 | Si |
| SLV 3 | 171 | -40220 | 2710423 | 3.55 | 5770403 | 2.129 | Si |
| SLV 3 | 381 | -31114 | 880149 | 2.75 | 4878012 | 5.542 | Si |
| SLV 16 | 171 | -52866 | -2330853 | 4.67 | 6607676 | 2.835 | Si |
| SLV 16 | 381 | -57952 | 337102 | 5.12 | 6812588 | 20.209 | Si |
| SLV 15 | 171 | -52866 | -2330853 | 4.67 | 6607676 | 2.835 | Si |
| SLV 15 | 381 | -57952 | 337102 | 5.12 | 6812588 | 20.209 | Si |

### Verifica a taglio nel piano secondo D.M. 17-01-18 (N.T.C.) §7.8.2.2.2 con rottura per scorrimento in combinazioni non sismiche, γM = 3

| Comb. | Quota | N | V par | M | σ0 | σN | l' | fvd | Vt scorr. | Vt fess.diag. | Vt,lim | c.s. | Verifica |
|---|---|---|---|---|---|---|---|---|---|---|---|---|---|
| SLU 77 | 171 | -69624 | -8566 | 238911 | | 6.15 | 404.5 | 1.08 | 12270 | | | 1.43 | Si |
| SLU 77 | 381 | -68308 | -8587 | 1084541 | | 6.03 | 404.5 | 1.08 | 12270 | | | 1.43 | Si |
| SLU 79 | 171 | -68972 | -8426 | 243409 | | 6.09 | 404.5 | 1.08 | 12270 | | | 1.46 | Si |
| SLU 79 | 381 | -67591 | -8447 | 1072630 | | 5.97 | 404.5 | 1.08 | 12270 | | | 1.45 | Si |
| SLU 83 | 171 | -70941 | -8899 | 270910 | | 6.26 | 404.5 | 1.08 | 12270 | | | 1.38 | Si |
| SLU 83 | 381 | -69914 | -8920 | 1128299 | | 6.17 | 404.5 | 1.08 | 12270 | | | 1.38 | Si |
| SLU 78 | 171 | -69883 | -8348 | 231100 | | 6.17 | 404.5 | 1.08 | 12270 | | | 1.47 | Si |
| SLU 78 | 381 | -68483 | -8378 | 1048471 | | 6.05 | 404.5 | 1.08 | 12270 | | | 1.46 | Si |
| SLU 82 | 171 | -70355 | -8439 | 263480 | | 6.21 | 404.5 | 1.08 | 12270 | | | 1.45 | Si |
| SLU 82 | 381 | -69151 | -8468 | 1060241 | | 6.11 | 404.5 | 1.08 | 12270 | | | 1.45 | Si |
| SLU 84 | 171 | -71200 | -8681 | 263099 | | 6.29 | 404.5 | 1.08 | 12270 | | | 1.41 | Si |
| SLU 84 | 381 | -70089 | -8710 | 1092229 | | 6.19 | 404.5 | 1.08 | 12270 | | | 1.41 | Si |
| SLU 74 | 171 | -68778 | -8324 | 239292 | | 6.07 | 404.5 | 1.08 | 12270 | | | 1.47 | Si |
| SLU 74 | 381 | -67371 | -8345 | 1052553 | | 5.95 | 404.5 | 1.08 | 12270 | | | 1.47 | Si |
| SLU 41 | 171 | -60264 | -8190 | 256441 | | 5.32 | 404.5 | 1.08 | 12270 | | | 1.5 | Si |

| Comb. | Quota | N | V par | M | σ0 | σN | l' | fvd | Vt scorr. | Vt fess.diag. | Vt,lim | c.s. | Verifica |
|---|---|---|---|---|---|---|---|---|---|---|---|---|---|
| SLU 41 | 381 | -60212 | -8208 | 1036890 | | 5.32 | 404.5 | 1.08 | 12270 | | | 1.49 | Si |
| SLU 81 | 171 | -70096 | -8657 | 271291 | | 6.19 | 404.5 | 1.08 | 12270 | | | 1.42 | Si |
| SLU 81 | 381 | -68976 | -8678 | 1096311 | | 6.09 | 404.5 | 1.08 | 12270 | | | 1.41 | Si |
| SLU 80 | 171 | -69231 | -8208 | 235597 | | 6.11 | 404.5 | 1.08 | 12270 | | | 1.49 | Si |
| SLU 80 | 381 | -67766 | -8237 | 1036560 | | 5.98 | 404.5 | 1.08 | 12270 | | | 1.49 | Si |

### Verifica a taglio nel piano secondo D.M. 17-01-18 (N.T.C.) §7.8.2.2.2 con rottura per scorrimento in combinazioni sismiche, γM = 2

| Comb. | Quota | N | V par | M | σ0 | σN | l' | fvd | Vt scorr. | Vt fess.diag. | Vt,lim | c.s. | Verifica |
|---|---|---|---|---|---|---|---|---|---|---|---|---|---|
| SLV 3 | 171 | -40220 | 12298 | 2710423 | | 3.55 | 404.5 | 1.54 | 17482 | | | 1.42 | Si |
| SLV 3 | 381 | -31114 | 12464 | 880149 | | 2.75 | 404.5 | 1.38 | 15661 | | | 1.26 | Si |
| SLD 14 | 171 | -50026 | -12389 | -952234 | | 4.42 | 404.5 | 1.63 | 18405 | | | 1.49 | Si |
| SLD 14 | 381 | -51253 | -12454 | 530584 | | 4.53 | 404.5 | 1.63 | 18405 | | | 1.48 | Si |
| SLV 15 | 171 | -52866 | -22141 | -2330853 | | 4.67 | 404.5 | 1.63 | 18405 | | | 0.83 | No, Vu<V |
| SLV 15 | 381 | -57952 | -22054 | 337102 | | 5.12 | 404.5 | 1.63 | 18405 | | | 0.83 | No, Vu<V |
| SLV 4 | 171 | -40220 | 12298 | 2710423 | | 3.55 | 404.5 | 1.54 | 17482 | | | 1.42 | Si |
| SLV 4 | 381 | -31114 | 12464 | 880149 | | 2.75 | 404.5 | 1.38 | 15661 | | | 1.26 | Si |
| SLV 1 | 171 | -41325 | 12194 | 2621061 | | 3.65 | 404.5 | 1.56 | 17703 | | | 1.45 | Si |
| SLV 1 | 381 | -32499 | 12078 | 933188 | | 2.87 | 404.5 | 1.41 | 15938 | | | 1.32 | Si |
| SLV 13 | 171 | -53971 | -22246 | -2420215 | | 4.77 | 404.5 | 1.63 | 18405 | | | 0.83 | No, Vu<V |
| SLV 13 | 381 | -59336 | -22439 | 390142 | | 5.24 | 404.5 | 1.63 | 18405 | | | 0.82 | No, Vu<V |
| SLV 14 | 171 | -53971 | -22246 | -2420215 | | 4.77 | 404.5 | 1.63 | 18405 | | | 0.83 | No, Vu<V |
| SLV 14 | 381 | -59336 | -22439 | 390142 | | 5.24 | 404.5 | 1.63 | 18405 | | | 0.82 | No, Vu<V |
| SLD 13 | 171 | -50026 | -12389 | -952234 | | 4.42 | 404.5 | 1.63 | 18405 | | | 1.49 | Si |
| SLD 13 | 381 | -51253 | -12454 | 530584 | | 4.53 | 404.5 | 1.63 | 18405 | | | 1.48 | Si |
| SLV 16 | 171 | -52866 | -22141 | -2330853 | | 4.67 | 404.5 | 1.63 | 18405 | | | 0.83 | No, Vu<V |
| SLV 16 | 381 | -57952 | -22054 | 337102 | | 5.12 | 404.5 | 1.63 | 18405 | | | 0.83 | No, Vu<V |
| SLV 2 | 171 | -41325 | 12194 | 2621061 | | 3.65 | 404.5 | 1.56 | 17703 | | | 1.45 | Si |
| SLV 2 | 381 | -32499 | 12078 | 933188 | | 2.87 | 404.5 | 1.41 | 15938 | | | 1.32 | Si |

### Verifica a pressoflessione fuori piano D.M. 17-01-18 (N.T.C.)

quota 357.5 Wa 0.05 denominatore 8 γM = 2

| Comb. | fd | Sa | σ0 | N | M | Mc | Coeff.s. | Verifica |
|---|---|---|---|---|---|---|---|---|
| SLV 4 | 14 | 0.32 | 2.88 | -32601 | 39211 | 348896 | 8.9 | Si |
| SLV 3 | 14 | 0.32 | 2.88 | -32601 | 39211 | 348896 | 8.9 | Si |
| SLV 1 | 14 | 0.32 | 3 | -33981 | 39211 | 358916 | 9.15 | Si |
| SLV 2 | 14 | 0.32 | 3 | -33981 | 39211 | 358916 | 9.15 | Si |
| SLV 7 | 14 | 0.32 | 3.52 | -39877 | 39211 | 397408 | 10.14 | Si |
| SLV 8 | 14 | 0.32 | 3.52 | -39877 | 39211 | 397408 | 10.14 | Si |
| SLV 6 | 14 | 0.32 | 3.93 | -44475 | 39211 | 422544 | 10.78 | Si |
| SLV 5 | 14 | 0.32 | 3.93 | -44475 | 39211 | 422544 | 10.78 | Si |
| SLV 11 | 14 | 0.32 | 4.19 | -47492 | 39211 | 436715 | 11.14 | Si |
| SLV 12 | 14 | 0.32 | 4.19 | -47492 | 39211 | 436715 | 11.14 | Si |

### Verifica dei meccanismi locali di collasso con analisi cinematica lineare

forza di aggancio al piano = 0 quota mezzeria = 357.5 Wa = 0.05 Ta = 0.083

| Comb. | N top | N base | V orto | α0 | M* | e* | a0* | aLim | Verifica |
|---|---|---|---|---|---|---|---|---|---|
| SLV 7 | -36913 | -43357 | -464 | 0.03 | 43.537 | 0.959 | 44.918 | 1417.879 | No |
| SLV 8 | -36913 | -43357 | -464 | 0.03 | 43.537 | 0.959 | 44.918 | 1417.879 | No |
| SLV 6 | -38767 | -47041 | 455 | 0.03 | 45.422 | 0.961 | 45.668 | 1417.879 | No |
| SLV 5 | -38767 | -47041 | 455 | 0.03 | 45.422 | 0.961 | 45.668 | 1417.879 | No |
| SLV 12 | -41447 | -47151 | -455 | 0.031 | 48.148 | 0.963 | 46.239 | 1417.879 | No |
| SLV 11 | -41447 | -47151 | -455 | 0.031 | 48.148 | 0.963 | 46.239 | 1417.879 | No |
| SLV 9 | -43300 | -50834 | 464 | 0.031 | 50.034 | 0.964 | 46.293 | 1417.879 | No |
| SLV 10 | -43300 | -50834 | 464 | 0.031 | 50.034 | 0.964 | 46.293 | 1417.879 | No |
| SLV 13 | -47941 | -53971 | 153 | 0.037 | 54.757 | 0.967 | 56.114 | 813.056 | No |
| SLV 14 | -47941 | -53971 | 153 | 0.037 | 54.757 | 0.967 | 56.114 | 813.056 | No |

### Tabella dei coefficienti di sicurezza minimi

| Stato limite | Coeff.s. | Comb. | Verifica |
|---|---|---|---|
| PF_SLU | 3.035 | SLU 83 | Si |
| V_SLU | 1.375 | SLU 83 | Si |
| PF_SLV | 2.129 | SLV 3 | Si |
| V_SLV | 0.82 | SLV 13 | No |
| PFFP_SLV | 8.898 | SLV 3 | Si |
| R_SLV | 0.032 | SLV 7 | No |

## Maschio 78

Verifiche condotte secondo D.M. 17-01-18 (N.T.C.)

### Dati geometrici

| X ini. | Y ini. | X fin. | Y fin. | Quota i. | Quota.s | l | Sp. | h netta | h ini. | h fin. | a | a.s.,sx | a.s.,dx |
|---|---|---|---|---|---|---|---|---|---|---|---|---|---|
| -1969.3 | 666.1 | -1776.8 | 666.1 | L3 | L4 | 192.5 | 28 | 373 | 373 | 373 | | | |

### Caratteristiche del materiale

(Circolare 7 21-01-19 C8.5.I) Muratura in mattoni pieni e malta di calce LC2_Corti

| fb | fk | fvk0 | fmedio | τ0 | fv0 | μ | ϕ | fv,lim | E | G | FC |
|---|---|---|---|---|---|---|---|---|---|---|---|
| 60 | | | 34.5 | 0.9 | 2 | 0.58 | 0.77 | 3.25 | 32000 | 12800 | 1.2 |

### Verifica a pressoflessione nel piano secondo D.M. 17-01-18 NTC §7.8.2.2.1 in combinazioni non sismiche, γM = 3

| Comb. | Quota | N | M | σ0 | Mu | c.s. | Verifica |
|---|---|---|---|---|---|---|---|
| SLU 83 | 261 | -22642 | -366757 | 4.2 | 1055448 | 2.878 | Si |
| SLU 83 | 451 | -26250 | 1934 | 4.87 | 1016021 | 525.347 | Si |

| Comb. | Quota | N | M | σ0 | Mu | c.s. | Verifica |
|---|---|---|---|---|---|---|---|
| SLU 84 | 261 | -22642 | -367419 | 4.2 | 1055449 | 2.873 | Si |
| SLU 84 | 451 | -26273 | 2896 | 4.87 | 1015572 | 350.642 | Si |
| SLU 82 | 261 | -22634 | -372232 | 4.2 | 1055473 | 2.836 | Si |
| SLU 82 | 451 | -26639 | 16598 | 4.94 | 1008351 | 60.751 | Si |
| SLU 78 | 261 | -21884 | -352608 | 4.06 | 1056479 | 2.996 | Si |
| SLU 78 | 451 | -24936 | -15613 | 4.63 | 1036987 | 66.419 | Si |
| SLU 76 | 261 | -21598 | -352869 | 4.01 | 1056213 | 2.993 | Si |
| SLU 76 | 451 | -24879 | -4495 | 4.62 | 1037725 | 230.885 | Si |
| SLU 77 | 261 | -21884 | -351945 | 4.06 | 1056479 | 3.002 | Si |
| SLU 77 | 451 | -24912 | -16575 | 4.62 | 1037296 | 62.581 | Si |
| SLU 75 | 261 | -21876 | -357421 | 4.06 | 1056476 | 2.956 | Si |
| SLU 75 | 451 | -25301 | -1911 | 4.69 | 1031910 | 539.98 | Si |
| SLU 74 | 261 | -21876 | -356758 | 4.06 | 1056476 | 2.961 | Si |
| SLU 74 | 451 | -25278 | -2873 | 4.69 | 1032258 | 359.254 | Si |
| SLU 73 | 261 | -21590 | -357682 | 4.01 | 1056200 | 2.953 | Si |
| SLU 73 | 451 | -25244 | 9207 | 4.68 | 1032740 | 112.165 | Si |
| SLU 81 | 261 | -22634 | -371570 | 4.2 | 1055472 | 2.841 | Si |
| SLU 81 | 451 | -26615 | 15636 | 4.94 | 1008838 | 64.521 | Si |

Verifica a pressoflessione nel piano secondo D.M. 17-01-18 NTC §7.8.2.2.1 in combinazioni sismiche, γM = 2

| Comb. | Quota | N | M | σ0 | Mu | c.s. | Verifica |
|---|---|---|---|---|---|---|---|
| SLV 1 | 261 | -12563 | -523989 | 2.33 | 978513 | 1.867 | Si |
| SLV 1 | 451 | -23075 | 371464 | 4.28 | 1442817 | 3.884 | Si |
| SLV 3 | 261 | -17212 | -584841 | 3.19 | 1223704 | 2.092 | Si |
| SLV 3 | 451 | -26707 | 336834 | 4.95 | 1528144 | 4.537 | Si |
| SLV 15 | 261 | -17319 | 22845 | 3.21 | 1228610 | 53.781 | Si |
| SLV 15 | 451 | -11298 | -381342 | 2.1 | 900871 | 2.362 | Si |
| SLV 4 | 261 | -17212 | -584841 | 3.19 | 1223704 | 2.092 | Si |
| SLV 4 | 451 | -26707 | 336834 | 4.95 | 1528144 | 4.537 | Si |
| SLV 5 | 261 | -7176 | -240305 | 1.33 | 615422 | 2.561 | Si |
| SLV 5 | 451 | -13445 | 160503 | 2.49 | 1029911 | 6.417 | Si |
| SLV 13 | 261 | -12670 | 83697 | 2.35 | 984875 | 11.767 | Si |
| SLV 13 | 451 | -7666 | -346712 | 1.42 | 651980 | 1.88 | Si |
| SLV 6 | 261 | -7176 | -240305 | 1.33 | 615422 | 2.561 | Si |
| SLV 6 | 451 | -13445 | 160503 | 2.49 | 1029911 | 6.417 | Si |
| SLV 2 | 261 | -12563 | -523989 | 2.33 | 978513 | 1.867 | Si |
| SLV 2 | 451 | -23075 | 371464 | 4.28 | 1442817 | 3.884 | Si |
| SLV 16 | 261 | -17319 | 22845 | 3.21 | 1228610 | 53.781 | Si |
| SLV 16 | 451 | -11298 | -381342 | 2.1 | 900871 | 2.362 | Si |
| SLV 14 | 261 | -12670 | 83697 | 2.35 | 984875 | 11.767 | Si |
| SLV 14 | 451 | -7666 | -346712 | 1.42 | 651980 | 1.88 | Si |

Verifica a taglio nel piano secondo D.M. 17-01-18 (N.T.C.) §7.8.2.2.2 con rottura per scorrimento in combinazioni non sismiche, γM = 3

| Comb. | Quota | N | V par | M | σ0 | σN | l' | fvd | Vt scorr. | Vt fess.diag. | Vt,lim | c.s. | Verifica |
|---|---|---|---|---|---|---|---|---|---|---|---|---|---|
| SLU 81 | 261 | -22634 | -5032 | -371570 | | 4.2 | 192.5 | 1.08 | 5839 | | | 1.16 | Si |
| SLU 81 | 451 | -26615 | -5045 | 15636 | | 4.94 | 192.5 | 1.08 | 5839 | | | 1.16 | Si |
| SLU 74 | 261 | -21876 | -4585 | -356758 | | 4.06 | 192.5 | 1.08 | 5839 | | | 1.27 | Si |
| SLU 74 | 451 | -25278 | -4600 | -2873 | | 4.69 | 192.5 | 1.08 | 5839 | | | 1.27 | Si |
| SLU 75 | 261 | -21876 | -4606 | -357421 | | 4.06 | 192.5 | 1.08 | 5839 | | | 1.27 | Si |
| SLU 75 | 451 | -25301 | -4619 | -1911 | | 4.69 | 192.5 | 1.08 | 5839 | | | 1.26 | Si |
| SLU 82 | 261 | -22634 | -5052 | -372232 | | 4.2 | 192.5 | 1.08 | 5839 | | | 1.16 | Si |
| SLU 82 | 451 | -26639 | -5064 | 16598 | | 4.94 | 192.5 | 1.08 | 5839 | | | 1.15 | Si |
| SLU 60 | 261 | -20405 | -4558 | -340606 | | 3.79 | 192.5 | 1.06 | 5715 | | | 1.25 | Si |
| SLU 60 | 451 | -23837 | -4569 | 7785 | | 4.42 | 192.5 | 1.08 | 5839 | | | 1.28 | Si |
| SLU 83 | 261 | -22642 | -4759 | -366757 | | 4.2 | 192.5 | 1.08 | 5839 | | | 1.23 | Si |
| SLU 83 | 451 | -26250 | -4774 | 1934 | | 4.87 | 192.5 | 1.08 | 5839 | | | 1.22 | Si |
| SLU 61 | 261 | -20405 | -4578 | -341269 | | 3.79 | 192.5 | 1.06 | 5715 | | | 1.25 | Si |
| SLU 61 | 451 | -23861 | -4588 | 8747 | | 4.43 | 192.5 | 1.08 | 5839 | | | 1.27 | Si |
| SLU 40 | 261 | -19315 | -4351 | -313329 | | 3.58 | 192.5 | 1.03 | 5570 | | | 1.28 | Si |
| SLU 40 | 451 | -22956 | -4360 | 23051 | | 4.26 | 192.5 | 1.08 | 5839 | | | 1.34 | Si |
| SLU 84 | 261 | -22642 | -4779 | -367419 | | 4.2 | 192.5 | 1.08 | 5839 | | | 1.22 | Si |
| SLU 84 | 451 | -26273 | -4793 | 2896 | | 4.87 | 192.5 | 1.08 | 5839 | | | 1.22 | Si |
| SLU 73 | 261 | -21590 | -4773 | -357682 | | 4.01 | 192.5 | 1.08 | 5839 | | | 1.22 | Si |
| SLU 73 | 451 | -25244 | -4784 | 9207 | | 4.68 | 192.5 | 1.08 | 5839 | | | 1.22 | Si |

Verifica a taglio nel piano secondo D.M. 17-01-18 (N.T.C.) §7.8.2.2.2 con rottura per scorrimento in combinazioni sismiche, γM = 2

| Comb. | Quota | N | V par | M | σ0 | σN | l' | fvd | Vt scorr. | Vt fess.diag. | Vt,lim | c.s. | Verifica |
|---|---|---|---|---|---|---|---|---|---|---|---|---|---|
| SLV 4 | 261 | -17212 | -10242 | -584841 | | 3.29 | 186.82 | 1.49 | 7801 | | | 0.76 | No, Vu<V |
| SLV 4 | 451 | -26707 | -10072 | 336834 | | 4.95 | 192.5 | 1.63 | 8759 | | | 0.87 | No, Vu<V |
| SLD 2 | 261 | -13951 | -6404 | -370635 | | 2.59 | 192.5 | 1.35 | 7282 | | | 1.14 | Si |
| SLD 2 | 451 | -19770 | -6254 | 157913 | | 3.67 | 192.5 | 1.57 | 8446 | | | 1.35 | Si |
| SLV 5 | 261 | -7176 | -5933 | -240305 | | 1.36 | 188.29 | 1.11 | 5829 | | | 0.98 | No, Vu<V |
| SLV 5 | 451 | -13445 | -5592 | 160503 | | 2.49 | 192.5 | 1.33 | 7181 | | | 1.28 | Si |
| SLV 3 | 261 | -17212 | -10242 | -584841 | | 3.29 | 186.82 | 1.49 | 7801 | | | 0.76 | No, Vu<V |
| SLV 3 | 451 | -26707 | -10072 | 336834 | | 4.95 | 192.5 | 1.63 | 8759 | | | 0.87 | No, Vu<V |
| SLD 1 | 261 | -13951 | -6404 | -370635 | | 2.59 | 192.5 | 1.35 | 7282 | | | 1.14 | Si |
| SLD 1 | 451 | -19770 | -6254 | 157913 | | 3.67 | 192.5 | 1.57 | 8446 | | | 1.35 | Si |
| SLV 1 | 261 | -12563 | -10579 | -523989 | | 2.74 | 163.62 | 1.38 | 6330 | | | 0.6 | No, Vu<V |
| SLV 1 | 451 | -23075 | -10246 | 371464 | | 4.28 | 192.5 | 1.63 | 8759 | | | 0.85 | No, Vu<V |
| SLD 3 | 261 | -15876 | -6260 | -393935 | | 2.95 | 192.5 | 1.42 | 7667 | | | 1.22 | Si |
| SLD 3 | 451 | -21241 | -6174 | 143403 | | 3.94 | 192.5 | 1.62 | 8740 | | | 1.42 | Si |
| SLV 2 | 261 | -12563 | -10579 | -523989 | | 2.74 | 163.62 | 1.38 | 6330 | | | 0.6 | No, Vu<V |
| SLV 2 | 451 | -23075 | -10246 | 371464 | | 4.28 | 192.5 | 1.63 | 8759 | | | 0.85 | No, Vu<V |
| SLD 4 | 261 | -15876 | -6260 | -393935 | | 2.95 | 192.5 | 1.42 | 7667 | | | 1.22 | Si |
| SLD 4 | 451 | -21241 | -6174 | 143403 | | 3.94 | 192.5 | 1.62 | 8740 | | | 1.42 | Si |
| SLV 6 | 261 | -7176 | -5933 | -240305 | | 1.36 | 188.29 | 1.11 | 5829 | | | 0.98 | No, Vu<V |
| SLV 6 | 451 | -13445 | -5592 | 160503 | | 2.49 | 192.5 | 1.33 | 7181 | | | 1.28 | Si |

### Verifica a pressoflessione fuori piano D.M. 17-01-18 (N.T.C.)

quota 357.5 Wa 0.05 denominatore 8 γM = 2

| Comb. | fd | Sa | σ0 | N | M | Mc | Coeff.s. | Verifica |
|---|---|---|---|---|---|---|---|---|
| SLV 10 | 14 | 0.32 | 1.54 | -8280 | 18236 | 101345 | 5.56 | Si |
| SLV 9 | 14 | 0.32 | 1.54 | -8280 | 18236 | 101345 | 5.56 | Si |
| SLV 14 | 14 | 0.32 | 1.84 | -9922 | 18236 | 117982 | 6.47 | Si |
| SLV 13 | 14 | 0.32 | 1.84 | -9922 | 18236 | 117982 | 6.47 | Si |
| SLV 6 | 14 | 0.32 | 2.04 | -10993 | 18236 | 128210 | 7.03 | Si |
| SLV 5 | 14 | 0.32 | 2.04 | -10993 | 18236 | 128210 | 7.03 | Si |
| SLV 15 | 14 | 0.32 | 2.61 | -14043 | 18236 | 154677 | 8.48 | Si |
| SLV 16 | 14 | 0.32 | 2.61 | -14043 | 18236 | 154677 | 8.48 | Si |
| SLV 1 | 14 | 0.32 | 3.52 | -18965 | 18236 | 189051 | 10.37 | Si |
| SLV 2 | 14 | 0.32 | 3.52 | -18965 | 18236 | 189051 | 10.37 | Si |

### Verifica dei meccanismi locali di collasso con analisi cinematica lineare

forza di aggancio al piano = 0 quota mezzeria = 357.5 Wa = 0.05 Ta = 0.083

| Comb. | N top | N base | V orto | α0 | M* | e* | a0* | aLim | Verifica |
|---|---|---|---|---|---|---|---|---|---|
| SLV 7 | -22779 | -20658 | 22 | 0.039 | 26.022 | 0.967 | 59.236 | 1417.879 | No |
| SLV 8 | -22779 | -20658 | 22 | 0.039 | 26.022 | 0.967 | 59.236 | 1417.879 | No |
| SLV 12 | -17719 | -20043 | 22 | 0.04 | 20.874 | 0.96 | 60.427 | 1417.879 | No |
| SLV 11 | -17719 | -20043 | 22 | 0.04 | 20.874 | 0.96 | 60.427 | 1417.879 | No |
| SLV 6 | -13232 | -6892 | -11 | 0.041 | 16.314 | 0.95 | 63.2 | 1417.879 | No |
| SLV 5 | -13232 | -6892 | -11 | 0.041 | 16.314 | 0.95 | 63.2 | 1417.879 | No |
| SLV 9 | -8173 | -6278 | -11 | 0.043 | 11.189 | 0.931 | 67.464 | 1417.879 | No |
| SLV 10 | -8173 | -6278 | -11 | 0.043 | 11.189 | 0.931 | 67.464 | 1417.879 | No |
| SLV 4 | -25340 | -16557 | 10 | 0.04 | 28.629 | 0.97 | 59.437 | 813.056 | No |
| SLV 3 | -25340 | -16557 | 10 | 0.04 | 28.629 | 0.97 | 59.437 | 813.056 | No |

### Tabella dei coefficienti di sicurezza minimi

| Stato limite | Coeff.s. | Comb. | Verifica |
|---|---|---|---|
| PF_SLU | 2.836 | SLU 82 | Si |
| V_SLU | 1.153 | SLU 82 | Si |
| PF_SLV | 1.867 | SLV 1 | Si |
| V_SLV | 0.598 | SLV 1 | No |
| PFFP_SLV | 5.557 | SLV 9 | Si |
| R_SLV | 0.042 | SLV 7 | No |

## Maschio 79

Verifiche condotte secondo D.M. 17-01-18 (N.T.C.)

### Dati geometrici

| X ini. | Y ini. | X fin. | Y fin. | Quota i. | Quota.s | l | Sp. | h netta | h ini. | h fin. | a | a.s.,sx | a.s.,dx |
|---|---|---|---|---|---|---|---|---|---|---|---|---|---|
| -1676.8 | 666.1 | -1288.8 | 666.1 | L3 | L4 | 388 | 28 | 373 | 373 | 373 | | | |

### Caratteristiche del materiale

(Circolare 7 21-01-19 C8.5.I) Muratura in mattoni pieni e malta di calce LC2_Corti

| fb | fk | fvk0 | fmedio | τ0 | fv0 | μ | ϕ | fv,lim | E | G | FC |
|---|---|---|---|---|---|---|---|---|---|---|---|
| 60 | | | 34.5 | 0.9 | 2 | 0.58 | 0.77 | 3.25 | 32000 | 12800 | 1.2 |

### Verifica a pressoflessione nel piano secondo D.M. 17-01-18 NTC §7.8.2.2.1 in combinazioni non sismiche, γM = 3

| Comb. | Quota | N | M | σ0 | Mu | c.s. | Verifica |
|---|---|---|---|---|---|---|---|
| SLU 75 | 261 | -52799 | -616586 | 4.86 | 4131787 | 6.701 | Si |
| SLU 75 | 451 | -57171 | -209620 | 5.26 | 3925992 | 18.729 | Si |
| SLU 78 | 261 | -52932 | -596803 | 4.87 | 4126745 | 6.915 | Si |
| SLU 78 | 451 | -57171 | -215883 | 5.26 | 3925997 | 18.186 | Si |
| SLU 82 | 261 | -54651 | -657629 | 5.03 | 4054821 | 6.166 | Si |
| SLU 82 | 451 | -59506 | -206617 | 5.48 | 3781756 | 18.303 | Si |
| SLU 77 | 261 | -52926 | -594698 | 4.87 | 4127006 | 6.94 | Si |
| SLU 77 | 451 | -57176 | -216573 | 5.26 | 3925701 | 18.126 | Si |
| SLU 74 | 261 | -52792 | -614480 | 4.86 | 4132043 | 6.724 | Si |
| SLU 74 | 451 | -57176 | -210310 | 5.26 | 3925696 | 18.666 | Si |
| SLU 73 | 261 | -51992 | -625495 | 4.79 | 4160627 | 6.652 | Si |
| SLU 73 | 451 | -56339 | -203154 | 5.19 | 3971615 | 19.55 | Si |
| SLU 83 | 261 | -54778 | -635740 | 5.04 | 4049012 | 6.369 | Si |
| SLU 83 | 451 | -59511 | -213570 | 5.48 | 3781413 | 17.706 | Si |
| SLU 84 | 261 | -54785 | -637846 | 5.04 | 4048697 | 6.347 | Si |
| SLU 84 | 451 | -59506 | -212880 | 5.48 | 3781762 | 17.765 | Si |
| SLU 81 | 261 | -54644 | -655523 | 5.03 | 4055133 | 6.186 | Si |
| SLU 81 | 451 | -59511 | -207307 | 5.48 | 3781407 | 18.241 | Si |
| SLU 76 | 261 | -52125 | -605712 | 4.8 | 4156058 | 6.861 | Si |
| SLU 76 | 451 | -56339 | -209417 | 5.19 | 3971620 | 18.965 | Si |

### Verifica a pressoflessione nel piano secondo D.M. 17-01-18 NTC §7.8.2.2.1 in combinazioni sismiche, γM = 2

| Comb. | Quota | N | M | σ0 | Mu | c.s. | Verifica |
|---|---|---|---|---|---|---|---|
| SLV 7 | 261 | -46158 | -1774809 | 4.25 | 5840941 | 3.291 | Si |
| SLV 7 | 451 | -45682 | -133399 | 4.2 | 5812507 | 43.572 | Si |
| SLV 4 | 261 | -39871 | -1906403 | 3.67 | 5411715 | 2.839 | Si |
| SLV 4 | 451 | -42326 | 998696 | 3.9 | 5593063 | 5.6 | Si |
| SLV 13 | 261 | -31600 | 1052103 | 2.91 | 4671085 | 4.44 | Si |
| SLV 13 | 451 | -34347 | -1300249 | 3.16 | 4939246 | 3.799 | Si |
| SLV 3 | 261 | -39871 | -1906403 | 3.67 | 5411715 | 2.839 | Si |
| SLV 3 | 451 | -42326 | 998696 | 3.9 | 5593063 | 5.6 | Si |
| SLV 8 | 261 | -46158 | -1774809 | 4.25 | 5840941 | 3.291 | Si |

| Comb. | Quota | N | M | σ0 | Mu | c.s. | Verifica |
|---|---|---|---|---|---|---|---|
| SLV 8 | 451 | -45682 | -133399 | 4.2 | 5812507 | 43.572 | Si |
| SLV 2 | 261 | -33817 | -1310436 | 3.11 | 4889215 | 3.731 | Si |
| SLV 2 | 451 | -38272 | 1214607 | 3.52 | 5284086 | 4.35 | Si |
| SLV 16 | 261 | -37654 | 456136 | 3.47 | 5232812 | 11.472 | Si |
| SLV 16 | 451 | -38402 | -1516160 | 3.53 | 5294729 | 3.492 | Si |
| SLV 1 | 261 | -33817 | -1310436 | 3.11 | 4889215 | 3.731 | Si |
| SLV 1 | 451 | -38272 | 1214607 | 3.52 | 5284086 | 4.35 | Si |
| SLV 15 | 261 | -37654 | 456136 | 3.47 | 5232812 | 11.472 | Si |
| SLV 15 | 451 | -38402 | -1516160 | 3.53 | 5294729 | 3.492 | Si |
| SLV 14 | 261 | -31600 | 1052103 | 2.91 | 4671085 | 4.44 | Si |
| SLV 14 | 451 | -34347 | -1300249 | 3.16 | 4939246 | 3.799 | Si |

### Verifica a taglio nel piano secondo D.M. 17-01-18 (N.T.C.) §7.8.2.2.2 con rottura per scorrimento in combinazioni non sismiche, γM = 3

| Comb. | Quota | N | V par | M | σ0 | σN | l' | fvd | Vt scorr. | Vt fess.diag. | Vt,lim | c.s. | Verifica |
|---|---|---|---|---|---|---|---|---|---|---|---|---|---|
| SLU 84 | 261 | -54785 | -3401 | -637846 | | 5.04 | 388 | 1.08 | 11769 | | | 3.46 | Si |
| SLU 84 | 451 | -59506 | -3400 | -212880 | | 5.48 | 388 | 1.08 | 11769 | | | 3.46 | Si |
| SLU 76 | 261 | -52125 | -3189 | -605712 | | 4.8 | 388 | 1.08 | 11769 | | | 3.69 | Si |
| SLU 76 | 451 | -56339 | -3188 | -209417 | | 5.19 | 388 | 1.08 | 11769 | | | 3.69 | Si |
| SLU 81 | 261 | -54644 | -3541 | -655523 | | 5.03 | 388 | 1.08 | 11769 | | | 3.32 | Si |
| SLU 81 | 451 | -59511 | -3540 | -207307 | | 5.48 | 388 | 1.08 | 11769 | | | 3.32 | Si |
| SLU 61 | 261 | -48995 | -3188 | -596377 | | 4.51 | 388 | 1.08 | 11769 | | | 3.69 | Si |
| SLU 61 | 451 | -52960 | -3188 | -193002 | | 4.87 | 388 | 1.08 | 11769 | | | 3.69 | Si |
| SLU 74 | 261 | -52792 | -3251 | -614480 | | 4.86 | 388 | 1.08 | 11769 | | | 3.62 | Si |
| SLU 74 | 451 | -57176 | -3250 | -210310 | | 5.26 | 388 | 1.08 | 11769 | | | 3.62 | Si |
| SLU 83 | 261 | -54778 | -3388 | -635740 | | 5.04 | 388 | 1.08 | 11769 | | | 3.47 | Si |
| SLU 83 | 451 | -59511 | -3387 | -213570 | | 5.48 | 388 | 1.08 | 11769 | | | 3.48 | Si |
| SLU 75 | 261 | -52799 | -3264 | -616586 | | 4.86 | 388 | 1.08 | 11769 | | | 3.61 | Si |
| SLU 75 | 451 | -57171 | -3263 | -209620 | | 5.26 | 388 | 1.08 | 11769 | | | 3.61 | Si |
| SLU 73 | 261 | -51992 | -3342 | -625495 | | 4.79 | 388 | 1.08 | 11769 | | | 3.52 | Si |
| SLU 73 | 451 | -56339 | -3341 | -203154 | | 5.19 | 388 | 1.08 | 11769 | | | 3.52 | Si |
| SLU 60 | 261 | -48988 | -3175 | -594271 | | 4.51 | 388 | 1.08 | 11769 | | | 3.71 | Si |
| SLU 60 | 451 | -52965 | -3174 | -193692 | | 4.88 | 388 | 1.08 | 11769 | | | 3.71 | Si |
| SLU 82 | 261 | -54651 | -3554 | -657629 | | 5.03 | 388 | 1.08 | 11769 | | | 3.31 | Si |
| SLU 82 | 451 | -59506 | -3553 | -206617 | | 5.48 | 388 | 1.08 | 11769 | | | 3.31 | Si |

### Verifica a taglio nel piano secondo D.M. 17-01-18 (N.T.C.) §7.8.2.2.2 con rottura per scorrimento in combinazioni sismiche, γM = 2

| Comb. | Quota | N | V par | M | σ0 | σN | l' | fvd | Vt scorr. | Vt fess.diag. | Vt,lim | c.s. | Verifica |
|---|---|---|---|---|---|---|---|---|---|---|---|---|---|
| SLV 2 | 261 | -33817 | -15997 | -1310436 | | 3.11 | 388 | 1.46 | 15817 | | | 0.99 | No, Vu<V |
| SLV 2 | 451 | -38272 | -14250 | 1214607 | | 3.52 | 388 | 1.54 | 16708 | | | 1.17 | Si |
| SLV 15 | 261 | -37654 | 11549 | 456136 | | 3.47 | 388 | 1.53 | 16584 | | | 1.44 | Si |
| SLV 15 | 451 | -38402 | 9803 | -1516160 | | 3.53 | 388 | 1.54 | 16734 | | | 1.71 | Si |
| SLD 2 | 261 | -34953 | -8207 | -816677 | | 3.22 | 388 | 1.48 | 16044 | | | 1.95 | Si |
| SLD 2 | 451 | -38336 | -7454 | 440211 | | 3.53 | 388 | 1.54 | 16720 | | | 2.24 | Si |
| SLV 3 | 261 | -39871 | -15987 | -1906403 | | 3.67 | 388 | 1.57 | 17028 | | | 1.07 | Si |
| SLV 3 | 451 | -42326 | -14529 | 998696 | | 3.9 | 388 | 1.61 | 17519 | | | 1.21 | Si |
| SLD 1 | 261 | -34953 | -8207 | -816677 | | 3.22 | 388 | 1.48 | 16044 | | | 1.95 | Si |
| SLD 1 | 451 | -38336 | -7454 | 440211 | | 3.53 | 388 | 1.54 | 16720 | | | 2.24 | Si |
| SLV 14 | 261 | -31600 | 11540 | 1052103 | | 2.91 | 388 | 1.42 | 15373 | | | 1.33 | Si |
| SLV 14 | 451 | -34347 | 10082 | -1300249 | | 3.16 | 388 | 1.47 | 15923 | | | 1.58 | Si |
| SLV 16 | 261 | -37654 | 11549 | 456136 | | 3.47 | 388 | 1.53 | 16584 | | | 1.44 | Si |
| SLV 16 | 451 | -38402 | 9803 | -1516160 | | 3.53 | 388 | 1.54 | 16734 | | | 1.71 | Si |
| SLV 13 | 261 | -31600 | 11540 | 1052103 | | 2.91 | 388 | 1.42 | 15373 | | | 1.33 | Si |
| SLV 13 | 451 | -34347 | 10082 | -1300249 | | 3.16 | 388 | 1.47 | 15923 | | | 1.58 | Si |
| SLV 4 | 261 | -39871 | -15987 | -1906403 | | 3.67 | 388 | 1.57 | 17028 | | | 1.07 | Si |
| SLV 4 | 451 | -42326 | -14529 | 998696 | | 3.9 | 388 | 1.61 | 17519 | | | 1.21 | Si |
| SLV 1 | 261 | -33817 | -15997 | -1310436 | | 3.11 | 388 | 1.46 | 15817 | | | 0.99 | No, Vu<V |
| SLV 1 | 451 | -38272 | -14250 | 1214607 | | 3.52 | 388 | 1.54 | 16708 | | | 1.17 | Si |

### Verifica a pressoflessione fuori piano D.M. 17-01-18 (N.T.C.)

quota 357.5 Wa 0.05 denominatore 8 γM = 2

| Comb. | fd | Sa | σ0 | N | M | Mc | Coeff.s. | Verifica |
|---|---|---|---|---|---|---|---|---|
| SLV 9 | 14 | 0.32 | 2.68 | -29074 | 36757 | 317890 | 8.65 | Si |
| SLV 10 | 14 | 0.32 | 2.68 | -29074 | 36757 | 317890 | 8.65 | Si |
| SLV 5 | 14 | 0.32 | 2.76 | -29980 | 36757 | 324930 | 8.84 | Si |
| SLV 6 | 14 | 0.32 | 2.76 | -29980 | 36757 | 324930 | 8.84 | Si |
| SLV 14 | 14 | 0.32 | 3.11 | -33808 | 36757 | 352767 | 9.6 | Si |
| SLV 13 | 14 | 0.32 | 3.11 | -33808 | 36757 | 352767 | 9.6 | Si |
| SLV 2 | 14 | 0.32 | 3.39 | -36828 | 36757 | 372546 | 10.14 | Si |
| SLV 1 | 14 | 0.32 | 3.39 | -36828 | 36757 | 372546 | 10.14 | Si |
| SLV 15 | 14 | 0.32 | 3.57 | -38771 | 36757 | 384260 | 10.45 | Si |
| SLV 16 | 14 | 0.32 | 3.57 | -38771 | 36757 | 384260 | 10.45 | Si |

### Verifica dei meccanismi locali di collasso con analisi cinematica lineare

forza di aggancio al piano = 0 quota mezzeria = 357.5 Wa = 0.05 Ta = 0.083

| Comb. | N top | N base | V orto | α0 | M* | e* | a0* | aLim | Verifica |
|---|---|---|---|---|---|---|---|---|---|
| SLV 10 | -26322 | -18948 | 669 | 0.02 | 32.529 | 0.949 | 30.291 | 1417.879 | No |
| SLV 9 | -26322 | -18948 | 669 | 0.02 | 32.529 | 0.949 | 30.291 | 1417.879 | No |
| SLV 6 | -27208 | -19132 | 670 | 0.02 | 33.428 | 0.95 | 30.988 | 1417.879 | No |
| SLV 5 | -27208 | -19132 | 670 | 0.02 | 33.428 | 0.95 | 30.988 | 1417.879 | No |
| SLV 11 | -37294 | -44021 | -675 | 0.024 | 43.679 | 0.961 | 36.895 | 1417.879 | No |
| SLV 12 | -37294 | -44021 | -675 | 0.024 | 43.679 | 0.961 | 36.895 | 1417.879 | No |
| SLV 8 | -38180 | -44206 | -674 | 0.025 | 44.581 | 0.962 | 37.32 | 1417.879 | No |
| SLV 7 | -38180 | -44206 | -674 | 0.025 | 44.581 | 0.962 | 37.32 | 1417.879 | No |
| SLV 15 | -32420 | -35030 | -206 | 0.036 | 38.723 | 0.957 | 54.135 | 813.056 | No |
| SLV 16 | -32420 | -35030 | -206 | 0.036 | 38.723 | 0.957 | 54.135 | 813.056 | No |

Tabella dei coefficienti di sicurezza minimi

| Stato limite | Coeff.s. | Comb. | Verifica |
|---|---|---|---|
| PF_SLU | 6.166 | SLU 82 | Si |
| V_SLU | 3.311 | SLU 82 | Si |
| PF_SLV | 2.839 | SLV 3 | Si |
| V_SLV | 0.989 | SLV 1 | No |
| PFFP_SLV | 8.648 | SLV 9 | Si |
| R_SLV | 0.021 | SLV 9 | No |

## Maschio 80

Verifiche condotte secondo D.M. 17-01-18 (N.T.C.)

### Dati geometrici

| X ini. | Y ini. | X fin. | Y fin. | Quota i. | Quota.s | l | Sp. | h netta | h ini. | h fin. | a | a.s.,sx | a.s.,dx |
|---|---|---|---|---|---|---|---|---|---|---|---|---|---|
| -1188.8 | 666.1 | -800.8 | 666.1 | L3 | L4 | 388 | 28 | 373 | 373 | 373 | | | |

### Caratteristiche del materiale

(Circolare 7 21-01-19 C8.5.I) Muratura in mattoni pieni e malta di calce LC2_Corti

| fb | fk | fvk0 | fmedio | τ0 | fv0 | μ | ϕ | fv,lim | E | G | FC |
|---|---|---|---|---|---|---|---|---|---|---|---|
| 60 | | | 34.5 | 0.9 | 2 | 0.58 | 0.77 | 3.25 | 32000 | 12800 | 1.2 |

### Verifica a pressoflessione nel piano secondo D.M. 17-01-18 NTC §7.8.2.2.1 in combinazioni non sismiche, γM = 3

| Comb. | Quota | N | M | σ0 | Mu | c.s. | Verifica |
|---|---|---|---|---|---|---|---|
| SLU 84 | 261 | -58743 | 588194 | 5.41 | 3831510 | 6.514 | Si |
| SLU 84 | 451 | -53812 | 428578 | 4.95 | 4091580 | 9.547 | Si |
| SLU 80 | 261 | -56463 | 585023 | 5.2 | 3965012 | 6.778 | Si |
| SLU 80 | 451 | -51531 | 417487 | 4.74 | 4175786 | 10.002 | Si |
| SLU 75 | 261 | -56469 | 562570 | 5.2 | 3964651 | 7.047 | Si |
| SLU 75 | 451 | -51538 | 414416 | 4.74 | 4175571 | 10.076 | Si |
| SLU 74 | 261 | -56519 | 563456 | 5.2 | 3961965 | 7.032 | Si |
| SLU 74 | 451 | -51588 | 416027 | 4.75 | 4173966 | 10.033 | Si |
| SLU 82 | 261 | -58081 | 562162 | 5.35 | 3872625 | 6.889 | Si |
| SLU 82 | 451 | -53149 | 420474 | 4.89 | 4118381 | 9.795 | Si |
| SLU 78 | 261 | -57131 | 588602 | 5.26 | 3928213 | 6.674 | Si |
| SLU 78 | 451 | -52200 | 422520 | 4.8 | 4153448 | 9.83 | Si |
| SLU 81 | 261 | -58131 | 563049 | 5.35 | 3869586 | 6.873 | Si |
| SLU 81 | 451 | -53199 | 422084 | 4.9 | 4116423 | 9.753 | Si |
| SLU 79 | 261 | -56513 | 585909 | 5.2 | 3962328 | 6.763 | Si |
| SLU 79 | 451 | -51581 | 419097 | 4.75 | 4174183 | 9.96 | Si |
| SLU 77 | 261 | -57182 | 589488 | 5.26 | 3925382 | 6.659 | Si |
| SLU 77 | 451 | -52250 | 424131 | 4.81 | 4151698 | 9.789 | Si |
| SLU 83 | 261 | -58793 | 589080 | 5.41 | 3828325 | 6.499 | Si |
| SLU 83 | 451 | -53862 | 430188 | 4.96 | 4089477 | 9.506 | Si |

### Verifica a pressoflessione nel piano secondo D.M. 17-01-18 NTC §7.8.2.2.1 in combinazioni sismiche, γM = 2

| Comb. | Quota | N | M | σ0 | Mu | c.s. | Verifica |
|---|---|---|---|---|---|---|---|
| SLV 1 | 261 | -35018 | -874721 | 3.22 | 5001343 | 5.718 | Si |
| SLV 1 | 451 | -30377 | 1305862 | 2.8 | 4544511 | 3.48 | Si |
| SLV 7 | 261 | -37264 | 261147 | 3.43 | 5199802 | 19.911 | Si |
| SLV 7 | 451 | -34989 | 1262454 | 3.22 | 4998690 | 3.96 | Si |
| SLV 14 | 261 | -40270 | 1450415 | 3.71 | 5442346 | 3.752 | Si |
| SLV 14 | 451 | -36380 | -1120069 | 3.35 | 5123455 | 4.574 | Si |
| SLV 16 | 261 | -40458 | 1599063 | 3.72 | 5456653 | 3.412 | Si |
| SLV 16 | 451 | -37539 | -748222 | 3.46 | 5223096 | 6.981 | Si |
| SLV 2 | 261 | -35018 | -874721 | 3.22 | 5001343 | 5.718 | Si |
| SLV 2 | 451 | -30377 | 1305862 | 2.8 | 4544511 | 3.48 | Si |
| SLV 15 | 261 | -40458 | 1599063 | 3.72 | 5456653 | 3.412 | Si |
| SLV 15 | 451 | -37539 | -748222 | 3.46 | 5223096 | 6.981 | Si |
| SLV 8 | 261 | -37264 | 261147 | 3.43 | 5199802 | 19.911 | Si |
| SLV 8 | 451 | -34989 | 1262454 | 3.22 | 4998690 | 3.96 | Si |
| SLV 4 | 261 | -35206 | -726073 | 3.24 | 5018540 | 6.912 | Si |
| SLV 4 | 451 | -31535 | 1677708 | 2.9 | 4664489 | 2.78 | Si |
| SLV 3 | 261 | -35206 | -726073 | 3.24 | 5018540 | 6.912 | Si |
| SLV 3 | 451 | -31535 | 1677708 | 2.9 | 4664489 | 2.78 | Si |
| SLV 13 | 261 | -40270 | 1450415 | 3.71 | 5442346 | 3.752 | Si |
| SLV 13 | 451 | -36380 | -1120069 | 3.35 | 5123455 | 4.574 | Si |

### Verifica a taglio nel piano secondo D.M. 17-01-18 (N.T.C.) §7.8.2.2.2 con rottura per scorrimento in combinazioni non sismiche, γM = 3

| Comb. | Quota | N | V par | M | σ0 | σN | l' | fvd | Vt scorr. | Vt fess.diag. | Vt,lim | c.s. | Verifica |
|---|---|---|---|---|---|---|---|---|---|---|---|---|---|
| SLU 36 | 261 | -49120 | 817 | 516077 | | 4.52 | 388 | 1.08 | 11769 | | | 14.41 | Si |
| SLU 36 | 451 | -45297 | 817 | 361118 | | 4.17 | 388 | 1.08 | 11769 | | | 14.41 | Si |
| SLU 84 | 261 | -58743 | 841 | 588194 | | 5.41 | 388 | 1.08 | 11769 | | | 13.99 | Si |
| SLU 84 | 451 | -53812 | 841 | 428578 | | 4.95 | 388 | 1.08 | 11769 | | | 13.99 | Si |
| SLU 35 | 261 | -49170 | 813 | 516963 | | 4.53 | 388 | 1.08 | 11769 | | | 14.48 | Si |
| SLU 35 | 451 | -45347 | 813 | 362728 | | 4.17 | 388 | 1.08 | 11769 | | | 14.48 | Si |
| SLU 37 | 261 | -48501 | 820 | 513384 | | 4.46 | 388 | 1.08 | 11769 | | | 14.35 | Si |
| SLU 37 | 451 | -44678 | 820 | 357695 | | 4.11 | 388 | 1.08 | 11769 | | | 14.35 | Si |
| SLU 78 | 261 | -57131 | 875 | 588602 | | 5.26 | 388 | 1.08 | 11769 | | | 13.45 | Si |
| SLU 78 | 451 | -52200 | 875 | 422520 | | 4.8 | 388 | 1.08 | 11769 | | | 13.45 | Si |
| SLU 79 | 261 | -56513 | 879 | 585909 | | 5.2 | 388 | 1.08 | 11769 | | | 13.39 | Si |
| SLU 79 | 451 | -51581 | 879 | 419097 | | 4.75 | 388 | 1.08 | 11769 | | | 13.39 | Si |
| SLU 83 | 261 | -58793 | 837 | 589080 | | 5.41 | 388 | 1.08 | 11769 | | | 14.05 | Si |
| SLU 83 | 451 | -53862 | 837 | 430188 | | 4.96 | 388 | 1.08 | 11769 | | | 14.05 | Si |
| SLU 80 | 261 | -56463 | 883 | 585023 | | 5.2 | 388 | 1.08 | 11769 | | | 13.33 | Si |

| Comb. | Quota | N | V par | M | σ0 | σN | l' | fvd | Vt scorr. | Vt fess.diag. | Vt,lim | c.s. | Verifica |
|---|---|---|---|---|---|---|---|---|---|---|---|---|---|
| SLU 80 | 451 | -51531 | 883 | 417487 | | 4.74 | 388 | 1.08 | 11769 | | | 13.33 | Si |
| SLU 38 | 261 | -48451 | 824 | 512498 | | 4.46 | 388 | 1.08 | 11769 | | | 14.28 | Si |
| SLU 38 | 451 | -44628 | 824 | 356085 | | 4.11 | 388 | 1.08 | 11769 | | | 14.28 | Si |
| SLU 77 | 261 | -57182 | 871 | 589488 | | 5.26 | 388 | 1.08 | 11769 | | | 13.5 | Si |
| SLU 77 | 451 | -52250 | 871 | 424131 | | 4.81 | 388 | 1.08 | 11769 | | | 13.5 | Si |

### Verifica a taglio nel piano secondo D.M. 17-01-18 (N.T.C.) §7.8.2.2.2 con rottura per scorrimento in combinazioni sismiche, γM = 2

| Comb. | Quota | N | V par | M | σ0 | σN | l' | fvd | Vt scorr. | Vt fess.diag. | Vt,lim | c.s. | Verifica |
|---|---|---|---|---|---|---|---|---|---|---|---|---|---|
| SLV 3 | 261 | -35206 | -12893 | -726073 | | 3.24 | 388 | 1.48 | 16095 | | | 1.25 | Si |
| SLV 3 | 451 | -31535 | -11418 | 1677708 | | 2.9 | 388 | 1.41 | 15360 | | | 1.35 | Si |
| SLD 14 | 261 | -38819 | 6240 | 836331 | | 3.57 | 388 | 1.55 | 16817 | | | 2.69 | Si |
| SLD 14 | 451 | -35000 | 5590 | -327135 | | 3.22 | 388 | 1.48 | 16053 | | | 2.87 | Si |
| SLV 2 | 261 | -35018 | -12840 | -874721 | | 3.22 | 388 | 1.48 | 16057 | | | 1.25 | Si |
| SLV 2 | 451 | -30377 | -11562 | 1305862 | | 2.8 | 388 | 1.39 | 15129 | | | 1.31 | Si |
| SLV 4 | 261 | -35206 | -12893 | -726073 | | 3.24 | 388 | 1.48 | 16095 | | | 1.25 | Si |
| SLV 4 | 451 | -31535 | -11418 | 1677708 | | 2.9 | 388 | 1.41 | 15360 | | | 1.35 | Si |
| SLV 1 | 261 | -35018 | -12840 | -874721 | | 3.22 | 388 | 1.48 | 16057 | | | 1.25 | Si |
| SLV 1 | 451 | -30377 | -11562 | 1305862 | | 2.8 | 388 | 1.39 | 15129 | | | 1.31 | Si |
| SLV 16 | 261 | -40458 | 13720 | 1599063 | | 3.72 | 388 | 1.58 | 17145 | | | 1.25 | Si |
| SLV 16 | 451 | -37539 | 12441 | -748222 | | 3.46 | 388 | 1.52 | 16561 | | | 1.33 | Si |
| SLV 13 | 261 | -40270 | 13772 | 1450415 | | 3.71 | 388 | 1.57 | 17107 | | | 1.24 | Si |
| SLV 13 | 451 | -36380 | 12297 | -1120069 | | 3.35 | 388 | 1.5 | 16329 | | | 1.33 | Si |
| SLV 14 | 261 | -40270 | 13772 | 1450415 | | 3.71 | 388 | 1.57 | 17107 | | | 1.24 | Si |
| SLV 14 | 451 | -36380 | 12297 | -1120069 | | 3.35 | 388 | 1.5 | 16329 | | | 1.33 | Si |
| SLV 15 | 261 | -40458 | 13720 | 1599063 | | 3.72 | 388 | 1.58 | 17145 | | | 1.25 | Si |
| SLV 15 | 451 | -37539 | 12441 | -748222 | | 3.46 | 388 | 1.52 | 16561 | | | 1.33 | Si |
| SLD 13 | 261 | -38819 | 6240 | 836331 | | 3.57 | 388 | 1.55 | 16817 | | | 2.69 | Si |
| SLD 13 | 451 | -35000 | 5590 | -327135 | | 3.22 | 388 | 1.48 | 16053 | | | 2.87 | Si |

### Verifica a pressoflessione fuori piano D.M. 17-01-18 (N.T.C.)

quota 357.5 Wa 0.05 denominatore 8 γM = 2

| Comb. | fd | Sa | σ0 | N | M | Mc | Coeff.s. | Verifica |
|---|---|---|---|---|---|---|---|---|
| SLV 2 | 14 | 0.32 | 2.95 | -32029 | 36757 | 340214 | 9.26 | Si |
| SLV 1 | 14 | 0.32 | 2.95 | -32029 | 36757 | 340214 | 9.26 | Si |
| SLV 6 | 14 | 0.32 | 2.98 | -32387 | 36757 | 342792 | 9.33 | Si |
| SLV 5 | 14 | 0.32 | 2.98 | -32387 | 36757 | 342792 | 9.33 | Si |
| SLV 3 | 14 | 0.32 | 3.07 | -33370 | 36757 | 349738 | 9.51 | Si |
| SLV 4 | 14 | 0.32 | 3.07 | -33370 | 36757 | 349738 | 9.51 | Si |
| SLV 9 | 14 | 0.32 | 3.13 | -34034 | 36757 | 354316 | 9.64 | Si |
| SLV 10 | 14 | 0.32 | 3.13 | -34034 | 36757 | 354316 | 9.64 | Si |
| SLV 8 | 14 | 0.32 | 3.39 | -36856 | 36757 | 372726 | 10.14 | Si |
| SLV 7 | 14 | 0.32 | 3.39 | -36856 | 36757 | 372726 | 10.14 | Si |

### Verifica dei meccanismi locali di collasso con analisi cinematica lineare

forza di aggancio al piano = 0 quota mezzeria = 357.5 Wa = 0.05 Ta = 0.083

| Comb. | N top | N base | V orto | α0 | M* | e* | a0* | aLim | Verifica |
|---|---|---|---|---|---|---|---|---|---|
| SLV 10 | -28029 | -40195 | -208 | 0.035 | 34.262 | 0.952 | 53.917 | 1417.879 | No |
| SLV 9 | -28029 | -40195 | -208 | 0.035 | 34.262 | 0.952 | 53.917 | 1417.879 | No |
| SLV 5 | -26848 | -38001 | -204 | 0.035 | 33.063 | 0.95 | 54.054 | 1417.879 | No |
| SLV 6 | -26848 | -38001 | -204 | 0.035 | 33.063 | 0.95 | 54.054 | 1417.879 | No |
| SLV 7 | -29564 | -33281 | 176 | 0.036 | 35.821 | 0.953 | 55.406 | 1417.879 | No |
| SLV 8 | -29564 | -33281 | 176 | 0.036 | 35.821 | 0.953 | 55.406 | 1417.879 | No |
| SLV 12 | -30745 | -35475 | 173 | 0.036 | 37.021 | 0.955 | 55.551 | 1417.879 | No |
| SLV 11 | -30745 | -35475 | 173 | 0.036 | 37.021 | 0.955 | 55.551 | 1417.879 | No |
| SLV 13 | -30358 | -41103 | -79 | 0.039 | 36.628 | 0.954 | 59.763 | 813.056 | No |
| SLV 14 | -30358 | -41103 | -79 | 0.039 | 36.628 | 0.954 | 59.763 | 813.056 | No |

### Tabella dei coefficienti di sicurezza minimi

| Stato limite | Coeff.s. | Comb. | Verifica |
|---|---|---|---|
| PF_SLU | 6.499 | SLU 83 | Si |
| V_SLU | 13.329 | SLU 80 | Si |
| PF_SLV | 2.78 | SLV 3 | Si |
| V_SLV | 1.242 | SLV 13 | Si |
| PFFP_SLV | 9.256 | SLV 1 | Si |
| R_SLV | 0.038 | SLV 9 | No |

## Maschio 81

Verifiche condotte secondo D.M. 17-01-18 (N.T.C.)

### Dati geometrici

| X ini. | Y ini. | X fin. | Y fin. | Quota i. | Quota.s | l | Sp. | h netta | h ini. | h fin. | a | a.s.,sx | a.s.,dx |
|---|---|---|---|---|---|---|---|---|---|---|---|---|---|
| -700.8 | 666.1 | -515.8 | 666.1 | L3 | L4 | 185 | 28 | 373 | 373 | 373 | | | |

### Caratteristiche del materiale

(Circolare 7 21-01-19 C8.5.I) Muratura in mattoni pieni e malta di calce LC2_Corti

| fb | fk | fvk0 | fmedio | τ0 | fv0 | μ | ϕ | fv,lim | E | G | FC |
|---|---|---|---|---|---|---|---|---|---|---|---|
| 60 | | | 34.5 | 0.9 | 2 | 0.58 | 0.77 | 3.25 | 32000 | 12800 | 1.2 |

### Verifica a pressoflessione nel piano secondo D.M. 17-01-18 NTC §7.8.2.2.1 in combinazioni non sismiche, γM = 3

| Comb. | Quota | N | M | σ0 | Mu | c.s. | Verifica |
|---|---|---|---|---|---|---|---|
| SLU 84 | 261 | -24387 | 510395 | 4.71 | 952045 | 1.865 | Si |
| SLU 84 | 451 | -32271 | -42389 | 6.23 | 702113 | 16.564 | Si |

| Comb. | Quota | N | M | σ0 | Mu | c.s. | Verifica |
|---|---|---|---|---|---|---|---|
| SLU 79 | 261 | -24039 | 505877 | 4.64 | 956800 | 1.891 | Si |
| SLU 79 | 451 | -31449 | -13043 | 6.07 | 740865 | 56.8 | Si |
| SLU 75 | 261 | -23479 | 493111 | 4.53 | 963335 | 1.954 | Si |
| SLU 75 | 451 | -30968 | -35914 | 5.98 | 762185 | 21.223 | Si |
| SLU 80 | 261 | -23985 | 505083 | 4.63 | 957490 | 1.896 | Si |
| SLU 80 | 451 | -31395 | -14470 | 6.06 | 743310 | 51.369 | Si |
| SLU 77 | 261 | -24242 | 509981 | 4.68 | 954094 | 1.871 | Si |
| SLU 77 | 451 | -31796 | -17753 | 6.14 | 724863 | 40.83 | Si |
| SLU 74 | 261 | -23533 | 493905 | 4.54 | 962764 | 1.949 | Si |
| SLU 74 | 451 | -31022 | -34487 | 5.99 | 759842 | 22.033 | Si |
| SLU 78 | 261 | -24188 | 509187 | 4.67 | 954832 | 1.875 | Si |
| SLU 78 | 451 | -31742 | -19180 | 6.13 | 727390 | 37.925 | Si |
| SLU 83 | 261 | -24441 | 511189 | 4.72 | 951260 | 1.861 | Si |
| SLU 83 | 451 | -32325 | -40962 | 6.24 | 699461 | 17.076 | Si |
| SLU 81 | 261 | -23733 | 495114 | 4.58 | 960550 | 1.94 | Si |
| SLU 81 | 451 | -31551 | -57696 | 6.09 | 736232 | 12.761 | Si |
| SLU 82 | 261 | -23679 | 494319 | 4.57 | 961167 | 1.944 | Si |
| SLU 82 | 451 | -31497 | -59122 | 6.08 | 738701 | 12.494 | Si |

Verifica a pressoflessione nel piano secondo D.M. 17-01-18 NTC §7.8.2.2.1 in combinazioni sismiche, γM = 2

| Comb. | Quota | N | M | σ0 | Mu | c.s. | Verifica |
|---|---|---|---|---|---|---|---|
| SLV 15 | 261 | -16826 | 769214 | 3.25 | 1142660 | 1.485 | Si |
| SLV 15 | 451 | -28871 | -393997 | 5.57 | 1452391 | 3.686 | Si |
| SLV 13 | 261 | -15905 | 599946 | 3.07 | 1101529 | 1.836 | Si |
| SLV 13 | 451 | -26638 | -447017 | 5.14 | 1426996 | 3.192 | Si |
| SLV 16 | 261 | -16826 | 769214 | 3.25 | 1142660 | 1.485 | Si |
| SLV 16 | 451 | -28871 | -393997 | 5.57 | 1452391 | 3.686 | Si |
| SLV 11 | 261 | -17342 | 717631 | 3.35 | 1164620 | 1.623 | Si |
| SLV 11 | 451 | -26272 | -52172 | 5.07 | 1421440 | 27.245 | Si |
| SLV 8 | 261 | -16864 | 504149 | 3.26 | 1144272 | 2.27 | Si |
| SLV 8 | 451 | -21813 | 187800 | 4.21 | 1322320 | 7.041 | Si |
| SLD 15 | 261 | -16092 | 518123 | 3.11 | 1110064 | 2.142 | Si |
| SLD 15 | 451 | -23984 | -182091 | 4.63 | 1377854 | 7.567 | Si |
| SLD 16 | 261 | -16092 | 518123 | 3.11 | 1110064 | 2.142 | Si |
| SLD 16 | 451 | -23984 | -182091 | 4.63 | 1377854 | 7.567 | Si |
| SLV 12 | 261 | -17342 | 717631 | 3.35 | 1164620 | 1.623 | Si |
| SLV 12 | 451 | -26272 | -52172 | 5.07 | 1421440 | 27.245 | Si |
| SLV 14 | 261 | -15905 | 599946 | 3.07 | 1101529 | 1.836 | Si |
| SLV 14 | 451 | -26638 | -447017 | 5.14 | 1426996 | 3.192 | Si |
| SLV 7 | 261 | -16864 | 504149 | 3.26 | 1144272 | 2.27 | Si |
| SLV 7 | 451 | -21813 | 187800 | 4.21 | 1322320 | 7.041 | Si |

Verifica a taglio nel piano secondo D.M. 17-01-18 (N.T.C.) §7.8.2.2.2 con rottura per scorrimento in combinazioni non sismiche, γM = 3

| Comb. | Quota | N | V par | M | σ0 | σN | l' | fvd | Vt scorr. | Vt fess.diag. | Vt,lim | c.s. | Verifica |
|---|---|---|---|---|---|---|---|---|---|---|---|---|---|
| SLU 81 | 261 | -23733 | 7886 | 495114 | | 4.58 | 185 | 1.08 | 5612 | | | 0.71 | No, Vu<V |
| SLU 81 | 451 | -31551 | 7858 | -57696 | | 6.09 | 185 | 1.08 | 5612 | | | 0.71 | No, Vu<V |
| SLU 79 | 261 | -24039 | 7510 | 505877 | | 4.64 | 185 | 1.08 | 5612 | | | 0.75 | No, Vu<V |
| SLU 79 | 451 | -31449 | 7479 | -13043 | | 6.07 | 185 | 1.08 | 5612 | | | 0.75 | No, Vu<V |
| SLU 78 | 261 | -24188 | 7630 | 509187 | | 4.67 | 185 | 1.08 | 5612 | | | 0.74 | No, Vu<V |
| SLU 78 | 451 | -31742 | 7599 | -19180 | | 6.13 | 185 | 1.08 | 5612 | | | 0.74 | No, Vu<V |
| SLU 77 | 261 | -24242 | 7626 | 509981 | | 4.68 | 185 | 1.08 | 5612 | | | 0.74 | No, Vu<V |
| SLU 77 | 451 | -31796 | 7596 | -17753 | | 6.14 | 185 | 1.08 | 5612 | | | 0.74 | No, Vu<V |
| SLU 83 | 261 | -24441 | 7915 | 511189 | | 4.72 | 185 | 1.08 | 5612 | | | 0.71 | No, Vu<V |
| SLU 83 | 451 | -32325 | 7885 | -40962 | | 6.24 | 185 | 1.08 | 5612 | | | 0.71 | No, Vu<V |
| SLU 74 | 261 | -23533 | 7597 | 493905 | | 4.54 | 185 | 1.08 | 5612 | | | 0.74 | No, Vu<V |
| SLU 74 | 451 | -31022 | 7569 | -34487 | | 5.99 | 185 | 1.08 | 5612 | | | 0.74 | No, Vu<V |
| SLU 84 | 261 | -24387 | 7919 | 510395 | | 4.71 | 185 | 1.08 | 5612 | | | 0.71 | No, Vu<V |
| SLU 84 | 451 | -32271 | 7888 | -42389 | | 6.23 | 185 | 1.08 | 5612 | | | 0.71 | No, Vu<V |
| SLU 80 | 261 | -23985 | 7514 | 505083 | | 4.63 | 185 | 1.08 | 5612 | | | 0.75 | No, Vu<V |
| SLU 80 | 451 | -31395 | 7482 | -14470 | | 6.06 | 185 | 1.08 | 5612 | | | 0.75 | No, Vu<V |
| SLU 75 | 261 | -23479 | 7601 | 493111 | | 4.53 | 185 | 1.08 | 5612 | | | 0.74 | No, Vu<V |
| SLU 75 | 451 | -30968 | 7571 | -35914 | | 5.98 | 185 | 1.08 | 5612 | | | 0.74 | No, Vu<V |
| SLU 82 | 261 | -23679 | 7890 | 494319 | | 4.57 | 185 | 1.08 | 5612 | | | 0.71 | No, Vu<V |
| SLU 82 | 451 | -31497 | 7860 | -59122 | | 6.08 | 185 | 1.08 | 5612 | | | 0.71 | No, Vu<V |

Verifica a taglio nel piano secondo D.M. 17-01-18 (N.T.C.) §7.8.2.2.2 con rottura per scorrimento in combinazioni sismiche, γM = 2

| Comb. | Quota | N | V par | M | σ0 | σN | l' | fvd | Vt scorr. | Vt fess.diag. | Vt,lim | c.s. | Verifica |
|---|---|---|---|---|---|---|---|---|---|---|---|---|---|
| SLV 11 | 261 | -17342 | 9354 | 717631 | | 4.04 | 153.36 | 1.63 | 6978 | | | 0.75 | No, Vu<V |
| SLV 11 | 451 | -26272 | 7976 | -52172 | | 5.07 | 185 | 1.63 | 8417 | | | 1.06 | Si |
| SLV 12 | 261 | -17342 | 9354 | 717631 | | 4.04 | 153.36 | 1.63 | 6978 | | | 0.75 | No, Vu<V |
| SLV 12 | 451 | -26272 | 7976 | -52172 | | 5.07 | 185 | 1.63 | 8417 | | | 1.06 | Si |
| SLD 14 | 261 | -15710 | 7877 | 447445 | | 3.03 | 185 | 1.44 | 7459 | | | 0.95 | No, Vu<V |
| SLD 14 | 451 | -23056 | 7865 | -204214 | | 4.45 | 185 | 1.63 | 8417 | | | 1.07 | Si |
| SLV 14 | 261 | -15905 | 11558 | 599946 | | 3.46 | 164.34 | 1.52 | 7016 | | | 0.61 | No, Vu<V |
| SLV 14 | 451 | -26638 | 11593 | -447017 | | 5.14 | 185 | 1.63 | 8417 | | | 0.73 | No, Vu<V |
| SLD 15 | 261 | -16092 | 8419 | 518123 | | 3.18 | 180.91 | 1.47 | 7440 | | | 0.88 | No, Vu<V |
| SLD 15 | 451 | -23984 | 8086 | -182091 | | 4.63 | 185 | 1.63 | 8417 | | | 1.04 | Si |
| SLD 13 | 261 | -15710 | 7877 | 447445 | | 3.03 | 185 | 1.44 | 7459 | | | 0.95 | No, Vu<V |
| SLD 13 | 451 | -23056 | 7865 | -204214 | | 4.45 | 185 | 1.63 | 8417 | | | 1.07 | Si |
| SLV 16 | 261 | -16826 | 12853 | 769214 | | 4.28 | 140.36 | 1.63 | 6386 | | | 0.5 | No, Vu<V |
| SLV 16 | 451 | -28871 | 12131 | -393997 | | 5.57 | 185 | 1.63 | 8417 | | | 0.69 | No, Vu<V |
| SLV 15 | 261 | -16826 | 12853 | 769214 | | 4.28 | 140.36 | 1.63 | 6386 | | | 0.5 | No, Vu<V |
| SLV 15 | 451 | -28871 | 12131 | -393997 | | 5.57 | 185 | 1.63 | 8417 | | | 0.69 | No, Vu<V |
| SLV 13 | 261 | -15905 | 11558 | 599946 | | 3.46 | 164.34 | 1.52 | 7016 | | | 0.61 | No, Vu<V |
| SLV 13 | 451 | -26638 | 11593 | -447017 | | 5.14 | 185 | 1.63 | 8417 | | | 0.73 | No, Vu<V |
| SLD 16 | 261 | -16092 | 8419 | 518123 | | 3.18 | 180.91 | 1.47 | 7440 | | | 0.88 | No, Vu<V |
| SLD 16 | 451 | -23984 | 8086 | -182091 | | 4.63 | 185 | 1.63 | 8417 | | | 1.04 | Si |

### Verifica a pressoflessione fuori piano D.M. 17-01-18 (N.T.C.)

quota 357.5 Wa 0.05 denominatore 8 γM = 2

| Comb. | fd | Sa | σ0 | N | M | Mc | Coeff.s. | Verifica |
|---|---|---|---|---|---|---|---|---|
| SLV 2 | 14 | 0.32 | 2.61 | -13529 | 17526 | 148918 | 8.5 | Si |
| SLV 1 | 14 | 0.32 | 2.61 | -13529 | 17526 | 148918 | 8.5 | Si |
| SLV 5 | 14 | 0.32 | 2.72 | -14101 | 17526 | 153434 | 8.75 | Si |
| SLV 6 | 14 | 0.32 | 2.72 | -14101 | 17526 | 153434 | 8.75 | Si |
| SLV 4 | 14 | 0.32 | 2.98 | -15449 | 17526 | 163490 | 9.33 | Si |
| SLV 3 | 14 | 0.32 | 2.98 | -15449 | 17526 | 163490 | 9.33 | Si |
| SLV 10 | 14 | 0.32 | 3.19 | -16512 | 17526 | 170858 | 9.75 | Si |
| SLV 9 | 14 | 0.32 | 3.19 | -16512 | 17526 | 170858 | 9.75 | Si |
| SLV 7 | 14 | 0.32 | 3.96 | -20500 | 17526 | 194045 | 11.07 | Si |
| SLV 8 | 14 | 0.32 | 3.96 | -20500 | 17526 | 194045 | 11.07 | Si |

### Verifica dei meccanismi locali di collasso con analisi cinematica lineare

forza di aggancio al piano = 0 quota mezzeria = 357.5 Wa = 0.05 Ta = 0.083

| Comb. | N top | N base | V orto | α0 | M* | e* | a0* | aLim | Verifica |
|---|---|---|---|---|---|---|---|---|---|
| SLV 12 | -21580 | -15315 | 11 | 0.04 | 24.691 | 0.967 | 59.923 | 1417.879 | No |
| SLV 11 | -21580 | -15315 | 11 | 0.04 | 24.691 | 0.967 | 59.923 | 1417.879 | No |
| SLV 10 | -17964 | -6444 | 18 | 0.04 | 21.012 | 0.961 | 60.357 | 1417.879 | No |
| SLV 9 | -17964 | -6444 | 18 | 0.04 | 21.012 | 0.961 | 60.357 | 1417.879 | No |
| SLV 7 | -16970 | -14847 | -2 | 0.041 | 20 | 0.96 | 61.956 | 1417.879 | No |
| SLV 8 | -16970 | -14847 | -2 | 0.041 | 20 | 0.96 | 61.956 | 1417.879 | No |
| SLV 6 | -13354 | -5976 | 5 | 0.042 | 16.326 | 0.952 | 63.439 | 1417.879 | No |
| SLV 5 | -13354 | -5976 | 5 | 0.042 | 16.326 | 0.952 | 63.439 | 1417.879 | No |
| SLV 15 | -25693 | -12757 | 29 | 0.039 | 28.878 | 0.971 | 58.143 | 813.056 | No |
| SLV 16 | -25693 | -12757 | 29 | 0.039 | 28.878 | 0.971 | 58.143 | 813.056 | No |

### Tabella dei coefficienti di sicurezza minimi

| Stato limite | Coeff.s. | Comb. | Verifica |
|---|---|---|---|
| PF_SLU | 1.861 | SLU 83 | Si |
| V_SLU | 0.709 | SLU 84 | No |
| PF_SLV | 1.485 | SLV 15 | Si |
| V_SLV | 0.497 | SLV 15 | No |
| PFFP_SLV | 8.497 | SLV 1 | Si |
| R_SLV | 0.042 | SLV 11 | No |

## Maschio 82

Verifiche condotte secondo D.M. 17-01-18 (N.T.C.)

### Dati geometrici

| X ini. | Y ini. | X fin. | Y fin. | Quota i. | Quota.s | l | Sp. | h netta | h ini. | h fin. | a | a.s.,sx | a.s.,dx |
|---|---|---|---|---|---|---|---|---|---|---|---|---|---|
| -1100.3 | -470.9 | -1100.3 | -331.4 | L3 | Z medio 373 cm | 139.5 | 28 | 202 | 202 | 202 | | | |

### Caratteristiche del materiale

(Circolare 7 21-01-19 C8.5.I) Muratura in mattoni pieni e malta di calce LC2_Corti

| fb | fk | fvk0 | fmedio | τ0 | fv0 | μ | ϕ | fv,lim | E | G | FC |
|---|---|---|---|---|---|---|---|---|---|---|---|
| 60 | | | 34.5 | 0.9 | 2 | 0.58 | 0.77 | 3.25 | 32000 | 12800 | 1.2 |

### Verifica a pressoflessione nel piano secondo D.M. 17-01-18 NTC §7.8.2.2.1 in combinazioni non sismiche, γM = 3

| Comb. | Quota | N | M | σ0 | Mu | c.s. | Verifica |
|---|---|---|---|---|---|---|---|
| SLU 77 | 171 | -26497 | -246475 | 6.78 | 309066 | 1.254 | Si |
| SLU 77 | 373 | -17695 | 49901 | 4.53 | 547829 | 10.978 | Si |
| SLU 82 | 171 | -25957 | -227368 | 6.65 | 333488 | 1.467 | Si |
| SLU 82 | 373 | -17309 | 52412 | 4.43 | 550523 | 10.504 | Si |
| SLU 84 | 171 | -26750 | -240602 | 6.85 | 297182 | 1.235 | Si |
| SLU 84 | 373 | -17872 | 53818 | 4.58 | 546371 | 10.152 | Si |
| SLU 79 | 171 | -26525 | -248583 | 6.79 | 307748 | 1.238 | Si |
| SLU 79 | 373 | -17710 | 49268 | 4.53 | 547704 | 11.117 | Si |
| SLU 80 | 171 | -26415 | -245632 | 6.76 | 312824 | 1.274 | Si |
| SLU 80 | 373 | -17636 | 48419 | 4.51 | 548283 | 11.324 | Si |
| SLU 81 | 171 | -26067 | -230319 | 6.67 | 328632 | 1.427 | Si |
| SLU 81 | 373 | -17384 | 53262 | 4.45 | 550051 | 10.327 | Si |
| SLU 75 | 171 | -25594 | -230289 | 6.55 | 349174 | 1.516 | Si |
| SLU 75 | 373 | -17057 | 47645 | 4.37 | 551931 | 11.584 | Si |
| SLU 74 | 171 | -25704 | -233240 | 6.58 | 344492 | 1.477 | Si |
| SLU 74 | 373 | -17131 | 48495 | 4.39 | 551542 | 11.373 | Si |
| SLU 78 | 171 | -26387 | -243524 | 6.76 | 314128 | 1.29 | Si |
| SLU 78 | 373 | -17620 | 49051 | 4.51 | 548403 | 11.18 | Si |
| SLU 83 | 171 | -26859 | -243553 | 6.88 | 291945 | 1.199 | Si |
| SLU 83 | 373 | -17947 | 54668 | 4.59 | 545715 | 9.982 | Si |

### Verifica a pressoflessione nel piano secondo D.M. 17-01-18 NTC §7.8.2.2.1 in combinazioni sismiche, γM = 2

| Comb. | Quota | N | M | σ0 | Mu | c.s. | Verifica |
|---|---|---|---|---|---|---|---|
| SLV 9 | 171 | -26886 | -418335 | 6.88 | 818873 | 1.957 | Si |
| SLV 9 | 373 | -17660 | 36491 | 4.52 | 775990 | 21.265 | Si |
| SLV 10 | 171 | -26886 | -418335 | 6.88 | 818873 | 1.957 | Si |
| SLV 10 | 373 | -17660 | 36491 | 4.52 | 775990 | 21.265 | Si |
| SLV 13 | 171 | -19263 | -348490 | 4.93 | 801297 | 2.299 | Si |
| SLV 13 | 373 | -12767 | 8564 | 3.27 | 652274 | 76.168 | Si |
| SLV 6 | 171 | -27616 | -344748 | 7.07 | 811648 | 2.354 | Si |
| SLV 6 | 373 | -18097 | 50310 | 4.63 | 783643 | 15.576 | Si |

| Comb. | Quota | N | M | σ0 | Mu | c.s. | Verifica |
|---|---|---|---|---|---|---|---|
| SLV 15 | 171 | -13458 | -215037 | 3.45 | 673986 | 3.134 | Si |
| SLV 15 | 373 | -9010 | -1556 | 2.31 | 509802 | 327.619 | Si |
| SLD 10 | 171 | -21488 | -268143 | 5.5 | 823987 | 3.073 | Si |
| SLD 10 | 373 | -14146 | 30714 | 3.62 | 694236 | 22.603 | Si |
| SLD 9 | 171 | -21488 | -268143 | 5.5 | 823987 | 3.073 | Si |
| SLD 9 | 373 | -14146 | 30714 | 3.62 | 694236 | 22.603 | Si |
| SLV 16 | 171 | -13458 | -215037 | 3.45 | 673986 | 3.134 | Si |
| SLV 16 | 373 | -9010 | -1556 | 2.31 | 509802 | 327.619 | Si |
| SLV 14 | 171 | -19263 | -348490 | 4.93 | 801297 | 2.299 | Si |
| SLV 14 | 373 | -12767 | 8564 | 3.27 | 652274 | 76.168 | Si |
| SLV 5 | 171 | -27616 | -344748 | 7.07 | 811648 | 2.354 | Si |
| SLV 5 | 373 | -18097 | 50310 | 4.63 | 783643 | 15.576 | Si |

Verifica a taglio nel piano secondo D.M. 17-01-18 (N.T.C.) §7.8.2.2.2 con rottura per scorrimento in combinazioni non sismiche, γM = 3

| Comb. | Quota | N | V par | M | σ0 | σN | l' | fvd | Vt scorr. | Vt fess.diag. | Vt,lim | c.s. | Verifica |
|---|---|---|---|---|---|---|---|---|---|---|---|---|---|
| SLU 80 | 171 | -26415 | -2289 | -245632 | | 6.76 | 139.5 | 1.08 | 4231 | | | 1.85 | Si |
| SLU 80 | 373 | -17636 | -1571 | 48419 | | 4.51 | 139.5 | 1.08 | 4231 | | | 2.69 | Si |
| SLU 77 | 171 | -26497 | -2333 | -246475 | | 6.78 | 139.5 | 1.08 | 4231 | | | 1.81 | Si |
| SLU 77 | 373 | -17695 | -1605 | 49901 | | 4.53 | 139.5 | 1.08 | 4231 | | | 2.64 | Si |
| SLU 58 | 171 | -24994 | -2108 | -237292 | | 6.4 | 139.5 | 1.08 | 4231 | | | 2.01 | Si |
| SLU 58 | 373 | -16629 | -1416 | 42329 | | 4.26 | 139.5 | 1.08 | 4231 | | | 2.99 | Si |
| SLU 84 | 171 | -26750 | -2220 | -240602 | | 6.85 | 139.5 | 1.08 | 4231 | | | 1.91 | Si |
| SLU 84 | 373 | -17872 | -1575 | 53818 | | 4.58 | 139.5 | 1.08 | 4231 | | | 2.69 | Si |
| SLU 83 | 171 | -26859 | -2275 | -243553 | | 6.88 | 139.5 | 1.08 | 4231 | | | 1.86 | Si |
| SLU 83 | 373 | -17947 | -1614 | 54668 | | 4.59 | 139.5 | 1.08 | 4231 | | | 2.62 | Si |
| SLU 74 | 171 | -25704 | -2149 | -233240 | | 6.58 | 139.5 | 1.08 | 4231 | | | 1.97 | Si |
| SLU 74 | 373 | -17131 | -1468 | 48495 | | 4.39 | 139.5 | 1.08 | 4231 | | | 2.88 | Si |
| SLU 78 | 171 | -26387 | -2278 | -243524 | | 6.76 | 139.5 | 1.08 | 4231 | | | 1.86 | Si |
| SLU 78 | 373 | -17620 | -1567 | 49051 | | 4.51 | 139.5 | 1.08 | 4231 | | | 2.7 | Si |
| SLU 79 | 171 | -26525 | -2344 | -248583 | | 6.79 | 139.5 | 1.08 | 4231 | | | 1.81 | Si |
| SLU 79 | 373 | -17710 | -1610 | 49268 | | 4.53 | 139.5 | 1.08 | 4231 | | | 2.63 | Si |
| SLU 56 | 171 | -24965 | -2098 | -235184 | | 6.39 | 139.5 | 1.08 | 4231 | | | 2.02 | Si |
| SLU 56 | 373 | -16613 | -1411 | 42961 | | 4.25 | 139.5 | 1.08 | 4231 | | | 3 | Si |
| SLU 75 | 171 | -25594 | -2094 | -230289 | | 6.55 | 139.5 | 1.08 | 4231 | | | 2.02 | Si |
| SLU 75 | 373 | -17057 | -1430 | 47645 | | 4.37 | 139.5 | 1.08 | 4231 | | | 2.96 | Si |

Verifica a taglio nel piano secondo D.M. 17-01-18 (N.T.C.) §7.8.2.2.2 con rottura per scorrimento in combinazioni sismiche, γM = 2

| Comb. | Quota | N | V par | M | σ0 | σN | l' | fvd | Vt scorr. | Vt fess.diag. | Vt,lim | c.s. | Verifica |
|---|---|---|---|---|---|---|---|---|---|---|---|---|---|
| SLV 10 | 171 | -26886 | -4630 | -418335 | | 6.88 | 139.5 | 1.63 | 6347 | | | 1.37 | Si |
| SLV 10 | 373 | -17660 | -3014 | 36491 | | 4.52 | 139.5 | 1.63 | 6347 | | | 2.11 | Si |
| SLV 5 | 171 | -27616 | -6323 | -344748 | | 7.07 | 139.5 | 1.63 | 6347 | | | 1 | Si |
| SLV 5 | 373 | -18097 | -4455 | 50310 | | 4.63 | 139.5 | 1.63 | 6347 | | | 1.42 | Si |
| SLV 6 | 171 | -27616 | -6323 | -344748 | | 7.07 | 139.5 | 1.63 | 6347 | | | 1 | Si |
| SLV 6 | 373 | -18097 | -4455 | 50310 | | 4.63 | 139.5 | 1.63 | 6347 | | | 1.42 | Si |
| SLV 11 | 171 | -7536 | 3646 | 26510 | | 1.93 | 139.5 | 1.22 | 4762 | | | 1.31 | Si |
| SLV 11 | 373 | -5137 | 2803 | 2759 | | 1.32 | 139.5 | 1.1 | 4282 | | | 1.53 | Si |
| SLV 9 | 171 | -26886 | -4630 | -418335 | | 6.88 | 139.5 | 1.63 | 6347 | | | 1.37 | Si |
| SLV 9 | 373 | -17660 | -3014 | 36491 | | 4.52 | 139.5 | 1.63 | 6347 | | | 2.11 | Si |
| SLD 5 | 171 | -21795 | -3448 | -237060 | | 5.58 | 139.5 | 1.63 | 6347 | | | 1.84 | Si |
| SLD 5 | 373 | -14333 | -2358 | 36520 | | 3.67 | 139.5 | 1.57 | 6122 | | | 2.6 | Si |
| SLV 2 | 171 | -21695 | -5402 | -103201 | | 5.55 | 139.5 | 1.63 | 6347 | | | 1.17 | Si |
| SLV 2 | 373 | -14225 | -4100 | 54625 | | 3.64 | 139.5 | 1.56 | 6100 | | | 1.49 | Si |
| SLV 1 | 171 | -21695 | -5402 | -103201 | | 5.55 | 139.5 | 1.63 | 6347 | | | 1.17 | Si |
| SLV 1 | 373 | -14225 | -4100 | 54625 | | 3.64 | 139.5 | 1.56 | 6100 | | | 1.49 | Si |
| SLD 6 | 171 | -21795 | -3448 | -237060 | | 5.58 | 139.5 | 1.63 | 6347 | | | 1.84 | Si |
| SLD 6 | 373 | -14333 | -2358 | 36520 | | 3.67 | 139.5 | 1.57 | 6122 | | | 2.6 | Si |
| SLV 12 | 171 | -7536 | 3646 | 26510 | | 1.93 | 139.5 | 1.22 | 4762 | | | 1.31 | Si |
| SLV 12 | 373 | -5137 | 2803 | 2759 | | 1.32 | 139.5 | 1.1 | 4282 | | | 1.53 | Si |

Verifica a pressoflessione fuori piano D.M. 17-01-18 (N.T.C.)

quota 272 Wa 0.05 denominatore 8 γM = 2

| Comb. | fd | Sa | σ0 | N | M | Mc | Coeff.s. | Verifica |
|---|---|---|---|---|---|---|---|---|
| SLV 12 | 14 | 0.3 | 1.86 | -7256 | 3749 | 86139 | 22.98 | Si |
| SLV 11 | 14 | 0.3 | 1.86 | -7256 | 3749 | 86139 | 22.98 | Si |
| SLV 7 | 14 | 0.3 | 1.92 | -7512 | 3749 | 88612 | 23.64 | Si |
| SLV 8 | 14 | 0.3 | 1.92 | -7512 | 3749 | 88612 | 23.64 | Si |
| SLV 16 | 14 | 0.3 | 3.29 | -12848 | 3749 | 131451 | 35.06 | Si |
| SLV 15 | 14 | 0.3 | 3.29 | -12848 | 3749 | 131451 | 35.06 | Si |
| SLV 3 | 14 | 0.3 | 3.51 | -13701 | 3749 | 136749 | 36.47 | Si |
| SLV 4 | 14 | 0.3 | 3.51 | -13701 | 3749 | 136749 | 36.47 | Si |
| SLV 13 | 14 | 0.3 | 4.58 | -17897 | 3749 | 156602 | 41.77 | Si |
| SLV 14 | 14 | 0.3 | 4.58 | -17897 | 3749 | 156602 | 41.77 | Si |

Verifica dei meccanismi locali di collasso con analisi cinematica lineare

forza di aggancio al piano = 0 quota mezzeria = 272 Wa = 0.05 Ta = 0.0243

| Comb. | N top | N base | V orto | α0 | M* | e* | a0* | aLim | Verifica |
|---|---|---|---|---|---|---|---|---|---|
| SLV 8 | -5575 | -8266 | -130 | 0.056 | 6.79 | 0.952 | 86.129 | 446.085 | No |
| SLV 7 | -5575 | -8266 | -130 | 0.056 | 6.79 | 0.952 | 86.129 | 446.085 | No |
| SLV 12 | -5137 | -7536 | -114 | 0.058 | 6.346 | 0.949 | 89.151 | 446.085 | No |
| SLV 11 | -5137 | -7536 | -114 | 0.058 | 6.346 | 0.949 | 89.151 | 446.085 | No |
| SLV 6 | -18097 | -27616 | -8 | 0.071 | 19.541 | 0.982 | 105.777 | 446.085 | No |
| SLV 5 | -18097 | -27616 | -8 | 0.071 | 19.541 | 0.982 | 105.777 | 446.085 | No |
| SLV 10 | -17660 | -26886 | 8 | 0.072 | 19.095 | 0.982 | 105.928 | 446.085 | No |
| SLV 9 | -17660 | -26886 | 8 | 0.072 | 19.095 | 0.982 | 105.928 | 446.085 | No |
| SLV 4 | -10468 | -15889 | -106 | 0.064 | 11.769 | 0.971 | 96.076 | 363.828 | No |
| SLV 3 | -10468 | -15889 | -106 | 0.064 | 11.769 | 0.971 | 96.076 | 363.828 | No |

Tabella dei coefficienti di sicurezza minimi

| Stato limite | Coeff.s. | Comb. | Verifica |
|---|---|---|---|
| PF_SLU | 1.199 | SLU 83 | Si |
| V_SLU | 1.805 | SLU 79 | Si |
| PF_SLV | 1.957 | SLV 9 | Si |
| V_SLV | 1.004 | SLV 5 | Si |
| PFFP_SLV | 22.975 | SLV 11 | Si |
| R_SLV | 0.193 | SLV 7 | No |

## Maschio 83

Verifiche condotte secondo D.M. 17-01-18 (N.T.C.)

### Dati geometrici

| X ini. | Y ini. | X fin. | Y fin. | Quota i. | Quota.s | l | Sp. | h netta | h ini. | h fin. | a | a.s.,sx | a.s.,dx |
|---|---|---|---|---|---|---|---|---|---|---|---|---|---|
| -1100.3 | -331.4 | -1100.3 | -35.4 | L3 | Z medio 459 cm | 296 | 28 | 287.5 | 202 | 373 | | | |

### Caratteristiche del materiale

(Circolare 7 21-01-19 C8.5.I) Muratura in mattoni pieni e malta di calce LC2_Corti

| fb | fk | fvk0 | fmedio | τ0 | fv0 | μ | ϕ | fv,lim | E | G | FC |
|---|---|---|---|---|---|---|---|---|---|---|---|
| 60 | | | 34.5 | 0.9 | 2 | 0.58 | 0.77 | 3.25 | 32000 | 12800 | 1.2 |

### Verifica a pressoflessione nel piano secondo D.M. 17-01-18 NTC §7.8.2.2.1 in combinazioni non sismiche, γM = 3

| Comb. | Quota | N | M | σ0 | Mu | c.s. | Verifica |
|---|---|---|---|---|---|---|---|
| SLU 75 | 171 | -51843 | -602016 | 6.26 | 1780869 | 2.958 | Si |
| SLU 75 | 373 | -43092 | 464161 | 5.2 | 2306915 | 4.97 | Si |
| SLU 83 | 171 | -54167 | -641996 | 6.54 | 1584694 | 2.468 | Si |
| SLU 83 | 373 | -45106 | 483195 | 5.44 | 2215549 | 4.585 | Si |
| SLU 77 | 171 | -52872 | -651142 | 6.38 | 1696888 | 2.606 | Si |
| SLU 77 | 373 | -43996 | 459229 | 5.31 | 2268111 | 4.939 | Si |
| SLU 84 | 171 | -54131 | -632962 | 6.53 | 1587882 | 2.509 | Si |
| SLU 84 | 373 | -45075 | 485354 | 5.44 | 2217108 | 4.568 | Si |
| SLU 82 | 171 | -53137 | -592870 | 6.41 | 1674521 | 2.824 | Si |
| SLU 82 | 373 | -44202 | 488127 | 5.33 | 2258756 | 4.627 | Si |
| SLU 80 | 171 | -52546 | -651645 | 6.34 | 1724016 | 2.646 | Si |
| SLU 80 | 373 | -43651 | 448528 | 5.27 | 2283354 | 5.091 | Si |
| SLU 81 | 171 | -53173 | -601904 | 6.42 | 1671488 | 2.777 | Si |
| SLU 81 | 373 | -44234 | 485968 | 5.34 | 2257317 | 4.645 | Si |
| SLU 78 | 171 | -52837 | -642108 | 6.38 | 1699873 | 2.647 | Si |
| SLU 78 | 373 | -43965 | 461388 | 5.3 | 2269517 | 4.919 | Si |
| SLU 74 | 171 | -51878 | -611050 | 6.26 | 1778039 | 2.91 | Si |
| SLU 74 | 373 | -43123 | 462002 | 5.2 | 2305629 | 4.991 | Si |
| SLU 79 | 171 | -52582 | -660679 | 6.34 | 1721076 | 2.605 | Si |
| SLU 79 | 373 | -43682 | 446369 | 5.27 | 2281992 | 5.112 | Si |

### Verifica a pressoflessione nel piano secondo D.M. 17-01-18 NTC §7.8.2.2.1 in combinazioni sismiche, γM = 2

| Comb. | Quota | N | M | σ0 | Mu | c.s. | Verifica |
|---|---|---|---|---|---|---|---|
| SLV 5 | 171 | -41766 | -1237412 | 5.04 | 3631999 | 2.935 | Si |
| SLV 5 | 373 | -31465 | 41296 | 3.8 | 3209892 | 77.729 | Si |
| SLD 9 | 171 | -34954 | -682789 | 4.22 | 3387628 | 4.961 | Si |
| SLD 9 | 373 | -29015 | 166023 | 3.5 | 3063857 | 18.454 | Si |
| SLV 2 | 171 | -47704 | -956829 | 5.76 | 3734388 | 3.903 | Si |
| SLV 2 | 373 | -32960 | 300304 | 3.98 | 3290428 | 10.957 | Si |
| SLD 6 | 171 | -37849 | -764045 | 4.57 | 3508042 | 4.591 | Si |
| SLD 6 | 373 | -29924 | 187445 | 3.61 | 3120113 | 16.646 | Si |
| SLD 10 | 171 | -34954 | -682789 | 4.22 | 3387628 | 4.961 | Si |
| SLD 10 | 373 | -29015 | 166023 | 3.5 | 3063857 | 18.454 | Si |
| SLV 9 | 171 | -34762 | -1045049 | 4.19 | 3378753 | 3.233 | Si |
| SLV 9 | 373 | -29268 | -12971 | 3.53 | 3079725 | 237.433 | Si |
| SLV 10 | 171 | -34762 | -1045049 | 4.19 | 3378753 | 3.233 | Si |
| SLV 10 | 373 | -29268 | -12971 | 3.53 | 3079725 | 237.433 | Si |
| SLV 6 | 171 | -41766 | -1237412 | 5.04 | 3631999 | 2.935 | Si |
| SLV 6 | 373 | -31465 | 41296 | 3.8 | 3209892 | 77.729 | Si |
| SLD 5 | 171 | -37849 | -764045 | 4.57 | 3508042 | 4.591 | Si |
| SLD 5 | 373 | -29924 | 187445 | 3.61 | 3120113 | 16.646 | Si |
| SLV 1 | 171 | -47704 | -956829 | 5.76 | 3734388 | 3.903 | Si |
| SLV 1 | 373 | -32960 | 300304 | 3.98 | 3290428 | 10.957 | Si |

### Verifica a taglio nel piano secondo D.M. 17-01-18 (N.T.C.) §7.8.2.2.2 con rottura per scorrimento in combinazioni non sismiche, γM = 3

| Comb. | Quota | N | V par | M | σ0 | σN | l' | fvd | Vt scorr. | Vt fess.diag. | Vt,lim | c.s. | Verifica |
|---|---|---|---|---|---|---|---|---|---|---|---|---|---|
| SLU 61 | 171 | -48886 | 1008 | -581093 | | 5.9 | 296 | 1.08 | 8979 | | | 8.9 | Si |
| SLU 61 | 373 | -40446 | 573 | 417703 | | 4.88 | 296 | 1.08 | 8979 | | | 15.68 | Si |
| SLU 71 | 171 | -46562 | -542 | -610725 | | 5.62 | 296 | 1.08 | 8979 | | | 16.56 | Si |
| SLU 71 | 373 | -38321 | -946 | 366911 | | 4.62 | 296 | 1.08 | 8979 | | | 9.49 | Si |
| SLU 29 | 171 | -38378 | -694 | -494116 | | 4.63 | 296 | 1.08 | 8979 | | | 12.94 | Si |
| SLU 29 | 373 | -31738 | -1006 | 315785 | | 3.83 | 296 | 1.07 | 8836 | | | 8.79 | Si |
| SLU 10 | 171 | -38098 | 951 | -437053 | | 4.6 | 296 | 1.08 | 8979 | | | 9.44 | Si |
| SLU 10 | 373 | -31544 | 580 | 333962 | | 3.81 | 296 | 1.06 | 8810 | | | 15.18 | Si |
| SLU 44 | 171 | -40263 | 951 | -503707 | | 4.86 | 296 | 1.08 | 8979 | | | 9.44 | Si |
| SLU 44 | 373 | -32766 | 479 | 305631 | | 3.95 | 296 | 1.08 | 8973 | | | 18.75 | Si |
| SLU 73 | 171 | -50534 | 1012 | -565439 | | 6.1 | 296 | 1.08 | 8979 | | | 8.87 | Si |
| SLU 73 | 373 | -41884 | 533 | 455513 | | 5.05 | 296 | 1.08 | 8979 | | | 16.83 | Si |
| SLU 8 | 171 | -34127 | -603 | -482339 | | 4.12 | 296 | 1.08 | 8979 | | | 14.88 | Si |
| SLU 8 | 373 | -27982 | -899 | 245360 | | 3.38 | 296 | 1.01 | 8335 | | | 9.27 | Si |

| Comb. | Quota | N | V par | M | σ0 | σN | l' | fvd | Vt scorr. | Vt fess.diag. | Vt,lim | c.s. | Verifica |
|---|---|---|---|---|---|---|---|---|---|---|---|---|---|
| SLU 82 | 171 | -53137 | 918 | -592870 | | 6.41 | 296 | 1.08 | 8979 | | | 9.78 | Si |
| SLU 82 | 373 | -44202 | 466 | 488127 | | 5.33 | 296 | 1.08 | 8979 | | | 19.28 | Si |
| SLU 52 | 171 | -46282 | 1103 | -553662 | | 5.58 | 296 | 1.08 | 8979 | | | 8.14 | Si |
| SLU 52 | 373 | -38127 | 640 | 385088 | | 4.6 | 296 | 1.08 | 8979 | | | 14.03 | Si |
| SLU 27 | 171 | -38669 | -620 | -484579 | | 4.67 | 296 | 1.08 | 8979 | | | 14.48 | Si |
| SLU 27 | 373 | -32052 | -940 | 328645 | | 3.87 | 296 | 1.07 | 8878 | | | 9.45 | Si |

### Verifica a taglio nel piano secondo D.M. 17-01-18 (N.T.C.) §7.8.2.2.2 con rottura per scorrimento in combinazioni sismiche, γM = 2

| Comb. | Quota | N | V par | M | σ0 | σN | l' | fvd | Vt scorr. | Vt fess.diag. | Vt,lim | c.s. | Verifica |
|---|---|---|---|---|---|---|---|---|---|---|---|---|---|
| SLV 7 | 171 | -35384 | 12078 | 205464 | | 4.27 | 296 | 1.63 | 13468 | | | 1.12 | Si |
| SLV 7 | 373 | -28414 | 11276 | 600431 | | 3.43 | 296 | 1.52 | 12589 | | | 1.12 | Si |
| SLV 10 | 171 | -34762 | -11239 | -1045049 | | 4.19 | 296 | 1.63 | 13468 | | | 1.2 | Si |
| SLV 10 | 373 | -29268 | -11091 | -12971 | | 3.53 | 296 | 1.54 | 12760 | | | 1.15 | Si |
| SLV 11 | 171 | -28380 | 12683 | 397827 | | 3.42 | 296 | 1.52 | 12583 | | | 0.99 | No, Vu<V |
| SLV 11 | 373 | -26217 | 10125 | 546164 | | 3.16 | 296 | 1.47 | 12150 | | | 1.2 | Si |
| SLV 6 | 171 | -41766 | -11844 | -1237412 | | 5.04 | 296 | 1.63 | 13468 | | | 1.14 | Si |
| SLV 6 | 373 | -31465 | -9940 | 41296 | | 3.8 | 296 | 1.59 | 13200 | | | 1.33 | Si |
| SLV 8 | 171 | -35384 | 12078 | 205464 | | 4.27 | 296 | 1.63 | 13468 | | | 1.12 | Si |
| SLV 8 | 373 | -28414 | 11276 | 600431 | | 3.43 | 296 | 1.52 | 12589 | | | 1.12 | Si |
| SLV 12 | 171 | -28380 | 12683 | 397827 | | 3.42 | 296 | 1.52 | 12583 | | | 0.99 | No, Vu<V |
| SLV 12 | 373 | -26217 | 10125 | 546164 | | 3.16 | 296 | 1.47 | 12150 | | | 1.2 | Si |
| SLV 15 | 171 | -22442 | 5016 | 117244 | | 2.71 | 296 | 1.37 | 11395 | | | 2.27 | Si |
| SLV 15 | 373 | -24721 | 1358 | 287156 | | 2.98 | 296 | 1.43 | 11851 | | | 8.73 | Si |
| SLV 5 | 171 | -41766 | -11844 | -1237412 | | 5.04 | 296 | 1.63 | 13468 | | | 1.14 | Si |
| SLV 5 | 373 | -31465 | -9940 | 41296 | | 3.8 | 296 | 1.59 | 13200 | | | 1.33 | Si |
| SLV 9 | 171 | -34762 | -11239 | -1045049 | | 4.19 | 296 | 1.63 | 13468 | | | 1.2 | Si |
| SLV 9 | 373 | -29268 | -11091 | -12971 | | 3.53 | 296 | 1.54 | 12760 | | | 1.15 | Si |
| SLV 16 | 171 | -22442 | 5016 | 117244 | | 2.71 | 296 | 1.37 | 11395 | | | 2.27 | Si |
| SLV 16 | 373 | -24721 | 1358 | 287156 | | 2.98 | 296 | 1.43 | 11851 | | | 8.73 | Si |

### Verifica a pressoflessione fuori piano D.M. 17-01-18 (N.T.C.)

quota 272 Wa 0.05 denominatore 8 γM = 2

| Comb. | fd | Sa | σ0 | N | M | Mc | Coeff.s. | Verifica |
|---|---|---|---|---|---|---|---|---|
| SLV 15 | 14 | 0.3 | 3.15 | -26141 | 16115 | 271504 | 16.85 | Si |
| SLV 16 | 14 | 0.3 | 3.15 | -26141 | 16115 | 271504 | 16.85 | Si |
| SLV 13 | 14 | 0.3 | 3.37 | -27959 | 16115 | 283358 | 17.58 | Si |
| SLV 14 | 14 | 0.3 | 3.37 | -27959 | 16115 | 283358 | 17.58 | Si |
| SLV 11 | 14 | 0.3 | 3.38 | -27979 | 16115 | 283482 | 17.59 | Si |
| SLV 12 | 14 | 0.3 | 3.38 | -27979 | 16115 | 283482 | 17.59 | Si |
| SLV 7 | 14 | 0.3 | 3.79 | -31372 | 16115 | 303145 | 18.81 | Si |
| SLV 8 | 14 | 0.3 | 3.79 | -31372 | 16115 | 303145 | 18.81 | Si |
| SLV 9 | 14 | 0.3 | 4.11 | -34038 | 16115 | 316363 | 19.63 | Si |
| SLV 10 | 14 | 0.3 | 4.11 | -34038 | 16115 | 316363 | 19.63 | Si |

### Verifica dei meccanismi locali di collasso con analisi cinematica lineare

forza di aggancio al piano = 0 quota mezzeria = 272 Wa = 0.05 Ta = 0.0493

| Comb. | N top | N base | V orto | α0 | M* | e* | a0* | aLim | Verifica |
|---|---|---|---|---|---|---|---|---|---|
| SLV 7 | -28414 | -35384 | 96 | 0.049 | 32.283 | 0.968 | 73.502 | 779.007 | No |
| SLV 8 | -28414 | -35384 | 96 | 0.049 | 32.283 | 0.968 | 73.502 | 779.007 | No |
| SLV 9 | -29268 | -34762 | -62 | 0.05 | 33.152 | 0.969 | 75.07 | 779.007 | No |
| SLV 10 | -29268 | -34762 | -62 | 0.05 | 33.152 | 0.969 | 75.07 | 779.007 | No |
| SLV 5 | -31465 | -41766 | 23 | 0.051 | 35.389 | 0.971 | 76.51 | 779.007 | No |
| SLV 6 | -31465 | -41766 | 23 | 0.051 | 35.389 | 0.971 | 76.51 | 779.007 | No |
| SLV 12 | -26217 | -28380 | 11 | 0.052 | 30.047 | 0.966 | 78.185 | 779.007 | No |
| SLV 11 | -26217 | -28380 | 11 | 0.052 | 30.047 | 0.966 | 78.185 | 779.007 | No |
| SLV 4 | -32045 | -45789 | 169 | 0.047 | 35.98 | 0.971 | 70.026 | 497.149 | No |
| SLV 3 | -32045 | -45789 | 169 | 0.047 | 35.98 | 0.971 | 70.026 | 497.149 | No |

### Tabella dei coefficienti di sicurezza minimi

| Stato limite | Coeff.s. | Comb. | Verifica |
|---|---|---|---|
| PF_SLU | 2.468 | SLU 83 | Si |
| V_SLU | 8.144 | SLU 52 | Si |
| PF_SLV | 2.935 | SLV 5 | Si |
| V_SLV | 0.992 | SLV 11 | No |
| PFFP_SLV | 16.848 | SLV 15 | Si |
| R_SLV | 0.094 | SLV 7 | No |

## Maschio 84

Verifiche condotte secondo D.M. 17-01-18 (N.T.C.)

### Dati geometrici

| X ini. | Y ini. | X fin. | Y fin. | Quota i. | Quota.s | l | Sp. | h netta | h ini. | h fin. | a | a.s.,sx | a.s.,dx |
|---|---|---|---|---|---|---|---|---|---|---|---|---|---|
| -944.8 | -335.9 | -1100.3 | -335.9 | L3 | L4 | 155.5 | 28 | 373 | 373 | 373 | | | |

### Caratteristiche del materiale

(Circolare 7 21-01-19 C8.5.I) Muratura in mattoni pieni e malta di calce LC2_Corti

| fb | fk | fvk0 | fmedio | τ0 | fv0 | μ | ϕ | fv,lim | E | G | FC |
|---|---|---|---|---|---|---|---|---|---|---|---|
| 60 | | | 34.5 | 0.9 | 2 | 0.58 | 0.77 | 3.25 | 32000 | 12800 | 1.2 |

### Verifica a pressoflessione nel piano secondo D.M. 17-01-18 NTC §7.8.2.2.1 in combinazioni non sismiche, γM = 3

| Comb. | Quota | N | M | σ0 | Mu | c.s. | Verifica |
|---|---|---|---|---|---|---|---|
| SLU 40 | 171 | -8257 | 399633 | 1.9 | 492512 | 1.232 | Si |

| Comb. | Quota | N | M | σ0 | Mu | c.s. | Verifica |
|---|---|---|---|---|---|---|---|
| SLU 40 | 381 | -12477 | 123407 | 2.87 | 628824 | 5.096 | Si |
| SLU 73 | 171 | -9585 | 444384 | 2.2 | 543848 | 1.224 | Si |
| SLU 73 | 381 | -14140 | 142729 | 3.25 | 661083 | 4.632 | Si |
| SLU 84 | 171 | -10252 | 473208 | 2.35 | 566695 | 1.198 | Si |
| SLU 84 | 381 | -15086 | 164298 | 3.46 | 674029 | 4.102 | Si |
| SLU 75 | 171 | -9878 | 449445 | 2.27 | 554098 | 1.233 | Si |
| SLU 75 | 381 | -14454 | 157649 | 3.32 | 665805 | 4.223 | Si |
| SLU 83 | 171 | -10237 | 470556 | 2.35 | 566210 | 1.203 | Si |
| SLU 83 | 381 | -15005 | 172698 | 3.45 | 673067 | 3.897 | Si |
| SLU 74 | 171 | -9863 | 446793 | 2.27 | 553589 | 1.239 | Si |
| SLU 74 | 381 | -14372 | 166049 | 3.3 | 664616 | 4.003 | Si |
| SLU 76 | 171 | -9865 | 449754 | 2.27 | 553656 | 1.231 | Si |
| SLU 76 | 381 | -14448 | 153640 | 3.32 | 665729 | 4.333 | Si |
| SLU 82 | 171 | -9973 | 467837 | 2.29 | 557361 | 1.191 | Si |
| SLU 82 | 381 | -14778 | 153387 | 3.39 | 670245 | 4.37 | Si |
| SLU 78 | 171 | -10157 | 454816 | 2.33 | 563549 | 1.239 | Si |
| SLU 78 | 381 | -14762 | 168560 | 3.39 | 670028 | 3.975 | Si |
| SLU 81 | 171 | -9958 | 465186 | 2.29 | 556858 | 1.197 | Si |
| SLU 81 | 381 | -14697 | 161787 | 3.38 | 669172 | 4.136 | Si |

Verifica a pressoflessione nel piano secondo D.M. 17-01-18 NTC §7.8.2.2.1 in combinazioni sismiche, γM = 2

| Comb. | Quota | N | M | σ0 | Mu | c.s. | Verifica |
|---|---|---|---|---|---|---|---|
| SLV 7 | 171 | -3110 | 444349 | 0 | 0 | 0 | No, e>l/2 |
| SLV 7 | 381 | -10226 | -201750 | 2.35 | 642249 | 3.183 | Si |
| SLV 13 | 171 | -7327 | -35836 | 1.68 | 491196 | 13.707 | Si |
| SLV 13 | 381 | -2276 | 592942 | 0 | 0 | 0 | No, e>l/2 |
| SLV 4 | 171 | -6240 | 638244 | 0 | 0 | 0 | No, e>l/2 |
| SLV 4 | 381 | -17210 | -366313 | 3.95 | 905225 | 2.471 | Si |
| SLV 16 | 171 | -5012 | -8122 | 1.15 | 352973 | 43.459 | Si |
| SLV 16 | 381 | -1117 | 480078 | 0 | 0 | 0 | No, e>l/2 |
| SLV 8 | 171 | -3110 | 444349 | 0 | 0 | 0 | No, e>l/2 |
| SLV 8 | 381 | -10226 | -201750 | 2.35 | 642249 | 3.183 | Si |
| SLV 3 | 171 | -6240 | 638244 | 0 | 0 | 0 | No, e>l/2 |
| SLV 3 | 381 | -17210 | -366313 | 3.95 | 905225 | 2.471 | Si |
| SLV 14 | 171 | -7327 | -35836 | 1.68 | 491196 | 13.707 | Si |
| SLV 14 | 381 | -2276 | 592942 | 0 | 0 | 0 | No, e>l/2 |
| SLV 15 | 171 | -5012 | -8122 | 1.15 | 352973 | 43.459 | Si |
| SLV 15 | 381 | -1117 | 480078 | 0 | 0 | 0 | No, e>l/2 |
| SLV 11 | 171 | -2741 | 250439 | 0 | 0 | 0 | No, e>l/2 |
| SLV 11 | 381 | -5398 | 52167 | 1.24 | 377121 | 7.229 | Si |
| SLV 12 | 171 | -2741 | 250439 | 0 | 0 | 0 | No, e>l/2 |
| SLV 12 | 381 | -5398 | 52167 | 1.24 | 377121 | 7.229 | Si |

Verifica a taglio nel piano secondo D.M. 17-01-18 (N.T.C.) §7.8.2.2.2 con rottura per scorrimento in combinazioni non sismiche, γM = 3

| Comb. | Quota | N | V par | M | σ0 | σN | l' | fvd | Vt scorr. | Vt fess.diag. | Vt,lim | c.s. | Verifica |
|---|---|---|---|---|---|---|---|---|---|---|---|---|---|
| SLU 83 | 171 | -10237 | 3572 | 470556 | | 3.83 | 95.36 | 1.07 | 2848 | | | 0.8 | No, Vu<V |
| SLU 83 | 381 | -15005 | 4660 | 172698 | | 3.45 | 155.5 | 1.02 | 4420 | | | 0.95 | No, Vu<V |
| SLU 73 | 171 | -9585 | 3546 | 444384 | | 3.64 | 94.17 | 1.04 | 2743 | | | 0.77 | No, Vu<V |
| SLU 73 | 381 | -14140 | 4531 | 142729 | | 3.25 | 155.5 | 0.99 | 4304 | | | 0.95 | No, Vu<V |
| SLU 76 | 171 | -9865 | 3524 | 449754 | | 3.65 | 96.47 | 1.04 | 2816 | | | 0.8 | No, Vu<V |
| SLU 76 | 381 | -14448 | 4499 | 153640 | | 3.32 | 155.5 | 1 | 4345 | | | 0.97 | No, Vu<V |
| SLU 81 | 171 | -9958 | 3594 | 465186 | | 3.82 | 93.11 | 1.06 | 2776 | | | 0.77 | No, Vu<V |
| SLU 81 | 381 | -14697 | 4691 | 161787 | | 3.38 | 155.5 | 1.01 | 4378 | | | 0.93 | No, Vu<V |
| SLU 31 | 171 | -7869 | 3024 | 376179 | | 3.13 | 89.84 | 0.97 | 2447 | | | 0.81 | No, Vu<V |
| SLU 31 | 381 | -11839 | 3888 | 112749 | | 2.72 | 155.5 | 0.92 | 3997 | | | 1.03 | Si |
| SLU 39 | 171 | -8242 | 3072 | 396981 | | 3.32 | 88.75 | 1 | 2480 | | | 0.81 | No, Vu<V |
| SLU 39 | 381 | -12396 | 4048 | 131807 | | 2.85 | 155.5 | 0.94 | 4072 | | | 1.01 | Si |
| SLU 84 | 171 | -10252 | 3648 | 473208 | | 3.86 | 94.78 | 1.07 | 2841 | | | 0.78 | No, Vu<V |
| SLU 84 | 381 | -15086 | 4743 | 164298 | | 3.46 | 155.5 | 1.02 | 4430 | | | 0.93 | No, Vu<V |
| SLU 40 | 171 | -8257 | 3147 | 399633 | | 3.35 | 88.05 | 1 | 2471 | | | 0.78 | No, Vu<V |
| SLU 40 | 381 | -12477 | 4132 | 123407 | | 2.87 | 155.5 | 0.94 | 4083 | | | 0.99 | No, Vu<V |
| SLU 82 | 171 | -9973 | 3670 | 467837 | | 3.85 | 92.52 | 1.07 | 2769 | | | 0.75 | No, Vu<V |
| SLU 82 | 381 | -14778 | 4775 | 153387 | | 3.39 | 155.5 | 1.01 | 4389 | | | 0.92 | No, Vu<V |
| SLU 75 | 171 | -9878 | 3501 | 449445 | | 3.65 | 96.75 | 1.04 | 2822 | | | 0.81 | No, Vu<V |
| SLU 75 | 381 | -14454 | 4478 | 157649 | | 3.32 | 155.5 | 1 | 4346 | | | 0.97 | No, Vu<V |

Verifica a taglio nel piano secondo D.M. 17-01-18 (N.T.C.) §7.8.2.2.2 con rottura per scorrimento in combinazioni sismiche, γM = 2

| Comb. | Quota | N | V par | M | σ0 | σN | l' | fvd | Vt scorr. | Vt fess.diag. | Vt,lim | c.s. | Verifica |
|---|---|---|---|---|---|---|---|---|---|---|---|---|---|
| SLV 13 | 171 | -7327 | -5481 | -35836 | | 1.68 | 155.5 | 1.17 | 5094 | | | 0.93 | No, Vu<V |
| SLV 13 | 381 | -2276 | -3251 | 592942 | | 0 | 0 | 0.83 | 0 | | | 0 | No, Vu<V |
| SLV 12 | 171 | -2741 | -1762 | 250439 | | 0 | 0 | 0.83 | 0 | | | 0 | No, Vu<V |
| SLV 12 | 381 | -5398 | 1806 | 52167 | | 1.24 | 155.5 | 1.08 | 4708 | | | 2.61 | Si |
| SLV 4 | 171 | -6240 | 10197 | 638244 | | 0 | 0 | 0.83 | 0 | | | 0 | No, Vu<V |
| SLV 4 | 381 | -17210 | 9146 | -366313 | | 3.95 | 155.5 | 1.62 | 7070 | | | 0.77 | No, Vu<V |
| SLV 11 | 171 | -2741 | -1762 | 250439 | | 0 | 0 | 0.83 | 0 | | | 0 | No, Vu<V |
| SLV 11 | 381 | -5398 | 1806 | 52167 | | 1.24 | 155.5 | 1.08 | 4708 | | | 2.61 | Si |
| SLV 7 | 171 | -3110 | 3233 | 444349 | | 0 | 0 | 0.83 | 0 | | | 0 | No, Vu<V |
| SLV 7 | 381 | -10226 | 5407 | -201750 | | 2.35 | 155.5 | 1.3 | 5674 | | | 1.05 | Si |
| SLV 16 | 171 | -5012 | -6454 | -8122 | | 1.15 | 155.5 | 1.06 | 4631 | | | 0.72 | No, Vu<V |
| SLV 16 | 381 | -1117 | -2856 | 480078 | | 0 | 0 | 0.83 | 0 | | | 0 | No, Vu<V |
| SLV 3 | 171 | -6240 | 10197 | 638244 | | 0 | 0 | 0.83 | 0 | | | 0 | No, Vu<V |
| SLV 3 | 381 | -17210 | 9146 | -366313 | | 3.95 | 155.5 | 1.62 | 7070 | | | 0.77 | No, Vu<V |
| SLV 15 | 171 | -5012 | -6454 | -8122 | | 1.15 | 155.5 | 1.06 | 4631 | | | 0.72 | No, Vu<V |
| SLV 15 | 381 | -1117 | -2856 | 480078 | | 0 | 0 | 0.83 | 0 | | | 0 | No, Vu<V |
| SLV 14 | 171 | -7327 | -5481 | -35836 | | 1.68 | 155.5 | 1.17 | 5094 | | | 0.93 | No, Vu<V |
| SLV 14 | 381 | -2276 | -3251 | 592942 | | 0 | 0 | 0.83 | 0 | | | 0 | No, Vu<V |
| SLV 8 | 171 | -3110 | 3233 | 444349 | | 0 | 0 | 0.83 | 0 | | | 0 | No, Vu<V |
| SLV 8 | 381 | -10226 | 5407 | -201750 | | 2.35 | 155.5 | 1.3 | 5674 | | | 1.05 | Si |

### Verifica a pressoflessione fuori piano D.M. 17-01-18 (N.T.C.)

quota 357.5 Wa 0.05 denominatore 8 γM = 2

| Comb. | fd | Sa | σ0 | N | M | Mc | Coeff.s. | Verifica |
|---|---|---|---|---|---|---|---|---|
| SLV 15 | 14 | 0.32 | 0.37 | -1616 | 14731 | 21935 | 1.49 | Si |
| SLV 16 | 14 | 0.32 | 0.37 | -1616 | 14731 | 21935 | 1.49 | Si |
| SLV 14 | 14 | 0.32 | 0.64 | -2776 | 14731 | 36839 | 2.5 | Si |
| SLV 13 | 14 | 0.32 | 0.64 | -2776 | 14731 | 36839 | 2.5 | Si |
| SLV 12 | 14 | 0.32 | 1.18 | -5140 | 14731 | 65005 | 4.41 | Si |
| SLV 11 | 14 | 0.32 | 1.18 | -5140 | 14731 | 65005 | 4.41 | Si |
| SLV 10 | 14 | 0.32 | 2.07 | -9008 | 14731 | 104755 | 7.11 | Si |
| SLV 9 | 14 | 0.32 | 2.07 | -9008 | 14731 | 104755 | 7.11 | Si |
| SLV 7 | 14 | 0.32 | 2.14 | -9321 | 14731 | 107628 | 7.31 | Si |
| SLV 8 | 14 | 0.32 | 2.14 | -9321 | 14731 | 107628 | 7.31 | Si |

### Verifica dei meccanismi locali di collasso con analisi cinematica lineare

forza di aggancio al piano = 0 quota mezzeria = 357.5 Wa = 0.05 Ta = 0.083

| Comb. | N top | N base | V orto | α0 | M* | e* | a0* | aLim | Verifica |
|---|---|---|---|---|---|---|---|---|---|
| SLV 8 | -5659 | -3110 | -143 | 0.025 | 8.089 | 0.925 | 39.548 | 1417.879 | No |
| SLV 7 | -5659 | -3110 | -143 | 0.025 | 8.089 | 0.925 | 39.548 | 1417.879 | No |
| SLV 12 | -6093 | -2741 | -112 | 0.03 | 8.525 | 0.928 | 46.908 | 1417.879 | No |
| SLV 11 | -6093 | -2741 | -112 | 0.03 | 8.525 | 0.928 | 46.908 | 1417.879 | No |
| SLV 9 | -14351 | -10457 | 148 | 0.032 | 16.9 | 0.96 | 47.927 | 1417.879 | No |
| SLV 10 | -14351 | -10457 | 148 | 0.032 | 16.9 | 0.96 | 47.927 | 1417.879 | No |
| SLV 5 | -13917 | -10825 | 117 | 0.033 | 16.459 | 0.959 | 50.755 | 1417.879 | No |
| SLV 6 | -13917 | -10825 | 117 | 0.033 | 16.459 | 0.959 | 50.755 | 1417.879 | No |
| SLV 3 | -8043 | -6240 | -88 | 0.034 | 10.496 | 0.939 | 52.734 | 813.056 | No |
| SLV 4 | -8043 | -6240 | -88 | 0.034 | 10.496 | 0.939 | 52.734 | 813.056 | No |

### Tabella dei coefficienti di sicurezza minimi

| Stato limite | Coeff.s. | Comb. | Verifica |
|---|---|---|---|
| PF_SLU | 1.191 | SLU 82 | Si |
| V_SLU | 0.755 | SLU 82 | No |
| PF_SLV | 0 | SLV 3 | No |
| V_SLV | 0 | SLV 3 | No |
| PFFP_SLV | 1.489 | SLV 15 | Si |
| R_SLV | 0.028 | SLV 7 | No |

## Maschio 85

Verifiche condotte secondo D.M. 17-01-18 (N.T.C.)

### Dati geometrici

| X ini. | Y ini. | X fin. | Y fin. | Quota i. | Quota.s | l | Sp. | h netta | h ini. | h fin. | a | a.s.,sx | a.s.,dx |
|---|---|---|---|---|---|---|---|---|---|---|---|---|---|
| -626.8 | -335.9 | -626.8 | 104.6 | L3 | L4 | 440.5 | 14 | 373 | 373 | 373 | | | |

### Caratteristiche del materiale

(Circolare 7 21-01-19 C8.5.I) Muratura in mattoni pieni e malta di calce LC2_Corti

| fb | fk | fvk0 | fmedio | τ0 | fv0 | μ | ϕ | fv,lim | E | G | FC |
|---|---|---|---|---|---|---|---|---|---|---|---|
| 60 | | | 34.5 | 0.9 | 2 | 0.58 | 0.77 | 3.25 | 32000 | 12800 | 1.2 |

### Verifica a pressoflessione nel piano secondo D.M. 17-01-18 NTC §7.8.2.2.1 in combinazioni non sismiche, γM = 3

| Comb. | Quota | N | M | σ0 | Mu | c.s. | Verifica |
|---|---|---|---|---|---|---|---|
| SLU 78 | 171 | -55171 | -1109146 | 8.95 | 0 | 0 | No, Rottura per schiacciamento |
| SLU 78 | 544 | -34122 | 250291 | 5.53 | 2410591 | 9.631 | Si |
| SLU 83 | 171 | -55408 | -963798 | 8.98 | 0 | 0 | No, Rottura per schiacciamento |
| SLU 83 | 544 | -34363 | 254636 | 5.57 | 2391325 | 9.391 | Si |
| SLU 76 | 171 | -54760 | -1230294 | 8.88 | 0 | 0 | No, Rottura per schiacciamento |
| SLU 76 | 544 | -33361 | 235090 | 5.41 | 2468152 | 10.499 | Si |
| SLU 61 | 171 | -50533 | -1131300 | 8.19 | 0 | 0 | No, Rottura per schiacciamento |
| SLU 61 | 544 | -30590 | 186306 | 4.96 | 2634789 | 14.142 | Si |
| SLU 84 | 171 | -56489 | -1135043 | 9.16 | 0 | 0 | No, Rottura per schiacciamento |
| SLU 84 | 544 | -34709 | 255871 | 5.63 | 2362790 | 9.234 | Si |
| SLU 63 | 171 | -51212 | -1118143 | 8.3 | 0 | 0 | No, Rottura per schiacciamento |
| SLU 63 | 544 | -31208 | 194159 | 5.06 | 2603474 | 13.409 | Si |
| SLU 75 | 171 | -54493 | -1122303 | 8.84 | 0 | 0 | No, Rottura per schiacciamento |
| SLU 75 | 544 | -33504 | 242438 | 5.43 | 2457694 | 10.137 | Si |
| SLU 73 | 171 | -54081 | -1243451 | 8.77 | 0 | 0 | No, Rottura per schiacciamento |
| SLU 73 | 544 | -32743 | 227237 | 5.31 | 2511131 | 11.051 | Si |
| SLU 79 | 171 | -53637 | -931729 | 8.7 | 0 | 0 | No, Rottura per schiacciamento |
| SLU 79 | 544 | -33403 | 240885 | 5.42 | 2465119 | 10.234 | Si |
| SLU 74 | 171 | -53411 | -951057 | 8.66 | 0 | 0 | No, Rottura per schiacciamento |
| SLU 74 | 544 | -33159 | 241203 | 5.38 | 2482581 | 10.292 | Si |

## Verifica a pressoflessione nel piano secondo D.M. 17-01-18 NTC §7.8.2.2.1 in combinazioni sismiche, γM = 2

| Comb. | Quota | N | M | σ0 | Mu | c.s. | Verifica |
|---|---|---|---|---|---|---|---|
| SLV 9 | 171 | -42250 | -1882634 | 6.85 | 4087989 | 2.171 | Si |
| SLV 9 | 544 | -23815 | -41216 | 3.86 | 3587487 | 87.041 | Si |
| SLV 2 | 171 | -45287 | -1343813 | 7.34 | 3979833 | 2.962 | Si |
| SLV 2 | 544 | -26853 | 654555 | 4.35 | 3806740 | 5.816 | Si |
| SLV 5 | 171 | -46218 | -2037142 | 7.49 | 3935885 | 1.932 | Si |
| SLV 5 | 544 | -26112 | 273771 | 4.23 | 3758195 | 13.728 | Si |
| SLD 5 | 171 | -40448 | -1267501 | 6.56 | 4126672 | 3.256 | Si |
| SLD 5 | 544 | -23845 | 194028 | 3.87 | 3589950 | 18.502 | Si |
| SLV 10 | 171 | -42250 | -1882634 | 6.85 | 4087989 | 2.171 | Si |
| SLV 10 | 544 | -23815 | -41216 | 3.86 | 3587487 | 87.041 | Si |
| SLV 6 | 171 | -46218 | -2037142 | 7.49 | 3935885 | 1.932 | Si |
| SLV 6 | 544 | -26112 | 273771 | 4.23 | 3758195 | 13.728 | Si |
| SLD 10 | 171 | -38785 | -1200298 | 6.29 | 4145534 | 3.454 | Si |
| SLD 10 | 544 | -22886 | 60107 | 3.71 | 3509698 | 58.391 | Si |
| SLD 9 | 171 | -38785 | -1200298 | 6.29 | 4145534 | 3.454 | Si |
| SLD 9 | 544 | -22886 | 60107 | 3.71 | 3509698 | 58.391 | Si |
| SLV 1 | 171 | -45287 | -1343813 | 7.34 | 3979833 | 2.962 | Si |
| SLV 1 | 544 | -26853 | 654555 | 4.35 | 3806740 | 5.816 | Si |
| SLD 6 | 171 | -40448 | -1267501 | 6.56 | 4126672 | 3.256 | Si |
| SLD 6 | 544 | -23845 | 194028 | 3.87 | 3589950 | 18.502 | Si |

## Verifica a taglio nel piano secondo D.M. 17-01-18 (N.T.C.) §7.8.2.2.2 con rottura per scorrimento in combinazioni non sismiche, γM = 3

| Comb. | Quota | N | V par | M | σ0 | σN | l' | fvd | Vt scorr. | Vt fess.diag. | Vt,lim | c.s. | Verifica |
|---|---|---|---|---|---|---|---|---|---|---|---|---|---|
| SLU 2 | 171 | -34952 | -2219 | -979877 | | 5.67 | 440.5 | 1.08 | 6681 | | | 3.01 | Si |
| SLU 2 | 544 | -20718 | -1439 | 105301 | | 3.36 | 440.5 | 1 | 6189 | | | 4.3 | Si |
| SLU 44 | 171 | -43087 | -2239 | -1182423 | | 6.99 | 440.5 | 1.08 | 6681 | | | 2.98 | Si |
| SLU 44 | 544 | -25561 | -1374 | 115115 | | 4.14 | 440.5 | 1.08 | 6681 | | | 4.86 | Si |
| SLU 55 | 171 | -49483 | -1937 | -1213395 | | 8.02 | 440.5 | 1.08 | 6681 | | | 3.45 | Si |
| SLU 55 | 544 | -29860 | -1023 | 173378 | | 4.84 | 440.5 | 1.08 | 6681 | | | 6.53 | Si |
| SLU 65 | 171 | -48365 | -2155 | -1199323 | | 7.84 | 440.5 | 1.08 | 6681 | | | 3.1 | Si |
| SLU 65 | 544 | -29062 | -1249 | 176827 | | 4.71 | 440.5 | 1.08 | 6681 | | | 5.35 | Si |
| SLU 23 | 171 | -40229 | -2135 | -996777 | | 6.52 | 440.5 | 1.08 | 6681 | | | 3.13 | Si |
| SLU 23 | 544 | -24219 | -1314 | 167013 | | 3.93 | 440.5 | 1.08 | 6655 | | | 5.06 | Si |
| SLU 10 | 171 | -40669 | -2269 | -1024005 | | 6.59 | 440.5 | 1.08 | 6681 | | | 2.94 | Si |
| SLU 10 | 544 | -24400 | -1447 | 155711 | | 3.96 | 440.5 | 1.08 | 6679 | | | 4.62 | Si |
| SLU 52 | 171 | -48804 | -2289 | -1226551 | | 7.91 | 440.5 | 1.08 | 6681 | | | 2.92 | Si |
| SLU 52 | 544 | -29243 | -1381 | 165525 | | 4.74 | 440.5 | 1.08 | 6681 | | | 4.84 | Si |
| SLU 13 | 171 | -41347 | -1917 | -1010848 | | 6.7 | 440.5 | 1.08 | 6681 | | | 3.49 | Si |
| SLU 13 | 544 | -25018 | -1089 | 163564 | | 4.06 | 440.5 | 1.08 | 6681 | | | 6.14 | Si |
| SLU 73 | 171 | -54081 | -2206 | -1243451 | | 8.77 | 440.5 | 1.08 | 6681 | | | 3.03 | Si |
| SLU 73 | 544 | -32743 | -1256 | 227237 | | 5.31 | 440.5 | 1.08 | 6681 | | | 5.32 | Si |
| SLU 31 | 171 | -45946 | -2186 | -1040905 | | 7.45 | 440.5 | 1.08 | 6681 | | | 3.06 | Si |
| SLU 31 | 544 | -27901 | -1322 | 217422 | | 4.52 | 440.5 | 1.08 | 6681 | | | 5.06 | Si |

## Verifica a taglio nel piano secondo D.M. 17-01-18 (N.T.C.) §7.8.2.2.2 con rottura per scorrimento in combinazioni sismiche, γM = 2

| Comb. | Quota | N | V par | M | σ0 | σN | l' | fvd | Vt scorr. | Vt fess.diag. | Vt,lim | c.s. | Verifica |
|---|---|---|---|---|---|---|---|---|---|---|---|---|---|
| SLV 5 | 171 | -46218 | -12162 | -2037142 | | 7.49 | 440.5 | 1.63 | 10021 | | | 0.82 | No, Vu<V |
| SLV 5 | 544 | -26112 | -9972 | 273771 | | 4.23 | 440.5 | 1.63 | 10021 | | | 1 | Si |
| SLV 15 | 171 | -27295 | 5463 | -79996 | | 4.43 | 440.5 | 1.63 | 10021 | | | 1.83 | Si |
| SLV 15 | 544 | -17536 | 3929 | -384001 | | 2.84 | 440.5 | 1.4 | 8646 | | | 2.2 | Si |
| SLV 12 | 171 | -26364 | 12239 | 613333 | | 4.28 | 440.5 | 1.63 | 10021 | | | 0.82 | No, Vu<V |
| SLV 12 | 544 | -18278 | 10762 | -3217 | | 2.96 | 440.5 | 1.43 | 8795 | | | 0.82 | No, Vu<V |
| SLV 10 | 171 | -42250 | -10998 | -1882634 | | 6.85 | 440.5 | 1.63 | 10021 | | | 0.91 | No, Vu<V |
| SLV 10 | 544 | -23815 | -9693 | -41216 | | 3.86 | 440.5 | 1.61 | 9902 | | | 1.02 | Si |
| SLV 6 | 171 | -46218 | -12162 | -2037142 | | 7.49 | 440.5 | 1.63 | 10021 | | | 0.82 | No, Vu<V |
| SLV 6 | 544 | -26112 | -9972 | 273771 | | 4.23 | 440.5 | 1.63 | 10021 | | | 1 | Si |
| SLV 16 | 171 | -27295 | 5463 | -79996 | | 4.43 | 440.5 | 1.63 | 10021 | | | 1.83 | Si |
| SLV 16 | 544 | -17536 | 3929 | -384001 | | 2.84 | 440.5 | 1.4 | 8646 | | | 2.2 | Si |
| SLV 7 | 171 | -30332 | 11075 | 458825 | | 4.92 | 440.5 | 1.63 | 10021 | | | 0.9 | No, Vu<V |
| SLV 7 | 544 | -20575 | 10482 | 311770 | | 3.34 | 440.5 | 1.5 | 9254 | | | 0.88 | No, Vu<V |
| SLV 8 | 171 | -30332 | 11075 | 458825 | | 4.92 | 440.5 | 1.63 | 10021 | | | 0.9 | No, Vu<V |
| SLV 8 | 544 | -20575 | 10482 | 311770 | | 3.34 | 440.5 | 1.5 | 9254 | | | 0.88 | No, Vu<V |
| SLV 9 | 171 | -42250 | -10998 | -1882634 | | 6.85 | 440.5 | 1.63 | 10021 | | | 0.91 | No, Vu<V |
| SLV 9 | 544 | -23815 | -9693 | -41216 | | 3.86 | 440.5 | 1.61 | 9902 | | | 1.02 | Si |
| SLV 11 | 171 | -26364 | 12239 | 613333 | | 4.28 | 440.5 | 1.63 | 10021 | | | 0.82 | No, Vu<V |
| SLV 11 | 544 | -18278 | 10762 | -3217 | | 2.96 | 440.5 | 1.43 | 8795 | | | 0.82 | No, Vu<V |

## Verifica a pressoflessione fuori piano D.M. 17-01-18 (N.T.C.)

quota 357.5 Wa 0.03 denominatore 8 γM = 2

| Comb. | fd | Sa | σ0 | N | M | Mc | Coeff.s. | Verifica |
|---|---|---|---|---|---|---|---|---|
| SLV 11 | 14 | 0.32 | 3.49 | -21518 | 22321 | 107613 | 4.82 | Si |
| SLV 12 | 14 | 0.32 | 3.49 | -21518 | 22321 | 107613 | 4.82 | Si |
| SLV 16 | 14 | 0.32 | 3.54 | -21825 | 22321 | 108525 | 4.86 | Si |
| SLV 15 | 14 | 0.32 | 3.54 | -21825 | 22321 | 108525 | 4.86 | Si |
| SLV 7 | 14 | 0.32 | 3.96 | -24445 | 22321 | 115604 | 5.18 | Si |
| SLV 8 | 14 | 0.32 | 3.96 | -24445 | 22321 | 115604 | 5.18 | Si |
| SLV 13 | 14 | 0.32 | 4.06 | -25015 | 22321 | 116975 | 5.24 | Si |
| SLV 14 | 14 | 0.32 | 4.06 | -25015 | 22321 | 116975 | 5.24 | Si |
| SLV 3 | 14 | 0.32 | 5.12 | -31582 | 22321 | 128417 | 5.75 | Si |
| SLV 4 | 14 | 0.32 | 5.12 | -31582 | 22321 | 128417 | 5.75 | Si |

## Verifica dei meccanismi locali di collasso con analisi cinematica lineare

forza di aggancio al piano = 0 quota mezzeria = 357.5 Wa = 0.03 Ta = 0.166

| Comb. | N top | N base | V orto | α0 | M* | e* | a0* | aLim | Verifica |
|---|---|---|---|---|---|---|---|---|---|
| SLV 4 | -25192 | -40521 | 30 | 0.019 | 28.887 | 0.966 | 28.742 | 1435.066 | No |

| Comb. | N top | N base | V orto | α0 | M* | e* | a0* | aLim | Verifica |
|---|---|---|---|---|---|---|---|---|---|
| SLV 3 | -25192 | -40521 | 30 | 0.019 | 28.887 | 0.966 | 28.742 | 1435.066 | No |
| SLV 2 | -26853 | -45287 | 26 | 0.019 | 30.578 | 0.968 | 28.874 | 1435.066 | No |
| SLV 1 | -26853 | -45287 | 26 | 0.019 | 30.578 | 0.968 | 28.874 | 1435.066 | No |
| SLV 13 | -19197 | -32061 | -29 | 0.019 | 22.788 | 0.958 | 29.186 | 1435.066 | No |
| SLV 14 | -19197 | -32061 | -29 | 0.019 | 22.788 | 0.958 | 29.186 | 1435.066 | No |
| SLV 16 | -17536 | -27295 | -25 | 0.019 | 21.1 | 0.955 | 29.656 | 1435.066 | No |
| SLV 15 | -17536 | -27295 | -25 | 0.019 | 21.1 | 0.955 | 29.656 | 1435.066 | No |
| SLV 10 | -23815 | -42250 | -15 | 0.02 | 27.485 | 0.965 | 29.689 | 1399.295 | No |
| SLV 9 | -23815 | -42250 | -15 | 0.02 | 27.485 | 0.965 | 29.689 | 1399.295 | No |

### Tabella dei coefficienti di sicurezza minimi

| Stato limite | Coeff.s. | Comb. | Verifica |
|---|---|---|---|
| PF_SLU | 0 | SLU 61 | No |
| V_SLU | 2.918 | SLU 52 | Si |
| PF_SLV | 1.932 | SLV 5 | Si |
| V_SLV | 0.817 | SLV 11 | No |
| PFFP_SLV | 4.821 | SLV 11 | Si |
| R_SLV | 0.02 | SLV 3 | No |

## Maschio 86

Verifiche condotte secondo D.M. 17-01-18 (N.T.C.)

### Dati geometrici

| X ini. | Y ini. | X fin. | Y fin. | Quota i. | Quota.s | l | Sp. | h netta | h ini. | h fin. | a | a.s.,sx | a.s.,dx |
|---|---|---|---|---|---|---|---|---|---|---|---|---|---|
| -746.3 | -335.9 | -854.8 | -335.9 | L3 | L4 | 108.5 | 28 | 373 | 373 | 373 | | | |

### Caratteristiche del materiale

(Circolare 7 21-01-19 C8.5.I) Muratura in mattoni pieni e malta di calce LC2_Corti

| fb | fk | fvk0 | fmedio | τ0 | fv0 | μ | ϕ | fv,lim | E | G | FC |
|---|---|---|---|---|---|---|---|---|---|---|---|
| 60 | | | 34.5 | 0.9 | 2 | 0.58 | 0.77 | 3.25 | 32000 | 12800 | 1.2 |

### Verifica a pressoflessione nel piano secondo D.M. 17-01-18 NTC §7.8.2.2.1 in combinazioni non sismiche, γM = 3

| Comb. | Quota | N | M | σ0 | Mu | c.s. | Verifica |
|---|---|---|---|---|---|---|---|
| SLU 73 | 261 | -18630 | -349977 | 6.13 | 249813 | 0.714 | No, M>Mu |
| SLU 73 | 451 | -12862 | -83266 | 4.23 | 335109 | 4.025 | Si |
| SLU 80 | 261 | -18999 | -351210 | 6.25 | 239391 | 0.682 | No, M>Mu |
| SLU 80 | 451 | -13274 | -85044 | 4.37 | 333853 | 3.926 | Si |
| SLU 75 | 261 | -18677 | -342125 | 6.15 | 248541 | 0.726 | No, M>Mu |
| SLU 75 | 451 | -13239 | -88598 | 4.36 | 333988 | 3.77 | Si |
| SLU 77 | 261 | -18428 | -324983 | 6.07 | 255272 | 0.785 | No, M>Mu |
| SLU 77 | 451 | -13556 | -94821 | 4.46 | 332565 | 3.507 | Si |
| SLU 82 | 261 | -18970 | -346784 | 6.24 | 240256 | 0.693 | No, M>Mu |
| SLU 82 | 451 | -13638 | -93292 | 4.49 | 332127 | 3.56 | Si |
| SLU 76 | 261 | -19031 | -359473 | 6.26 | 238459 | 0.663 | No, M>Mu |
| SLU 76 | 451 | -13013 | -81488 | 4.28 | 334736 | 4.108 | Si |
| SLU 84 | 261 | -19371 | -356279 | 6.38 | 228306 | 0.641 | No, M>Mu |
| SLU 84 | 451 | -13789 | -91514 | 4.54 | 331241 | 3.62 | Si |
| SLU 83 | 261 | -18721 | -329643 | 6.16 | 247307 | 0.75 | No, M>Mu |
| SLU 83 | 451 | -13955 | -99514 | 4.59 | 330151 | 3.318 | Si |
| SLU 79 | 261 | -18350 | -324574 | 6.04 | 257334 | 0.793 | No, M>Mu |
| SLU 79 | 451 | -13440 | -93044 | 4.42 | 333137 | 3.58 | Si |
| SLU 78 | 261 | -19078 | -351620 | 6.28 | 237106 | 0.674 | No, M>Mu |
| SLU 78 | 451 | -13390 | -86820 | 4.41 | 333365 | 3.84 | Si |

### Verifica a pressoflessione nel piano secondo D.M. 17-01-18 NTC §7.8.2.2.1 in combinazioni sismiche, γM = 2

| Comb. | Quota | N | M | σ0 | Mu | c.s. | Verifica |
|---|---|---|---|---|---|---|---|
| SLV 12 | 261 | -7264 | -245309 | 2.39 | 316972 | 1.292 | Si |
| SLV 12 | 451 | 1955 | 200812 | 0 | 0 | 0 | No, Trazione |
| SLV 10 | 261 | -20498 | -359595 | 6.75 | 497962 | 1.385 | Si |
| SLV 10 | 451 | -18476 | -224577 | 6.08 | 503437 | 2.242 | Si |
| SLV 15 | 261 | -15553 | -495146 | 5.12 | 490228 | 0.99 | No, M>Mu |
| SLV 15 | 451 | -3268 | 180912 | 0 | 0 | 0 | No, e>l/2 |
| SLV 11 | 261 | -7264 | -245309 | 2.39 | 316972 | 1.292 | Si |
| SLV 11 | 451 | 1955 | 200812 | 0 | 0 | 0 | No, Trazione |
| SLV 9 | 261 | -20498 | -359595 | 6.75 | 497962 | 1.385 | Si |
| SLV 9 | 451 | -18476 | -224577 | 6.08 | 503437 | 2.242 | Si |
| SLV 14 | 261 | -19523 | -529432 | 6.43 | 502094 | 0.948 | No, M>Mu |
| SLV 14 | 451 | -9397 | 53296 | 3.09 | 380742 | 7.144 | Si |
| SLV 16 | 261 | -15553 | -495146 | 5.12 | 490228 | 0.99 | No, M>Mu |
| SLV 16 | 451 | -3268 | 180912 | 0 | 0 | 0 | No, e>l/2 |
| SLV 13 | 261 | -19523 | -529432 | 6.43 | 502094 | 0.948 | No, M>Mu |
| SLV 13 | 451 | -9397 | 53296 | 3.09 | 380742 | 7.144 | Si |
| SLV 8 | 261 | -4130 | -65448 | 1.36 | 199132 | 3.043 | Si |
| SLV 8 | 451 | 302 | 90253 | 0 | 0 | 0 | No, Trazione |
| SLV 7 | 261 | -4130 | -65448 | 1.36 | 199132 | 3.043 | Si |
| SLV 7 | 451 | 302 | 90253 | 0 | 0 | 0 | No, Trazione |

### Verifica a taglio nel piano secondo D.M. 17-01-18 (N.T.C.) §7.8.2.2.2 con rottura per scorrimento in combinazioni non sismiche, γM = 3

| Comb. | Quota | N | V par | M | σ0 | σN | l' | fvd | Vt scorr. | Vt fess.diag. | Vt,lim | c.s. | Verifica |
|---|---|---|---|---|---|---|---|---|---|---|---|---|---|
| SLU 80 | 261 | -18999 | -3538 | -351210 | | 6.32 | 107.29 | 1.08 | 3255 | | | 0.92 | No, Vu<V |
| SLU 80 | 451 | -13274 | -656 | -85044 | | 4.37 | 108.5 | 1.08 | 3291 | | | 5.01 | Si |
| SLU 75 | 261 | -18677 | -3380 | -342125 | | 6.19 | 107.79 | 1.08 | 3270 | | | 0.97 | No, Vu<V |
| SLU 75 | 451 | -13239 | -601 | -88598 | | 4.36 | 108.5 | 1.08 | 3291 | | | 5.47 | Si |

| Comb. | Quota | N | V par | M | σ0 | σN | l' | fvd | Vt scorr. | Vt fess.diag. | Vt,lim | c.s. | Verifica |
|---|---|---|---|---|---|---|---|---|---|---|---|---|---|
| SLU 83 | 261 | -18721 | -3453 | -329643 | | 6.16 | 108.5 | 1.08 | 3291 | | | 0.95 | No, Vu<V |
| SLU 83 | 451 | -13955 | -642 | -99514 | | 4.59 | 108.5 | 1.08 | 3291 | | | 5.13 | Si |
| SLU 77 | 261 | -18428 | -3433 | -324983 | | 6.07 | 108.5 | 1.08 | 3291 | | | 0.96 | No, Vu<V |
| SLU 77 | 451 | -13556 | -643 | -94821 | | 4.46 | 108.5 | 1.08 | 3291 | | | 5.12 | Si |
| SLU 79 | 261 | -18350 | -3443 | -324574 | | 6.04 | 108.5 | 1.08 | 3291 | | | 0.96 | No, Vu<V |
| SLU 79 | 451 | -13440 | -652 | -93044 | | 4.42 | 108.5 | 1.08 | 3291 | | | 5.05 | Si |
| SLU 73 | 261 | -18630 | -3306 | -349977 | | 6.25 | 106.39 | 1.08 | 3227 | | | 0.98 | No, Vu<V |
| SLU 73 | 451 | -12862 | -566 | -83266 | | 4.23 | 108.5 | 1.08 | 3291 | | | 5.81 | Si |
| SLU 82 | 261 | -18970 | -3401 | -346784 | | 6.28 | 107.91 | 1.08 | 3273 | | | 0.96 | No, Vu<V |
| SLU 82 | 451 | -13638 | -600 | -93292 | | 4.49 | 108.5 | 1.08 | 3291 | | | 5.48 | Si |
| SLU 78 | 261 | -19078 | -3529 | -351620 | | 6.34 | 107.46 | 1.08 | 3260 | | | 0.92 | No, Vu<V |
| SLU 78 | 451 | -13390 | -648 | -86820 | | 4.41 | 108.5 | 1.08 | 3291 | | | 5.08 | Si |
| SLU 76 | 261 | -19031 | -3454 | -359473 | | 6.41 | 106.08 | 1.08 | 3218 | | | 0.93 | No, Vu<V |
| SLU 76 | 451 | -13013 | -613 | -81488 | | 4.28 | 108.5 | 1.08 | 3291 | | | 5.37 | Si |
| SLU 84 | 261 | -19371 | -3549 | -356279 | | 6.43 | 107.57 | 1.08 | 3263 | | | 0.92 | No, Vu<V |
| SLU 84 | 451 | -13789 | -646 | -91514 | | 4.54 | 108.5 | 1.08 | 3291 | | | 5.09 | Si |

### Verifica a taglio nel piano secondo D.M. 17-01-18 (N.T.C.) §7.8.2.2.2 con rottura per scorrimento in combinazioni sismiche, γM = 2

| Comb. | Quota | N | V par | M | σ0 | σN | l' | fvd | Vt scorr. | Vt fess.diag. | Vt,lim | c.s. | Verifica |
|---|---|---|---|---|---|---|---|---|---|---|---|---|---|
| SLV 14 | 261 | -19523 | -9124 | -529432 | | 8.57 | 81.39 | 1.63 | 3703 | | | 0.41 | No, Vu<V |
| SLV 14 | 451 | -9397 | -2827 | 53296 | | 3.09 | 108.5 | 1.45 | 4411 | | | 1.56 | Si |
| SLV 13 | 261 | -19523 | -9124 | -529432 | | 8.57 | 81.39 | 1.63 | 3703 | | | 0.41 | No, Vu<V |
| SLV 13 | 451 | -9397 | -2827 | 53296 | | 3.09 | 108.5 | 1.45 | 4411 | | | 1.56 | Si |
| SLV 7 | 261 | -4130 | 2788 | -65448 | | 1.36 | 108.5 | 1.11 | 3358 | | | 1.2 | Si |
| SLV 7 | 451 | 302 | -941 | 90253 | | 0 | 0 | 0.83 | 0 | | | 0 | No, Vu<V |
| SLV 9 | 261 | -20498 | -7152 | -359595 | | 6.75 | 108.5 | 1.63 | 4937 | | | 0.69 | No, Vu<V |
| SLV 9 | 451 | -18476 | 208 | -224577 | | 6.08 | 108.5 | 1.63 | 4937 | | | 23.71 | Si |
| SLV 8 | 261 | -4130 | 2788 | -65448 | | 1.36 | 108.5 | 1.11 | 3358 | | | 1.2 | Si |
| SLV 8 | 451 | 302 | -941 | 90253 | | 0 | 0 | 0.83 | 0 | | | 0 | No, Vu<V |
| SLV 15 | 261 | -15553 | -7220 | -495146 | | 8.26 | 67.24 | 1.63 | 3059 | | | 0.42 | No, Vu<V |
| SLV 15 | 451 | -3268 | -3693 | 180912 | | 0 | 0 | 0.83 | 0 | | | 0 | No, Vu<V |
| SLV 16 | 261 | -15553 | -7220 | -495146 | | 8.26 | 67.24 | 1.63 | 3059 | | | 0.42 | No, Vu<V |
| SLV 16 | 451 | -3268 | -3693 | 180912 | | 0 | 0 | 0.83 | 0 | | | 0 | No, Vu<V |
| SLV 12 | 261 | -7264 | -806 | -245309 | | 4.22 | 61.44 | 1.63 | 2796 | | | 3.47 | Si |
| SLV 12 | 451 | 1955 | -2677 | 200812 | | 0 | 0 | 0.83 | 0 | | | 0 | No, Vu<V |
| SLV 11 | 261 | -7264 | -806 | -245309 | | 4.22 | 61.44 | 1.63 | 2796 | | | 3.47 | Si |
| SLV 11 | 451 | 1955 | -2677 | 200812 | | 0 | 0 | 0.83 | 0 | | | 0 | No, Vu<V |
| SLV 10 | 261 | -20498 | -7152 | -359595 | | 6.75 | 108.5 | 1.63 | 4937 | | | 0.69 | No, Vu<V |
| SLV 10 | 451 | -18476 | 208 | -224577 | | 6.08 | 108.5 | 1.63 | 4937 | | | 23.71 | Si |

### Verifica a pressoflessione fuori piano D.M. 17-01-18 (N.T.C.)

quota 357.5 Wa 0.05 denominatore 8 γM = 2

| Comb. | fd | Sa | σ0 | N | M | Mc | Coeff.s. | Verifica |
|---|---|---|---|---|---|---|---|---|
| SLV 8 | 14 | 0.32 | 1.05 | -3184 | 10279 | 40754 | 3.96 | Si |
| SLV 7 | 14 | 0.32 | 1.05 | -3184 | 10279 | 40754 | 3.96 | Si |
| SLV 4 | 14 | 0.32 | 1.59 | -4832 | 10279 | 58845 | 5.72 | Si |
| SLV 3 | 14 | 0.32 | 1.59 | -4832 | 10279 | 58845 | 5.72 | Si |
| SLV 11 | 14 | 0.32 | 2.04 | -6198 | 10279 | 72287 | 7.03 | Si |
| SLV 12 | 14 | 0.32 | 2.04 | -6198 | 10279 | 72287 | 7.03 | Si |
| SLV 1 | 14 | 0.32 | 3.05 | -9259 | 10279 | 97293 | 9.47 | Si |
| SLV 2 | 14 | 0.32 | 3.05 | -9259 | 10279 | 97293 | 9.47 | Si |
| SLV 16 | 14 | 0.32 | 4.9 | -14879 | 10279 | 124812 | 12.14 | Si |
| SLV 15 | 14 | 0.32 | 4.9 | -14879 | 10279 | 124812 | 12.14 | Si |

### Verifica dei meccanismi locali di collasso con analisi cinematica lineare

forza di aggancio al piano = 0 quota mezzeria = 357.5 Wa = 0.05 Ta = 0.083

| Comb. | N top | N base | V orto | α0 | M* | e* | a0* | aLim | Verifica |
|---|---|---|---|---|---|---|---|---|---|
| SLV 11 | -2641 | -3234 | 54 | 0.033 | 4.336 | 0.909 | 53.228 | 1417.879 | No |
| SLV 12 | -2641 | -3234 | 54 | 0.033 | 4.336 | 0.909 | 53.228 | 1417.879 | No |
| SLV 7 | -4641 | -3279 | 57 | 0.034 | 6.342 | 0.931 | 53.475 | 1417.879 | No |
| SLV 8 | -4641 | -3279 | 57 | 0.034 | 6.342 | 0.931 | 53.475 | 1417.879 | No |
| SLV 9 | -10063 | -16437 | -53 | 0.036 | 11.842 | 0.96 | 54.809 | 1417.879 | No |
| SLV 10 | -10063 | -16437 | -53 | 0.036 | 11.842 | 0.96 | 54.809 | 1417.879 | No |
| SLV 6 | -12063 | -16482 | -50 | 0.037 | 13.877 | 0.965 | 55.147 | 1417.879 | No |
| SLV 5 | -12063 | -16482 | -50 | 0.037 | 13.877 | 0.965 | 55.147 | 1417.879 | No |
| SLV 4 | -9572 | -7954 | 23 | 0.039 | 11.343 | 0.958 | 59.139 | 813.056 | No |
| SLV 3 | -9572 | -7954 | 23 | 0.039 | 11.343 | 0.958 | 59.139 | 813.056 | No |

### Tabella dei coefficienti di sicurezza minimi

| Stato limite | Coeff.s. | Comb. | Verifica |
|---|---|---|---|
| PF_SLU | 0.641 | SLU 84 | No |
| V_SLU | 0.919 | SLU 84 | No |
| PF_SLV | 0 | SLV 12 | No |
| V_SLV | 0 | SLV 7 | No |
| PFFP_SLV | 3.965 | SLV 7 | Si |
| R_SLV | 0.038 | SLV 11 | No |

## Maschio 87

Verifiche condotte secondo D.M. 17-01-18 (N.T.C.)

### Dati geometrici

| X ini. | Y ini. | X fin. | Y fin. | Quota i. | Quota.s | l | Sp. | h netta | h ini. | h fin. | a | a.s.,sx | a.s.,dx |
|---|---|---|---|---|---|---|---|---|---|---|---|---|---|
| -515.8 | 104.6 | -515.8 | 581.1 | L3 | L4 | 476.5 | 14 | 373 | 373 | 373 | | | |

## Caratteristiche del materiale

(Circolare 7 21-01-19 C8.5.I) Muratura in mattoni pieni e malta di calce LC2_Corti

| fb | fk | fvk0 | fmedio | τ0 | fv0 | μ | ϕ | fv,lim | E | G | FC |
|---|---|---|---|---|---|---|---|---|---|---|---|
| 60 | | | 34.5 | 0.9 | 2 | 0.58 | 0.77 | 3.25 | 32000 | 12800 | 1.2 |

## Verifica a pressoflessione nel piano secondo D.M. 17-01-18 NTC §7.8.2.2.1 in combinazioni non sismiche, γM = 3

| Comb. | Quota | N | M | σ0 | Mu | c.s. | Verifica |
|---|---|---|---|---|---|---|---|
| SLU 59 | 171 | -54527 | 2473377 | 8.17 | 0 | 0 | No, Rottura per schiacciamento |
| SLU 59 | 544 | -36360 | 131354 | 5.45 | 2866397 | 21.822 | Si |
| SLU 63 | 171 | -54931 | 2460683 | 8.23 | 0 | 0 | No, Rottura per schiacciamento |
| SLU 63 | 544 | -36069 | 59650 | 5.41 | 2889487 | 48.441 | Si |
| SLU 58 | 171 | -54847 | 2471362 | 8.22 | 0 | 0 | No, Rottura per schiacciamento |
| SLU 58 | 544 | -36454 | 135706 | 5.46 | 2858805 | 21.066 | Si |
| SLU 57 | 171 | -54917 | 2480574 | 8.23 | 0 | 0 | No, Rottura per schiacciamento |
| SLU 57 | 544 | -36605 | 114011 | 5.49 | 2846390 | 24.966 | Si |
| SLU 62 | 171 | -55250 | 2458668 | 8.28 | 0 | 0 | No, Rottura per schiacciamento |
| SLU 62 | 544 | -36163 | 64002 | 5.42 | 2882134 | 45.032 | Si |
| SLU 71 | 171 | -55460 | 2501439 | 8.31 | 0 | 0 | No, Rottura per schiacciamento |
| SLU 71 | 544 | -37079 | 169461 | 5.56 | 2806196 | 16.56 | Si |
| SLU 56 | 171 | -55237 | 2478559 | 8.28 | 0 | 0 | No, Rottura per schiacciamento |
| SLU 56 | 544 | -36699 | 118363 | 5.5 | 2838597 | 23.982 | Si |
| SLU 83 | 171 | -61732 | 2736075 | 9.25 | 0 | 0 | No, Rottura per schiacciamento |
| SLU 83 | 544 | -40738 | 60413 | 6.11 | 2429623 | 40.217 | Si |
| SLU 84 | 171 | -61413 | 2738090 | 9.21 | 0 | 0 | No, Rottura per schiacciamento |
| SLU 84 | 544 | -40644 | 56060 | 6.09 | 2440736 | 43.538 | Si |
| SLU 69 | 171 | -55850 | 2508637 | 8.37 | 0 | 0 | No, Rottura per schiacciamento |
| SLU 69 | 544 | -37324 | 152118 | 5.6 | 2784644 | 18.306 | Si |

## Verifica a pressoflessione nel piano secondo D.M. 17-01-18 NTC §7.8.2.2.1 in combinazioni sismiche, γM = 2

| Comb. | Quota | N | M | σ0 | Mu | c.s. | Verifica |
|---|---|---|---|---|---|---|---|
| SLV 8 | 171 | -50774 | 2618384 | 7.61 | 4561663 | 1.742 | Si |
| SLV 8 | 544 | -31201 | 282229 | 4.68 | 4588184 | 16.257 | Si |
| SLV 4 | 171 | -44298 | 2674204 | 6.64 | 4818332 | 1.802 | Si |
| SLV 4 | 544 | -27205 | 717297 | 4.08 | 4318334 | 6.02 | Si |
| SLD 3 | 171 | -41610 | 2139679 | 6.24 | 4852880 | 2.268 | Si |
| SLD 3 | 544 | -26272 | 325572 | 3.94 | 4241882 | 13.029 | Si |
| SLV 12 | 171 | -49916 | 2181376 | 7.48 | 4609731 | 2.113 | Si |
| SLV 12 | 544 | -31248 | -118835 | 4.68 | 4590772 | 38.631 | Si |
| SLV 2 | 171 | -37890 | 2285042 | 5.68 | 4831019 | 2.114 | Si |
| SLV 2 | 544 | -23827 | 689148 | 3.57 | 4017347 | 5.829 | Si |
| SLV 1 | 171 | -37890 | 2285042 | 5.68 | 4831019 | 2.114 | Si |
| SLV 1 | 544 | -23827 | 689148 | 3.57 | 4017347 | 5.829 | Si |
| SLD 4 | 171 | -41610 | 2139679 | 6.24 | 4852880 | 2.268 | Si |
| SLD 4 | 544 | -26272 | 325572 | 3.94 | 4241882 | 13.029 | Si |
| SLV 3 | 171 | -44298 | 2674204 | 6.64 | 4818332 | 1.802 | Si |
| SLV 3 | 544 | -27205 | 717297 | 4.08 | 4318334 | 6.02 | Si |
| SLV 11 | 171 | -49916 | 2181376 | 7.48 | 4609731 | 2.113 | Si |
| SLV 11 | 544 | -31248 | -118835 | 4.68 | 4590772 | 38.631 | Si |
| SLV 7 | 171 | -50774 | 2618384 | 7.61 | 4561663 | 1.742 | Si |
| SLV 7 | 544 | -31201 | 282229 | 4.68 | 4588184 | 16.257 | Si |

## Verifica a taglio nel piano secondo D.M. 17-01-18 (N.T.C.) §7.8.2.2.2 con rottura per scorrimento in combinazioni non sismiche, γM = 3

| Comb. | Quota | N | V par | M | σ0 | σN | l' | fvd | Vt scorr. | Vt fess.diag. | Vt,lim | c.s. | Verifica |
|---|---|---|---|---|---|---|---|---|---|---|---|---|---|
| SLU 74 | 171 | -59608 | 3148 | 2637274 | | 8.94 | 476.5 | 1.08 | 7227 | | | 2.3 | Si |
| SLU 74 | 544 | -39290 | 1827 | 59074 | | 5.89 | 476.5 | 1.08 | 7227 | | | 3.96 | Si |
| SLU 84 | 171 | -61413 | 3272 | 2738090 | | 9.21 | 476.5 | 1.08 | 7227 | | | 2.21 | Si |
| SLU 84 | 544 | -40644 | 1899 | 56060 | | 6.09 | 476.5 | 1.08 | 7227 | | | 3.81 | Si |
| SLU 79 | 171 | -61329 | 3476 | 2748770 | | 9.19 | 476.5 | 1.08 | 7227 | | | 2.08 | Si |
| SLU 79 | 544 | -41029 | 1985 | 132117 | | 6.15 | 476.5 | 1.08 | 7227 | | | 3.64 | Si |
| SLU 77 | 171 | -61719 | 3484 | 2755967 | | 9.25 | 476.5 | 1.08 | 7227 | | | 2.07 | Si |
| SLU 77 | 544 | -41274 | 2019 | 114774 | | 6.19 | 476.5 | 1.08 | 7227 | | | 3.58 | Si |
| SLU 36 | 171 | -52781 | 3141 | 2372688 | | 7.91 | 476.5 | 1.08 | 7227 | | | 2.3 | Si |
| SLU 36 | 544 | -35801 | 1874 | 95248 | | 5.37 | 476.5 | 1.08 | 7227 | | | 3.86 | Si |
| SLU 78 | 171 | -61399 | 3413 | 2757982 | | 9.2 | 476.5 | 1.08 | 7227 | | | 2.12 | Si |
| SLU 78 | 544 | -41180 | 1952 | 110422 | | 6.17 | 476.5 | 1.08 | 7227 | | | 3.7 | Si |
| SLU 37 | 171 | -52710 | 3204 | 2363475 | | 7.9 | 476.5 | 1.08 | 7227 | | | 2.26 | Si |
| SLU 37 | 544 | -35650 | 1908 | 116943 | | 5.34 | 476.5 | 1.08 | 7227 | | | 3.79 | Si |
| SLU 83 | 171 | -61732 | 3343 | 2736075 | | 9.25 | 476.5 | 1.08 | 7227 | | | 2.16 | Si |
| SLU 83 | 544 | -40738 | 1967 | 60413 | | 6.11 | 476.5 | 1.08 | 7227 | | | 3.67 | Si |
| SLU 80 | 171 | -61009 | 3405 | 2750785 | | 9.15 | 476.5 | 1.08 | 7227 | | | 2.12 | Si |
| SLU 80 | 544 | -40935 | 1918 | 127765 | | 6.14 | 476.5 | 1.08 | 7227 | | | 3.77 | Si |
| SLU 35 | 171 | -53100 | 3212 | 2370673 | | 7.96 | 476.5 | 1.08 | 7227 | | | 2.25 | Si |
| SLU 35 | 544 | -35895 | 1941 | 99601 | | 5.38 | 476.5 | 1.08 | 7227 | | | 3.72 | Si |

## Verifica a taglio nel piano secondo D.M. 17-01-18 (N.T.C.) §7.8.2.2.2 con rottura per scorrimento in combinazioni sismiche, γM = 2

| Comb. | Quota | N | V par | M | σ0 | σN | l' | fvd | Vt scorr. | Vt fess.diag. | Vt,lim | c.s. | Verifica |
|---|---|---|---|---|---|---|---|---|---|---|---|---|---|
| SLV 11 | 171 | -49916 | 14852 | 2181376 | | 7.48 | 476.5 | 1.63 | 10840 | | | 0.73 | No, Vu<V |
| SLV 11 | 544 | -31248 | 13238 | -118835 | | 4.68 | 476.5 | 1.63 | 10840 | | | 0.82 | No, Vu<V |

| Comb. | Quota | N | V par | M | σ0 | σN | l' | fvd | Vt scorr. | Vt fess.diag. | Vt,lim | c.s. | Verifica |
|---|---|---|---|---|---|---|---|---|---|---|---|---|---|
| SLV 15 | 171 | -41440 | 9412 | 1217511 | | 6.21 | 476.5 | 1.63 | 10840 | | | 1.15 | Si |
| SLV 15 | 544 | -27360 | 10196 | -619585 | | 4.1 | 476.5 | 1.63 | 10840 | | | 1.06 | Si |
| SLV 8 | 171 | -50774 | 12419 | 2618384 | | 7.61 | 476.5 | 1.63 | 10840 | | | 0.87 | No, Vu<V |
| SLV 8 | 544 | -31201 | 9571 | 282229 | | 4.68 | 476.5 | 1.63 | 10840 | | | 1.13 | Si |
| SLV 9 | 171 | -28557 | -8799 | 884168 | | 4.28 | 476.5 | 1.63 | 10840 | | | 1.23 | Si |
| SLV 9 | 544 | -19986 | -7675 | -212666 | | 3 | 476.5 | 1.43 | 9556 | | | 1.25 | Si |
| SLV 12 | 171 | -49916 | 14852 | 2181376 | | 7.48 | 476.5 | 1.63 | 10840 | | | 0.73 | No, Vu<V |
| SLV 12 | 544 | -31248 | 13238 | -118835 | | 4.68 | 476.5 | 1.63 | 10840 | | | 0.82 | No, Vu<V |
| SLV 7 | 171 | -50774 | 12419 | 2618384 | | 7.61 | 476.5 | 1.63 | 10840 | | | 0.87 | No, Vu<V |
| SLV 7 | 544 | -31201 | 9571 | 282229 | | 4.68 | 476.5 | 1.63 | 10840 | | | 1.13 | Si |
| SLV 5 | 171 | -29414 | -11231 | 1321176 | | 4.41 | 476.5 | 1.63 | 10840 | | | 0.97 | No, Vu<V |
| SLV 5 | 544 | -19939 | -11342 | 188398 | | 2.99 | 476.5 | 1.43 | 9547 | | | 0.84 | No, Vu<V |
| SLV 16 | 171 | -41440 | 9412 | 1217511 | | 6.21 | 476.5 | 1.63 | 10840 | | | 1.15 | Si |
| SLV 16 | 544 | -27360 | 10196 | -619585 | | 4.1 | 476.5 | 1.63 | 10840 | | | 1.06 | Si |
| SLV 6 | 171 | -29414 | -11231 | 1321176 | | 4.41 | 476.5 | 1.63 | 10840 | | | 0.97 | No, Vu<V |
| SLV 6 | 544 | -19939 | -11342 | 188398 | | 2.99 | 476.5 | 1.43 | 9547 | | | 0.84 | No, Vu<V |
| SLV 10 | 171 | -28557 | -8799 | 884168 | | 4.28 | 476.5 | 1.63 | 10840 | | | 1.23 | Si |
| SLV 10 | 544 | -19986 | -7675 | -212666 | | 3 | 476.5 | 1.43 | 9556 | | | 1.25 | Si |

### Verifica a pressoflessione fuori piano D.M. 17-01-18 (N.T.C.)

quota 357.5 Wa 0.03 denominatore 8 γM = 2

| Comb. | fd | Sa | σ0 | N | M | Mc | Coeff.s. | Verifica |
|---|---|---|---|---|---|---|---|---|
| SLV 10 | 14 | 0.32 | 3.55 | -23713 | 24145 | 117702 | 4.87 | Si |
| SLV 9 | 14 | 0.32 | 3.55 | -23713 | 24145 | 117702 | 4.87 | Si |
| SLV 5 | 14 | 0.32 | 3.79 | -25292 | 24145 | 122108 | 5.06 | Si |
| SLV 6 | 14 | 0.32 | 3.79 | -25292 | 24145 | 122108 | 5.06 | Si |
| SLV 14 | 14 | 0.32 | 4.13 | -27569 | 24145 | 127712 | 5.29 | Si |
| SLV 13 | 14 | 0.32 | 4.13 | -27569 | 24145 | 127712 | 5.29 | Si |
| SLV 16 | 14 | 0.32 | 4.86 | -32453 | 24145 | 136725 | 5.66 | Si |
| SLV 15 | 14 | 0.32 | 4.86 | -32453 | 24145 | 136725 | 5.66 | Si |
| SLV 1 | 14 | 0.32 | 4.92 | -32831 | 24145 | 137251 | 5.68 | Si |
| SLV 2 | 14 | 0.32 | 4.92 | -32831 | 24145 | 137251 | 5.68 | Si |

### Verifica dei meccanismi locali di collasso con analisi cinematica lineare

forza di aggancio al piano = 0 quota mezzeria = 357.5 Wa = 0.03 Ta = 0.166

| Comb. | N top | N base | V orto | α0 | M* | e* | a0* | aLim | Verifica |
|---|---|---|---|---|---|---|---|---|---|
| SLV 4 | -27205 | -44298 | 31 | 0.019 | 31.202 | 0.966 | 28.775 | 1435.066 | No |
| SLV 3 | -27205 | -44298 | 31 | 0.019 | 31.202 | 0.966 | 28.775 | 1435.066 | No |
| SLV 7 | -31201 | -50774 | 42 | 0.019 | 35.269 | 0.97 | 28.142 | 1399.295 | No |
| SLV 8 | -31201 | -50774 | 42 | 0.019 | 35.269 | 0.97 | 28.142 | 1399.295 | No |
| SLV 13 | -23982 | -35032 | -28 | 0.019 | 27.921 | 0.962 | 29.141 | 1435.066 | No |
| SLV 14 | -23982 | -35032 | -28 | 0.019 | 27.921 | 0.962 | 29.141 | 1435.066 | No |
| SLV 12 | -31248 | -49916 | 30 | 0.019 | 35.316 | 0.97 | 28.665 | 1399.295 | No |
| SLV 11 | -31248 | -49916 | 30 | 0.019 | 35.316 | 0.97 | 28.665 | 1399.295 | No |
| SLV 9 | -19986 | -28557 | -38 | 0.019 | 23.858 | 0.957 | 28.759 | 1399.295 | No |
| SLV 10 | -19986 | -28557 | -38 | 0.019 | 23.858 | 0.957 | 28.759 | 1399.295 | No |

### Tabella dei coefficienti di sicurezza minimi

| Stato limite | Coeff.s. | Comb. | Verifica |
|---|---|---|---|
| PF_SLU | 0 | SLU 56 | No |
| V_SLU | 2.074 | SLU 77 | Si |
| PF_SLV | 1.742 | SLV 7 | Si |
| V_SLV | 0.73 | SLV 11 | No |
| PFFP_SLV | 4.875 | SLV 9 | Si |
| R_SLV | 0.02 | SLV 3 | No |

## Maschio 88

Verifiche condotte secondo D.M. 17-01-18 (N.T.C.)

### Dati geometrici

| X ini. | Y ini. | X fin. | Y fin. | Quota i. | Quota.s | l | Sp. | h netta | h ini. | h fin. | a | a.s.,sx | a.s.,dx |
|---|---|---|---|---|---|---|---|---|---|---|---|---|---|
| -515.8 | 595.1 | -515.8 | 600.6 | L3 | L4 | 5.5 | 28 | 373 | 373 | 373 | | | |

### Caratteristiche del materiale

(Circolare 7 21-01-19 C8.5.I) Muratura in mattoni pieni e malta di calce LC2_Corti

| fb | fk | fvk0 | fmedio | τ0 | fv0 | μ | ϕ | fv,lim | E | G | FC |
|---|---|---|---|---|---|---|---|---|---|---|---|
| 60 | | | 34.5 | 0.9 | 2 | 0.58 | 0.77 | 3.25 | 32000 | 12800 | 1.2 |

### Verifica a pressoflessione nel piano secondo D.M. 17-01-18 NTC §7.8.2.2.1 in combinazioni non sismiche, γM = 3

| Comb. | Quota | N | M | σ0 | Mu | c.s. | Verifica |
|---|---|---|---|---|---|---|---|
| SLU 59 | 371 | -1264 | 2065 | 8.21 | 0 | 0 | No, Rottura per schiacciamento |
| SLU 59 | 451 | -1584 | 4473 | 0 | 0 | 0 | No, e>l/2 |
| SLU 1 | 371 | -798 | 1250 | 5.18 | 798 | 0.639 | No, M>Mu |
| SLU 1 | 451 | -1031 | 2987 | 0 | 0 | 0 | No, e>l/2 |
| SLU 54 | 371 | -1177 | 1851 | 7.64 | 200 | 0.108 | No, M>Mu |
| SLU 54 | 451 | -1533 | 4438 | 0 | 0 | 0 | No, e>l/2 |
| SLU 58 | 371 | -1270 | 2081 | 8.25 | 0 | 0 | No, Rottura per schiacciamento |
| SLU 58 | 451 | -1587 | 4477 | 0 | 0 | 0 | No, e>l/2 |
| SLU 55 | 371 | -1173 | 1851 | 7.61 | 210 | 0.114 | No, M>Mu |
| SLU 55 | 451 | -1518 | 4374 | 0 | 0 | 0 | No, e>l/2 |
| SLU 61 | 371 | -1137 | 1716 | 7.39 | 292 | 0.17 | No, M>Mu |

| Comb. | Quota | N | M | σ0 | Mu | c.s. | Verifica |
|---|---|---|---|---|---|---|---|
| SLU 61 | 451 | -1536 | 4535 | 0 | 0 | 0 | No, e>l/2 |
| SLU 60 | 371 | -1144 | 1732 | 7.43 | 277 | 0.16 | No, M>Mu |
| SLU 60 | 451 | -1539 | 4539 | 0 | 0 | 0 | No, e>l/2 |
| SLU 56 | 371 | -1270 | 2070 | 8.25 | 0 | 0 | No, Rottura per schiacciamento |
| SLU 56 | 451 | -1600 | 4539 | 0 | 0 | 0 | No, e>l/2 |
| SLU 53 | 371 | -1184 | 1868 | 7.69 | 183 | 0.098 | No, M>Mu |
| SLU 53 | 451 | -1536 | 4442 | 0 | 0 | 0 | No, e>l/2 |
| SLU 57 | 371 | -1264 | 2054 | 8.21 | 0 | 0 | No, Rottura per schiacciamento |
| SLU 57 | 451 | -1597 | 4535 | 0 | 0 | 0 | No, e>l/2 |

Verifica a pressoflessione nel piano secondo D.M. 17-01-18 NTC §7.8.2.2.1 in combinazioni sismiche, γM = 2

| Comb. | Quota | N | M | σ0 | Mu | c.s. | Verifica |
|---|---|---|---|---|---|---|---|
| SLV 5 | 371 | -406 | 419 | 2.64 | 876 | 2.091 | Si |
| SLV 5 | 451 | -753 | 3025 | 0 | 0 | 0 | No, e>l/2 |
| SLD 14 | 371 | -619 | 561 | 4.02 | 1142 | 2.034 | Si |
| SLD 14 | 451 | -1255 | 4052 | 0 | 0 | 0 | No, e>l/2 |
| SLD 15 | 371 | -765 | 903 | 4.97 | 1248 | 1.382 | Si |
| SLD 15 | 451 | -1325 | 4004 | 0 | 0 | 0 | No, e>l/2 |
| SLV 14 | 371 | -275 | -502 | 1.79 | 646 | 1.286 | Si |
| SLV 14 | 451 | -1399 | 5022 | 0 | 0 | 0 | No, e>l/2 |
| SLD 1 | 371 | -976 | 1802 | 6.34 | 1292 | 0.717 | No, M>Mu |
| SLD 1 | 451 | -956 | 2636 | 0 | 0 | 0 | No, e>l/2 |
| SLV 10 | 371 | -155 | -448 | 0 | 0 | 0 | No, e>l/2 |
| SLV 10 | 451 | -959 | 4011 | 0 | 0 | 0 | No, e>l/2 |
| SLV 15 | 371 | -629 | 318 | 4.08 | 1151 | 3.617 | Si |
| SLV 15 | 451 | -1570 | 4903 | 0 | 0 | 0 | No, e>l/2 |
| SLV 6 | 371 | -406 | 419 | 2.64 | 876 | 2.091 | Si |
| SLV 6 | 451 | -753 | 3025 | 0 | 0 | 0 | No, e>l/2 |
| SLV 13 | 371 | -275 | -502 | 1.79 | 646 | 1.286 | Si |
| SLV 13 | 451 | -1399 | 5022 | 0 | 0 | 0 | No, e>l/2 |
| SLV 9 | 371 | -155 | -448 | 0 | 0 | 0 | No, e>l/2 |
| SLV 9 | 451 | -959 | 4011 | 0 | 0 | 0 | No, e>l/2 |

Verifica a taglio nel piano secondo D.M. 17-01-18 (N.T.C.) §7.8.2.2.2 con rottura per scorrimento in combinazioni non sismiche, γM = 3

| Comb. | Quota | N | V par | M | σ0 | σN | l' | fvd | Vt scorr. | Vt fess.diag. | Vt,lim | c.s. | Verifica |
|---|---|---|---|---|---|---|---|---|---|---|---|---|---|
| SLU 59 | 371 | -1264 | 106 | 2065 | | 13.48 | 3.35 | 1.08 | 102 | | | 0.96 | No, Vu<V |
| SLU 59 | 451 | -1584 | -212 | 4473 | | 0 | 0 | 0.56 | 0 | | | 0 | No, Vu<V |
| SLU 54 | 371 | -1177 | 96 | 1851 | | 11.9 | 3.53 | 1.08 | 107 | | | 1.11 | Si |
| SLU 54 | 451 | -1533 | -210 | 4438 | | 0 | 0 | 0.56 | 0 | | | 0 | No, Vu<V |
| SLU 61 | 371 | -1137 | 90 | 1716 | | 10.91 | 3.72 | 1.08 | 113 | | | 1.25 | Si |
| SLU 61 | 451 | -1536 | -215 | 4535 | | 0 | 0 | 0.56 | 0 | | | 0 | No, Vu<V |
| SLU 58 | 371 | -1270 | 107 | 2081 | | 13.6 | 3.34 | 1.08 | 101 | | | 0.94 | No, Vu<V |
| SLU 58 | 451 | -1587 | -213 | 4477 | | 0 | 0 | 0.56 | 0 | | | 0 | No, Vu<V |
| SLU 53 | 371 | -1184 | 97 | 1868 | | 12.02 | 3.52 | 1.08 | 107 | | | 1.1 | Si |
| SLU 53 | 451 | -1536 | -211 | 4442 | | 0 | 0 | 0.56 | 0 | | | 0 | No, Vu<V |
| SLU 57 | 371 | -1264 | 106 | 2054 | | 13.38 | 3.37 | 1.08 | 102 | | | 0.97 | No, Vu<V |
| SLU 57 | 451 | -1597 | -215 | 4535 | | 0 | 0 | 0.56 | 0 | | | 0 | No, Vu<V |
| SLU 60 | 371 | -1144 | 91 | 1732 | | 11.02 | 3.71 | 1.08 | 112 | | | 1.24 | Si |
| SLU 60 | 451 | -1539 | -215 | 4539 | | 0 | 0 | 0.56 | 0 | | | 0 | No, Vu<V |
| SLU 55 | 371 | -1173 | 96 | 1851 | | 11.92 | 3.51 | 1.08 | 107 | | | 1.11 | Si |
| SLU 55 | 451 | -1518 | -207 | 4374 | | 0 | 0 | 0.56 | 0 | | | 0 | No, Vu<V |
| SLU 1 | 371 | -798 | 65 | 1250 | | 8.02 | 3.55 | 1.08 | 108 | | | 1.66 | Si |
| SLU 1 | 451 | -1031 | -142 | 2987 | | 0 | 0 | 0.56 | 0 | | | 0 | No, Vu<V |
| SLU 56 | 371 | -1270 | 107 | 2070 | | 13.5 | 3.36 | 1.08 | 102 | | | 0.95 | No, Vu<V |
| SLU 56 | 451 | -1600 | -215 | 4539 | | 0 | 0 | 0.56 | 0 | | | 0 | No, Vu<V |

Verifica a taglio nel piano secondo D.M. 17-01-18 (N.T.C.) §7.8.2.2.2 con rottura per scorrimento in combinazioni sismiche, γM = 2

| Comb. | Quota | N | V par | M | σ0 | σN | l' | fvd | Vt scorr. | Vt fess.diag. | Vt,lim | c.s. | Verifica |
|---|---|---|---|---|---|---|---|---|---|---|---|---|---|
| SLV 5 | 371 | -406 | 15 | 419 | | 2.81 | 5.16 | 1.4 | 202 | | | 13.81 | Si |
| SLV 5 | 451 | -753 | -154 | 3025 | | 0 | 0 | 0.83 | 0 | | | 0 | No, Vu<V |
| SLD 15 | 371 | -765 | 47 | 903 | | 5.8 | 4.71 | 1.63 | 214 | | | 4.6 | Si |
| SLD 15 | 451 | -1325 | -185 | 4004 | | 0 | 0 | 0.83 | 0 | | | 0 | No, Vu<V |
| SLV 15 | 371 | -629 | 16 | 318 | | 4.08 | 5.5 | 1.63 | 250 | | | 15.93 | Si |
| SLV 15 | 451 | -1570 | -222 | 4903 | | 0 | 0 | 0.83 | 0 | | | 0 | No, Vu<V |
| SLD 1 | 371 | -976 | 95 | 1802 | | 12.85 | 2.71 | 1.63 | 123 | | | 1.31 | Si |
| SLD 1 | 451 | -956 | -129 | 2636 | | 0 | 0 | 0.83 | 0 | | | 0 | No, Vu<V |
| SLV 6 | 371 | -406 | 15 | 419 | | 2.81 | 5.16 | 1.4 | 202 | | | 13.81 | Si |
| SLV 6 | 451 | -753 | -154 | 3025 | | 0 | 0 | 0.83 | 0 | | | 0 | No, Vu<V |
| SLV 9 | 371 | -155 | -33 | -448 | | 0 | 0 | 0.83 | 0 | | | 0 | No, Vu<V |
| SLV 9 | 451 | -959 | -196 | 4011 | | 0 | 0 | 0.83 | 0 | | | 0 | No, Vu<V |
| SLD 14 | 371 | -619 | 26 | 561 | | 4.02 | 5.5 | 1.63 | 250 | | | 9.45 | Si |
| SLD 14 | 451 | -1255 | -190 | 4052 | | 0 | 0 | 0.83 | 0 | | | 0 | No, Vu<V |
| SLV 10 | 371 | -155 | -33 | -448 | | 0 | 0 | 0.83 | 0 | | | 0 | No, Vu<V |
| SLV 10 | 451 | -959 | -196 | 4011 | | 0 | 0 | 0.83 | 0 | | | 0 | No, Vu<V |
| SLV 14 | 371 | -275 | -32 | -502 | | 3.54 | 2.77 | 1.54 | 120 | | | 3.74 | Si |
| SLV 14 | 451 | -1399 | -233 | 5022 | | 0 | 0 | 0.83 | 0 | | | 0 | No, Vu<V |
| SLV 13 | 371 | -275 | -32 | -502 | | 3.54 | 2.77 | 1.54 | 120 | | | 3.74 | Si |
| SLV 13 | 451 | -1399 | -233 | 5022 | | 0 | 0 | 0.83 | 0 | | | 0 | No, Vu<V |

Verifica a pressoflessione fuori piano D.M. 17-01-18 (N.T.C.)

quota 357.5 Wa 0.05 denominatore 8 γM = 2

| Comb. | fd | Sa | σ0 | N | M | Mc | Coeff.s. | Verifica |
|---|---|---|---|---|---|---|---|---|
| SLV 10 | 14 | 0.32 | 0.45 | -69 | 533 | 935 | 1.75 | Si |
| SLV 9 | 14 | 0.32 | 0.45 | -69 | 533 | 935 | 1.75 | Si |
| SLV 13 | 14 | 0.32 | 0.64 | -98 | 533 | 1302 | 2.44 | Si |

| Comb. | fd | Sa | σ0 | N | M | Mc | Coeff.s. | Verifica |
|---|---|---|---|---|---|---|---|---|
| SLV 14 | 14 | 0.32 | 0.64 | -98 | 533 | 1302 | 2.44 | Si |
| SLV 6 | 14 | 0.32 | 1.45 | -223 | 533 | 2754 | 5.16 | Si |
| SLV 5 | 14 | 0.32 | 1.45 | -223 | 533 | 2754 | 5.16 | Si |
| SLV 15 | 14 | 0.32 | 1.8 | -277 | 533 | 3303 | 6.19 | Si |
| SLV 16 | 14 | 0.32 | 1.8 | -277 | 533 | 3303 | 6.19 | Si |
| SLV 2 | 14 | 0.32 | 3.97 | -611 | 533 | 5776 | 10.83 | Si |
| SLV 1 | 14 | 0.32 | 3.97 | -611 | 533 | 5776 | 10.83 | Si |

### Verifica dei meccanismi locali di collasso con analisi cinematica lineare

forza di aggancio al piano = 0 quota mezzeria = 357.5 Wa = 0.05 Ta = 0.083

| Comb. | N top | N base | V orto | α0 | M* | e* | a0* | aLim | Verifica |
|---|---|---|---|---|---|---|---|---|---|
| SLV 7 | -537 | -2357 | 2 | 0.038 | 0.628 | 0.961 | 57.316 | 1417.879 | No |
| SLV 8 | -537 | -2357 | 2 | 0.038 | 0.628 | 0.961 | 57.316 | 1417.879 | No |
| SLV 12 | -503 | -2342 | 2 | 0.038 | 0.593 | 0.959 | 57.412 | 1417.879 | No |
| SLV 11 | -503 | -2342 | 2 | 0.038 | 0.593 | 0.959 | 57.412 | 1417.879 | No |
| SLV 5 | -248 | -1295 | -2 | 0.038 | 0.335 | 0.933 | 59.918 | 1417.879 | No |
| SLV 6 | -248 | -1295 | -2 | 0.038 | 0.335 | 0.933 | 59.918 | 1417.879 | No |
| SLV 9 | -215 | -1279 | -2 | 0.039 | 0.301 | 0.927 | 60.627 | 1417.879 | No |
| SLV 10 | -215 | -1279 | -2 | 0.039 | 0.301 | 0.927 | 60.627 | 1417.879 | No |
| SLV 4 | -476 | -2003 | 1 | 0.04 | 0.565 | 0.958 | 61.081 | 813.056 | No |
| SLV 3 | -476 | -2003 | 1 | 0.04 | 0.565 | 0.958 | 61.081 | 813.056 | No |

### Tabella dei coefficienti di sicurezza minimi

| Stato limite | Coeff.s. | Comb. | Verifica |
|---|---|---|---|
| PF_SLU | 0 | SLU 1 | No |
| V_SLU | 0 | SLU 1 | No |
| PF_SLV | 0 | SLD 1 | No |
| V_SLV | 0 | SLD 1 | No |
| PFFP_SLV | 1.753 | SLV 9 | Si |
| R_SLV | 0.04 | SLV 7 | No |

## Maschio 89

Verifiche condotte secondo D.M. 17-01-18 (N.T.C.)

### Dati geometrici

| X ini. | Y ini. | X fin. | Y fin. | Quota i. | Quota.s | l | Sp. | h netta | h ini. | h fin. | a | a.s.,sx | a.s.,dx |
|---|---|---|---|---|---|---|---|---|---|---|---|---|---|
| -515.8 | 650.6 | -515.8 | 666.1 | L3 | L4 | 15.5 | 28 | 373 | 373 | 373 | | | |

### Caratteristiche del materiale

(Circolare 7 21-01-19 C8.5.I) Muratura in mattoni pieni e malta di calce LC2_Corti

| fb | fk | fvk0 | fmedio | τ0 | fv0 | μ | ϕ | fv,lim | E | G | FC |
|---|---|---|---|---|---|---|---|---|---|---|---|
| 60 | | | 34.5 | 0.9 | 2 | 0.58 | 0.77 | 3.25 | 32000 | 12800 | 1.2 |

### Verifica a pressoflessione nel piano secondo D.M. 17-01-18 NTC §7.8.2.2.1 in combinazioni non sismiche, γM = 3

| Comb. | Quota | N | M | σ0 | Mu | c.s. | Verifica |
|---|---|---|---|---|---|---|---|
| SLU 53 | 371 | -4617 | -15581 | 10.64 | 0 | 0 | No, Rottura per schiacciamento |
| SLU 53 | 451 | -2602 | 11416 | 6 | 5324 | 0.466 | No, M>Mu |
| SLU 42 | 371 | -4650 | -15916 | 10.71 | 0 | 0 | No, Rottura per schiacciamento |
| SLU 42 | 451 | -2608 | 11720 | 6.01 | 5301 | 0.452 | No, M>Mu |
| SLU 56 | 371 | -4773 | -15362 | 11 | 0 | 0 | No, Rottura per schiacciamento |
| SLU 56 | 451 | -2801 | 10942 | 6.45 | 4510 | 0.412 | No, M>Mu |
| SLU 58 | 371 | -4725 | -15014 | 10.89 | 0 | 0 | No, Rottura per schiacciamento |
| SLU 58 | 451 | -2800 | 10610 | 6.45 | 4514 | 0.425 | No, M>Mu |
| SLU 61 | 371 | -4648 | -16558 | 10.71 | 0 | 0 | No, Rottura per schiacciamento |
| SLU 61 | 451 | -2493 | 12486 | 5.75 | 5695 | 0.456 | No, M>Mu |
| SLU 60 | 371 | -4658 | -16528 | 10.73 | 0 | 0 | No, Rottura per schiacciamento |
| SLU 60 | 451 | -2508 | 12441 | 5.78 | 5648 | 0.454 | No, M>Mu |
| SLU 55 | 371 | -4553 | -15285 | 10.49 | 0 | 0 | No, Rottura per schiacciamento |
| SLU 55 | 451 | -2576 | 11159 | 5.94 | 5416 | 0.485 | No, M>Mu |
| SLU 59 | 371 | -4715 | -15045 | 10.86 | 0 | 0 | No, Rottura per schiacciamento |
| SLU 59 | 451 | -2785 | 10655 | 6.42 | 4580 | 0.43 | No, M>Mu |
| SLU 54 | 371 | -4607 | -15612 | 10.62 | 0 | 0 | No, Rottura per schiacciamento |
| SLU 54 | 451 | -2587 | 11461 | 5.96 | 5378 | 0.469 | No, M>Mu |
| SLU 57 | 371 | -4763 | -15392 | 10.97 | 0 | 0 | No, Rottura per schiacciamento |
| SLU 57 | 451 | -2786 | 10987 | 6.42 | 4576 | 0.417 | No, M>Mu |

### Verifica a pressoflessione nel piano secondo D.M. 17-01-18 NTC §7.8.2.2.1 in combinazioni sismiche, γM = 2

| Comb. | Quota | N | M | σ0 | Mu | c.s. | Verifica |
|---|---|---|---|---|---|---|---|
| SLV 6 | 371 | -2094 | -8242 | 4.83 | 9821 | 1.191 | Si |
| SLV 6 | 451 | -936 | 9298 | 0 | 0 | 0 | No, e>l/2 |
| SLV 5 | 371 | -2094 | -8242 | 4.83 | 9821 | 1.191 | Si |
| SLV 5 | 451 | -936 | 9298 | 0 | 0 | 0 | No, e>l/2 |
| SLV 9 | 371 | -2723 | -17710 | 6.28 | 10267 | 0.58 | No, M>Mu |

| Comb. | Quota | N | M | σ0 | Mu | c.s. | Verifica |
|---|---|---|---|---|---|---|---|
| SLV 9 | 451 | -274 | 18776 | 0 | 0 | 0 | No, e>l/2 |
| SLD 14 | 371 | -3762 | -18725 | 8.67 | 8473 | 0.452 | No, M>Mu |
| SLD 14 | 451 | -1270 | 16188 | 0 | 0 | 0 | No, e>l/2 |
| SLV 10 | 371 | -2723 | -17710 | 6.28 | 10267 | 0.58 | No, M>Mu |
| SLV 10 | 451 | -274 | 18776 | 0 | 0 | 0 | No, e>l/2 |
| SLD 15 | 371 | -4020 | -18438 | 9.26 | 7538 | 0.409 | No, M>Mu |
| SLD 15 | 451 | -1596 | 14840 | 0 | 0 | 0 | No, e>l/2 |
| SLV 15 | 371 | -4796 | -27215 | 11.05 | 3552 | 0.131 | No, M>Mu |
| SLV 15 | 451 | -1195 | 22922 | 0 | 0 | 0 | No, e>l/2 |
| SLD 16 | 371 | -4020 | -18438 | 9.26 | 7538 | 0.409 | No, M>Mu |
| SLD 16 | 451 | -1596 | 14840 | 0 | 0 | 0 | No, e>l/2 |
| SLV 14 | 371 | -4178 | -27926 | 9.63 | 6867 | 0.246 | No, M>Mu |
| SLV 14 | 451 | -413 | 26112 | 0 | 0 | 0 | No, e>l/2 |
| SLV 13 | 371 | -4178 | -27926 | 9.63 | 6867 | 0.246 | No, M>Mu |
| SLV 13 | 451 | -413 | 26112 | 0 | 0 | 0 | No, e>l/2 |

### Verifica a taglio nel piano secondo D.M. 17-01-18 (N.T.C.) §7.8.2.2.2 con rottura per scorrimento in combinazioni non sismiche, γM = 3

| Comb. | Quota | N | V par | M | σ0 | σN | l' | fvd | Vt scorr. | Vt fess.diag. | Vt,lim | c.s. | Verifica |
|---|---|---|---|---|---|---|---|---|---|---|---|---|---|
| SLU 83 | 371 | -5394 | -627 | -18339 | | 14.76 | 13.05 | 1.08 | 396 | | | 0.63 | No, Vu<V |
| SLU 83 | 451 | -3034 | -610 | 13470 | | 10.91 | 9.93 | 1.08 | 301 | | | 0.49 | No, Vu<V |
| SLU 61 | 371 | -4648 | -570 | -16558 | | 13.21 | 12.56 | 1.08 | 381 | | | 0.67 | No, Vu<V |
| SLU 61 | 451 | -2493 | -557 | 12486 | | 10.82 | 8.23 | 1.08 | 250 | | | 0.45 | No, Vu<V |
| SLU 60 | 371 | -4658 | -569 | -16528 | | 13.2 | 12.6 | 1.08 | 382 | | | 0.67 | No, Vu<V |
| SLU 60 | 451 | -2508 | -556 | 12441 | | 10.7 | 8.37 | 1.08 | 254 | | | 0.46 | No, Vu<V |
| SLU 40 | 371 | -4494 | -556 | -16136 | | 12.86 | 12.48 | 1.08 | 379 | | | 0.68 | No, Vu<V |
| SLU 40 | 451 | -2409 | -543 | 12194 | | 10.67 | 8.07 | 1.08 | 245 | | | 0.45 | No, Vu<V |
| SLU 39 | 371 | -4504 | -555 | -16106 | | 12.85 | 12.52 | 1.08 | 380 | | | 0.68 | No, Vu<V |
| SLU 39 | 451 | -2424 | -542 | 12149 | | 10.54 | 8.21 | 1.08 | 249 | | | 0.46 | No, Vu<V |
| SLU 82 | 371 | -5228 | -640 | -18589 | | 14.84 | 12.58 | 1.08 | 382 | | | 0.6 | No, Vu<V |
| SLU 82 | 451 | -2820 | -625 | 13989 | | 12.03 | 8.37 | 1.08 | 254 | | | 0.41 | No, Vu<V |
| SLU 81 | 371 | -5238 | -638 | -18558 | | 14.82 | 12.62 | 1.08 | 383 | | | 0.6 | No, Vu<V |
| SLU 81 | 451 | -2835 | -624 | 13944 | | 11.92 | 8.49 | 1.08 | 258 | | | 0.41 | No, Vu<V |
| SLU 73 | 371 | -4977 | -603 | -17535 | | 14.02 | 12.68 | 1.08 | 385 | | | 0.64 | No, Vu<V |
| SLU 73 | 451 | -2704 | -588 | 13136 | | 11.13 | 8.68 | 1.08 | 263 | | | 0.45 | No, Vu<V |
| SLU 84 | 371 | -5384 | -628 | -18369 | | 14.77 | 13.01 | 1.08 | 395 | | | 0.63 | No, Vu<V |
| SLU 84 | 451 | -3019 | -611 | 13515 | | 10.98 | 9.82 | 1.08 | 298 | | | 0.49 | No, Vu<V |
| SLU 52 | 371 | -4397 | -533 | -15504 | | 12.39 | 12.67 | 1.08 | 384 | | | 0.72 | No, Vu<V |
| SLU 52 | 451 | -2378 | -521 | 11633 | | 9.91 | 8.57 | 1.08 | 260 | | | 0.5 | No, Vu<V |

### Verifica a taglio nel piano secondo D.M. 17-01-18 (N.T.C.) §7.8.2.2.2 con rottura per scorrimento in combinazioni sismiche, γM = 2

| Comb. | Quota | N | V par | M | σ0 | σN | l' | fvd | Vt scorr. | Vt fess.diag. | Vt,lim | c.s. | Verifica |
|---|---|---|---|---|---|---|---|---|---|---|---|---|---|
| SLV 13 | 371 | -4178 | -1063 | -27926 | | 46.64 | 3.2 | 1.63 | 146 | | | 0.14 | No, Vu<V |
| SLV 13 | 451 | -413 | -1054 | 26112 | | 0 | 0 | 0.83 | 0 | | | 0 | No, Vu<V |
| SLD 14 | 371 | -3762 | -687 | -18725 | | 16.15 | 8.32 | 1.63 | 378 | | | 0.55 | No, Vu<V |
| SLD 14 | 451 | -1270 | -677 | 16188 | | 0 | 0 | 0.83 | 0 | | | 0 | No, Vu<V |
| SLD 16 | 371 | -4020 | -639 | -18438 | | 15.13 | 9.49 | 1.63 | 432 | | | 0.68 | No, Vu<V |
| SLD 16 | 451 | -1596 | -630 | 14840 | | 0 | 0 | 0.83 | 0 | | | 0 | No, Vu<V |
| SLV 6 | 371 | -2094 | -409 | -8242 | | 6.54 | 11.44 | 1.63 | 521 | | | 1.27 | Si |
| SLV 6 | 451 | -936 | -398 | 9298 | | 0 | 0 | 0.83 | 0 | | | 0 | No, Vu<V |
| SLV 14 | 371 | -4178 | -1063 | -27926 | | 46.64 | 3.2 | 1.63 | 146 | | | 0.14 | No, Vu<V |
| SLV 14 | 451 | -413 | -1054 | 26112 | | 0 | 0 | 0.83 | 0 | | | 0 | No, Vu<V |
| SLV 10 | 371 | -2723 | -771 | -17710 | | 25.99 | 3.74 | 1.63 | 170 | | | 0.22 | No, Vu<V |
| SLV 10 | 451 | -274 | -761 | 18776 | | 0 | 0 | 0.83 | 0 | | | 0 | No, Vu<V |
| SLV 9 | 371 | -2723 | -771 | -17710 | | 25.99 | 3.74 | 1.63 | 170 | | | 0.22 | No, Vu<V |
| SLV 9 | 451 | -274 | -761 | 18776 | | 0 | 0 | 0.83 | 0 | | | 0 | No, Vu<V |
| SLV 15 | 371 | -4796 | -951 | -27215 | | 27.51 | 6.23 | 1.63 | 283 | | | 0.3 | No, Vu<V |
| SLV 15 | 451 | -1195 | -942 | 22922 | | 0 | 0 | 0.83 | 0 | | | 0 | No, Vu<V |
| SLD 15 | 371 | -4020 | -639 | -18438 | | 15.13 | 9.49 | 1.63 | 432 | | | 0.68 | No, Vu<V |
| SLD 15 | 451 | -1596 | -630 | 14840 | | 0 | 0 | 0.83 | 0 | | | 0 | No, Vu<V |
| SLV 5 | 371 | -2094 | -409 | -8242 | | 6.54 | 11.44 | 1.63 | 521 | | | 1.27 | Si |
| SLV 5 | 451 | -936 | -398 | 9298 | | 0 | 0 | 0.83 | 0 | | | 0 | No, Vu<V |

### Verifica a pressoflessione fuori piano D.M. 17-01-18 (N.T.C.)

quota 357.5 Wa 0.05 denominatore 8 γM = 2

| Comb. | fd | Sa | σ0 | N | M | Mc | Coeff.s. | Verifica |
|---|---|---|---|---|---|---|---|---|
| SLV 1 | 14 | 0.32 | 3.29 | -1430 | 1503 | 14621 | 9.73 | Si |
| SLV 2 | 14 | 0.32 | 3.29 | -1430 | 1503 | 14621 | 9.73 | Si |
| SLV 5 | 14 | 0.32 | 3.56 | -1547 | 1503 | 15340 | 10.21 | Si |
| SLV 6 | 14 | 0.32 | 3.56 | -1547 | 1503 | 15340 | 10.21 | Si |
| SLV 15 | 14 | 0.32 | 8.1 | -3516 | 1503 | 16589 | 11.04 | Si |
| SLV 16 | 14 | 0.32 | 8.1 | -3516 | 1503 | 16589 | 11.04 | Si |
| SLV 4 | 14 | 0.32 | 4.23 | -1834 | 1503 | 16796 | 11.18 | Si |
| SLV 3 | 14 | 0.32 | 4.23 | -1834 | 1503 | 16796 | 11.18 | Si |
| SLV 12 | 14 | 0.32 | 7.83 | -3398 | 1503 | 17087 | 11.37 | Si |
| SLV 11 | 14 | 0.32 | 7.83 | -3398 | 1503 | 17087 | 11.37 | Si |

### Verifica dei meccanismi locali di collasso con analisi cinematica lineare

forza di aggancio al piano = 0 quota mezzeria = 357.5 Wa = 0.05 Ta = 0.083

| Comb. | N top | N base | V orto | α0 | M* | e* | a0* | aLim | Verifica |
|---|---|---|---|---|---|---|---|---|---|
| SLV 9 | 281 | -2859 | -11 | 0 | 0 | 0 | 0 | 1417.879 | No, Trazione |
| SLV 15 | -109 | -5175 | 30 | 0 | 0.364 | 0.891 | 0 | 813.056 | No |
| SLV 14 | 330 | -4422 | 17 | 0 | 0 | 0 | 0 | 813.056 | No, Trazione |
| SLV 13 | 330 | -4422 | 17 | 0 | 0 | 0 | 0 | 813.056 | No, Trazione |
| SLV 16 | -109 | -5175 | 30 | 0 | 0.364 | 0.891 | 0 | 813.056 | No |
| SLV 10 | 281 | -2859 | -11 | 0 | 0 | 0 | 0 | 1417.879 | No, Trazione |
| SLV 5 | -200 | -2271 | -23 | 0 | 0.446 | 0.891 | 0 | 1417.879 | No |
| SLV 6 | -200 | -2271 | -23 | 0 | 0.446 | 0.891 | 0 | 1417.879 | No |

| Comb. | N top | N base | V orto | α0 | M* | e* | a0* | aLim | Verifica |
|---|---|---|---|---|---|---|---|---|---|
| SLV 12 | -1183 | -5366 | 32 | 0.017 | 1.433 | 0.953 | 26.26 | 1417.879 | No |
| SLV 11 | -1183 | -5366 | 32 | 0.017 | 1.433 | 0.953 | 26.26 | 1417.879 | No |

### Tabella dei coefficienti di sicurezza minimi

| Stato limite | Coeff.s. | Comb. | Verifica |
|---|---|---|---|
| PF_SLU | 0 | SLU 10 | No |
| V_SLU | 0.406 | SLU 82 | No |
| PF_SLV | 0 | SLD 9 | No |
| V_SLV | 0 | SLD 9 | No |
| PFFP_SLV | 9.731 | SLV 1 | Si |
| R_SLV | 0 | SLV 14 | No |

## Maschio 90

Verifiche condotte secondo D.M. 17-01-18 (N.T.C.)

### Dati geometrici

| X ini. | Y ini. | X fin. | Y fin. | Quota i. | Quota.s | l | Sp. | h netta | h ini. | h fin. | a | a.s.,sx | a.s.,dx |
|---|---|---|---|---|---|---|---|---|---|---|---|---|---|
| -600.8 | -335.9 | -646.3 | -335.9 | L3 | L4 | 45.5 | 28 | 373 | 373 | 373 | | | |

### Caratteristiche del materiale

(Circolare 7 21-01-19 C8.5.I) Muratura in mattoni pieni e malta di calce LC2_Corti

| fb | fk | fvk0 | fmedio | τ0 | fv0 | μ | ϕ | fv,lim | E | G | FC |
|---|---|---|---|---|---|---|---|---|---|---|---|
| 60 | | | 34.5 | 0.9 | 2 | 0.58 | 0.77 | 3.25 | 32000 | 12800 | 1.2 |

### Verifica a pressoflessione nel piano secondo D.M. 17-01-18 NTC §7.8.2.2.1 in combinazioni non sismiche, γM = 3

| Comb. | Quota | N | M | σ0 | Mu | c.s. | Verifica |
|---|---|---|---|---|---|---|---|
| SLU 83 | 371 | -10269 | 16453 | 8.06 | 2452 | 0.149 | No, M>Mu |
| SLU 83 | 451 | -11386 | -27102 | 8.94 | 0 | 0 | No, Rottura per schiacciamento |
| SLU 57 | 371 | -9473 | 17530 | 7.44 | 18782 | 1.071 | Si |
| SLU 57 | 451 | -10422 | -26518 | 8.18 | 0 | 0 | No, Rottura per schiacciamento |
| SLU 63 | 371 | -9696 | 18204 | 7.61 | 14488 | 0.796 | No, M>Mu |
| SLU 63 | 451 | -10669 | -27782 | 8.37 | 0 | 0 | No, Rottura per schiacciamento |
| SLU 74 | 371 | -9891 | 16161 | 7.76 | 10560 | 0.653 | No, M>Mu |
| SLU 74 | 451 | -10946 | -26735 | 8.59 | 0 | 0 | No, Rottura per schiacciamento |
| SLU 75 | 371 | -10215 | 19285 | 8.02 | 3652 | 0.189 | No, M>Mu |
| SLU 75 | 451 | -11253 | -29736 | 8.83 | 0 | 0 | No, Rottura per schiacciamento |
| SLU 61 | 371 | -9541 | 18586 | 7.49 | 17504 | 0.942 | No, M>Mu |
| SLU 61 | 451 | -10475 | -28678 | 8.22 | 0 | 0 | No, Rottura per schiacciamento |
| SLU 78 | 371 | -10370 | 18903 | 8.14 | 177 | 0.009 | No, M>Mu |
| SLU 78 | 451 | -11446 | -28840 | 8.98 | 0 | 0 | No, Rottura per schiacciamento |
| SLU 84 | 371 | -10593 | 19577 | 8.31 | 0 | 0 | No, Rottura per schiacciamento |
| SLU 84 | 451 | -11693 | -30104 | 9.18 | 0 | 0 | No, Rottura per schiacciamento |
| SLU 77 | 371 | -10046 | 15779 | 7.89 | 7306 | 0.463 | No, M>Mu |
| SLU 77 | 451 | -11139 | -25839 | 8.74 | 0 | 0 | No, Rottura per schiacciamento |
| SLU 73 | 371 | -10205 | 21504 | 8.01 | 3864 | 0.18 | No, M>Mu |
| SLU 73 | 451 | -11191 | -32086 | 8.78 | 0 | 0 | No, Rottura per schiacciamento |

### Verifica a pressoflessione nel piano secondo D.M. 17-01-18 NTC §7.8.2.2.1 in combinazioni sismiche, γM = 2

| Comb. | Quota | N | M | σ0 | Mu | c.s. | Verifica |
|---|---|---|---|---|---|---|---|
| SLV 4 | 371 | -3862 | 80992 | 3.03 | 66067 | 0.816 | No, M>Mu |
| SLV 4 | 451 | -4737 | -118586 | 0 | 0 | 0 | No, e>l/2 |
| SLV 2 | 371 | -5791 | 83637 | 4.55 | 82732 | 0.989 | No, M>Mu |
| SLV 2 | 451 | -6640 | -126002 | 5.21 | 86625 | 0.687 | No, M>Mu |
| SLV 15 | 371 | -7673 | -60379 | 6.02 | 88518 | 1.466 | Si |
| SLV 15 | 451 | -8181 | 87419 | 6.42 | 88304 | 1.01 | Si |
| SLV 1 | 371 | -5791 | 83637 | 4.55 | 82732 | 0.989 | No, M>Mu |
| SLV 1 | 451 | -6640 | -126002 | 5.21 | 86625 | 0.687 | No, M>Mu |
| SLV 14 | 371 | -9601 | -57734 | 7.54 | 83706 | 1.45 | Si |
| SLV 14 | 451 | -10083 | 80002 | 7.91 | 80803 | 1.01 | Si |
| SLV 5 | 371 | -9374 | 37243 | 7.36 | 84839 | 2.278 | Si |
| SLV 5 | 451 | -10065 | -62553 | 7.9 | 80929 | 1.294 | Si |
| SLV 3 | 371 | -3862 | 80992 | 3.03 | 66067 | 0.816 | No, M>Mu |
| SLV 3 | 451 | -4737 | -118586 | 0 | 0 | 0 | No, e>l/2 |
| SLV 16 | 371 | -7673 | -60379 | 6.02 | 88518 | 1.466 | Si |
| SLV 16 | 451 | -8181 | 87419 | 6.42 | 88304 | 1.01 | Si |
| SLV 6 | 371 | -9374 | 37243 | 7.36 | 84839 | 2.278 | Si |
| SLV 6 | 451 | -10065 | -62553 | 7.9 | 80929 | 1.294 | Si |
| SLV 13 | 371 | -9601 | -57734 | 7.54 | 83706 | 1.45 | Si |
| SLV 13 | 451 | -10083 | 80002 | 7.91 | 80803 | 1.01 | Si |

### Verifica a taglio nel piano secondo D.M. 17-01-18 (N.T.C.) §7.8.2.2.2 con rottura per scorrimento in combinazioni non sismiche, γM = 3

| Comb. | Quota | N | V par | M | σ0 | σN | l' | fvd | Vt scorr. | Vt fess.diag. | Vt,lim | c.s. | Verifica |
|---|---|---|---|---|---|---|---|---|---|---|---|---|---|
| SLU 84 | 371 | -10593 | 676 | 19577 | | 8.31 | 45.5 | 1.08 | 1380 | | | 2.04 | Si |

| Comb. | Quota | N | V par | M | σ0 | σN | l' | fvd | Vt scorr. | Vt fess.diag. | Vt,lim | c.s. | Verifica |
|---|---|---|---|---|---|---|---|---|---|---|---|---|---|
| SLU 84 | 451 | -11693 | 675 | -30104 | | 9.18 | 45.5 | 1.08 | 1380 | | | 2.05 | Si |
| SLU 82 | 371 | -10438 | 691 | 19959 | | 8.19 | 45.5 | 1.08 | 1380 | | | 2 | Si |
| SLU 82 | 451 | -11500 | 689 | -31000 | | 9.03 | 45.5 | 1.08 | 1380 | | | 2 | Si |
| SLU 75 | 371 | -10215 | 666 | 19285 | | 8.02 | 45.5 | 1.08 | 1380 | | | 2.07 | Si |
| SLU 75 | 451 | -11253 | 664 | -29736 | | 8.83 | 45.5 | 1.08 | 1380 | | | 2.08 | Si |
| SLU 76 | 371 | -10360 | 706 | 21122 | | 8.13 | 45.5 | 1.08 | 1380 | | | 1.95 | Si |
| SLU 76 | 451 | -11385 | 704 | -31190 | | 8.94 | 45.5 | 1.08 | 1380 | | | 1.96 | Si |
| SLU 65 | 371 | -9159 | 672 | 20251 | | 7.19 | 45.5 | 1.08 | 1380 | | | 2.05 | Si |
| SLU 65 | 451 | -9994 | 670 | -29952 | | 7.84 | 45.5 | 1.08 | 1380 | | | 2.06 | Si |
| SLU 73 | 371 | -10205 | 721 | 21504 | | 8.01 | 45.5 | 1.08 | 1380 | | | 1.91 | Si |
| SLU 73 | 451 | -11191 | 719 | -32086 | | 8.78 | 45.5 | 1.08 | 1380 | | | 1.92 | Si |
| SLU 52 | 371 | -9308 | 669 | 20131 | | 7.31 | 45.5 | 1.08 | 1380 | | | 2.06 | Si |
| SLU 52 | 451 | -10167 | 667 | -29764 | | 7.98 | 45.5 | 1.08 | 1380 | | | 2.07 | Si |
| SLU 68 | 371 | -9314 | 658 | 19869 | | 7.31 | 45.5 | 1.08 | 1380 | | | 2.1 | Si |
| SLU 68 | 451 | -10187 | 656 | -29056 | | 8 | 45.5 | 1.08 | 1380 | | | 2.1 | Si |
| SLU 55 | 371 | -9464 | 655 | 19749 | | 7.43 | 45.5 | 1.08 | 1380 | | | 2.11 | Si |
| SLU 55 | 451 | -10360 | 653 | -28868 | | 8.13 | 45.5 | 1.08 | 1380 | | | 2.11 | Si |
| SLU 78 | 371 | -10370 | 651 | 18903 | | 8.14 | 45.5 | 1.08 | 1380 | | | 2.12 | Si |
| SLU 78 | 451 | -11446 | 650 | -28840 | | 8.98 | 45.5 | 1.08 | 1380 | | | 2.12 | Si |

### Verifica a taglio nel piano secondo D.M. 17-01-18 (N.T.C.) §7.8.2.2.2 con rottura per scorrimento in combinazioni sismiche, γM = 2

| Comb. | Quota | N | V par | M | σ0 | σN | l' | fvd | Vt scorr. | Vt fess.diag. | Vt,lim | c.s. | Verifica |
|---|---|---|---|---|---|---|---|---|---|---|---|---|---|
| SLV 16 | 371 | -7673 | -1991 | -60379 | | 6.14 | 44.64 | 1.63 | 2031 | | | 1.02 | Si |
| SLV 16 | 451 | -8181 | -1848 | 87419 | | 8.07 | 36.19 | 1.63 | 1647 | | | 0.89 | No, Vu<V |
| SLV 3 | 371 | -3862 | 2371 | 80992 | | 25.82 | 5.34 | 1.63 | 243 | | | 0.1 | No, Vu<V |
| SLV 3 | 451 | -4737 | 2584 | -118586 | | 0 | 0 | 0.83 | 0 | | | 0 | No, Vu<V |
| SLV 6 | 371 | -9374 | 1849 | 37243 | | 7.36 | 45.5 | 1.63 | 2070 | | | 1.12 | Si |
| SLV 6 | 451 | -10065 | 1266 | -62553 | | 7.9 | 45.5 | 1.63 | 2070 | | | 1.64 | Si |
| SLV 1 | 371 | -5791 | 2835 | 83637 | | 8.3 | 24.92 | 1.63 | 1134 | | | 0.4 | No, Vu<V |
| SLV 1 | 451 | -6640 | 2691 | -126002 | | 20.95 | 11.32 | 1.63 | 515 | | | 0.19 | No, Vu<V |
| SLV 15 | 371 | -7673 | -1991 | -60379 | | 6.14 | 44.64 | 1.63 | 2031 | | | 1.02 | Si |
| SLV 15 | 451 | -8181 | -1848 | 87419 | | 8.07 | 36.19 | 1.63 | 1647 | | | 0.89 | No, Vu<V |
| SLV 4 | 371 | -3862 | 2371 | 80992 | | 25.82 | 5.34 | 1.63 | 243 | | | 0.1 | No, Vu<V |
| SLV 4 | 451 | -4737 | 2584 | -118586 | | 0 | 0 | 0.83 | 0 | | | 0 | No, Vu<V |
| SLV 5 | 371 | -9374 | 1849 | 37243 | | 7.36 | 45.5 | 1.63 | 2070 | | | 1.12 | Si |
| SLV 5 | 451 | -10065 | 1266 | -62553 | | 7.9 | 45.5 | 1.63 | 2070 | | | 1.64 | Si |
| SLV 13 | 371 | -9601 | -1528 | -57734 | | 7.54 | 45.5 | 1.63 | 2070 | | | 1.36 | Si |
| SLV 13 | 451 | -10083 | -1741 | 80002 | | 8.1 | 44.45 | 1.63 | 2022 | | | 1.16 | Si |
| SLV 14 | 371 | -9601 | -1528 | -57734 | | 7.54 | 45.5 | 1.63 | 2070 | | | 1.36 | Si |
| SLV 14 | 451 | -10083 | -1741 | 80002 | | 8.1 | 44.45 | 1.63 | 2022 | | | 1.16 | Si |
| SLV 2 | 371 | -5791 | 2835 | 83637 | | 8.3 | 24.92 | 1.63 | 1134 | | | 0.4 | No, Vu<V |
| SLV 2 | 451 | -6640 | 2691 | -126002 | | 20.95 | 11.32 | 1.63 | 515 | | | 0.19 | No, Vu<V |

### Verifica a pressoflessione fuori piano D.M. 17-01-18 (N.T.C.)

quota 357.5 Wa 0.05 denominatore 8 γM = 2

| Comb. | fd | Sa | σ0 | N | M | Mc | Coeff.s. | Verifica |
|---|---|---|---|---|---|---|---|---|
| SLV 8 | 14 | 0.32 | 1.86 | -2367 | 4310 | 28096 | 6.52 | Si |
| SLV 7 | 14 | 0.32 | 1.86 | -2367 | 4310 | 28096 | 6.52 | Si |
| SLV 11 | 14 | 0.32 | 2.02 | -2568 | 4310 | 30022 | 6.97 | Si |
| SLV 12 | 14 | 0.32 | 2.02 | -2568 | 4310 | 30022 | 6.97 | Si |
| SLV 4 | 14 | 0.32 | 3.27 | -4172 | 4310 | 42752 | 9.92 | Si |
| SLV 3 | 14 | 0.32 | 3.27 | -4172 | 4310 | 42752 | 9.92 | Si |
| SLV 15 | 14 | 0.32 | 3.8 | -4843 | 4310 | 46709 | 10.84 | Si |
| SLV 16 | 14 | 0.32 | 3.8 | -4843 | 4310 | 46709 | 10.84 | Si |
| SLV 1 | 14 | 0.32 | 4.65 | -5920 | 4310 | 51362 | 11.92 | Si |
| SLV 2 | 14 | 0.32 | 4.65 | -5920 | 4310 | 51362 | 11.92 | Si |

### Verifica dei meccanismi locali di collasso con analisi cinematica lineare

forza di aggancio al piano = 0 quota mezzeria = 357.5 Wa = 0.05 Ta = 0.083

| Comb. | N top | N base | V orto | α0 | M* | e* | a0* | aLim | Verifica |
|---|---|---|---|---|---|---|---|---|---|
| SLV 11 | -2038 | -1818 | -17 | 0.037 | 2.752 | 0.933 | 58.125 | 1417.879 | No |
| SLV 12 | -2038 | -1818 | -17 | 0.037 | 2.752 | 0.933 | 58.125 | 1417.879 | No |
| SLV 6 | -3495 | -8840 | 11 | 0.039 | 4.229 | 0.954 | 58.993 | 1417.879 | No |
| SLV 5 | -3495 | -8840 | 11 | 0.039 | 4.229 | 0.954 | 58.993 | 1417.879 | No |
| SLV 10 | -3743 | -8282 | -1 | 0.041 | 4.481 | 0.956 | 62.728 | 1417.879 | No |
| SLV 9 | -3743 | -8282 | -1 | 0.041 | 4.481 | 0.956 | 62.728 | 1417.879 | No |
| SLV 7 | -1790 | -2376 | -5 | 0.043 | 2.502 | 0.928 | 66.851 | 1417.879 | No |
| SLV 8 | -1790 | -2376 | -5 | 0.043 | 2.502 | 0.928 | 66.851 | 1417.879 | No |
| SLV 15 | -2924 | -3429 | -25 | 0.035 | 3.649 | 0.947 | 53.547 | 813.056 | No |
| SLV 16 | -2924 | -3429 | -25 | 0.035 | 3.649 | 0.947 | 53.547 | 813.056 | No |

### Tabella dei coefficienti di sicurezza minimi

| Stato limite | Coeff.s. | Comb. | Verifica |
|---|---|---|---|
| PF_SLU | 0 | SLU 57 | No |
| V_SLU | 1.915 | SLU 73 | Si |
| PF_SLV | 0 | SLV 3 | No |
| V_SLV | 0 | SLV 3 | No |
| PFFP_SLV | 6.518 | SLV 7 | Si |
| R_SLV | 0.041 | SLV 11 | No |

## Maschio 91

Verifiche condotte secondo D.M. 17-01-18 (N.T.C.)

## Dati geometrici

| X ini. | Y ini. | X fin. | Y fin. | Quota i. | Quota.s | l | Sp. | h netta | h ini. | h fin. | a | a.s.,sx | a.s.,dx |
|---|---|---|---|---|---|---|---|---|---|---|---|---|---|
| -323.3 | -335.9 | -550.8 | -335.9 | L3 | L4 | 227.5 | 28 | 373 | 373 | 373 | | | |

## Caratteristiche del materiale

(Circolare 7 21-01-19 C8.5.I) Muratura in mattoni pieni e malta di calce LC2_Corti

| fb | fk | fvk0 | fmedio | τ0 | fv0 | μ | ϕ | fv,lim | E | G | FC |
|---|---|---|---|---|---|---|---|---|---|---|---|
| 60 | | | 34.5 | 0.9 | 2 | 0.58 | 0.77 | 3.25 | 32000 | 12800 | 1.2 |

## Verifica a pressoflessione nel piano secondo D.M. 17-01-18 NTC §7.8.2.2.1 in combinazioni non sismiche, γM = 3

| Comb. | Quota | N | M | σ0 | Mu | c.s. | Verifica |
|---|---|---|---|---|---|---|---|
| SLU 73 | 371 | -17502 | 841903 | 2.75 | 1319348 | 1.567 | Si |
| SLU 73 | 451 | -16362 | 380707 | 2.57 | 1274305 | 3.347 | Si |
| SLU 52 | 371 | -15453 | 783537 | 2.43 | 1234283 | 1.575 | Si |
| SLU 52 | 451 | -14327 | 355301 | 2.25 | 1179731 | 3.32 | Si |
| SLU 68 | 371 | -15488 | 779392 | 2.43 | 1235912 | 1.586 | Si |
| SLU 68 | 451 | -14348 | 356402 | 2.25 | 1180803 | 3.313 | Si |
| SLU 5 | 371 | -10324 | 606875 | 1.62 | 940672 | 1.55 | Si |
| SLU 5 | 451 | -9454 | 283735 | 1.48 | 879458 | 3.1 | Si |
| SLU 55 | 371 | -15714 | 790989 | 2.47 | 1246170 | 1.575 | Si |
| SLU 55 | 451 | -14589 | 360503 | 2.29 | 1192910 | 3.309 | Si |
| SLU 76 | 371 | -17764 | 849354 | 2.79 | 1328884 | 1.565 | Si |
| SLU 76 | 451 | -16624 | 385910 | 2.61 | 1285149 | 3.33 | Si |
| SLU 65 | 371 | -15226 | 771941 | 2.39 | 1223765 | 1.585 | Si |
| SLU 65 | 451 | -14087 | 351199 | 2.21 | 1167348 | 3.324 | Si |
| SLU 2 | 371 | -10062 | 599424 | 1.58 | 922600 | 1.539 | Si |
| SLU 2 | 451 | -9192 | 278532 | 1.44 | 860387 | 3.089 | Si |
| SLU 44 | 371 | -13177 | 713576 | 2.07 | 1118252 | 1.567 | Si |
| SLU 44 | 451 | -12052 | 325792 | 1.89 | 1052470 | 3.23 | Si |
| SLU 47 | 371 | -13439 | 721027 | 2.11 | 1132751 | 1.571 | Si |
| SLU 47 | 451 | -12313 | 330995 | 1.93 | 1068260 | 3.227 | Si |

## Verifica a pressoflessione nel piano secondo D.M. 17-01-18 NTC §7.8.2.2.1 in combinazioni sismiche, γM = 2

| Comb. | Quota | N | M | σ0 | Mu | c.s. | Verifica |
|---|---|---|---|---|---|---|---|
| SLV 13 | 371 | -12125 | 448193 | 1.9 | 1164346 | 2.598 | Si |
| SLV 13 | 451 | -12568 | 992032 | 1.97 | 1198730 | 1.208 | Si |
| SLV 15 | 371 | -10613 | 70973 | 1.67 | 1042580 | 14.69 | Si |
| SLV 15 | 451 | -8303 | 879849 | 1.3 | 843724 | 0.959 | No, M>Mu |
| SLV 5 | 371 | -17260 | 1179862 | 2.71 | 1527960 | 1.295 | Si |
| SLV 5 | 451 | -20991 | 169129 | 3.3 | 1743795 | 10.31 | Si |
| SLV 10 | 371 | -15704 | 1045288 | 2.47 | 1425932 | 1.364 | Si |
| SLV 10 | 451 | -19400 | 609337 | 3.05 | 1656697 | 2.719 | Si |
| SLV 14 | 371 | -12125 | 448193 | 1.9 | 1164346 | 2.598 | Si |
| SLV 14 | 451 | -12568 | 992032 | 1.97 | 1198730 | 1.208 | Si |
| SLV 16 | 371 | -10613 | 70973 | 1.67 | 1042580 | 14.69 | Si |
| SLV 16 | 451 | -8303 | 879849 | 1.3 | 843724 | 0.959 | No, M>Mu |
| SLV 1 | 371 | -17311 | 896775 | 2.72 | 1531182 | 1.707 | Si |
| SLV 1 | 451 | -17873 | -475326 | 2.81 | 1566212 | 3.295 | Si |
| SLV 2 | 371 | -17311 | 896775 | 2.72 | 1531182 | 1.707 | Si |
| SLV 2 | 451 | -17873 | -475326 | 2.81 | 1566212 | 3.295 | Si |
| SLV 9 | 371 | -15704 | 1045288 | 2.47 | 1425932 | 1.364 | Si |
| SLV 9 | 451 | -19400 | 609337 | 3.05 | 1656697 | 2.719 | Si |
| SLV 6 | 371 | -17260 | 1179862 | 2.71 | 1527960 | 1.295 | Si |
| SLV 6 | 451 | -20991 | 169129 | 3.3 | 1743795 | 10.31 | Si |

## Verifica a taglio nel piano secondo D.M. 17-01-18 (N.T.C.) §7.8.2.2.2 con rottura per scorrimento in combinazioni non sismiche, γM = 3

| Comb. | Quota | N | V par | M | σ0 | σN | l' | fvd | Vt scorr. | Vt fess.diag. | Vt,lim | c.s. | Verifica |
|---|---|---|---|---|---|---|---|---|---|---|---|---|---|
| SLU 2 | 371 | -10062 | 4003 | 599424 | | 2.21 | 162.53 | 0.85 | 3870 | | | 0.97 | No, Vu<V |
| SLU 2 | 451 | -9192 | 4003 | 278532 | | 1.44 | 227.5 | 0.75 | 4765 | | | 1.19 | Si |
| SLU 44 | 371 | -13177 | 4835 | 713576 | | 2.63 | 178.79 | 0.91 | 4538 | | | 0.94 | No, Vu<V |
| SLU 44 | 451 | -12052 | 4835 | 325792 | | 1.89 | 227.5 | 0.81 | 5146 | | | 1.06 | Si |
| SLU 68 | 371 | -15488 | 5278 | 779392 | | 2.91 | 190.28 | 0.94 | 5025 | | | 0.95 | No, Vu<V |
| SLU 68 | 451 | -14348 | 5278 | 356402 | | 2.25 | 227.5 | 0.86 | 5452 | | | 1.03 | Si |
| SLU 47 | 371 | -13439 | 4864 | 721027 | | 2.66 | 180.29 | 0.91 | 4596 | | | 0.95 | No, Vu<V |
| SLU 47 | 451 | -12313 | 4864 | 330995 | | 1.93 | 227.5 | 0.81 | 5181 | | | 1.07 | Si |
| SLU 76 | 371 | -17764 | 5783 | 849354 | | 3.21 | 197.81 | 0.98 | 5446 | | | 0.94 | No, Vu<V |
| SLU 76 | 451 | -16624 | 5783 | 385910 | | 2.61 | 227.5 | 0.9 | 5755 | | | 1 | No, Vu<V |
| SLU 73 | 371 | -17502 | 5755 | 841903 | | 3.17 | 196.94 | 0.98 | 5397 | | | 0.94 | No, Vu<V |
| SLU 73 | 451 | -16362 | 5755 | 380707 | | 2.57 | 227.5 | 0.9 | 5721 | | | 0.99 | No, Vu<V |
| SLU 5 | 371 | -10324 | 4031 | 606875 | | 2.24 | 164.89 | 0.85 | 3941 | | | 0.98 | No, Vu<V |
| SLU 5 | 451 | -9454 | 4031 | 283735 | | 1.48 | 227.5 | 0.75 | 4799 | | | 1.19 | Si |
| SLU 55 | 371 | -15714 | 5369 | 790989 | | 2.95 | 190.24 | 0.95 | 5055 | | | 0.94 | No, Vu<V |
| SLU 55 | 451 | -14589 | 5369 | 360503 | | 2.29 | 227.5 | 0.86 | 5484 | | | 1.02 | Si |
| SLU 52 | 371 | -15453 | 5341 | 783537 | | 2.92 | 189.13 | 0.94 | 5002 | | | 0.94 | No, Vu<V |
| SLU 52 | 451 | -14327 | 5341 | 355301 | | 2.25 | 227.5 | 0.86 | 5449 | | | 1.02 | Si |
| SLU 65 | 371 | -15226 | 5249 | 771941 | | 2.87 | 189.16 | 0.94 | 4973 | | | 0.95 | No, Vu<V |
| SLU 65 | 451 | -14087 | 5249 | 351199 | | 2.21 | 227.5 | 0.85 | 5417 | | | 1.03 | Si |

## Verifica a taglio nel piano secondo D.M. 17-01-18 (N.T.C.) §7.8.2.2.2 con rottura per scorrimento in combinazioni sismiche, γM = 2

| Comb. | Quota | N | V par | M | σ0 | σN | l' | fvd | Vt scorr. | Vt fess.diag. | Vt,lim | c.s. | Verifica |
|---|---|---|---|---|---|---|---|---|---|---|---|---|---|
| SLV 6 | 371 | -17260 | 10986 | 1179862 | | 4.53 | 136.18 | 1.63 | 6196 | | | 0.56 | No, Vu<V |
| SLV 6 | 451 | -20991 | 11421 | 169129 | | 3.3 | 227.5 | 1.49 | 9507 | | | 0.83 | No, Vu<V |
| SLV 1 | 371 | -17311 | 16555 | 896775 | | 3.33 | 185.84 | 1.5 | 7799 | | | 0.47 | No, Vu<V |
| SLV 1 | 451 | -17873 | 16748 | -475326 | | 2.81 | 227.5 | 1.39 | 8883 | | | 0.53 | No, Vu<V |
| SLV 16 | 371 | -10613 | -9531 | 70973 | | 1.67 | 227.5 | 1.17 | 7431 | | | 0.78 | No, Vu<V |
| SLV 16 | 451 | -8303 | -9724 | 879849 | | 12.7 | 23.35 | 1.63 | 1063 | | | 0.11 | No, Vu<V |
| SLV 14 | 371 | -12125 | -7182 | 448193 | | 1.9 | 227.5 | 1.21 | 7733 | | | 1.08 | Si |

| Comb. | Quota | N | V par | M | σ0 | σN | l' | fvd | Vt scorr. | Vt fess.diag. | Vt,lim | c.s. | Verifica |
|---|---|---|---|---|---|---|---|---|---|---|---|---|---|
| SLV 14 | 451 | -12568 | -7127 | 992032 | | 4.3 | 104.44 | 1.63 | 4752 | | | 0.67 | No, Vu<V |
| SLV 2 | 371 | -17311 | 16555 | 896775 | | 3.33 | 185.84 | 1.5 | 7799 | | | 0.47 | No, Vu<V |
| SLV 2 | 451 | -17873 | 16748 | -475326 | | 2.81 | 227.5 | 1.39 | 8883 | | | 0.53 | No, Vu<V |
| SLV 3 | 371 | -15799 | 14207 | 519554 | | 2.48 | 227.5 | 1.33 | 8468 | | | 0.6 | No, Vu<V |
| SLV 3 | 451 | -13609 | 14152 | -587509 | | 2.3 | 211.74 | 1.29 | 7662 | | | 0.54 | No, Vu<V |
| SLV 5 | 371 | -17260 | 10986 | 1179862 | | 4.53 | 136.18 | 1.63 | 6196 | | | 0.56 | No, Vu<V |
| SLV 5 | 451 | -20991 | 11421 | 169129 | | 3.3 | 227.5 | 1.49 | 9507 | | | 0.83 | No, Vu<V |
| SLV 15 | 371 | -10613 | -9531 | 70973 | | 1.67 | 227.5 | 1.17 | 7431 | | | 0.78 | No, Vu<V |
| SLV 15 | 451 | -8303 | -9724 | 879849 | | 12.7 | 23.35 | 1.63 | 1063 | | | 0.11 | No, Vu<V |
| SLV 4 | 371 | -15799 | 14207 | 519554 | | 2.48 | 227.5 | 1.33 | 8468 | | | 0.6 | No, Vu<V |
| SLV 4 | 451 | -13609 | 14152 | -587509 | | 2.3 | 211.74 | 1.29 | 7662 | | | 0.54 | No, Vu<V |
| SLV 13 | 371 | -12125 | -7182 | 448193 | | 1.9 | 227.5 | 1.21 | 7733 | | | 1.08 | Si |
| SLV 13 | 451 | -12568 | -7127 | 992032 | | 4.3 | 104.44 | 1.63 | 4752 | | | 0.67 | No, Vu<V |

### Verifica a pressoflessione fuori piano D.M. 17-01-18 (N.T.C.)

quota 357.5 Wa 0.05 denominatore 8 γM = 2

| Comb. | fd | Sa | σ0 | N | M | Mc | Coeff.s. | Verifica |
|---|---|---|---|---|---|---|---|---|
| SLV 10 | 14 | 0.32 | 1.62 | -10329 | 21552 | 125414 | 5.82 | Si |
| SLV 9 | 14 | 0.32 | 1.62 | -10329 | 21552 | 125414 | 5.82 | Si |
| SLV 13 | 14 | 0.32 | 1.66 | -10588 | 21552 | 128065 | 5.94 | Si |
| SLV 14 | 14 | 0.32 | 1.66 | -10588 | 21552 | 128065 | 5.94 | Si |
| SLV 5 | 14 | 0.32 | 1.67 | -10630 | 21552 | 128499 | 5.96 | Si |
| SLV 6 | 14 | 0.32 | 1.67 | -10630 | 21552 | 128499 | 5.96 | Si |
| SLV 16 | 14 | 0.32 | 1.74 | -11111 | 21552 | 133350 | 6.19 | Si |
| SLV 15 | 14 | 0.32 | 1.74 | -11111 | 21552 | 133350 | 6.19 | Si |
| SLV 1 | 14 | 0.32 | 1.82 | -11593 | 21552 | 138127 | 6.41 | Si |
| SLV 2 | 14 | 0.32 | 1.82 | -11593 | 21552 | 138127 | 6.41 | Si |

### Verifica dei meccanismi locali di collasso con analisi cinematica lineare

forza di aggancio al piano = 0 quota mezzeria = 357.5 Wa = 0.05 Ta = 0.083

| Comb. | N top | N base | V orto | α0 | M* | e* | a0* | aLim | Verifica |
|---|---|---|---|---|---|---|---|---|---|
| SLV 6 | -17786 | -9560 | 83 | 0.037 | 21.462 | 0.954 | 56.943 | 1417.879 | No |
| SLV 5 | -17786 | -9560 | 83 | 0.037 | 21.462 | 0.954 | 56.943 | 1417.879 | No |
| SLV 12 | -5261 | -7726 | -92 | 0.036 | 8.817 | 0.907 | 57.644 | 1417.879 | No |
| SLV 11 | -5261 | -7726 | -92 | 0.036 | 8.817 | 0.907 | 57.644 | 1417.879 | No |
| SLV 10 | -17778 | -10536 | 73 | 0.038 | 21.454 | 0.954 | 57.704 | 1417.879 | No |
| SLV 9 | -17778 | -10536 | 73 | 0.038 | 21.454 | 0.954 | 57.704 | 1417.879 | No |
| SLV 8 | -5268 | -6751 | -82 | 0.037 | 8.824 | 0.907 | 59.795 | 1417.879 | No |
| SLV 7 | -5268 | -6751 | -82 | 0.037 | 8.824 | 0.907 | 59.795 | 1417.879 | No |
| SLV 1 | -13413 | -7439 | 37 | 0.04 | 17.023 | 0.944 | 62.069 | 813.056 | No |
| SLV 2 | -13413 | -7439 | 37 | 0.04 | 17.023 | 0.944 | 62.069 | 813.056 | No |

### Tabella dei coefficienti di sicurezza minimi

| Stato limite | Coeff.s. | Comb. | Verifica |
|---|---|---|---|
| PF_SLU | 1.539 | SLU 2 | Si |
| V_SLU | 0.937 | SLU 52 | No |
| PF_SLV | 0.959 | SLV 15 | No |
| V_SLV | 0.109 | SLV 15 | No |
| PFFP_SLV | 5.819 | SLV 9 | Si |
| R_SLV | 0.04 | SLV 5 | No |

## Maschio 92

Verifiche condotte secondo D.M. 17-01-18 (N.T.C.)

### Dati geometrici

| X ini. | Y ini. | X fin. | Y fin. | Quota i. | Quota.s | l | Sp. | h netta | h ini. | h fin. | a | a.s.,sx | a.s.,dx |
|---|---|---|---|---|---|---|---|---|---|---|---|---|---|
| -12.3 | -335.9 | -223.3 | -335.9 | L3 | L4 | 211 | 28 | 373 | 373 | 373 | | | |

### Caratteristiche del materiale

(Circolare 7 21-01-19 C8.5.I) Muratura in mattoni pieni e malta di calce LC2_Corti

| fb | fk | fvk0 | fmedio | τ0 | fv0 | μ | ϕ | fv,lim | E | G | FC |
|---|---|---|---|---|---|---|---|---|---|---|---|
| 60 | | | 34.5 | 0.9 | 2 | 0.58 | 0.77 | 3.25 | 32000 | 12800 | 1.2 |

### Verifica a pressoflessione nel piano secondo D.M. 17-01-18 NTC §7.8.2.2.1 in combinazioni non sismiche, γM = 3

| Comb. | Quota | N | M | σ0 | Mu | c.s. | Verifica |
|---|---|---|---|---|---|---|---|
| SLU 47 | 261 | -12374 | -723434 | 2.09 | 969788 | 1.341 | Si |
| SLU 47 | 451 | -16955 | -113585 | 2.87 | 1158553 | 10.2 | Si |
| SLU 68 | 261 | -13913 | -776546 | 2.35 | 1043471 | 1.344 | Si |
| SLU 68 | 451 | -19238 | -105248 | 3.26 | 1218286 | 11.575 | Si |
| SLU 44 | 261 | -12100 | -713618 | 2.05 | 955577 | 1.339 | Si |
| SLU 44 | 451 | -16574 | -113046 | 2.81 | 1146365 | 10.141 | Si |
| SLU 76 | 261 | -15303 | -821038 | 2.59 | 1101081 | 1.341 | Si |
| SLU 76 | 451 | -21360 | -91383 | 3.62 | 1253303 | 13.715 | Si |
| SLU 26 | 261 | -11236 | -681722 | 1.9 | 908650 | 1.333 | Si |
| SLU 26 | 451 | -15950 | -96782 | 2.7 | 1125033 | 11.624 | Si |
| SLU 5 | 261 | -9697 | -628610 | 1.64 | 816905 | 1.3 | Si |
| SLU 5 | 451 | -13667 | -105119 | 2.31 | 1032381 | 9.821 | Si |
| SLU 13 | 261 | -11087 | -673102 | 1.88 | 900201 | 1.337 | Si |
| SLU 13 | 451 | -15789 | -91253 | 2.67 | 1119236 | 12.265 | Si |
| SLU 2 | 261 | -9423 | -618795 | 1.59 | 799477 | 1.292 | Si |
| SLU 2 | 451 | -13286 | -104580 | 2.25 | 1014701 | 9.703 | Si |
| SLU 10 | 261 | -10813 | -663287 | 1.83 | 884443 | 1.333 | Si |
| SLU 10 | 451 | -15408 | -90715 | 2.61 | 1105101 | 12.182 | Si |

| Comb. | Quota | N | M | σ0 | Mu | c.s. | Verifica |
|---|---|---|---|---|---|---|---|
| SLU 23 | 261 | -10962 | -671907 | 1.86 | 893071 | 1.329 | Si |
| SLU 23 | 451 | -15569 | -96244 | 2.64 | 1111167 | 11.545 | Si |

Verifica a pressoflessione nel piano secondo D.M. 17-01-18 NTC §7.8.2.2.1 in combinazioni sismiche, γM = 2

| Comb. | Quota | N | M | σ0 | Mu | c.s. | Verifica |
|---|---|---|---|---|---|---|---|
| SLV 7 | 261 | -5350 | 411837 | 0.91 | 522634 | 1.269 | Si |
| SLV 7 | 451 | -1614 | -203136 | 0 | 0 | 0 | No, e>l/2 |
| SLV 8 | 261 | -5350 | 411837 | 0.91 | 522634 | 1.269 | Si |
| SLV 8 | 451 | -1614 | -203136 | 0 | 0 | 0 | No, e>l/2 |
| SLV 4 | 261 | -5746 | 451076 | 0.97 | 557946 | 1.237 | Si |
| SLV 4 | 451 | -1796 | -455639 | 0 | 0 | 0 | No, e>l/2 |
| SLV 9 | 261 | -17686 | -1221168 | 2.99 | 1408715 | 1.154 | Si |
| SLV 9 | 451 | -28044 | 178439 | 4.75 | 1809248 | 10.139 | Si |
| SLV 13 | 261 | -17290 | -1260407 | 2.93 | 1387206 | 1.101 | Si |
| SLV 13 | 451 | -27862 | 430942 | 4.72 | 1804926 | 4.188 | Si |
| SLV 15 | 261 | -14365 | -891321 | 2.43 | 1213949 | 1.362 | Si |
| SLV 15 | 451 | -21727 | 392831 | 3.68 | 1602298 | 4.079 | Si |
| SLV 16 | 261 | -14365 | -891321 | 2.43 | 1213949 | 1.362 | Si |
| SLV 16 | 451 | -21727 | 392831 | 3.68 | 1602298 | 4.079 | Si |
| SLV 3 | 261 | -5746 | 451076 | 0.97 | 557946 | 1.237 | Si |
| SLV 3 | 451 | -1796 | -455639 | 0 | 0 | 0 | No, e>l/2 |
| SLV 14 | 261 | -17290 | -1260407 | 2.93 | 1387206 | 1.101 | Si |
| SLV 14 | 451 | -27862 | 430942 | 4.72 | 1804926 | 4.188 | Si |
| SLV 10 | 261 | -17686 | -1221168 | 2.99 | 1408715 | 1.154 | Si |
| SLV 10 | 451 | -28044 | 178439 | 4.75 | 1809248 | 10.139 | Si |

Verifica a taglio nel piano secondo D.M. 17-01-18 (N.T.C.) §7.8.2.2.2 con rottura per scorrimento in combinazioni non sismiche, γM = 3

| Comb. | Quota | N | V par | M | σ0 | σN | l' | fvd | Vt scorr. | Vt fess.diag. | Vt,lim | c.s. | Verifica |
|---|---|---|---|---|---|---|---|---|---|---|---|---|---|
| SLU 31 | 261 | -12352 | -7489 | -716399 | | 3.1 | 142.5 | 0.97 | 3864 | | | 0.52 | No, Vu<V |
| SLU 31 | 451 | -17691 | -7440 | -82379 | | 2.99 | 211 | 0.95 | 5641 | | | 0.76 | No, Vu<V |
| SLU 10 | 261 | -10813 | -6734 | -663287 | | 2.92 | 132.47 | 0.94 | 3502 | | | 0.52 | No, Vu<V |
| SLU 10 | 451 | -15408 | -6686 | -90715 | | 2.61 | 211 | 0.9 | 5337 | | | 0.8 | No, Vu<V |
| SLU 34 | 261 | -12626 | -7597 | -726215 | | 3.13 | 143.95 | 0.97 | 3923 | | | 0.52 | No, Vu<V |
| SLU 34 | 451 | -18072 | -7548 | -82917 | | 3.06 | 211 | 0.96 | 5692 | | | 0.75 | No, Vu<V |
| SLU 65 | 261 | -13639 | -7904 | -766730 | | 3.29 | 147.85 | 0.99 | 4118 | | | 0.52 | No, Vu<V |
| SLU 65 | 451 | -18857 | -7853 | -104710 | | 3.19 | 211 | 0.98 | 5797 | | | 0.74 | No, Vu<V |
| SLU 5 | 261 | -9697 | -6128 | -628610 | | 2.84 | 122.03 | 0.93 | 3191 | | | 0.52 | No, Vu<V |
| SLU 5 | 451 | -13667 | -6082 | -105119 | | 2.31 | 211 | 0.86 | 5104 | | | 0.84 | No, Vu<V |
| SLU 23 | 261 | -10962 | -6775 | -671907 | | 2.95 | 132.62 | 0.95 | 3525 | | | 0.52 | No, Vu<V |
| SLU 23 | 451 | -15569 | -6727 | -96244 | | 2.64 | 211 | 0.91 | 5358 | | | 0.8 | No, Vu<V |
| SLU 68 | 261 | -13913 | -8012 | -776546 | | 3.33 | 149.05 | 1 | 4174 | | | 0.52 | No, Vu<V |
| SLU 68 | 451 | -19238 | -7961 | -105248 | | 3.26 | 211 | 0.99 | 5847 | | | 0.73 | No, Vu<V |
| SLU 76 | 261 | -15303 | -8727 | -821038 | | 3.51 | 155.54 | 1.02 | 4460 | | | 0.51 | No, Vu<V |
| SLU 76 | 451 | -21360 | -8674 | -91383 | | 3.62 | 211 | 1.04 | 6130 | | | 0.71 | No, Vu<V |
| SLU 2 | 261 | -9423 | -6020 | -618795 | | 2.82 | 119.49 | 0.93 | 3115 | | | 0.52 | No, Vu<V |
| SLU 2 | 451 | -13286 | -5974 | -104580 | | 2.25 | 211 | 0.86 | 5054 | | | 0.85 | No, Vu<V |
| SLU 73 | 261 | -15028 | -8618 | -811223 | | 3.47 | 154.56 | 1.02 | 4408 | | | 0.51 | No, Vu<V |
| SLU 73 | 451 | -20979 | -8566 | -90844 | | 3.55 | 211 | 1.03 | 6079 | | | 0.71 | No, Vu<V |

Verifica a taglio nel piano secondo D.M. 17-01-18 (N.T.C.) §7.8.2.2.2 con rottura per scorrimento in combinazioni sismiche, γM = 2

| Comb. | Quota | N | V par | M | σ0 | σN | l' | fvd | Vt scorr. | Vt fess.diag. | Vt,lim | c.s. | Verifica |
|---|---|---|---|---|---|---|---|---|---|---|---|---|---|
| SLV 15 | 261 | -14365 | -13049 | -891321 | | 3.94 | 130.36 | 1.62 | 5915 | | | 0.45 | No, Vu<V |
| SLV 15 | 451 | -21727 | -13193 | 392831 | | 3.68 | 211 | 1.57 | 9269 | | | 0.7 | No, Vu<V |
| SLV 9 | 261 | -17686 | -12183 | -1221168 | | 5.78 | 109.35 | 1.63 | 4976 | | | 0.41 | No, Vu<V |
| SLV 9 | 451 | -28044 | -12177 | 178439 | | 4.75 | 211 | 1.63 | 9600 | | | 0.79 | No, Vu<V |
| SLV 13 | 261 | -17290 | -15655 | -1260407 | | 6.31 | 97.81 | 1.63 | 4450 | | | 0.28 | No, Vu<V |
| SLV 13 | 451 | -27862 | -15778 | 430942 | | 4.72 | 211 | 1.63 | 9600 | | | 0.61 | No, Vu<V |
| SLV 10 | 261 | -17686 | -12183 | -1221168 | | 5.78 | 109.35 | 1.63 | 4976 | | | 0.41 | No, Vu<V |
| SLV 10 | 451 | -28044 | -12177 | 178439 | | 4.75 | 211 | 1.63 | 9600 | | | 0.79 | No, Vu<V |
| SLV 7 | 261 | -5350 | 2089 | 411837 | | 2.23 | 85.58 | 1.28 | 3067 | | | 1.47 | Si |
| SLV 7 | 451 | -1614 | 2110 | -203136 | | 0 | 0 | 0.83 | 0 | | | 0 | No, Vu<V |
| SLV 3 | 261 | -5746 | 5561 | 451076 | | 2.53 | 80.99 | 1.34 | 3039 | | | 0.55 | No, Vu<V |
| SLV 3 | 451 | -1796 | 5711 | -455639 | | 0 | 0 | 0.83 | 0 | | | 0 | No, Vu<V |
| SLV 8 | 261 | -5350 | 2089 | 411837 | | 2.23 | 85.58 | 1.28 | 3067 | | | 1.47 | Si |
| SLV 8 | 451 | -1614 | 2110 | -203136 | | 0 | 0 | 0.83 | 0 | | | 0 | No, Vu<V |
| SLV 16 | 261 | -14365 | -13049 | -891321 | | 3.94 | 130.36 | 1.62 | 5915 | | | 0.45 | No, Vu<V |
| SLV 16 | 451 | -21727 | -13193 | 392831 | | 3.68 | 211 | 1.57 | 9269 | | | 0.7 | No, Vu<V |
| SLV 4 | 261 | -5746 | 5561 | 451076 | | 2.53 | 80.99 | 1.34 | 3039 | | | 0.55 | No, Vu<V |
| SLV 4 | 451 | -1796 | 5711 | -455639 | | 0 | 0 | 0.83 | 0 | | | 0 | No, Vu<V |
| SLV 14 | 261 | -17290 | -15655 | -1260407 | | 6.31 | 97.81 | 1.63 | 4450 | | | 0.28 | No, Vu<V |
| SLV 14 | 451 | -27862 | -15778 | 430942 | | 4.72 | 211 | 1.63 | 9600 | | | 0.61 | No, Vu<V |

Verifica a pressoflessione fuori piano D.M. 17-01-18 (N.T.C.)

quota 357.5 Wa 0.05 denominatore 8 γM = 2

| Comb. | fd | Sa | σ0 | N | M | Mc | Coeff.s. | Verifica |
|---|---|---|---|---|---|---|---|---|
| SLV 7 | 14 | 0.32 | 0 | 405 | 19989 | 0 | 0 | No, Trazione |
| SLV 8 | 14 | 0.32 | 0 | 405 | 19989 | 0 | 0 | No, Trazione |
| SLV 4 | 14 | 0.32 | 0.37 | -2185 | 19989 | 29661 | 1.48 | Si |
| SLV 3 | 14 | 0.32 | 0.37 | -2185 | 19989 | 29661 | 1.48 | Si |
| SLV 12 | 14 | 0.32 | 0.75 | -4415 | 19989 | 58029 | 2.9 | Si |
| SLV 11 | 14 | 0.32 | 0.75 | -4415 | 19989 | 58029 | 2.9 | Si |
| SLV 1 | 14 | 0.32 | 1.56 | -9225 | 19989 | 112646 | 5.64 | Si |
| SLV 2 | 14 | 0.32 | 1.56 | -9225 | 19989 | 112646 | 5.64 | Si |
| SLV 15 | 14 | 0.32 | 3.09 | -18252 | 19989 | 190922 | 9.55 | Si |
| SLV 16 | 14 | 0.32 | 3.09 | -18252 | 19989 | 190922 | 9.55 | Si |

### Verifica dei meccanismi locali di collasso con analisi cinematica lineare

forza di aggancio al piano = 0 quota mezzeria = 357.5 Wa = 0.05 Ta = 0.083

| Comb. | N top | N base | V orto | α0 | M* | e* | a0* | aLim | Verifica |
|---|---|---|---|---|---|---|---|---|---|
| SLV 7 | -2677 | 119 | -72 | 0 | 0 | 0 | 0 | 1417.879 | No, Trazione |
| SLV 8 | -2677 | 119 | -72 | 0 | 0 | 0 | 0 | 1417.879 | No, Trazione |
| SLV 11 | -7018 | -2299 | -97 | 0.035 | 10.312 | 0.921 | 55.308 | 1417.879 | No |
| SLV 12 | -7018 | -2299 | -97 | 0.035 | 10.312 | 0.921 | 55.308 | 1417.879 | No |
| SLV 5 | -19011 | -17557 | 83 | 0.037 | 22.462 | 0.959 | 56.296 | 1417.879 | No |
| SLV 6 | -19011 | -17557 | 83 | 0.037 | 22.462 | 0.959 | 56.296 | 1417.879 | No |
| SLV 9 | -23352 | -19975 | 58 | 0.038 | 26.878 | 0.965 | 57.49 | 1417.879 | No |
| SLV 10 | -23352 | -19975 | 58 | 0.038 | 26.878 | 0.965 | 57.49 | 1417.879 | No |
| SLV 15 | -17800 | -11306 | -71 | 0.038 | 21.23 | 0.957 | 57.258 | 813.056 | No |
| SLV 16 | -17800 | -11306 | -71 | 0.038 | 21.23 | 0.957 | 57.258 | 813.056 | No |

### Tabella dei coefficienti di sicurezza minimi

| Stato limite | Coeff.s. | Comb. | Verifica |
|---|---|---|---|
| PF_SLU | 1.292 | SLU 2 | Si |
| V_SLU | 0.511 | SLU 76 | No |
| PF_SLV | 0 | SLV 3 | No |
| V_SLV | 0 | SLV 3 | No |
| PFFP_SLV | 0 | SLV 8 | No |
| R_SLV | 0 | SLV 8 | No |

## Maschio 93

Verifiche condotte secondo D.M. 17-01-18 (N.T.C.)

### Dati geometrici

| X ini. | Y ini. | X fin. | Y fin. | Quota i. | Quota.s | l | Sp. | h netta | h ini. | h fin. | a | a.s.,sx | a.s.,dx |
|---|---|---|---|---|---|---|---|---|---|---|---|---|---|
| -301.3 | 595.1 | -515.8 | 595.1 | L3 | L4 | 214.5 | 28 | 373 | 373 | 373 | | | |

### Caratteristiche del materiale

(Circolare 7 21-01-19 C8.5.I) Muratura in mattoni pieni e malta di calce LC2_Corti

| fb | fk | fvk0 | fmedio | τ0 | fv0 | μ | ϕ | fv,lim | E | G | FC |
|---|---|---|---|---|---|---|---|---|---|---|---|
| 60 | | | 34.5 | 0.9 | 2 | 0.58 | 0.77 | 3.25 | 32000 | 12800 | 1.2 |

### Verifica a pressoflessione nel piano secondo D.M. 17-01-18 NTC §7.8.2.2.1 in combinazioni non sismiche, γM = 3

| Comb. | Quota | N | M | σ0 | Mu | c.s. | Verifica |
|---|---|---|---|---|---|---|---|
| SLU 76 | 261 | -24125 | 603505 | 4.02 | 1311522 | 2.173 | Si |
| SLU 76 | 451 | -27745 | 463027 | 4.62 | 1288141 | 2.782 | Si |
| SLU 84 | 261 | -25249 | 628580 | 4.2 | 1310412 | 2.085 | Si |
| SLU 84 | 451 | -29151 | 476169 | 4.85 | 1263565 | 2.654 | Si |
| SLU 79 | 261 | -25287 | 635620 | 4.21 | 1310280 | 2.061 | Si |
| SLU 79 | 451 | -29259 | 486400 | 4.87 | 1261318 | 2.593 | Si |
| SLU 81 | 261 | -24399 | 606556 | 4.06 | 1311763 | 2.163 | Si |
| SLU 81 | 451 | -28103 | 439690 | 4.68 | 1282715 | 2.917 | Si |
| SLU 77 | 261 | -25425 | 637756 | 4.23 | 1309738 | 2.054 | Si |
| SLU 77 | 451 | -29408 | 488244 | 4.9 | 1258151 | 2.577 | Si |
| SLU 83 | 261 | -25366 | 632364 | 4.22 | 1309979 | 2.072 | Si |
| SLU 83 | 451 | -29326 | 471255 | 4.88 | 1259909 | 2.674 | Si |
| SLU 74 | 261 | -24458 | 611948 | 4.07 | 1311771 | 2.144 | Si |
| SLU 74 | 451 | -28184 | 456679 | 4.69 | 1281396 | 2.806 | Si |
| SLU 80 | 261 | -25170 | 631836 | 4.19 | 1310673 | 2.074 | Si |
| SLU 80 | 451 | -29085 | 491315 | 4.84 | 1264923 | 2.575 | Si |
| SLU 78 | 261 | -25308 | 633972 | 4.21 | 1310201 | 2.067 | Si |
| SLU 78 | 451 | -29233 | 493159 | 4.87 | 1261870 | 2.559 | Si |
| SLU 75 | 261 | -24341 | 608164 | 4.05 | 1311739 | 2.157 | Si |
| SLU 75 | 451 | -28010 | 461594 | 4.66 | 1284178 | 2.782 | Si |

### Verifica a pressoflessione nel piano secondo D.M. 17-01-18 NTC §7.8.2.2.1 in combinazioni sismiche, γM = 2

| Comb. | Quota | N | M | σ0 | Mu | c.s. | Verifica |
|---|---|---|---|---|---|---|---|
| SLD 6 | 261 | -11142 | 582779 | 1.86 | 1013563 | 1.739 | Si |
| SLD 6 | 451 | -15147 | 297454 | 2.52 | 1289183 | 4.334 | Si |
| SLV 6 | 261 | -3838 | 835409 | 0 | 0 | 0 | No, e>l/2 |
| SLV 6 | 451 | -10404 | 314905 | 1.73 | 957673 | 3.041 | Si |
| SLV 2 | 261 | -10142 | 927102 | 1.69 | 937414 | 1.011 | Si |
| SLV 2 | 451 | -19224 | -106755 | 3.2 | 1521701 | 14.254 | Si |
| SLV 10 | 261 | -5384 | 578788 | 0 | 0 | 0 | No, e>l/2 |
| SLV 10 | 451 | -8302 | 584055 | 1.38 | 789661 | 1.352 | Si |
| SLV 9 | 261 | -5384 | 578788 | 0 | 0 | 0 | No, e>l/2 |
| SLV 9 | 451 | -8302 | 584055 | 1.38 | 789661 | 1.352 | Si |
| SLV 14 | 261 | -15296 | 71700 | 2.55 | 1298542 | 18.111 | Si |
| SLV 14 | 451 | -12216 | 790410 | 2.03 | 1092088 | 1.382 | Si |
| SLV 5 | 261 | -3838 | 835409 | 0 | 0 | 0 | No, e>l/2 |
| SLV 5 | 451 | -10404 | 314905 | 1.73 | 957673 | 3.041 | Si |
| SLV 1 | 261 | -10142 | 927102 | 1.69 | 937414 | 1.011 | Si |
| SLV 1 | 451 | -19224 | -106755 | 3.2 | 1521701 | 14.254 | Si |
| SLV 13 | 261 | -15296 | 71700 | 2.55 | 1298542 | 18.111 | Si |
| SLV 13 | 451 | -12216 | 790410 | 2.03 | 1092088 | 1.382 | Si |
| SLD 5 | 261 | -11142 | 582779 | 1.86 | 1013563 | 1.739 | Si |
| SLD 5 | 451 | -15147 | 297454 | 2.52 | 1289183 | 4.334 | Si |

Verifica a taglio nel piano secondo D.M. 17-01-18 (N.T.C.) §7.8.2.2.2 con rottura per scorrimento in combinazioni non sismiche, γM = 3

| Comb. | Quota | N | V par | M | σ0 | σN | l' | fvd | Vt scorr. | Vt fess.diag. | Vt,lim | c.s. | Verifica |
|---|---|---|---|---|---|---|---|---|---|---|---|---|---|
| SLU 83 | 261 | -25366 | 4653 | 632364 | | 4.22 | 214.5 | 1.08 | 6507 | | | 1.4 | Si |
| SLU 83 | 451 | -29326 | 4609 | 471255 | | 4.88 | 214.5 | 1.08 | 6507 | | | 1.41 | Si |
| SLU 82 | 261 | -24282 | 4461 | 602772 | | 4.04 | 214.5 | 1.08 | 6507 | | | 1.46 | Si |
| SLU 82 | 451 | -27928 | 4417 | 444604 | | 4.65 | 214.5 | 1.08 | 6507 | | | 1.47 | Si |
| SLU 84 | 261 | -25249 | 4576 | 628580 | | 4.2 | 214.5 | 1.08 | 6507 | | | 1.42 | Si |
| SLU 84 | 451 | -29151 | 4530 | 476169 | | 4.85 | 214.5 | 1.08 | 6507 | | | 1.44 | Si |
| SLU 74 | 261 | -24458 | 4490 | 611948 | | 4.07 | 214.5 | 1.08 | 6507 | | | 1.45 | Si |
| SLU 74 | 451 | -28184 | 4447 | 456679 | | 4.69 | 214.5 | 1.08 | 6507 | | | 1.46 | Si |
| SLU 80 | 261 | -25170 | 4520 | 631836 | | 4.19 | 214.5 | 1.08 | 6507 | | | 1.44 | Si |
| SLU 80 | 451 | -29085 | 4475 | 491315 | | 4.84 | 214.5 | 1.08 | 6507 | | | 1.45 | Si |
| SLU 81 | 261 | -24399 | 4538 | 606556 | | 4.06 | 214.5 | 1.08 | 6507 | | | 1.43 | Si |
| SLU 81 | 451 | -28103 | 4496 | 439690 | | 4.68 | 214.5 | 1.08 | 6507 | | | 1.45 | Si |
| SLU 77 | 261 | -25425 | 4605 | 637756 | | 4.23 | 214.5 | 1.08 | 6507 | | | 1.41 | Si |
| SLU 77 | 451 | -29408 | 4560 | 488244 | | 4.9 | 214.5 | 1.08 | 6507 | | | 1.43 | Si |
| SLU 79 | 261 | -25287 | 4598 | 635620 | | 4.21 | 214.5 | 1.08 | 6507 | | | 1.42 | Si |
| SLU 79 | 451 | -29259 | 4553 | 486400 | | 4.87 | 214.5 | 1.08 | 6507 | | | 1.43 | Si |
| SLU 75 | 261 | -24341 | 4412 | 608164 | | 4.05 | 214.5 | 1.08 | 6507 | | | 1.47 | Si |
| SLU 75 | 451 | -28010 | 4369 | 461594 | | 4.66 | 214.5 | 1.08 | 6507 | | | 1.49 | Si |
| SLU 78 | 261 | -25308 | 4528 | 633972 | | 4.21 | 214.5 | 1.08 | 6507 | | | 1.44 | Si |
| SLU 78 | 451 | -29233 | 4482 | 493159 | | 4.87 | 214.5 | 1.08 | 6507 | | | 1.45 | Si |

Verifica a taglio nel piano secondo D.M. 17-01-18 (N.T.C.) §7.8.2.2.2 con rottura per scorrimento in combinazioni sismiche, γM = 2

| Comb. | Quota | N | V par | M | σ0 | σN | l' | fvd | Vt scorr. | Vt fess.diag. | Vt,lim | c.s. | Verifica |
|---|---|---|---|---|---|---|---|---|---|---|---|---|---|
| SLV 8 | 261 | -27004 | 11093 | 241989 | | 4.5 | 214.5 | 1.63 | 9760 | | | 0.88 | No, Vu<V |
| SLV 8 | 451 | -28596 | 9126 | 7327 | | 4.76 | 214.5 | 1.63 | 9760 | | | 1.07 | Si |
| SLV 7 | 261 | -27004 | 11093 | 241989 | | 4.5 | 214.5 | 1.63 | 9760 | | | 0.88 | No, Vu<V |
| SLV 7 | 451 | -28596 | 9126 | 7327 | | 4.76 | 214.5 | 1.63 | 9760 | | | 1.07 | Si |
| SLV 9 | 261 | -5384 | -4939 | 578788 | | 0 | 0 | 0.83 | 0 | | | 0 | No, Vu<V |
| SLV 9 | 451 | -8302 | -3026 | 584055 | | 2.68 | 110.7 | 1.37 | 4243 | | | 1.4 | Si |
| SLV 3 | 261 | -17092 | 12525 | 749076 | | 3.21 | 190.27 | 1.47 | 7858 | | | 0.63 | No, Vu<V |
| SLV 3 | 451 | -24682 | 11692 | -199029 | | 4.11 | 214.5 | 1.63 | 9760 | | | 0.83 | No, Vu<V |
| SLV 6 | 261 | -3838 | -296 | 835409 | | 0 | 0 | 0.83 | 0 | | | 0 | No, Vu<V |
| SLV 6 | 451 | -10404 | 1470 | 314905 | | 1.73 | 214.5 | 1.18 | 7086 | | | 4.82 | Si |
| SLV 1 | 261 | -10142 | 9108 | 927102 | | 7.62 | 47.52 | 1.63 | 2162 | | | 0.24 | No, Vu<V |
| SLV 1 | 451 | -19224 | 9395 | -106755 | | 3.2 | 214.5 | 1.47 | 8850 | | | 0.94 | No, Vu<V |
| SLV 10 | 261 | -5384 | -4939 | 578788 | | 0 | 0 | 0.83 | 0 | | | 0 | No, Vu<V |
| SLV 10 | 451 | -8302 | -3026 | 584055 | | 2.68 | 110.7 | 1.37 | 4243 | | | 1.4 | Si |
| SLV 5 | 261 | -3838 | -296 | 835409 | | 0 | 0 | 0.83 | 0 | | | 0 | No, Vu<V |
| SLV 5 | 451 | -10404 | 1470 | 314905 | | 1.73 | 214.5 | 1.18 | 7086 | | | 4.82 | Si |
| SLV 4 | 261 | -17092 | 12525 | 749076 | | 3.21 | 190.27 | 1.47 | 7858 | | | 0.63 | No, Vu<V |
| SLV 4 | 451 | -24682 | 11692 | -199029 | | 4.11 | 214.5 | 1.63 | 9760 | | | 0.83 | No, Vu<V |
| SLV 2 | 261 | -10142 | 9108 | 927102 | | 7.62 | 47.52 | 1.63 | 2162 | | | 0.24 | No, Vu<V |
| SLV 2 | 451 | -19224 | 9395 | -106755 | | 3.2 | 214.5 | 1.47 | 8850 | | | 0.94 | No, Vu<V |

Verifica a pressoflessione fuori piano D.M. 17-01-18 (N.T.C.)

quota 357.5 Wa 0.05 denominatore 8 γM = 2

| Comb. | fd | Sa | σ0 | N | M | Mc | Coeff.s. | Verifica |
|---|---|---|---|---|---|---|---|---|
| SLV 9 | 14 | 0.32 | 0.89 | -5350 | 20320 | 69442 | 3.42 | Si |
| SLV 10 | 14 | 0.32 | 0.89 | -5350 | 20320 | 69442 | 3.42 | Si |
| SLV 5 | 14 | 0.32 | 1.08 | -6485 | 20320 | 82763 | 4.07 | Si |
| SLV 6 | 14 | 0.32 | 1.08 | -6485 | 20320 | 82763 | 4.07 | Si |
| SLV 13 | 14 | 0.32 | 1.97 | -11829 | 20320 | 138915 | 6.84 | Si |
| SLV 14 | 14 | 0.32 | 1.97 | -11829 | 20320 | 138915 | 6.84 | Si |
| SLV 2 | 14 | 0.32 | 2.6 | -15611 | 20320 | 172062 | 8.47 | Si |
| SLV 1 | 14 | 0.32 | 2.6 | -15611 | 20320 | 172062 | 8.47 | Si |
| SLV 16 | 14 | 0.32 | 3.08 | -18517 | 20320 | 193829 | 9.54 | Si |
| SLV 15 | 14 | 0.32 | 3.08 | -18517 | 20320 | 193829 | 9.54 | Si |

Verifica dei meccanismi locali di collasso con analisi cinematica lineare

forza di aggancio al piano = 0 quota mezzeria = 357.5 Wa = 0.05 Ta = 0.083

| Comb. | N top | N base | V orto | α0 | M* | e* | a0* | aLim | Verifica |
|---|---|---|---|---|---|---|---|---|---|
| SLV 9 | -8304 | 810 | 93 | 0 | 0 | 0 | 0 | 1417.879 | No, Trazione |
| SLV 6 | -10197 | 2250 | 136 | 0 | 0 | 0 | 0 | 1417.879 | No, Trazione |
| SLV 10 | -8304 | 810 | 93 | 0 | 0 | 0 | 0 | 1417.879 | No, Trazione |
| SLV 5 | -10197 | 2250 | 136 | 0 | 0 | 0 | 0 | 1417.879 | No, Trazione |
| SLV 12 | -19660 | -27302 | -128 | 0.035 | 23.174 | 0.96 | 53.195 | 1417.879 | No |
| SLV 11 | -19660 | -27302 | -128 | 0.035 | 23.174 | 0.96 | 53.195 | 1417.879 | No |
| SLV 8 | -21553 | -25863 | -85 | 0.037 | 25.099 | 0.962 | 56.091 | 1417.879 | No |
| SLV 7 | -21553 | -25863 | -85 | 0.037 | 25.099 | 0.962 | 56.091 | 1417.879 | No |
| SLV 2 | -16380 | -5911 | 109 | 0.036 | 19.84 | 0.953 | 54.451 | 813.056 | No |
| SLV 1 | -16380 | -5911 | 109 | 0.036 | 19.84 | 0.953 | 54.451 | 813.056 | No |

Tabella dei coefficienti di sicurezza minimi

| Stato limite | Coeff.s. | Comb. | Verifica |
|---|---|---|---|
| PF_SLU | 2.054 | SLU 77 | Si |
| V_SLU | 1.398 | SLU 83 | Si |
| PF_SLV | 0 | SLV 5 | No |
| V_SLV | 0 | SLV 5 | No |
| PFFP_SLV | 3.417 | SLV 9 | Si |
| R_SLV | 0 | SLV 10 | No |

## Maschio 94

Verifiche condotte secondo D.M. 17-01-18 (N.T.C.)

### Dati geometrici

| X ini. | Y ini. | X fin. | Y fin. | Quota i. | Quota.s | l | Sp. | h netta | h ini. | h fin. | a | a.s.,sx | a.s.,dx |
|---|---|---|---|---|---|---|---|---|---|---|---|---|---|
| -12.3 | 595.1 | -201.3 | 595.1 | L3 | L4 | 189 | 28 | 373 | 373 | 373 | | | |

### Caratteristiche del materiale

(Circolare 7 21-01-19 C8.5.I) Muratura in mattoni pieni e malta di calce LC2_Corti

| fb | fk | fvk0 | fmedio | τ0 | fv0 | μ | ϕ | fv,lim | E | G | FC |
|---|---|---|---|---|---|---|---|---|---|---|---|
| 60 | | | 34.5 | 0.9 | 2 | 0.58 | 0.77 | 3.25 | 32000 | 12800 | 1.2 |

### Verifica a pressoflessione nel piano secondo D.M. 17-01-18 NTC §7.8.2.2.1 in combinazioni non sismiche, γM = 3

| Comb. | Quota | N | M | σ0 | Mu | c.s. | Verifica |
|---|---|---|---|---|---|---|---|
| SLU 78 | 261 | -15068 | -415173 | 2.85 | 926216 | 2.231 | Si |
| SLU 78 | 451 | -19539 | 114977 | 3.69 | 1009518 | 8.78 | Si |
| SLU 83 | 261 | -15877 | -438359 | 3 | 947779 | 2.162 | Si |
| SLU 83 | 451 | -20526 | 104168 | 3.88 | 1016106 | 9.754 | Si |
| SLU 84 | 261 | -15411 | -425473 | 2.91 | 935701 | 2.199 | Si |
| SLU 84 | 451 | -20069 | 111872 | 3.79 | 1013587 | 9.06 | Si |
| SLU 82 | 261 | -15286 | -424119 | 2.89 | 932297 | 2.198 | Si |
| SLU 82 | 451 | -19873 | 100184 | 3.76 | 1012228 | 10.104 | Si |
| SLU 79 | 261 | -15385 | -423757 | 2.91 | 935003 | 2.206 | Si |
| SLU 79 | 451 | -19794 | 107776 | 3.74 | 1011630 | 9.386 | Si |
| SLU 81 | 261 | -15752 | -437004 | 2.98 | 944631 | 2.162 | Si |
| SLU 81 | 451 | -20330 | 92480 | 3.84 | 1015140 | 10.977 | Si |
| SLU 75 | 261 | -14943 | -413818 | 2.82 | 922624 | 2.23 | Si |
| SLU 75 | 451 | -19343 | 103289 | 3.66 | 1007703 | 9.756 | Si |
| SLU 74 | 261 | -15410 | -426704 | 2.91 | 935659 | 2.193 | Si |
| SLU 74 | 451 | -19800 | 95585 | 3.74 | 1011679 | 10.584 | Si |
| SLU 77 | 261 | -15535 | -428058 | 2.94 | 938995 | 2.194 | Si |
| SLU 77 | 451 | -19996 | 107273 | 3.78 | 1013100 | 9.444 | Si |
| SLU 80 | 261 | -14919 | -410872 | 2.82 | 921919 | 2.244 | Si |
| SLU 80 | 451 | -19337 | 115480 | 3.65 | 1007642 | 8.726 | Si |

### Verifica a pressoflessione nel piano secondo D.M. 17-01-18 NTC §7.8.2.2.1 in combinazioni sismiche, γM = 2

| Comb. | Quota | N | M | σ0 | Mu | c.s. | Verifica |
|---|---|---|---|---|---|---|---|
| SLV 10 | 261 | -2968 | -156802 | 0.56 | 267613 | 1.707 | Si |
| SLV 10 | 451 | -6293 | 31160 | 1.19 | 536775 | 17.226 | Si |
| SLV 14 | 261 | -11584 | -716764 | 2.19 | 898571 | 1.254 | Si |
| SLV 14 | 451 | -20379 | 249279 | 3.85 | 1318885 | 5.291 | Si |
| SLV 16 | 261 | -16833 | -892834 | 3.18 | 1176616 | 1.318 | Si |
| SLV 16 | 451 | -26464 | 301573 | 5 | 1477323 | 4.899 | Si |
| SLV 15 | 261 | -16833 | -892834 | 3.18 | 1176616 | 1.318 | Si |
| SLV 15 | 451 | -26464 | 301573 | 5 | 1477323 | 4.899 | Si |
| SLV 9 | 261 | -2968 | -156802 | 0.56 | 267613 | 1.707 | Si |
| SLV 9 | 451 | -6293 | 31160 | 1.19 | 536775 | 17.226 | Si |
| SLV 6 | 261 | -832 | 147094 | 0 | 0 | 0 | No, e>l/2 |
| SLV 6 | 451 | -302 | -103505 | 0 | 0 | 0 | No, e>l/2 |
| SLV 13 | 261 | -11584 | -716764 | 2.19 | 898571 | 1.254 | Si |
| SLV 13 | 451 | -20379 | 249279 | 3.85 | 1318885 | 5.291 | Si |
| SLV 2 | 261 | -4464 | 296225 | 0.84 | 392761 | 1.326 | Si |
| SLV 2 | 451 | -412 | -199605 | 0 | 0 | 0 | No, e>l/2 |
| SLV 1 | 261 | -4464 | 296225 | 0.84 | 392761 | 1.326 | Si |
| SLV 1 | 451 | -412 | -199605 | 0 | 0 | 0 | No, e>l/2 |
| SLV 5 | 261 | -832 | 147094 | 0 | 0 | 0 | No, e>l/2 |
| SLV 5 | 451 | -302 | -103505 | 0 | 0 | 0 | No, e>l/2 |

### Verifica a taglio nel piano secondo D.M. 17-01-18 (N.T.C.) §7.8.2.2.2 con rottura per scorrimento in combinazioni non sismiche, γM = 3

| Comb. | Quota | N | V par | M | σ0 | σN | l' | fvd | Vt scorr. | Vt fess.diag. | Vt,lim | c.s. | Verifica |
|---|---|---|---|---|---|---|---|---|---|---|---|---|---|
| SLU 79 | 261 | -15385 | -6191 | -423757 | | 2.91 | 189 | 0.94 | 4991 | | | 0.81 | No, Vu<V |
| SLU 79 | 451 | -19794 | -6175 | 107776 | | 3.74 | 189 | 1.05 | 5579 | | | 0.9 | No, Vu<V |
| SLU 75 | 261 | -14943 | -6110 | -413818 | | 2.82 | 189 | 0.93 | 4932 | | | 0.81 | No, Vu<V |
| SLU 75 | 451 | -19343 | -6094 | 103289 | | 3.66 | 189 | 1.04 | 5519 | | | 0.91 | No, Vu<V |
| SLU 81 | 261 | -15752 | -6264 | -437004 | | 2.98 | 189 | 0.95 | 5040 | | | 0.8 | No, Vu<V |
| SLU 81 | 451 | -20330 | -6249 | 92480 | | 3.84 | 189 | 1.07 | 5651 | | | 0.9 | No, Vu<V |
| SLU 78 | 261 | -15068 | -6215 | -415173 | | 2.85 | 189 | 0.94 | 4949 | | | 0.8 | No, Vu<V |
| SLU 78 | 451 | -19539 | -6197 | 114977 | | 3.69 | 189 | 1.05 | 5545 | | | 0.89 | No, Vu<V |
| SLU 82 | 261 | -15286 | -6242 | -424119 | | 2.89 | 189 | 0.94 | 4978 | | | 0.8 | No, Vu<V |
| SLU 82 | 451 | -19873 | -6225 | 100184 | | 3.76 | 189 | 1.06 | 5590 | | | 0.9 | No, Vu<V |
| SLU 84 | 261 | -15411 | -6346 | -425473 | | 2.91 | 189 | 0.94 | 4995 | | | 0.79 | No, Vu<V |
| SLU 84 | 451 | -20069 | -6329 | 111872 | | 3.79 | 189 | 1.06 | 5616 | | | 0.89 | No, Vu<V |
| SLU 80 | 261 | -14919 | -6168 | -410872 | | 2.82 | 189 | 0.93 | 4929 | | | 0.8 | No, Vu<V |
| SLU 80 | 451 | -19337 | -6151 | 115480 | | 3.65 | 189 | 1.04 | 5518 | | | 0.9 | No, Vu<V |
| SLU 83 | 261 | -15877 | -6368 | -438359 | | 3 | 189 | 0.96 | 5057 | | | 0.79 | No, Vu<V |
| SLU 83 | 451 | -20526 | -6352 | 104168 | | 3.88 | 189 | 1.07 | 5677 | | | 0.89 | No, Vu<V |
| SLU 77 | 261 | -15535 | -6237 | -428058 | | 2.94 | 189 | 0.95 | 5011 | | | 0.8 | No, Vu<V |
| SLU 77 | 451 | -19996 | -6221 | 107273 | | 3.78 | 189 | 1.06 | 5606 | | | 0.9 | No, Vu<V |
| SLU 76 | 261 | -14483 | -6049 | -400927 | | 2.74 | 189 | 0.92 | 4871 | | | 0.81 | No, Vu<V |
| SLU 76 | 451 | -18836 | -6032 | 108928 | | 3.56 | 189 | 1.03 | 5451 | | | 0.9 | No, Vu<V |

### Verifica a taglio nel piano secondo D.M. 17-01-18 (N.T.C.) §7.8.2.2.2 con rottura per scorrimento in combinazioni sismiche, γM = 2

| Comb. | Quota | N | V par | M | σ0 | σN | l' | fvd | Vt scorr. | Vt fess.diag. | Vt,lim | c.s. | Verifica |
|---|---|---|---|---|---|---|---|---|---|---|---|---|---|
| SLV 5 | 261 | -832 | 4172 | 147094 | | 0 | 0 | 0.83 | 0 | | | 0 | No, Vu<V |
| SLV 5 | 451 | -302 | 1988 | -103505 | | 0 | 0 | 0.83 | 0 | | | 0 | No, Vu<V |
| SLV 11 | 261 | -20465 | -12461 | -743703 | | 4.19 | 174.48 | 1.63 | 7939 | | | 0.64 | No, Vu<V |

| Comb. | Quota | N | V par | M | σ0 | σN | l' | fvd | Vt scorr. | Vt fess.diag. | Vt,lim | c.s. | Verifica |
|---|---|---|---|---|---|---|---|---|---|---|---|---|---|
| SLV 11 | 451 | -26573 | -10257 | 205474 | | 5.02 | 189 | 1.63 | 8599 | | | 0.84 | No, Vu<V |
| SLV 15 | 261 | -16833 | -12747 | -892834 | | 4.83 | 124.38 | 1.63 | 5659 | | | 0.44 | No, Vu<V |
| SLV 15 | 451 | -26464 | -11995 | 301573 | | 5 | 189 | 1.63 | 8599 | | | 0.72 | No, Vu<V |
| SLV 16 | 261 | -16833 | -12747 | -892834 | | 4.83 | 124.38 | 1.63 | 5659 | | | 0.44 | No, Vu<V |
| SLV 16 | 451 | -26464 | -11995 | 301573 | | 5 | 189 | 1.63 | 8599 | | | 0.72 | No, Vu<V |
| SLV 1 | 261 | -4464 | 4457 | 296225 | | 1.89 | 84.44 | 1.21 | 2863 | | | 0.64 | No, Vu<V |
| SLV 1 | 451 | -412 | 3726 | -199605 | | 0 | 0 | 0.83 | 0 | | | 0 | No, Vu<V |
| SLV 13 | 261 | -11584 | -8965 | -716764 | | 4.23 | 97.87 | 1.63 | 4453 | | | 0.5 | No, Vu<V |
| SLV 13 | 451 | -20379 | -9513 | 249279 | | 3.85 | 189 | 1.6 | 8486 | | | 0.89 | No, Vu<V |
| SLV 2 | 261 | -4464 | 4457 | 296225 | | 1.89 | 84.44 | 1.21 | 2863 | | | 0.64 | No, Vu<V |
| SLV 2 | 451 | -412 | 3726 | -199605 | | 0 | 0 | 0.83 | 0 | | | 0 | No, Vu<V |
| SLV 6 | 261 | -832 | 4172 | 147094 | | 0 | 0 | 0.83 | 0 | | | 0 | No, Vu<V |
| SLV 6 | 451 | -302 | 1988 | -103505 | | 0 | 0 | 0.83 | 0 | | | 0 | No, Vu<V |
| SLV 14 | 261 | -11584 | -8965 | -716764 | | 4.23 | 97.87 | 1.63 | 4453 | | | 0.5 | No, Vu<V |
| SLV 14 | 451 | -20379 | -9513 | 249279 | | 3.85 | 189 | 1.6 | 8486 | | | 0.89 | No, Vu<V |
| SLV 12 | 261 | -20465 | -12461 | -743703 | | 4.19 | 174.48 | 1.63 | 7939 | | | 0.64 | No, Vu<V |
| SLV 12 | 451 | -26573 | -10257 | 205474 | | 5.02 | 189 | 1.63 | 8599 | | | 0.84 | No, Vu<V |

### Verifica a pressoflessione fuori piano D.M. 17-01-18 (N.T.C.)

quota 357.5 Wa 0.05 denominatore 8 γM = 2

| Comb. | fd | Sa | σ0 | N | M | Mc | Coeff.s. | Verifica |
|---|---|---|---|---|---|---|---|---|
| SLV 5 | 14 | 0.32 | 0 | 1794 | 17905 | 0 | 0 | No, Trazione |
| SLV 6 | 14 | 0.32 | 0 | 1794 | 17905 | 0 | 0 | No, Trazione |
| SLV 2 | 14 | 0.32 | 0.39 | -2088 | 17905 | 28285 | 1.58 | Si |
| SLV 1 | 14 | 0.32 | 0.39 | -2088 | 17905 | 28285 | 1.58 | Si |
| SLV 9 | 14 | 0.32 | 0.43 | -2251 | 17905 | 30423 | 1.7 | Si |
| SLV 10 | 14 | 0.32 | 0.43 | -2251 | 17905 | 30423 | 1.7 | Si |
| SLV 3 | 14 | 0.32 | 1.79 | -9460 | 17905 | 113062 | 6.31 | Si |
| SLV 4 | 14 | 0.32 | 1.79 | -9460 | 17905 | 113062 | 6.31 | Si |
| SLV 13 | 14 | 0.32 | 2.94 | -15572 | 17905 | 165503 | 9.24 | Si |
| SLV 14 | 14 | 0.32 | 2.94 | -15572 | 17905 | 165503 | 9.24 | Si |

### Verifica dei meccanismi locali di collasso con analisi cinematica lineare

forza di aggancio al piano = 0 quota mezzeria = 357.5 Wa = 0.05 Ta = 0.083

| Comb. | N top | N base | V orto | α0 | M* | e* | a0* | aLim | Verifica |
|---|---|---|---|---|---|---|---|---|---|
| SLV 5 | -2235 | 4239 | 81 | 0 | 0 | 0 | 0 | 1417.879 | No, Trazione |
| SLV 6 | -2235 | 4239 | 81 | 0 | 0 | 0 | 0 | 1417.879 | No, Trazione |
| SLV 10 | -6011 | 1968 | 88 | 0 | 0 | 0 | 0 | 1417.879 | No, Trazione |
| SLV 9 | -6011 | 1968 | 88 | 0 | 0 | 0 | 0 | 1417.879 | No, Trazione |
| SLV 8 | -16599 | -21074 | -83 | 0.037 | 19.682 | 0.958 | 55.618 | 1417.879 | No |
| SLV 7 | -16599 | -21074 | -83 | 0.037 | 19.682 | 0.958 | 55.618 | 1417.879 | No |
| SLV 12 | -20375 | -23345 | -76 | 0.037 | 23.524 | 0.964 | 55.956 | 1417.879 | No |
| SLV 11 | -20375 | -23345 | -76 | 0.037 | 23.524 | 0.964 | 55.956 | 1417.879 | No |
| SLV 14 | -15444 | -9540 | 39 | 0.039 | 18.508 | 0.956 | 59.543 | 813.056 | No |
| SLV 13 | -15444 | -9540 | 39 | 0.039 | 18.508 | 0.956 | 59.543 | 813.056 | No |

### Tabella dei coefficienti di sicurezza minimi

| Stato limite | Coeff.s. | Comb. | Verifica |
|---|---|---|---|
| PF_SLU | 2.162 | SLU 81 | Si |
| V_SLU | 0.787 | SLU 84 | No |
| PF_SLV | 0 | SLV 1 | No |
| V_SLV | 0 | SLV 1 | No |
| PFFP_SLV | 0 | SLV 6 | No |
| R_SLV | 0 | SLV 10 | No |

## Maschio 95

Verifiche condotte secondo D.M. 17-01-18 (N.T.C.)

### Dati geometrici

| X ini. | Y ini. | X fin. | Y fin. | Quota i. | Quota.s | l | Sp. | h netta | h ini. | h fin. | a | a.s.,sx | a.s.,dx |
|---|---|---|---|---|---|---|---|---|---|---|---|---|---|
| -12.3 | -328.4 | -12.3 | 595.1 | L3 | L4 | 923.5 | 28 | 373 | 373 | 373 | | | |

### Caratteristiche del materiale

(Circolare 7 21-01-19 C8.5.I) Muratura in mattoni pieni e malta di calce LC2_Corti

| fb | fk | fvk0 | fmedio | τ0 | fv0 | μ | ϕ | fv,lim | E | G | FC |
|---|---|---|---|---|---|---|---|---|---|---|---|
| 60 | | | 34.5 | 0.9 | 2 | 0.58 | 0.77 | 3.25 | 32000 | 12800 | 1.2 |

### Verifica a pressoflessione nel piano secondo D.M. 17-01-18 NTC §7.8.2.2.1 in combinazioni non sismiche, γM = 3

| Comb. | Quota | N | M | σ0 | Mu | c.s. | Verifica |
|---|---|---|---|---|---|---|---|
| SLU 73 | 171 | -167992 | -4395070 | 6.5 | 15703687 | 3.573 | Si |
| SLU 73 | 544 | -110227 | -1862937 | 4.26 | 24262010 | 13.024 | Si |
| SLU 78 | 171 | -171826 | -3875481 | 6.65 | 14617712 | 3.772 | Si |
| SLU 78 | 544 | -113373 | -1724016 | 4.38 | 24172595 | 14.021 | Si |
| SLU 68 | 171 | -155618 | -4574459 | 6.02 | 18768212 | 4.103 | Si |
| SLU 68 | 544 | -101915 | -2053516 | 3.94 | 24289503 | 11.828 | Si |
| SLU 82 | 171 | -172823 | -3447890 | 6.68 | 14324791 | 4.155 | Si |
| SLU 82 | 544 | -113652 | -1399129 | 4.4 | 24162560 | 17.27 | Si |
| SLU 76 | 171 | -169715 | -4616078 | 6.56 | 15223508 | 3.298 | Si |
| SLU 76 | 544 | -111507 | -2019690 | 4.31 | 24230875 | 11.997 | Si |
| SLU 65 | 171 | -153894 | -4353452 | 5.95 | 19141849 | 4.397 | Si |
| SLU 65 | 544 | -100636 | -1896763 | 3.89 | 24266833 | 12.794 | Si |
| SLU 75 | 171 | -170103 | -3654473 | 6.58 | 15113845 | 4.136 | Si |
| SLU 75 | 544 | -112093 | -1567264 | 4.33 | 24214199 | 15.45 | Si |

| Comb. | Quota | N | M | σ0 | Mu | c.s. | Verifica |
|---|---|---|---|---|---|---|---|
| SLU 55 | 171 | -155247 | -4297766 | 6 | 18849799 | 4.386 | Si |
| SLU 55 | 544 | -101502 | -1849380 | 3.93 | 24282974 | 13.13 | Si |
| SLU 84 | 171 | -174547 | -3668897 | 6.75 | 13808096 | 3.764 | Si |
| SLU 84 | 544 | -114932 | -1555881 | 4.44 | 24112212 | 15.497 | Si |
| SLU 80 | 171 | -170229 | -3872068 | 6.58 | 15077879 | 3.894 | Si |
| SLU 80 | 544 | -112101 | -1727131 | 4.34 | 24213988 | 14.02 | Si |

Verifica a pressoflessione nel piano secondo D.M. 17-01-18 NTC §7.8.2.2.1 in combinazioni sismiche, γM = 2

| Comb. | Quota | N | M | σ0 | Mu | c.s. | Verifica |
|---|---|---|---|---|---|---|---|
| SLV 1 | 171 | -36656 | -4775962 | 1.42 | 14962191 | 3.133 | Si |
| SLV 1 | 544 | -27167 | -3150035 | 1.05 | 11465488 | 3.64 | Si |
| SLV 10 | 171 | -139903 | -17473204 | 5.41 | 35994972 | 2.06 | Si |
| SLV 10 | 544 | -90454 | -8356542 | 3.5 | 29809302 | 3.567 | Si |
| SLV 11 | 171 | -141869 | 13793900 | 5.49 | 36093200 | 2.617 | Si |
| SLV 11 | 544 | -92329 | 7403628 | 3.57 | 30174246 | 4.076 | Si |
| SLV 5 | 171 | -91933 | -16663778 | 3.56 | 30098034 | 1.806 | Si |
| SLV 5 | 544 | -60941 | -8499412 | 2.36 | 22711866 | 2.672 | Si |
| SLV 12 | 171 | -141869 | 13793900 | 5.49 | 36093200 | 2.617 | Si |
| SLV 12 | 544 | -92329 | 7403628 | 3.57 | 30174246 | 4.076 | Si |
| SLV 6 | 171 | -91933 | -16663778 | 3.56 | 30098034 | 1.806 | Si |
| SLV 6 | 544 | -60941 | -8499412 | 2.36 | 22711866 | 2.672 | Si |
| SLV 8 | 171 | -93899 | 14603326 | 3.63 | 30471992 | 2.087 | Si |
| SLV 8 | 544 | -62816 | 7260758 | 2.43 | 23238567 | 3.201 | Si |
| SLV 9 | 171 | -139903 | -17473204 | 5.41 | 35994972 | 2.06 | Si |
| SLV 9 | 544 | -90454 | -8356542 | 3.5 | 29809302 | 3.567 | Si |
| SLV 7 | 171 | -93899 | 14603326 | 3.63 | 30471992 | 2.087 | Si |
| SLV 7 | 544 | -62816 | 7260758 | 2.43 | 23238567 | 3.201 | Si |
| SLV 2 | 171 | -36656 | -4775962 | 1.42 | 14962191 | 3.133 | Si |
| SLV 2 | 544 | -27167 | -3150035 | 1.05 | 11465488 | 3.64 | Si |

Verifica a taglio nel piano secondo D.M. 17-01-18 (N.T.C.) §7.8.2.2.2 con rottura per scorrimento in combinazioni non sismiche, γM = 3

| Comb. | Quota | N | V par | M | σ0 | σN | l' | fvd | Vt scorr. | Vt fess.diag. | Vt,lim | c.s. | Verifica |
|---|---|---|---|---|---|---|---|---|---|---|---|---|---|
| SLU 34 | 171 | -142054 | -934 | -4325583 | | 5.49 | 923.49 | 1.08 | 28013 | | | 29.98 | Si |
| SLU 34 | 544 | -93626 | -650 | -1925413 | | 3.62 | 923.49 | 1.04 | 26849 | | | 41.33 | Si |
| SLU 2 | 171 | -111764 | -1079 | -3744645 | | 4.32 | 923.49 | 1.08 | 28013 | | | 25.97 | Si |
| SLU 2 | 544 | -72751 | -798 | -1632176 | | 2.81 | 923.49 | 0.93 | 24066 | | | 30.16 | Si |
| SLU 26 | 171 | -127957 | -1005 | -4283964 | | 4.95 | 923.49 | 1.08 | 28013 | | | 27.88 | Si |
| SLU 26 | 544 | -84034 | -721 | -1959239 | | 3.25 | 923.49 | 0.99 | 25570 | | | 35.46 | Si |
| SLU 5 | 171 | -113488 | -1102 | -3965652 | | 4.39 | 923.49 | 1.08 | 28013 | | | 25.43 | Si |
| SLU 5 | 544 | -74030 | -821 | -1788929 | | 2.86 | 923.49 | 0.94 | 24236 | | | 29.53 | Si |
| SLU 44 | 171 | -139425 | -945 | -4035140 | | 5.39 | 923.49 | 1.08 | 28013 | | | 29.64 | Si |
| SLU 44 | 544 | -90631 | -657 | -1726453 | | 3.5 | 923.49 | 1.02 | 26450 | | | 40.23 | Si |
| SLU 81 | 171 | -171008 | 888 | -2000364 | | 6.61 | 923.49 | 1.08 | 28013 | | | 31.56 | Si |
| SLU 81 | 544 | -112624 | 924 | -725161 | | 4.36 | 923.49 | 1.08 | 28013 | | | 30.3 | Si |
| SLU 23 | 171 | -126233 | -982 | -4062957 | | 4.88 | 923.49 | 1.08 | 28013 | | | 28.53 | Si |
| SLU 23 | 544 | -82755 | -698 | -1802486 | | 3.2 | 923.49 | 0.98 | 25399 | | | 36.37 | Si |
| SLU 10 | 171 | -125862 | -1008 | -3786263 | | 4.87 | 923.49 | 1.08 | 28013 | | | 27.79 | Si |
| SLU 10 | 544 | -82342 | -726 | -1598350 | | 3.18 | 923.49 | 0.98 | 25344 | | | 34.89 | Si |
| SLU 13 | 171 | -127586 | -1031 | -4007271 | | 4.93 | 923.49 | 1.08 | 28013 | | | 27.17 | Si |
| SLU 13 | 544 | -83622 | -749 | -1755103 | | 3.23 | 923.49 | 0.99 | 25515 | | | 34.06 | Si |
| SLU 47 | 171 | -141149 | -968 | -4256147 | | 5.46 | 923.49 | 1.08 | 28013 | | | 28.94 | Si |
| SLU 47 | 544 | -91911 | -680 | -1883206 | | 3.55 | 923.49 | 1.03 | 26620 | | | 39.13 | Si |

Verifica a taglio nel piano secondo D.M. 17-01-18 (N.T.C.) §7.8.2.2.2 con rottura per scorrimento in combinazioni sismiche, γM = 2

| Comb. | Quota | N | V par | M | σ0 | σN | l' | fvd | Vt scorr. | Vt fess.diag. | Vt,lim | c.s. | Verifica |
|---|---|---|---|---|---|---|---|---|---|---|---|---|---|
| SLD 12 | 171 | -127556 | 12479 | 4988376 | | 4.93 | 923.49 | 1.63 | 42019 | | | 3.37 | Si |
| SLD 12 | 544 | -83350 | 8599 | 2799176 | | 3.22 | 923.49 | 1.48 | 38218 | | | 4.44 | Si |
| SLV 9 | 171 | -139903 | -26863 | -17473204 | | 5.41 | 923.49 | 1.63 | 42019 | | | 1.56 | Si |
| SLV 9 | 544 | -90454 | -17937 | -8356542 | | 3.5 | 923.49 | 1.53 | 39639 | | | 2.21 | Si |
| SLV 8 | 171 | -93899 | 28071 | 14603326 | | 3.65 | 918.68 | 1.56 | 40216 | | | 1.43 | Si |
| SLV 8 | 544 | -62816 | 19199 | 7260758 | | 2.43 | 923.49 | 1.32 | 34111 | | | 1.78 | Si |
| SLV 5 | 171 | -91933 | -27035 | -16663778 | | 3.9 | 841.46 | 1.61 | 38021 | | | 1.41 | Si |
| SLV 5 | 544 | -60941 | -17989 | -8499412 | | 2.36 | 923.49 | 1.3 | 33736 | | | 1.88 | Si |
| SLV 12 | 171 | -141869 | 28243 | 13793900 | | 5.49 | 923.49 | 1.63 | 42019 | | | 1.49 | Si |
| SLV 12 | 544 | -92329 | 19251 | 7403628 | | 3.57 | 923.49 | 1.55 | 40014 | | | 2.08 | Si |
| SLV 6 | 171 | -91933 | -27035 | -16663778 | | 3.9 | 841.46 | 1.61 | 38021 | | | 1.41 | Si |
| SLV 6 | 544 | -60941 | -17989 | -8499412 | | 2.36 | 923.49 | 1.3 | 33736 | | | 1.88 | Si |
| SLV 7 | 171 | -93899 | 28071 | 14603326 | | 3.65 | 918.68 | 1.56 | 40216 | | | 1.43 | Si |
| SLV 7 | 544 | -62816 | 19199 | 7260758 | | 2.43 | 923.49 | 1.32 | 34111 | | | 1.78 | Si |
| SLD 11 | 171 | -127556 | 12479 | 4988376 | | 4.93 | 923.49 | 1.63 | 42019 | | | 3.37 | Si |
| SLD 11 | 544 | -83350 | 8599 | 2799176 | | 3.22 | 923.49 | 1.48 | 38218 | | | 4.44 | Si |
| SLV 11 | 171 | -141869 | 28243 | 13793900 | | 5.49 | 923.49 | 1.63 | 42019 | | | 1.49 | Si |
| SLV 11 | 544 | -92329 | 19251 | 7403628 | | 3.57 | 923.49 | 1.55 | 40014 | | | 2.08 | Si |
| SLV 10 | 171 | -139903 | -26863 | -17473204 | | 5.41 | 923.49 | 1.63 | 42019 | | | 1.56 | Si |
| SLV 10 | 544 | -90454 | -17937 | -8356542 | | 3.5 | 923.49 | 1.53 | 39639 | | | 2.21 | Si |

Verifica a pressoflessione fuori piano D.M. 17-01-18 (N.T.C.)

quota 357.5 Wa 0.05 denominatore 8 γM = 2

| Comb. | fd | Sa | σ0 | N | M | Mc | Coeff.s. | Verifica |
|---|---|---|---|---|---|---|---|---|
| SLV 2 | 14 | 0.32 | 1.25 | -32441 | 87486 | 407539 | 4.66 | Si |
| SLV 1 | 14 | 0.32 | 1.25 | -32441 | 87486 | 407539 | 4.66 | Si |
| SLV 3 | 14 | 0.32 | 1.26 | -32641 | 87486 | 409763 | 4.68 | Si |
| SLV 4 | 14 | 0.32 | 1.26 | -32641 | 87486 | 409763 | 4.68 | Si |
| SLV 6 | 14 | 0.32 | 2.91 | -75167 | 87486 | 801977 | 9.17 | Si |
| SLV 5 | 14 | 0.32 | 2.91 | -75167 | 87486 | 801977 | 9.17 | Si |
| SLV 7 | 14 | 0.32 | 2.93 | -75834 | 87486 | 806851 | 9.22 | Si |
| SLV 8 | 14 | 0.32 | 2.93 | -75834 | 87486 | 806851 | 9.22 | Si |

| Comb. | fd | Sa | σ0 | N | M | Mc | Coeff.s. | Verifica |
|---|---|---|---|---|---|---|---|---|
| SLV 9 | 14 | 0.32 | 4.33 | -111989 | 87486 | 1012121 | 11.57 | Si |
| SLV 10 | 14 | 0.32 | 4.33 | -111989 | 87486 | 1012121 | 11.57 | Si |

### Verifica dei meccanismi locali di collasso con analisi cinematica lineare

forza di aggancio al piano = 0 quota mezzeria = 357.5 Wa = 0.05 Ta = 0.083

| Comb. | N top | N base | V orto | α0 | M* | e* | a0* | aLim | Verifica |
|---|---|---|---|---|---|---|---|---|---|
| SLV 12 | -92329 | -141869 | -132 | 0.039 | 107.589 | 0.962 | 59.59 | 1417.879 | No |
| SLV 11 | -92329 | -141869 | -132 | 0.039 | 107.589 | 0.962 | 59.59 | 1417.879 | No |
| SLV 10 | -90454 | -139903 | 59 | 0.04 | 105.681 | 0.962 | 60.79 | 1417.879 | No |
| SLV 9 | -90454 | -139903 | 59 | 0.04 | 105.681 | 0.962 | 60.79 | 1417.879 | No |
| SLV 5 | -60941 | -91933 | 108 | 0.041 | 75.689 | 0.948 | 62.311 | 1417.879 | No |
| SLV 6 | -60941 | -91933 | 108 | 0.041 | 75.689 | 0.948 | 62.311 | 1417.879 | No |
| SLV 8 | -62816 | -93899 | -83 | 0.041 | 77.592 | 0.949 | 62.658 | 1417.879 | No |
| SLV 7 | -62816 | -93899 | -83 | 0.041 | 77.592 | 0.949 | 62.658 | 1417.879 | No |
| SLV 15 | -126104 | -197146 | -122 | 0.039 | 141.966 | 0.971 | 58.454 | 813.056 | No |
| SLV 16 | -126104 | -197146 | -122 | 0.039 | 141.966 | 0.971 | 58.454 | 813.056 | No |

### Tabella dei coefficienti di sicurezza minimi

| Stato limite | Coeff.s. | Comb. | Verifica |
|---|---|---|---|
| PF_SLU | 3.298 | SLU 76 | Si |
| V_SLU | 25.426 | SLU 5 | Si |
| PF_SLV | 1.806 | SLV 5 | Si |
| V_SLV | 1.406 | SLV 5 | Si |
| PFFP_SLV | 4.658 | SLV 1 | Si |
| R_SLV | 0.042 | SLV 11 | No |

## Maschio 96

Verifiche condotte secondo D.M. 17-01-18 (N.T.C.)

### Dati geometrici

| X ini. | Y ini. | X fin. | Y fin. | Quota i. | Quota.s | l | Sp. | h netta | h ini. | h fin. | a | a.s.,sx | a.s.,dx |
|---|---|---|---|---|---|---|---|---|---|---|---|---|---|
| -2467.8 | -335.9 | -2467.8 | 126.6 | L4 | L5 | 462.6 | 28 | 352 | 352 | 352 | | | |

### Caratteristiche del materiale

(Circolare 7 21-01-19 C8.5.I) Muratura in mattoni pieni e malta di calce LC2_Corti

| fb | fk | fvk0 | fmedio | τ0 | fv0 | μ | ϕ | fv,lim | E | G | FC |
|---|---|---|---|---|---|---|---|---|---|---|---|
| 60 | | | 34.5 | 0.9 | 2 | 0.58 | 0.77 | 3.25 | 32000 | 12800 | 1.2 |

### Verifica a pressoflessione nel piano secondo D.M. 17-01-18 NTC §7.8.2.2.1 in combinazioni non sismiche, γM = 3

| Comb. | Quota | N | M | σ0 | Mu | c.s. | Verifica |
|---|---|---|---|---|---|---|---|
| SLU 41 | 544 | -47816 | 588533 | 3.69 | 6046972 | 10.275 | Si |
| SLU 41 | 754 | -36979 | 321460 | 2.86 | 5555005 | 17.281 | Si |
| SLU 32 | 544 | -46158 | 547009 | 3.56 | 6005070 | 10.978 | Si |
| SLU 32 | 754 | -35842 | 320481 | 2.77 | 5473509 | 17.079 | Si |
| SLU 81 | 544 | -54641 | 672034 | 4.22 | 6092563 | 9.066 | Si |
| SLU 81 | 754 | -42230 | 418237 | 3.26 | 5857659 | 14.006 | Si |
| SLU 60 | 544 | -49247 | 564452 | 3.8 | 6073444 | 10.76 | Si |
| SLU 60 | 754 | -38161 | 401982 | 2.95 | 5633664 | 14.015 | Si |
| SLU 77 | 544 | -55903 | 574802 | 4.32 | 6078618 | 10.575 | Si |
| SLU 77 | 754 | -43657 | 386494 | 3.37 | 5919051 | 15.315 | Si |
| SLU 39 | 544 | -46356 | 616387 | 3.58 | 6010703 | 9.752 | Si |
| SLU 39 | 754 | -35697 | 336842 | 2.76 | 5462709 | 16.217 | Si |
| SLU 79 | 544 | -55407 | 556217 | 4.28 | 6084937 | 10.94 | Si |
| SLU 79 | 754 | -43234 | 378264 | 3.34 | 5901787 | 15.602 | Si |
| SLU 74 | 544 | -54443 | 602656 | 4.2 | 6094115 | 10.112 | Si |
| SLU 74 | 754 | -42375 | 401876 | 3.27 | 5864305 | 14.592 | Si |
| SLU 83 | 544 | -56101 | 644180 | 4.33 | 6075799 | 9.432 | Si |
| SLU 83 | 754 | -43512 | 402855 | 3.36 | 5913221 | 14.678 | Si |
| SLU 82 | 544 | -56114 | 546389 | 4.33 | 6075603 | 11.12 | Si |
| SLU 82 | 754 | -43308 | 411319 | 3.34 | 5904877 | 14.356 | Si |

### Verifica a pressoflessione nel piano secondo D.M. 17-01-18 NTC §7.8.2.2.1 in combinazioni sismiche, γM = 2

| Comb. | Quota | N | M | σ0 | Mu | c.s. | Verifica |
|---|---|---|---|---|---|---|---|
| SLV 15 | 544 | -4496 | 159314 | 0.35 | 1010301 | 6.342 | Si |
| SLV 15 | 754 | -7387 | 403876 | 0.57 | 1628840 | 4.033 | Si |
| SLV 11 | 544 | -18027 | 1739985 | 1.39 | 3694424 | 2.123 | Si |
| SLV 11 | 754 | -13978 | 637609 | 1.08 | 2947328 | 4.622 | Si |
| SLV 10 | 544 | -37923 | -1395653 | 2.93 | 6669171 | 4.779 | Si |
| SLV 10 | 754 | -32173 | -34859 | 2.48 | 5928345 | 170.067 | Si |
| SLV 16 | 544 | -4496 | 159314 | 0.35 | 1010301 | 6.342 | Si |
| SLV 16 | 754 | -7387 | 403876 | 0.57 | 1628840 | 4.033 | Si |
| SLV 14 | 544 | -10465 | -781378 | 0.81 | 2260272 | 2.893 | Si |
| SLV 14 | 754 | -12846 | 202136 | 0.99 | 2729897 | 13.505 | Si |
| SLV 12 | 544 | -18027 | 1739985 | 1.39 | 3694424 | 2.123 | Si |
| SLV 12 | 754 | -13978 | 637609 | 1.08 | 2947328 | 4.622 | Si |
| SLV 7 | 544 | -35594 | 2154155 | 2.75 | 6380736 | 2.962 | Si |
| SLV 7 | 754 | -25085 | 636211 | 1.94 | 4882197 | 7.674 | Si |
| SLV 13 | 544 | -10465 | -781378 | 0.81 | 2260272 | 2.893 | Si |
| SLV 13 | 754 | -12846 | 202136 | 0.99 | 2729897 | 13.505 | Si |
| SLV 8 | 544 | -35594 | 2154155 | 2.75 | 6380736 | 2.962 | Si |
| SLV 8 | 754 | -25085 | 636211 | 1.94 | 4882197 | 7.674 | Si |
| SLV 9 | 544 | -37923 | -1395653 | 2.93 | 6669171 | 4.779 | Si |
| SLV 9 | 754 | -32173 | -34859 | 2.48 | 5928345 | 170.067 | Si |

Verifica a taglio nel piano secondo D.M. 17-01-18 (N.T.C.) §7.8.2.2.2 con rottura per scorrimento in combinazioni non sismiche, γM = 3

| Comb. | Quota | N | V par | M | σ0 | σN | l' | fvd | Vt scorr. | Vt fess.diag. | Vt,lim | c.s. | Verifica |
|---|---|---|---|---|---|---|---|---|---|---|---|---|---|
| SLU 62 | 544 | -50707 | 3229 | 536598 | | 3.91 | 462.57 | 1.08 | 13956 | | | 4.32 | Si |
| SLU 62 | 754 | -39444 | 3229 | 386600 | | 3.05 | 462.57 | 0.96 | 12455 | | | 3.86 | Si |
| SLU 81 | 544 | -54641 | 3466 | 672034 | | 4.22 | 462.57 | 1.08 | 14031 | | | 4.05 | Si |
| SLU 81 | 754 | -42230 | 3465 | 418237 | | 3.26 | 462.57 | 0.99 | 12826 | | | 3.7 | Si |
| SLU 83 | 544 | -56101 | 3419 | 644180 | | 4.33 | 462.57 | 1.08 | 14031 | | | 4.1 | Si |
| SLU 83 | 754 | -43512 | 3419 | 402855 | | 3.36 | 462.57 | 1 | 12997 | | | 3.8 | Si |
| SLU 64 | 544 | -47460 | 3179 | 471669 | | 3.66 | 462.57 | 1.04 | 13523 | | | 4.25 | Si |
| SLU 64 | 754 | -37028 | 3179 | 387542 | | 2.86 | 462.57 | 0.94 | 12133 | | | 3.82 | Si |
| SLU 74 | 544 | -54443 | 3352 | 602656 | | 4.2 | 462.57 | 1.08 | 14031 | | | 4.19 | Si |
| SLU 74 | 754 | -42375 | 3352 | 401876 | | 3.27 | 462.57 | 0.99 | 12845 | | | 3.83 | Si |
| SLU 43 | 544 | -42065 | 2990 | 364087 | | 3.25 | 462.57 | 0.99 | 12804 | | | 4.28 | Si |
| SLU 43 | 754 | -32959 | 2990 | 371288 | | 2.54 | 462.57 | 0.89 | 11590 | | | 3.88 | Si |
| SLU 82 | 544 | -56114 | 3209 | 546389 | | 4.33 | 462.57 | 1.08 | 14031 | | | 4.37 | Si |
| SLU 82 | 754 | -43308 | 3356 | 411319 | | 3.34 | 462.57 | 1 | 12970 | | | 3.86 | Si |
| SLU 53 | 544 | -49049 | 3163 | 495074 | | 3.79 | 462.57 | 1.06 | 13735 | | | 4.34 | Si |
| SLU 53 | 754 | -38306 | 3163 | 385621 | | 2.96 | 462.57 | 0.95 | 12303 | | | 3.89 | Si |
| SLU 60 | 544 | -49247 | 3276 | 564452 | | 3.8 | 462.57 | 1.06 | 13762 | | | 4.2 | Si |
| SLU 60 | 754 | -38161 | 3276 | 401982 | | 2.95 | 462.57 | 0.95 | 12284 | | | 3.75 | Si |
| SLU 66 | 544 | -49416 | 3152 | 462400 | | 3.82 | 462.57 | 1.06 | 13784 | | | 4.37 | Si |
| SLU 66 | 754 | -38733 | 3152 | 380390 | | 2.99 | 462.57 | 0.95 | 12360 | | | 3.92 | Si |

Verifica a taglio nel piano secondo D.M. 17-01-18 (N.T.C.) §7.8.2.2.2 con rottura per scorrimento in combinazioni sismiche, γM = 2

| Comb. | Quota | N | V par | M | σ0 | σN | l' | fvd | Vt scorr. | Vt fess.diag. | Vt,lim | c.s. | Verifica |
|---|---|---|---|---|---|---|---|---|---|---|---|---|---|
| SLV 4 | 544 | -63052 | 8533 | 1539880 | | 4.87 | 462.57 | 1.63 | 21047 | | | 2.47 | Si |
| SLV 4 | 754 | -44412 | 7925 | 399216 | | 3.43 | 462.57 | 1.52 | 19676 | | | 2.48 | Si |
| SLV 3 | 544 | -63052 | 8533 | 1539880 | | 4.87 | 462.57 | 1.63 | 21047 | | | 2.47 | Si |
| SLV 3 | 754 | -44412 | 7925 | 399216 | | 3.43 | 462.57 | 1.52 | 19676 | | | 2.48 | Si |
| SLV 8 | 544 | -35594 | 12665 | 2154155 | | 2.75 | 462.57 | 1.38 | 17912 | | | 1.41 | Si |
| SLV 8 | 754 | -25085 | 11245 | 636211 | | 1.94 | 462.57 | 1.22 | 15810 | | | 1.41 | Si |
| SLV 7 | 544 | -35594 | 12665 | 2154155 | | 2.75 | 462.57 | 1.38 | 17912 | | | 1.41 | Si |
| SLV 7 | 754 | -25085 | 11245 | 636211 | | 1.94 | 462.57 | 1.22 | 15810 | | | 1.41 | Si |
| SLD 8 | 544 | -36402 | 6797 | 1124981 | | 2.81 | 462.57 | 1.4 | 18074 | | | 2.66 | Si |
| SLD 8 | 754 | -27195 | 6191 | 439898 | | 2.1 | 462.57 | 1.25 | 16232 | | | 2.62 | Si |
| SLD 7 | 544 | -36402 | 6797 | 1124981 | | 2.81 | 462.57 | 1.4 | 18074 | | | 2.66 | Si |
| SLD 7 | 754 | -27195 | 6191 | 439898 | | 2.1 | 462.57 | 1.25 | 16232 | | | 2.62 | Si |
| SLV 10 | 544 | -37923 | -7743 | -1395653 | | 2.93 | 462.57 | 1.42 | 18378 | | | 2.37 | Si |
| SLV 10 | 754 | -32173 | -6323 | -34859 | | 2.48 | 462.57 | 1.33 | 17228 | | | 2.72 | Si |
| SLV 9 | 544 | -37923 | -7743 | -1395653 | | 2.93 | 462.57 | 1.42 | 18378 | | | 2.37 | Si |
| SLV 9 | 754 | -32173 | -6323 | -34859 | | 2.48 | 462.57 | 1.33 | 17228 | | | 2.72 | Si |
| SLV 12 | 544 | -18027 | 10680 | 1739985 | | 1.59 | 404.29 | 1.15 | 13039 | | | 1.22 | Si |
| SLV 12 | 754 | -13978 | 9380 | 637609 | | 1.08 | 462.57 | 1.05 | 13589 | | | 1.45 | Si |
| SLV 11 | 544 | -18027 | 10680 | 1739985 | | 1.59 | 404.29 | 1.15 | 13039 | | | 1.22 | Si |
| SLV 11 | 754 | -13978 | 9380 | 637609 | | 1.08 | 462.57 | 1.05 | 13589 | | | 1.45 | Si |

Verifica a pressoflessione fuori piano D.M. 17-01-18 (N.T.C.)

quota 720 Wa 0.05 denominatore 8 γM = 2

| Comb. | fd | Sa | σ0 | N | M | Mc | Coeff.s. | Verifica |
|---|---|---|---|---|---|---|---|---|
| SLV 16 | 14 | 0.39 | 0.64 | -8260 | 48070 | 109599 | 2.28 | Si |
| SLV 15 | 14 | 0.39 | 0.64 | -8260 | 48070 | 109599 | 2.28 | Si |
| SLV 14 | 14 | 0.39 | 1.06 | -13748 | 48070 | 175746 | 3.66 | Si |
| SLV 13 | 14 | 0.39 | 1.06 | -13748 | 48070 | 175746 | 3.66 | Si |
| SLV 12 | 14 | 0.39 | 1.14 | -14769 | 48070 | 187468 | 3.9 | Si |
| SLV 11 | 14 | 0.39 | 1.14 | -14769 | 48070 | 187468 | 3.9 | Si |
| SLV 7 | 14 | 0.39 | 1.99 | -25836 | 48070 | 302656 | 6.3 | Si |
| SLV 8 | 14 | 0.39 | 1.99 | -25836 | 48070 | 302656 | 6.3 | Si |
| SLV 9 | 14 | 0.39 | 2.55 | -33062 | 48070 | 366169 | 7.62 | Si |
| SLV 10 | 14 | 0.39 | 2.55 | -33062 | 48070 | 366169 | 7.62 | Si |

Verifica dei meccanismi locali di collasso con analisi cinematica lineare

forza di aggancio al piano = 0 quota mezzeria = 720 Wa = 0.05 Ta = 0.0739

| Comb. | N top | N base | V orto | α0 | M* | e* | a0* | aLim | Verifica |
|---|---|---|---|---|---|---|---|---|---|
| SLV 6 | -32268 | -55489 | -2 | 0.044 | 39.292 | 0.952 | 67.467 | 1522.194 | No |
| SLV 5 | -32268 | -55489 | -2 | 0.044 | 39.292 | 0.952 | 67.467 | 1522.194 | No |
| SLV 10 | -24867 | -37923 | -10 | 0.045 | 31.782 | 0.943 | 69.476 | 1522.194 | No |
| SLV 9 | -24867 | -37923 | -10 | 0.045 | 31.782 | 0.943 | 69.476 | 1522.194 | No |
| SLV 7 | -20404 | -35594 | 14 | 0.046 | 27.264 | 0.935 | 71.324 | 1522.194 | No |
| SLV 8 | -20404 | -35594 | 14 | 0.046 | 27.264 | 0.935 | 71.324 | 1522.194 | No |
| SLV 12 | -13002 | -18027 | 6 | 0.049 | 19.813 | 0.916 | 77.692 | 1522.194 | No |
| SLV 11 | -13002 | -18027 | 6 | 0.049 | 19.813 | 0.916 | 77.692 | 1522.194 | No |
| SLV 1 | -36751 | -69020 | 13 | 0.043 | 43.847 | 0.957 | 66 | 839.377 | No |
| SLV 2 | -36751 | -69020 | 13 | 0.043 | 43.847 | 0.957 | 66 | 839.377 | No |

Tabella dei coefficienti di sicurezza minimi

| Stato limite | Coeff.s. | Comb. | Verifica |
|---|---|---|---|
| PF_SLU | 9.066 | SLU 81 | Si |
| V_SLU | 3.701 | SLU 81 | Si |
| PF_SLV | 2.123 | SLV 11 | Si |
| V_SLV | 1.221 | SLV 11 | Si |
| PFFP_SLV | 2.28 | SLV 15 | Si |
| R_SLV | 0.044 | SLV 5 | No |

## Maschio 97

Verifiche condotte secondo D.M. 17-01-18 (N.T.C.)

### Dati geometrici

| X ini. | Y ini. | X fin. | Y fin. | Quota i. | Quota.s | l | Sp. | h netta | h ini. | h fin. | a | a.s.,sx | a.s.,dx |
|---|---|---|---|---|---|---|---|---|---|---|---|---|---|
| -2467.8 | 206.6 | -2467.8 | 595.1 | L4 | L5 | 388.5 | 28 | 352 | 352 | 352 | | | |

### Caratteristiche del materiale

(Circolare 7 21-01-19 C8.5.I) Muratura in mattoni pieni e malta di calce LC2_Corti

| fb | fk | fvk0 | fmedio | τ0 | fv0 | μ | ϕ | fv,lim | E | G | FC |
|---|---|---|---|---|---|---|---|---|---|---|---|
| 60 | | | 34.5 | 0.9 | 2 | 0.58 | 0.77 | 3.25 | 32000 | 12800 | 1.2 |

### Verifica a pressoflessione nel piano secondo D.M. 17-01-18 NTC §7.8.2.2.1 in combinazioni non sismiche, γM = 3

| Comb. | Quota | N | M | σ0 | Mu | c.s. | Verifica |
|---|---|---|---|---|---|---|---|
| SLU 80 | 544 | -42117 | -687146 | 3.87 | 4292642 | 6.247 | Si |
| SLU 80 | 754 | -33871 | -316547 | 3.11 | 4064477 | 12.84 | Si |
| SLU 47 | 544 | -34389 | -639020 | 3.16 | 4087592 | 6.397 | Si |
| SLU 47 | 754 | -26861 | -189130 | 2.47 | 3636056 | 19.225 | Si |
| SLU 70 | 544 | -39131 | -668545 | 3.6 | 4244450 | 6.349 | Si |
| SLU 70 | 754 | -31306 | -261335 | 2.88 | 3932718 | 15.049 | Si |
| SLU 59 | 544 | -38657 | -645170 | 3.55 | 4233194 | 6.561 | Si |
| SLU 59 | 754 | -30821 | -259532 | 2.83 | 3904541 | 15.045 | Si |
| SLU 55 | 544 | -37769 | -653696 | 3.47 | 4209488 | 6.44 | Si |
| SLU 55 | 754 | -29779 | -251516 | 2.74 | 3840580 | 15.27 | Si |
| SLU 51 | 544 | -35277 | -630494 | 3.24 | 4124450 | 6.542 | Si |
| SLU 51 | 754 | -27903 | -197147 | 2.57 | 3713346 | 18.835 | Si |
| SLU 68 | 544 | -37849 | -680996 | 3.48 | 4211777 | 6.185 | Si |
| SLU 68 | 754 | -29911 | -246145 | 2.75 | 3848949 | 15.637 | Si |
| SLU 72 | 544 | -38737 | -672470 | 3.56 | 4235171 | 6.298 | Si |
| SLU 72 | 754 | -30953 | -254162 | 2.85 | 3912308 | 15.393 | Si |
| SLU 76 | 544 | -41229 | -695672 | 3.79 | 4282399 | 6.156 | Si |
| SLU 76 | 754 | -32829 | -308530 | 3.02 | 4014446 | 13.012 | Si |
| SLU 78 | 544 | -42511 | -683221 | 3.91 | 4296082 | 6.288 | Si |
| SLU 78 | 754 | -34224 | -323720 | 3.15 | 4080366 | 12.605 | Si |

### Verifica a pressoflessione nel piano secondo D.M. 17-01-18 NTC §7.8.2.2.1 in combinazioni sismiche, γM = 2

| Comb. | Quota | N | M | σ0 | Mu | c.s. | Verifica |
|---|---|---|---|---|---|---|---|
| SLV 13 | 544 | -7681 | -559455 | 0.71 | 1405774 | 2.513 | Si |
| SLV 13 | 754 | -4861 | 58693 | 0.45 | 909670 | 15.499 | Si |
| SLV 6 | 544 | -26191 | -1469460 | 2.41 | 4085118 | 2.78 | Si |
| SLV 6 | 754 | -18841 | -332267 | 1.73 | 3141078 | 9.453 | Si |
| SLD 6 | 544 | -28083 | -835691 | 2.58 | 4302495 | 5.148 | Si |
| SLD 6 | 754 | -21428 | -260691 | 1.97 | 3491338 | 13.393 | Si |
| SLV 10 | 544 | -14789 | -1391233 | 1.36 | 2553053 | 1.835 | Si |
| SLV 10 | 754 | -9436 | -164137 | 0.87 | 1702874 | 10.375 | Si |
| SLD 5 | 544 | -28083 | -835691 | 2.58 | 4302495 | 5.148 | Si |
| SLD 5 | 754 | -21428 | -260691 | 1.97 | 3491338 | 13.393 | Si |
| SLV 9 | 544 | -14789 | -1391233 | 1.36 | 2553053 | 1.835 | Si |
| SLV 9 | 754 | -9436 | -164137 | 0.87 | 1702874 | 10.375 | Si |
| SLV 5 | 544 | -26191 | -1469460 | 2.41 | 4085118 | 2.78 | Si |
| SLV 5 | 754 | -18841 | -332267 | 1.73 | 3141078 | 9.453 | Si |
| SLV 14 | 544 | -7681 | -559455 | 0.71 | 1405774 | 2.513 | Si |
| SLV 14 | 754 | -4861 | 58693 | 0.45 | 909670 | 15.499 | Si |
| SLD 10 | 544 | -23219 | -801983 | 2.13 | 3722354 | 4.641 | Si |
| SLD 10 | 754 | -17413 | -188975 | 1.6 | 2939406 | 15.554 | Si |
| SLD 9 | 544 | -23219 | -801983 | 2.13 | 3722354 | 4.641 | Si |
| SLD 9 | 754 | -17413 | -188975 | 1.6 | 2939406 | 15.554 | Si |

### Verifica a taglio nel piano secondo D.M. 17-01-18 (N.T.C.) §7.8.2.2.2 con rottura per scorrimento in combinazioni non sismiche, γM = 3

| Comb. | Quota | N | V par | M | σ0 | σN | l' | fvd | Vt scorr. | Vt fess.diag. | Vt,lim | c.s. | Verifica |
|---|---|---|---|---|---|---|---|---|---|---|---|---|---|
| SLU 76 | 544 | -41229 | -4538 | -695672 | | 3.79 | 388.5 | 1.06 | 11541 | | | 2.54 | Si |
| SLU 76 | 754 | -32829 | -4537 | -308530 | | 3.02 | 388.5 | 0.96 | 10421 | | | 2.3 | Si |
| SLU 68 | 544 | -37849 | -4338 | -680996 | | 3.48 | 388.5 | 1.02 | 11090 | | | 2.56 | Si |
| SLU 68 | 754 | -29911 | -4337 | -246145 | | 2.75 | 388.5 | 0.92 | 10031 | | | 2.31 | Si |
| SLU 73 | 544 | -40603 | -4381 | -647407 | | 3.73 | 388.5 | 1.05 | 11457 | | | 2.62 | Si |
| SLU 73 | 754 | -32124 | -4380 | -308544 | | 2.95 | 388.5 | 0.95 | 10327 | | | 2.36 | Si |
| SLU 80 | 544 | -42117 | -4317 | -687146 | | 3.87 | 388.5 | 1.07 | 11659 | | | 2.7 | Si |
| SLU 80 | 754 | -33871 | -4315 | -316547 | | 3.11 | 388.5 | 0.97 | 10559 | | | 2.45 | Si |
| SLU 47 | 544 | -34389 | -4084 | -639020 | | 3.16 | 388.5 | 0.98 | 10629 | | | 2.6 | Si |
| SLU 47 | 754 | -26861 | -4083 | -189130 | | 2.47 | 388.5 | 0.88 | 9625 | | | 2.36 | Si |
| SLU 65 | 544 | -37223 | -4181 | -632731 | | 3.42 | 388.5 | 1.01 | 11006 | | | 2.63 | Si |
| SLU 65 | 754 | -29206 | -4181 | -246158 | | 2.68 | 388.5 | 0.91 | 9937 | | | 2.38 | Si |
| SLU 55 | 544 | -37769 | -4284 | -653696 | | 3.47 | 388.5 | 1.02 | 11079 | | | 2.59 | Si |
| SLU 55 | 754 | -29779 | -4283 | -251516 | | 2.74 | 388.5 | 0.92 | 10014 | | | 2.34 | Si |
| SLU 78 | 544 | -42511 | -4302 | -683221 | | 3.91 | 388.5 | 1.08 | 11711 | | | 2.72 | Si |
| SLU 78 | 754 | -34224 | -4300 | -323720 | | 3.15 | 388.5 | 0.98 | 10607 | | | 2.47 | Si |
| SLU 44 | 544 | -33763 | -3927 | -590755 | | 3.1 | 388.5 | 0.97 | 10545 | | | 2.69 | Si |
| SLU 44 | 754 | -26156 | -3926 | -189144 | | 2.4 | 388.5 | 0.88 | 9531 | | | 2.43 | Si |
| SLU 52 | 544 | -37143 | -4126 | -605431 | | 3.41 | 388.5 | 1.01 | 10996 | | | 2.66 | Si |
| SLU 52 | 754 | -29074 | -4126 | -251529 | | 2.67 | 388.5 | 0.91 | 9920 | | | 2.4 | Si |

### Verifica a taglio nel piano secondo D.M. 17-01-18 (N.T.C.) §7.8.2.2.2 con rottura per scorrimento in combinazioni sismiche, γM = 2

| Comb. | Quota | N | V par | M | σ0 | σN | l' | fvd | Vt scorr. | Vt fess.diag. | Vt,lim | c.s. | Verifica |
|---|---|---|---|---|---|---|---|---|---|---|---|---|---|
| SLD 5 | 544 | -28083 | -5972 | -835691 | | 2.58 | 388.5 | 1.35 | 14682 | | | 2.46 | Si |
| SLD 5 | 754 | -21428 | -5314 | -260691 | | 1.97 | 388.5 | 1.23 | 13351 | | | 2.51 | Si |
| SLV 5 | 544 | -26191 | -10689 | -1469460 | | 2.41 | 388.5 | 1.31 | 14303 | | | 1.34 | Si |

| Comb. | Quota | N | V par | M | σ0 | σN | l' | fvd | Vt scorr. | Vt fess.diag. | Vt,lim | c.s. | Verifica |
|---|---|---|---|---|---|---|---|---|---|---|---|---|---|
| SLV 5 | 754 | -18841 | -9121 | -332267 | | 1.73 | 388.5 | 1.18 | 12833 | | | 1.41 | Si |
| SLV 9 | 544 | -14789 | -8601 | -1391233 | | 1.76 | 300.52 | 1.18 | 9970 | | | 1.16 | Si |
| SLV 9 | 754 | -9436 | -7626 | -164137 | | 0.87 | 388.5 | 1.01 | 10952 | | | 1.44 | Si |
| SLV 6 | 544 | -26191 | -10689 | -1469460 | | 2.41 | 388.5 | 1.31 | 14303 | | | 1.34 | Si |
| SLV 6 | 754 | -18841 | -9121 | -332267 | | 1.73 | 388.5 | 1.18 | 12833 | | | 1.41 | Si |
| SLV 2 | 544 | -45690 | -8118 | -820212 | | 4.2 | 388.5 | 1.63 | 17677 | | | 2.18 | Si |
| SLV 2 | 754 | -36210 | -6746 | -501740 | | 3.33 | 388.5 | 1.5 | 16307 | | | 2.42 | Si |
| SLD 10 | 544 | -23219 | -5087 | -801983 | | 2.13 | 388.5 | 1.26 | 13709 | | | 2.7 | Si |
| SLD 10 | 754 | -17413 | -4676 | -188975 | | 1.6 | 388.5 | 1.15 | 12548 | | | 2.68 | Si |
| SLV 1 | 544 | -45690 | -8118 | -820212 | | 4.2 | 388.5 | 1.63 | 17677 | | | 2.18 | Si |
| SLV 1 | 754 | -36210 | -6746 | -501740 | | 3.33 | 388.5 | 1.5 | 16307 | | | 2.42 | Si |
| SLD 6 | 544 | -28083 | -5972 | -835691 | | 2.58 | 388.5 | 1.35 | 14682 | | | 2.46 | Si |
| SLD 6 | 754 | -21428 | -5314 | -260691 | | 1.97 | 388.5 | 1.23 | 13351 | | | 2.51 | Si |
| SLV 10 | 544 | -14789 | -8601 | -1391233 | | 1.76 | 300.52 | 1.18 | 9970 | | | 1.16 | Si |
| SLV 10 | 754 | -9436 | -7626 | -164137 | | 0.87 | 388.5 | 1.01 | 10952 | | | 1.44 | Si |
| SLD 9 | 544 | -23219 | -5087 | -801983 | | 2.13 | 388.5 | 1.26 | 13709 | | | 2.7 | Si |
| SLD 9 | 754 | -17413 | -4676 | -188975 | | 1.6 | 388.5 | 1.15 | 12548 | | | 2.68 | Si |

### Verifica a pressoflessione fuori piano D.M. 17-01-18 (N.T.C.)

quota 720 Wa 0.05 denominatore 8 γM = 2

| Comb. | fd | Sa | σ0 | N | M | Mc | Coeff.s. | Verifica |
|---|---|---|---|---|---|---|---|---|
| SLV 14 | 14 | 0.39 | 0.51 | -5504 | 40373 | 73865 | 1.83 | Si |
| SLV 13 | 14 | 0.39 | 0.51 | -5504 | 40373 | 73865 | 1.83 | Si |
| SLV 10 | 14 | 0.39 | 0.92 | -10040 | 40373 | 129940 | 3.22 | Si |
| SLV 9 | 14 | 0.39 | 0.92 | -10040 | 40373 | 129940 | 3.22 | Si |
| SLV 15 | 14 | 0.39 | 1.01 | -11034 | 40373 | 141654 | 3.51 | Si |
| SLV 16 | 14 | 0.39 | 1.01 | -11034 | 40373 | 141654 | 3.51 | Si |
| SLV 5 | 14 | 0.39 | 1.79 | -19458 | 40373 | 232530 | 5.76 | Si |
| SLV 6 | 14 | 0.39 | 1.79 | -19458 | 40373 | 232530 | 5.76 | Si |
| SLV 12 | 14 | 0.39 | 2.62 | -28474 | 40373 | 313235 | 7.76 | Si |
| SLV 11 | 14 | 0.39 | 2.62 | -28474 | 40373 | 313235 | 7.76 | Si |

### Verifica dei meccanismi locali di collasso con analisi cinematica lineare

forza di aggancio al piano = 0 quota mezzeria = 720 Wa = 0.05 Ta = 0.0739

| Comb. | N top | N base | V orto | α0 | M* | e* | a0* | aLim | Verifica |
|---|---|---|---|---|---|---|---|---|---|
| SLV 7 | -27416 | -43892 | -38 | 0.043 | 33.32 | 0.953 | 65.556 | 1522.194 | No |
| SLV 8 | -27416 | -43892 | -38 | 0.043 | 33.32 | 0.953 | 65.556 | 1522.194 | No |
| SLV 12 | -21015 | -32490 | -59 | 0.043 | 26.824 | 0.943 | 66.251 | 1522.194 | No |
| SLV 11 | -21015 | -32490 | -59 | 0.043 | 26.824 | 0.943 | 66.251 | 1522.194 | No |
| SLV 5 | -15799 | -26191 | 60 | 0.044 | 21.547 | 0.932 | 68.292 | 1522.194 | No |
| SLV 6 | -15799 | -26191 | 60 | 0.044 | 21.547 | 0.932 | 68.292 | 1522.194 | No |
| SLV 10 | -9398 | -14789 | 40 | 0.047 | 15.121 | 0.911 | 75.564 | 1522.194 | No |
| SLV 9 | -9398 | -14789 | 40 | 0.047 | 15.121 | 0.911 | 75.564 | 1522.194 | No |
| SLV 2 | -27333 | -45690 | 49 | 0.043 | 33.236 | 0.953 | 65.023 | 839.377 | No |
| SLV 1 | -27333 | -45690 | 49 | 0.043 | 33.236 | 0.953 | 65.023 | 839.377 | No |

### Tabella dei coefficienti di sicurezza minimi

| Stato limite | Coeff.s. | Comb. | Verifica |
|---|---|---|---|
| PF_SLU | 6.156 | SLU 76 | Si |
| V_SLU | 2.297 | SLU 76 | Si |
| PF_SLV | 1.835 | SLV 9 | Si |
| V_SLV | 1.159 | SLV 9 | Si |
| PFFP_SLV | 1.83 | SLV 13 | Si |
| R_SLV | 0.043 | SLV 7 | No |

## Maschio 98

Verifiche condotte secondo D.M. 17-01-18 (N.T.C.)

### Dati geometrici

| X ini. | Y ini. | X fin. | Y fin. | Quota i. | Quota.s | l | Sp. | h netta | h ini. | h fin. | a | a.s.,sx | a.s.,dx |
|---|---|---|---|---|---|---|---|---|---|---|---|---|---|
| -2271.3 | 595.1 | -2467.8 | 595.1 | L4 | L5 | 196.5 | 28 | 352 | 352 | 352 | | | |

### Caratteristiche del materiale

(Circolare 7 21-01-19 C8.5.I) Muratura in mattoni pieni e malta di calce LC2_Corti

| fb | fk | fvk0 | fmedio | τ0 | fv0 | μ | ϕ | fv,lim | E | G | FC |
|---|---|---|---|---|---|---|---|---|---|---|---|
| 60 | | | 34.5 | 0.9 | 2 | 0.58 | 0.77 | 3.25 | 32000 | 12800 | 1.2 |

### Verifica a pressoflessione nel piano secondo D.M. 17-01-18 NTC §7.8.2.2.1 in combinazioni non sismiche, γM = 3

| Comb. | Quota | N | M | σ0 | Mu | c.s. | Verifica |
|---|---|---|---|---|---|---|---|
| SLU 73 | 634 | -14657 | -24374 | 2.66 | 969112 | 39.76 | Si |
| SLU 73 | 814 | -14866 | -130464 | 2.7 | 976111 | 7.482 | Si |
| SLU 60 | 634 | -14598 | -17840 | 2.65 | 967110 | 54.211 | Si |
| SLU 60 | 814 | -14496 | -124354 | 2.63 | 963593 | 7.749 | Si |
| SLU 81 | 634 | -15810 | -18684 | 2.87 | 1005377 | 53.809 | Si |
| SLU 81 | 814 | -16004 | -137850 | 2.91 | 1010923 | 7.333 | Si |
| SLU 40 | 634 | -12765 | -15473 | 2.32 | 896969 | 57.969 | Si |
| SLU 40 | 814 | -13329 | -123732 | 2.42 | 920098 | 7.436 | Si |
| SLU 61 | 634 | -14212 | -20057 | 2.58 | 953551 | 47.542 | Si |
| SLU 61 | 814 | -14232 | -126693 | 2.59 | 954262 | 7.532 | Si |
| SLU 19 | 634 | -11554 | -14629 | 2.1 | 842532 | 57.594 | Si |
| SLU 19 | 814 | -11821 | -110236 | 2.15 | 855079 | 7.757 | Si |
| SLU 52 | 634 | -13446 | -23530 | 2.44 | 924723 | 39.3 | Si |
| SLU 52 | 814 | -13358 | -116968 | 2.43 | 921253 | 7.876 | Si |

| Comb. | Quota | N | M | σ0 | Mu | c.s. | Verifica |
|---|---|---|---|---|---|---|---|
| SLU 31 | 634 | -11999 | -18946 | 2.18 | 863280 | 45.566 | Si |
| SLU 31 | 814 | -12455 | -114007 | 2.26 | 883629 | 7.751 | Si |
| SLU 82 | 634 | -15423 | -20901 | 2.8 | 993870 | 47.55 | Si |
| SLU 82 | 814 | -15740 | -140189 | 2.86 | 1003341 | 7.157 | Si |
| SLU 39 | 634 | -13152 | -13256 | 2.39 | 912980 | 68.874 | Si |
| SLU 39 | 814 | -13593 | -121393 | 2.47 | 930477 | 7.665 | Si |

Verifica a pressoflessione nel piano secondo D.M. 17-01-18 NTC §7.8.2.2.1 in combinazioni sismiche, γM = 2

| Comb. | Quota | N | M | σ0 | Mu | c.s. | Verifica |
|---|---|---|---|---|---|---|---|
| SLV 16 | 634 | -10652 | -398523 | 1.94 | 880703 | 2.21 | Si |
| SLV 16 | 814 | -7181 | 152734 | 1.31 | 630136 | 4.126 | Si |
| SLV 14 | 634 | -6694 | -413459 | 1.22 | 592234 | 1.432 | Si |
| SLV 14 | 814 | -3753 | 177483 | 0.68 | 348124 | 1.961 | Si |
| SLV 3 | 634 | -15165 | 377517 | 2.76 | 1153880 | 3.056 | Si |
| SLV 3 | 814 | -17559 | -340804 | 3.19 | 1274585 | 3.74 | Si |
| SLV 10 | 634 | -3658 | -159271 | 0.66 | 339817 | 2.134 | Si |
| SLV 10 | 814 | -3386 | 33619 | 0.62 | 315927 | 9.397 | Si |
| SLV 1 | 634 | -11208 | 362581 | 2.04 | 917619 | 2.531 | Si |
| SLV 1 | 814 | -14131 | -316055 | 2.57 | 1096557 | 3.47 | Si |
| SLV 9 | 634 | -3658 | -159271 | 0.66 | 339817 | 2.134 | Si |
| SLV 9 | 814 | -3386 | 33619 | 0.62 | 315927 | 9.397 | Si |
| SLV 15 | 634 | -10652 | -398523 | 1.94 | 880703 | 2.21 | Si |
| SLV 15 | 814 | -7181 | 152734 | 1.31 | 630136 | 4.126 | Si |
| SLV 2 | 634 | -11208 | 362581 | 2.04 | 917619 | 2.531 | Si |
| SLV 2 | 814 | -14131 | -316055 | 2.57 | 1096557 | 3.47 | Si |
| SLV 13 | 634 | -6694 | -413459 | 1.22 | 592234 | 1.432 | Si |
| SLV 13 | 814 | -3753 | 177483 | 0.68 | 348124 | 1.961 | Si |
| SLV 4 | 634 | -15165 | 377517 | 2.76 | 1153880 | 3.056 | Si |
| SLV 4 | 814 | -17559 | -340804 | 3.19 | 1274585 | 3.74 | Si |

Verifica a taglio nel piano secondo D.M. 17-01-18 (N.T.C.) §7.8.2.2.2 con rottura per scorrimento in combinazioni non sismiche, γM = 3

| Comb. | Quota | N | V par | M | σ0 | σN | l' | fvd | Vt scorr. | Vt fess.diag. | Vt,lim | c.s. | Verifica |
|---|---|---|---|---|---|---|---|---|---|---|---|---|---|
| SLU 82 | 634 | -15423 | 2202 | -20901 | | 2.8 | 196.5 | 0.93 | 5113 | | | 2.32 | Si |
| SLU 82 | 814 | -15740 | 2203 | -140189 | | 2.86 | 196.5 | 0.94 | 5155 | | | 2.34 | Si |
| SLU 31 | 634 | -11999 | 1836 | -18946 | | 2.18 | 196.5 | 0.85 | 4657 | | | 2.54 | Si |
| SLU 31 | 814 | -12455 | 1834 | -114007 | | 2.26 | 196.5 | 0.86 | 4717 | | | 2.57 | Si |
| SLU 39 | 634 | -13152 | 1898 | -13256 | | 2.39 | 196.5 | 0.87 | 4810 | | | 2.53 | Si |
| SLU 39 | 814 | -13593 | 1902 | -121393 | | 2.47 | 196.5 | 0.88 | 4869 | | | 2.56 | Si |
| SLU 84 | 634 | -15585 | 1987 | -28876 | | 2.83 | 196.5 | 0.93 | 5135 | | | 2.58 | Si |
| SLU 84 | 814 | -15804 | 1989 | -119270 | | 2.87 | 196.5 | 0.94 | 5164 | | | 2.6 | Si |
| SLU 60 | 634 | -14598 | 1887 | -17840 | | 2.65 | 196.5 | 0.91 | 5003 | | | 2.65 | Si |
| SLU 60 | 814 | -14496 | 1890 | -124354 | | 2.63 | 196.5 | 0.91 | 4990 | | | 2.64 | Si |
| SLU 40 | 634 | -12765 | 1967 | -15473 | | 2.32 | 196.5 | 0.86 | 4759 | | | 2.42 | Si |
| SLU 40 | 814 | -13329 | 1967 | -123732 | | 2.42 | 196.5 | 0.88 | 4834 | | | 2.46 | Si |
| SLU 73 | 634 | -14657 | 2070 | -24374 | | 2.66 | 196.5 | 0.91 | 5011 | | | 2.42 | Si |
| SLU 73 | 814 | -14866 | 2070 | -130464 | | 2.7 | 196.5 | 0.92 | 5039 | | | 2.43 | Si |
| SLU 52 | 634 | -13446 | 1825 | -23530 | | 2.44 | 196.5 | 0.88 | 4849 | | | 2.66 | Si |
| SLU 52 | 814 | -13358 | 1823 | -116968 | | 2.43 | 196.5 | 0.88 | 4838 | | | 2.65 | Si |
| SLU 61 | 634 | -14212 | 1956 | -20057 | | 2.58 | 196.5 | 0.9 | 4952 | | | 2.53 | Si |
| SLU 61 | 814 | -14232 | 1956 | -126693 | | 2.59 | 196.5 | 0.9 | 4954 | | | 2.53 | Si |
| SLU 81 | 634 | -15810 | 2133 | -18684 | | 2.87 | 196.5 | 0.94 | 5165 | | | 2.42 | Si |
| SLU 81 | 814 | -16004 | 2137 | -137850 | | 2.91 | 196.5 | 0.94 | 5191 | | | 2.43 | Si |

Verifica a taglio nel piano secondo D.M. 17-01-18 (N.T.C.) §7.8.2.2.2 con rottura per scorrimento in combinazioni sismiche, γM = 2

| Comb. | Quota | N | V par | M | σ0 | σN | l' | fvd | Vt scorr. | Vt fess.diag. | Vt,lim | c.s. | Verifica |
|---|---|---|---|---|---|---|---|---|---|---|---|---|---|
| SLV 16 | 634 | -10652 | -3914 | -398523 | | 2.08 | 182.51 | 1.25 | 6389 | | | 1.63 | Si |
| SLV 16 | 814 | -7181 | -3659 | 152734 | | 1.31 | 196.5 | 1.09 | 6021 | | | 1.65 | Si |
| SLV 2 | 634 | -11208 | 6417 | 362581 | | 2.04 | 196.5 | 1.24 | 6827 | | | 1.06 | Si |
| SLV 2 | 814 | -14131 | 6167 | -316055 | | 2.57 | 196.5 | 1.35 | 7411 | | | 1.2 | Si |
| SLD 4 | 634 | -12718 | 3636 | 150429 | | 2.31 | 196.5 | 1.3 | 7129 | | | 1.96 | Si |
| SLD 4 | 814 | -13595 | 3493 | -191932 | | 2.47 | 196.5 | 1.33 | 7304 | | | 2.09 | Si |
| SLV 13 | 634 | -6694 | -4337 | -413459 | | 2.18 | 109.47 | 1.27 | 3893 | | | 0.9 | No, Vu<V |
| SLV 13 | 814 | -3753 | -3997 | 177483 | | 0.88 | 152.87 | 1.01 | 4317 | | | 1.08 | Si |
| SLD 3 | 634 | -12718 | 3636 | 150429 | | 2.31 | 196.5 | 1.3 | 7129 | | | 1.96 | Si |
| SLD 3 | 814 | -13595 | 3493 | -191932 | | 2.47 | 196.5 | 1.33 | 7304 | | | 2.09 | Si |
| SLV 4 | 634 | -15165 | 6840 | 377517 | | 2.76 | 196.5 | 1.38 | 7618 | | | 1.11 | Si |
| SLV 4 | 814 | -17559 | 6505 | -340804 | | 3.19 | 196.5 | 1.47 | 8097 | | | 1.24 | Si |
| SLV 1 | 634 | -11208 | 6417 | 362581 | | 2.04 | 196.5 | 1.24 | 6827 | | | 1.06 | Si |
| SLV 1 | 814 | -14131 | 6167 | -316055 | | 2.57 | 196.5 | 1.35 | 7411 | | | 1.2 | Si |
| SLV 14 | 634 | -6694 | -4337 | -413459 | | 2.18 | 109.47 | 1.27 | 3893 | | | 0.9 | No, Vu<V |
| SLV 14 | 814 | -3753 | -3997 | 177483 | | 0.88 | 152.87 | 1.01 | 4317 | | | 1.08 | Si |
| SLV 15 | 634 | -10652 | -3914 | -398523 | | 2.08 | 182.51 | 1.25 | 6389 | | | 1.63 | Si |
| SLV 15 | 814 | -7181 | -3659 | 152734 | | 1.31 | 196.5 | 1.09 | 6021 | | | 1.65 | Si |
| SLV 3 | 634 | -15165 | 6840 | 377517 | | 2.76 | 196.5 | 1.38 | 7618 | | | 1.11 | Si |
| SLV 3 | 814 | -17559 | 6505 | -340804 | | 3.19 | 196.5 | 1.47 | 8097 | | | 1.24 | Si |

Verifica a pressoflessione fuori piano D.M. 17-01-18 (N.T.C.)

quota 720 Wa 0.05 denominatore 8 γM = 2

| Comb. | fd | Sa | σ0 | N | M | Mc | Coeff.s. | Verifica |
|---|---|---|---|---|---|---|---|---|
| SLV 10 | 14 | 0.39 | 0.7 | -3839 | 20420 | 50678 | 2.48 | Si |
| SLV 9 | 14 | 0.39 | 0.7 | -3839 | 20420 | 50678 | 2.48 | Si |
| SLV 13 | 14 | 0.39 | 0.93 | -5124 | 20420 | 66268 | 3.25 | Si |
| SLV 14 | 14 | 0.39 | 0.93 | -5124 | 20420 | 66268 | 3.25 | Si |
| SLV 5 | 14 | 0.39 | 1.16 | -6360 | 20420 | 80616 | 3.95 | Si |
| SLV 6 | 14 | 0.39 | 1.16 | -6360 | 20420 | 80616 | 3.95 | Si |
| SLV 16 | 14 | 0.39 | 1.59 | -8746 | 20420 | 106517 | 5.22 | Si |
| SLV 15 | 14 | 0.39 | 1.59 | -8746 | 20420 | 106517 | 5.22 | Si |

| Comb. | fd | Sa | σ0 | N | M | Mc | Coeff.s. | Verifica |
|---|---|---|---|---|---|---|---|---|
| SLV 1 | 14 | 0.39 | 2.46 | -13527 | 20420 | 151272 | 7.41 | Si |
| SLV 2 | 14 | 0.39 | 2.46 | -13527 | 20420 | 151272 | 7.41 | Si |

### Verifica dei meccanismi locali di collasso con analisi cinematica lineare

forza di aggancio al piano = 0 quota mezzeria = 720 Wa = 0.05 Ta = 0.0739

| Comb. | N top | N base | V orto | α0 | M* | e* | a0* | aLim | Verifica |
|---|---|---|---|---|---|---|---|---|---|
| SLV 12 | -12096 | -15592 | -51 | 0.041 | 15.056 | 0.948 | 62.971 | 1522.194 | No |
| SLV 11 | -12096 | -15592 | -51 | 0.041 | 15.056 | 0.948 | 62.971 | 1522.194 | No |
| SLV 8 | -14449 | -18688 | -26 | 0.042 | 17.444 | 0.954 | 64.683 | 1522.194 | No |
| SLV 7 | -14449 | -18688 | -26 | 0.042 | 17.444 | 0.954 | 64.683 | 1522.194 | No |
| SLV 5 | -5943 | -4885 | 52 | 0.042 | 8.837 | 0.919 | 66.42 | 1522.194 | No |
| SLV 6 | -5943 | -4885 | 52 | 0.042 | 8.837 | 0.919 | 66.42 | 1522.194 | No |
| SLV 10 | -3591 | -1789 | 26 | 0.048 | 6.499 | 0.901 | 77.152 | 1522.194 | No |
| SLV 9 | -3591 | -1789 | 26 | 0.048 | 6.499 | 0.901 | 77.152 | 1522.194 | No |
| SLV 1 | -11664 | -13329 | 55 | 0.041 | 14.617 | 0.946 | 62.732 | 839.377 | No |
| SLV 2 | -11664 | -13329 | 55 | 0.041 | 14.617 | 0.946 | 62.732 | 839.377 | No |

### Tabella dei coefficienti di sicurezza minimi

| Stato limite | Coeff.s. | Comb. | Verifica |
|---|---|---|---|
| PF_SLU | 7.157 | SLU 82 | Si |
| V_SLU | 2.322 | SLU 82 | Si |
| PF_SLV | 1.432 | SLV 13 | Si |
| V_SLV | 0.898 | SLV 13 | No |
| PFFP_SLV | 2.482 | SLV 9 | Si |
| R_SLV | 0.041 | SLV 11 | No |

## Maschio 99

Verifiche condotte secondo D.M. 17-01-18 (N.T.C.)

### Dati geometrici

| X ini. | Y ini. | X fin. | Y fin. | Quota i. | Quota.s | l | Sp. | h netta | h ini. | h fin. | a | a.s.,sx | a.s.,dx |
|---|---|---|---|---|---|---|---|---|---|---|---|---|---|
| -1961.8 | 595.1 | -2181.3 | 595.1 | L4 | L5 | 219.5 | 28 | 352 | 352 | 352 | | | |

### Caratteristiche del materiale

(Circolare 7 21-01-19 C8.5.I) Muratura in mattoni pieni e malta di calce LC2_Corti

| fb | fk | fvk0 | fmedio | τ0 | fv0 | μ | ϕ | fv,lim | E | G | FC |
|---|---|---|---|---|---|---|---|---|---|---|---|
| 60 | | | 34.5 | 0.9 | 2 | 0.58 | 0.77 | 3.25 | 32000 | 12800 | 1.2 |

### Verifica a pressoflessione nel piano secondo D.M. 17-01-18 NTC §7.8.2.2.1 in combinazioni non sismiche, γM = 3

| Comb. | Quota | N | M | σ0 | Mu | c.s. | Verifica |
|---|---|---|---|---|---|---|---|
| SLU 37 | 634 | -17176 | -83353 | 2.79 | 1238324 | 14.856 | Si |
| SLU 37 | 814 | -14858 | -6218 | 2.42 | 1146701 | 184.429 | Si |
| SLU 27 | 634 | -15740 | -80513 | 2.56 | 1184341 | 14.71 | Si |
| SLU 27 | 814 | -13205 | -12616 | 2.15 | 1067005 | 84.575 | Si |
| SLU 38 | 634 | -17062 | -86525 | 2.78 | 1234374 | 14.266 | Si |
| SLU 38 | 814 | -14752 | -9807 | 2.4 | 1141977 | 116.44 | Si |
| SLU 28 | 634 | -15626 | -83685 | 2.54 | 1179675 | 14.097 | Si |
| SLU 28 | 814 | -13100 | -16206 | 2.13 | 1061518 | 65.502 | Si |
| SLU 30 | 634 | -15394 | -91904 | 2.5 | 1169997 | 12.731 | Si |
| SLU 30 | 814 | -12755 | -21494 | 2.08 | 1043200 | 48.535 | Si |
| SLU 72 | 634 | -18506 | -87614 | 3.01 | 1280268 | 14.613 | Si |
| SLU 72 | 814 | -15442 | -10777 | 2.51 | 1172036 | 108.751 | Si |
| SLU 71 | 634 | -18620 | -84441 | 3.03 | 1283497 | 15.2 | Si |
| SLU 71 | 814 | -15548 | -7187 | 2.53 | 1176441 | 163.681 | Si |
| SLU 8 | 634 | -13627 | -75672 | 2.22 | 1088467 | 14.384 | Si |
| SLU 8 | 814 | -11023 | -16152 | 1.79 | 943399 | 58.408 | Si |
| SLU 9 | 634 | -13513 | -78844 | 2.2 | 1082746 | 13.733 | Si |
| SLU 9 | 814 | -10917 | -19742 | 1.78 | 936904 | 47.458 | Si |
| SLU 29 | 634 | -15508 | -88731 | 2.52 | 1174779 | 13.24 | Si |
| SLU 29 | 814 | -12860 | -17904 | 2.09 | 1048847 | 58.582 | Si |

### Verifica a pressoflessione nel piano secondo D.M. 17-01-18 NTC §7.8.2.2.1 in combinazioni sismiche, γM = 2

| Comb. | Quota | N | M | σ0 | Mu | c.s. | Verifica |
|---|---|---|---|---|---|---|---|
| SLV 13 | 634 | -12573 | -400789 | 2.05 | 1148857 | 2.866 | Si |
| SLV 13 | 814 | -18962 | 249983 | 3.09 | 1555581 | 6.223 | Si |
| SLV 14 | 634 | -12573 | -400789 | 2.05 | 1148857 | 2.866 | Si |
| SLV 14 | 814 | -18962 | 249983 | 3.09 | 1555581 | 6.223 | Si |
| SLV 15 | 634 | -16126 | -367912 | 2.62 | 1389781 | 3.777 | Si |
| SLV 15 | 814 | -20432 | 285806 | 3.32 | 1632284 | 5.711 | Si |
| SLV 2 | 634 | -10948 | 362274 | 1.78 | 1026344 | 2.833 | Si |
| SLV 2 | 814 | -3877 | -212690 | 0.63 | 403486 | 1.897 | Si |
| SLV 10 | 634 | -7859 | -172073 | 1.28 | 772249 | 4.488 | Si |
| SLV 10 | 814 | -11967 | 46255 | 1.95 | 1104069 | 23.869 | Si |
| SLV 16 | 634 | -16126 | -367912 | 2.62 | 1389781 | 3.777 | Si |
| SLV 16 | 814 | -20432 | 285806 | 3.32 | 1632284 | 5.711 | Si |
| SLV 9 | 634 | -7859 | -172073 | 1.28 | 772249 | 4.488 | Si |
| SLV 9 | 814 | -11967 | 46255 | 1.95 | 1104069 | 23.869 | Si |
| SLV 3 | 634 | -14501 | 395151 | 2.36 | 1284147 | 3.25 | Si |
| SLV 3 | 814 | -5347 | -176867 | 0.87 | 545007 | 3.081 | Si |
| SLV 1 | 634 | -10948 | 362274 | 1.78 | 1026344 | 2.833 | Si |
| SLV 1 | 814 | -3877 | -212690 | 0.63 | 403486 | 1.897 | Si |
| SLV 4 | 634 | -14501 | 395151 | 2.36 | 1284147 | 3.25 | Si |
| SLV 4 | 814 | -5347 | -176867 | 0.87 | 545007 | 3.081 | Si |

Verifica a taglio nel piano secondo D.M. 17-01-18 (N.T.C.) §7.8.2.2.2 con rottura per scorrimento in combinazioni non sismiche, γM = 3

| Comb. | Quota | N | V par | M | σ0 | σN | l' | fvd | Vt scorr. | Vt fess.diag. | Vt,lim | c.s. | Verifica |
|---|---|---|---|---|---|---|---|---|---|---|---|---|---|
| SLU 40 | 634 | -16673 | -884 | -9173 | | 2.71 | 219.5 | 0.92 | 5637 | | | 6.38 | Si |
| SLU 40 | 814 | -15644 | -883 | 45073 | | 2.55 | 219.5 | 0.89 | 5500 | | | 6.23 | Si |
| SLU 60 | 634 | -18017 | -954 | 11349 | | 2.93 | 219.5 | 0.95 | 5817 | | | 6.1 | Si |
| SLU 60 | 814 | -16600 | -952 | 61131 | | 2.7 | 219.5 | 0.92 | 5628 | | | 5.91 | Si |
| SLU 73 | 634 | -18994 | -912 | -9303 | | 3.09 | 219.5 | 0.97 | 5947 | | | 6.52 | Si |
| SLU 73 | 814 | -17405 | -911 | 48387 | | 2.83 | 219.5 | 0.93 | 5735 | | | 6.3 | Si |
| SLU 39 | 634 | -16786 | -881 | -6000 | | 2.73 | 219.5 | 0.92 | 5653 | | | 6.42 | Si |
| SLU 39 | 814 | -15749 | -880 | 48662 | | 2.56 | 219.5 | 0.9 | 5514 | | | 6.27 | Si |
| SLU 19 | 634 | -14791 | -829 | 3886 | | 2.41 | 219.5 | 0.88 | 5387 | | | 6.5 | Si |
| SLU 19 | 814 | -13807 | -828 | 46825 | | 2.25 | 219.5 | 0.86 | 5255 | | | 6.35 | Si |
| SLU 52 | 634 | -17113 | -857 | 3757 | | 2.78 | 219.5 | 0.93 | 5696 | | | 6.65 | Si |
| SLU 52 | 814 | -15568 | -856 | 50140 | | 2.53 | 219.5 | 0.89 | 5490 | | | 6.41 | Si |
| SLU 18 | 634 | -14905 | -826 | 7059 | | 2.43 | 219.5 | 0.88 | 5402 | | | 6.54 | Si |
| SLU 18 | 814 | -13912 | -825 | 50415 | | 2.26 | 219.5 | 0.86 | 5269 | | | 6.39 | Si |
| SLU 61 | 634 | -17903 | -956 | 8177 | | 2.91 | 219.5 | 0.94 | 5802 | | | 6.07 | Si |
| SLU 61 | 814 | -16494 | -955 | 57541 | | 2.68 | 219.5 | 0.91 | 5614 | | | 5.88 | Si |
| SLU 81 | 634 | -19898 | -1009 | -1710 | | 3.24 | 219.5 | 0.99 | 6068 | | | 6.01 | Si |
| SLU 81 | 814 | -18437 | -1007 | 59379 | | 3 | 219.5 | 0.96 | 5873 | | | 5.83 | Si |
| SLU 82 | 634 | -19785 | -1012 | -4883 | | 3.22 | 219.5 | 0.98 | 6052 | | | 5.98 | Si |
| SLU 82 | 814 | -18332 | -1010 | 55789 | | 2.98 | 219.5 | 0.95 | 5859 | | | 5.8 | Si |

Verifica a taglio nel piano secondo D.M. 17-01-18 (N.T.C.) §7.8.2.2.2 con rottura per scorrimento in combinazioni sismiche, γM = 2

| Comb. | Quota | N | V par | M | σ0 | σN | l' | fvd | Vt scorr. | Vt fess.diag. | Vt,lim | c.s. | Verifica |
|---|---|---|---|---|---|---|---|---|---|---|---|---|---|
| SLV 13 | 634 | -12573 | -9212 | -400789 | | 2.05 | 219.5 | 1.24 | 7636 | | | 0.83 | No, Vu<V |
| SLV 13 | 814 | -18962 | -8949 | 249983 | | 3.09 | 219.5 | 1.45 | 8914 | | | 1 | No, Vu<V |
| SLV 16 | 634 | -16126 | -7440 | -367912 | | 2.62 | 219.5 | 1.36 | 8347 | | | 1.12 | Si |
| SLV 16 | 814 | -20432 | -7013 | 285806 | | 3.32 | 219.5 | 1.5 | 9208 | | | 1.31 | Si |
| SLV 2 | 634 | -10948 | 6296 | 362274 | | 1.78 | 219.5 | 1.19 | 7311 | | | 1.16 | Si |
| SLV 2 | 814 | -3877 | 5871 | -212690 | | 0.84 | 164.65 | 1 | 4617 | | | 0.79 | No, Vu<V |
| SLV 15 | 634 | -16126 | -7440 | -367912 | | 2.62 | 219.5 | 1.36 | 8347 | | | 1.12 | Si |
| SLV 15 | 814 | -20432 | -7013 | 285806 | | 3.32 | 219.5 | 1.5 | 9208 | | | 1.31 | Si |
| SLV 9 | 634 | -7859 | -5852 | -172073 | | 1.28 | 219.5 | 1.09 | 6693 | | | 1.14 | Si |
| SLV 9 | 814 | -11967 | -6021 | 46255 | | 1.95 | 219.5 | 1.22 | 7515 | | | 1.25 | Si |
| SLV 10 | 634 | -7859 | -5852 | -172073 | | 1.28 | 219.5 | 1.09 | 6693 | | | 1.14 | Si |
| SLV 10 | 814 | -11967 | -6021 | 46255 | | 1.95 | 219.5 | 1.22 | 7515 | | | 1.25 | Si |
| SLV 1 | 634 | -10948 | 6296 | 362274 | | 1.78 | 219.5 | 1.19 | 7311 | | | 1.16 | Si |
| SLV 1 | 814 | -3877 | 5871 | -212690 | | 0.84 | 164.65 | 1 | 4617 | | | 0.79 | No, Vu<V |
| SLV 3 | 634 | -14501 | 8068 | 395151 | | 2.36 | 219.5 | 1.31 | 8022 | | | 0.99 | No, Vu<V |
| SLV 3 | 814 | -5347 | 7807 | -176867 | | 0.87 | 219.5 | 1.01 | 6191 | | | 0.79 | No, Vu<V |
| SLV 14 | 634 | -12573 | -9212 | -400789 | | 2.05 | 219.5 | 1.24 | 7636 | | | 0.83 | No, Vu<V |
| SLV 14 | 814 | -18962 | -8949 | 249983 | | 3.09 | 219.5 | 1.45 | 8914 | | | 1 | No, Vu<V |
| SLV 4 | 634 | -14501 | 8068 | 395151 | | 2.36 | 219.5 | 1.31 | 8022 | | | 0.99 | No, Vu<V |
| SLV 4 | 814 | -5347 | 7807 | -176867 | | 0.87 | 219.5 | 1.01 | 6191 | | | 0.79 | No, Vu<V |

Verifica a pressoflessione fuori piano D.M. 17-01-18 (N.T.C.)

quota 720 Wa 0.05 denominatore 8 γM = 2

| Comb. | fd | Sa | σ0 | N | M | Mc | Coeff.s. | Verifica |
|---|---|---|---|---|---|---|---|---|
| SLV 5 | 14 | 0.39 | 1.06 | -6502 | 22810 | 83146 | 3.65 | Si |
| SLV 6 | 14 | 0.39 | 1.06 | -6502 | 22810 | 83146 | 3.65 | Si |
| SLV 1 | 14 | 0.39 | 1.21 | -7431 | 22810 | 93740 | 4.11 | Si |
| SLV 2 | 14 | 0.39 | 1.21 | -7431 | 22810 | 93740 | 4.11 | Si |
| SLV 10 | 14 | 0.39 | 1.44 | -8876 | 22810 | 109577 | 4.8 | Si |
| SLV 9 | 14 | 0.39 | 1.44 | -8876 | 22810 | 109577 | 4.8 | Si |
| SLV 3 | 14 | 0.39 | 1.72 | -10601 | 22810 | 127467 | 5.59 | Si |
| SLV 4 | 14 | 0.39 | 1.72 | -10601 | 22810 | 127467 | 5.59 | Si |
| SLV 13 | 14 | 0.39 | 2.5 | -15344 | 22810 | 170928 | 7.49 | Si |
| SLV 14 | 14 | 0.39 | 2.5 | -15344 | 22810 | 170928 | 7.49 | Si |

Verifica dei meccanismi locali di collasso con analisi cinematica lineare

forza di aggancio al piano = 0 quota mezzeria = 720 Wa = 0.05 Ta = 0.0739

| Comb. | N top | N base | V orto | α0 | M* | e* | a0* | aLim | Verifica |
|---|---|---|---|---|---|---|---|---|---|
| SLV 5 | -8222 | -6671 | -447 | 0.003 | 11.463 | 0.928 | 5.383 | 1522.194 | No |
| SLV 6 | -8222 | -6671 | -447 | 0.003 | 11.463 | 0.928 | 5.383 | 1522.194 | No |
| SLV 7 | -7762 | -17605 | 390 | 0.008 | 11.001 | 0.926 | 11.912 | 1522.194 | No |
| SLV 8 | -7762 | -17605 | 390 | 0.008 | 11.001 | 0.926 | 11.912 | 1522.194 | No |
| SLV 11 | -11268 | -19649 | 457 | 0.011 | 14.542 | 0.941 | 17.106 | 1522.194 | No |
| SLV 12 | -11268 | -19649 | 457 | 0.011 | 14.542 | 0.941 | 17.106 | 1522.194 | No |
| SLV 9 | -11727 | -8714 | -380 | 0.018 | 15.008 | 0.942 | 27.191 | 1522.194 | No |
| SLV 10 | -11727 | -8714 | -380 | 0.018 | 15.008 | 0.942 | 27.191 | 1522.194 | No |
| SLV 1 | -3972 | -8113 | -232 | 0.014 | 7.221 | 0.901 | 22.069 | 839.377 | No |
| SLV 2 | -3972 | -8113 | -232 | 0.014 | 7.221 | 0.901 | 22.069 | 839.377 | No |

Tabella dei coefficienti di sicurezza minimi

| Stato limite | Coeff.s. | Comb. | Verifica |
|---|---|---|---|
| PF_SLU | 12.731 | SLU 30 | Si |
| V_SLU | 5.8 | SLU 82 | Si |
| PF_SLV | 1.897 | SLV 1 | Si |
| V_SLV | 0.786 | SLV 1 | No |
| PFFP_SLV | 3.645 | SLV 5 | Si |
| R_SLV | 0.004 | SLV 5 | No |

## Maschio 100

Verifiche condotte secondo D.M. 17-01-18 (N.T.C.)

### Dati geometrici

| X ini. | Y ini. | X fin. | Y fin. | Quota i. | Quota.s | l | Sp. | h netta | h ini. | h fin. | a | a.s.,sx | a.s.,dx |
|---|---|---|---|---|---|---|---|---|---|---|---|---|---|
| -2249.3 | -335.9 | -2467.8 | -335.9 | L4 | L5 | 218.5 | 28 | 352 | 352 | 352 | | | |

### Caratteristiche del materiale

(Circolare 7 21-01-19 C8.5.I) Muratura in mattoni pieni e malta di calce LC2_Corti

| fb | fk | fvk0 | fmedio | τ0 | fv0 | μ | ϕ | fv,lim | E | G | FC |
|---|---|---|---|---|---|---|---|---|---|---|---|
| 60 | | | 34.5 | 0.9 | 2 | 0.58 | 0.77 | 3.25 | 32000 | 12800 | 1.2 |

### Verifica a pressoflessione nel piano secondo D.M. 17-01-18 NTC §7.8.2.2.1 in combinazioni non sismiche, γM = 3

| Comb. | Quota | N | M | σ0 | Mu | c.s. | Verifica |
|---|---|---|---|---|---|---|---|
| SLU 5 | 634 | -10998 | 165942 | 1.8 | 936366 | 5.643 | Si |
| SLU 5 | 814 | -11592 | -135045 | 1.89 | 971865 | 7.197 | Si |
| SLU 31 | 634 | -13173 | 186216 | 2.15 | 1058742 | 5.686 | Si |
| SLU 31 | 814 | -14569 | -180726 | 2.38 | 1126354 | 6.232 | Si |
| SLU 76 | 634 | -16464 | 214217 | 2.69 | 1204478 | 5.623 | Si |
| SLU 76 | 814 | -17792 | -215079 | 2.91 | 1249833 | 5.811 | Si |
| SLU 84 | 634 | -17143 | 187939 | 2.8 | 1228612 | 6.537 | Si |
| SLU 84 | 814 | -18451 | -224466 | 3.02 | 1269477 | 5.656 | Si |
| SLU 34 | 634 | -13738 | 199109 | 2.25 | 1087138 | 5.46 | Si |
| SLU 34 | 814 | -15226 | -186140 | 2.49 | 1155233 | 6.206 | Si |
| SLU 83 | 634 | -17348 | 140334 | 2.84 | 1235538 | 8.804 | Si |
| SLU 83 | 814 | -18332 | -222679 | 3 | 1266052 | 5.686 | Si |
| SLU 23 | 634 | -11910 | 173480 | 1.95 | 990233 | 5.708 | Si |
| SLU 23 | 814 | -12844 | -156045 | 2.1 | 1041590 | 6.675 | Si |
| SLU 82 | 634 | -16577 | 175046 | 2.71 | 1208650 | 6.905 | Si |
| SLU 82 | 814 | -17794 | -219051 | 2.91 | 1249893 | 5.706 | Si |
| SLU 26 | 634 | -12475 | 186373 | 2.04 | 1021756 | 5.482 | Si |
| SLU 26 | 814 | -13502 | -161459 | 2.21 | 1075438 | 6.661 | Si |
| SLU 13 | 634 | -12260 | 178678 | 2 | 1009927 | 5.652 | Si |
| SLU 13 | 814 | -13317 | -159726 | 2.18 | 1066097 | 6.675 | Si |

### Verifica a pressoflessione nel piano secondo D.M. 17-01-18 NTC §7.8.2.2.1 in combinazioni sismiche, γM = 2

| Comb. | Quota | N | M | σ0 | Mu | c.s. | Verifica |
|---|---|---|---|---|---|---|---|
| SLV 13 | 634 | -10291 | -463726 | 1.68 | 969487 | 2.091 | Si |
| SLV 13 | 814 | -5329 | 318412 | 0.87 | 540676 | 1.698 | Si |
| SLV 15 | 634 | -5594 | -473616 | 0.91 | 565439 | 1.194 | Si |
| SLV 15 | 814 | -1406 | 356620 | 0 | 0 | 0 | No, e>l/2 |
| SLV 3 | 634 | -12827 | 630096 | 2.1 | 1160901 | 1.842 | Si |
| SLV 3 | 814 | -18219 | -600913 | 2.98 | 1505297 | 2.505 | Si |
| SLV 2 | 634 | -17523 | 639986 | 2.86 | 1465664 | 2.29 | Si |
| SLV 2 | 814 | -22142 | -639122 | 3.62 | 1702489 | 2.664 | Si |
| SLV 14 | 634 | -10291 | -463726 | 1.68 | 969487 | 2.091 | Si |
| SLV 14 | 814 | -5329 | 318412 | 0.87 | 540676 | 1.698 | Si |
| SLV 1 | 634 | -17523 | 639986 | 2.86 | 1465664 | 2.29 | Si |
| SLV 1 | 814 | -22142 | -639122 | 3.62 | 1702489 | 2.664 | Si |
| SLV 7 | 634 | -4817 | 232257 | 0.79 | 492306 | 2.12 | Si |
| SLV 7 | 814 | -7757 | -221200 | 1.27 | 759537 | 3.434 | Si |
| SLV 16 | 634 | -5594 | -473616 | 0.91 | 565439 | 1.194 | Si |
| SLV 16 | 814 | -1406 | 356620 | 0 | 0 | 0 | No, e>l/2 |
| SLV 4 | 634 | -12827 | 630096 | 2.1 | 1160901 | 1.842 | Si |
| SLV 4 | 814 | -18219 | -600913 | 2.98 | 1505297 | 2.505 | Si |
| SLV 8 | 634 | -4817 | 232257 | 0.79 | 492306 | 2.12 | Si |
| SLV 8 | 814 | -7757 | -221200 | 1.27 | 759537 | 3.434 | Si |

### Verifica a taglio nel piano secondo D.M. 17-01-18 (N.T.C.) §7.8.2.2.2 con rottura per scorrimento in combinazioni non sismiche, γM = 3

| Comb. | Quota | N | V par | M | σ0 | σN | l' | fvd | Vt scorr. | Vt fess.diag. | Vt,lim | c.s. | Verifica |
|---|---|---|---|---|---|---|---|---|---|---|---|---|---|
| SLU 76 | 634 | -16464 | 4859 | 214217 | | 2.69 | 218.5 | 0.91 | 5594 | | | 1.15 | Si |
| SLU 76 | 814 | -17792 | 4811 | -215079 | | 2.91 | 218.5 | 0.94 | 5771 | | | 1.2 | Si |
| SLU 73 | 634 | -15899 | 4701 | 201324 | | 2.6 | 218.5 | 0.9 | 5519 | | | 1.17 | Si |
| SLU 73 | 814 | -17135 | 4653 | -209665 | | 2.8 | 218.5 | 0.93 | 5684 | | | 1.22 | Si |
| SLU 78 | 634 | -17335 | 4712 | 194226 | | 2.83 | 218.5 | 0.93 | 5710 | | | 1.21 | Si |
| SLU 78 | 814 | -18559 | 4685 | -221992 | | 3.03 | 218.5 | 0.96 | 5873 | | | 1.25 | Si |
| SLU 84 | 634 | -17143 | 4743 | 187939 | | 2.8 | 218.5 | 0.93 | 5685 | | | 1.2 | Si |
| SLU 84 | 814 | -18451 | 4715 | -224466 | | 3.02 | 218.5 | 0.96 | 5859 | | | 1.24 | Si |
| SLU 82 | 634 | -16577 | 4585 | 175046 | | 2.71 | 218.5 | 0.92 | 5609 | | | 1.22 | Si |
| SLU 82 | 814 | -17794 | 4558 | -219051 | | 2.91 | 218.5 | 0.94 | 5771 | | | 1.27 | Si |
| SLU 80 | 634 | -17166 | 4691 | 195373 | | 2.81 | 218.5 | 0.93 | 5688 | | | 1.21 | Si |
| SLU 80 | 814 | -18370 | 4664 | -219302 | | 3 | 218.5 | 0.96 | 5848 | | | 1.25 | Si |
| SLU 31 | 634 | -13173 | 4183 | 186216 | | 2.15 | 218.5 | 0.84 | 5155 | | | 1.23 | Si |
| SLU 31 | 814 | -14569 | 4135 | -180726 | | 2.38 | 218.5 | 0.87 | 5341 | | | 1.29 | Si |
| SLU 68 | 634 | -15202 | 4371 | 201481 | | 2.48 | 218.5 | 0.89 | 5426 | | | 1.24 | Si |
| SLU 68 | 814 | -16068 | 4323 | -190398 | | 2.63 | 218.5 | 0.91 | 5541 | | | 1.28 | Si |
| SLU 75 | 634 | -16770 | 4554 | 181333 | | 2.74 | 218.5 | 0.92 | 5635 | | | 1.24 | Si |
| SLU 75 | 814 | -17901 | 4527 | -216578 | | 2.93 | 218.5 | 0.95 | 5786 | | | 1.28 | Si |
| SLU 34 | 634 | -13738 | 4341 | 199109 | | 2.25 | 218.5 | 0.85 | 5231 | | | 1.2 | Si |
| SLU 34 | 814 | -15226 | 4292 | -186140 | | 2.49 | 218.5 | 0.89 | 5429 | | | 1.26 | Si |

### Verifica a taglio nel piano secondo D.M. 17-01-18 (N.T.C.) §7.8.2.2.2 con rottura per scorrimento in combinazioni sismiche, γM = 2

| Comb. | Quota | N | V par | M | σ0 | σN | l' | fvd | Vt scorr. | Vt fess.diag. | Vt,lim | c.s. | Verifica |
|---|---|---|---|---|---|---|---|---|---|---|---|---|---|
| SLV 16 | 634 | -5594 | -6938 | -473616 | | 2.71 | 73.77 | 1.38 | 2840 | | | 0.41 | No, Vu<V |
| SLV 16 | 814 | -1406 | -6353 | 356620 | | 0 | 0 | 0.83 | 0 | | | 0 | No, Vu<V |
| SLV 14 | 634 | -10291 | -5882 | -463726 | | 1.91 | 192.56 | 1.22 | 6551 | | | 1.11 | Si |

| Comb. | Quota | N | V par | M | σ0 | σN | l' | fvd | Vt scorr. | Vt fess.diag. | Vt,lim | c.s. | Verifica |
|---|---|---|---|---|---|---|---|---|---|---|---|---|---|
| SLV 14 | 814 | -5329 | -5970 | 318412 | | 1.28 | 148.49 | 1.09 | 4531 | | | 0.76 | No, Vu<V |
| SLV 4 | 634 | -12827 | 11155 | 630096 | | 2.54 | 180.38 | 1.34 | 6774 | | | 0.61 | No, Vu<V |
| SLV 4 | 814 | -18219 | 11247 | -600913 | | 2.98 | 218.5 | 1.43 | 8742 | | | 0.78 | No, Vu<V |
| SLV 15 | 634 | -5594 | -6938 | -473616 | | 2.71 | 73.77 | 1.38 | 2840 | | | 0.41 | No, Vu<V |
| SLV 15 | 814 | -1406 | -6353 | 356620 | | 0 | 0 | 0.83 | 0 | | | 0 | No, Vu<V |
| SLD 1 | 634 | -14076 | 6717 | 321853 | | 2.3 | 218.5 | 1.29 | 7914 | | | 1.18 | Si |
| SLD 1 | 814 | -16191 | 6479 | -353765 | | 2.65 | 218.5 | 1.36 | 8337 | | | 1.29 | Si |
| SLV 13 | 634 | -10291 | -5882 | -463726 | | 1.91 | 192.56 | 1.22 | 6551 | | | 1.11 | Si |
| SLV 13 | 814 | -5329 | -5970 | 318412 | | 1.28 | 148.49 | 1.09 | 4531 | | | 0.76 | No, Vu<V |
| SLV 2 | 634 | -17523 | 12211 | 639986 | | 2.87 | 218.18 | 1.41 | 8596 | | | 0.7 | No, Vu<V |
| SLV 2 | 814 | -22142 | 11631 | -639122 | | 3.62 | 218.5 | 1.56 | 9527 | | | 0.82 | No, Vu<V |
| SLV 3 | 634 | -12827 | 11155 | 630096 | | 2.54 | 180.38 | 1.34 | 6774 | | | 0.61 | No, Vu<V |
| SLV 3 | 814 | -18219 | 11247 | -600913 | | 2.98 | 218.5 | 1.43 | 8742 | | | 0.78 | No, Vu<V |
| SLV 1 | 634 | -17523 | 12211 | 639986 | | 2.87 | 218.18 | 1.41 | 8596 | | | 0.7 | No, Vu<V |
| SLV 1 | 814 | -22142 | 11631 | -639122 | | 3.62 | 218.5 | 1.56 | 9527 | | | 0.82 | No, Vu<V |
| SLD 2 | 634 | -14076 | 6717 | 321853 | | 2.3 | 218.5 | 1.29 | 7914 | | | 1.18 | Si |
| SLD 2 | 814 | -16191 | 6479 | -353765 | | 2.65 | 218.5 | 1.36 | 8337 | | | 1.29 | Si |

### Verifica a pressoflessione fuori piano D.M. 17-01-18 (N.T.C.)

quota 720 Wa 0.05 denominatore 8 γM = 2

| Comb. | fd | Sa | σ0 | N | M | Mc | Coeff.s. | Verifica |
|---|---|---|---|---|---|---|---|---|
| SLV 12 | 14 | 0.39 | 0.52 | -3176 | 22706 | 42581 | 1.88 | Si |
| SLV 11 | 14 | 0.39 | 0.52 | -3176 | 22706 | 42581 | 1.88 | Si |
| SLV 15 | 14 | 0.39 | 0.61 | -3707 | 22706 | 49327 | 2.17 | Si |
| SLV 16 | 14 | 0.39 | 0.61 | -3707 | 22706 | 49327 | 2.17 | Si |
| SLV 8 | 14 | 0.39 | 1.13 | -6938 | 22706 | 88115 | 3.88 | Si |
| SLV 7 | 14 | 0.39 | 1.13 | -6938 | 22706 | 88115 | 3.88 | Si |
| SLV 14 | 14 | 0.39 | 1.3 | -7924 | 22706 | 99172 | 4.37 | Si |
| SLV 13 | 14 | 0.39 | 1.3 | -7924 | 22706 | 99172 | 4.37 | Si |
| SLV 4 | 14 | 0.39 | 2.66 | -16245 | 22706 | 178007 | 7.84 | Si |
| SLV 3 | 14 | 0.39 | 2.66 | -16245 | 22706 | 178007 | 7.84 | Si |

### Verifica dei meccanismi locali di collasso con analisi cinematica lineare

forza di aggancio al piano = 0 quota mezzeria = 720 Wa = 0.05 Ta = 0.0739

| Comb. | N top | N base | V orto | α0 | M* | e* | a0* | aLim | Verifica |
|---|---|---|---|---|---|---|---|---|---|
| SLV 7 | -6389 | -6139 | -110 | 0.036 | 9.606 | 0.918 | 56.623 | 1522.194 | No |
| SLV 8 | -6389 | -6139 | -110 | 0.036 | 9.606 | 0.918 | 56.623 | 1522.194 | No |
| SLV 10 | -13008 | -17397 | 109 | 0.038 | 16.292 | 0.947 | 57.81 | 1522.194 | No |
| SLV 9 | -13008 | -17397 | 109 | 0.038 | 16.292 | 0.947 | 57.81 | 1522.194 | No |
| SLV 5 | -15904 | -21576 | 70 | 0.04 | 19.232 | 0.954 | 61.213 | 1522.194 | No |
| SLV 6 | -15904 | -21576 | 70 | 0.04 | 19.232 | 0.954 | 61.213 | 1522.194 | No |
| SLV 12 | -3493 | -1960 | -72 | 0.041 | 6.738 | 0.897 | 66.077 | 1522.194 | No |
| SLV 11 | -3493 | -1960 | -72 | 0.041 | 6.738 | 0.897 | 66.077 | 1522.194 | No |
| SLV 3 | -13098 | -16417 | -93 | 0.039 | 16.383 | 0.947 | 59.461 | 839.377 | No |
| SLV 4 | -13098 | -16417 | -93 | 0.039 | 16.383 | 0.947 | 59.461 | 839.377 | No |

### Tabella dei coefficienti di sicurezza minimi

| Stato limite | Coeff.s. | Comb. | Verifica |
|---|---|---|---|
| PF_SLU | 5.46 | SLU 34 | Si |
| V_SLU | 1.151 | SLU 76 | Si |
| PF_SLV | 0 | SLV 15 | No |
| V_SLV | 0 | SLV 15 | No |
| PFFP_SLV | 1.875 | SLV 11 | Si |
| R_SLV | 0.037 | SLV 7 | No |

## Maschio 101

Verifiche condotte secondo D.M. 17-01-18 (N.T.C.)

### Dati geometrici

| X ini. | Y ini. | X fin. | Y fin. | Quota i. | Quota.s | l | Sp. | h netta | h ini. | h fin. | a | a.s.,sx | a.s.,dx |
|---|---|---|---|---|---|---|---|---|---|---|---|---|---|
| -1936.8 | -335.9 | -2159.3 | -335.9 | L4 | L5 | 222.5 | 28 | 352 | 352 | 352 | | | |

### Caratteristiche del materiale

(Circolare 7 21-01-19 C8.5.I) Muratura in mattoni pieni e malta di calce LC2_Corti

| fb | fk | fvk0 | fmedio | τ0 | fv0 | μ | ϕ | fv,lim | E | G | FC |
|---|---|---|---|---|---|---|---|---|---|---|---|
| 60 | | | 34.5 | 0.9 | 2 | 0.58 | 0.77 | 3.25 | 32000 | 12800 | 1.2 |

### Verifica a pressoflessione nel piano secondo D.M. 17-01-18 NTC §7.8.2.2.1 in combinazioni non sismiche, γM = 3

| Comb. | Quota | N | M | σ0 | Mu | c.s. | Verifica |
|---|---|---|---|---|---|---|---|
| SLU 61 | 744 | -16366 | -238332 | 2.63 | 1233542 | 5.176 | Si |
| SLU 61 | 824 | -14451 | -187146 | 2.32 | 1149886 | 6.144 | Si |
| SLU 84 | 744 | -18184 | -246131 | 2.92 | 1298114 | 5.274 | Si |
| SLU 84 | 824 | -16214 | -211284 | 2.6 | 1227479 | 5.81 | Si |
| SLU 31 | 744 | -13847 | -214216 | 2.22 | 1120154 | 5.229 | Si |
| SLU 31 | 824 | -12363 | -163083 | 1.98 | 1040308 | 6.379 | Si |
| SLU 65 | 744 | -14907 | -226219 | 2.39 | 1171244 | 5.177 | Si |
| SLU 65 | 824 | -13117 | -183580 | 2.11 | 1082095 | 5.894 | Si |
| SLU 10 | 744 | -12151 | -195914 | 1.95 | 1028110 | 5.248 | Si |
| SLU 10 | 824 | -10747 | -145631 | 1.73 | 942401 | 6.471 | Si |
| SLU 73 | 744 | -16750 | -252915 | 2.69 | 1248382 | 4.936 | Si |
| SLU 73 | 824 | -14858 | -197484 | 2.38 | 1169001 | 5.919 | Si |
| SLU 44 | 744 | -13210 | -207917 | 2.12 | 1087081 | 5.228 | Si |
| SLU 44 | 824 | -11501 | -166129 | 1.85 | 989534 | 5.956 | Si |

| Comb. | Quota | N | M | σ0 | Mu | c.s. | Verifica |
|---|---|---|---|---|---|---|---|
| SLU 52 | 744 | -15053 | -234613 | 2.42 | 1177927 | 5.021 | Si |
| SLU 52 | 824 | -13242 | -180032 | 2.13 | 1088772 | 6.048 | Si |
| SLU 82 | 744 | -18062 | -256634 | 2.9 | 1294235 | 5.043 | Si |
| SLU 82 | 824 | -16067 | -204597 | 2.58 | 1221548 | 5.971 | Si |
| SLU 76 | 744 | -16872 | -242412 | 2.71 | 1252962 | 5.169 | Si |
| SLU 76 | 824 | -15004 | -204171 | 2.41 | 1175709 | 5.758 | Si |

Verifica a pressoflessione nel piano secondo D.M. 17-01-18 NTC §7.8.2.2.1 in combinazioni sismiche, γM = 2

| Comb. | Quota | N | M | σ0 | Mu | c.s. | Verifica |
|---|---|---|---|---|---|---|---|
| SLV 11 | 744 | -8533 | -289173 | 1.37 | 842879 | 2.915 | Si |
| SLV 11 | 824 | -6871 | 51142 | 1.1 | 695394 | 13.597 | Si |
| SLV 4 | 744 | -7843 | 144717 | 1.26 | 782597 | 5.408 | Si |
| SLV 4 | 824 | -9170 | -533347 | 1.47 | 897300 | 1.682 | Si |
| SLV 16 | 744 | -14366 | -489058 | 2.31 | 1296582 | 2.651 | Si |
| SLV 16 | 824 | -10413 | 289017 | 1.67 | 999942 | 3.46 | Si |
| SLV 3 | 744 | -7843 | 144717 | 1.26 | 782597 | 5.408 | Si |
| SLV 3 | 824 | -9170 | -533347 | 1.47 | 897300 | 1.682 | Si |
| SLV 2 | 744 | -10885 | 163519 | 1.75 | 1037811 | 6.347 | Si |
| SLV 2 | 824 | -11833 | -576163 | 1.9 | 1111817 | 1.93 | Si |
| SLV 15 | 744 | -14366 | -489058 | 2.31 | 1296582 | 2.651 | Si |
| SLV 15 | 824 | -10413 | 289017 | 1.67 | 999942 | 3.46 | Si |
| SLV 13 | 744 | -17408 | -470255 | 2.79 | 1493784 | 3.177 | Si |
| SLV 13 | 824 | -13076 | 246201 | 2.1 | 1204791 | 4.894 | Si |
| SLV 14 | 744 | -17408 | -470255 | 2.79 | 1493784 | 3.177 | Si |
| SLV 14 | 824 | -13076 | 246201 | 2.1 | 1204791 | 4.894 | Si |
| SLV 1 | 744 | -10885 | 163519 | 1.75 | 1037811 | 6.347 | Si |
| SLV 1 | 824 | -11833 | -576163 | 1.9 | 1111817 | 1.93 | Si |
| SLV 12 | 744 | -8533 | -289173 | 1.37 | 842879 | 2.915 | Si |
| SLV 12 | 824 | -6871 | 51142 | 1.1 | 695394 | 13.597 | Si |

Verifica a taglio nel piano secondo D.M. 17-01-18 (N.T.C.) §7.8.2.2.2 con rottura per scorrimento in combinazioni non sismiche, γM = 3

| Comb. | Quota | N | V par | M | σ0 | σN | l' | fvd | Vt scorr. | Vt fess.diag. | Vt,lim | c.s. | Verifica |
|---|---|---|---|---|---|---|---|---|---|---|---|---|---|
| SLU 61 | 744 | -16366 | -1716 | -238332 | | 2.63 | 222.5 | 0.91 | 5643 | | | 3.29 | Si |
| SLU 61 | 824 | -14451 | -1520 | -187146 | | 2.32 | 222.5 | 0.86 | 5388 | | | 3.55 | Si |
| SLU 73 | 744 | -16750 | -1713 | -252915 | | 2.69 | 222.5 | 0.91 | 5694 | | | 3.32 | Si |
| SLU 73 | 824 | -14858 | -1556 | -197484 | | 2.38 | 222.5 | 0.87 | 5442 | | | 3.5 | Si |
| SLU 82 | 744 | -18062 | -1818 | -256634 | | 2.9 | 222.5 | 0.94 | 5869 | | | 3.23 | Si |
| SLU 82 | 824 | -16067 | -1641 | -204597 | | 2.58 | 222.5 | 0.9 | 5603 | | | 3.42 | Si |
| SLU 40 | 744 | -15160 | -1559 | -217935 | | 2.43 | 222.5 | 0.88 | 5482 | | | 3.52 | Si |
| SLU 40 | 824 | -13572 | -1433 | -170196 | | 2.18 | 222.5 | 0.85 | 5271 | | | 3.68 | Si |
| SLU 31 | 744 | -13847 | -1454 | -214216 | | 2.22 | 222.5 | 0.85 | 5307 | | | 3.65 | Si |
| SLU 31 | 824 | -12363 | -1349 | -163083 | | 1.98 | 222.5 | 0.82 | 5109 | | | 3.79 | Si |
| SLU 52 | 744 | -15053 | -1611 | -234613 | | 2.42 | 222.5 | 0.88 | 5468 | | | 3.39 | Si |
| SLU 52 | 824 | -13242 | -1435 | -180032 | | 2.13 | 222.5 | 0.84 | 5227 | | | 3.64 | Si |
| SLU 39 | 744 | -15943 | -1521 | -206352 | | 2.56 | 222.5 | 0.9 | 5587 | | | 3.67 | Si |
| SLU 39 | 824 | -14267 | -1371 | -171928 | | 2.29 | 222.5 | 0.86 | 5363 | | | 3.91 | Si |
| SLU 81 | 744 | -18846 | -1780 | -245051 | | 3.03 | 222.5 | 0.96 | 5974 | | | 3.36 | Si |
| SLU 81 | 824 | -16762 | -1578 | -206329 | | 2.69 | 222.5 | 0.91 | 5696 | | | 3.61 | Si |
| SLU 60 | 744 | -17150 | -1677 | -226749 | | 2.75 | 222.5 | 0.92 | 5748 | | | 3.43 | Si |
| SLU 60 | 824 | -15146 | -1457 | -188878 | | 2.43 | 222.5 | 0.88 | 5481 | | | 3.76 | Si |
| SLU 19 | 744 | -13463 | -1456 | -199633 | | 2.16 | 222.5 | 0.84 | 5256 | | | 3.61 | Si |
| SLU 19 | 824 | -11956 | -1312 | -152745 | | 1.92 | 222.5 | 0.81 | 5055 | | | 3.85 | Si |

Verifica a taglio nel piano secondo D.M. 17-01-18 (N.T.C.) §7.8.2.2.2 con rottura per scorrimento in combinazioni sismiche, γM = 2

| Comb. | Quota | N | V par | M | σ0 | σN | l' | fvd | Vt scorr. | Vt fess.diag. | Vt,lim | c.s. | Verifica |
|---|---|---|---|---|---|---|---|---|---|---|---|---|---|
| SLV 16 | 744 | -14366 | -15052 | -489058 | | 2.31 | 222.5 | 1.29 | 8065 | | | 0.54 | No, Vu<V |
| SLV 16 | 824 | -10413 | -11841 | 289017 | | 1.67 | 222.5 | 1.17 | 7274 | | | 0.61 | No, Vu<V |
| SLV 2 | 744 | -10885 | 12853 | 163519 | | 1.75 | 222.5 | 1.18 | 7369 | | | 0.57 | No, Vu<V |
| SLV 2 | 824 | -11833 | 9945 | -576163 | | 2.25 | 187.68 | 1.28 | 6746 | | | 0.68 | No, Vu<V |
| SLV 14 | 744 | -17408 | -13431 | -470255 | | 2.79 | 222.5 | 1.39 | 8673 | | | 0.65 | No, Vu<V |
| SLV 14 | 824 | -13076 | -10490 | 246201 | | 2.1 | 222.5 | 1.25 | 7807 | | | 0.74 | No, Vu<V |
| SLV 13 | 744 | -17408 | -13431 | -470255 | | 2.79 | 222.5 | 1.39 | 8673 | | | 0.65 | No, Vu<V |
| SLV 13 | 824 | -13076 | -10490 | 246201 | | 2.1 | 222.5 | 1.25 | 7807 | | | 0.74 | No, Vu<V |
| SLV 12 | 744 | -8533 | -7744 | -289173 | | 1.37 | 222.5 | 1.11 | 6898 | | | 0.89 | No, Vu<V |
| SLV 12 | 824 | -6871 | -6264 | 51142 | | 1.1 | 222.5 | 1.05 | 6566 | | | 1.05 | Si |
| SLV 11 | 744 | -8533 | -7744 | -289173 | | 1.37 | 222.5 | 1.11 | 6898 | | | 0.89 | No, Vu<V |
| SLV 11 | 824 | -6871 | -6264 | 51142 | | 1.1 | 222.5 | 1.05 | 6566 | | | 1.05 | Si |
| SLV 1 | 744 | -10885 | 12853 | 163519 | | 1.75 | 222.5 | 1.18 | 7369 | | | 0.57 | No, Vu<V |
| SLV 1 | 824 | -11833 | 9945 | -576163 | | 2.25 | 187.68 | 1.28 | 6746 | | | 0.68 | No, Vu<V |
| SLV 4 | 744 | -7843 | 11232 | 144717 | | 1.26 | 222.5 | 1.09 | 6760 | | | 0.6 | No, Vu<V |
| SLV 4 | 824 | -9170 | 8594 | -533347 | | 2.06 | 159.27 | 1.24 | 5550 | | | 0.65 | No, Vu<V |
| SLV 3 | 744 | -7843 | 11232 | 144717 | | 1.26 | 222.5 | 1.09 | 6760 | | | 0.6 | No, Vu<V |
| SLV 3 | 824 | -9170 | 8594 | -533347 | | 2.06 | 159.27 | 1.24 | 5550 | | | 0.65 | No, Vu<V |
| SLV 15 | 744 | -14366 | -15052 | -489058 | | 2.31 | 222.5 | 1.29 | 8065 | | | 0.54 | No, Vu<V |
| SLV 15 | 824 | -10413 | -11841 | 289017 | | 1.67 | 222.5 | 1.17 | 7274 | | | 0.61 | No, Vu<V |

Verifica a pressoflessione fuori piano D.M. 17-01-18 (N.T.C.)

quota 720 Wa 0.05 denominatore 8 γM = 2

| Comb. | fd | Sa | σ0 | N | M | Mc | Coeff.s. | Verifica |
|---|---|---|---|---|---|---|---|---|
| SLV 8 | 14 | 0.39 | 1.07 | -6676 | 23122 | 85272 | 3.69 | Si |
| SLV 7 | 14 | 0.39 | 1.07 | -6676 | 23122 | 85272 | 3.69 | Si |
| SLV 11 | 14 | 0.39 | 1.17 | -7308 | 23122 | 92495 | 4 | Si |
| SLV 12 | 14 | 0.39 | 1.17 | -7308 | 23122 | 92495 | 4 | Si |
| SLV 4 | 14 | 0.39 | 1.49 | -9312 | 23122 | 114423 | 4.95 | Si |
| SLV 3 | 14 | 0.39 | 1.49 | -9312 | 23122 | 114423 | 4.95 | Si |
| SLV 16 | 14 | 0.39 | 1.83 | -11419 | 23122 | 135886 | 5.88 | Si |
| SLV 15 | 14 | 0.39 | 1.83 | -11419 | 23122 | 135886 | 5.88 | Si |

| Comb. | fd | Sa | σ0 | N | M | Mc | Coeff.s. | Verifica |
|---|---|---|---|---|---|---|---|---|
| SLV 2 | 14 | 0.39 | 1.96 | -12204 | 23122 | 143461 | 6.2 | Si |
| SLV 1 | 14 | 0.39 | 1.96 | -12204 | 23122 | 143461 | 6.2 | Si |

### Verifica dei meccanismi locali di collasso con analisi cinematica lineare

forza di aggancio al piano = 0 quota mezzeria = 720 Wa = 0.05 Ta = 0.0739

| Comb. | N top | N base | V orto | α0 | M* | e* | a0* | aLim | Verifica |
|---|---|---|---|---|---|---|---|---|---|
| SLV 12 | -6526 | -4065 | -126 | 0.034 | 9.802 | 0.918 | 54.072 | 1522.194 | No |
| SLV 11 | -6526 | -4065 | -126 | 0.034 | 9.802 | 0.918 | 54.072 | 1522.194 | No |
| SLV 5 | -12381 | -16152 | 129 | 0.036 | 15.713 | 0.944 | 55.829 | 1522.194 | No |
| SLV 6 | -12381 | -16152 | 129 | 0.036 | 15.713 | 0.944 | 55.829 | 1522.194 | No |
| SLV 9 | -13128 | -15379 | 94 | 0.039 | 16.47 | 0.946 | 59.488 | 1522.194 | No |
| SLV 10 | -13128 | -15379 | 94 | 0.039 | 16.47 | 0.946 | 59.488 | 1522.194 | No |
| SLV 8 | -5778 | -4838 | -92 | 0.038 | 9.055 | 0.913 | 60.607 | 1522.194 | No |
| SLV 7 | -5778 | -4838 | -92 | 0.038 | 9.055 | 0.913 | 60.607 | 1522.194 | No |
| SLV 1 | -9198 | -13094 | 92 | 0.039 | 12.491 | 0.932 | 60.106 | 839.377 | No |
| SLV 2 | -9198 | -13094 | 92 | 0.039 | 12.491 | 0.932 | 60.106 | 839.377 | No |

### Tabella dei coefficienti di sicurezza minimi

| Stato limite | Coeff.s. | Comb. | Verifica |
|---|---|---|---|
| PF_SLU | 4.936 | SLU 73 | Si |
| V_SLU | 3.228 | SLU 82 | Si |
| PF_SLV | 1.682 | SLV 3 | Si |
| V_SLV | 0.536 | SLV 15 | No |
| PFFP_SLV | 3.688 | SLV 7 | Si |
| R_SLV | 0.036 | SLV 11 | No |

## Maschio 102

Verifiche condotte secondo D.M. 17-01-18 (N.T.C.)

### Dati geometrici

| X ini. | Y ini. | X fin. | Y fin. | Quota i. | Quota.s | l | Sp. | h netta | h ini. | h fin. | a | a.s.,sx | a.s.,dx |
|---|---|---|---|---|---|---|---|---|---|---|---|---|---|
| -1826.3 | -335.9 | -1886.8 | -335.9 | L4 | L5 | 60.5 | 28 | 352 | 352 | 352 | | | |

### Caratteristiche del materiale

(Circolare 7 21-01-19 C8.5.I) Muratura in mattoni pieni e malta di calce LC2_Corti

| fb | fk | fvk0 | fmedio | τ0 | fv0 | μ | ϕ | fv,lim | E | G | FC |
|---|---|---|---|---|---|---|---|---|---|---|---|
| 60 | | | 34.5 | 0.9 | 2 | 0.58 | 0.77 | 3.25 | 32000 | 12800 | 1.2 |

### Verifica a pressoflessione nel piano secondo D.M. 17-01-18 NTC §7.8.2.2.1 in combinazioni non sismiche, γM = 3

| Comb. | Quota | N | M | σ0 | Mu | c.s. | Verifica |
|---|---|---|---|---|---|---|---|
| SLU 82 | 744 | -6881 | 2416 | 4.06 | 104355 | 43.192 | Si |
| SLU 82 | 824 | -6223 | 44186 | 3.67 | 103351 | 2.339 | Si |
| SLU 76 | 744 | -6595 | 4290 | 3.89 | 104152 | 24.28 | Si |
| SLU 76 | 824 | -5863 | 39315 | 3.46 | 102002 | 2.594 | Si |
| SLU 81 | 744 | -7110 | 4395 | 4.2 | 104258 | 23.723 | Si |
| SLU 81 | 824 | -6443 | 43131 | 3.8 | 103899 | 2.409 | Si |
| SLU 52 | 744 | -5872 | 1334 | 3.47 | 102040 | 76.509 | Si |
| SLU 52 | 824 | -5215 | 38488 | 3.08 | 98138 | 2.55 | Si |
| SLU 73 | 744 | -6463 | 1673 | 3.82 | 103937 | 62.136 | Si |
| SLU 73 | 824 | -5794 | 42330 | 3.42 | 101677 | 2.402 | Si |
| SLU 84 | 744 | -7013 | 5033 | 4.14 | 104327 | 20.729 | Si |
| SLU 84 | 824 | -6292 | 41171 | 3.71 | 103546 | 2.515 | Si |
| SLU 40 | 744 | -5737 | 1127 | 3.39 | 101390 | 89.991 | Si |
| SLU 40 | 824 | -5238 | 38100 | 3.09 | 98306 | 2.58 | Si |
| SLU 61 | 744 | -6290 | 2077 | 3.71 | 103541 | 49.851 | Si |
| SLU 61 | 824 | -5644 | 40344 | 3.33 | 100900 | 2.501 | Si |
| SLU 75 | 744 | -6836 | 5284 | 4.04 | 104346 | 19.749 | Si |
| SLU 75 | 824 | -6101 | 39895 | 3.6 | 102959 | 2.581 | Si |
| SLU 83 | 744 | -7243 | 7011 | 4.28 | 104097 | 14.847 | Si |
| SLU 83 | 824 | -6513 | 40116 | 3.84 | 104027 | 2.593 | Si |

### Verifica a pressoflessione nel piano secondo D.M. 17-01-18 NTC §7.8.2.2.1 in combinazioni sismiche, γM = 2

| Comb. | Quota | N | M | σ0 | Mu | c.s. | Verifica |
|---|---|---|---|---|---|---|---|
| SLV 15 | 744 | -2287 | -95160 | 0 | 0 | 0 | No, e>l/2 |
| SLV 15 | 824 | -4840 | 136564 | 2.86 | 112177 | 0.821 | No, M>Mu |
| SLV 3 | 744 | -6666 | 94261 | 3.93 | 136702 | 1.45 | Si |
| SLV 3 | 824 | -4233 | -75105 | 2.5 | 101854 | 1.356 | Si |
| SLV 1 | 744 | -7386 | 103957 | 4.36 | 143698 | 1.382 | Si |
| SLV 1 | 824 | -3750 | -81609 | 2.21 | 92889 | 1.138 | Si |
| SLV 13 | 744 | -3007 | -85464 | 1.77 | 77741 | 0.91 | No, M>Mu |
| SLV 13 | 824 | -4358 | 130060 | 2.57 | 104069 | 0.8 | No, M>Mu |
| SLV 4 | 744 | -6666 | 94261 | 3.93 | 136702 | 1.45 | Si |
| SLV 4 | 824 | -4233 | -75105 | 2.5 | 101854 | 1.356 | Si |
| SLD 16 | 744 | -3752 | -38123 | 2.21 | 92917 | 2.437 | Si |
| SLD 16 | 824 | -4521 | 74007 | 2.67 | 106881 | 1.444 | Si |
| SLV 2 | 744 | -7386 | 103957 | 4.36 | 143698 | 1.382 | Si |
| SLV 2 | 824 | -3750 | -81609 | 2.21 | 92889 | 1.138 | Si |
| SLV 14 | 744 | -3007 | -85464 | 1.77 | 77741 | 0.91 | No, M>Mu |
| SLV 14 | 824 | -4358 | 130060 | 2.57 | 104069 | 0.8 | No, M>Mu |
| SLV 16 | 744 | -2287 | -95160 | 0 | 0 | 0 | No, e>l/2 |
| SLV 16 | 824 | -4840 | 136564 | 2.86 | 112177 | 0.821 | No, M>Mu |
| SLD 15 | 744 | -3752 | -38123 | 2.21 | 92917 | 2.437 | Si |
| SLD 15 | 824 | -4521 | 74007 | 2.67 | 106881 | 1.444 | Si |

Verifica a taglio nel piano secondo D.M. 17-01-18 (N.T.C.) §7.8.2.2.2 con rottura per scorrimento in combinazioni non sismiche, γM = 3

| Comb. | Quota | N | V par | M | σ0 | σN | l' | fvd | Vt scorr. | Vt fess.diag. | Vt,lim | c.s. | Verifica |
|---|---|---|---|---|---|---|---|---|---|---|---|---|---|
| SLU 61 | 744 | -6290 | -262 | 2077 | | 3.71 | 60.5 | 1.05 | 1780 | | | 6.79 | Si |
| SLU 61 | 824 | -5644 | -287 | 40344 | | 3.33 | 60.5 | 1 | 1694 | | | 5.9 | Si |
| SLU 81 | 744 | -7110 | -214 | 4395 | | 4.2 | 60.5 | 1.08 | 1835 | | | 8.56 | Si |
| SLU 81 | 824 | -6443 | -335 | 43131 | | 3.8 | 60.5 | 1.06 | 1800 | | | 5.37 | Si |
| SLU 82 | 744 | -6881 | -282 | 2416 | | 4.06 | 60.5 | 1.08 | 1835 | | | 6.5 | Si |
| SLU 82 | 824 | -6223 | -330 | 44186 | | 3.67 | 60.5 | 1.05 | 1771 | | | 5.36 | Si |
| SLU 83 | 744 | -7243 | -103 | 7011 | | 4.28 | 60.5 | 1.08 | 1835 | | | 17.83 | Si |
| SLU 83 | 824 | -6513 | -320 | 40116 | | 3.84 | 60.5 | 1.07 | 1809 | | | 5.65 | Si |
| SLU 40 | 744 | -5737 | -270 | 1127 | | 3.39 | 60.5 | 1.01 | 1706 | | | 6.32 | Si |
| SLU 40 | 824 | -5238 | -298 | 38100 | | 3.09 | 60.5 | 0.97 | 1640 | | | 5.5 | Si |
| SLU 39 | 744 | -5966 | -202 | 3105 | | 3.52 | 60.5 | 1.03 | 1737 | | | 8.59 | Si |
| SLU 39 | 824 | -5459 | -303 | 37046 | | 3.22 | 60.5 | 0.99 | 1669 | | | 5.51 | Si |
| SLU 42 | 744 | -5869 | -159 | 3743 | | 3.46 | 60.5 | 1.02 | 1724 | | | 10.87 | Si |
| SLU 42 | 824 | -5308 | -283 | 35086 | | 3.13 | 60.5 | 0.97 | 1649 | | | 5.83 | Si |
| SLU 84 | 744 | -7013 | -171 | 5033 | | 4.14 | 60.5 | 1.08 | 1835 | | | 10.75 | Si |
| SLU 84 | 824 | -6292 | -315 | 41171 | | 3.71 | 60.5 | 1.05 | 1780 | | | 5.65 | Si |
| SLU 41 | 744 | -6098 | -91 | 5722 | | 3.6 | 60.5 | 1.04 | 1754 | | | 19.33 | Si |
| SLU 41 | 824 | -5528 | -288 | 34031 | | 3.26 | 60.5 | 0.99 | 1678 | | | 5.83 | Si |
| SLU 73 | 744 | -6463 | -292 | 1673 | | 3.82 | 60.5 | 1.06 | 1803 | | | 6.18 | Si |
| SLU 73 | 824 | -5794 | -296 | 42330 | | 3.42 | 60.5 | 1.01 | 1714 | | | 5.78 | Si |

Verifica a taglio nel piano secondo D.M. 17-01-18 (N.T.C.) §7.8.2.2.2 con rottura per scorrimento in combinazioni sismiche, γM = 2

| Comb. | Quota | N | V par | M | σ0 | σN | l' | fvd | Vt scorr. | Vt fess.diag. | Vt,lim | c.s. | Verifica |
|---|---|---|---|---|---|---|---|---|---|---|---|---|---|
| SLV 2 | 744 | -7386 | 3693 | 103957 | | 5.44 | 48.52 | 1.63 | 2208 | | | 0.6 | No, Vu<V |
| SLV 2 | 824 | -3750 | 1380 | -81609 | | 5.26 | 25.47 | 1.63 | 1159 | | | 0.84 | No, Vu<V |
| SLV 13 | 744 | -3007 | -3508 | -85464 | | 19.6 | 5.48 | 1.63 | 249 | | | 0.07 | No, Vu<V |
| SLV 13 | 824 | -4358 | -1308 | 130060 | | 128.39 | 1.21 | 1.63 | 55 | | | 0.04 | No, Vu<V |
| SLV 16 | 744 | -2287 | -3879 | -95160 | | 0 | 0 | 0.83 | 0 | | | 0 | No, Vu<V |
| SLV 16 | 824 | -4840 | -1759 | 136564 | | 28.31 | 6.11 | 1.63 | 278 | | | 0.16 | No, Vu<V |
| SLV 14 | 744 | -3007 | -3508 | -85464 | | 19.6 | 5.48 | 1.63 | 249 | | | 0.07 | No, Vu<V |
| SLV 14 | 824 | -4358 | -1308 | 130060 | | 128.39 | 1.21 | 1.63 | 55 | | | 0.04 | No, Vu<V |
| SLV 12 | 744 | -2979 | -1791 | -40175 | | 2.12 | 50.29 | 1.26 | 1769 | | | 0.99 | No, Vu<V |
| SLV 12 | 824 | -5190 | -1345 | 70068 | | 3.69 | 50.25 | 1.57 | 2211 | | | 1.64 | Si |
| SLV 3 | 744 | -6666 | 3323 | 94261 | | 4.93 | 48.33 | 1.63 | 2199 | | | 0.66 | No, Vu<V |
| SLV 3 | 824 | -4233 | 928 | -75105 | | 4.03 | 37.52 | 1.63 | 1707 | | | 1.84 | Si |
| SLV 4 | 744 | -6666 | 3323 | 94261 | | 4.93 | 48.33 | 1.63 | 2199 | | | 0.66 | No, Vu<V |
| SLV 4 | 824 | -4233 | 928 | -75105 | | 4.03 | 37.52 | 1.63 | 1707 | | | 1.84 | Si |
| SLV 15 | 744 | -2287 | -3879 | -95160 | | 0 | 0 | 0.83 | 0 | | | 0 | No, Vu<V |
| SLV 15 | 824 | -4840 | -1759 | 136564 | | 28.31 | 6.11 | 1.63 | 278 | | | 0.16 | No, Vu<V |
| SLV 1 | 744 | -7386 | 3693 | 103957 | | 5.44 | 48.52 | 1.63 | 2208 | | | 0.6 | No, Vu<V |
| SLV 1 | 824 | -3750 | 1380 | -81609 | | 5.26 | 25.47 | 1.63 | 1159 | | | 0.84 | No, Vu<V |
| SLV 11 | 744 | -2979 | -1791 | -40175 | | 2.12 | 50.29 | 1.26 | 1769 | | | 0.99 | No, Vu<V |
| SLV 11 | 824 | -5190 | -1345 | 70068 | | 3.69 | 50.25 | 1.57 | 2211 | | | 1.64 | Si |

Verifica a pressoflessione fuori piano D.M. 17-01-18 (N.T.C.)

quota 720 Wa 0.05 denominatore 8 γM = 2

| Comb. | fd | Sa | σ0 | N | M | Mc | Coeff.s. | Verifica |
|---|---|---|---|---|---|---|---|---|
| SLV 11 | 14 | 0.39 | 1.57 | -2661 | 6287 | 32464 | 5.16 | Si |
| SLV 12 | 14 | 0.39 | 1.57 | -2661 | 6287 | 32464 | 5.16 | Si |
| SLV 8 | 14 | 0.39 | 1.71 | -2891 | 6287 | 34825 | 5.54 | Si |
| SLV 7 | 14 | 0.39 | 1.71 | -2891 | 6287 | 34825 | 5.54 | Si |
| SLV 15 | 14 | 0.39 | 2.03 | -3436 | 6287 | 40114 | 6.38 | Si |
| SLV 16 | 14 | 0.39 | 2.03 | -3436 | 6287 | 40114 | 6.38 | Si |
| SLV 4 | 14 | 0.39 | 2.48 | -4204 | 6287 | 46900 | 7.46 | Si |
| SLV 3 | 14 | 0.39 | 2.48 | -4204 | 6287 | 46900 | 7.46 | Si |
| SLV 13 | 14 | 0.39 | 2.56 | -4330 | 6287 | 47938 | 7.62 | Si |
| SLV 14 | 14 | 0.39 | 2.56 | -4330 | 6287 | 47938 | 7.62 | Si |

Verifica dei meccanismi locali di collasso con analisi cinematica lineare

forza di aggancio al piano = 0 quota mezzeria = 720 Wa = 0.05 Ta = 0.0739

| Comb. | N top | N base | V orto | α0 | M* | e* | a0* | aLim | Verifica |
|---|---|---|---|---|---|---|---|---|---|
| SLV 8 | -2645 | -1680 | -8 | 0.044 | 3.542 | 0.934 | 68.446 | 1522.194 | No |
| SLV 7 | -2645 | -1680 | -8 | 0.044 | 3.542 | 0.934 | 68.446 | 1522.194 | No |
| SLV 12 | -2459 | -2386 | -6 | 0.045 | 3.354 | 0.932 | 70.124 | 1522.194 | No |
| SLV 11 | -2459 | -2386 | -6 | 0.045 | 3.354 | 0.932 | 70.124 | 1522.194 | No |
| SLV 9 | -2064 | -5161 | 5 | 0.046 | 2.956 | 0.924 | 72.408 | 1522.194 | No |
| SLV 10 | -2064 | -5161 | 5 | 0.046 | 2.956 | 0.924 | 72.408 | 1522.194 | No |
| SLV 6 | -2250 | -4456 | 3 | 0.046 | 3.144 | 0.928 | 72.602 | 1522.194 | No |
| SLV 5 | -2250 | -4456 | 3 | 0.046 | 3.144 | 0.928 | 72.602 | 1522.194 | No |
| SLV 4 | -2725 | -1828 | -6 | 0.044 | 3.623 | 0.936 | 68.893 | 839.377 | No |
| SLV 3 | -2725 | -1828 | -6 | 0.044 | 3.623 | 0.936 | 68.893 | 839.377 | No |

Tabella dei coefficienti di sicurezza minimi

| Stato limite | Coeff.s. | Comb. | Verifica |
|---|---|---|---|
| PF_SLU | 2.339 | SLU 82 | Si |
| V_SLU | 5.359 | SLU 82 | Si |
| PF_SLV | 0 | SLV 15 | No |
| V_SLV | 0 | SLV 15 | No |
| PFFP_SLV | 5.164 | SLV 11 | Si |
| R_SLV | 0.045 | SLV 7 | No |

## Maschio 103

Verifiche condotte secondo D.M. 17-01-18 (N.T.C.)

### Dati geometrici

| X ini. | Y ini. | X fin. | Y fin. | Quota i. | Quota.s | l | Sp. | h netta | h ini. | h fin. | a | a.s.,sx | a.s.,dx |
|---|---|---|---|---|---|---|---|---|---|---|---|---|---|
| -1961.8 | 104.6 | -1961.8 | 581.1 | L4 | L5 | 476.5 | 14 | 352 | 352 | 352 | | | |

### Caratteristiche del materiale

(Circolare 7 21-01-19 C8.5.I) Muratura in mattoni pieni e malta di calce LC2_Corti

| fb | fk | fvk0 | fmedio | τ0 | fv0 | μ | ϕ | fv,lim | E | G | FC |
|---|---|---|---|---|---|---|---|---|---|---|---|
| 60 | | | 34.5 | 0.9 | 2 | 0.58 | 0.77 | 3.25 | 32000 | 12800 | 1.2 |

### Verifica a pressoflessione nel piano secondo D.M. 17-01-18 NTC §7.8.2.2.1 in combinazioni non sismiche, γM = 3

| Comb. | Quota | N | M | σ0 | Mu | c.s. | Verifica |
|---|---|---|---|---|---|---|---|
| SLU 8 | 544 | -25219 | -80951 | 3.78 | 3220171 | 39.779 | Si |
| SLU 8 | 896 | -21447 | 534491 | 3.21 | 3093196 | 5.787 | Si |
| SLU 27 | 544 | -29460 | -129808 | 4.42 | 3213925 | 24.759 | Si |
| SLU 27 | 896 | -24590 | 519341 | 3.69 | 3207673 | 6.176 | Si |
| SLU 28 | 544 | -29394 | -128172 | 4.41 | 3215228 | 25.085 | Si |
| SLU 28 | 896 | -24583 | 507768 | 3.68 | 3207509 | 6.317 | Si |
| SLU 29 | 544 | -29198 | -117240 | 4.38 | 3218881 | 27.456 | Si |
| SLU 29 | 896 | -24737 | 585896 | 3.71 | 3210909 | 5.48 | Si |
| SLU 30 | 544 | -29132 | -115604 | 4.37 | 3220033 | 27.854 | Si |
| SLU 30 | 896 | -24730 | 574323 | 3.71 | 3210754 | 5.591 | Si |
| SLU 9 | 544 | -25153 | -79315 | 3.77 | 3219024 | 40.585 | Si |
| SLU 9 | 896 | -21439 | 522918 | 3.21 | 3092833 | 5.915 | Si |
| SLU 72 | 544 | -34314 | -134580 | 5.14 | 3013215 | 22.39 | Si |
| SLU 72 | 896 | -28002 | 551692 | 4.2 | 3233857 | 5.862 | Si |
| SLU 50 | 544 | -30401 | -99927 | 4.56 | 3191150 | 31.935 | Si |
| SLU 50 | 896 | -24719 | 511861 | 3.71 | 3210507 | 6.272 | Si |
| SLU 51 | 544 | -30335 | -98291 | 4.55 | 3192997 | 32.485 | Si |
| SLU 51 | 896 | -24711 | 500288 | 3.7 | 3210351 | 6.417 | Si |
| SLU 71 | 544 | -34380 | -136215 | 5.15 | 3009069 | 22.091 | Si |
| SLU 71 | 896 | -28009 | 563265 | 4.2 | 3233804 | 5.741 | Si |

### Verifica a pressoflessione nel piano secondo D.M. 17-01-18 NTC §7.8.2.2.1 in combinazioni sismiche, γM = 2

| Comb. | Quota | N | M | σ0 | Mu | c.s. | Verifica |
|---|---|---|---|---|---|---|---|
| SLV 16 | 544 | -23058 | 462040 | 3.46 | 3939747 | 8.527 | Si |
| SLV 16 | 896 | -15232 | 95405 | 2.28 | 2950940 | 30.931 | Si |
| SLV 9 | 544 | -19548 | -339277 | 2.93 | 3540546 | 10.436 | Si |
| SLV 9 | 896 | -11100 | -349410 | 1.66 | 2284584 | 6.538 | Si |
| SLV 6 | 544 | -20751 | -630328 | 3.11 | 3685426 | 5.847 | Si |
| SLV 6 | 896 | -12424 | -363671 | 1.86 | 2508989 | 6.899 | Si |
| SLV 5 | 544 | -20751 | -630328 | 3.11 | 3685426 | 5.847 | Si |
| SLV 5 | 896 | -12424 | -363671 | 1.86 | 2508989 | 6.899 | Si |
| SLV 4 | 544 | -27067 | -508132 | 4.06 | 4307536 | 8.477 | Si |
| SLV 4 | 896 | -19645 | 47867 | 2.94 | 3552525 | 74.217 | Si |
| SLV 3 | 544 | -27067 | -508132 | 4.06 | 4307536 | 8.477 | Si |
| SLV 3 | 896 | -19645 | 47867 | 2.94 | 3552525 | 74.217 | Si |
| SLV 15 | 544 | -23058 | 462040 | 3.46 | 3939747 | 8.527 | Si |
| SLV 15 | 896 | -15232 | 95405 | 2.28 | 2950940 | 30.931 | Si |
| SLV 10 | 544 | -19548 | -339277 | 2.93 | 3540546 | 10.436 | Si |
| SLV 10 | 896 | -11100 | -349410 | 1.66 | 2284584 | 6.538 | Si |
| SLV 2 | 544 | -24799 | -721251 | 3.72 | 4111024 | 5.7 | Si |
| SLV 2 | 896 | -17025 | -149753 | 2.55 | 3209152 | 21.43 | Si |
| SLV 1 | 544 | -24799 | -721251 | 3.72 | 4111024 | 5.7 | Si |
| SLV 1 | 896 | -17025 | -149753 | 2.55 | 3209152 | 21.43 | Si |

### Verifica a taglio nel piano secondo D.M. 17-01-18 (N.T.C.) §7.8.2.2.2 con rottura per scorrimento in combinazioni non sismiche, γM = 3

| Comb. | Quota | N | V par | M | σ0 | σN | l' | fvd | Vt scorr. | Vt fess.diag. | Vt,lim | c.s. | Verifica |
|---|---|---|---|---|---|---|---|---|---|---|---|---|---|
| SLU 71 | 544 | -34380 | -488 | -136215 | | 5.15 | 476.52 | 1.08 | 7227 | | | 14.81 | Si |
| SLU 71 | 896 | -28009 | -842 | 563265 | | 4.2 | 476.52 | 1.08 | 7227 | | | 8.58 | Si |
| SLU 30 | 544 | -29132 | -548 | -115604 | | 4.37 | 476.52 | 1.08 | 7227 | | | 13.19 | Si |
| SLU 30 | 896 | -24730 | -825 | 574323 | | 3.71 | 476.52 | 1.05 | 7004 | | | 8.49 | Si |
| SLU 49 | 544 | -30597 | -467 | -110860 | | 4.59 | 476.52 | 1.08 | 7227 | | | 15.47 | Si |
| SLU 49 | 896 | -24564 | -810 | 433733 | | 3.68 | 476.52 | 1.05 | 6981 | | | 8.62 | Si |
| SLU 8 | 544 | -25219 | -595 | -80951 | | 3.78 | 476.52 | 1.06 | 7069 | | | 11.88 | Si |
| SLU 8 | 896 | -21447 | -797 | 534491 | | 3.21 | 476.52 | 0.98 | 6566 | | | 8.23 | Si |
| SLU 7 | 544 | -25415 | -505 | -91884 | | 3.81 | 476.52 | 1.06 | 7095 | | | 14.05 | Si |
| SLU 7 | 896 | -21292 | -753 | 456364 | | 3.19 | 476.52 | 0.98 | 6545 | | | 8.7 | Si |
| SLU 51 | 544 | -30335 | -580 | -98291 | | 4.55 | 476.52 | 1.08 | 7227 | | | 12.47 | Si |
| SLU 51 | 896 | -24711 | -895 | 500288 | | 3.7 | 476.52 | 1.05 | 7001 | | | 7.82 | Si |
| SLU 72 | 544 | -34314 | -510 | -134580 | | 5.14 | 476.52 | 1.08 | 7227 | | | 14.16 | Si |
| SLU 72 | 896 | -28002 | -882 | 551692 | | 4.2 | 476.52 | 1.08 | 7227 | | | 8.19 | Si |
| SLU 50 | 544 | -30401 | -557 | -99927 | | 4.56 | 476.52 | 1.08 | 7227 | | | 12.97 | Si |
| SLU 50 | 896 | -24719 | -855 | 511861 | | 3.71 | 476.52 | 1.05 | 7002 | | | 8.19 | Si |
| SLU 29 | 544 | -29198 | -526 | -117240 | | 4.38 | 476.52 | 1.08 | 7227 | | | 13.75 | Si |
| SLU 29 | 896 | -24737 | -785 | 585896 | | 3.71 | 476.52 | 1.05 | 7005 | | | 8.93 | Si |
| SLU 9 | 544 | -25153 | -617 | -79315 | | 3.77 | 476.52 | 1.06 | 7060 | | | 11.44 | Si |
| SLU 9 | 896 | -21439 | -837 | 522918 | | 3.21 | 476.52 | 0.98 | 6565 | | | 7.84 | Si |

### Verifica a taglio nel piano secondo D.M. 17-01-18 (N.T.C.) §7.8.2.2.2 con rottura per scorrimento in combinazioni sismiche, γM = 2

| Comb. | Quota | N | V par | M | σ0 | σN | l' | fvd | Vt scorr. | Vt fess.diag. | Vt,lim | c.s. | Verifica |
|---|---|---|---|---|---|---|---|---|---|---|---|---|---|
| SLV 8 | 544 | -28310 | 12444 | 80066 | | 4.24 | 476.52 | 1.63 | 10841 | | | 0.87 | No, Vu<V |
| SLV 8 | 896 | -21157 | 10810 | 295061 | | 3.17 | 476.52 | 1.47 | 9791 | | | 0.91 | No, Vu<V |
| SLV 9 | 544 | -19548 | -11821 | -339277 | | 2.93 | 476.52 | 1.42 | 9469 | | | 0.8 | No, Vu<V |

| Comb. | Quota | N | V par | M | σ0 | σN | l' | fvd | Vt scorr. | Vt fess.diag. | Vt,lim | c.s. | Verifica |
|---|---|---|---|---|---|---|---|---|---|---|---|---|---|
| SLV 9 | 896 | -11100 | -11048 | -349410 | | 1.66 | 476.52 | 1.17 | 7779 | | | 0.7 | No, Vu<V |
| SLV 6 | 544 | -20751 | -9130 | -630328 | | 3.11 | 476.52 | 1.46 | 9709 | | | 1.06 | Si |
| SLV 6 | 896 | -12424 | -8557 | -363671 | | 1.86 | 476.52 | 1.21 | 8044 | | | 0.94 | No, Vu<V |
| SLV 13 | 544 | -20791 | -7410 | 248922 | | 3.12 | 476.52 | 1.46 | 9717 | | | 1.31 | Si |
| SLV 13 | 896 | -12612 | -7176 | -102215 | | 1.89 | 476.52 | 1.21 | 8082 | | | 1.13 | Si |
| SLV 12 | 544 | -27107 | 9753 | 371118 | | 4.06 | 476.52 | 1.63 | 10841 | | | 1.11 | Si |
| SLV 12 | 896 | -19833 | 8319 | 309323 | | 2.97 | 476.52 | 1.43 | 9526 | | | 1.15 | Si |
| SLV 5 | 544 | -20751 | -9130 | -630328 | | 3.11 | 476.52 | 1.46 | 9709 | | | 1.06 | Si |
| SLV 5 | 896 | -12424 | -8557 | -363671 | | 1.86 | 476.52 | 1.21 | 8044 | | | 0.94 | No, Vu<V |
| SLV 14 | 544 | -20791 | -7410 | 248922 | | 3.12 | 476.52 | 1.46 | 9717 | | | 1.31 | Si |
| SLV 14 | 896 | -12612 | -7176 | -102215 | | 1.89 | 476.52 | 1.21 | 8082 | | | 1.13 | Si |
| SLV 10 | 544 | -19548 | -11821 | -339277 | | 2.93 | 476.52 | 1.42 | 9469 | | | 0.8 | No, Vu<V |
| SLV 10 | 896 | -11100 | -11048 | -349410 | | 1.66 | 476.52 | 1.17 | 7779 | | | 0.7 | No, Vu<V |
| SLV 11 | 544 | -27107 | 9753 | 371118 | | 4.06 | 476.52 | 1.63 | 10841 | | | 1.11 | Si |
| SLV 11 | 896 | -19833 | 8319 | 309323 | | 2.97 | 476.52 | 1.43 | 9526 | | | 1.15 | Si |
| SLV 7 | 544 | -28310 | 12444 | 80066 | | 4.24 | 476.52 | 1.63 | 10841 | | | 0.87 | No, Vu<V |
| SLV 7 | 896 | -21157 | 10810 | 295061 | | 3.17 | 476.52 | 1.47 | 9791 | | | 0.91 | No, Vu<V |

### Verifica a pressoflessione fuori piano D.M. 17-01-18 (N.T.C.)

quota 720 Wa 0.03 denominatore 8 γM = 2

| Comb. | fd | Sa | σ0 | N | M | Mc | Coeff.s. | Verifica |
|---|---|---|---|---|---|---|---|---|
| SLV 10 | 14 | 0.39 | 2.32 | -15497 | 26487 | 87854 | 3.32 | Si |
| SLV 9 | 14 | 0.39 | 2.32 | -15497 | 26487 | 87854 | 3.32 | Si |
| SLV 5 | 14 | 0.39 | 2.37 | -15809 | 26487 | 89202 | 3.37 | Si |
| SLV 6 | 14 | 0.39 | 2.37 | -15809 | 26487 | 89202 | 3.37 | Si |
| SLV 14 | 14 | 0.39 | 2.67 | -17792 | 26487 | 97361 | 3.68 | Si |
| SLV 13 | 14 | 0.39 | 2.67 | -17792 | 26487 | 97361 | 3.68 | Si |
| SLV 1 | 14 | 0.39 | 2.82 | -18834 | 26487 | 101378 | 3.83 | Si |
| SLV 2 | 14 | 0.39 | 2.82 | -18834 | 26487 | 101378 | 3.83 | Si |
| SLV 16 | 14 | 0.39 | 3.01 | -20073 | 26487 | 105908 | 4 | Si |
| SLV 15 | 14 | 0.39 | 3.01 | -20073 | 26487 | 105908 | 4 | Si |

### Verifica dei meccanismi locali di collasso con analisi cinematica lineare

forza di aggancio al piano = 0 quota mezzeria = 720 Wa = 0.03 Ta = 0.1478

| Comb. | N top | N base | V orto | α0 | M* | e* | a0* | aLim | Verifica |
|---|---|---|---|---|---|---|---|---|---|
| SLV 2 | -17025 | -24799 | -60 | 0.019 | 20.649 | 0.953 | 28.878 | 1675.074 | No |
| SLV 1 | -17025 | -24799 | -60 | 0.019 | 20.649 | 0.953 | 28.878 | 1675.074 | No |
| SLV 15 | -15232 | -23058 | 59 | 0.019 | 18.828 | 0.949 | 28.909 | 1675.074 | No |
| SLV 16 | -15232 | -23058 | 59 | 0.019 | 18.828 | 0.949 | 28.909 | 1675.074 | No |
| SLV 12 | -19833 | -27107 | 44 | 0.02 | 23.503 | 0.958 | 29.996 | 1675.074 | No |
| SLV 11 | -19833 | -27107 | 44 | 0.02 | 23.503 | 0.958 | 29.996 | 1675.074 | No |
| SLV 4 | -19645 | -27067 | -42 | 0.02 | 23.312 | 0.958 | 30.137 | 1675.074 | No |
| SLV 3 | -19645 | -27067 | -42 | 0.02 | 23.312 | 0.958 | 30.137 | 1675.074 | No |
| SLV 6 | -12424 | -20751 | -45 | 0.02 | 15.981 | 0.942 | 30.375 | 1675.074 | No |
| SLV 5 | -12424 | -20751 | -45 | 0.02 | 15.981 | 0.942 | 30.375 | 1675.074 | No |

### Tabella dei coefficienti di sicurezza minimi

| Stato limite | Coeff.s. | Comb. | Verifica |
|---|---|---|---|
| PF_SLU | 5.48 | SLU 29 | Si |
| V_SLU | 7.824 | SLU 51 | Si |
| PF_SLV | 5.7 | SLV 1 | Si |
| V_SLV | 0.704 | SLV 9 | No |
| PFFP_SLV | 3.317 | SLV 9 | Si |
| R_SLV | 0.017 | SLV 1 | No |

## Maschio 104

Verifiche condotte secondo D.M. 17-01-18 (N.T.C.)

### Dati geometrici

| X ini. | Y ini. | X fin. | Y fin. | Quota i. | Quota.s | l | Sp. | h netta | h ini. | h fin. | a | a.s.,sx | a.s.,dx |
|---|---|---|---|---|---|---|---|---|---|---|---|---|---|
| -1961.8 | 595.1 | -1961.8 | 666.1 | L4 | L5 | 71 | 28 | 352 | 352 | 352 | | | |

### Caratteristiche del materiale

(Circolare 7 21-01-19 C8.5.I) Muratura in mattoni pieni e malta di calce LC2_Corti

| fb | fk | fvk0 | fmedio | τ0 | fv0 | μ | ϕ | fv,lim | E | G | FC |
|---|---|---|---|---|---|---|---|---|---|---|---|
| 60 | | | 34.5 | 0.9 | 2 | 0.58 | 0.77 | 3.25 | 32000 | 12800 | 1.2 |

### Verifica a pressoflessione nel piano secondo D.M. 17-01-18 NTC §7.8.2.2.1 in combinazioni non sismiche, γM = 3

| Comb. | Quota | N | M | σ0 | Mu | c.s. | Verifica |
|---|---|---|---|---|---|---|---|
| SLU 40 | 544 | -5524 | -38689 | 2.78 | 129207 | 3.34 | Si |
| SLU 40 | 896 | -4995 | 14615 | 2.51 | 122626 | 8.39 | Si |
| SLU 73 | 544 | -6391 | -40096 | 3.21 | 137344 | 3.425 | Si |
| SLU 73 | 896 | -5588 | 14145 | 2.81 | 129917 | 9.185 | Si |
| SLU 60 | 544 | -5838 | -39688 | 2.94 | 132534 | 3.339 | Si |
| SLU 60 | 896 | -4901 | 16158 | 2.47 | 121327 | 7.509 | Si |
| SLU 19 | 544 | -4778 | -34951 | 2.4 | 119570 | 3.421 | Si |
| SLU 19 | 896 | -4100 | 14906 | 2.06 | 108692 | 7.292 | Si |
| SLU 81 | 544 | -6584 | -43426 | 3.31 | 138704 | 3.194 | Si |
| SLU 81 | 896 | -5796 | 15867 | 2.92 | 132115 | 8.326 | Si |
| SLU 52 | 544 | -5645 | -36358 | 2.84 | 130544 | 3.591 | Si |
| SLU 52 | 896 | -4692 | 14435 | 2.36 | 118310 | 8.196 | Si |
| SLU 61 | 544 | -5813 | -40071 | 2.92 | 132281 | 3.301 | Si |
| SLU 61 | 896 | -4872 | 16696 | 2.45 | 120915 | 7.242 | Si |

| Comb. | Quota | N | M | σ0 | Mu | c.s. | Verifica |
|---|---|---|---|---|---|---|---|
| SLU 18 | 544 | -4803 | -34568 | 2.42 | 119939 | 3.47 | Si |
| SLU 18 | 896 | -4129 | 14368 | 2.08 | 109203 | 7.601 | Si |
| SLU 82 | 544 | -6559 | -43809 | 3.3 | 138534 | 3.162 | Si |
| SLU 82 | 896 | -5767 | 16406 | 2.9 | 131818 | 8.035 | Si |
| SLU 39 | 544 | -5549 | -38306 | 2.79 | 129493 | 3.38 | Si |
| SLU 39 | 896 | -5024 | 14077 | 2.53 | 123022 | 8.739 | Si |

Verifica a pressoflessione nel piano secondo D.M. 17-01-18 NTC §7.8.2.2.1 in combinazioni sismiche, γM = 2

| Comb. | Quota | N | M | σ0 | Mu | c.s. | Verifica |
|---|---|---|---|---|---|---|---|
| SLV 1 | 544 | 2426 | -126073 | 0 | 0 | 0 | No, Trazione |
| SLV 1 | 896 | -6571 | 148225 | 3.31 | 170167 | 1.148 | Si |
| SLV 6 | 544 | 597 | -82508 | 0 | 0 | 0 | No, Trazione |
| SLV 6 | 896 | -4182 | 75569 | 2.1 | 122900 | 1.626 | Si |
| SLV 3 | 544 | 381 | -108172 | 0 | 0 | 0 | No, Trazione |
| SLV 3 | 896 | -6940 | 131087 | 3.49 | 175988 | 1.343 | Si |
| SLD 1 | 544 | -1622 | -68087 | 0 | 0 | 0 | No, e>l/2 |
| SLD 1 | 896 | -5069 | 67325 | 2.55 | 142397 | 2.115 | Si |
| SLV 13 | 544 | -9612 | 58067 | 4.83 | 206201 | 3.551 | Si |
| SLV 13 | 896 | -977 | -116489 | 0 | 0 | 0 | No, e>l/2 |
| SLV 15 | 544 | -11656 | 75968 | 5.86 | 215232 | 2.833 | Si |
| SLV 15 | 896 | -1346 | -133627 | 0 | 0 | 0 | No, e>l/2 |
| SLV 4 | 544 | 381 | -108172 | 0 | 0 | 0 | No, Trazione |
| SLV 4 | 896 | -6940 | 131087 | 3.49 | 175988 | 1.343 | Si |
| SLV 2 | 544 | 2426 | -126073 | 0 | 0 | 0 | No, Trazione |
| SLV 2 | 896 | -6571 | 148225 | 3.31 | 170167 | 1.148 | Si |
| SLV 5 | 544 | 597 | -82508 | 0 | 0 | 0 | No, Trazione |
| SLV 5 | 896 | -4182 | 75569 | 2.1 | 122900 | 1.626 | Si |
| SLV 14 | 544 | -9612 | 58067 | 4.83 | 206201 | 3.551 | Si |
| SLV 14 | 896 | -977 | -116489 | 0 | 0 | 0 | No, e>l/2 |

Verifica a taglio nel piano secondo D.M. 17-01-18 (N.T.C.) §7.8.2.2.2 con rottura per scorrimento in combinazioni non sismiche, γM = 3

| Comb. | Quota | N | V par | M | σ0 | σN | l' | fvd | Vt scorr. | Vt fess.diag. | Vt,lim | c.s. | Verifica |
|---|---|---|---|---|---|---|---|---|---|---|---|---|---|
| SLU 18 | 544 | -4803 | -710 | -34568 | | 2.42 | 71 | 0.88 | 1745 | | | 2.46 | Si |
| SLU 18 | 896 | -4129 | -149 | 14368 | | 2.08 | 71 | 0.83 | 1655 | | | 11.07 | Si |
| SLU 82 | 544 | -6559 | -903 | -43809 | | 3.3 | 71 | 1 | 1979 | | | 2.19 | Si |
| SLU 82 | 896 | -5767 | -183 | 16406 | | 2.9 | 71 | 0.94 | 1873 | | | 10.22 | Si |
| SLU 40 | 544 | -5524 | -786 | -38689 | | 2.78 | 71 | 0.93 | 1841 | | | 2.34 | Si |
| SLU 40 | 896 | -4995 | -166 | 14615 | | 2.51 | 71 | 0.89 | 1770 | | | 10.68 | Si |
| SLU 81 | 544 | -6584 | -896 | -43426 | | 3.31 | 71 | 1 | 1982 | | | 2.21 | Si |
| SLU 81 | 896 | -5796 | -178 | 15867 | | 2.92 | 71 | 0.94 | 1877 | | | 10.56 | Si |
| SLU 52 | 544 | -5645 | -765 | -36358 | | 2.84 | 71 | 0.93 | 1857 | | | 2.43 | Si |
| SLU 52 | 896 | -4692 | -153 | 14435 | | 2.36 | 71 | 0.87 | 1730 | | | 11.34 | Si |
| SLU 39 | 544 | -5549 | -779 | -38306 | | 2.79 | 71 | 0.93 | 1844 | | | 2.37 | Si |
| SLU 39 | 896 | -5024 | -160 | 14077 | | 2.53 | 71 | 0.89 | 1774 | | | 11.08 | Si |
| SLU 19 | 544 | -4778 | -716 | -34951 | | 2.4 | 71 | 0.88 | 1741 | | | 2.43 | Si |
| SLU 19 | 896 | -4100 | -155 | 14906 | | 2.06 | 71 | 0.83 | 1651 | | | 10.65 | Si |
| SLU 61 | 544 | -5813 | -833 | -40071 | | 2.92 | 71 | 0.95 | 1879 | | | 2.26 | Si |
| SLU 61 | 896 | -4872 | -173 | 16696 | | 2.45 | 71 | 0.88 | 1754 | | | 10.17 | Si |
| SLU 60 | 544 | -5838 | -826 | -39688 | | 2.94 | 71 | 0.95 | 1883 | | | 2.28 | Si |
| SLU 60 | 896 | -4901 | -167 | 16158 | | 2.47 | 71 | 0.88 | 1758 | | | 10.53 | Si |
| SLU 73 | 544 | -6391 | -835 | -40096 | | 3.21 | 71 | 0.98 | 1957 | | | 2.34 | Si |
| SLU 73 | 896 | -5588 | -163 | 14145 | | 2.81 | 71 | 0.93 | 1849 | | | 11.33 | Si |

Verifica a taglio nel piano secondo D.M. 17-01-18 (N.T.C.) §7.8.2.2.2 con rottura per scorrimento in combinazioni sismiche, γM = 2

| Comb. | Quota | N | V par | M | σ0 | σN | l' | fvd | Vt scorr. | Vt fess.diag. | Vt,lim | c.s. | Verifica |
|---|---|---|---|---|---|---|---|---|---|---|---|---|---|
| SLV 14 | 544 | -9612 | 1199 | 58067 | | 4.83 | 71 | 1.63 | 3230 | | | 2.69 | Si |
| SLV 14 | 896 | -977 | 1357 | -116489 | | 0 | 0 | 0.83 | 0 | | | 0 | No, Vu<V |
| SLV 3 | 544 | 381 | -2272 | -108172 | | 0 | 0 | 0.83 | 0 | | | 0 | No, Vu<V |
| SLV 3 | 896 | -6940 | -1536 | 131087 | | 4.97 | 49.84 | 1.63 | 2268 | | | 1.48 | Si |
| SLV 13 | 544 | -9612 | 1199 | 58067 | | 4.83 | 71 | 1.63 | 3230 | | | 2.69 | Si |
| SLV 13 | 896 | -977 | 1357 | -116489 | | 0 | 0 | 0.83 | 0 | | | 0 | No, Vu<V |
| SLV 4 | 544 | 381 | -2272 | -108172 | | 0 | 0 | 0.83 | 0 | | | 0 | No, Vu<V |
| SLV 4 | 896 | -6940 | -1536 | 131087 | | 4.97 | 49.84 | 1.63 | 2268 | | | 1.48 | Si |
| SLV 5 | 544 | 597 | -2402 | -82508 | | 0 | 0 | 0.83 | 0 | | | 0 | No, Vu<V |
| SLV 5 | 896 | -4182 | -1394 | 75569 | | 2.86 | 52.29 | 1.4 | 2056 | | | 1.48 | Si |
| SLV 1 | 544 | 2426 | -3012 | -126073 | | 0 | 0 | 0.83 | 0 | | | 0 | No, Vu<V |
| SLV 1 | 896 | -6571 | -2015 | 148225 | | 6.04 | 38.83 | 1.63 | 1767 | | | 0.88 | No, Vu<V |
| SLV 15 | 544 | -11656 | 1940 | 75968 | | 5.86 | 71 | 1.63 | 3230 | | | 1.67 | Si |
| SLV 15 | 896 | -1346 | 1836 | -133627 | | 0 | 0 | 0.83 | 0 | | | 0 | No, Vu<V |
| SLD 1 | 544 | -1622 | -1589 | -68087 | | 0 | 0 | 0.83 | 0 | | | 0 | No, Vu<V |
| SLD 1 | 896 | -5069 | -906 | 67325 | | 2.72 | 66.65 | 1.38 | 2569 | | | 2.84 | Si |
| SLV 6 | 544 | 597 | -2402 | -82508 | | 0 | 0 | 0.83 | 0 | | | 0 | No, Vu<V |
| SLV 6 | 896 | -4182 | -1394 | 75569 | | 2.86 | 52.29 | 1.4 | 2056 | | | 1.48 | Si |
| SLV 2 | 544 | 2426 | -3012 | -126073 | | 0 | 0 | 0.83 | 0 | | | 0 | No, Vu<V |
| SLV 2 | 896 | -6571 | -2015 | 148225 | | 6.04 | 38.83 | 1.63 | 1767 | | | 0.88 | No, Vu<V |

Verifica a pressoflessione fuori piano D.M. 17-01-18 (N.T.C.)

quota 720 Wa 0.05 denominatore 8 γM = 2

| Comb. | fd | Sa | σ0 | N | M | Mc | Coeff.s. | Verifica |
|---|---|---|---|---|---|---|---|---|
| SLV 5 | 14 | 0.39 | 0.92 | -1831 | 7550 | 23698 | 3.14 | Si |
| SLV 6 | 14 | 0.39 | 0.92 | -1831 | 7550 | 23698 | 3.14 | Si |
| SLV 1 | 14 | 0.39 | 1.09 | -2163 | 7550 | 27591 | 3.65 | Si |
| SLV 2 | 14 | 0.39 | 1.09 | -2163 | 7550 | 27591 | 3.65 | Si |
| SLV 9 | 14 | 0.39 | 1.4 | -2790 | 7550 | 34575 | 4.58 | Si |
| SLV 10 | 14 | 0.39 | 1.4 | -2790 | 7550 | 34575 | 4.58 | Si |
| SLV 4 | 14 | 0.39 | 1.71 | -3408 | 7550 | 41019 | 5.43 | Si |
| SLV 3 | 14 | 0.39 | 1.71 | -3408 | 7550 | 41019 | 5.43 | Si |

| Comb. | fd | Sa | σ0 | N | M | Mc | Coeff.s. | Verifica |
|---|---|---|---|---|---|---|---|---|
| SLV 13 | 14 | 0.39 | 2.7 | -5362 | 7550 | 58494 | 7.75 | Si |
| SLV 14 | 14 | 0.39 | 2.7 | -5362 | 7550 | 58494 | 7.75 | Si |

### Verifica dei meccanismi locali di collasso con analisi cinematica lineare

forza di aggancio al piano = 0 quota mezzeria = 720 Wa = 0.05 Ta = 0.0739

| Comb. | N top | N base | V orto | α0 | M* | e* | a0* | aLim | Verifica |
|---|---|---|---|---|---|---|---|---|---|
| SLV 3 | -6940 | 381 | 206 | 0 | 0 | 0 | 0 | 839.377 | No, Trazione |
| SLV 1 | -6571 | 2426 | 51 | 0 | 0 | 0 | 0 | 839.377 | No, Trazione |
| SLV 4 | -6940 | 381 | 206 | 0 | 0 | 0 | 0 | 839.377 | No, Trazione |
| SLV 7 | -5414 | -6217 | 295 | 0 | 6.499 | 0.955 | 0 | 1522.194 | No |
| SLV 5 | -4182 | 597 | -222 | 0 | 0 | 0 | 0 | 1522.194 | No, Trazione |
| SLV 6 | -4182 | 597 | -222 | 0 | 0 | 0 | 0 | 1522.194 | No, Trazione |
| SLV 2 | -6571 | 2426 | 51 | 0 | 0 | 0 | 0 | 839.377 | No, Trazione |
| SLV 8 | -5414 | -6217 | 295 | 0 | 6.499 | 0.955 | 0 | 1522.194 | No |
| SLV 10 | -2504 | -3014 | -301 | 0 | 3.551 | 0.926 | 0 | 1522.194 | No |
| SLV 9 | -2504 | -3014 | -301 | 0 | 3.551 | 0.926 | 0 | 1522.194 | No |

### Tabella dei coefficienti di sicurezza minimi

| Stato limite | Coeff.s. | Comb. | Verifica |
|---|---|---|---|
| PF_SLU | 3.162 | SLU 82 | Si |
| V_SLU | 2.193 | SLU 82 | Si |
| PF_SLV | 0 | SLV 6 | No |
| V_SLV | 0 | SLD 1 | No |
| PFFP_SLV | 3.139 | SLV 5 | Si |
| R_SLV | 0 | SLV 6 | No |

## Maschio 105

Verifiche condotte secondo D.M. 17-01-18 (N.T.C.)

### Dati geometrici

| X ini. | Y ini. | X fin. | Y fin. | Quota i. | Quota.s | l | Sp. | h netta | h ini. | h fin. | a | a.s.,sx | a.s.,dx |
|---|---|---|---|---|---|---|---|---|---|---|---|---|---|
| -1633.3 | -335.9 | -1736.3 | -335.9 | L4 | L5 | 103 | 28 | 352 | 352 | 352 | | | |

### Caratteristiche del materiale

(Circolare 7 21-01-19 C8.5.I) Muratura in mattoni pieni e malta di calce LC2_Corti

| fb | fk | fvk0 | fmedio | τ0 | fv0 | μ | ϕ | fv,lim | E | G | FC |
|---|---|---|---|---|---|---|---|---|---|---|---|
| 60 | | | 34.5 | 0.9 | 2 | 0.58 | 0.77 | 3.25 | 32000 | 12800 | 1.2 |

### Verifica a pressoflessione nel piano secondo D.M. 17-01-18 NTC §7.8.2.2.1 in combinazioni non sismiche, γM = 3

| Comb. | Quota | N | M | σ0 | Mu | c.s. | Verifica |
|---|---|---|---|---|---|---|---|
| SLU 83 | 634 | -14922 | -46517 | 5.17 | 280356 | 6.027 | Si |
| SLU 83 | 814 | -12622 | 143552 | 4.38 | 300786 | 2.095 | Si |
| SLU 84 | 634 | -14863 | -55491 | 5.15 | 281168 | 5.067 | Si |
| SLU 84 | 814 | -12387 | 145930 | 4.3 | 301567 | 2.067 | Si |
| SLU 75 | 634 | -14516 | -54721 | 5.03 | 285650 | 5.22 | Si |
| SLU 75 | 814 | -12047 | 142586 | 4.18 | 302269 | 2.12 | Si |
| SLU 73 | 634 | -14166 | -69356 | 4.91 | 289633 | 4.176 | Si |
| SLU 73 | 814 | -11728 | 148031 | 4.07 | 302466 | 2.043 | Si |
| SLU 81 | 634 | -14771 | -58524 | 5.12 | 282414 | 4.826 | Si |
| SLU 81 | 814 | -12659 | 151246 | 4.39 | 300642 | 1.988 | Si |
| SLU 82 | 634 | -14712 | -67498 | 5.1 | 283187 | 4.195 | Si |
| SLU 82 | 814 | -12424 | 153624 | 4.31 | 301460 | 1.962 | Si |
| SLU 61 | 634 | -13628 | -63109 | 4.73 | 294702 | 4.67 | Si |
| SLU 61 | 814 | -11347 | 141434 | 3.93 | 302118 | 2.136 | Si |
| SLU 60 | 634 | -13687 | -54135 | 4.75 | 294209 | 5.435 | Si |
| SLU 60 | 814 | -11582 | 139056 | 4.02 | 302408 | 2.175 | Si |
| SLU 76 | 634 | -14317 | -57349 | 4.96 | 287977 | 5.021 | Si |
| SLU 76 | 814 | -11691 | 140337 | 4.05 | 302460 | 2.155 | Si |
| SLU 74 | 634 | -14575 | -45747 | 5.05 | 284928 | 6.228 | Si |
| SLU 74 | 814 | -12282 | 140208 | 4.26 | 301838 | 2.153 | Si |

### Verifica a pressoflessione nel piano secondo D.M. 17-01-18 NTC §7.8.2.2.1 in combinazioni sismiche, γM = 2

| Comb. | Quota | N | M | σ0 | Mu | c.s. | Verifica |
|---|---|---|---|---|---|---|---|
| SLV 10 | 634 | -11320 | -285819 | 3.93 | 395701 | 1.384 | Si |
| SLV 10 | 814 | -16631 | 303766 | 5.77 | 452272 | 1.489 | Si |
| SLV 16 | 634 | -10486 | -332627 | 3.64 | 379339 | 1.14 | Si |
| SLV 16 | 814 | -10969 | 304165 | 3.8 | 389067 | 1.279 | Si |
| SLV 15 | 634 | -10486 | -332627 | 3.64 | 379339 | 1.14 | Si |
| SLV 15 | 814 | -10969 | 304165 | 3.8 | 389067 | 1.279 | Si |
| SLV 14 | 634 | -11070 | -421070 | 3.84 | 391009 | 0.929 | No, M>Mu |
| SLV 14 | 814 | -15046 | 382598 | 5.22 | 444021 | 1.161 | Si |
| SLV 3 | 634 | -9255 | 348614 | 3.21 | 351445 | 1.008 | Si |
| SLV 3 | 814 | -1909 | -182512 | 0 | 0 | 0 | No, e>l/2 |
| SLV 4 | 634 | -9255 | 348614 | 3.21 | 351445 | 1.008 | Si |
| SLV 4 | 814 | -1909 | -182512 | 0 | 0 | 0 | No, e>l/2 |
| SLV 9 | 634 | -11320 | -285819 | 3.93 | 395701 | 1.384 | Si |
| SLV 9 | 814 | -16631 | 303766 | 5.77 | 452272 | 1.489 | Si |
| SLV 8 | 634 | -9005 | 213363 | 3.12 | 345245 | 1.618 | Si |
| SLV 8 | 814 | -324 | -103680 | 0 | 0 | 0 | No, e>l/2 |
| SLV 13 | 634 | -11070 | -421070 | 3.84 | 391009 | 0.929 | No, M>Mu |
| SLV 13 | 814 | -15046 | 382598 | 5.22 | 444021 | 1.161 | Si |
| SLV 7 | 634 | -9005 | 213363 | 3.12 | 345245 | 1.618 | Si |
| SLV 7 | 814 | -324 | -103680 | 0 | 0 | 0 | No, e>l/2 |

Verifica a taglio nel piano secondo D.M. 17-01-18 (N.T.C.) §7.8.2.2.2 con rottura per scorrimento in combinazioni non sismiche, γM = 3

| Comb. | Quota | N | V par | M | σ0 | σN | l' | fvd | Vt scorr. | Vt fess.diag. | Vt,lim | c.s. | Verifica |
|---|---|---|---|---|---|---|---|---|---|---|---|---|---|
| SLU 31 | 634 | -11683 | -652 | -61194 | | 4.05 | 103 | 1.08 | 3124 | | | 4.79 | Si |
| SLU 31 | 814 | -9754 | -192 | 124678 | | 3.38 | 103 | 1.01 | 2903 | | | 15.15 | Si |
| SLU 52 | 634 | -13082 | -722 | -64967 | | 4.54 | 103 | 1.08 | 3124 | | | 4.33 | Si |
| SLU 52 | 814 | -10651 | -255 | 135840 | | 3.69 | 103 | 1.05 | 3022 | | | 11.85 | Si |
| SLU 10 | 634 | -10599 | -636 | -56805 | | 3.68 | 103 | 1.05 | 3015 | | | 4.74 | Si |
| SLU 10 | 814 | -8677 | -208 | 112488 | | 3.01 | 103 | 0.96 | 2759 | | | 13.29 | Si |
| SLU 44 | 634 | -11900 | -642 | -55343 | | 4.13 | 103 | 1.08 | 3124 | | | 4.87 | Si |
| SLU 44 | 814 | -9393 | -300 | 119090 | | 3.26 | 103 | 0.99 | 2855 | | | 9.52 | Si |
| SLU 2 | 634 | -9417 | -556 | -47181 | | 3.27 | 103 | 0.99 | 2858 | | | 5.14 | Si |
| SLU 2 | 814 | -7419 | -252 | 95738 | | 2.57 | 103 | 0.9 | 2591 | | | 10.27 | Si |
| SLU 65 | 634 | -12983 | -657 | -59732 | | 4.5 | 103 | 1.08 | 3124 | | | 4.76 | Si |
| SLU 65 | 814 | -10469 | -284 | 131281 | | 3.63 | 103 | 1.04 | 2998 | | | 10.56 | Si |
| SLU 23 | 634 | -10500 | -571 | -51570 | | 3.64 | 103 | 1.04 | 3002 | | | 5.26 | Si |
| SLU 23 | 814 | -8495 | -236 | 107928 | | 2.95 | 103 | 0.95 | 2735 | | | 11.57 | Si |
| SLU 82 | 634 | -14712 | -672 | -67498 | | 5.1 | 103 | 1.08 | 3124 | | | 4.65 | Si |
| SLU 82 | 814 | -12424 | -175 | 153624 | | 4.31 | 103 | 1.08 | 3124 | | | 17.83 | Si |
| SLU 73 | 634 | -14166 | -738 | -69356 | | 4.91 | 103 | 1.08 | 3124 | | | 4.24 | Si |
| SLU 73 | 814 | -11728 | -239 | 148031 | | 4.07 | 103 | 1.08 | 3124 | | | 13.06 | Si |
| SLU 61 | 634 | -13628 | -656 | -63109 | | 4.73 | 103 | 1.08 | 3124 | | | 4.76 | Si |
| SLU 61 | 814 | -11347 | -191 | 141434 | | 3.93 | 103 | 1.08 | 3115 | | | 16.3 | Si |

Verifica a taglio nel piano secondo D.M. 17-01-18 (N.T.C.) §7.8.2.2.2 con rottura per scorrimento in combinazioni sismiche, γM = 2

| Comb. | Quota | N | V par | M | σ0 | σN | l' | fvd | Vt scorr. | Vt fess.diag. | Vt,lim | c.s. | Verifica |
|---|---|---|---|---|---|---|---|---|---|---|---|---|---|
| SLV 14 | 634 | -11070 | -5194 | -421070 | | 9.79 | 40.39 | 1.63 | 1838 | | | 0.35 | No, Vu<V |
| SLV 14 | 814 | -15046 | -1407 | 382598 | | 6.87 | 78.21 | 1.63 | 3559 | | | 2.53 | Si |
| SLV 15 | 634 | -10486 | -4778 | -332627 | | 6.31 | 59.34 | 1.63 | 2700 | | | 0.57 | No, Vu<V |
| SLV 15 | 814 | -10969 | -1279 | 304165 | | 5.49 | 71.31 | 1.63 | 3245 | | | 2.54 | Si |
| SLV 1 | 634 | -9838 | 4114 | 260171 | | 4.67 | 75.17 | 1.63 | 3420 | | | 0.83 | No, Vu<V |
| SLV 1 | 814 | -5986 | 1033 | -104079 | | 2.09 | 102.34 | 1.25 | 3585 | | | 3.47 | Si |
| SLV 8 | 634 | -9005 | 1759 | 213363 | | 3.86 | 83.42 | 1.6 | 3747 | | | 2.13 | Si |
| SLV 8 | 814 | -324 | 456 | -103680 | | 0 | 0 | 0.83 | 0 | | | 0 | No, Vu<V |
| SLV 16 | 634 | -10486 | -4778 | -332627 | | 6.31 | 59.34 | 1.63 | 2700 | | | 0.57 | No, Vu<V |
| SLV 16 | 814 | -10969 | -1279 | 304165 | | 5.49 | 71.31 | 1.63 | 3245 | | | 2.54 | Si |
| SLV 7 | 634 | -9005 | 1759 | 213363 | | 3.86 | 83.42 | 1.6 | 3747 | | | 2.13 | Si |
| SLV 7 | 814 | -324 | 456 | -103680 | | 0 | 0 | 0.83 | 0 | | | 0 | No, Vu<V |
| SLV 3 | 634 | -9255 | 4531 | 348614 | | 7.97 | 41.49 | 1.63 | 1888 | | | 0.42 | No, Vu<V |
| SLV 3 | 814 | -1909 | 1161 | -182512 | | 0 | 0 | 0.83 | 0 | | | 0 | No, Vu<V |
| SLV 13 | 634 | -11070 | -5194 | -421070 | | 9.79 | 40.39 | 1.63 | 1838 | | | 0.35 | No, Vu<V |
| SLV 13 | 814 | -15046 | -1407 | 382598 | | 6.87 | 78.21 | 1.63 | 3559 | | | 2.53 | Si |
| SLV 2 | 634 | -9838 | 4114 | 260171 | | 4.67 | 75.17 | 1.63 | 3420 | | | 0.83 | No, Vu<V |
| SLV 2 | 814 | -5986 | 1033 | -104079 | | 2.09 | 102.34 | 1.25 | 3585 | | | 3.47 | Si |
| SLV 4 | 634 | -9255 | 4531 | 348614 | | 7.97 | 41.49 | 1.63 | 1888 | | | 0.42 | No, Vu<V |
| SLV 4 | 814 | -1909 | 1161 | -182512 | | 0 | 0 | 0.83 | 0 | | | 0 | No, Vu<V |

Verifica a pressoflessione fuori piano D.M. 17-01-18 (N.T.C.)

quota 720 Wa 0.05 denominatore 8 γM = 2

| Comb. | fd | Sa | σ0 | N | M | Mc | Coeff.s. | Verifica |
|---|---|---|---|---|---|---|---|---|
| SLV 7 | 14 | 0.39 | 1.73 | -4976 | 10704 | 59831 | 5.59 | Si |
| SLV 8 | 14 | 0.39 | 1.73 | -4976 | 10704 | 59831 | 5.59 | Si |
| SLV 12 | 14 | 0.39 | 2 | -5779 | 10704 | 67638 | 6.32 | Si |
| SLV 11 | 14 | 0.39 | 2 | -5779 | 10704 | 67638 | 6.32 | Si |
| SLV 4 | 14 | 0.39 | 2.53 | -7295 | 10704 | 80990 | 7.57 | Si |
| SLV 3 | 14 | 0.39 | 2.53 | -7295 | 10704 | 80990 | 7.57 | Si |
| SLV 15 | 14 | 0.39 | 3.46 | -9971 | 10704 | 100094 | 9.35 | Si |
| SLV 16 | 14 | 0.39 | 3.46 | -9971 | 10704 | 100094 | 9.35 | Si |
| SLV 1 | 14 | 0.39 | 3.5 | -10086 | 10704 | 100787 | 9.42 | Si |
| SLV 2 | 14 | 0.39 | 3.5 | -10086 | 10704 | 100787 | 9.42 | Si |

Verifica dei meccanismi locali di collasso con analisi cinematica lineare

forza di aggancio al piano = 0 quota mezzeria = 720 Wa = 0.05 Ta = 0.0739

| Comb. | N top | N base | V orto | α0 | M* | e* | a0* | aLim | Verifica |
|---|---|---|---|---|---|---|---|---|---|
| SLV 8 | -576 | -5684 | -86 | 0.006 | 2.19 | 0.894 | 10.24 | 1522.194 | No |
| SLV 7 | -576 | -5684 | -86 | 0.006 | 2.19 | 0.894 | 10.24 | 1522.194 | No |
| SLV 12 | -1857 | -9416 | -108 | 0.014 | 3.382 | 0.9 | 22.377 | 1522.194 | No |
| SLV 11 | -1857 | -9416 | -108 | 0.014 | 3.382 | 0.9 | 22.377 | 1522.194 | No |
| SLV 5 | -10378 | -9702 | 103 | 0.034 | 11.995 | 0.964 | 51.044 | 1522.194 | No |
| SLV 6 | -10378 | -9702 | 103 | 0.034 | 11.995 | 0.964 | 51.044 | 1522.194 | No |
| SLV 10 | -11659 | -13434 | 81 | 0.036 | 13.3 | 0.967 | 54.398 | 1522.194 | No |
| SLV 9 | -11659 | -13434 | 81 | 0.036 | 13.3 | 0.967 | 54.398 | 1522.194 | No |
| SLV 16 | -6783 | -15176 | -67 | 0.036 | 8.341 | 0.95 | 54.64 | 839.377 | No |
| SLV 15 | -6783 | -15176 | -67 | 0.036 | 8.341 | 0.95 | 54.64 | 839.377 | No |

Tabella dei coefficienti di sicurezza minimi

| Stato limite | Coeff.s. | Comb. | Verifica |
|---|---|---|---|
| PF_SLU | 1.962 | SLU 82 | Si |
| V_SLU | 4.236 | SLU 73 | Si |
| PF_SLV | 0 | SLV 3 | No |
| V_SLV | 0 | SLV 3 | No |
| PFFP_SLV | 5.59 | SLV 7 | Si |
| R_SLV | 0.007 | SLV 7 | No |

## Maschio 106

Verifiche condotte secondo D.M. 17-01-18 (N.T.C.)

### Dati geometrici

| X ini. | Y ini. | X fin. | Y fin. | Quota i. | Quota.s | l | Sp. | h netta | h ini. | h fin. | a | a.s.,sx | a.s.,dx |
|---|---|---|---|---|---|---|---|---|---|---|---|---|---|
| -1844.8 | -335.9 | -1844.8 | 104.6 | L4 | L5 | 440.6 | 14 | 352 | 352 | 352 | | | |

### Caratteristiche del materiale

(Circolare 7 21-01-19 C8.5.I) Muratura in mattoni pieni e malta di calce LC2_Corti

| fb | fk | fvk0 | fmedio | τ0 | fv0 | μ | ϕ | fv,lim | E | G | FC |
|---|---|---|---|---|---|---|---|---|---|---|---|
| 60 | | | 34.5 | 0.9 | 2 | 0.58 | 0.77 | 3.25 | 32000 | 12800 | 1.2 |

### Verifica a pressoflessione nel piano secondo D.M. 17-01-18 NTC §7.8.2.2.1 in combinazioni non sismiche, γM = 3

| Comb. | Quota | N | M | σ0 | Mu | c.s. | Verifica |
|---|---|---|---|---|---|---|---|
| SLU 73 | 544 | -26054 | 211157 | 4.22 | 2763143 | 13.086 | Si |
| SLU 73 | 896 | -18809 | 387500 | 3.05 | 2592236 | 6.69 | Si |
| SLU 34 | 544 | -22622 | 234029 | 3.67 | 2739560 | 11.706 | Si |
| SLU 34 | 896 | -16409 | 381454 | 2.66 | 2434127 | 6.381 | Si |
| SLU 42 | 544 | -23549 | 282578 | 3.82 | 2756106 | 9.753 | Si |
| SLU 42 | 896 | -17307 | 373483 | 2.81 | 2499230 | 6.692 | Si |
| SLU 78 | 544 | -27124 | 322809 | 4.4 | 2749376 | 8.517 | Si |
| SLU 78 | 896 | -20275 | 421723 | 3.29 | 2663972 | 6.317 | Si |
| SLU 76 | 544 | -26541 | 252176 | 4.3 | 2758127 | 10.937 | Si |
| SLU 76 | 896 | -19327 | 414749 | 3.13 | 2619746 | 6.316 | Si |
| SLU 38 | 544 | -22858 | 300991 | 3.71 | 2744488 | 9.118 | Si |
| SLU 38 | 896 | -16980 | 380114 | 2.75 | 2476351 | 6.515 | Si |
| SLU 75 | 544 | -26637 | 281791 | 4.32 | 2756882 | 9.783 | Si |
| SLU 75 | 896 | -19757 | 394475 | 3.2 | 2640771 | 6.694 | Si |
| SLU 80 | 544 | -26776 | 319138 | 4.34 | 2754947 | 8.632 | Si |
| SLU 80 | 896 | -19899 | 413409 | 3.23 | 2647348 | 6.404 | Si |
| SLU 84 | 544 | -27467 | 300724 | 4.45 | 2742834 | 9.121 | Si |
| SLU 84 | 896 | -20226 | 406778 | 3.28 | 2661858 | 6.544 | Si |
| SLU 36 | 544 | -23205 | 304663 | 3.76 | 2750855 | 9.029 | Si |
| SLU 36 | 896 | -17357 | 388428 | 2.81 | 2502612 | 6.443 | Si |

### Verifica a pressoflessione nel piano secondo D.M. 17-01-18 NTC §7.8.2.2.1 in combinazioni sismiche, γM = 2

| Comb. | Quota | N | M | σ0 | Mu | c.s. | Verifica |
|---|---|---|---|---|---|---|---|
| SLV 8 | 544 | -15237 | 578338 | 2.47 | 2677929 | 4.63 | Si |
| SLV 8 | 896 | -12234 | -11733 | 1.98 | 2257552 | 192.417 | Si |
| SLV 4 | 544 | -17684 | 524045 | 2.87 | 2981405 | 5.689 | Si |
| SLV 4 | 896 | -13944 | 114945 | 2.26 | 2503307 | 21.778 | Si |
| SLV 9 | 544 | -20056 | -234374 | 3.25 | 3242312 | 13.834 | Si |
| SLV 9 | 896 | -14113 | 426050 | 2.29 | 2526655 | 5.93 | Si |
| SLV 3 | 544 | -17684 | 524045 | 2.87 | 2981405 | 5.689 | Si |
| SLV 3 | 896 | -13944 | 114945 | 2.26 | 2503307 | 21.778 | Si |
| SLV 12 | 544 | -14737 | 426587 | 2.39 | 2611473 | 6.122 | Si |
| SLV 12 | 896 | -11541 | 5770 | 1.87 | 2152958 | 373.103 | Si |
| SLV 7 | 544 | -15237 | 578338 | 2.47 | 2677929 | 4.63 | Si |
| SLV 7 | 896 | -12234 | -11733 | 1.98 | 2257552 | 192.417 | Si |
| SLV 10 | 544 | -20056 | -234374 | 3.25 | 3242312 | 13.834 | Si |
| SLV 10 | 896 | -14113 | 426050 | 2.29 | 2526655 | 5.93 | Si |
| SLV 6 | 544 | -20557 | -82623 | 3.33 | 3293192 | 39.858 | Si |
| SLV 6 | 896 | -14806 | 408547 | 2.4 | 2620820 | 6.415 | Si |
| SLV 11 | 544 | -14737 | 426587 | 2.39 | 2611473 | 6.122 | Si |
| SLV 11 | 896 | -11541 | 5770 | 1.87 | 2152958 | 373.103 | Si |
| SLV 5 | 544 | -20557 | -82623 | 3.33 | 3293192 | 39.858 | Si |
| SLV 5 | 896 | -14806 | 408547 | 2.4 | 2620820 | 6.415 | Si |

### Verifica a taglio nel piano secondo D.M. 17-01-18 (N.T.C.) §7.8.2.2.2 con rottura per scorrimento in combinazioni non sismiche, γM = 3

| Comb. | Quota | N | V par | M | σ0 | σN | l' | fvd | Vt scorr. | Vt fess.diag. | Vt,lim | c.s. | Verifica |
|---|---|---|---|---|---|---|---|---|---|---|---|---|---|
| SLU 69 | 544 | -24001 | 1359 | 308979 | | 3.89 | 440.57 | 1.07 | 6627 | | | 4.88 | Si |
| SLU 69 | 896 | -18383 | 1339 | 330735 | | 2.98 | 440.57 | 0.95 | 5878 | | | 4.39 | Si |
| SLU 58 | 544 | -23740 | 1297 | 290557 | | 3.85 | 440.57 | 1.07 | 6592 | | | 5.08 | Si |
| SLU 58 | 896 | -17961 | 1276 | 312826 | | 2.91 | 440.57 | 0.94 | 5821 | | | 4.56 | Si |
| SLU 79 | 544 | -26401 | 1426 | 358053 | | 4.28 | 440.57 | 1.08 | 6682 | | | 4.69 | Si |
| SLU 79 | 896 | -19978 | 1405 | 370527 | | 3.24 | 440.57 | 0.99 | 6090 | | | 4.33 | Si |
| SLU 29 | 544 | -19735 | 1289 | 287161 | | 3.2 | 440.57 | 0.98 | 6058 | | | 4.7 | Si |
| SLU 29 | 896 | -15088 | 1275 | 289127 | | 2.45 | 440.57 | 0.88 | 5438 | | | 4.26 | Si |
| SLU 8 | 544 | -17075 | 1160 | 219665 | | 2.77 | 440.57 | 0.92 | 5703 | | | 4.92 | Si |
| SLU 8 | 896 | -13070 | 1146 | 231425 | | 2.12 | 440.57 | 0.84 | 5169 | | | 4.51 | Si |
| SLU 50 | 544 | -20994 | 1287 | 237811 | | 3.4 | 440.57 | 1.01 | 6226 | | | 4.84 | Si |
| SLU 50 | 896 | -15988 | 1268 | 264720 | | 2.59 | 440.57 | 0.9 | 5558 | | | 4.39 | Si |
| SLU 37 | 544 | -22482 | 1299 | 339906 | | 3.64 | 440.57 | 1.04 | 6424 | | | 4.95 | Si |
| SLU 37 | 896 | -17060 | 1284 | 337233 | | 2.77 | 440.57 | 0.92 | 5701 | | | 4.44 | Si |
| SLU 27 | 544 | -20083 | 1232 | 290832 | | 3.26 | 440.57 | 0.99 | 6104 | | | 4.96 | Si |
| SLU 27 | 896 | -15464 | 1217 | 297440 | | 2.51 | 440.57 | 0.89 | 5489 | | | 4.51 | Si |
| SLU 71 | 544 | -23654 | 1417 | 305307 | | 3.83 | 440.57 | 1.07 | 6580 | | | 4.65 | Si |
| SLU 71 | 896 | -18006 | 1397 | 322421 | | 2.92 | 440.57 | 0.94 | 5827 | | | 4.17 | Si |
| SLU 77 | 544 | -26748 | 1368 | 361724 | | 4.34 | 440.57 | 1.08 | 6682 | | | 4.88 | Si |
| SLU 77 | 896 | -20355 | 1347 | 378841 | | 3.3 | 440.57 | 1 | 6141 | | | 4.56 | Si |

### Verifica a taglio nel piano secondo D.M. 17-01-18 (N.T.C.) §7.8.2.2.2 con rottura per scorrimento in combinazioni sismiche, γM = 2

| Comb. | Quota | N | V par | M | σ0 | σN | l' | fvd | Vt scorr. | Vt fess.diag. | Vt,lim | c.s. | Verifica |
|---|---|---|---|---|---|---|---|---|---|---|---|---|---|
| SLV 5 | 544 | -20557 | -12479 | -82623 | | 3.33 | 440.57 | 1.5 | 9251 | | | 0.74 | No, Vu<V |
| SLV 5 | 896 | -14806 | -10405 | 408547 | | 2.4 | 440.57 | 1.31 | 8101 | | | 0.78 | No, Vu<V |
| SLV 6 | 544 | -20557 | -12479 | -82623 | | 3.33 | 440.57 | 1.5 | 9251 | | | 0.74 | No, Vu<V |

| Comb. | Quota | N | V par | M | σ0 | σN | l' | fvd | Vt scorr. | Vt fess.diag. | Vt,lim | c.s. | Verifica |
|---|---|---|---|---|---|---|---|---|---|---|---|---|---|
| SLV 6 | 896 | -14806 | -10405 | 408547 | | 2.4 | 440.57 | 1.31 | 8101 | | | 0.78 | No, Vu<V |
| SLV 7 | 544 | -15237 | 12399 | 578338 | | 2.47 | 440.57 | 1.33 | 8187 | | | 0.66 | No, Vu<V |
| SLV 7 | 896 | -12234 | 10503 | -11733 | | 1.98 | 440.57 | 1.23 | 7587 | | | 0.72 | No, Vu<V |
| SLV 9 | 544 | -20056 | -11176 | -234374 | | 3.25 | 440.57 | 1.48 | 9151 | | | 0.82 | No, Vu<V |
| SLV 9 | 896 | -14113 | -9318 | 426050 | | 2.29 | 440.57 | 1.29 | 7963 | | | 0.85 | No, Vu<V |
| SLV 15 | 544 | -16014 | 6514 | 18207 | | 2.6 | 440.57 | 1.35 | 8343 | | | 1.28 | Si |
| SLV 15 | 896 | -11632 | 5540 | 173289 | | 1.89 | 440.57 | 1.21 | 7466 | | | 1.35 | Si |
| SLV 11 | 544 | -14737 | 13701 | 426587 | | 2.39 | 440.57 | 1.31 | 8087 | | | 0.59 | No, Vu<V |
| SLV 11 | 896 | -11541 | 11590 | 5770 | | 1.87 | 440.57 | 1.21 | 7448 | | | 0.64 | No, Vu<V |
| SLV 8 | 544 | -15237 | 12399 | 578338 | | 2.47 | 440.57 | 1.33 | 8187 | | | 0.66 | No, Vu<V |
| SLV 8 | 896 | -12234 | 10503 | -11733 | | 1.98 | 440.57 | 1.23 | 7587 | | | 0.72 | No, Vu<V |
| SLV 12 | 544 | -14737 | 13701 | 426587 | | 2.39 | 440.57 | 1.31 | 8087 | | | 0.59 | No, Vu<V |
| SLV 12 | 896 | -11541 | 11590 | 5770 | | 1.87 | 440.57 | 1.21 | 7448 | | | 0.64 | No, Vu<V |
| SLV 10 | 544 | -20056 | -11176 | -234374 | | 3.25 | 440.57 | 1.48 | 9151 | | | 0.82 | No, Vu<V |
| SLV 10 | 896 | -14113 | -9318 | 426050 | | 2.29 | 440.57 | 1.29 | 7963 | | | 0.85 | No, Vu<V |
| SLV 16 | 544 | -16014 | 6514 | 18207 | | 2.6 | 440.57 | 1.35 | 8343 | | | 1.28 | Si |
| SLV 16 | 896 | -11632 | 5540 | 173289 | | 1.89 | 440.57 | 1.21 | 7466 | | | 1.35 | Si |

### Verifica a pressoflessione fuori piano D.M. 17-01-18 (N.T.C.)

quota 720 Wa 0.03 denominatore 8 γM = 2

| Comb. | fd | Sa | σ0 | N | M | Mc | Coeff.s. | Verifica |
|---|---|---|---|---|---|---|---|---|
| SLV 12 | 14 | 0.39 | 2.21 | -13606 | 24489 | 78049 | 3.19 | Si |
| SLV 11 | 14 | 0.39 | 2.21 | -13606 | 24489 | 78049 | 3.19 | Si |
| SLV 16 | 14 | 0.39 | 2.27 | -14002 | 24489 | 79803 | 3.26 | Si |
| SLV 15 | 14 | 0.39 | 2.27 | -14002 | 24489 | 79803 | 3.26 | Si |
| SLV 7 | 14 | 0.39 | 2.37 | -14627 | 24489 | 82516 | 3.37 | Si |
| SLV 8 | 14 | 0.39 | 2.37 | -14627 | 24489 | 82516 | 3.37 | Si |
| SLV 13 | 14 | 0.39 | 2.49 | -15361 | 24489 | 85611 | 3.5 | Si |
| SLV 14 | 14 | 0.39 | 2.49 | -15361 | 24489 | 85611 | 3.5 | Si |
| SLV 3 | 14 | 0.39 | 2.82 | -17403 | 24489 | 93692 | 3.83 | Si |
| SLV 4 | 14 | 0.39 | 2.82 | -17403 | 24489 | 93692 | 3.83 | Si |

### Verifica dei meccanismi locali di collasso con analisi cinematica lineare

forza di aggancio al piano = 0 quota mezzeria = 720 Wa = 0.03 Ta = 0.1478

| Comb. | N top | N base | V orto | α0 | M* | e* | a0* | aLim | Verifica |
|---|---|---|---|---|---|---|---|---|---|
| SLV 2 | -14715 | -19279 | 26 | 0.021 | 18.05 | 0.951 | 31.61 | 1675.074 | No |
| SLV 1 | -14715 | -19279 | 26 | 0.021 | 18.05 | 0.951 | 31.61 | 1675.074 | No |
| SLV 4 | -13944 | -17684 | 24 | 0.021 | 17.267 | 0.949 | 31.91 | 1675.074 | No |
| SLV 3 | -13944 | -17684 | 24 | 0.021 | 17.267 | 0.949 | 31.91 | 1675.074 | No |
| SLV 15 | -11632 | -16014 | -26 | 0.021 | 14.922 | 0.942 | 32.184 | 1675.074 | No |
| SLV 16 | -11632 | -16014 | -26 | 0.021 | 14.922 | 0.942 | 32.184 | 1675.074 | No |
| SLV 14 | -12403 | -17610 | -24 | 0.021 | 15.704 | 0.944 | 32.215 | 1675.074 | No |
| SLV 13 | -12403 | -17610 | -24 | 0.021 | 15.704 | 0.944 | 32.215 | 1675.074 | No |
| SLV 6 | -14806 | -20557 | 10 | 0.022 | 18.142 | 0.951 | 32.978 | 1675.074 | No |
| SLV 5 | -14806 | -20557 | 10 | 0.022 | 18.142 | 0.951 | 32.978 | 1675.074 | No |

### Tabella dei coefficienti di sicurezza minimi

| Stato limite | Coeff.s. | Comb. | Verifica |
|---|---|---|---|
| PF_SLU | 6.316 | SLU 76 | Si |
| V_SLU | 4.171 | SLU 71 | Si |
| PF_SLV | 4.63 | SLV 7 | Si |
| V_SLV | 0.59 | SLV 11 | No |
| PFFP_SLV | 3.187 | SLV 11 | Si |
| R_SLV | 0.019 | SLV 1 | No |

## Maschio 107

Verifiche condotte secondo D.M. 17-01-18 (N.T.C.)
Maschio considerato membratura sismica secondaria

### Dati geometrici

| X ini. | Y ini. | X fin. | Y fin. | Quota i. | Quota.s | l | Sp. | h netta | h ini. | h fin. | a | a.s.,sx | a.s.,dx |
|---|---|---|---|---|---|---|---|---|---|---|---|---|---|
| -1375.3 | -335.9 | -1543.3 | -335.9 | L4 | L5 | 168 | 28 | 352 | 352 | 352 | | | |

### Caratteristiche del materiale

(Circolare 7 21-01-19 C8.5.I) Muratura in mattoni pieni e malta di calce LC2_Corti

| fb | fk | fvk0 | fmedio | τ0 | fv0 | μ | ϕ | fv,lim | E | G | FC |
|---|---|---|---|---|---|---|---|---|---|---|---|
| 60 | | | 34.5 | 0.9 | 2 | 0.58 | 0.77 | 3.25 | 32000 | 12800 | 1.2 |

### Verifica a pressoflessione nel piano secondo D.M. 17-01-18 NTC §7.8.2.2.1 in combinazioni non sismiche, γM = 3

| Comb. | Quota | N | M | σ0 | Mu | c.s. | Verifica |
|---|---|---|---|---|---|---|---|
| SLU 76 | 544 | -29202 | 109233 | 6.21 | 583586 | 5.343 | Si |
| SLU 76 | 754 | -27945 | 6360 | 5.94 | 635471 | 99.916 | Si |
| SLU 83 | 544 | -29997 | 109569 | 6.38 | 547165 | 4.994 | Si |
| SLU 83 | 754 | -28756 | 5871 | 6.11 | 602779 | 102.667 | Si |
| SLU 81 | 544 | -29633 | 116532 | 6.3 | 564207 | 4.842 | Si |
| SLU 81 | 754 | -28364 | 15675 | 6.03 | 618944 | 39.487 | Si |
| SLU 82 | 544 | -29682 | 119934 | 6.31 | 561920 | 4.685 | Si |
| SLU 82 | 754 | -28417 | 18526 | 6.04 | 616804 | 33.294 | Si |
| SLU 78 | 544 | -29771 | 104913 | 6.33 | 557822 | 5.317 | Si |
| SLU 78 | 754 | -28549 | -1110 | 6.07 | 611403 | 550.799 | Si |
| SLU 75 | 544 | -29406 | 111875 | 6.25 | 574502 | 5.135 | Si |
| SLU 75 | 754 | -28156 | 8693 | 5.99 | 627212 | 72.149 | Si |

| Comb. | Quota | N | M | σ0 | Mu | c.s. | Verifica |
|---|---|---|---|---|---|---|---|
| SLU 74 | 544 | -29356 | 108473 | 6.24 | 576729 | 5.317 | Si |
| SLU 74 | 754 | -28104 | 5842 | 5.97 | 629291 | 107.722 | Si |
| SLU 84 | 544 | -30047 | 112971 | 6.39 | 544798 | 4.822 | Si |
| SLU 84 | 754 | -28809 | 8723 | 6.12 | 600549 | 68.849 | Si |
| SLU 77 | 544 | -29721 | 101511 | 6.32 | 560129 | 5.518 | Si |
| SLU 77 | 754 | -28496 | -3962 | 6.06 | 613573 | 154.882 | Si |
| SLU 73 | 544 | -28837 | 116196 | 6.13 | 599356 | 5.158 | Si |
| SLU 73 | 754 | -27552 | 16163 | 5.86 | 650241 | 40.229 | Si |

### Verifica a taglio nel piano secondo D.M. 17-01-18 (N.T.C.) §7.8.2.2.2 con rottura per scorrimento in combinazioni non sismiche, γM = 3

| Comb. | Quota | N | V par | M | σ0 | σN | l' | fvd | Vt scorr. | Vt fess.diag. | Vt,lim | c.s. | Verifica |
|---|---|---|---|---|---|---|---|---|---|---|---|---|---|
| SLU 45 | 544 | -25365 | -2 | 74304 | | 5.39 | 168 | 1.08 | 5096 | | | 1000 | Si |
| SLU 45 | 754 | -23997 | -30 | -16613 | | 5.1 | 168 | 1.08 | 5096 | | | 167.52 | Si |
| SLU 81 | 544 | -29633 | 12 | 116532 | | 6.3 | 168 | 1.08 | 5096 | | | 432.35 | Si |
| SLU 81 | 754 | -28364 | -27 | 15675 | | 6.03 | 168 | 1.08 | 5096 | | | 187.24 | Si |
| SLU 1 | 544 | -19561 | -1 | 64051 | | 4.16 | 168 | 1.08 | 5096 | | | 1000 | Si |
| SLU 1 | 754 | -18497 | -34 | -5197 | | 3.93 | 168 | 1.08 | 5080 | | | 149.66 | Si |
| SLU 60 | 544 | -27692 | 11 | 96377 | | 5.89 | 168 | 1.08 | 5096 | | | 456.73 | Si |
| SLU 60 | 754 | -26356 | -33 | 3169 | | 5.6 | 168 | 1.08 | 5096 | | | 155.65 | Si |
| SLU 43 | 544 | -24763 | -2 | 76356 | | 5.26 | 168 | 1.08 | 5096 | | | 1000 | Si |
| SLU 43 | 754 | -23358 | -46 | -11044 | | 4.97 | 168 | 1.08 | 5096 | | | 110.74 | Si |
| SLU 22 | 544 | -21502 | 0 | 84206 | | 4.57 | 168 | 1.08 | 5096 | | | 1000 | Si |
| SLU 22 | 754 | -20505 | -28 | 7309 | | 4.36 | 168 | 1.08 | 5096 | | | 179.33 | Si |
| SLU 44 | 544 | -24846 | 0 | 82026 | | 5.28 | 168 | 1.08 | 5096 | | | 1000 | Si |
| SLU 44 | 754 | -23446 | -27 | -6291 | | 4.98 | 168 | 1.08 | 5096 | | | 190.4 | Si |
| SLU 64 | 544 | -26704 | -1 | 96511 | | 5.68 | 168 | 1.08 | 5096 | | | 1000 | Si |
| SLU 64 | 754 | -25366 | -40 | 1462 | | 5.39 | 168 | 1.08 | 5096 | | | 125.85 | Si |
| SLU 36 | 544 | -24568 | 9 | 92608 | | 5.22 | 168 | 1.08 | 5096 | | | 563.7 | Si |
| SLU 36 | 754 | -23688 | 27 | 4737 | | 5.04 | 168 | 1.08 | 5096 | | | 185.44 | Si |
| SLU 38 | 544 | -24331 | 9 | 87697 | | 5.17 | 168 | 1.08 | 5096 | | | 560.36 | Si |
| SLU 38 | 754 | -23441 | 31 | 502 | | 4.98 | 168 | 1.08 | 5096 | | | 162.61 | Si |

### Verifica a pressoflessione fuori piano D.M. 17-01-18 (N.T.C.)

quota 720 Wa 0.05 denominatore 8 γM = 2

| Comb. | fd | Sa | σ0 | N | M | Mc | Coeff.s. | Verifica |
|---|---|---|---|---|---|---|---|---|
| SLV 4 | 14 | 0.39 | 2.96 | -13935 | 17458 | 147791 | 8.47 | Si |
| SLV 3 | 14 | 0.39 | 2.96 | -13935 | 17458 | 147791 | 8.47 | Si |
| SLV 7 | 14 | 0.39 | 3.22 | -15160 | 17458 | 156257 | 8.95 | Si |
| SLV 8 | 14 | 0.39 | 3.22 | -15160 | 17458 | 156257 | 8.95 | Si |
| SLV 2 | 14 | 0.39 | 3.39 | -15941 | 17458 | 161278 | 9.24 | Si |
| SLV 1 | 14 | 0.39 | 3.39 | -15941 | 17458 | 161278 | 9.24 | Si |
| SLV 11 | 14 | 0.39 | 3.87 | -18215 | 17458 | 174196 | 9.98 | Si |
| SLV 12 | 14 | 0.39 | 3.87 | -18215 | 17458 | 174196 | 9.98 | Si |
| SLV 6 | 14 | 0.39 | 4.64 | -21847 | 17458 | 189600 | 10.86 | Si |
| SLV 5 | 14 | 0.39 | 4.64 | -21847 | 17458 | 189600 | 10.86 | Si |

### Verifica dei meccanismi locali di collasso con analisi cinematica lineare

forza di aggancio al piano = 0 quota mezzeria = 720 Wa = 0.05 Ta = 0.0739

| Comb. | N top | N base | V orto | α0 | M* | e* | a0* | aLim | Verifica |
|---|---|---|---|---|---|---|---|---|---|
| SLV 9 | -23607 | -25541 | 180 | 0.035 | 26.366 | 0.973 | 52.245 | 1522.194 | No |
| SLV 10 | -23607 | -25541 | 180 | 0.035 | 26.366 | 0.973 | 52.245 | 1522.194 | No |
| SLV 6 | -21778 | -22824 | 162 | 0.035 | 24.504 | 0.971 | 52.898 | 1522.194 | No |
| SLV 5 | -21778 | -22824 | 162 | 0.035 | 24.504 | 0.971 | 52.898 | 1522.194 | No |
| SLV 8 | -15828 | -15861 | -49 | 0.04 | 18.447 | 0.962 | 60.972 | 1522.194 | No |
| SLV 7 | -15828 | -15861 | -49 | 0.04 | 18.447 | 0.962 | 60.972 | 1522.194 | No |
| SLV 12 | -17656 | -18578 | -32 | 0.041 | 20.307 | 0.965 | 62.047 | 1522.194 | No |
| SLV 11 | -17656 | -18578 | -32 | 0.041 | 20.307 | 0.965 | 62.047 | 1522.194 | No |
| SLV 14 | -23657 | -26274 | 126 | 0.037 | 26.417 | 0.973 | 55.453 | 839.377 | No |
| SLV 13 | -23657 | -26274 | 126 | 0.037 | 26.417 | 0.973 | 55.453 | 839.377 | No |

### Tabella dei coefficienti di sicurezza minimi

| Stato limite | Coeff.s. | Comb. | Verifica |
|---|---|---|---|
| PF_SLU | 4.685 | SLU 82 | Si |
| V_SLU | 110.741 | SLU 43 | Si |
| PFFP_SLV | 8.465 | SLV 3 | Si |
| R_SLV | 0.034 | SLV 9 | No |

## Maschio 108

Verifiche condotte secondo D.M. 17-01-18 (N.T.C.)

### Dati geometrici

| X ini. | Y ini. | X fin. | Y fin. | Quota i. | Quota.s | l | Sp. | h netta | h ini. | h fin. | a | a.s.,sx | a.s.,dx |
|---|---|---|---|---|---|---|---|---|---|---|---|---|---|
| -1505.8 | 104.6 | -1505.8 | 140.6 | L4 | L5 | 36 | 14 | 352 | 352 | 352 | | | |

### Caratteristiche del materiale

(Circolare 7 21-01-19 C8.5.I) Muratura in mattoni pieni e malta di calce LC2_Corti

| fb | fk | fvk0 | fmedio | τ0 | fv0 | μ | ϕ | fv,lim | E | G | FC |
|---|---|---|---|---|---|---|---|---|---|---|---|
| 60 | | | 34.5 | 0.9 | 2 | 0.58 | 0.77 | 3.25 | 32000 | 12800 | 1.2 |

Verifica a pressoflessione nel piano secondo D.M. 17-01-18 NTC §7.8.2.2.1 in combinazioni non sismiche, γM = 3

| Comb. | Quota | N | M | σ0 | Mu | c.s. | Verifica |
|---|---|---|---|---|---|---|---|
| SLU 73 | 544 | -4289 | 27326 | 8.51 | 0 | 0 | No, Rottura per schiacciamento |
| SLU 73 | 754 | -1517 | -14397 | 3.01 | 17217 | 1.196 | Si |
| SLU 83 | 544 | -4730 | 30900 | 9.39 | 0 | 0 | No, Rottura per schiacciamento |
| SLU 83 | 754 | -1573 | -16958 | 3.12 | 17465 | 1.03 | Si |
| SLU 74 | 544 | -4524 | 29058 | 8.98 | 0 | 0 | No, Rottura per schiacciamento |
| SLU 74 | 754 | -1578 | -15569 | 3.13 | 17486 | 1.123 | Si |
| SLU 41 | 544 | -4156 | 27746 | 8.25 | 0 | 0 | No, Rottura per schiacciamento |
| SLU 41 | 754 | -1305 | -15729 | 2.59 | 16026 | 1.019 | Si |
| SLU 42 | 544 | -4151 | 27743 | 8.24 | 0 | 0 | No, Rottura per schiacciamento |
| SLU 42 | 754 | -1298 | -15794 | 2.57 | 15976 | 1.012 | Si |
| SLU 36 | 544 | -4120 | 27469 | 8.17 | 0 | 0 | No, Rottura per schiacciamento |
| SLU 36 | 754 | -1304 | -15731 | 2.59 | 16016 | 1.018 | Si |
| SLU 57 | 544 | -4129 | 26426 | 8.19 | 0 | 0 | No, Rottura per schiacciamento |
| SLU 57 | 754 | -1444 | -14243 | 2.86 | 16848 | 1.183 | Si |
| SLU 63 | 544 | -4160 | 26700 | 8.25 | 0 | 0 | No, Rottura per schiacciamento |
| SLU 63 | 754 | -1438 | -14305 | 2.85 | 16816 | 1.176 | Si |
| SLU 56 | 544 | -4135 | 26429 | 8.2 | 0 | 0 | No, Rottura per schiacciamento |
| SLU 56 | 754 | -1451 | -14178 | 2.88 | 16888 | 1.191 | Si |
| SLU 62 | 544 | -4165 | 26702 | 8.26 | 0 | 0 | No, Rottura per schiacciamento |
| SLU 62 | 754 | -1445 | -14240 | 2.87 | 16856 | 1.184 | Si |

Verifica a pressoflessione nel piano secondo D.M. 17-01-18 NTC §7.8.2.2.1 in combinazioni sismiche, γM = 2

| Comb. | Quota | N | M | σ0 | Mu | c.s. | Verifica |
|---|---|---|---|---|---|---|---|
| SLV 5 | 544 | 692 | -44427 | 0 | 0 | 0 | No, Trazione |
| SLV 5 | 754 | -4012 | 34237 | 7.96 | 25166 | 0.735 | No, M>Mu |
| SLV 6 | 544 | 692 | -44427 | 0 | 0 | 0 | No, Trazione |
| SLV 6 | 754 | -4012 | 34237 | 7.96 | 25166 | 0.735 | No, M>Mu |
| SLV 12 | 544 | -6475 | 80115 | 12.85 | 0 | 0 | No, Rottura per schiacciamento |
| SLV 12 | 754 | 1810 | -51994 | 0 | 0 | 0 | No, Trazione |
| SLV 7 | 544 | -6108 | 75559 | 12.12 | 892 | 0.012 | No, M>Mu |
| SLV 7 | 754 | 1604 | -47485 | 0 | 0 | 0 | No, Trazione |
| SLV 8 | 544 | -6108 | 75559 | 12.12 | 892 | 0.012 | No, M>Mu |
| SLV 8 | 754 | 1604 | -47485 | 0 | 0 | 0 | No, Trazione |
| SLD 16 | 544 | -3567 | 28367 | 7.08 | 27017 | 0.952 | No, M>Mu |
| SLD 16 | 754 | -608 | -17147 | 0 | 0 | 0 | No, e>l/2 |
| SLV 11 | 544 | -6475 | 80115 | 12.85 | 0 | 0 | No, Rottura per schiacciamento |
| SLV 11 | 754 | 1810 | -51994 | 0 | 0 | 0 | No, Trazione |
| SLV 10 | 544 | 325 | -39871 | 0 | 0 | 0 | No, Trazione |
| SLV 10 | 754 | -3807 | 29729 | 7.55 | 26165 | 0.88 | No, M>Mu |
| SLV 9 | 544 | 325 | -39871 | 0 | 0 | 0 | No, Trazione |
| SLV 9 | 754 | -3807 | 29729 | 7.55 | 26165 | 0.88 | No, M>Mu |
| SLV 4 | 544 | -3300 | 28248 | 6.55 | 27570 | 0.976 | No, M>Mu |
| SLV 4 | 754 | -602 | -13622 | 0 | 0 | 0 | No, e>l/2 |

Verifica a taglio nel piano secondo D.M. 17-01-18 (N.T.C.) §7.8.2.2.2 con rottura per scorrimento in combinazioni non sismiche, γM = 3

| Comb. | Quota | N | V par | M | σ0 | σN | l' | fvd | Vt scorr. | Vt fess.diag. | Vt,lim | c.s. | Verifica |
|---|---|---|---|---|---|---|---|---|---|---|---|---|---|
| SLU 41 | 544 | -4156 | 434 | 27746 | | 8.74 | 33.97 | 1.08 | 515 | | | 1.19 | Si |
| SLU 41 | 754 | -1305 | 427 | -15729 | | 5.22 | 17.85 | 1.08 | 271 | | | 0.63 | No, Vu<V |
| SLU 36 | 544 | -4120 | 429 | 27469 | | 8.66 | 34 | 1.08 | 516 | | | 1.2 | Si |
| SLU 36 | 754 | -1304 | 424 | -15731 | | 5.23 | 17.8 | 1.08 | 270 | | | 0.64 | No, Vu<V |
| SLU 80 | 544 | -4643 | 469 | 30464 | | 9.66 | 34.31 | 1.08 | 520 | | | 1.11 | Si |
| SLU 80 | 754 | -1524 | 465 | -17007 | | 5.3 | 20.52 | 1.08 | 311 | | | 0.67 | No, Vu<V |
| SLU 42 | 544 | -4151 | 433 | 27743 | | 8.73 | 33.95 | 1.08 | 515 | | | 1.19 | Si |
| SLU 42 | 754 | -1298 | 429 | -15794 | | 5.3 | 17.49 | 1.08 | 265 | | | 0.62 | No, Vu<V |
| SLU 35 | 544 | -4125 | 429 | 27472 | | 8.66 | 34.02 | 1.08 | 516 | | | 1.2 | Si |
| SLU 35 | 754 | -1311 | 422 | -15666 | | 5.16 | 18.16 | 1.08 | 275 | | | 0.65 | No, Vu<V |
| SLU 79 | 544 | -4648 | 470 | 30467 | | 9.67 | 34.34 | 1.08 | 521 | | | 1.11 | Si |
| SLU 79 | 754 | -1532 | 464 | -16942 | | 5.26 | 20.81 | 1.08 | 316 | | | 0.68 | No, Vu<V |
| SLU 38 | 544 | -4069 | 428 | 27310 | | 8.58 | 33.86 | 1.08 | 514 | | | 1.2 | Si |
| SLU 38 | 754 | -1257 | 423 | -15778 | | 5.5 | 16.33 | 1.08 | 248 | | | 0.59 | No, Vu<V |
| SLU 37 | 544 | -4074 | 428 | 27313 | | 8.59 | 33.89 | 1.08 | 514 | | | 1.2 | Si |
| SLU 37 | 754 | -1264 | 422 | -15713 | | 5.4 | 16.71 | 1.08 | 253 | | | 0.6 | No, Vu<V |
| SLU 84 | 544 | -4725 | 475 | 30897 | | 9.82 | 34.38 | 1.08 | 521 | | | 1.1 | Si |
| SLU 84 | 754 | -1565 | 471 | -17023 | | 5.23 | 21.37 | 1.08 | 324 | | | 0.69 | No, Vu<V |
| SLU 83 | 544 | -4730 | 476 | 30900 | | 9.82 | 34.4 | 1.08 | 522 | | | 1.1 | Si |
| SLU 83 | 754 | -1573 | 469 | -16958 | | 5.19 | 21.65 | 1.08 | 328 | | | 0.7 | No, Vu<V |

Verifica a taglio nel piano secondo D.M. 17-01-18 (N.T.C.) §7.8.2.2.2 con rottura per scorrimento in combinazioni sismiche, γM = 2

| Comb. | Quota | N | V par | M | σ0 | σN | l' | fvd | Vt scorr. | Vt fess.diag. | Vt,lim | c.s. | Verifica |
|---|---|---|---|---|---|---|---|---|---|---|---|---|---|
| SLV 5 | 544 | 692 | -1290 | -44427 | | 0 | 0 | 0.83 | 0 | | | 0 | No, Vu<V |
| SLV 5 | 754 | -4012 | -666 | 34237 | | 10.09 | 28.4 | 1.63 | 646 | | | 0.97 | No, Vu<V |
| SLV 9 | 544 | 325 | -1169 | -39871 | | 0 | 0 | 0.83 | 0 | | | 0 | No, Vu<V |
| SLV 9 | 754 | -3807 | -581 | 29729 | | 8.89 | 30.57 | 1.63 | 695 | | | 1.2 | Si |
| SLV 6 | 544 | 692 | -1290 | -44427 | | 0 | 0 | 0.83 | 0 | | | 0 | No, Vu<V |
| SLV 6 | 754 | -4012 | -666 | 34237 | | 10.09 | 28.4 | 1.63 | 646 | | | 0.97 | No, Vu<V |

| Comb. | Quota | N | V par | M | σ0 | σN | l' | fvd | Vt scorr. | Vt fess.diag. | Vt,lim | c.s. | Verifica |
|---|---|---|---|---|---|---|---|---|---|---|---|---|---|
| SLV 7 | 544 | -6108 | 1694 | 75559 | | 25.83 | 16.89 | 1.63 | 384 | | | 0.23 | No, Vu<V |
| SLV 7 | 754 | 1604 | 1102 | -47485 | | 0 | 0 | 0.83 | 0 | | | 0 | No, Vu<V |
| SLD 16 | 544 | -3567 | 528 | 28367 | | 8.45 | 30.14 | 1.63 | 686 | | | 1.3 | Si |
| SLD 16 | 754 | -608 | 430 | -17147 | | 0 | 0 | 0.83 | 0 | | | 0 | No, Vu<V |
| SLV 11 | 544 | -6475 | 1815 | 80115 | | 27.39 | 16.88 | 1.63 | 384 | | | 0.21 | No, Vu<V |
| SLV 11 | 754 | 1810 | 1187 | -51994 | | 0 | 0 | 0.83 | 0 | | | 0 | No, Vu<V |
| SLV 10 | 544 | 325 | -1169 | -39871 | | 0 | 0 | 0.83 | 0 | | | 0 | No, Vu<V |
| SLV 10 | 754 | -3807 | -581 | 29729 | | 8.89 | 30.57 | 1.63 | 695 | | | 1.2 | Si |
| SLV 12 | 544 | -6475 | 1815 | 80115 | | 27.39 | 16.88 | 1.63 | 384 | | | 0.21 | No, Vu<V |
| SLV 12 | 754 | 1810 | 1187 | -51994 | | 0 | 0 | 0.83 | 0 | | | 0 | No, Vu<V |
| SLV 8 | 544 | -6108 | 1694 | 75559 | | 25.83 | 16.89 | 1.63 | 384 | | | 0.23 | No, Vu<V |
| SLV 8 | 754 | 1604 | 1102 | -47485 | | 0 | 0 | 0.83 | 0 | | | 0 | No, Vu<V |
| SLV 4 | 544 | -3300 | 509 | 28248 | | 8.32 | 28.32 | 1.63 | 644 | | | 1.27 | Si |
| SLV 4 | 754 | -602 | 384 | -13622 | | 0 | 0 | 0.83 | 0 | | | 0 | No, Vu<V |

### Verifica a pressoflessione fuori piano D.M. 17-01-18 (N.T.C.)

quota 720 Wa 0.03 denominatore 8 γM = 2

| Comb. | fd | Sa | σ0 | N | M | Mc | Coeff.s. | Verifica |
|---|---|---|---|---|---|---|---|---|
| SLV 7 | 14 | 0.39 | 0 | 514 | 2001 | 0 | 0 | No, Trazione |
| SLV 8 | 14 | 0.39 | 0 | 514 | 2001 | 0 | 0 | No, Trazione |
| SLV 11 | 14 | 0.39 | 0 | 744 | 2001 | 0 | 0 | No, Trazione |
| SLV 12 | 14 | 0.39 | 0 | 744 | 2001 | 0 | 0 | No, Trazione |
| SLV 16 | 14 | 0.39 | 0.89 | -450 | 2001 | 2920 | 1.46 | Si |
| SLV 15 | 14 | 0.39 | 0.89 | -450 | 2001 | 2920 | 1.46 | Si |
| SLV 3 | 14 | 0.39 | 2.42 | -1219 | 2001 | 6843 | 3.42 | Si |
| SLV 4 | 14 | 0.39 | 2.42 | -1219 | 2001 | 6843 | 3.42 | Si |
| SLV 13 | 14 | 0.39 | 3.38 | -1705 | 2001 | 8629 | 4.31 | Si |
| SLV 14 | 14 | 0.39 | 3.38 | -1705 | 2001 | 8629 | 4.31 | Si |

### Verifica dei meccanismi locali di collasso con analisi cinematica lineare

forza di aggancio al piano = 0 quota mezzeria = 720 Wa = 0.03 Ta = 0.1478

| Comb. | N top | N base | V orto | α0 | M* | e* | a0* | aLim | Verifica |
|---|---|---|---|---|---|---|---|---|---|
| SLV 1 | -819 | -1260 | 32 | 0 | 1.087 | 0.936 | 0 | 1675.074 | No |
| SLV 5 | 23 | 692 | 12 | 0 | 0 | 0 | 0 | 1675.074 | No, Trazione |
| SLV 9 | -115 | 325 | -6 | 0 | 0 | 0 | 0 | 1675.074 | No, Trazione |
| SLV 2 | -819 | -1260 | 32 | 0 | 1.087 | 0.936 | 0 | 1675.074 | No |
| SLV 6 | 23 | 692 | 12 | 0 | 0 | 0 | 0 | 1675.074 | No, Trazione |
| SLV 10 | -115 | 325 | -6 | 0 | 0 | 0 | 0 | 1675.074 | No, Trazione |
| SLV 14 | -1279 | -2484 | -30 | 0.001 | 1.553 | 0.953 | 1.998 | 1675.074 | No |
| SLV 13 | -1279 | -2484 | -30 | 0.001 | 1.553 | 0.953 | 1.998 | 1675.074 | No |
| SLV 4 | -1680 | -3300 | 30 | 0.005 | 1.96 | 0.962 | 8.144 | 1675.074 | No |
| SLV 3 | -1680 | -3300 | 30 | 0.005 | 1.96 | 0.962 | 8.144 | 1675.074 | No |

### Tabella dei coefficienti di sicurezza minimi

| Stato limite | Coeff.s. | Comb. | Verifica |
|---|---|---|---|
| PF_SLU | 0 | SLU 35 | No |
| V_SLU | 0.586 | SLU 38 | No |
| PF_SLV | 0 | SLV 16 | No |
| V_SLV | 0 | SLD 7 | No |
| PFFP_SLV | 0 | SLV 12 | No |
| R_SLV | 0 | SLV 10 | No |

## Maschio 109

Verifiche condotte secondo D.M. 17-01-18 (N.T.C.)

### Dati geometrici

| X ini. | Y ini. | X fin. | Y fin. | Quota i. | Quota.s | l | Sp. | h netta | h ini. | h fin. | a | a.s.,sx | a.s.,dx |
|---|---|---|---|---|---|---|---|---|---|---|---|---|---|
| -1505.8 | 220.6 | -1505.8 | 666.1 | L4 | L5 | 445.5 | 14 | 352 | 352 | 352 | | | |

### Caratteristiche del materiale

(Circolare 7 21-01-19 C8.5.I) Muratura in mattoni pieni e malta di calce LC2_Corti

| fb | fk | fvk0 | fmedio | τ0 | fv0 | μ | ϕ | fv,lim | E | G | FC |
|---|---|---|---|---|---|---|---|---|---|---|---|
| 60 | | | 34.5 | 0.9 | 2 | 0.58 | 0.77 | 3.25 | 32000 | 12800 | 1.2 |

### Verifica a pressoflessione nel piano secondo D.M. 17-01-18 NTC §7.8.2.2.1 in combinazioni non sismiche, γM = 3

| Comb. | Quota | N | M | σ0 | Mu | c.s. | Verifica |
|---|---|---|---|---|---|---|---|
| SLU 74 | 544 | -31404 | -840537 | 5.04 | 2671351 | 3.178 | Si |
| SLU 74 | 754 | -28176 | -794339 | 4.52 | 2795506 | 3.519 | Si |
| SLU 78 | 544 | -31939 | -808980 | 5.12 | 2641900 | 3.266 | Si |
| SLU 78 | 754 | -28712 | -835145 | 4.6 | 2781216 | 3.33 | Si |
| SLU 77 | 544 | -31954 | -815507 | 5.12 | 2641080 | 3.239 | Si |
| SLU 77 | 754 | -28726 | -837543 | 4.61 | 2780800 | 3.32 | Si |
| SLU 81 | 544 | -31628 | -902040 | 5.07 | 2659303 | 2.948 | Si |
| SLU 81 | 754 | -28401 | -789075 | 4.55 | 2789818 | 3.536 | Si |
| SLU 75 | 544 | -31389 | -834010 | 5.03 | 2672103 | 3.204 | Si |
| SLU 75 | 754 | -28162 | -791941 | 4.52 | 2795853 | 3.53 | Si |
| SLU 73 | 544 | -30402 | -833748 | 4.87 | 2719651 | 3.262 | Si |
| SLU 73 | 754 | -27175 | -739807 | 4.36 | 2815465 | 3.806 | Si |
| SLU 76 | 544 | -30952 | -808718 | 4.96 | 2694210 | 3.331 | Si |
| SLU 76 | 754 | -27725 | -783010 | 4.45 | 2805591 | 3.583 | Si |
| SLU 82 | 544 | -31614 | -895512 | 5.07 | 2660083 | 2.97 | Si |
| SLU 82 | 754 | -28387 | -786677 | 4.55 | 2790193 | 3.547 | Si |
| SLU 83 | 544 | -32179 | -877010 | 5.16 | 2627947 | 2.996 | Si |

| Comb. | Quota | N | M | σ0 | Mu | c.s. | Verifica |
|---|---|---|---|---|---|---|---|
| SLU 83 | 754 | -28951 | -832278 | 4.64 | 2774028 | 3.333 | Si |
| SLU 84 | 544 | -32164 | -870482 | 5.16 | 2628796 | 3.02 | Si |
| SLU 84 | 754 | -28937 | -829880 | 4.64 | 2774472 | 3.343 | Si |

Verifica a pressoflessione nel piano secondo D.M. 17-01-18 NTC §7.8.2.2.1 in combinazioni sismiche, γM = 2

| Comb. | Quota | N | M | σ0 | Mu | c.s. | Verifica |
|---|---|---|---|---|---|---|---|
| SLD 6 | 544 | -18404 | -1242240 | 2.95 | 3109496 | 2.503 | Si |
| SLD 6 | 754 | -15996 | -182623 | 2.56 | 2815158 | 15.415 | Si |
| SLV 5 | 544 | -14144 | -2206256 | 2.27 | 2565814 | 1.163 | Si |
| SLV 5 | 754 | -11788 | 273148 | 1.89 | 2219674 | 8.126 | Si |
| SLV 1 | 544 | -17591 | -1224125 | 2.82 | 3013939 | 2.462 | Si |
| SLV 1 | 754 | -16023 | -121395 | 2.57 | 2818756 | 23.22 | Si |
| SLV 6 | 544 | -14144 | -2206256 | 2.27 | 2565814 | 1.163 | Si |
| SLV 6 | 754 | -11788 | 273148 | 1.89 | 2219674 | 8.126 | Si |
| SLV 10 | 544 | -15212 | -2095791 | 2.44 | 2712104 | 1.294 | Si |
| SLV 10 | 754 | -12294 | 177148 | 1.97 | 2296639 | 12.965 | Si |
| SLD 5 | 544 | -18404 | -1242240 | 2.95 | 3109496 | 2.503 | Si |
| SLD 5 | 754 | -15996 | -182623 | 2.56 | 2815158 | 15.415 | Si |
| SLD 10 | 544 | -18856 | -1195127 | 3.02 | 3160954 | 2.645 | Si |
| SLD 10 | 754 | -16208 | -222823 | 2.6 | 2842438 | 12.756 | Si |
| SLV 2 | 544 | -17591 | -1224125 | 2.82 | 3013939 | 2.462 | Si |
| SLV 2 | 754 | -16023 | -121395 | 2.57 | 2818756 | 23.22 | Si |
| SLD 9 | 544 | -18856 | -1195127 | 3.02 | 3160954 | 2.645 | Si |
| SLD 9 | 754 | -16208 | -222823 | 2.6 | 2842438 | 12.756 | Si |
| SLV 9 | 544 | -15212 | -2095791 | 2.44 | 2712104 | 1.294 | Si |
| SLV 9 | 754 | -12294 | 177148 | 1.97 | 2296639 | 12.965 | Si |

Verifica a taglio nel piano secondo D.M. 17-01-18 (N.T.C.) §7.8.2.2.2 con rottura per scorrimento in combinazioni non sismiche, γM = 3

| Comb. | Quota | N | V par | M | σ0 | σN | l' | fvd | Vt scorr. | Vt fess.diag. | Vt,lim | c.s. | Verifica |
|---|---|---|---|---|---|---|---|---|---|---|---|---|---|
| SLU 82 | 544 | -31614 | -490 | -895512 | | 5.07 | 445.5 | 1.08 | 6757 | | | 13.79 | Si |
| SLU 82 | 754 | -28387 | -490 | -786677 | | 4.55 | 445.5 | 1.08 | 6757 | | | 13.79 | Si |
| SLU 81 | 544 | -31628 | -510 | -902040 | | 5.07 | 445.5 | 1.08 | 6757 | | | 13.26 | Si |
| SLU 81 | 754 | -28401 | -510 | -789075 | | 4.55 | 445.5 | 1.08 | 6757 | | | 13.26 | Si |
| SLU 61 | 544 | -28588 | -522 | -799636 | | 4.58 | 445.5 | 1.08 | 6757 | | | 12.93 | Si |
| SLU 61 | 754 | -25508 | -522 | -683857 | | 4.09 | 445.5 | 1.08 | 6757 | | | 12.93 | Si |
| SLU 19 | 544 | -23711 | -433 | -683047 | | 3.8 | 445.5 | 1.06 | 6626 | | | 15.3 | Si |
| SLU 19 | 754 | -21302 | -433 | -587432 | | 3.42 | 445.5 | 1.01 | 6305 | | | 14.55 | Si |
| SLU 29 | 544 | -23843 | 422 | -544018 | | 3.82 | 445.5 | 1.07 | 6644 | | | 15.74 | Si |
| SLU 29 | 754 | -21288 | 422 | -628153 | | 3.41 | 445.5 | 1.01 | 6303 | | | 14.93 | Si |
| SLU 18 | 544 | -23725 | -453 | -689575 | | 3.8 | 445.5 | 1.06 | 6628 | | | 14.64 | Si |
| SLU 18 | 754 | -21317 | -453 | -589830 | | 3.42 | 445.5 | 1.01 | 6307 | | | 13.93 | Si |
| SLU 9 | 544 | -20803 | 409 | -441615 | | 3.34 | 445.5 | 1 | 6239 | | | 15.24 | Si |
| SLU 9 | 754 | -18395 | 409 | -522936 | | 2.95 | 445.5 | 0.95 | 5918 | | | 14.46 | Si |
| SLU 52 | 544 | -27376 | -452 | -737873 | | 4.39 | 445.5 | 1.08 | 6757 | | | 14.96 | Si |
| SLU 52 | 754 | -24296 | -452 | -636988 | | 3.9 | 445.5 | 1.07 | 6704 | | | 14.85 | Si |
| SLU 30 | 544 | -23829 | 442 | -537490 | | 3.82 | 445.5 | 1.06 | 6642 | | | 15.03 | Si |
| SLU 30 | 754 | -21273 | 442 | -625755 | | 3.41 | 445.5 | 1.01 | 6301 | | | 14.26 | Si |
| SLU 60 | 544 | -28603 | -542 | -806164 | | 4.59 | 445.5 | 1.08 | 6757 | | | 12.46 | Si |
| SLU 60 | 754 | -25522 | -542 | -686255 | | 4.09 | 445.5 | 1.08 | 6757 | | | 12.46 | Si |

Verifica a taglio nel piano secondo D.M. 17-01-18 (N.T.C.) §7.8.2.2.2 con rottura per scorrimento in combinazioni sismiche, γM = 2

| Comb. | Quota | N | V par | M | σ0 | σN | l' | fvd | Vt scorr. | Vt fess.diag. | Vt,lim | c.s. | Verifica |
|---|---|---|---|---|---|---|---|---|---|---|---|---|---|
| SLV 5 | 544 | -14144 | -10500 | -2206256 | | 5.04 | 200.29 | 1.63 | 4557 | | | 0.43 | No, Vu<V |
| SLV 5 | 754 | -11788 | -11455 | 273148 | | 1.89 | 445.5 | 1.21 | 7555 | | | 0.66 | No, Vu<V |
| SLV 6 | 544 | -14144 | -10500 | -2206256 | | 5.04 | 200.29 | 1.63 | 4557 | | | 0.43 | No, Vu<V |
| SLV 6 | 754 | -11788 | -11455 | 273148 | | 1.89 | 445.5 | 1.21 | 7555 | | | 0.66 | No, Vu<V |
| SLV 9 | 544 | -15212 | -9562 | -2095791 | | 4.26 | 254.93 | 1.63 | 5800 | | | 0.61 | No, Vu<V |
| SLV 9 | 754 | -12294 | -10556 | 177148 | | 1.97 | 445.5 | 1.23 | 7656 | | | 0.73 | No, Vu<V |
| SLV 8 | 544 | -27554 | 8983 | 968051 | | 4.42 | 445.5 | 1.63 | 10135 | | | 1.13 | Si |
| SLV 8 | 754 | -25572 | 9977 | -1174116 | | 4.1 | 445.5 | 1.63 | 10135 | | | 1.02 | Si |
| SLV 12 | 544 | -28622 | 9921 | 1078516 | | 4.59 | 445.5 | 1.63 | 10135 | | | 1.02 | Si |
| SLV 12 | 754 | -26077 | 10876 | -1270116 | | 4.18 | 445.5 | 1.63 | 10135 | | | 0.93 | No, Vu<V |
| SLV 10 | 544 | -15212 | -9562 | -2095791 | | 4.26 | 254.93 | 1.63 | 5800 | | | 0.61 | No, Vu<V |
| SLV 10 | 754 | -12294 | -10556 | 177148 | | 1.97 | 445.5 | 1.23 | 7656 | | | 0.73 | No, Vu<V |
| SLV 1 | 544 | -17591 | -4775 | -1224125 | | 2.82 | 445.5 | 1.4 | 8716 | | | 1.83 | Si |
| SLV 1 | 754 | -16023 | -5003 | -121395 | | 2.57 | 445.5 | 1.35 | 8402 | | | 1.68 | Si |
| SLV 11 | 544 | -28622 | 9921 | 1078516 | | 4.59 | 445.5 | 1.63 | 10135 | | | 1.02 | Si |
| SLV 11 | 754 | -26077 | 10876 | -1270116 | | 4.18 | 445.5 | 1.63 | 10135 | | | 0.93 | No, Vu<V |
| SLV 2 | 544 | -17591 | -4775 | -1224125 | | 2.82 | 445.5 | 1.4 | 8716 | | | 1.83 | Si |
| SLV 2 | 754 | -16023 | -5003 | -121395 | | 2.57 | 445.5 | 1.35 | 8402 | | | 1.68 | Si |
| SLV 7 | 544 | -27554 | 8983 | 968051 | | 4.42 | 445.5 | 1.63 | 10135 | | | 1.13 | Si |
| SLV 7 | 754 | -25572 | 9977 | -1174116 | | 4.1 | 445.5 | 1.63 | 10135 | | | 1.02 | Si |

Verifica a pressoflessione fuori piano D.M. 17-01-18 (N.T.C.)

quota 720 Wa 0.03 denominatore 8 γM = 2

| Comb. | fd | Sa | σ0 | N | M | Mc | Coeff.s. | Verifica |
|---|---|---|---|---|---|---|---|---|
| SLV 5 | 14 | 0.39 | 1.95 | -12162 | 24763 | 71545 | 2.89 | Si |
| SLV 6 | 14 | 0.39 | 1.95 | -12162 | 24763 | 71545 | 2.89 | Si |
| SLV 10 | 14 | 0.39 | 2.03 | -12682 | 24763 | 74002 | 2.99 | Si |
| SLV 9 | 14 | 0.39 | 2.03 | -12682 | 24763 | 74002 | 2.99 | Si |
| SLV 2 | 14 | 0.39 | 2.64 | -16449 | 24763 | 90291 | 3.65 | Si |
| SLV 1 | 14 | 0.39 | 2.64 | -16449 | 24763 | 90291 | 3.65 | Si |
| SLV 13 | 14 | 0.39 | 2.92 | -18185 | 24763 | 96918 | 3.91 | Si |
| SLV 14 | 14 | 0.39 | 2.92 | -18185 | 24763 | 96918 | 3.91 | Si |
| SLV 3 | 14 | 0.39 | 3.31 | -20645 | 24763 | 105366 | 4.25 | Si |
| SLV 4 | 14 | 0.39 | 3.31 | -20645 | 24763 | 105366 | 4.25 | Si |

### Verifica dei meccanismi locali di collasso con analisi cinematica lineare

forza di aggancio al piano = 0 quota mezzeria = 720 Wa = 0.03 Ta = 0.1478

| Comb. | N top | N base | V orto | α0 | M* | e* | a0* | aLim | Verifica |
|---|---|---|---|---|---|---|---|---|---|
| SLV 10 | -13802 | -15212 | 215 | 0.009 | 17.158 | 0.948 | 13.426 | 1675.074 | No |
| SLV 9 | -13802 | -15212 | 215 | 0.009 | 17.158 | 0.948 | 13.426 | 1675.074 | No |
| SLV 7 | -16567 | -27554 | -215 | 0.01 | 19.965 | 0.955 | 15.859 | 1675.074 | No |
| SLV 8 | -16567 | -27554 | -215 | 0.01 | 19.965 | 0.955 | 15.859 | 1675.074 | No |
| SLV 5 | -13696 | -14144 | 188 | 0.01 | 17.05 | 0.948 | 15.975 | 1675.074 | No |
| SLV 6 | -13696 | -14144 | 188 | 0.01 | 17.05 | 0.948 | 15.975 | 1675.074 | No |
| SLV 11 | -16673 | -28622 | -188 | 0.012 | 20.074 | 0.955 | 18.158 | 1675.074 | No |
| SLV 12 | -16673 | -28622 | -188 | 0.012 | 20.074 | 0.955 | 18.158 | 1675.074 | No |
| SLV 13 | -14931 | -21152 | 106 | 0.016 | 18.304 | 0.951 | 24.39 | 1675.074 | No |
| SLV 14 | -14931 | -21152 | 106 | 0.016 | 18.304 | 0.951 | 24.39 | 1675.074 | No |

### Tabella dei coefficienti di sicurezza minimi

| Stato limite | Coeff.s. | Comb. | Verifica |
|---|---|---|---|
| PF_SLU | 2.948 | SLU 81 | Si |
| V_SLU | 12.464 | SLU 60 | Si |
| PF_SLV | 1.163 | SLV 5 | Si |
| V_SLV | 0.434 | SLV 5 | No |
| PFFP_SLV | 2.889 | SLV 5 | Si |
| R_SLV | 0.008 | SLV 9 | No |

## Maschio 110

Verifiche condotte secondo D.M. 17-01-18 (N.T.C.)
Maschio considerato membratura sismica secondaria

### Dati geometrici

| X ini. | Y ini. | X fin. | Y fin. | Quota i. | Quota.s | l | Sp. | h netta | h ini. | h fin. | a | a.s.,sx | a.s.,dx |
|---|---|---|---|---|---|---|---|---|---|---|---|---|---|
| -1375.3 | -349.9 | -1375.3 | -331.4 | L4 | L5 | 18.6 | 28 | 352 | 352 | 352 | | | |

### Caratteristiche del materiale

(Circolare 7 21-01-19 C8.5.I) Muratura in mattoni pieni e malta di calce LC2_Corti

| fb | fk | fvk0 | fmedio | τ0 | fv0 | μ | ϕ | fv,lim | E | G | FC |
|---|---|---|---|---|---|---|---|---|---|---|---|
| 60 | | | 34.5 | 0.9 | 2 | 0.58 | 0.77 | 3.25 | 32000 | 12800 | 1.2 |

### Verifica a pressoflessione nel piano secondo D.M. 17-01-18 NTC §7.8.2.2.1 in combinazioni non sismiche, γM = 3

| Comb. | Quota | N | M | σ0 | Mu | c.s. | Verifica |
|---|---|---|---|---|---|---|---|
| SLU 58 | 544 | -562 | 13109 | 0 | 0 | 0 | No, e>l/2 |
| SLU 58 | 896 | 16 | 1925 | 0 | 0 | 0 | No, Trazione |
| SLU 59 | 544 | -552 | 13054 | 0 | 0 | 0 | No, e>l/2 |
| SLU 59 | 896 | 22 | 1842 | 0 | 0 | 0 | No, Trazione |
| SLU 55 | 544 | -550 | 12954 | 0 | 0 | 0 | No, e>l/2 |
| SLU 55 | 896 | 27 | 1725 | 0 | 0 | 0 | No, Trazione |
| SLU 57 | 544 | -544 | 13046 | 0 | 0 | 0 | No, e>l/2 |
| SLU 57 | 896 | 22 | 1828 | 0 | 0 | 0 | No, Trazione |
| SLU 56 | 544 | -554 | 13101 | 0 | 0 | 0 | No, e>l/2 |
| SLU 56 | 896 | 15 | 1911 | 0 | 0 | 0 | No, Trazione |
| SLU 53 | 544 | -559 | 13039 | 0 | 0 | 0 | No, e>l/2 |
| SLU 53 | 896 | 16 | 1848 | 0 | 0 | 0 | No, Trazione |
| SLU 54 | 544 | -549 | 12983 | 0 | 0 | 0 | No, e>l/2 |
| SLU 54 | 896 | 22 | 1766 | 0 | 0 | 0 | No, Trazione |
| SLU 60 | 544 | -623 | 13939 | 0 | 0 | 0 | No, e>l/2 |
| SLU 60 | 896 | 22 | 1854 | 0 | 0 | 0 | No, Trazione |
| SLU 1 | 544 | -338 | 8436 | 0 | 0 | 0 | No, e>l/2 |
| SLU 1 | 896 | 4 | 1293 | 0 | 0 | 0 | No, Trazione |
| SLU 61 | 544 | -613 | 13883 | 0 | 0 | 0 | No, e>l/2 |
| SLU 61 | 896 | 28 | 1771 | 0 | 0 | 0 | No, Trazione |

### Verifica a taglio nel piano secondo D.M. 17-01-18 (N.T.C.) §7.8.2.2.2 con rottura per scorrimento in combinazioni non sismiche, γM = 3

| Comb. | Quota | N | V par | M | σ0 | σN | l' | fvd | Vt scorr. | Vt fess.diag. | Vt,lim | c.s. | Verifica |
|---|---|---|---|---|---|---|---|---|---|---|---|---|---|
| SLU 60 | 544 | -623 | 316 | 13939 | | 0 | 0 | 0.56 | 0 | | | 0 | No, Vu<V |
| SLU 60 | 896 | 22 | 77 | 1854 | | 0 | 0 | 0.56 | 0 | | | 0 | No, Vu<V |
| SLU 1 | 544 | -338 | 216 | 8436 | | 0 | 0 | 0.56 | 0 | | | 0 | No, Vu<V |
| SLU 1 | 896 | 4 | 54 | 1293 | | 0 | 0 | 0.56 | 0 | | | 0 | No, Vu<V |
| SLU 56 | 544 | -554 | 316 | 13101 | | 0 | 0 | 0.56 | 0 | | | 0 | No, Vu<V |
| SLU 56 | 896 | 15 | 75 | 1911 | | 0 | 0 | 0.56 | 0 | | | 0 | No, Vu<V |
| SLU 61 | 544 | -613 | 319 | 13883 | | 0 | 0 | 0.56 | 0 | | | 0 | No, Vu<V |
| SLU 61 | 896 | 28 | 84 | 1771 | | 0 | 0 | 0.56 | 0 | | | 0 | No, Vu<V |
| SLU 53 | 544 | -559 | 310 | 13039 | | 0 | 0 | 0.56 | 0 | | | 0 | No, Vu<V |
| SLU 53 | 896 | 16 | 75 | 1848 | | 0 | 0 | 0.56 | 0 | | | 0 | No, Vu<V |
| SLU 54 | 544 | -549 | 313 | 12983 | | 0 | 0 | 0.56 | 0 | | | 0 | No, Vu<V |
| SLU 54 | 896 | 22 | 82 | 1766 | | 0 | 0 | 0.56 | 0 | | | 0 | No, Vu<V |
| SLU 57 | 544 | -544 | 319 | 13046 | | 0 | 0 | 0.56 | 0 | | | 0 | No, Vu<V |
| SLU 57 | 896 | 22 | 82 | 1828 | | 0 | 0 | 0.56 | 0 | | | 0 | No, Vu<V |
| SLU 59 | 544 | -552 | 315 | 13054 | | 0 | 0 | 0.56 | 0 | | | 0 | No, Vu<V |
| SLU 59 | 896 | 22 | 81 | 1842 | | 0 | 0 | 0.56 | 0 | | | 0 | No, Vu<V |
| SLU 58 | 544 | -562 | 312 | 13109 | | 0 | 0 | 0.56 | 0 | | | 0 | No, Vu<V |
| SLU 58 | 896 | 16 | 74 | 1925 | | 0 | 0 | 0.56 | 0 | | | 0 | No, Vu<V |
| SLU 55 | 544 | -550 | 312 | 12954 | | 0 | 0 | 0.56 | 0 | | | 0 | No, Vu<V |
| SLU 55 | 896 | 27 | 86 | 1725 | | 0 | 0 | 0.56 | 0 | | | 0 | No, Vu<V |

### Verifica a pressoflessione fuori piano D.M. 17-01-18 (N.T.C.)

quota 720 Wa 0.05 denominatore 8 γM = 2

| Comb. | fd | Sa | σ0 | N | M | Mc | Coeff.s. | Verifica |
|---|---|---|---|---|---|---|---|---|
| SLV 8 | 14 | 0.39 | 0 | -113 | 1974 | 0 | 0 | No, e>t/2 |
| SLV 15 | 14 | 0.39 | 0 | -100 | 1974 | 0 | 0 | No, e>t/2 |
| SLV 11 | 14 | 0.39 | 0 | -76 | 1974 | 0 | 0 | No, e>t/2 |
| SLV 7 | 14 | 0.39 | 0 | -113 | 1974 | 0 | 0 | No, e>t/2 |
| SLV 12 | 14 | 0.39 | 0 | -76 | 1974 | 0 | 0 | No, e>t/2 |
| SLV 16 | 14 | 0.39 | 0 | -100 | 1974 | 0 | 0 | No, e>t/2 |
| SLV 14 | 14 | 0.39 | 0.3 | -158 | 1974 | 2159 | 1.09 | Si |
| SLV 13 | 14 | 0.39 | 0.3 | -158 | 1974 | 2159 | 1.09 | Si |
| SLV 4 | 14 | 0.39 | 0.43 | -224 | 1974 | 3022 | 1.53 | Si |
| SLV 3 | 14 | 0.39 | 0.43 | -224 | 1974 | 3022 | 1.53 | Si |

### Verifica dei meccanismi locali di collasso con analisi cinematica lineare

forza di aggancio al piano = 0 quota mezzeria = 720 Wa = 0.05 Ta = 0.0739

| Comb. | N top | N base | V orto | α0 | M* | e* | a0* | aLim | Verifica |
|---|---|---|---|---|---|---|---|---|---|
| SLV 7 | 15 | 24 | -20 | 0 | 0 | 0 | 0 | 1522.194 | No, Trazione |
| SLV 12 | 131 | 193 | -20 | 0 | 0 | 0 | 0 | 1522.194 | No, Trazione |
| SLV 11 | 131 | 193 | -20 | 0 | 0 | 0 | 0 | 1522.194 | No, Trazione |
| SLV 16 | 221 | 60 | -17 | 0 | 0 | 0 | 0 | 839.377 | No, Trazione |
| SLV 8 | 15 | 24 | -20 | 0 | 0 | 0 | 0 | 1522.194 | No, Trazione |
| SLV 14 | 181 | -223 | -15 | 0 | 0 | 0 | 0 | 839.377 | No, Trazione |
| SLV 13 | 181 | -223 | -15 | 0 | 0 | 0 | 0 | 839.377 | No, Trazione |
| SLV 15 | 221 | 60 | -17 | 0 | 0 | 0 | 0 | 839.377 | No, Trazione |
| SLV 9 | -1 | -750 | -13 | 0 | 0.336 | 0.997 | 0.586 | 1522.194 | No |
| SLV 10 | -1 | -750 | -13 | 0 | 0.336 | 0.997 | 0.586 | 1522.194 | No |

### Tabella dei coefficienti di sicurezza minimi

| Stato limite | Coeff.s. | Comb. | Verifica |
|---|---|---|---|
| PF_SLU | 0 | SLU 84 | No |
| V_SLU | 0 | SLU 1 | No |
| PFFP_SLV | 0 | SLV 7 | No |
| R_SLV | 0 | SLV 16 | No |

## Maschio 112

Verifiche condotte secondo D.M. 17-01-18 (N.T.C.)

### Dati geometrici

| X ini. | Y ini. | X fin. | Y fin. | Quota i. | Quota.s | l | Sp. | h netta | h ini. | h fin. | a | a.s.,sx | a.s.,dx |
|---|---|---|---|---|---|---|---|---|---|---|---|---|---|
| -1375.3 | -331.4 | -1375.3 | -35.4 | Z medio 631 cm | L5 | 296 | 28 | 265 | 178 | 352 | | | |

### Caratteristiche del materiale

(Circolare 7 21-01-19 C8.5.I) Muratura in mattoni pieni e malta di calce LC2_Corti

| fb | fk | fvk0 | fmedio | τ0 | fv0 | μ | ϕ | fv,lim | E | G | FC |
|---|---|---|---|---|---|---|---|---|---|---|---|
| 60 | | | 34.5 | 0.9 | 2 | 0.58 | 0.77 | 3.25 | 32000 | 12800 | 1.2 |

### Verifica a pressoflessione nel piano secondo D.M. 17-01-18 NTC §7.8.2.2.1 in combinazioni non sismiche, γM = 3

| Comb. | Quota | N | M | σ0 | Mu | c.s. | Verifica |
|---|---|---|---|---|---|---|---|
| SLU 81 | 718 | -11876 | 613356 | 1.43 | 1448455 | 2.362 | Si |
| SLU 81 | 896 | -1995 | 123932 | 0.24 | 286580 | 2.312 | Si |
| SLU 19 | 718 | -9153 | 477487 | 1.1 | 1170997 | 2.452 | Si |
| SLU 19 | 896 | -1714 | 119786 | 0.21 | 247207 | 2.064 | Si |
| SLU 20 | 718 | -9333 | 493639 | 1.13 | 1190302 | 2.411 | Si |
| SLU 20 | 896 | -1711 | 120907 | 0.21 | 246791 | 2.041 | Si |
| SLU 35 | 718 | -9733 | 532507 | 1.17 | 1232858 | 2.315 | Si |
| SLU 35 | 896 | -1552 | 88550 | 0.19 | 224486 | 2.535 | Si |
| SLU 41 | 718 | -10094 | 575047 | 1.22 | 1270548 | 2.209 | Si |
| SLU 41 | 896 | -1841 | 131100 | 0.22 | 265102 | 2.022 | Si |
| SLU 18 | 718 | -9189 | 480457 | 1.11 | 1174902 | 2.445 | Si |
| SLU 18 | 896 | -1702 | 121827 | 0.21 | 245519 | 2.015 | Si |
| SLU 40 | 718 | -9914 | 558895 | 1.2 | 1251843 | 2.24 | Si |
| SLU 40 | 896 | -1844 | 129979 | 0.22 | 265516 | 2.043 | Si |
| SLU 39 | 718 | -9951 | 561865 | 1.2 | 1255627 | 2.235 | Si |
| SLU 39 | 896 | -1832 | 132019 | 0.22 | 263835 | 1.998 | Si |
| SLU 42 | 718 | -10058 | 572077 | 1.21 | 1266787 | 2.214 | Si |
| SLU 42 | 896 | -1853 | 129059 | 0.22 | 266782 | 2.067 | Si |
| SLU 21 | 718 | -9296 | 490669 | 1.12 | 1186420 | 2.418 | Si |
| SLU 21 | 896 | -1723 | 118867 | 0.21 | 248478 | 2.09 | Si |

### Verifica a pressoflessione nel piano secondo D.M. 17-01-18 NTC §7.8.2.2.1 in combinazioni sismiche, γM = 2

| Comb. | Quota | N | M | σ0 | Mu | c.s. | Verifica |
|---|---|---|---|---|---|---|---|
| SLD 14 | 718 | -8117 | 416665 | 0.98 | 1105027 | 2.652 | Si |
| SLD 14 | 896 | -655 | 67204 | 0.08 | 96328 | 1.433 | Si |
| SLV 14 | 718 | -8439 | 532761 | 1.02 | 1144887 | 2.149 | Si |
| SLV 14 | 896 | -266 | 139955 | 0 | 0 | 0 | No, e>l/2 |
| SLV 13 | 718 | -8439 | 532761 | 1.02 | 1144887 | 2.149 | Si |
| SLV 13 | 896 | -266 | 139955 | 0 | 0 | 0 | No, e>l/2 |
| SLD 16 | 718 | -7507 | 390380 | 0.91 | 1028630 | 2.635 | Si |
| SLD 16 | 896 | -701 | 53530 | 0.08 | 102966 | 1.924 | Si |
| SLV 15 | 718 | -6999 | 472468 | 0.84 | 964257 | 2.041 | Si |
| SLV 15 | 896 | -385 | 106295 | 0 | 0 | 0 | No, e>l/2 |

| Comb. | Quota | N | M | σ0 | Mu | c.s. | Verifica |
|---|---|---|---|---|---|---|---|
| SLV 9 | 718 | -10236 | 483037 | 1.23 | 1361759 | 2.819 | Si |
| SLV 9 | 896 | -552 | 103558 | 0 | 0 | 0 | No, e>l/2 |
| SLV 16 | 718 | -6999 | 472468 | 0.84 | 964257 | 2.041 | Si |
| SLV 16 | 896 | -385 | 106295 | 0 | 0 | 0 | No, e>l/2 |
| SLD 15 | 718 | -7507 | 390380 | 0.91 | 1028630 | 2.635 | Si |
| SLD 15 | 896 | -701 | 53530 | 0.08 | 102966 | 1.924 | Si |
| SLV 10 | 718 | -10236 | 483037 | 1.23 | 1361759 | 2.819 | Si |
| SLV 10 | 896 | -552 | 103558 | 0 | 0 | 0 | No, e>l/2 |
| SLD 13 | 718 | -8117 | 416665 | 0.98 | 1105027 | 2.652 | Si |
| SLD 13 | 896 | -655 | 67204 | 0.08 | 96328 | 1.433 | Si |

### Verifica a taglio nel piano secondo D.M. 17-01-18 (N.T.C.) §7.8.2.2.2 con rottura per scorrimento in combinazioni non sismiche, γM = 3

| Comb. | Quota | N | V par | M | σ0 | σN | l' | fvd | Vt scorr. | Vt fess.diag. | Vt,lim | c.s. | Verifica |
|---|---|---|---|---|---|---|---|---|---|---|---|---|---|
| SLU 75 | 718 | -11479 | 1191 | 567847 | | 1.39 | 295.6 | 0.74 | 6129 | | | 5.15 | Si |
| SLU 75 | 896 | -1718 | 564 | 79342 | | 0.21 | 296 | 0.58 | 4834 | | | 8.57 | Si |
| SLU 80 | 718 | -11556 | 1195 | 572016 | | 1.4 | 295.5 | 0.74 | 6137 | | | 5.13 | Si |
| SLU 80 | 896 | -1723 | 560 | 78911 | | 0.21 | 296 | 0.58 | 4834 | | | 8.64 | Si |
| SLU 70 | 718 | -10292 | 1128 | 429981 | | 1.24 | 296 | 0.72 | 5977 | | | 5.3 | Si |
| SLU 70 | 896 | -1021 | 819 | -17573 | | 0.12 | 296 | 0.57 | 4741 | | | 5.79 | Si |
| SLU 68 | 718 | -10057 | 1139 | 405806 | | 1.21 | 296 | 0.72 | 5945 | | | 5.22 | Si |
| SLU 68 | 896 | -1015 | 833 | -17525 | | 0.12 | 296 | 0.57 | 4740 | | | 5.69 | Si |
| SLU 73 | 718 | -11245 | 1202 | 543672 | | 1.36 | 296 | 0.74 | 6104 | | | 5.08 | Si |
| SLU 73 | 896 | -1712 | 579 | 79390 | | 0.21 | 296 | 0.58 | 4833 | | | 8.35 | Si |
| SLU 76 | 718 | -11389 | 1223 | 556854 | | 1.37 | 296 | 0.74 | 6123 | | | 5.01 | Si |
| SLU 76 | 896 | -1722 | 594 | 78471 | | 0.21 | 296 | 0.58 | 4834 | | | 8.13 | Si |
| SLU 65 | 718 | -9914 | 1118 | 392624 | | 1.2 | 296 | 0.72 | 5926 | | | 5.3 | Si |
| SLU 65 | 896 | -1006 | 818 | -16605 | | 0.12 | 296 | 0.57 | 4739 | | | 5.79 | Si |
| SLU 82 | 718 | -11840 | 1189 | 610386 | | 1.46 | 289.34 | 0.75 | 6079 | | | 5.11 | Si |
| SLU 82 | 896 | -2007 | 426 | 121891 | | 0.27 | 261.83 | 0.59 | 4341 | | | 10.2 | Si |
| SLU 78 | 718 | -11623 | 1212 | 581029 | | 1.41 | 294.02 | 0.74 | 6123 | | | 5.05 | Si |
| SLU 78 | 896 | -1727 | 580 | 78422 | | 0.21 | 296 | 0.58 | 4835 | | | 8.34 | Si |
| SLU 84 | 718 | -11983 | 1210 | 623568 | | 1.49 | 287.89 | 0.75 | 6076 | | | 5.02 | Si |
| SLU 84 | 896 | -2016 | 441 | 120972 | | 0.27 | 264.02 | 0.59 | 4376 | | | 9.91 | Si |

### Verifica a taglio nel piano secondo D.M. 17-01-18 (N.T.C.) §7.8.2.2.2 con rottura per scorrimento in combinazioni sismiche, γM = 2

| Comb. | Quota | N | V par | M | σ0 | σN | l' | fvd | Vt scorr. | Vt fess.diag. | Vt,lim | c.s. | Verifica |
|---|---|---|---|---|---|---|---|---|---|---|---|---|---|
| SLV 11 | 718 | -5436 | 4602 | 282059 | | 0.67 | 288.33 | 0.97 | 7815 | | | 1.7 | Si |
| SLV 11 | 896 | -948 | 1482 | -8641 | | 0.11 | 296 | 0.86 | 7096 | | | 4.79 | Si |
| SLV 12 | 718 | -5436 | 4602 | 282059 | | 0.67 | 288.33 | 0.97 | 7815 | | | 1.7 | Si |
| SLV 12 | 896 | -948 | 1482 | -8641 | | 0.11 | 296 | 0.86 | 7096 | | | 4.79 | Si |
| SLV 8 | 718 | -5536 | 4673 | 179145 | | 0.67 | 296 | 0.97 | 8014 | | | 1.71 | Si |
| SLV 8 | 896 | -1311 | 1416 | -73497 | | 0.17 | 275.81 | 0.87 | 6698 | | | 4.73 | Si |
| SLV 10 | 718 | -10236 | -3153 | 483037 | | 1.23 | 296 | 1.08 | 8954 | | | 2.84 | Si |
| SLV 10 | 896 | -552 | -521 | 103558 | | 0 | 0 | 0.83 | 0 | | | 0 | No, Vu<V |
| SLV 13 | 718 | -8439 | -522 | 532761 | | 1.18 | 254.61 | 1.07 | 7629 | | | 14.61 | Si |
| SLV 13 | 896 | -266 | 257 | 139955 | | 0 | 0 | 0.83 | 0 | | | 0 | No, Vu<V |
| SLV 14 | 718 | -8439 | -522 | 532761 | | 1.18 | 254.61 | 1.07 | 7629 | | | 14.61 | Si |
| SLV 14 | 896 | -266 | 257 | 139955 | | 0 | 0 | 0.83 | 0 | | | 0 | No, Vu<V |
| SLV 16 | 718 | -6999 | 1804 | 472468 | | 1.04 | 241.48 | 1.04 | 7034 | | | 3.9 | Si |
| SLV 16 | 896 | -385 | 858 | 106295 | | 0 | 0 | 0.83 | 0 | | | 0 | No, Vu<V |
| SLV 9 | 718 | -10236 | -3153 | 483037 | | 1.23 | 296 | 1.08 | 8954 | | | 2.84 | Si |
| SLV 9 | 896 | -552 | -521 | 103558 | | 0 | 0 | 0.83 | 0 | | | 0 | No, Vu<V |
| SLV 15 | 718 | -6999 | 1804 | 472468 | | 1.04 | 241.48 | 1.04 | 7034 | | | 3.9 | Si |
| SLV 15 | 896 | -385 | 858 | 106295 | | 0 | 0 | 0.83 | 0 | | | 0 | No, Vu<V |
| SLV 7 | 718 | -5536 | 4673 | 179145 | | 0.67 | 296 | 0.97 | 8014 | | | 1.71 | Si |
| SLV 7 | 896 | -1311 | 1416 | -73497 | | 0.17 | 275.81 | 0.87 | 6698 | | | 4.73 | Si |

### Verifica a pressoflessione fuori piano D.M. 17-01-18 (N.T.C.)

quota 807 Wa 0.05 denominatore 8 γM = 2

| Comb. | fd | Sa | σ0 | N | M | Mc | Coeff.s. | Verifica |
|---|---|---|---|---|---|---|---|---|
| SLV 12 | 14 | 0.41 | 0.41 | -3362 | 18645 | 45508 | 2.44 | Si |
| SLV 11 | 14 | 0.41 | 0.41 | -3362 | 18645 | 45508 | 2.44 | Si |
| SLV 16 | 14 | 0.41 | 0.42 | -3468 | 18645 | 46884 | 2.51 | Si |
| SLV 15 | 14 | 0.41 | 0.42 | -3468 | 18645 | 46884 | 2.51 | Si |
| SLV 7 | 14 | 0.41 | 0.42 | -3501 | 18645 | 47314 | 2.54 | Si |
| SLV 8 | 14 | 0.41 | 0.42 | -3501 | 18645 | 47314 | 2.54 | Si |
| SLV 14 | 14 | 0.41 | 0.45 | -3696 | 18645 | 49859 | 2.67 | Si |
| SLV 13 | 14 | 0.41 | 0.45 | -3696 | 18645 | 49859 | 2.67 | Si |
| SLV 3 | 14 | 0.41 | 0.47 | -3929 | 18645 | 52869 | 2.84 | Si |
| SLV 4 | 14 | 0.41 | 0.47 | -3929 | 18645 | 52869 | 2.84 | Si |

### Verifica dei meccanismi locali di collasso con analisi cinematica lineare

forza di aggancio al piano = 0 quota mezzeria = 807 Wa = 0.05 Ta = 0.0419

| Comb. | N top | N base | V orto | α0 | M* | e* | a0* | aLim | Verifica |
|---|---|---|---|---|---|---|---|---|---|
| SLV 6 | -916 | -10336 | 263 | 0 | 4.479 | 0.902 | 0 | 827.338 | No |
| SLV 10 | -552 | -10236 | 239 | 0 | 4.232 | 0.921 | 0 | 827.338 | No |
| SLV 9 | -552 | -10236 | 239 | 0 | 4.232 | 0.921 | 0 | 827.338 | No |
| SLV 5 | -916 | -10336 | 263 | 0 | 4.479 | 0.902 | 0 | 827.338 | No |
| SLV 11 | -948 | -5436 | -232 | 0.009 | 4.503 | 0.901 | 14.71 | 827.338 | No |
| SLV 12 | -948 | -5436 | -232 | 0.009 | 4.503 | 0.901 | 14.71 | 827.338 | No |
| SLV 8 | -1311 | -5536 | -208 | 0.021 | 4.792 | 0.893 | 34.856 | 827.338 | No |
| SLV 7 | -1311 | -5536 | -208 | 0.021 | 4.792 | 0.893 | 34.856 | 827.338 | No |
| SLV 2 | -1478 | -8772 | 127 | 0.046 | 4.933 | 0.891 | 75.477 | 567.981 | No |
| SLV 1 | -1478 | -8772 | 127 | 0.046 | 4.933 | 0.891 | 75.477 | 567.981 | No |

Tabella dei coefficienti di sicurezza minimi

| Stato limite | Coeff.s. | Comb. | Verifica |
|---|---|---|---|
| PF_SLU | 1.998 | SLU 39 | Si |
| V_SLU | 5.005 | SLU 76 | Si |
| PF_SLV | 0 | SLV 9 | No |
| V_SLV | 0 | SLV 9 | No |
| PFFP_SLV | 2.441 | SLV 11 | Si |
| R_SLV | 0 | SLV 5 | No |

## Maschio 113

Verifiche condotte secondo D.M. 17-01-18 (N.T.C.)

### Dati geometrici

| X ini. | Y ini. | X fin. | Y fin. | Quota i. | Quota.s | l | Sp. | h netta | h ini. | h fin. | a | a.s.,sx | a.s.,dx |
|---|---|---|---|---|---|---|---|---|---|---|---|---|---|
| -1375.3 | -35.4 | -1375.3 | -22.8 | L4 | L5 | 12.6 | 28 | 352 | 352 | 352 | | | |

### Caratteristiche del materiale

(Circolare 7 21-01-19 C8.5.I) Muratura in mattoni pieni e malta di calce LC2_Corti

| fb | fk | fvk0 | fmedio | τ0 | fv0 | μ | ϕ | fv,lim | E | G | FC |
|---|---|---|---|---|---|---|---|---|---|---|---|
| 60 | | | 34.5 | 0.9 | 2 | 0.58 | 0.77 | 3.25 | 32000 | 12800 | 1.2 |

### Verifica a pressoflessione nel piano secondo D.M. 17-01-18 NTC §7.8.2.2.1 in combinazioni non sismiche, γM = 3

| Comb. | Quota | N | M | σ0 | Mu | c.s. | Verifica |
|---|---|---|---|---|---|---|---|
| SLU 1 | 544 | -311 | -1299 | 0.88 | 1743 | 1.341 | Si |
| SLU 1 | 754 | -372 | -5437 | 0 | 0 | 0 | No, e>l/2 |
| SLU 58 | 544 | -424 | -953 | 1.2 | 2270 | 2.383 | Si |
| SLU 58 | 754 | -578 | -8642 | 0 | 0 | 0 | No, e>l/2 |
| SLU 61 | 544 | -425 | -408 | 1.21 | 2277 | 5.587 | Si |
| SLU 61 | 754 | -579 | -8798 | 0 | 0 | 0 | No, e>l/2 |
| SLU 57 | 544 | -443 | -899 | 1.26 | 2354 | 2.619 | Si |
| SLU 57 | 754 | -579 | -8651 | 0 | 0 | 0 | No, e>l/2 |
| SLU 59 | 544 | -437 | -870 | 1.24 | 2326 | 2.673 | Si |
| SLU 59 | 754 | -571 | -8544 | 0 | 0 | 0 | No, e>l/2 |
| SLU 55 | 544 | -436 | -756 | 1.24 | 2325 | 3.075 | Si |
| SLU 55 | 754 | -551 | -8281 | 0 | 0 | 0 | No, e>l/2 |
| SLU 56 | 544 | -430 | -981 | 1.22 | 2298 | 2.343 | Si |
| SLU 56 | 754 | -586 | -8749 | 0 | 0 | 0 | No, e>l/2 |
| SLU 60 | 544 | -413 | -490 | 1.17 | 2220 | 4.533 | Si |
| SLU 60 | 754 | -586 | -8896 | 0 | 0 | 0 | No, e>l/2 |
| SLU 54 | 544 | -434 | -839 | 1.23 | 2316 | 2.759 | Si |
| SLU 54 | 754 | -564 | -8453 | 0 | 0 | 0 | No, e>l/2 |
| SLU 53 | 544 | -421 | -921 | 1.2 | 2259 | 2.451 | Si |
| SLU 53 | 754 | -571 | -8551 | 0 | 0 | 0 | No, e>l/2 |

### Verifica a pressoflessione nel piano secondo D.M. 17-01-18 NTC §7.8.2.2.1 in combinazioni sismiche, γM = 2

| Comb. | Quota | N | M | σ0 | Mu | c.s. | Verifica |
|---|---|---|---|---|---|---|---|
| SLV 10 | 544 | 255 | -4750 | 0 | 0 | 0 | No, Trazione |
| SLV 10 | 754 | -758 | -10438 | 0 | 0 | 0 | No, e>l/2 |
| SLV 13 | 544 | -92 | -3842 | 0 | 0 | 0 | No, e>l/2 |
| SLV 13 | 754 | -604 | -8579 | 0 | 0 | 0 | No, e>l/2 |
| SLV 6 | 544 | 215 | -3670 | 0 | 0 | 0 | No, Trazione |
| SLV 6 | 754 | -702 | -9686 | 0 | 0 | 0 | No, e>l/2 |
| SLD 1 | 544 | -284 | -738 | 0.81 | 1669 | 2.261 | Si |
| SLD 1 | 754 | -417 | -6120 | 0 | 0 | 0 | No, e>l/2 |
| SLV 8 | 544 | -908 | 2523 | 2.58 | 4503 | 1.785 | Si |
| SLV 8 | 754 | -75 | -1863 | 0 | 0 | 0 | No, e>l/2 |
| SLV 7 | 544 | -908 | 2523 | 2.58 | 4503 | 1.785 | Si |
| SLV 7 | 754 | -75 | -1863 | 0 | 0 | 0 | No, e>l/2 |
| SLV 12 | 544 | -869 | 1443 | 2.47 | 4358 | 3.02 | Si |
| SLV 12 | 754 | -131 | -2615 | 0 | 0 | 0 | No, e>l/2 |
| SLV 14 | 544 | -92 | -3842 | 0 | 0 | 0 | No, e>l/2 |
| SLV 14 | 754 | -604 | -8579 | 0 | 0 | 0 | No, e>l/2 |
| SLV 11 | 544 | -869 | 1443 | 2.47 | 4358 | 3.02 | Si |
| SLV 11 | 754 | -131 | -2615 | 0 | 0 | 0 | No, e>l/2 |
| SLV 9 | 544 | 255 | -4750 | 0 | 0 | 0 | No, Trazione |
| SLV 9 | 754 | -758 | -10438 | 0 | 0 | 0 | No, e>l/2 |

### Verifica a taglio nel piano secondo D.M. 17-01-18 (N.T.C.) §7.8.2.2.2 con rottura per scorrimento in combinazioni non sismiche, γM = 3

| Comb. | Quota | N | V par | M | σ0 | σN | l' | fvd | Vt scorr. | Vt fess.diag. | Vt,lim | c.s. | Verifica |
|---|---|---|---|---|---|---|---|---|---|---|---|---|---|
| SLU 58 | 544 | -424 | -57 | -953 | | 1.25 | 12.11 | 0.72 | 245 | | | 4.32 | Si |
| SLU 58 | 754 | -578 | -403 | -8642 | | 0 | 0 | 0.56 | 0 | | | 0 | No, Vu<V |
| SLU 59 | 544 | -437 | -49 | -870 | | 1.24 | 12.57 | 0.72 | 254 | | | 5.15 | Si |
| SLU 59 | 754 | -571 | -395 | -8544 | | 0 | 0 | 0.56 | 0 | | | 0 | No, Vu<V |
| SLU 1 | 544 | -311 | -66 | -1299 | | 1.76 | 6.32 | 0.79 | 140 | | | 2.12 | Si |
| SLU 1 | 754 | -372 | -276 | -5437 | | 0 | 0 | 0.56 | 0 | | | 0 | No, Vu<V |
| SLU 53 | 544 | -421 | -55 | -921 | | 1.22 | 12.29 | 0.72 | 247 | | | 4.52 | Si |
| SLU 53 | 754 | -571 | -396 | -8551 | | 0 | 0 | 0.56 | 0 | | | 0 | No, Vu<V |
| SLU 56 | 544 | -430 | -58 | -981 | | 1.28 | 12.01 | 0.73 | 244 | | | 4.21 | Si |
| SLU 56 | 754 | -586 | -410 | -8749 | | 0 | 0 | 0.56 | 0 | | | 0 | No, Vu<V |
| SLU 61 | 544 | -425 | -29 | -408 | | 1.21 | 12.57 | 0.72 | 252 | | | 8.65 | Si |
| SLU 61 | 754 | -579 | -382 | -8798 | | 0 | 0 | 0.56 | 0 | | | 0 | No, Vu<V |
| SLU 57 | 544 | -443 | -51 | -899 | | 1.26 | 12.57 | 0.72 | 255 | | | 5.03 | Si |
| SLU 57 | 754 | -579 | -403 | -8651 | | 0 | 0 | 0.56 | 0 | | | 0 | No, Vu<V |
| SLU 54 | 544 | -434 | -47 | -839 | | 1.23 | 12.57 | 0.72 | 253 | | | 5.35 | Si |

| Comb. | Quota | N | V par | M | σ0 | σN | l' | fvd | Vt scorr. | Vt fess.diag. | Vt,lim | c.s. | Verifica |
|---|---|---|---|---|---|---|---|---|---|---|---|---|---|
| SLU 54 | 754 | -564 | -389 | -8453 | | 0 | 0 | 0.56 | 0 | | | 0 | No, Vu<V |
| SLU 60 | 544 | -413 | -36 | -490 | | 1.17 | 12.57 | 0.71 | 251 | | | 6.87 | Si |
| SLU 60 | 754 | -586 | -389 | -8896 | | 0 | 0 | 0.56 | 0 | | | 0 | No, Vu<V |
| SLU 55 | 544 | -436 | -41 | -756 | | 1.24 | 12.57 | 0.72 | 254 | | | 6.16 | Si |
| SLU 55 | 754 | -551 | -376 | -8281 | | 0 | 0 | 0.56 | 0 | | | 0 | No, Vu<V |

### Verifica a taglio nel piano secondo D.M. 17-01-18 (N.T.C.) §7.8.2.2.2 con rottura per scorrimento in combinazioni sismiche, γM = 2

| Comb. | Quota | N | V par | M | σ0 | σN | l' | fvd | Vt scorr. | Vt fess.diag. | Vt,lim | c.s. | Verifica |
|---|---|---|---|---|---|---|---|---|---|---|---|---|---|
| SLV 12 | 544 | -869 | 194 | 1443 | | 2.47 | 12.57 | 1.33 | 467 | | | 2.41 | Si |
| SLV 12 | 754 | -131 | 9 | -2615 | | 0 | 0 | 0.83 | 0 | | | 0 | No, Vu<V |
| SLV 11 | 544 | -869 | 194 | 1443 | | 2.47 | 12.57 | 1.33 | 467 | | | 2.41 | Si |
| SLV 11 | 754 | -131 | 9 | -2615 | | 0 | 0 | 0.83 | 0 | | | 0 | No, Vu<V |
| SLV 7 | 544 | -908 | 249 | 2523 | | 3.08 | 10.52 | 1.45 | 427 | | | 1.72 | Si |
| SLV 7 | 754 | -75 | 60 | -1863 | | 0 | 0 | 0.83 | 0 | | | 0 | No, Vu<V |
| SLV 6 | 544 | 215 | -314 | -3670 | | 0 | 0 | 0.83 | 0 | | | 0 | No, Vu<V |
| SLV 6 | 754 | -702 | -611 | -9686 | | 0 | 0 | 0.83 | 0 | | | 0 | No, Vu<V |
| SLV 13 | 544 | -92 | -235 | -3842 | | 0 | 0 | 0.83 | 0 | | | 0 | No, Vu<V |
| SLV 13 | 754 | -604 | -487 | -8579 | | 0 | 0 | 0.83 | 0 | | | 0 | No, Vu<V |
| SLV 14 | 544 | -92 | -235 | -3842 | | 0 | 0 | 0.83 | 0 | | | 0 | No, Vu<V |
| SLV 14 | 754 | -604 | -487 | -8579 | | 0 | 0 | 0.83 | 0 | | | 0 | No, Vu<V |
| SLD 1 | 544 | -284 | -57 | -738 | | 0.92 | 11.07 | 1.02 | 315 | | | 5.55 | Si |
| SLD 1 | 754 | -417 | -308 | -6120 | | 0 | 0 | 0.83 | 0 | | | 0 | No, Vu<V |
| SLV 9 | 544 | 255 | -369 | -4750 | | 0 | 0 | 0.83 | 0 | | | 0 | No, Vu<V |
| SLV 9 | 754 | -758 | -662 | -10438 | | 0 | 0 | 0.83 | 0 | | | 0 | No, Vu<V |
| SLV 8 | 544 | -908 | 249 | 2523 | | 3.08 | 10.52 | 1.45 | 427 | | | 1.72 | Si |
| SLV 8 | 754 | -75 | 60 | -1863 | | 0 | 0 | 0.83 | 0 | | | 0 | No, Vu<V |
| SLV 10 | 544 | 255 | -369 | -4750 | | 0 | 0 | 0.83 | 0 | | | 0 | No, Vu<V |
| SLV 10 | 754 | -758 | -662 | -10438 | | 0 | 0 | 0.83 | 0 | | | 0 | No, Vu<V |

### Verifica a pressoflessione fuori piano D.M. 17-01-18 (N.T.C.)

quota 720 Wa 0.05 denominatore 8 γM = 2

| Comb. | fd | Sa | σ0 | N | M | Mc | Coeff.s. | Verifica |
|---|---|---|---|---|---|---|---|---|
| SLV 8 | 14 | 0.39 | 0.81 | -285 | 1337 | 3720 | 2.78 | Si |
| SLV 7 | 14 | 0.39 | 0.81 | -285 | 1337 | 3720 | 2.78 | Si |
| SLV 12 | 14 | 0.39 | 1.14 | -402 | 1337 | 5105 | 3.82 | Si |
| SLV 11 | 14 | 0.39 | 1.14 | -402 | 1337 | 5105 | 3.82 | Si |
| SLV 3 | 14 | 0.39 | 1.54 | -541 | 1337 | 6617 | 4.95 | Si |
| SLV 4 | 14 | 0.39 | 1.54 | -541 | 1337 | 6617 | 4.95 | Si |
| SLV 1 | 14 | 0.39 | 2.49 | -878 | 1337 | 9781 | 7.32 | Si |
| SLV 2 | 14 | 0.39 | 2.49 | -878 | 1337 | 9781 | 7.32 | Si |
| SLV 16 | 14 | 0.39 | 2.65 | -933 | 1337 | 10229 | 7.65 | Si |
| SLV 15 | 14 | 0.39 | 2.65 | -933 | 1337 | 10229 | 7.65 | Si |

### Verifica dei meccanismi locali di collasso con analisi cinematica lineare

forza di aggancio al piano = 0 quota mezzeria = 720 Wa = 0.05 Ta = 0.0739

| Comb. | N top | N base | V orto | α0 | M* | e* | a0* | aLim | Verifica |
|---|---|---|---|---|---|---|---|---|---|
| SLV 1 | -419 | -224 | 394 | 0 | 0.604 | 0.923 | 0 | 839.377 | No |
| SLV 9 | -184 | 255 | 141 | 0 | 0 | 0 | 0 | 1522.194 | No, Trazione |
| SLV 4 | -518 | -561 | 261 | 0 | 0.704 | 0.932 | 0 | 839.377 | No |
| SLV 7 | -570 | -908 | -113 | 0 | 0.756 | 0.936 | 0 | 1522.194 | No |
| SLV 2 | -419 | -224 | 394 | 0 | 0.604 | 0.923 | 0 | 839.377 | No |
| SLV 10 | -184 | 255 | 141 | 0 | 0 | 0 | 0 | 1522.194 | No, Trazione |
| SLV 5 | -239 | 215 | 329 | 0 | 0 | 0 | 0 | 1522.194 | No, Trazione |
| SLV 3 | -518 | -561 | 261 | 0 | 0.704 | 0.932 | 0 | 839.377 | No |
| SLV 8 | -570 | -908 | -113 | 0 | 0.756 | 0.936 | 0 | 1522.194 | No |
| SLV 6 | -239 | 215 | 329 | 0 | 0 | 0 | 0 | 1522.194 | No, Trazione |

### Tabella dei coefficienti di sicurezza minimi

| Stato limite | Coeff.s. | Comb. | Verifica |
|---|---|---|---|
| PF_SLU | 0 | SLU 1 | No |
| V_SLU | 0 | SLU 1 | No |
| PF_SLV | 0 | SLV 10 | No |
| V_SLV | 0 | SLD 1 | No |
| PFFP_SLV | 2.783 | SLV 7 | Si |
| R_SLV | 0 | SLV 10 | No |

## Maschio 114

Verifiche condotte secondo D.M. 17-01-18 (N.T.C.)

### Dati geometrici

| X ini. | Y ini. | X fin. | Y fin. | Quota i. | Quota.s | l | Sp. | h netta | h ini. | h fin. | a | a.s.,sx | a.s.,dx |
|---|---|---|---|---|---|---|---|---|---|---|---|---|---|
| -1375.3 | 67.2 | -1375.3 | 104.6 | L4 | L5 | 37.4 | 28 | 352 | 352 | 352 | | | |

### Caratteristiche del materiale

(Circolare 7 21-01-19 C8.5.I) Muratura in mattoni pieni e malta di calce LC2_Corti

| fb | fk | fvk0 | fmedio | τ0 | fv0 | μ | ϕ | fv,lim | E | G | FC |
|---|---|---|---|---|---|---|---|---|---|---|---|
| 60 | | | 34.5 | 0.9 | 2 | 0.58 | 0.77 | 3.25 | 32000 | 12800 | 1.2 |

### Verifica a pressoflessione nel piano secondo D.M. 17-01-18 NTC §7.8.2.2.1 in combinazioni non sismiche, γM = 3

| Comb. | Quota | N | M | σ0 | Mu | c.s. | Verifica |
|---|---|---|---|---|---|---|---|
| SLU 81 | 544 | -7924 | -40597 | 7.56 | 10657 | 0.262 | No, M>Mu |
| SLU 81 | 754 | -3145 | 28867 | 3 | 37177 | 1.288 | Si |

| Comb. | Quota | N | M | σ0 | Mu | c.s. | Verifica |
|---|---|---|---|---|---|---|---|
| SLU 82 | 544 | -7869 | -39847 | 7.51 | 11533 | 0.289 | No, M>Mu |
| SLU 82 | 754 | -3178 | 28225 | 3.03 | 37338 | 1.323 | Si |
| SLU 79 | 544 | -7974 | -41422 | 7.61 | 9848 | 0.238 | No, M>Mu |
| SLU 79 | 754 | -3117 | 29996 | 2.97 | 37037 | 1.235 | Si |
| SLU 78 | 544 | -8040 | -41246 | 7.67 | 8760 | 0.212 | No, M>Mu |
| SLU 78 | 754 | -3209 | 29819 | 3.06 | 37481 | 1.257 | Si |
| SLU 77 | 544 | -8095 | -41996 | 7.72 | 7842 | 0.187 | No, M>Mu |
| SLU 77 | 754 | -3175 | 30460 | 3.03 | 37324 | 1.225 | Si |
| SLU 80 | 544 | -7919 | -40672 | 7.56 | 10737 | 0.264 | No, M>Mu |
| SLU 80 | 754 | -3150 | 29355 | 3.01 | 37203 | 1.267 | Si |
| SLU 83 | 544 | -8129 | -41678 | 7.76 | 7278 | 0.175 | No, M>Mu |
| SLU 83 | 754 | -3244 | 29739 | 3.1 | 37644 | 1.266 | Si |
| SLU 74 | 544 | -7890 | -40916 | 7.53 | 11190 | 0.273 | No, M>Mu |
| SLU 74 | 754 | -3076 | 29588 | 2.94 | 36827 | 1.245 | Si |
| SLU 75 | 544 | -7835 | -40166 | 7.48 | 12059 | 0.3 | No, M>Mu |
| SLU 75 | 754 | -3109 | 28946 | 2.97 | 36999 | 1.278 | Si |
| SLU 84 | 544 | -8074 | -40928 | 7.7 | 8205 | 0.2 | No, M>Mu |
| SLU 84 | 754 | -3277 | 29098 | 3.13 | 37791 | 1.299 | Si |

Verifica a pressoflessione nel piano secondo D.M. 17-01-18 NTC §7.8.2.2.1 in combinazioni sismiche, γM = 2

| Comb. | Quota | N | M | σ0 | Mu | c.s. | Verifica |
|---|---|---|---|---|---|---|---|
| SLV 13 | 544 | -6937 | -44834 | 6.62 | 59501 | 1.327 | Si |
| SLV 13 | 754 | -1444 | 46325 | 0 | 0 | 0 | No, e>l/2 |
| SLV 6 | 544 | -7031 | -58958 | 6.71 | 59341 | 1.006 | Si |
| SLV 6 | 754 | -451 | 32429 | 0 | 0 | 0 | No, e>l/2 |
| SLV 5 | 544 | -7031 | -58958 | 6.71 | 59341 | 1.006 | Si |
| SLV 5 | 754 | -451 | 32429 | 0 | 0 | 0 | No, e>l/2 |
| SLV 10 | 544 | -7681 | -63296 | 7.33 | 57530 | 0.909 | No, M>Mu |
| SLV 10 | 754 | -432 | 44802 | 0 | 0 | 0 | No, e>l/2 |
| SLD 6 | 544 | -5980 | -40956 | 5.71 | 59655 | 1.457 | Si |
| SLD 6 | 754 | -1295 | 25389 | 0 | 0 | 0 | No, e>l/2 |
| SLD 9 | 544 | -6255 | -42747 | 5.97 | 59885 | 1.401 | Si |
| SLD 9 | 754 | -1286 | 30701 | 0 | 0 | 0 | No, e>l/2 |
| SLD 10 | 544 | -6255 | -42747 | 5.97 | 59885 | 1.401 | Si |
| SLD 10 | 754 | -1286 | 30701 | 0 | 0 | 0 | No, e>l/2 |
| SLV 14 | 544 | -6937 | -44834 | 6.62 | 59501 | 1.327 | Si |
| SLV 14 | 754 | -1444 | 46325 | 0 | 0 | 0 | No, e>l/2 |
| SLD 5 | 544 | -5980 | -40956 | 5.71 | 59655 | 1.457 | Si |
| SLD 5 | 754 | -1295 | 25389 | 0 | 0 | 0 | No, e>l/2 |
| SLV 9 | 544 | -7681 | -63296 | 7.33 | 57530 | 0.909 | No, M>Mu |
| SLV 9 | 754 | -432 | 44802 | 0 | 0 | 0 | No, e>l/2 |

Verifica a taglio nel piano secondo D.M. 17-01-18 (N.T.C.) §7.8.2.2.2 con rottura per scorrimento in combinazioni non sismiche, γM = 3

| Comb. | Quota | N | V par | M | σ0 | σN | l' | fvd | Vt scorr. | Vt fess.diag. | Vt,lim | c.s. | Verifica |
|---|---|---|---|---|---|---|---|---|---|---|---|---|---|
| SLU 66 | 544 | -7050 | -669 | -37798 | | 6.73 | 37.43 | 1.08 | 1135 | | | 1.7 | Si |
| SLU 66 | 754 | -2548 | -674 | 28153 | | 3.96 | 23 | 1.08 | 697 | | | 1.04 | Si |
| SLU 67 | 544 | -6995 | -654 | -37048 | | 6.67 | 37.43 | 1.08 | 1135 | | | 1.74 | Si |
| SLU 67 | 754 | -2581 | -660 | 27512 | | 3.81 | 24.17 | 1.06 | 720 | | | 1.09 | Si |
| SLU 64 | 544 | -6724 | -639 | -36143 | | 6.42 | 37.43 | 1.08 | 1135 | | | 1.78 | Si |
| SLU 64 | 754 | -2390 | -644 | 26817 | | 3.8 | 22.49 | 1.06 | 668 | | | 1.04 | Si |
| SLU 72 | 544 | -7079 | -662 | -37554 | | 6.75 | 37.43 | 1.08 | 1135 | | | 1.71 | Si |
| SLU 72 | 754 | -2622 | -668 | 27920 | | 3.87 | 24.2 | 1.07 | 726 | | | 1.09 | Si |
| SLU 71 | 544 | -7134 | -677 | -38304 | | 6.81 | 37.43 | 1.08 | 1135 | | | 1.68 | Si |
| SLU 71 | 754 | -2589 | -682 | 28562 | | 4.01 | 23.04 | 1.08 | 699 | | | 1.03 | Si |
| SLU 29 | 544 | -6038 | -578 | -32597 | | 5.76 | 37.43 | 1.08 | 1135 | | | 1.96 | Si |
| SLU 29 | 754 | -2196 | -581 | 24329 | | 3.42 | 22.91 | 1.01 | 649 | | | 1.12 | Si |
| SLU 77 | 544 | -8095 | -739 | -41996 | | 7.72 | 37.43 | 1.08 | 1135 | | | 1.54 | Si |
| SLU 77 | 754 | -3175 | -741 | 30460 | | 4.14 | 27.37 | 1.08 | 830 | | | 1.12 | Si |
| SLU 69 | 544 | -7255 | -688 | -38878 | | 6.92 | 37.43 | 1.08 | 1135 | | | 1.65 | Si |
| SLU 69 | 754 | -2647 | -692 | 29025 | | 4.07 | 23.25 | 1.08 | 705 | | | 1.02 | Si |
| SLU 27 | 544 | -6159 | -589 | -33171 | | 5.88 | 37.43 | 1.08 | 1135 | | | 1.93 | Si |
| SLU 27 | 754 | -2254 | -592 | 24792 | | 3.48 | 23.15 | 1.02 | 661 | | | 1.12 | Si |
| SLU 70 | 544 | -7200 | -673 | -38128 | | 6.87 | 37.43 | 1.08 | 1135 | | | 1.69 | Si |
| SLU 70 | 754 | -2680 | -678 | 28384 | | 3.93 | 24.38 | 1.08 | 737 | | | 1.09 | Si |

Verifica a taglio nel piano secondo D.M. 17-01-18 (N.T.C.) §7.8.2.2.2 con rottura per scorrimento in combinazioni sismiche, γM = 2

| Comb. | Quota | N | V par | M | σ0 | σN | l' | fvd | Vt scorr. | Vt fess.diag. | Vt,lim | c.s. | Verifica |
|---|---|---|---|---|---|---|---|---|---|---|---|---|---|
| SLV 10 | 544 | -7681 | -1581 | -63296 | | 8.73 | 31.42 | 1.63 | 1430 | | | 0.9 | No, Vu<V |
| SLV 10 | 754 | -432 | -894 | 44802 | | 0 | 0 | 0.83 | 0 | | | 0 | No, Vu<V |
| SLV 13 | 544 | -6937 | -1108 | -44834 | | 6.74 | 36.76 | 1.63 | 1672 | | | 1.51 | Si |
| SLV 13 | 754 | -1444 | -733 | 46325 | | 0 | 0 | 0.83 | 0 | | | 0 | No, Vu<V |
| SLV 14 | 544 | -6937 | -1108 | -44834 | | 6.74 | 36.76 | 1.63 | 1672 | | | 1.51 | Si |
| SLV 14 | 754 | -1444 | -733 | 46325 | | 0 | 0 | 0.83 | 0 | | | 0 | No, Vu<V |
| SLV 6 | 544 | -7031 | -1386 | -58958 | | 8.1 | 30.99 | 1.63 | 1410 | | | 1.02 | Si |
| SLV 6 | 754 | -451 | -813 | 32429 | | 0 | 0 | 0.83 | 0 | | | 0 | No, Vu<V |
| SLV 5 | 544 | -7031 | -1386 | -58958 | | 8.1 | 30.99 | 1.63 | 1410 | | | 1.02 | Si |
| SLV 5 | 754 | -451 | -813 | 32429 | | 0 | 0 | 0.83 | 0 | | | 0 | No, Vu<V |
| SLD 9 | 544 | -6255 | -946 | -42747 | | 6.27 | 35.64 | 1.63 | 1622 | | | 1.71 | Si |
| SLD 9 | 754 | -1286 | -657 | 30701 | | 0 | 0 | 0.83 | 0 | | | 0 | No, Vu<V |
| SLD 6 | 544 | -5980 | -864 | -40956 | | 6 | 35.6 | 1.63 | 1620 | | | 1.87 | Si |
| SLD 6 | 754 | -1295 | -623 | 25389 | | 0 | 0 | 0.83 | 0 | | | 0 | No, Vu<V |
| SLV 9 | 544 | -7681 | -1581 | -63296 | | 8.73 | 31.42 | 1.63 | 1430 | | | 0.9 | No, Vu<V |
| SLV 9 | 754 | -432 | -894 | 44802 | | 0 | 0 | 0.83 | 0 | | | 0 | No, Vu<V |
| SLD 10 | 544 | -6255 | -946 | -42747 | | 6.27 | 35.64 | 1.63 | 1622 | | | 1.71 | Si |
| SLD 10 | 754 | -1286 | -657 | 30701 | | 0 | 0 | 0.83 | 0 | | | 0 | No, Vu<V |
| SLD 5 | 544 | -5980 | -864 | -40956 | | 6 | 35.6 | 1.63 | 1620 | | | 1.87 | Si |
| SLD 5 | 754 | -1295 | -623 | 25389 | | 0 | 0 | 0.83 | 0 | | | 0 | No, Vu<V |

### Verifica a pressoflessione fuori piano D.M. 17-01-18 (N.T.C.)

quota 720 Wa 0.05 denominatore 8 γM = 2

| Comb. | fd | Sa | σ0 | N | M | Mc | Coeff.s. | Verifica |
|---|---|---|---|---|---|---|---|---|
| SLV 5 | 14 | 0.39 | 1.14 | -1196 | 3980 | 15175 | 3.81 | Si |
| SLV 6 | 14 | 0.39 | 1.14 | -1196 | 3980 | 15175 | 3.81 | Si |
| SLV 10 | 14 | 0.39 | 1.44 | -1505 | 3980 | 18597 | 4.67 | Si |
| SLV 9 | 14 | 0.39 | 1.44 | -1505 | 3980 | 18597 | 4.67 | Si |
| SLV 2 | 14 | 0.39 | 1.54 | -1613 | 3980 | 19736 | 4.96 | Si |
| SLV 1 | 14 | 0.39 | 1.54 | -1613 | 3980 | 19736 | 4.96 | Si |
| SLV 4 | 14 | 0.39 | 2.18 | -2280 | 3980 | 26239 | 6.59 | Si |
| SLV 3 | 14 | 0.39 | 2.18 | -2280 | 3980 | 26239 | 6.59 | Si |
| SLV 14 | 14 | 0.39 | 2.52 | -2645 | 3980 | 29384 | 7.38 | Si |
| SLV 13 | 14 | 0.39 | 2.52 | -2645 | 3980 | 29384 | 7.38 | Si |

### Verifica dei meccanismi locali di collasso con analisi cinematica lineare

forza di aggancio al piano = 0 quota mezzeria = 720 Wa = 0.05 Ta = 0.0739

| Comb. | N top | N base | V orto | α0 | M* | e* | a0* | aLim | Verifica |
|---|---|---|---|---|---|---|---|---|---|
| SLV 6 | -1874 | -7031 | -15 | 0.039 | 2.432 | 0.94 | 60.289 | 1522.194 | No |
| SLV 5 | -1874 | -7031 | -15 | 0.039 | 2.432 | 0.94 | 60.289 | 1522.194 | No |
| SLV 11 | -988 | -3388 | 14 | 0.039 | 1.539 | 0.914 | 62.418 | 1522.194 | No |
| SLV 12 | -988 | -3388 | 14 | 0.039 | 1.539 | 0.914 | 62.418 | 1522.194 | No |
| SLV 10 | -2006 | -7681 | -7 | 0.042 | 2.565 | 0.943 | 65.229 | 1522.194 | No |
| SLV 9 | -2006 | -7681 | -7 | 0.042 | 2.565 | 0.943 | 65.229 | 1522.194 | No |
| SLV 7 | -857 | -2738 | 6 | 0.046 | 1.408 | 0.909 | 72.988 | 1522.194 | No |
| SLV 8 | -857 | -2738 | 6 | 0.046 | 1.408 | 0.909 | 72.988 | 1522.194 | No |
| SLV 1 | -1365 | -4770 | -16 | 0.038 | 1.917 | 0.927 | 59.366 | 839.377 | No |
| SLV 2 | -1365 | -4770 | -16 | 0.038 | 1.917 | 0.927 | 59.366 | 839.377 | No |

### Tabella dei coefficienti di sicurezza minimi

| Stato limite | Coeff.s. | Comb. | Verifica |
|---|---|---|---|
| PF_SLU | 0.175 | SLU 83 | No |
| V_SLU | 1.018 | SLU 69 | Si |
| PF_SLV | 0 | SLD 5 | No |
| V_SLV | 0 | SLD 5 | No |
| PFFP_SLV | 3.813 | SLV 5 | Si |
| R_SLV | 0.04 | SLV 5 | No |

## Maschio 115

Verifiche condotte secondo D.M. 17-01-18 (N.T.C.)

### Dati geometrici

| X ini. | Y ini. | X fin. | Y fin. | Quota i. | Quota.s | l | Sp. | h netta | h ini. | h fin. | a | a.s.,sx | a.s.,dx |
|---|---|---|---|---|---|---|---|---|---|---|---|---|---|
| -1975.8 | 666.1 | -1771.8 | 666.1 | L4 | L5 | 204 | 28 | 352 | 352 | 352 | | | |

### Caratteristiche del materiale

(Circolare 7 21-01-19 C8.5.I) Muratura in mattoni pieni e malta di calce LC2_Corti

| fb | fk | fvk0 | fmedio | τ0 | fv0 | μ | ϕ | fv,lim | E | G | FC |
|---|---|---|---|---|---|---|---|---|---|---|---|
| 60 | | | 34.5 | 0.9 | 2 | 0.58 | 0.77 | 3.25 | 32000 | 12800 | 1.2 |

### Verifica a pressoflessione nel piano secondo D.M. 17-01-18 NTC §7.8.2.2.1 in combinazioni non sismiche, γM = 3

| Comb. | Quota | N | M | σ0 | Mu | c.s. | Verifica |
|---|---|---|---|---|---|---|---|
| SLU 82 | 634 | -22089 | 9002 | 3.87 | 1183462 | 131.462 | Si |
| SLU 82 | 814 | -19380 | 215037 | 3.39 | 1153404 | 5.364 | Si |
| SLU 84 | 634 | -21198 | 24839 | 3.71 | 1177128 | 47.391 | Si |
| SLU 84 | 814 | -18488 | 197680 | 3.24 | 1136483 | 5.749 | Si |
| SLU 39 | 634 | -18740 | 4528 | 3.28 | 1141610 | 252.098 | Si |
| SLU 39 | 814 | -16642 | 187590 | 2.91 | 1090354 | 5.812 | Si |
| SLU 81 | 634 | -22061 | 10771 | 3.86 | 1183316 | 109.862 | Si |
| SLU 81 | 814 | -19352 | 213662 | 3.39 | 1152928 | 5.396 | Si |
| SLU 61 | 634 | -20185 | 9460 | 3.53 | 1165698 | 123.219 | Si |
| SLU 61 | 814 | -17502 | 192069 | 3.06 | 1113695 | 5.798 | Si |
| SLU 73 | 634 | -21032 | 12413 | 3.68 | 1175560 | 94.706 | Si |
| SLU 73 | 814 | -18322 | 200513 | 3.21 | 1132939 | 5.65 | Si |
| SLU 40 | 634 | -18768 | 2760 | 3.29 | 1142161 | 413.858 | Si |
| SLU 40 | 814 | -16670 | 188965 | 2.92 | 1091161 | 5.774 | Si |
| SLU 75 | 634 | -20718 | 27230 | 3.63 | 1172271 | 43.051 | Si |
| SLU 75 | 814 | -18008 | 189266 | 3.15 | 1125920 | 5.949 | Si |
| SLU 83 | 634 | -21170 | 26607 | 3.71 | 1176874 | 44.231 | Si |
| SLU 83 | 814 | -18461 | 196305 | 3.23 | 1135898 | 5.786 | Si |
| SLU 60 | 634 | -20157 | 11229 | 3.53 | 1165320 | 103.777 | Si |
| SLU 60 | 814 | -17474 | 190694 | 3.06 | 1112989 | 5.837 | Si |

### Verifica a pressoflessione nel piano secondo D.M. 17-01-18 NTC §7.8.2.2.1 in combinazioni sismiche, γM = 2

| Comb. | Quota | N | M | σ0 | Mu | c.s. | Verifica |
|---|---|---|---|---|---|---|---|
| SLV 16 | 634 | -8917 | 489674 | 1.56 | 793325 | 1.62 | Si |
| SLV 16 | 814 | -6703 | -227164 | 1.17 | 618073 | 2.721 | Si |
| SLV 2 | 634 | -20103 | -455485 | 3.52 | 1459874 | 3.205 | Si |
| SLV 2 | 814 | -18159 | 487184 | 3.18 | 1370324 | 2.813 | Si |
| SLV 1 | 634 | -20103 | -455485 | 3.52 | 1459874 | 3.205 | Si |
| SLV 1 | 814 | -18159 | 487184 | 3.18 | 1370324 | 2.813 | Si |
| SLV 9 | 634 | -7918 | 200926 | 1.39 | 716004 | 3.564 | Si |
| SLV 9 | 814 | -6080 | -33338 | 1.06 | 566131 | 16.982 | Si |
| SLV 10 | 634 | -7918 | 200926 | 1.39 | 716004 | 3.564 | Si |

| Comb. | Quota | N | M | σ0 | Mu | c.s. | Verifica |
|---|---|---|---|---|---|---|---|
| SLV 10 | 814 | -6080 | -33338 | 1.06 | 566131 | 16.982 | Si |
| SLV 14 | 634 | -6212 | 512825 | 1.09 | 577225 | 1.126 | Si |
| SLV 14 | 814 | -4153 | -258097 | 0.73 | 398407 | 1.544 | Si |
| SLV 15 | 634 | -8917 | 489674 | 1.56 | 793325 | 1.62 | Si |
| SLV 15 | 814 | -6703 | -227164 | 1.17 | 618073 | 2.721 | Si |
| SLV 3 | 634 | -22808 | -478636 | 3.99 | 1566149 | 3.272 | Si |
| SLV 3 | 814 | -20710 | 518117 | 3.63 | 1485583 | 2.867 | Si |
| SLV 13 | 634 | -6212 | 512825 | 1.09 | 577225 | 1.126 | Si |
| SLV 13 | 814 | -4153 | -258097 | 0.73 | 398407 | 1.544 | Si |
| SLV 4 | 634 | -22808 | -478636 | 3.99 | 1566149 | 3.272 | Si |
| SLV 4 | 814 | -20710 | 518117 | 3.63 | 1485583 | 2.867 | Si |

Verifica a taglio nel piano secondo D.M. 17-01-18 (N.T.C.) §7.8.2.2.2 con rottura per scorrimento in combinazioni non sismiche, γM = 3

| Comb. | Quota | N | V par | M | σ0 | σN | l' | fvd | Vt scorr. | Vt fess.diag. | Vt,lim | c.s. | Verifica |
|---|---|---|---|---|---|---|---|---|---|---|---|---|---|
| SLU 40 | 634 | -18768 | -1041 | 2760 | | 3.29 | 204 | 0.99 | 5676 | | | 5.45 | Si |
| SLU 40 | 814 | -16670 | -1041 | 188965 | | 2.92 | 204 | 0.94 | 5396 | | | 5.18 | Si |
| SLU 73 | 634 | -21032 | -1054 | 12413 | | 3.68 | 204 | 1.05 | 5978 | | | 5.67 | Si |
| SLU 73 | 814 | -18322 | -1054 | 200513 | | 3.21 | 204 | 0.98 | 5616 | | | 5.33 | Si |
| SLU 39 | 634 | -18740 | -1024 | 4528 | | 3.28 | 204 | 0.99 | 5672 | | | 5.54 | Si |
| SLU 39 | 814 | -16642 | -1024 | 187590 | | 2.91 | 204 | 0.94 | 5392 | | | 5.27 | Si |
| SLU 19 | 634 | -16863 | -911 | 3218 | | 2.95 | 204 | 0.95 | 5422 | | | 5.95 | Si |
| SLU 19 | 814 | -14792 | -911 | 165998 | | 2.59 | 204 | 0.9 | 5146 | | | 5.65 | Si |
| SLU 82 | 634 | -22089 | -1154 | 9002 | | 3.87 | 204 | 1.07 | 6119 | | | 5.3 | Si |
| SLU 82 | 814 | -19380 | -1154 | 215037 | | 3.39 | 204 | 1.01 | 5757 | | | 4.99 | Si |
| SLU 81 | 634 | -22061 | -1136 | 10771 | | 3.86 | 204 | 1.07 | 6115 | | | 5.38 | Si |
| SLU 81 | 814 | -19352 | -1136 | 213662 | | 3.39 | 204 | 1.01 | 5754 | | | 5.06 | Si |
| SLU 60 | 634 | -20157 | -1006 | 11229 | | 3.53 | 204 | 1.03 | 5861 | | | 5.82 | Si |
| SLU 60 | 814 | -17474 | -1006 | 190694 | | 3.06 | 204 | 0.96 | 5503 | | | 5.47 | Si |
| SLU 61 | 634 | -20185 | -1024 | 9460 | | 3.53 | 204 | 1.03 | 5865 | | | 5.73 | Si |
| SLU 61 | 814 | -17502 | -1024 | 192069 | | 3.06 | 204 | 0.96 | 5507 | | | 5.38 | Si |
| SLU 31 | 634 | -17710 | -942 | 6170 | | 3.1 | 204 | 0.97 | 5535 | | | 5.88 | Si |
| SLU 31 | 814 | -15613 | -942 | 174442 | | 2.73 | 204 | 0.92 | 5255 | | | 5.58 | Si |
| SLU 18 | 634 | -16835 | -894 | 4987 | | 2.95 | 204 | 0.95 | 5418 | | | 6.06 | Si |
| SLU 18 | 814 | -14765 | -894 | 164623 | | 2.58 | 204 | 0.9 | 5142 | | | 5.75 | Si |

Verifica a taglio nel piano secondo D.M. 17-01-18 (N.T.C.) §7.8.2.2.2 con rottura per scorrimento in combinazioni sismiche, γM = 2

| Comb. | Quota | N | V par | M | σ0 | σN | l' | fvd | Vt scorr. | Vt fess.diag. | Vt,lim | c.s. | Verifica |
|---|---|---|---|---|---|---|---|---|---|---|---|---|---|
| SLV 15 | 634 | -8917 | 4540 | 489674 | | 2.25 | 141.26 | 1.28 | 5079 | | | 1.12 | Si |
| SLV 15 | 814 | -6703 | 4337 | -227164 | | 1.17 | 204 | 1.07 | 6101 | | | 1.41 | Si |
| SLV 1 | 634 | -20103 | -5808 | -455485 | | 3.52 | 204 | 1.54 | 8781 | | | 1.51 | Si |
| SLV 1 | 814 | -18159 | -5606 | 487184 | | 3.18 | 204 | 1.47 | 8392 | | | 1.5 | Si |
| SLV 14 | 634 | -6212 | 3855 | 512825 | | 3.8 | 58.34 | 1.59 | 2604 | | | 0.68 | No, Vu<V |
| SLV 14 | 814 | -4153 | 3625 | -258097 | | 1.24 | 119.56 | 1.08 | 3620 | | | 1 | No, Vu<V |
| SLV 3 | 634 | -22808 | -5124 | -478636 | | 3.99 | 204 | 1.63 | 9282 | | | 1.81 | Si |
| SLV 3 | 814 | -20710 | -4893 | 518117 | | 3.63 | 204 | 1.56 | 8902 | | | 1.82 | Si |
| SLV 4 | 634 | -22808 | -5124 | -478636 | | 3.99 | 204 | 1.63 | 9282 | | | 1.81 | Si |
| SLV 4 | 814 | -20710 | -4893 | 518117 | | 3.63 | 204 | 1.56 | 8902 | | | 1.82 | Si |
| SLV 13 | 634 | -6212 | 3855 | 512825 | | 3.8 | 58.34 | 1.59 | 2604 | | | 0.68 | No, Vu<V |
| SLV 13 | 814 | -4153 | 3625 | -258097 | | 1.24 | 119.56 | 1.08 | 3620 | | | 1 | No, Vu<V |
| SLV 2 | 634 | -20103 | -5808 | -455485 | | 3.52 | 204 | 1.54 | 8781 | | | 1.51 | Si |
| SLV 2 | 814 | -18159 | -5606 | 487184 | | 3.18 | 204 | 1.47 | 8392 | | | 1.5 | Si |
| SLV 6 | 634 | -12085 | -3225 | -89567 | | 2.12 | 204 | 1.26 | 7177 | | | 2.23 | Si |
| SLV 6 | 814 | -10282 | -3206 | 190247 | | 1.8 | 204 | 1.19 | 6816 | | | 2.13 | Si |
| SLV 5 | 634 | -12085 | -3225 | -89567 | | 2.12 | 204 | 1.26 | 7177 | | | 2.23 | Si |
| SLV 5 | 814 | -10282 | -3206 | 190247 | | 1.8 | 204 | 1.19 | 6816 | | | 2.13 | Si |
| SLV 16 | 634 | -8917 | 4540 | 489674 | | 2.25 | 141.26 | 1.28 | 5079 | | | 1.12 | Si |
| SLV 16 | 814 | -6703 | 4337 | -227164 | | 1.17 | 204 | 1.07 | 6101 | | | 1.41 | Si |

Verifica a pressoflessione fuori piano D.M. 17-01-18 (N.T.C.)

quota 720 Wa 0.05 denominatore 8 γM = 2

| Comb. | fd | Sa | σ0 | N | M | Mc | Coeff.s. | Verifica |
|---|---|---|---|---|---|---|---|---|
| SLV 13 | 14 | 0.39 | 0.95 | -5400 | 21200 | 69751 | 3.29 | Si |
| SLV 14 | 14 | 0.39 | 0.95 | -5400 | 21200 | 69751 | 3.29 | Si |
| SLV 10 | 14 | 0.39 | 1.28 | -7323 | 21200 | 91766 | 4.33 | Si |
| SLV 9 | 14 | 0.39 | 1.28 | -7323 | 21200 | 91766 | 4.33 | Si |
| SLV 16 | 14 | 0.39 | 1.39 | -7934 | 21200 | 98453 | 4.64 | Si |
| SLV 15 | 14 | 0.39 | 1.39 | -7934 | 21200 | 98453 | 4.64 | Si |
| SLV 5 | 14 | 0.39 | 2.01 | -11506 | 21200 | 134526 | 6.35 | Si |
| SLV 6 | 14 | 0.39 | 2.01 | -11506 | 21200 | 134526 | 6.35 | Si |
| SLV 11 | 14 | 0.39 | 2.76 | -15771 | 21200 | 170900 | 8.06 | Si |
| SLV 12 | 14 | 0.39 | 2.76 | -15771 | 21200 | 170900 | 8.06 | Si |

Verifica dei meccanismi locali di collasso con analisi cinematica lineare

forza di aggancio al piano = 0 quota mezzeria = 720 Wa = 0.05 Ta = 0.0739

| Comb. | N top | N base | V orto | α0 | M* | e* | a0* | aLim | Verifica |
|---|---|---|---|---|---|---|---|---|---|
| SLV 9 | -5034 | -6468 | 262 | 0.012 | 8.039 | 0.911 | 19.062 | 1522.194 | No |
| SLV 10 | -5034 | -6468 | 262 | 0.012 | 8.039 | 0.911 | 19.062 | 1522.194 | No |
| SLV 6 | -7295 | -12477 | 240 | 0.021 | 10.305 | 0.926 | 33.4 | 1522.194 | No |
| SLV 5 | -7295 | -12477 | 240 | 0.021 | 10.305 | 0.926 | 33.4 | 1522.194 | No |
| SLV 12 | -12876 | -16027 | -237 | 0.029 | 15.953 | 0.949 | 43.695 | 1522.194 | No |
| SLV 11 | -12876 | -16027 | -237 | 0.029 | 15.953 | 0.949 | 43.695 | 1522.194 | No |
| SLV 8 | -15137 | -22037 | -259 | 0.029 | 18.25 | 0.954 | 43.736 | 1522.194 | No |
| SLV 7 | -15137 | -22037 | -259 | 0.029 | 18.25 | 0.954 | 43.736 | 1522.194 | No |
| SLV 14 | -5140 | -2802 | 113 | 0.034 | 8.145 | 0.912 | 53.903 | 839.377 | No |
| SLV 13 | -5140 | -2802 | 113 | 0.034 | 8.145 | 0.912 | 53.903 | 839.377 | No |

Tabella dei coefficienti di sicurezza minimi

| Stato limite | Coeff.s. | Comb. | Verifica |
|---|---|---|---|
| PF_SLU | 5.364 | SLU 82 | Si |
| V_SLU | 4.99 | SLU 82 | Si |
| PF_SLV | 1.126 | SLV 13 | Si |
| V_SLV | 0.675 | SLV 13 | No |
| PFFP_SLV | 3.29 | SLV 13 | Si |
| R_SLV | 0.013 | SLV 9 | No |

## Maschio 116

Verifiche condotte secondo D.M. 17-01-18 (N.T.C.)

### Dati geometrici

| X ini. | Y ini. | X fin. | Y fin. | Quota i. | Quota.s | l | Sp. | h netta | h ini. | h fin. | a | a.s.,sx | a.s.,dx |
|---|---|---|---|---|---|---|---|---|---|---|---|---|---|
| -1681.8 | 666.1 | -1283.8 | 666.1 | L4 | L5 | 398 | 28 | 352 | 352 | 352 | | | |

### Caratteristiche del materiale

(Circolare 7 21-01-19 C8.5.I) Muratura in mattoni pieni e malta di calce LC2_Corti

| fb | fk | fvk0 | fmedio | τ0 | fv0 | μ | ϕ | fv,lim | E | G | FC |
|---|---|---|---|---|---|---|---|---|---|---|---|
| 60 | | | 34.5 | 0.9 | 2 | 0.58 | 0.77 | 3.25 | 32000 | 12800 | 1.2 |

### Verifica a pressoflessione nel piano secondo D.M. 17-01-18 NTC §7.8.2.2.1 in combinazioni non sismiche, γM = 3

| Comb. | Quota | N | M | σ0 | Mu | c.s. | Verifica |
|---|---|---|---|---|---|---|---|
| SLU 61 | 634 | -41229 | -391815 | 3.7 | 4478238 | 11.429 | Si |
| SLU 61 | 814 | -36144 | 148526 | 3.24 | 4328800 | 29.145 | Si |
| SLU 73 | 634 | -43587 | -395733 | 3.91 | 4509052 | 11.394 | Si |
| SLU 73 | 814 | -38449 | 171358 | 3.45 | 4410605 | 25.739 | Si |
| SLU 75 | 634 | -44367 | -356661 | 3.98 | 4513876 | 12.656 | Si |
| SLU 75 | 814 | -39229 | 202413 | 3.52 | 4432988 | 21.901 | Si |
| SLU 84 | 634 | -45614 | -365208 | 4.09 | 4516053 | 12.366 | Si |
| SLU 84 | 814 | -40476 | 215115 | 3.63 | 4463256 | 20.748 | Si |
| SLU 40 | 634 | -39038 | -352396 | 3.5 | 4427748 | 12.565 | Si |
| SLU 40 | 814 | -35060 | 164246 | 3.15 | 4282281 | 26.072 | Si |
| SLU 82 | 634 | -45724 | -417167 | 4.1 | 4515917 | 10.825 | Si |
| SLU 82 | 814 | -40586 | 181606 | 3.64 | 4465600 | 24.589 | Si |
| SLU 52 | 634 | -39093 | -370382 | 3.51 | 4429268 | 11.959 | Si |
| SLU 52 | 814 | -34007 | 138277 | 3.05 | 4232191 | 30.607 | Si |
| SLU 81 | 634 | -45725 | -413838 | 4.1 | 4515916 | 10.912 | Si |
| SLU 81 | 814 | -40587 | 181194 | 3.64 | 4465620 | 24.646 | Si |
| SLU 60 | 634 | -41230 | -388487 | 3.7 | 4478255 | 11.527 | Si |
| SLU 60 | 814 | -36145 | 148113 | 3.24 | 4328837 | 29.226 | Si |
| SLU 83 | 634 | -45615 | -361880 | 4.09 | 4516052 | 12.479 | Si |
| SLU 83 | 814 | -40477 | 214702 | 3.63 | 4463276 | 20.788 | Si |

### Verifica a pressoflessione nel piano secondo D.M. 17-01-18 NTC §7.8.2.2.1 in combinazioni sismiche, γM = 2

| Comb. | Quota | N | M | σ0 | Mu | c.s. | Verifica |
|---|---|---|---|---|---|---|---|
| SLV 2 | 634 | -31121 | -1463564 | 2.79 | 4777610 | 3.264 | Si |
| SLV 2 | 814 | -27692 | 1078658 | 2.48 | 4389946 | 4.07 | Si |
| SLV 14 | 634 | -26111 | 958154 | 2.34 | 4199674 | 4.383 | Si |
| SLV 14 | 814 | -22686 | -715204 | 2.04 | 3762430 | 5.261 | Si |
| SLD 1 | 634 | -30585 | -780804 | 2.74 | 4719260 | 6.044 | Si |
| SLD 1 | 814 | -26847 | 526704 | 2.41 | 4289188 | 8.143 | Si |
| SLV 4 | 634 | -34154 | -1493928 | 3.06 | 5091843 | 3.408 | Si |
| SLV 4 | 814 | -29697 | 939488 | 2.66 | 4620781 | 4.918 | Si |
| SLD 2 | 634 | -30585 | -780804 | 2.74 | 4719260 | 6.044 | Si |
| SLD 2 | 814 | -26847 | 526704 | 2.41 | 4289188 | 8.143 | Si |
| SLV 13 | 634 | -26111 | 958154 | 2.34 | 4199674 | 4.383 | Si |
| SLV 13 | 814 | -22686 | -715204 | 2.04 | 3762430 | 5.261 | Si |
| SLV 16 | 634 | -29144 | 927790 | 2.62 | 4558321 | 4.913 | Si |
| SLV 16 | 814 | -24691 | -854375 | 2.22 | 4022598 | 4.708 | Si |
| SLV 15 | 634 | -29144 | 927790 | 2.62 | 4558321 | 4.913 | Si |
| SLV 15 | 814 | -24691 | -854375 | 2.22 | 4022598 | 4.708 | Si |
| SLV 3 | 634 | -34154 | -1493928 | 3.06 | 5091843 | 3.408 | Si |
| SLV 3 | 814 | -29697 | 939488 | 2.66 | 4620781 | 4.918 | Si |
| SLV 1 | 634 | -31121 | -1463564 | 2.79 | 4777610 | 3.264 | Si |
| SLV 1 | 814 | -27692 | 1078658 | 2.48 | 4389946 | 4.07 | Si |

### Verifica a taglio nel piano secondo D.M. 17-01-18 (N.T.C.) §7.8.2.2.2 con rottura per scorrimento in combinazioni non sismiche, γM = 3

| Comb. | Quota | N | V par | M | σ0 | σN | l' | fvd | Vt scorr. | Vt fess.diag. | Vt,lim | c.s. | Verifica |
|---|---|---|---|---|---|---|---|---|---|---|---|---|---|
| SLU 60 | 634 | -41230 | -2846 | -388487 | | 3.7 | 398 | 1.05 | 11688 | | | 4.11 | Si |
| SLU 60 | 814 | -36145 | -2846 | 148113 | | 3.24 | 398 | 0.99 | 11010 | | | 3.87 | Si |
| SLU 83 | 634 | -45615 | -3068 | -361880 | | 4.09 | 398 | 1.08 | 12073 | | | 3.93 | Si |
| SLU 83 | 814 | -40477 | -3068 | 214702 | | 3.63 | 398 | 1.04 | 11588 | | | 3.78 | Si |
| SLU 82 | 634 | -45724 | -3192 | -417167 | | 4.1 | 398 | 1.08 | 12073 | | | 3.78 | Si |
| SLU 82 | 814 | -40586 | -3192 | 181606 | | 3.64 | 398 | 1.04 | 11603 | | | 3.64 | Si |
| SLU 84 | 634 | -45614 | -3089 | -365208 | | 4.09 | 398 | 1.08 | 12073 | | | 3.91 | Si |
| SLU 84 | 814 | -40476 | -3089 | 215115 | | 3.63 | 398 | 1.04 | 11588 | | | 3.75 | Si |
| SLU 73 | 634 | -43587 | -3016 | -395733 | | 3.91 | 398 | 1.08 | 12003 | | | 3.98 | Si |
| SLU 73 | 814 | -38449 | -3016 | 171358 | | 3.45 | 398 | 1.02 | 11318 | | | 3.75 | Si |
| SLU 74 | 634 | -44368 | -2950 | -353333 | | 3.98 | 398 | 1.08 | 12073 | | | 4.09 | Si |
| SLU 74 | 814 | -39230 | -2950 | 202001 | | 3.52 | 398 | 1.02 | 11422 | | | 3.87 | Si |
| SLU 75 | 634 | -44367 | -2971 | -356661 | | 3.98 | 398 | 1.08 | 12073 | | | 4.06 | Si |
| SLU 75 | 814 | -39229 | -2971 | 202413 | | 3.52 | 398 | 1.02 | 11422 | | | 3.84 | Si |
| SLU 61 | 634 | -41229 | -2867 | -391815 | | 3.7 | 398 | 1.05 | 11688 | | | 4.08 | Si |

| Comb. | Quota | N | V par | M | σ0 | σN | l' | fvd | Vt scorr. | Vt fess.diag. | Vt,lim | c.s. | Verifica |
|---|---|---|---|---|---|---|---|---|---|---|---|---|---|
| SLU 61 | 814 | -36144 | -2867 | 148526 | | 3.24 | 398 | 0.99 | 11010 | | | 3.84 | Si |
| SLU 81 | 634 | -45725 | -3171 | -413838 | | 4.1 | 398 | 1.08 | 12073 | | | 3.81 | Si |
| SLU 81 | 814 | -40587 | -3171 | 181194 | | 3.64 | 398 | 1.04 | 11603 | | | 3.66 | Si |
| SLU 76 | 634 | -43477 | -2913 | -343775 | | 3.9 | 398 | 1.08 | 11988 | | | 4.12 | Si |
| SLU 76 | 814 | -38339 | -2913 | 204866 | | 3.44 | 398 | 1.01 | 11303 | | | 3.88 | Si |

### Verifica a taglio nel piano secondo D.M. 17-01-18 (N.T.C.) §7.8.2.2.2 con rottura per scorrimento in combinazioni sismiche, γM = 2

| Comb. | Quota | N | V par | M | σ0 | σN | l' | fvd | Vt scorr. | Vt fess.diag. | Vt,lim | c.s. | Verifica |
|---|---|---|---|---|---|---|---|---|---|---|---|---|---|
| SLV 4 | 634 | -34154 | -13801 | -1493928 | | 3.06 | 398 | 1.45 | 16117 | | | 1.17 | Si |
| SLV 4 | 814 | -29697 | -13068 | 939488 | | 2.66 | 398 | 1.37 | 15226 | | | 1.17 | Si |
| SLV 6 | 634 | -25829 | -6081 | -580537 | | 2.32 | 398 | 1.3 | 14452 | | | 2.38 | Si |
| SLV 6 | 814 | -23601 | -6921 | 613171 | | 2.12 | 398 | 1.26 | 14007 | | | 2.02 | Si |
| SLV 16 | 634 | -29144 | 10080 | 927790 | | 2.62 | 398 | 1.36 | 15115 | | | 1.5 | Si |
| SLV 16 | 814 | -24691 | 9931 | -854375 | | 2.22 | 398 | 1.28 | 14225 | | | 1.43 | Si |
| SLV 13 | 634 | -26111 | 9786 | 958154 | | 2.34 | 398 | 1.3 | 14509 | | | 1.48 | Si |
| SLV 13 | 814 | -22686 | 9053 | -715204 | | 2.04 | 398 | 1.24 | 13824 | | | 1.53 | Si |
| SLV 2 | 634 | -31121 | -14096 | -1463564 | | 2.79 | 398 | 1.39 | 15511 | | | 1.1 | Si |
| SLV 2 | 814 | -27692 | -13946 | 1078658 | | 2.48 | 398 | 1.33 | 14825 | | | 1.06 | Si |
| SLV 3 | 634 | -34154 | -13801 | -1493928 | | 3.06 | 398 | 1.45 | 16117 | | | 1.17 | Si |
| SLV 3 | 814 | -29697 | -13068 | 939488 | | 2.66 | 398 | 1.37 | 15226 | | | 1.17 | Si |
| SLV 15 | 634 | -29144 | 10080 | 927790 | | 2.62 | 398 | 1.36 | 15115 | | | 1.5 | Si |
| SLV 15 | 814 | -24691 | 9931 | -854375 | | 2.22 | 398 | 1.28 | 14225 | | | 1.43 | Si |
| SLV 14 | 634 | -26111 | 9786 | 958154 | | 2.34 | 398 | 1.3 | 14509 | | | 1.48 | Si |
| SLV 14 | 814 | -22686 | 9053 | -715204 | | 2.04 | 398 | 1.24 | 13824 | | | 1.53 | Si |
| SLV 1 | 634 | -31121 | -14096 | -1463564 | | 2.79 | 398 | 1.39 | 15511 | | | 1.1 | Si |
| SLV 1 | 814 | -27692 | -13946 | 1078658 | | 2.48 | 398 | 1.33 | 14825 | | | 1.06 | Si |
| SLV 5 | 634 | -25829 | -6081 | -580537 | | 2.32 | 398 | 1.3 | 14452 | | | 2.38 | Si |
| SLV 5 | 814 | -23601 | -6921 | 613171 | | 2.12 | 398 | 1.26 | 14007 | | | 2.02 | Si |

### Verifica a pressoflessione fuori piano D.M. 17-01-18 (N.T.C.)

quota 720 Wa 0.05 denominatore 8 γM = 2

| Comb. | fd | Sa | σ0 | N | M | Mc | Coeff.s. | Verifica |
|---|---|---|---|---|---|---|---|---|
| SLV 9 | 14 | 0.39 | 2.1 | -23362 | 41360 | 270955 | 6.55 | Si |
| SLV 10 | 14 | 0.39 | 2.1 | -23362 | 41360 | 270955 | 6.55 | Si |
| SLV 13 | 14 | 0.39 | 2.2 | -24467 | 41360 | 280987 | 6.79 | Si |
| SLV 14 | 14 | 0.39 | 2.2 | -24467 | 41360 | 280987 | 6.79 | Si |
| SLV 6 | 14 | 0.39 | 2.23 | -24887 | 41360 | 284739 | 6.88 | Si |
| SLV 5 | 14 | 0.39 | 2.23 | -24887 | 41360 | 284739 | 6.88 | Si |
| SLV 15 | 14 | 0.39 | 2.42 | -26938 | 41360 | 302526 | 7.31 | Si |
| SLV 16 | 14 | 0.39 | 2.42 | -26938 | 41360 | 302526 | 7.31 | Si |
| SLV 2 | 14 | 0.39 | 2.65 | -29550 | 41360 | 323918 | 7.83 | Si |
| SLV 1 | 14 | 0.39 | 2.65 | -29550 | 41360 | 323918 | 7.83 | Si |

### Verifica dei meccanismi locali di collasso con analisi cinematica lineare

forza di aggancio al piano = 0 quota mezzeria = 720 Wa = 0.05 Ta = 0.0739

| Comb. | N top | N base | V orto | α0 | M* | e* | a0* | aLim | Verifica |
|---|---|---|---|---|---|---|---|---|---|
| SLV 9 | -16941 | -26304 | 448 | 0.025 | 22.837 | 0.933 | 38.57 | 1522.194 | No |
| SLV 10 | -16941 | -26304 | 448 | 0.025 | 22.837 | 0.933 | 38.57 | 1522.194 | No |
| SLV 6 | -18058 | -27521 | 457 | 0.025 | 23.966 | 0.936 | 38.953 | 1522.194 | No |
| SLV 5 | -18058 | -27521 | 457 | 0.025 | 23.966 | 0.936 | 38.953 | 1522.194 | No |
| SLV 11 | -24143 | -31666 | -472 | 0.028 | 30.131 | 0.947 | 42.629 | 1522.194 | No |
| SLV 12 | -24143 | -31666 | -472 | 0.028 | 30.131 | 0.947 | 42.629 | 1522.194 | No |
| SLV 8 | -25261 | -32883 | -462 | 0.029 | 31.266 | 0.949 | 43.796 | 1522.194 | No |
| SLV 7 | -25261 | -32883 | -462 | 0.029 | 31.266 | 0.949 | 43.796 | 1522.194 | No |
| SLV 16 | -20318 | -28369 | -162 | 0.039 | 26.254 | 0.941 | 60.058 | 839.377 | No |
| SLV 15 | -20318 | -28369 | -162 | 0.039 | 26.254 | 0.941 | 60.058 | 839.377 | No |

### Tabella dei coefficienti di sicurezza minimi

| Stato limite | Coeff.s. | Comb. | Verifica |
|---|---|---|---|
| PF_SLU | 10.825 | SLU 82 | Si |
| V_SLU | 3.635 | SLU 82 | Si |
| PF_SLV | 3.264 | SLV 1 | Si |
| V_SLV | 1.063 | SLV 1 | Si |
| PFFP_SLV | 6.551 | SLV 9 | Si |
| R_SLV | 0.025 | SLV 9 | No |

## Maschio 117

Verifiche condotte secondo D.M. 17-01-18 (N.T.C.)

### Dati geometrici

| X ini. | Y ini. | X fin. | Y fin. | Quota i. | Quota.s | l | Sp. | h netta | h ini. | h fin. | a | a.s.,sx | a.s.,dx |
|---|---|---|---|---|---|---|---|---|---|---|---|---|---|
| -1193.8 | 666.1 | -795.8 | 666.1 | L4 | L5 | 398 | 28 | 352 | 352 | 352 | | | |

### Caratteristiche del materiale

(Circolare 7 21-01-19 C8.5.I) Muratura in mattoni pieni e malta di calce LC2_Corti

| fb | fk | fvk0 | fmedio | τ0 | fv0 | μ | ϕ | fv,lim | E | G | FC |
|---|---|---|---|---|---|---|---|---|---|---|---|
| 60 | | | 34.5 | 0.9 | 2 | 0.58 | 0.77 | 3.25 | 32000 | 12800 | 1.2 |

### Verifica a pressoflessione nel piano secondo D.M. 17-01-18 NTC §7.8.2.2.1 in combinazioni non sismiche, γM = 3

| Comb. | Quota | N | M | σ0 | Mu | c.s. | Verifica |
|---|---|---|---|---|---|---|---|
| SLU 79 | 634 | -41967 | 402684 | 3.77 | 4490494 | 11.151 | Si |
| SLU 79 | 814 | -37008 | -4839 | 3.32 | 4362188 | 901.459 | Si |

| Comb. | Quota | N | M | σ0 | Mu | c.s. | Verifica |
|---|---|---|---|---|---|---|---|
| SLU 38 | 634 | -35829 | 359840 | 3.22 | 4315829 | 11.994 | Si |
| SLU 38 | 814 | -31989 | -13702 | 2.87 | 4122532 | 300.881 | Si |
| SLU 35 | 634 | -36669 | 362365 | 3.29 | 4349506 | 12.003 | Si |
| SLU 35 | 814 | -32829 | -6581 | 2.95 | 4170361 | 633.74 | Si |
| SLU 78 | 634 | -42732 | 403060 | 3.83 | 4500698 | 11.166 | Si |
| SLU 78 | 814 | -37774 | 33 | 3.39 | 4389043 | 1000 | Si |
| SLU 80 | 634 | -41929 | 401610 | 3.76 | 4489931 | 11.18 | Si |
| SLU 80 | 814 | -36970 | -5963 | 3.32 | 4360815 | 731.252 | Si |
| SLU 77 | 634 | -42770 | 404135 | 3.84 | 4501130 | 11.138 | Si |
| SLU 77 | 814 | -37811 | 1157 | 3.39 | 4390286 | 1000 | Si |
| SLU 83 | 634 | -43457 | 385699 | 3.9 | 4507987 | 11.688 | Si |
| SLU 83 | 814 | -38498 | 19827 | 3.45 | 4412091 | 222.525 | Si |
| SLU 36 | 634 | -36632 | 361291 | 3.29 | 4348077 | 12.035 | Si |
| SLU 36 | 814 | -32792 | -7705 | 2.94 | 4168303 | 540.986 | Si |
| SLU 37 | 634 | -35866 | 360915 | 3.22 | 4317389 | 11.962 | Si |
| SLU 37 | 814 | -32026 | -12577 | 2.87 | 4124720 | 327.956 | Si |
| SLU 84 | 634 | -43420 | 384624 | 3.9 | 4507669 | 11.72 | Si |
| SLU 84 | 814 | -38461 | 18703 | 3.45 | 4410961 | 235.843 | Si |

Verifica a pressoflessione nel piano secondo D.M. 17-01-18 NTC §7.8.2.2.1 in combinazioni sismiche, γM = 2

| Comb. | Quota | N | M | σ0 | Mu | c.s. | Verifica |
|---|---|---|---|---|---|---|---|
| SLV 1 | 634 | -25493 | -1067051 | 2.29 | 4123363 | 3.864 | Si |
| SLV 1 | 814 | -21578 | 889356 | 1.94 | 3613613 | 4.063 | Si |
| SLV 2 | 634 | -25493 | -1067051 | 2.29 | 4123363 | 3.864 | Si |
| SLV 2 | 814 | -21578 | 889356 | 1.94 | 3613613 | 4.063 | Si |
| SLV 16 | 634 | -30812 | 1515921 | 2.76 | 4744104 | 3.13 | Si |
| SLV 16 | 814 | -27121 | -839704 | 2.43 | 4322085 | 5.147 | Si |
| SLV 4 | 634 | -24788 | -916943 | 2.22 | 4034778 | 4.4 | Si |
| SLV 4 | 814 | -20927 | 912641 | 1.88 | 3524495 | 3.862 | Si |
| SLV 12 | 634 | -27880 | 839544 | 2.5 | 4412141 | 5.255 | Si |
| SLV 12 | 814 | -24194 | -199217 | 2.17 | 3959083 | 19.873 | Si |
| SLV 13 | 634 | -31518 | 1365813 | 2.83 | 4820261 | 3.529 | Si |
| SLV 13 | 814 | -27772 | -862990 | 2.49 | 4399417 | 5.098 | Si |
| SLV 3 | 634 | -24788 | -916943 | 2.22 | 4034778 | 4.4 | Si |
| SLV 3 | 814 | -20927 | 912641 | 1.88 | 3524495 | 3.862 | Si |
| SLV 11 | 634 | -27880 | 839544 | 2.5 | 4412141 | 5.255 | Si |
| SLV 11 | 814 | -24194 | -199217 | 2.17 | 3959083 | 19.873 | Si |
| SLV 14 | 634 | -31518 | 1365813 | 2.83 | 4820261 | 3.529 | Si |
| SLV 14 | 814 | -27772 | -862990 | 2.49 | 4399417 | 5.098 | Si |
| SLV 15 | 634 | -30812 | 1515921 | 2.76 | 4744104 | 3.13 | Si |
| SLV 15 | 814 | -27121 | -839704 | 2.43 | 4322085 | 5.147 | Si |

Verifica a taglio nel piano secondo D.M. 17-01-18 (N.T.C.) §7.8.2.2.2 con rottura per scorrimento in combinazioni non sismiche, γM = 3

| Comb. | Quota | N | V par | M | σ0 | σN | l' | fvd | Vt scorr. | Vt fess.diag. | Vt,lim | c.s. | Verifica |
|---|---|---|---|---|---|---|---|---|---|---|---|---|---|
| SLU 72 | 634 | -37179 | 2099 | 359675 | | 3.34 | 398 | 1 | 11148 | | | 5.31 | Si |
| SLU 72 | 814 | -32220 | 2099 | -14653 | | 2.89 | 398 | 0.94 | 10487 | | | 5 | Si |
| SLU 37 | 634 | -35866 | 2090 | 360915 | | 3.22 | 398 | 0.98 | 10973 | | | 5.25 | Si |
| SLU 37 | 814 | -32026 | 2090 | -12577 | | 2.87 | 398 | 0.94 | 10461 | | | 5 | Si |
| SLU 69 | 634 | -38020 | 2074 | 362200 | | 3.41 | 398 | 1.01 | 11260 | | | 5.43 | Si |
| SLU 69 | 814 | -33061 | 2074 | -7532 | | 2.97 | 398 | 0.95 | 10599 | | | 5.11 | Si |
| SLU 78 | 634 | -42732 | 2259 | 403060 | | 3.83 | 398 | 1.07 | 11889 | | | 5.26 | Si |
| SLU 78 | 814 | -37774 | 2259 | 33 | | 3.39 | 398 | 1.01 | 11228 | | | 4.97 | Si |
| SLU 70 | 634 | -37982 | 2074 | 361125 | | 3.41 | 398 | 1.01 | 11255 | | | 5.43 | Si |
| SLU 70 | 814 | -33023 | 2074 | -8657 | | 2.96 | 398 | 0.95 | 10594 | | | 5.11 | Si |
| SLU 79 | 634 | -41967 | 2284 | 402684 | | 3.77 | 398 | 1.06 | 11787 | | | 5.16 | Si |
| SLU 79 | 814 | -37008 | 2284 | -4839 | | 3.32 | 398 | 1 | 11125 | | | 4.87 | Si |
| SLU 77 | 634 | -42770 | 2259 | 404135 | | 3.84 | 398 | 1.07 | 11894 | | | 5.27 | Si |
| SLU 77 | 814 | -37811 | 2259 | 1157 | | 3.39 | 398 | 1.01 | 11233 | | | 4.97 | Si |
| SLU 80 | 634 | -41929 | 2284 | 401610 | | 3.76 | 398 | 1.06 | 11782 | | | 5.16 | Si |
| SLU 80 | 814 | -36970 | 2284 | -5963 | | 3.32 | 398 | 1 | 11121 | | | 4.87 | Si |
| SLU 71 | 634 | -37216 | 2099 | 360749 | | 3.34 | 398 | 1 | 11153 | | | 5.31 | Si |
| SLU 71 | 814 | -32258 | 2099 | -13529 | | 2.89 | 398 | 0.94 | 10492 | | | 5 | Si |
| SLU 38 | 634 | -35829 | 2090 | 359840 | | 3.22 | 398 | 0.98 | 10968 | | | 5.25 | Si |
| SLU 38 | 814 | -31989 | 2090 | -13702 | | 2.87 | 398 | 0.94 | 10456 | | | 5 | Si |

Verifica a taglio nel piano secondo D.M. 17-01-18 (N.T.C.) §7.8.2.2.2 con rottura per scorrimento in combinazioni sismiche, γM = 2

| Comb. | Quota | N | V par | M | σ0 | σN | l' | fvd | Vt scorr. | Vt fess.diag. | Vt,lim | c.s. | Verifica |
|---|---|---|---|---|---|---|---|---|---|---|---|---|---|
| SLV 15 | 634 | -30812 | 12824 | 1515921 | | 2.76 | 398 | 1.39 | 15449 | | | 1.2 | Si |
| SLV 15 | 814 | -27121 | 12656 | -839704 | | 2.43 | 398 | 1.32 | 14711 | | | 1.16 | Si |
| SLV 4 | 634 | -24788 | -11198 | -916943 | | 2.22 | 398 | 1.28 | 14244 | | | 1.27 | Si |
| SLV 4 | 814 | -20927 | -10416 | 912641 | | 1.88 | 398 | 1.21 | 13472 | | | 1.29 | Si |
| SLD 14 | 634 | -29585 | 6409 | 712389 | | 2.65 | 398 | 1.36 | 15204 | | | 2.37 | Si |
| SLD 14 | 814 | -25809 | 6064 | -357222 | | 2.32 | 398 | 1.3 | 14448 | | | 2.38 | Si |
| SLD 13 | 634 | -29585 | 6409 | 712389 | | 2.65 | 398 | 1.36 | 15204 | | | 2.37 | Si |
| SLD 13 | 814 | -25809 | 6064 | -357222 | | 2.32 | 398 | 1.3 | 14448 | | | 2.38 | Si |
| SLV 3 | 634 | -24788 | -11198 | -916943 | | 2.22 | 398 | 1.28 | 14244 | | | 1.27 | Si |
| SLV 3 | 814 | -20927 | -10416 | 912641 | | 1.88 | 398 | 1.21 | 13472 | | | 1.29 | Si |
| SLV 1 | 634 | -25493 | -10576 | -1067051 | | 2.29 | 398 | 1.29 | 14385 | | | 1.36 | Si |
| SLV 1 | 814 | -21578 | -10408 | 889356 | | 1.94 | 398 | 1.22 | 13602 | | | 1.31 | Si |
| SLV 14 | 634 | -31518 | 13447 | 1365813 | | 2.83 | 398 | 1.4 | 15590 | | | 1.16 | Si |
| SLV 14 | 814 | -27772 | 12665 | -862990 | | 2.49 | 398 | 1.33 | 14841 | | | 1.17 | Si |
| SLV 16 | 634 | -30812 | 12824 | 1515921 | | 2.76 | 398 | 1.39 | 15449 | | | 1.2 | Si |
| SLV 16 | 814 | -27121 | 12656 | -839704 | | 2.43 | 398 | 1.32 | 14711 | | | 1.16 | Si |
| SLV 13 | 634 | -31518 | 13447 | 1365813 | | 2.83 | 398 | 1.4 | 15590 | | | 1.16 | Si |
| SLV 13 | 814 | -27772 | 12665 | -862990 | | 2.49 | 398 | 1.33 | 14841 | | | 1.17 | Si |
| SLV 2 | 634 | -25493 | -10576 | -1067051 | | 2.29 | 398 | 1.29 | 14385 | | | 1.36 | Si |
| SLV 2 | 814 | -21578 | -10408 | 889356 | | 1.94 | 398 | 1.22 | 13602 | | | 1.31 | Si |

### Verifica a pressoflessione fuori piano D.M. 17-01-18 (N.T.C.)

quota 720 Wa 0.05 denominatore 8 γM = 2

| Comb. | fd | Sa | σ0 | N | M | Mc | Coeff.s. | Verifica |
|---|---|---|---|---|---|---|---|---|
| SLV 4 | 14 | 0.39 | 2 | -22293 | 41360 | 261002 | 6.31 | Si |
| SLV 3 | 14 | 0.39 | 2 | -22293 | 41360 | 261002 | 6.31 | Si |
| SLV 7 | 14 | 0.39 | 2.07 | -23113 | 41360 | 268659 | 6.5 | Si |
| SLV 8 | 14 | 0.39 | 2.07 | -23113 | 41360 | 268659 | 6.5 | Si |
| SLV 1 | 14 | 0.39 | 2.11 | -23486 | 41360 | 272093 | 6.58 | Si |
| SLV 2 | 14 | 0.39 | 2.11 | -23486 | 41360 | 272093 | 6.58 | Si |
| SLV 11 | 14 | 0.39 | 2.24 | -25010 | 41360 | 285828 | 6.91 | Si |
| SLV 12 | 14 | 0.39 | 2.24 | -25010 | 41360 | 285828 | 6.91 | Si |
| SLV 5 | 14 | 0.39 | 2.43 | -27091 | 41360 | 303818 | 7.35 | Si |
| SLV 6 | 14 | 0.39 | 2.43 | -27091 | 41360 | 303818 | 7.35 | Si |

### Verifica dei meccanismi locali di collasso con analisi cinematica lineare

forza di aggancio al piano = 0 quota mezzeria = 720 Wa = 0.05 Ta = 0.0739

| Comb. | N top | N base | V orto | α0 | M* | e* | a0* | aLim | Verifica |
|---|---|---|---|---|---|---|---|---|---|
| SLV 9 | -23433 | -25700 | -37 | 0.044 | 29.412 | 0.946 | 66.988 | 1522.194 | No |
| SLV 10 | -23433 | -25700 | -37 | 0.044 | 29.412 | 0.946 | 66.988 | 1522.194 | No |
| SLV 5 | -22154 | -24202 | -32 | 0.044 | 28.114 | 0.944 | 67.719 | 1522.194 | No |
| SLV 6 | -22154 | -24202 | -32 | 0.044 | 28.114 | 0.944 | 67.719 | 1522.194 | No |
| SLV 11 | -19699 | -26722 | 44 | 0.044 | 25.627 | 0.939 | 67.924 | 1522.194 | No |
| SLV 12 | -19699 | -26722 | 44 | 0.044 | 25.627 | 0.939 | 67.924 | 1522.194 | No |
| SLV 8 | -18419 | -25224 | 49 | 0.044 | 24.332 | 0.937 | 68.156 | 1522.194 | No |
| SLV 7 | -18419 | -25224 | 49 | 0.044 | 24.332 | 0.937 | 68.156 | 1522.194 | No |
| SLV 13 | -23619 | -27805 | -14 | 0.044 | 29.6 | 0.946 | 68.221 | 839.377 | No |
| SLV 14 | -23619 | -27805 | -14 | 0.044 | 29.6 | 0.946 | 68.221 | 839.377 | No |

### Tabella dei coefficienti di sicurezza minimi

| Stato limite | Coeff.s. | Comb. | Verifica |
|---|---|---|---|
| PF_SLU | 11.138 | SLU 77 | Si |
| V_SLU | 4.869 | SLU 80 | Si |
| PF_SLV | 3.13 | SLV 15 | Si |
| V_SLV | 1.159 | SLV 13 | Si |
| PFFP_SLV | 6.311 | SLV 3 | Si |
| R_SLV | 0.044 | SLV 9 | No |

## Maschio 118

Verifiche condotte secondo D.M. 17-01-18 (N.T.C.)

### Dati geometrici

| X ini. | Y ini. | X fin. | Y fin. | Quota i. | Quota.s | l | Sp. | h netta | h ini. | h fin. | a | a.s.,sx | a.s.,dx |
|---|---|---|---|---|---|---|---|---|---|---|---|---|---|
| -705.8 | 666.1 | -501.8 | 666.1 | L4 | L5 | 204 | 28 | 352 | 352 | 352 | | | |

### Caratteristiche del materiale

(Circolare 7 21-01-19 C8.5.I) Muratura in mattoni pieni e malta di calce LC2_Corti

| fb | fk | fvk0 | fmedio | τ0 | fv0 | μ | ϕ | fv,lim | E | G | FC |
|---|---|---|---|---|---|---|---|---|---|---|---|
| 60 | | | 34.5 | 0.9 | 2 | 0.58 | 0.77 | 3.25 | 32000 | 12800 | 1.2 |

### Verifica a pressoflessione nel piano secondo D.M. 17-01-18 NTC §7.8.2.2.1 in combinazioni non sismiche, γM = 3

| Comb. | Quota | N | M | σ0 | Mu | c.s. | Verifica |
|---|---|---|---|---|---|---|---|
| SLU 82 | 634 | -25136 | 103317 | 4.4 | 1178810 | 11.41 | Si |
| SLU 82 | 814 | -22549 | -357325 | 3.95 | 1185366 | 3.317 | Si |
| SLU 73 | 634 | -23883 | 93210 | 4.18 | 1185650 | 12.72 | Si |
| SLU 73 | 814 | -21296 | -334365 | 3.73 | 1177991 | 3.523 | Si |
| SLU 84 | 634 | -25373 | 97794 | 4.44 | 1176740 | 12.033 | Si |
| SLU 84 | 814 | -22786 | -349786 | 3.99 | 1185987 | 3.391 | Si |
| SLU 81 | 634 | -25166 | 102223 | 4.41 | 1178563 | 11.529 | Si |
| SLU 81 | 814 | -22578 | -356435 | 3.95 | 1185458 | 3.326 | Si |
| SLU 77 | 634 | -24899 | 82686 | 4.36 | 1180633 | 14.278 | Si |
| SLU 77 | 814 | -22311 | -325773 | 3.91 | 1184498 | 3.636 | Si |
| SLU 78 | 634 | -24869 | 83780 | 4.35 | 1180846 | 14.095 | Si |
| SLU 78 | 814 | -22281 | -326663 | 3.9 | 1184371 | 3.626 | Si |
| SLU 83 | 634 | -25403 | 96700 | 4.45 | 1176461 | 12.166 | Si |
| SLU 83 | 814 | -22816 | -348896 | 3.99 | 1186048 | 3.399 | Si |
| SLU 76 | 634 | -24120 | 87687 | 4.22 | 1184883 | 13.513 | Si |
| SLU 76 | 814 | -21533 | -326827 | 3.77 | 1179916 | 3.61 | Si |
| SLU 74 | 634 | -24662 | 88209 | 4.32 | 1182210 | 13.402 | Si |
| SLU 74 | 814 | -22074 | -333312 | 3.86 | 1183383 | 3.55 | Si |
| SLU 75 | 634 | -24632 | 89303 | 4.31 | 1182391 | 13.24 | Si |
| SLU 75 | 814 | -22044 | -334202 | 3.86 | 1183225 | 3.54 | Si |

### Verifica a pressoflessione nel piano secondo D.M. 17-01-18 NTC §7.8.2.2.1 in combinazioni sismiche, γM = 2

| Comb. | Quota | N | M | σ0 | Mu | c.s. | Verifica |
|---|---|---|---|---|---|---|---|
| SLV 13 | 634 | -23452 | 525954 | 4.11 | 1588311 | 3.02 | Si |
| SLV 13 | 814 | -21477 | -635683 | 3.76 | 1516557 | 2.386 | Si |
| SLV 1 | 634 | -9014 | -340382 | 1.58 | 800649 | 2.352 | Si |
| SLV 1 | 814 | -7063 | 131819 | 1.24 | 647495 | 4.912 | Si |
| SLV 15 | 634 | -23852 | 449350 | 4.18 | 1601446 | 3.564 | Si |
| SLV 15 | 814 | -21833 | -572093 | 3.82 | 1530338 | 2.675 | Si |
| SLV 14 | 634 | -23452 | 525954 | 4.11 | 1588311 | 3.02 | Si |
| SLV 14 | 814 | -21477 | -635683 | 3.76 | 1516557 | 2.386 | Si |
| SLV 9 | 634 | -17932 | 312107 | 3.14 | 1359141 | 4.355 | Si |

| Comb. | Quota | N | M | σ0 | Mu | c.s. | Verifica |
|---|---|---|---|---|---|---|---|
| SLV 9 | 814 | -16017 | -441245 | 2.8 | 1258798 | 2.853 | Si |
| SLV 3 | 634 | -9413 | -416986 | 1.65 | 830649 | 1.992 | Si |
| SLV 3 | 814 | -7419 | 195409 | 1.3 | 676278 | 3.461 | Si |
| SLV 16 | 634 | -23852 | 449350 | 4.18 | 1601446 | 3.564 | Si |
| SLV 16 | 814 | -21833 | -572093 | 3.82 | 1530338 | 2.675 | Si |
| SLV 4 | 634 | -9413 | -416986 | 1.65 | 830649 | 1.992 | Si |
| SLV 4 | 814 | -7419 | 195409 | 1.3 | 676278 | 3.461 | Si |
| SLV 10 | 634 | -17932 | 312107 | 3.14 | 1359141 | 4.355 | Si |
| SLV 10 | 814 | -16017 | -441245 | 2.8 | 1258798 | 2.853 | Si |
| SLV 2 | 634 | -9014 | -340382 | 1.58 | 800649 | 2.352 | Si |
| SLV 2 | 814 | -7063 | 131819 | 1.24 | 647495 | 4.912 | Si |

Verifica a taglio nel piano secondo D.M. 17-01-18 (N.T.C.) §7.8.2.2.2 con rottura per scorrimento in combinazioni non sismiche, γM = 3

| Comb. | Quota | N | V par | M | σ0 | σN | l' | fvd | Vt scorr. | Vt fess.diag. | Vt,lim | c.s. | Verifica |
|---|---|---|---|---|---|---|---|---|---|---|---|---|---|
| SLU 84 | 634 | -25373 | 2450 | 97794 | | 4.44 | 204 | 1.08 | 6188 | | | 2.53 | Si |
| SLU 84 | 814 | -22786 | 2450 | -349786 | | 3.99 | 204 | 1.08 | 6188 | | | 2.53 | Si |
| SLU 73 | 634 | -23883 | 2338 | 93210 | | 4.18 | 204 | 1.08 | 6188 | | | 2.65 | Si |
| SLU 73 | 814 | -21296 | 2338 | -334365 | | 3.73 | 204 | 1.05 | 6013 | | | 2.57 | Si |
| SLU 40 | 634 | -21596 | 2251 | 96135 | | 3.78 | 204 | 1.06 | 6053 | | | 2.69 | Si |
| SLU 40 | 814 | -19593 | 2251 | -314234 | | 3.43 | 204 | 1.01 | 5786 | | | 2.57 | Si |
| SLU 81 | 634 | -25166 | 2511 | 102223 | | 4.41 | 204 | 1.08 | 6188 | | | 2.46 | Si |
| SLU 81 | 814 | -22578 | 2511 | -356435 | | 3.95 | 204 | 1.08 | 6184 | | | 2.46 | Si |
| SLU 39 | 634 | -21626 | 2240 | 95041 | | 3.79 | 204 | 1.06 | 6057 | | | 2.7 | Si |
| SLU 39 | 814 | -19623 | 2240 | -313344 | | 3.44 | 204 | 1.01 | 5790 | | | 2.58 | Si |
| SLU 74 | 634 | -24662 | 2305 | 88209 | | 4.32 | 204 | 1.08 | 6188 | | | 2.68 | Si |
| SLU 74 | 814 | -22074 | 2305 | -333312 | | 3.86 | 204 | 1.07 | 6117 | | | 2.65 | Si |
| SLU 75 | 634 | -24632 | 2316 | 89303 | | 4.31 | 204 | 1.08 | 6188 | | | 2.67 | Si |
| SLU 75 | 814 | -22044 | 2316 | -334202 | | 3.86 | 204 | 1.07 | 6113 | | | 2.64 | Si |
| SLU 83 | 634 | -25403 | 2439 | 96700 | | 4.45 | 204 | 1.08 | 6188 | | | 2.54 | Si |
| SLU 83 | 814 | -22816 | 2439 | -348896 | | 3.99 | 204 | 1.08 | 6188 | | | 2.54 | Si |
| SLU 82 | 634 | -25136 | 2522 | 103317 | | 4.4 | 204 | 1.08 | 6188 | | | 2.45 | Si |
| SLU 82 | 814 | -22549 | 2522 | -357325 | | 3.95 | 204 | 1.08 | 6180 | | | 2.45 | Si |
| SLU 61 | 634 | -22468 | 2195 | 86994 | | 3.93 | 204 | 1.08 | 6169 | | | 2.81 | Si |
| SLU 61 | 814 | -19908 | 2195 | -314765 | | 3.49 | 204 | 1.02 | 5828 | | | 2.65 | Si |

Verifica a taglio nel piano secondo D.M. 17-01-18 (N.T.C.) §7.8.2.2.2 con rottura per scorrimento in combinazioni sismiche, γM = 2

| Comb. | Quota | N | V par | M | σ0 | σN | l' | fvd | Vt scorr. | Vt fess.diag. | Vt,lim | c.s. | Verifica |
|---|---|---|---|---|---|---|---|---|---|---|---|---|---|
| SLV 10 | 634 | -17932 | 4367 | 312107 | | 3.14 | 204 | 1.46 | 8346 | | | 1.91 | Si |
| SLV 10 | 814 | -16017 | 4150 | -441245 | | 2.8 | 204 | 1.39 | 7963 | | | 1.92 | Si |
| SLV 13 | 634 | -23452 | 6599 | 525954 | | 4.11 | 204 | 1.63 | 9282 | | | 1.41 | Si |
| SLV 13 | 814 | -21477 | 6298 | -635683 | | 3.76 | 204 | 1.59 | 9055 | | | 1.44 | Si |
| SLV 16 | 634 | -23852 | 5716 | 449350 | | 4.18 | 204 | 1.63 | 9282 | | | 1.62 | Si |
| SLV 16 | 814 | -21833 | 5498 | -572093 | | 3.82 | 204 | 1.6 | 9127 | | | 1.66 | Si |
| SLV 9 | 634 | -17932 | 4367 | 312107 | | 3.14 | 204 | 1.46 | 8346 | | | 1.91 | Si |
| SLV 9 | 814 | -16017 | 4150 | -441245 | | 2.8 | 204 | 1.39 | 7963 | | | 1.92 | Si |
| SLV 2 | 634 | -9014 | -2722 | -340382 | | 1.67 | 192.71 | 1.17 | 6299 | | | 2.31 | Si |
| SLV 2 | 814 | -7063 | -2504 | 131819 | | 1.24 | 204 | 1.08 | 6173 | | | 2.47 | Si |
| SLV 14 | 634 | -23452 | 6599 | 525954 | | 4.11 | 204 | 1.63 | 9282 | | | 1.41 | Si |
| SLV 14 | 814 | -21477 | 6298 | -635683 | | 3.76 | 204 | 1.59 | 9055 | | | 1.44 | Si |
| SLV 4 | 634 | -9413 | -3605 | -416986 | | 1.94 | 173.11 | 1.22 | 5922 | | | 1.64 | Si |
| SLV 4 | 814 | -7419 | -3303 | 195409 | | 1.3 | 204 | 1.09 | 6244 | | | 1.89 | Si |
| SLV 3 | 634 | -9413 | -3605 | -416986 | | 1.94 | 173.11 | 1.22 | 5922 | | | 1.64 | Si |
| SLV 3 | 814 | -7419 | -3303 | 195409 | | 1.3 | 204 | 1.09 | 6244 | | | 1.89 | Si |
| SLV 15 | 634 | -23852 | 5716 | 449350 | | 4.18 | 204 | 1.63 | 9282 | | | 1.62 | Si |
| SLV 15 | 814 | -21833 | 5498 | -572093 | | 3.82 | 204 | 1.6 | 9127 | | | 1.66 | Si |
| SLV 1 | 634 | -9014 | -2722 | -340382 | | 1.67 | 192.71 | 1.17 | 6299 | | | 2.31 | Si |
| SLV 1 | 814 | -7063 | -2504 | 131819 | | 1.24 | 204 | 1.08 | 6173 | | | 2.47 | Si |

Verifica a pressoflessione fuori piano D.M. 17-01-18 (N.T.C.)

quota 720 Wa 0.05 denominatore 8 γM = 2

| Comb. | fd | Sa | σ0 | N | M | Mc | Coeff.s. | Verifica |
|---|---|---|---|---|---|---|---|---|
| SLV 2 | 14 | 0.39 | 1.41 | -8040 | 21200 | 99597 | 4.7 | Si |
| SLV 1 | 14 | 0.39 | 1.41 | -8040 | 21200 | 99597 | 4.7 | Si |
| SLV 3 | 14 | 0.39 | 1.52 | -8674 | 21200 | 106344 | 5.02 | Si |
| SLV 4 | 14 | 0.39 | 1.52 | -8674 | 21200 | 106344 | 5.02 | Si |
| SLV 5 | 14 | 0.39 | 2.13 | -12166 | 21200 | 140634 | 6.63 | Si |
| SLV 6 | 14 | 0.39 | 2.13 | -12166 | 21200 | 140634 | 6.63 | Si |
| SLV 7 | 14 | 0.39 | 2.5 | -14278 | 21200 | 159001 | 7.5 | Si |
| SLV 8 | 14 | 0.39 | 2.5 | -14278 | 21200 | 159001 | 7.5 | Si |
| SLV 9 | 14 | 0.39 | 2.86 | -16336 | 21200 | 175173 | 8.26 | Si |
| SLV 10 | 14 | 0.39 | 2.86 | -16336 | 21200 | 175173 | 8.26 | Si |

Verifica dei meccanismi locali di collasso con analisi cinematica lineare

forza di aggancio al piano = 0 quota mezzeria = 720 Wa = 0.05 Ta = 0.0739

| Comb. | N top | N base | V orto | α0 | M* | e* | a0* | aLim | Verifica |
|---|---|---|---|---|---|---|---|---|---|
| SLV 5 | -8900 | -13379 | 312 | 0.017 | 11.924 | 0.934 | 27.001 | 1522.194 | No |
| SLV 6 | -8900 | -13379 | 312 | 0.017 | 11.924 | 0.934 | 27.001 | 1522.194 | No |
| SLV 7 | -10915 | -14171 | -344 | 0.018 | 13.964 | 0.943 | 28.31 | 1522.194 | No |
| SLV 8 | -10915 | -14171 | -344 | 0.018 | 13.964 | 0.943 | 28.31 | 1522.194 | No |
| SLV 10 | -11334 | -19511 | 322 | 0.021 | 14.389 | 0.944 | 31.904 | 1522.194 | No |
| SLV 9 | -11334 | -19511 | 322 | 0.021 | 14.389 | 0.944 | 31.904 | 1522.194 | No |
| SLV 11 | -13350 | -20303 | -334 | 0.022 | 16.434 | 0.95 | 34.392 | 1522.194 | No |
| SLV 12 | -13350 | -20303 | -334 | 0.022 | 16.434 | 0.95 | 34.392 | 1522.194 | No |
| SLV 3 | -7370 | -6740 | -127 | 0.034 | 10.38 | 0.927 | 53.011 | 839.377 | No |
| SLV 4 | -7370 | -6740 | -127 | 0.034 | 10.38 | 0.927 | 53.011 | 839.377 | No |

Tabella dei coefficienti di sicurezza minimi

| Stato limite | Coeff.s. | Comb. | Verifica |
|---|---|---|---|
| PF_SLU | 3.317 | SLU 82 | Si |
| V_SLU | 2.45 | SLU 82 | Si |
| PF_SLV | 1.992 | SLV 3 | Si |
| V_SLV | 1.406 | SLV 13 | Si |
| PFFP_SLV | 4.698 | SLV 1 | Si |
| R_SLV | 0.018 | SLV 5 | No |

## Maschio 119

Verifiche condotte secondo D.M. 17-01-18 (N.T.C.)

### Dati geometrici

| X ini. | Y ini. | X fin. | Y fin. | Quota i. | Quota.s | l | Sp. | h netta | h ini. | h fin. | a | a.s.,sx | a.s.,dx |
|---|---|---|---|---|---|---|---|---|---|---|---|---|---|
| -2066.8 | 104.6 | -2467.8 | 104.6 | L4 | L5 | 401 | 28 | 352 | 352 | 352 | | | |

### Caratteristiche del materiale

(Circolare 7 21-01-19 C8.5.I) Muratura in mattoni pieni e malta di calce LC2_Corti

| fb | fk | fvk0 | fmedio | τ0 | fv0 | μ | ϕ | fv,lim | E | G | FC |
|---|---|---|---|---|---|---|---|---|---|---|---|
| 60 | | | 34.5 | 0.9 | 2 | 0.58 | 0.77 | 3.25 | 32000 | 12800 | 1.2 |

### Verifica a pressoflessione nel piano secondo D.M. 17-01-18 NTC §7.8.2.2.1 in combinazioni non sismiche, γM = 3

| Comb. | Quota | N | M | σ0 | Mu | c.s. | Verifica |
|---|---|---|---|---|---|---|---|
| SLU 77 | 544 | -55049 | -453340 | 4.9 | 4394144 | 9.693 | Si |
| SLU 77 | 754 | -51120 | -997456 | 4.55 | 4520835 | 4.532 | Si |
| SLU 35 | 544 | -46355 | -416022 | 4.13 | 4583649 | 11.018 | Si |
| SLU 35 | 754 | -43919 | -916099 | 3.91 | 4577307 | 4.997 | Si |
| SLU 83 | 544 | -55016 | -493843 | 4.9 | 4395518 | 8.901 | Si |
| SLU 83 | 754 | -51332 | -986662 | 4.57 | 4515714 | 4.577 | Si |
| SLU 84 | 544 | -55143 | -505811 | 4.91 | 4390289 | 8.68 | Si |
| SLU 84 | 754 | -51484 | -952907 | 4.59 | 4511936 | 4.735 | Si |
| SLU 78 | 544 | -55177 | -465308 | 4.91 | 4388896 | 9.432 | Si |
| SLU 78 | 754 | -51272 | -963701 | 4.57 | 4517199 | 4.687 | Si |
| SLU 75 | 544 | -54012 | -471369 | 4.81 | 4434161 | 9.407 | Si |
| SLU 75 | 754 | -50020 | -905849 | 4.45 | 4544177 | 5.016 | Si |
| SLU 79 | 544 | -54352 | -441017 | 4.84 | 4421558 | 10.026 | Si |
| SLU 79 | 754 | -50370 | -976670 | 4.49 | 4537323 | 4.646 | Si |
| SLU 81 | 544 | -53851 | -499904 | 4.8 | 4439959 | 8.882 | Si |
| SLU 81 | 754 | -50081 | -928810 | 4.46 | 4543026 | 4.891 | Si |
| SLU 74 | 544 | -53885 | -459401 | 4.8 | 4438757 | 9.662 | Si |
| SLU 74 | 754 | -49868 | -939604 | 4.44 | 4546980 | 4.839 | Si |
| SLU 80 | 544 | -54480 | -452985 | 4.85 | 4416700 | 9.75 | Si |
| SLU 80 | 754 | -50522 | -942914 | 4.5 | 4534185 | 4.809 | Si |

### Verifica a pressoflessione nel piano secondo D.M. 17-01-18 NTC §7.8.2.2.1 in combinazioni sismiche, γM = 2

| Comb. | Quota | N | M | σ0 | Mu | c.s. | Verifica |
|---|---|---|---|---|---|---|---|
| SLV 16 | 544 | -25648 | -1751781 | 2.28 | 4181040 | 2.387 | Si |
| SLV 16 | 754 | -17855 | 440618 | 1.59 | 3114053 | 7.067 | Si |
| SLV 2 | 544 | -48194 | 1197563 | 4.29 | 6268416 | 5.234 | Si |
| SLV 2 | 754 | -48430 | -1540277 | 4.31 | 6282439 | 4.079 | Si |
| SLV 4 | 544 | -47957 | 1221706 | 4.27 | 6254203 | 5.119 | Si |
| SLV 4 | 754 | -47296 | -1491323 | 4.21 | 6213692 | 4.167 | Si |
| SLV 14 | 544 | -25885 | -1775924 | 2.31 | 4210704 | 2.371 | Si |
| SLV 14 | 754 | -18990 | 391664 | 1.69 | 3280420 | 8.376 | Si |
| SLD 13 | 544 | -32247 | -914219 | 2.87 | 4945855 | 5.41 | Si |
| SLD 13 | 754 | -27075 | -147096 | 2.41 | 4357191 | 29.621 | Si |
| SLV 15 | 544 | -25648 | -1751781 | 2.28 | 4181040 | 2.387 | Si |
| SLV 15 | 754 | -17855 | 440618 | 1.59 | 3114053 | 7.067 | Si |
| SLV 1 | 544 | -48194 | 1197563 | 4.29 | 6268416 | 5.234 | Si |
| SLV 1 | 754 | -48430 | -1540277 | 4.31 | 6282439 | 4.079 | Si |
| SLV 13 | 544 | -25885 | -1775924 | 2.31 | 4210704 | 2.371 | Si |
| SLV 13 | 754 | -18990 | 391664 | 1.69 | 3280420 | 8.376 | Si |
| SLV 3 | 544 | -47957 | 1221706 | 4.27 | 6254203 | 5.119 | Si |
| SLV 3 | 754 | -47296 | -1491323 | 4.21 | 6213692 | 4.167 | Si |
| SLD 14 | 544 | -32247 | -914219 | 2.87 | 4945855 | 5.41 | Si |
| SLD 14 | 754 | -27075 | -147096 | 2.41 | 4357191 | 29.621 | Si |

### Verifica a taglio nel piano secondo D.M. 17-01-18 (N.T.C.) §7.8.2.2.2 con rottura per scorrimento in combinazioni non sismiche, γM = 3

| Comb. | Quota | N | V par | M | σ0 | σN | l' | fvd | Vt scorr. | Vt fess.diag. | Vt,lim | c.s. | Verifica |
|---|---|---|---|---|---|---|---|---|---|---|---|---|---|
| SLU 37 | 544 | -45658 | 4190 | -403699 | | 4.07 | 401 | 1.08 | 12164 | | | 2.9 | Si |
| SLU 37 | 754 | -43169 | 4287 | -895312 | | 3.84 | 401 | 1.07 | 11994 | | | 2.8 | Si |
| SLU 41 | 544 | -46321 | 4270 | -456525 | | 4.13 | 401 | 1.08 | 12164 | | | 2.85 | Si |
| SLU 41 | 754 | -44131 | 4369 | -905305 | | 3.93 | 401 | 1.08 | 12122 | | | 2.77 | Si |
| SLU 35 | 544 | -46355 | 4280 | -416022 | | 4.13 | 401 | 1.08 | 12164 | | | 2.84 | Si |
| SLU 35 | 754 | -43919 | 4378 | -916099 | | 3.91 | 401 | 1.08 | 12094 | | | 2.76 | Si |
| SLU 84 | 544 | -55143 | 4057 | -505811 | | 4.91 | 401 | 1.08 | 12164 | | | 3 | Si |
| SLU 84 | 754 | -51484 | 4192 | -952907 | | 4.59 | 401 | 1.08 | 12164 | | | 2.9 | Si |
| SLU 42 | 544 | -46449 | 4070 | -468493 | | 4.14 | 401 | 1.08 | 12164 | | | 2.99 | Si |
| SLU 42 | 754 | -44283 | 4186 | -871550 | | 3.94 | 401 | 1.08 | 12142 | | | 2.9 | Si |
| SLU 79 | 544 | -54352 | 4178 | -441017 | | 4.84 | 401 | 1.08 | 12164 | | | 2.91 | Si |
| SLU 79 | 754 | -50370 | 4294 | -976670 | | 4.49 | 401 | 1.08 | 12164 | | | 2.83 | Si |
| SLU 77 | 544 | -55049 | 4268 | -453340 | | 4.9 | 401 | 1.08 | 12164 | | | 2.85 | Si |
| SLU 77 | 754 | -51120 | 4385 | -997456 | | 4.55 | 401 | 1.08 | 12164 | | | 2.77 | Si |
| SLU 78 | 544 | -55177 | 4067 | -465308 | | 4.91 | 401 | 1.08 | 12164 | | | 2.99 | Si |

| Comb. | Quota | N | V par | M | σ0 | σN | l' | fvd | Vt scorr. | Vt fess.diag. | Vt,lim | c.s. | Verifica |
|---|---|---|---|---|---|---|---|---|---|---|---|---|---|
| SLU 78 | 754 | -51272 | 4201 | -963701 | | 4.57 | 401 | 1.08 | 12164 | | | 2.9 | Si |
| SLU 36 | 544 | -46483 | 4079 | -427990 | | 4.14 | 401 | 1.08 | 12164 | | | 2.98 | Si |
| SLU 36 | 754 | -44071 | 4195 | -882344 | | 3.93 | 401 | 1.08 | 12114 | | | 2.89 | Si |
| SLU 83 | 544 | -55016 | 4258 | -493843 | | 4.9 | 401 | 1.08 | 12164 | | | 2.86 | Si |
| SLU 83 | 754 | -51332 | 4376 | -986662 | | 4.57 | 401 | 1.08 | 12164 | | | 2.78 | Si |

### Verifica a taglio nel piano secondo D.M. 17-01-18 (N.T.C.) §7.8.2.2.2 con rottura per scorrimento in combinazioni sismiche, γM = 2

| Comb. | Quota | N | V par | M | σ0 | σN | l' | fvd | Vt scorr. | Vt fess.diag. | Vt,lim | c.s. | Verifica |
|---|---|---|---|---|---|---|---|---|---|---|---|---|---|
| SLV 14 | 544 | -25885 | -14813 | -1775924 | | 2.34 | 395.67 | 1.3 | 14409 | | | 0.97 | No, Vu<V |
| SLV 14 | 754 | -18990 | -14074 | 391664 | | 1.69 | 401 | 1.17 | 13155 | | | 0.93 | No, Vu<V |
| SLV 1 | 544 | -48194 | 19687 | 1197563 | | 4.29 | 401 | 1.63 | 18245 | | | 0.93 | No, Vu<V |
| SLV 1 | 754 | -48430 | 19065 | -1540277 | | 4.31 | 401 | 1.63 | 18245 | | | 0.96 | No, Vu<V |
| SLV 15 | 544 | -25648 | -15984 | -1751781 | | 2.31 | 396.6 | 1.3 | 14384 | | | 0.9 | No, Vu<V |
| SLV 15 | 754 | -17855 | -15203 | 440618 | | 1.59 | 401 | 1.15 | 12928 | | | 0.85 | No, Vu<V |
| SLD 1 | 544 | -41682 | 9429 | 349602 | | 3.71 | 401 | 1.58 | 17693 | | | 1.88 | Si |
| SLD 1 | 754 | -39664 | 9233 | -971080 | | 3.53 | 401 | 1.54 | 17290 | | | 1.87 | Si |
| SLV 16 | 544 | -25648 | -15984 | -1751781 | | 2.31 | 396.6 | 1.3 | 14384 | | | 0.9 | No, Vu<V |
| SLV 16 | 754 | -17855 | -15203 | 440618 | | 1.59 | 401 | 1.15 | 12928 | | | 0.85 | No, Vu<V |
| SLV 3 | 544 | -47957 | 18516 | 1221706 | | 4.27 | 401 | 1.63 | 18245 | | | 0.99 | No, Vu<V |
| SLV 3 | 754 | -47296 | 17935 | -1491323 | | 4.21 | 401 | 1.63 | 18245 | | | 1.02 | Si |
| SLV 13 | 544 | -25885 | -14813 | -1775924 | | 2.34 | 395.67 | 1.3 | 14409 | | | 0.97 | No, Vu<V |
| SLV 13 | 754 | -18990 | -14074 | 391664 | | 1.69 | 401 | 1.17 | 13155 | | | 0.93 | No, Vu<V |
| SLD 2 | 544 | -41682 | 9429 | 349602 | | 3.71 | 401 | 1.58 | 17693 | | | 1.88 | Si |
| SLD 2 | 754 | -39664 | 9233 | -971080 | | 3.53 | 401 | 1.54 | 17290 | | | 1.87 | Si |
| SLV 4 | 544 | -47957 | 18516 | 1221706 | | 4.27 | 401 | 1.63 | 18245 | | | 0.99 | No, Vu<V |
| SLV 4 | 754 | -47296 | 17935 | -1491323 | | 4.21 | 401 | 1.63 | 18245 | | | 1.02 | Si |
| SLV 2 | 544 | -48194 | 19687 | 1197563 | | 4.29 | 401 | 1.63 | 18245 | | | 0.93 | No, Vu<V |
| SLV 2 | 754 | -48430 | 19065 | -1540277 | | 4.31 | 401 | 1.63 | 18245 | | | 0.96 | No, Vu<V |

### Verifica a pressoflessione fuori piano D.M. 17-01-18 (N.T.C.)

quota 720 Wa 0.05 denominatore 8 γM = 2

| Comb. | fd | Sa | σ0 | N | M | Mc | Coeff.s. | Verifica |
|---|---|---|---|---|---|---|---|---|
| SLV 16 | 14 | 0.39 | 1.61 | -18060 | 42641 | 219559 | 5.15 | Si |
| SLV 15 | 14 | 0.39 | 1.61 | -18060 | 42641 | 219559 | 5.15 | Si |
| SLV 13 | 14 | 0.39 | 1.72 | -19273 | 42641 | 231919 | 5.44 | Si |
| SLV 14 | 14 | 0.39 | 1.72 | -19273 | 42641 | 231919 | 5.44 | Si |
| SLV 12 | 14 | 0.39 | 2.43 | -27276 | 42641 | 305944 | 7.17 | Si |
| SLV 11 | 14 | 0.39 | 2.43 | -27276 | 42641 | 305944 | 7.17 | Si |
| SLV 9 | 14 | 0.39 | 2.79 | -31319 | 42641 | 338371 | 7.94 | Si |
| SLV 10 | 14 | 0.39 | 2.79 | -31319 | 42641 | 338371 | 7.94 | Si |
| SLV 7 | 14 | 0.39 | 3.24 | -36388 | 42641 | 374315 | 8.78 | Si |
| SLV 8 | 14 | 0.39 | 3.24 | -36388 | 42641 | 374315 | 8.78 | Si |

### Verifica dei meccanismi locali di collasso con analisi cinematica lineare

forza di aggancio al piano = 0 quota mezzeria = 720 Wa = 0.05 Ta = 0.0739

| Comb. | N top | N base | V orto | α0 | M* | e* | a0* | aLim | Verifica |
|---|---|---|---|---|---|---|---|---|---|
| SLV 12 | -24379 | -33180 | -593 | 0.024 | 30.414 | 0.947 | 36.226 | 1522.194 | No |
| SLV 11 | -24379 | -33180 | -593 | 0.024 | 30.414 | 0.947 | 36.226 | 1522.194 | No |
| SLV 6 | -31790 | -40662 | 594 | 0.027 | 37.94 | 0.957 | 40.958 | 1522.194 | No |
| SLV 5 | -31790 | -40662 | 594 | 0.027 | 37.94 | 0.957 | 40.958 | 1522.194 | No |
| SLV 10 | -26583 | -33969 | 496 | 0.028 | 32.65 | 0.951 | 42.806 | 1522.194 | No |
| SLV 9 | -26583 | -33969 | 496 | 0.028 | 32.65 | 0.951 | 42.806 | 1522.194 | No |
| SLV 7 | -29586 | -39872 | -495 | 0.029 | 35.701 | 0.954 | 44.327 | 1522.194 | No |
| SLV 8 | -29586 | -39872 | -495 | 0.029 | 35.701 | 0.954 | 44.327 | 1522.194 | No |
| SLV 15 | -19076 | -25648 | -326 | 0.032 | 25.039 | 0.938 | 49.01 | 839.377 | No |
| SLV 16 | -19076 | -25648 | -326 | 0.032 | 25.039 | 0.938 | 49.01 | 839.377 | No |

### Tabella dei coefficienti di sicurezza minimi

| Stato limite | Coeff.s. | Comb. | Verifica |
|---|---|---|---|
| PF_SLU | 4.532 | SLU 77 | Si |
| V_SLU | 2.762 | SLU 35 | Si |
| PF_SLV | 2.371 | SLV 13 | Si |
| V_SLV | 0.85 | SLV 15 | No |
| PFFP_SLV | 5.149 | SLV 15 | Si |
| R_SLV | 0.024 | SLV 11 | No |

## Maschio 120

Verifiche condotte secondo D.M. 17-01-18 (N.T.C.)

### Dati geometrici

| X ini. | Y ini. | X fin. | Y fin. | Quota i. | Quota.s | l | Sp. | h netta | h ini. | h fin. | a | a.s.,sx | a.s.,dx |
|---|---|---|---|---|---|---|---|---|---|---|---|---|---|
| -1228.3 | 104.6 | -1986.8 | 104.6 | L4 | L5 | 758.5 | 28 | 352 | 352 | 352 | | | |

### Caratteristiche del materiale

(Circolare 7 21-01-19 C8.5.I) Muratura in mattoni pieni e malta di calce LC2_Corti

| fb | fk | fvk0 | fmedio | τ0 | fv0 | μ | ϕ | fv,lim | E | G | FC |
|---|---|---|---|---|---|---|---|---|---|---|---|
| 60 | | | 34.5 | 0.9 | 2 | 0.58 | 0.77 | 3.25 | 32000 | 12800 | 1.2 |

### Verifica a pressoflessione nel piano secondo D.M. 17-01-18 NTC §7.8.2.2.1 in combinazioni non sismiche, γM = 3

| Comb. | Quota | N | M | σ0 | Mu | c.s. | Verifica |
|---|---|---|---|---|---|---|---|
| SLU 83 | 544 | -114240 | 683627 | 5.38 | 14715873 | 21.526 | Si |
| SLU 83 | 794 | -109110 | -1793623 | 5.14 | 15282032 | 8.52 | Si |

| Comb. | Quota | N | M | σ0 | Mu | c.s. | Verifica |
|---|---|---|---|---|---|---|---|
| SLU 81 | 544 | -110739 | 592562 | 5.21 | 15114721 | 25.507 | Si |
| SLU 81 | 794 | -105721 | -1760762 | 4.98 | 15592869 | 8.856 | Si |
| SLU 79 | 544 | -112939 | 796022 | 5.32 | 14870409 | 18.681 | Si |
| SLU 79 | 794 | -107066 | -1719286 | 5.04 | 15475515 | 9.001 | Si |
| SLU 78 | 544 | -114484 | 765831 | 5.39 | 14686079 | 19.177 | Si |
| SLU 78 | 794 | -109052 | -1710858 | 5.13 | 15287769 | 8.936 | Si |
| SLU 82 | 544 | -110576 | 576247 | 5.21 | 15132031 | 26.26 | Si |
| SLU 82 | 794 | -105824 | -1700225 | 4.98 | 15584162 | 9.166 | Si |
| SLU 80 | 544 | -112775 | 779706 | 5.31 | 14889294 | 19.096 | Si |
| SLU 80 | 794 | -107169 | -1658748 | 5.05 | 15466201 | 9.324 | Si |
| SLU 77 | 544 | -114647 | 782146 | 5.4 | 14665970 | 18.751 | Si |
| SLU 77 | 794 | -108949 | -1771396 | 5.13 | 15297934 | 8.636 | Si |
| SLU 74 | 544 | -111147 | 691081 | 5.23 | 15071069 | 21.808 | Si |
| SLU 74 | 794 | -105560 | -1738535 | 4.97 | 15606378 | 8.977 | Si |
| SLU 75 | 544 | -110983 | 674766 | 5.23 | 15088671 | 22.361 | Si |
| SLU 75 | 794 | -105663 | -1677997 | 4.98 | 15597745 | 9.295 | Si |
| SLU 84 | 544 | -114076 | 667312 | 5.37 | 14735691 | 22.082 | Si |
| SLU 84 | 794 | -109213 | -1733086 | 5.14 | 15271794 | 8.812 | Si |

Verifica a pressoflessione nel piano secondo D.M. 17-01-18 NTC §7.8.2.2.1 in combinazioni sismiche, γM = 2

| Comb. | Quota | N | M | σ0 | Mu | c.s. | Verifica |
|---|---|---|---|---|---|---|---|
| SLD 4 | 544 | -70114 | 3674430 | 3.3 | 19406298 | 5.281 | Si |
| SLD 4 | 794 | -68228 | -1214598 | 3.21 | 19072243 | 15.703 | Si |
| SLV 1 | 544 | -68347 | 7875935 | 3.22 | 19093699 | 2.424 | Si |
| SLV 1 | 794 | -68482 | -970677 | 3.22 | 19117933 | 19.695 | Si |
| SLV 15 | 544 | -78689 | -6903691 | 3.71 | 20793514 | 3.012 | Si |
| SLV 15 | 794 | -67993 | -1252498 | 3.2 | 19029932 | 15.194 | Si |
| SLV 2 | 544 | -68347 | 7875935 | 3.22 | 19093699 | 2.424 | Si |
| SLV 2 | 794 | -68482 | -970677 | 3.22 | 19117933 | 19.695 | Si |
| SLV 4 | 544 | -65411 | 7952344 | 3.08 | 18554086 | 2.333 | Si |
| SLV 4 | 794 | -68158 | -1357584 | 3.21 | 19059694 | 14.039 | Si |
| SLV 14 | 544 | -81625 | -6980100 | 3.84 | 21219164 | 3.04 | Si |
| SLV 14 | 794 | -68317 | -865591 | 3.22 | 19088327 | 22.052 | Si |
| SLV 3 | 544 | -65411 | 7952344 | 3.08 | 18554086 | 2.333 | Si |
| SLV 3 | 794 | -68158 | -1357584 | 3.21 | 19059694 | 14.039 | Si |
| SLV 13 | 544 | -81625 | -6980100 | 3.84 | 21219164 | 3.04 | Si |
| SLV 13 | 794 | -68317 | -865591 | 3.22 | 19088327 | 22.052 | Si |
| SLV 16 | 544 | -78689 | -6903691 | 3.71 | 20793514 | 3.012 | Si |
| SLV 16 | 794 | -67993 | -1252498 | 3.2 | 19029932 | 15.194 | Si |
| SLD 3 | 544 | -70114 | 3674430 | 3.3 | 19406298 | 5.281 | Si |
| SLD 3 | 794 | -68228 | -1214598 | 3.21 | 19072243 | 15.703 | Si |

Verifica a taglio nel piano secondo D.M. 17-01-18 (N.T.C.) §7.8.2.2.2 con rottura per scorrimento in combinazioni non sismiche, γM = 3

| Comb. | Quota | N | V par | M | σ0 | σN | l' | fvd | Vt scorr. | Vt fess.diag. | Vt,lim | c.s. | Verifica |
|---|---|---|---|---|---|---|---|---|---|---|---|---|---|
| SLU 82 | 544 | -110576 | 3911 | 576247 | | 5.21 | 758.5 | 1.08 | 23008 | | | 5.88 | Si |
| SLU 82 | 794 | -105824 | 3539 | -1700225 | | 4.98 | 758.5 | 1.08 | 23008 | | | 6.5 | Si |
| SLU 40 | 544 | -94465 | 3439 | 445969 | | 4.45 | 758.5 | 1.08 | 23008 | | | 6.69 | Si |
| SLU 40 | 794 | -91851 | 3091 | -1465102 | | 4.32 | 758.5 | 1.08 | 23008 | | | 7.44 | Si |
| SLU 61 | 544 | -98948 | 3639 | 529988 | | 4.66 | 758.5 | 1.08 | 23008 | | | 6.32 | Si |
| SLU 61 | 794 | -93196 | 3402 | -1520759 | | 4.39 | 758.5 | 1.08 | 23008 | | | 6.76 | Si |
| SLU 84 | 544 | -114076 | 3706 | 667312 | | 5.37 | 758.5 | 1.08 | 23008 | | | 6.21 | Si |
| SLU 84 | 794 | -109213 | 3164 | -1733086 | | 5.14 | 758.5 | 1.08 | 23008 | | | 7.27 | Si |
| SLU 74 | 544 | -111147 | 3510 | 691081 | | 5.23 | 758.5 | 1.08 | 23008 | | | 6.56 | Si |
| SLU 74 | 794 | -105560 | 2898 | -1738535 | | 4.97 | 758.5 | 1.08 | 23008 | | | 7.94 | Si |
| SLU 83 | 544 | -114240 | 3685 | 683627 | | 5.38 | 758.5 | 1.08 | 23008 | | | 6.24 | Si |
| SLU 83 | 794 | -109110 | 3062 | -1793623 | | 5.14 | 758.5 | 1.08 | 23008 | | | 7.51 | Si |
| SLU 75 | 544 | -110983 | 3531 | 674766 | | 5.23 | 758.5 | 1.08 | 23008 | | | 6.52 | Si |
| SLU 75 | 794 | -105663 | 2999 | -1677997 | | 4.98 | 758.5 | 1.08 | 23008 | | | 7.67 | Si |
| SLU 81 | 544 | -110739 | 3890 | 592562 | | 5.21 | 758.5 | 1.08 | 23008 | | | 5.92 | Si |
| SLU 81 | 794 | -105721 | 3437 | -1760762 | | 4.98 | 758.5 | 1.08 | 23008 | | | 6.69 | Si |
| SLU 60 | 544 | -99111 | 3618 | 546303 | | 4.67 | 758.5 | 1.08 | 23008 | | | 6.36 | Si |
| SLU 60 | 794 | -93093 | 3301 | -1581297 | | 4.38 | 758.5 | 1.08 | 23008 | | | 6.97 | Si |
| SLU 73 | 544 | -105666 | 3546 | 586699 | | 4.98 | 758.5 | 1.08 | 23008 | | | 6.49 | Si |
| SLU 73 | 794 | -100458 | 3245 | -1552668 | | 4.73 | 758.5 | 1.08 | 23008 | | | 7.09 | Si |

Verifica a taglio nel piano secondo D.M. 17-01-18 (N.T.C.) §7.8.2.2.2 con rottura per scorrimento in combinazioni sismiche, γM = 2

| Comb. | Quota | N | V par | M | σ0 | σN | l' | fvd | Vt scorr. | Vt fess.diag. | Vt,lim | c.s. | Verifica |
|---|---|---|---|---|---|---|---|---|---|---|---|---|---|
| SLV 4 | 544 | -65411 | 47624 | 7952344 | | 3.08 | 758.5 | 1.45 | 30780 | | | 0.65 | No, Vu<V |
| SLV 4 | 794 | -68158 | 42599 | -1357584 | | 3.21 | 758.5 | 1.48 | 31330 | | | 0.74 | No, Vu<V |
| SLV 2 | 544 | -68347 | 44632 | 7875935 | | 3.22 | 758.5 | 1.48 | 31368 | | | 0.7 | No, Vu<V |
| SLV 2 | 794 | -68482 | 39060 | -970677 | | 3.22 | 758.5 | 1.48 | 31395 | | | 0.8 | No, Vu<V |
| SLV 16 | 544 | -78689 | -40205 | -6903691 | | 3.71 | 758.5 | 1.57 | 33436 | | | 0.83 | No, Vu<V |
| SLV 16 | 794 | -67993 | -35204 | -1252498 | | 3.2 | 758.5 | 1.47 | 31297 | | | 0.89 | No, Vu<V |
| SLD 4 | 544 | -70114 | 21612 | 3674430 | | 3.3 | 758.5 | 1.49 | 31721 | | | 1.47 | Si |
| SLD 4 | 794 | -68228 | 19286 | -1214598 | | 3.21 | 758.5 | 1.48 | 31344 | | | 1.63 | Si |
| SLV 3 | 544 | -65411 | 47624 | 7952344 | | 3.08 | 758.5 | 1.45 | 30780 | | | 0.65 | No, Vu<V |
| SLV 3 | 794 | -68158 | 42599 | -1357584 | | 3.21 | 758.5 | 1.48 | 31330 | | | 0.74 | No, Vu<V |
| SLV 14 | 544 | -81625 | -43197 | -6980100 | | 3.84 | 758.5 | 1.6 | 34023 | | | 0.79 | No, Vu<V |
| SLV 14 | 794 | -68317 | -38744 | -865591 | | 3.22 | 758.5 | 1.48 | 31362 | | | 0.81 | No, Vu<V |
| SLD 3 | 544 | -70114 | 21612 | 3674430 | | 3.3 | 758.5 | 1.49 | 31721 | | | 1.47 | Si |
| SLD 3 | 794 | -68228 | 19286 | -1214598 | | 3.21 | 758.5 | 1.48 | 31344 | | | 1.63 | Si |
| SLV 15 | 544 | -78689 | -40205 | -6903691 | | 3.71 | 758.5 | 1.57 | 33436 | | | 0.83 | No, Vu<V |
| SLV 15 | 794 | -67993 | -35204 | -1252498 | | 3.2 | 758.5 | 1.47 | 31297 | | | 0.89 | No, Vu<V |
| SLV 1 | 544 | -68347 | 44632 | 7875935 | | 3.22 | 758.5 | 1.48 | 31368 | | | 0.7 | No, Vu<V |
| SLV 1 | 794 | -68482 | 39060 | -970677 | | 3.22 | 758.5 | 1.48 | 31395 | | | 0.8 | No, Vu<V |
| SLV 13 | 544 | -81625 | -43197 | -6980100 | | 3.84 | 758.5 | 1.6 | 34023 | | | 0.79 | No, Vu<V |
| SLV 13 | 794 | -68317 | -38744 | -865591 | | 3.22 | 758.5 | 1.48 | 31362 | | | 0.81 | No, Vu<V |

### Verifica a pressoflessione fuori piano D.M. 17-01-18 (N.T.C.)

quota 720 Wa 0.05 denominatore 8 γM = 2

| Comb. | fd | Sa | σ0 | N | M | Mc | Coeff.s. | Verifica |
|---|---|---|---|---|---|---|---|---|
| SLV 4 | 14 | 0.39 | 3.04 | -64570 | 80656 | 679049 | 8.42 | Si |
| SLV 3 | 14 | 0.39 | 3.04 | -64570 | 80656 | 679049 | 8.42 | Si |
| SLV 1 | 14 | 0.39 | 3.07 | -65239 | 80656 | 683730 | 8.48 | Si |
| SLV 2 | 14 | 0.39 | 3.07 | -65239 | 80656 | 683730 | 8.48 | Si |
| SLV 7 | 14 | 0.39 | 3.18 | -67542 | 80656 | 699476 | 8.67 | Si |
| SLV 8 | 14 | 0.39 | 3.18 | -67542 | 80656 | 699476 | 8.67 | Si |
| SLV 5 | 14 | 0.39 | 3.29 | -69772 | 80656 | 714177 | 8.85 | Si |
| SLV 6 | 14 | 0.39 | 3.29 | -69772 | 80656 | 714177 | 8.85 | Si |
| SLV 11 | 14 | 0.39 | 3.33 | -70759 | 80656 | 720509 | 8.93 | Si |
| SLV 12 | 14 | 0.39 | 3.33 | -70759 | 80656 | 720509 | 8.93 | Si |

### Verifica dei meccanismi locali di collasso con analisi cinematica lineare

forza di aggancio al piano = 0 quota mezzeria = 720 Wa = 0.05 Ta = 0.0739

| Comb. | N top | N base | V orto | α0 | M* | e* | a0* | aLim | Verifica |
|---|---|---|---|---|---|---|---|---|---|
| SLV 11 | -61060 | -70616 | -1103 | 0.027 | 72.71 | 0.957 | 41.669 | 1522.194 | No |
| SLV 12 | -61060 | -70616 | -1103 | 0.027 | 72.71 | 0.957 | 41.669 | 1522.194 | No |
| SLV 6 | -69484 | -76420 | 1142 | 0.028 | 81.276 | 0.961 | 42.776 | 1522.194 | No |
| SLV 5 | -69484 | -76420 | 1142 | 0.028 | 81.276 | 0.961 | 42.776 | 1522.194 | No |
| SLV 7 | -60861 | -66632 | -942 | 0.03 | 72.507 | 0.957 | 45.237 | 1522.194 | No |
| SLV 8 | -60861 | -66632 | -942 | 0.03 | 72.507 | 0.957 | 45.237 | 1522.194 | No |
| SLV 10 | -69684 | -80404 | 981 | 0.03 | 81.479 | 0.961 | 46.004 | 1522.194 | No |
| SLV 9 | -69684 | -80404 | 981 | 0.03 | 81.479 | 0.961 | 46.004 | 1522.194 | No |
| SLV 1 | -66234 | -68347 | 601 | 0.035 | 77.97 | 0.96 | 53.31 | 839.377 | No |
| SLV 2 | -66234 | -68347 | 601 | 0.035 | 77.97 | 0.96 | 53.31 | 839.377 | No |

### Tabella dei coefficienti di sicurezza minimi

| Stato limite | Coeff.s. | Comb. | Verifica |
|---|---|---|---|
| PF_SLU | 8.52 | SLU 83 | Si |
| V_SLU | 5.883 | SLU 82 | Si |
| PF_SLV | 2.333 | SLV 3 | Si |
| V_SLV | 0.646 | SLV 3 | No |
| PFFP_SLV | 8.419 | SLV 3 | Si |
| R_SLV | 0.027 | SLV 11 | No |

## Maschio 121

Verifiche condotte secondo D.M. 17-01-18 (N.T.C.)

### Dati geometrici

| X ini. | Y ini. | X fin. | Y fin. | Quota i. | Quota.s | l | Sp. | h netta | h ini. | h fin. | a | a.s.,sx | a.s.,dx |
|---|---|---|---|---|---|---|---|---|---|---|---|---|---|
| -1046.6 | 104.6 | -1116.3 | 104.6 | L4 | L5 | 69.6 | 28 | 352 | 352 | 352 | | | |

### Caratteristiche del materiale

(Circolare 7 21-01-19 C8.5.I) Muratura in mattoni pieni e malta di calce LC2_Corti

| fb | fk | fvk0 | fmedio | τ0 | fv0 | μ | ϕ | fv,lim | E | G | FC |
|---|---|---|---|---|---|---|---|---|---|---|---|
| 60 | | | 34.5 | 0.9 | 2 | 0.58 | 0.77 | 3.25 | 32000 | 12800 | 1.2 |

### Verifica a pressoflessione nel piano secondo D.M. 17-01-18 NTC §7.8.2.2.1 in combinazioni non sismiche, γM = 3

| Comb. | Quota | N | M | σ0 | Mu | c.s. | Verifica |
|---|---|---|---|---|---|---|---|
| SLU 76 | 544 | -12821 | -14522 | 6.58 | 86058 | 5.926 | Si |
| SLU 76 | 794 | -11927 | 5168 | 6.12 | 103440 | 20.014 | Si |
| SLU 78 | 544 | -13201 | -14264 | 6.77 | 77607 | 5.441 | Si |
| SLU 78 | 794 | -12534 | 4637 | 6.43 | 92012 | 19.844 | Si |
| SLU 84 | 544 | -13459 | -13743 | 6.9 | 71511 | 5.204 | Si |
| SLU 84 | 794 | -12657 | 3713 | 6.49 | 89501 | 24.104 | Si |
| SLU 75 | 544 | -13063 | -14411 | 6.7 | 80747 | 5.603 | Si |
| SLU 75 | 794 | -12167 | 4906 | 6.24 | 99105 | 20.203 | Si |
| SLU 77 | 544 | -13160 | -12833 | 6.75 | 78547 | 6.121 | Si |
| SLU 77 | 794 | -12587 | 3118 | 6.46 | 90946 | 29.17 | Si |
| SLU 83 | 544 | -13418 | -12312 | 6.88 | 72497 | 5.888 | Si |
| SLU 83 | 794 | -12710 | 2194 | 6.52 | 88406 | 40.289 | Si |
| SLU 73 | 544 | -12683 | -14669 | 6.5 | 88968 | 6.065 | Si |
| SLU 73 | 794 | -11560 | 5437 | 5.93 | 109556 | 20.149 | Si |
| SLU 82 | 544 | -13321 | -13890 | 6.83 | 74807 | 5.386 | Si |
| SLU 82 | 794 | -12291 | 3982 | 6.3 | 96792 | 24.307 | Si |
| SLU 63 | 544 | -12224 | -16209 | 6.27 | 98058 | 6.05 | Si |
| SLU 63 | 794 | -11083 | 8040 | 5.68 | 116620 | 14.504 | Si |
| SLU 81 | 544 | -13280 | -12460 | 6.81 | 75768 | 6.081 | Si |
| SLU 81 | 794 | -12343 | 2463 | 6.33 | 95782 | 38.885 | Si |

### Verifica a pressoflessione nel piano secondo D.M. 17-01-18 NTC §7.8.2.2.1 in combinazioni sismiche, γM = 2

| Comb. | Quota | N | M | σ0 | Mu | c.s. | Verifica |
|---|---|---|---|---|---|---|---|
| SLV 14 | 544 | -10470 | -294613 | 5.37 | 204343 | 0.694 | No, M>Mu |
| SLV 14 | 794 | -8195 | 309567 | 0 | 0 | 0 | No, e>l/2 |
| SLV 15 | 544 | -12766 | -290696 | 6.55 | 206317 | 0.71 | No, M>Mu |
| SLV 15 | 794 | -7655 | 307570 | 0 | 0 | 0 | No, e>l/2 |
| SLV 4 | 544 | -6893 | 275023 | 0 | 0 | 0 | No, e>l/2 |
| SLV 4 | 794 | -7462 | -302196 | 0 | 0 | 0 | No, e>l/2 |
| SLV 13 | 544 | -10470 | -294613 | 5.37 | 204343 | 0.694 | No, M>Mu |
| SLV 13 | 794 | -8195 | 309567 | 0 | 0 | 0 | No, e>l/2 |
| SLV 16 | 544 | -12766 | -290696 | 6.55 | 206317 | 0.71 | No, M>Mu |

| Comb. | Quota | N | M | σ0 | Mu | c.s. | Verifica |
|---|---|---|---|---|---|---|---|
| SLV 16 | 794 | -7655 | 307570 | 0 | 0 | 0 | No, e>l/2 |
| SLV 3 | 544 | -6893 | 275023 | 0 | 0 | 0 | No, e>l/2 |
| SLV 3 | 794 | -7462 | -302196 | 0 | 0 | 0 | No, e>l/2 |
| SLD 15 | 544 | -10418 | -129705 | 5.34 | 204121 | 1.574 | Si |
| SLD 15 | 794 | -7757 | 133517 | 3.98 | 182148 | 1.364 | Si |
| SLV 2 | 544 | -4597 | 271106 | 0 | 0 | 0 | No, e>l/2 |
| SLV 2 | 794 | -8003 | -300198 | 0 | 0 | 0 | No, e>l/2 |
| SLV 1 | 544 | -4597 | 271106 | 0 | 0 | 0 | No, e>l/2 |
| SLV 1 | 794 | -8003 | -300198 | 0 | 0 | 0 | No, e>l/2 |
| SLD 16 | 544 | -10418 | -129705 | 5.34 | 204121 | 1.574 | Si |
| SLD 16 | 794 | -7757 | 133517 | 3.98 | 182148 | 1.364 | Si |

## Verifica a taglio nel piano secondo D.M. 17-01-18 (N.T.C.) §7.8.2.2.2 con rottura per scorrimento in combinazioni non sismiche, γM = 3

| Comb. | Quota | N | V par | M | σ0 | σN | l' | fvd | Vt scorr. | Vt fess.diag. | Vt,lim | c.s. | Verifica |
|---|---|---|---|---|---|---|---|---|---|---|---|---|---|
| SLU 44 | 544 | -9895 | -136 | -16729 | | 5.07 | 69.64 | 1.08 | 2112 | | | 15.48 | Si |
| SLU 44 | 794 | -8362 | -135 | 10797 | | 4.29 | 69.64 | 1.08 | 2112 | | | 15.59 | Si |
| SLU 43 | 544 | -9826 | -104 | -14345 | | 5.04 | 69.64 | 1.08 | 2112 | | | 20.23 | Si |
| SLU 43 | 794 | -8450 | -104 | 8266 | | 4.33 | 69.64 | 1.08 | 2112 | | | 20.28 | Si |
| SLU 60 | 544 | -12045 | -74 | -14926 | | 6.18 | 69.64 | 1.08 | 2112 | | | 28.51 | Si |
| SLU 60 | 794 | -10769 | -98 | 6790 | | 5.52 | 69.64 | 1.08 | 2112 | | | 21.53 | Si |
| SLU 61 | 544 | -12086 | -93 | -16357 | | 6.2 | 69.64 | 1.08 | 2112 | | | 22.65 | Si |
| SLU 61 | 794 | -10716 | -117 | 8309 | | 5.5 | 69.64 | 1.08 | 2112 | | | 18.07 | Si |
| SLU 47 | 544 | -10033 | -117 | -16581 | | 5.15 | 69.64 | 1.08 | 2112 | | | 18.01 | Si |
| SLU 47 | 794 | -8729 | -116 | 10529 | | 4.48 | 69.64 | 1.08 | 2112 | | | 18.18 | Si |
| SLU 46 | 544 | -10275 | -116 | -16471 | | 5.27 | 69.64 | 1.08 | 2112 | | | 18.23 | Si |
| SLU 46 | 794 | -8970 | -115 | 10266 | | 4.6 | 69.64 | 1.08 | 2112 | | | 18.4 | Si |
| SLU 52 | 544 | -11447 | -115 | -17136 | | 5.87 | 69.64 | 1.08 | 2112 | | | 18.34 | Si |
| SLU 52 | 794 | -9985 | -131 | 9765 | | 5.12 | 69.64 | 1.08 | 2112 | | | 16.09 | Si |
| SLU 54 | 544 | -11828 | -95 | -16878 | | 6.07 | 69.64 | 1.08 | 2112 | | | 22.33 | Si |
| SLU 54 | 794 | -10593 | -111 | 9233 | | 5.43 | 69.64 | 1.08 | 2112 | | | 19.1 | Si |
| SLU 55 | 544 | -11585 | -96 | -16988 | | 5.94 | 69.64 | 1.08 | 2112 | | | 22 | Si |
| SLU 55 | 794 | -10352 | -112 | 9496 | | 5.31 | 69.64 | 1.08 | 2112 | | | 18.87 | Si |
| SLU 2 | 544 | -7953 | -97 | -12768 | | 4.08 | 69.64 | 1.08 | 2112 | | | 21.68 | Si |
| SLU 2 | 794 | -6827 | -97 | 7749 | | 3.5 | 69.64 | 1.02 | 1994 | | | 20.56 | Si |

## Verifica a taglio nel piano secondo D.M. 17-01-18 (N.T.C.) §7.8.2.2.2 con rottura per scorrimento in combinazioni sismiche, γM = 2

| Comb. | Quota | N | V par | M | σ0 | σN | l' | fvd | Vt scorr. | Vt fess.diag. | Vt,lim | c.s. | Verifica |
|---|---|---|---|---|---|---|---|---|---|---|---|---|---|
| SLV 15 | 544 | -12766 | -2725 | -290696 | | 12.61 | 36.14 | 1.63 | 1645 | | | 0.6 | No, Vu<V |
| SLV 15 | 794 | -7655 | -2654 | 307570 | | 0 | 0 | 0.83 | 0 | | | 0 | No, Vu<V |
| SLV 13 | 544 | -10470 | -2582 | -294613 | | 18.66 | 20.04 | 1.63 | 912 | | | 0.35 | No, Vu<V |
| SLV 13 | 794 | -8195 | -2457 | 309567 | | 0 | 0 | 0.83 | 0 | | | 0 | No, Vu<V |
| SLV 1 | 544 | -4597 | 2639 | 271106 | | 0 | 0 | 0.83 | 0 | | | 0 | No, Vu<V |
| SLV 1 | 794 | -8003 | 2556 | -300198 | | 0 | 0 | 0.83 | 0 | | | 0 | No, Vu<V |
| SLV 2 | 544 | -4597 | 2639 | 271106 | | 0 | 0 | 0.83 | 0 | | | 0 | No, Vu<V |
| SLV 2 | 794 | -8003 | 2556 | -300198 | | 0 | 0 | 0.83 | 0 | | | 0 | No, Vu<V |
| SLV 16 | 544 | -12766 | -2725 | -290696 | | 12.61 | 36.14 | 1.63 | 1645 | | | 0.6 | No, Vu<V |
| SLV 16 | 794 | -7655 | -2654 | 307570 | | 0 | 0 | 0.83 | 0 | | | 0 | No, Vu<V |
| SLV 14 | 544 | -10470 | -2582 | -294613 | | 18.66 | 20.04 | 1.63 | 912 | | | 0.35 | No, Vu<V |
| SLV 14 | 794 | -8195 | -2457 | 309567 | | 0 | 0 | 0.83 | 0 | | | 0 | No, Vu<V |
| SLV 6 | 544 | -3973 | 979 | 68534 | | 2.69 | 52.71 | 1.37 | 2024 | | | 2.07 | Si |
| SLV 6 | 794 | -8700 | 1031 | -84450 | | 4.46 | 69.64 | 1.63 | 3168 | | | 3.07 | Si |
| SLV 3 | 544 | -6893 | 2495 | 275023 | | 0 | 0 | 0.83 | 0 | | | 0 | No, Vu<V |
| SLV 3 | 794 | -7462 | 2360 | -302196 | | 0 | 0 | 0.83 | 0 | | | 0 | No, Vu<V |
| SLV 4 | 544 | -6893 | 2495 | 275023 | | 0 | 0 | 0.83 | 0 | | | 0 | No, Vu<V |
| SLV 4 | 794 | -7462 | 2360 | -302196 | | 0 | 0 | 0.83 | 0 | | | 0 | No, Vu<V |
| SLV 5 | 544 | -3973 | 979 | 68534 | | 2.69 | 52.71 | 1.37 | 2024 | | | 2.07 | Si |
| SLV 5 | 794 | -8700 | 1031 | -84450 | | 4.46 | 69.64 | 1.63 | 3168 | | | 3.07 | Si |

## Verifica a pressoflessione fuori piano D.M. 17-01-18 (N.T.C.)

quota 720 Wa 0.05 denominatore 8 γM = 2

| Comb. | fd | Sa | σ0 | N | M | Mc | Coeff.s. | Verifica |
|---|---|---|---|---|---|---|---|---|
| SLV 6 | 14 | 0.39 | 4.01 | -7813 | 7405 | 73510 | 9.93 | Si |
| SLV 5 | 14 | 0.39 | 4.01 | -7813 | 7405 | 73510 | 9.93 | Si |
| SLV 10 | 14 | 0.39 | 4.01 | -7818 | 7405 | 73537 | 9.93 | Si |
| SLV 9 | 14 | 0.39 | 4.01 | -7818 | 7405 | 73537 | 9.93 | Si |
| SLV 2 | 14 | 0.39 | 4.03 | -7851 | 7405 | 73694 | 9.95 | Si |
| SLV 1 | 14 | 0.39 | 4.03 | -7851 | 7405 | 73694 | 9.95 | Si |
| SLV 14 | 14 | 0.39 | 4.04 | -7870 | 7405 | 73783 | 9.96 | Si |
| SLV 13 | 14 | 0.39 | 4.04 | -7870 | 7405 | 73783 | 9.96 | Si |
| SLV 4 | 14 | 0.39 | 4.05 | -7890 | 7405 | 73878 | 9.98 | Si |
| SLV 3 | 14 | 0.39 | 4.05 | -7890 | 7405 | 73878 | 9.98 | Si |

## Verifica dei meccanismi locali di collasso con analisi cinematica lineare

forza di aggancio al piano = 0 quota mezzeria = 720 Wa = 0.05 Ta = 0.0739

| Comb. | N top | N base | V orto | α0 | M* | e* | a0* | aLim | Verifica |
|---|---|---|---|---|---|---|---|---|---|
| SLV 9 | -4552 | -5735 | 258 | 0 | 5.605 | 0.95 | 0 | 1522.194 | No |
| SLV 10 | -4552 | -5735 | 258 | 0 | 5.605 | 0.95 | 0 | 1522.194 | No |
| SLV 5 | -3717 | -3973 | 225 | 0 | 4.758 | 0.942 | 0 | 1522.194 | No |
| SLV 8 | -4804 | -11628 | -262 | 0 | 5.861 | 0.952 | 0 | 1522.194 | No |
| SLV 6 | -3717 | -3973 | 225 | 0 | 4.758 | 0.942 | 0 | 1522.194 | No |
| SLV 7 | -4804 | -11628 | -262 | 0 | 5.861 | 0.952 | 0 | 1522.194 | No |
| SLV 11 | -5639 | -13390 | -228 | 0.007 | 6.709 | 0.957 | 10.933 | 1522.194 | No |
| SLV 12 | -5639 | -13390 | -228 | 0.007 | 6.709 | 0.957 | 10.933 | 1522.194 | No |
| SLV 3 | -3450 | -6893 | -131 | 0.014 | 4.487 | 0.939 | 21.165 | 839.377 | No |
| SLV 4 | -3450 | -6893 | -131 | 0.014 | 4.487 | 0.939 | 21.165 | 839.377 | No |

Tabella dei coefficienti di sicurezza minimi

| Stato limite | Coeff.s. | Comb. | Verifica |
|---|---|---|---|
| PF_SLU | 5.204 | SLU 84 | Si |
| V_SLU | 15.485 | SLU 44 | Si |
| PF_SLV | 0 | SLV 1 | No |
| V_SLV | 0 | SLV 1 | No |
| PFFP_SLV | 9.927 | SLV 5 | Si |
| R_SLV | 0 | SLV 5 | No |

## Maschio 122

Verifiche condotte secondo D.M. 17-01-18 (N.T.C.)

### Dati geometrici

| X ini. | Y ini. | X fin. | Y fin. | Quota i. | Quota.s | l | Sp. | h netta | h ini. | h fin. | a | a.s.,sx | a.s.,dx |
|---|---|---|---|---|---|---|---|---|---|---|---|---|---|
| -727.8 | 104.6 | -938.6 | 104.6 | L4 | L5 | 210.9 | 28 | 352 | 352 | 352 | | | |

### Caratteristiche del materiale

(Circolare 7 21-01-19 C8.5.I) Muratura in mattoni pieni e malta di calce LC2_Corti

| fb | fk | fvk0 | fmedio | τ0 | fv0 | μ | ϕ | fv,lim | E | G | FC |
|---|---|---|---|---|---|---|---|---|---|---|---|
| 60 | | | 34.5 | 0.9 | 2 | 0.58 | 0.77 | 3.25 | 32000 | 12800 | 1.2 |

### Verifica a pressoflessione nel piano secondo D.M. 17-01-18 NTC §7.8.2.2.1 in combinazioni non sismiche, γM = 3

| Comb. | Quota | N | M | σ0 | Mu | c.s. | Verifica |
|---|---|---|---|---|---|---|---|
| SLU 82 | 544 | -38550 | -107593 | 6.53 | 806599 | 7.497 | Si |
| SLU 82 | 794 | -32906 | 380202 | 5.57 | 1095610 | 2.882 | Si |
| SLU 75 | 544 | -38237 | -90951 | 6.48 | 826265 | 9.085 | Si |
| SLU 75 | 794 | -32555 | 362313 | 5.51 | 1108978 | 3.061 | Si |
| SLU 83 | 544 | -39527 | -74329 | 6.69 | 742392 | 9.988 | Si |
| SLU 83 | 794 | -33712 | 372078 | 5.71 | 1062885 | 2.857 | Si |
| SLU 76 | 544 | -37614 | -97698 | 6.37 | 864154 | 8.845 | Si |
| SLU 76 | 794 | -31990 | 358610 | 5.42 | 1129351 | 3.149 | Si |
| SLU 80 | 544 | -38590 | -71156 | 6.54 | 804037 | 11.3 | Si |
| SLU 80 | 794 | -32818 | 352942 | 5.56 | 1099009 | 3.114 | Si |
| SLU 74 | 544 | -38241 | -70786 | 6.48 | 826016 | 11.669 | Si |
| SLU 74 | 794 | -32489 | 354946 | 5.5 | 1111452 | 3.131 | Si |
| SLU 78 | 544 | -39210 | -77853 | 6.64 | 763662 | 9.809 | Si |
| SLU 78 | 794 | -33428 | 361556 | 5.66 | 1074764 | 2.973 | Si |
| SLU 81 | 544 | -38554 | -87427 | 6.53 | 806346 | 9.223 | Si |
| SLU 81 | 794 | -32840 | 372835 | 5.56 | 1098187 | 2.946 | Si |
| SLU 77 | 544 | -39214 | -57688 | 6.64 | 763397 | 13.233 | Si |
| SLU 77 | 794 | -33361 | 354189 | 5.65 | 1077493 | 3.042 | Si |
| SLU 84 | 544 | -39523 | -94494 | 6.69 | 742663 | 7.859 | Si |
| SLU 84 | 794 | -33779 | 379445 | 5.72 | 1060053 | 2.794 | Si |

### Verifica a pressoflessione nel piano secondo D.M. 17-01-18 NTC §7.8.2.2.1 in combinazioni sismiche, γM = 2

| Comb. | Quota | N | M | σ0 | Mu | c.s. | Verifica |
|---|---|---|---|---|---|---|---|
| SLV 16 | 544 | -21317 | -1467185 | 3.61 | 1583367 | 1.079 | Si |
| SLV 16 | 794 | -22420 | 827039 | 3.8 | 1629186 | 1.97 | Si |
| SLV 13 | 544 | -20131 | -1362190 | 3.41 | 1530191 | 1.123 | Si |
| SLV 13 | 794 | -20965 | 736467 | 3.55 | 1568030 | 2.129 | Si |
| SLV 15 | 544 | -21317 | -1467185 | 3.61 | 1583367 | 1.079 | Si |
| SLV 15 | 794 | -22420 | 827039 | 3.8 | 1629186 | 1.97 | Si |
| SLD 15 | 544 | -23458 | -653429 | 3.97 | 1669006 | 2.554 | Si |
| SLD 15 | 794 | -21532 | 483947 | 3.65 | 1592570 | 3.291 | Si |
| SLD 16 | 544 | -23458 | -653429 | 3.97 | 1669006 | 2.554 | Si |
| SLD 16 | 794 | -21532 | 483947 | 3.65 | 1592570 | 3.291 | Si |
| SLV 4 | 544 | -30004 | 1265632 | 5.08 | 1847701 | 1.46 | Si |
| SLV 4 | 794 | -20812 | -277999 | 3.52 | 1561210 | 5.616 | Si |
| SLV 2 | 544 | -28818 | 1370627 | 4.88 | 1824624 | 1.331 | Si |
| SLV 2 | 794 | -19356 | -368572 | 3.28 | 1493211 | 4.051 | Si |
| SLV 14 | 544 | -20131 | -1362190 | 3.41 | 1530191 | 1.123 | Si |
| SLV 14 | 794 | -20965 | 736467 | 3.55 | 1568030 | 2.129 | Si |
| SLV 1 | 544 | -28818 | 1370627 | 4.88 | 1824624 | 1.331 | Si |
| SLV 1 | 794 | -19356 | -368572 | 3.28 | 1493211 | 4.051 | Si |
| SLV 3 | 544 | -30004 | 1265632 | 5.08 | 1847701 | 1.46 | Si |
| SLV 3 | 794 | -20812 | -277999 | 3.52 | 1561210 | 5.616 | Si |

### Verifica a taglio nel piano secondo D.M. 17-01-18 (N.T.C.) §7.8.2.2.2 con rottura per scorrimento in combinazioni non sismiche, γM = 3

| Comb. | Quota | N | V par | M | σ0 | σN | l' | fvd | Vt scorr. | Vt fess.diag. | Vt,lim | c.s. | Verifica |
|---|---|---|---|---|---|---|---|---|---|---|---|---|---|
| SLU 81 | 544 | -38554 | -991 | -87427 | | 6.53 | 210.86 | 1.08 | 6396 | | | 6.46 | Si |
| SLU 81 | 794 | -32840 | -607 | 372835 | | 5.56 | 210.86 | 1.08 | 6396 | | | 10.54 | Si |
| SLU 63 | 544 | -35093 | -995 | -96568 | | 5.94 | 210.86 | 1.08 | 6396 | | | 6.43 | Si |
| SLU 63 | 794 | -29706 | -624 | 339810 | | 5.03 | 210.86 | 1.08 | 6396 | | | 10.24 | Si |
| SLU 82 | 544 | -38550 | -1139 | -107593 | | 6.53 | 210.86 | 1.08 | 6396 | | | 5.62 | Si |
| SLU 82 | 794 | -32906 | -700 | 380202 | | 5.57 | 210.86 | 1.08 | 6396 | | | 9.13 | Si |
| SLU 61 | 544 | -34120 | -1095 | -109667 | | 5.78 | 210.86 | 1.08 | 6396 | | | 5.84 | Si |
| SLU 61 | 794 | -28833 | -722 | 340568 | | 4.88 | 210.86 | 1.08 | 6396 | | | 8.85 | Si |
| SLU 31 | 544 | -31401 | -1002 | -97472 | | 5.32 | 210.86 | 1.08 | 6396 | | | 6.38 | Si |
| SLU 31 | 794 | -26964 | -597 | 312733 | | 4.57 | 210.86 | 1.08 | 6396 | | | 10.71 | Si |
| SLU 73 | 544 | -36641 | -1115 | -110797 | | 6.21 | 210.86 | 1.08 | 6396 | | | 5.74 | Si |
| SLU 73 | 794 | -31118 | -701 | 359367 | | 5.27 | 210.86 | 1.08 | 6396 | | | 9.13 | Si |
| SLU 76 | 544 | -37614 | -1016 | -97698 | | 6.37 | 210.86 | 1.08 | 6396 | | | 6.3 | Si |
| SLU 76 | 794 | -31990 | -603 | 358610 | | 5.42 | 210.86 | 1.08 | 6396 | | | 10.62 | Si |
| SLU 84 | 544 | -39523 | -1039 | -94494 | | 6.69 | 210.86 | 1.08 | 6396 | | | 6.16 | Si |

| Comb. | Quota | N | V par | M | σ0 | σN | l' | fvd | Vt scorr. | Vt fess.diag. | Vt,lim | c.s. | Verifica |
|---|---|---|---|---|---|---|---|---|---|---|---|---|---|
| SLU 84 | 794 | -33779 | -602 | 379445 | | 5.72 | 210.86 | 1.08 | 6396 | | | 10.62 | Si |
| SLU 40 | 544 | -33309 | -1026 | -94268 | | 5.64 | 210.86 | 1.08 | 6396 | | | 6.24 | Si |
| SLU 40 | 794 | -28752 | -597 | 333567 | | 4.87 | 210.86 | 1.08 | 6396 | | | 10.71 | Si |
| SLU 52 | 544 | -32212 | -1071 | -112871 | | 5.46 | 210.86 | 1.08 | 6396 | | | 5.97 | Si |
| SLU 52 | 794 | -27045 | -723 | 319733 | | 4.58 | 210.86 | 1.08 | 6396 | | | 8.85 | Si |

### Verifica a taglio nel piano secondo D.M. 17-01-18 (N.T.C.) §7.8.2.2.2 con rottura per scorrimento in combinazioni sismiche, γM = 2

| Comb. | Quota | N | V par | M | σ0 | σN | l' | fvd | Vt scorr. | Vt fess.diag. | Vt,lim | c.s. | Verifica |
|---|---|---|---|---|---|---|---|---|---|---|---|---|---|
| SLV 15 | 544 | -21317 | -11636 | -1467185 | | 6.93 | 109.81 | 1.63 | 4996 | | | 0.43 | No, Vu<V |
| SLV 15 | 794 | -22420 | -6483 | 827039 | | 3.89 | 205.63 | 1.61 | 9282 | | | 1.43 | Si |
| SLV 16 | 544 | -21317 | -11636 | -1467185 | | 6.93 | 109.81 | 1.63 | 4996 | | | 0.43 | No, Vu<V |
| SLV 16 | 794 | -22420 | -6483 | 827039 | | 3.89 | 205.63 | 1.61 | 9282 | | | 1.43 | Si |
| SLV 11 | 544 | -25740 | -5267 | -633192 | | 4.36 | 210.86 | 1.63 | 9594 | | | 1.82 | Si |
| SLV 11 | 794 | -23555 | -3190 | 545944 | | 3.99 | 210.86 | 1.63 | 9594 | | | 3.01 | Si |
| SLV 3 | 544 | -30004 | 9663 | 1265632 | | 5.65 | 189.75 | 1.63 | 8633 | | | 0.89 | No, Vu<V |
| SLV 3 | 794 | -20812 | 5118 | -277999 | | 3.52 | 210.86 | 1.54 | 9082 | | | 1.77 | Si |
| SLV 1 | 544 | -28818 | 10594 | 1370627 | | 5.93 | 173.61 | 1.63 | 7899 | | | 0.75 | No, Vu<V |
| SLV 1 | 794 | -19356 | 5776 | -368572 | | 3.28 | 210.86 | 1.49 | 8791 | | | 1.52 | Si |
| SLV 13 | 544 | -20131 | -10705 | -1362190 | | 6.35 | 113.3 | 1.63 | 5155 | | | 0.48 | No, Vu<V |
| SLV 13 | 794 | -20965 | -5826 | 736467 | | 3.55 | 210.86 | 1.54 | 9113 | | | 1.56 | Si |
| SLV 14 | 544 | -20131 | -10705 | -1362190 | | 6.35 | 113.3 | 1.63 | 5155 | | | 0.48 | No, Vu<V |
| SLV 14 | 794 | -20965 | -5826 | 736467 | | 3.55 | 210.86 | 1.54 | 9113 | | | 1.56 | Si |
| SLV 12 | 544 | -25740 | -5267 | -633192 | | 4.36 | 210.86 | 1.63 | 9594 | | | 1.82 | Si |
| SLV 12 | 794 | -23555 | -3190 | 545944 | | 3.99 | 210.86 | 1.63 | 9594 | | | 3.01 | Si |
| SLV 2 | 544 | -28818 | 10594 | 1370627 | | 5.93 | 173.61 | 1.63 | 7899 | | | 0.75 | No, Vu<V |
| SLV 2 | 794 | -19356 | 5776 | -368572 | | 3.28 | 210.86 | 1.49 | 8791 | | | 1.52 | Si |
| SLV 4 | 544 | -30004 | 9663 | 1265632 | | 5.65 | 189.75 | 1.63 | 8633 | | | 0.89 | No, Vu<V |
| SLV 4 | 794 | -20812 | 5118 | -277999 | | 3.52 | 210.86 | 1.54 | 9082 | | | 1.77 | Si |

### Verifica a pressoflessione fuori piano D.M. 17-01-18 (N.T.C.)

quota 720 Wa 0.05 denominatore 8 γM = 2

| Comb. | fd | Sa | σ0 | N | M | Mc | Coeff.s. | Verifica |
|---|---|---|---|---|---|---|---|---|
| SLV 13 | 14 | 0.39 | 3.12 | -18431 | 22422 | 192110 | 8.57 | Si |
| SLV 14 | 14 | 0.39 | 3.12 | -18431 | 22422 | 192110 | 8.57 | Si |
| SLV 16 | 14 | 0.39 | 3.24 | -19140 | 22422 | 196865 | 8.78 | Si |
| SLV 15 | 14 | 0.39 | 3.24 | -19140 | 22422 | 196865 | 8.78 | Si |
| SLV 9 | 14 | 0.39 | 3.51 | -20710 | 22422 | 206708 | 9.22 | Si |
| SLV 10 | 14 | 0.39 | 3.51 | -20710 | 22422 | 206708 | 9.22 | Si |
| SLV 12 | 14 | 0.39 | 3.91 | -23073 | 22422 | 219710 | 9.8 | Si |
| SLV 11 | 14 | 0.39 | 3.91 | -23073 | 22422 | 219710 | 9.8 | Si |
| SLV 6 | 14 | 0.39 | 3.96 | -23373 | 22422 | 221206 | 9.87 | Si |
| SLV 5 | 14 | 0.39 | 3.96 | -23373 | 22422 | 221206 | 9.87 | Si |

### Verifica dei meccanismi locali di collasso con analisi cinematica lineare

forza di aggancio al piano = 0 quota mezzeria = 720 Wa = 0.05 Ta = 0.0739

| Comb. | N top | N base | V orto | α0 | M* | e* | a0* | aLim | Verifica |
|---|---|---|---|---|---|---|---|---|---|
| SLV 10 | -17678 | -21789 | 397 | 0.023 | 20.929 | 0.959 | 35.268 | 1522.194 | No |
| SLV 9 | -17678 | -21789 | 397 | 0.023 | 20.929 | 0.959 | 35.268 | 1522.194 | No |
| SLV 6 | -16963 | -24395 | 386 | 0.023 | 20.201 | 0.957 | 35.302 | 1522.194 | No |
| SLV 5 | -16963 | -24395 | 386 | 0.023 | 20.201 | 0.957 | 35.302 | 1522.194 | No |
| SLV 7 | -18999 | -28346 | -399 | 0.024 | 22.272 | 0.961 | 36.666 | 1522.194 | No |
| SLV 8 | -18999 | -28346 | -399 | 0.024 | 22.272 | 0.961 | 36.666 | 1522.194 | No |
| SLV 11 | -19715 | -25740 | -387 | 0.025 | 23 | 0.962 | 38.215 | 1522.194 | No |
| SLV 12 | -19715 | -25740 | -387 | 0.025 | 23 | 0.962 | 38.215 | 1522.194 | No |
| SLV 4 | -17452 | -30004 | -138 | 0.036 | 20.698 | 0.958 | 55.362 | 839.377 | No |
| SLV 3 | -17452 | -30004 | -138 | 0.036 | 20.698 | 0.958 | 55.362 | 839.377 | No |

### Tabella dei coefficienti di sicurezza minimi

| Stato limite | Coeff.s. | Comb. | Verifica |
|---|---|---|---|
| PF_SLU | 2.794 | SLU 84 | Si |
| V_SLU | 5.618 | SLU 82 | Si |
| PF_SLV | 1.079 | SLV 15 | Si |
| V_SLV | 0.429 | SLV 15 | No |
| PFFP_SLV | 8.568 | SLV 13 | Si |
| R_SLV | 0.023 | SLV 9 | No |

## Maschio 123

Verifiche condotte secondo D.M. 17-01-18 (N.T.C.)

### Dati geometrici

| X ini. | Y ini. | X fin. | Y fin. | Quota i. | Quota.s | l | Sp. | h netta | h ini. | h fin. | a | a.s.,sx | a.s.,dx |
|---|---|---|---|---|---|---|---|---|---|---|---|---|---|
| -496.8 | 104.6 | -647.8 | 104.6 | L4 | L5 | 151 | 28 | 352 | 352 | 352 | | | |

### Caratteristiche del materiale

(Circolare 7 21-01-19 C8.5.I) Muratura in mattoni pieni e malta di calce LC2_Corti

| fb | fk | fvk0 | fmedio | τ0 | fv0 | μ | ϕ | fv,lim | E | G | FC |
|---|---|---|---|---|---|---|---|---|---|---|---|
| 60 | | | 34.5 | 0.9 | 2 | 0.58 | 0.77 | 3.25 | 32000 | 12800 | 1.2 |

### Verifica a pressoflessione nel piano secondo D.M. 17-01-18 NTC §7.8.2.2.1 in combinazioni non sismiche, γM = 3

| Comb. | Quota | N | M | σ0 | Mu | c.s. | Verifica |
|---|---|---|---|---|---|---|---|
| SLU 75 | 544 | -23496 | -56478 | 5.56 | 563732 | 9.981 | Si |
| SLU 75 | 754 | -24126 | 136085 | 5.71 | 545509 | 4.009 | Si |

| Comb. | Quota | N | M | σ0 | Mu | c.s. | Verifica |
|---|---|---|---|---|---|---|---|
| SLU 80 | 544 | -23822 | -56125 | 5.63 | 554526 | 9.88 | Si |
| SLU 80 | 754 | -24233 | 136787 | 5.73 | 542246 | 3.964 | Si |
| SLU 84 | 544 | -24080 | -58761 | 5.7 | 546919 | 9.307 | Si |
| SLU 84 | 754 | -24978 | 142699 | 5.91 | 518147 | 3.631 | Si |
| SLU 78 | 544 | -24173 | -59552 | 5.72 | 544099 | 9.136 | Si |
| SLU 78 | 754 | -24640 | 141863 | 5.83 | 529393 | 3.732 | Si |
| SLU 77 | 544 | -24230 | -60002 | 5.73 | 542339 | 9.039 | Si |
| SLU 77 | 754 | -24378 | 141626 | 5.77 | 537760 | 3.797 | Si |
| SLU 83 | 544 | -24137 | -59210 | 5.71 | 545182 | 9.208 | Si |
| SLU 83 | 754 | -24716 | 142462 | 5.85 | 526901 | 3.699 | Si |
| SLU 81 | 544 | -23460 | -56136 | 5.55 | 564709 | 10.06 | Si |
| SLU 81 | 754 | -24203 | 136684 | 5.72 | 543187 | 3.974 | Si |
| SLU 79 | 544 | -23879 | -56574 | 5.65 | 552854 | 9.772 | Si |
| SLU 79 | 754 | -23972 | 136550 | 5.67 | 550145 | 4.029 | Si |
| SLU 74 | 544 | -23553 | -56928 | 5.57 | 562143 | 9.875 | Si |
| SLU 74 | 754 | -23865 | 135847 | 5.64 | 553286 | 4.073 | Si |
| SLU 82 | 544 | -23403 | -55687 | 5.54 | 566276 | 10.169 | Si |
| SLU 82 | 754 | -24465 | 136921 | 5.79 | 535022 | 3.908 | Si |

Verifica a pressoflessione nel piano secondo D.M. 17-01-18 NTC §7.8.2.2.1 in combinazioni sismiche, γM = 2

| Comb. | Quota | N | M | σ0 | Mu | c.s. | Verifica |
|---|---|---|---|---|---|---|---|
| SLV 15 | 544 | -15112 | -855063 | 3.57 | 807211 | 0.944 | No, M>Mu |
| SLV 15 | 754 | -15507 | 838318 | 3.67 | 819350 | 0.977 | No, M>Mu |
| SLD 15 | 544 | -15468 | -382141 | 3.66 | 818176 | 2.141 | Si |
| SLD 15 | 754 | -15555 | 402746 | 3.68 | 820799 | 2.038 | Si |
| SLV 1 | 544 | -16362 | 793983 | 3.87 | 844074 | 1.063 | Si |
| SLV 1 | 754 | -15698 | -681404 | 3.71 | 825068 | 1.211 | Si |
| SLV 4 | 544 | -16934 | 733822 | 4.01 | 859432 | 1.171 | Si |
| SLV 4 | 754 | -16505 | -656305 | 3.9 | 848007 | 1.292 | Si |
| SLV 13 | 544 | -14540 | -794902 | 3.44 | 788807 | 0.992 | No, M>Mu |
| SLV 13 | 754 | -14700 | 813219 | 3.48 | 794058 | 0.976 | No, M>Mu |
| SLV 16 | 544 | -15112 | -855063 | 3.57 | 807211 | 0.944 | No, M>Mu |
| SLV 16 | 754 | -15507 | 838318 | 3.67 | 819350 | 0.977 | No, M>Mu |
| SLV 2 | 544 | -16362 | 793983 | 3.87 | 844074 | 1.063 | Si |
| SLV 2 | 754 | -15698 | -681404 | 3.71 | 825068 | 1.211 | Si |
| SLV 3 | 544 | -16934 | 733822 | 4.01 | 859432 | 1.171 | Si |
| SLV 3 | 754 | -16505 | -656305 | 3.9 | 848007 | 1.292 | Si |
| SLV 14 | 544 | -14540 | -794902 | 3.44 | 788807 | 0.992 | No, M>Mu |
| SLV 14 | 754 | -14700 | 813219 | 3.48 | 794058 | 0.976 | No, M>Mu |
| SLD 16 | 544 | -15468 | -382141 | 3.66 | 818176 | 2.141 | Si |
| SLD 16 | 754 | -15555 | 402746 | 3.68 | 820799 | 2.038 | Si |

Verifica a taglio nel piano secondo D.M. 17-01-18 (N.T.C.) §7.8.2.2.2 con rottura per scorrimento in combinazioni non sismiche, γM = 3

| Comb. | Quota | N | V par | M | σ0 | σN | l' | fvd | Vt scorr. | Vt fess.diag. | Vt,lim | c.s. | Verifica |
|---|---|---|---|---|---|---|---|---|---|---|---|---|---|
| SLU 83 | 544 | -24137 | -1328 | -59210 | | 5.71 | 151 | 1.08 | 4580 | | | 3.45 | Si |
| SLU 83 | 754 | -24716 | -1328 | 142462 | | 5.85 | 151 | 1.08 | 4580 | | | 3.45 | Si |
| SLU 81 | 544 | -23460 | -1253 | -56136 | | 5.55 | 151 | 1.08 | 4580 | | | 3.65 | Si |
| SLU 81 | 754 | -24203 | -1253 | 136684 | | 5.72 | 151 | 1.08 | 4580 | | | 3.66 | Si |
| SLU 84 | 544 | -24080 | -1204 | -58761 | | 5.7 | 151 | 1.08 | 4580 | | | 3.81 | Si |
| SLU 84 | 754 | -24978 | -1200 | 142699 | | 5.91 | 151 | 1.08 | 4580 | | | 3.82 | Si |
| SLU 78 | 544 | -24173 | -1218 | -59552 | | 5.72 | 151 | 1.08 | 4580 | | | 3.76 | Si |
| SLU 78 | 754 | -24640 | -1214 | 141863 | | 5.83 | 151 | 1.08 | 4580 | | | 3.77 | Si |
| SLU 41 | 544 | -20647 | -1225 | -54714 | | 4.88 | 151 | 1.08 | 4580 | | | 3.74 | Si |
| SLU 41 | 754 | -21513 | -1225 | 130042 | | 5.09 | 151 | 1.08 | 4580 | | | 3.74 | Si |
| SLU 79 | 544 | -23879 | -1290 | -56574 | | 5.65 | 151 | 1.08 | 4580 | | | 3.55 | Si |
| SLU 79 | 754 | -23972 | -1290 | 136550 | | 5.67 | 151 | 1.08 | 4580 | | | 3.55 | Si |
| SLU 35 | 544 | -20740 | -1240 | -55505 | | 4.91 | 151 | 1.08 | 4580 | | | 3.7 | Si |
| SLU 35 | 754 | -21175 | -1239 | 129206 | | 5.01 | 151 | 1.08 | 4580 | | | 3.7 | Si |
| SLU 37 | 544 | -20389 | -1187 | -52078 | | 4.82 | 151 | 1.08 | 4580 | | | 3.86 | Si |
| SLU 37 | 754 | -20769 | -1187 | 124130 | | 4.91 | 151 | 1.08 | 4580 | | | 3.86 | Si |
| SLU 77 | 544 | -24230 | -1342 | -60002 | | 5.73 | 151 | 1.08 | 4580 | | | 3.41 | Si |
| SLU 77 | 754 | -24378 | -1342 | 141626 | | 5.77 | 151 | 1.08 | 4580 | | | 3.41 | Si |
| SLU 74 | 544 | -23553 | -1268 | -56928 | | 5.57 | 151 | 1.08 | 4580 | | | 3.61 | Si |
| SLU 74 | 754 | -23865 | -1267 | 135847 | | 5.64 | 151 | 1.08 | 4580 | | | 3.62 | Si |

Verifica a taglio nel piano secondo D.M. 17-01-18 (N.T.C.) §7.8.2.2.2 con rottura per scorrimento in combinazioni sismiche, γM = 2

| Comb. | Quota | N | V par | M | σ0 | σN | l' | fvd | Vt scorr. | Vt fess.diag. | Vt,lim | c.s. | Verifica |
|---|---|---|---|---|---|---|---|---|---|---|---|---|---|
| SLV 4 | 544 | -16934 | 8002 | 733822 | | 6.27 | 96.5 | 1.63 | 4391 | | | 0.55 | No, Vu<V |
| SLV 4 | 754 | -16505 | 7771 | -656305 | | 5.5 | 107.21 | 1.63 | 4878 | | | 0.63 | No, Vu<V |
| SLV 2 | 544 | -16362 | 9552 | 793983 | | 7.22 | 80.92 | 1.63 | 3682 | | | 0.39 | No, Vu<V |
| SLV 2 | 754 | -15698 | 9476 | -681404 | | 5.82 | 96.28 | 1.63 | 4381 | | | 0.46 | No, Vu<V |
| SLV 13 | 544 | -14540 | -9414 | -794902 | | 8.31 | 62.49 | 1.63 | 2843 | | | 0.3 | No, Vu<V |
| SLV 13 | 754 | -14700 | -9182 | 813219 | | 8.67 | 60.54 | 1.63 | 2755 | | | 0.3 | No, Vu<V |
| SLV 12 | 544 | -16418 | -6134 | -369142 | | 3.88 | 151 | 1.61 | 6807 | | | 1.11 | Si |
| SLV 12 | 754 | -16798 | -6346 | 344483 | | 3.97 | 151 | 1.63 | 6871 | | | 1.08 | Si |
| SLV 14 | 544 | -14540 | -9414 | -794902 | | 8.31 | 62.49 | 1.63 | 2843 | | | 0.3 | No, Vu<V |
| SLV 14 | 754 | -14700 | -9182 | 813219 | | 8.67 | 60.54 | 1.63 | 2755 | | | 0.3 | No, Vu<V |
| SLV 3 | 544 | -16934 | 8002 | 733822 | | 6.27 | 96.5 | 1.63 | 4391 | | | 0.55 | No, Vu<V |
| SLV 3 | 754 | -16505 | 7771 | -656305 | | 5.5 | 107.21 | 1.63 | 4878 | | | 0.63 | No, Vu<V |
| SLV 16 | 544 | -15112 | -10964 | -855063 | | 9.51 | 56.76 | 1.63 | 2583 | | | 0.24 | No, Vu<V |
| SLV 16 | 754 | -15507 | -10887 | 838318 | | 8.61 | 64.32 | 1.63 | 2927 | | | 0.27 | No, Vu<V |
| SLV 1 | 544 | -16362 | 9552 | 793983 | | 7.22 | 80.92 | 1.63 | 3682 | | | 0.39 | No, Vu<V |
| SLV 1 | 754 | -15698 | 9476 | -681404 | | 5.82 | 96.28 | 1.63 | 4381 | | | 0.46 | No, Vu<V |
| SLV 15 | 544 | -15112 | -10964 | -855063 | | 9.51 | 56.76 | 1.63 | 2583 | | | 0.24 | No, Vu<V |
| SLV 15 | 754 | -15507 | -10887 | 838318 | | 8.61 | 64.32 | 1.63 | 2927 | | | 0.27 | No, Vu<V |
| SLV 11 | 544 | -16418 | -6134 | -369142 | | 3.88 | 151 | 1.61 | 6807 | | | 1.11 | Si |
| SLV 11 | 754 | -16798 | -6346 | 344483 | | 3.97 | 151 | 1.63 | 6871 | | | 1.08 | Si |

### Verifica a pressoflessione fuori piano D.M. 17-01-18 (N.T.C.)

quota 720 Wa 0.05 denominatore 8 γM = 2

| Comb. | fd | Sa | σ0 | N | M | Mc | Coeff.s. | Verifica |
|---|---|---|---|---|---|---|---|---|
| SLV 10 | 14 | 0.39 | 3.34 | -14119 | 16057 | 143642 | 8.95 | Si |
| SLV 9 | 14 | 0.39 | 3.34 | -14119 | 16057 | 143642 | 8.95 | Si |
| SLV 5 | 14 | 0.39 | 3.4 | -14390 | 16057 | 145345 | 9.05 | Si |
| SLV 6 | 14 | 0.39 | 3.4 | -14390 | 16057 | 145345 | 9.05 | Si |
| SLV 13 | 14 | 0.39 | 3.45 | -14597 | 16057 | 146618 | 9.13 | Si |
| SLV 14 | 14 | 0.39 | 3.45 | -14597 | 16057 | 146618 | 9.13 | Si |
| SLV 16 | 14 | 0.39 | 3.61 | -15279 | 16057 | 150644 | 9.38 | Si |
| SLV 15 | 14 | 0.39 | 3.61 | -15279 | 16057 | 150644 | 9.38 | Si |
| SLV 2 | 14 | 0.39 | 3.67 | -15502 | 16057 | 151907 | 9.46 | Si |
| SLV 1 | 14 | 0.39 | 3.67 | -15502 | 16057 | 151907 | 9.46 | Si |

### Verifica dei meccanismi locali di collasso con analisi cinematica lineare

forza di aggancio al piano = 0 quota mezzeria = 720 Wa = 0.05 Ta = 0.0739

| Comb. | N top | N base | V orto | α0 | M* | e* | a0* | aLim | Verifica |
|---|---|---|---|---|---|---|---|---|---|
| SLV 5 | -11963 | -15057 | 160 | 0.032 | 14.279 | 0.957 | 48.201 | 1522.194 | No |
| SLV 6 | -11963 | -15057 | 160 | 0.032 | 14.279 | 0.957 | 48.201 | 1522.194 | No |
| SLV 9 | -11980 | -14510 | 159 | 0.032 | 14.296 | 0.957 | 48.371 | 1522.194 | No |
| SLV 10 | -11980 | -14510 | 159 | 0.032 | 14.296 | 0.957 | 48.371 | 1522.194 | No |
| SLV 11 | -12693 | -16418 | -160 | 0.032 | 15.021 | 0.959 | 48.785 | 1522.194 | No |
| SLV 12 | -12693 | -16418 | -160 | 0.032 | 15.021 | 0.959 | 48.785 | 1522.194 | No |
| SLV 7 | -12677 | -16964 | -158 | 0.032 | 15.005 | 0.959 | 48.922 | 1522.194 | No |
| SLV 8 | -12677 | -16964 | -158 | 0.032 | 15.005 | 0.959 | 48.922 | 1522.194 | No |
| SLV 16 | -12463 | -15112 | -50 | 0.04 | 14.787 | 0.958 | 60.708 | 839.377 | No |
| SLV 15 | -12463 | -15112 | -50 | 0.04 | 14.787 | 0.958 | 60.708 | 839.377 | No |

### Tabella dei coefficienti di sicurezza minimi

| Stato limite | Coeff.s. | Comb. | Verifica |
|---|---|---|---|
| PF_SLU | 3.631 | SLU 84 | Si |
| V_SLU | 3.412 | SLU 77 | Si |
| PF_SLV | 0.944 | SLV 15 | No |
| V_SLV | 0.236 | SLV 15 | No |
| PFFP_SLV | 8.946 | SLV 9 | Si |
| R_SLV | 0.032 | SLV 5 | No |

## Maschio 124

Verifiche condotte secondo D.M. 17-01-18 (N.T.C.)

### Dati geometrici

| X ini. | Y ini. | X fin. | Y fin. | Quota i. | Quota.s | l | Sp. | h netta | h ini. | h fin. | a | a.s.,sx | a.s.,dx |
|---|---|---|---|---|---|---|---|---|---|---|---|---|---|
| -12.3 | 104.6 | -416.8 | 104.6 | L4 | L5 | 404.5 | 28 | 352 | 352 | 352 | | | |

### Caratteristiche del materiale

(Circolare 7 21-01-19 C8.5.I) Muratura in mattoni pieni e malta di calce LC2_Corti

| fb | fk | fvk0 | fmedio | τ0 | fv0 | μ | ϕ | fv,lim | E | G | FC |
|---|---|---|---|---|---|---|---|---|---|---|---|
| 60 | | | 34.5 | 0.9 | 2 | 0.58 | 0.77 | 3.25 | 32000 | 12800 | 1.2 |

### Verifica a pressoflessione nel piano secondo D.M. 17-01-18 NTC §7.8.2.2.1 in combinazioni non sismiche, γM = 3

| Comb. | Quota | N | M | σ0 | Mu | c.s. | Verifica |
|---|---|---|---|---|---|---|---|
| SLU 84 | 544 | -51730 | 347481 | 4.57 | 4596124 | 13.227 | Si |
| SLU 84 | 754 | -49547 | 882372 | 4.37 | 4639288 | 5.258 | Si |
| SLU 74 | 544 | -50380 | 325702 | 4.45 | 4625278 | 14.201 | Si |
| SLU 74 | 754 | -47914 | 862074 | 4.23 | 4657907 | 5.403 | Si |
| SLU 75 | 544 | -50712 | 326511 | 4.48 | 4618856 | 14.146 | Si |
| SLU 75 | 754 | -48149 | 843158 | 4.25 | 4655940 | 5.522 | Si |
| SLU 79 | 544 | -50471 | 326755 | 4.46 | 4623574 | 14.15 | Si |
| SLU 79 | 754 | -47970 | 878828 | 4.24 | 4657457 | 5.3 | Si |
| SLU 77 | 544 | -51173 | 330262 | 4.52 | 4609119 | 13.956 | Si |
| SLU 77 | 754 | -48753 | 900252 | 4.3 | 4649799 | 5.165 | Si |
| SLU 82 | 544 | -50937 | 342922 | 4.5 | 4614220 | 13.456 | Si |
| SLU 82 | 754 | -48707 | 844194 | 4.3 | 4650318 | 5.509 | Si |
| SLU 83 | 544 | -51399 | 346672 | 4.54 | 4604027 | 13.281 | Si |
| SLU 83 | 754 | -49311 | 901288 | 4.35 | 4642701 | 5.151 | Si |
| SLU 80 | 544 | -50802 | 327564 | 4.49 | 4617021 | 14.095 | Si |
| SLU 80 | 754 | -48206 | 859912 | 4.26 | 4655431 | 5.414 | Si |
| SLU 78 | 544 | -51505 | 331071 | 4.55 | 4601544 | 13.899 | Si |
| SLU 78 | 754 | -48989 | 881336 | 4.33 | 4646964 | 5.273 | Si |
| SLU 81 | 544 | -50606 | 342112 | 4.47 | 4620968 | 13.507 | Si |
| SLU 81 | 754 | -48471 | 863110 | 4.28 | 4652862 | 5.391 | Si |

### Verifica a pressoflessione nel piano secondo D.M. 17-01-18 NTC §7.8.2.2.1 in combinazioni sismiche, γM = 2

| Comb. | Quota | N | M | σ0 | Mu | c.s. | Verifica |
|---|---|---|---|---|---|---|---|
| SLV 2 | 544 | -29140 | 2150446 | 2.57 | 4652545 | 2.164 | Si |
| SLV 2 | 754 | -19554 | -303151 | 1.73 | 3396030 | 11.202 | Si |
| SLV 14 | 544 | -40561 | -1877325 | 3.58 | 5799057 | 3.089 | Si |
| SLV 14 | 754 | -44002 | 1191892 | 3.89 | 6069797 | 5.093 | Si |
| SLD 3 | 544 | -32182 | 1093437 | 2.84 | 4995157 | 4.568 | Si |
| SLD 3 | 754 | -26884 | 229813 | 2.37 | 4381011 | 19.063 | Si |
| SLV 13 | 544 | -40561 | -1877325 | 3.58 | 5799057 | 3.089 | Si |
| SLV 13 | 754 | -44002 | 1191892 | 3.89 | 6069797 | 5.093 | Si |
| SLV 16 | 544 | -40235 | -1741096 | 3.55 | 5771688 | 3.315 | Si |

| Comb. | Quota | N | M | σ0 | Mu | c.s. | Verifica |
|---|---|---|---|---|---|---|---|
| SLV 16 | 754 | -44469 | 1340744 | 3.93 | 6103811 | 4.553 | Si |
| SLV 15 | 544 | -40235 | -1741096 | 3.55 | 5771688 | 3.315 | Si |
| SLV 15 | 754 | -44469 | 1340744 | 3.93 | 6103811 | 4.553 | Si |
| SLV 1 | 544 | -29140 | 2150446 | 2.57 | 4652545 | 2.164 | Si |
| SLV 1 | 754 | -19554 | -303151 | 1.73 | 3396030 | 11.202 | Si |
| SLD 4 | 544 | -32182 | 1093437 | 2.84 | 4995157 | 4.568 | Si |
| SLD 4 | 754 | -26884 | 229813 | 2.37 | 4381011 | 19.063 | Si |
| SLV 4 | 544 | -28814 | 2286674 | 2.54 | 4614321 | 2.018 | Si |
| SLV 4 | 754 | -20020 | -154299 | 1.77 | 3463363 | 22.446 | Si |
| SLV 3 | 544 | -28814 | 2286674 | 2.54 | 4614321 | 2.018 | Si |
| SLV 3 | 754 | -20020 | -154299 | 1.77 | 3463363 | 22.446 | Si |

Verifica a taglio nel piano secondo D.M. 17-01-18 (N.T.C.) §7.8.2.2.2 con rottura per scorrimento in combinazioni non sismiche, γM = 3

| Comb. | Quota | N | V par | M | σ0 | σN | l' | fvd | Vt scorr. | Vt fess.diag. | Vt,lim | c.s. | Verifica |
|---|---|---|---|---|---|---|---|---|---|---|---|---|---|
| SLU 81 | 544 | -50606 | -5814 | 342112 | | 4.47 | 404.5 | 1.08 | 12270 | | | 2.11 | Si |
| SLU 81 | 754 | -48471 | -5824 | 863110 | | 4.28 | 404.5 | 1.08 | 12270 | | | 2.11 | Si |
| SLU 84 | 544 | -51730 | -5816 | 347481 | | 4.57 | 404.5 | 1.08 | 12270 | | | 2.11 | Si |
| SLU 84 | 754 | -49547 | -5863 | 882372 | | 4.37 | 404.5 | 1.08 | 12270 | | | 2.09 | Si |
| SLU 79 | 544 | -50471 | -5610 | 326755 | | 4.46 | 404.5 | 1.08 | 12270 | | | 2.19 | Si |
| SLU 79 | 754 | -47970 | -5620 | 878828 | | 4.24 | 404.5 | 1.08 | 12270 | | | 2.18 | Si |
| SLU 82 | 544 | -50937 | -5612 | 342922 | | 4.5 | 404.5 | 1.08 | 12270 | | | 2.19 | Si |
| SLU 82 | 754 | -48707 | -5658 | 844194 | | 4.3 | 404.5 | 1.08 | 12270 | | | 2.17 | Si |
| SLU 83 | 544 | -51399 | -6019 | 346672 | | 4.54 | 404.5 | 1.08 | 12270 | | | 2.04 | Si |
| SLU 83 | 754 | -49311 | -6029 | 901288 | | 4.35 | 404.5 | 1.08 | 12270 | | | 2.04 | Si |
| SLU 35 | 544 | -43011 | -5512 | 297245 | | 3.8 | 404.5 | 1.06 | 12027 | | | 2.18 | Si |
| SLU 35 | 754 | -41805 | -5521 | 815392 | | 3.69 | 404.5 | 1.05 | 11866 | | | 2.15 | Si |
| SLU 42 | 544 | -43568 | -5557 | 314464 | | 3.85 | 404.5 | 1.07 | 12101 | | | 2.18 | Si |
| SLU 42 | 754 | -42598 | -5602 | 797512 | | 3.76 | 404.5 | 1.06 | 11972 | | | 2.14 | Si |
| SLU 77 | 544 | -51173 | -5772 | 330262 | | 4.52 | 404.5 | 1.08 | 12270 | | | 2.13 | Si |
| SLU 77 | 754 | -48753 | -5782 | 900252 | | 4.3 | 404.5 | 1.08 | 12270 | | | 2.12 | Si |
| SLU 41 | 544 | -43236 | -5759 | 313655 | | 3.82 | 404.5 | 1.06 | 12057 | | | 2.09 | Si |
| SLU 41 | 754 | -42363 | -5768 | 816428 | | 3.74 | 404.5 | 1.05 | 11941 | | | 2.07 | Si |
| SLU 39 | 544 | -42443 | -5555 | 309096 | | 3.75 | 404.5 | 1.06 | 11951 | | | 2.15 | Si |
| SLU 39 | 754 | -41523 | -5563 | 778250 | | 3.67 | 404.5 | 1.04 | 11829 | | | 2.13 | Si |

Verifica a taglio nel piano secondo D.M. 17-01-18 (N.T.C.) §7.8.2.2.2 con rottura per scorrimento in combinazioni sismiche, γM = 2

| Comb. | Quota | N | V par | M | σ0 | σN | l' | fvd | Vt scorr. | Vt fess.diag. | Vt,lim | c.s. | Verifica |
|---|---|---|---|---|---|---|---|---|---|---|---|---|---|
| SLV 15 | 544 | -40235 | -22338 | -1741096 | | 3.55 | 404.5 | 1.54 | 17485 | | | 0.78 | No, Vu<V |
| SLV 15 | 754 | -44469 | -21812 | 1340744 | | 3.93 | 404.5 | 1.62 | 18332 | | | 0.84 | No, Vu<V |
| SLD 14 | 544 | -37194 | -11416 | -684087 | | 3.28 | 404.5 | 1.49 | 16877 | | | 1.48 | Si |
| SLD 14 | 754 | -37139 | -11188 | 807780 | | 3.28 | 404.5 | 1.49 | 16866 | | | 1.51 | Si |
| SLV 13 | 544 | -40561 | -22670 | -1877325 | | 3.58 | 404.5 | 1.55 | 17550 | | | 0.77 | No, Vu<V |
| SLV 13 | 754 | -44002 | -22115 | 1191892 | | 3.89 | 404.5 | 1.61 | 18239 | | | 0.82 | No, Vu<V |
| SLV 16 | 544 | -40235 | -22338 | -1741096 | | 3.55 | 404.5 | 1.54 | 17485 | | | 0.78 | No, Vu<V |
| SLV 16 | 754 | -44469 | -21812 | 1340744 | | 3.93 | 404.5 | 1.62 | 18332 | | | 0.84 | No, Vu<V |
| SLV 3 | 544 | -28814 | 16596 | 2286674 | | 2.79 | 368.67 | 1.39 | 14365 | | | 0.87 | No, Vu<V |
| SLV 3 | 754 | -20020 | 16027 | -154299 | | 1.77 | 404.5 | 1.19 | 13442 | | | 0.84 | No, Vu<V |
| SLV 4 | 544 | -28814 | 16596 | 2286674 | | 2.79 | 368.67 | 1.39 | 14365 | | | 0.87 | No, Vu<V |
| SLV 4 | 754 | -20020 | 16027 | -154299 | | 1.77 | 404.5 | 1.19 | 13442 | | | 0.84 | No, Vu<V |
| SLV 14 | 544 | -40561 | -22670 | -1877325 | | 3.58 | 404.5 | 1.55 | 17550 | | | 0.77 | No, Vu<V |
| SLV 14 | 754 | -44002 | -22115 | 1191892 | | 3.89 | 404.5 | 1.61 | 18239 | | | 0.82 | No, Vu<V |
| SLV 2 | 544 | -29140 | 16264 | 2150446 | | 2.7 | 385.36 | 1.37 | 14820 | | | 0.91 | No, Vu<V |
| SLV 2 | 754 | -19554 | 15724 | -303151 | | 1.73 | 404.5 | 1.18 | 13349 | | | 0.85 | No, Vu<V |
| SLD 13 | 544 | -37194 | -11416 | -684087 | | 3.28 | 404.5 | 1.49 | 16877 | | | 1.48 | Si |
| SLD 13 | 754 | -37139 | -11188 | 807780 | | 3.28 | 404.5 | 1.49 | 16866 | | | 1.51 | Si |
| SLV 1 | 544 | -29140 | 16264 | 2150446 | | 2.7 | 385.36 | 1.37 | 14820 | | | 0.91 | No, Vu<V |
| SLV 1 | 754 | -19554 | 15724 | -303151 | | 1.73 | 404.5 | 1.18 | 13349 | | | 0.85 | No, Vu<V |

Verifica a pressoflessione fuori piano D.M. 17-01-18 (N.T.C.)

quota 720 Wa 0.05 denominatore 8 γM = 2

| Comb. | fd | Sa | σ0 | N | M | Mc | Coeff.s. | Verifica |
|---|---|---|---|---|---|---|---|---|
| SLV 3 | 14 | 0.39 | 1.9 | -21478 | 43013 | 254023 | 5.91 | Si |
| SLV 4 | 14 | 0.39 | 1.9 | -21478 | 43013 | 254023 | 5.91 | Si |
| SLV 1 | 14 | 0.39 | 1.9 | -21492 | 43013 | 254157 | 5.91 | Si |
| SLV 2 | 14 | 0.39 | 1.9 | -21492 | 43013 | 254157 | 5.91 | Si |
| SLV 8 | 14 | 0.39 | 2.57 | -29117 | 43013 | 321870 | 7.48 | Si |
| SLV 7 | 14 | 0.39 | 2.57 | -29117 | 43013 | 321870 | 7.48 | Si |
| SLV 6 | 14 | 0.39 | 2.57 | -29163 | 43013 | 322245 | 7.49 | Si |
| SLV 5 | 14 | 0.39 | 2.57 | -29163 | 43013 | 322245 | 7.49 | Si |
| SLV 12 | 14 | 0.39 | 3.15 | -35678 | 43013 | 370721 | 8.62 | Si |
| SLV 11 | 14 | 0.39 | 3.15 | -35678 | 43013 | 370721 | 8.62 | Si |

Verifica dei meccanismi locali di collasso con analisi cinematica lineare

forza di aggancio al piano = 0 quota mezzeria = 720 Wa = 0.05 Ta = 0.0739

| Comb. | N top | N base | V orto | α0 | M* | e* | a0* | aLim | Verifica |
|---|---|---|---|---|---|---|---|---|---|
| SLV 8 | -26880 | -32432 | -536 | 0.027 | 33.001 | 0.951 | 41.063 | 1522.194 | No |
| SLV 7 | -26880 | -32432 | -536 | 0.027 | 33.001 | 0.951 | 41.063 | 1522.194 | No |
| SLV 5 | -24863 | -33516 | 498 | 0.027 | 30.954 | 0.948 | 41.835 | 1522.194 | No |
| SLV 6 | -24863 | -33516 | 498 | 0.027 | 30.954 | 0.948 | 41.835 | 1522.194 | No |
| SLV 9 | -28441 | -36943 | 537 | 0.027 | 34.586 | 0.953 | 41.877 | 1522.194 | No |
| SLV 10 | -28441 | -36943 | 537 | 0.027 | 34.586 | 0.953 | 41.877 | 1522.194 | No |
| SLV 12 | -30457 | -35859 | -497 | 0.029 | 36.635 | 0.955 | 44.699 | 1522.194 | No |
| SLV 11 | -30457 | -35859 | -497 | 0.029 | 36.635 | 0.955 | 44.699 | 1522.194 | No |
| SLV 3 | -22000 | -28814 | -220 | 0.037 | 28.05 | 0.943 | 56.628 | 839.377 | No |
| SLV 4 | -22000 | -28814 | -220 | 0.037 | 28.05 | 0.943 | 56.628 | 839.377 | No |

### Tabella dei coefficienti di sicurezza minimi

| Stato limite | Coeff.s. | Comb. | Verifica |
|---|---|---|---|
| PF_SLU | 5.151 | SLU 83 | Si |
| V_SLU | 2.035 | SLU 83 | Si |
| PF_SLV | 2.018 | SLV 3 | Si |
| V_SLV | 0.774 | SLV 13 | No |
| PFFP_SLV | 5.906 | SLV 3 | Si |
| R_SLV | 0.027 | SLV 7 | No |

## Maschio 126

Verifiche condotte secondo D.M. 17-01-18 (N.T.C.)

### Dati geometrici

| X ini. | Y ini. | X fin. | Y fin. | Quota i. | Quota.s | l | Sp. | h netta | h ini. | h fin. | a | a.s.,sx | a.s.,dx |
|---|---|---|---|---|---|---|---|---|---|---|---|---|---|
| -944.8 | -335.9 | -1100.3 | -335.9 | L4 | L5 | 155.5 | 28 | 352 | 352 | 352 | | | |

### Caratteristiche del materiale

(Circolare 7 21-01-19 C8.5.I) Muratura in mattoni pieni e malta di calce LC2_Corti

| fb | fk | fvk0 | fmedio | τ0 | fv0 | μ | ϕ | fv,lim | E | G | FC |
|---|---|---|---|---|---|---|---|---|---|---|---|
| 60 | | | 34.5 | 0.9 | 2 | 0.58 | 0.77 | 3.25 | 32000 | 12800 | 1.2 |

### Verifica a pressoflessione nel piano secondo D.M. 17-01-18 NTC §7.8.2.2.1 in combinazioni non sismiche, γM = 3

| Comb. | Quota | N | M | σ0 | Mu | c.s. | Verifica |
|---|---|---|---|---|---|---|---|
| SLU 81 | 544 | -14717 | 45286 | 3.38 | 669435 | 14.782 | Si |
| SLU 81 | 754 | -14742 | -161534 | 3.39 | 669769 | 4.146 | Si |
| SLU 73 | 544 | -14089 | 49063 | 3.24 | 660268 | 13.458 | Si |
| SLU 73 | 754 | -14142 | -157697 | 3.25 | 661114 | 4.192 | Si |
| SLU 40 | 544 | -12162 | 45168 | 2.79 | 621341 | 13.756 | Si |
| SLU 40 | 754 | -12463 | -148181 | 2.86 | 628495 | 4.241 | Si |
| SLU 76 | 544 | -14636 | 41925 | 3.36 | 668355 | 15.942 | Si |
| SLU 76 | 754 | -14564 | -150849 | 3.35 | 667367 | 4.424 | Si |
| SLU 84 | 544 | -15239 | 41839 | 3.5 | 675749 | 16.151 | Si |
| SLU 84 | 754 | -15200 | -159614 | 3.49 | 675311 | 4.231 | Si |
| SLU 75 | 544 | -14686 | 41206 | 3.37 | 669033 | 16.236 | Si |
| SLU 75 | 754 | -14621 | -150981 | 3.36 | 668146 | 4.425 | Si |
| SLU 83 | 544 | -15264 | 38149 | 3.51 | 676016 | 17.721 | Si |
| SLU 83 | 754 | -15164 | -154686 | 3.48 | 674912 | 4.363 | Si |
| SLU 31 | 544 | -11559 | 45255 | 2.65 | 605808 | 13.387 | Si |
| SLU 31 | 754 | -11828 | -139417 | 2.72 | 612926 | 4.396 | Si |
| SLU 82 | 544 | -14692 | 48976 | 3.37 | 669109 | 13.662 | Si |
| SLU 82 | 754 | -14778 | -166461 | 3.39 | 670234 | 4.026 | Si |
| SLU 39 | 544 | -12187 | 41479 | 2.8 | 621939 | 14.994 | Si |
| SLU 39 | 754 | -12427 | -143254 | 2.85 | 627667 | 4.382 | Si |

### Verifica a pressoflessione nel piano secondo D.M. 17-01-18 NTC §7.8.2.2.1 in combinazioni sismiche, γM = 2

| Comb. | Quota | N | M | σ0 | Mu | c.s. | Verifica |
|---|---|---|---|---|---|---|---|
| SLV 8 | 544 | -4098 | 273674 | 0.94 | 294075 | 1.075 | Si |
| SLV 8 | 754 | -7662 | -227978 | 1.76 | 509923 | 2.237 | Si |
| SLV 4 | 544 | -5419 | 495073 | 0 | 0 | 0 | No, e>l/2 |
| SLV 4 | 754 | -13318 | -507810 | 3.06 | 776240 | 1.529 | Si |
| SLV 15 | 544 | -11631 | -369185 | 2.67 | 706582 | 1.914 | Si |
| SLV 15 | 754 | -4225 | 308603 | 0.97 | 302403 | 0.98 | No, M>Mu |
| SLV 2 | 544 | -8415 | 425567 | 1.93 | 550773 | 1.294 | Si |
| SLV 2 | 754 | -15438 | -502742 | 3.55 | 851974 | 1.695 | Si |
| SLV 13 | 544 | -14626 | -438691 | 3.36 | 824547 | 1.88 | Si |
| SLV 13 | 754 | -6345 | 313671 | 1.46 | 434477 | 1.385 | Si |
| SLV 1 | 544 | -8415 | 425567 | 1.93 | 550773 | 1.294 | Si |
| SLV 1 | 754 | -15438 | -502742 | 3.55 | 851974 | 1.695 | Si |
| SLV 3 | 544 | -5419 | 495073 | 0 | 0 | 0 | No, e>l/2 |
| SLV 3 | 754 | -13318 | -507810 | 3.06 | 776240 | 1.529 | Si |
| SLV 7 | 544 | -4098 | 273674 | 0.94 | 294075 | 1.075 | Si |
| SLV 7 | 754 | -7662 | -227978 | 1.76 | 509923 | 2.237 | Si |
| SLV 14 | 544 | -14626 | -438691 | 3.36 | 824547 | 1.88 | Si |
| SLV 14 | 754 | -6345 | 313671 | 1.46 | 434477 | 1.385 | Si |
| SLV 16 | 544 | -11631 | -369185 | 2.67 | 706582 | 1.914 | Si |
| SLV 16 | 754 | -4225 | 308603 | 0.97 | 302403 | 0.98 | No, M>Mu |

### Verifica a taglio nel piano secondo D.M. 17-01-18 (N.T.C.) §7.8.2.2.2 con rottura per scorrimento in combinazioni non sismiche, γM = 3

| Comb. | Quota | N | V par | M | σ0 | σN | l' | fvd | Vt scorr. | Vt fess.diag. | Vt,lim | c.s. | Verifica |
|---|---|---|---|---|---|---|---|---|---|---|---|---|---|
| SLU 40 | 544 | -12162 | 1619 | 45168 | | 2.79 | 155.5 | 0.93 | 4040 | | | 2.5 | Si |
| SLU 40 | 754 | -12463 | 1826 | -148181 | | 2.86 | 155.5 | 0.94 | 4081 | | | 2.24 | Si |
| SLU 75 | 544 | -14686 | 1685 | 41206 | | 3.37 | 155.5 | 1.01 | 4377 | | | 2.6 | Si |
| SLU 75 | 754 | -14621 | 1858 | -150981 | | 3.36 | 155.5 | 1 | 4368 | | | 2.35 | Si |
| SLU 61 | 544 | -13854 | 1563 | 39234 | | 3.18 | 155.5 | 0.98 | 4266 | | | 2.73 | Si |
| SLU 61 | 754 | -13604 | 1794 | -146790 | | 3.12 | 155.5 | 0.97 | 4233 | | | 2.36 | Si |
| SLU 83 | 544 | -15264 | 1665 | 38149 | | 3.51 | 155.5 | 1.02 | 4454 | | | 2.68 | Si |
| SLU 83 | 754 | -15164 | 1880 | -154686 | | 3.48 | 155.5 | 1.02 | 4441 | | | 2.36 | Si |
| SLU 31 | 544 | -11559 | 1578 | 45255 | | 2.65 | 155.5 | 0.91 | 3960 | | | 2.51 | Si |
| SLU 31 | 754 | -11828 | 1741 | -139417 | | 2.72 | 155.5 | 0.92 | 3996 | | | 2.3 | Si |
| SLU 84 | 544 | -15239 | 1725 | 41839 | | 3.5 | 155.5 | 1.02 | 4451 | | | 2.58 | Si |
| SLU 84 | 754 | -15200 | 1927 | -159614 | | 3.49 | 155.5 | 1.02 | 4446 | | | 2.31 | Si |
| SLU 73 | 544 | -14089 | 1792 | 49063 | | 3.24 | 155.5 | 0.99 | 4297 | | | 2.4 | Si |
| SLU 73 | 754 | -14142 | 1982 | -157697 | | 3.25 | 155.5 | 0.99 | 4305 | | | 2.17 | Si |
| SLU 39 | 544 | -12187 | 1558 | 41479 | | 2.8 | 155.5 | 0.93 | 4044 | | | 2.6 | Si |

| Comb. | Quota | N | V par | M | σ0 | σN | l' | fvd | Vt scorr. | Vt fess.diag. | Vt,lim | c.s. | Verifica |
|---|---|---|---|---|---|---|---|---|---|---|---|---|---|
| SLU 39 | 754 | -12427 | 1778 | -143254 | | 2.85 | 155.5 | 0.94 | 4076 | | | 2.29 | Si |
| SLU 81 | 544 | -14717 | 1771 | 45286 | | 3.38 | 155.5 | 1.01 | 4381 | | | 2.47 | Si |
| SLU 81 | 754 | -14742 | 2019 | -161534 | | 3.39 | 155.5 | 1.01 | 4384 | | | 2.17 | Si |
| SLU 82 | 544 | -14692 | 1832 | 48976 | | 3.37 | 155.5 | 1.01 | 4378 | | | 2.39 | Si |
| SLU 82 | 754 | -14778 | 2067 | -166461 | | 3.39 | 155.5 | 1.01 | 4389 | | | 2.12 | Si |

### Verifica a taglio nel piano secondo D.M. 17-01-18 (N.T.C.) §7.8.2.2.2 con rottura per scorrimento in combinazioni sismiche, γM = 2

| Comb. | Quota | N | V par | M | σ0 | σN | l' | fvd | Vt scorr. | Vt fess.diag. | Vt,lim | c.s. | Verifica |
|---|---|---|---|---|---|---|---|---|---|---|---|---|---|
| SLV 1 | 544 | -8415 | 7789 | 425567 | | 3.69 | 81.53 | 1.57 | 3585 | | | 0.46 | No, Vu<V |
| SLV 1 | 754 | -15438 | 5920 | -502742 | | 4.07 | 135.55 | 1.63 | 6168 | | | 1.04 | Si |
| SLV 14 | 544 | -14626 | -6451 | -438691 | | 3.65 | 143.27 | 1.56 | 6268 | | | 0.97 | No, Vu<V |
| SLV 14 | 754 | -6345 | -4465 | 313671 | | 2.67 | 84.94 | 1.37 | 3251 | | | 0.73 | No, Vu<V |
| SLV 16 | 544 | -11631 | -5488 | -369185 | | 3.01 | 138.02 | 1.44 | 5547 | | | 1.01 | Si |
| SLV 16 | 754 | -4225 | -3377 | 308603 | | 10.69 | 14.12 | 1.63 | 643 | | | 0.19 | No, Vu<V |
| SLV 13 | 544 | -14626 | -6451 | -438691 | | 3.65 | 143.27 | 1.56 | 6268 | | | 0.97 | No, Vu<V |
| SLV 13 | 754 | -6345 | -4465 | 313671 | | 2.67 | 84.94 | 1.37 | 3251 | | | 0.73 | No, Vu<V |
| SLV 2 | 544 | -8415 | 7789 | 425567 | | 3.69 | 81.53 | 1.57 | 3585 | | | 0.46 | No, Vu<V |
| SLV 2 | 754 | -15438 | 5920 | -502742 | | 4.07 | 135.55 | 1.63 | 6168 | | | 1.04 | Si |
| SLV 4 | 544 | -5419 | 8752 | 495073 | | 0 | 0 | 0.83 | 0 | | | 0 | No, Vu<V |
| SLV 4 | 754 | -13318 | 7008 | -507810 | | 4 | 118.86 | 1.63 | 5408 | | | 0.77 | No, Vu<V |
| SLV 3 | 544 | -5419 | 8752 | 495073 | | 0 | 0 | 0.83 | 0 | | | 0 | No, Vu<V |
| SLV 3 | 754 | -13318 | 7008 | -507810 | | 4 | 118.86 | 1.63 | 5408 | | | 0.77 | No, Vu<V |
| SLV 8 | 544 | -4098 | 4891 | 273674 | | 4.45 | 32.9 | 1.63 | 1497 | | | 0.31 | No, Vu<V |
| SLV 8 | 754 | -7662 | 4643 | -227978 | | 1.9 | 143.99 | 1.21 | 4892 | | | 1.05 | Si |
| SLV 15 | 544 | -11631 | -5488 | -369185 | | 3.01 | 138.02 | 1.44 | 5547 | | | 1.01 | Si |
| SLV 15 | 754 | -4225 | -3377 | 308603 | | 10.69 | 14.12 | 1.63 | 643 | | | 0.19 | No, Vu<V |
| SLV 7 | 544 | -4098 | 4891 | 273674 | | 4.45 | 32.9 | 1.63 | 1497 | | | 0.31 | No, Vu<V |
| SLV 7 | 754 | -7662 | 4643 | -227978 | | 1.9 | 143.99 | 1.21 | 4892 | | | 1.05 | Si |

### Verifica a pressoflessione fuori piano D.M. 17-01-18 (N.T.C.)

quota 720 Wa 0.05 denominatore 8 γM = 2

| Comb. | fd | Sa | σ0 | N | M | Mc | Coeff.s. | Verifica |
|---|---|---|---|---|---|---|---|---|
| SLV 16 | 14 | 0.39 | 1.11 | -4840 | 16159 | 61592 | 3.81 | Si |
| SLV 15 | 14 | 0.39 | 1.11 | -4840 | 16159 | 61592 | 3.81 | Si |
| SLV 12 | 14 | 0.39 | 1.29 | -5616 | 16159 | 70321 | 4.35 | Si |
| SLV 11 | 14 | 0.39 | 1.29 | -5616 | 16159 | 70321 | 4.35 | Si |
| SLV 14 | 14 | 0.39 | 1.56 | -6784 | 16159 | 82860 | 5.13 | Si |
| SLV 13 | 14 | 0.39 | 1.56 | -6784 | 16159 | 82860 | 5.13 | Si |
| SLV 8 | 14 | 0.39 | 1.89 | -8225 | 16159 | 97344 | 6.02 | Si |
| SLV 7 | 14 | 0.39 | 1.89 | -8225 | 16159 | 97344 | 6.02 | Si |
| SLV 10 | 14 | 0.39 | 2.78 | -12095 | 16159 | 130835 | 8.1 | Si |
| SLV 9 | 14 | 0.39 | 2.78 | -12095 | 16159 | 130835 | 8.1 | Si |

### Verifica dei meccanismi locali di collasso con analisi cinematica lineare

forza di aggancio al piano = 0 quota mezzeria = 720 Wa = 0.05 Ta = 0.0739

| Comb. | N top | N base | V orto | α0 | M* | e* | a0* | aLim | Verifica |
|---|---|---|---|---|---|---|---|---|---|
| SLV 8 | -3424 | -4098 | -214 | 0.007 | 5.717 | 0.907 | 10.53 | 1522.194 | No |
| SLV 7 | -3424 | -4098 | -214 | 0.007 | 5.717 | 0.907 | 10.53 | 1522.194 | No |
| SLV 12 | -4080 | -5961 | -185 | 0.016 | 6.369 | 0.914 | 25.441 | 1522.194 | No |
| SLV 11 | -4080 | -5961 | -185 | 0.016 | 6.369 | 0.914 | 25.441 | 1522.194 | No |
| SLV 10 | -11287 | -15948 | 265 | 0.023 | 13.655 | 0.954 | 35.326 | 1522.194 | No |
| SLV 9 | -11287 | -15948 | 265 | 0.023 | 13.655 | 0.954 | 35.326 | 1522.194 | No |
| SLV 5 | -10631 | -14084 | 235 | 0.025 | 12.989 | 0.952 | 37.794 | 1522.194 | No |
| SLV 6 | -10631 | -14084 | 235 | 0.025 | 12.989 | 0.952 | 37.794 | 1522.194 | No |
| SLV 13 | -9529 | -14626 | 142 | 0.032 | 11.87 | 0.948 | 48.711 | 839.377 | No |
| SLV 14 | -9529 | -14626 | 142 | 0.032 | 11.87 | 0.948 | 48.711 | 839.377 | No |

### Tabella dei coefficienti di sicurezza minimi

| Stato limite | Coeff.s. | Comb. | Verifica |
|---|---|---|---|
| PF_SLU | 4.026 | SLU 82 | Si |
| V_SLU | 2.124 | SLU 82 | Si |
| PF_SLV | 0 | SLV 3 | No |
| V_SLV | 0 | SLV 3 | No |
| PFFP_SLV | 3.811 | SLV 15 | Si |
| R_SLV | 0.007 | SLV 7 | No |

## Maschio 127

Verifiche condotte secondo D.M. 17-01-18 (N.T.C.)

### Dati geometrici

| X ini. | Y ini. | X fin. | Y fin. | Quota i. | Quota.s | l | Sp. | h netta | h ini. | h fin. | a | a.s.,sx | a.s.,dx |
|---|---|---|---|---|---|---|---|---|---|---|---|---|---|
| -626.8 | -335.9 | -626.8 | 104.6 | L4 | L5 | 440.5 | 14 | 352 | 352 | 352 | | | |

### Caratteristiche del materiale

(Circolare 7 21-01-19 C8.5.I) Muratura in mattoni pieni e malta di calce LC2_Corti

| fb | fk | fvk0 | fmedio | τ0 | fv0 | μ | ϕ | fv,lim | E | G | FC |
|---|---|---|---|---|---|---|---|---|---|---|---|
| 60 | | | 34.5 | 0.9 | 2 | 0.58 | 0.77 | 3.25 | 32000 | 12800 | 1.2 |

### Verifica a pressoflessione nel piano secondo D.M. 17-01-18 NTC §7.8.2.2.1 in combinazioni non sismiche, γM = 3

| Comb. | Quota | N | M | σ0 | Mu | c.s. | Verifica |
|---|---|---|---|---|---|---|---|
| SLU 76 | 544 | -32182 | 297712 | 5.22 | 2547275 | 8.556 | Si |
| SLU 76 | 896 | -20732 | 457691 | 3.36 | 2681742 | 5.859 | Si |

| Comb. | Quota | N | M | σ0 | Mu | c.s. | Verifica |
|---|---|---|---|---|---|---|---|
| SLU 31 | 544 | -26818 | 248642 | 4.35 | 2753404 | 11.074 | Si |
| SLU 31 | 896 | -17071 | 402261 | 2.77 | 2482223 | 6.171 | Si |
| SLU 75 | 544 | -32372 | 320757 | 5.25 | 2535345 | 7.904 | Si |
| SLU 75 | 896 | -21151 | 439637 | 3.43 | 2697090 | 6.135 | Si |
| SLU 82 | 544 | -32856 | 314140 | 5.33 | 2503569 | 7.97 | Si |
| SLU 82 | 896 | -21103 | 437587 | 3.42 | 2695402 | 6.16 | Si |
| SLU 84 | 544 | -33471 | 336120 | 5.43 | 2460147 | 7.319 | Si |
| SLU 84 | 896 | -21705 | 447457 | 3.52 | 2715024 | 6.068 | Si |
| SLU 68 | 544 | -28740 | 245590 | 4.66 | 2708543 | 11.029 | Si |
| SLU 68 | 896 | -18539 | 409048 | 3.01 | 2576307 | 6.298 | Si |
| SLU 78 | 544 | -32988 | 342737 | 5.35 | 2494532 | 7.278 | Si |
| SLU 78 | 896 | -21753 | 449507 | 3.53 | 2716457 | 6.043 | Si |
| SLU 34 | 544 | -27434 | 270621 | 4.45 | 2742565 | 10.134 | Si |
| SLU 34 | 896 | -17674 | 412130 | 2.87 | 2523143 | 6.122 | Si |
| SLU 73 | 544 | -31567 | 275732 | 5.12 | 2583740 | 9.37 | Si |
| SLU 73 | 896 | -20129 | 447822 | 3.26 | 2656977 | 5.933 | Si |
| SLU 80 | 544 | -32612 | 335761 | 5.29 | 2519869 | 7.505 | Si |
| SLU 80 | 896 | -21368 | 436479 | 3.46 | 2704429 | 6.196 | Si |

Verifica a pressoflessione nel piano secondo D.M. 17-01-18 NTC §7.8.2.2.1 in combinazioni sismiche, γM = 2

| Comb. | Quota | N | M | σ0 | Mu | c.s. | Verifica |
|---|---|---|---|---|---|---|---|
| SLD 1 | 544 | -23399 | 312362 | 3.79 | 3553270 | 11.376 | Si |
| SLD 1 | 896 | -13972 | 399514 | 2.27 | 2506801 | 6.275 | Si |
| SLV 7 | 544 | -20172 | 680860 | 3.27 | 3253513 | 4.779 | Si |
| SLV 7 | 896 | -12716 | 265737 | 2.06 | 2328073 | 8.761 | Si |
| SLV 5 | 544 | -25120 | -56236 | 4.07 | 3688306 | 65.586 | Si |
| SLV 5 | 896 | -15016 | 432166 | 2.43 | 2648166 | 6.128 | Si |
| SLV 4 | 544 | -24500 | 678428 | 3.97 | 3641642 | 5.368 | Si |
| SLV 4 | 896 | -13211 | 558459 | 2.14 | 2399517 | 4.297 | Si |
| SLV 3 | 544 | -24500 | 678428 | 3.97 | 3641642 | 5.368 | Si |
| SLV 3 | 896 | -13211 | 558459 | 2.14 | 2399517 | 4.297 | Si |
| SLD 2 | 544 | -23399 | 312362 | 3.79 | 3553270 | 11.376 | Si |
| SLD 2 | 896 | -13972 | 399514 | 2.27 | 2506801 | 6.275 | Si |
| SLV 2 | 544 | -25984 | 457299 | 4.21 | 3749551 | 8.199 | Si |
| SLV 2 | 896 | -13900 | 608387 | 2.25 | 2496797 | 4.104 | Si |
| SLV 8 | 544 | -20172 | 680860 | 3.27 | 3253513 | 4.779 | Si |
| SLV 8 | 896 | -12716 | 265737 | 2.06 | 2328073 | 8.761 | Si |
| SLV 1 | 544 | -25984 | 457299 | 4.21 | 3749551 | 8.199 | Si |
| SLV 1 | 896 | -13900 | 608387 | 2.25 | 2496797 | 4.104 | Si |
| SLV 6 | 544 | -25120 | -56236 | 4.07 | 3688306 | 65.586 | Si |
| SLV 6 | 896 | -15016 | 432166 | 2.43 | 2648166 | 6.128 | Si |

Verifica a taglio nel piano secondo D.M. 17-01-18 (N.T.C.) §7.8.2.2.2 con rottura per scorrimento in combinazioni non sismiche, γM = 3

| Comb. | Quota | N | V par | M | σ0 | σN | l' | fvd | Vt scorr. | Vt fess.diag. | Vt,lim | c.s. | Verifica |
|---|---|---|---|---|---|---|---|---|---|---|---|---|---|
| SLU 8 | 544 | -20837 | 1080 | 212337 | | 3.38 | 440.5 | 1.01 | 6204 | | | 5.75 | Si |
| SLU 8 | 896 | -13941 | 1070 | 237766 | | 2.26 | 440.5 | 0.86 | 5285 | | | 4.94 | Si |
| SLU 27 | 544 | -24518 | 1136 | 287630 | | 3.98 | 440.5 | 1.08 | 6681 | | | 5.88 | Si |
| SLU 27 | 896 | -16553 | 1126 | 308680 | | 2.68 | 440.5 | 0.91 | 5633 | | | 5 | Si |
| SLU 71 | 544 | -28891 | 1272 | 307745 | | 4.68 | 440.5 | 1.08 | 6681 | | | 5.25 | Si |
| SLU 71 | 896 | -19225 | 1259 | 341213 | | 3.12 | 440.5 | 0.97 | 5989 | | | 4.76 | Si |
| SLU 37 | 544 | -27584 | 1198 | 332775 | | 4.47 | 440.5 | 1.08 | 6681 | | | 5.58 | Si |
| SLU 37 | 896 | -18360 | 1186 | 344296 | | 2.98 | 440.5 | 0.95 | 5874 | | | 4.95 | Si |
| SLU 69 | 544 | -29267 | 1203 | 314720 | | 4.75 | 440.5 | 1.08 | 6681 | | | 5.56 | Si |
| SLU 69 | 896 | -19610 | 1190 | 354241 | | 3.18 | 440.5 | 0.98 | 6041 | | | 5.07 | Si |
| SLU 2 | 544 | -20071 | -1330 | 128204 | | 3.25 | 440.5 | 0.99 | 6102 | | | 4.59 | Si |
| SLU 2 | 896 | -12653 | -643 | 295730 | | 2.05 | 440.5 | 0.83 | 5113 | | | 7.96 | Si |
| SLU 79 | 544 | -32332 | 1264 | 359866 | | 5.24 | 440.5 | 1.08 | 6681 | | | 5.28 | Si |
| SLU 79 | 896 | -21418 | 1250 | 389857 | | 3.47 | 440.5 | 1.02 | 6282 | | | 5.03 | Si |
| SLU 50 | 544 | -25585 | 1146 | 239428 | | 4.15 | 440.5 | 1.08 | 6681 | | | 5.83 | Si |
| SLU 50 | 896 | -16999 | 1135 | 283327 | | 2.76 | 440.5 | 0.92 | 5693 | | | 5.02 | Si |
| SLU 29 | 544 | -24142 | 1205 | 280654 | | 3.91 | 440.5 | 1.08 | 6645 | | | 5.51 | Si |
| SLU 29 | 896 | -16167 | 1195 | 295652 | | 2.62 | 440.5 | 0.91 | 5582 | | | 4.67 | Si |
| SLU 10 | 544 | -23513 | -1338 | 180325 | | 3.81 | 440.5 | 1.06 | 6561 | | | 4.91 | Si |
| SLU 10 | 896 | -14846 | -652 | 344374 | | 2.41 | 440.5 | 0.88 | 5406 | | | 8.29 | Si |

Verifica a taglio nel piano secondo D.M. 17-01-18 (N.T.C.) §7.8.2.2.2 con rottura per scorrimento in combinazioni sismiche, γM = 2

| Comb. | Quota | N | V par | M | σ0 | σN | l' | fvd | Vt scorr. | Vt fess.diag. | Vt,lim | c.s. | Verifica |
|---|---|---|---|---|---|---|---|---|---|---|---|---|---|
| SLD 12 | 544 | -20020 | 4536 | 310280 | | 3.25 | 440.5 | 1.48 | 9143 | | | 2.02 | Si |
| SLD 12 | 896 | -13571 | 4000 | 170652 | | 2.2 | 440.5 | 1.27 | 7853 | | | 1.96 | Si |
| SLV 6 | 544 | -25120 | -9438 | -56236 | | 4.07 | 440.5 | 1.63 | 10021 | | | 1.06 | Si |
| SLV 6 | 896 | -15016 | -8220 | 432166 | | 2.43 | 440.5 | 1.32 | 8142 | | | 0.99 | No, Vu<V |
| SLV 9 | 544 | -22895 | -9462 | -275281 | | 3.71 | 440.5 | 1.58 | 9718 | | | 1.03 | Si |
| SLV 9 | 896 | -15282 | -8180 | 231190 | | 2.48 | 440.5 | 1.33 | 8195 | | | 1 | Si |
| SLD 11 | 544 | -20020 | 4536 | 310280 | | 3.25 | 440.5 | 1.48 | 9143 | | | 2.02 | Si |
| SLD 11 | 896 | -13571 | 4000 | 170652 | | 2.2 | 440.5 | 1.27 | 7853 | | | 1.96 | Si |
| SLV 7 | 544 | -20172 | 10258 | 680860 | | 3.27 | 440.5 | 1.49 | 9174 | | | 0.89 | No, Vu<V |
| SLV 7 | 896 | -12716 | 8959 | 265737 | | 2.06 | 440.5 | 1.25 | 7682 | | | 0.86 | No, Vu<V |
| SLV 11 | 544 | -17947 | 10234 | 461815 | | 2.91 | 440.5 | 1.42 | 8729 | | | 0.85 | No, Vu<V |
| SLV 11 | 896 | -12982 | 8999 | 64761 | | 2.11 | 440.5 | 1.25 | 7736 | | | 0.86 | No, Vu<V |
| SLV 5 | 544 | -25120 | -9438 | -56236 | | 4.07 | 440.5 | 1.63 | 10021 | | | 1.06 | Si |
| SLV 5 | 896 | -15016 | -8220 | 432166 | | 2.43 | 440.5 | 1.32 | 8142 | | | 0.99 | No, Vu<V |
| SLV 10 | 544 | -22895 | -9462 | -275281 | | 3.71 | 440.5 | 1.58 | 9718 | | | 1.03 | Si |
| SLV 10 | 896 | -15282 | -8180 | 231190 | | 2.48 | 440.5 | 1.33 | 8195 | | | 1 | Si |
| SLV 12 | 544 | -17947 | 10234 | 461815 | | 2.91 | 440.5 | 1.42 | 8729 | | | 0.85 | No, Vu<V |
| SLV 12 | 896 | -12982 | 8999 | 64761 | | 2.11 | 440.5 | 1.25 | 7736 | | | 0.86 | No, Vu<V |
| SLV 8 | 544 | -20172 | 10258 | 680860 | | 3.27 | 440.5 | 1.49 | 9174 | | | 0.89 | No, Vu<V |
| SLV 8 | 896 | -12716 | 8959 | 265737 | | 2.06 | 440.5 | 1.25 | 7682 | | | 0.86 | No, Vu<V |

### Verifica a pressoflessione fuori piano D.M. 17-01-18 (N.T.C.)

quota 720 Wa 0.03 denominatore 8 γM = 2

| Comb. | fd | Sa | σ0 | N | M | Mc | Coeff.s. | Verifica |
|---|---|---|---|---|---|---|---|---|
| SLV 7 | 14 | 0.39 | 2.58 | -15896 | 24485 | 87798 | 3.59 | Si |
| SLV 8 | 14 | 0.39 | 2.58 | -15896 | 24485 | 87798 | 3.59 | Si |
| SLV 12 | 14 | 0.39 | 2.61 | -16080 | 24485 | 88541 | 3.62 | Si |
| SLV 11 | 14 | 0.39 | 2.61 | -16080 | 24485 | 88541 | 3.62 | Si |
| SLV 4 | 14 | 0.39 | 2.79 | -17232 | 24485 | 93040 | 3.8 | Si |
| SLV 3 | 14 | 0.39 | 2.79 | -17232 | 24485 | 93040 | 3.8 | Si |
| SLV 15 | 14 | 0.39 | 2.89 | -17847 | 24485 | 95340 | 3.89 | Si |
| SLV 16 | 14 | 0.39 | 2.89 | -17847 | 24485 | 95340 | 3.89 | Si |
| SLV 1 | 14 | 0.39 | 3.01 | -18562 | 24485 | 97928 | 4 | Si |
| SLV 2 | 14 | 0.39 | 3.01 | -18562 | 24485 | 97928 | 4 | Si |

### Verifica dei meccanismi locali di collasso con analisi cinematica lineare

forza di aggancio al piano = 0 quota mezzeria = 720 Wa = 0.03 Ta = 0.1478

| Comb. | N top | N base | V orto | α0 | M* | e* | a0* | aLim | Verifica |
|---|---|---|---|---|---|---|---|---|---|
| SLV 16 | -14097 | -17083 | -39 | 0.02 | 17.422 | 0.949 | 30.461 | 1675.074 | No |
| SLV 15 | -14097 | -17083 | -39 | 0.02 | 17.422 | 0.949 | 30.461 | 1675.074 | No |
| SLV 2 | -13900 | -25984 | 39 | 0.02 | 17.222 | 0.949 | 30.491 | 1675.074 | No |
| SLV 1 | -13900 | -25984 | 39 | 0.02 | 17.222 | 0.949 | 30.491 | 1675.074 | No |
| SLV 6 | -15016 | -25120 | 36 | 0.02 | 18.355 | 0.952 | 30.588 | 1675.074 | No |
| SLV 5 | -15016 | -25120 | 36 | 0.02 | 18.355 | 0.952 | 30.588 | 1675.074 | No |
| SLV 12 | -12982 | -17947 | -37 | 0.02 | 16.29 | 0.946 | 30.775 | 1675.074 | No |
| SLV 11 | -12982 | -17947 | -37 | 0.02 | 16.29 | 0.946 | 30.775 | 1675.074 | No |
| SLV 13 | -14787 | -18567 | -22 | 0.021 | 18.123 | 0.951 | 31.907 | 1675.074 | No |
| SLV 14 | -14787 | -18567 | -22 | 0.021 | 18.123 | 0.951 | 31.907 | 1675.074 | No |

### Tabella dei coefficienti di sicurezza minimi

| Stato limite | Coeff.s. | Comb. | Verifica |
|---|---|---|---|
| PF_SLU | 5.859 | SLU 76 | Si |
| V_SLU | 4.587 | SLU 2 | Si |
| PF_SLV | 4.104 | SLV 1 | Si |
| V_SLV | 0.853 | SLV 11 | No |
| PFFP_SLV | 3.586 | SLV 7 | Si |
| R_SLV | 0.018 | SLV 15 | No |

## Maschio 128

Verifiche condotte secondo D.M. 17-01-18 (N.T.C.)

### Dati geometrici

| X ini. | Y ini. | X fin. | Y fin. | Quota i. | Quota.s | l | Sp. | h netta | h ini. | h fin. | a | a.s.,sx | a.s.,dx |
|---|---|---|---|---|---|---|---|---|---|---|---|---|---|
| -741.3 | -335.9 | -854.8 | -335.9 | L4 | L5 | 113.5 | 28 | 352 | 352 | 352 | | | |

### Caratteristiche del materiale

(Circolare 7 21-01-19 C8.5.I) Muratura in mattoni pieni e malta di calce LC2_Corti

| fb | fk | fvk0 | fmedio | τ0 | fv0 | μ | ϕ | fv,lim | E | G | FC |
|---|---|---|---|---|---|---|---|---|---|---|---|
| 60 | | | 34.5 | 0.9 | 2 | 0.58 | 0.77 | 3.25 | 32000 | 12800 | 1.2 |

### Verifica a pressoflessione nel piano secondo D.M. 17-01-18 NTC §7.8.2.2.1 in combinazioni non sismiche, γM = 3

| Comb. | Quota | N | M | σ0 | Mu | c.s. | Verifica |
|---|---|---|---|---|---|---|---|
| SLU 44 | 634 | -9590 | 30245 | 3.02 | 342621 | 11.328 | Si |
| SLU 44 | 814 | -7209 | -91127 | 2.27 | 295185 | 3.239 | Si |
| SLU 52 | 634 | -10772 | 29057 | 3.39 | 356940 | 12.284 | Si |
| SLU 52 | 814 | -8329 | -98627 | 2.62 | 320600 | 3.251 | Si |
| SLU 65 | 634 | -10518 | 31757 | 3.31 | 354379 | 11.159 | Si |
| SLU 65 | 814 | -8154 | -100143 | 2.57 | 316991 | 3.165 | Si |
| SLU 61 | 634 | -11343 | 23227 | 3.57 | 361661 | 15.571 | Si |
| SLU 61 | 814 | -8976 | -100893 | 2.82 | 332762 | 3.298 | Si |
| SLU 73 | 634 | -11700 | 30569 | 3.68 | 363888 | 11.904 | Si |
| SLU 73 | 814 | -9274 | -107644 | 2.92 | 337763 | 3.138 | Si |
| SLU 75 | 634 | -12238 | 19838 | 3.85 | 366188 | 18.459 | Si |
| SLU 75 | 814 | -9750 | -106057 | 3.07 | 344925 | 3.252 | Si |
| SLU 82 | 634 | -12271 | 24740 | 3.86 | 366287 | 14.806 | Si |
| SLU 82 | 814 | -9921 | -109909 | 3.12 | 347247 | 3.159 | Si |
| SLU 84 | 634 | -12671 | 16979 | 3.99 | 367115 | 21.621 | Si |
| SLU 84 | 814 | -10101 | -106419 | 3.18 | 349564 | 3.285 | Si |
| SLU 81 | 634 | -12367 | 16759 | 3.89 | 366550 | 21.872 | Si |
| SLU 81 | 814 | -10170 | -108486 | 3.2 | 350417 | 3.23 | Si |
| SLU 76 | 634 | -12100 | 22809 | 3.81 | 365716 | 16.034 | Si |
| SLU 76 | 814 | -9455 | -104154 | 2.98 | 340592 | 3.27 | Si |

### Verifica a pressoflessione nel piano secondo D.M. 17-01-18 NTC §7.8.2.2.1 in combinazioni sismiche, γM = 2

| Comb. | Quota | N | M | σ0 | Mu | c.s. | Verifica |
|---|---|---|---|---|---|---|---|
| SLV 1 | 634 | -7238 | 413924 | 0 | 0 | 0 | No, e>l/2 |
| SLV 1 | 814 | -11876 | -370745 | 3.74 | 467847 | 1.262 | Si |
| SLV 3 | 634 | -4282 | 362807 | 0 | 0 | 0 | No, e>l/2 |
| SLV 3 | 814 | -7207 | -284800 | 2.27 | 333071 | 1.169 | Si |
| SLV 12 | 634 | -4198 | -184122 | 1.32 | 212501 | 1.154 | Si |
| SLV 12 | 814 | 1929 | 143593 | 0 | 0 | 0 | No, Trazione |
| SLV 8 | 634 | -2646 | 40782 | 0.83 | 139912 | 3.431 | Si |
| SLV 8 | 814 | 227 | -7849 | 0 | 0 | 0 | No, Trazione |
| SLV 7 | 634 | -2646 | 40782 | 0.83 | 139912 | 3.431 | Si |

| Comb. | Quota | N | M | σ0 | Mu | c.s. | Verifica |
|---|---|---|---|---|---|---|---|
| SLV 7 | 814 | 227 | -7849 | 0 | 0 | 0 | No, Trazione |
| SLV 4 | 634 | -4282 | 362807 | 0 | 0 | 0 | No, e>l/2 |
| SLV 4 | 814 | -7207 | -284800 | 2.27 | 333071 | 1.169 | Si |
| SLV 11 | 634 | -4198 | -184122 | 1.32 | 212501 | 1.154 | Si |
| SLV 11 | 814 | 1929 | 143593 | 0 | 0 | 0 | No, Trazione |
| SLV 16 | 634 | -9458 | -386874 | 2.98 | 406017 | 1.049 | Si |
| SLV 16 | 814 | -1533 | 220006 | 0 | 0 | 0 | No, e>l/2 |
| SLV 2 | 634 | -7238 | 413924 | 0 | 0 | 0 | No, e>l/2 |
| SLV 2 | 814 | -11876 | -370745 | 3.74 | 467847 | 1.262 | Si |
| SLV 15 | 634 | -9458 | -386874 | 2.98 | 406017 | 1.049 | Si |
| SLV 15 | 814 | -1533 | 220006 | 0 | 0 | 0 | No, e>l/2 |

## Verifica a taglio nel piano secondo D.M. 17-01-18 (N.T.C.) §7.8.2.2.2 con rottura per scorrimento in combinazioni non sismiche, γM = 3

| Comb. | Quota | N | V par | M | σ0 | σN | l' | fvd | Vt scorr. | Vt fess.diag. | Vt,lim | c.s. | Verifica |
|---|---|---|---|---|---|---|---|---|---|---|---|---|---|
| SLU 2 | 634 | -7585 | 509 | 26734 | | 2.39 | 113.5 | 0.87 | 2777 | | | 5.45 | Si |
| SLU 2 | 814 | -5699 | 297 | -73023 | | 1.79 | 113.5 | 0.79 | 2525 | | | 8.5 | Si |
| SLU 68 | 634 | -10917 | 476 | 23997 | | 3.44 | 113.5 | 1.01 | 3221 | | | 6.77 | Si |
| SLU 68 | 814 | -8334 | 256 | -96653 | | 2.62 | 113.5 | 0.91 | 2877 | | | 11.25 | Si |
| SLU 52 | 634 | -10772 | 480 | 29057 | | 3.39 | 113.5 | 1.01 | 3202 | | | 6.68 | Si |
| SLU 52 | 814 | -8329 | 377 | -98627 | | 2.62 | 113.5 | 0.91 | 2876 | | | 7.62 | Si |
| SLU 73 | 634 | -11700 | 509 | 30569 | | 3.68 | 113.5 | 1.05 | 3326 | | | 6.53 | Si |
| SLU 73 | 814 | -9274 | 350 | -107644 | | 2.92 | 113.5 | 0.94 | 3002 | | | 8.57 | Si |
| SLU 65 | 634 | -10518 | 605 | 31757 | | 3.31 | 113.5 | 1 | 3168 | | | 5.23 | Si |
| SLU 65 | 814 | -8154 | 321 | -100143 | | 2.57 | 113.5 | 0.9 | 2853 | | | 8.9 | Si |
| SLU 31 | 634 | -9695 | 443 | 27058 | | 3.05 | 113.5 | 0.96 | 3058 | | | 6.9 | Si |
| SLU 31 | 814 | -7764 | 299 | -89540 | | 2.44 | 113.5 | 0.88 | 2801 | | | 9.36 | Si |
| SLU 44 | 634 | -9590 | 576 | 30245 | | 3.02 | 113.5 | 0.96 | 3044 | | | 5.29 | Si |
| SLU 44 | 814 | -7209 | 348 | -91127 | | 2.27 | 113.5 | 0.86 | 2727 | | | 7.84 | Si |
| SLU 23 | 634 | -8513 | 539 | 28246 | | 2.68 | 113.5 | 0.91 | 2901 | | | 5.38 | Si |
| SLU 23 | 814 | -6644 | 270 | -82040 | | 2.09 | 113.5 | 0.83 | 2651 | | | 9.82 | Si |
| SLU 47 | 634 | -9989 | 446 | 22484 | | 3.14 | 113.5 | 0.97 | 3097 | | | 6.94 | Si |
| SLU 47 | 814 | -7389 | 283 | -87636 | | 2.33 | 113.5 | 0.87 | 2751 | | | 9.73 | Si |
| SLU 10 | 634 | -8767 | 413 | 25546 | | 2.76 | 113.5 | 0.92 | 2934 | | | 7.1 | Si |
| SLU 10 | 814 | -6819 | 326 | -80523 | | 2.15 | 113.5 | 0.84 | 2675 | | | 8.19 | Si |

## Verifica a taglio nel piano secondo D.M. 17-01-18 (N.T.C.) §7.8.2.2.2 con rottura per scorrimento in combinazioni sismiche, γM = 2

| Comb. | Quota | N | V par | M | σ0 | σN | l' | fvd | Vt scorr. | Vt fess.diag. | Vt,lim | c.s. | Verifica |
|---|---|---|---|---|---|---|---|---|---|---|---|---|---|
| SLV 16 | 634 | -9458 | -6591 | -386874 | | 7.11 | 47.54 | 1.63 | 2163 | | | 0.33 | No, Vu<V |
| SLV 16 | 814 | -1533 | -2148 | 220006 | | 0 | 0 | 0.83 | 0 | | | 0 | No, Vu<V |
| SLV 15 | 634 | -9458 | -6591 | -386874 | | 7.11 | 47.54 | 1.63 | 2163 | | | 0.33 | No, Vu<V |
| SLV 15 | 814 | -1533 | -2148 | 220006 | | 0 | 0 | 0.83 | 0 | | | 0 | No, Vu<V |
| SLV 12 | 634 | -4198 | -2463 | -184122 | | 3.88 | 38.69 | 1.61 | 1742 | | | 0.71 | No, Vu<V |
| SLV 12 | 814 | 1929 | -604 | 143593 | | 0 | 0 | 0.83 | 0 | | | 0 | No, Vu<V |
| SLV 2 | 634 | -7238 | 7064 | 413924 | | 0 | 0 | 0.83 | 0 | | | 0 | No, Vu<V |
| SLV 2 | 814 | -11876 | 2426 | -370745 | | 5.54 | 76.6 | 1.63 | 3485 | | | 1.44 | Si |
| SLV 7 | 634 | -2646 | 1505 | 40782 | | 0.83 | 113.5 | 1 | 3177 | | | 2.11 | Si |
| SLV 7 | 814 | 227 | 757 | -7849 | | 0 | 0 | 0.83 | 0 | | | 0 | No, Vu<V |
| SLV 1 | 634 | -7238 | 7064 | 413924 | | 0 | 0 | 0.83 | 0 | | | 0 | No, Vu<V |
| SLV 1 | 814 | -11876 | 2426 | -370745 | | 5.54 | 76.6 | 1.63 | 3485 | | | 1.44 | Si |
| SLV 3 | 634 | -4282 | 6634 | 362807 | | 0 | 0 | 0.83 | 0 | | | 0 | No, Vu<V |
| SLV 3 | 814 | -7207 | 2389 | -284800 | | 4.98 | 51.69 | 1.63 | 2352 | | | 0.98 | No, Vu<V |
| SLV 11 | 634 | -4198 | -2463 | -184122 | | 3.88 | 38.69 | 1.61 | 1742 | | | 0.71 | No, Vu<V |
| SLV 11 | 814 | 1929 | -604 | 143593 | | 0 | 0 | 0.83 | 0 | | | 0 | No, Vu<V |
| SLV 8 | 634 | -2646 | 1505 | 40782 | | 0.83 | 113.5 | 1 | 3177 | | | 2.11 | Si |
| SLV 8 | 814 | 227 | 757 | -7849 | | 0 | 0 | 0.83 | 0 | | | 0 | No, Vu<V |
| SLV 4 | 634 | -4282 | 6634 | 362807 | | 0 | 0 | 0.83 | 0 | | | 0 | No, Vu<V |
| SLV 4 | 814 | -7207 | 2389 | -284800 | | 4.98 | 51.69 | 1.63 | 2352 | | | 0.98 | No, Vu<V |

## Verifica a pressoflessione fuori piano D.M. 17-01-18 (N.T.C.)

quota 720 Wa 0.05 denominatore 8 γM = 2

| Comb. | fd | Sa | σ0 | N | M | Mc | Coeff.s. | Verifica |
|---|---|---|---|---|---|---|---|---|
| SLV 7 | 14 | 0.39 | 0.35 | -1111 | 11795 | 15105 | 1.28 | Si |
| SLV 8 | 14 | 0.39 | 0.35 | -1111 | 11795 | 15105 | 1.28 | Si |
| SLV 12 | 14 | 0.39 | 0.92 | -2938 | 11795 | 38018 | 3.22 | Si |
| SLV 11 | 14 | 0.39 | 0.92 | -2938 | 11795 | 38018 | 3.22 | Si |
| SLV 3 | 14 | 0.39 | 0.99 | -3147 | 11795 | 40489 | 3.43 | Si |
| SLV 4 | 14 | 0.39 | 0.99 | -3147 | 11795 | 40489 | 3.43 | Si |
| SLV 2 | 14 | 0.39 | 2.11 | -6720 | 11795 | 77798 | 6.6 | Si |
| SLV 1 | 14 | 0.39 | 2.11 | -6720 | 11795 | 77798 | 6.6 | Si |
| SLV 15 | 14 | 0.39 | 2.91 | -9238 | 11795 | 98562 | 8.36 | Si |
| SLV 16 | 14 | 0.39 | 2.91 | -9238 | 11795 | 98562 | 8.36 | Si |

## Verifica dei meccanismi locali di collasso con analisi cinematica lineare

forza di aggancio al piano = 0 quota mezzeria = 720 Wa = 0.05 Ta = 0.0739

| Comb. | N top | N base | V orto | α0 | M* | e* | a0* | aLim | Verifica |
|---|---|---|---|---|---|---|---|---|---|
| SLV 11 | 1331 | -5185 | -70 | 0 | 0 | 0 | 0 | 1522.194 | No, Trazione |
| SLV 12 | 1331 | -5185 | -70 | 0 | 0 | 0 | 0 | 1522.194 | No, Trazione |
| SLV 7 | -280 | -7326 | -85 | 0.005 | 2.155 | 0.922 | 7.463 | 1522.194 | No |
| SLV 8 | -280 | -7326 | -85 | 0.005 | 2.155 | 0.922 | 7.463 | 1522.194 | No |
| SLV 9 | -10080 | -7935 | 84 | 0.036 | 11.839 | 0.96 | 54.122 | 1522.194 | No |
| SLV 10 | -10080 | -7935 | 84 | 0.036 | 11.839 | 0.96 | 54.122 | 1522.194 | No |
| SLV 6 | -11692 | -10076 | 69 | 0.037 | 13.479 | 0.965 | 56.437 | 1522.194 | No |
| SLV 5 | -11692 | -10076 | 69 | 0.037 | 13.479 | 0.965 | 56.437 | 1522.194 | No |
| SLV 3 | -6154 | -10787 | -49 | 0.039 | 7.852 | 0.943 | 59.423 | 839.377 | No |
| SLV 4 | -6154 | -10787 | -49 | 0.039 | 7.852 | 0.943 | 59.423 | 839.377 | No |

Tabella dei coefficienti di sicurezza minimi

| Stato limite | Coeff.s. | Comb. | Verifica |
|---|---|---|---|
| PF_SLU | 3.138 | SLU 73 | Si |
| V_SLU | 5.234 | SLU 65 | Si |
| PF_SLV | 0 | SLV 12 | No |
| V_SLV | 0 | SLV 1 | No |
| PFFP_SLV | 1.281 | SLV 7 | Si |
| R_SLV | 0 | SLV 12 | No |

## Maschio 129

Verifiche condotte secondo D.M. 17-01-18 (N.T.C.)

### Dati geometrici

| X ini. | Y ini. | X fin. | Y fin. | Quota i. | Quota.s | l | Sp. | h netta | h ini. | h fin. | a | a.s.,sx | a.s.,dx |
|---|---|---|---|---|---|---|---|---|---|---|---|---|---|
| -515.8 | 104.6 | -515.8 | 581.1 | L4 | L5 | 476.5 | 14 | 352 | 352 | 352 | | | |

### Caratteristiche del materiale

(Circolare 7 21-01-19 C8.5.I) Muratura in mattoni pieni e malta di calce LC2_Corti

| fb | fk | fvk0 | fmedio | τ0 | fv0 | μ | ϕ | fv,lim | E | G | FC |
|---|---|---|---|---|---|---|---|---|---|---|---|
| 60 | | | 34.5 | 0.9 | 2 | 0.58 | 0.77 | 3.25 | 32000 | 12800 | 1.2 |

### Verifica a pressoflessione nel piano secondo D.M. 17-01-18 NTC §7.8.2.2.1 in combinazioni non sismiche, γM = 3

| Comb. | Quota | N | M | σ0 | Mu | c.s. | Verifica |
|---|---|---|---|---|---|---|---|
| SLU 30 | 544 | -30812 | 77377 | 4.62 | 3178541 | 41.078 | Si |
| SLU 30 | 896 | -25043 | 391702 | 3.75 | 3216831 | 8.212 | Si |
| SLU 72 | 544 | -36080 | 69663 | 5.41 | 2888613 | 41.466 | Si |
| SLU 72 | 896 | -28371 | 353658 | 4.25 | 3230356 | 9.134 | Si |
| SLU 8 | 544 | -26553 | 90888 | 3.98 | 3235006 | 35.593 | Si |
| SLU 8 | 896 | -21634 | 378970 | 3.24 | 3102279 | 8.186 | Si |
| SLU 29 | 544 | -30890 | 84684 | 4.63 | 3176020 | 37.504 | Si |
| SLU 29 | 896 | -25053 | 410569 | 3.76 | 3217025 | 7.836 | Si |
| SLU 9 | 544 | -26475 | 83581 | 3.97 | 3234557 | 38.7 | Si |
| SLU 9 | 896 | -21623 | 360104 | 3.24 | 3101772 | 8.614 | Si |
| SLU 71 | 544 | -36158 | 76970 | 5.42 | 2882486 | 37.45 | Si |
| SLU 71 | 896 | -28382 | 372524 | 4.25 | 3230246 | 8.671 | Si |
| SLU 6 | 544 | -26785 | 71656 | 4.02 | 3236025 | 45.161 | Si |
| SLU 6 | 896 | -21527 | 316495 | 3.23 | 3097047 | 9.785 | Si |
| SLU 50 | 544 | -31822 | 83173 | 4.77 | 3141825 | 37.774 | Si |
| SLU 50 | 896 | -24962 | 340926 | 3.74 | 3215296 | 9.431 | Si |
| SLU 28 | 544 | -31043 | 58145 | 4.65 | 3170912 | 54.534 | Si |
| SLU 28 | 896 | -24936 | 329227 | 3.74 | 3214789 | 9.765 | Si |
| SLU 27 | 544 | -31121 | 65452 | 4.67 | 3168234 | 48.406 | Si |
| SLU 27 | 896 | -24947 | 348093 | 3.74 | 3214993 | 9.236 | Si |

### Verifica a pressoflessione nel piano secondo D.M. 17-01-18 NTC §7.8.2.2.1 in combinazioni sismiche, γM = 2

| Comb. | Quota | N | M | σ0 | Mu | c.s. | Verifica |
|---|---|---|---|---|---|---|---|
| SLV 3 | 544 | -26064 | 597002 | 3.91 | 4224164 | 7.076 | Si |
| SLV 3 | 896 | -16597 | 11238 | 2.49 | 3149101 | 280.222 | Si |
| SLV 5 | 544 | -18992 | -355048 | 2.85 | 3470515 | 9.775 | Si |
| SLV 5 | 896 | -10918 | -353462 | 1.64 | 2252714 | 6.373 | Si |
| SLV 14 | 544 | -23541 | -689632 | 3.53 | 3988781 | 5.784 | Si |
| SLV 14 | 896 | -16504 | -224891 | 2.47 | 3135944 | 13.944 | Si |
| SLV 7 | 544 | -30348 | 565555 | 4.55 | 4538437 | 8.025 | Si |
| SLV 7 | 896 | -21279 | 164070 | 3.19 | 3746242 | 22.833 | Si |
| SLV 9 | 544 | -19257 | -658184 | 2.89 | 3504016 | 5.324 | Si |
| SLV 9 | 896 | -11822 | -377723 | 1.77 | 2408116 | 6.375 | Si |
| SLV 8 | 544 | -30348 | 565555 | 4.55 | 4538437 | 8.025 | Si |
| SLV 8 | 896 | -21279 | 164070 | 3.19 | 3746242 | 22.833 | Si |
| SLV 10 | 544 | -19257 | -658184 | 2.89 | 3504016 | 5.324 | Si |
| SLV 10 | 896 | -11822 | -377723 | 1.77 | 2408116 | 6.375 | Si |
| SLV 13 | 544 | -23541 | -689632 | 3.53 | 3988781 | 5.784 | Si |
| SLV 13 | 896 | -16504 | -224891 | 2.47 | 3135944 | 13.944 | Si |
| SLV 4 | 544 | -26064 | 597002 | 3.91 | 4224164 | 7.076 | Si |
| SLV 4 | 896 | -16597 | 11238 | 2.49 | 3149101 | 280.222 | Si |
| SLV 6 | 544 | -18992 | -355048 | 2.85 | 3470515 | 9.775 | Si |
| SLV 6 | 896 | -10918 | -353462 | 1.64 | 2252714 | 6.373 | Si |

### Verifica a taglio nel piano secondo D.M. 17-01-18 (N.T.C.) §7.8.2.2.2 con rottura per scorrimento in combinazioni non sismiche, γM = 3

| Comb. | Quota | N | V par | M | σ0 | σN | l' | fvd | Vt scorr. | Vt fess.diag. | Vt,lim | c.s. | Verifica |
|---|---|---|---|---|---|---|---|---|---|---|---|---|---|
| SLU 80 | 544 | -39739 | 1608 | 28580 | | 5.96 | 476.5 | 1.08 | 7227 | | | 4.49 | Si |
| SLU 80 | 896 | -30371 | 913 | 265624 | | 4.55 | 476.5 | 1.08 | 7227 | | | 7.92 | Si |
| SLU 35 | 544 | -34780 | 1672 | 24369 | | 5.21 | 476.5 | 1.08 | 7227 | | | 4.32 | Si |
| SLU 35 | 896 | -26946 | 1086 | 260058 | | 4.04 | 476.5 | 1.08 | 7227 | | | 6.65 | Si |
| SLU 36 | 544 | -34702 | 1600 | 17062 | | 5.2 | 476.5 | 1.08 | 7227 | | | 4.52 | Si |
| SLU 36 | 896 | -26936 | 996 | 241192 | | 4.04 | 476.5 | 1.08 | 7227 | | | 7.26 | Si |
| SLU 77 | 544 | -40048 | 1704 | 16655 | | 6 | 476.5 | 1.08 | 7227 | | | 4.24 | Si |
| SLU 77 | 896 | -30274 | 995 | 222014 | | 4.54 | 476.5 | 1.08 | 7227 | | | 7.26 | Si |
| SLU 79 | 544 | -39817 | 1680 | 35887 | | 5.97 | 476.5 | 1.08 | 7227 | | | 4.3 | Si |
| SLU 79 | 896 | -30381 | 1003 | 284490 | | 4.55 | 476.5 | 1.08 | 7227 | | | 7.2 | Si |
| SLU 37 | 544 | -34548 | 1647 | 43601 | | 5.18 | 476.5 | 1.08 | 7227 | | | 4.39 | Si |
| SLU 37 | 896 | -27053 | 1094 | 322534 | | 4.06 | 476.5 | 1.08 | 7227 | | | 6.61 | Si |
| SLU 83 | 544 | -39367 | 1624 | -43566 | | 5.9 | 476.5 | 1.08 | 7227 | | | 4.45 | Si |
| SLU 83 | 896 | -27922 | 793 | 11925 | | 4.19 | 476.5 | 1.08 | 7227 | | | 9.11 | Si |
| SLU 38 | 544 | -34470 | 1575 | 36295 | | 5.17 | 476.5 | 1.08 | 7227 | | | 4.59 | Si |

| Comb. | Quota | N | V par | M | σ0 | σN | l' | fvd | Vt scorr. | Vt fess.diag. | Vt,lim | c.s. | Verifica |
|---|---|---|---|---|---|---|---|---|---|---|---|---|---|
| SLU 38 | 896 | -27042 | 1003 | 303668 | | 4.05 | 476.5 | 1.08 | 7227 | | | 7.2 | Si |
| SLU 41 | 544 | -34099 | 1591 | -35852 | | 5.11 | 476.5 | 1.08 | 7227 | | | 4.54 | Si |
| SLU 41 | 896 | -24594 | 884 | 49969 | | 3.69 | 476.5 | 1.05 | 6985 | | | 7.9 | Si |
| SLU 78 | 544 | -39970 | 1632 | 9348 | | 5.99 | 476.5 | 1.08 | 7227 | | | 4.43 | Si |
| SLU 78 | 896 | -30264 | 905 | 203148 | | 4.54 | 476.5 | 1.08 | 7227 | | | 7.98 | Si |

### Verifica a taglio nel piano secondo D.M. 17-01-18 (N.T.C.) §7.8.2.2.2 con rottura per scorrimento in combinazioni sismiche, γM = 2

| Comb. | Quota | N | V par | M | σ0 | σN | l' | fvd | Vt scorr. | Vt fess.diag. | Vt,lim | c.s. | Verifica |
|---|---|---|---|---|---|---|---|---|---|---|---|---|---|
| SLV 16 | 544 | -26948 | 9569 | -413451 | | 4.04 | 476.5 | 1.63 | 10840 | | | 1.13 | Si |
| SLV 16 | 896 | -19613 | 7784 | -69631 | | 2.94 | 476.5 | 1.42 | 9482 | | | 1.22 | Si |
| SLV 10 | 544 | -19257 | -7599 | -658184 | | 2.89 | 476.5 | 1.41 | 9410 | | | 1.24 | Si |
| SLV 10 | 896 | -11822 | -7781 | -377723 | | 1.77 | 476.5 | 1.19 | 7924 | | | 1.02 | Si |
| SLV 12 | 544 | -30613 | 12545 | 262419 | | 4.59 | 476.5 | 1.63 | 10840 | | | 0.86 | No, Vu<V |
| SLV 12 | 896 | -22184 | 10980 | 139809 | | 3.33 | 476.5 | 1.5 | 9996 | | | 0.91 | No, Vu<V |
| SLV 9 | 544 | -19257 | -7599 | -658184 | | 2.89 | 476.5 | 1.41 | 9410 | | | 1.24 | Si |
| SLV 9 | 896 | -11822 | -7781 | -377723 | | 1.77 | 476.5 | 1.19 | 7924 | | | 1.02 | Si |
| SLV 1 | 544 | -22657 | -8116 | 320821 | | 3.4 | 476.5 | 1.51 | 10091 | | | 1.24 | Si |
| SLV 1 | 896 | -13489 | -7473 | -144022 | | 2.02 | 476.5 | 1.24 | 8257 | | | 1.1 | Si |
| SLV 2 | 544 | -22657 | -8116 | 320821 | | 3.4 | 476.5 | 1.51 | 10091 | | | 1.24 | Si |
| SLV 2 | 896 | -13489 | -7473 | -144022 | | 2.02 | 476.5 | 1.24 | 8257 | | | 1.1 | Si |
| SLV 6 | 544 | -18992 | -11092 | -355048 | | 2.85 | 476.5 | 1.4 | 9357 | | | 0.84 | No, Vu<V |
| SLV 6 | 896 | -10918 | -10670 | -353462 | | 1.64 | 476.5 | 1.16 | 7743 | | | 0.73 | No, Vu<V |
| SLV 5 | 544 | -18992 | -11092 | -355048 | | 2.85 | 476.5 | 1.4 | 9357 | | | 0.84 | No, Vu<V |
| SLV 5 | 896 | -10918 | -10670 | -353462 | | 1.64 | 476.5 | 1.16 | 7743 | | | 0.73 | No, Vu<V |
| SLV 15 | 544 | -26948 | 9569 | -413451 | | 4.04 | 476.5 | 1.63 | 10840 | | | 1.13 | Si |
| SLV 15 | 896 | -19613 | 7784 | -69631 | | 2.94 | 476.5 | 1.42 | 9482 | | | 1.22 | Si |
| SLV 11 | 544 | -30613 | 12545 | 262419 | | 4.59 | 476.5 | 1.63 | 10840 | | | 0.86 | No, Vu<V |
| SLV 11 | 896 | -22184 | 10980 | 139809 | | 3.33 | 476.5 | 1.5 | 9996 | | | 0.91 | No, Vu<V |

### Verifica a pressoflessione fuori piano D.M. 17-01-18 (N.T.C.)

quota 720 Wa 0.03 denominatore 8 γM = 2

| Comb. | fd | Sa | σ0 | N | M | Mc | Coeff.s. | Verifica |
|---|---|---|---|---|---|---|---|---|
| SLV 9 | 14 | 0.39 | 2.18 | -14543 | 26486 | 83639 | 3.16 | Si |
| SLV 10 | 14 | 0.39 | 2.18 | -14543 | 26486 | 83639 | 3.16 | Si |
| SLV 13 | 14 | 0.39 | 2.33 | -15559 | 26486 | 88124 | 3.33 | Si |
| SLV 14 | 14 | 0.39 | 2.33 | -15559 | 26486 | 88124 | 3.33 | Si |
| SLV 6 | 14 | 0.39 | 2.46 | -16434 | 26486 | 91846 | 3.47 | Si |
| SLV 5 | 14 | 0.39 | 2.46 | -16434 | 26486 | 91846 | 3.47 | Si |
| SLV 15 | 14 | 0.39 | 2.75 | -18321 | 26486 | 99420 | 3.75 | Si |
| SLV 16 | 14 | 0.39 | 2.75 | -18321 | 26486 | 99420 | 3.75 | Si |
| SLV 1 | 14 | 0.39 | 3.28 | -21863 | 26486 | 111991 | 4.23 | Si |
| SLV 2 | 14 | 0.39 | 3.28 | -21863 | 26486 | 111991 | 4.23 | Si |

### Verifica dei meccanismi locali di collasso con analisi cinematica lineare

forza di aggancio al piano = 0 quota mezzeria = 720 Wa = 0.03 Ta = 0.1478

| Comb. | N top | N base | V orto | α0 | M* | e* | a0* | aLim | Verifica |
|---|---|---|---|---|---|---|---|---|---|
| SLV 14 | -16504 | -23541 | 57 | 0.019 | 20.12 | 0.952 | 29.169 | 1675.074 | No |
| SLV 13 | -16504 | -23541 | 57 | 0.019 | 20.12 | 0.952 | 29.169 | 1675.074 | No |
| SLV 4 | -16597 | -26064 | -56 | 0.019 | 20.214 | 0.952 | 29.218 | 1675.074 | No |
| SLV 3 | -16597 | -26064 | -56 | 0.019 | 20.214 | 0.952 | 29.218 | 1675.074 | No |
| SLV 7 | -21279 | -30348 | -43 | 0.02 | 24.974 | 0.961 | 30.055 | 1675.074 | No |
| SLV 8 | -21279 | -30348 | -43 | 0.02 | 24.974 | 0.961 | 30.055 | 1675.074 | No |
| SLV 16 | -19613 | -26948 | 39 | 0.02 | 23.279 | 0.958 | 30.357 | 1675.074 | No |
| SLV 15 | -19613 | -26948 | 39 | 0.02 | 23.279 | 0.958 | 30.357 | 1675.074 | No |
| SLV 10 | -11822 | -19257 | 43 | 0.02 | 15.371 | 0.94 | 30.635 | 1675.074 | No |
| SLV 9 | -11822 | -19257 | 43 | 0.02 | 15.371 | 0.94 | 30.635 | 1675.074 | No |

### Tabella dei coefficienti di sicurezza minimi

| Stato limite | Coeff.s. | Comb. | Verifica |
|---|---|---|---|
| PF_SLU | 7.836 | SLU 29 | Si |
| V_SLU | 4.24 | SLU 77 | Si |
| PF_SLV | 5.324 | SLV 9 | Si |
| V_SLV | 0.726 | SLV 5 | No |
| PFFP_SLV | 3.158 | SLV 9 | Si |
| R_SLV | 0.017 | SLV 13 | No |

## Maschio 130

Verifiche condotte secondo D.M. 17-01-18 (N.T.C.)

### Dati geometrici

| X ini. | Y ini. | X fin. | Y fin. | Quota i. | Quota.s | l | Sp. | h netta | h ini. | h fin. | a | a.s.,sx | a.s.,dx |
|---|---|---|---|---|---|---|---|---|---|---|---|---|---|
| -515.8 | 595.1 | -515.8 | 600.6 | L4 | L5 | 5.5 | 28 | 352 | 352 | 352 | | | |

### Caratteristiche del materiale

(Circolare 7 21-01-19 C8.5.I) Muratura in mattoni pieni e malta di calce LC2_Corti

| fb | fk | fvk0 | fmedio | τ0 | fv0 | μ | ϕ | fv,lim | E | G | FC |
|---|---|---|---|---|---|---|---|---|---|---|---|
| 60 | | | 34.5 | 0.9 | 2 | 0.58 | 0.77 | 3.25 | 32000 | 12800 | 1.2 |

### Verifica a pressoflessione nel piano secondo D.M. 17-01-18 NTC §7.8.2.2.1 in combinazioni non sismiche, γM = 3

| Comb. | Quota | N | M | σ0 | Mu | c.s. | Verifica |
|---|---|---|---|---|---|---|---|
| SLU 77 | 744 | -920 | 422 | 5.97 | 674 | 1.599 | Si |
| SLU 77 | 824 | -1146 | 2681 | 7.44 | 272 | 0.101 | No, M>Mu |

| Comb. | Quota | N | M | σ0 | Mu | c.s. | Verifica |
|---|---|---|---|---|---|---|---|
| SLU 69 | 744 | -872 | 540 | 5.66 | 732 | 1.356 | Si |
| SLU 69 | 824 | -1066 | 2352 | 6.92 | 440 | 0.187 | No, M>Mu |
| SLU 19 | 744 | -528 | -90 | 3.43 | 841 | 9.354 | Si |
| SLU 19 | 824 | -679 | 1889 | 0 | 0 | 0 | No, e>l/2 |
| SLU 71 | 744 | -879 | 586 | 5.71 | 723 | 1.235 | Si |
| SLU 71 | 824 | -1072 | 2329 | 6.96 | 428 | 0.184 | No, M>Mu |
| SLU 18 | 744 | -534 | -75 | 3.46 | 843 | 11.18 | Si |
| SLU 18 | 824 | -684 | 1888 | 0 | 0 | 0 | No, e>l/2 |
| SLU 84 | 744 | -838 | 179 | 5.44 | 765 | 4.279 | Si |
| SLU 84 | 824 | -1058 | 2666 | 6.87 | 455 | 0.171 | No, M>Mu |
| SLU 83 | 744 | -843 | 193 | 5.47 | 760 | 3.932 | Si |
| SLU 83 | 824 | -1064 | 2665 | 6.91 | 444 | 0.167 | No, M>Mu |
| SLU 78 | 744 | -915 | 407 | 5.94 | 681 | 1.673 | Si |
| SLU 78 | 824 | -1141 | 2682 | 7.41 | 284 | 0.106 | No, M>Mu |
| SLU 79 | 744 | -928 | 468 | 6.03 | 664 | 1.42 | Si |
| SLU 79 | 824 | -1152 | 2658 | 7.48 | 258 | 0.097 | No, M>Mu |
| SLU 80 | 744 | -922 | 453 | 5.99 | 672 | 1.482 | Si |
| SLU 80 | 824 | -1147 | 2659 | 7.45 | 270 | 0.102 | No, M>Mu |

Verifica a pressoflessione nel piano secondo D.M. 17-01-18 NTC §7.8.2.2.1 in combinazioni sismiche, γM = 2

| Comb. | Quota | N | M | σ0 | Mu | c.s. | Verifica |
|---|---|---|---|---|---|---|---|
| SLV 5 | 744 | -304 | -354 | 1.97 | 701 | 1.983 | Si |
| SLV 5 | 824 | -279 | 1556 | 0 | 0 | 0 | No, e>l/2 |
| SLV 10 | 744 | -26 | -2047 | 0 | 0 | 0 | No, e>l/2 |
| SLV 10 | 824 | -422 | 3238 | 0 | 0 | 0 | No, e>l/2 |
| SLV 9 | 744 | -26 | -2047 | 0 | 0 | 0 | No, e>l/2 |
| SLV 9 | 824 | -422 | 3238 | 0 | 0 | 0 | No, e>l/2 |
| SLD 16 | 744 | -351 | -979 | 0 | 0 | 0 | No, e>l/2 |
| SLD 16 | 824 | -767 | 2703 | 0 | 0 | 0 | No, e>l/2 |
| SLV 6 | 744 | -304 | -354 | 1.97 | 701 | 1.983 | Si |
| SLV 6 | 824 | -279 | 1556 | 0 | 0 | 0 | No, e>l/2 |
| SLV 2 | 744 | -868 | 2508 | 0 | 0 | 0 | No, e>l/2 |
| SLV 2 | 824 | -308 | -959 | 0 | 0 | 0 | No, e>l/2 |
| SLV 13 | 744 | 61 | -3135 | 0 | 0 | 0 | No, Trazione |
| SLV 13 | 824 | -785 | 4647 | 0 | 0 | 0 | No, e>l/2 |
| SLV 3 | 744 | -1073 | 3268 | 0 | 0 | 0 | No, e>l/2 |
| SLV 3 | 824 | -475 | -1433 | 0 | 0 | 0 | No, e>l/2 |
| SLV 14 | 744 | 61 | -3135 | 0 | 0 | 0 | No, Trazione |
| SLV 14 | 824 | -785 | 4647 | 0 | 0 | 0 | No, e>l/2 |
| SLV 4 | 744 | -1073 | 3268 | 0 | 0 | 0 | No, e>l/2 |
| SLV 4 | 824 | -475 | -1433 | 0 | 0 | 0 | No, e>l/2 |

Verifica a taglio nel piano secondo D.M. 17-01-18 (N.T.C.) §7.8.2.2.2 con rottura per scorrimento in combinazioni non sismiche, γM = 3

| Comb. | Quota | N | V par | M | σ0 | σN | l' | fvd | Vt scorr. | Vt fess.diag. | Vt,lim | c.s. | Verifica |
|---|---|---|---|---|---|---|---|---|---|---|---|---|---|
| SLU 82 | 744 | -732 | -10 | -45 | | 4.75 | 5.5 | 1.08 | 167 | | | 16.09 | Si |
| SLU 82 | 824 | -936 | -174 | 2533 | | 0 | 0 | 0.56 | 0 | | | 0 | No, Vu<V |
| SLU 73 | 744 | -707 | -7 | -4 | | 4.59 | 5.5 | 1.08 | 167 | | | 23.33 | Si |
| SLU 73 | 824 | -897 | -165 | 2393 | | 0 | 0 | 0.56 | 0 | | | 0 | No, Vu<V |
| SLU 52 | 744 | -609 | -8 | -30 | | 3.95 | 5.5 | 1.08 | 167 | | | 20.73 | Si |
| SLU 52 | 824 | -767 | -142 | 2061 | | 0 | 0 | 0.56 | 0 | | | 0 | No, Vu<V |
| SLU 60 | 744 | -639 | -10 | -56 | | 4.15 | 5.5 | 1.08 | 167 | | | 16.25 | Si |
| SLU 60 | 824 | -810 | -151 | 2200 | | 0 | 0 | 0.56 | 0 | | | 0 | No, Vu<V |
| SLU 61 | 744 | -633 | -11 | -71 | | 4.11 | 5.5 | 1.08 | 167 | | | 14.82 | Si |
| SLU 61 | 824 | -805 | -152 | 2201 | | 0 | 0 | 0.56 | 0 | | | 0 | No, Vu<V |
| SLU 31 | 744 | -602 | -8 | -23 | | 3.91 | 5.5 | 1.08 | 166 | | | 22.02 | Si |
| SLU 31 | 824 | -771 | -143 | 2081 | | 0 | 0 | 0.56 | 0 | | | 0 | No, Vu<V |
| SLU 39 | 744 | -632 | -10 | -49 | | 4.1 | 5.5 | 1.08 | 167 | | | 17.11 | Si |
| SLU 39 | 824 | -815 | -153 | 2220 | | 0 | 0 | 0.56 | 0 | | | 0 | No, Vu<V |
| SLU 40 | 744 | -626 | -11 | -64 | | 4.07 | 5.5 | 1.08 | 167 | | | 15.52 | Si |
| SLU 40 | 824 | -809 | -153 | 2221 | | 0 | 0 | 0.56 | 0 | | | 0 | No, Vu<V |
| SLU 10 | 744 | -503 | -8 | -49 | | 3.27 | 5.5 | 0.99 | 153 | | | 18.12 | Si |
| SLU 10 | 824 | -641 | -120 | 1749 | | 0 | 0 | 0.56 | 0 | | | 0 | No, Vu<V |
| SLU 81 | 744 | -737 | -9 | -30 | | 4.79 | 5.5 | 1.08 | 167 | | | 17.8 | Si |
| SLU 81 | 824 | -941 | -174 | 2532 | | 0 | 0 | 0.56 | 0 | | | 0 | No, Vu<V |

Verifica a taglio nel piano secondo D.M. 17-01-18 (N.T.C.) §7.8.2.2.2 con rottura per scorrimento in combinazioni sismiche, γM = 2

| Comb. | Quota | N | V par | M | σ0 | σN | l' | fvd | Vt scorr. | Vt fess.diag. | Vt,lim | c.s. | Verifica |
|---|---|---|---|---|---|---|---|---|---|---|---|---|---|
| SLV 14 | 744 | 61 | -202 | -3135 | | 0 | 0 | 0.83 | 0 | | | 0 | No, Vu<V |
| SLV 14 | 824 | -785 | -291 | 4647 | | 0 | 0 | 0.83 | 0 | | | 0 | No, Vu<V |
| SLV 5 | 744 | -304 | -41 | -354 | | 2.28 | 4.76 | 1.29 | 172 | | | 4.15 | Si |
| SLV 5 | 824 | -279 | -2 | 1556 | | 0 | 0 | 0.83 | 0 | | | 0 | No, Vu<V |
| SLD 16 | 744 | -351 | -63 | -979 | | 0 | 0 | 0.83 | 0 | | | 0 | No, Vu<V |
| SLD 16 | 824 | -767 | -200 | 2703 | | 0 | 0 | 0.83 | 0 | | | 0 | No, Vu<V |
| SLV 13 | 744 | 61 | -202 | -3135 | | 0 | 0 | 0.83 | 0 | | | 0 | No, Vu<V |
| SLV 13 | 824 | -785 | -291 | 4647 | | 0 | 0 | 0.83 | 0 | | | 0 | No, Vu<V |
| SLV 6 | 744 | -304 | -41 | -354 | | 2.28 | 4.76 | 1.29 | 172 | | | 4.15 | Si |
| SLV 6 | 824 | -279 | -2 | 1556 | | 0 | 0 | 0.83 | 0 | | | 0 | No, Vu<V |
| SLV 3 | 744 | -1073 | 202 | 3268 | | 0 | 0 | 0.83 | 0 | | | 0 | No, Vu<V |
| SLV 3 | 824 | -475 | 70 | -1433 | | 0 | 0 | 0.83 | 0 | | | 0 | No, Vu<V |
| SLV 2 | 744 | -868 | 146 | 2508 | | 0 | 0 | 0.83 | 0 | | | 0 | No, Vu<V |
| SLV 2 | 824 | -308 | 100 | -959 | | 0 | 0 | 0.83 | 0 | | | 0 | No, Vu<V |
| SLV 4 | 744 | -1073 | 202 | 3268 | | 0 | 0 | 0.83 | 0 | | | 0 | No, Vu<V |
| SLV 4 | 824 | -475 | 70 | -1433 | | 0 | 0 | 0.83 | 0 | | | 0 | No, Vu<V |
| SLV 9 | 744 | -26 | -146 | -2047 | | 0 | 0 | 0.83 | 0 | | | 0 | No, Vu<V |
| SLV 9 | 824 | -422 | -120 | 3238 | | 0 | 0 | 0.83 | 0 | | | 0 | No, Vu<V |
| SLV 10 | 744 | -26 | -146 | -2047 | | 0 | 0 | 0.83 | 0 | | | 0 | No, Vu<V |
| SLV 10 | 824 | -422 | -120 | 3238 | | 0 | 0 | 0.83 | 0 | | | 0 | No, Vu<V |

### Verifica a pressoflessione fuori piano D.M. 17-01-18 (N.T.C.)

quota 720 Wa 0.05 denominatore 8 γM = 2

| Comb. | fd | Sa | σ0 | N | M | Mc | Coeff.s. | Verifica |
|---|---|---|---|---|---|---|---|---|
| SLV 14 | 14 | 0.39 | 0 | 54 | 585 | 0 | 0 | No, Trazione |
| SLV 16 | 14 | 0.39 | 0 | -11 | 585 | 0 | 0 | No, e>t/2 |
| SLV 13 | 14 | 0.39 | 0 | 54 | 585 | 0 | 0 | No, Trazione |
| SLV 15 | 14 | 0.39 | 0 | -11 | 585 | 0 | 0 | No, e>t/2 |
| SLV 9 | 14 | 0.39 | 0.28 | -43 | 585 | 586 | 1 | Si |
| SLV 10 | 14 | 0.39 | 0.28 | -43 | 585 | 586 | 1 | Si |
| SLV 6 | 14 | 0.39 | 1.23 | -190 | 585 | 2386 | 4.08 | Si |
| SLV 5 | 14 | 0.39 | 1.23 | -190 | 585 | 2386 | 4.08 | Si |
| SLV 12 | 14 | 0.39 | 1.67 | -257 | 585 | 3102 | 5.3 | Si |
| SLV 11 | 14 | 0.39 | 1.67 | -257 | 585 | 3102 | 5.3 | Si |

### Verifica dei meccanismi locali di collasso con analisi cinematica lineare

forza di aggancio al piano = 0 quota mezzeria = 720 Wa = 0.05 Ta = 0.0739

| Comb. | N top | N base | V orto | α0 | M* | e* | a0* | aLim | Verifica |
|---|---|---|---|---|---|---|---|---|---|
| SLV 13 | -52 | -130 | 26 | 0 | 0.135 | 0.889 | 0 | 839.377 | No |
| SLV 10 | 137 | -129 | 12 | 0 | 0 | 0 | 0 | 1522.194 | No, Trazione |
| SLV 5 | 121 | -226 | -2 | 0 | 0 | 0 | 0 | 1522.194 | No, Trazione |
| SLV 9 | 137 | -129 | 12 | 0 | 0 | 0 | 0 | 1522.194 | No, Trazione |
| SLV 2 | -103 | -454 | -22 | 0 | 0.184 | 0.902 | 0 | 839.377 | No |
| SLV 1 | -103 | -454 | -22 | 0 | 0.184 | 0.902 | 0 | 839.377 | No |
| SLV 14 | -52 | -130 | 26 | 0 | 0.135 | 0.889 | 0 | 839.377 | No |
| SLV 3 | -280 | -552 | -25 | 0 | 0.362 | 0.941 | 0 | 839.377 | No |
| SLV 6 | 121 | -226 | -2 | 0 | 0 | 0 | 0 | 1522.194 | No, Trazione |
| SLV 4 | -280 | -552 | -25 | 0 | 0.362 | 0.941 | 0 | 839.377 | No |

### Tabella dei coefficienti di sicurezza minimi

| Stato limite | Coeff.s. | Comb. | Verifica |
|---|---|---|---|
| PF_SLU | 0 | SLU 18 | No |
| V_SLU | 0 | SLU 10 | No |
| PF_SLV | 0 | SLV 14 | No |
| V_SLV | 0 | SLD 5 | No |
| PFFP_SLV | 0 | SLV 14 | No |
| R_SLV | 0 | SLV 10 | No |

## Maschio 131

Verifiche condotte secondo D.M. 17-01-18 (N.T.C.)

### Dati geometrici

| X ini. | Y ini. | X fin. | Y fin. | Quota i. | Quota.s | l | Sp. | h netta | h ini. | h fin. | a | a.s.,sx | a.s.,dx |
|---|---|---|---|---|---|---|---|---|---|---|---|---|---|
| -515.8 | 650.6 | -515.8 | 666.1 | L4 | L5 | 15.5 | 28 | 352 | 352 | 352 | | | |

### Caratteristiche del materiale

(Circolare 7 21-01-19 C8.5.I) Muratura in mattoni pieni e malta di calce LC2_Corti

| fb | fk | fvk0 | fmedio | τ0 | fv0 | μ | ϕ | fv,lim | E | G | FC |
|---|---|---|---|---|---|---|---|---|---|---|---|
| 60 | | | 34.5 | 0.9 | 2 | 0.58 | 0.77 | 3.25 | 32000 | 12800 | 1.2 |

### Verifica a pressoflessione nel piano secondo D.M. 17-01-18 NTC §7.8.2.2.1 in combinazioni non sismiche, γM = 3

| Comb. | Quota | N | M | σ0 | Mu | c.s. | Verifica |
|---|---|---|---|---|---|---|---|
| SLU 79 | 744 | -3240 | -2953 | 7.47 | 2097 | 0.71 | No, M>Mu |
| SLU 79 | 824 | -3157 | 348 | 7.27 | 2620 | 7.539 | Si |
| SLU 69 | 744 | -3005 | -2631 | 6.92 | 3491 | 1.327 | Si |
| SLU 69 | 824 | -2922 | 213 | 6.73 | 3929 | 18.489 | Si |
| SLU 83 | 744 | -2972 | -2927 | 6.85 | 3672 | 1.254 | Si |
| SLU 83 | 824 | -2888 | 508 | 6.65 | 4097 | 8.063 | Si |
| SLU 77 | 744 | -3216 | -2975 | 7.41 | 2250 | 0.756 | No, M>Mu |
| SLU 77 | 824 | -3133 | 380 | 7.22 | 2764 | 7.267 | Si |
| SLU 84 | 744 | -2953 | -2926 | 6.8 | 3770 | 1.288 | Si |
| SLU 84 | 824 | -2870 | 521 | 6.61 | 4188 | 8.042 | Si |
| SLU 80 | 744 | -3221 | -2952 | 7.42 | 2217 | 0.751 | No, M>Mu |
| SLU 80 | 824 | -3138 | 360 | 7.23 | 2733 | 7.588 | Si |
| SLU 70 | 744 | -2987 | -2631 | 6.88 | 3592 | 1.365 | Si |
| SLU 70 | 824 | -2903 | 225 | 6.69 | 4023 | 17.868 | Si |
| SLU 71 | 744 | -3029 | -2610 | 6.98 | 3361 | 1.288 | Si |
| SLU 71 | 824 | -2946 | 180 | 6.79 | 3807 | 21.189 | Si |
| SLU 78 | 744 | -3198 | -2974 | 7.37 | 2367 | 0.796 | No, M>Mu |
| SLU 78 | 824 | -3114 | 393 | 7.18 | 2875 | 7.315 | Si |
| SLU 72 | 744 | -3011 | -2609 | 6.94 | 3463 | 1.327 | Si |
| SLU 72 | 824 | -2927 | 192 | 6.74 | 3903 | 20.294 | Si |

### Verifica a pressoflessione nel piano secondo D.M. 17-01-18 NTC §7.8.2.2.1 in combinazioni sismiche, γM = 2

| Comb. | Quota | N | M | σ0 | Mu | c.s. | Verifica |
|---|---|---|---|---|---|---|---|
| SLV 3 | 744 | -1629 | 3152 | 3.75 | 8747 | 2.775 | Si |
| SLV 3 | 824 | -1578 | -5410 | 3.64 | 8592 | 1.588 | Si |
| SLV 14 | 744 | -1889 | -6669 | 4.35 | 9424 | 1.413 | Si |
| SLV 14 | 824 | -1811 | 6021 | 4.17 | 9243 | 1.535 | Si |
| SLV 15 | 744 | -2241 | -6732 | 5.16 | 10028 | 1.49 | Si |
| SLV 15 | 824 | -2171 | 5173 | 5 | 9937 | 1.921 | Si |
| SLV 16 | 744 | -2241 | -6732 | 5.16 | 10028 | 1.49 | Si |
| SLV 16 | 824 | -2171 | 5173 | 5 | 9937 | 1.921 | Si |
| SLV 2 | 744 | -1277 | 3214 | 2.94 | 7513 | 2.337 | Si |

| Comb. | Quota | N | M | σ0 | Mu | c.s. | Verifica |
|---|---|---|---|---|---|---|---|
| SLV 2 | 824 | -1219 | -4562 | 2.81 | 7276 | 1.595 | Si |
| SLV 10 | 744 | -1264 | -3137 | 2.91 | 7461 | 2.378 | Si |
| SLV 10 | 824 | -1185 | 3306 | 2.73 | 7131 | 2.157 | Si |
| SLV 4 | 744 | -1629 | 3152 | 3.75 | 8747 | 2.775 | Si |
| SLV 4 | 824 | -1578 | -5410 | 3.64 | 8592 | 1.588 | Si |
| SLV 1 | 744 | -1277 | 3214 | 2.94 | 7513 | 2.337 | Si |
| SLV 1 | 824 | -1219 | -4562 | 2.81 | 7276 | 1.595 | Si |
| SLV 9 | 744 | -1264 | -3137 | 2.91 | 7461 | 2.378 | Si |
| SLV 9 | 824 | -1185 | 3306 | 2.73 | 7131 | 2.157 | Si |
| SLV 13 | 744 | -1889 | -6669 | 4.35 | 9424 | 1.413 | Si |
| SLV 13 | 824 | -1811 | 6021 | 4.17 | 9243 | 1.535 | Si |

Verifica a taglio nel piano secondo D.M. 17-01-18 (N.T.C.) §7.8.2.2.2 con rottura per scorrimento in combinazioni non sismiche, γM = 3

| Comb. | Quota | N | V par | M | σ0 | σN | l' | fvd | Vt scorr. | Vt fess.diag. | Vt,lim | c.s. | Verifica |
|---|---|---|---|---|---|---|---|---|---|---|---|---|---|
| SLU 77 | 744 | -3216 | -42 | -2975 | | 7.41 | 15.5 | 1.08 | 470 | | | 11.21 | Si |
| SLU 77 | 824 | -3133 | -42 | 380 | | 7.22 | 15.5 | 1.08 | 470 | | | 11.21 | Si |
| SLU 78 | 744 | -3198 | -42 | -2974 | | 7.37 | 15.5 | 1.08 | 470 | | | 11.17 | Si |
| SLU 78 | 824 | -3114 | -42 | 393 | | 7.18 | 15.5 | 1.08 | 470 | | | 11.17 | Si |
| SLU 75 | 744 | -2839 | -41 | -2801 | | 6.54 | 15.5 | 1.08 | 470 | | | 11.46 | Si |
| SLU 75 | 824 | -2755 | -41 | 482 | | 6.35 | 15.5 | 1.08 | 470 | | | 11.46 | Si |
| SLU 84 | 744 | -2953 | -43 | -2926 | | 6.8 | 15.5 | 1.08 | 470 | | | 10.91 | Si |
| SLU 84 | 824 | -2870 | -43 | 521 | | 6.61 | 15.5 | 1.08 | 470 | | | 10.91 | Si |
| SLU 79 | 744 | -3240 | -41 | -2953 | | 7.47 | 15.5 | 1.08 | 470 | | | 11.4 | Si |
| SLU 79 | 824 | -3157 | -41 | 348 | | 7.27 | 15.5 | 1.08 | 470 | | | 11.4 | Si |
| SLU 83 | 744 | -2972 | -43 | -2927 | | 6.85 | 15.5 | 1.08 | 470 | | | 10.95 | Si |
| SLU 83 | 824 | -2888 | -43 | 508 | | 6.65 | 15.5 | 1.08 | 470 | | | 10.95 | Si |
| SLU 74 | 744 | -2857 | -41 | -2801 | | 6.58 | 15.5 | 1.08 | 470 | | | 11.5 | Si |
| SLU 74 | 824 | -2774 | -41 | 469 | | 6.39 | 15.5 | 1.08 | 470 | | | 11.5 | Si |
| SLU 80 | 744 | -3221 | -41 | -2952 | | 7.42 | 15.5 | 1.08 | 470 | | | 11.35 | Si |
| SLU 80 | 824 | -3138 | -41 | 360 | | 7.23 | 15.5 | 1.08 | 470 | | | 11.35 | Si |
| SLU 82 | 744 | -2594 | -42 | -2753 | | 5.98 | 15.5 | 1.08 | 470 | | | 11.19 | Si |
| SLU 82 | 824 | -2511 | -42 | 609 | | 5.79 | 15.5 | 1.08 | 470 | | | 11.19 | Si |
| SLU 81 | 744 | -2613 | -42 | -2754 | | 6.02 | 15.5 | 1.08 | 470 | | | 11.23 | Si |
| SLU 81 | 824 | -2529 | -42 | 597 | | 5.83 | 15.5 | 1.08 | 470 | | | 11.23 | Si |

Verifica a taglio nel piano secondo D.M. 17-01-18 (N.T.C.) §7.8.2.2.2 con rottura per scorrimento in combinazioni sismiche, γM = 2

| Comb. | Quota | N | V par | M | σ0 | σN | l' | fvd | Vt scorr. | Vt fess.diag. | Vt,lim | c.s. | Verifica |
|---|---|---|---|---|---|---|---|---|---|---|---|---|---|
| SLV 4 | 744 | -1629 | 109 | 3152 | | 3.75 | 15.5 | 1.58 | 687 | | | 6.29 | Si |
| SLV 4 | 824 | -1578 | 83 | -5410 | | 4.35 | 12.97 | 1.63 | 590 | | | 7.15 | Si |
| SLV 14 | 744 | -1889 | -161 | -6669 | | 5.33 | 12.66 | 1.63 | 576 | | | 3.58 | Si |
| SLV 14 | 824 | -1811 | -134 | 6021 | | 4.87 | 13.28 | 1.63 | 604 | | | 4.5 | Si |
| SLV 2 | 744 | -1277 | 68 | 3214 | | 2.94 | 15.5 | 1.42 | 617 | | | 9.12 | Si |
| SLV 2 | 824 | -1219 | 76 | -4562 | | 3.62 | 12.02 | 1.56 | 524 | | | 6.91 | Si |
| SLV 1 | 744 | -1277 | 68 | 3214 | | 2.94 | 15.5 | 1.42 | 617 | | | 9.12 | Si |
| SLV 1 | 824 | -1219 | 76 | -4562 | | 3.62 | 12.02 | 1.56 | 524 | | | 6.91 | Si |
| SLV 13 | 744 | -1889 | -161 | -6669 | | 5.33 | 12.66 | 1.63 | 576 | | | 3.58 | Si |
| SLV 13 | 824 | -1811 | -134 | 6021 | | 4.87 | 13.28 | 1.63 | 604 | | | 4.5 | Si |
| SLV 9 | 744 | -1264 | -130 | -3137 | | 2.91 | 15.5 | 1.42 | 614 | | | 4.74 | Si |
| SLV 9 | 824 | -1185 | -68 | 3306 | | 2.84 | 14.88 | 1.4 | 584 | | | 8.54 | Si |
| SLV 10 | 744 | -1264 | -130 | -3137 | | 2.91 | 15.5 | 1.42 | 614 | | | 4.74 | Si |
| SLV 10 | 824 | -1185 | -68 | 3306 | | 2.84 | 14.88 | 1.4 | 584 | | | 8.54 | Si |
| SLV 15 | 744 | -2241 | -119 | -6732 | | 5.62 | 14.24 | 1.63 | 648 | | | 5.43 | Si |
| SLV 15 | 824 | -2171 | -127 | 5173 | | 5 | 15.5 | 1.63 | 705 | | | 5.53 | Si |
| SLV 3 | 744 | -1629 | 109 | 3152 | | 3.75 | 15.5 | 1.58 | 687 | | | 6.29 | Si |
| SLV 3 | 824 | -1578 | 83 | -5410 | | 4.35 | 12.97 | 1.63 | 590 | | | 7.15 | Si |
| SLV 16 | 744 | -2241 | -119 | -6732 | | 5.62 | 14.24 | 1.63 | 648 | | | 5.43 | Si |
| SLV 16 | 824 | -2171 | -127 | 5173 | | 5 | 15.5 | 1.63 | 705 | | | 5.53 | Si |

Verifica a pressoflessione fuori piano D.M. 17-01-18 (N.T.C.)

quota 720 Wa 0.05 denominatore 8 γM = 2

| Comb. | fd | Sa | σ0 | N | M | Mc | Coeff.s. | Verifica |
|---|---|---|---|---|---|---|---|---|
| SLV 9 | 14 | 0.39 | 1.45 | -631 | 1648 | 7778 | 4.72 | Si |
| SLV 10 | 14 | 0.39 | 1.45 | -631 | 1648 | 7778 | 4.72 | Si |
| SLV 5 | 14 | 0.39 | 1.6 | -695 | 1648 | 8454 | 5.13 | Si |
| SLV 6 | 14 | 0.39 | 1.6 | -695 | 1648 | 8454 | 5.13 | Si |
| SLV 14 | 14 | 0.39 | 1.89 | -820 | 1648 | 9705 | 5.89 | Si |
| SLV 13 | 14 | 0.39 | 1.89 | -820 | 1648 | 9705 | 5.89 | Si |
| SLV 1 | 14 | 0.39 | 2.38 | -1035 | 1648 | 11659 | 7.07 | Si |
| SLV 2 | 14 | 0.39 | 2.38 | -1035 | 1648 | 11659 | 7.07 | Si |
| SLV 15 | 14 | 0.39 | 2.41 | -1047 | 1648 | 11762 | 7.14 | Si |
| SLV 16 | 14 | 0.39 | 2.41 | -1047 | 1648 | 11762 | 7.14 | Si |

Verifica dei meccanismi locali di collasso con analisi cinematica lineare

forza di aggancio al piano = 0 quota mezzeria = 720 Wa = 0.05 Ta = 0.0739

| Comb. | N top | N base | V orto | α0 | M* | e* | a0* | aLim | Verifica |
|---|---|---|---|---|---|---|---|---|---|
| SLV 9 | -3209 | 1928 | -395 | 0 | 0 | 0 | 0 | 1522.194 | No, Trazione |
| SLV 10 | -3209 | 1928 | -395 | 0 | 0 | 0 | 0 | 1522.194 | No, Trazione |
| SLV 2 | 720 | -2117 | 515 | 0 | 0 | 0 | 0 | 839.377 | No, Trazione |
| SLV 1 | 720 | -2117 | 515 | 0 | 0 | 0 | 0 | 839.377 | No, Trazione |
| SLV 3 | 1136 | -2826 | 652 | 0 | 0 | 0 | 0 | 839.377 | No, Trazione |
| SLV 8 | -231 | -1921 | 407 | 0 | 0.462 | 0.895 | 0 | 1522.194 | No |
| SLV 4 | 1136 | -2826 | 652 | 0 | 0 | 0 | 0 | 839.377 | No, Trazione |
| SLV 6 | -1620 | 443 | -48 | 0 | 0 | 0 | 0 | 1522.194 | No, Trazione |
| SLV 5 | -1620 | 443 | -48 | 0 | 0 | 0 | 0 | 1522.194 | No, Trazione |
| SLV 7 | -231 | -1921 | 407 | 0 | 0.462 | 0.895 | 0 | 1522.194 | No |

### Tabella dei coefficienti di sicurezza minimi

| Stato limite | Coeff.s. | Comb. | Verifica |
|---|---|---|---|
| PF_SLU | 0.71 | SLU 79 | No |
| V_SLU | 10.911 | SLU 84 | Si |
| PF_SLV | 1.413 | SLV 13 | Si |
| V_SLV | 3.578 | SLV 13 | Si |
| PFFP_SLV | 4.719 | SLV 9 | Si |
| R_SLV | 0 | SLV 16 | No |

## Maschio 132

Verifiche condotte secondo D.M. 17-01-18 (N.T.C.)

### Dati geometrici

| X ini. | Y ini. | X fin. | Y fin. | Quota i. | Quota.s | l | Sp. | h netta | h ini. | h fin. | a | a.s.,sx | a.s.,dx |
|---|---|---|---|---|---|---|---|---|---|---|---|---|---|
| -600.8 | -335.9 | -651.3 | -335.9 | L4 | L5 | 50.5 | 28 | 352 | 352 | 352 | | | |

### Caratteristiche del materiale

(Circolare 7 21-01-19 C8.5.I) Muratura in mattoni pieni e malta di calce LC2_Corti

| fb | fk | fvk0 | fmedio | τ0 | fv0 | μ | ϕ | fv,lim | E | G | FC |
|---|---|---|---|---|---|---|---|---|---|---|---|
| 60 | | | 34.5 | 0.9 | 2 | 0.58 | 0.77 | 3.25 | 32000 | 12800 | 1.2 |

### Verifica a pressoflessione nel piano secondo D.M. 17-01-18 NTC §7.8.2.2.1 in combinazioni non sismiche, γM = 3

| Comb. | Quota | N | M | σ0 | Mu | c.s. | Verifica |
|---|---|---|---|---|---|---|---|
| SLU 77 | 744 | -5975 | -4630 | 4.23 | 72606 | 15.683 | Si |
| SLU 77 | 824 | -5461 | -34030 | 3.86 | 72514 | 2.131 | Si |
| SLU 78 | 744 | -5797 | -3610 | 4.1 | 72705 | 20.139 | Si |
| SLU 78 | 824 | -5264 | -33956 | 3.72 | 72172 | 2.125 | Si |
| SLU 81 | 744 | -5818 | -3059 | 4.11 | 72701 | 23.763 | Si |
| SLU 81 | 824 | -5338 | -35302 | 3.78 | 72320 | 2.049 | Si |
| SLU 84 | 744 | -5806 | -2822 | 4.11 | 72704 | 25.76 | Si |
| SLU 84 | 824 | -5298 | -35202 | 3.75 | 72244 | 2.052 | Si |
| SLU 83 | 744 | -5984 | -3842 | 4.23 | 72598 | 18.897 | Si |
| SLU 83 | 824 | -5496 | -35276 | 3.89 | 72556 | 2.057 | Si |
| SLU 75 | 744 | -5632 | -2828 | 3.98 | 72673 | 25.698 | Si |
| SLU 75 | 824 | -5107 | -33981 | 3.61 | 71776 | 2.112 | Si |
| SLU 73 | 744 | -5287 | -1416 | 3.74 | 72220 | 51.013 | Si |
| SLU 73 | 824 | -4764 | -33394 | 3.37 | 70537 | 2.112 | Si |
| SLU 76 | 744 | -5452 | -2198 | 3.86 | 72502 | 32.986 | Si |
| SLU 76 | 824 | -4921 | -33369 | 3.48 | 71169 | 2.133 | Si |
| SLU 82 | 744 | -5641 | -2040 | 3.99 | 72678 | 35.626 | Si |
| SLU 82 | 824 | -5141 | -35227 | 3.64 | 71871 | 2.04 | Si |
| SLU 74 | 744 | -5810 | -3847 | 4.11 | 72703 | 18.897 | Si |
| SLU 74 | 824 | -5304 | -34056 | 3.75 | 72254 | 2.122 | Si |

### Verifica a pressoflessione nel piano secondo D.M. 17-01-18 NTC §7.8.2.2.1 in combinazioni sismiche, γM = 2

| Comb. | Quota | N | M | σ0 | Mu | c.s. | Verifica |
|---|---|---|---|---|---|---|---|
| SLD 3 | 744 | -2647 | 30108 | 1.87 | 56600 | 1.88 | Si |
| SLD 3 | 824 | -3354 | -52436 | 2.37 | 68247 | 1.302 | Si |
| SLV 8 | 744 | -1791 | 32922 | 1.27 | 40533 | 1.231 | Si |
| SLV 8 | 824 | -4232 | -52949 | 2.99 | 80685 | 1.524 | Si |
| SLV 2 | 744 | -1752 | 65389 | 0 | 0 | 0 | No, e>l/2 |
| SLV 2 | 824 | -2604 | -86239 | 0 | 0 | 0 | No, e>l/2 |
| SLV 4 | 744 | -941 | 73637 | 0 | 0 | 0 | No, e>l/2 |
| SLV 4 | 824 | -3146 | -92265 | 0 | 0 | 0 | No, e>l/2 |
| SLV 1 | 744 | -1752 | 65389 | 0 | 0 | 0 | No, e>l/2 |
| SLV 1 | 824 | -2604 | -86239 | 0 | 0 | 0 | No, e>l/2 |
| SLD 1 | 744 | -2979 | 26455 | 2.11 | 62253 | 2.353 | Si |
| SLD 1 | 824 | -3131 | -50115 | 2.21 | 64736 | 1.292 | Si |
| SLD 2 | 744 | -2979 | 26455 | 2.11 | 62253 | 2.353 | Si |
| SLD 2 | 824 | -3131 | -50115 | 2.21 | 64736 | 1.292 | Si |
| SLV 3 | 744 | -941 | 73637 | 0 | 0 | 0 | No, e>l/2 |
| SLV 3 | 824 | -3146 | -92265 | 0 | 0 | 0 | No, e>l/2 |
| SLD 4 | 744 | -2647 | 30108 | 1.87 | 56600 | 1.88 | Si |
| SLD 4 | 824 | -3354 | -52436 | 2.37 | 68247 | 1.302 | Si |
| SLV 7 | 744 | -1791 | 32922 | 1.27 | 40533 | 1.231 | Si |
| SLV 7 | 824 | -4232 | -52949 | 2.99 | 80685 | 1.524 | Si |

### Verifica a taglio nel piano secondo D.M. 17-01-18 (N.T.C.) §7.8.2.2.2 con rottura per scorrimento in combinazioni non sismiche, γM = 3

| Comb. | Quota | N | V par | M | σ0 | σN | l' | fvd | Vt scorr. | Vt fess.diag. | Vt,lim | c.s. | Verifica |
|---|---|---|---|---|---|---|---|---|---|---|---|---|---|
| SLU 41 | 744 | -5085 | 42 | -3235 | | 3.6 | 50.5 | 1.04 | 1464 | | | 34.52 | Si |
| SLU 41 | 824 | -4714 | 279 | -30143 | | 3.33 | 50.5 | 1 | 1414 | | | 5.07 | Si |
| SLU 62 | 744 | -5453 | 53 | -3556 | | 3.86 | 50.5 | 1.07 | 1513 | | | 28.71 | Si |
| SLU 62 | 824 | -4968 | 273 | -31956 | | 3.51 | 50.5 | 1.02 | 1448 | | | 5.31 | Si |
| SLU 84 | 744 | -5806 | 97 | -2822 | | 4.11 | 50.5 | 1.08 | 1532 | | | 15.75 | Si |
| SLU 84 | 824 | -5298 | 292 | -35202 | | 3.75 | 50.5 | 1.06 | 1492 | | | 5.1 | Si |
| SLU 80 | 744 | -5736 | 52 | -3660 | | 4.06 | 50.5 | 1.08 | 1532 | | | 29.26 | Si |
| SLU 80 | 824 | -5210 | 281 | -33393 | | 3.68 | 50.5 | 1.05 | 1480 | | | 5.28 | Si |
| SLU 42 | 744 | -4907 | 84 | -2215 | | 3.47 | 50.5 | 1.02 | 1440 | | | 17.21 | Si |
| SLU 42 | 824 | -4516 | 265 | -30069 | | 3.19 | 50.5 | 0.98 | 1388 | | | 5.24 | Si |
| SLU 77 | 744 | -5975 | 20 | -4630 | | 4.23 | 50.5 | 1.08 | 1532 | | | 75.89 | Si |
| SLU 77 | 824 | -5461 | 291 | -34030 | | 3.86 | 50.5 | 1.07 | 1514 | | | 5.2 | Si |
| SLU 81 | 744 | -5818 | 93 | -3059 | | 4.11 | 50.5 | 1.08 | 1532 | | | 16.52 | Si |
| SLU 81 | 824 | -5338 | 289 | -35302 | | 3.78 | 50.5 | 1.06 | 1497 | | | 5.18 | Si |
| SLU 37 | 744 | -5015 | -2 | -4072 | | 3.55 | 50.5 | 1.03 | 1454 | | | 584.96 | Si |

| Comb. | Quota | N | V par | M | σ0 | σN | l' | fvd | Vt scorr. | Vt fess.diag. | Vt,lim | c.s. | Verifica |
|---|---|---|---|---|---|---|---|---|---|---|---|---|---|
| SLU 37 | 824 | -4625 | 267 | -28335 | | 3.27 | 50.5 | 0.99 | 1402 | | | 5.25 | Si |
| SLU 79 | 744 | -5914 | 11 | -4679 | | 4.18 | 50.5 | 1.08 | 1532 | | | 138.39 | Si |
| SLU 79 | 824 | -5407 | 294 | -33468 | | 3.82 | 50.5 | 1.07 | 1507 | | | 5.12 | Si |
| SLU 83 | 744 | -5984 | 56 | -3842 | | 4.23 | 50.5 | 1.08 | 1532 | | | 27.38 | Si |
| SLU 83 | 824 | -5496 | 306 | -35276 | | 3.89 | 50.5 | 1.07 | 1518 | | | 4.96 | Si |

### Verifica a taglio nel piano secondo D.M. 17-01-18 (N.T.C.) §7.8.2.2.2 con rottura per scorrimento in combinazioni sismiche, γM = 2

| Comb. | Quota | N | V par | M | σ0 | σN | l' | fvd | Vt scorr. | Vt fess.diag. | Vt,lim | c.s. | Verifica |
|---|---|---|---|---|---|---|---|---|---|---|---|---|---|
| SLV 4 | 744 | -941 | 2830 | 73637 | | 0 | 0 | 0.83 | 0 | | | 0 | No, Vu<V |
| SLV 4 | 824 | -3146 | 694 | -92265 | | 0 | 0 | 0.83 | 0 | | | 0 | No, Vu<V |
| SLV 7 | 744 | -1791 | 1226 | 32922 | | 3.1 | 20.6 | 1.45 | 839 | | | 0.68 | No, Vu<V |
| SLV 7 | 824 | -4232 | 747 | -52949 | | 3.96 | 38.22 | 1.62 | 1738 | | | 2.33 | Si |
| SLV 15 | 744 | -6074 | -2497 | -70180 | | 5.28 | 41.09 | 1.63 | 1869 | | | 0.75 | No, Vu<V |
| SLV 15 | 824 | -4444 | -94 | 40154 | | 3.26 | 48.64 | 1.49 | 2024 | | | 21.6 | Si |
| SLV 2 | 744 | -1752 | 2607 | 65389 | | 0 | 0 | 0.83 | 0 | | | 0 | No, Vu<V |
| SLV 2 | 824 | -2604 | 412 | -86239 | | 0 | 0 | 0.83 | 0 | | | 0 | No, Vu<V |
| SLV 1 | 744 | -1752 | 2607 | 65389 | | 0 | 0 | 0.83 | 0 | | | 0 | No, Vu<V |
| SLV 1 | 824 | -2604 | 412 | -86239 | | 0 | 0 | 0.83 | 0 | | | 0 | No, Vu<V |
| SLV 3 | 744 | -941 | 2830 | 73637 | | 0 | 0 | 0.83 | 0 | | | 0 | No, Vu<V |
| SLV 3 | 824 | -3146 | 694 | -92265 | | 0 | 0 | 0.83 | 0 | | | 0 | No, Vu<V |
| SLV 13 | 744 | -6885 | -2720 | -78427 | | 5.91 | 41.58 | 1.63 | 1892 | | | 0.7 | No, Vu<V |
| SLV 13 | 824 | -3902 | -376 | 46180 | | 3.46 | 40.24 | 1.53 | 1719 | | | 4.58 | Si |
| SLV 8 | 744 | -1791 | 1226 | 32922 | | 3.1 | 20.6 | 1.45 | 839 | | | 0.68 | No, Vu<V |
| SLV 8 | 824 | -4232 | 747 | -52949 | | 3.96 | 38.22 | 1.62 | 1738 | | | 2.33 | Si |
| SLV 14 | 744 | -6885 | -2720 | -78427 | | 5.91 | 41.58 | 1.63 | 1892 | | | 0.7 | No, Vu<V |
| SLV 14 | 824 | -3902 | -376 | 46180 | | 3.46 | 40.24 | 1.53 | 1719 | | | 4.58 | Si |
| SLV 16 | 744 | -6074 | -2497 | -70180 | | 5.28 | 41.09 | 1.63 | 1869 | | | 0.75 | No, Vu<V |
| SLV 16 | 824 | -4444 | -94 | 40154 | | 3.26 | 48.64 | 1.49 | 2024 | | | 21.6 | Si |

### Verifica a pressoflessione fuori piano D.M. 17-01-18 (N.T.C.)

quota 720 Wa 0.05 denominatore 8 γM = 2

| Comb. | fd | Sa | σ0 | N | M | Mc | Coeff.s. | Verifica |
|---|---|---|---|---|---|---|---|---|
| SLV 7 | 14 | 0.39 | 0.91 | -1280 | 5248 | 16598 | 3.16 | Si |
| SLV 8 | 14 | 0.39 | 0.91 | -1280 | 5248 | 16598 | 3.16 | Si |
| SLV 11 | 14 | 0.39 | 1.22 | -1726 | 5248 | 21753 | 4.14 | Si |
| SLV 12 | 14 | 0.39 | 1.22 | -1726 | 5248 | 21753 | 4.14 | Si |
| SLV 4 | 14 | 0.39 | 1.3 | -1841 | 5248 | 23024 | 4.39 | Si |
| SLV 3 | 14 | 0.39 | 1.3 | -1841 | 5248 | 23024 | 4.39 | Si |
| SLV 2 | 14 | 0.39 | 1.96 | -2767 | 5248 | 32531 | 6.2 | Si |
| SLV 1 | 14 | 0.39 | 1.96 | -2767 | 5248 | 32531 | 6.2 | Si |
| SLV 15 | 14 | 0.39 | 2.35 | -3327 | 5248 | 37606 | 7.17 | Si |
| SLV 16 | 14 | 0.39 | 2.35 | -3327 | 5248 | 37606 | 7.17 | Si |

### Verifica dei meccanismi locali di collasso con analisi cinematica lineare

forza di aggancio al piano = 0 quota mezzeria = 720 Wa = 0.05 Ta = 0.0739

| Comb. | N top | N base | V orto | α0 | M* | e* | a0* | aLim | Verifica |
|---|---|---|---|---|---|---|---|---|---|
| SLV 12 | -1932 | -1107 | -14 | 0.041 | 2.678 | 0.929 | 64.443 | 1522.194 | No |
| SLV 11 | -1932 | -1107 | -14 | 0.041 | 2.678 | 0.929 | 64.443 | 1522.194 | No |
| SLV 5 | -1513 | -4087 | 11 | 0.043 | 2.256 | 0.919 | 68.102 | 1522.194 | No |
| SLV 6 | -1513 | -4087 | 11 | 0.043 | 2.256 | 0.919 | 68.102 | 1522.194 | No |
| SLV 10 | -2019 | -3932 | 7 | 0.044 | 2.766 | 0.931 | 68.894 | 1522.194 | No |
| SLV 9 | -2019 | -3932 | 7 | 0.044 | 2.766 | 0.931 | 68.894 | 1522.194 | No |
| SLV 8 | -1425 | -1262 | -10 | 0.044 | 2.169 | 0.917 | 69.557 | 1522.194 | No |
| SLV 7 | -1425 | -1262 | -10 | 0.044 | 2.169 | 0.917 | 69.557 | 1522.194 | No |
| SLV 16 | -2554 | -1915 | -12 | 0.042 | 3.307 | 0.94 | 64.514 | 839.377 | No |
| SLV 15 | -2554 | -1915 | -12 | 0.042 | 3.307 | 0.94 | 64.514 | 839.377 | No |

### Tabella dei coefficienti di sicurezza minimi

| Stato limite | Coeff.s. | Comb. | Verifica |
|---|---|---|---|
| PF_SLU | 2.04 | SLU 82 | Si |
| V_SLU | 4.956 | SLU 83 | Si |
| PF_SLV | 0 | SLV 1 | No |
| V_SLV | 0 | SLV 1 | No |
| PFFP_SLV | 3.163 | SLV 7 | Si |
| R_SLV | 0.042 | SLV 11 | No |

## Maschio 133

Verifiche condotte secondo D.M. 17-01-18 (N.T.C.)

### Dati geometrici

| X ini. | Y ini. | X fin. | Y fin. | Quota i. | Quota.s | l | Sp. | h netta | h ini. | h fin. | a | a.s.,sx | a.s.,dx |
|---|---|---|---|---|---|---|---|---|---|---|---|---|---|
| -318.3 | -335.9 | -550.8 | -335.9 | L4 | L5 | 232.5 | 28 | 352 | 352 | 352 | | | |

### Caratteristiche del materiale

(Circolare 7 21-01-19 C8.5.I) Muratura in mattoni pieni e malta di calce LC2_Corti

| fb | fk | fvk0 | fmedio | τ0 | fv0 | μ | ϕ | fv,lim | E | G | FC |
|---|---|---|---|---|---|---|---|---|---|---|---|
| 60 | | | 34.5 | 0.9 | 2 | 0.58 | 0.77 | 3.25 | 32000 | 12800 | 1.2 |

### Verifica a pressoflessione nel piano secondo D.M. 17-01-18 NTC §7.8.2.2.1 in combinazioni non sismiche, γM = 3

| Comb. | Quota | N | M | σ0 | Mu | c.s. | Verifica |
|---|---|---|---|---|---|---|---|
| SLU 82 | 744 | -18108 | 251949 | 2.78 | 1386247 | 5.502 | Si |
| SLU 82 | 824 | -15958 | 220501 | 2.45 | 1296842 | 5.881 | Si |

| Comb. | Quota | N | M | σ0 | Mu | c.s. | Verifica |
|---|---|---|---|---|---|---|---|
| SLU 75 | 744 | -17973 | 243761 | 2.76 | 1381228 | 5.666 | Si |
| SLU 75 | 824 | -15838 | 220116 | 2.43 | 1291266 | 5.866 | Si |
| SLU 78 | 744 | -18350 | 245385 | 2.82 | 1395033 | 5.685 | Si |
| SLU 78 | 824 | -16181 | 224231 | 2.49 | 1307079 | 5.829 | Si |
| SLU 52 | 744 | -15045 | 227231 | 2.31 | 1252790 | 5.513 | Si |
| SLU 52 | 824 | -13134 | 191127 | 2.02 | 1148662 | 6.01 | Si |
| SLU 84 | 744 | -18485 | 253572 | 2.84 | 1399830 | 5.52 | Si |
| SLU 84 | 824 | -16301 | 224616 | 2.5 | 1312474 | 5.843 | Si |
| SLU 61 | 744 | -16329 | 233240 | 2.51 | 1313745 | 5.633 | Si |
| SLU 61 | 824 | -14286 | 199126 | 2.19 | 1213323 | 6.093 | Si |
| SLU 55 | 744 | -15422 | 228855 | 2.37 | 1271435 | 5.556 | Si |
| SLU 55 | 824 | -13477 | 195242 | 2.07 | 1168545 | 5.985 | Si |
| SLU 63 | 744 | -16706 | 234864 | 2.57 | 1330268 | 5.664 | Si |
| SLU 63 | 824 | -14629 | 203241 | 2.25 | 1231472 | 6.059 | Si |
| SLU 73 | 744 | -16824 | 245940 | 2.58 | 1335307 | 5.429 | Si |
| SLU 73 | 824 | -14806 | 212502 | 2.27 | 1240624 | 5.838 | Si |
| SLU 76 | 744 | -17201 | 247564 | 2.64 | 1351011 | 5.457 | Si |
| SLU 76 | 824 | -15149 | 216617 | 2.33 | 1257990 | 5.807 | Si |

Verifica a pressoflessione nel piano secondo D.M. 17-01-18 NTC §7.8.2.2.1 in combinazioni sismiche, γM = 2

| Comb. | Quota | N | M | σ0 | Mu | c.s. | Verifica |
|---|---|---|---|---|---|---|---|
| SLV 13 | 744 | -12415 | -42361 | 1.91 | 1217997 | 28.753 | Si |
| SLV 13 | 824 | -12778 | 604473 | 1.96 | 1246844 | 2.063 | Si |
| SLD 14 | 744 | -12513 | 73199 | 1.92 | 1225797 | 16.746 | Si |
| SLD 14 | 824 | -11756 | 343197 | 1.81 | 1164696 | 3.394 | Si |
| SLD 16 | 744 | -11170 | 75588 | 1.72 | 1116130 | 14.766 | Si |
| SLD 16 | 824 | -10598 | 315323 | 1.63 | 1067868 | 3.387 | Si |
| SLV 16 | 744 | -9150 | -38667 | 1.41 | 941369 | 24.346 | Si |
| SLV 16 | 824 | -9992 | 538484 | 1.53 | 1015690 | 1.886 | Si |
| SLV 3 | 744 | -12836 | 362207 | 1.97 | 1251395 | 3.455 | Si |
| SLV 3 | 824 | -9263 | -305988 | 1.42 | 951425 | 3.109 | Si |
| SLV 15 | 744 | -9150 | -38667 | 1.41 | 941369 | 24.346 | Si |
| SLV 15 | 824 | -9992 | 538484 | 1.53 | 1015690 | 1.886 | Si |
| SLD 13 | 744 | -12513 | 73199 | 1.92 | 1225797 | 16.746 | Si |
| SLD 13 | 824 | -11756 | 343197 | 1.81 | 1164696 | 3.394 | Si |
| SLD 15 | 744 | -11170 | 75588 | 1.72 | 1116130 | 14.766 | Si |
| SLD 15 | 824 | -10598 | 315323 | 1.63 | 1067868 | 3.387 | Si |
| SLV 14 | 744 | -12415 | -42361 | 1.91 | 1217997 | 28.753 | Si |
| SLV 14 | 824 | -12778 | 604473 | 1.96 | 1246844 | 2.063 | Si |
| SLV 4 | 744 | -12836 | 362207 | 1.97 | 1251395 | 3.455 | Si |
| SLV 4 | 824 | -9263 | -305988 | 1.42 | 951425 | 3.109 | Si |

Verifica a taglio nel piano secondo D.M. 17-01-18 (N.T.C.) §7.8.2.2.2 con rottura per scorrimento in combinazioni non sismiche, γM = 3

| Comb. | Quota | N | V par | M | σ0 | σN | l' | fvd | Vt scorr. | Vt fess.diag. | Vt,lim | c.s. | Verifica |
|---|---|---|---|---|---|---|---|---|---|---|---|---|---|
| SLU 62 | 744 | -17455 | 1525 | 225833 | | 2.68 | 232.5 | 0.91 | 5944 | | | 3.9 | Si |
| SLU 62 | 824 | -15267 | 1340 | 202996 | | 2.35 | 232.5 | 0.87 | 5652 | | | 4.22 | Si |
| SLU 82 | 744 | -18108 | 1554 | 251949 | | 2.78 | 232.5 | 0.93 | 6031 | | | 3.88 | Si |
| SLU 82 | 824 | -15958 | 1432 | 220501 | | 2.45 | 232.5 | 0.88 | 5744 | | | 4.01 | Si |
| SLU 77 | 744 | -19099 | 1495 | 236354 | | 2.93 | 232.5 | 0.95 | 6163 | | | 4.12 | Si |
| SLU 77 | 824 | -16819 | 1335 | 223986 | | 2.58 | 232.5 | 0.9 | 5859 | | | 4.39 | Si |
| SLU 81 | 744 | -18857 | 1599 | 242918 | | 2.9 | 232.5 | 0.94 | 6131 | | | 3.83 | Si |
| SLU 81 | 824 | -16596 | 1436 | 220256 | | 2.55 | 232.5 | 0.9 | 5829 | | | 4.06 | Si |
| SLU 61 | 744 | -16329 | 1464 | 233240 | | 2.51 | 232.5 | 0.89 | 5794 | | | 3.96 | Si |
| SLU 61 | 824 | -14286 | 1333 | 199126 | | 2.19 | 232.5 | 0.85 | 5521 | | | 4.14 | Si |
| SLU 83 | 744 | -19234 | 1615 | 244541 | | 2.95 | 232.5 | 0.95 | 6181 | | | 3.83 | Si |
| SLU 83 | 824 | -16939 | 1439 | 224371 | | 2.6 | 232.5 | 0.9 | 5875 | | | 4.08 | Si |
| SLU 84 | 744 | -18485 | 1570 | 253572 | | 2.84 | 232.5 | 0.93 | 6081 | | | 3.87 | Si |
| SLU 84 | 824 | -16301 | 1435 | 224616 | | 2.5 | 232.5 | 0.89 | 5790 | | | 4.04 | Si |
| SLU 79 | 744 | -18826 | 1502 | 234136 | | 2.89 | 232.5 | 0.94 | 6127 | | | 4.08 | Si |
| SLU 79 | 824 | -16556 | 1332 | 220324 | | 2.54 | 232.5 | 0.89 | 5824 | | | 4.37 | Si |
| SLU 60 | 744 | -17078 | 1509 | 224209 | | 2.62 | 232.5 | 0.91 | 5894 | | | 3.91 | Si |
| SLU 60 | 824 | -14924 | 1337 | 198881 | | 2.29 | 232.5 | 0.86 | 5607 | | | 4.19 | Si |
| SLU 63 | 744 | -16706 | 1480 | 234864 | | 2.57 | 232.5 | 0.9 | 5844 | | | 3.95 | Si |
| SLU 63 | 824 | -14629 | 1336 | 203241 | | 2.25 | 232.5 | 0.86 | 5567 | | | 4.17 | Si |

Verifica a taglio nel piano secondo D.M. 17-01-18 (N.T.C.) §7.8.2.2.2 con rottura per scorrimento in combinazioni sismiche, γM = 2

| Comb. | Quota | N | V par | M | σ0 | σN | l' | fvd | Vt scorr. | Vt fess.diag. | Vt,lim | c.s. | Verifica |
|---|---|---|---|---|---|---|---|---|---|---|---|---|---|
| SLV 16 | 744 | -9150 | -8839 | -38667 | | 1.41 | 232.5 | 1.11 | 7255 | | | 0.82 | No, Vu<V |
| SLV 16 | 824 | -9992 | -7016 | 538484 | | 1.91 | 187.08 | 1.21 | 6364 | | | 0.91 | No, Vu<V |
| SLV 3 | 744 | -12836 | 12647 | 362207 | | 1.97 | 232.5 | 1.23 | 7992 | | | 0.63 | No, Vu<V |
| SLV 3 | 824 | -9263 | 10483 | -305988 | | 1.42 | 232.5 | 1.12 | 7278 | | | 0.69 | No, Vu<V |
| SLV 7 | 744 | -7737 | 7316 | 226211 | | 1.19 | 232.5 | 1.07 | 6972 | | | 0.95 | No, Vu<V |
| SLV 7 | 824 | -6268 | 6359 | -87410 | | 0.96 | 232.5 | 1.03 | 6679 | | | 1.05 | Si |
| SLV 1 | 744 | -16101 | 10770 | 358513 | | 2.47 | 232.5 | 1.33 | 8645 | | | 0.8 | No, Vu<V |
| SLV 1 | 824 | -12049 | 8768 | -239999 | | 1.85 | 232.5 | 1.2 | 7835 | | | 0.89 | No, Vu<V |
| SLV 4 | 744 | -12836 | 12647 | 362207 | | 1.97 | 232.5 | 1.23 | 7992 | | | 0.63 | No, Vu<V |
| SLV 4 | 824 | -9263 | 10483 | -305988 | | 1.42 | 232.5 | 1.12 | 7278 | | | 0.69 | No, Vu<V |
| SLV 14 | 744 | -12415 | -10716 | -42361 | | 1.91 | 232.5 | 1.21 | 7908 | | | 0.74 | No, Vu<V |
| SLV 14 | 824 | -12778 | -8731 | 604473 | | 2.21 | 206.84 | 1.27 | 7382 | | | 0.85 | No, Vu<V |
| SLV 8 | 744 | -7737 | 7316 | 226211 | | 1.19 | 232.5 | 1.07 | 6972 | | | 0.95 | No, Vu<V |
| SLV 8 | 824 | -6268 | 6359 | -87410 | | 0.96 | 232.5 | 1.03 | 6679 | | | 1.05 | Si |
| SLV 15 | 744 | -9150 | -8839 | -38667 | | 1.41 | 232.5 | 1.11 | 7255 | | | 0.82 | No, Vu<V |
| SLV 15 | 824 | -9992 | -7016 | 538484 | | 1.91 | 187.08 | 1.21 | 6364 | | | 0.91 | No, Vu<V |
| SLV 13 | 744 | -12415 | -10716 | -42361 | | 1.91 | 232.5 | 1.21 | 7908 | | | 0.74 | No, Vu<V |
| SLV 13 | 824 | -12778 | -8731 | 604473 | | 2.21 | 206.84 | 1.27 | 7382 | | | 0.85 | No, Vu<V |
| SLV 2 | 744 | -16101 | 10770 | 358513 | | 2.47 | 232.5 | 1.33 | 8645 | | | 0.8 | No, Vu<V |
| SLV 2 | 824 | -12049 | 8768 | -239999 | | 1.85 | 232.5 | 1.2 | 7835 | | | 0.89 | No, Vu<V |

### Verifica a pressoflessione fuori piano D.M. 17-01-18 (N.T.C.)

quota 720 Wa 0.05 denominatore 8 γM = 2

| Comb. | fd | Sa | σ0 | N | M | Mc | Coeff.s. | Verifica |
|---|---|---|---|---|---|---|---|---|
| SLV 11 | 14 | 0.39 | 0.99 | -6428 | 24161 | 82721 | 3.42 | Si |
| SLV 12 | 14 | 0.39 | 0.99 | -6428 | 24161 | 82721 | 3.42 | Si |
| SLV 8 | 14 | 0.39 | 1 | -6503 | 24161 | 83600 | 3.46 | Si |
| SLV 7 | 14 | 0.39 | 1 | -6503 | 24161 | 83600 | 3.46 | Si |
| SLV 15 | 14 | 0.39 | 1.55 | -10081 | 24161 | 123248 | 5.1 | Si |
| SLV 16 | 14 | 0.39 | 1.55 | -10081 | 24161 | 123248 | 5.1 | Si |
| SLV 3 | 14 | 0.39 | 1.59 | -10331 | 24161 | 125849 | 5.21 | Si |
| SLV 4 | 14 | 0.39 | 1.59 | -10331 | 24161 | 125849 | 5.21 | Si |
| SLV 14 | 14 | 0.39 | 2.04 | -13287 | 24161 | 154946 | 6.41 | Si |
| SLV 13 | 14 | 0.39 | 2.04 | -13287 | 24161 | 154946 | 6.41 | Si |

### Verifica dei meccanismi locali di collasso con analisi cinematica lineare

forza di aggancio al piano = 0 quota mezzeria = 720 Wa = 0.05 Ta = 0.0739

| Comb. | N top | N base | V orto | α0 | M* | e* | a0* | aLim | Verifica |
|---|---|---|---|---|---|---|---|---|---|
| SLV 10 | -12949 | -16654 | 97 | 0.039 | 16.431 | 0.944 | 59.654 | 1522.194 | No |
| SLV 9 | -12949 | -16654 | 97 | 0.039 | 16.431 | 0.944 | 59.654 | 1522.194 | No |
| SLV 7 | -6223 | -3905 | -96 | 0.038 | 9.647 | 0.915 | 60.461 | 1522.194 | No |
| SLV 8 | -6223 | -3905 | -96 | 0.038 | 9.647 | 0.915 | 60.461 | 1522.194 | No |
| SLV 5 | -12927 | -15815 | 76 | 0.04 | 16.409 | 0.944 | 61.855 | 1522.194 | No |
| SLV 6 | -12927 | -15815 | 76 | 0.04 | 16.409 | 0.944 | 61.855 | 1522.194 | No |
| SLV 11 | -6246 | -4744 | -75 | 0.041 | 9.669 | 0.915 | 64.555 | 1522.194 | No |
| SLV 12 | -6246 | -4744 | -75 | 0.041 | 9.669 | 0.915 | 64.555 | 1522.194 | No |
| SLV 13 | -10629 | -13464 | 62 | 0.041 | 14.082 | 0.936 | 64.178 | 839.377 | No |
| SLV 14 | -10629 | -13464 | 62 | 0.041 | 14.082 | 0.936 | 64.178 | 839.377 | No |

### Tabella dei coefficienti di sicurezza minimi

| Stato limite | Coeff.s. | Comb. | Verifica |
|---|---|---|---|
| PF_SLU | 5.429 | SLU 73 | Si |
| V_SLU | 3.827 | SLU 83 | Si |
| PF_SLV | 1.886 | SLV 15 | Si |
| V_SLV | 0.632 | SLV 3 | No |
| PFFP_SLV | 3.424 | SLV 11 | Si |
| R_SLV | 0.039 | SLV 9 | No |

## Maschio 134

Verifiche condotte secondo D.M. 17-01-18 (N.T.C.)

### Dati geometrici

| X ini. | Y ini. | X fin. | Y fin. | Quota i. | Quota.s | l | Sp. | h netta | h ini. | h fin. | a | a.s.,sx | a.s.,dx |
|---|---|---|---|---|---|---|---|---|---|---|---|---|---|
| -12.3 | -335.9 | -228.3 | -335.9 | L4 | L5 | 216 | 28 | 352 | 352 | 352 | | | |

### Caratteristiche del materiale

(Circolare 7 21-01-19 C8.5.I) Muratura in mattoni pieni e malta di calce LC2_Corti

| fb | fk | fvk0 | fmedio | τ0 | fv0 | μ | ϕ | fv,lim | E | G | FC |
|---|---|---|---|---|---|---|---|---|---|---|---|
| 60 | | | 34.5 | 0.9 | 2 | 0.58 | 0.77 | 3.25 | 32000 | 12800 | 1.2 |

### Verifica a pressoflessione nel piano secondo D.M. 17-01-18 NTC §7.8.2.2.1 in combinazioni non sismiche, γM = 3

| Comb. | Quota | N | M | σ0 | Mu | c.s. | Verifica |
|---|---|---|---|---|---|---|---|
| SLU 73 | 634 | -14932 | -187589 | 2.47 | 1123861 | 5.991 | Si |
| SLU 73 | 814 | -17332 | 169630 | 2.87 | 1213336 | 7.153 | Si |
| SLU 10 | 634 | -10972 | -153448 | 1.81 | 921046 | 6.002 | Si |
| SLU 10 | 814 | -12818 | 124725 | 2.12 | 1024162 | 8.211 | Si |
| SLU 31 | 634 | -12338 | -171224 | 2.04 | 998815 | 5.833 | Si |
| SLU 31 | 814 | -14689 | 148107 | 2.43 | 1113392 | 7.518 | Si |
| SLU 65 | 634 | -13817 | -179507 | 2.28 | 1073712 | 5.981 | Si |
| SLU 65 | 814 | -15719 | 148858 | 2.6 | 1156003 | 7.766 | Si |
| SLU 34 | 634 | -12726 | -171166 | 2.1 | 1019365 | 5.955 | Si |
| SLU 34 | 814 | -15106 | 148811 | 2.5 | 1131194 | 7.602 | Si |
| SLU 5 | 634 | -10244 | -145308 | 1.69 | 876304 | 6.031 | Si |
| SLU 5 | 814 | -11622 | 104658 | 1.92 | 959076 | 9.164 | Si |
| SLU 23 | 634 | -11223 | -163142 | 1.86 | 935989 | 5.737 | Si |
| SLU 23 | 814 | -13076 | 127335 | 2.16 | 1037363 | 8.147 | Si |
| SLU 2 | 634 | -9857 | -145366 | 1.63 | 851539 | 5.858 | Si |
| SLU 2 | 814 | -11205 | 103953 | 1.85 | 934905 | 8.994 | Si |
| SLU 26 | 634 | -11611 | -163084 | 1.92 | 958432 | 5.877 | Si |
| SLU 26 | 814 | -13493 | 128039 | 2.23 | 1058115 | 8.264 | Si |
| SLU 76 | 634 | -15319 | -187531 | 2.53 | 1140007 | 6.079 | Si |
| SLU 76 | 814 | -17749 | 170335 | 2.93 | 1226304 | 7.199 | Si |

### Verifica a pressoflessione nel piano secondo D.M. 17-01-18 NTC §7.8.2.2.1 in combinazioni sismiche, γM = 2

| Comb. | Quota | N | M | σ0 | Mu | c.s. | Verifica |
|---|---|---|---|---|---|---|---|
| SLV 12 | 634 | -3988 | -189180 | 0.66 | 407478 | 2.154 | Si |
| SLV 12 | 814 | -7735 | 177387 | 1.28 | 747934 | 4.216 | Si |
| SLV 15 | 634 | -10994 | -497009 | 1.82 | 1010702 | 2.034 | Si |
| SLV 15 | 814 | -16959 | 482783 | 2.8 | 1411253 | 2.923 | Si |
| SLV 16 | 634 | -10994 | -497009 | 1.82 | 1010702 | 2.034 | Si |
| SLV 16 | 814 | -16959 | 482783 | 2.8 | 1411253 | 2.923 | Si |
| SLV 4 | 634 | -6254 | 344039 | 1.03 | 618257 | 1.797 | Si |
| SLV 4 | 814 | -3164 | -290424 | 0.52 | 327073 | 1.126 | Si |
| SLV 13 | 634 | -15577 | -508549 | 2.58 | 1327692 | 2.611 | Si |

| Comb. | Quota | N | M | σ0 | Mu | c.s. | Verifica |
|---|---|---|---|---|---|---|---|
| SLV 13 | 814 | -20727 | 512589 | 3.43 | 1610662 | 3.142 | Si |
| SLV 2 | 634 | -10837 | 332499 | 1.79 | 998742 | 3.004 | Si |
| SLV 2 | 814 | -6932 | -260618 | 1.15 | 678412 | 2.603 | Si |
| SLV 1 | 634 | -10837 | 332499 | 1.79 | 998742 | 3.004 | Si |
| SLV 1 | 814 | -6932 | -260618 | 1.15 | 678412 | 2.603 | Si |
| SLV 11 | 634 | -3988 | -189180 | 0.66 | 407478 | 2.154 | Si |
| SLV 11 | 814 | -7735 | 177387 | 1.28 | 747934 | 4.216 | Si |
| SLV 3 | 634 | -6254 | 344039 | 1.03 | 618257 | 1.797 | Si |
| SLV 3 | 814 | -3164 | -290424 | 0.52 | 327073 | 1.126 | Si |
| SLV 14 | 634 | -15577 | -508549 | 2.58 | 1327692 | 2.611 | Si |
| SLV 14 | 814 | -20727 | 512589 | 3.43 | 1610662 | 3.142 | Si |

Verifica a taglio nel piano secondo D.M. 17-01-18 (N.T.C.) §7.8.2.2.2 con rottura per scorrimento in combinazioni non sismiche, γM = 3

| Comb. | Quota | N | V par | M | σ0 | σN | l' | fvd | Vt scorr. | Vt fess.diag. | Vt,lim | c.s. | Verifica |
|---|---|---|---|---|---|---|---|---|---|---|---|---|---|
| SLU 68 | 634 | -14204 | -4552 | -179449 | | 2.35 | 216 | 0.87 | 5254 | | | 1.15 | Si |
| SLU 68 | 814 | -16136 | -4494 | 149563 | | 2.67 | 216 | 0.91 | 5512 | | | 1.23 | Si |
| SLU 76 | 634 | -15319 | -5011 | -187531 | | 2.53 | 216 | 0.89 | 5403 | | | 1.08 | Si |
| SLU 76 | 814 | -17749 | -4953 | 170335 | | 2.93 | 216 | 0.95 | 5727 | | | 1.16 | Si |
| SLU 75 | 634 | -15662 | -4736 | -160978 | | 2.59 | 216 | 0.9 | 5448 | | | 1.15 | Si |
| SLU 75 | 814 | -17892 | -4701 | 171141 | | 2.96 | 216 | 0.95 | 5746 | | | 1.22 | Si |
| SLU 84 | 634 | -15937 | -4882 | -162795 | | 2.64 | 216 | 0.91 | 5485 | | | 1.12 | Si |
| SLU 84 | 814 | -18339 | -4847 | 177042 | | 3.03 | 216 | 0.96 | 5805 | | | 1.2 | Si |
| SLU 78 | 634 | -16050 | -4757 | -160920 | | 2.65 | 216 | 0.91 | 5500 | | | 1.16 | Si |
| SLU 78 | 814 | -18309 | -4722 | 171846 | | 3.03 | 216 | 0.96 | 5801 | | | 1.23 | Si |
| SLU 65 | 634 | -13817 | -4530 | -179507 | | 2.28 | 216 | 0.86 | 5202 | | | 1.15 | Si |
| SLU 65 | 814 | -15719 | -4473 | 148858 | | 2.6 | 216 | 0.9 | 5456 | | | 1.22 | Si |
| SLU 31 | 634 | -12338 | -4404 | -171224 | | 2.04 | 216 | 0.83 | 5005 | | | 1.14 | Si |
| SLU 31 | 814 | -14689 | -4346 | 148107 | | 2.43 | 216 | 0.88 | 5318 | | | 1.22 | Si |
| SLU 34 | 634 | -12726 | -4425 | -171166 | | 2.1 | 216 | 0.84 | 5057 | | | 1.14 | Si |
| SLU 34 | 814 | -15106 | -4368 | 148811 | | 2.5 | 216 | 0.89 | 5374 | | | 1.23 | Si |
| SLU 73 | 634 | -14932 | -4989 | -187589 | | 2.47 | 216 | 0.88 | 5351 | | | 1.07 | Si |
| SLU 73 | 814 | -17332 | -4932 | 169630 | | 2.87 | 216 | 0.94 | 5671 | | | 1.15 | Si |
| SLU 82 | 634 | -15549 | -4860 | -162854 | | 2.57 | 216 | 0.9 | 5433 | | | 1.12 | Si |
| SLU 82 | 814 | -17922 | -4825 | 176338 | | 2.96 | 216 | 0.95 | 5750 | | | 1.19 | Si |

Verifica a taglio nel piano secondo D.M. 17-01-18 (N.T.C.) §7.8.2.2.2 con rottura per scorrimento in combinazioni sismiche, γM = 2

| Comb. | Quota | N | V par | M | σ0 | σN | l' | fvd | Vt scorr. | Vt fess.diag. | Vt,lim | c.s. | Verifica |
|---|---|---|---|---|---|---|---|---|---|---|---|---|---|
| SLD 13 | 634 | -12885 | -6231 | -265053 | | 2.13 | 216 | 1.26 | 7617 | | | 1.22 | Si |
| SLD 13 | 814 | -15688 | -6006 | 282540 | | 2.59 | 216 | 1.35 | 8178 | | | 1.36 | Si |
| SLV 13 | 634 | -15577 | -10765 | -508549 | | 2.58 | 216 | 1.35 | 8155 | | | 0.76 | No, Vu<V |
| SLV 13 | 814 | -20727 | -10226 | 512589 | | 3.43 | 216 | 1.52 | 9185 | | | 0.9 | No, Vu<V |
| SLV 14 | 634 | -15577 | -10765 | -508549 | | 2.58 | 216 | 1.35 | 8155 | | | 0.76 | No, Vu<V |
| SLV 14 | 814 | -20727 | -10226 | 512589 | | 3.43 | 216 | 1.52 | 9185 | | | 0.9 | No, Vu<V |
| SLV 4 | 634 | -6254 | 5027 | 344039 | | 1.41 | 158.96 | 1.11 | 4960 | | | 0.99 | No, Vu<V |
| SLV 4 | 814 | -3164 | 4489 | -290424 | | 2.32 | 48.62 | 1.3 | 1767 | | | 0.39 | No, Vu<V |
| SLV 16 | 634 | -10994 | -9833 | -497009 | | 2.08 | 188.38 | 1.25 | 6594 | | | 0.67 | No, Vu<V |
| SLV 16 | 814 | -16959 | -9776 | 482783 | | 2.8 | 216 | 1.39 | 8432 | | | 0.86 | No, Vu<V |
| SLD 14 | 634 | -12885 | -6231 | -265053 | | 2.13 | 216 | 1.26 | 7617 | | | 1.22 | Si |
| SLD 14 | 814 | -15688 | -6006 | 282540 | | 2.59 | 216 | 1.35 | 8178 | | | 1.36 | Si |
| SLV 15 | 634 | -10994 | -9833 | -497009 | | 2.08 | 188.38 | 1.25 | 6594 | | | 0.67 | No, Vu<V |
| SLV 15 | 814 | -16959 | -9776 | 482783 | | 2.8 | 216 | 1.39 | 8432 | | | 0.86 | No, Vu<V |
| SLV 3 | 634 | -6254 | 5027 | 344039 | | 1.41 | 158.96 | 1.11 | 4960 | | | 0.99 | No, Vu<V |
| SLV 3 | 814 | -3164 | 4489 | -290424 | | 2.32 | 48.62 | 1.3 | 1767 | | | 0.39 | No, Vu<V |
| SLD 15 | 634 | -10967 | -5848 | -258563 | | 1.81 | 216 | 1.2 | 7233 | | | 1.24 | Si |
| SLD 15 | 814 | -14091 | -5819 | 269632 | | 2.33 | 216 | 1.3 | 7858 | | | 1.35 | Si |
| SLD 16 | 634 | -10967 | -5848 | -258563 | | 1.81 | 216 | 1.2 | 7233 | | | 1.24 | Si |
| SLD 16 | 814 | -14091 | -5819 | 269632 | | 2.33 | 216 | 1.3 | 7858 | | | 1.35 | Si |

Verifica a pressoflessione fuori piano D.M. 17-01-18 (N.T.C.)

quota 720 Wa 0.05 denominatore 8 γM = 2

| Comb. | fd | Sa | σ0 | N | M | Mc | Coeff.s. | Verifica |
|---|---|---|---|---|---|---|---|---|
| SLV 8 | 14 | 0.39 | 0.58 | -3525 | 22447 | 46999 | 2.09 | Si |
| SLV 7 | 14 | 0.39 | 0.58 | -3525 | 22447 | 46999 | 2.09 | Si |
| SLV 3 | 14 | 0.39 | 0.86 | -5186 | 22447 | 67511 | 3.01 | Si |
| SLV 4 | 14 | 0.39 | 0.86 | -5186 | 22447 | 67511 | 3.01 | Si |
| SLV 11 | 14 | 0.39 | 1.03 | -6201 | 22447 | 79527 | 3.54 | Si |
| SLV 12 | 14 | 0.39 | 1.03 | -6201 | 22447 | 79527 | 3.54 | Si |
| SLV 1 | 14 | 0.39 | 1.54 | -9285 | 22447 | 113662 | 5.06 | Si |
| SLV 2 | 14 | 0.39 | 1.54 | -9285 | 22447 | 113662 | 5.06 | Si |
| SLV 15 | 14 | 0.39 | 2.33 | -14105 | 22447 | 159777 | 7.12 | Si |
| SLV 16 | 14 | 0.39 | 2.33 | -14105 | 22447 | 159777 | 7.12 | Si |

Verifica dei meccanismi locali di collasso con analisi cinematica lineare

forza di aggancio al piano = 0 quota mezzeria = 720 Wa = 0.05 Ta = 0.0739

| Comb. | N top | N base | V orto | α0 | M* | e* | a0* | aLim | Verifica |
|---|---|---|---|---|---|---|---|---|---|
| SLV 11 | -6113 | -5069 | -142 | 0.032 | 9.293 | 0.917 | 50.135 | 1522.194 | No |
| SLV 12 | -6113 | -5069 | -142 | 0.032 | 9.293 | 0.917 | 50.135 | 1522.194 | No |
| SLV 6 | -13408 | -17008 | 140 | 0.036 | 16.663 | 0.948 | 54.537 | 1522.194 | No |
| SLV 5 | -13408 | -17008 | 140 | 0.036 | 16.663 | 0.948 | 54.537 | 1522.194 | No |
| SLV 10 | -15651 | -20416 | 91 | 0.039 | 18.94 | 0.954 | 59.319 | 1522.194 | No |
| SLV 9 | -15651 | -20416 | 91 | 0.039 | 18.94 | 0.954 | 59.319 | 1522.194 | No |
| SLV 8 | -3870 | -1661 | -92 | 0.037 | 7.069 | 0.9 | 59.722 | 1522.194 | No |
| SLV 7 | -3870 | -1661 | -92 | 0.037 | 7.069 | 0.9 | 59.722 | 1522.194 | No |
| SLV 1 | -7454 | -7660 | 117 | 0.035 | 10.639 | 0.925 | 55.73 | 839.377 | No |
| SLV 2 | -7454 | -7660 | 117 | 0.035 | 10.639 | 0.925 | 55.73 | 839.377 | No |

Tabella dei coefficienti di sicurezza minimi

| Stato limite | Coeff.s. | Comb. | Verifica |
|---|---|---|---|
| PF_SLU | 5.737 | SLU 23 | Si |
| V_SLU | 1.072 | SLU 73 | Si |
| PF_SLV | 1.126 | SLV 3 | Si |
| V_SLV | 0.394 | SLV 3 | No |
| PFFP_SLV | 2.094 | SLV 7 | Si |
| R_SLV | 0.033 | SLV 11 | No |

## Maschio 135

Verifiche condotte secondo D.M. 17-01-18 (N.T.C.)

### Dati geometrici

| X ini. | Y ini. | X fin. | Y fin. | Quota i. | Quota.s | l | Sp. | h netta | h ini. | h fin. | a | a.s.,sx | a.s.,dx |
|---|---|---|---|---|---|---|---|---|---|---|---|---|---|
| -296.3 | 595.1 | -515.8 | 595.1 | L4 | L5 | 219.5 | 28 | 352 | 352 | 352 | | | |

### Caratteristiche del materiale

(Circolare 7 21-01-19 C8.5.I) Muratura in mattoni pieni e malta di calce LC2_Corti

| fb | fk | fvk0 | fmedio | τ0 | fv0 | μ | ϕ | fv,lim | E | G | FC |
|---|---|---|---|---|---|---|---|---|---|---|---|
| 60 | | | 34.5 | 0.9 | 2 | 0.58 | 0.77 | 3.25 | 32000 | 12800 | 1.2 |

### Verifica a pressoflessione nel piano secondo D.M. 17-01-18 NTC §7.8.2.2.1 in combinazioni non sismiche, γM = 3

| Comb. | Quota | N | M | σ0 | Mu | c.s. | Verifica |
|---|---|---|---|---|---|---|---|
| SLU 27 | 634 | -16604 | 15797 | 2.7 | 1217920 | 77.098 | Si |
| SLU 27 | 814 | -15256 | 114336 | 2.48 | 1164107 | 10.181 | Si |
| SLU 29 | 634 | -16441 | 24494 | 2.68 | 1211854 | 49.475 | Si |
| SLU 29 | 814 | -15017 | 120670 | 2.44 | 1153778 | 9.561 | Si |
| SLU 30 | 634 | -16276 | 27879 | 2.65 | 1205583 | 43.244 | Si |
| SLU 30 | 814 | -14863 | 123136 | 2.42 | 1146923 | 9.314 | Si |
| SLU 72 | 634 | -19282 | 12206 | 3.14 | 1301155 | 106.599 | Si |
| SLU 72 | 814 | -17588 | 126079 | 2.86 | 1252145 | 9.931 | Si |
| SLU 51 | 634 | -17204 | 7136 | 2.8 | 1239319 | 173.677 | Si |
| SLU 51 | 814 | -15429 | 111808 | 2.51 | 1171489 | 10.478 | Si |
| SLU 28 | 634 | -16439 | 19182 | 2.67 | 1211766 | 63.173 | Si |
| SLU 28 | 814 | -15101 | 116802 | 2.46 | 1157414 | 9.909 | Si |
| SLU 7 | 634 | -14362 | 14111 | 2.34 | 1124036 | 79.655 | Si |
| SLU 7 | 814 | -12942 | 102531 | 2.11 | 1053224 | 10.272 | Si |
| SLU 8 | 634 | -14364 | 19424 | 2.34 | 1124146 | 57.875 | Si |
| SLU 8 | 814 | -12859 | 106400 | 2.09 | 1048801 | 9.857 | Si |
| SLU 9 | 634 | -14199 | 22808 | 2.31 | 1116373 | 48.946 | Si |
| SLU 9 | 814 | -12704 | 108866 | 2.07 | 1040480 | 9.557 | Si |
| SLU 71 | 634 | -19447 | 8822 | 3.16 | 1305253 | 147.962 | Si |
| SLU 71 | 814 | -17743 | 123613 | 2.89 | 1257149 | 10.17 | Si |

### Verifica a pressoflessione nel piano secondo D.M. 17-01-18 NTC §7.8.2.2.1 in combinazioni sismiche, γM = 2

| Comb. | Quota | N | M | σ0 | Mu | c.s. | Verifica |
|---|---|---|---|---|---|---|---|
| SLV 14 | 634 | -10287 | -491409 | 1.67 | 974359 | 1.983 | Si |
| SLV 14 | 814 | -4132 | 312086 | 0.67 | 428576 | 1.373 | Si |
| SLV 5 | 634 | -8212 | 185693 | 1.34 | 802739 | 4.323 | Si |
| SLV 5 | 814 | -11309 | -76929 | 1.84 | 1054238 | 13.704 | Si |
| SLV 3 | 634 | -16651 | 394552 | 2.71 | 1422250 | 3.605 | Si |
| SLV 3 | 814 | -21351 | -255316 | 3.47 | 1677066 | 6.569 | Si |
| SLV 4 | 634 | -16651 | 394552 | 2.71 | 1422250 | 3.605 | Si |
| SLV 4 | 814 | -21351 | -255316 | 3.47 | 1677066 | 6.569 | Si |
| SLV 1 | 634 | -13232 | 450274 | 2.15 | 1196326 | 2.657 | Si |
| SLV 1 | 814 | -19141 | -266437 | 3.11 | 1565270 | 5.875 | Si |
| SLV 16 | 634 | -13706 | -547131 | 2.23 | 1229712 | 2.248 | Si |
| SLV 16 | 814 | -6343 | 323207 | 1.03 | 637348 | 1.972 | Si |
| SLV 6 | 634 | -8212 | 185693 | 1.34 | 802739 | 4.323 | Si |
| SLV 6 | 814 | -11309 | -76929 | 1.84 | 1054238 | 13.704 | Si |
| SLV 15 | 634 | -13706 | -547131 | 2.23 | 1229712 | 2.248 | Si |
| SLV 15 | 814 | -6343 | 323207 | 1.03 | 637348 | 1.972 | Si |
| SLV 2 | 634 | -13232 | 450274 | 2.15 | 1196326 | 2.657 | Si |
| SLV 2 | 814 | -19141 | -266437 | 3.11 | 1565270 | 5.875 | Si |
| SLV 13 | 634 | -10287 | -491409 | 1.67 | 974359 | 1.983 | Si |
| SLV 13 | 814 | -4132 | 312086 | 0.67 | 428576 | 1.373 | Si |

### Verifica a taglio nel piano secondo D.M. 17-01-18 (N.T.C.) §7.8.2.2.2 con rottura per scorrimento in combinazioni non sismiche, γM = 3

| Comb. | Quota | N | V par | M | σ0 | σN | l' | fvd | Vt scorr. | Vt fess.diag. | Vt,lim | c.s. | Verifica |
|---|---|---|---|---|---|---|---|---|---|---|---|---|---|
| SLU 82 | 634 | -19726 | 622 | -70814 | | 3.21 | 219.5 | 0.98 | 6045 | | | 9.72 | Si |
| SLU 82 | 814 | -19155 | 623 | 36746 | | 3.12 | 219.5 | 0.97 | 5968 | | | 9.59 | Si |
| SLU 60 | 634 | -17813 | 592 | -79269 | | 2.9 | 219.5 | 0.94 | 5790 | | | 9.77 | Si |
| SLU 60 | 814 | -17151 | 592 | 20010 | | 2.79 | 219.5 | 0.93 | 5701 | | | 9.62 | Si |
| SLU 73 | 634 | -18891 | 559 | -63413 | | 3.07 | 219.5 | 0.97 | 5933 | | | 10.62 | Si |
| SLU 73 | 814 | -18188 | 560 | 41105 | | 2.96 | 219.5 | 0.95 | 5840 | | | 10.44 | Si |
| SLU 61 | 634 | -17648 | 603 | -75884 | | 2.87 | 219.5 | 0.94 | 5768 | | | 9.56 | Si |
| SLU 61 | 814 | -16996 | 604 | 22476 | | 2.77 | 219.5 | 0.92 | 5681 | | | 9.41 | Si |
| SLU 19 | 634 | -14643 | 526 | -60212 | | 2.38 | 219.5 | 0.87 | 5367 | | | 10.2 | Si |
| SLU 19 | 814 | -14271 | 526 | 19533 | | 2.32 | 219.5 | 0.87 | 5317 | | | 10.1 | Si |
| SLU 52 | 634 | -16814 | 540 | -68483 | | 2.74 | 219.5 | 0.92 | 5656 | | | 10.47 | Si |
| SLU 52 | 814 | -16030 | 541 | 26835 | | 2.61 | 219.5 | 0.9 | 5552 | | | 10.27 | Si |
| SLU 39 | 634 | -16885 | 533 | -58526 | | 2.75 | 219.5 | 0.92 | 5666 | | | 10.62 | Si |
| SLU 39 | 814 | -16585 | 534 | 31338 | | 2.7 | 219.5 | 0.92 | 5626 | | | 10.54 | Si |
| SLU 81 | 634 | -19891 | 611 | -74198 | | 3.24 | 219.5 | 0.99 | 6067 | | | 9.93 | Si |

| Comb. | Quota | N | V par | M | σ0 | σN | l' | fvd | Vt scorr. | Vt fess.diag. | Vt,lim | c.s. | Verifica |
|---|---|---|---|---|---|---|---|---|---|---|---|---|---|
| SLU 81 | 814 | -19310 | 611 | 34281 | | 3.14 | 219.5 | 0.97 | 5989 | | | 9.8 | Si |
| SLU 40 | 634 | -16720 | 544 | -55141 | | 2.72 | 219.5 | 0.92 | 5644 | | | 10.37 | Si |
| SLU 40 | 814 | -16430 | 545 | 33804 | | 2.67 | 219.5 | 0.91 | 5605 | | | 10.28 | Si |
| SLU 18 | 634 | -14808 | 515 | -63596 | | 2.41 | 219.5 | 0.88 | 5389 | | | 10.47 | Si |
| SLU 18 | 814 | -14426 | 515 | 17067 | | 2.35 | 219.5 | 0.87 | 5338 | | | 10.36 | Si |

### Verifica a taglio nel piano secondo D.M. 17-01-18 (N.T.C.) §7.8.2.2.2 con rottura per scorrimento in combinazioni sismiche, γM = 2

| Comb. | Quota | N | V par | M | σ0 | σN | l' | fvd | Vt scorr. | Vt fess.diag. | Vt,lim | c.s. | Verifica |
|---|---|---|---|---|---|---|---|---|---|---|---|---|---|
| SLV 3 | 634 | -16651 | 7596 | 394552 | | 2.71 | 219.5 | 1.38 | 8452 | | | 1.11 | Si |
| SLV 3 | 814 | -21351 | 7608 | -255316 | | 3.47 | 219.5 | 1.53 | 9392 | | | 1.23 | Si |
| SLV 13 | 634 | -10287 | -6933 | -491409 | | 1.98 | 185.94 | 1.23 | 6396 | | | 0.92 | No, Vu<V |
| SLV 13 | 814 | -4132 | -6945 | 312086 | | 1.44 | 102.69 | 1.12 | 3222 | | | 0.46 | No, Vu<V |
| SLV 4 | 634 | -16651 | 7596 | 394552 | | 2.71 | 219.5 | 1.38 | 8452 | | | 1.11 | Si |
| SLV 4 | 814 | -21351 | 7608 | -255316 | | 3.47 | 219.5 | 1.53 | 9392 | | | 1.23 | Si |
| SLV 2 | 634 | -13232 | 9578 | 450274 | | 2.15 | 219.5 | 1.26 | 7768 | | | 0.81 | No, Vu<V |
| SLV 2 | 814 | -19141 | 8920 | -266437 | | 3.11 | 219.5 | 1.46 | 8950 | | | 1 | Si |
| SLV 5 | 634 | -8212 | 6112 | 185693 | | 1.34 | 219.5 | 1.1 | 6764 | | | 1.11 | Si |
| SLV 5 | 814 | -11309 | 4898 | -76929 | | 1.84 | 219.5 | 1.2 | 7383 | | | 1.51 | Si |
| SLV 1 | 634 | -13232 | 9578 | 450274 | | 2.15 | 219.5 | 1.26 | 7768 | | | 0.81 | No, Vu<V |
| SLV 1 | 814 | -19141 | 8920 | -266437 | | 3.11 | 219.5 | 1.46 | 8950 | | | 1 | Si |
| SLV 14 | 634 | -10287 | -6933 | -491409 | | 1.98 | 185.94 | 1.23 | 6396 | | | 0.92 | No, Vu<V |
| SLV 14 | 814 | -4132 | -6945 | 312086 | | 1.44 | 102.69 | 1.12 | 3222 | | | 0.46 | No, Vu<V |
| SLV 16 | 634 | -13706 | -8915 | -547131 | | 2.34 | 209.5 | 1.3 | 7629 | | | 0.86 | No, Vu<V |
| SLV 16 | 814 | -6343 | -8256 | 323207 | | 1.28 | 176.39 | 1.09 | 5384 | | | 0.65 | No, Vu<V |
| SLV 15 | 634 | -13706 | -8915 | -547131 | | 2.34 | 209.5 | 1.3 | 7629 | | | 0.86 | No, Vu<V |
| SLV 15 | 814 | -6343 | -8256 | 323207 | | 1.28 | 176.39 | 1.09 | 5384 | | | 0.65 | No, Vu<V |
| SLV 6 | 634 | -8212 | 6112 | 185693 | | 1.34 | 219.5 | 1.1 | 6764 | | | 1.11 | Si |
| SLV 6 | 814 | -11309 | 4898 | -76929 | | 1.84 | 219.5 | 1.2 | 7383 | | | 1.51 | Si |

### Verifica a pressoflessione fuori piano D.M. 17-01-18 (N.T.C.)

quota 720 Wa 0.05 denominatore 8 γM = 2

| Comb. | fd | Sa | σ0 | N | M | Mc | Coeff.s. | Verifica |
|---|---|---|---|---|---|---|---|---|
| SLV 13 | 14 | 0.39 | 1.07 | -6592 | 22810 | 84183 | 3.69 | Si |
| SLV 14 | 14 | 0.39 | 1.07 | -6592 | 22810 | 84183 | 3.69 | Si |
| SLV 9 | 14 | 0.39 | 1.13 | -6955 | 22810 | 88357 | 3.87 | Si |
| SLV 10 | 14 | 0.39 | 1.13 | -6955 | 22810 | 88357 | 3.87 | Si |
| SLV 15 | 14 | 0.39 | 1.54 | -9442 | 22810 | 115566 | 5.07 | Si |
| SLV 16 | 14 | 0.39 | 1.54 | -9442 | 22810 | 115566 | 5.07 | Si |
| SLV 6 | 14 | 0.39 | 1.65 | -10117 | 22810 | 122561 | 5.37 | Si |
| SLV 5 | 14 | 0.39 | 1.65 | -10117 | 22810 | 122561 | 5.37 | Si |
| SLV 12 | 14 | 0.39 | 2.68 | -16456 | 22810 | 179899 | 7.89 | Si |
| SLV 11 | 14 | 0.39 | 2.68 | -16456 | 22810 | 179899 | 7.89 | Si |

### Verifica dei meccanismi locali di collasso con analisi cinematica lineare

forza di aggancio al piano = 0 quota mezzeria = 720 Wa = 0.05 Ta = 0.0739

| Comb. | N top | N base | V orto | α0 | M* | e* | a0* | aLim | Verifica |
|---|---|---|---|---|---|---|---|---|---|
| SLV 9 | -7343 | -6801 | -370 | 0.008 | 10.578 | 0.924 | 13.086 | 1522.194 | No |
| SLV 10 | -7343 | -6801 | -370 | 0.008 | 10.578 | 0.924 | 13.086 | 1522.194 | No |
| SLV 12 | -7894 | -17785 | 334 | 0.014 | 11.133 | 0.926 | 21.563 | 1522.194 | No |
| SLV 11 | -7894 | -17785 | 334 | 0.014 | 11.133 | 0.926 | 21.563 | 1522.194 | No |
| SLV 8 | -12198 | -19590 | 377 | 0.019 | 15.484 | 0.944 | 28.66 | 1522.194 | No |
| SLV 7 | -12198 | -19590 | 377 | 0.019 | 15.484 | 0.944 | 28.66 | 1522.194 | No |
| SLV 6 | -11646 | -8606 | -327 | 0.021 | 14.925 | 0.942 | 33.082 | 1522.194 | No |
| SLV 5 | -11646 | -8606 | -327 | 0.021 | 14.925 | 0.942 | 33.082 | 1522.194 | No |
| SLV 14 | -2516 | -8539 | -174 | 0.018 | 5.818 | 0.89 | 29.652 | 839.377 | No |
| SLV 13 | -2516 | -8539 | -174 | 0.018 | 5.818 | 0.89 | 29.652 | 839.377 | No |

### Tabella dei coefficienti di sicurezza minimi

| Stato limite | Coeff.s. | Comb. | Verifica |
|---|---|---|---|
| PF_SLU | 9.314 | SLU 30 | Si |
| V_SLU | 9.407 | SLU 61 | Si |
| PF_SLV | 1.373 | SLV 13 | Si |
| V_SLV | 0.464 | SLV 13 | No |
| PFFP_SLV | 3.691 | SLV 13 | Si |
| R_SLV | 0.009 | SLV 9 | No |

## Maschio 136

Verifiche condotte secondo D.M. 17-01-18 (N.T.C.)

### Dati geometrici

| X ini. | Y ini. | X fin. | Y fin. | Quota i. | Quota.s | l | Sp. | h netta | h ini. | h fin. | a | a.s.,sx | a.s.,dx |
|---|---|---|---|---|---|---|---|---|---|---|---|---|---|
| -12.3 | 595.1 | -206.3 | 595.1 | L4 | L5 | 194 | 28 | 352 | 352 | 352 | | | |

### Caratteristiche del materiale

(Circolare 7 21-01-19 C8.5.I) Muratura in mattoni pieni e malta di calce LC2_Corti

| fb | fk | fvk0 | fmedio | τ0 | fv0 | μ | ϕ | fv,lim | E | G | FC |
|---|---|---|---|---|---|---|---|---|---|---|---|
| 60 | | | 34.5 | 0.9 | 2 | 0.58 | 0.77 | 3.25 | 32000 | 12800 | 1.2 |

### Verifica a pressoflessione nel piano secondo D.M. 17-01-18 NTC §7.8.2.2.1 in combinazioni non sismiche, γM = 3

| Comb. | Quota | N | M | σ0 | Mu | c.s. | Verifica |
|---|---|---|---|---|---|---|---|
| SLU 82 | 634 | -15210 | 18270 | 2.8 | 968219 | 52.996 | Si |
| SLU 82 | 814 | -16402 | 128404 | 3.02 | 1001243 | 7.798 | Si |

| Comb. | Quota | N | M | σ0 | Mu | c.s. | Verifica |
|---|---|---|---|---|---|---|---|
| SLU 39 | 634 | -13050 | 13030 | 2.4 | 892502 | 68.498 | Si |
| SLU 39 | 814 | -14205 | 112663 | 2.62 | 935535 | 8.304 | Si |
| SLU 61 | 634 | -13943 | 14294 | 2.57 | 926303 | 64.804 | Si |
| SLU 61 | 814 | -14800 | 113818 | 2.72 | 955433 | 8.394 | Si |
| SLU 84 | 634 | -15439 | 31781 | 2.84 | 975049 | 30.681 | Si |
| SLU 84 | 814 | -16473 | 114875 | 3.03 | 1003000 | 8.731 | Si |
| SLU 81 | 634 | -15620 | 16132 | 2.88 | 980269 | 60.767 | Si |
| SLU 81 | 814 | -16686 | 126894 | 3.07 | 1008180 | 7.945 | Si |
| SLU 31 | 634 | -11836 | 18342 | 2.18 | 840998 | 45.851 | Si |
| SLU 31 | 814 | -12981 | 104989 | 2.39 | 889776 | 8.475 | Si |
| SLU 73 | 634 | -14406 | 21444 | 2.65 | 942437 | 43.949 | Si |
| SLU 73 | 814 | -15462 | 119219 | 2.85 | 975728 | 8.184 | Si |
| SLU 60 | 634 | -14353 | 12156 | 2.64 | 940628 | 77.38 | Si |
| SLU 60 | 814 | -15084 | 112308 | 2.78 | 964360 | 8.587 | Si |
| SLU 40 | 634 | -12640 | 15168 | 2.33 | 875837 | 57.743 | Si |
| SLU 40 | 814 | -13921 | 114173 | 2.56 | 925514 | 8.106 | Si |
| SLU 19 | 634 | -11373 | 11192 | 2.09 | 819649 | 73.235 | Si |
| SLU 19 | 814 | -12319 | 99587 | 2.27 | 862281 | 8.659 | Si |

Verifica a pressoflessione nel piano secondo D.M. 17-01-18 NTC §7.8.2.2.1 in combinazioni sismiche, γM = 2

| Comb. | Quota | N | M | σ0 | Mu | c.s. | Verifica |
|---|---|---|---|---|---|---|---|
| SLV 3 | 634 | -10386 | 392410 | 1.91 | 849771 | 2.166 | Si |
| SLV 3 | 814 | -6702 | -143401 | 1.23 | 584426 | 4.075 | Si |
| SLV 4 | 634 | -10386 | 392410 | 1.91 | 849771 | 2.166 | Si |
| SLV 4 | 814 | -6702 | -143401 | 1.23 | 584426 | 4.075 | Si |
| SLV 5 | 634 | -3183 | 145718 | 0.59 | 293965 | 2.017 | Si |
| SLV 5 | 814 | -3619 | -11314 | 0.67 | 331930 | 29.337 | Si |
| SLV 14 | 634 | -11074 | -362704 | 2.04 | 894938 | 2.467 | Si |
| SLV 14 | 814 | -15415 | 293536 | 2.84 | 1147978 | 3.911 | Si |
| SLV 15 | 634 | -15171 | -372390 | 2.79 | 1135216 | 3.048 | Si |
| SLV 15 | 814 | -18790 | 305008 | 3.46 | 1306658 | 4.284 | Si |
| SLV 16 | 634 | -15171 | -372390 | 2.79 | 1135216 | 3.048 | Si |
| SLV 16 | 814 | -18790 | 305008 | 3.46 | 1306658 | 4.284 | Si |
| SLV 2 | 634 | -6288 | 402097 | 1.16 | 552185 | 1.373 | Si |
| SLV 2 | 814 | -3326 | -154873 | 0.61 | 306479 | 1.979 | Si |
| SLV 13 | 634 | -11074 | -362704 | 2.04 | 894938 | 2.467 | Si |
| SLV 13 | 814 | -15415 | 293536 | 2.84 | 1147978 | 3.911 | Si |
| SLV 6 | 634 | -3183 | 145718 | 0.59 | 293965 | 2.017 | Si |
| SLV 6 | 814 | -3619 | -11314 | 0.67 | 331930 | 29.337 | Si |
| SLV 1 | 634 | -6288 | 402097 | 1.16 | 552185 | 1.373 | Si |
| SLV 1 | 814 | -3326 | -154873 | 0.61 | 306479 | 1.979 | Si |

Verifica a taglio nel piano secondo D.M. 17-01-18 (N.T.C.) §7.8.2.2.2 con rottura per scorrimento in combinazioni non sismiche, γM = 3

| Comb. | Quota | N | V par | M | σ0 | σN | l' | fvd | Vt scorr. | Vt fess.diag. | Vt,lim | c.s. | Verifica |
|---|---|---|---|---|---|---|---|---|---|---|---|---|---|
| SLU 61 | 634 | -13943 | -2220 | 14294 | | 2.57 | 194 | 0.9 | 4877 | | | 2.2 | Si |
| SLU 61 | 814 | -14800 | -2216 | 113818 | | 2.72 | 194 | 0.92 | 4991 | | | 2.25 | Si |
| SLU 31 | 634 | -11836 | -2047 | 18342 | | 2.18 | 194 | 0.85 | 4596 | | | 2.24 | Si |
| SLU 31 | 814 | -12981 | -2041 | 104989 | | 2.39 | 194 | 0.87 | 4749 | | | 2.33 | Si |
| SLU 52 | 634 | -13139 | -2079 | 17468 | | 2.42 | 194 | 0.88 | 4770 | | | 2.29 | Si |
| SLU 52 | 814 | -13860 | -2072 | 104634 | | 2.55 | 194 | 0.9 | 4866 | | | 2.35 | Si |
| SLU 84 | 634 | -15439 | -2239 | 31781 | | 2.84 | 194 | 0.93 | 5076 | | | 2.27 | Si |
| SLU 84 | 814 | -16473 | -2236 | 114875 | | 3.03 | 194 | 0.96 | 5214 | | | 2.33 | Si |
| SLU 81 | 634 | -15620 | -2408 | 16132 | | 2.88 | 194 | 0.94 | 5100 | | | 2.12 | Si |
| SLU 81 | 814 | -16686 | -2409 | 126894 | | 3.07 | 194 | 0.97 | 5243 | | | 2.18 | Si |
| SLU 73 | 634 | -14406 | -2335 | 21444 | | 2.65 | 194 | 0.91 | 4939 | | | 2.12 | Si |
| SLU 73 | 814 | -15462 | -2328 | 119219 | | 2.85 | 194 | 0.94 | 5079 | | | 2.18 | Si |
| SLU 60 | 634 | -14353 | -2153 | 12156 | | 2.64 | 194 | 0.91 | 4931 | | | 2.29 | Si |
| SLU 60 | 814 | -15084 | -2153 | 112308 | | 2.78 | 194 | 0.93 | 5029 | | | 2.34 | Si |
| SLU 39 | 634 | -13050 | -2121 | 13030 | | 2.4 | 194 | 0.88 | 4758 | | | 2.24 | Si |
| SLU 39 | 814 | -14205 | -2122 | 112663 | | 2.62 | 194 | 0.9 | 4912 | | | 2.32 | Si |
| SLU 40 | 634 | -12640 | -2188 | 15168 | | 2.33 | 194 | 0.87 | 4703 | | | 2.15 | Si |
| SLU 40 | 814 | -13921 | -2184 | 114173 | | 2.56 | 194 | 0.9 | 4874 | | | 2.23 | Si |
| SLU 82 | 634 | -15210 | -2475 | 18270 | | 2.8 | 194 | 0.93 | 5046 | | | 2.04 | Si |
| SLU 82 | 814 | -16402 | -2471 | 128404 | | 3.02 | 194 | 0.96 | 5205 | | | 2.11 | Si |

Verifica a taglio nel piano secondo D.M. 17-01-18 (N.T.C.) §7.8.2.2.2 con rottura per scorrimento in combinazioni sismiche, γM = 2

| Comb. | Quota | N | V par | M | σ0 | σN | l' | fvd | Vt scorr. | Vt fess.diag. | Vt,lim | c.s. | Verifica |
|---|---|---|---|---|---|---|---|---|---|---|---|---|---|
| SLV 9 | 634 | -4619 | -4511 | -83722 | | 0.85 | 194 | 1 | 5450 | | | 1.21 | Si |
| SLV 9 | 814 | -7246 | -3271 | 123209 | | 1.33 | 194 | 1.1 | 5976 | | | 1.83 | Si |
| SLV 15 | 634 | -15171 | -6712 | -372390 | | 2.79 | 194 | 1.39 | 7561 | | | 1.13 | Si |
| SLV 15 | 814 | -18790 | -6729 | 305008 | | 3.46 | 194 | 1.53 | 8285 | | | 1.23 | Si |
| SLV 1 | 634 | -6288 | 3820 | 402097 | | 2.26 | 99.17 | 1.29 | 3572 | | | 0.93 | No, Vu<V |
| SLV 1 | 814 | -3326 | 3837 | -154873 | | 0.79 | 151.32 | 0.99 | 4196 | | | 1.09 | Si |
| SLV 13 | 634 | -11074 | -7529 | -362704 | | 2.05 | 192.74 | 1.24 | 6712 | | | 0.89 | No, Vu<V |
| SLV 13 | 814 | -15415 | -6861 | 293536 | | 2.84 | 194 | 1.4 | 7610 | | | 1.11 | Si |
| SLV 3 | 634 | -10386 | 4638 | 392410 | | 2.09 | 177.65 | 1.25 | 6222 | | | 1.34 | Si |
| SLV 3 | 814 | -6702 | 3969 | -143401 | | 1.23 | 194 | 1.08 | 5867 | | | 1.48 | Si |
| SLV 14 | 634 | -11074 | -7529 | -362704 | | 2.05 | 192.74 | 1.24 | 6712 | | | 0.89 | No, Vu<V |
| SLV 14 | 814 | -15415 | -6861 | 293536 | | 2.84 | 194 | 1.4 | 7610 | | | 1.11 | Si |
| SLV 4 | 634 | -10386 | 4638 | 392410 | | 2.09 | 177.65 | 1.25 | 6222 | | | 1.34 | Si |
| SLV 4 | 814 | -6702 | 3969 | -143401 | | 1.23 | 194 | 1.08 | 5867 | | | 1.48 | Si |
| SLV 16 | 634 | -15171 | -6712 | -372390 | | 2.79 | 194 | 1.39 | 7561 | | | 1.13 | Si |
| SLV 16 | 814 | -18790 | -6729 | 305008 | | 3.46 | 194 | 1.53 | 8285 | | | 1.23 | Si |
| SLV 2 | 634 | -6288 | 3820 | 402097 | | 2.26 | 99.17 | 1.29 | 3572 | | | 0.93 | No, Vu<V |
| SLV 2 | 814 | -3326 | 3837 | -154873 | | 0.79 | 151.32 | 0.99 | 4196 | | | 1.09 | Si |
| SLV 10 | 634 | -4619 | -4511 | -83722 | | 0.85 | 194 | 1 | 5450 | | | 1.21 | Si |
| SLV 10 | 814 | -7246 | -3271 | 123209 | | 1.33 | 194 | 1.1 | 5976 | | | 1.83 | Si |

### Verifica a pressoflessione fuori piano D.M. 17-01-18 (N.T.C.)

quota 720 Wa 0.05 denominatore 8 γM = 2

| Comb. | fd | Sa | σ0 | N | M | Mc | Coeff.s. | Verifica |
|---|---|---|---|---|---|---|---|---|
| SLV 5 | 14 | 0.39 | 0.67 | -3660 | 20160 | 48419 | 2.4 | Si |
| SLV 6 | 14 | 0.39 | 0.67 | -3660 | 20160 | 48419 | 2.4 | Si |
| SLV 2 | 14 | 0.39 | 0.89 | -4832 | 20160 | 62725 | 3.11 | Si |
| SLV 1 | 14 | 0.39 | 0.89 | -4832 | 20160 | 62725 | 3.11 | Si |
| SLV 9 | 14 | 0.39 | 1.17 | -6348 | 20160 | 80367 | 3.99 | Si |
| SLV 10 | 14 | 0.39 | 1.17 | -6348 | 20160 | 80367 | 3.99 | Si |
| SLV 3 | 14 | 0.39 | 1.57 | -8524 | 20160 | 104009 | 5.16 | Si |
| SLV 4 | 14 | 0.39 | 1.57 | -8524 | 20160 | 104009 | 5.16 | Si |
| SLV 13 | 14 | 0.39 | 2.54 | -13790 | 20160 | 152946 | 7.59 | Si |
| SLV 14 | 14 | 0.39 | 2.54 | -13790 | 20160 | 152946 | 7.59 | Si |

### Verifica dei meccanismi locali di collasso con analisi cinematica lineare

forza di aggancio al piano = 0 quota mezzeria = 720 Wa = 0.05 Ta = 0.0739

| Comb. | N top | N base | V orto | α0 | M* | e* | a0* | aLim | Verifica |
|---|---|---|---|---|---|---|---|---|---|
| SLV 8 | -12048 | -15330 | -42 | 0.042 | 14.971 | 0.948 | 63.88 | 1522.194 | No |
| SLV 7 | -12048 | -15330 | -42 | 0.042 | 14.971 | 0.948 | 63.88 | 1522.194 | No |
| SLV 12 | -14476 | -18503 | -26 | 0.042 | 17.437 | 0.955 | 64.529 | 1522.194 | No |
| SLV 11 | -14476 | -18503 | -26 | 0.042 | 17.437 | 0.955 | 64.529 | 1522.194 | No |
| SLV 9 | -6059 | -4729 | 43 | 0.043 | 8.917 | 0.921 | 67.907 | 1522.194 | No |
| SLV 10 | -6059 | -4729 | 43 | 0.043 | 8.917 | 0.921 | 67.907 | 1522.194 | No |
| SLV 6 | -3631 | -1557 | 27 | 0.048 | 6.501 | 0.902 | 76.583 | 1522.194 | No |
| SLV 5 | -3631 | -1557 | 27 | 0.048 | 6.501 | 0.902 | 76.583 | 1522.194 | No |
| SLV 13 | -11838 | -13251 | 38 | 0.042 | 14.758 | 0.948 | 64.473 | 839.377 | No |
| SLV 14 | -11838 | -13251 | 38 | 0.042 | 14.758 | 0.948 | 64.473 | 839.377 | No |

### Tabella dei coefficienti di sicurezza minimi

| Stato limite | Coeff.s. | Comb. | Verifica |
|---|---|---|---|
| PF_SLU | 7.798 | SLU 82 | Si |
| V_SLU | 2.039 | SLU 82 | Si |
| PF_SLV | 1.373 | SLV 1 | Si |
| V_SLV | 0.891 | SLV 13 | No |
| PFFP_SLV | 2.402 | SLV 5 | Si |
| R_SLV | 0.042 | SLV 7 | No |

## Maschio 137

Verifiche condotte secondo D.M. 17-01-18 (N.T.C.)

### Dati geometrici

| X ini. | Y ini. | X fin. | Y fin. | Quota i. | Quota.s | l | Sp. | h netta | h ini. | h fin. | a | a.s.,sx | a.s.,dx |
|---|---|---|---|---|---|---|---|---|---|---|---|---|---|
| -12.3 | -335.9 | -12.3 | 595.1 | L4 | L5 | 931 | 28 | 352 | 352 | 352 | | | |

### Caratteristiche del materiale

(Circolare 7 21-01-19 C8.5.I) Muratura in mattoni pieni e malta di calce LC2_Corti

| fb | fk | fvk0 | fmedio | τ0 | fv0 | μ | ϕ | fv,lim | E | G | FC |
|---|---|---|---|---|---|---|---|---|---|---|---|
| 60 | | | 34.5 | 0.9 | 2 | 0.58 | 0.77 | 3.25 | 32000 | 12800 | 1.2 |

### Verifica a pressoflessione nel piano secondo D.M. 17-01-18 NTC §7.8.2.2.1 in combinazioni non sismiche, γM = 3

| Comb. | Quota | N | M | σ0 | Mu | c.s. | Verifica |
|---|---|---|---|---|---|---|---|
| SLU 55 | 544 | -99630 | -1662034 | 3.82 | 24617860 | 14.812 | Si |
| SLU 55 | 896 | -62575 | -264270 | 2.4 | 20544897 | 77.742 | Si |
| SLU 76 | 544 | -109190 | -1815628 | 4.19 | 24691764 | 13.6 | Si |
| SLU 76 | 896 | -68906 | -296776 | 2.64 | 21667166 | 73.009 | Si |
| SLU 34 | 544 | -91484 | -1747022 | 3.51 | 24238699 | 13.874 | Si |
| SLU 34 | 896 | -57880 | -325818 | 2.22 | 19599205 | 60.154 | Si |
| SLU 13 | 544 | -81923 | -1593429 | 3.14 | 23422626 | 14.7 | Si |
| SLU 13 | 896 | -51550 | -293312 | 1.98 | 18170903 | 61.951 | Si |
| SLU 5 | 544 | -72845 | -1641335 | 2.79 | 22276741 | 13.572 | Si |
| SLU 5 | 896 | -45961 | -349138 | 1.76 | 16764090 | 48.016 | Si |
| SLU 68 | 544 | -100111 | -1863535 | 3.84 | 24631174 | 13.217 | Si |
| SLU 68 | 896 | -63318 | -352602 | 2.43 | 20685610 | 58.666 | Si |
| SLU 26 | 544 | -82405 | -1794929 | 3.16 | 23473343 | 13.078 | Si |
| SLU 26 | 896 | -52292 | -381644 | 2.01 | 18347507 | 48.075 | Si |
| SLU 65 | 544 | -98832 | -1712121 | 3.79 | 24593590 | 14.364 | Si |
| SLU 65 | 896 | -61924 | -340679 | 2.38 | 20419534 | 59.938 | Si |
| SLU 23 | 544 | -81126 | -1643515 | 3.11 | 23336453 | 14.199 | Si |
| SLU 23 | 896 | -50899 | -369722 | 1.95 | 18014072 | 48.723 | Si |
| SLU 47 | 544 | -90551 | -1709941 | 3.47 | 24176741 | 14.139 | Si |
| SLU 47 | 896 | -56987 | -320096 | 2.19 | 19408225 | 60.633 | Si |

### Verifica a pressoflessione nel piano secondo D.M. 17-01-18 NTC §7.8.2.2.1 in combinazioni sismiche, γM = 2

| Comb. | Quota | N | M | σ0 | Mu | c.s. | Verifica |
|---|---|---|---|---|---|---|---|
| SLV 9 | 544 | -88849 | -8199728 | 3.41 | 29822192 | 3.637 | Si |
| SLV 9 | 896 | -53430 | -3622866 | 2.05 | 20699658 | 5.714 | Si |
| SLV 11 | 544 | -89924 | 7571135 | 3.45 | 30041924 | 3.968 | Si |
| SLV 11 | 896 | -55050 | 4396000 | 2.11 | 21196882 | 4.822 | Si |
| SLV 10 | 544 | -88849 | -8199728 | 3.41 | 29822192 | 3.637 | Si |
| SLV 10 | 896 | -53430 | -3622866 | 2.05 | 20699658 | 5.714 | Si |
| SLV 5 | 544 | -60620 | -8439971 | 2.33 | 22848082 | 2.707 | Si |
| SLV 5 | 896 | -39735 | -4263360 | 1.52 | 16189104 | 3.797 | Si |
| SLV 8 | 544 | -61696 | 7330892 | 2.37 | 23156585 | 3.159 | Si |

| Comb. | Quota | N | M | σ0 | Mu | c.s. | Verifica |
|---|---|---|---|---|---|---|---|
| SLV 8 | 896 | -41355 | 3755506 | 1.59 | 16751171 | 4.46 | Si |
| SLV 12 | 544 | -89924 | 7571135 | 3.45 | 30041924 | 3.968 | Si |
| SLV 12 | 896 | -55050 | 4396000 | 2.11 | 21196882 | 4.822 | Si |
| SLV 1 | 544 | -28063 | -3200453 | 1.08 | 11912473 | 3.722 | Si |
| SLV 1 | 896 | -24323 | -2203999 | 0.93 | 10457941 | 4.745 | Si |
| SLV 2 | 544 | -28063 | -3200453 | 1.08 | 11912473 | 3.722 | Si |
| SLV 2 | 896 | -24323 | -2203999 | 0.93 | 10457941 | 4.745 | Si |
| SLV 7 | 544 | -61696 | 7330892 | 2.37 | 23156585 | 3.159 | Si |
| SLV 7 | 896 | -41355 | 3755506 | 1.59 | 16751171 | 4.46 | Si |
| SLV 6 | 544 | -60620 | -8439971 | 2.33 | 22848082 | 2.707 | Si |
| SLV 6 | 896 | -39735 | -4263360 | 1.52 | 16189104 | 3.797 | Si |

Verifica a taglio nel piano secondo D.M. 17-01-18 (N.T.C.) §7.8.2.2.2 con rottura per scorrimento in combinazioni non sismiche, γM = 3

| Comb. | Quota | N | V par | M | σ0 | σN | l' | fvd | Vt scorr. | Vt fess.diag. | Vt,lim | c.s. | Verifica |
|---|---|---|---|---|---|---|---|---|---|---|---|---|---|
| SLU 64 | 544 | -97213 | 828 | -626421 | | 3.73 | 931 | 1.05 | 27444 | | | 33.15 | Si |
| SLU 64 | 896 | -61343 | 834 | 56193 | | 2.35 | 931 | 0.87 | 22661 | | | 27.16 | Si |
| SLU 77 | 544 | -110103 | 871 | -877316 | | 4.22 | 931 | 1.08 | 28240 | | | 32.41 | Si |
| SLU 77 | 896 | -70670 | 881 | 78398 | | 2.71 | 931 | 0.92 | 23905 | | | 27.15 | Si |
| SLU 74 | 544 | -108824 | 894 | -725902 | | 4.17 | 931 | 1.08 | 28240 | | | 31.58 | Si |
| SLU 74 | 896 | -69277 | 902 | 90320 | | 2.66 | 931 | 0.91 | 23719 | | | 26.29 | Si |
| SLU 81 | 544 | -110183 | 931 | -557983 | | 4.23 | 931 | 1.08 | 28240 | | | 30.33 | Si |
| SLU 81 | 896 | -69327 | 938 | 135945 | | 2.66 | 931 | 0.91 | 23726 | | | 25.28 | Si |
| SLU 39 | 544 | -92476 | 790 | -489378 | | 3.55 | 931 | 1.03 | 26812 | | | 33.96 | Si |
| SLU 39 | 896 | -58301 | 796 | 106903 | | 2.24 | 931 | 0.85 | 22256 | | | 27.96 | Si |
| SLU 62 | 544 | -101902 | 808 | -555804 | | 3.91 | 931 | 1.08 | 28069 | | | 34.73 | Si |
| SLU 62 | 896 | -64389 | 816 | 156528 | | 2.47 | 931 | 0.88 | 23067 | | | 28.28 | Si |
| SLU 79 | 544 | -108850 | 855 | -881343 | | 4.18 | 931 | 1.08 | 28240 | | | 33.05 | Si |
| SLU 79 | 896 | -69719 | 864 | 88174 | | 2.67 | 931 | 0.91 | 23778 | | | 27.52 | Si |
| SLU 83 | 544 | -111462 | 908 | -709397 | | 4.28 | 931 | 1.08 | 28240 | | | 31.09 | Si |
| SLU 83 | 896 | -70720 | 917 | 124022 | | 2.71 | 931 | 0.92 | 23912 | | | 26.08 | Si |
| SLU 66 | 544 | -99745 | 822 | -773808 | | 3.83 | 931 | 1.07 | 27782 | | | 33.8 | Si |
| SLU 66 | 896 | -63689 | 829 | 34494 | | 2.44 | 931 | 0.88 | 22974 | | | 27.7 | Si |
| SLU 60 | 544 | -100622 | 831 | -404390 | | 3.86 | 931 | 1.07 | 27899 | | | 33.58 | Si |
| SLU 60 | 896 | -62996 | 837 | 168451 | | 2.42 | 931 | 0.88 | 22882 | | | 27.33 | Si |

Verifica a taglio nel piano secondo D.M. 17-01-18 (N.T.C.) §7.8.2.2.2 con rottura per scorrimento in combinazioni sismiche, γM = 2

| Comb. | Quota | N | V par | M | σ0 | σN | l' | fvd | Vt scorr. | Vt fess.diag. | Vt,lim | c.s. | Verifica |
|---|---|---|---|---|---|---|---|---|---|---|---|---|---|
| SLD 7 | 544 | -69484 | 7921 | 2838101 | | 2.67 | 931 | 1.37 | 35620 | | | 4.5 | Si |
| SLD 7 | 896 | -44813 | 6356 | 1630703 | | 1.72 | 931 | 1.18 | 30686 | | | 4.83 | Si |
| SLV 6 | 544 | -60620 | -16552 | -8439971 | | 2.33 | 931 | 1.3 | 33847 | | | 2.04 | Si |
| SLV 6 | 896 | -39735 | -12986 | -4263360 | | 1.52 | 931 | 1.14 | 29670 | | | 2.28 | Si |
| SLV 8 | 544 | -61696 | 17647 | 7330892 | | 2.37 | 931 | 1.31 | 34063 | | | 1.93 | Si |
| SLV 8 | 896 | -41355 | 14079 | 3755506 | | 1.59 | 931 | 1.15 | 29994 | | | 2.13 | Si |
| SLD 8 | 544 | -69484 | 7921 | 2838101 | | 2.67 | 931 | 1.37 | 35620 | | | 4.5 | Si |
| SLD 8 | 896 | -44813 | 6356 | 1630703 | | 1.72 | 931 | 1.18 | 30686 | | | 4.83 | Si |
| SLV 9 | 544 | -88849 | -16376 | -8199728 | | 3.41 | 931 | 1.52 | 39493 | | | 2.41 | Si |
| SLV 9 | 896 | -53430 | -12798 | -3622866 | | 2.05 | 931 | 1.24 | 32409 | | | 2.53 | Si |
| SLV 11 | 544 | -89924 | 17823 | 7571135 | | 3.45 | 931 | 1.52 | 39708 | | | 2.23 | Si |
| SLV 11 | 896 | -55050 | 14267 | 4396000 | | 2.11 | 931 | 1.26 | 32733 | | | 2.29 | Si |
| SLV 10 | 544 | -88849 | -16376 | -8199728 | | 3.41 | 931 | 1.52 | 39493 | | | 2.41 | Si |
| SLV 10 | 896 | -53430 | -12798 | -3622866 | | 2.05 | 931 | 1.24 | 32409 | | | 2.53 | Si |
| SLV 5 | 544 | -60620 | -16552 | -8439971 | | 2.33 | 931 | 1.3 | 33847 | | | 2.04 | Si |
| SLV 5 | 896 | -39735 | -12986 | -4263360 | | 1.52 | 931 | 1.14 | 29670 | | | 2.28 | Si |
| SLV 12 | 544 | -89924 | 17823 | 7571135 | | 3.45 | 931 | 1.52 | 39708 | | | 2.23 | Si |
| SLV 12 | 896 | -55050 | 14267 | 4396000 | | 2.11 | 931 | 1.26 | 32733 | | | 2.29 | Si |
| SLV 7 | 544 | -61696 | 17647 | 7330892 | | 2.37 | 931 | 1.31 | 34063 | | | 1.93 | Si |
| SLV 7 | 896 | -41355 | 14079 | 3755506 | | 1.59 | 931 | 1.15 | 29994 | | | 2.13 | Si |

Verifica a pressoflessione fuori piano D.M. 17-01-18 (N.T.C.)

quota 720 Wa 0.05 denominatore 8 γM = 2

| Comb. | fd | Sa | σ0 | N | M | Mc | Coeff.s. | Verifica |
|---|---|---|---|---|---|---|---|---|
| SLV 1 | 14 | 0.39 | 1.01 | -26431 | 96749 | 339323 | 3.51 | Si |
| SLV 2 | 14 | 0.39 | 1.01 | -26431 | 96749 | 339323 | 3.51 | Si |
| SLV 3 | 14 | 0.39 | 1.02 | -26589 | 96749 | 341170 | 3.53 | Si |
| SLV 4 | 14 | 0.39 | 1.02 | -26589 | 96749 | 341170 | 3.53 | Si |
| SLV 5 | 14 | 0.39 | 1.94 | -50476 | 96749 | 594675 | 6.15 | Si |
| SLV 6 | 14 | 0.39 | 1.94 | -50476 | 96749 | 594675 | 6.15 | Si |
| SLV 8 | 14 | 0.39 | 1.96 | -51003 | 96749 | 599708 | 6.2 | Si |
| SLV 7 | 14 | 0.39 | 1.96 | -51003 | 96749 | 599708 | 6.2 | Si |
| SLV 9 | 14 | 0.39 | 2.73 | -71244 | 96749 | 774321 | 8 | Si |
| SLV 10 | 14 | 0.39 | 2.73 | -71244 | 96749 | 774321 | 8 | Si |

Verifica dei meccanismi locali di collasso con analisi cinematica lineare

forza di aggancio al piano = 0 quota mezzeria = 720 Wa = 0.05 Ta = 0.0739

| Comb. | N top | N base | V orto | α0 | M* | e* | a0* | aLim | Verifica |
|---|---|---|---|---|---|---|---|---|---|
| SLV 11 | -55050 | -89924 | -96 | 0.043 | 69.037 | 0.946 | 66.729 | 1522.194 | No |
| SLV 12 | -55050 | -89924 | -96 | 0.043 | 69.037 | 0.946 | 66.729 | 1522.194 | No |
| SLV 9 | -53430 | -88849 | 72 | 0.044 | 67.395 | 0.945 | 67.555 | 1522.194 | No |
| SLV 10 | -53430 | -88849 | 72 | 0.044 | 67.395 | 0.945 | 67.555 | 1522.194 | No |
| SLV 5 | -39735 | -60620 | 92 | 0.045 | 53.528 | 0.934 | 69.576 | 1522.194 | No |
| SLV 6 | -39735 | -60620 | 92 | 0.045 | 53.528 | 0.934 | 69.576 | 1522.194 | No |
| SLV 7 | -41355 | -61696 | -75 | 0.045 | 55.165 | 0.935 | 69.757 | 1522.194 | No |
| SLV 8 | -41355 | -61696 | -75 | 0.045 | 55.165 | 0.935 | 69.757 | 1522.194 | No |
| SLV 15 | -70461 | -122481 | -61 | 0.043 | 84.687 | 0.955 | 65.68 | 839.377 | No |
| SLV 16 | -70461 | -122481 | -61 | 0.043 | 84.687 | 0.955 | 65.68 | 839.377 | No |

### Tabella dei coefficienti di sicurezza minimi

| Stato limite | Coeff.s. | Comb. | Verifica |
|---|---|---|---|
| PF_SLU | 13.078 | SLU 26 | Si |
| V_SLU | 25.283 | SLU 81 | Si |
| PF_SLV | 2.707 | SLV 5 | Si |
| V_SLV | 1.93 | SLV 7 | Si |
| PFFP_SLV | 3.507 | SLV 1 | Si |
| R_SLV | 0.044 | SLV 11 | No |

## Maschio 138

Verifiche condotte secondo D.M. 17-01-18 (N.T.C.)

### Dati geometrici

| X ini. | Y ini. | X fin. | Y fin. | Quota i. | Quota.s | l | Sp. | h netta | h ini. | h fin. | a | a.s.,sx | a.s.,dx |
|---|---|---|---|---|---|---|---|---|---|---|---|---|---|
| -2467.8 | -335.9 | -2467.8 | 126.6 | L5 | L6 | 462.6 | 28 | 352 | 352 | 352 | | | |

### Caratteristiche del materiale

(Circolare 7 21-01-19 C8.5.I) Muratura in mattoni pieni e malta di calce LC2_Corti

| fb | fk | fvk0 | fmedio | τ0 | fv0 | μ | ϕ | fv,lim | E | G | FC |
|---|---|---|---|---|---|---|---|---|---|---|---|
| 60 | | | 34.5 | 0.9 | 2 | 0.58 | 0.77 | 3.25 | 32000 | 12800 | 1.2 |

### Verifica a pressoflessione nel piano secondo D.M. 17-01-18 NTC §7.8.2.2.1 in combinazioni non sismiche, γM = 3

| Comb. | Quota | N | M | σ0 | Mu | c.s. | Verifica |
|---|---|---|---|---|---|---|---|
| SLU 82 | 896 | -33338 | 354453 | 2.57 | 5274106 | 14.88 | Si |
| SLU 82 | 1106 | -22104 | -12525 | 1.71 | 4041189 | 322.638 | Si |
| SLU 61 | 896 | -30233 | 321336 | 2.33 | 4988735 | 15.525 | Si |
| SLU 61 | 1106 | -20218 | 51413 | 1.56 | 3779988 | 73.523 | Si |
| SLU 40 | 896 | -28201 | 300233 | 2.18 | 4779001 | 15.918 | Si |
| SLU 40 | 1106 | -18527 | -52182 | 1.43 | 3532593 | 67.698 | Si |
| SLU 81 | 896 | -32814 | 385562 | 2.53 | 5228884 | 13.562 | Si |
| SLU 81 | 1106 | -21653 | -31374 | 1.67 | 3980198 | 126.862 | Si |
| SLU 74 | 896 | -33082 | 335400 | 2.55 | 5252207 | 15.66 | Si |
| SLU 74 | 1106 | -22166 | -71131 | 1.71 | 4049588 | 56.932 | Si |
| SLU 83 | 896 | -33853 | 342620 | 2.61 | 5317419 | 15.52 | Si |
| SLU 83 | 1106 | -22544 | -94889 | 1.74 | 4099973 | 43.208 | Si |
| SLU 60 | 896 | -29709 | 352445 | 2.29 | 4936378 | 14.006 | Si |
| SLU 60 | 1106 | -19767 | 32564 | 1.53 | 3715271 | 114.092 | Si |
| SLU 64 | 896 | -28912 | 305918 | 2.23 | 4854490 | 15.869 | Si |
| SLU 64 | 1106 | -19538 | 34834 | 1.51 | 3682037 | 105.701 | Si |
| SLU 39 | 896 | -27677 | 331342 | 2.14 | 4721973 | 14.251 | Si |
| SLU 39 | 1106 | -18077 | -71031 | 1.4 | 3464537 | 48.775 | Si |
| SLU 18 | 896 | -24572 | 298225 | 1.9 | 4359549 | 14.618 | Si |
| SLU 18 | 1106 | -16191 | -7093 | 1.25 | 3170041 | 446.948 | Si |

### Verifica a pressoflessione nel piano secondo D.M. 17-01-18 NTC §7.8.2.2.1 in combinazioni sismiche, γM = 2

| Comb. | Quota | N | M | σ0 | Mu | c.s. | Verifica |
|---|---|---|---|---|---|---|---|
| SLV 9 | 896 | -23963 | -660935 | 1.85 | 4703121 | 7.116 | Si |
| SLV 9 | 1106 | -18478 | 94856 | 1.43 | 3774759 | 39.794 | Si |
| SLV 8 | 896 | -20713 | 1148879 | 1.6 | 4163624 | 3.624 | Si |
| SLV 8 | 1106 | -11597 | -39644 | 0.9 | 2485720 | 62.701 | Si |
| SLD 12 | 896 | -18737 | 553042 | 1.45 | 3820416 | 6.908 | Si |
| SLD 12 | 1106 | -12436 | 32819 | 0.96 | 2650181 | 80.752 | Si |
| SLD 8 | 896 | -21683 | 627094 | 1.67 | 4327791 | 6.901 | Si |
| SLD 8 | 1106 | -13591 | -1590 | 1.05 | 2873396 | 1000 | Si |
| SLV 7 | 896 | -20713 | 1148879 | 1.6 | 4163624 | 3.624 | Si |
| SLV 7 | 1106 | -11597 | -39644 | 0.9 | 2485720 | 62.701 | Si |
| SLD 7 | 896 | -21683 | 627094 | 1.67 | 4327791 | 6.901 | Si |
| SLD 7 | 1106 | -13591 | -1590 | 1.05 | 2873396 | 1000 | Si |
| SLD 11 | 896 | -18737 | 553042 | 1.45 | 3820416 | 6.908 | Si |
| SLD 11 | 1106 | -12436 | 32819 | 0.96 | 2650181 | 80.752 | Si |
| SLV 10 | 896 | -23963 | -660935 | 1.85 | 4703121 | 7.116 | Si |
| SLV 10 | 1106 | -18478 | 94856 | 1.43 | 3774759 | 39.794 | Si |
| SLV 11 | 896 | -13826 | 975594 | 1.07 | 2918403 | 2.991 | Si |
| SLV 11 | 1106 | -8900 | 40805 | 0.69 | 1942744 | 47.611 | Si |
| SLV 12 | 896 | -13826 | 975594 | 1.07 | 2918403 | 2.991 | Si |
| SLV 12 | 1106 | -8900 | 40805 | 0.69 | 1942744 | 47.611 | Si |

### Verifica a taglio nel piano secondo D.M. 17-01-18 (N.T.C.) §7.8.2.2.2 con rottura per scorrimento in combinazioni non sismiche, γM = 3

| Comb. | Quota | N | V par | M | σ0 | σN | l' | fvd | Vt scorr. | Vt fess.diag. | Vt,lim | c.s. | Verifica |
|---|---|---|---|---|---|---|---|---|---|---|---|---|---|
| SLU 68 | 896 | -30826 | 2000 | 211127 | | 2.38 | 462.57 | 0.87 | 11306 | | | 5.65 | Si |
| SLU 68 | 1106 | -21180 | 2249 | 2735 | | 1.64 | 462.57 | 0.77 | 10020 | | | 4.46 | Si |
| SLU 80 | 896 | -34247 | 2211 | 244675 | | 2.64 | 462.57 | 0.91 | 11762 | | | 5.32 | Si |
| SLU 80 | 1106 | -23252 | 2361 | -119692 | | 1.8 | 462.57 | 0.79 | 10296 | | | 4.36 | Si |
| SLU 76 | 896 | -33557 | 2073 | 266878 | | 2.59 | 462.57 | 0.9 | 11670 | | | 5.63 | Si |
| SLU 76 | 1106 | -22661 | 2321 | -43611 | | 1.75 | 462.57 | 0.79 | 10217 | | | 4.4 | Si |
| SLU 84 | 896 | -34378 | 2172 | 311511 | | 2.65 | 462.57 | 0.91 | 11779 | | | 5.42 | Si |
| SLU 84 | 1106 | -22995 | 2322 | -76040 | | 1.78 | 462.57 | 0.79 | 10261 | | | 4.42 | Si |
| SLU 79 | 896 | -33723 | 2313 | 275784 | | 2.6 | 462.57 | 0.9 | 11692 | | | 5.05 | Si |
| SLU 79 | 1106 | -22801 | 2315 | -138540 | | 1.76 | 462.57 | 0.79 | 10236 | | | 4.42 | Si |
| SLU 77 | 896 | -34122 | 2315 | 292457 | | 2.63 | 462.57 | 0.91 | 11745 | | | 5.07 | Si |
| SLU 77 | 1106 | -23057 | 2316 | -134645 | | 1.78 | 462.57 | 0.79 | 10270 | | | 4.43 | Si |
| SLU 72 | 896 | -31516 | 2138 | 188924 | | 2.43 | 462.57 | 0.88 | 11398 | | | 5.33 | Si |
| SLU 72 | 1106 | -21771 | 2289 | -73346 | | 1.68 | 462.57 | 0.78 | 10098 | | | 4.41 | Si |
| SLU 75 | 896 | -33606 | 2143 | 304290 | | 2.59 | 462.57 | 0.9 | 11676 | | | 5.45 | Si |

| Comb. | Quota | N | V par | M | σ0 | σN | l' | fvd | Vt scorr. | Vt fess.diag. | Vt,lim | c.s. | Verifica |
|---|---|---|---|---|---|---|---|---|---|---|---|---|---|
| SLU 75 | 1106 | -22617 | 2292 | -52282 | | 1.75 | 462.57 | 0.79 | 10211 | | | 4.46 | Si |
| SLU 78 | 896 | -34646 | 2213 | 261348 | | 2.67 | 462.57 | 0.91 | 11815 | | | 5.34 | Si |
| SLU 78 | 1106 | -23508 | 2363 | -115796 | | 1.82 | 462.57 | 0.8 | 10330 | | | 4.37 | Si |
| SLU 70 | 896 | -31915 | 2140 | 205597 | | 2.46 | 462.57 | 0.88 | 11451 | | | 5.35 | Si |
| SLU 70 | 1106 | -22028 | 2290 | -69450 | | 1.7 | 462.57 | 0.78 | 10133 | | | 4.42 | Si |

### Verifica a taglio nel piano secondo D.M. 17-01-18 (N.T.C.) §7.8.2.2.2 con rottura per scorrimento in combinazioni sismiche, γM = 2

| Comb. | Quota | N | V par | M | σ0 | σN | l' | fvd | Vt scorr. | Vt fess.diag. | Vt,lim | c.s. | Verifica |
|---|---|---|---|---|---|---|---|---|---|---|---|---|---|
| SLV 4 | 896 | -32296 | 6034 | 778259 | | 2.49 | 462.57 | 1.33 | 17252 | | | 2.86 | Si |
| SLV 4 | 1106 | -18096 | 5658 | -114583 | | 1.4 | 462.57 | 1.11 | 14413 | | | 2.55 | Si |
| SLV 11 | 896 | -13826 | 7615 | 975594 | | 1.07 | 462.57 | 1.05 | 13559 | | | 1.78 | Si |
| SLV 11 | 1106 | -8900 | 6667 | 40805 | | 0.69 | 462.57 | 0.97 | 12573 | | | 1.89 | Si |
| SLV 8 | 896 | -20713 | 9058 | 1148879 | | 1.6 | 462.57 | 1.15 | 14936 | | | 1.65 | Si |
| SLV 8 | 1106 | -11597 | 8059 | -39644 | | 0.9 | 462.57 | 1.01 | 13113 | | | 1.63 | Si |
| SLV 9 | 896 | -23963 | -5836 | -660935 | | 1.85 | 462.57 | 1.2 | 15586 | | | 2.67 | Si |
| SLV 9 | 1106 | -18478 | -4837 | 94856 | | 1.43 | 462.57 | 1.12 | 14489 | | | 3 | Si |
| SLD 7 | 896 | -21683 | 4763 | 627094 | | 1.67 | 462.57 | 1.17 | 15130 | | | 3.18 | Si |
| SLD 7 | 1106 | -13591 | 4338 | -1590 | | 1.05 | 462.57 | 1.04 | 13511 | | | 3.11 | Si |
| SLD 8 | 896 | -21683 | 4763 | 627094 | | 1.67 | 462.57 | 1.17 | 15130 | | | 3.18 | Si |
| SLD 8 | 1106 | -13591 | 4338 | -1590 | | 1.05 | 462.57 | 1.04 | 13511 | | | 3.11 | Si |
| SLV 10 | 896 | -23963 | -5836 | -660935 | | 1.85 | 462.57 | 1.2 | 15586 | | | 2.67 | Si |
| SLV 10 | 1106 | -18478 | -4837 | 94856 | | 1.43 | 462.57 | 1.12 | 14489 | | | 3 | Si |
| SLV 7 | 896 | -20713 | 9058 | 1148879 | | 1.6 | 462.57 | 1.15 | 14936 | | | 1.65 | Si |
| SLV 7 | 1106 | -11597 | 8059 | -39644 | | 0.9 | 462.57 | 1.01 | 13113 | | | 1.63 | Si |
| SLV 3 | 896 | -32296 | 6034 | 778259 | | 2.49 | 462.57 | 1.33 | 17252 | | | 2.86 | Si |
| SLV 3 | 1106 | -18096 | 5658 | -114583 | | 1.4 | 462.57 | 1.11 | 14413 | | | 2.55 | Si |
| SLV 12 | 896 | -13826 | 7615 | 975594 | | 1.07 | 462.57 | 1.05 | 13559 | | | 1.78 | Si |
| SLV 12 | 1106 | -8900 | 6667 | 40805 | | 0.69 | 462.57 | 0.97 | 12573 | | | 1.89 | Si |

### Verifica a pressoflessione fuori piano D.M. 17-01-18 (N.T.C.)

quota 1072 Wa 0.05 denominatore 8 γM = 2

| Comb. | fd | Sa | σ0 | N | M | Mc | Coeff.s. | Verifica |
|---|---|---|---|---|---|---|---|---|
| SLV 12 | 14 | 0.46 | 0.77 | -9945 | 56852 | 130486 | 2.3 | Si |
| SLV 11 | 14 | 0.46 | 0.77 | -9945 | 56852 | 130486 | 2.3 | Si |
| SLV 16 | 14 | 0.46 | 0.77 | -10006 | 56852 | 131232 | 2.31 | Si |
| SLV 15 | 14 | 0.46 | 0.77 | -10006 | 56852 | 131232 | 2.31 | Si |
| SLV 8 | 14 | 0.46 | 0.98 | -12634 | 56852 | 162757 | 2.86 | Si |
| SLV 7 | 14 | 0.46 | 0.98 | -12634 | 56852 | 162757 | 2.86 | Si |
| SLV 14 | 14 | 0.46 | 0.98 | -12747 | 56852 | 164087 | 2.89 | Si |
| SLV 13 | 14 | 0.46 | 0.98 | -12747 | 56852 | 164087 | 2.89 | Si |
| SLV 3 | 14 | 0.46 | 1.46 | -18969 | 56852 | 233730 | 4.11 | Si |
| SLV 4 | 14 | 0.46 | 1.46 | -18969 | 56852 | 233730 | 4.11 | Si |

### Verifica dei meccanismi locali di collasso con analisi cinematica lineare

forza di aggancio al piano = 0 quota mezzeria = 1072 Wa = 0.05 Ta = 0.0739

| Comb. | N top | N base | V orto | α0 | M* | e* | a0* | aLim | Verifica |
|---|---|---|---|---|---|---|---|---|---|
| SLV 5 | -12054 | -30850 | -70 | 0.046 | 18.865 | 0.913 | 72.432 | 1733.979 | No |
| SLV 6 | -12054 | -30850 | -70 | 0.046 | 18.865 | 0.913 | 72.432 | 1733.979 | No |
| SLV 9 | -11364 | -23963 | -23 | 0.049 | 18.178 | 0.911 | 77.841 | 1733.979 | No |
| SLV 10 | -11364 | -23963 | -23 | 0.049 | 18.178 | 0.911 | 77.841 | 1733.979 | No |
| SLV 12 | -7121 | -13826 | 45 | 0.05 | 14.001 | 0.896 | 81.553 | 1733.979 | No |
| SLV 11 | -7121 | -13826 | 45 | 0.05 | 14.001 | 0.896 | 81.553 | 1733.979 | No |
| SLV 8 | -7811 | -20713 | -2 | 0.053 | 14.671 | 0.899 | 86.277 | 1733.979 | No |
| SLV 7 | -7811 | -20713 | -2 | 0.053 | 14.671 | 0.899 | 86.277 | 1733.979 | No |
| SLV 2 | -11373 | -35337 | -101 | 0.044 | 18.187 | 0.911 | 69.872 | 956.161 | No |
| SLV 1 | -11373 | -35337 | -101 | 0.044 | 18.187 | 0.911 | 69.872 | 956.161 | No |

### Tabella dei coefficienti di sicurezza minimi

| Stato limite | Coeff.s. | Comb. | Verifica |
|---|---|---|---|
| PF_SLU | 13.562 | SLU 81 | Si |
| V_SLU | 4.36 | SLU 80 | Si |
| PF_SLV | 2.991 | SLV 11 | Si |
| V_SLV | 1.627 | SLV 7 | Si |
| PFFP_SLV | 2.295 | SLV 11 | Si |
| R_SLV | 0.042 | SLV 5 | No |

## Maschio 139

Verifiche condotte secondo D.M. 17-01-18 (N.T.C.)

### Dati geometrici

| X ini. | Y ini. | X fin. | Y fin. | Quota i. | Quota.s | l | Sp. | h netta | h ini. | h fin. | a | a.s.,sx | a.s.,dx |
|---|---|---|---|---|---|---|---|---|---|---|---|---|---|
| -2467.8 | 206.6 | -2467.8 | 595.1 | L5 | L6 | 388.5 | 28 | 352 | 352 | 352 | | | |

### Caratteristiche del materiale

(Circolare 7 21-01-19 C8.5.I) Muratura in mattoni pieni e malta di calce LC2_Corti

| fb | fk | fvk0 | fmedio | τ0 | fv0 | μ | ϕ | fv,lim | E | G | FC |
|---|---|---|---|---|---|---|---|---|---|---|---|
| 60 | | | 34.5 | 0.9 | 2 | 0.58 | 0.77 | 3.25 | 32000 | 12800 | 1.2 |

### Verifica a pressoflessione nel piano secondo D.M. 17-01-18 NTC §7.8.2.2.1 in combinazioni non sismiche, γM = 3

| Comb. | Quota | N | M | σ0 | Mu | c.s. | Verifica |
|---|---|---|---|---|---|---|---|
| SLU 7 | 896 | -19363 | -130236 | 1.78 | 2939341 | 22.569 | Si |
| SLU 7 | 1106 | -14070 | 182498 | 1.29 | 2299134 | 12.598 | Si |

| Comb. | Quota | N | M | σ0 | Mu | c.s. | Verifica |
|---|---|---|---|---|---|---|---|
| SLU 2 | 896 | -17199 | -187527 | 1.58 | 2692436 | 14.358 | Si |
| SLU 2 | 1106 | -11814 | 59998 | 1.09 | 1988901 | 33.15 | Si |
| SLU 28 | 896 | -21557 | -114087 | 1.98 | 3168733 | 27.775 | Si |
| SLU 28 | 1106 | -15911 | 178937 | 1.46 | 2535720 | 14.171 | Si |
| SLU 44 | 896 | -21691 | -226525 | 1.99 | 3182023 | 14.047 | Si |
| SLU 44 | 1106 | -14865 | 67163 | 1.37 | 2403079 | 35.78 | Si |
| SLU 8 | 896 | -19301 | -86841 | 1.77 | 2932529 | 33.769 | Si |
| SLU 8 | 1106 | -14158 | 171539 | 1.3 | 2310775 | 13.471 | Si |
| SLU 51 | 896 | -23624 | -171433 | 2.17 | 3365490 | 19.632 | Si |
| SLU 51 | 1106 | -16933 | 202813 | 1.56 | 2660738 | 13.119 | Si |
| SLU 72 | 896 | -25818 | -155284 | 2.37 | 3553892 | 22.886 | Si |
| SLU 72 | 1106 | -18774 | 199253 | 1.73 | 2874215 | 14.425 | Si |
| SLU 30 | 896 | -21326 | -116285 | 1.96 | 3145582 | 27.051 | Si |
| SLU 30 | 1106 | -15724 | 192087 | 1.45 | 2512329 | 13.079 | Si |
| SLU 49 | 896 | -23855 | -169234 | 2.19 | 3386313 | 20.01 | Si |
| SLU 49 | 1106 | -17121 | 189663 | 1.57 | 2683136 | 14.147 | Si |
| SLU 9 | 896 | -19132 | -132434 | 1.76 | 2913969 | 22.003 | Si |
| SLU 9 | 1106 | -13883 | 195647 | 1.28 | 2274231 | 11.624 | Si |

Verifica a pressoflessione nel piano secondo D.M. 17-01-18 NTC §7.8.2.2.1 in combinazioni sismiche, γM = 2

| Comb. | Quota | N | M | σ0 | Mu | c.s. | Verifica |
|---|---|---|---|---|---|---|---|
| SLV 10 | 896 | -10557 | -717860 | 0.97 | 1887824 | 2.63 | Si |
| SLV 10 | 1106 | -5924 | 225540 | 0.54 | 1099537 | 4.875 | Si |
| SLV 9 | 896 | -10557 | -717860 | 0.97 | 1887824 | 2.63 | Si |
| SLV 9 | 1106 | -5924 | 225540 | 0.54 | 1099537 | 4.875 | Si |
| SLV 13 | 896 | -6976 | -339491 | 0.64 | 1283992 | 3.782 | Si |
| SLV 13 | 1106 | -4860 | 218298 | 0.45 | 909626 | 4.167 | Si |
| SLV 5 | 896 | -16646 | -683366 | 1.53 | 2828605 | 4.139 | Si |
| SLV 5 | 1106 | -9993 | 129346 | 0.92 | 1795267 | 13.88 | Si |
| SLV 11 | 896 | -20624 | 478177 | 1.9 | 3384598 | 7.078 | Si |
| SLV 11 | 1106 | -16448 | -115797 | 1.51 | 2799581 | 24.177 | Si |
| SLD 9 | 896 | -15217 | -363348 | 1.4 | 2617444 | 7.204 | Si |
| SLD 9 | 1106 | -10124 | 99969 | 0.93 | 1816776 | 18.173 | Si |
| SLV 12 | 896 | -20624 | 478177 | 1.9 | 3384598 | 7.078 | Si |
| SLV 12 | 1106 | -16448 | -115797 | 1.51 | 2799581 | 24.177 | Si |
| SLD 10 | 896 | -15217 | -363348 | 1.4 | 2617444 | 7.204 | Si |
| SLD 10 | 1106 | -10124 | 99969 | 0.93 | 1816776 | 18.173 | Si |
| SLV 14 | 896 | -6976 | -339491 | 0.64 | 1283992 | 3.782 | Si |
| SLV 14 | 1106 | -4860 | 218298 | 0.45 | 909626 | 4.167 | Si |
| SLV 6 | 896 | -16646 | -683366 | 1.53 | 2828605 | 4.139 | Si |
| SLV 6 | 1106 | -9993 | 129346 | 0.92 | 1795267 | 13.88 | Si |

Verifica a taglio nel piano secondo D.M. 17-01-18 (N.T.C.) §7.8.2.2.2 con rottura per scorrimento in combinazioni non sismiche, γM = 3

| Comb. | Quota | N | V par | M | σ0 | σN | l' | fvd | Vt scorr. | Vt fess.diag. | Vt,lim | c.s. | Verifica |
|---|---|---|---|---|---|---|---|---|---|---|---|---|---|
| SLU 76 | 896 | -26644 | -3214 | -182874 | | 2.45 | 388.5 | 0.88 | 9596 | | | 2.99 | Si |
| SLU 76 | 1106 | -19125 | -3215 | 97378 | | 1.76 | 388.5 | 0.79 | 8593 | | | 2.67 | Si |
| SLU 51 | 896 | -23624 | -2948 | -171433 | | 2.17 | 388.5 | 0.85 | 9193 | | | 3.12 | Si |
| SLU 51 | 1106 | -16933 | -2949 | 202813 | | 1.56 | 388.5 | 0.76 | 8301 | | | 2.82 | Si |
| SLU 55 | 896 | -24450 | -3034 | -199023 | | 2.25 | 388.5 | 0.86 | 9303 | | | 3.07 | Si |
| SLU 55 | 1106 | -17284 | -3035 | 100938 | | 1.59 | 388.5 | 0.77 | 8348 | | | 2.75 | Si |
| SLU 80 | 896 | -27667 | -3200 | -140130 | | 2.54 | 388.5 | 0.89 | 9732 | | | 3.04 | Si |
| SLU 80 | 1106 | -20251 | -3200 | 157166 | | 1.86 | 388.5 | 0.8 | 8743 | | | 2.73 | Si |
| SLU 68 | 896 | -24795 | -3142 | -198028 | | 2.28 | 388.5 | 0.86 | 9349 | | | 2.98 | Si |
| SLU 68 | 1106 | -17648 | -3143 | 139464 | | 1.62 | 388.5 | 0.77 | 8396 | | | 2.67 | Si |
| SLU 72 | 896 | -25818 | -3128 | -155284 | | 2.37 | 388.5 | 0.87 | 9486 | | | 3.03 | Si |
| SLU 72 | 1106 | -18774 | -3129 | 199253 | | 1.73 | 388.5 | 0.79 | 8547 | | | 2.73 | Si |
| SLU 59 | 896 | -25473 | -3020 | -156279 | | 2.34 | 388.5 | 0.87 | 9440 | | | 3.13 | Si |
| SLU 59 | 1106 | -18410 | -3020 | 160726 | | 1.69 | 388.5 | 0.78 | 8498 | | | 2.81 | Si |
| SLU 78 | 896 | -27898 | -3167 | -137931 | | 2.56 | 388.5 | 0.9 | 9763 | | | 3.08 | Si |
| SLU 78 | 1106 | -20438 | -3168 | 144016 | | 1.88 | 388.5 | 0.81 | 8768 | | | 2.77 | Si |
| SLU 70 | 896 | -26049 | -3095 | -153085 | | 2.39 | 388.5 | 0.87 | 9517 | | | 3.07 | Si |
| SLU 70 | 1106 | -18962 | -3096 | 186103 | | 1.74 | 388.5 | 0.79 | 8572 | | | 2.77 | Si |
| SLU 47 | 896 | -22601 | -2963 | -214177 | | 2.08 | 388.5 | 0.83 | 9057 | | | 3.06 | Si |
| SLU 47 | 1106 | -15807 | -2963 | 143024 | | 1.45 | 388.5 | 0.75 | 8151 | | | 2.75 | Si |

Verifica a taglio nel piano secondo D.M. 17-01-18 (N.T.C.) §7.8.2.2.2 con rottura per scorrimento in combinazioni sismiche, γM = 2

| Comb. | Quota | N | V par | M | σ0 | σN | l' | fvd | Vt scorr. | Vt fess.diag. | Vt,lim | c.s. | Verifica |
|---|---|---|---|---|---|---|---|---|---|---|---|---|---|
| SLD 5 | 896 | -17817 | -4002 | -348585 | | 1.64 | 388.5 | 1.16 | 12628 | | | 3.16 | Si |
| SLD 5 | 1106 | -11862 | -3685 | 58960 | | 1.09 | 388.5 | 1.05 | 11437 | | | 3.1 | Si |
| SLV 2 | 896 | -27274 | -4928 | -224509 | | 2.51 | 388.5 | 1.33 | 14520 | | | 2.95 | Si |
| SLV 2 | 1106 | -18424 | -4931 | -102348 | | 1.69 | 388.5 | 1.17 | 12750 | | | 2.59 | Si |
| SLV 10 | 896 | -10557 | -6152 | -717860 | | 1 | 378.76 | 1.03 | 10949 | | | 1.78 | Si |
| SLV 10 | 1106 | -5924 | -5254 | 225540 | | 0.54 | 388.5 | 0.94 | 10250 | | | 1.95 | Si |
| SLV 6 | 896 | -16646 | -7217 | -683366 | | 1.53 | 388.5 | 1.14 | 12394 | | | 1.72 | Si |
| SLV 6 | 1106 | -9993 | -6470 | 129346 | | 0.92 | 388.5 | 1.02 | 11064 | | | 1.71 | Si |
| SLV 9 | 896 | -10557 | -6152 | -717860 | | 1 | 378.76 | 1.03 | 10949 | | | 1.78 | Si |
| SLV 9 | 1106 | -5924 | -5254 | 225540 | | 0.54 | 388.5 | 0.94 | 10250 | | | 1.95 | Si |
| SLV 12 | 896 | -20624 | 3943 | 478177 | | 1.9 | 388.5 | 1.21 | 13190 | | | 3.35 | Si |
| SLV 12 | 1106 | -16448 | 3196 | -115797 | | 1.51 | 388.5 | 1.14 | 12355 | | | 3.87 | Si |
| SLD 6 | 896 | -17817 | -4002 | -348585 | | 1.64 | 388.5 | 1.16 | 12628 | | | 3.16 | Si |
| SLD 6 | 1106 | -11862 | -3685 | 58960 | | 1.09 | 388.5 | 1.05 | 11437 | | | 3.1 | Si |
| SLV 11 | 896 | -20624 | 3943 | 478177 | | 1.9 | 388.5 | 1.21 | 13190 | | | 3.35 | Si |
| SLV 11 | 1106 | -16448 | 3196 | -115797 | | 1.51 | 388.5 | 1.14 | 12355 | | | 3.87 | Si |
| SLV 1 | 896 | -27274 | -4928 | -224509 | | 2.51 | 388.5 | 1.33 | 14520 | | | 2.95 | Si |
| SLV 1 | 1106 | -18424 | -4931 | -102348 | | 1.69 | 388.5 | 1.17 | 12750 | | | 2.59 | Si |
| SLV 5 | 896 | -16646 | -7217 | -683366 | | 1.53 | 388.5 | 1.14 | 12394 | | | 1.72 | Si |
| SLV 5 | 1106 | -9993 | -6470 | 129346 | | 0.92 | 388.5 | 1.02 | 11064 | | | 1.71 | Si |

### Verifica a pressoflessione fuori piano D.M. 17-01-18 (N.T.C.)

quota 1072 Wa 0.05 denominatore 8 γM = 2

| Comb. | fd | Sa | σ0 | N | M | Mc | Coeff.s. | Verifica |
|---|---|---|---|---|---|---|---|---|
| SLV 13 | 14 | 0.46 | 0.51 | -5531 | 47749 | 74209 | 1.55 | Si |
| SLV 14 | 14 | 0.46 | 0.51 | -5531 | 47749 | 74209 | 1.55 | Si |
| SLV 10 | 14 | 0.46 | 0.61 | -6590 | 47749 | 87684 | 1.84 | Si |
| SLV 9 | 14 | 0.46 | 0.61 | -6590 | 47749 | 87684 | 1.84 | Si |
| SLV 16 | 14 | 0.46 | 0.8 | -8700 | 47749 | 113822 | 2.38 | Si |
| SLV 15 | 14 | 0.46 | 0.8 | -8700 | 47749 | 113822 | 2.38 | Si |
| SLV 6 | 14 | 0.46 | 0.98 | -10667 | 47749 | 137347 | 2.88 | Si |
| SLV 5 | 14 | 0.46 | 0.98 | -10667 | 47749 | 137347 | 2.88 | Si |
| SLV 12 | 14 | 0.46 | 1.58 | -17153 | 47749 | 209146 | 4.38 | Si |
| SLV 11 | 14 | 0.46 | 1.58 | -17153 | 47749 | 209146 | 4.38 | Si |

### Verifica dei meccanismi locali di collasso con analisi cinematica lineare

forza di aggancio al piano = 0 quota mezzeria = 1072 Wa = 0.05 Ta = 0.0739

| Comb. | N top | N base | V orto | α0 | M* | e* | a0* | aLim | Verifica |
|---|---|---|---|---|---|---|---|---|---|
| SLV 8 | -11932 | -26714 | 63 | 0.045 | 17.654 | 0.92 | 70.397 | 1733.979 | No |
| SLV 7 | -11932 | -26714 | 63 | 0.045 | 17.654 | 0.92 | 70.397 | 1733.979 | No |
| SLV 10 | -5791 | -10557 | -75 | 0.047 | 11.576 | 0.895 | 75.501 | 1733.979 | No |
| SLV 9 | -5791 | -10557 | -75 | 0.047 | 11.576 | 0.895 | 75.501 | 1733.979 | No |
| SLV 12 | -10253 | -20624 | 6 | 0.049 | 15.974 | 0.914 | 78.436 | 1733.979 | No |
| SLV 11 | -10253 | -20624 | 6 | 0.049 | 15.974 | 0.914 | 78.436 | 1733.979 | No |
| SLV 5 | -7470 | -16646 | -18 | 0.051 | 13.214 | 0.903 | 81.666 | 1733.979 | No |
| SLV 6 | -7470 | -16646 | -18 | 0.051 | 13.214 | 0.903 | 81.666 | 1733.979 | No |
| SLV 4 | -12329 | -30294 | 102 | 0.042 | 18.053 | 0.921 | 66.267 | 956.161 | No |
| SLV 3 | -12329 | -30294 | 102 | 0.042 | 18.053 | 0.921 | 66.267 | 956.161 | No |

### Tabella dei coefficienti di sicurezza minimi

| Stato limite | Coeff.s. | Comb. | Verifica |
|---|---|---|---|
| PF_SLU | 11.624 | SLU 9 | Si |
| V_SLU | 2.671 | SLU 68 | Si |
| PF_SLV | 2.63 | SLV 9 | Si |
| V_SLV | 1.71 | SLV 5 | Si |
| PFFP_SLV | 1.554 | SLV 13 | Si |
| R_SLV | 0.041 | SLV 7 | No |

## Maschio 140

Verifiche condotte secondo D.M. 17-01-18 (N.T.C.)

### Dati geometrici

| X ini. | Y ini. | X fin. | Y fin. | Quota i. | Quota.s | l | Sp. | h netta | h ini. | h fin. | a | a.s.,sx | a.s.,dx |
|---|---|---|---|---|---|---|---|---|---|---|---|---|---|
| -2271.3 | 595.1 | -2467.8 | 595.1 | L5 | L6 | 196.5 | 28 | 352 | 352 | 352 | | | |

### Caratteristiche del materiale

(Circolare 7 21-01-19 C8.5.I) Muratura in mattoni pieni e malta di calce LC2_Corti

| fb | fk | fvk0 | fmedio | τ0 | fv0 | μ | ϕ | fv,lim | E | G | FC |
|---|---|---|---|---|---|---|---|---|---|---|---|
| 60 | | | 34.5 | 0.9 | 2 | 0.58 | 0.77 | 3.25 | 32000 | 12800 | 1.2 |

### Verifica a pressoflessione nel piano secondo D.M. 17-01-18 NTC §7.8.2.2.1 in combinazioni non sismiche, γM = 3

| Comb. | Quota | N | M | σ0 | Mu | c.s. | Verifica |
|---|---|---|---|---|---|---|---|
| SLU 19 | 986 | -7601 | 1908 | 1.38 | 620171 | 324.963 | Si |
| SLU 19 | 1166 | -7283 | -56767 | 1.32 | 599267 | 10.557 | Si |
| SLU 18 | 986 | -7781 | 1344 | 1.41 | 631749 | 469.91 | Si |
| SLU 18 | 1166 | -7362 | -55053 | 1.34 | 604522 | 10.981 | Si |
| SLU 61 | 986 | -9426 | -1807 | 1.71 | 731312 | 404.651 | Si |
| SLU 61 | 1166 | -8744 | -66231 | 1.59 | 691492 | 10.441 | Si |
| SLU 60 | 986 | -9605 | -2371 | 1.75 | 741456 | 312.679 | Si |
| SLU 60 | 1166 | -8823 | -64517 | 1.6 | 696238 | 10.792 | Si |
| SLU 40 | 986 | -8363 | 9644 | 1.52 | 668366 | 69.301 | Si |
| SLU 40 | 1166 | -8302 | -56498 | 1.51 | 664574 | 11.763 | Si |
| SLU 81 | 986 | -10367 | 5365 | 1.88 | 782957 | 145.949 | Si |
| SLU 81 | 1166 | -9843 | -64247 | 1.79 | 754661 | 11.746 | Si |
| SLU 52 | 986 | -9057 | -2898 | 1.65 | 710046 | 245.016 | Si |
| SLU 52 | 1166 | -8293 | -60229 | 1.51 | 664021 | 11.025 | Si |
| SLU 82 | 986 | -10188 | 5929 | 1.85 | 773413 | 130.454 | Si |
| SLU 82 | 1166 | -9763 | -65962 | 1.77 | 750270 | 11.374 | Si |
| SLU 10 | 986 | -7233 | 818 | 1.31 | 595959 | 728.782 | Si |
| SLU 10 | 1166 | -6832 | -50765 | 1.24 | 568906 | 11.207 | Si |
| SLU 73 | 986 | -9819 | 4838 | 1.78 | 753378 | 155.722 | Si |
| SLU 73 | 1166 | -9312 | -59960 | 1.69 | 724814 | 12.088 | Si |

### Verifica a pressoflessione nel piano secondo D.M. 17-01-18 NTC §7.8.2.2.1 in combinazioni sismiche, γM = 2

| Comb. | Quota | N | M | σ0 | Mu | c.s. | Verifica |
|---|---|---|---|---|---|---|---|
| SLV 1 | 986 | -6963 | 280519 | 1.27 | 613226 | 2.186 | Si |
| SLV 1 | 1166 | -9166 | -272799 | 1.67 | 777806 | 2.851 | Si |
| SLV 16 | 986 | -7708 | -281232 | 1.4 | 670476 | 2.384 | Si |
| SLV 16 | 1166 | -4017 | 200952 | 0.73 | 371107 | 1.847 | Si |
| SLV 15 | 986 | -7708 | -281232 | 1.4 | 670476 | 2.384 | Si |
| SLV 15 | 1166 | -4017 | 200952 | 0.73 | 371107 | 1.847 | Si |
| SLV 3 | 986 | -8587 | 354506 | 1.56 | 735904 | 2.076 | Si |
| SLV 3 | 1166 | -11052 | -317733 | 2.01 | 907341 | 2.856 | Si |
| SLV 13 | 986 | -6084 | -355219 | 1.11 | 543625 | 1.53 | Si |

| Comb. | Quota | N | M | σ0 | Mu | c.s. | Verifica |
|---|---|---|---|---|---|---|---|
| SLV 13 | 1166 | -2132 | 245886 | 0 | 0 | 0 | No, e>l/2 |
| SLV 4 | 986 | -8587 | 354506 | 1.56 | 735904 | 2.076 | Si |
| SLV 4 | 1166 | -11052 | -317733 | 2.01 | 907341 | 2.856 | Si |
| SLV 9 | 986 | -4496 | -219029 | 0.82 | 412206 | 1.882 | Si |
| SLV 9 | 1166 | -2394 | 116769 | 0.44 | 226850 | 1.943 | Si |
| SLV 14 | 986 | -6084 | -355219 | 1.11 | 543625 | 1.53 | Si |
| SLV 14 | 1166 | -2132 | 245886 | 0 | 0 | 0 | No, e>l/2 |
| SLV 10 | 986 | -4496 | -219029 | 0.82 | 412206 | 1.882 | Si |
| SLV 10 | 1166 | -2394 | 116769 | 0.44 | 226850 | 1.943 | Si |
| SLV 2 | 986 | -6963 | 280519 | 1.27 | 613226 | 2.186 | Si |
| SLV 2 | 1166 | -9166 | -272799 | 1.67 | 777806 | 2.851 | Si |

Verifica a taglio nel piano secondo D.M. 17-01-18 (N.T.C.) §7.8.2.2.2 con rottura per scorrimento in combinazioni non sismiche, γM = 3

| Comb. | Quota | N | V par | M | σ0 | σN | l' | fvd | Vt scorr. | Vt fess.diag. | Vt,lim | c.s. | Verifica |
|---|---|---|---|---|---|---|---|---|---|---|---|---|---|
| SLU 81 | 986 | -10367 | 1430 | 5365 | | 1.88 | 196.5 | 0.81 | 4439 | | | 3.11 | Si |
| SLU 81 | 1166 | -9843 | 1431 | -64247 | | 1.79 | 196.5 | 0.79 | 4369 | | | 3.05 | Si |
| SLU 39 | 986 | -8543 | 1296 | 9080 | | 1.55 | 196.5 | 0.76 | 4196 | | | 3.24 | Si |
| SLU 39 | 1166 | -8381 | 1297 | -54784 | | 1.52 | 196.5 | 0.76 | 4174 | | | 3.22 | Si |
| SLU 61 | 986 | -9426 | 1302 | -1807 | | 1.71 | 196.5 | 0.78 | 4313 | | | 3.31 | Si |
| SLU 61 | 1166 | -8744 | 1301 | -66231 | | 1.59 | 196.5 | 0.77 | 4223 | | | 3.25 | Si |
| SLU 76 | 986 | -10157 | 1281 | 17331 | | 1.85 | 196.5 | 0.8 | 4411 | | | 3.44 | Si |
| SLU 76 | 1166 | -9634 | 1279 | -25069 | | 1.75 | 196.5 | 0.79 | 4341 | | | 3.39 | Si |
| SLU 40 | 986 | -8363 | 1364 | 9644 | | 1.52 | 196.5 | 0.76 | 4172 | | | 3.06 | Si |
| SLU 40 | 1166 | -8302 | 1363 | -56498 | | 1.51 | 196.5 | 0.76 | 4164 | | | 3.05 | Si |
| SLU 75 | 986 | -10487 | 1291 | 12843 | | 1.91 | 196.5 | 0.81 | 4455 | | | 3.45 | Si |
| SLU 75 | 1166 | -9942 | 1290 | -33649 | | 1.81 | 196.5 | 0.8 | 4382 | | | 3.4 | Si |
| SLU 73 | 986 | -9819 | 1414 | 4838 | | 1.78 | 196.5 | 0.79 | 4366 | | | 3.09 | Si |
| SLU 73 | 1166 | -9312 | 1411 | -59960 | | 1.69 | 196.5 | 0.78 | 4298 | | | 3.05 | Si |
| SLU 82 | 986 | -10188 | 1498 | 5929 | | 1.85 | 196.5 | 0.8 | 4415 | | | 2.95 | Si |
| SLU 82 | 1166 | -9763 | 1497 | -65962 | | 1.77 | 196.5 | 0.79 | 4358 | | | 2.91 | Si |
| SLU 31 | 986 | -7995 | 1281 | 8554 | | 1.45 | 196.5 | 0.75 | 4123 | | | 3.22 | Si |
| SLU 31 | 1166 | -7851 | 1278 | -50496 | | 1.43 | 196.5 | 0.75 | 4103 | | | 3.21 | Si |
| SLU 84 | 986 | -10525 | 1365 | 18421 | | 1.91 | 196.5 | 0.81 | 4460 | | | 3.27 | Si |
| SLU 84 | 1166 | -10085 | 1364 | -31070 | | 1.83 | 196.5 | 0.8 | 4401 | | | 3.23 | Si |

Verifica a taglio nel piano secondo D.M. 17-01-18 (N.T.C.) §7.8.2.2.2 con rottura per scorrimento in combinazioni sismiche, γM = 2

| Comb. | Quota | N | V par | M | σ0 | σN | l' | fvd | Vt scorr. | Vt fess.diag. | Vt,lim | c.s. | Verifica |
|---|---|---|---|---|---|---|---|---|---|---|---|---|---|
| SLV 16 | 986 | -7708 | -4286 | -281232 | | 1.49 | 185.29 | 1.13 | 5865 | | | 1.37 | Si |
| SLV 16 | 1166 | -4017 | -3709 | 200952 | | 0.99 | 144.68 | 1.03 | 4179 | | | 1.13 | Si |
| SLV 2 | 986 | -6963 | 5909 | 280519 | | 1.43 | 173.88 | 1.12 | 5450 | | | 0.92 | No, Vu<V |
| SLV 2 | 1166 | -9166 | 5333 | -272799 | | 1.67 | 196.5 | 1.17 | 6418 | | | 1.2 | Si |
| SLV 1 | 986 | -6963 | 5909 | 280519 | | 1.43 | 173.88 | 1.12 | 5450 | | | 0.92 | No, Vu<V |
| SLV 1 | 1166 | -9166 | 5333 | -272799 | | 1.67 | 196.5 | 1.17 | 6418 | | | 1.2 | Si |
| SLV 15 | 986 | -7708 | -4286 | -281232 | | 1.49 | 185.29 | 1.13 | 5865 | | | 1.37 | Si |
| SLV 15 | 1166 | -4017 | -3709 | 200952 | | 0.99 | 144.68 | 1.03 | 4179 | | | 1.13 | Si |
| SLV 3 | 986 | -8587 | 6510 | 354506 | | 1.79 | 170.9 | 1.19 | 5705 | | | 0.88 | No, Vu<V |
| SLV 3 | 1166 | -11052 | 5709 | -317733 | | 2.01 | 196.5 | 1.24 | 6795 | | | 1.19 | Si |
| SLD 4 | 986 | -7863 | 3242 | 150975 | | 1.43 | 196.5 | 1.12 | 6158 | | | 1.9 | Si |
| SLD 4 | 1166 | -8488 | 2901 | -155866 | | 1.54 | 196.5 | 1.14 | 6283 | | | 2.17 | Si |
| SLD 3 | 986 | -7863 | 3242 | 150975 | | 1.43 | 196.5 | 1.12 | 6158 | | | 1.9 | Si |
| SLD 3 | 1166 | -8488 | 2901 | -155866 | | 1.54 | 196.5 | 1.14 | 6283 | | | 2.17 | Si |
| SLV 4 | 986 | -8587 | 6510 | 354506 | | 1.79 | 170.9 | 1.19 | 5705 | | | 0.88 | No, Vu<V |
| SLV 4 | 1166 | -11052 | 5709 | -317733 | | 2.01 | 196.5 | 1.24 | 6795 | | | 1.19 | Si |
| SLV 14 | 986 | -6084 | -4887 | -355219 | | 1.82 | 119.58 | 1.2 | 4007 | | | 0.82 | No, Vu<V |
| SLV 14 | 1166 | -2132 | -4085 | 245886 | | 0 | 0 | 0.83 | 0 | | | 0 | No, Vu<V |
| SLV 13 | 986 | -6084 | -4887 | -355219 | | 1.82 | 119.58 | 1.2 | 4007 | | | 0.82 | No, Vu<V |
| SLV 13 | 1166 | -2132 | -4085 | 245886 | | 0 | 0 | 0.83 | 0 | | | 0 | No, Vu<V |

Verifica a pressoflessione fuori piano D.M. 17-01-18 (N.T.C.)

quota 1072 Wa 0.05 denominatore 8 γM = 2

| Comb. | fd | Sa | σ0 | N | M | Mc | Coeff.s. | Verifica |
|---|---|---|---|---|---|---|---|---|
| SLV 10 | 14 | 0.46 | 0.62 | -3408 | 24151 | 45289 | 1.88 | Si |
| SLV 9 | 14 | 0.46 | 0.62 | -3408 | 24151 | 45289 | 1.88 | Si |
| SLV 13 | 14 | 0.46 | 0.74 | -4063 | 24151 | 53446 | 2.21 | Si |
| SLV 14 | 14 | 0.46 | 0.74 | -4063 | 24151 | 53446 | 2.21 | Si |
| SLV 5 | 14 | 0.46 | 0.86 | -4732 | 24151 | 61589 | 2.55 | Si |
| SLV 6 | 14 | 0.46 | 0.86 | -4732 | 24151 | 61589 | 2.55 | Si |
| SLV 16 | 14 | 0.46 | 1.08 | -5950 | 24151 | 75924 | 3.14 | Si |
| SLV 15 | 14 | 0.46 | 1.08 | -5950 | 24151 | 75924 | 3.14 | Si |
| SLV 1 | 14 | 0.46 | 1.54 | -8479 | 24151 | 103734 | 4.3 | Si |
| SLV 2 | 14 | 0.46 | 1.54 | -8479 | 24151 | 103734 | 4.3 | Si |

Verifica dei meccanismi locali di collasso con analisi cinematica lineare

forza di aggancio al piano = 0 quota mezzeria = 1072 Wa = 0.05 Ta = 0.0739

| Comb. | N top | N base | V orto | α0 | M* | e* | a0* | aLim | Verifica |
|---|---|---|---|---|---|---|---|---|---|
| SLV 10 | -2896 | -2616 | 157 | 0.021 | 5.822 | 0.895 | 33.799 | 1733.979 | No |
| SLV 9 | -2896 | -2616 | 157 | 0.021 | 5.822 | 0.895 | 33.799 | 1733.979 | No |
| SLV 5 | -3882 | -4339 | 132 | 0.029 | 6.785 | 0.903 | 46.021 | 1733.979 | No |
| SLV 6 | -3882 | -4339 | 132 | 0.029 | 6.785 | 0.903 | 46.021 | 1733.979 | No |
| SLV 7 | -7611 | -11997 | -156 | 0.03 | 10.515 | 0.93 | 47.634 | 1733.979 | No |
| SLV 8 | -7611 | -11997 | -156 | 0.03 | 10.515 | 0.93 | 47.634 | 1733.979 | No |
| SLV 12 | -6625 | -10274 | -131 | 0.032 | 9.521 | 0.924 | 50.928 | 1733.979 | No |
| SLV 11 | -6625 | -10274 | -131 | 0.032 | 9.521 | 0.924 | 50.928 | 1733.979 | No |
| SLV 13 | -3050 | -3286 | 86 | 0.036 | 5.972 | 0.896 | 58.983 | 956.161 | No |
| SLV 14 | -3050 | -3286 | 86 | 0.036 | 5.972 | 0.896 | 58.983 | 956.161 | No |

### Tabella dei coefficienti di sicurezza minimi

| Stato limite | Coeff.s. | Comb. | Verifica |
|---|---|---|---|
| PF_SLU | 10.441 | SLU 61 | Si |
| V_SLU | 2.912 | SLU 82 | Si |
| PF_SLV | 0 | SLV 13 | No |
| V_SLV | 0 | SLV 13 | No |
| PFFP_SLV | 1.875 | SLV 9 | Si |
| R_SLV | 0.019 | SLV 9 | No |

## Maschio 141

Verifiche condotte secondo D.M. 17-01-18 (N.T.C.)

### Dati geometrici

| X ini. | Y ini. | X fin. | Y fin. | Quota i. | Quota.s | l | Sp. | h netta | h ini. | h fin. | a | a.s.,sx | a.s.,dx |
|---|---|---|---|---|---|---|---|---|---|---|---|---|---|
| -1961.8 | 595.1 | -2181.3 | 595.1 | L5 | L6 | 219.5 | 28 | 352 | 352 | 352 | | | |

### Caratteristiche del materiale

(Circolare 7 21-01-19 C8.5.I) Muratura in mattoni pieni e malta di calce LC2_Corti

| fb | fk | fvk0 | fmedio | τ0 | fv0 | μ | ϕ | fv,lim | E | G | FC |
|---|---|---|---|---|---|---|---|---|---|---|---|
| 60 | | | 34.5 | 0.9 | 2 | 0.58 | 0.77 | 3.25 | 32000 | 12800 | 1.2 |

### Verifica a pressoflessione nel piano secondo D.M. 17-01-18 NTC §7.8.2.2.1 in combinazioni non sismiche, γM = 3

| Comb. | Quota | N | M | σ0 | Mu | c.s. | Verifica |
|---|---|---|---|---|---|---|---|
| SLU 9 | 986 | -2769 | 170879 | 0.45 | 287119 | 1.68 | Si |
| SLU 9 | 1166 | -734 | 117132 | 0 | 0 | 0 | No, e>l/2 |
| SLU 29 | 986 | -3112 | 187289 | 0.51 | 320309 | 1.71 | Si |
| SLU 29 | 1166 | -1045 | 133945 | 0 | 0 | 0 | No, e>l/2 |
| SLU 30 | 986 | -3073 | 184901 | 0.5 | 316545 | 1.712 | Si |
| SLU 30 | 1166 | -1006 | 132670 | 0 | 0 | 0 | No, e>l/2 |
| SLU 27 | 986 | -3895 | 176039 | 0.63 | 394260 | 2.24 | Si |
| SLU 27 | 1166 | -1829 | 130899 | 0.3 | 193396 | 1.477 | Si |
| SLU 72 | 986 | -5055 | 195297 | 0.82 | 498732 | 2.554 | Si |
| SLU 72 | 1166 | -2388 | 146839 | 0.39 | 249575 | 1.7 | Si |
| SLU 51 | 986 | -4751 | 181275 | 0.77 | 471943 | 2.603 | Si |
| SLU 51 | 1166 | -2115 | 131300 | 0.34 | 222331 | 1.693 | Si |
| SLU 6 | 986 | -3592 | 162016 | 0.58 | 365928 | 2.259 | Si |
| SLU 6 | 1166 | -1556 | 115360 | 0.25 | 165483 | 1.434 | Si |
| SLU 8 | 986 | -2808 | 173266 | 0.46 | 290935 | 1.679 | Si |
| SLU 8 | 1166 | -773 | 118406 | 0 | 0 | 0 | No, e>l/2 |
| SLU 28 | 986 | -3856 | 173651 | 0.63 | 390630 | 2.25 | Si |
| SLU 28 | 1166 | -1790 | 129625 | 0.29 | 189412 | 1.461 | Si |
| SLU 7 | 986 | -3553 | 159629 | 0.58 | 362247 | 2.269 | Si |
| SLU 7 | 1166 | -1517 | 114086 | 0.25 | 161452 | 1.415 | Si |

### Verifica a pressoflessione nel piano secondo D.M. 17-01-18 NTC §7.8.2.2.1 in combinazioni sismiche, γM = 2

| Comb. | Quota | N | M | σ0 | Mu | c.s. | Verifica |
|---|---|---|---|---|---|---|---|
| SLV 3 | 986 | -1230 | 659802 | 0 | 0 | 0 | No, e>l/2 |
| SLV 3 | 1166 | 815 | -223581 | 0 | 0 | 0 | No, Trazione |
| SLV 2 | 986 | -1797 | 479283 | 0 | 0 | 0 | No, e>l/2 |
| SLV 2 | 1166 | 74 | -193406 | 0 | 0 | 0 | No, Trazione |
| SLV 4 | 986 | -1230 | 659802 | 0 | 0 | 0 | No, e>l/2 |
| SLV 4 | 1166 | 815 | -223581 | 0 | 0 | 0 | No, Trazione |
| SLV 7 | 986 | -4693 | 506275 | 0.76 | 482846 | 0.954 | No, M>Mu |
| SLV 7 | 1166 | -2383 | -63431 | 0.39 | 253251 | 3.993 | Si |
| SLV 1 | 986 | -1797 | 479283 | 0 | 0 | 0 | No, e>l/2 |
| SLV 1 | 1166 | 74 | -193406 | 0 | 0 | 0 | No, Trazione |
| SLV 8 | 986 | -4693 | 506275 | 0.76 | 482846 | 0.954 | No, M>Mu |
| SLV 8 | 1166 | -2383 | -63431 | 0.39 | 253251 | 3.993 | Si |
| SLV 14 | 986 | -13578 | -561096 | 2.21 | 1220717 | 2.176 | Si |
| SLV 14 | 1166 | -11534 | 364751 | 1.88 | 1071467 | 2.938 | Si |
| SLV 13 | 986 | -13578 | -561096 | 2.21 | 1220717 | 2.176 | Si |
| SLV 13 | 1166 | -11534 | 364751 | 1.88 | 1071467 | 2.938 | Si |
| SLD 3 | 986 | -4770 | 309303 | 0.78 | 490258 | 1.585 | Si |
| SLD 3 | 1166 | -2728 | -55631 | 0.44 | 288473 | 5.185 | Si |
| SLD 4 | 986 | -4770 | 309303 | 0.78 | 490258 | 1.585 | Si |
| SLD 4 | 1166 | -2728 | -55631 | 0.44 | 288473 | 5.185 | Si |

### Verifica a taglio nel piano secondo D.M. 17-01-18 (N.T.C.) §7.8.2.2.2 con rottura per scorrimento in combinazioni non sismiche, γM = 3

| Comb. | Quota | N | V par | M | σ0 | σN | l' | fvd | Vt scorr. | Vt fess.diag. | Vt,lim | c.s. | Verifica |
|---|---|---|---|---|---|---|---|---|---|---|---|---|---|
| SLU 51 | 986 | -4751 | 254 | 181275 | | 0.79 | 214.79 | 0.66 | 3975 | | | 15.64 | Si |
| SLU 51 | 1166 | -2115 | 254 | 131300 | | 0.53 | 143.02 | 0.63 | 2507 | | | 9.87 | Si |
| SLU 7 | 986 | -3553 | 235 | 159629 | | 0.65 | 194.46 | 0.64 | 3499 | | | 14.88 | Si |
| SLU 7 | 1166 | -1517 | 235 | 114086 | | 0.52 | 103.64 | 0.63 | 1815 | | | 7.72 | Si |
| SLU 28 | 986 | -3856 | 227 | 173651 | | 0.71 | 194.16 | 0.65 | 3534 | | | 15.54 | Si |
| SLU 28 | 1166 | -1790 | 227 | 129625 | | 0.57 | 111.98 | 0.63 | 1981 | | | 8.71 | Si |
| SLU 30 | 986 | -3073 | 273 | 184901 | | 0.74 | 148.73 | 0.65 | 2723 | | | 9.98 | Si |
| SLU 30 | 1166 | -1006 | 273 | 132670 | | 0 | 0 | 0.56 | 0 | | | 0 | No, Vu<V |
| SLU 50 | 986 | -4790 | 260 | 183662 | | 0.8 | 214.23 | 0.66 | 3971 | | | 15.26 | Si |
| SLU 50 | 1166 | -2154 | 260 | 132575 | | 0.53 | 144.63 | 0.63 | 2537 | | | 9.75 | Si |
| SLU 8 | 986 | -2808 | 287 | 173266 | | 0.7 | 144.16 | 0.65 | 2617 | | | 9.12 | Si |
| SLU 8 | 1166 | -773 | 287 | 118406 | | 0 | 0 | 0.56 | 0 | | | 0 | No, Vu<V |
| SLU 27 | 986 | -3895 | 234 | 176039 | | 0.72 | 193.68 | 0.65 | 3532 | | | 15.12 | Si |
| SLU 27 | 1166 | -1829 | 234 | 130899 | | 0.57 | 114.54 | 0.63 | 2026 | | | 8.67 | Si |
| SLU 6 | 986 | -3592 | 241 | 162016 | | 0.66 | 193.93 | 0.64 | 3496 | | | 14.49 | Si |

| Comb. | Quota | N | V par | M | σ0 | σN | l' | fvd | Vt scorr. | Vt fess.diag. | Vt,lim | c.s. | Verifica |
|---|---|---|---|---|---|---|---|---|---|---|---|---|---|
| SLU 6 | 1166 | -1556 | 241 | 115360 | | 0.52 | 106.86 | 0.62 | 1870 | | | 7.75 | Si |
| SLU 9 | 986 | -2769 | 281 | 170879 | | 0.69 | 144.14 | 0.65 | 2611 | | | 9.3 | Si |
| SLU 9 | 1166 | -734 | 281 | 117132 | | 0 | 0 | 0.56 | 0 | | | 0 | No, Vu<V |
| SLU 29 | 986 | -3112 | 279 | 187289 | | 0.75 | 148.7 | 0.66 | 2728 | | | 9.77 | Si |
| SLU 29 | 1166 | -1045 | 279 | 133945 | | 0 | 0 | 0.56 | 0 | | | 0 | No, Vu<V |

### Verifica a taglio nel piano secondo D.M. 17-01-18 (N.T.C.) §7.8.2.2.2 con rottura per scorrimento in combinazioni sismiche, γM = 2

| Comb. | Quota | N | V par | M | σ0 | σN | l' | fvd | Vt scorr. | Vt fess.diag. | Vt,lim | c.s. | Verifica |
|---|---|---|---|---|---|---|---|---|---|---|---|---|---|
| SLV 16 | 986 | -13011 | -4589 | -380577 | | 2.12 | 219.5 | 1.26 | 7724 | | | 1.68 | Si |
| SLV 16 | 1166 | -10793 | -4036 | 334576 | | 1.76 | 219.5 | 1.18 | 7280 | | | 1.8 | Si |
| SLV 7 | 986 | -4693 | 3544 | 506275 | | 29.95 | 5.6 | 1.63 | 255 | | | 0.07 | No, Vu<V |
| SLV 7 | 1166 | -2383 | 3148 | -63431 | | 0.39 | 219.5 | 0.91 | 5598 | | | 1.78 | Si |
| SLV 4 | 986 | -1230 | 5608 | 659802 | | 0 | 0 | 0.83 | 0 | | | 0 | No, Vu<V |
| SLV 4 | 1166 | 815 | 4928 | -223581 | | 0 | 0 | 0.83 | 0 | | | 0 | No, Vu<V |
| SLV 15 | 986 | -13011 | -4589 | -380577 | | 2.12 | 219.5 | 1.26 | 7724 | | | 1.68 | Si |
| SLV 15 | 1166 | -10793 | -4036 | 334576 | | 1.76 | 219.5 | 1.18 | 7280 | | | 1.8 | Si |
| SLV 14 | 986 | -13578 | -5879 | -561096 | | 2.36 | 205.27 | 1.31 | 7505 | | | 1.28 | Si |
| SLV 14 | 1166 | -11534 | -5200 | 364751 | | 1.88 | 219.5 | 1.21 | 7429 | | | 1.43 | Si |
| SLV 8 | 986 | -4693 | 3544 | 506275 | | 29.95 | 5.6 | 1.63 | 255 | | | 0.07 | No, Vu<V |
| SLV 8 | 1166 | -2383 | 3148 | -63431 | | 0.39 | 219.5 | 0.91 | 5598 | | | 1.78 | Si |
| SLV 13 | 986 | -13578 | -5879 | -561096 | | 2.36 | 205.27 | 1.31 | 7505 | | | 1.28 | Si |
| SLV 13 | 1166 | -11534 | -5200 | 364751 | | 1.88 | 219.5 | 1.21 | 7429 | | | 1.43 | Si |
| SLV 2 | 986 | -1797 | 4318 | 479283 | | 0 | 0 | 0.83 | 0 | | | 0 | No, Vu<V |
| SLV 2 | 1166 | 74 | 3765 | -193406 | | 0 | 0 | 0.83 | 0 | | | 0 | No, Vu<V |
| SLV 3 | 986 | -1230 | 5608 | 659802 | | 0 | 0 | 0.83 | 0 | | | 0 | No, Vu<V |
| SLV 3 | 1166 | 815 | 4928 | -223581 | | 0 | 0 | 0.83 | 0 | | | 0 | No, Vu<V |
| SLV 1 | 986 | -1797 | 4318 | 479283 | | 0 | 0 | 0.83 | 0 | | | 0 | No, Vu<V |
| SLV 1 | 1166 | 74 | 3765 | -193406 | | 0 | 0 | 0.83 | 0 | | | 0 | No, Vu<V |

### Verifica a pressoflessione fuori piano D.M. 17-01-18 (N.T.C.)

quota 1072 Wa 0.05 denominatore 8 γM = 2

| Comb. | fd | Sa | σ0 | N | M | Mc | Coeff.s. | Verifica |
|---|---|---|---|---|---|---|---|---|
| SLV 1 | 14 | 0.46 | 0 | -1455 | 26978 | 0 | 0 | No, e>t/2 |
| SLV 2 | 14 | 0.46 | 0 | -1455 | 26978 | 0 | 0 | No, e>t/2 |
| SLV 3 | 14 | 0.46 | 0 | -797 | 26978 | 0 | 0 | No, e>t/2 |
| SLV 4 | 14 | 0.46 | 0 | -797 | 26978 | 0 | 0 | No, e>t/2 |
| SLV 8 | 14 | 0.46 | 0.62 | -3795 | 26978 | 50449 | 1.87 | Si |
| SLV 7 | 14 | 0.46 | 0.62 | -3795 | 26978 | 50449 | 1.87 | Si |
| SLV 6 | 14 | 0.46 | 0.97 | -5988 | 26978 | 77148 | 2.86 | Si |
| SLV 5 | 14 | 0.46 | 0.97 | -5988 | 26978 | 77148 | 2.86 | Si |
| SLV 12 | 14 | 0.46 | 1.14 | -7023 | 26978 | 89125 | 3.3 | Si |
| SLV 11 | 14 | 0.46 | 1.14 | -7023 | 26978 | 89125 | 3.3 | Si |

### Verifica dei meccanismi locali di collasso con analisi cinematica lineare

forza di aggancio al piano = 0 quota mezzeria = 1072 Wa = 0.05 Ta = 0.0739

| Comb. | N top | N base | V orto | α0 | M* | e* | a0* | aLim | Verifica |
|---|---|---|---|---|---|---|---|---|---|
| SLV 3 | -878 | 1672 | -58 | 0 | 0 | 0 | 0 | 956.161 | No, Trazione |
| SLV 4 | -878 | 1672 | -58 | 0 | 0 | 0 | 0 | 956.161 | No, Trazione |
| SLV 2 | -1301 | 444 | 12 | 0 | 0 | 0 | 0 | 956.161 | No, Trazione |
| SLV 1 | -1301 | 444 | 12 | 0 | 0 | 0 | 0 | 956.161 | No, Trazione |
| SLV 8 | -2380 | -3057 | -126 | 0.029 | 5.691 | 0.89 | 46.646 | 1733.979 | No |
| SLV 7 | -2380 | -3057 | -126 | 0.029 | 5.691 | 0.89 | 46.646 | 1733.979 | No |
| SLV 11 | -4091 | -8339 | -115 | 0.034 | 7.338 | 0.902 | 54.09 | 1733.979 | No |
| SLV 12 | -4091 | -8339 | -115 | 0.034 | 7.338 | 0.902 | 54.09 | 1733.979 | No |
| SLV 9 | -5501 | -12431 | 117 | 0.034 | 8.734 | 0.912 | 54.964 | 1733.979 | No |
| SLV 10 | -5501 | -12431 | 117 | 0.034 | 8.734 | 0.912 | 54.964 | 1733.979 | No |

### Tabella dei coefficienti di sicurezza minimi

| Stato limite | Coeff.s. | Comb. | Verifica |
|---|---|---|---|
| PF_SLU | 0 | SLU 8 | No |
| V_SLU | 0 | SLU 8 | No |
| PF_SLV | 0 | SLV 4 | No |
| V_SLV | 0 | SLV 1 | No |
| PFFP_SLV | 0 | SLV 1 | No |
| R_SLV | 0 | SLV 4 | No |

## Maschio 142

Verifiche condotte secondo D.M. 17-01-18 (N.T.C.)

### Dati geometrici

| X ini. | Y ini. | X fin. | Y fin. | Quota i. | Quota.s | l | Sp. | h netta | h ini. | h fin. | a | a.s.,sx | a.s.,dx |
|---|---|---|---|---|---|---|---|---|---|---|---|---|---|
| -2249.3 | -335.9 | -2467.8 | -335.9 | L5 | L6 | 218.5 | 28 | 352 | 352 | 352 | | | |

### Caratteristiche del materiale

(Circolare 7 21-01-19 C8.5.I) Muratura in mattoni pieni e malta di calce LC2_Corti

| fb | fk | fvk0 | fmedio | τ0 | fv0 | μ | ϕ | fv,lim | E | G | FC |
|---|---|---|---|---|---|---|---|---|---|---|---|
| 60 | | | 34.5 | 0.9 | 2 | 0.58 | 0.77 | 3.25 | 32000 | 12800 | 1.2 |

### Verifica a pressoflessione nel piano secondo D.M. 17-01-18 NTC §7.8.2.2.1 in combinazioni non sismiche, γM = 3

| Comb. | Quota | N | M | σ0 | Mu | c.s. | Verifica |
|---|---|---|---|---|---|---|---|
| SLU 10 | 986 | -8081 | 25827 | 1.32 | 739691 | 28.64 | Si |
| SLU 10 | 1166 | -7562 | -80942 | 1.24 | 700801 | 8.658 | Si |

| Comb. | Quota | N | M | σ0 | Mu | c.s. | Verifica |
|---|---|---|---|---|---|---|---|
| SLU 73 | 986 | -10934 | 32632 | 1.79 | 932452 | 28.575 | Si |
| SLU 73 | 1166 | -10304 | -106150 | 1.68 | 892986 | 8.412 | Si |
| SLU 31 | 986 | -9028 | 40486 | 1.48 | 807635 | 19.949 | Si |
| SLU 31 | 1166 | -8840 | -94710 | 1.44 | 794467 | 8.388 | Si |
| SLU 40 | 986 | -9345 | 34222 | 1.53 | 829469 | 24.238 | Si |
| SLU 40 | 1166 | -9232 | -98387 | 1.51 | 821786 | 8.353 | Si |
| SLU 61 | 986 | -10303 | 11709 | 1.68 | 892925 | 76.259 | Si |
| SLU 61 | 1166 | -9419 | -96060 | 1.54 | 834524 | 8.688 | Si |
| SLU 52 | 986 | -9987 | 17973 | 1.63 | 872422 | 48.541 | Si |
| SLU 52 | 1166 | -9026 | -92383 | 1.48 | 807525 | 8.741 | Si |
| SLU 19 | 986 | -8398 | 19563 | 1.37 | 762839 | 38.993 | Si |
| SLU 19 | 1166 | -7954 | -84619 | 1.3 | 730319 | 8.631 | Si |
| SLU 39 | 986 | -9373 | 18745 | 1.53 | 831436 | 44.356 | Si |
| SLU 39 | 1166 | -9138 | -92647 | 1.49 | 815253 | 8.8 | Si |
| SLU 82 | 986 | -11250 | 26368 | 1.84 | 951640 | 36.091 | Si |
| SLU 82 | 1166 | -10697 | -109827 | 1.75 | 917787 | 8.357 | Si |
| SLU 81 | 986 | -11279 | 10890 | 1.84 | 953367 | 87.543 | Si |
| SLU 81 | 1166 | -10602 | -104088 | 1.73 | 911862 | 8.761 | Si |

Verifica a pressoflessione nel piano secondo D.M. 17-01-18 NTC §7.8.2.2.1 in combinazioni sismiche, γM = 2

| Comb. | Quota | N | M | σ0 | Mu | c.s. | Verifica |
|---|---|---|---|---|---|---|---|
| SLV 11 | 986 | -3717 | -128216 | 0.61 | 385900 | 3.01 | Si |
| SLV 11 | 1166 | -2620 | 96598 | 0.43 | 276209 | 2.859 | Si |
| SLV 1 | 986 | -9502 | 358722 | 1.55 | 906153 | 2.526 | Si |
| SLV 1 | 1166 | -11904 | -442005 | 1.95 | 1093398 | 2.474 | Si |
| SLV 16 | 986 | -6306 | -363796 | 1.03 | 630818 | 1.734 | Si |
| SLV 16 | 1166 | -2117 | 316395 | 0 | 0 | 0 | No, e>l/2 |
| SLV 14 | 986 | -8751 | -352389 | 1.43 | 844094 | 2.395 | Si |
| SLV 14 | 1166 | -4043 | 286301 | 0.66 | 417852 | 1.459 | Si |
| SLV 12 | 986 | -3717 | -128216 | 0.61 | 385900 | 3.01 | Si |
| SLV 12 | 1166 | -2620 | 96598 | 0.43 | 276209 | 2.859 | Si |
| SLV 2 | 986 | -9502 | 358722 | 1.55 | 906153 | 2.526 | Si |
| SLV 2 | 1166 | -11904 | -442005 | 1.95 | 1093398 | 2.474 | Si |
| SLV 3 | 986 | -7058 | 347315 | 1.15 | 698247 | 2.01 | Si |
| SLV 3 | 1166 | -9977 | -411911 | 1.63 | 944518 | 2.293 | Si |
| SLV 4 | 986 | -7058 | 347315 | 1.15 | 698247 | 2.01 | Si |
| SLV 4 | 1166 | -9977 | -411911 | 1.63 | 944518 | 2.293 | Si |
| SLV 15 | 986 | -6306 | -363796 | 1.03 | 630818 | 1.734 | Si |
| SLV 15 | 1166 | -2117 | 316395 | 0 | 0 | 0 | No, e>l/2 |
| SLV 13 | 986 | -8751 | -352389 | 1.43 | 844094 | 2.395 | Si |
| SLV 13 | 1166 | -4043 | 286301 | 0.66 | 417852 | 1.459 | Si |

Verifica a taglio nel piano secondo D.M. 17-01-18 (N.T.C.) §7.8.2.2.2 con rottura per scorrimento in combinazioni non sismiche, γM = 3

| Comb. | Quota | N | V par | M | σ0 | σN | l' | fvd | Vt scorr. | Vt fess.diag. | Vt,lim | c.s. | Verifica |
|---|---|---|---|---|---|---|---|---|---|---|---|---|---|
| SLU 31 | 986 | -9028 | 1967 | 40486 | | 1.48 | 218.5 | 0.75 | 4603 | | | 2.34 | Si |
| SLU 31 | 1166 | -8840 | 1918 | -94710 | | 1.44 | 218.5 | 0.75 | 4578 | | | 2.39 | Si |
| SLU 34 | 986 | -9550 | 2012 | 52850 | | 1.56 | 218.5 | 0.76 | 4672 | | | 2.32 | Si |
| SLU 34 | 1166 | -9426 | 1964 | -83597 | | 1.54 | 218.5 | 0.76 | 4656 | | | 2.37 | Si |
| SLU 42 | 986 | -9866 | 2033 | 46586 | | 1.61 | 218.5 | 0.77 | 4714 | | | 2.32 | Si |
| SLU 42 | 1166 | -9818 | 2005 | -87273 | | 1.6 | 218.5 | 0.77 | 4708 | | | 2.35 | Si |
| SLU 78 | 986 | -12203 | 2099 | 43846 | | 1.99 | 218.5 | 0.82 | 5026 | | | 2.39 | Si |
| SLU 78 | 1166 | -11662 | 2072 | -87465 | | 1.91 | 218.5 | 0.81 | 4954 | | | 2.39 | Si |
| SLU 75 | 986 | -11681 | 2053 | 31482 | | 1.91 | 218.5 | 0.81 | 4956 | | | 2.41 | Si |
| SLU 75 | 1166 | -11076 | 2025 | -98578 | | 1.81 | 218.5 | 0.8 | 4876 | | | 2.41 | Si |
| SLU 82 | 986 | -11250 | 2119 | 26368 | | 1.84 | 218.5 | 0.8 | 4899 | | | 2.31 | Si |
| SLU 82 | 1166 | -10697 | 2090 | -109827 | | 1.75 | 218.5 | 0.79 | 4825 | | | 2.31 | Si |
| SLU 84 | 986 | -11772 | 2164 | 38732 | | 1.92 | 218.5 | 0.81 | 4969 | | | 2.3 | Si |
| SLU 84 | 1166 | -11283 | 2136 | -98714 | | 1.84 | 218.5 | 0.8 | 4903 | | | 2.3 | Si |
| SLU 73 | 986 | -10934 | 2098 | 32632 | | 1.79 | 218.5 | 0.79 | 4857 | | | 2.31 | Si |
| SLU 73 | 1166 | -10304 | 2049 | -106150 | | 1.68 | 218.5 | 0.78 | 4773 | | | 2.33 | Si |
| SLU 76 | 986 | -11456 | 2143 | 44995 | | 1.87 | 218.5 | 0.81 | 4926 | | | 2.3 | Si |
| SLU 76 | 1166 | -10890 | 2095 | -95037 | | 1.78 | 218.5 | 0.79 | 4851 | | | 2.32 | Si |
| SLU 40 | 986 | -9345 | 1988 | 34222 | | 1.53 | 218.5 | 0.76 | 4645 | | | 2.34 | Si |
| SLU 40 | 1166 | -9232 | 1959 | -98387 | | 1.51 | 218.5 | 0.76 | 4630 | | | 2.36 | Si |

Verifica a taglio nel piano secondo D.M. 17-01-18 (N.T.C.) §7.8.2.2.2 con rottura per scorrimento in combinazioni sismiche, γM = 2

| Comb. | Quota | N | V par | M | σ0 | σN | l' | fvd | Vt scorr. | Vt fess.diag. | Vt,lim | c.s. | Verifica |
|---|---|---|---|---|---|---|---|---|---|---|---|---|---|
| SLV 16 | 986 | -6306 | -5601 | -363796 | | 1.46 | 154.68 | 1.12 | 4870 | | | 0.87 | No, Vu<V |
| SLV 16 | 1166 | -2117 | -4614 | 316395 | | 0 | 0 | 0.83 | 0 | | | 0 | No, Vu<V |
| SLV 15 | 986 | -6306 | -5601 | -363796 | | 1.46 | 154.68 | 1.12 | 4870 | | | 0.87 | No, Vu<V |
| SLV 15 | 1166 | -2117 | -4614 | 316395 | | 0 | 0 | 0.83 | 0 | | | 0 | No, Vu<V |
| SLV 4 | 986 | -7058 | 7563 | 347315 | | 1.4 | 180.12 | 1.11 | 5614 | | | 0.74 | No, Vu<V |
| SLV 4 | 1166 | -9977 | 6757 | -411911 | | 1.75 | 203.89 | 1.18 | 6753 | | | 1 | No, Vu<V |
| SLV 3 | 986 | -7058 | 7563 | 347315 | | 1.4 | 180.12 | 1.11 | 5614 | | | 0.74 | No, Vu<V |
| SLV 3 | 1166 | -9977 | 6757 | -411911 | | 1.75 | 203.89 | 1.18 | 6753 | | | 1 | No, Vu<V |
| SLV 2 | 986 | -9502 | 7766 | 358722 | | 1.58 | 214.5 | 1.15 | 6905 | | | 0.89 | No, Vu<V |
| SLV 2 | 1166 | -11904 | 6781 | -442005 | | 1.96 | 216.36 | 1.23 | 7429 | | | 1.1 | Si |
| SLV 13 | 986 | -8751 | -5398 | -352389 | | 1.51 | 206.94 | 1.14 | 6579 | | | 1.22 | Si |
| SLV 13 | 1166 | -4043 | -4590 | 286301 | | 1.25 | 115.33 | 1.08 | 3500 | | | 0.76 | No, Vu<V |
| SLD 4 | 986 | -7548 | 3852 | 147169 | | 1.23 | 218.5 | 1.08 | 6608 | | | 1.72 | Si |
| SLD 4 | 1166 | -8284 | 3509 | -212182 | | 1.35 | 218.5 | 1.1 | 6755 | | | 1.92 | Si |
| SLV 1 | 986 | -9502 | 7766 | 358722 | | 1.58 | 214.5 | 1.15 | 6905 | | | 0.89 | No, Vu<V |
| SLV 1 | 1166 | -11904 | 6781 | -442005 | | 1.96 | 216.36 | 1.23 | 7429 | | | 1.1 | Si |
| SLV 14 | 986 | -8751 | -5398 | -352389 | | 1.51 | 206.94 | 1.14 | 6579 | | | 1.22 | Si |
| SLV 14 | 1166 | -4043 | -4590 | 286301 | | 1.25 | 115.33 | 1.08 | 3500 | | | 0.76 | No, Vu<V |
| SLD 3 | 986 | -7548 | 3852 | 147169 | | 1.23 | 218.5 | 1.08 | 6608 | | | 1.72 | Si |
| SLD 3 | 1166 | -8284 | 3509 | -212182 | | 1.35 | 218.5 | 1.1 | 6755 | | | 1.92 | Si |

### Verifica a pressoflessione fuori piano D.M. 17-01-18 (N.T.C.)

quota 1072 Wa 0.05 denominatore 8 γM = 2

| Comb. | fd | Sa | σ0 | N | M | Mc | Coeff.s. | Verifica |
|---|---|---|---|---|---|---|---|---|
| SLV 11 | 14 | 0.46 | 0.54 | -3316 | 26855 | 44360 | 1.65 | Si |
| SLV 12 | 14 | 0.46 | 0.54 | -3316 | 26855 | 44360 | 1.65 | Si |
| SLV 15 | 14 | 0.46 | 0.64 | -3928 | 26855 | 52108 | 1.94 | Si |
| SLV 16 | 14 | 0.46 | 0.64 | -3928 | 26855 | 52108 | 1.94 | Si |
| SLV 7 | 14 | 0.46 | 0.8 | -4876 | 26855 | 63815 | 2.38 | Si |
| SLV 8 | 14 | 0.46 | 0.8 | -4876 | 26855 | 63815 | 2.38 | Si |
| SLV 14 | 14 | 0.46 | 0.98 | -6014 | 26855 | 77427 | 2.88 | Si |
| SLV 13 | 14 | 0.46 | 0.98 | -6014 | 26855 | 77427 | 2.88 | Si |
| SLV 4 | 14 | 0.46 | 1.49 | -9131 | 26855 | 112216 | 4.18 | Si |
| SLV 3 | 14 | 0.46 | 1.49 | -9131 | 26855 | 112216 | 4.18 | Si |

### Verifica dei meccanismi locali di collasso con analisi cinematica lineare

forza di aggancio al piano = 0 quota mezzeria = 1072 Wa = 0.05 Ta = 0.0739

| Comb. | N top | N base | V orto | α0 | M* | e* | a0* | aLim | Verifica |
|---|---|---|---|---|---|---|---|---|---|
| SLV 6 | -7968 | -13383 | -46 | 0.043 | 11.194 | 0.927 | 67.316 | 1733.979 | No |
| SLV 5 | -7968 | -13383 | -46 | 0.043 | 11.194 | 0.927 | 67.316 | 1733.979 | No |
| SLV 9 | -6895 | -11129 | -46 | 0.043 | 10.114 | 0.921 | 68.38 | 1733.979 | No |
| SLV 10 | -6895 | -11129 | -46 | 0.043 | 10.114 | 0.921 | 68.38 | 1733.979 | No |
| SLV 8 | -3999 | -4802 | 43 | 0.045 | 7.233 | 0.901 | 73.31 | 1733.979 | No |
| SLV 7 | -3999 | -4802 | 43 | 0.045 | 7.233 | 0.901 | 73.31 | 1733.979 | No |
| SLV 11 | -2925 | -2549 | 44 | 0.047 | 6.191 | 0.893 | 75.96 | 1733.979 | No |
| SLV 12 | -2925 | -2549 | 44 | 0.047 | 6.191 | 0.893 | 75.96 | 1733.979 | No |
| SLV 2 | -7832 | -13009 | -15 | 0.046 | 11.056 | 0.926 | 72.421 | 956.161 | No |
| SLV 1 | -7832 | -13009 | -15 | 0.046 | 11.056 | 0.926 | 72.421 | 956.161 | No |

### Tabella dei coefficienti di sicurezza minimi

| Stato limite | Coeff.s. | Comb. | Verifica |
|---|---|---|---|
| PF_SLU | 8.353 | SLU 40 | Si |
| V_SLU | 2.295 | SLU 84 | Si |
| PF_SLV | 0 | SLV 15 | No |
| V_SLV | 0 | SLV 15 | No |
| PFFP_SLV | 1.652 | SLV 11 | Si |
| R_SLV | 0.039 | SLV 5 | No |

## Maschio 143

Verifiche condotte secondo D.M. 17-01-18 (N.T.C.)

### Dati geometrici

| X ini. | Y ini. | X fin. | Y fin. | Quota i. | Quota.s | l | Sp. | h netta | h ini. | h fin. | a | a.s.,sx | a.s.,dx |
|---|---|---|---|---|---|---|---|---|---|---|---|---|---|
| -1936.8 | -335.9 | -2159.3 | -335.9 | L5 | L6 | 222.5 | 28 | 352 | 352 | 352 | | | |

### Caratteristiche del materiale

(Circolare 7 21-01-19 C8.5.I) Muratura in mattoni pieni e malta di calce LC2_Corti

| fb | fk | fvk0 | fmedio | τ0 | fv0 | μ | ϕ | fv,lim | E | G | FC |
|---|---|---|---|---|---|---|---|---|---|---|---|
| 60 | | | 34.5 | 0.9 | 2 | 0.58 | 0.77 | 3.25 | 32000 | 12800 | 1.2 |

### Verifica a pressoflessione nel piano secondo D.M. 17-01-18 NTC §7.8.2.2.1 in combinazioni non sismiche, γM = 3

| Comb. | Quota | N | M | σ0 | Mu | c.s. | Verifica |
|---|---|---|---|---|---|---|---|
| SLU 29 | 1096 | -7787 | -35459 | 1.25 | 733405 | 20.683 | Si |
| SLU 29 | 1176 | -6577 | -79935 | 1.06 | 636874 | 7.967 | Si |
| SLU 49 | 1096 | -8556 | -42985 | 1.37 | 791386 | 18.411 | Si |
| SLU 49 | 1176 | -7049 | -84943 | 1.13 | 675304 | 7.95 | Si |
| SLU 50 | 1096 | -8531 | -42913 | 1.37 | 789559 | 18.399 | Si |
| SLU 50 | 1176 | -6988 | -85740 | 1.12 | 670397 | 7.819 | Si |
| SLU 30 | 1096 | -7388 | -31952 | 1.19 | 702268 | 21.979 | Si |
| SLU 30 | 1176 | -6238 | -77363 | 1 | 608684 | 7.868 | Si |
| SLU 8 | 1096 | -6810 | -30521 | 1.09 | 655935 | 21.491 | Si |
| SLU 8 | 1176 | -5633 | -71510 | 0.9 | 557129 | 7.791 | Si |
| SLU 9 | 1096 | -6411 | -27014 | 1.03 | 623086 | 23.065 | Si |
| SLU 9 | 1176 | -5294 | -68938 | 0.85 | 527536 | 7.652 | Si |
| SLU 7 | 1096 | -6835 | -30594 | 1.1 | 657949 | 21.506 | Si |
| SLU 7 | 1176 | -5694 | -70714 | 0.91 | 562398 | 7.953 | Si |
| SLU 72 | 1096 | -9110 | -44344 | 1.46 | 831527 | 18.752 | Si |
| SLU 72 | 1176 | -7593 | -91593 | 1.22 | 718358 | 7.843 | Si |
| SLU 71 | 1096 | -9509 | -47851 | 1.53 | 859651 | 17.965 | Si |
| SLU 71 | 1176 | -7932 | -94165 | 1.27 | 744534 | 7.907 | Si |
| SLU 51 | 1096 | -8132 | -39405 | 1.31 | 759724 | 19.28 | Si |
| SLU 51 | 1176 | -6649 | -83168 | 1.07 | 642818 | 7.729 | Si |

### Verifica a pressoflessione nel piano secondo D.M. 17-01-18 NTC §7.8.2.2.1 in combinazioni sismiche, γM = 2

| Comb. | Quota | N | M | σ0 | Mu | c.s. | Verifica |
|---|---|---|---|---|---|---|---|
| SLD 1 | 1096 | -6046 | 4493 | 0.97 | 619223 | 137.814 | Si |
| SLD 1 | 1176 | -5610 | -240055 | 0.9 | 578125 | 2.408 | Si |
| SLV 2 | 1096 | -4214 | 78742 | 0.68 | 442885 | 5.624 | Si |
| SLV 2 | 1176 | -4926 | -481806 | 0.79 | 512531 | 1.064 | Si |
| SLV 5 | 1096 | -7143 | 45009 | 1.15 | 720054 | 15.998 | Si |
| SLV 5 | 1176 | -7209 | -311365 | 1.16 | 726009 | 2.332 | Si |
| SLD 2 | 1096 | -6046 | 4493 | 0.97 | 619223 | 137.814 | Si |
| SLD 2 | 1176 | -5610 | -240055 | 0.9 | 578125 | 2.408 | Si |
| SLV 16 | 1096 | -10630 | -180831 | 1.71 | 1017444 | 5.627 | Si |

| Comb. | Quota | N | M | σ0 | Mu | c.s. | Verifica |
|---|---|---|---|---|---|---|---|
| SLV 16 | 1176 | -7353 | 360726 | 1.18 | 738962 | 2.049 | Si |
| SLV 6 | 1096 | -7143 | 45009 | 1.15 | 720054 | 15.998 | Si |
| SLV 6 | 1176 | -7209 | -311365 | 1.16 | 726009 | 2.332 | Si |
| SLV 4 | 1096 | -3764 | 41082 | 0.6 | 398050 | 9.689 | Si |
| SLV 4 | 1176 | -3981 | -399755 | 0.64 | 419689 | 1.05 | Si |
| SLV 3 | 1096 | -3764 | 41082 | 0.6 | 398050 | 9.689 | Si |
| SLV 3 | 1176 | -3981 | -399755 | 0.64 | 419689 | 1.05 | Si |
| SLV 1 | 1096 | -4214 | 78742 | 0.68 | 442885 | 5.624 | Si |
| SLV 1 | 1176 | -4926 | -481806 | 0.79 | 512531 | 1.064 | Si |
| SLV 15 | 1096 | -10630 | -180831 | 1.71 | 1017444 | 5.627 | Si |
| SLV 15 | 1176 | -7353 | 360726 | 1.18 | 738962 | 2.049 | Si |

## Verifica a taglio nel piano secondo D.M. 17-01-18 (N.T.C.) §7.8.2.2.2 con rottura per scorrimento in combinazioni non sismiche, γM = 3

| Comb. | Quota | N | V par | M | σ0 | σN | l' | fvd | Vt scorr. | Vt fess.diag. | Vt,lim | c.s. | Verifica |
|---|---|---|---|---|---|---|---|---|---|---|---|---|---|
| SLU 52 | 1096 | -8917 | -594 | -62890 | | 1.43 | 222.5 | 0.75 | 4650 | | | 7.83 | Si |
| SLU 52 | 1176 | -7343 | -518 | -70759 | | 1.18 | 222.5 | 0.71 | 4440 | | | 8.57 | Si |
| SLU 18 | 1096 | -8292 | -672 | -60369 | | 1.33 | 222.5 | 0.73 | 4567 | | | 6.8 | Si |
| SLU 18 | 1176 | -6963 | -568 | -62426 | | 1.12 | 222.5 | 0.7 | 4390 | | | 7.73 | Si |
| SLU 43 | 1096 | -8577 | -628 | -59341 | | 1.38 | 222.5 | 0.74 | 4605 | | | 7.33 | Si |
| SLU 43 | 1176 | -6951 | -457 | -71289 | | 1.12 | 222.5 | 0.7 | 4388 | | | 9.61 | Si |
| SLU 64 | 1096 | -9555 | -606 | -64279 | | 1.53 | 222.5 | 0.76 | 4735 | | | 7.81 | Si |
| SLU 64 | 1176 | -7895 | -476 | -79714 | | 1.27 | 222.5 | 0.72 | 4514 | | | 9.48 | Si |
| SLU 19 | 1096 | -7892 | -569 | -56862 | | 1.27 | 222.5 | 0.72 | 4513 | | | 7.93 | Si |
| SLU 19 | 1176 | -6624 | -516 | -59854 | | 1.06 | 222.5 | 0.7 | 4344 | | | 8.42 | Si |
| SLU 82 | 1096 | -10591 | -698 | -74192 | | 1.7 | 222.5 | 0.78 | 4873 | | | 6.98 | Si |
| SLU 82 | 1176 | -8923 | -636 | -82509 | | 1.43 | 222.5 | 0.75 | 4651 | | | 7.32 | Si |
| SLU 60 | 1096 | -10013 | -823 | -72761 | | 1.61 | 222.5 | 0.77 | 4796 | | | 5.83 | Si |
| SLU 60 | 1176 | -8318 | -668 | -76655 | | 1.34 | 222.5 | 0.73 | 4570 | | | 6.84 | Si |
| SLU 81 | 1096 | -10991 | -801 | -77699 | | 1.76 | 222.5 | 0.79 | 4927 | | | 6.15 | Si |
| SLU 81 | 1176 | -9262 | -688 | -85080 | | 1.49 | 222.5 | 0.75 | 4696 | | | 6.83 | Si |
| SLU 39 | 1096 | -9269 | -650 | -65307 | | 1.49 | 222.5 | 0.75 | 4697 | | | 7.23 | Si |
| SLU 39 | 1176 | -7907 | -587 | -70851 | | 1.27 | 222.5 | 0.72 | 4515 | | | 7.69 | Si |
| SLU 61 | 1096 | -9614 | -720 | -69253 | | 1.54 | 222.5 | 0.76 | 4743 | | | 6.58 | Si |
| SLU 61 | 1176 | -7979 | -616 | -74084 | | 1.28 | 222.5 | 0.73 | 4525 | | | 7.34 | Si |

## Verifica a taglio nel piano secondo D.M. 17-01-18 (N.T.C.) §7.8.2.2.2 con rottura per scorrimento in combinazioni sismiche, γM = 2

| Comb. | Quota | N | V par | M | σ0 | σN | l' | fvd | Vt scorr. | Vt fess.diag. | Vt,lim | c.s. | Verifica |
|---|---|---|---|---|---|---|---|---|---|---|---|---|---|
| SLV 1 | 1096 | -4214 | 9182 | 78742 | | 0.68 | 222.5 | 0.97 | 6035 | | | 0.66 | No, Vu<V |
| SLV 1 | 1176 | -4926 | 7385 | -481806 | | 4.36 | 40.31 | 1.63 | 1834 | | | 0.25 | No, Vu<V |
| SLV 11 | 1096 | -7702 | -5645 | -147097 | | 1.24 | 222.5 | 1.08 | 6732 | | | 1.19 | Si |
| SLV 11 | 1176 | -5070 | -4649 | 190284 | | 0.82 | 221.15 | 1 | 6174 | | | 1.33 | Si |
| SLV 15 | 1096 | -10630 | -10202 | -180831 | | 1.71 | 222.5 | 1.17 | 7318 | | | 0.72 | No, Vu<V |
| SLV 15 | 1176 | -7353 | -8193 | 360726 | | 1.41 | 186.57 | 1.11 | 5824 | | | 0.71 | No, Vu<V |
| SLV 3 | 1096 | -3764 | 7713 | 41082 | | 0.6 | 222.5 | 0.95 | 5944 | | | 0.77 | No, Vu<V |
| SLV 3 | 1176 | -3981 | 6127 | -399755 | | 4.38 | 32.48 | 1.63 | 1478 | | | 0.24 | No, Vu<V |
| SLV 4 | 1096 | -3764 | 7713 | 41082 | | 0.6 | 222.5 | 0.95 | 5944 | | | 0.77 | No, Vu<V |
| SLV 4 | 1176 | -3981 | 6127 | -399755 | | 4.38 | 32.48 | 1.63 | 1478 | | | 0.24 | No, Vu<V |
| SLV 12 | 1096 | -7702 | -5645 | -147097 | | 1.24 | 222.5 | 1.08 | 6732 | | | 1.19 | Si |
| SLV 12 | 1176 | -5070 | -4649 | 190284 | | 0.82 | 221.15 | 1 | 6174 | | | 1.33 | Si |
| SLV 16 | 1096 | -10630 | -10202 | -180831 | | 1.71 | 222.5 | 1.17 | 7318 | | | 0.72 | No, Vu<V |
| SLV 16 | 1176 | -7353 | -8193 | 360726 | | 1.41 | 186.57 | 1.11 | 5824 | | | 0.71 | No, Vu<V |
| SLV 14 | 1096 | -11080 | -8733 | -143171 | | 1.78 | 222.5 | 1.19 | 7408 | | | 0.85 | No, Vu<V |
| SLV 14 | 1176 | -8298 | -6935 | 278674 | | 1.33 | 222.5 | 1.1 | 6851 | | | 0.99 | No, Vu<V |
| SLV 2 | 1096 | -4214 | 9182 | 78742 | | 0.68 | 222.5 | 0.97 | 6035 | | | 0.66 | No, Vu<V |
| SLV 2 | 1176 | -4926 | 7385 | -481806 | | 4.36 | 40.31 | 1.63 | 1834 | | | 0.25 | No, Vu<V |
| SLV 13 | 1096 | -11080 | -8733 | -143171 | | 1.78 | 222.5 | 1.19 | 7408 | | | 0.85 | No, Vu<V |
| SLV 13 | 1176 | -8298 | -6935 | 278674 | | 1.33 | 222.5 | 1.1 | 6851 | | | 0.99 | No, Vu<V |

## Verifica a pressoflessione fuori piano D.M. 17-01-18 (N.T.C.)

quota 1072 Wa 0.05 denominatore 8 γM = 2

| Comb. | fd | Sa | σ0 | N | M | Mc | Coeff.s. | Verifica |
|---|---|---|---|---|---|---|---|---|
| SLV 3 | 14 | 0.46 | 0.78 | -4842 | 27346 | 63475 | 2.32 | Si |
| SLV 4 | 14 | 0.46 | 0.78 | -4842 | 27346 | 63475 | 2.32 | Si |
| SLV 8 | 14 | 0.46 | 0.86 | -5359 | 27346 | 69746 | 2.55 | Si |
| SLV 7 | 14 | 0.46 | 0.86 | -5359 | 27346 | 69746 | 2.55 | Si |
| SLV 2 | 14 | 0.46 | 0.88 | -5503 | 27346 | 71468 | 2.61 | Si |
| SLV 1 | 14 | 0.46 | 0.88 | -5503 | 27346 | 71468 | 2.61 | Si |
| SLV 11 | 14 | 0.46 | 1.04 | -6463 | 27346 | 82803 | 3.03 | Si |
| SLV 12 | 14 | 0.46 | 1.04 | -6463 | 27346 | 82803 | 3.03 | Si |
| SLV 6 | 14 | 0.46 | 1.21 | -7562 | 27346 | 95347 | 3.49 | Si |
| SLV 5 | 14 | 0.46 | 1.21 | -7562 | 27346 | 95347 | 3.49 | Si |

## Verifica dei meccanismi locali di collasso con analisi cinematica lineare

forza di aggancio al piano = 0 quota mezzeria = 1072 Wa = 0.05 Ta = 0.0739

| Comb. | N top | N base | V orto | α0 | M* | e* | a0* | aLim | Verifica |
|---|---|---|---|---|---|---|---|---|---|
| SLV 7 | -3290 | -4863 | 152 | 0.026 | 6.603 | 0.895 | 41.8 | 1733.979 | No |
| SLV 8 | -3290 | -4863 | 152 | 0.026 | 6.603 | 0.895 | 41.8 | 1733.979 | No |
| SLV 9 | -6255 | -10084 | -147 | 0.031 | 9.531 | 0.916 | 49.828 | 1733.979 | No |
| SLV 10 | -6255 | -10084 | -147 | 0.031 | 9.531 | 0.916 | 49.828 | 1733.979 | No |
| SLV 11 | -4642 | -4990 | 103 | 0.036 | 7.926 | 0.905 | 57.861 | 1733.979 | No |
| SLV 12 | -4642 | -4990 | 103 | 0.036 | 7.926 | 0.905 | 57.861 | 1733.979 | No |
| SLV 6 | -4902 | -9957 | -98 | 0.037 | 8.184 | 0.907 | 59.154 | 1733.979 | No |
| SLV 5 | -4902 | -9957 | -98 | 0.037 | 8.184 | 0.907 | 59.154 | 1733.979 | No |
| SLV 3 | -2276 | -6496 | 122 | 0.03 | 5.642 | 0.889 | 48.258 | 956.161 | No |
| SLV 4 | -2276 | -6496 | 122 | 0.03 | 5.642 | 0.889 | 48.258 | 956.161 | No |

Tabella dei coefficienti di sicurezza minimi

| Stato limite | Coeff.s. | Comb. | Verifica |
|---|---|---|---|
| PF_SLU | 7.652 | SLU 9 | Si |
| V_SLU | 5.829 | SLU 60 | Si |
| PF_SLV | 1.05 | SLV 3 | Si |
| V_SLV | 0.241 | SLV 3 | No |
| PFFP_SLV | 2.321 | SLV 3 | Si |
| R_SLV | 0.024 | SLV 7 | No |

## Maschio 144

Verifiche condotte secondo D.M. 17-01-18 (N.T.C.)

### Dati geometrici

| X ini. | Y ini. | X fin. | Y fin. | Quota i. | Quota.s | l | Sp. | h netta | h ini. | h fin. | a | a.s.,sx | a.s.,dx |
|---|---|---|---|---|---|---|---|---|---|---|---|---|---|
| -1826.3 | -335.9 | -1886.8 | -335.9 | L5 | L6 | 60.5 | 28 | 352 | 352 | 352 | | | |

### Caratteristiche del materiale

(Circolare 7 21-01-19 C8.5.I) Muratura in mattoni pieni e malta di calce LC2_Corti

| fb | fk | fvk0 | fmedio | τ0 | fv0 | μ | ϕ | fv,lim | E | G | FC |
|---|---|---|---|---|---|---|---|---|---|---|---|
| 60 | | | 34.5 | 0.9 | 2 | 0.58 | 0.77 | 3.25 | 32000 | 12800 | 1.2 |

### Verifica a pressoflessione nel piano secondo D.M. 17-01-18 NTC §7.8.2.2.1 in combinazioni non sismiche, γM = 3

| Comb. | Quota | N | M | σ0 | Mu | c.s. | Verifica |
|---|---|---|---|---|---|---|---|
| SLU 60 | 1096 | -3601 | 6638 | 2.13 | 80505 | 12.128 | Si |
| SLU 60 | 1176 | -3153 | 16525 | 1.86 | 73583 | 4.453 | Si |
| SLU 52 | 1096 | -3084 | 5713 | 1.82 | 72434 | 12.679 | Si |
| SLU 52 | 1176 | -2624 | 15633 | 1.55 | 64282 | 4.112 | Si |
| SLU 81 | 1096 | -3939 | 7077 | 2.33 | 85138 | 12.031 | Si |
| SLU 81 | 1176 | -3491 | 18065 | 2.06 | 78885 | 4.367 | Si |
| SLU 19 | 1096 | -2724 | 4003 | 1.61 | 66142 | 16.523 | Si |
| SLU 19 | 1176 | -2406 | 14515 | 1.42 | 60082 | 4.139 | Si |
| SLU 40 | 1096 | -3062 | 4442 | 1.81 | 72073 | 16.227 | Si |
| SLU 40 | 1176 | -2744 | 16056 | 1.62 | 66492 | 4.141 | Si |
| SLU 10 | 1096 | -2440 | 3924 | 1.44 | 60766 | 15.486 | Si |
| SLU 10 | 1176 | -2103 | 13312 | 1.24 | 53913 | 4.05 | Si |
| SLU 31 | 1096 | -2778 | 4362 | 1.64 | 67118 | 15.386 | Si |
| SLU 31 | 1176 | -2441 | 14852 | 1.44 | 60772 | 4.092 | Si |
| SLU 82 | 1096 | -3705 | 6231 | 2.19 | 81988 | 13.159 | Si |
| SLU 82 | 1176 | -3265 | 18377 | 1.93 | 75396 | 4.103 | Si |
| SLU 61 | 1096 | -3368 | 5792 | 1.99 | 77009 | 13.296 | Si |
| SLU 61 | 1176 | -2927 | 16837 | 1.73 | 69759 | 4.143 | Si |
| SLU 73 | 1096 | -3421 | 6151 | 2.02 | 77833 | 12.653 | Si |
| SLU 73 | 1176 | -2962 | 17173 | 1.75 | 70369 | 4.098 | Si |

### Verifica a pressoflessione nel piano secondo D.M. 17-01-18 NTC §7.8.2.2.1 in combinazioni sismiche, γM = 2

| Comb. | Quota | N | M | σ0 | Mu | c.s. | Verifica |
|---|---|---|---|---|---|---|---|
| SLV 2 | 1096 | -5695 | 92899 | 3.36 | 124875 | 1.344 | Si |
| SLV 2 | 1176 | -2291 | -75815 | 0 | 0 | 0 | No, e>l/2 |
| SLV 4 | 1096 | -4960 | 81792 | 2.93 | 114086 | 1.395 | Si |
| SLV 4 | 1176 | -2887 | -71520 | 1.7 | 75148 | 1.051 | Si |
| SLV 14 | 1096 | -464 | -69259 | 0 | 0 | 0 | No, e>l/2 |
| SLV 14 | 1176 | -1758 | 93278 | 0 | 0 | 0 | No, e>l/2 |
| SLV 3 | 1096 | -4960 | 81792 | 2.93 | 114086 | 1.395 | Si |
| SLV 3 | 1176 | -2887 | -71520 | 1.7 | 75148 | 1.051 | Si |
| SLV 1 | 1096 | -5695 | 92899 | 3.36 | 124875 | 1.344 | Si |
| SLV 1 | 1176 | -2291 | -75815 | 0 | 0 | 0 | No, e>l/2 |
| SLV 11 | 1096 | -702 | -36568 | 0 | 0 | 0 | No, e>l/2 |
| SLV 11 | 1176 | -3235 | 43402 | 1.91 | 82571 | 1.902 | Si |
| SLV 15 | 1096 | 271 | -80365 | 0 | 0 | 0 | No, Trazione |
| SLV 15 | 1176 | -2353 | 97573 | 0 | 0 | 0 | No, e>l/2 |
| SLV 12 | 1096 | -702 | -36568 | 0 | 0 | 0 | No, e>l/2 |
| SLV 12 | 1176 | -3235 | 43402 | 1.91 | 82571 | 1.902 | Si |
| SLV 16 | 1096 | 271 | -80365 | 0 | 0 | 0 | No, Trazione |
| SLV 16 | 1176 | -2353 | 97573 | 0 | 0 | 0 | No, e>l/2 |
| SLV 13 | 1096 | -464 | -69259 | 0 | 0 | 0 | No, e>l/2 |
| SLV 13 | 1176 | -1758 | 93278 | 0 | 0 | 0 | No, e>l/2 |

### Verifica a taglio nel piano secondo D.M. 17-01-18 (N.T.C.) §7.8.2.2.2 con rottura per scorrimento in combinazioni non sismiche, γM = 3

| Comb. | Quota | N | V par | M | σ0 | σN | l' | fvd | Vt scorr. | Vt fess.diag. | Vt,lim | c.s. | Verifica |
|---|---|---|---|---|---|---|---|---|---|---|---|---|---|
| SLU 8 | 1096 | -2806 | 395 | 12756 | | 1.66 | 60.5 | 0.78 | 1315 | | | 3.33 | Si |
| SLU 8 | 1176 | -2234 | -146 | 1757 | | 1.32 | 60.5 | 0.73 | 1239 | | | 8.5 | Si |
| SLU 29 | 1096 | -3144 | 402 | 13195 | | 1.86 | 60.5 | 0.8 | 1360 | | | 3.39 | Si |
| SLU 29 | 1176 | -2572 | -174 | 3298 | | 1.52 | 60.5 | 0.76 | 1284 | | | 7.37 | Si |
| SLU 72 | 1096 | -3554 | 394 | 14138 | | 2.1 | 60.5 | 0.84 | 1415 | | | 3.59 | Si |
| SLU 72 | 1176 | -2868 | -190 | 5931 | | 1.69 | 60.5 | 0.78 | 1323 | | | 6.98 | Si |
| SLU 51 | 1096 | -3216 | 388 | 13700 | | 1.9 | 60.5 | 0.81 | 1370 | | | 3.53 | Si |
| SLU 51 | 1176 | -2530 | -161 | 4390 | | 1.49 | 60.5 | 0.75 | 1278 | | | 7.94 | Si |
| SLU 69 | 1096 | -3890 | 404 | 14537 | | 2.3 | 60.5 | 0.86 | 1460 | | | 3.62 | Si |
| SLU 69 | 1176 | -3209 | -218 | 7161 | | 1.89 | 60.5 | 0.81 | 1369 | | | 6.27 | Si |
| SLU 6 | 1096 | -2909 | 365 | 12310 | | 1.72 | 60.5 | 0.78 | 1329 | | | 3.64 | Si |
| SLU 6 | 1176 | -2350 | -153 | 3299 | | 1.39 | 60.5 | 0.74 | 1254 | | | 8.2 | Si |
| SLU 71 | 1096 | -3787 | 434 | 14984 | | 2.24 | 60.5 | 0.85 | 1446 | | | 3.33 | Si |
| SLU 71 | 1176 | -3094 | -211 | 5619 | | 1.83 | 60.5 | 0.8 | 1354 | | | 6.42 | Si |
| SLU 50 | 1096 | -3450 | 427 | 14545 | | 2.04 | 60.5 | 0.83 | 1401 | | | 3.28 | Si |

| Comb. | Quota | N | V par | M | σ0 | σN | l' | fvd | Vt scorr. | Vt fess.diag. | Vt,lim | c.s. | Verifica |
|---|---|---|---|---|---|---|---|---|---|---|---|---|---|
| SLU 50 | 1176 | -2756 | -182 | 4079 | | 1.63 | 60.5 | 0.77 | 1309 | | | 7.17 | Si |
| SLU 48 | 1096 | -3552 | 397 | 14099 | | 2.1 | 60.5 | 0.84 | 1415 | | | 3.56 | Si |
| SLU 48 | 1176 | -2871 | -190 | 5620 | | 1.7 | 60.5 | 0.78 | 1324 | | | 6.98 | Si |
| SLU 9 | 1096 | -2573 | 356 | 11910 | | 1.52 | 60.5 | 0.76 | 1284 | | | 3.61 | Si |
| SLU 9 | 1176 | -2008 | -124 | 2069 | | 1.19 | 60.5 | 0.71 | 1209 | | | 9.72 | Si |

### Verifica a taglio nel piano secondo D.M. 17-01-18 (N.T.C.) §7.8.2.2.2 con rottura per scorrimento in combinazioni sismiche, γM = 2

| Comb. | Quota | N | V par | M | σ0 | σN | l' | fvd | Vt scorr. | Vt fess.diag. | Vt,lim | c.s. | Verifica |
|---|---|---|---|---|---|---|---|---|---|---|---|---|---|
| SLV 16 | 1096 | 271 | -3219 | -80365 | | 0 | 0 | 0.83 | 0 | | | 0 | No, Vu<V |
| SLV 16 | 1176 | -2353 | -1017 | 97573 | | 0 | 0 | 0.83 | 0 | | | 0 | No, Vu<V |
| SLV 2 | 1096 | -5695 | 3419 | 92899 | | 4.86 | 41.81 | 1.63 | 1903 | | | 0.56 | No, Vu<V |
| SLV 2 | 1176 | -2291 | 661 | -75815 | | 0 | 0 | 0.83 | 0 | | | 0 | No, Vu<V |
| SLV 14 | 1096 | -464 | -2855 | -69259 | | 0 | 0 | 0.83 | 0 | | | 0 | No, Vu<V |
| SLV 14 | 1176 | -1758 | -659 | 93278 | | 0 | 0 | 0.83 | 0 | | | 0 | No, Vu<V |
| SLV 3 | 1096 | -4960 | 3055 | 81792 | | 4.29 | 41.28 | 1.63 | 1878 | | | 0.61 | No, Vu<V |
| SLV 3 | 1176 | -2887 | 303 | -71520 | | 6.28 | 16.43 | 1.63 | 747 | | | 2.47 | Si |
| SLV 13 | 1096 | -464 | -2855 | -69259 | | 0 | 0 | 0.83 | 0 | | | 0 | No, Vu<V |
| SLV 13 | 1176 | -1758 | -659 | 93278 | | 0 | 0 | 0.83 | 0 | | | 0 | No, Vu<V |
| SLV 1 | 1096 | -5695 | 3419 | 92899 | | 4.86 | 41.81 | 1.63 | 1903 | | | 0.56 | No, Vu<V |
| SLV 1 | 1176 | -2291 | 661 | -75815 | | 0 | 0 | 0.83 | 0 | | | 0 | No, Vu<V |
| SLV 12 | 1096 | -702 | -1448 | -36568 | | 0 | 0 | 0.83 | 0 | | | 0 | No, Vu<V |
| SLV 12 | 1176 | -3235 | -974 | 43402 | | 2.29 | 50.51 | 1.29 | 1826 | | | 1.87 | Si |
| SLV 11 | 1096 | -702 | -1448 | -36568 | | 0 | 0 | 0.83 | 0 | | | 0 | No, Vu<V |
| SLV 11 | 1176 | -3235 | -974 | 43402 | | 2.29 | 50.51 | 1.29 | 1826 | | | 1.87 | Si |
| SLV 15 | 1096 | 271 | -3219 | -80365 | | 0 | 0 | 0.83 | 0 | | | 0 | No, Vu<V |
| SLV 15 | 1176 | -2353 | -1017 | 97573 | | 0 | 0 | 0.83 | 0 | | | 0 | No, Vu<V |
| SLV 4 | 1096 | -4960 | 3055 | 81792 | | 4.29 | 41.28 | 1.63 | 1878 | | | 0.61 | No, Vu<V |
| SLV 4 | 1176 | -2887 | 303 | -71520 | | 6.28 | 16.43 | 1.63 | 747 | | | 2.47 | Si |

### Verifica a pressoflessione fuori piano D.M. 17-01-18 (N.T.C.)

quota 1072 Wa 0.05 denominatore 8 γM = 2

| Comb. | fd | Sa | σ0 | N | M | Mc | Coeff.s. | Verifica |
|---|---|---|---|---|---|---|---|---|
| SLV 11 | 14 | 0.46 | 0.36 | -606 | 7436 | 8239 | 1.11 | Si |
| SLV 12 | 14 | 0.46 | 0.36 | -606 | 7436 | 8239 | 1.11 | Si |
| SLV 15 | 14 | 0.46 | 0.5 | -852 | 7436 | 11437 | 1.54 | Si |
| SLV 16 | 14 | 0.46 | 0.5 | -852 | 7436 | 11437 | 1.54 | Si |
| SLV 7 | 14 | 0.46 | 0.69 | -1169 | 7436 | 15444 | 2.08 | Si |
| SLV 8 | 14 | 0.46 | 0.69 | -1169 | 7436 | 15444 | 2.08 | Si |
| SLV 14 | 14 | 0.46 | 0.96 | -1626 | 7436 | 20971 | 2.82 | Si |
| SLV 13 | 14 | 0.46 | 0.96 | -1626 | 7436 | 20971 | 2.82 | Si |
| SLV 4 | 14 | 0.46 | 1.61 | -2728 | 7436 | 33164 | 4.46 | Si |
| SLV 3 | 14 | 0.46 | 1.61 | -2728 | 7436 | 33164 | 4.46 | Si |

### Verifica dei meccanismi locali di collasso con analisi cinematica lineare

forza di aggancio al piano = 0 quota mezzeria = 1072 Wa = 0.05 Ta = 0.0739

| Comb. | N top | N base | V orto | α0 | M* | e* | a0* | aLim | Verifica |
|---|---|---|---|---|---|---|---|---|---|
| SLV 16 | -340 | -2448 | -78 | 0 | 1.287 | 0.894 | 0 | 956.161 | No |
| SLV 14 | -199 | -2556 | -70 | 0 | 1.181 | 0.91 | 0 | 956.161 | No |
| SLV 13 | -199 | -2556 | -70 | 0 | 1.181 | 0.91 | 0 | 956.161 | No |
| SLV 15 | -340 | -2448 | -78 | 0 | 1.287 | 0.894 | 0 | 956.161 | No |
| SLV 12 | -1192 | -1922 | -36 | 0.031 | 2.086 | 0.903 | 49.956 | 1733.979 | No |
| SLV 11 | -1192 | -1922 | -36 | 0.031 | 2.086 | 0.903 | 49.956 | 1733.979 | No |
| SLV 6 | -1315 | -1942 | 32 | 0.034 | 2.207 | 0.907 | 54.109 | 1733.979 | No |
| SLV 5 | -1315 | -1942 | 32 | 0.034 | 2.207 | 0.907 | 54.109 | 1733.979 | No |
| SLV 2 | -2167 | -1416 | 74 | 0.02 | 3.06 | 0.926 | 31.847 | 956.161 | No |
| SLV 1 | -2167 | -1416 | 74 | 0.02 | 3.06 | 0.926 | 31.847 | 956.161 | No |

### Tabella dei coefficienti di sicurezza minimi

| Stato limite | Coeff.s. | Comb. | Verifica |
|---|---|---|---|
| PF_SLU | 4.05 | SLU 10 | Si |
| V_SLU | 3.278 | SLU 50 | Si |
| PF_SLV | 0 | SLV 16 | No |
| V_SLV | 0 | SLV 1 | No |
| PFFP_SLV | 1.108 | SLV 11 | Si |
| R_SLV | 0 | SLV 13 | No |

## Maschio 145

Verifiche condotte secondo D.M. 17-01-18 (N.T.C.)

### Dati geometrici

| X ini. | Y ini. | X fin. | Y fin. | Quota i. | Quota.s | l | Sp. | h netta | h ini. | h fin. | a | a.s.,sx | a.s.,dx |
|---|---|---|---|---|---|---|---|---|---|---|---|---|---|
| -1961.8 | 104.6 | -1961.8 | 581.1 | L5 | L6 | 476.5 | 14 | 352 | 352 | 352 | | | |

### Caratteristiche del materiale

(Circolare 7 21-01-19 C8.5.I) Muratura in mattoni pieni e malta di calce LC2_Corti

| fb | fk | fvk0 | fmedio | τ0 | fv0 | μ | ϕ | fv,lim | E | G | FC |
|---|---|---|---|---|---|---|---|---|---|---|---|
| 60 | | | 34.5 | 0.9 | 2 | 0.58 | 0.77 | 3.25 | 32000 | 12800 | 1.2 |

### Verifica a pressoflessione nel piano secondo D.M. 17-01-18 NTC §7.8.2.2.1 in combinazioni non sismiche, γM = 3

| Comb. | Quota | N | M | σ0 | Mu | c.s. | Verifica |
|---|---|---|---|---|---|---|---|
| SLU 30 | 896 | -23599 | 369692 | 3.54 | 3180922 | 8.604 | Si |
| SLU 30 | 1248 | -16470 | 744587 | 2.47 | 2734832 | 3.673 | Si |

| Comb. | Quota | N | M | σ0 | Mu | c.s. | Verifica |
|---|---|---|---|---|---|---|---|
| SLU 8 | 896 | -20552 | 343001 | 3.08 | 3044793 | 8.877 | Si |
| SLU 8 | 1248 | -14347 | 653908 | 2.15 | 2515833 | 3.847 | Si |
| SLU 27 | 896 | -23452 | 322744 | 3.52 | 3176237 | 9.841 | Si |
| SLU 27 | 1248 | -16164 | 683817 | 2.42 | 2705682 | 3.957 | Si |
| SLU 28 | 896 | -23454 | 310169 | 3.52 | 3176289 | 10.24 | Si |
| SLU 28 | 1248 | -16193 | 671699 | 2.43 | 2708495 | 4.032 | Si |
| SLU 37 | 896 | -25199 | 310470 | 3.78 | 3219822 | 10.371 | Si |
| SLU 37 | 1248 | -17028 | 724852 | 2.55 | 2785787 | 3.843 | Si |
| SLU 9 | 896 | -20554 | 330427 | 3.08 | 3044887 | 9.215 | Si |
| SLU 9 | 1248 | -14376 | 641790 | 2.15 | 2519111 | 3.925 | Si |
| SLU 71 | 896 | -26746 | 336562 | 4.01 | 3236090 | 9.615 | Si |
| SLU 71 | 1248 | -18036 | 736019 | 2.7 | 2870956 | 3.901 | Si |
| SLU 72 | 896 | -26748 | 323988 | 4.01 | 3236096 | 9.988 | Si |
| SLU 72 | 1248 | -18065 | 723901 | 2.71 | 2873290 | 3.969 | Si |
| SLU 29 | 896 | -23597 | 382266 | 3.54 | 3180872 | 8.321 | Si |
| SLU 29 | 1248 | -16441 | 756705 | 2.46 | 2732090 | 3.611 | Si |
| SLU 38 | 896 | -25200 | 297896 | 3.78 | 3219850 | 10.809 | Si |
| SLU 38 | 1248 | -17057 | 712734 | 2.56 | 2788379 | 3.912 | Si |

Verifica a pressoflessione nel piano secondo D.M. 17-01-18 NTC §7.8.2.2.1 in combinazioni sismiche, γM = 2

| Comb. | Quota | N | M | σ0 | Mu | c.s. | Verifica |
|---|---|---|---|---|---|---|---|
| SLV 7 | 896 | -20028 | 511285 | 3 | 3599427 | 7.04 | Si |
| SLV 7 | 1248 | -9399 | 141613 | 1.41 | 1981146 | 13.99 | Si |
| SLD 10 | 896 | -13327 | -374581 | 2 | 2656133 | 7.091 | Si |
| SLD 10 | 1248 | -8071 | 42100 | 1.21 | 1732656 | 41.155 | Si |
| SLV 14 | 896 | -11610 | -415094 | 1.74 | 2372160 | 5.715 | Si |
| SLV 14 | 1248 | -8147 | 95 | 1.22 | 1747166 | 1000 | Si |
| SLV 9 | 896 | -10579 | -744818 | 1.59 | 2193391 | 2.945 | Si |
| SLV 9 | 1248 | -7548 | -4018 | 1.13 | 1631937 | 406.164 | Si |
| SLV 10 | 896 | -10579 | -744818 | 1.59 | 2193391 | 2.945 | Si |
| SLV 10 | 1248 | -7548 | -4018 | 1.13 | 1631937 | 406.164 | Si |
| SLV 6 | 896 | -12080 | -672349 | 1.81 | 2451587 | 3.646 | Si |
| SLV 6 | 1248 | -7581 | 26877 | 1.14 | 1638164 | 60.95 | Si |
| SLV 8 | 896 | -20028 | 511285 | 3 | 3599427 | 7.04 | Si |
| SLV 8 | 1248 | -9399 | 141613 | 1.41 | 1981146 | 13.99 | Si |
| SLV 13 | 896 | -11610 | -415094 | 1.74 | 2372160 | 5.715 | Si |
| SLV 13 | 1248 | -8147 | 95 | 1.22 | 1747166 | 1000 | Si |
| SLD 9 | 896 | -13327 | -374581 | 2 | 2656133 | 7.091 | Si |
| SLD 9 | 1248 | -8071 | 42100 | 1.21 | 1732656 | 41.155 | Si |
| SLV 5 | 896 | -12080 | -672349 | 1.81 | 2451587 | 3.646 | Si |
| SLV 5 | 1248 | -7581 | 26877 | 1.14 | 1638164 | 60.95 | Si |

Verifica a taglio nel piano secondo D.M. 17-01-18 (N.T.C.) §7.8.2.2.2 con rottura per scorrimento in combinazioni non sismiche, γM = 3

| Comb. | Quota | N | V par | M | σ0 | σN | l' | fvd | Vt scorr. | Vt fess.diag. | Vt,lim | c.s. | Verifica |
|---|---|---|---|---|---|---|---|---|---|---|---|---|---|
| SLU 9 | 896 | -20554 | -1249 | 330427 | | 3.08 | 476.52 | 0.97 | 6447 | | | 5.16 | Si |
| SLU 9 | 1248 | -14376 | -488 | 641790 | | 2.15 | 476.52 | 0.84 | 5623 | | | 11.52 | Si |
| SLU 71 | 896 | -26746 | -1326 | 336562 | | 4.01 | 476.52 | 1.08 | 7227 | | | 5.45 | Si |
| SLU 71 | 1248 | -18036 | -427 | 736019 | | 2.7 | 476.52 | 0.92 | 6111 | | | 14.32 | Si |
| SLU 50 | 896 | -23701 | -1285 | 297297 | | 3.55 | 476.52 | 1.03 | 6866 | | | 5.34 | Si |
| SLU 50 | 1248 | -15941 | -482 | 633222 | | 2.39 | 476.52 | 0.87 | 5832 | | | 12.09 | Si |
| SLU 7 | 896 | -20409 | -1139 | 270904 | | 3.06 | 476.52 | 0.96 | 6427 | | | 5.64 | Si |
| SLU 7 | 1248 | -14099 | -429 | 568902 | | 2.11 | 476.52 | 0.84 | 5586 | | | 13.03 | Si |
| SLU 29 | 896 | -23597 | -1250 | 382266 | | 3.54 | 476.52 | 1.03 | 6853 | | | 5.48 | Si |
| SLU 29 | 1248 | -16441 | -374 | 756705 | | 2.46 | 476.52 | 0.88 | 5898 | | | 15.76 | Si |
| SLU 51 | 896 | -23703 | -1325 | 284723 | | 3.55 | 476.52 | 1.03 | 6867 | | | 5.18 | Si |
| SLU 51 | 1248 | -15971 | -541 | 621104 | | 2.39 | 476.52 | 0.87 | 5836 | | | 10.79 | Si |
| SLU 30 | 896 | -23599 | -1290 | 369692 | | 3.54 | 476.52 | 1.03 | 6853 | | | 5.31 | Si |
| SLU 30 | 1248 | -16470 | -433 | 744587 | | 2.47 | 476.52 | 0.88 | 5902 | | | 13.64 | Si |
| SLU 72 | 896 | -26748 | -1367 | 323988 | | 4.01 | 476.52 | 1.08 | 7227 | | | 5.29 | Si |
| SLU 72 | 1248 | -18065 | -485 | 723901 | | 2.71 | 476.52 | 0.92 | 6115 | | | 12.6 | Si |
| SLU 49 | 896 | -23558 | -1215 | 225200 | | 3.53 | 476.52 | 1.03 | 6847 | | | 5.63 | Si |
| SLU 49 | 1248 | -15694 | -481 | 548215 | | 2.35 | 476.52 | 0.87 | 5799 | | | 12.05 | Si |
| SLU 8 | 896 | -20552 | -1209 | 343001 | | 3.08 | 476.52 | 0.97 | 6447 | | | 5.33 | Si |
| SLU 8 | 1248 | -14347 | -430 | 653908 | | 2.15 | 476.52 | 0.84 | 5619 | | | 13.08 | Si |

Verifica a taglio nel piano secondo D.M. 17-01-18 (N.T.C.) §7.8.2.2.2 con rottura per scorrimento in combinazioni sismiche, γM = 2

| Comb. | Quota | N | V par | M | σ0 | σN | l' | fvd | Vt scorr. | Vt fess.diag. | Vt,lim | c.s. | Verifica |
|---|---|---|---|---|---|---|---|---|---|---|---|---|---|
| SLV 7 | 896 | -20028 | 8955 | 511285 | | 3 | 476.52 | 1.43 | 9565 | | | 1.07 | Si |
| SLV 7 | 1248 | -9399 | 7825 | 141613 | | 1.41 | 476.52 | 1.12 | 7439 | | | 0.95 | No, Vu<V |
| SLV 9 | 896 | -10579 | -9463 | -744818 | | 1.59 | 476.52 | 1.15 | 7675 | | | 0.81 | No, Vu<V |
| SLV 9 | 1248 | -7548 | -7923 | -4018 | | 1.13 | 476.52 | 1.06 | 7069 | | | 0.89 | No, Vu<V |
| SLV 10 | 896 | -10579 | -9463 | -744818 | | 1.59 | 476.52 | 1.15 | 7675 | | | 0.81 | No, Vu<V |
| SLV 10 | 1248 | -7548 | -7923 | -4018 | | 1.13 | 476.52 | 1.06 | 7069 | | | 0.89 | No, Vu<V |
| SLV 14 | 896 | -11610 | -6199 | -415094 | | 1.74 | 476.52 | 1.18 | 7881 | | | 1.27 | Si |
| SLV 14 | 1248 | -8147 | -4287 | 95 | | 1.22 | 476.52 | 1.08 | 7189 | | | 1.68 | Si |
| SLV 6 | 896 | -12080 | -7364 | -672349 | | 1.81 | 476.52 | 1.2 | 7975 | | | 1.08 | Si |
| SLV 6 | 1248 | -7581 | -6685 | 26877 | | 1.14 | 476.52 | 1.06 | 7075 | | | 1.06 | Si |
| SLV 13 | 896 | -11610 | -6199 | -415094 | | 1.74 | 476.52 | 1.18 | 7881 | | | 1.27 | Si |
| SLV 13 | 1248 | -8147 | -4287 | 95 | | 1.22 | 476.52 | 1.08 | 7189 | | | 1.68 | Si |
| SLV 5 | 896 | -12080 | -7364 | -672349 | | 1.81 | 476.52 | 1.2 | 7975 | | | 1.08 | Si |
| SLV 5 | 1248 | -7581 | -6685 | 26877 | | 1.14 | 476.52 | 1.06 | 7075 | | | 1.06 | Si |
| SLV 11 | 896 | -18527 | 6856 | 438816 | | 2.78 | 476.52 | 1.39 | 9265 | | | 1.35 | Si |
| SLV 11 | 1248 | -9367 | 6588 | 110718 | | 1.4 | 476.52 | 1.11 | 7433 | | | 1.13 | Si |
| SLV 12 | 896 | -18527 | 6856 | 438816 | | 2.78 | 476.52 | 1.39 | 9265 | | | 1.35 | Si |
| SLV 12 | 1248 | -9367 | 6588 | 110718 | | 1.4 | 476.52 | 1.11 | 7433 | | | 1.13 | Si |
| SLV 8 | 896 | -20028 | 8955 | 511285 | | 3 | 476.52 | 1.43 | 9565 | | | 1.07 | Si |
| SLV 8 | 1248 | -9399 | 7825 | 141613 | | 1.41 | 476.52 | 1.12 | 7439 | | | 0.95 | No, Vu<V |

### Verifica a pressoflessione fuori piano D.M. 17-01-18 (N.T.C.)

quota 1072 Wa 0.03 denominatore 8 γM = 2

| Comb. | fd | Sa | σ0 | N | M | Mc | Coeff.s. | Verifica |
|---|---|---|---|---|---|---|---|---|
| SLV 9 | 14 | 0.46 | 1.38 | -9190 | 31326 | 57080 | 1.82 | Si |
| SLV 10 | 14 | 0.46 | 1.38 | -9190 | 31326 | 57080 | 1.82 | Si |
| SLV 5 | 14 | 0.46 | 1.42 | -9497 | 31326 | 58735 | 1.87 | Si |
| SLV 6 | 14 | 0.46 | 1.42 | -9497 | 31326 | 58735 | 1.87 | Si |
| SLV 14 | 14 | 0.46 | 1.59 | -10626 | 31326 | 64685 | 2.06 | Si |
| SLV 13 | 14 | 0.46 | 1.59 | -10626 | 31326 | 64685 | 2.06 | Si |
| SLV 1 | 14 | 0.46 | 1.75 | -11649 | 31326 | 69888 | 2.23 | Si |
| SLV 2 | 14 | 0.46 | 1.75 | -11649 | 31326 | 69888 | 2.23 | Si |
| SLV 15 | 14 | 0.46 | 1.82 | -12163 | 31326 | 72437 | 2.31 | Si |
| SLV 16 | 14 | 0.46 | 1.82 | -12163 | 31326 | 72437 | 2.31 | Si |

### Verifica dei meccanismi locali di collasso con analisi cinematica lineare

forza di aggancio al piano = 0 quota mezzeria = 1072 Wa = 0.03 Ta = 0.1478

| Comb. | N top | N base | V orto | α0 | M* | e* | a0* | aLim | Verifica |
|---|---|---|---|---|---|---|---|---|---|
| SLV 12 | -9367 | -18527 | -6 | 0.023 | 12.889 | 0.93 | 35.91 | 1908.13 | No |
| SLV 11 | -9367 | -18527 | -6 | 0.023 | 12.889 | 0.93 | 35.91 | 1908.13 | No |
| SLV 15 | -8693 | -13994 | -9 | 0.023 | 12.21 | 0.927 | 36.01 | 1908.13 | No |
| SLV 16 | -8693 | -13994 | -9 | 0.023 | 12.21 | 0.927 | 36.01 | 1908.13 | No |
| SLV 2 | -8254 | -16613 | 9 | 0.023 | 11.768 | 0.925 | 36.222 | 1908.13 | No |
| SLV 1 | -8254 | -16613 | 9 | 0.023 | 11.768 | 0.925 | 36.222 | 1908.13 | No |
| SLV 4 | -8800 | -18997 | 7 | 0.023 | 12.317 | 0.928 | 36.254 | 1908.13 | No |
| SLV 3 | -8800 | -18997 | 7 | 0.023 | 12.317 | 0.928 | 36.254 | 1908.13 | No |
| SLV 8 | -9399 | -20028 | -2 | 0.023 | 12.921 | 0.93 | 36.511 | 1908.13 | No |
| SLV 7 | -9399 | -20028 | -2 | 0.023 | 12.921 | 0.93 | 36.511 | 1908.13 | No |

### Tabella dei coefficienti di sicurezza minimi

| Stato limite | Coeff.s. | Comb. | Verifica |
|---|---|---|---|
| PF_SLU | 3.611 | SLU 29 | Si |
| V_SLU | 5.162 | SLU 9 | Si |
| PF_SLV | 2.945 | SLV 9 | Si |
| V_SLV | 0.811 | SLV 9 | No |
| PFFP_SLV | 1.822 | SLV 9 | Si |
| R_SLV | 0.019 | SLV 11 | No |

## Maschio 146

Verifiche condotte secondo D.M. 17-01-18 (N.T.C.)

### Dati geometrici

| X ini. | Y ini. | X fin. | Y fin. | Quota i. | Quota.s | l | Sp. | h netta | h ini. | h fin. | a | a.s.,sx | a.s.,dx |
|---|---|---|---|---|---|---|---|---|---|---|---|---|---|
| -1961.8 | 581.1 | -1961.8 | 652.1 | L5 | L6 | 71 | 28 | 352 | 352 | 352 | | | |

### Caratteristiche del materiale

(Circolare 7 21-01-19 C8.5.I) Muratura in mattoni pieni e malta di calce LC2_Corti

| fb | fk | fvk0 | fmedio | τ0 | fv0 | μ | ϕ | fv,lim | E | G | FC |
|---|---|---|---|---|---|---|---|---|---|---|---|
| 60 | | | 34.5 | 0.9 | 2 | 0.58 | 0.77 | 3.25 | 32000 | 12800 | 1.2 |

### Verifica a pressoflessione nel piano secondo D.M. 17-01-18 NTC §7.8.2.2.1 in combinazioni non sismiche, γM = 3

| Comb. | Quota | N | M | σ0 | Mu | c.s. | Verifica |
|---|---|---|---|---|---|---|---|
| SLU 72 | 896 | -10898 | 43320 | 5.48 | 126519 | 2.921 | Si |
| SLU 72 | 1248 | -10296 | 17805 | 5.18 | 133122 | 7.477 | Si |
| SLU 70 | 896 | -10416 | 40524 | 5.24 | 131928 | 3.256 | Si |
| SLU 70 | 1248 | -9850 | 16938 | 4.95 | 136984 | 8.087 | Si |
| SLU 30 | 896 | -10240 | 41860 | 5.15 | 133653 | 3.193 | Si |
| SLU 30 | 1248 | -9879 | 17544 | 4.97 | 136759 | 7.795 | Si |
| SLU 37 | 896 | -10114 | 39446 | 5.09 | 134800 | 3.417 | Si |
| SLU 37 | 1248 | -10025 | 18077 | 5.04 | 135573 | 7.5 | Si |
| SLU 27 | 896 | -9831 | 39566 | 4.95 | 137128 | 3.466 | Si |
| SLU 27 | 1248 | -9485 | 16753 | 4.77 | 139498 | 8.327 | Si |
| SLU 69 | 896 | -10489 | 41026 | 5.28 | 131174 | 3.197 | Si |
| SLU 69 | 1248 | -9902 | 17014 | 4.98 | 136582 | 8.028 | Si |
| SLU 79 | 896 | -10772 | 40906 | 5.42 | 128029 | 3.13 | Si |
| SLU 79 | 1248 | -10442 | 18338 | 5.25 | 131669 | 7.18 | Si |
| SLU 71 | 896 | -10971 | 43821 | 5.52 | 125609 | 2.866 | Si |
| SLU 71 | 1248 | -10347 | 17880 | 5.2 | 132618 | 7.417 | Si |
| SLU 80 | 896 | -10699 | 40405 | 5.38 | 128874 | 3.19 | Si |
| SLU 80 | 1248 | -10390 | 18263 | 5.23 | 132194 | 7.238 | Si |
| SLU 29 | 896 | -10313 | 42361 | 5.19 | 132955 | 3.139 | Si |
| SLU 29 | 1248 | -9931 | 17619 | 5 | 136350 | 7.739 | Si |

### Verifica a pressoflessione nel piano secondo D.M. 17-01-18 NTC §7.8.2.2.1 in combinazioni sismiche, γM = 2

| Comb. | Quota | N | M | σ0 | Mu | c.s. | Verifica |
|---|---|---|---|---|---|---|---|
| SLV 10 | 896 | 957 | 19241 | 0 | 0 | 0 | No, Trazione |
| SLV 10 | 1248 | -1273 | 2311 | 0.64 | 42821 | 18.53 | Si |
| SLV 1 | 896 | -3503 | -60784 | 1.76 | 106423 | 1.751 | Si |
| SLV 1 | 1248 | -3676 | 6061 | 1.85 | 110756 | 18.273 | Si |
| SLV 9 | 896 | 957 | 19241 | 0 | 0 | 0 | No, Trazione |
| SLV 9 | 1248 | -1273 | 2311 | 0.64 | 42821 | 18.53 | Si |
| SLV 16 | 896 | -4120 | 81145 | 2.07 | 121448 | 1.497 | Si |
| SLV 16 | 1248 | -2988 | 3500 | 1.5 | 93016 | 26.579 | Si |
| SLV 2 | 896 | -3503 | -60784 | 1.76 | 106423 | 1.751 | Si |

| Comb. | Quota | N | M | σ0 | Mu | c.s. | Verifica |
|---|---|---|---|---|---|---|---|
| SLV 2 | 1248 | -3676 | 6061 | 1.85 | 110756 | 18.273 | Si |
| SLV 13 | 896 | -1444 | 74414 | 0 | 0 | 0 | No, e>l/2 |
| SLV 13 | 1248 | -1911 | 2352 | 0.96 | 62506 | 26.578 | Si |
| SLV 14 | 896 | -1444 | 74414 | 0 | 0 | 0 | No, e>l/2 |
| SLV 14 | 1248 | -1911 | 2352 | 0.96 | 62506 | 26.578 | Si |
| SLV 6 | 896 | 339 | -21318 | 0 | 0 | 0 | No, Trazione |
| SLV 6 | 1248 | -1802 | 3424 | 0.91 | 59240 | 17.303 | Si |
| SLV 15 | 896 | -4120 | 81145 | 2.07 | 121448 | 1.497 | Si |
| SLV 15 | 1248 | -2988 | 3500 | 1.5 | 93016 | 26.579 | Si |
| SLV 5 | 896 | 339 | -21318 | 0 | 0 | 0 | No, Trazione |
| SLV 5 | 1248 | -1802 | 3424 | 0.91 | 59240 | 17.303 | Si |

### Verifica a taglio nel piano secondo D.M. 17-01-18 (N.T.C.) §7.8.2.2.2 con rottura per scorrimento in combinazioni non sismiche, γM = 3

| Comb. | Quota | N | V par | M | σ0 | σN | l' | fvd | Vt scorr. | Vt fess.diag. | Vt,lim | c.s. | Verifica |
|---|---|---|---|---|---|---|---|---|---|---|---|---|---|
| SLU 50 | 896 | -9799 | 440 | 39519 | | 4.93 | 71 | 1.08 | 2154 | | | 4.89 | Si |
| SLU 50 | 1248 | -9006 | -352 | 15234 | | 4.53 | 71 | 1.08 | 2154 | | | 6.12 | Si |
| SLU 69 | 896 | -10489 | 437 | 41026 | | 5.28 | 71 | 1.08 | 2154 | | | 4.93 | Si |
| SLU 69 | 1248 | -9902 | -404 | 17014 | | 4.98 | 71 | 1.08 | 2154 | | | 5.33 | Si |
| SLU 72 | 896 | -10898 | 470 | 43320 | | 5.48 | 71 | 1.08 | 2154 | | | 4.58 | Si |
| SLU 72 | 1248 | -10296 | -416 | 17805 | | 5.18 | 71 | 1.08 | 2154 | | | 5.17 | Si |
| SLU 27 | 896 | -9831 | 434 | 39566 | | 4.95 | 71 | 1.08 | 2154 | | | 4.96 | Si |
| SLU 27 | 1248 | -9485 | -387 | 16753 | | 4.77 | 71 | 1.08 | 2154 | | | 5.57 | Si |
| SLU 79 | 896 | -10772 | 405 | 40906 | | 5.42 | 71 | 1.08 | 2154 | | | 5.31 | Si |
| SLU 79 | 1248 | -10442 | -441 | 18338 | | 5.25 | 71 | 1.08 | 2154 | | | 4.88 | Si |
| SLU 30 | 896 | -10240 | 467 | 41860 | | 5.15 | 71 | 1.08 | 2154 | | | 4.61 | Si |
| SLU 30 | 1248 | -9879 | -399 | 17544 | | 4.97 | 71 | 1.08 | 2154 | | | 5.4 | Si |
| SLU 80 | 896 | -10699 | 398 | 40405 | | 5.38 | 71 | 1.08 | 2154 | | | 5.41 | Si |
| SLU 80 | 1248 | -10390 | -443 | 18263 | | 5.23 | 71 | 1.08 | 2154 | | | 4.86 | Si |
| SLU 29 | 896 | -10313 | 475 | 42361 | | 5.19 | 71 | 1.08 | 2154 | | | 4.54 | Si |
| SLU 29 | 1248 | -9931 | -397 | 17619 | | 5 | 71 | 1.08 | 2154 | | | 5.43 | Si |
| SLU 71 | 896 | -10971 | 477 | 43821 | | 5.52 | 71 | 1.08 | 2154 | | | 4.51 | Si |
| SLU 71 | 1248 | -10347 | -414 | 17880 | | 5.2 | 71 | 1.08 | 2154 | | | 5.2 | Si |
| SLU 8 | 896 | -9141 | 438 | 38059 | | 4.6 | 71 | 1.08 | 2154 | | | 4.92 | Si |
| SLU 8 | 1248 | -8590 | -335 | 14973 | | 4.32 | 71 | 1.08 | 2154 | | | 6.43 | Si |

### Verifica a taglio nel piano secondo D.M. 17-01-18 (N.T.C.) §7.8.2.2.2 con rottura per scorrimento in combinazioni sismiche, γM = 2

| Comb. | Quota | N | V par | M | σ0 | σN | l' | fvd | Vt scorr. | Vt fess.diag. | Vt,lim | c.s. | Verifica |
|---|---|---|---|---|---|---|---|---|---|---|---|---|---|
| SLV 9 | 896 | 957 | -373 | 19241 | | 0 | 0 | 0.83 | 0 | | | 0 | No, Vu<V |
| SLV 9 | 1248 | -1273 | -376 | 2311 | | 0.64 | 71 | 0.96 | 1911 | | | 5.08 | Si |
| SLV 10 | 896 | 957 | -373 | 19241 | | 0 | 0 | 0.83 | 0 | | | 0 | No, Vu<V |
| SLV 10 | 1248 | -1273 | -376 | 2311 | | 0.64 | 71 | 0.96 | 1911 | | | 5.08 | Si |
| SLV 6 | 896 | 339 | -999 | -21318 | | 0 | 0 | 0.83 | 0 | | | 0 | No, Vu<V |
| SLV 6 | 1248 | -1802 | -377 | 3424 | | 0.91 | 71 | 1.01 | 2017 | | | 5.34 | Si |
| SLV 14 | 896 | -1444 | 865 | 74414 | | 0 | 0 | 0.83 | 0 | | | 0 | No, Vu<V |
| SLV 14 | 1248 | -1911 | -218 | 2352 | | 0.96 | 71 | 1.03 | 2039 | | | 9.34 | Si |
| SLV 16 | 896 | -4120 | 1301 | 81145 | | 3.1 | 47.41 | 1.45 | 1930 | | | 1.48 | Si |
| SLV 16 | 1248 | -2988 | -84 | 3500 | | 1.5 | 71 | 1.13 | 2254 | | | 26.72 | Si |
| SLV 1 | 896 | -3503 | -1221 | -60784 | | 2.3 | 54.44 | 1.29 | 1971 | | | 1.61 | Si |
| SLV 1 | 1248 | -3676 | -223 | 6061 | | 1.85 | 71 | 1.2 | 2392 | | | 10.75 | Si |
| SLV 15 | 896 | -4120 | 1301 | 81145 | | 3.1 | 47.41 | 1.45 | 1930 | | | 1.48 | Si |
| SLV 15 | 1248 | -2988 | -84 | 3500 | | 1.5 | 71 | 1.13 | 2254 | | | 26.72 | Si |
| SLV 5 | 896 | 339 | -999 | -21318 | | 0 | 0 | 0.83 | 0 | | | 0 | No, Vu<V |
| SLV 5 | 1248 | -1802 | -377 | 3424 | | 0.91 | 71 | 1.01 | 2017 | | | 5.34 | Si |
| SLV 2 | 896 | -3503 | -1221 | -60784 | | 2.3 | 54.44 | 1.29 | 1971 | | | 1.61 | Si |
| SLV 2 | 1248 | -3676 | -223 | 6061 | | 1.85 | 71 | 1.2 | 2392 | | | 10.75 | Si |
| SLV 13 | 896 | -1444 | 865 | 74414 | | 0 | 0 | 0.83 | 0 | | | 0 | No, Vu<V |
| SLV 13 | 1248 | -1911 | -218 | 2352 | | 0.96 | 71 | 1.03 | 2039 | | | 9.34 | Si |

### Verifica a pressoflessione fuori piano D.M. 17-01-18 (N.T.C.)

quota 1072 Wa 0.05 denominatore 8 γM = 2

| Comb. | fd | Sa | σ0 | N | M | Mc | Coeff.s. | Verifica |
|---|---|---|---|---|---|---|---|---|
| SLV 9 | 14 | 0.46 | 0.35 | -698 | 8929 | 9496 | 1.06 | Si |
| SLV 10 | 14 | 0.46 | 0.35 | -698 | 8929 | 9496 | 1.06 | Si |
| SLV 6 | 14 | 0.46 | 0.66 | -1309 | 8929 | 17341 | 1.94 | Si |
| SLV 5 | 14 | 0.46 | 0.66 | -1309 | 8929 | 17341 | 1.94 | Si |
| SLV 14 | 14 | 0.46 | 0.9 | -1792 | 8929 | 23243 | 2.6 | Si |
| SLV 13 | 14 | 0.46 | 0.9 | -1792 | 8929 | 23243 | 2.6 | Si |
| SLV 16 | 14 | 0.46 | 1.68 | -3341 | 8929 | 40342 | 4.52 | Si |
| SLV 15 | 14 | 0.46 | 1.68 | -3341 | 8929 | 40342 | 4.52 | Si |
| SLV 1 | 14 | 0.46 | 1.93 | -3829 | 8929 | 45151 | 5.06 | Si |
| SLV 2 | 14 | 0.46 | 1.93 | -3829 | 8929 | 45151 | 5.06 | Si |

### Verifica dei meccanismi locali di collasso con analisi cinematica lineare

forza di aggancio al piano = 0 quota mezzeria = 1072 Wa = 0.05 Ta = 0.0739

| Comb. | N top | N base | V orto | α0 | M* | e* | a0* | aLim | Verifica |
|---|---|---|---|---|---|---|---|---|---|
| SLV 6 | -1802 | 339 | 18 | 0 | 0 | 0 | 0 | 1733.979 | No, Trazione |
| SLV 10 | -1273 | 957 | 11 | 0 | 0 | 0 | 0 | 1733.979 | No, Trazione |
| SLV 9 | -1273 | 957 | 11 | 0 | 0 | 0 | 0 | 1733.979 | No, Trazione |
| SLV 5 | -1802 | 339 | 18 | 0 | 0 | 0 | 0 | 1733.979 | No, Trazione |
| SLV 11 | -4861 | -7962 | -16 | 0.041 | 5.938 | 0.952 | 63.212 | 1733.979 | No |
| SLV 12 | -4861 | -7962 | -16 | 0.041 | 5.938 | 0.952 | 63.212 | 1733.979 | No |
| SLV 8 | -5391 | -8579 | -10 | 0.042 | 6.476 | 0.955 | 64.426 | 1733.979 | No |
| SLV 7 | -5391 | -8579 | -10 | 0.042 | 6.476 | 0.955 | 64.426 | 1733.979 | No |
| SLV 2 | -3676 | -3503 | 16 | 0.042 | 4.736 | 0.941 | 64.643 | 956.161 | No |
| SLV 1 | -3676 | -3503 | 16 | 0.042 | 4.736 | 0.941 | 64.643 | 956.161 | No |

Tabella dei coefficienti di sicurezza minimi

| Stato limite | Coeff.s. | Comb. | Verifica |
|---|---|---|---|
| PF_SLU | 2.866 | SLU 71 | Si |
| V_SLU | 4.515 | SLU 71 | Si |
| PF_SLV | 0 | SLV 10 | No |
| V_SLV | 0 | SLV 5 | No |
| PFFP_SLV | 1.064 | SLV 9 | Si |
| R_SLV | 0 | SLV 10 | No |

## Maschio 147

Verifiche condotte secondo D.M. 17-01-18 (N.T.C.)

### Dati geometrici

| X ini. | Y ini. | X fin. | Y fin. | Quota i. | Quota.s | l | Sp. | h netta | h ini. | h fin. | a | a.s.,sx | a.s.,dx |
|---|---|---|---|---|---|---|---|---|---|---|---|---|---|
| -1633.3 | -335.9 | -1736.3 | -335.9 | L5 | L6 | 103 | 28 | 352 | 352 | 352 | | | |

### Caratteristiche del materiale

(Circolare 7 21-01-19 C8.5.I) Muratura in mattoni pieni e malta di calce LC2_Corti

| fb | fk | fvk0 | fmedio | τ0 | fv0 | μ | ϕ | fv,lim | E | G | FC |
|---|---|---|---|---|---|---|---|---|---|---|---|
| 60 | | | 34.5 | 0.9 | 2 | 0.58 | 0.77 | 3.25 | 32000 | 12800 | 1.2 |

### Verifica a pressoflessione nel piano secondo D.M. 17-01-18 NTC §7.8.2.2.1 in combinazioni non sismiche, γM = 3

| Comb. | Quota | N | M | σ0 | Mu | c.s. | Verifica |
|---|---|---|---|---|---|---|---|
| SLU 10 | 986 | -6002 | -14737 | 2.08 | 230128 | 15.616 | Si |
| SLU 10 | 1166 | -5115 | 43379 | 1.77 | 206065 | 4.75 | Si |
| SLU 65 | 986 | -7852 | -8044 | 2.72 | 269221 | 33.467 | Si |
| SLU 65 | 1166 | -6220 | 45806 | 2.16 | 235516 | 5.142 | Si |
| SLU 73 | 986 | -8290 | -13444 | 2.87 | 276278 | 20.55 | Si |
| SLU 73 | 1166 | -6888 | 54383 | 2.39 | 250732 | 4.611 | Si |
| SLU 52 | 986 | -7747 | -12683 | 2.69 | 267402 | 21.083 | Si |
| SLU 52 | 1166 | -6255 | 49161 | 2.17 | 236368 | 4.808 | Si |
| SLU 40 | 986 | -7082 | -11686 | 2.46 | 254773 | 21.801 | Si |
| SLU 40 | 1166 | -6066 | 48452 | 2.1 | 231727 | 4.783 | Si |
| SLU 19 | 986 | -6539 | -10925 | 2.27 | 243021 | 22.244 | Si |
| SLU 19 | 1166 | -5433 | 43230 | 1.88 | 215080 | 4.975 | Si |
| SLU 31 | 986 | -6545 | -15498 | 2.27 | 243159 | 15.69 | Si |
| SLU 31 | 1166 | -5748 | 48601 | 1.99 | 223593 | 4.601 | Si |
| SLU 23 | 986 | -6107 | -10098 | 2.12 | 232751 | 23.048 | Si |
| SLU 23 | 1166 | -5080 | 40024 | 1.76 | 205036 | 5.123 | Si |
| SLU 82 | 986 | -8827 | -9632 | 3.06 | 283783 | 29.462 | Si |
| SLU 82 | 1166 | -7206 | 54234 | 2.5 | 257277 | 4.744 | Si |
| SLU 61 | 986 | -8284 | -8871 | 2.87 | 276186 | 31.133 | Si |
| SLU 61 | 1166 | -6573 | 49012 | 2.28 | 243795 | 4.974 | Si |

### Verifica a pressoflessione nel piano secondo D.M. 17-01-18 NTC §7.8.2.2.1 in combinazioni sismiche, γM = 2

| Comb. | Quota | N | M | σ0 | Mu | c.s. | Verifica |
|---|---|---|---|---|---|---|---|
| SLV 7 | 986 | -2097 | 114486 | 0 | 0 | 0 | No, e>l/2 |
| SLV 7 | 1166 | -881 | -87022 | 0 | 0 | 0 | No, e>l/2 |
| SLV 13 | 986 | -3710 | -307098 | 0 | 0 | 0 | No, e>l/2 |
| SLV 13 | 1166 | -7630 | 261242 | 2.65 | 307853 | 1.178 | Si |
| SLV 8 | 986 | -2097 | 114486 | 0 | 0 | 0 | No, e>l/2 |
| SLV 8 | 1166 | -881 | -87022 | 0 | 0 | 0 | No, e>l/2 |
| SLV 11 | 986 | 800 | -68965 | 0 | 0 | 0 | No, Trazione |
| SLV 11 | 1166 | -1889 | 42998 | 0.66 | 92074 | 2.141 | Si |
| SLV 15 | 986 | -69 | -295972 | 0 | 0 | 0 | No, e>l/2 |
| SLV 15 | 1166 | -5523 | 230525 | 1.92 | 239851 | 1.04 | Si |
| SLV 4 | 986 | -9725 | 315532 | 3.37 | 362612 | 1.149 | Si |
| SLV 4 | 1166 | -2163 | -202876 | 0 | 0 | 0 | No, e>l/2 |
| SLV 14 | 986 | -3710 | -307098 | 0 | 0 | 0 | No, e>l/2 |
| SLV 14 | 1166 | -7630 | 261242 | 2.65 | 307853 | 1.178 | Si |
| SLV 12 | 986 | 800 | -68965 | 0 | 0 | 0 | No, Trazione |
| SLV 12 | 1166 | -1889 | 42998 | 0.66 | 92074 | 2.141 | Si |
| SLV 16 | 986 | -69 | -295972 | 0 | 0 | 0 | No, e>l/2 |
| SLV 16 | 1166 | -5523 | 230525 | 1.92 | 239851 | 1.04 | Si |
| SLV 3 | 986 | -9725 | 315532 | 3.37 | 362612 | 1.149 | Si |
| SLV 3 | 1166 | -2163 | -202876 | 0 | 0 | 0 | No, e>l/2 |

### Verifica a taglio nel piano secondo D.M. 17-01-18 (N.T.C.) §7.8.2.2.2 con rottura per scorrimento in combinazioni non sismiche, γM = 3

| Comb. | Quota | N | V par | M | σ0 | σN | l' | fvd | Vt scorr. | Vt fess.diag. | Vt,lim | c.s. | Verifica |
|---|---|---|---|---|---|---|---|---|---|---|---|---|---|
| SLU 58 | 986 | -9564 | 1113 | 34750 | | 3.32 | 103 | 1 | 2877 | | | 2.58 | Si |
| SLU 58 | 1166 | -6543 | 327 | 17873 | | 2.27 | 103 | 0.86 | 2475 | | | 7.57 | Si |
| SLU 8 | 986 | -7381 | 1026 | 38096 | | 2.56 | 103 | 0.9 | 2586 | | | 2.52 | Si |
| SLU 8 | 1166 | -4735 | 285 | 3514 | | 1.64 | 103 | 0.77 | 2234 | | | 7.83 | Si |
| SLU 29 | 986 | -7925 | 1045 | 37335 | | 2.75 | 103 | 0.92 | 2659 | | | 2.55 | Si |
| SLU 29 | 1166 | -5368 | 324 | 8736 | | 1.86 | 103 | 0.8 | 2318 | | | 7.14 | Si |
| SLU 71 | 986 | -9670 | 1173 | 39389 | | 3.35 | 103 | 1 | 2891 | | | 2.47 | Si |
| SLU 71 | 1166 | -6508 | 351 | 14518 | | 2.26 | 103 | 0.86 | 2470 | | | 7.03 | Si |
| SLU 79 | 986 | -10107 | 1132 | 33989 | | 3.5 | 103 | 1.02 | 2950 | | | 2.61 | Si |
| SLU 79 | 1166 | -7177 | 366 | 23095 | | 2.49 | 103 | 0.89 | 2559 | | | 6.99 | Si |
| SLU 69 | 986 | -9774 | 1101 | 35428 | | 3.39 | 103 | 1.01 | 2905 | | | 2.64 | Si |
| SLU 69 | 1166 | -6697 | 337 | 19057 | | 2.32 | 103 | 0.87 | 2495 | | | 7.4 | Si |
| SLU 48 | 986 | -9231 | 1082 | 36189 | | 3.2 | 103 | 0.98 | 2833 | | | 2.62 | Si |
| SLU 48 | 1166 | -6064 | 298 | 13836 | | 2.1 | 103 | 0.84 | 2411 | | | 8.08 | Si |
| SLU 51 | 986 | -8602 | 1079 | 30961 | | 2.98 | 103 | 0.95 | 2749 | | | 2.55 | Si |

| Comb. | Quota | N | V par | M | σ0 | σN | l' | fvd | Vt scorr. | Vt fess.diag. | Vt,lim | c.s. | Verifica |
|---|---|---|---|---|---|---|---|---|---|---|---|---|---|
| SLU 51 | 1166 | -5828 | 265 | 15033 | | 2.02 | 103 | 0.83 | 2379 | | | 8.97 | Si |
| SLU 72 | 986 | -9146 | 1098 | 30200 | | 3.17 | 103 | 0.98 | 2822 | | | 2.57 | Si |
| SLU 72 | 1166 | -6461 | 304 | 20255 | | 2.24 | 103 | 0.85 | 2464 | | | 8.09 | Si |
| SLU 50 | 986 | -9126 | 1154 | 40150 | | 3.16 | 103 | 0.98 | 2819 | | | 2.44 | Si |
| SLU 50 | 1166 | -5875 | 312 | 9296 | | 2.04 | 103 | 0.83 | 2386 | | | 7.64 | Si |

### Verifica a taglio nel piano secondo D.M. 17-01-18 (N.T.C.) §7.8.2.2.2 con rottura per scorrimento in combinazioni sismiche, γM = 2

| Comb. | Quota | N | V par | M | σ0 | σN | l' | fvd | Vt scorr. | Vt fess.diag. | Vt,lim | c.s. | Verifica |
|---|---|---|---|---|---|---|---|---|---|---|---|---|---|
| SLV 16 | 986 | -69 | -5014 | -295972 | | 0 | 0 | 0.83 | 0 | | | 0 | No, Vu<V |
| SLV 16 | 1166 | -5523 | -427 | 230525 | | 6.74 | 29.28 | 1.63 | 1332 | | | 3.12 | Si |
| SLV 7 | 986 | -2097 | 2850 | 114486 | | 0 | 0 | 0.83 | 0 | | | 0 | No, Vu<V |
| SLV 7 | 1166 | -881 | 640 | -87022 | | 0 | 0 | 0.83 | 0 | | | 0 | No, Vu<V |
| SLV 12 | 986 | 800 | -551 | -68965 | | 0 | 0 | 0.83 | 0 | | | 0 | No, Vu<V |
| SLV 12 | 1166 | -1889 | 242 | 42998 | | 0.78 | 86.22 | 0.99 | 2390 | | | 9.88 | Si |
| SLV 15 | 986 | -69 | -5014 | -295972 | | 0 | 0 | 0.83 | 0 | | | 0 | No, Vu<V |
| SLV 15 | 1166 | -5523 | -427 | 230525 | | 6.74 | 29.28 | 1.63 | 1332 | | | 3.12 | Si |
| SLV 14 | 986 | -3710 | -5438 | -307098 | | 0 | 0 | 0.83 | 0 | | | 0 | No, Vu<V |
| SLV 14 | 1166 | -7630 | -602 | 261242 | | 5.26 | 51.78 | 1.63 | 2356 | | | 3.91 | Si |
| SLV 11 | 986 | 800 | -551 | -68965 | | 0 | 0 | 0.83 | 0 | | | 0 | No, Vu<V |
| SLV 11 | 1166 | -1889 | 242 | 42998 | | 0.78 | 86.22 | 0.99 | 2390 | | | 9.88 | Si |
| SLV 3 | 986 | -9725 | 6322 | 315532 | | 6.08 | 57.16 | 1.63 | 2601 | | | 0.41 | No, Vu<V |
| SLV 3 | 1166 | -2163 | 900 | -202876 | | 0 | 0 | 0.83 | 0 | | | 0 | No, Vu<V |
| SLV 13 | 986 | -3710 | -5438 | -307098 | | 0 | 0 | 0.83 | 0 | | | 0 | No, Vu<V |
| SLV 13 | 1166 | -7630 | -602 | 261242 | | 5.26 | 51.78 | 1.63 | 2356 | | | 3.91 | Si |
| SLV 4 | 986 | -9725 | 6322 | 315532 | | 6.08 | 57.16 | 1.63 | 2601 | | | 0.41 | No, Vu<V |
| SLV 4 | 1166 | -2163 | 900 | -202876 | | 0 | 0 | 0.83 | 0 | | | 0 | No, Vu<V |
| SLV 8 | 986 | -2097 | 2850 | 114486 | | 0 | 0 | 0.83 | 0 | | | 0 | No, Vu<V |
| SLV 8 | 1166 | -881 | 640 | -87022 | | 0 | 0 | 0.83 | 0 | | | 0 | No, Vu<V |

### Verifica a pressoflessione fuori piano D.M. 17-01-18 (N.T.C.)

quota 1072 Wa 0.05 denominatore 8 γM = 2

| Comb. | fd | Sa | σ0 | N | M | Mc | Coeff.s. | Verifica |
|---|---|---|---|---|---|---|---|---|
| SLV 16 | 14 | 0.46 | 0 | -901 | 12659 | 0 | 0 | No, e>t/2 |
| SLV 15 | 14 | 0.46 | 0 | -901 | 12659 | 0 | 0 | No, e>t/2 |
| SLV 12 | 14 | 0.46 | 0.4 | -1152 | 12659 | 15595 | 1.23 | Si |
| SLV 11 | 14 | 0.46 | 0.4 | -1152 | 12659 | 15595 | 1.23 | Si |
| SLV 13 | 14 | 0.46 | 1.17 | -3361 | 12659 | 42564 | 3.36 | Si |
| SLV 14 | 14 | 0.46 | 1.17 | -3361 | 12659 | 42564 | 3.36 | Si |
| SLV 7 | 14 | 0.46 | 1.33 | -3827 | 12659 | 47759 | 3.77 | Si |
| SLV 8 | 14 | 0.46 | 1.33 | -3827 | 12659 | 47759 | 3.77 | Si |
| SLV 10 | 14 | 0.46 | 3.24 | -9352 | 12659 | 96183 | 7.6 | Si |
| SLV 9 | 14 | 0.46 | 3.24 | -9352 | 12659 | 96183 | 7.6 | Si |

### Verifica dei meccanismi locali di collasso con analisi cinematica lineare

forza di aggancio al piano = 0 quota mezzeria = 1072 Wa = 0.05 Ta = 0.0739

| Comb. | N top | N base | V orto | α0 | M* | e* | a0* | aLim | Verifica |
|---|---|---|---|---|---|---|---|---|---|
| SLV 7 | 5 | -1214 | -33 | 0 | 0 | 0 | 0 | 1733.979 | No, Trazione |
| SLV 8 | 5 | -1214 | -33 | 0 | 0 | 0 | 0 | 1733.979 | No, Trazione |
| SLV 9 | -6148 | -10369 | 30 | 0.041 | 7.696 | 0.947 | 62.44 | 1733.979 | No |
| SLV 10 | -6148 | -10369 | 30 | 0.041 | 7.696 | 0.947 | 62.44 | 1733.979 | No |
| SLV 5 | -5255 | -10255 | 24 | 0.042 | 6.791 | 0.941 | 64.665 | 1733.979 | No |
| SLV 6 | -5255 | -10255 | 24 | 0.042 | 6.791 | 0.941 | 64.665 | 1733.979 | No |
| SLV 12 | -888 | -1328 | -27 | 0.045 | 2.46 | 0.889 | 73.893 | 1733.979 | No |
| SLV 11 | -888 | -1328 | -27 | 0.045 | 2.46 | 0.889 | 73.893 | 1733.979 | No |
| SLV 14 | -5349 | -7338 | 18 | 0.043 | 6.886 | 0.941 | 65.986 | 956.161 | No |
| SLV 13 | -5349 | -7338 | 18 | 0.043 | 6.886 | 0.941 | 65.986 | 956.161 | No |

### Tabella dei coefficienti di sicurezza minimi

| Stato limite | Coeff.s. | Comb. | Verifica |
|---|---|---|---|
| PF_SLU | 4.601 | SLU 31 | Si |
| V_SLU | 2.443 | SLU 50 | Si |
| PF_SLV | 0 | SLV 12 | No |
| V_SLV | 0 | SLV 3 | No |
| PFFP_SLV | 0 | SLV 15 | No |
| R_SLV | 0 | SLV 8 | No |

## Maschio 148

Verifiche condotte secondo D.M. 17-01-18 (N.T.C.)

### Dati geometrici

| X ini. | Y ini. | X fin. | Y fin. | Quota i. | Quota.s | l | Sp. | h netta | h ini. | h fin. | a | a.s.,sx | a.s.,dx |
|---|---|---|---|---|---|---|---|---|---|---|---|---|---|
| -1844.8 | -335.9 | -1844.8 | 104.6 | L5 | L6 | 440.6 | 14 | 352 | 352 | 352 | | | |

### Caratteristiche del materiale

(Circolare 7 21-01-19 C8.5.I) Muratura in mattoni pieni e malta di calce LC2_Corti

| fb | fk | fvk0 | fmedio | τ0 | fv0 | μ | ϕ | fv,lim | E | G | FC |
|---|---|---|---|---|---|---|---|---|---|---|---|
| 60 | | | 34.5 | 0.9 | 2 | 0.58 | 0.77 | 3.25 | 32000 | 12800 | 1.2 |

### Verifica a pressoflessione nel piano secondo D.M. 17-01-18 NTC §7.8.2.2.1 in combinazioni non sismiche, γM = 3

| Comb. | Quota | N | M | σ0 | Mu | c.s. | Verifica |
|---|---|---|---|---|---|---|---|
| SLU 30 | 896 | -14430 | 364285 | 2.34 | 2265736 | 6.22 | Si |
| SLU 30 | 1248 | -8201 | 268035 | 1.33 | 1511636 | 5.64 | Si |

| Comb. | Quota | N | M | σ0 | Mu | c.s. | Verifica |
|---|---|---|---|---|---|---|---|
| SLU 76 | 896 | -18512 | 420124 | 3 | 2575390 | 6.13 | Si |
| SLU 76 | 1248 | -9950 | 304300 | 1.61 | 1757816 | 5.777 | Si |
| SLU 5 | 896 | -12059 | 279837 | 1.96 | 2018842 | 7.214 | Si |
| SLU 5 | 1248 | -6681 | 222976 | 1.08 | 1276040 | 5.723 | Si |
| SLU 68 | 896 | -16766 | 377703 | 2.72 | 2460871 | 6.515 | Si |
| SLU 68 | 1248 | -9198 | 286176 | 1.49 | 1655301 | 5.784 | Si |
| SLU 34 | 896 | -15630 | 380017 | 2.53 | 2371973 | 6.242 | Si |
| SLU 34 | 1248 | -8401 | 274398 | 1.36 | 1541173 | 5.617 | Si |
| SLU 36 | 896 | -16554 | 412040 | 2.68 | 2445150 | 5.934 | Si |
| SLU 36 | 1248 | -9243 | 293130 | 1.5 | 1661494 | 5.668 | Si |
| SLU 38 | 896 | -16175 | 406705 | 2.62 | 2416016 | 5.94 | Si |
| SLU 38 | 1248 | -8953 | 286159 | 1.45 | 1620729 | 5.664 | Si |
| SLU 26 | 896 | -13885 | 337596 | 2.25 | 2213355 | 6.556 | Si |
| SLU 26 | 1248 | -7649 | 256274 | 1.24 | 1428442 | 5.574 | Si |
| SLU 28 | 896 | -14809 | 369619 | 2.4 | 2300677 | 6.224 | Si |
| SLU 28 | 1248 | -8491 | 275005 | 1.38 | 1554314 | 5.652 | Si |
| SLU 78 | 896 | -19436 | 452146 | 3.15 | 2625214 | 5.806 | Si |
| SLU 78 | 1248 | -10792 | 323032 | 1.75 | 1866699 | 5.779 | Si |

Verifica a pressoflessione nel piano secondo D.M. 17-01-18 NTC §7.8.2.2.1 in combinazioni sismiche, γM = 2

| Comb. | Quota | N | M | σ0 | Mu | c.s. | Verifica |
|---|---|---|---|---|---|---|---|
| SLV 13 | 896 | -13275 | 142104 | 2.15 | 2409176 | 16.954 | Si |
| SLV 13 | 1248 | -6302 | 276613 | 1.02 | 1272218 | 4.599 | Si |
| SLV 7 | 896 | -11242 | 408762 | 1.82 | 2107073 | 5.155 | Si |
| SLV 7 | 1248 | -6484 | -58700 | 1.05 | 1305371 | 22.238 | Si |
| SLV 14 | 896 | -13275 | 142104 | 2.15 | 2409176 | 16.954 | Si |
| SLV 14 | 1248 | -6302 | 276613 | 1.02 | 1272218 | 4.599 | Si |
| SLV 8 | 896 | -11242 | 408762 | 1.82 | 2107073 | 5.155 | Si |
| SLV 8 | 1248 | -6484 | -58700 | 1.05 | 1305371 | 22.238 | Si |
| SLV 12 | 896 | -11323 | 387606 | 1.84 | 2119518 | 5.468 | Si |
| SLV 12 | 1248 | -6125 | -18575 | 0.99 | 1239658 | 66.736 | Si |
| SLV 9 | 896 | -14181 | 47882 | 2.3 | 2536096 | 52.966 | Si |
| SLV 9 | 1248 | -7041 | 363542 | 1.14 | 1406062 | 3.868 | Si |
| SLV 11 | 896 | -11323 | 387606 | 1.84 | 2119518 | 5.468 | Si |
| SLV 11 | 1248 | -6125 | -18575 | 0.99 | 1239658 | 66.736 | Si |
| SLV 6 | 896 | -14101 | 69037 | 2.29 | 2524999 | 36.574 | Si |
| SLV 6 | 1248 | -7399 | 323418 | 1.2 | 1469858 | 4.545 | Si |
| SLV 5 | 896 | -14101 | 69037 | 2.29 | 2524999 | 36.574 | Si |
| SLV 5 | 1248 | -7399 | 323418 | 1.2 | 1469858 | 4.545 | Si |
| SLV 10 | 896 | -14181 | 47882 | 2.3 | 2536096 | 52.966 | Si |
| SLV 10 | 1248 | -7041 | 363542 | 1.14 | 1406062 | 3.868 | Si |

Verifica a taglio nel piano secondo D.M. 17-01-18 (N.T.C.) §7.8.2.2.2 con rottura per scorrimento in combinazioni non sismiche, γM = 3

| Comb. | Quota | N | V par | M | σ0 | σN | l' | fvd | Vt scorr. | Vt fess.diag. | Vt,lim | c.s. | Verifica |
|---|---|---|---|---|---|---|---|---|---|---|---|---|---|
| SLU 29 | 896 | -14506 | 1274 | 341377 | | 2.35 | 440.57 | 0.87 | 5361 | | | 4.21 | Si |
| SLU 29 | 1248 | -8261 | 1272 | 236541 | | 1.34 | 440.57 | 0.73 | 4528 | | | 3.56 | Si |
| SLU 72 | 896 | -17311 | 924 | 404391 | | 2.81 | 440.57 | 0.93 | 5735 | | | 6.21 | Si |
| SLU 72 | 1248 | -9750 | 1319 | 297937 | | 1.58 | 440.57 | 0.77 | 4727 | | | 3.58 | Si |
| SLU 77 | 896 | -19512 | 1345 | 429239 | | 3.16 | 440.57 | 0.98 | 6028 | | | 4.48 | Si |
| SLU 77 | 1248 | -10853 | 1338 | 291538 | | 1.76 | 440.57 | 0.79 | 4874 | | | 3.64 | Si |
| SLU 58 | 896 | -17307 | 1273 | 366145 | | 2.81 | 440.57 | 0.93 | 5734 | | | 4.5 | Si |
| SLU 58 | 1248 | -9595 | 1264 | 251270 | | 1.56 | 440.57 | 0.76 | 4706 | | | 3.72 | Si |
| SLU 69 | 896 | -17766 | 1336 | 386818 | | 2.88 | 440.57 | 0.94 | 5796 | | | 4.34 | Si |
| SLU 69 | 1248 | -10101 | 1329 | 273414 | | 1.64 | 440.57 | 0.77 | 4773 | | | 3.59 | Si |
| SLU 71 | 896 | -17387 | 1394 | 381484 | | 2.82 | 440.57 | 0.93 | 5745 | | | 4.12 | Si |
| SLU 71 | 1248 | -9811 | 1387 | 266443 | | 1.59 | 440.57 | 0.77 | 4735 | | | 3.41 | Si |
| SLU 37 | 896 | -16251 | 1282 | 383798 | | 2.63 | 440.57 | 0.91 | 5593 | | | 4.36 | Si |
| SLU 37 | 1248 | -9013 | 1282 | 254665 | | 1.46 | 440.57 | 0.75 | 4628 | | | 3.61 | Si |
| SLU 50 | 896 | -15561 | 1265 | 323724 | | 2.52 | 440.57 | 0.89 | 5501 | | | 4.35 | Si |
| SLU 50 | 1248 | -8843 | 1255 | 233145 | | 1.43 | 440.57 | 0.75 | 4606 | | | 3.67 | Si |
| SLU 79 | 896 | -19132 | 1403 | 423905 | | 3.1 | 440.57 | 0.97 | 5978 | | | 4.26 | Si |
| SLU 79 | 1248 | -10563 | 1397 | 284568 | | 1.71 | 440.57 | 0.78 | 4835 | | | 3.46 | Si |
| SLU 80 | 896 | -19056 | 933 | 446812 | | 3.09 | 440.57 | 0.97 | 5968 | | | 6.4 | Si |
| SLU 80 | 1248 | -10502 | 1329 | 316061 | | 1.7 | 440.57 | 0.78 | 4827 | | | 3.63 | Si |

Verifica a taglio nel piano secondo D.M. 17-01-18 (N.T.C.) §7.8.2.2.2 con rottura per scorrimento in combinazioni sismiche, γM = 2

| Comb. | Quota | N | V par | M | σ0 | σN | l' | fvd | Vt scorr. | Vt fess.diag. | Vt,lim | c.s. | Verifica |
|---|---|---|---|---|---|---|---|---|---|---|---|---|---|
| SLV 9 | 896 | -14181 | -8737 | 47882 | | 2.3 | 440.57 | 1.29 | 7976 | | | 0.91 | No, Vu<V |
| SLV 9 | 1248 | -7041 | -5968 | 363542 | | 1.14 | 440.57 | 1.06 | 6548 | | | 1.1 | Si |
| SLV 5 | 896 | -14101 | -9637 | 69037 | | 2.29 | 440.57 | 1.29 | 7960 | | | 0.83 | No, Vu<V |
| SLV 5 | 1248 | -7399 | -6845 | 323418 | | 1.2 | 440.57 | 1.07 | 6620 | | | 0.97 | No, Vu<V |
| SLV 15 | 896 | -12417 | 5024 | 244021 | | 2.01 | 440.57 | 1.24 | 7623 | | | 1.52 | Si |
| SLV 15 | 1248 | -6028 | 4133 | 161977 | | 0.98 | 440.57 | 1.03 | 6346 | | | 1.54 | Si |
| SLV 11 | 896 | -11323 | 10816 | 387606 | | 1.84 | 440.57 | 1.2 | 7405 | | | 0.68 | No, Vu<V |
| SLV 11 | 1248 | -6125 | 7998 | -18575 | | 0.99 | 440.57 | 1.03 | 6365 | | | 0.8 | No, Vu<V |
| SLV 6 | 896 | -14101 | -9637 | 69037 | | 2.29 | 440.57 | 1.29 | 7960 | | | 0.83 | No, Vu<V |
| SLV 6 | 1248 | -7399 | -6845 | 323418 | | 1.2 | 440.57 | 1.07 | 6620 | | | 0.97 | No, Vu<V |
| SLV 12 | 896 | -11323 | 10816 | 387606 | | 1.84 | 440.57 | 1.2 | 7405 | | | 0.68 | No, Vu<V |
| SLV 12 | 1248 | -6125 | 7998 | -18575 | | 0.99 | 440.57 | 1.03 | 6365 | | | 0.8 | No, Vu<V |
| SLV 8 | 896 | -11242 | 9915 | 408762 | | 1.82 | 440.57 | 1.2 | 7388 | | | 0.75 | No, Vu<V |
| SLV 8 | 1248 | -6484 | 7120 | -58700 | | 1.05 | 440.57 | 1.04 | 6437 | | | 0.9 | No, Vu<V |
| SLV 16 | 896 | -12417 | 5024 | 244021 | | 2.01 | 440.57 | 1.24 | 7623 | | | 1.52 | Si |
| SLV 16 | 1248 | -6028 | 4133 | 161977 | | 0.98 | 440.57 | 1.03 | 6346 | | | 1.54 | Si |
| SLV 10 | 896 | -14181 | -8737 | 47882 | | 2.3 | 440.57 | 1.29 | 7976 | | | 0.91 | No, Vu<V |
| SLV 10 | 1248 | -7041 | -5968 | 363542 | | 1.14 | 440.57 | 1.06 | 6548 | | | 1.1 | Si |
| SLV 7 | 896 | -11242 | 9915 | 408762 | | 1.82 | 440.57 | 1.2 | 7388 | | | 0.75 | No, Vu<V |
| SLV 7 | 1248 | -6484 | 7120 | -58700 | | 1.05 | 440.57 | 1.04 | 6437 | | | 0.9 | No, Vu<V |

### Verifica a pressoflessione fuori piano D.M. 17-01-18 (N.T.C.)

quota 1072 Wa 0.03 denominatore 8 γM = 2

| Comb. | fd | Sa | σ0 | N | M | Mc | Coeff.s. | Verifica |
|---|---|---|---|---|---|---|---|---|
| SLV 12 | 14 | 0.46 | 1.46 | -9028 | 28963 | 55628 | 1.92 | Si |
| SLV 11 | 14 | 0.46 | 1.46 | -9028 | 28963 | 55628 | 1.92 | Si |
| SLV 16 | 14 | 0.46 | 1.49 | -9188 | 28963 | 56475 | 1.95 | Si |
| SLV 15 | 14 | 0.46 | 1.49 | -9188 | 28963 | 56475 | 1.95 | Si |
| SLV 8 | 14 | 0.46 | 1.52 | -9348 | 28963 | 57319 | 1.98 | Si |
| SLV 7 | 14 | 0.46 | 1.52 | -9348 | 28963 | 57319 | 1.98 | Si |
| SLV 14 | 14 | 0.46 | 1.56 | -9644 | 28963 | 58871 | 2.03 | Si |
| SLV 13 | 14 | 0.46 | 1.56 | -9644 | 28963 | 58871 | 2.03 | Si |
| SLV 4 | 14 | 0.46 | 1.66 | -10253 | 28963 | 62005 | 2.14 | Si |
| SLV 3 | 14 | 0.46 | 1.66 | -10253 | 28963 | 62005 | 2.14 | Si |

### Verifica dei meccanismi locali di collasso con analisi cinematica lineare

forza di aggancio al piano = 0 quota mezzeria = 1072 Wa = 0.03 Ta = 0.1478

| Comb. | N top | N base | V orto | α0 | M* | e* | a0* | aLim | Verifica |
|---|---|---|---|---|---|---|---|---|---|
| SLV 9 | -7041 | -14181 | -14 | 0.023 | 10.286 | 0.922 | 35.724 | 1908.13 | No |
| SLV 10 | -7041 | -14181 | -14 | 0.023 | 10.286 | 0.922 | 35.724 | 1908.13 | No |
| SLV 7 | -6484 | -11242 | 14 | 0.023 | 9.727 | 0.918 | 36.086 | 1908.13 | No |
| SLV 8 | -6484 | -11242 | 14 | 0.023 | 9.727 | 0.918 | 36.086 | 1908.13 | No |
| SLV 6 | -7399 | -14101 | -10 | 0.023 | 10.646 | 0.924 | 36.153 | 1908.13 | No |
| SLV 5 | -7399 | -14101 | -10 | 0.023 | 10.646 | 0.924 | 36.153 | 1908.13 | No |
| SLV 4 | -7222 | -12149 | 10 | 0.023 | 10.468 | 0.923 | 36.197 | 1908.13 | No |
| SLV 3 | -7222 | -12149 | 10 | 0.023 | 10.468 | 0.923 | 36.197 | 1908.13 | No |
| SLV 13 | -6302 | -13275 | -10 | 0.023 | 9.546 | 0.917 | 37.02 | 1908.13 | No |
| SLV 14 | -6302 | -13275 | -10 | 0.023 | 9.546 | 0.917 | 37.02 | 1908.13 | No |

### Tabella dei coefficienti di sicurezza minimi

| Stato limite | Coeff.s. | Comb. | Verifica |
|---|---|---|---|
| PF_SLU | 5.574 | SLU 26 | Si |
| V_SLU | 3.413 | SLU 71 | Si |
| PF_SLV | 3.868 | SLV 9 | Si |
| V_SLV | 0.685 | SLV 11 | No |
| PFFP_SLV | 1.921 | SLV 11 | Si |
| R_SLV | 0.019 | SLV 9 | No |

## Maschio 149

Verifiche condotte secondo D.M. 17-01-18 (N.T.C.)
Maschio considerato membratura sismica secondaria

### Dati geometrici

| X ini. | Y ini. | X fin. | Y fin. | Quota i. | Quota.s | l | Sp. | h netta | h ini. | h fin. | a | a.s.,sx | a.s.,dx |
|---|---|---|---|---|---|---|---|---|---|---|---|---|---|
| -1375.3 | -335.9 | -1543.3 | -335.9 | L5 | L6 | 168 | 28 | 352 | 352 | 352 | | | |

### Caratteristiche del materiale

(Circolare 7 21-01-19 C8.5.I) Muratura in mattoni pieni e malta di calce LC2_Corti

| fb | fk | fvk0 | fmedio | τ0 | fv0 | μ | ϕ | fv,lim | E | G | FC |
|---|---|---|---|---|---|---|---|---|---|---|---|
| 60 | | | 34.5 | 0.9 | 2 | 0.58 | 0.77 | 3.25 | 32000 | 12800 | 1.2 |

### Verifica a pressoflessione nel piano secondo D.M. 17-01-18 NTC §7.8.2.2.1 in combinazioni non sismiche, γM = 3

| Comb. | Quota | N | M | σ0 | Mu | c.s. | Verifica |
|---|---|---|---|---|---|---|---|
| SLU 77 | 896 | -27298 | -365137 | 5.8 | 659453 | 1.806 | Si |
| SLU 77 | 1106 | -24824 | -369732 | 5.28 | 734321 | 1.986 | Si |
| SLU 78 | 896 | -27280 | -369323 | 5.8 | 660085 | 1.787 | Si |
| SLU 78 | 1106 | -24806 | -373911 | 5.27 | 734760 | 1.965 | Si |
| SLU 84 | 896 | -26965 | -370309 | 5.73 | 671098 | 1.812 | Si |
| SLU 84 | 1106 | -24491 | -374843 | 5.21 | 742352 | 1.98 | Si |
| SLU 79 | 896 | -27065 | -363689 | 5.75 | 667651 | 1.836 | Si |
| SLU 79 | 1106 | -24591 | -368292 | 5.23 | 739991 | 2.009 | Si |
| SLU 83 | 896 | -26983 | -366123 | 5.74 | 670491 | 1.831 | Si |
| SLU 83 | 1106 | -24509 | -370663 | 5.21 | 741937 | 2.002 | Si |
| SLU 80 | 896 | -27047 | -367875 | 5.75 | 668265 | 1.817 | Si |
| SLU 80 | 1106 | -24573 | -372472 | 5.22 | 740412 | 1.988 | Si |
| SLU 82 | 896 | -26340 | -366776 | 5.6 | 691632 | 1.886 | Si |
| SLU 82 | 1106 | -23866 | -371238 | 5.07 | 756107 | 2.037 | Si |
| SLU 74 | 896 | -26673 | -361604 | 5.67 | 680900 | 1.883 | Si |
| SLU 74 | 1106 | -24199 | -366127 | 5.14 | 748988 | 2.046 | Si |
| SLU 76 | 896 | -26411 | -367133 | 5.61 | 689400 | 1.878 | Si |
| SLU 76 | 1106 | -23937 | -371654 | 5.09 | 754641 | 2.03 | Si |
| SLU 75 | 896 | -26655 | -365790 | 5.67 | 681483 | 1.863 | Si |
| SLU 75 | 1106 | -24181 | -370307 | 5.14 | 749379 | 2.024 | Si |

### Verifica a taglio nel piano secondo D.M. 17-01-18 (N.T.C.) §7.8.2.2.2 con rottura per scorrimento in combinazioni non sismiche, γM = 3

| Comb. | Quota | N | V par | M | σ0 | σN | l' | fvd | Vt scorr. | Vt fess.diag. | Vt,lim | c.s. | Verifica |
|---|---|---|---|---|---|---|---|---|---|---|---|---|---|
| SLU 70 | 896 | -26014 | 5 | -355402 | | 5.53 | 168 | 1.08 | 5096 | | | 946.56 | Si |
| SLU 70 | 1106 | -23540 | 5 | -359968 | | 5 | 168 | 1.08 | 5096 | | | 946.56 | Si |
| SLU 72 | 896 | -25781 | 5 | -353954 | | 5.48 | 168 | 1.08 | 5096 | | | 939.7 | Si |
| SLU 72 | 1106 | -23307 | 5 | -358528 | | 4.95 | 168 | 1.08 | 5096 | | | 939.7 | Si |
| SLU 79 | 896 | -27065 | 6 | -363689 | | 5.75 | 168 | 1.08 | 5096 | | | 916.4 | Si |
| SLU 79 | 1106 | -24591 | 6 | -368292 | | 5.23 | 168 | 1.08 | 5096 | | | 916.4 | Si |
| SLU 69 | 896 | -26032 | 5 | -351216 | | 5.53 | 168 | 1.08 | 5096 | | | 941.44 | Si |

| Comb. | Quota | N | V par | M | σ0 | σN | l' | fvd | Vt scorr. | Vt fess.diag. | Vt,lim | c.s. | Verifica |
|---|---|---|---|---|---|---|---|---|---|---|---|---|---|
| SLU 69 | 1106 | -23558 | 5 | -355788 | | 5.01 | 168 | 1.08 | 5096 | | | 941.43 | Si |
| SLU 59 | 896 | -25580 | 5 | -347215 | | 5.44 | 168 | 1.08 | 5096 | | | 961.25 | Si |
| SLU 59 | 1106 | -23132 | 5 | -351755 | | 4.92 | 168 | 1.08 | 5096 | | | 961.25 | Si |
| SLU 78 | 896 | -27280 | 5 | -369323 | | 5.8 | 168 | 1.08 | 5096 | | | 927.84 | Si |
| SLU 78 | 1106 | -24806 | 5 | -373911 | | 5.27 | 168 | 1.08 | 5096 | | | 927.84 | Si |
| SLU 58 | 896 | -25598 | 5 | -343029 | | 5.44 | 168 | 1.08 | 5096 | | | 955.96 | Si |
| SLU 58 | 1106 | -23149 | 5 | -347575 | | 4.92 | 168 | 1.08 | 5096 | | | 955.96 | Si |
| SLU 80 | 896 | -27047 | 6 | -367875 | | 5.75 | 168 | 1.08 | 5096 | | | 921.25 | Si |
| SLU 80 | 1106 | -24573 | 6 | -372472 | | 5.22 | 168 | 1.08 | 5096 | | | 921.25 | Si |
| SLU 71 | 896 | -25799 | 5 | -349768 | | 5.48 | 168 | 1.08 | 5096 | | | 934.65 | Si |
| SLU 71 | 1106 | -23325 | 5 | -354348 | | 4.96 | 168 | 1.08 | 5096 | | | 934.65 | Si |
| SLU 77 | 896 | -27298 | 6 | -365137 | | 5.8 | 168 | 1.08 | 5096 | | | 922.92 | Si |
| SLU 77 | 1106 | -24824 | 6 | -369732 | | 5.28 | 168 | 1.08 | 5096 | | | 922.92 | Si |

### Verifica a pressoflessione fuori piano D.M. 17-01-18 (N.T.C.)

quota 1072 Wa 0.05 denominatore 8 γM = 2

| Comb. | fd | Sa | σ0 | N | M | Mc | Coeff.s. | Verifica |
|---|---|---|---|---|---|---|---|---|
| SLV 11 | 14 | 0.46 | 3.01 | -14157 | 20648 | 149378 | 7.23 | Si |
| SLV 12 | 14 | 0.46 | 3.01 | -14157 | 20648 | 149378 | 7.23 | Si |
| SLV 7 | 14 | 0.46 | 3.07 | -14462 | 20648 | 151524 | 7.34 | Si |
| SLV 8 | 14 | 0.46 | 3.07 | -14462 | 20648 | 151524 | 7.34 | Si |
| SLV 15 | 14 | 0.46 | 3.39 | -15941 | 20648 | 161279 | 7.81 | Si |
| SLV 16 | 14 | 0.46 | 3.39 | -15941 | 20648 | 161279 | 7.81 | Si |
| SLV 4 | 14 | 0.46 | 3.61 | -16959 | 20648 | 167370 | 8.11 | Si |
| SLV 3 | 14 | 0.46 | 3.61 | -16959 | 20648 | 167370 | 8.11 | Si |
| SLV 14 | 14 | 0.46 | 3.78 | -17776 | 20648 | 171898 | 8.33 | Si |
| SLV 13 | 14 | 0.46 | 3.78 | -17776 | 20648 | 171898 | 8.33 | Si |

### Verifica dei meccanismi locali di collasso con analisi cinematica lineare

forza di aggancio al piano = 0 quota mezzeria = 1072 Wa = 0.05 Ta = 0.0739

| Comb. | N top | N base | V orto | α0 | M* | e* | a0* | aLim | Verifica |
|---|---|---|---|---|---|---|---|---|---|
| SLV 8 | -13406 | -15500 | 692 | 0 | 15.984 | 0.957 | 0 | 1733.979 | No |
| SLV 11 | -11638 | -16157 | 736 | 0 | 14.188 | 0.952 | 0 | 1733.979 | No |
| SLV 12 | -11638 | -16157 | 736 | 0 | 14.188 | 0.952 | 0 | 1733.979 | No |
| SLV 7 | -13406 | -15500 | 692 | 0 | 15.984 | 0.957 | 0 | 1733.979 | No |
| SLV 10 | -17089 | -22347 | -686 | 0.006 | 19.73 | 0.964 | 9.119 | 1733.979 | No |
| SLV 9 | -17089 | -22347 | -686 | 0.006 | 19.73 | 0.964 | 9.119 | 1733.979 | No |
| SLV 5 | -18856 | -21689 | -730 | 0.007 | 21.529 | 0.967 | 10.246 | 1733.979 | No |
| SLV 6 | -18856 | -21689 | -730 | 0.007 | 21.529 | 0.967 | 10.246 | 1733.979 | No |
| SLV 15 | -11484 | -19090 | 289 | 0.022 | 14.031 | 0.952 | 33.648 | 956.161 | No |
| SLV 16 | -11484 | -19090 | 289 | 0.022 | 14.031 | 0.952 | 33.648 | 956.161 | No |

### Tabella dei coefficienti di sicurezza minimi

| Stato limite | Coeff.s. | Comb. | Verifica |
|---|---|---|---|
| PF_SLU | 1.787 | SLU 78 | Si |
| V_SLU | 916.396 | SLU 79 | Si |
| PFFP_SLV | 7.234 | SLV 11 | Si |
| R_SLV | 0 | SLV 7 | No |

## Maschio 150

Verifiche condotte secondo D.M. 17-01-18 (N.T.C.)

### Dati geometrici

| X ini. | Y ini. | X fin. | Y fin. | Quota i. | Quota.s | l | Sp. | h netta | h ini. | h fin. | a | a.s.,sx | a.s.,dx |
|---|---|---|---|---|---|---|---|---|---|---|---|---|---|
| -1505.8 | 104.6 | -1505.8 | 140.6 | L5 | L6 | 36 | 14 | 352 | 352 | 352 | | | |

### Caratteristiche del materiale

(Circolare 7 21-01-19 C8.5.I) Muratura in mattoni pieni e malta di calce LC2_Corti

| fb | fk | fvk0 | fmedio | τ0 | fv0 | μ | ϕ | fv,lim | E | G | FC |
|---|---|---|---|---|---|---|---|---|---|---|---|
| 60 | | | 34.5 | 0.9 | 2 | 0.58 | 0.77 | 3.25 | 32000 | 12800 | 1.2 |

### Verifica a pressoflessione nel piano secondo D.M. 17-01-18 NTC §7.8.2.2.1 in combinazioni non sismiche, γM = 3

| Comb. | Quota | N | M | σ0 | Mu | c.s. | Verifica |
|---|---|---|---|---|---|---|---|
| SLU 40 | 896 | -3019 | 15904 | 5.99 | 14383 | 0.904 | No, M>Mu |
| SLU 40 | 1106 | -686 | -12484 | 0 | 0 | 0 | No, e>l/2 |
| SLU 77 | 896 | -3747 | 18858 | 7.43 | 5891 | 0.312 | No, M>Mu |
| SLU 77 | 1106 | -976 | -14839 | 1.94 | 13395 | 0.903 | No, M>Mu |
| SLU 38 | 896 | -3245 | 17326 | 6.44 | 12240 | 0.706 | No, M>Mu |
| SLU 38 | 1106 | -711 | -13912 | 0 | 0 | 0 | No, e>l/2 |
| SLU 78 | 896 | -3747 | 18872 | 7.43 | 5886 | 0.312 | No, M>Mu |
| SLU 78 | 1106 | -970 | -14918 | 1.92 | 13333 | 0.894 | No, M>Mu |
| SLU 41 | 896 | -3224 | 17324 | 6.4 | 12463 | 0.719 | No, M>Mu |
| SLU 41 | 1106 | -695 | -13730 | 0 | 0 | 0 | No, e>l/2 |
| SLU 36 | 896 | -3310 | 17503 | 6.57 | 11546 | 0.66 | No, M>Mu |
| SLU 36 | 1106 | -754 | -14035 | 0 | 0 | 0 | No, e>l/2 |
| SLU 35 | 896 | -3310 | 17489 | 6.57 | 11549 | 0.66 | No, M>Mu |
| SLU 35 | 1106 | -761 | -13956 | 0 | 0 | 0 | No, e>l/2 |
| SLU 80 | 896 | -3683 | 18695 | 7.31 | 6829 | 0.365 | No, M>Mu |
| SLU 80 | 1106 | -927 | -14794 | 1.84 | 12917 | 0.873 | No, M>Mu |
| SLU 37 | 896 | -3245 | 17312 | 6.44 | 12243 | 0.707 | No, M>Mu |
| SLU 37 | 1106 | -718 | -13833 | 0 | 0 | 0 | No, e>l/2 |
| SLU 42 | 896 | -3224 | 17338 | 6.4 | 12459 | 0.719 | No, M>Mu |
| SLU 42 | 1106 | -688 | -13810 | 0 | 0 | 0 | No, e>l/2 |

## Verifica a pressoflessione nel piano secondo D.M. 17-01-18 NTC §7.8.2.2.1 in combinazioni sismiche, γM = 2

| Comb. | Quota | N | M | σ0 | Mu | c.s. | Verifica |
|---|---|---|---|---|---|---|---|
| SLV 9 | 896 | 599 | -32742 | 0 | 0 | 0 | No, Trazione |
| SLV 9 | 1106 | -2578 | 12476 | 5.11 | 26977 | 2.162 | Si |
| SLV 5 | 896 | 856 | -36288 | 0 | 0 | 0 | No, Trazione |
| SLV 5 | 1106 | -2794 | 14728 | 5.54 | 27475 | 1.865 | Si |
| SLD 16 | 896 | -2754 | 17806 | 5.46 | 27404 | 1.539 | Si |
| SLD 16 | 1106 | -338 | -11537 | 0 | 0 | 0 | No, e>l/2 |
| SLV 7 | 896 | -5022 | 52476 | 9.96 | 16675 | 0.318 | No, M>Mu |
| SLV 7 | 1106 | 1114 | -27172 | 0 | 0 | 0 | No, Trazione |
| SLV 4 | 896 | -2665 | 17272 | 5.29 | 27211 | 1.576 | Si |
| SLV 4 | 1106 | -507 | -9880 | 0 | 0 | 0 | No, e>l/2 |
| SLV 10 | 896 | 599 | -32742 | 0 | 0 | 0 | No, Trazione |
| SLV 10 | 1106 | -2578 | 12476 | 5.11 | 26977 | 2.162 | Si |
| SLV 8 | 896 | -5022 | 52476 | 9.96 | 16675 | 0.318 | No, M>Mu |
| SLV 8 | 1106 | 1114 | -27172 | 0 | 0 | 0 | No, Trazione |
| SLV 11 | 896 | -5279 | 56023 | 10.47 | 13563 | 0.242 | No, M>Mu |
| SLV 11 | 1106 | 1330 | -29424 | 0 | 0 | 0 | No, Trazione |
| SLV 12 | 896 | -5279 | 56023 | 10.47 | 13563 | 0.242 | No, M>Mu |
| SLV 12 | 1106 | 1330 | -29424 | 0 | 0 | 0 | No, Trazione |
| SLV 6 | 896 | 856 | -36288 | 0 | 0 | 0 | No, Trazione |
| SLV 6 | 1106 | -2794 | 14728 | 5.54 | 27475 | 1.865 | Si |

## Verifica a taglio nel piano secondo D.M. 17-01-18 (N.T.C.) §7.8.2.2.2 con rottura per scorrimento in combinazioni non sismiche, γM = 3

| Comb. | Quota | N | V par | M | σ0 | σN | l' | fvd | Vt scorr. | Vt fess.diag. | Vt,lim | c.s. | Verifica |
|---|---|---|---|---|---|---|---|---|---|---|---|---|---|
| SLU 35 | 896 | -3310 | 355 | 17489 | | 6.57 | 36 | 1.08 | 546 | | | 1.54 | Si |
| SLU 35 | 1106 | -761 | 349 | -13956 | | 0 | 0 | 0.56 | 0 | | | 0 | No, Vu<V |
| SLU 37 | 896 | -3245 | 352 | 17312 | | 6.44 | 36 | 1.08 | 546 | | | 1.55 | Si |
| SLU 37 | 1106 | -718 | 346 | -13833 | | 0 | 0 | 0.56 | 0 | | | 0 | No, Vu<V |
| SLU 38 | 896 | -3245 | 351 | 17326 | | 6.44 | 36 | 1.08 | 546 | | | 1.55 | Si |
| SLU 38 | 1106 | -711 | 348 | -13912 | | 0 | 0 | 0.56 | 0 | | | 0 | No, Vu<V |
| SLU 39 | 896 | -3018 | 318 | 15890 | | 5.99 | 36 | 1.08 | 546 | | | 1.72 | Si |
| SLU 39 | 1106 | -692 | 316 | -12405 | | 0 | 0 | 0.56 | 0 | | | 0 | No, Vu<V |
| SLU 40 | 896 | -3019 | 318 | 15904 | | 5.99 | 36 | 1.08 | 546 | | | 1.72 | Si |
| SLU 40 | 1106 | -686 | 318 | -12484 | | 0 | 0 | 0.56 | 0 | | | 0 | No, Vu<V |
| SLU 34 | 896 | -3040 | 319 | 15902 | | 6.03 | 36 | 1.08 | 546 | | | 1.71 | Si |
| SLU 34 | 1106 | -704 | 319 | -12639 | | 0 | 0 | 0.56 | 0 | | | 0 | No, Vu<V |
| SLU 36 | 896 | -3310 | 355 | 17503 | | 6.57 | 36 | 1.08 | 546 | | | 1.54 | Si |
| SLU 36 | 1106 | -754 | 351 | -14035 | | 0 | 0 | 0.56 | 0 | | | 0 | No, Vu<V |
| SLU 42 | 896 | -3224 | 350 | 17338 | | 6.4 | 36 | 1.08 | 546 | | | 1.56 | Si |
| SLU 42 | 1106 | -688 | 348 | -13810 | | 0 | 0 | 0.56 | 0 | | | 0 | No, Vu<V |
| SLU 41 | 896 | -3224 | 350 | 17324 | | 6.4 | 36 | 1.08 | 546 | | | 1.56 | Si |
| SLU 41 | 1106 | -695 | 346 | -13730 | | 0 | 0 | 0.56 | 0 | | | 0 | No, Vu<V |
| SLU 33 | 896 | -3105 | 322 | 16069 | | 6.16 | 36 | 1.08 | 546 | | | 1.69 | Si |
| SLU 33 | 1106 | -751 | 321 | -12710 | | 16.54 | 3.24 | 1.08 | 49 | | | 0.15 | No, Vu<V |

## Verifica a taglio nel piano secondo D.M. 17-01-18 (N.T.C.) §7.8.2.2.2 con rottura per scorrimento in combinazioni sismiche, γM = 2

| Comb. | Quota | N | V par | M | σ0 | σN | l' | fvd | Vt scorr. | Vt fess.diag. | Vt,lim | c.s. | Verifica |
|---|---|---|---|---|---|---|---|---|---|---|---|---|---|
| SLV 10 | 896 | 599 | -1155 | -32742 | | 0 | 0 | 0.83 | 0 | | | 0 | No, Vu<V |
| SLV 10 | 1106 | -2578 | -186 | 12476 | | 5.11 | 36 | 1.63 | 819 | | | 4.39 | Si |
| SLV 9 | 896 | 599 | -1155 | -32742 | | 0 | 0 | 0.83 | 0 | | | 0 | No, Vu<V |
| SLV 9 | 1106 | -2578 | -186 | 12476 | | 5.11 | 36 | 1.63 | 819 | | | 4.39 | Si |
| SLV 4 | 896 | -2665 | 406 | 17272 | | 5.51 | 34.56 | 1.63 | 786 | | | 1.94 | Si |
| SLV 4 | 1106 | -507 | 225 | -9880 | | 0 | 0 | 0.83 | 0 | | | 0 | No, Vu<V |
| SLV 12 | 896 | -5279 | 1660 | 56023 | | 17.01 | 22.16 | 1.63 | 504 | | | 0.3 | No, Vu<V |
| SLV 12 | 1106 | 1330 | 623 | -29424 | | 0 | 0 | 0.83 | 0 | | | 0 | No, Vu<V |
| SLV 7 | 896 | -5022 | 1535 | 52476 | | 15.84 | 22.65 | 1.63 | 515 | | | 0.34 | No, Vu<V |
| SLV 7 | 1106 | 1114 | 570 | -27172 | | 0 | 0 | 0.83 | 0 | | | 0 | No, Vu<V |
| SLV 8 | 896 | -5022 | 1535 | 52476 | | 15.84 | 22.65 | 1.63 | 515 | | | 0.34 | No, Vu<V |
| SLV 8 | 1106 | 1114 | 570 | -27172 | | 0 | 0 | 0.83 | 0 | | | 0 | No, Vu<V |
| SLV 6 | 896 | 856 | -1279 | -36288 | | 0 | 0 | 0.83 | 0 | | | 0 | No, Vu<V |
| SLV 6 | 1106 | -2794 | -240 | 14728 | | 5.54 | 36 | 1.63 | 819 | | | 3.42 | Si |
| SLV 11 | 896 | -5279 | 1660 | 56023 | | 17.01 | 22.16 | 1.63 | 504 | | | 0.3 | No, Vu<V |
| SLV 11 | 1106 | 1330 | 623 | -29424 | | 0 | 0 | 0.83 | 0 | | | 0 | No, Vu<V |
| SLV 5 | 896 | 856 | -1279 | -36288 | | 0 | 0 | 0.83 | 0 | | | 0 | No, Vu<V |
| SLV 5 | 1106 | -2794 | -240 | 14728 | | 5.54 | 36 | 1.63 | 819 | | | 3.42 | Si |
| SLD 16 | 896 | -2754 | 448 | 17806 | | 5.69 | 34.61 | 1.63 | 787 | | | 1.76 | Si |
| SLD 16 | 1106 | -338 | 279 | -11537 | | 0 | 0 | 0.83 | 0 | | | 0 | No, Vu<V |

## Verifica a pressoflessione fuori piano D.M. 17-01-18 (N.T.C.)

quota 1072 Wa 0.03 denominatore 8 γM = 2

| Comb. | fd | Sa | σ0 | N | M | Mc | Coeff.s. | Verifica |
|---|---|---|---|---|---|---|---|---|
| SLV 11 | 14 | 0.46 | 0 | 1289 | 2367 | 0 | 0 | No, Trazione |
| SLV 12 | 14 | 0.46 | 0 | 1289 | 2367 | 0 | 0 | No, Trazione |
| SLV 15 | 14 | 0.46 | 0 | 173 | 2367 | 0 | 0 | No, Trazione |
| SLV 8 | 14 | 0.46 | 0 | 1075 | 2367 | 0 | 0 | No, Trazione |
| SLV 7 | 14 | 0.46 | 0 | 1075 | 2367 | 0 | 0 | No, Trazione |
| SLV 16 | 14 | 0.46 | 0 | 173 | 2367 | 0 | 0 | No, Trazione |
| SLV 4 | 14 | 0.46 | 1.08 | -542 | 2367 | 3459 | 1.46 | Si |
| SLV 3 | 14 | 0.46 | 1.08 | -542 | 2367 | 3459 | 1.46 | Si |
| SLV 14 | 14 | 0.46 | 1.98 | -999 | 2367 | 5857 | 2.47 | Si |
| SLV 13 | 14 | 0.46 | 1.98 | -999 | 2367 | 5857 | 2.47 | Si |

## Verifica dei meccanismi locali di collasso con analisi cinematica lineare

forza di aggancio al piano = 0 quota mezzeria = 1072 Wa = 0.03 Ta = 0.1478

| Comb. | N top | N base | V orto | α0 | M* | e* | a0* | aLim | Verifica |
|---|---|---|---|---|---|---|---|---|---|
| SLV 9 | -71 | 599 | 0 | 0 | 0 | 0 | 0 | 1908.13 | No, Trazione |

| Comb. | N top | N base | V orto | α0 | M* | e* | a0* | aLim | Verifica |
|---|---|---|---|---|---|---|---|---|---|
| SLV 5 | 15 | 856 | 3 | 0 | 0 | 0 | 0 | 1908.13 | No, Trazione |
| SLV 6 | 15 | 856 | 3 | 0 | 0 | 0 | 0 | 1908.13 | No, Trazione |
| SLV 10 | -71 | 599 | 0 | 0 | 0 | 0 | 0 | 1908.13 | No, Trazione |
| SLV 2 | -669 | -902 | 5 | 0.018 | 0.934 | 0.928 | 27.548 | 1908.13 | No |
| SLV 1 | -669 | -902 | 5 | 0.018 | 0.934 | 0.928 | 27.548 | 1908.13 | No |
| SLV 16 | -1625 | -3522 | -5 | 0.019 | 1.904 | 0.961 | 28.338 | 1908.13 | No |
| SLV 15 | -1625 | -3522 | -5 | 0.019 | 1.904 | 0.961 | 28.338 | 1908.13 | No |
| SLV 14 | -954 | -1758 | -4 | 0.019 | 1.223 | 0.942 | 29.026 | 1908.13 | No |
| SLV 13 | -954 | -1758 | -4 | 0.019 | 1.223 | 0.942 | 29.026 | 1908.13 | No |

### Tabella dei coefficienti di sicurezza minimi

| Stato limite | Coeff.s. | Comb. | Verifica |
|---|---|---|---|
| PF_SLU | 0 | SLU 35 | No |
| V_SLU | 0 | SLU 34 | No |
| PF_SLV | 0 | SLV 16 | No |
| V_SLV | 0 | SLD 7 | No |
| PFFP_SLV | 0 | SLV 16 | No |
| R_SLV | 0 | SLV 10 | No |

## Maschio 151

Verifiche condotte secondo D.M. 17-01-18 (N.T.C.)

### Dati geometrici

| X ini. | Y ini. | X fin. | Y fin. | Quota i. | Quota.s | l | Sp. | h netta | h ini. | h fin. | a | a.s.,sx | a.s.,dx |
|---|---|---|---|---|---|---|---|---|---|---|---|---|---|
| -1505.8 | 220.6 | -1505.8 | 652.1 | L5 | L6 | 431.5 | 14 | 352 | 352 | 352 | | | |

### Caratteristiche del materiale

(Circolare 7 21-01-19 C8.5.I) Muratura in mattoni pieni e malta di calce LC2_Corti

| fb | fk | fvk0 | fmedio | τ0 | fv0 | μ | ϕ | fv,lim | E | G | FC |
|---|---|---|---|---|---|---|---|---|---|---|---|
| 60 | | | 34.5 | 0.9 | 2 | 0.58 | 0.77 | 3.25 | 32000 | 12800 | 1.2 |

### Verifica a pressoflessione nel piano secondo D.M. 17-01-18 NTC §7.8.2.2.1 in combinazioni non sismiche, γM = 3

| Comb. | Quota | N | M | σ0 | Mu | c.s. | Verifica |
|---|---|---|---|---|---|---|---|
| SLU 69 | 896 | -19310 | -247415 | 3.2 | 2531323 | 10.231 | Si |
| SLU 69 | 1106 | -16187 | -311237 | 2.68 | 2343547 | 7.53 | Si |
| SLU 9 | 896 | -13755 | -162678 | 2.28 | 2138141 | 13.143 | Si |
| SLU 9 | 1106 | -11425 | -253237 | 1.89 | 1892609 | 7.474 | Si |
| SLU 70 | 896 | -19298 | -243785 | 3.19 | 2530740 | 10.381 | Si |
| SLU 70 | 1106 | -16174 | -312728 | 2.68 | 2342620 | 7.491 | Si |
| SLU 72 | 896 | -18946 | -236241 | 3.14 | 2513831 | 10.641 | Si |
| SLU 72 | 1106 | -15823 | -318617 | 2.62 | 2316077 | 7.269 | Si |
| SLU 29 | 896 | -15784 | -193380 | 2.61 | 2313065 | 11.961 | Si |
| SLU 29 | 1106 | -13310 | -285173 | 2.2 | 2094947 | 7.346 | Si |
| SLU 80 | 896 | -20803 | -271622 | 3.44 | 2590850 | 9.538 | Si |
| SLU 80 | 1106 | -17680 | -327222 | 2.93 | 2443958 | 7.469 | Si |
| SLU 71 | 896 | -18959 | -239871 | 3.14 | 2514453 | 10.483 | Si |
| SLU 71 | 1106 | -15835 | -317126 | 2.62 | 2317043 | 7.306 | Si |
| SLU 79 | 896 | -20816 | -275252 | 3.45 | 2591268 | 9.414 | Si |
| SLU 79 | 1106 | -17692 | -325731 | 2.93 | 2444719 | 7.505 | Si |
| SLU 8 | 896 | -13768 | -166308 | 2.28 | 2139335 | 12.864 | Si |
| SLU 8 | 1106 | -11437 | -251746 | 1.89 | 1894059 | 7.524 | Si |
| SLU 30 | 896 | -15771 | -189750 | 2.61 | 2312093 | 12.185 | Si |
| SLU 30 | 1106 | -13298 | -286664 | 2.2 | 2093703 | 7.304 | Si |

### Verifica a pressoflessione nel piano secondo D.M. 17-01-18 NTC §7.8.2.2.1 in combinazioni sismiche, γM = 2

| Comb. | Quota | N | M | σ0 | Mu | c.s. | Verifica |
|---|---|---|---|---|---|---|---|
| SLV 12 | 896 | -16705 | 440677 | 2.77 | 2788441 | 6.328 | Si |
| SLV 12 | 1106 | -14036 | -1255179 | 2.32 | 2452410 | 1.954 | Si |
| SLV 9 | 896 | -11398 | -785994 | 1.89 | 2079317 | 2.645 | Si |
| SLV 9 | 1106 | -9183 | 853946 | 1.52 | 1734686 | 2.031 | Si |
| SLV 15 | 896 | -14981 | 83899 | 2.48 | 2576212 | 30.706 | Si |
| SLV 15 | 1106 | -12306 | -619412 | 2.04 | 2212436 | 3.572 | Si |
| SLV 5 | 896 | -11283 | -848186 | 1.87 | 2062145 | 2.431 | Si |
| SLV 5 | 1106 | -9209 | 941740 | 1.52 | 1738968 | 1.847 | Si |
| SLV 8 | 896 | -16590 | 378485 | 2.75 | 2774834 | 7.331 | Si |
| SLV 8 | 1106 | -14062 | -1167385 | 2.33 | 2455942 | 2.104 | Si |
| SLV 7 | 896 | -16590 | 378485 | 2.75 | 2774834 | 7.331 | Si |
| SLV 7 | 1106 | -14062 | -1167385 | 2.33 | 2455942 | 2.104 | Si |
| SLV 16 | 896 | -14981 | 83899 | 2.48 | 2576212 | 30.706 | Si |
| SLV 16 | 1106 | -12306 | -619412 | 2.04 | 2212436 | 3.572 | Si |
| SLV 6 | 896 | -11283 | -848186 | 1.87 | 2062145 | 2.431 | Si |
| SLV 6 | 1106 | -9209 | 941740 | 1.52 | 1738968 | 1.847 | Si |
| SLV 10 | 896 | -11398 | -785994 | 1.89 | 2079317 | 2.645 | Si |
| SLV 10 | 1106 | -9183 | 853946 | 1.52 | 1734686 | 2.031 | Si |
| SLV 11 | 896 | -16705 | 440677 | 2.77 | 2788441 | 6.328 | Si |
| SLV 11 | 1106 | -14036 | -1255179 | 2.32 | 2452410 | 1.954 | Si |

### Verifica a taglio nel piano secondo D.M. 17-01-18 (N.T.C.) §7.8.2.2.2 con rottura per scorrimento in combinazioni non sismiche, γM = 3

| Comb. | Quota | N | V par | M | σ0 | σN | l' | fvd | Vt scorr. | Vt fess.diag. | Vt,lim | c.s. | Verifica |
|---|---|---|---|---|---|---|---|---|---|---|---|---|---|
| SLU 30 | 896 | -15771 | 481 | -189750 | | 2.61 | 431.5 | 0.9 | 5459 | | | 11.35 | Si |
| SLU 30 | 1106 | -13298 | 481 | -286664 | | 2.2 | 431.5 | 0.85 | 5129 | | | 10.66 | Si |
| SLU 60 | 896 | -18715 | -422 | -282946 | | 3.1 | 431.5 | 0.97 | 5851 | | | 13.87 | Si |
| SLU 60 | 1106 | -15734 | -422 | -188956 | | 2.6 | 431.5 | 0.9 | 5454 | | | 12.93 | Si |

| Comb. | Quota | N | V par | M | σ0 | σN | l' | fvd | Vt scorr. | Vt fess.diag. | Vt,lim | c.s. | Verifica |
|---|---|---|---|---|---|---|---|---|---|---|---|---|---|
| SLU 9 | 896 | -13755 | 451 | -162678 | | 2.28 | 431.5 | 0.86 | 5190 | | | 11.51 | Si |
| SLU 9 | 1106 | -11425 | 451 | -253237 | | 1.89 | 431.5 | 0.81 | 4879 | | | 10.82 | Si |
| SLU 28 | 896 | -16123 | 417 | -197294 | | 2.67 | 431.5 | 0.91 | 5506 | | | 13.2 | Si |
| SLU 28 | 1106 | -13649 | 417 | -280776 | | 2.26 | 431.5 | 0.86 | 5176 | | | 12.41 | Si |
| SLU 72 | 896 | -18946 | 418 | -236241 | | 3.14 | 431.5 | 0.97 | 5882 | | | 14.08 | Si |
| SLU 72 | 1106 | -15823 | 418 | -318617 | | 2.62 | 431.5 | 0.9 | 5466 | | | 13.08 | Si |
| SLU 51 | 896 | -16930 | 388 | -209169 | | 2.8 | 431.5 | 0.93 | 5613 | | | 14.48 | Si |
| SLU 51 | 1106 | -13949 | 388 | -285190 | | 2.31 | 431.5 | 0.86 | 5216 | | | 13.45 | Si |
| SLU 8 | 896 | -13768 | 427 | -166308 | | 2.28 | 431.5 | 0.86 | 5192 | | | 12.17 | Si |
| SLU 8 | 1106 | -11437 | 427 | -251746 | | 1.89 | 431.5 | 0.81 | 4881 | | | 11.44 | Si |
| SLU 7 | 896 | -14107 | 387 | -170222 | | 2.34 | 431.5 | 0.87 | 5237 | | | 13.53 | Si |
| SLU 7 | 1106 | -11776 | 387 | -247349 | | 1.95 | 431.5 | 0.82 | 4926 | | | 12.73 | Si |
| SLU 29 | 896 | -15784 | 457 | -193380 | | 2.61 | 431.5 | 0.9 | 5461 | | | 11.96 | Si |
| SLU 29 | 1106 | -13310 | 457 | -285173 | | 2.2 | 431.5 | 0.85 | 5131 | | | 11.24 | Si |
| SLU 27 | 896 | -16135 | 393 | -200923 | | 2.67 | 431.5 | 0.91 | 5507 | | | 14.03 | Si |
| SLU 27 | 1106 | -13662 | 393 | -279285 | | 2.26 | 431.5 | 0.86 | 5178 | | | 13.19 | Si |

### Verifica a taglio nel piano secondo D.M. 17-01-18 (N.T.C.) §7.8.2.2.2 con rottura per scorrimento in combinazioni sismiche, γM = 2

| Comb. | Quota | N | V par | M | σ0 | σN | l' | fvd | Vt scorr. | Vt fess.diag. | Vt,lim | c.s. | Verifica |
|---|---|---|---|---|---|---|---|---|---|---|---|---|---|
| SLV 2 | 896 | -13006 | -3376 | -491408 | | 2.15 | 431.5 | 1.26 | 7635 | | | 2.26 | Si |
| SLV 2 | 1106 | -10939 | -3576 | 305973 | | 1.81 | 431.5 | 1.2 | 7222 | | | 2.02 | Si |
| SLV 11 | 896 | -16705 | 6583 | 440677 | | 2.77 | 431.5 | 1.39 | 8375 | | | 1.27 | Si |
| SLV 11 | 1106 | -14036 | 7592 | -1255179 | | 2.65 | 378.97 | 1.36 | 7228 | | | 0.95 | No, Vu<V |
| SLV 12 | 896 | -16705 | 6583 | 440677 | | 2.77 | 431.5 | 1.39 | 8375 | | | 1.27 | Si |
| SLV 12 | 1106 | -14036 | 7592 | -1255179 | | 2.65 | 378.97 | 1.36 | 7228 | | | 0.95 | No, Vu<V |
| SLV 8 | 896 | -16590 | 5834 | 378485 | | 2.75 | 431.5 | 1.38 | 8352 | | | 1.43 | Si |
| SLV 8 | 1106 | -14062 | 6910 | -1167385 | | 2.52 | 398.2 | 1.34 | 7458 | | | 1.08 | Si |
| SLV 7 | 896 | -16590 | 5834 | 378485 | | 2.75 | 431.5 | 1.38 | 8352 | | | 1.43 | Si |
| SLV 7 | 1106 | -14062 | 6910 | -1167385 | | 2.52 | 398.2 | 1.34 | 7458 | | | 1.08 | Si |
| SLV 5 | 896 | -11283 | -6991 | -848186 | | 1.91 | 421.72 | 1.22 | 7177 | | | 1.03 | Si |
| SLV 5 | 1106 | -9209 | -8000 | 941740 | | 1.93 | 340.46 | 1.22 | 5814 | | | 0.73 | No, Vu<V |
| SLV 9 | 896 | -11398 | -6243 | -785994 | | 1.89 | 431.5 | 1.21 | 7314 | | | 1.17 | Si |
| SLV 9 | 1106 | -9183 | -7319 | 853946 | | 1.78 | 368.26 | 1.19 | 6133 | | | 0.84 | No, Vu<V |
| SLV 10 | 896 | -11398 | -6243 | -785994 | | 1.89 | 431.5 | 1.21 | 7314 | | | 1.17 | Si |
| SLV 10 | 1106 | -9183 | -7319 | 853946 | | 1.78 | 368.26 | 1.19 | 6133 | | | 0.84 | No, Vu<V |
| SLV 1 | 896 | -13006 | -3376 | -491408 | | 2.15 | 431.5 | 1.26 | 7635 | | | 2.26 | Si |
| SLV 1 | 1106 | -10939 | -3576 | 305973 | | 1.81 | 431.5 | 1.2 | 7222 | | | 2.02 | Si |
| SLV 6 | 896 | -11283 | -6991 | -848186 | | 1.91 | 421.72 | 1.22 | 7177 | | | 1.03 | Si |
| SLV 6 | 1106 | -9209 | -8000 | 941740 | | 1.93 | 340.46 | 1.22 | 5814 | | | 0.73 | No, Vu<V |

### Verifica a pressoflessione fuori piano D.M. 17-01-18 (N.T.C.)

quota 1072 Wa 0.03 denominatore 8 γM = 2

| Comb. | fd | Sa | σ0 | N | M | Mc | Coeff.s. | Verifica |
|---|---|---|---|---|---|---|---|---|
| SLV 5 | 14 | 0.46 | 1.53 | -9227 | 28367 | 56514 | 1.99 | Si |
| SLV 6 | 14 | 0.46 | 1.53 | -9227 | 28367 | 56514 | 1.99 | Si |
| SLV 9 | 14 | 0.46 | 1.53 | -9227 | 28367 | 56515 | 1.99 | Si |
| SLV 10 | 14 | 0.46 | 1.53 | -9227 | 28367 | 56515 | 1.99 | Si |
| SLV 1 | 14 | 0.46 | 1.86 | -11230 | 28367 | 66650 | 2.35 | Si |
| SLV 2 | 14 | 0.46 | 1.86 | -11230 | 28367 | 66650 | 2.35 | Si |
| SLV 13 | 14 | 0.46 | 1.86 | -11230 | 28367 | 66652 | 2.35 | Si |
| SLV 14 | 14 | 0.46 | 1.86 | -11230 | 28367 | 66652 | 2.35 | Si |
| SLV 4 | 14 | 0.46 | 2.14 | -12947 | 28367 | 74732 | 2.63 | Si |
| SLV 3 | 14 | 0.46 | 2.14 | -12947 | 28367 | 74732 | 2.63 | Si |

### Verifica dei meccanismi locali di collasso con analisi cinematica lineare

forza di aggancio al piano = 0 quota mezzeria = 1072 Wa = 0.03 Ta = 0.1478

| Comb. | N top | N base | V orto | α0 | M* | e* | a0* | aLim | Verifica |
|---|---|---|---|---|---|---|---|---|---|
| SLV 13 | -7945 | -13389 | 88 | 0.015 | 11.13 | 0.927 | 23.264 | 1908.13 | No |
| SLV 14 | -7945 | -13389 | 88 | 0.015 | 11.13 | 0.927 | 23.264 | 1908.13 | No |
| SLV 4 | -8586 | -14598 | -89 | 0.015 | 11.777 | 0.931 | 23.516 | 1908.13 | No |
| SLV 3 | -8586 | -14598 | -89 | 0.015 | 11.777 | 0.931 | 23.516 | 1908.13 | No |
| SLV 16 | -7039 | -14981 | 76 | 0.016 | 10.219 | 0.922 | 24.73 | 1908.13 | No |
| SLV 15 | -7039 | -14981 | 76 | 0.016 | 10.219 | 0.922 | 24.73 | 1908.13 | No |
| SLV 1 | -9492 | -13006 | -77 | 0.017 | 12.692 | 0.935 | 25.669 | 1908.13 | No |
| SLV 2 | -9492 | -13006 | -77 | 0.017 | 12.692 | 0.935 | 25.669 | 1908.13 | No |
| SLV 8 | -6988 | -16590 | -45 | 0.019 | 10.167 | 0.922 | 30.033 | 1908.13 | No |
| SLV 7 | -6988 | -16590 | -45 | 0.019 | 10.167 | 0.922 | 30.033 | 1908.13 | No |

### Tabella dei coefficienti di sicurezza minimi

| Stato limite | Coeff.s. | Comb. | Verifica |
|---|---|---|---|
| PF_SLU | 7.269 | SLU 72 | Si |
| V_SLU | 10.664 | SLU 30 | Si |
| PF_SLV | 1.847 | SLV 5 | Si |
| V_SLV | 0.727 | SLV 5 | No |
| PFFP_SLV | 1.992 | SLV 5 | Si |
| R_SLV | 0.012 | SLV 13 | No |

## Maschio 152

Verifiche condotte secondo D.M. 17-01-18 (N.T.C.)

### Dati geometrici

| X ini. | Y ini. | X fin. | Y fin. | Quota i. | Quota.s | l | Sp. | h netta | h ini. | h fin. | a | a.s.,sx | a.s.,dx |
|---|---|---|---|---|---|---|---|---|---|---|---|---|---|
| -1975.8 | 666.1 | -1771.8 | 666.1 | L5 | L6 | 204 | 28 | 352 | 352 | 352 | | | |

## Caratteristiche del materiale

(Circolare 7 21-01-19 C8.5.I) Muratura in mattoni pieni e malta di calce LC2_Corti

| fb | fk | fvk0 | fmedio | τ0 | fv0 | μ | ϕ | fv,lim | E | G | FC |
|---|---|---|---|---|---|---|---|---|---|---|---|
| 60 | | | 34.5 | 0.9 | 2 | 0.58 | 0.77 | 3.25 | 32000 | 12800 | 1.2 |

## Verifica a pressoflessione nel piano secondo D.M. 17-01-18 NTC §7.8.2.2.1 in combinazioni non sismiche, γM = 3

| Comb. | Quota | N | M | σ0 | Mu | c.s. | Verifica |
|---|---|---|---|---|---|---|---|
| SLU 30 | 986 | -4683 | 25483 | 0.82 | 429623 | 16.859 | Si |
| SLU 30 | 1166 | -2686 | 163969 | 0.47 | 258196 | 1.575 | Si |
| SLU 29 | 986 | -4656 | 27160 | 0.82 | 427391 | 15.736 | Si |
| SLU 29 | 1166 | -2659 | 163573 | 0.47 | 255724 | 1.563 | Si |
| SLU 7 | 986 | -4940 | 26722 | 0.86 | 450419 | 16.856 | Si |
| SLU 7 | 1166 | -2970 | 133176 | 0.52 | 283605 | 2.13 | Si |
| SLU 37 | 986 | -5992 | 15707 | 1.05 | 532494 | 33.901 | Si |
| SLU 37 | 1166 | -3995 | 175323 | 0.7 | 372527 | 2.125 | Si |
| SLU 27 | 986 | -5443 | 25449 | 0.95 | 490260 | 19.264 | Si |
| SLU 27 | 1166 | -3446 | 158890 | 0.6 | 325486 | 2.049 | Si |
| SLU 38 | 986 | -6020 | 14030 | 1.05 | 534566 | 38.101 | Si |
| SLU 38 | 1166 | -4023 | 175719 | 0.7 | 374838 | 2.133 | Si |
| SLU 28 | 986 | -5471 | 23772 | 0.96 | 492397 | 20.713 | Si |
| SLU 28 | 1166 | -3474 | 159286 | 0.61 | 327863 | 2.058 | Si |
| SLU 6 | 986 | -4913 | 28399 | 0.86 | 448218 | 15.783 | Si |
| SLU 6 | 1166 | -2943 | 132780 | 0.52 | 281167 | 2.118 | Si |
| SLU 9 | 986 | -4153 | 28433 | 0.73 | 385815 | 13.569 | Si |
| SLU 9 | 1166 | -2183 | 137859 | 0.38 | 212199 | 1.539 | Si |
| SLU 8 | 986 | -4126 | 30110 | 0.72 | 383519 | 12.737 | Si |
| SLU 8 | 1166 | -2155 | 137464 | 0.38 | 209667 | 1.525 | Si |

## Verifica a pressoflessione nel piano secondo D.M. 17-01-18 NTC §7.8.2.2.1 in combinazioni sismiche, γM = 2

| Comb. | Quota | N | M | σ0 | Mu | c.s. | Verifica |
|---|---|---|---|---|---|---|---|
| SLV 13 | 986 | -2790 | 301656 | 0 | 0 | 0 | No, e>l/2 |
| SLV 13 | 1166 | -560 | -96522 | 0 | 0 | 0 | No, e>l/2 |
| SLV 16 | 986 | -5057 | 280450 | 0.89 | 478449 | 1.706 | Si |
| SLV 16 | 1166 | -2657 | -113571 | 0.47 | 260681 | 2.295 | Si |
| SLV 1 | 986 | -11234 | -278222 | 1.97 | 961457 | 3.456 | Si |
| SLV 1 | 1166 | -9679 | 265417 | 1.69 | 850320 | 3.204 | Si |
| SLV 14 | 986 | -2790 | 301656 | 0 | 0 | 0 | No, e>l/2 |
| SLV 14 | 1166 | -560 | -96522 | 0 | 0 | 0 | No, e>l/2 |
| SLV 10 | 986 | -3101 | 123438 | 0.54 | 302229 | 2.448 | Si |
| SLV 10 | 1166 | -1305 | 50047 | 0.23 | 130584 | 2.609 | Si |
| SLV 5 | 986 | -5634 | -50525 | 0.99 | 528286 | 10.456 | Si |
| SLV 5 | 1166 | -4040 | 158628 | 0.71 | 388256 | 2.448 | Si |
| SLV 15 | 986 | -5057 | 280450 | 0.89 | 478449 | 1.706 | Si |
| SLV 15 | 1166 | -2657 | -113571 | 0.47 | 260681 | 2.295 | Si |
| SLV 9 | 986 | -3101 | 123438 | 0.54 | 302229 | 2.448 | Si |
| SLV 9 | 1166 | -1305 | 50047 | 0.23 | 130584 | 2.609 | Si |
| SLV 6 | 986 | -5634 | -50525 | 0.99 | 528286 | 10.456 | Si |
| SLV 6 | 1166 | -4040 | 158628 | 0.71 | 388256 | 2.448 | Si |
| SLV 2 | 986 | -11234 | -278222 | 1.97 | 961457 | 3.456 | Si |
| SLV 2 | 1166 | -9679 | 265417 | 1.69 | 850320 | 3.204 | Si |

## Verifica a taglio nel piano secondo D.M. 17-01-18 (N.T.C.) §7.8.2.2.2 con rottura per scorrimento in combinazioni non sismiche, γM = 3

| Comb. | Quota | N | V par | M | σ0 | σN | l' | fvd | Vt scorr. | Vt fess.diag. | Vt,lim | c.s. | Verifica |
|---|---|---|---|---|---|---|---|---|---|---|---|---|---|
| SLU 38 | 986 | -6020 | -881 | 14030 | | 1.05 | 204 | 0.7 | 3976 | | | 4.51 | Si |
| SLU 38 | 1166 | -4023 | -881 | 175719 | | 0.82 | 174.95 | 0.67 | 3258 | | | 3.7 | Si |
| SLU 72 | 986 | -6785 | -792 | 28063 | | 1.19 | 204 | 0.71 | 4078 | | | 5.15 | Si |
| SLU 72 | 1166 | -4206 | -792 | 174549 | | 0.83 | 181.51 | 0.67 | 3384 | | | 4.28 | Si |
| SLU 30 | 986 | -4683 | -752 | 25483 | | 0.82 | 204 | 0.66 | 3798 | | | 5.05 | Si |
| SLU 30 | 1166 | -2686 | -752 | 163969 | | 0.78 | 122.89 | 0.66 | 2270 | | | 3.02 | Si |
| SLU 9 | 986 | -4153 | -591 | 28433 | | 0.73 | 204 | 0.65 | 3727 | | | 6.31 | Si |
| SLU 9 | 1166 | -2183 | -591 | 137859 | | 0.67 | 116.53 | 0.64 | 2104 | | | 3.56 | Si |
| SLU 37 | 986 | -5992 | -870 | 15707 | | 1.05 | 204 | 0.7 | 3972 | | | 4.57 | Si |
| SLU 37 | 1166 | -3995 | -870 | 175323 | | 0.82 | 174.35 | 0.66 | 3245 | | | 3.73 | Si |
| SLU 28 | 986 | -5471 | -736 | 23772 | | 0.96 | 204 | 0.68 | 3903 | | | 5.3 | Si |
| SLU 28 | 1166 | -3474 | -736 | 159286 | | 0.74 | 168.43 | 0.65 | 3083 | | | 4.19 | Si |
| SLU 27 | 986 | -5443 | -724 | 25449 | | 0.95 | 204 | 0.68 | 3899 | | | 5.38 | Si |
| SLU 27 | 1166 | -3446 | -724 | 158890 | | 0.73 | 167.69 | 0.65 | 3068 | | | 4.24 | Si |
| SLU 80 | 986 | -8122 | -921 | 16610 | | 1.42 | 204 | 0.75 | 4256 | | | 4.62 | Si |
| SLU 80 | 1166 | -5543 | -921 | 186299 | | 0.97 | 204 | 0.68 | 3912 | | | 4.25 | Si |
| SLU 8 | 986 | -4126 | -579 | 30110 | | 0.72 | 204 | 0.65 | 3723 | | | 6.43 | Si |
| SLU 8 | 1166 | -2155 | -579 | 137464 | | 0.67 | 114.67 | 0.65 | 2071 | | | 3.57 | Si |
| SLU 29 | 986 | -4656 | -741 | 27160 | | 0.82 | 204 | 0.66 | 3794 | | | 5.12 | Si |
| SLU 29 | 1166 | -2659 | -741 | 163573 | | 0.78 | 121.45 | 0.66 | 2244 | | | 3.03 | Si |

## Verifica a taglio nel piano secondo D.M. 17-01-18 (N.T.C.) §7.8.2.2.2 con rottura per scorrimento in combinazioni sismiche, γM = 2

| Comb. | Quota | N | V par | M | σ0 | σN | l' | fvd | Vt scorr. | Vt fess.diag. | Vt,lim | c.s. | Verifica |
|---|---|---|---|---|---|---|---|---|---|---|---|---|---|
| SLV 4 | 986 | -13501 | -3234 | -299427 | | 2.36 | 204 | 1.31 | 7460 | | | 2.31 | Si |
| SLV 4 | 1166 | -11776 | -2851 | 248368 | | 2.06 | 204 | 1.25 | 7115 | | | 2.5 | Si |
| SLV 6 | 986 | -5634 | -1759 | -50525 | | 0.99 | 204 | 1.03 | 5887 | | | 3.35 | Si |
| SLV 6 | 1166 | -4040 | -1308 | 158628 | | 0.77 | 188.22 | 0.99 | 5200 | | | 3.98 | Si |
| SLV 2 | 986 | -11234 | -3515 | -278222 | | 1.97 | 204 | 1.23 | 7007 | | | 1.99 | Si |
| SLV 2 | 1166 | -9679 | -2947 | 265417 | | 1.69 | 204 | 1.17 | 6696 | | | 2.27 | Si |
| SLV 15 | 986 | -5057 | 2717 | 280450 | | 1.29 | 139.63 | 1.09 | 4269 | | | 1.57 | Si |
| SLV 15 | 1166 | -2657 | 2149 | -113571 | | 0.53 | 177.76 | 0.94 | 4679 | | | 2.18 | Si |
| SLV 13 | 986 | -2790 | 2437 | 301656 | | 0 | 0 | 0.83 | 0 | | | 0 | No, Vu<V |
| SLV 13 | 1166 | -560 | 2054 | -96522 | | 0 | 0 | 0.83 | 0 | | | 0 | No, Vu<V |
| SLV 3 | 986 | -13501 | -3234 | -299427 | | 2.36 | 204 | 1.31 | 7460 | | | 2.31 | Si |

| Comb. | Quota | N | V par | M | σ0 | σN | l' | fvd | Vt scorr. | Vt fess.diag. | Vt,lim | c.s. | Verifica |
|---|---|---|---|---|---|---|---|---|---|---|---|---|---|
| SLV 3 | 1166 | -11776 | -2851 | 248368 | | 2.06 | 204 | 1.25 | 7115 | | | 2.5 | Si |
| SLV 16 | 986 | -5057 | 2717 | 280450 | | 1.29 | 139.63 | 1.09 | 4269 | | | 1.57 | Si |
| SLV 16 | 1166 | -2657 | 2149 | -113571 | | 0.53 | 177.76 | 0.94 | 4679 | | | 2.18 | Si |
| SLV 5 | 986 | -5634 | -1759 | -50525 | | 0.99 | 204 | 1.03 | 5887 | | | 3.35 | Si |
| SLV 5 | 1166 | -4040 | -1308 | 158628 | | 0.77 | 188.22 | 0.99 | 5200 | | | 3.98 | Si |
| SLV 14 | 986 | -2790 | 2437 | 301656 | | 0 | 0 | 0.83 | 0 | | | 0 | No, Vu<V |
| SLV 14 | 1166 | -560 | 2054 | -96522 | | 0 | 0 | 0.83 | 0 | | | 0 | No, Vu<V |
| SLV 1 | 986 | -11234 | -3515 | -278222 | | 1.97 | 204 | 1.23 | 7007 | | | 1.99 | Si |
| SLV 1 | 1166 | -9679 | -2947 | 265417 | | 1.69 | 204 | 1.17 | 6696 | | | 2.27 | Si |

### Verifica a pressoflessione fuori piano D.M. 17-01-18 (N.T.C.)

quota 1072 Wa 0.05 denominatore 8 γM = 2

| Comb. | fd | Sa | σ0 | N | M | Mc | Coeff.s. | Verifica |
|---|---|---|---|---|---|---|---|---|
| SLV 13 | 14 | 0.46 | 0 | -1632 | 25073 | 0 | 0 | No, e>t/2 |
| SLV 14 | 14 | 0.46 | 0 | -1632 | 25073 | 0 | 0 | No, e>t/2 |
| SLV 9 | 14 | 0.46 | 0.4 | -2265 | 25073 | 30683 | 1.22 | Si |
| SLV 10 | 14 | 0.46 | 0.4 | -2265 | 25073 | 30683 | 1.22 | Si |
| SLV 15 | 14 | 0.46 | 0.65 | -3711 | 25073 | 49187 | 1.96 | Si |
| SLV 16 | 14 | 0.46 | 0.65 | -3711 | 25073 | 49187 | 1.96 | Si |
| SLV 6 | 14 | 0.46 | 0.86 | -4887 | 25073 | 63629 | 2.54 | Si |
| SLV 5 | 14 | 0.46 | 0.86 | -4887 | 25073 | 63629 | 2.54 | Si |
| SLV 12 | 14 | 0.46 | 1.61 | -9195 | 25073 | 111772 | 4.46 | Si |
| SLV 11 | 14 | 0.46 | 1.61 | -9195 | 25073 | 111772 | 4.46 | Si |

### Verifica dei meccanismi locali di collasso con analisi cinematica lineare

forza di aggancio al piano = 0 quota mezzeria = 1072 Wa = 0.05 Ta = 0.0739

| Comb. | N top | N base | V orto | α0 | M* | e* | a0* | aLim | Verifica |
|---|---|---|---|---|---|---|---|---|---|
| SLV 12 | -6457 | -8768 | 465 | 0 | 9.462 | 0.921 | 0 | 1733.979 | No |
| SLV 13 | -1030 | -1180 | -185 | 0 | 4.249 | 0.896 | 0 | 956.161 | No |
| SLV 8 | -7985 | -12767 | 496 | 0 | 11.001 | 0.93 | 0 | 1733.979 | No |
| SLV 5 | -2381 | -8269 | -448 | 0 | 5.448 | 0.891 | 0 | 1733.979 | No |
| SLV 14 | -1030 | -1180 | -185 | 0 | 4.249 | 0.896 | 0 | 956.161 | No |
| SLV 6 | -2381 | -8269 | -448 | 0 | 5.448 | 0.891 | 0 | 1733.979 | No |
| SLV 10 | -853 | -4271 | -479 | 0 | 4.111 | 0.902 | 0 | 1733.979 | No |
| SLV 9 | -853 | -4271 | -479 | 0 | 4.111 | 0.902 | 0 | 1733.979 | No |
| SLV 11 | -6457 | -8768 | 465 | 0 | 9.462 | 0.921 | 0 | 1733.979 | No |
| SLV 7 | -7985 | -12767 | 496 | 0 | 11.001 | 0.93 | 0 | 1733.979 | No |

### Tabella dei coefficienti di sicurezza minimi

| Stato limite | Coeff.s. | Comb. | Verifica |
|---|---|---|---|
| PF_SLU | 1.525 | SLU 8 | Si |
| V_SLU | 3.017 | SLU 30 | Si |
| PF_SLV | 0 | SLV 13 | No |
| V_SLV | 0 | SLV 13 | No |
| PFFP_SLV | 0 | SLV 13 | No |
| R_SLV | 0 | SLV 5 | No |

## Maschio 153

Verifiche condotte secondo D.M. 17-01-18 (N.T.C.)

### Dati geometrici

| X ini. | Y ini. | X fin. | Y fin. | Quota i. | Quota.s | l | Sp. | h netta | h ini. | h fin. | a | a.s.,sx | a.s.,dx |
|---|---|---|---|---|---|---|---|---|---|---|---|---|---|
| -1681.8 | 666.1 | -1283.8 | 666.1 | L5 | L6 | 398 | 28 | 352 | 352 | 352 | | | |

### Caratteristiche del materiale

(Circolare 7 21-01-19 C8.5.I) Muratura in mattoni pieni e malta di calce LC2_Corti

| fb | fk | fvk0 | fmedio | τ0 | fv0 | μ | ϕ | fv,lim | E | G | FC |
|---|---|---|---|---|---|---|---|---|---|---|---|
| 60 | | | 34.5 | 0.9 | 2 | 0.58 | 0.77 | 3.25 | 32000 | 12800 | 1.2 |

### Verifica a pressoflessione nel piano secondo D.M. 17-01-18 NTC §7.8.2.2.1 in combinazioni non sismiche, γM = 3

| Comb. | Quota | N | M | σ0 | Mu | c.s. | Verifica |
|---|---|---|---|---|---|---|---|
| SLU 36 | 986 | -21702 | 49555 | 1.95 | 3286211 | 66.315 | Si |
| SLU 36 | 1166 | -18159 | 349496 | 1.63 | 2890744 | 8.271 | Si |
| SLU 38 | 986 | -20846 | 61291 | 1.87 | 3195753 | 52.141 | Si |
| SLU 38 | 1166 | -17303 | 354745 | 1.55 | 2786997 | 7.856 | Si |
| SLU 37 | 986 | -20839 | 64387 | 1.87 | 3195008 | 49.622 | Si |
| SLU 37 | 1166 | -17296 | 353288 | 1.55 | 2786144 | 7.886 | Si |
| SLU 28 | 986 | -19508 | 69158 | 1.75 | 3047885 | 44.071 | Si |
| SLU 28 | 1166 | -15965 | 318969 | 1.43 | 2618348 | 8.209 | Si |
| SLU 8 | 986 | -16386 | 74068 | 1.47 | 2672149 | 36.077 | Si |
| SLU 8 | 1166 | -12905 | 271211 | 1.16 | 2202942 | 8.123 | Si |
| SLU 30 | 986 | -18653 | 80895 | 1.67 | 2949200 | 36.457 | Si |
| SLU 30 | 1166 | -15110 | 324218 | 1.36 | 2506373 | 7.731 | Si |
| SLU 29 | 986 | -18646 | 83991 | 1.67 | 2948389 | 35.104 | Si |
| SLU 29 | 1166 | -15103 | 322761 | 1.36 | 2505454 | 7.763 | Si |
| SLU 9 | 986 | -16392 | 70972 | 1.47 | 2673030 | 37.663 | Si |
| SLU 9 | 1166 | -12911 | 272668 | 1.16 | 2203928 | 8.083 | Si |
| SLU 17 | 986 | -18586 | 51368 | 1.67 | 2941320 | 57.26 | Si |
| SLU 17 | 1166 | -15105 | 303195 | 1.36 | 2505693 | 8.264 | Si |
| SLU 27 | 986 | -19502 | 72255 | 1.75 | 3047099 | 42.172 | Si |
| SLU 27 | 1166 | -15959 | 317512 | 1.43 | 2617455 | 8.244 | Si |

Verifica a pressoflessione nel piano secondo D.M. 17-01-18 NTC §7.8.2.2.1 in combinazioni sismiche, γM = 2

| Comb. | Quota | N | M | σ0 | Mu | c.s. | Verifica |
|---|---|---|---|---|---|---|---|
| SLV 5 | 986 | -16111 | -212275 | 1.45 | 2826692 | 13.316 | Si |
| SLV 5 | 1166 | -12341 | 641636 | 1.11 | 2233236 | 3.481 | Si |
| SLV 14 | 986 | -15531 | 880036 | 1.39 | 2738152 | 3.111 | Si |
| SLV 14 | 1166 | -11965 | -594726 | 1.07 | 2171822 | 3.652 | Si |
| SLV 3 | 986 | -19116 | -981554 | 1.72 | 3270107 | 3.332 | Si |
| SLV 3 | 1166 | -15685 | 921489 | 1.41 | 2761769 | 2.997 | Si |
| SLV 15 | 986 | -16495 | 815235 | 1.48 | 2884841 | 3.539 | Si |
| SLV 15 | 1166 | -13089 | -732793 | 1.17 | 2354373 | 3.213 | Si |
| SLV 6 | 986 | -16111 | -212275 | 1.45 | 2826692 | 13.316 | Si |
| SLV 6 | 1166 | -12341 | 641636 | 1.11 | 2233236 | 3.481 | Si |
| SLV 16 | 986 | -16495 | 815235 | 1.48 | 2884841 | 3.539 | Si |
| SLV 16 | 1166 | -13089 | -732793 | 1.17 | 2354373 | 3.213 | Si |
| SLV 1 | 986 | -18153 | -916753 | 1.63 | 3130803 | 3.415 | Si |
| SLV 1 | 1166 | -14561 | 1059556 | 1.31 | 2587747 | 2.442 | Si |
| SLV 13 | 986 | -15531 | 880036 | 1.39 | 2738152 | 3.111 | Si |
| SLV 13 | 1166 | -11965 | -594726 | 1.07 | 2171822 | 3.652 | Si |
| SLV 2 | 986 | -18153 | -916753 | 1.63 | 3130803 | 3.415 | Si |
| SLV 2 | 1166 | -14561 | 1059556 | 1.31 | 2587747 | 2.442 | Si |
| SLV 4 | 986 | -19116 | -981554 | 1.72 | 3270107 | 3.332 | Si |
| SLV 4 | 1166 | -15685 | 921489 | 1.41 | 2761769 | 2.997 | Si |

Verifica a taglio nel piano secondo D.M. 17-01-18 (N.T.C.) §7.8.2.2.2 con rottura per scorrimento in combinazioni non sismiche, γM = 3

| Comb. | Quota | N | V par | M | σ0 | σN | l' | fvd | Vt scorr. | Vt fess.diag. | Vt,lim | c.s. | Verifica |
|---|---|---|---|---|---|---|---|---|---|---|---|---|---|
| SLU 80 | 986 | -24887 | -1751 | 43491 | | 2.23 | 398 | 0.85 | 9509 | | | 5.43 | Si |
| SLU 80 | 1166 | -20321 | -1751 | 379050 | | 1.82 | 398 | 0.8 | 8901 | | | 5.08 | Si |
| SLU 75 | 986 | -25575 | -1762 | -29276 | | 2.29 | 398 | 0.86 | 9601 | | | 5.45 | Si |
| SLU 75 | 1166 | -21009 | -1762 | 308161 | | 1.89 | 398 | 0.81 | 8992 | | | 5.1 | Si |
| SLU 84 | 986 | -25659 | -1845 | -25941 | | 2.3 | 398 | 0.86 | 9612 | | | 5.21 | Si |
| SLU 84 | 1166 | -21093 | -1845 | 326493 | | 1.89 | 398 | 0.81 | 9004 | | | 4.88 | Si |
| SLU 77 | 986 | -25735 | -1762 | 34851 | | 2.31 | 398 | 0.86 | 9622 | | | 5.46 | Si |
| SLU 77 | 1166 | -21169 | -1762 | 372344 | | 1.9 | 398 | 0.81 | 9014 | | | 5.12 | Si |
| SLU 81 | 986 | -25485 | -1794 | -83875 | | 2.29 | 398 | 0.86 | 9589 | | | 5.34 | Si |
| SLU 81 | 1166 | -20919 | -1794 | 259396 | | 1.88 | 398 | 0.81 | 8980 | | | 5.01 | Si |
| SLU 78 | 986 | -25742 | -1787 | 31755 | | 2.31 | 398 | 0.86 | 9623 | | | 5.38 | Si |
| SLU 78 | 1166 | -21176 | -1787 | 373801 | | 1.9 | 398 | 0.81 | 9015 | | | 5.04 | Si |
| SLU 82 | 986 | -25492 | -1819 | -86972 | | 2.29 | 398 | 0.86 | 9590 | | | 5.27 | Si |
| SLU 82 | 1166 | -20926 | -1819 | 260853 | | 1.88 | 398 | 0.81 | 8981 | | | 4.94 | Si |
| SLU 83 | 986 | -25653 | -1820 | -22845 | | 2.3 | 398 | 0.86 | 9611 | | | 5.28 | Si |
| SLU 83 | 1166 | -21086 | -1820 | 325036 | | 1.89 | 398 | 0.81 | 9003 | | | 4.95 | Si |
| SLU 79 | 986 | -24880 | -1726 | 46587 | | 2.23 | 398 | 0.85 | 9508 | | | 5.51 | Si |
| SLU 79 | 1166 | -20314 | -1726 | 377593 | | 1.82 | 398 | 0.8 | 8900 | | | 5.16 | Si |
| SLU 76 | 986 | -24724 | -1743 | -19604 | | 2.22 | 398 | 0.85 | 9488 | | | 5.44 | Si |
| SLU 76 | 1166 | -20158 | -1743 | 314382 | | 1.81 | 398 | 0.8 | 8879 | | | 5.1 | Si |

Verifica a taglio nel piano secondo D.M. 17-01-18 (N.T.C.) §7.8.2.2.2 con rottura per scorrimento in combinazioni sismiche, γM = 2

| Comb. | Quota | N | V par | M | σ0 | σN | l' | fvd | Vt scorr. | Vt fess.diag. | Vt,lim | c.s. | Verifica |
|---|---|---|---|---|---|---|---|---|---|---|---|---|---|
| SLV 14 | 986 | -15531 | 9034 | 880036 | | 1.39 | 398 | 1.11 | 12393 | | | 1.37 | Si |
| SLV 14 | 1166 | -11965 | 7817 | -594726 | | 1.07 | 398 | 1.05 | 11680 | | | 1.49 | Si |
| SLV 3 | 986 | -19116 | -11239 | -981554 | | 1.72 | 398 | 1.18 | 13110 | | | 1.17 | Si |
| SLV 3 | 1166 | -15685 | -10023 | 921489 | | 1.41 | 398 | 1.11 | 12424 | | | 1.24 | Si |
| SLV 2 | 986 | -18153 | -11235 | -916753 | | 1.63 | 398 | 1.16 | 12917 | | | 1.15 | Si |
| SLV 2 | 1166 | -14561 | -10269 | 1059556 | | 1.37 | 378.7 | 1.11 | 11748 | | | 1.14 | Si |
| SLD 1 | 986 | -17688 | -5436 | -421747 | | 1.59 | 398 | 1.15 | 12824 | | | 2.36 | Si |
| SLD 1 | 1166 | -14150 | -5021 | 545097 | | 1.27 | 398 | 1.09 | 12117 | | | 2.41 | Si |
| SLV 4 | 986 | -19116 | -11239 | -981554 | | 1.72 | 398 | 1.18 | 13110 | | | 1.17 | Si |
| SLV 4 | 1166 | -15685 | -10023 | 921489 | | 1.41 | 398 | 1.11 | 12424 | | | 1.24 | Si |
| SLD 2 | 986 | -17688 | -5436 | -421747 | | 1.59 | 398 | 1.15 | 12824 | | | 2.36 | Si |
| SLD 2 | 1166 | -14150 | -5021 | 545097 | | 1.27 | 398 | 1.09 | 12117 | | | 2.41 | Si |
| SLV 16 | 986 | -16495 | 9029 | 815235 | | 1.48 | 398 | 1.13 | 12586 | | | 1.39 | Si |
| SLV 16 | 1166 | -13089 | 8063 | -732793 | | 1.17 | 398 | 1.07 | 11905 | | | 1.48 | Si |
| SLV 15 | 986 | -16495 | 9029 | 815235 | | 1.48 | 398 | 1.13 | 12586 | | | 1.39 | Si |
| SLV 15 | 1166 | -13089 | 8063 | -732793 | | 1.17 | 398 | 1.07 | 11905 | | | 1.48 | Si |
| SLV 13 | 986 | -15531 | 9034 | 880036 | | 1.39 | 398 | 1.11 | 12393 | | | 1.37 | Si |
| SLV 13 | 1166 | -11965 | 7817 | -594726 | | 1.07 | 398 | 1.05 | 11680 | | | 1.49 | Si |
| SLV 1 | 986 | -18153 | -11235 | -916753 | | 1.63 | 398 | 1.16 | 12917 | | | 1.15 | Si |
| SLV 1 | 1166 | -14561 | -10269 | 1059556 | | 1.37 | 378.7 | 1.11 | 11748 | | | 1.14 | Si |

Verifica a pressoflessione fuori piano D.M. 17-01-18 (N.T.C.)

quota 1072 Wa 0.05 denominatore 8 γM = 2

| Comb. | fd | Sa | σ0 | N | M | Mc | Coeff.s. | Verifica |
|---|---|---|---|---|---|---|---|---|
| SLV 13 | 14 | 0.46 | 1.24 | -13865 | 48916 | 174348 | 3.56 | Si |
| SLV 14 | 14 | 0.46 | 1.24 | -13865 | 48916 | 174348 | 3.56 | Si |
| SLV 9 | 14 | 0.46 | 1.25 | -13902 | 48916 | 174757 | 3.57 | Si |
| SLV 10 | 14 | 0.46 | 1.25 | -13902 | 48916 | 174757 | 3.57 | Si |
| SLV 15 | 14 | 0.46 | 1.31 | -14626 | 48916 | 182766 | 3.74 | Si |
| SLV 16 | 14 | 0.46 | 1.31 | -14626 | 48916 | 182766 | 3.74 | Si |
| SLV 5 | 14 | 0.46 | 1.32 | -14694 | 48916 | 183514 | 3.75 | Si |
| SLV 6 | 14 | 0.46 | 1.32 | -14694 | 48916 | 183514 | 3.75 | Si |
| SLV 12 | 14 | 0.46 | 1.47 | -16436 | 48916 | 202334 | 4.14 | Si |
| SLV 11 | 14 | 0.46 | 1.47 | -16436 | 48916 | 202334 | 4.14 | Si |

Verifica dei meccanismi locali di collasso con analisi cinematica lineare

forza di aggancio al piano = 0 quota mezzeria = 1072 Wa = 0.05 Ta = 0.0739

| Comb. | N top | N base | V orto | α0 | M* | e* | a0* | aLim | Verifica |
|---|---|---|---|---|---|---|---|---|---|
| SLV 10 | -8942 | -16629 | 578 | 0.005 | 14.81 | 0.908 | 7.455 | 1733.979 | No |

| Comb. | N top | N base | V orto | α0 | M* | e* | a0* | aLim | Verifica |
|---|---|---|---|---|---|---|---|---|---|
| SLV 9 | -8942 | -16629 | 578 | 0.005 | 14.81 | 0.908 | 7.455 | 1733.979 | No |
| SLV 6 | -9155 | -17515 | 579 | 0.005 | 15.021 | 0.909 | 8.278 | 1733.979 | No |
| SLV 5 | -9155 | -17515 | 579 | 0.005 | 15.021 | 0.909 | 8.278 | 1733.979 | No |
| SLV 12 | -10619 | -18501 | -621 | 0.006 | 16.479 | 0.914 | 9.196 | 1733.979 | No |
| SLV 11 | -10619 | -18501 | -621 | 0.006 | 16.479 | 0.914 | 9.196 | 1733.979 | No |
| SLV 8 | -10832 | -19388 | -620 | 0.006 | 16.692 | 0.915 | 10.088 | 1733.979 | No |
| SLV 7 | -10832 | -19388 | -620 | 0.006 | 16.692 | 0.915 | 10.088 | 1733.979 | No |
| SLV 15 | -9784 | -16811 | -202 | 0.035 | 15.646 | 0.911 | 56.002 | 956.161 | No |
| SLV 16 | -9784 | -16811 | -202 | 0.035 | 15.646 | 0.911 | 56.002 | 956.161 | No |

### Tabella dei coefficienti di sicurezza minimi

| Stato limite | Coeff.s. | Comb. | Verifica |
|---|---|---|---|
| PF_SLU | 7.731 | SLU 30 | Si |
| V_SLU | 4.88 | SLU 84 | Si |
| PF_SLV | 2.442 | SLV 1 | Si |
| V_SLV | 1.144 | SLV 1 | Si |
| PFFP_SLV | 3.564 | SLV 13 | Si |
| R_SLV | 0.004 | SLV 9 | No |

## Maschio 154

Verifiche condotte secondo D.M. 17-01-18 (N.T.C.)

### Dati geometrici

| X ini. | Y ini. | X fin. | Y fin. | Quota i. | Quota.s | l | Sp. | h netta | h ini. | h fin. | a | a.s.,sx | a.s.,dx |
|---|---|---|---|---|---|---|---|---|---|---|---|---|---|
| -1193.8 | 666.1 | -795.8 | 666.1 | L5 | L6 | 398 | 28 | 352 | 352 | 352 | | | |

### Caratteristiche del materiale

(Circolare 7 21-01-19 C8.5.I) Muratura in mattoni pieni e malta di calce LC2_Corti

| fb | fk | fvk0 | fmedio | τ0 | fv0 | μ | ϕ | fv,lim | E | G | FC |
|---|---|---|---|---|---|---|---|---|---|---|---|
| 60 | | | 34.5 | 0.9 | 2 | 0.58 | 0.77 | 3.25 | 32000 | 12800 | 1.2 |

### Verifica a pressoflessione nel piano secondo D.M. 17-01-18 NTC §7.8.2.2.1 in combinazioni non sismiche, γM = 3

| Comb. | Quota | N | M | σ0 | Mu | c.s. | Verifica |
|---|---|---|---|---|---|---|---|
| SLU 37 | 986 | -22121 | 116145 | 1.98 | 3329319 | 28.665 | Si |
| SLU 37 | 1166 | -18689 | -206721 | 1.68 | 2953422 | 14.287 | Si |
| SLU 28 | 986 | -20566 | 102223 | 1.85 | 3165452 | 30.966 | Si |
| SLU 28 | 1166 | -17135 | -199752 | 1.54 | 2766170 | 13.848 | Si |
| SLU 27 | 986 | -20587 | 102863 | 1.85 | 3167764 | 30.796 | Si |
| SLU 27 | 1166 | -17156 | -198827 | 1.54 | 2768801 | 13.926 | Si |
| SLU 38 | 986 | -22099 | 115505 | 1.98 | 3327150 | 28.805 | Si |
| SLU 38 | 1166 | -18668 | -207646 | 1.68 | 2950934 | 14.211 | Si |
| SLU 29 | 986 | -19687 | 103612 | 1.77 | 3068081 | 29.611 | Si |
| SLU 29 | 1166 | -16255 | -212831 | 1.46 | 2655571 | 12.477 | Si |
| SLU 8 | 986 | -17134 | 83603 | 1.54 | 2766044 | 33.085 | Si |
| SLU 8 | 1166 | -13765 | -184043 | 1.24 | 2323860 | 12.627 | Si |
| SLU 72 | 986 | -23617 | 107124 | 2.12 | 3477040 | 32.458 | Si |
| SLU 72 | 1166 | -19196 | -213469 | 1.72 | 3012225 | 14.111 | Si |
| SLU 30 | 986 | -19666 | 102972 | 1.76 | 3065686 | 29.772 | Si |
| SLU 30 | 1166 | -16234 | -213757 | 1.46 | 2652856 | 12.411 | Si |
| SLU 71 | 986 | -23638 | 107764 | 2.12 | 3479067 | 32.284 | Si |
| SLU 71 | 1166 | -19217 | -212543 | 1.72 | 3014664 | 14.184 | Si |
| SLU 9 | 986 | -17112 | 82963 | 1.54 | 2763410 | 33.309 | Si |
| SLU 9 | 1166 | -13744 | -184969 | 1.23 | 2320913 | 12.548 | Si |

### Verifica a pressoflessione nel piano secondo D.M. 17-01-18 NTC §7.8.2.2.1 in combinazioni sismiche, γM = 2

| Comb. | Quota | N | M | σ0 | Mu | c.s. | Verifica |
|---|---|---|---|---|---|---|---|
| SLV 1 | 986 | -16715 | -825869 | 1.5 | 2918032 | 3.533 | Si |
| SLV 1 | 1166 | -13138 | 771913 | 1.18 | 2362197 | 3.06 | Si |
| SLV 2 | 986 | -16715 | -825869 | 1.5 | 2918032 | 3.533 | Si |
| SLV 2 | 1166 | -13138 | 771913 | 1.18 | 2362197 | 3.06 | Si |
| SLV 14 | 986 | -19963 | 924254 | 1.79 | 3390174 | 3.668 | Si |
| SLV 14 | 1166 | -16317 | -846072 | 1.46 | 2857974 | 3.378 | Si |
| SLV 3 | 986 | -15063 | -832244 | 1.35 | 2665932 | 3.203 | Si |
| SLV 3 | 1166 | -11935 | 769234 | 1.07 | 2166952 | 2.817 | Si |
| SLV 15 | 986 | -18310 | 917878 | 1.64 | 3153758 | 3.436 | Si |
| SLV 15 | 1166 | -15114 | -848751 | 1.36 | 2673904 | 3.15 | Si |
| SLD 16 | 986 | -17863 | 417848 | 1.6 | 3088344 | 7.391 | Si |
| SLD 16 | 1166 | -14557 | -384460 | 1.31 | 2587210 | 6.729 | Si |
| SLV 16 | 986 | -18310 | 917878 | 1.64 | 3153758 | 3.436 | Si |
| SLV 16 | 1166 | -15114 | -848751 | 1.36 | 2673904 | 3.15 | Si |
| SLV 13 | 986 | -19963 | 924254 | 1.79 | 3390174 | 3.668 | Si |
| SLV 13 | 1166 | -16317 | -846072 | 1.46 | 2857974 | 3.378 | Si |
| SLD 15 | 986 | -17863 | 417848 | 1.6 | 3088344 | 7.391 | Si |
| SLD 15 | 1166 | -14557 | -384460 | 1.31 | 2587210 | 6.729 | Si |
| SLV 4 | 986 | -15063 | -832244 | 1.35 | 2665932 | 3.203 | Si |
| SLV 4 | 1166 | -11935 | 769234 | 1.07 | 2166952 | 2.817 | Si |

### Verifica a taglio nel piano secondo D.M. 17-01-18 (N.T.C.) §7.8.2.2.2 con rottura per scorrimento in combinazioni non sismiche, γM = 3

| Comb. | Quota | N | V par | M | σ0 | σN | l' | fvd | Vt scorr. | Vt fess.diag. | Vt,lim | c.s. | Verifica |
|---|---|---|---|---|---|---|---|---|---|---|---|---|---|
| SLU 29 | 986 | -19687 | 1735 | 103612 | | 1.77 | 398 | 0.79 | 8816 | | | 5.08 | Si |
| SLU 29 | 1166 | -16255 | 1735 | -212831 | | 1.46 | 398 | 0.75 | 8359 | | | 4.82 | Si |
| SLU 37 | 986 | -22121 | 1770 | 116145 | | 1.98 | 398 | 0.82 | 9141 | | | 5.16 | Si |
| SLU 37 | 1166 | -18689 | 1770 | -206721 | | 1.68 | 398 | 0.78 | 8683 | | | 4.9 | Si |

| Comb. | Quota | N | V par | M | σ0 | σN | l' | fvd | Vt scorr. | Vt fess.diag. | Vt,lim | c.s. | Verifica |
|---|---|---|---|---|---|---|---|---|---|---|---|---|---|
| SLU 28 | 986 | -20566 | 1654 | 102223 | | 1.85 | 398 | 0.8 | 8933 | | | 5.4 | Si |
| SLU 28 | 1166 | -17135 | 1654 | -199752 | | 1.54 | 398 | 0.76 | 8476 | | | 5.12 | Si |
| SLU 80 | 986 | -26050 | 1787 | 119657 | | 2.34 | 398 | 0.87 | 9664 | | | 5.41 | Si |
| SLU 80 | 1166 | -21630 | 1787 | -207358 | | 1.94 | 398 | 0.81 | 9075 | | | 5.08 | Si |
| SLU 30 | 986 | -19666 | 1736 | 102972 | | 1.76 | 398 | 0.79 | 8813 | | | 5.08 | Si |
| SLU 30 | 1166 | -16234 | 1736 | -213757 | | 1.46 | 398 | 0.75 | 8356 | | | 4.81 | Si |
| SLU 71 | 986 | -23638 | 1749 | 107764 | | 2.12 | 398 | 0.84 | 9343 | | | 5.34 | Si |
| SLU 71 | 1166 | -19217 | 1749 | -212543 | | 1.72 | 398 | 0.79 | 8753 | | | 5 | Si |
| SLU 79 | 986 | -26071 | 1785 | 120297 | | 2.34 | 398 | 0.87 | 9667 | | | 5.42 | Si |
| SLU 79 | 1166 | -21651 | 1785 | -206432 | | 1.94 | 398 | 0.81 | 9078 | | | 5.09 | Si |
| SLU 38 | 986 | -22099 | 1772 | 115505 | | 1.98 | 398 | 0.82 | 9138 | | | 5.16 | Si |
| SLU 38 | 1166 | -18668 | 1772 | -207646 | | 1.68 | 398 | 0.78 | 8680 | | | 4.9 | Si |
| SLU 72 | 986 | -23617 | 1751 | 107124 | | 2.12 | 398 | 0.84 | 9340 | | | 5.33 | Si |
| SLU 72 | 1166 | -19196 | 1751 | -213469 | | 1.72 | 398 | 0.79 | 8751 | | | 5 | Si |
| SLU 27 | 986 | -20587 | 1653 | 102863 | | 1.85 | 398 | 0.8 | 8936 | | | 5.41 | Si |
| SLU 27 | 1166 | -17156 | 1653 | -198827 | | 1.54 | 398 | 0.76 | 8479 | | | 5.13 | Si |

### Verifica a taglio nel piano secondo D.M. 17-01-18 (N.T.C.) §7.8.2.2.2 con rottura per scorrimento in combinazioni sismiche, γM = 2

| Comb. | Quota | N | V par | M | σ0 | σN | l' | fvd | Vt scorr. | Vt fess.diag. | Vt,lim | c.s. | Verifica |
|---|---|---|---|---|---|---|---|---|---|---|---|---|---|
| SLV 13 | 986 | -19963 | 10533 | 924254 | | 1.79 | 398 | 1.19 | 13279 | | | 1.26 | Si |
| SLV 13 | 1166 | -16317 | 9463 | -846072 | | 1.46 | 398 | 1.13 | 12550 | | | 1.33 | Si |
| SLV 4 | 986 | -15063 | -9642 | -832244 | | 1.35 | 398 | 1.1 | 12299 | | | 1.28 | Si |
| SLV 4 | 1166 | -11935 | -8572 | 769234 | | 1.07 | 398 | 1.05 | 11674 | | | 1.36 | Si |
| SLV 2 | 986 | -16715 | -9499 | -825869 | | 1.5 | 398 | 1.13 | 12630 | | | 1.33 | Si |
| SLV 2 | 1166 | -13138 | -8284 | 771913 | | 1.18 | 398 | 1.07 | 11914 | | | 1.44 | Si |
| SLV 14 | 986 | -19963 | 10533 | 924254 | | 1.79 | 398 | 1.19 | 13279 | | | 1.26 | Si |
| SLV 14 | 1166 | -16317 | 9463 | -846072 | | 1.46 | 398 | 1.13 | 12550 | | | 1.33 | Si |
| SLD 14 | 986 | -18550 | 4750 | 420112 | | 1.66 | 398 | 1.17 | 12997 | | | 2.74 | Si |
| SLD 14 | 1166 | -15052 | 4289 | -383038 | | 1.35 | 398 | 1.1 | 12297 | | | 2.87 | Si |
| SLV 16 | 986 | -18310 | 10391 | 917878 | | 1.64 | 398 | 1.16 | 12949 | | | 1.25 | Si |
| SLV 16 | 1166 | -15114 | 9175 | -848751 | | 1.36 | 398 | 1.1 | 12310 | | | 1.34 | Si |
| SLV 15 | 986 | -18310 | 10391 | 917878 | | 1.64 | 398 | 1.16 | 12949 | | | 1.25 | Si |
| SLV 15 | 1166 | -15114 | 9175 | -848751 | | 1.36 | 398 | 1.1 | 12310 | | | 1.34 | Si |
| SLV 3 | 986 | -15063 | -9642 | -832244 | | 1.35 | 398 | 1.1 | 12299 | | | 1.28 | Si |
| SLV 3 | 1166 | -11935 | -8572 | 769234 | | 1.07 | 398 | 1.05 | 11674 | | | 1.36 | Si |
| SLV 1 | 986 | -16715 | -9499 | -825869 | | 1.5 | 398 | 1.13 | 12630 | | | 1.33 | Si |
| SLV 1 | 1166 | -13138 | -8284 | 771913 | | 1.18 | 398 | 1.07 | 11914 | | | 1.44 | Si |
| SLD 13 | 986 | -18550 | 4750 | 420112 | | 1.66 | 398 | 1.17 | 12997 | | | 2.74 | Si |
| SLD 13 | 1166 | -15052 | 4289 | -383038 | | 1.35 | 398 | 1.1 | 12297 | | | 2.87 | Si |

### Verifica a pressoflessione fuori piano D.M. 17-01-18 (N.T.C.)

quota 1072 Wa 0.05 denominatore 8 γM = 2

| Comb. | fd | Sa | σ0 | N | M | Mc | Coeff.s. | Verifica |
|---|---|---|---|---|---|---|---|---|
| SLV 7 | 14 | 0.46 | 1.18 | -13108 | 48916 | 165846 | 3.39 | Si |
| SLV 8 | 14 | 0.46 | 1.18 | -13108 | 48916 | 165846 | 3.39 | Si |
| SLV 3 | 14 | 0.46 | 1.22 | -13562 | 48916 | 170958 | 3.49 | Si |
| SLV 4 | 14 | 0.46 | 1.22 | -13562 | 48916 | 170958 | 3.49 | Si |
| SLV 11 | 14 | 0.46 | 1.26 | -14077 | 48916 | 176704 | 3.61 | Si |
| SLV 12 | 14 | 0.46 | 1.26 | -14077 | 48916 | 176704 | 3.61 | Si |
| SLV 1 | 14 | 0.46 | 1.34 | -14920 | 48916 | 185995 | 3.8 | Si |
| SLV 2 | 14 | 0.46 | 1.34 | -14920 | 48916 | 185995 | 3.8 | Si |
| SLV 16 | 14 | 0.46 | 1.51 | -16792 | 48916 | 206097 | 4.21 | Si |
| SLV 15 | 14 | 0.46 | 1.51 | -16792 | 48916 | 206097 | 4.21 | Si |

### Verifica dei meccanismi locali di collasso con analisi cinematica lineare

forza di aggancio al piano = 0 quota mezzeria = 1072 Wa = 0.05 Ta = 0.0739

| Comb. | N top | N base | V orto | α0 | M* | e* | a0* | aLim | Verifica |
|---|---|---|---|---|---|---|---|---|---|
| SLV 6 | -11826 | -18364 | 119 | 0.041 | 17.687 | 0.919 | 65.174 | 1733.979 | No |
| SLV 5 | -11826 | -18364 | 119 | 0.041 | 17.687 | 0.919 | 65.174 | 1733.979 | No |
| SLV 10 | -12474 | -19459 | 115 | 0.041 | 18.337 | 0.921 | 65.261 | 1733.979 | No |
| SLV 9 | -12474 | -19459 | 115 | 0.041 | 18.337 | 0.921 | 65.261 | 1733.979 | No |
| SLV 12 | -10472 | -15212 | -65 | 0.045 | 16.333 | 0.914 | 71.874 | 1733.979 | No |
| SLV 11 | -10472 | -15212 | -65 | 0.045 | 16.333 | 0.914 | 71.874 | 1733.979 | No |
| SLV 8 | -9824 | -14117 | -61 | 0.046 | 15.687 | 0.911 | 72.889 | 1733.979 | No |
| SLV 7 | -9824 | -14117 | -61 | 0.046 | 15.687 | 0.911 | 72.889 | 1733.979 | No |
| SLV 14 | -12530 | -19251 | 48 | 0.046 | 18.393 | 0.921 | 71.804 | 956.161 | No |
| SLV 13 | -12530 | -19251 | 48 | 0.046 | 18.393 | 0.921 | 71.804 | 956.161 | No |

### Tabella dei coefficienti di sicurezza minimi

| Stato limite | Coeff.s. | Comb. | Verifica |
|---|---|---|---|
| PF_SLU | 12.411 | SLU 30 | Si |
| V_SLU | 4.812 | SLU 30 | Si |
| PF_SLV | 2.817 | SLV 3 | Si |
| V_SLV | 1.246 | SLV 15 | Si |
| PFFP_SLV | 3.39 | SLV 7 | Si |
| R_SLV | 0.038 | SLV 5 | No |

## Maschio 155

Verifiche condotte secondo D.M. 17-01-18 (N.T.C.)

### Dati geometrici

| X ini. | Y ini. | X fin. | Y fin. | Quota i. | Quota.s | l | Sp. | h netta | h ini. | h fin. | a | a.s.,sx | a.s.,dx |
|---|---|---|---|---|---|---|---|---|---|---|---|---|---|
| -705.8 | 666.1 | -501.8 | 666.1 | L5 | L6 | 204 | 28 | 352 | 352 | 352 | | | |

## Caratteristiche del materiale

(Circolare 7 21-01-19 C8.5.I) Muratura in mattoni pieni e malta di calce LC2_Corti

| fb | fk | fvk0 | fmedio | τ0 | fv0 | μ | ϕ | fv,lim | E | G | FC |
|---|---|---|---|---|---|---|---|---|---|---|---|
| 60 | | | 34.5 | 0.9 | 2 | 0.58 | 0.77 | 3.25 | 32000 | 12800 | 1.2 |

## Verifica a pressoflessione nel piano secondo D.M. 17-01-18 NTC §7.8.2.2.1 in combinazioni non sismiche, γM = 3

| Comb. | Quota | N | M | σ0 | Mu | c.s. | Verifica |
|---|---|---|---|---|---|---|---|
| SLU 30 | 986 | -9155 | 73739 | 1.6 | 750044 | 10.172 | Si |
| SLU 30 | 1166 | -7153 | -175180 | 1.25 | 617441 | 3.525 | Si |
| SLU 72 | 986 | -11372 | 81809 | 1.99 | 876443 | 10.713 | Si |
| SLU 72 | 1166 | -8789 | -197032 | 1.54 | 727170 | 3.691 | Si |
| SLU 9 | 986 | -7879 | 52922 | 1.38 | 667574 | 12.614 | Si |
| SLU 9 | 1166 | -5908 | -144963 | 1.03 | 526091 | 3.629 | Si |
| SLU 37 | 986 | -10771 | 99576 | 1.89 | 844332 | 8.479 | Si |
| SLU 37 | 1166 | -8770 | -202015 | 1.54 | 725917 | 3.593 | Si |
| SLU 38 | 986 | -10758 | 100598 | 1.88 | 843589 | 8.386 | Si |
| SLU 38 | 1166 | -8756 | -202361 | 1.53 | 725055 | 3.583 | Si |
| SLU 80 | 986 | -12975 | 108668 | 2.27 | 954402 | 8.783 | Si |
| SLU 80 | 1166 | -10393 | -224213 | 1.82 | 823281 | 3.672 | Si |
| SLU 79 | 986 | -12989 | 107646 | 2.27 | 955013 | 8.872 | Si |
| SLU 79 | 1166 | -10406 | -223868 | 1.82 | 824046 | 3.681 | Si |
| SLU 8 | 986 | -7893 | 51900 | 1.38 | 668488 | 12.88 | Si |
| SLU 8 | 1166 | -5921 | -144618 | 1.04 | 527122 | 3.645 | Si |
| SLU 71 | 986 | -11386 | 80787 | 1.99 | 877150 | 10.858 | Si |
| SLU 71 | 1166 | -8803 | -196687 | 1.54 | 728031 | 3.701 | Si |
| SLU 29 | 986 | -9168 | 72717 | 1.61 | 750883 | 10.326 | Si |
| SLU 29 | 1166 | -7167 | -174834 | 1.25 | 618399 | 3.537 | Si |

## Verifica a pressoflessione nel piano secondo D.M. 17-01-18 NTC §7.8.2.2.1 in combinazioni sismiche, γM = 2

| Comb. | Quota | N | M | σ0 | Mu | c.s. | Verifica |
|---|---|---|---|---|---|---|---|
| SLV 2 | 986 | -5413 | -199098 | 0.95 | 509279 | 2.558 | Si |
| SLV 2 | 1166 | -3474 | 51011 | 0.61 | 336691 | 6.6 | Si |
| SLV 9 | 986 | -11632 | 214049 | 2.04 | 988743 | 4.619 | Si |
| SLV 9 | 1166 | -8761 | -303103 | 1.53 | 781415 | 2.578 | Si |
| SLV 13 | 986 | -14306 | 366648 | 2.5 | 1160136 | 3.164 | Si |
| SLV 13 | 1166 | -11802 | -368409 | 2.07 | 1000210 | 2.715 | Si |
| SLV 6 | 986 | -8964 | 44325 | 1.57 | 796907 | 17.979 | Si |
| SLV 6 | 1166 | -6262 | -177276 | 1.1 | 581437 | 3.28 | Si |
| SLV 3 | 986 | -5037 | -238023 | 0.88 | 476672 | 2.003 | Si |
| SLV 3 | 1166 | -3582 | 120861 | 0.63 | 346612 | 2.868 | Si |
| SLV 4 | 986 | -5037 | -238023 | 0.88 | 476672 | 2.003 | Si |
| SLV 4 | 1166 | -3582 | 120861 | 0.63 | 346612 | 2.868 | Si |
| SLV 1 | 986 | -5413 | -199098 | 0.95 | 509279 | 2.558 | Si |
| SLV 1 | 1166 | -3474 | 51011 | 0.61 | 336691 | 6.6 | Si |
| SLV 14 | 986 | -14306 | 366648 | 2.5 | 1160136 | 3.164 | Si |
| SLV 14 | 1166 | -11802 | -368409 | 2.07 | 1000210 | 2.715 | Si |
| SLV 10 | 986 | -11632 | 214049 | 2.04 | 988743 | 4.619 | Si |
| SLV 10 | 1166 | -8761 | -303103 | 1.53 | 781415 | 2.578 | Si |
| SLV 5 | 986 | -8964 | 44325 | 1.57 | 796907 | 17.979 | Si |
| SLV 5 | 1166 | -6262 | -177276 | 1.1 | 581437 | 3.28 | Si |

## Verifica a taglio nel piano secondo D.M. 17-01-18 (N.T.C.) §7.8.2.2.2 con rottura per scorrimento in combinazioni non sismiche, γM = 3

| Comb. | Quota | N | V par | M | σ0 | σN | l' | fvd | Vt scorr. | Vt fess.diag. | Vt,lim | c.s. | Verifica |
|---|---|---|---|---|---|---|---|---|---|---|---|---|---|
| SLU 80 | 986 | -12975 | 1820 | 108668 | | 2.27 | 204 | 0.86 | 4903 | | | 2.69 | Si |
| SLU 80 | 1166 | -10393 | 1820 | -224213 | | 1.82 | 204 | 0.8 | 4559 | | | 2.5 | Si |
| SLU 37 | 986 | -10771 | 1653 | 99576 | | 1.89 | 204 | 0.81 | 4610 | | | 2.79 | Si |
| SLU 37 | 1166 | -8770 | 1653 | -202015 | | 1.54 | 204 | 0.76 | 4343 | | | 2.63 | Si |
| SLU 77 | 986 | -13630 | 1827 | 109323 | | 2.39 | 204 | 0.87 | 4991 | | | 2.73 | Si |
| SLU 77 | 1166 | -11048 | 1827 | -224773 | | 1.93 | 204 | 0.81 | 4646 | | | 2.54 | Si |
| SLU 83 | 986 | -14154 | 1834 | 118553 | | 2.48 | 204 | 0.89 | 5061 | | | 2.76 | Si |
| SLU 83 | 1166 | -11572 | 1834 | -216895 | | 2.03 | 204 | 0.83 | 4716 | | | 2.57 | Si |
| SLU 38 | 986 | -10758 | 1661 | 100598 | | 1.88 | 204 | 0.81 | 4608 | | | 2.77 | Si |
| SLU 38 | 1166 | -8756 | 1661 | -202361 | | 1.53 | 204 | 0.76 | 4341 | | | 2.61 | Si |
| SLU 78 | 986 | -13617 | 1834 | 110345 | | 2.38 | 204 | 0.87 | 4989 | | | 2.72 | Si |
| SLU 78 | 1166 | -11034 | 1834 | -225119 | | 1.93 | 204 | 0.81 | 4645 | | | 2.53 | Si |
| SLU 79 | 986 | -12989 | 1813 | 107646 | | 2.27 | 204 | 0.86 | 4905 | | | 2.71 | Si |
| SLU 79 | 1166 | -10406 | 1813 | -223868 | | 1.82 | 204 | 0.8 | 4561 | | | 2.52 | Si |
| SLU 84 | 986 | -14140 | 1842 | 119575 | | 2.48 | 204 | 0.89 | 5059 | | | 2.75 | Si |
| SLU 84 | 1166 | -11558 | 1842 | -217241 | | 2.02 | 204 | 0.83 | 4714 | | | 2.56 | Si |
| SLU 36 | 986 | -11399 | 1675 | 102275 | | 2 | 204 | 0.82 | 4693 | | | 2.8 | Si |
| SLU 36 | 1166 | -9398 | 1675 | -203266 | | 1.65 | 204 | 0.77 | 4426 | | | 2.64 | Si |
| SLU 35 | 986 | -11413 | 1667 | 101253 | | 2 | 204 | 0.82 | 4695 | | | 2.82 | Si |
| SLU 35 | 1166 | -9411 | 1667 | -202920 | | 1.65 | 204 | 0.78 | 4428 | | | 2.66 | Si |

## Verifica a taglio nel piano secondo D.M. 17-01-18 (N.T.C.) §7.8.2.2.2 con rottura per scorrimento in combinazioni sismiche, γM = 2

| Comb. | Quota | N | V par | M | σ0 | σN | l' | fvd | Vt scorr. | Vt fess.diag. | Vt,lim | c.s. | Verifica |
|---|---|---|---|---|---|---|---|---|---|---|---|---|---|
| SLV 9 | 986 | -11632 | 2669 | 214049 | | 2.04 | 204 | 1.24 | 7086 | | | 2.65 | Si |
| SLV 9 | 1166 | -8761 | 2499 | -303103 | | 1.55 | 202.2 | 1.14 | 6470 | | | 2.59 | Si |
| SLV 14 | 986 | -14306 | 4113 | 366648 | | 2.5 | 204 | 1.33 | 7621 | | | 1.85 | Si |
| SLV 14 | 1166 | -11802 | 3571 | -368409 | | 2.07 | 204 | 1.25 | 7120 | | | 1.99 | Si |
| SLV 10 | 986 | -11632 | 2669 | 214049 | | 2.04 | 204 | 1.24 | 7086 | | | 2.65 | Si |
| SLV 10 | 1166 | -8761 | 2499 | -303103 | | 1.55 | 202.2 | 1.14 | 6470 | | | 2.59 | Si |
| SLD 14 | 986 | -11646 | 2339 | 193208 | | 2.04 | 204 | 1.24 | 7089 | | | 3.03 | Si |
| SLD 14 | 1166 | -9443 | 2108 | -227873 | | 1.65 | 204 | 1.16 | 6649 | | | 3.15 | Si |
| SLV 13 | 986 | -14306 | 4113 | 366648 | | 2.5 | 204 | 1.33 | 7621 | | | 1.85 | Si |
| SLV 13 | 1166 | -11802 | 3571 | -368409 | | 2.07 | 204 | 1.25 | 7120 | | | 1.99 | Si |
| SLV 4 | 986 | -5037 | -2068 | -238023 | | 1.1 | 164.23 | 1.05 | 4839 | | | 2.34 | Si |

| Comb. | Quota | N | V par | M | σ0 | σN | l' | fvd | Vt scorr. | Vt fess.diag. | Vt,lim | c.s. | Verifica |
|---|---|---|---|---|---|---|---|---|---|---|---|---|---|
| SLV 4 | 1166 | -3582 | -1526 | 120861 | | 0.63 | 204 | 0.96 | 5476 | | | 3.59 | Si |
| SLV 15 | 986 | -13930 | 3638 | 327724 | | 2.44 | 204 | 1.32 | 7546 | | | 2.07 | Si |
| SLV 15 | 1166 | -11910 | 3102 | -298560 | | 2.09 | 204 | 1.25 | 7142 | | | 2.3 | Si |
| SLV 16 | 986 | -13930 | 3638 | 327724 | | 2.44 | 204 | 1.32 | 7546 | | | 2.07 | Si |
| SLV 16 | 1166 | -11910 | 3102 | -298560 | | 2.09 | 204 | 1.25 | 7142 | | | 2.3 | Si |
| SLD 13 | 986 | -11646 | 2339 | 193208 | | 2.04 | 204 | 1.24 | 7089 | | | 3.03 | Si |
| SLD 13 | 1166 | -9443 | 2108 | -227873 | | 1.65 | 204 | 1.16 | 6649 | | | 3.15 | Si |
| SLV 3 | 986 | -5037 | -2068 | -238023 | | 1.1 | 164.23 | 1.05 | 4839 | | | 2.34 | Si |
| SLV 3 | 1166 | -3582 | -1526 | 120861 | | 0.63 | 204 | 0.96 | 5476 | | | 3.59 | Si |

### Verifica a pressoflessione fuori piano D.M. 17-01-18 (N.T.C.)

quota 1072 Wa 0.05 denominatore 8 γM = 2

| Comb. | fd | Sa | σ0 | N | M | Mc | Coeff.s. | Verifica |
|---|---|---|---|---|---|---|---|---|
| SLV 3 | 14 | 0.46 | 0.76 | -4314 | 25073 | 56665 | 2.26 | Si |
| SLV 4 | 14 | 0.46 | 0.76 | -4314 | 25073 | 56665 | 2.26 | Si |
| SLV 1 | 14 | 0.46 | 0.82 | -4668 | 25073 | 60977 | 2.43 | Si |
| SLV 2 | 14 | 0.46 | 0.82 | -4668 | 25073 | 60977 | 2.43 | Si |
| SLV 8 | 14 | 0.46 | 1.2 | -6881 | 25073 | 86833 | 3.46 | Si |
| SLV 7 | 14 | 0.46 | 1.2 | -6881 | 25073 | 86833 | 3.46 | Si |
| SLV 6 | 14 | 0.46 | 1.41 | -8059 | 25073 | 99797 | 3.98 | Si |
| SLV 5 | 14 | 0.46 | 1.41 | -8059 | 25073 | 99797 | 3.98 | Si |
| SLV 11 | 14 | 0.46 | 1.65 | -9434 | 25073 | 114223 | 4.56 | Si |
| SLV 12 | 14 | 0.46 | 1.65 | -9434 | 25073 | 114223 | 4.56 | Si |

### Verifica dei meccanismi locali di collasso con analisi cinematica lineare

forza di aggancio al piano = 0 quota mezzeria = 1072 Wa = 0.05 Ta = 0.0739

| Comb. | N top | N base | V orto | α0 | M* | e* | a0* | aLim | Verifica |
|---|---|---|---|---|---|---|---|---|---|
| SLV 9 | -5618 | -12648 | 43 | 0.044 | 8.621 | 0.916 | 69.383 | 1733.979 | No |
| SLV 10 | -5618 | -12648 | 43 | 0.044 | 8.621 | 0.916 | 69.383 | 1733.979 | No |
| SLV 8 | -5495 | -8205 | -26 | 0.046 | 8.499 | 0.915 | 73.256 | 1733.979 | No |
| SLV 7 | -5495 | -8205 | -26 | 0.046 | 8.499 | 0.915 | 73.256 | 1733.979 | No |
| SLV 12 | -6677 | -11878 | -10 | 0.047 | 9.683 | 0.923 | 74.1 | 1733.979 | No |
| SLV 11 | -6677 | -11878 | -10 | 0.047 | 9.683 | 0.923 | 74.1 | 1733.979 | No |
| SLV 6 | -4436 | -8975 | 27 | 0.047 | 7.445 | 0.907 | 75.214 | 1733.979 | No |
| SLV 5 | -4436 | -8975 | 27 | 0.047 | 7.445 | 0.907 | 75.214 | 1733.979 | No |
| SLV 14 | -7368 | -16663 | 42 | 0.043 | 10.378 | 0.927 | 67.48 | 956.161 | No |
| SLV 13 | -7368 | -16663 | 42 | 0.043 | 10.378 | 0.927 | 67.48 | 956.161 | No |

### Tabella dei coefficienti di sicurezza minimi

| Stato limite | Coeff.s. | Comb. | Verifica |
|---|---|---|---|
| PF_SLU | 3.525 | SLU 30 | Si |
| V_SLU | 2.505 | SLU 80 | Si |
| PF_SLV | 2.003 | SLV 3 | Si |
| V_SLV | 1.853 | SLV 13 | Si |
| PFFP_SLV | 2.26 | SLV 3 | Si |
| R_SLV | 0.04 | SLV 9 | No |

## Maschio 156

Verifiche condotte secondo D.M. 17-01-18 (N.T.C.)

### Dati geometrici

| X ini. | Y ini. | X fin. | Y fin. | Quota i. | Quota.s | l | Sp. | h netta | h ini. | h fin. | a | a.s.,sx | a.s.,dx |
|---|---|---|---|---|---|---|---|---|---|---|---|---|---|
| -2066.8 | 104.6 | -2467.8 | 104.6 | L5 | L6 | 401 | 28 | 352 | 352 | 352 | | | |

### Caratteristiche del materiale

(Circolare 7 21-01-19 C8.5.I) Muratura in mattoni pieni e malta di calce LC2_Corti

| fb | fk | fvk0 | fmedio | τ0 | fv0 | μ | ϕ | fv,lim | E | G | FC |
|---|---|---|---|---|---|---|---|---|---|---|---|
| 60 | | | 34.5 | 0.9 | 2 | 0.58 | 0.77 | 3.25 | 32000 | 12800 | 1.2 |

### Verifica a pressoflessione nel piano secondo D.M. 17-01-18 NTC §7.8.2.2.1 in combinazioni non sismiche, γM = 3

| Comb. | Quota | N | M | σ0 | Mu | c.s. | Verifica |
|---|---|---|---|---|---|---|---|
| SLU 69 | 896 | -31403 | -294217 | 2.8 | 4134508 | 14.053 | Si |
| SLU 69 | 1106 | -27162 | -683087 | 2.42 | 3828613 | 5.605 | Si |
| SLU 79 | 896 | -32483 | -298937 | 2.89 | 4199768 | 14.049 | Si |
| SLU 79 | 1106 | -28991 | -742675 | 2.58 | 3970244 | 5.346 | Si |
| SLU 36 | 896 | -28070 | -273375 | 2.5 | 3900755 | 14.269 | Si |
| SLU 36 | 1106 | -25980 | -679473 | 2.31 | 3729347 | 5.489 | Si |
| SLU 80 | 896 | -32671 | -306840 | 2.91 | 4210608 | 13.722 | Si |
| SLU 80 | 1106 | -29118 | -721760 | 2.59 | 3979482 | 5.514 | Si |
| SLU 77 | 896 | -33330 | -318662 | 2.97 | 4247385 | 13.329 | Si |
| SLU 77 | 1106 | -29941 | -764039 | 2.67 | 4037994 | 5.285 | Si |
| SLU 78 | 896 | -33518 | -326565 | 2.99 | 4257527 | 13.037 | Si |
| SLU 78 | 1106 | -30068 | -743124 | 2.68 | 4046706 | 5.446 | Si |
| SLU 35 | 896 | -27882 | -265472 | 2.48 | 3886123 | 14.639 | Si |
| SLU 35 | 1106 | -25854 | -700388 | 2.3 | 3718371 | 5.309 | Si |
| SLU 37 | 896 | -27035 | -245748 | 2.41 | 3818279 | 15.537 | Si |
| SLU 37 | 1106 | -24903 | -679025 | 2.22 | 3633592 | 5.351 | Si |
| SLU 38 | 896 | -27223 | -253651 | 2.42 | 3833609 | 15.114 | Si |
| SLU 38 | 1106 | -25030 | -658109 | 2.23 | 3645095 | 5.539 | Si |
| SLU 27 | 896 | -25956 | -241028 | 2.31 | 3727232 | 15.464 | Si |
| SLU 27 | 1106 | -23074 | -619437 | 2.06 | 3459166 | 5.584 | Si |

## Verifica a pressoflessione nel piano secondo D.M. 17-01-18 NTC §7.8.2.2.1 in combinazioni sismiche, γM = 2

| Comb. | Quota | N | M | σ0 | Mu | c.s. | Verifica |
|---|---|---|---|---|---|---|---|
| SLV 2 | 896 | -29605 | 740574 | 2.64 | 4654903 | 6.286 | Si |
| SLV 2 | 1106 | -29589 | -1542637 | 2.64 | 4653072 | 3.016 | Si |
| SLV 13 | 896 | -15436 | -1113078 | 1.37 | 2746685 | 2.468 | Si |
| SLV 13 | 1106 | -9271 | 723433 | 0.83 | 1733136 | 2.396 | Si |
| SLV 14 | 896 | -15436 | -1113078 | 1.37 | 2746685 | 2.468 | Si |
| SLV 14 | 1106 | -9271 | 723433 | 0.83 | 1733136 | 2.396 | Si |
| SLV 1 | 896 | -29605 | 740574 | 2.64 | 4654903 | 6.286 | Si |
| SLV 1 | 1106 | -29589 | -1542637 | 2.64 | 4653072 | 3.016 | Si |
| SLV 16 | 896 | -14869 | -1170324 | 1.32 | 2658095 | 2.271 | Si |
| SLV 16 | 1106 | -8127 | 759531 | 0.72 | 1532985 | 2.018 | Si |
| SLV 15 | 896 | -14869 | -1170324 | 1.32 | 2658095 | 2.271 | Si |
| SLV 15 | 1106 | -8127 | 759531 | 0.72 | 1532985 | 2.018 | Si |
| SLD 3 | 896 | -25145 | 170521 | 2.24 | 4117590 | 24.147 | Si |
| SLD 3 | 1106 | -22971 | -868728 | 2.05 | 3834565 | 4.414 | Si |
| SLV 3 | 896 | -29038 | 683327 | 2.59 | 4589800 | 6.717 | Si |
| SLV 3 | 1106 | -28446 | -1506540 | 2.53 | 4520817 | 3.001 | Si |
| SLD 4 | 896 | -25145 | 170521 | 2.24 | 4117590 | 24.147 | Si |
| SLD 4 | 1106 | -22971 | -868728 | 2.05 | 3834565 | 4.414 | Si |
| SLV 4 | 896 | -29038 | 683327 | 2.59 | 4589800 | 6.717 | Si |
| SLV 4 | 1106 | -28446 | -1506540 | 2.53 | 4520817 | 3.001 | Si |

## Verifica a taglio nel piano secondo D.M. 17-01-18 (N.T.C.) §7.8.2.2.2 con rottura per scorrimento in combinazioni non sismiche, γM = 3

| Comb. | Quota | N | V par | M | σ0 | σN | l' | fvd | Vt scorr. | Vt fess.diag. | Vt,lim | c.s. | Verifica |
|---|---|---|---|---|---|---|---|---|---|---|---|---|---|
| SLU 83 | 896 | -32479 | 4142 | -310355 | | 2.89 | 401 | 0.94 | 10568 | | | 2.55 | Si |
| SLU 83 | 1106 | -29262 | 4148 | -701608 | | 2.61 | 401 | 0.9 | 10139 | | | 2.44 | Si |
| SLU 42 | 896 | -27219 | 4008 | -265069 | | 2.42 | 401 | 0.88 | 9867 | | | 2.46 | Si |
| SLU 42 | 1106 | -25301 | 4040 | -617042 | | 2.25 | 401 | 0.86 | 9611 | | | 2.38 | Si |
| SLU 37 | 896 | -27035 | 4204 | -245748 | | 2.41 | 401 | 0.88 | 9842 | | | 2.34 | Si |
| SLU 37 | 1106 | -24903 | 4214 | -679025 | | 2.22 | 401 | 0.85 | 9558 | | | 2.27 | Si |
| SLU 41 | 896 | -27031 | 4217 | -257166 | | 2.41 | 401 | 0.88 | 9842 | | | 2.33 | Si |
| SLU 41 | 1106 | -25174 | 4224 | -637957 | | 2.24 | 401 | 0.85 | 9594 | | | 2.27 | Si |
| SLU 32 | 896 | -27053 | 3859 | -266414 | | 2.41 | 401 | 0.88 | 9845 | | | 2.55 | Si |
| SLU 32 | 1106 | -24933 | 3865 | -624627 | | 2.22 | 401 | 0.85 | 9562 | | | 2.47 | Si |
| SLU 77 | 896 | -33330 | 4235 | -318662 | | 2.97 | 401 | 0.95 | 10682 | | | 2.52 | Si |
| SLU 77 | 1106 | -29941 | 4244 | -764039 | | 2.67 | 401 | 0.91 | 10230 | | | 2.41 | Si |
| SLU 38 | 896 | -27223 | 3995 | -253651 | | 2.42 | 401 | 0.88 | 9868 | | | 2.47 | Si |
| SLU 38 | 1106 | -25030 | 4030 | -658109 | | 2.23 | 401 | 0.85 | 9575 | | | 2.38 | Si |
| SLU 35 | 896 | -27882 | 4311 | -265472 | | 2.48 | 401 | 0.89 | 9955 | | | 2.31 | Si |
| SLU 35 | 1106 | -25854 | 4320 | -700388 | | 2.3 | 401 | 0.86 | 9685 | | | 2.24 | Si |
| SLU 36 | 896 | -28070 | 4102 | -273375 | | 2.5 | 401 | 0.89 | 9980 | | | 2.43 | Si |
| SLU 36 | 1106 | -25980 | 4136 | -679473 | | 2.31 | 401 | 0.86 | 9702 | | | 2.35 | Si |
| SLU 79 | 896 | -32483 | 4128 | -298937 | | 2.89 | 401 | 0.94 | 10569 | | | 2.56 | Si |
| SLU 79 | 1106 | -28991 | 4138 | -742675 | | 2.58 | 401 | 0.9 | 10103 | | | 2.44 | Si |

## Verifica a taglio nel piano secondo D.M. 17-01-18 (N.T.C.) §7.8.2.2.2 con rottura per scorrimento in combinazioni sismiche, γM = 2

| Comb. | Quota | N | V par | M | σ0 | σN | l' | fvd | Vt scorr. | Vt fess.diag. | Vt,lim | c.s. | Verifica |
|---|---|---|---|---|---|---|---|---|---|---|---|---|---|
| SLV 13 | 896 | -15436 | -11711 | -1113078 | | 1.43 | 385.17 | 1.12 | 12075 | | | 1.03 | Si |
| SLV 13 | 1106 | -9271 | -10148 | 723433 | | 0.9 | 367.39 | 1.01 | 10427 | | | 1.03 | Si |
| SLV 3 | 896 | -29038 | 15120 | 683327 | | 2.59 | 401 | 1.35 | 15164 | | | 1 | Si |
| SLV 3 | 1106 | -28446 | 13562 | -1506540 | | 2.53 | 401 | 1.34 | 15046 | | | 1.11 | Si |
| SLV 2 | 896 | -29605 | 16252 | 740574 | | 2.64 | 401 | 1.36 | 15278 | | | 0.94 | No, Vu<V |
| SLV 2 | 1106 | -29589 | 14762 | -1542637 | | 2.64 | 401 | 1.36 | 15274 | | | 1.03 | Si |
| SLD 1 | 896 | -25369 | 7902 | 193138 | | 2.26 | 401 | 1.29 | 14430 | | | 1.83 | Si |
| SLD 1 | 1106 | -23427 | 7266 | -881866 | | 2.09 | 401 | 1.25 | 14042 | | | 1.93 | Si |
| SLD 2 | 896 | -25369 | 7902 | 193138 | | 2.26 | 401 | 1.29 | 14430 | | | 1.83 | Si |
| SLD 2 | 1106 | -23427 | 7266 | -881866 | | 2.09 | 401 | 1.25 | 14042 | | | 1.93 | Si |
| SLV 15 | 896 | -14869 | -12843 | -1170324 | | 1.45 | 365.37 | 1.12 | 11499 | | | 0.9 | No, Vu<V |
| SLV 15 | 1106 | -8127 | -11349 | 759531 | | 0.9 | 321.14 | 1.01 | 9119 | | | 0.8 | No, Vu<V |
| SLV 1 | 896 | -29605 | 16252 | 740574 | | 2.64 | 401 | 1.36 | 15278 | | | 0.94 | No, Vu<V |
| SLV 1 | 1106 | -29589 | 14762 | -1542637 | | 2.64 | 401 | 1.36 | 15274 | | | 1.03 | Si |
| SLV 14 | 896 | -15436 | -11711 | -1113078 | | 1.43 | 385.17 | 1.12 | 12075 | | | 1.03 | Si |
| SLV 14 | 1106 | -9271 | -10148 | 723433 | | 0.9 | 367.39 | 1.01 | 10427 | | | 1.03 | Si |
| SLV 16 | 896 | -14869 | -12843 | -1170324 | | 1.45 | 365.37 | 1.12 | 11499 | | | 0.9 | No, Vu<V |
| SLV 16 | 1106 | -8127 | -11349 | 759531 | | 0.9 | 321.14 | 1.01 | 9119 | | | 0.8 | No, Vu<V |
| SLV 4 | 896 | -29038 | 15120 | 683327 | | 2.59 | 401 | 1.35 | 15164 | | | 1 | Si |
| SLV 4 | 1106 | -28446 | 13562 | -1506540 | | 2.53 | 401 | 1.34 | 15046 | | | 1.11 | Si |

## Verifica a pressoflessione fuori piano D.M. 17-01-18 (N.T.C.)

quota 1072 Wa 0.05 denominatore 8 γM = 2

| Comb. | fd | Sa | σ0 | N | M | Mc | Coeff.s. | Verifica |
|---|---|---|---|---|---|---|---|---|
| SLV 16 | 14 | 0.46 | 0.8 | -9026 | 50431 | 118047 | 2.34 | Si |
| SLV 15 | 14 | 0.46 | 0.8 | -9026 | 50431 | 118047 | 2.34 | Si |
| SLV 13 | 14 | 0.46 | 0.9 | -10072 | 50431 | 130660 | 2.59 | Si |
| SLV 14 | 14 | 0.46 | 0.9 | -10072 | 50431 | 130660 | 2.59 | Si |
| SLV 12 | 14 | 0.46 | 1.32 | -14806 | 50431 | 184910 | 3.67 | Si |
| SLV 11 | 14 | 0.46 | 1.32 | -14806 | 50431 | 184910 | 3.67 | Si |
| SLV 10 | 14 | 0.46 | 1.63 | -18294 | 50431 | 221967 | 4.4 | Si |
| SLV 9 | 14 | 0.46 | 1.63 | -18294 | 50431 | 221967 | 4.4 | Si |
| SLV 8 | 14 | 0.46 | 1.85 | -20807 | 50431 | 247114 | 4.9 | Si |
| SLV 7 | 14 | 0.46 | 1.85 | -20807 | 50431 | 247114 | 4.9 | Si |

## Verifica dei meccanismi locali di collasso con analisi cinematica lineare

forza di aggancio al piano = 0 quota mezzeria = 1072 Wa = 0.05 Ta = 0.0739

| Comb. | N top | N base | V orto | α0 | M* | e* | a0* | aLim | Verifica |
|---|---|---|---|---|---|---|---|---|---|
| SLV 9 | -15103 | -21057 | -621 | 0.014 | 21.026 | 0.928 | 22.002 | 1733.979 | No |

| Comb. | N top | N base | V orto | α0 | M* | e* | a0* | aLim | Verifica |
|---|---|---|---|---|---|---|---|---|---|
| SLV 10 | -15103 | -21057 | -621 | 0.014 | 21.026 | 0.928 | 22.002 | 1733.979 | No |
| SLV 8 | -15577 | -23417 | 629 | 0.014 | 21.503 | 0.93 | 22.369 | 1733.979 | No |
| SLV 7 | -15577 | -23417 | 629 | 0.014 | 21.503 | 0.93 | 22.369 | 1733.979 | No |
| SLV 12 | -12703 | -19166 | 556 | 0.014 | 18.611 | 0.921 | 22.512 | 1733.979 | No |
| SLV 11 | -12703 | -19166 | 556 | 0.014 | 18.611 | 0.921 | 22.512 | 1733.979 | No |
| SLV 6 | -17977 | -25307 | -549 | 0.021 | 23.927 | 0.935 | 32.4 | 1733.979 | No |
| SLV 5 | -17977 | -25307 | -549 | 0.021 | 23.927 | 0.935 | 32.4 | 1733.979 | No |
| SLV 14 | -10911 | -15436 | -294 | 0.029 | 16.815 | 0.915 | 46.433 | 956.161 | No |
| SLV 13 | -10911 | -15436 | -294 | 0.029 | 16.815 | 0.915 | 46.433 | 956.161 | No |

### Tabella dei coefficienti di sicurezza minimi

| Stato limite | Coeff.s. | Comb. | Verifica |
|---|---|---|---|
| PF_SLU | 5.285 | SLU 77 | Si |
| V_SLU | 2.242 | SLU 35 | Si |
| PF_SLV | 2.018 | SLV 15 | Si |
| V_SLV | 0.804 | SLV 15 | No |
| PFFP_SLV | 2.341 | SLV 15 | Si |
| R_SLV | 0.013 | SLV 9 | No |

## Maschio 157

Verifiche condotte secondo D.M. 17-01-18 (N.T.C.)

### Dati geometrici

| X ini. | Y ini. | X fin. | Y fin. | Quota i. | Quota.s | l | Sp. | h netta | h ini. | h fin. | a | a.s.,sx | a.s.,dx |
|---|---|---|---|---|---|---|---|---|---|---|---|---|---|
| -1228.3 | 104.6 | -1986.8 | 104.6 | L5 | L6 | 758.5 | 28 | 352 | 352 | 352 | | | |

### Caratteristiche del materiale

(Circolare 7 21-01-19 C8.5.I) Muratura in mattoni pieni e malta di calce LC2_Corti

| fb | fk | fvk0 | fmedio | τ0 | fv0 | μ | ϕ | fv,lim | E | G | FC |
|---|---|---|---|---|---|---|---|---|---|---|---|
| 60 | | | 34.5 | 0.9 | 2 | 0.58 | 0.77 | 3.25 | 32000 | 12800 | 1.2 |

### Verifica a pressoflessione nel piano secondo D.M. 17-01-18 NTC §7.8.2.2.1 in combinazioni non sismiche, γM = 3

| Comb. | Quota | N | M | σ0 | Mu | c.s. | Verifica |
|---|---|---|---|---|---|---|---|
| SLU 81 | 896 | -80338 | -1706135 | 3.78 | 16319426 | 9.565 | Si |
| SLU 81 | 1146 | -71402 | -2319393 | 3.36 | 15902955 | 6.857 | Si |
| SLU 78 | 896 | -87785 | -1777772 | 4.13 | 16399058 | 9.224 | Si |
| SLU 78 | 1146 | -78569 | -2406096 | 3.7 | 16264749 | 6.76 | Si |
| SLU 74 | 896 | -83795 | -1773676 | 3.95 | 16386628 | 9.239 | Si |
| SLU 74 | 1146 | -74468 | -2407584 | 3.51 | 16085278 | 6.681 | Si |
| SLU 83 | 896 | -84194 | -1788318 | 3.96 | 16391016 | 9.166 | Si |
| SLU 83 | 1146 | -75277 | -2398558 | 3.54 | 16126541 | 6.723 | Si |
| SLU 77 | 896 | -87651 | -1855859 | 4.13 | 16399776 | 8.837 | Si |
| SLU 77 | 1146 | -78343 | -2486748 | 3.69 | 16256785 | 6.537 | Si |
| SLU 75 | 896 | -83929 | -1695589 | 3.95 | 16388184 | 9.665 | Si |
| SLU 75 | 1146 | -74694 | -2326931 | 3.52 | 16097079 | 6.918 | Si |
| SLU 84 | 896 | -84329 | -1710232 | 3.97 | 16392337 | 9.585 | Si |
| SLU 84 | 1146 | -75503 | -2317906 | 3.56 | 16137540 | 6.962 | Si |
| SLU 79 | 896 | -85613 | -1804655 | 4.03 | 16400949 | 9.088 | Si |
| SLU 79 | 1146 | -76210 | -2396329 | 3.59 | 16170523 | 6.748 | Si |
| SLU 56 | 896 | -80021 | -1612147 | 3.77 | 16310626 | 10.117 | Si |
| SLU 56 | 1146 | -70245 | -2284780 | 3.31 | 15823434 | 6.926 | Si |
| SLU 69 | 896 | -81963 | -1702216 | 3.86 | 16357548 | 9.61 | Si |
| SLU 69 | 1146 | -71477 | -2296828 | 3.37 | 15907907 | 6.926 | Si |

### Verifica a pressoflessione nel piano secondo D.M. 17-01-18 NTC §7.8.2.2.1 in combinazioni sismiche, γM = 2

| Comb. | Quota | N | M | σ0 | Mu | c.s. | Verifica |
|---|---|---|---|---|---|---|---|
| SLV 7 | 896 | -50304 | 57479 | 2.37 | 15379650 | 267.571 | Si |
| SLV 7 | 1146 | -49190 | -3518497 | 2.32 | 15119188 | 4.297 | Si |
| SLV 16 | 896 | -54257 | -4470173 | 2.55 | 16274730 | 3.641 | Si |
| SLV 16 | 1146 | -41799 | 1003819 | 1.97 | 13298854 | 13.248 | Si |
| SLV 4 | 896 | -53673 | 2307222 | 2.53 | 16145351 | 6.998 | Si |
| SLV 4 | 1146 | -53270 | -4811028 | 2.51 | 16055576 | 3.337 | Si |
| SLV 14 | 896 | -57320 | -4575040 | 2.7 | 16936854 | 3.702 | Si |
| SLV 14 | 1146 | -41855 | 1640389 | 1.97 | 13313162 | 8.116 | Si |
| SLV 1 | 896 | -56736 | 2202355 | 2.67 | 16812704 | 7.634 | Si |
| SLV 1 | 1146 | -53326 | -4174458 | 2.51 | 16068017 | 3.849 | Si |
| SLV 2 | 896 | -56736 | 2202355 | 2.67 | 16812704 | 7.634 | Si |
| SLV 2 | 1146 | -53326 | -4174458 | 2.51 | 16068017 | 3.849 | Si |
| SLV 15 | 896 | -54257 | -4470173 | 2.55 | 16274730 | 3.641 | Si |
| SLV 15 | 1146 | -41799 | 1003819 | 1.97 | 13298854 | 13.248 | Si |
| SLV 3 | 896 | -53673 | 2307222 | 2.53 | 16145351 | 6.998 | Si |
| SLV 3 | 1146 | -53270 | -4811028 | 2.51 | 16055576 | 3.337 | Si |
| SLV 13 | 896 | -57320 | -4575040 | 2.7 | 16936854 | 3.702 | Si |
| SLV 13 | 1146 | -41855 | 1640389 | 1.97 | 13313162 | 8.116 | Si |
| SLV 8 | 896 | -50304 | 57479 | 2.37 | 15379650 | 267.571 | Si |
| SLV 8 | 1146 | -49190 | -3518497 | 2.32 | 15119188 | 4.297 | Si |

### Verifica a taglio nel piano secondo D.M. 17-01-18 (N.T.C.) §7.8.2.2.2 con rottura per scorrimento in combinazioni non sismiche, γM = 3

| Comb. | Quota | N | V par | M | σ0 | σN | l' | fvd | Vt scorr. | Vt fess.diag. | Vt,lim | c.s. | Verifica |
|---|---|---|---|---|---|---|---|---|---|---|---|---|---|
| SLU 19 | 896 | -59951 | 2245 | -1161782 | | 2.82 | 758.5 | 0.93 | 19792 | | | 8.81 | Si |
| SLU 19 | 1146 | -53321 | 2436 | -1664014 | | 2.51 | 758.5 | 0.89 | 18908 | | | 7.76 | Si |
| SLU 39 | 896 | -67447 | 2233 | -1483580 | | 3.18 | 758.5 | 0.98 | 20792 | | | 9.31 | Si |
| SLU 39 | 1146 | -61192 | 2467 | -1946634 | | 2.88 | 758.5 | 0.94 | 19958 | | | 8.09 | Si |

| Comb. | Quota | N | V par | M | σ0 | σN | l' | fvd | Vt scorr. | Vt fess.diag. | Vt,lim | c.s. | Verifica |
|---|---|---|---|---|---|---|---|---|---|---|---|---|---|
| SLU 60 | 896 | -72708 | 2621 | -1462424 | | 3.42 | 758.5 | 1.01 | 21493 | | | 8.2 | Si |
| SLU 60 | 1146 | -63305 | 2760 | -2117425 | | 2.98 | 758.5 | 0.95 | 20240 | | | 7.33 | Si |
| SLU 52 | 896 | -70494 | 2370 | -1266433 | | 3.32 | 758.5 | 1 | 21198 | | | 8.95 | Si |
| SLU 52 | 1146 | -60739 | 2482 | -1901610 | | 2.86 | 758.5 | 0.94 | 19897 | | | 8.02 | Si |
| SLU 82 | 896 | -80473 | 2640 | -1628049 | | 3.79 | 758.5 | 1.06 | 22529 | | | 8.53 | Si |
| SLU 82 | 1146 | -71628 | 2862 | -2238741 | | 3.37 | 758.5 | 1.01 | 21349 | | | 7.46 | Si |
| SLU 18 | 896 | -59816 | 2230 | -1239868 | | 2.82 | 758.5 | 0.93 | 19774 | | | 8.87 | Si |
| SLU 18 | 1146 | -53095 | 2400 | -1744666 | | 2.5 | 758.5 | 0.89 | 18878 | | | 7.86 | Si |
| SLU 61 | 896 | -72842 | 2637 | -1384337 | | 3.43 | 758.5 | 1.01 | 21511 | | | 8.16 | Si |
| SLU 61 | 1146 | -63531 | 2796 | -2036773 | | 2.99 | 758.5 | 0.95 | 20270 | | | 7.25 | Si |
| SLU 81 | 896 | -80338 | 2624 | -1706135 | | 3.78 | 758.5 | 1.06 | 22511 | | | 8.58 | Si |
| SLU 81 | 1146 | -71402 | 2827 | -2319393 | | 3.36 | 758.5 | 1 | 21319 | | | 7.54 | Si |
| SLU 40 | 896 | -67581 | 2248 | -1405493 | | 3.18 | 758.5 | 0.98 | 20810 | | | 9.26 | Si |
| SLU 40 | 1146 | -61418 | 2502 | -1865982 | | 2.89 | 758.5 | 0.94 | 19988 | | | 7.99 | Si |
| SLU 73 | 896 | -78125 | 2373 | -1510144 | | 3.68 | 758.5 | 1.05 | 22216 | | | 9.36 | Si |
| SLU 73 | 1146 | -68836 | 2549 | -2103578 | | 3.24 | 758.5 | 0.99 | 20977 | | | 8.23 | Si |

### Verifica a taglio nel piano secondo D.M. 17-01-18 (N.T.C.) §7.8.2.2.2 con rottura per scorrimento in combinazioni sismiche, γM = 2

| Comb. | Quota | N | V par | M | σ0 | σN | l' | fvd | Vt scorr. | Vt fess.diag. | Vt,lim | c.s. | Verifica |
|---|---|---|---|---|---|---|---|---|---|---|---|---|---|
| SLV 16 | 896 | -54257 | -34183 | -4470173 | | 2.55 | 758.5 | 1.34 | 28550 | | | 0.84 | No, Vu<V |
| SLV 16 | 1146 | -41799 | -27117 | 1003819 | | 1.97 | 758.5 | 1.23 | 26058 | | | 0.96 | No, Vu<V |
| SLV 3 | 896 | -53673 | 39853 | 2307222 | | 2.53 | 758.5 | 1.34 | 28433 | | | 0.71 | No, Vu<V |
| SLV 3 | 1146 | -53270 | 33941 | -4811028 | | 2.51 | 758.5 | 1.33 | 28352 | | | 0.84 | No, Vu<V |
| SLV 1 | 896 | -56736 | 37168 | 2202355 | | 2.67 | 758.5 | 1.37 | 29045 | | | 0.78 | No, Vu<V |
| SLV 1 | 1146 | -53326 | 30156 | -4174458 | | 2.51 | 758.5 | 1.34 | 28364 | | | 0.94 | No, Vu<V |
| SLV 2 | 896 | -56736 | 37168 | 2202355 | | 2.67 | 758.5 | 1.37 | 29045 | | | 0.78 | No, Vu<V |
| SLV 2 | 1146 | -53326 | 30156 | -4174458 | | 2.51 | 758.5 | 1.34 | 28364 | | | 0.94 | No, Vu<V |
| SLV 4 | 896 | -53673 | 39853 | 2307222 | | 2.53 | 758.5 | 1.34 | 28433 | | | 0.71 | No, Vu<V |
| SLV 4 | 1146 | -53270 | 33941 | -4811028 | | 2.51 | 758.5 | 1.33 | 28352 | | | 0.84 | No, Vu<V |
| SLV 13 | 896 | -57320 | -36868 | -4575040 | | 2.7 | 758.5 | 1.37 | 29162 | | | 0.79 | No, Vu<V |
| SLV 13 | 1146 | -41855 | -30902 | 1640389 | | 1.97 | 758.5 | 1.23 | 26069 | | | 0.84 | No, Vu<V |
| SLD 4 | 896 | -54757 | 17879 | 338135 | | 2.58 | 758.5 | 1.35 | 28650 | | | 1.6 | Si |
| SLD 4 | 1146 | -50017 | 15351 | -2960410 | | 2.36 | 758.5 | 1.3 | 27702 | | | 1.8 | Si |
| SLD 3 | 896 | -54757 | 17879 | 338135 | | 2.58 | 758.5 | 1.35 | 28650 | | | 1.6 | Si |
| SLD 3 | 1146 | -50017 | 15351 | -2960410 | | 2.36 | 758.5 | 1.3 | 27702 | | | 1.8 | Si |
| SLV 14 | 896 | -57320 | -36868 | -4575040 | | 2.7 | 758.5 | 1.37 | 29162 | | | 0.79 | No, Vu<V |
| SLV 14 | 1146 | -41855 | -30902 | 1640389 | | 1.97 | 758.5 | 1.23 | 26069 | | | 0.84 | No, Vu<V |
| SLV 15 | 896 | -54257 | -34183 | -4470173 | | 2.55 | 758.5 | 1.34 | 28550 | | | 0.84 | No, Vu<V |
| SLV 15 | 1146 | -41799 | -27117 | 1003819 | | 1.97 | 758.5 | 1.23 | 26058 | | | 0.96 | No, Vu<V |

### Verifica a pressoflessione fuori piano D.M. 17-01-18 (N.T.C.)

quota 1072 Wa 0.05 denominatore 8 γM = 2

| Comb. | fd | Sa | σ0 | N | M | Mc | Coeff.s. | Verifica |
|---|---|---|---|---|---|---|---|---|
| SLV 14 | 14 | 0.46 | 2.33 | -49507 | 95392 | 560871 | 5.88 | Si |
| SLV 13 | 14 | 0.46 | 2.33 | -49507 | 95392 | 560871 | 5.88 | Si |
| SLV 9 | 14 | 0.46 | 2.35 | -49861 | 95392 | 563928 | 5.91 | Si |
| SLV 10 | 14 | 0.46 | 2.35 | -49861 | 95392 | 563928 | 5.91 | Si |
| SLV 16 | 14 | 0.46 | 2.35 | -49923 | 95392 | 564465 | 5.92 | Si |
| SLV 15 | 14 | 0.46 | 2.35 | -49923 | 95392 | 564465 | 5.92 | Si |
| SLV 5 | 14 | 0.46 | 2.38 | -50580 | 95392 | 570103 | 5.98 | Si |
| SLV 6 | 14 | 0.46 | 2.38 | -50580 | 95392 | 570103 | 5.98 | Si |
| SLV 11 | 14 | 0.46 | 2.41 | -51248 | 95392 | 575783 | 6.04 | Si |
| SLV 12 | 14 | 0.46 | 2.41 | -51248 | 95392 | 575783 | 6.04 | Si |

### Verifica dei meccanismi locali di collasso con analisi cinematica lineare

forza di aggancio al piano = 0 quota mezzeria = 1072 Wa = 0.05 Ta = 0.0739

| Comb. | N top | N base | V orto | α0 | M* | e* | a0* | aLim | Verifica |
|---|---|---|---|---|---|---|---|---|---|
| SLV 11 | -39563 | -50479 | -1442 | 0.014 | 50.886 | 0.942 | 22.22 | 1733.979 | No |
| SLV 12 | -39563 | -50479 | -1442 | 0.014 | 50.886 | 0.942 | 22.22 | 1733.979 | No |
| SLV 7 | -42064 | -50304 | -1494 | 0.015 | 53.421 | 0.944 | 22.553 | 1733.979 | No |
| SLV 8 | -42064 | -50304 | -1494 | 0.015 | 53.421 | 0.944 | 22.553 | 1733.979 | No |
| SLV 10 | -44085 | -60689 | 1368 | 0.018 | 55.47 | 0.946 | 27.834 | 1733.979 | No |
| SLV 9 | -44085 | -60689 | 1368 | 0.018 | 55.47 | 0.946 | 27.834 | 1733.979 | No |
| SLV 5 | -46586 | -60513 | 1317 | 0.02 | 58.007 | 0.948 | 30.802 | 1733.979 | No |
| SLV 6 | -46586 | -60513 | 1317 | 0.02 | 58.007 | 0.948 | 30.802 | 1733.979 | No |
| SLV 3 | -46565 | -53673 | -569 | 0.034 | 57.985 | 0.948 | 52.306 | 956.161 | No |
| SLV 4 | -46565 | -53673 | -569 | 0.034 | 57.985 | 0.948 | 52.306 | 956.161 | No |

### Tabella dei coefficienti di sicurezza minimi

| Stato limite | Coeff.s. | Comb. | Verifica |
|---|---|---|---|
| PF_SLU | 6.537 | SLU 77 | Si |
| V_SLU | 7.249 | SLU 61 | Si |
| PF_SLV | 3.337 | SLV 3 | Si |
| V_SLV | 0.713 | SLV 3 | No |
| PFFP_SLV | 5.88 | SLV 13 | Si |
| R_SLV | 0.013 | SLV 11 | No |

## Maschio 158

Verifiche condotte secondo D.M. 17-01-18 (N.T.C.)

### Dati geometrici

| X ini. | Y ini. | X fin. | Y fin. | Quota i. | Quota.s | l | Sp. | h netta | h ini. | h fin. | a | a.s.,sx | a.s.,dx |
|---|---|---|---|---|---|---|---|---|---|---|---|---|---|
| -1046.6 | 104.6 | -1116.3 | 104.6 | L5 | L6 | 69.6 | 28 | 352 | 352 | 352 | | | |

## Caratteristiche del materiale

(Circolare 7 21-01-19 C8.5.I) Muratura in mattoni pieni e malta di calce LC2_Corti

| fb | fk | fvk0 | fmedio | τ0 | fv0 | μ | ϕ | fv,lim | E | G | FC |
|---|---|---|---|---|---|---|---|---|---|---|---|
| 60 | | | 34.5 | 0.9 | 2 | 0.58 | 0.77 | 3.25 | 32000 | 12800 | 1.2 |

## Verifica a pressoflessione nel piano secondo D.M. 17-01-18 NTC §7.8.2.2.1 in combinazioni non sismiche, γM = 3

| Comb. | Quota | N | M | σ0 | Mu | c.s. | Verifica |
|---|---|---|---|---|---|---|---|
| SLU 81 | 896 | -7500 | 32974 | 3.85 | 137828 | 4.18 | Si |
| SLU 81 | 1146 | -8229 | -21477 | 4.22 | 138074 | 6.429 | Si |
| SLU 35 | 896 | -6633 | 31901 | 3.4 | 134500 | 4.216 | Si |
| SLU 35 | 1146 | -8072 | -22139 | 4.14 | 138218 | 6.243 | Si |
| SLU 83 | 896 | -7702 | 34354 | 3.95 | 138129 | 4.021 | Si |
| SLU 83 | 1146 | -8759 | -22771 | 4.49 | 136789 | 6.007 | Si |
| SLU 39 | 896 | -6224 | 32766 | 3.19 | 131785 | 4.022 | Si |
| SLU 39 | 1146 | -7148 | -22231 | 3.67 | 136876 | 6.157 | Si |
| SLU 79 | 896 | -7666 | 32466 | 3.93 | 138089 | 4.253 | Si |
| SLU 79 | 1146 | -8936 | -21862 | 4.58 | 136088 | 6.225 | Si |
| SLU 41 | 896 | -6425 | 34146 | 3.3 | 133217 | 3.901 | Si |
| SLU 41 | 1146 | -7678 | -23526 | 3.94 | 138104 | 5.87 | Si |
| SLU 40 | 896 | -6232 | 31553 | 3.2 | 131846 | 4.179 | Si |
| SLU 40 | 1146 | -7088 | -21210 | 3.64 | 136660 | 6.443 | Si |
| SLU 84 | 896 | -7710 | 33141 | 3.95 | 138138 | 4.168 | Si |
| SLU 84 | 1146 | -8699 | -21750 | 4.46 | 136996 | 6.299 | Si |
| SLU 42 | 896 | -6434 | 32933 | 3.3 | 133270 | 4.047 | Si |
| SLU 42 | 1146 | -7618 | -22505 | 3.91 | 138027 | 6.133 | Si |
| SLU 37 | 896 | -6390 | 32258 | 3.28 | 132977 | 4.122 | Si |
| SLU 37 | 1146 | -7855 | -22617 | 4.03 | 138239 | 6.112 | Si |

## Verifica a pressoflessione nel piano secondo D.M. 17-01-18 NTC §7.8.2.2.1 in combinazioni sismiche, γM = 2

| Comb. | Quota | N | M | σ0 | Mu | c.s. | Verifica |
|---|---|---|---|---|---|---|---|
| SLV 15 | 896 | -7739 | -286334 | 0 | 0 | 0 | No, e>l/2 |
| SLV 15 | 1146 | -4327 | 262904 | 0 | 0 | 0 | No, e>l/2 |
| SLV 14 | 896 | -6873 | -295151 | 0 | 0 | 0 | No, e>l/2 |
| SLV 14 | 1146 | -5753 | 268906 | 0 | 0 | 0 | No, e>l/2 |
| SLV 3 | 896 | -3522 | 329135 | 0 | 0 | 0 | No, e>l/2 |
| SLV 3 | 1146 | -5080 | -290013 | 0 | 0 | 0 | No, e>l/2 |
| SLD 2 | 896 | -4115 | 146572 | 0 | 0 | 0 | No, e>l/2 |
| SLD 2 | 1146 | -5876 | -127424 | 3.01 | 154138 | 1.21 | Si |
| SLV 1 | 896 | -2656 | 320318 | 0 | 0 | 0 | No, e>l/2 |
| SLV 1 | 1146 | -6506 | -284012 | 0 | 0 | 0 | No, e>l/2 |
| SLD 1 | 896 | -4115 | 146572 | 0 | 0 | 0 | No, e>l/2 |
| SLD 1 | 1146 | -5876 | -127424 | 3.01 | 154138 | 1.21 | Si |
| SLV 2 | 896 | -2656 | 320318 | 0 | 0 | 0 | No, e>l/2 |
| SLV 2 | 1146 | -6506 | -284012 | 0 | 0 | 0 | No, e>l/2 |
| SLV 13 | 896 | -6873 | -295151 | 0 | 0 | 0 | No, e>l/2 |
| SLV 13 | 1146 | -5753 | 268906 | 0 | 0 | 0 | No, e>l/2 |
| SLV 16 | 896 | -7739 | -286334 | 0 | 0 | 0 | No, e>l/2 |
| SLV 16 | 1146 | -4327 | 262904 | 0 | 0 | 0 | No, e>l/2 |
| SLV 4 | 896 | -3522 | 329135 | 0 | 0 | 0 | No, e>l/2 |
| SLV 4 | 1146 | -5080 | -290013 | 0 | 0 | 0 | No, e>l/2 |

## Verifica a taglio nel piano secondo D.M. 17-01-18 (N.T.C.) §7.8.2.2.2 con rottura per scorrimento in combinazioni non sismiche, γM = 3

| Comb. | Quota | N | V par | M | σ0 | σN | l' | fvd | Vt scorr. | Vt fess.diag. | Vt,lim | c.s. | Verifica |
|---|---|---|---|---|---|---|---|---|---|---|---|---|---|
| SLU 77 | 896 | -7909 | 412 | 32109 | | 4.06 | 69.64 | 1.08 | 2112 | | | 5.12 | Si |
| SLU 77 | 1146 | -9153 | 395 | -21384 | | 4.69 | 69.64 | 1.08 | 2112 | | | 5.35 | Si |
| SLU 79 | 896 | -7666 | 418 | 32466 | | 3.93 | 69.64 | 1.08 | 2105 | | | 5.04 | Si |
| SLU 79 | 1146 | -8936 | 400 | -21862 | | 4.58 | 69.64 | 1.08 | 2112 | | | 5.28 | Si |
| SLU 83 | 896 | -7702 | 416 | 34354 | | 3.95 | 69.64 | 1.08 | 2110 | | | 5.07 | Si |
| SLU 83 | 1146 | -8759 | 392 | -22771 | | 4.49 | 69.64 | 1.08 | 2112 | | | 5.39 | Si |
| SLU 36 | 896 | -6641 | 395 | 30688 | | 3.41 | 69.64 | 1.01 | 1969 | | | 4.99 | Si |
| SLU 36 | 1146 | -8012 | 378 | -21118 | | 4.11 | 69.64 | 1.08 | 2112 | | | 5.59 | Si |
| SLU 42 | 896 | -6434 | 399 | 32933 | | 3.3 | 69.64 | 1 | 1941 | | | 4.86 | Si |
| SLU 42 | 1146 | -7618 | 375 | -22505 | | 3.91 | 69.64 | 1.08 | 2099 | | | 5.6 | Si |
| SLU 37 | 896 | -6390 | 415 | 32258 | | 3.28 | 69.64 | 0.99 | 1935 | | | 4.67 | Si |
| SLU 37 | 1146 | -7855 | 397 | -22617 | | 4.03 | 69.64 | 1.08 | 2112 | | | 5.32 | Si |
| SLU 35 | 896 | -6633 | 409 | 31901 | | 3.4 | 69.64 | 1.01 | 1968 | | | 4.81 | Si |
| SLU 35 | 1146 | -8072 | 392 | -22139 | | 4.14 | 69.64 | 1.08 | 2112 | | | 5.39 | Si |
| SLU 41 | 896 | -6425 | 413 | 34146 | | 3.3 | 69.64 | 0.99 | 1940 | | | 4.69 | Si |
| SLU 41 | 1146 | -7678 | 389 | -23526 | | 3.94 | 69.64 | 1.08 | 2107 | | | 5.41 | Si |
| SLU 39 | 896 | -6224 | 378 | 32766 | | 3.19 | 69.64 | 0.98 | 1913 | | | 5.07 | Si |
| SLU 39 | 1146 | -7148 | 353 | -22231 | | 3.67 | 69.64 | 1.04 | 2036 | | | 5.77 | Si |
| SLU 38 | 896 | -6398 | 400 | 31045 | | 3.28 | 69.64 | 0.99 | 1936 | | | 4.84 | Si |
| SLU 38 | 1146 | -7795 | 383 | -21596 | | 4 | 69.64 | 1.08 | 2112 | | | 5.52 | Si |

## Verifica a taglio nel piano secondo D.M. 17-01-18 (N.T.C.) §7.8.2.2.2 con rottura per scorrimento in combinazioni sismiche, γM = 2

| Comb. | Quota | N | V par | M | σ0 | σN | l' | fvd | Vt scorr. | Vt fess.diag. | Vt,lim | c.s. | Verifica |
|---|---|---|---|---|---|---|---|---|---|---|---|---|---|
| SLV 13 | 896 | -6873 | -2553 | -295151 | | 0 | 0 | 0.83 | 0 | | | 0 | No, Vu<V |
| SLV 13 | 1146 | -5753 | -1932 | 268906 | | 0 | 0 | 0.83 | 0 | | | 0 | No, Vu<V |
| SLV 3 | 896 | -3522 | 2955 | 329135 | | 0 | 0 | 0.83 | 0 | | | 0 | No, Vu<V |
| SLV 3 | 1146 | -5080 | 2321 | -290013 | | 0 | 0 | 0.83 | 0 | | | 0 | No, Vu<V |
| SLV 16 | 896 | -7739 | -2610 | -286334 | | 0 | 0 | 0.83 | 0 | | | 0 | No, Vu<V |
| SLV 16 | 1146 | -4327 | -2057 | 262904 | | 0 | 0 | 0.83 | 0 | | | 0 | No, Vu<V |
| SLD 1 | 896 | -4115 | 1401 | 146572 | | 0 | 0 | 0.83 | 0 | | | 0 | No, Vu<V |
| SLD 1 | 1146 | -5876 | 1157 | -127424 | | 5.33 | 39.4 | 1.63 | 1793 | | | 1.55 | Si |
| SLV 2 | 896 | -2656 | 3013 | 320318 | | 0 | 0 | 0.83 | 0 | | | 0 | No, Vu<V |
| SLV 2 | 1146 | -6506 | 2445 | -284012 | | 0 | 0 | 0.83 | 0 | | | 0 | No, Vu<V |
| SLV 14 | 896 | -6873 | -2553 | -295151 | | 0 | 0 | 0.83 | 0 | | | 0 | No, Vu<V |

| Comb. | Quota | N | V par | M | σ0 | σN | l' | fvd | Vt scorr. | Vt fess.diag. | Vt,lim | c.s. | Verifica |
|---|---|---|---|---|---|---|---|---|---|---|---|---|---|
| SLV 14 | 1146 | -5753 | -1932 | 268906 | | 0 | 0 | 0.83 | 0 | | | 0 | No, Vu<V |
| SLV 4 | 896 | -3522 | 2955 | 329135 | | 0 | 0 | 0.83 | 0 | | | 0 | No, Vu<V |
| SLV 4 | 1146 | -5080 | 2321 | -290013 | | 0 | 0 | 0.83 | 0 | | | 0 | No, Vu<V |
| SLV 1 | 896 | -2656 | 3013 | 320318 | | 0 | 0 | 0.83 | 0 | | | 0 | No, Vu<V |
| SLV 1 | 1146 | -6506 | 2445 | -284012 | | 0 | 0 | 0.83 | 0 | | | 0 | No, Vu<V |
| SLD 2 | 896 | -4115 | 1401 | 146572 | | 0 | 0 | 0.83 | 0 | | | 0 | No, Vu<V |
| SLD 2 | 1146 | -5876 | 1157 | -127424 | | 5.33 | 39.4 | 1.63 | 1793 | | | 1.55 | Si |
| SLV 15 | 896 | -7739 | -2610 | -286334 | | 0 | 0 | 0.83 | 0 | | | 0 | No, Vu<V |
| SLV 15 | 1146 | -4327 | -2057 | 262904 | | 0 | 0 | 0.83 | 0 | | | 0 | No, Vu<V |

### Verifica a pressoflessione fuori piano D.M. 17-01-18 (N.T.C.)

quota 1072 Wa 0.05 denominatore 8 γM = 2

| Comb. | fd | Sa | σ0 | N | M | Mc | Coeff.s. | Verifica |
|---|---|---|---|---|---|---|---|---|
| SLV 12 | 14 | 0.46 | 1.88 | -3660 | 8758 | 43369 | 4.95 | Si |
| SLV 11 | 14 | 0.46 | 1.88 | -3660 | 8758 | 43369 | 4.95 | Si |
| SLV 7 | 14 | 0.46 | 2 | -3898 | 8758 | 45642 | 5.21 | Si |
| SLV 8 | 14 | 0.46 | 2 | -3898 | 8758 | 45642 | 5.21 | Si |
| SLV 15 | 14 | 0.46 | 2.3 | -4476 | 8758 | 50893 | 5.81 | Si |
| SLV 16 | 14 | 0.46 | 2.3 | -4476 | 8758 | 50893 | 5.81 | Si |
| SLV 4 | 14 | 0.46 | 2.7 | -5269 | 8758 | 57452 | 6.56 | Si |
| SLV 3 | 14 | 0.46 | 2.7 | -5269 | 8758 | 57452 | 6.56 | Si |
| SLV 13 | 14 | 0.46 | 2.78 | -5414 | 8758 | 58569 | 6.69 | Si |
| SLV 14 | 14 | 0.46 | 2.78 | -5414 | 8758 | 58569 | 6.69 | Si |

### Verifica dei meccanismi locali di collasso con analisi cinematica lineare

forza di aggancio al piano = 0 quota mezzeria = 1072 Wa = 0.05 Ta = 0.0739

| Comb. | N top | N base | V orto | α0 | M* | e* | a0* | aLim | Verifica |
|---|---|---|---|---|---|---|---|---|---|
| SLV 9 | -3787 | -4386 | 327 | 0 | 4.829 | 0.943 | 0 | 1733.979 | No |
| SLV 6 | -3274 | -3121 | 299 | 0 | 4.309 | 0.937 | 0 | 1733.979 | No |
| SLV 5 | -3274 | -3121 | 299 | 0 | 4.309 | 0.937 | 0 | 1733.979 | No |
| SLV 11 | -2368 | -7274 | -297 | 0 | 3.395 | 0.924 | 0 | 1733.979 | No |
| SLV 10 | -3787 | -4386 | 327 | 0 | 4.829 | 0.943 | 0 | 1733.979 | No |
| SLV 12 | -2368 | -7274 | -297 | 0 | 3.395 | 0.924 | 0 | 1733.979 | No |
| SLV 7 | -1855 | -6009 | -326 | 0 | 2.881 | 0.914 | 0 | 1733.979 | No |
| SLV 3 | -1754 | -3522 | -140 | 0 | 2.779 | 0.912 | 0 | 956.161 | No |
| SLV 4 | -1754 | -3522 | -140 | 0 | 2.779 | 0.912 | 0 | 956.161 | No |
| SLV 8 | -1855 | -6009 | -326 | 0 | 2.881 | 0.914 | 0 | 1733.979 | No |

### Tabella dei coefficienti di sicurezza minimi

| Stato limite | Coeff.s. | Comb. | Verifica |
|---|---|---|---|
| PF_SLU | 3.901 | SLU 41 | Si |
| V_SLU | 4.669 | SLU 37 | Si |
| PF_SLV | 0 | SLD 1 | No |
| V_SLV | 0 | SLD 1 | No |
| PFFP_SLV | 4.952 | SLV 11 | Si |
| R_SLV | 0 | SLV 3 | No |

## Maschio 159

Verifiche condotte secondo D.M. 17-01-18 (N.T.C.)

### Dati geometrici

| X ini. | Y ini. | X fin. | Y fin. | Quota i. | Quota.s | l | Sp. | h netta | h ini. | h fin. | a | a.s.,sx | a.s.,dx |
|---|---|---|---|---|---|---|---|---|---|---|---|---|---|
| -727.8 | 104.6 | -938.6 | 104.6 | L5 | L6 | 210.9 | 28 | 352 | 352 | 352 | | | |

### Caratteristiche del materiale

(Circolare 7 21-01-19 C8.5.I) Muratura in mattoni pieni e malta di calce LC2_Corti

| fb | fk | fvk0 | fmedio | τ0 | fv0 | μ | ϕ | fv,lim | E | G | FC |
|---|---|---|---|---|---|---|---|---|---|---|---|
| 60 | | | 34.5 | 0.9 | 2 | 0.58 | 0.77 | 3.25 | 32000 | 12800 | 1.2 |

### Verifica a pressoflessione nel piano secondo D.M. 17-01-18 NTC §7.8.2.2.1 in combinazioni non sismiche, γM = 3

| Comb. | Quota | N | M | σ0 | Mu | c.s. | Verifica |
|---|---|---|---|---|---|---|---|
| SLU 81 | 896 | -24074 | -125486 | 4.08 | 1267664 | 10.102 | Si |
| SLU 81 | 1146 | -19410 | 216811 | 3.29 | 1220532 | 5.629 | Si |
| SLU 61 | 896 | -21841 | -133823 | 3.7 | 1256994 | 9.393 | Si |
| SLU 61 | 1146 | -17426 | 206407 | 2.95 | 1171551 | 5.676 | Si |
| SLU 82 | 896 | -24169 | -136988 | 4.09 | 1267633 | 9.254 | Si |
| SLU 82 | 1146 | -19521 | 222377 | 3.31 | 1222763 | 5.499 | Si |
| SLU 63 | 896 | -22965 | -117928 | 3.89 | 1265099 | 10.728 | Si |
| SLU 63 | 1146 | -18427 | 207018 | 3.12 | 1198420 | 5.789 | Si |
| SLU 76 | 896 | -24571 | -114616 | 4.16 | 1267064 | 11.055 | Si |
| SLU 76 | 1146 | -19814 | 213178 | 3.36 | 1228374 | 5.762 | Si |
| SLU 75 | 896 | -25180 | -113931 | 4.26 | 1264854 | 11.102 | Si |
| SLU 75 | 1146 | -20401 | 217471 | 3.46 | 1238523 | 5.695 | Si |
| SLU 78 | 896 | -26304 | -98036 | 4.46 | 1256500 | 12.817 | Si |
| SLU 78 | 1146 | -21402 | 218082 | 3.62 | 1252331 | 5.742 | Si |
| SLU 73 | 896 | -23447 | -130511 | 3.97 | 1266876 | 9.707 | Si |
| SLU 73 | 1146 | -18812 | 212567 | 3.19 | 1207591 | 5.681 | Si |
| SLU 83 | 896 | -25198 | -109591 | 4.27 | 1264762 | 11.541 | Si |
| SLU 83 | 1146 | -20412 | 217422 | 3.46 | 1238689 | 5.697 | Si |
| SLU 84 | 896 | -25294 | -121093 | 4.28 | 1264260 | 10.44 | Si |
| SLU 84 | 1146 | -20523 | 222988 | 3.48 | 1240432 | 5.563 | Si |

## Verifica a pressoflessione nel piano secondo D.M. 17-01-18 NTC §7.8.2.2.1 in combinazioni sismiche, γM = 2

| Comb. | Quota | N | M | σ0 | Mu | c.s. | Verifica |
|---|---|---|---|---|---|---|---|
| SLV 12 | 896 | -17153 | -520884 | 2.91 | 1378481 | 2.646 | Si |
| SLV 12 | 1146 | -15220 | 456415 | 2.58 | 1266118 | 2.774 | Si |
| SLV 14 | 896 | -17617 | -895388 | 2.98 | 1403791 | 1.568 | Si |
| SLV 14 | 1146 | -18367 | 784218 | 3.11 | 1443421 | 1.841 | Si |
| SLV 2 | 896 | -15244 | 869684 | 2.58 | 1267583 | 1.458 | Si |
| SLV 2 | 1146 | -7261 | -577697 | 1.23 | 688491 | 1.192 | Si |
| SLV 16 | 896 | -17786 | -1007667 | 3.01 | 1412886 | 1.402 | Si |
| SLV 16 | 1146 | -18708 | 852926 | 3.17 | 1460931 | 1.713 | Si |
| SLV 3 | 896 | -15413 | 757405 | 2.61 | 1277853 | 1.687 | Si |
| SLV 3 | 1146 | -7603 | -508989 | 1.29 | 717091 | 1.409 | Si |
| SLV 11 | 896 | -17153 | -520884 | 2.91 | 1378481 | 2.646 | Si |
| SLV 11 | 1146 | -15220 | 456415 | 2.58 | 1266118 | 2.774 | Si |
| SLV 13 | 896 | -17617 | -895388 | 2.98 | 1403791 | 1.568 | Si |
| SLV 13 | 1146 | -18367 | 784218 | 3.11 | 1443421 | 1.841 | Si |
| SLV 15 | 896 | -17786 | -1007667 | 3.01 | 1412886 | 1.402 | Si |
| SLV 15 | 1146 | -18708 | 852926 | 3.17 | 1460931 | 1.713 | Si |
| SLV 4 | 896 | -15413 | 757405 | 2.61 | 1277853 | 1.687 | Si |
| SLV 4 | 1146 | -7603 | -508989 | 1.29 | 717091 | 1.409 | Si |
| SLV 1 | 896 | -15244 | 869684 | 2.58 | 1267583 | 1.458 | Si |
| SLV 1 | 1146 | -7261 | -577697 | 1.23 | 688491 | 1.192 | Si |

## Verifica a taglio nel piano secondo D.M. 17-01-18 (N.T.C.) §7.8.2.2.2 con rottura per scorrimento in combinazioni non sismiche, γM = 3

| Comb. | Quota | N | V par | M | σ0 | σN | l' | fvd | Vt scorr. | Vt fess.diag. | Vt,lim | c.s. | Verifica |
|---|---|---|---|---|---|---|---|---|---|---|---|---|---|
| SLU 61 | 896 | -21841 | -1039 | -133823 | | 3.7 | 210.86 | 1.05 | 6192 | | | 5.96 | Si |
| SLU 61 | 1146 | -17426 | -510 | 206407 | | 2.95 | 210.86 | 0.95 | 5604 | | | 10.98 | Si |
| SLU 84 | 896 | -25294 | -947 | -121093 | | 4.28 | 210.86 | 1.08 | 6396 | | | 6.76 | Si |
| SLU 84 | 1146 | -20523 | -361 | 222988 | | 3.48 | 210.86 | 1.02 | 6016 | | | 16.64 | Si |
| SLU 73 | 896 | -23447 | -996 | -130511 | | 3.97 | 210.86 | 1.08 | 6396 | | | 6.43 | Si |
| SLU 73 | 1146 | -18812 | -446 | 212567 | | 3.19 | 210.86 | 0.98 | 5788 | | | 12.97 | Si |
| SLU 82 | 896 | -24169 | -1060 | -136988 | | 4.09 | 210.86 | 1.08 | 6396 | | | 6.04 | Si |
| SLU 82 | 1146 | -19521 | -494 | 222377 | | 3.31 | 210.86 | 1 | 5883 | | | 11.9 | Si |
| SLU 40 | 896 | -20370 | -933 | -120477 | | 3.45 | 210.86 | 1.02 | 5996 | | | 6.43 | Si |
| SLU 40 | 1146 | -16681 | -446 | 190641 | | 2.83 | 210.86 | 0.93 | 5504 | | | 12.33 | Si |
| SLU 81 | 896 | -24074 | -981 | -125486 | | 4.08 | 210.86 | 1.08 | 6396 | | | 6.52 | Si |
| SLU 81 | 1146 | -19410 | -444 | 216811 | | 3.29 | 210.86 | 0.99 | 5868 | | | 13.22 | Si |
| SLU 19 | 896 | -18041 | -912 | -117311 | | 3.06 | 210.86 | 0.96 | 5686 | | | 6.23 | Si |
| SLU 19 | 1146 | -14585 | -463 | 174671 | | 2.47 | 210.86 | 0.88 | 5225 | | | 11.29 | Si |
| SLU 10 | 896 | -17319 | -848 | -110834 | | 2.93 | 210.86 | 0.95 | 5589 | | | 6.59 | Si |
| SLU 10 | 1146 | -13876 | -415 | 164861 | | 2.35 | 210.86 | 0.87 | 5130 | | | 12.37 | Si |
| SLU 60 | 896 | -21745 | -961 | -122321 | | 3.68 | 210.86 | 1.05 | 6179 | | | 6.43 | Si |
| SLU 60 | 1146 | -17315 | -460 | 200841 | | 2.93 | 210.86 | 0.95 | 5589 | | | 12.14 | Si |
| SLU 52 | 896 | -21118 | -975 | -127346 | | 3.58 | 210.86 | 1.03 | 6096 | | | 6.25 | Si |
| SLU 52 | 1146 | -16717 | -463 | 196597 | | 2.83 | 210.86 | 0.93 | 5509 | | | 11.91 | Si |

## Verifica a taglio nel piano secondo D.M. 17-01-18 (N.T.C.) §7.8.2.2.2 con rottura per scorrimento in combinazioni sismiche, γM = 2

| Comb. | Quota | N | V par | M | σ0 | σN | l' | fvd | Vt scorr. | Vt fess.diag. | Vt,lim | c.s. | Verifica |
|---|---|---|---|---|---|---|---|---|---|---|---|---|---|
| SLV 4 | 896 | -15413 | 7778 | 757405 | | 3.26 | 168.88 | 1.49 | 7023 | | | 0.9 | No, Vu<V |
| SLV 4 | 1146 | -7603 | 4261 | -508989 | | 2.35 | 115.45 | 1.3 | 4214 | | | 0.99 | No, Vu<V |
| SLV 11 | 896 | -17153 | -4716 | -520884 | | 2.91 | 210.86 | 1.41 | 8351 | | | 1.77 | Si |
| SLV 11 | 1146 | -15220 | -2753 | 456415 | | 2.58 | 210.86 | 1.35 | 7964 | | | 2.89 | Si |
| SLV 13 | 896 | -17617 | -8838 | -895388 | | 3.84 | 163.82 | 1.6 | 7346 | | | 0.83 | No, Vu<V |
| SLV 13 | 1146 | -18367 | -4642 | 784218 | | 3.49 | 188.2 | 1.53 | 8065 | | | 1.74 | Si |
| SLV 3 | 896 | -15413 | 7778 | 757405 | | 3.26 | 168.88 | 1.49 | 7023 | | | 0.9 | No, Vu<V |
| SLV 3 | 1146 | -7603 | 4261 | -508989 | | 2.35 | 115.45 | 1.3 | 4214 | | | 0.99 | No, Vu<V |
| SLV 1 | 896 | -15244 | 8711 | 869684 | | 3.75 | 145.14 | 1.58 | 6435 | | | 0.74 | No, Vu<V |
| SLV 1 | 1146 | -7261 | 4936 | -577697 | | 3.34 | 77.61 | 1.5 | 3263 | | | 0.66 | No, Vu<V |
| SLV 12 | 896 | -17153 | -4716 | -520884 | | 2.91 | 210.86 | 1.41 | 8351 | | | 1.77 | Si |
| SLV 12 | 1146 | -15220 | -2753 | 456415 | | 2.58 | 210.86 | 1.35 | 7964 | | | 2.89 | Si |
| SLV 14 | 896 | -17617 | -8838 | -895388 | | 3.84 | 163.82 | 1.6 | 7346 | | | 0.83 | No, Vu<V |
| SLV 14 | 1146 | -18367 | -4642 | 784218 | | 3.49 | 188.2 | 1.53 | 8065 | | | 1.74 | Si |
| SLV 16 | 896 | -17786 | -9770 | -1007667 | | 4.34 | 146.33 | 1.63 | 6658 | | | 0.68 | No, Vu<V |
| SLV 16 | 1146 | -18708 | -5317 | 852926 | | 3.72 | 179.52 | 1.58 | 7930 | | | 1.49 | Si |
| SLV 2 | 896 | -15244 | 8711 | 869684 | | 3.75 | 145.14 | 1.58 | 6435 | | | 0.74 | No, Vu<V |
| SLV 2 | 1146 | -7261 | 4936 | -577697 | | 3.34 | 77.61 | 1.5 | 3263 | | | 0.66 | No, Vu<V |
| SLV 15 | 896 | -17786 | -9770 | -1007667 | | 4.34 | 146.33 | 1.63 | 6658 | | | 0.68 | No, Vu<V |
| SLV 15 | 1146 | -18708 | -5317 | 852926 | | 3.72 | 179.52 | 1.58 | 7930 | | | 1.49 | Si |

## Verifica a pressoflessione fuori piano D.M. 17-01-18 (N.T.C.)

quota 1072 Wa 0.05 denominatore 8 γM = 2

| Comb. | fd | Sa | σ0 | N | M | Mc | Coeff.s. | Verifica |
|---|---|---|---|---|---|---|---|---|
| SLV 2 | 14 | 0.46 | 2.25 | -13295 | 26519 | 151829 | 5.73 | Si |
| SLV 1 | 14 | 0.46 | 2.25 | -13295 | 26519 | 151829 | 5.73 | Si |
| SLV 3 | 14 | 0.46 | 2.27 | -13395 | 26519 | 152714 | 5.76 | Si |
| SLV 4 | 14 | 0.46 | 2.27 | -13395 | 26519 | 152714 | 5.76 | Si |
| SLV 5 | 14 | 0.46 | 2.39 | -14106 | 26519 | 158868 | 5.99 | Si |
| SLV 6 | 14 | 0.46 | 2.39 | -14106 | 26519 | 158868 | 5.99 | Si |
| SLV 7 | 14 | 0.46 | 2.45 | -14440 | 26519 | 161696 | 6.1 | Si |
| SLV 8 | 14 | 0.46 | 2.45 | -14440 | 26519 | 161696 | 6.1 | Si |
| SLV 10 | 14 | 0.46 | 2.52 | -14901 | 26519 | 165524 | 6.24 | Si |
| SLV 9 | 14 | 0.46 | 2.52 | -14901 | 26519 | 165524 | 6.24 | Si |

## Verifica dei meccanismi locali di collasso con analisi cinematica lineare

forza di aggancio al piano = 0 quota mezzeria = 1072 Wa = 0.05 Ta = 0.0739

| Comb. | N top | N base | V orto | α0 | M* | e* | a0* | aLim | Verifica |
|---|---|---|---|---|---|---|---|---|---|
| SLV 8 | -9293 | -16441 | -535 | 0 | 12.42 | 0.935 | 0 | 1733.979 | No |

| Comb. | N top | N base | V orto | α0 | M* | e* | a0* | aLim | Verifica |
|---|---|---|---|---|---|---|---|---|---|
| SLV 7 | -9293 | -16441 | -535 | 0 | 12.42 | 0.935 | 0 | 1733.979 | No |
| SLV 6 | -9560 | -15877 | 521 | 0.001 | 12.69 | 0.936 | 1.061 | 1733.979 | No |
| SLV 5 | -9560 | -15877 | 521 | 0.001 | 12.69 | 0.936 | 1.061 | 1733.979 | No |
| SLV 9 | -12496 | -16589 | 538 | 0.008 | 15.665 | 0.946 | 11.547 | 1733.979 | No |
| SLV 10 | -12496 | -16589 | 538 | 0.008 | 15.665 | 0.946 | 11.547 | 1733.979 | No |
| SLV 12 | -12229 | -17153 | -518 | 0.008 | 15.394 | 0.946 | 12.746 | 1733.979 | No |
| SLV 11 | -12229 | -17153 | -518 | 0.008 | 15.394 | 0.946 | 12.746 | 1733.979 | No |
| SLV 3 | -5961 | -15413 | -185 | 0.026 | 9.066 | 0.917 | 40.762 | 956.161 | No |
| SLV 4 | -5961 | -15413 | -185 | 0.026 | 9.066 | 0.917 | 40.762 | 956.161 | No |

### Tabella dei coefficienti di sicurezza minimi

| Stato limite | Coeff.s. | Comb. | Verifica |
|---|---|---|---|
| PF_SLU | 5.499 | SLU 82 | Si |
| V_SLU | 5.958 | SLU 61 | Si |
| PF_SLV | 1.192 | SLV 1 | Si |
| V_SLV | 0.661 | SLV 1 | No |
| PFFP_SLV | 5.725 | SLV 1 | Si |
| R_SLV | 0 | SLV 7 | No |

## Maschio 160

Verifiche condotte secondo D.M. 17-01-18 (N.T.C.)

### Dati geometrici

| X ini. | Y ini. | X fin. | Y fin. | Quota i. | Quota.s | l | Sp. | h netta | h ini. | h fin. | a | a.s.,sx | a.s.,dx |
|---|---|---|---|---|---|---|---|---|---|---|---|---|---|
| -496.8 | 104.6 | -647.8 | 104.6 | L5 | L6 | 151 | 28 | 352 | 352 | 352 | | | |

### Caratteristiche del materiale

(Circolare 7 21-01-19 C8.5.I) Muratura in mattoni pieni e malta di calce LC2_Corti

| fb | fk | fvk0 | fmedio | τ0 | fv0 | μ | ϕ | fv,lim | E | G | FC |
|---|---|---|---|---|---|---|---|---|---|---|---|
| 60 | | | 34.5 | 0.9 | 2 | 0.58 | 0.77 | 3.25 | 32000 | 12800 | 1.2 |

### Verifica a pressoflessione nel piano secondo D.M. 17-01-18 NTC §7.8.2.2.1 in combinazioni non sismiche, γM = 3

| Comb. | Quota | N | M | σ0 | Mu | c.s. | Verifica |
|---|---|---|---|---|---|---|---|
| SLU 77 | 896 | -16658 | -85221 | 3.94 | 649372 | 7.62 | Si |
| SLU 77 | 1106 | -16130 | 136986 | 3.82 | 647462 | 4.726 | Si |
| SLU 83 | 896 | -16099 | -85959 | 3.81 | 647311 | 7.53 | Si |
| SLU 83 | 1106 | -15900 | 129962 | 3.76 | 646242 | 4.973 | Si |
| SLU 80 | 896 | -16411 | -80218 | 3.88 | 648631 | 8.086 | Si |
| SLU 80 | 1106 | -15923 | 133786 | 3.77 | 646375 | 4.831 | Si |
| SLU 79 | 896 | -16236 | -81612 | 3.84 | 647943 | 7.939 | Si |
| SLU 79 | 1106 | -15646 | 133543 | 3.7 | 644633 | 4.827 | Si |
| SLU 36 | 896 | -14266 | -75621 | 3.37 | 630934 | 8.343 | Si |
| SLU 36 | 1106 | -14261 | 124065 | 3.37 | 630870 | 5.085 | Si |
| SLU 37 | 896 | -13670 | -73407 | 3.23 | 622433 | 8.479 | Si |
| SLU 37 | 1106 | -13500 | 120378 | 3.19 | 619728 | 5.148 | Si |
| SLU 84 | 896 | -16274 | -84565 | 3.85 | 648103 | 7.664 | Si |
| SLU 84 | 1106 | -16176 | 130205 | 3.83 | 647677 | 4.974 | Si |
| SLU 74 | 896 | -16084 | -82203 | 3.8 | 647233 | 7.874 | Si |
| SLU 74 | 1106 | -15665 | 125265 | 3.71 | 644764 | 5.147 | Si |
| SLU 35 | 896 | -14091 | -77015 | 3.33 | 628603 | 8.162 | Si |
| SLU 35 | 1106 | -13984 | 123822 | 3.31 | 627112 | 5.065 | Si |
| SLU 78 | 896 | -16832 | -83827 | 3.98 | 649736 | 7.751 | Si |
| SLU 78 | 1106 | -16407 | 137230 | 3.88 | 648616 | 4.727 | Si |

### Verifica a pressoflessione nel piano secondo D.M. 17-01-18 NTC §7.8.2.2.1 in combinazioni sismiche, γM = 2

| Comb. | Quota | N | M | σ0 | Mu | c.s. | Verifica |
|---|---|---|---|---|---|---|---|
| SLV 13 | 896 | -10813 | -711123 | 2.56 | 645523 | 0.908 | No, M>Mu |
| SLV 13 | 1106 | -10592 | 703108 | 2.51 | 635752 | 0.904 | No, M>Mu |
| SLV 1 | 896 | -10618 | 678429 | 2.51 | 636904 | 0.939 | No, M>Mu |
| SLV 1 | 1106 | -9397 | -613086 | 2.22 | 580410 | 0.947 | No, M>Mu |
| SLV 3 | 896 | -10808 | 616155 | 2.56 | 645292 | 1.047 | Si |
| SLV 3 | 1106 | -9658 | -559080 | 2.28 | 592876 | 1.06 | Si |
| SLD 16 | 896 | -10888 | -357230 | 2.58 | 648775 | 1.816 | Si |
| SLD 16 | 1106 | -10432 | 364382 | 2.47 | 628585 | 1.725 | Si |
| SLV 4 | 896 | -10808 | 616155 | 2.56 | 645292 | 1.047 | Si |
| SLV 4 | 1106 | -9658 | -559080 | 2.28 | 592876 | 1.06 | Si |
| SLV 2 | 896 | -10618 | 678429 | 2.51 | 636904 | 0.939 | No, M>Mu |
| SLV 2 | 1106 | -9397 | -613086 | 2.22 | 580410 | 0.947 | No, M>Mu |
| SLV 16 | 896 | -11003 | -773397 | 2.6 | 653803 | 0.845 | No, M>Mu |
| SLV 16 | 1106 | -10854 | 757114 | 2.57 | 647304 | 0.855 | No, M>Mu |
| SLV 14 | 896 | -10813 | -711123 | 2.56 | 645523 | 0.908 | No, M>Mu |
| SLV 14 | 1106 | -10592 | 703108 | 2.51 | 635752 | 0.904 | No, M>Mu |
| SLV 15 | 896 | -11003 | -773397 | 2.6 | 653803 | 0.845 | No, M>Mu |
| SLV 15 | 1106 | -10854 | 757114 | 2.57 | 647304 | 0.855 | No, M>Mu |
| SLD 15 | 896 | -10888 | -357230 | 2.58 | 648775 | 1.816 | Si |
| SLD 15 | 1106 | -10432 | 364382 | 2.47 | 628585 | 1.725 | Si |

### Verifica a taglio nel piano secondo D.M. 17-01-18 (N.T.C.) §7.8.2.2.2 con rottura per scorrimento in combinazioni non sismiche, γM = 3

| Comb. | Quota | N | V par | M | σ0 | σN | l' | fvd | Vt scorr. | Vt fess.diag. | Vt,lim | c.s. | Verifica |
|---|---|---|---|---|---|---|---|---|---|---|---|---|---|
| SLU 37 | 896 | -13670 | -1205 | -73407 | | 3.23 | 151 | 0.99 | 4172 | | | 3.46 | Si |
| SLU 37 | 1106 | -13500 | -1205 | 120378 | | 3.19 | 151 | 0.98 | 4149 | | | 3.44 | Si |
| SLU 77 | 896 | -16658 | -1350 | -85221 | | 3.94 | 151 | 1.08 | 4570 | | | 3.39 | Si |
| SLU 77 | 1106 | -16130 | -1350 | 136986 | | 3.82 | 151 | 1.06 | 4500 | | | 3.33 | Si |

| Comb. | Quota | N | V par | M | σ0 | σN | l' | fvd | Vt scorr. | Vt fess.diag. | Vt,lim | c.s. | Verifica |
|---|---|---|---|---|---|---|---|---|---|---|---|---|---|
| SLU 56 | 896 | -15282 | -1175 | -74566 | | 3.61 | 151 | 1.04 | 4387 | | | 3.73 | Si |
| SLU 56 | 1106 | -14385 | -1175 | 121093 | | 3.4 | 151 | 1.01 | 4267 | | | 3.63 | Si |
| SLU 83 | 896 | -16099 | -1275 | -85959 | | 3.81 | 151 | 1.06 | 4495 | | | 3.52 | Si |
| SLU 83 | 1106 | -15900 | -1276 | 129962 | | 3.76 | 151 | 1.06 | 4469 | | | 3.5 | Si |
| SLU 80 | 896 | -16411 | -1258 | -80218 | | 3.88 | 151 | 1.07 | 4537 | | | 3.61 | Si |
| SLU 80 | 1106 | -15923 | -1255 | 133786 | | 3.77 | 151 | 1.06 | 4472 | | | 3.56 | Si |
| SLU 78 | 896 | -16832 | -1294 | -83827 | | 3.98 | 151 | 1.08 | 4580 | | | 3.54 | Si |
| SLU 78 | 1106 | -16407 | -1290 | 137230 | | 3.88 | 151 | 1.07 | 4536 | | | 3.52 | Si |
| SLU 79 | 896 | -16236 | -1314 | -81612 | | 3.84 | 151 | 1.07 | 4514 | | | 3.44 | Si |
| SLU 79 | 1106 | -15646 | -1314 | 133543 | | 3.7 | 151 | 1.05 | 4435 | | | 3.38 | Si |
| SLU 35 | 896 | -14091 | -1241 | -77015 | | 3.33 | 151 | 1 | 4228 | | | 3.41 | Si |
| SLU 35 | 1106 | -13984 | -1241 | 123822 | | 3.31 | 151 | 1 | 4213 | | | 3.4 | Si |
| SLU 41 | 896 | -13533 | -1167 | -77754 | | 3.2 | 151 | 0.98 | 4153 | | | 3.56 | Si |
| SLU 41 | 1106 | -13754 | -1167 | 116797 | | 3.25 | 151 | 0.99 | 4183 | | | 3.59 | Si |
| SLU 36 | 896 | -14266 | -1185 | -75621 | | 3.37 | 151 | 1.01 | 4251 | | | 3.59 | Si |
| SLU 36 | 1106 | -14261 | -1182 | 124065 | | 3.37 | 151 | 1.01 | 4250 | | | 3.6 | Si |

### Verifica a taglio nel piano secondo D.M. 17-01-18 (N.T.C.) §7.8.2.2.2 con rottura per scorrimento in combinazioni sismiche, γM = 2

| Comb. | Quota | N | V par | M | σ0 | σN | l' | fvd | Vt scorr. | Vt fess.diag. | Vt,lim | c.s. | Verifica |
|---|---|---|---|---|---|---|---|---|---|---|---|---|---|
| SLV 2 | 896 | -10618 | 8313 | 678429 | | 10.89 | 34.82 | 1.63 | 1584 | | | 0.19 | No, Vu<V |
| SLV 2 | 1106 | -9397 | 7702 | -613086 | | 10.91 | 30.77 | 1.63 | 1400 | | | 0.18 | No, Vu<V |
| SLV 11 | 896 | -11156 | -5386 | -359708 | | 3.07 | 129.77 | 1.45 | 5259 | | | 0.98 | No, Vu<V |
| SLV 11 | 1106 | -10741 | -5384 | 359453 | | 3.04 | 126.1 | 1.44 | 5090 | | | 0.95 | No, Vu<V |
| SLV 4 | 896 | -10808 | 6983 | 616155 | | 6.96 | 55.47 | 1.63 | 2524 | | | 0.36 | No, Vu<V |
| SLV 4 | 1106 | -9658 | 6252 | -559080 | | 6.53 | 52.84 | 1.63 | 2404 | | | 0.38 | No, Vu<V |
| SLV 12 | 896 | -11156 | -5386 | -359708 | | 3.07 | 129.77 | 1.45 | 5259 | | | 0.98 | No, Vu<V |
| SLV 12 | 1106 | -10741 | -5384 | 359453 | | 3.04 | 126.1 | 1.44 | 5090 | | | 0.95 | No, Vu<V |
| SLV 16 | 896 | -11003 | -9658 | -773397 | | 25.13 | 15.63 | 1.63 | 711 | | | 0.07 | No, Vu<V |
| SLV 16 | 1106 | -10854 | -9047 | 757114 | | 22.49 | 17.24 | 1.63 | 784 | | | 0.09 | No, Vu<V |
| SLV 14 | 896 | -10813 | -8328 | -711123 | | 13.22 | 29.21 | 1.63 | 1329 | | | 0.16 | No, Vu<V |
| SLV 14 | 1106 | -10592 | -7597 | 703108 | | 13.82 | 27.36 | 1.63 | 1245 | | | 0.16 | No, Vu<V |
| SLV 3 | 896 | -10808 | 6983 | 616155 | | 6.96 | 55.47 | 1.63 | 2524 | | | 0.36 | No, Vu<V |
| SLV 3 | 1106 | -9658 | 6252 | -559080 | | 6.53 | 52.84 | 1.63 | 2404 | | | 0.38 | No, Vu<V |
| SLV 1 | 896 | -10618 | 8313 | 678429 | | 10.89 | 34.82 | 1.63 | 1584 | | | 0.19 | No, Vu<V |
| SLV 1 | 1106 | -9397 | 7702 | -613086 | | 10.91 | 30.77 | 1.63 | 1400 | | | 0.18 | No, Vu<V |
| SLV 15 | 896 | -11003 | -9658 | -773397 | | 25.13 | 15.63 | 1.63 | 711 | | | 0.07 | No, Vu<V |
| SLV 15 | 1106 | -10854 | -9047 | 757114 | | 22.49 | 17.24 | 1.63 | 784 | | | 0.09 | No, Vu<V |
| SLV 13 | 896 | -10813 | -8328 | -711123 | | 13.22 | 29.21 | 1.63 | 1329 | | | 0.16 | No, Vu<V |
| SLV 13 | 1106 | -10592 | -7597 | 703108 | | 13.82 | 27.36 | 1.63 | 1245 | | | 0.16 | No, Vu<V |

### Verifica a pressoflessione fuori piano D.M. 17-01-18 (N.T.C.)

quota 1072 Wa 0.05 denominatore 8 γM = 2

| Comb. | fd | Sa | σ0 | N | M | Mc | Coeff.s. | Verifica |
|---|---|---|---|---|---|---|---|---|
| SLV 1 | 14 | 0.46 | 2.27 | -9617 | 18990 | 109575 | 5.77 | Si |
| SLV 2 | 14 | 0.46 | 2.27 | -9617 | 18990 | 109575 | 5.77 | Si |
| SLV 6 | 14 | 0.46 | 2.31 | -9766 | 18990 | 110878 | 5.84 | Si |
| SLV 5 | 14 | 0.46 | 2.31 | -9766 | 18990 | 110878 | 5.84 | Si |
| SLV 3 | 14 | 0.46 | 2.34 | -9877 | 18990 | 111838 | 5.89 | Si |
| SLV 4 | 14 | 0.46 | 2.34 | -9877 | 18990 | 111838 | 5.89 | Si |
| SLV 10 | 14 | 0.46 | 2.4 | -10153 | 18990 | 114209 | 6.01 | Si |
| SLV 9 | 14 | 0.46 | 2.4 | -10153 | 18990 | 114209 | 6.01 | Si |
| SLV 7 | 14 | 0.46 | 2.51 | -10631 | 18990 | 118208 | 6.22 | Si |
| SLV 8 | 14 | 0.46 | 2.51 | -10631 | 18990 | 118208 | 6.22 | Si |

### Verifica dei meccanismi locali di collasso con analisi cinematica lineare

forza di aggancio al piano = 0 quota mezzeria = 1072 Wa = 0.05 Ta = 0.0739

| Comb. | N top | N base | V orto | α0 | M* | e* | a0* | aLim | Verifica |
|---|---|---|---|---|---|---|---|---|---|
| SLV 6 | -6876 | -10465 | 235 | 0.018 | 9.117 | 0.936 | 27.495 | 1733.979 | No |
| SLV 5 | -6876 | -10465 | 235 | 0.018 | 9.117 | 0.936 | 27.495 | 1733.979 | No |
| SLV 10 | -7198 | -10524 | 234 | 0.019 | 9.444 | 0.938 | 28.771 | 1733.979 | No |
| SLV 9 | -7198 | -10524 | 234 | 0.019 | 9.444 | 0.938 | 28.771 | 1733.979 | No |
| SLV 7 | -7534 | -11098 | -234 | 0.019 | 9.784 | 0.94 | 29.955 | 1733.979 | No |
| SLV 8 | -7534 | -11098 | -234 | 0.019 | 9.784 | 0.94 | 29.955 | 1733.979 | No |
| SLV 12 | -7857 | -11156 | -235 | 0.02 | 10.111 | 0.941 | 30.97 | 1733.979 | No |
| SLV 11 | -7857 | -11156 | -235 | 0.02 | 10.111 | 0.941 | 30.97 | 1733.979 | No |
| SLV 2 | -6730 | -10618 | 71 | 0.038 | 8.97 | 0.935 | 58.453 | 956.161 | No |
| SLV 1 | -6730 | -10618 | 71 | 0.038 | 8.97 | 0.935 | 58.453 | 956.161 | No |

### Tabella dei coefficienti di sicurezza minimi

| Stato limite | Coeff.s. | Comb. | Verifica |
|---|---|---|---|
| PF_SLU | 4.726 | SLU 77 | Si |
| V_SLU | 3.334 | SLU 77 | Si |
| PF_SLV | 0.845 | SLV 15 | No |
| V_SLV | 0.074 | SLV 15 | No |
| PFFP_SLV | 5.77 | SLV 1 | Si |
| R_SLV | 0.016 | SLV 5 | No |

## Maschio 161

Verifiche condotte secondo D.M. 17-01-18 (N.T.C.)

### Dati geometrici

| X ini. | Y ini. | X fin. | Y fin. | Quota i. | Quota.s | l | Sp. | h netta | h ini. | h fin. | a | a.s.,sx | a.s.,dx |
|---|---|---|---|---|---|---|---|---|---|---|---|---|---|
| -12.3 | 104.6 | -416.8 | 104.6 | L5 | L6 | 404.5 | 28 | 352 | 352 | 352 | | | |

## Caratteristiche del materiale

(Circolare 7 21-01-19 C8.5.I) Muratura in mattoni pieni e malta di calce LC2_Corti

| fb | fk | fvk0 | fmedio | τ0 | fv0 | μ | ϕ | fv,lim | E | G | FC |
|---|---|---|---|---|---|---|---|---|---|---|---|
| 60 | | | 34.5 | 0.9 | 2 | 0.58 | 0.77 | 3.25 | 32000 | 12800 | 1.2 |

## Verifica a pressoflessione nel piano secondo D.M. 17-01-18 NTC §7.8.2.2.1 in combinazioni non sismiche, γM = 3

| Comb. | Quota | N | M | σ0 | Mu | c.s. | Verifica |
|---|---|---|---|---|---|---|---|
| SLU 77 | 896 | -32191 | 322192 | 2.84 | 4238954 | 13.157 | Si |
| SLU 77 | 1106 | -28914 | 800501 | 2.55 | 4015122 | 5.016 | Si |
| SLU 74 | 896 | -31565 | 317639 | 2.79 | 4199826 | 13.222 | Si |
| SLU 74 | 1106 | -28281 | 760126 | 2.5 | 3966509 | 5.218 | Si |
| SLU 36 | 896 | -27031 | 285509 | 2.39 | 3865266 | 13.538 | Si |
| SLU 36 | 1106 | -24965 | 716481 | 2.2 | 3682905 | 5.14 | Si |
| SLU 78 | 896 | -32478 | 330141 | 2.87 | 4256312 | 12.892 | Si |
| SLU 78 | 1106 | -29089 | 792775 | 2.57 | 4028296 | 5.081 | Si |
| SLU 80 | 896 | -31663 | 311906 | 2.8 | 4206067 | 13.485 | Si |
| SLU 80 | 1106 | -28163 | 754810 | 2.49 | 3957247 | 5.243 | Si |
| SLU 79 | 896 | -31376 | 303957 | 2.77 | 4187682 | 13.777 | Si |
| SLU 79 | 1106 | -27988 | 762536 | 2.47 | 3943361 | 5.171 | Si |
| SLU 35 | 896 | -26744 | 277560 | 2.36 | 3841054 | 13.839 | Si |
| SLU 35 | 1106 | -24790 | 724207 | 2.19 | 3666559 | 5.063 | Si |
| SLU 37 | 896 | -25929 | 259325 | 2.29 | 3770317 | 14.539 | Si |
| SLU 37 | 1106 | -23864 | 686242 | 2.11 | 3578059 | 5.214 | Si |
| SLU 41 | 896 | -26019 | 267933 | 2.3 | 3778284 | 14.102 | Si |
| SLU 41 | 1106 | -24355 | 693516 | 2.15 | 3625467 | 5.228 | Si |
| SLU 83 | 896 | -31466 | 312565 | 2.78 | 4193497 | 13.416 | Si |
| SLU 83 | 1106 | -28479 | 769810 | 2.51 | 3981891 | 5.173 | Si |

## Verifica a pressoflessione nel piano secondo D.M. 17-01-18 NTC §7.8.2.2.1 in combinazioni sismiche, γM = 2

| Comb. | Quota | N | M | σ0 | Mu | c.s. | Verifica |
|---|---|---|---|---|---|---|---|
| SLV 14 | 896 | -25817 | -788550 | 2.28 | 4247390 | 5.386 | Si |
| SLV 14 | 1106 | -26699 | 1569674 | 2.36 | 4358094 | 2.776 | Si |
| SLV 15 | 896 | -26237 | -801592 | 2.32 | 4300380 | 5.365 | Si |
| SLV 15 | 1106 | -27468 | 1672906 | 2.43 | 4452705 | 2.662 | Si |
| SLV 4 | 896 | -17916 | 1197958 | 1.58 | 3154363 | 2.633 | Si |
| SLV 4 | 1106 | -10600 | -677520 | 0.94 | 1979662 | 2.922 | Si |
| SLV 2 | 896 | -17496 | 1211000 | 1.54 | 3091159 | 2.553 | Si |
| SLV 2 | 1106 | -9831 | -780752 | 0.87 | 1847155 | 2.366 | Si |
| SLV 13 | 896 | -25817 | -788550 | 2.28 | 4247390 | 5.386 | Si |
| SLV 13 | 1106 | -26699 | 1569674 | 2.36 | 4358094 | 2.776 | Si |
| SLV 16 | 896 | -26237 | -801592 | 2.32 | 4300380 | 5.365 | Si |
| SLV 16 | 1106 | -27468 | 1672906 | 2.43 | 4452705 | 2.662 | Si |
| SLV 11 | 896 | -23814 | -116965 | 2.1 | 3987635 | 34.092 | Si |
| SLV 11 | 1106 | -22461 | 970695 | 1.98 | 3805407 | 3.92 | Si |
| SLV 1 | 896 | -17496 | 1211000 | 1.54 | 3091159 | 2.553 | Si |
| SLV 1 | 1106 | -9831 | -780752 | 0.87 | 1847155 | 2.366 | Si |
| SLV 3 | 896 | -17916 | 1197958 | 1.58 | 3154363 | 2.633 | Si |
| SLV 3 | 1106 | -10600 | -677520 | 0.94 | 1979662 | 2.922 | Si |
| SLV 12 | 896 | -23814 | -116965 | 2.1 | 3987635 | 34.092 | Si |
| SLV 12 | 1106 | -22461 | 970695 | 1.98 | 3805407 | 3.92 | Si |

## Verifica a taglio nel piano secondo D.M. 17-01-18 (N.T.C.) §7.8.2.2.2 con rottura per scorrimento in combinazioni non sismiche, γM = 3

| Comb. | Quota | N | V par | M | σ0 | σN | l' | fvd | Vt scorr. | Vt fess.diag. | Vt,lim | c.s. | Verifica |
|---|---|---|---|---|---|---|---|---|---|---|---|---|---|
| SLU 35 | 896 | -26744 | -4621 | 277560 | | 2.36 | 404.5 | 0.87 | 9858 | | | 2.13 | Si |
| SLU 35 | 1106 | -24790 | -4632 | 724207 | | 2.19 | 404.5 | 0.85 | 9598 | | | 2.07 | Si |
| SLU 81 | 896 | -30840 | -4744 | 308012 | | 2.72 | 404.5 | 0.92 | 10404 | | | 2.19 | Si |
| SLU 81 | 1106 | -27846 | -4749 | 729435 | | 2.46 | 404.5 | 0.88 | 10005 | | | 2.11 | Si |
| SLU 84 | 896 | -31753 | -4719 | 320515 | | 2.8 | 404.5 | 0.93 | 10526 | | | 2.23 | Si |
| SLU 84 | 1106 | -28654 | -4763 | 762085 | | 2.53 | 404.5 | 0.89 | 10113 | | | 2.12 | Si |
| SLU 32 | 896 | -26118 | -4446 | 273007 | | 2.31 | 404.5 | 0.86 | 9775 | | | 2.2 | Si |
| SLU 32 | 1106 | -24157 | -4454 | 683832 | | 2.13 | 404.5 | 0.84 | 9513 | | | 2.14 | Si |
| SLU 77 | 896 | -32191 | -4738 | 322192 | | 2.84 | 404.5 | 0.93 | 10584 | | | 2.23 | Si |
| SLU 77 | 1106 | -28914 | -4750 | 800501 | | 2.55 | 404.5 | 0.9 | 10147 | | | 2.14 | Si |
| SLU 39 | 896 | -25393 | -4626 | 263380 | | 2.24 | 404.5 | 0.85 | 9678 | | | 2.09 | Si |
| SLU 39 | 1106 | -23723 | -4631 | 653141 | | 2.09 | 404.5 | 0.83 | 9455 | | | 2.04 | Si |
| SLU 41 | 896 | -26019 | -4801 | 267933 | | 2.3 | 404.5 | 0.86 | 9761 | | | 2.03 | Si |
| SLU 41 | 1106 | -24355 | -4810 | 693516 | | 2.15 | 404.5 | 0.84 | 9540 | | | 1.98 | Si |
| SLU 83 | 896 | -31466 | -4919 | 312565 | | 2.78 | 404.5 | 0.93 | 10488 | | | 2.13 | Si |
| SLU 83 | 1106 | -28479 | -4928 | 769810 | | 2.51 | 404.5 | 0.89 | 10089 | | | 2.05 | Si |
| SLU 42 | 896 | -26306 | -4601 | 275882 | | 2.32 | 404.5 | 0.87 | 9800 | | | 2.13 | Si |
| SLU 42 | 1106 | -24530 | -4645 | 685791 | | 2.17 | 404.5 | 0.84 | 9563 | | | 2.06 | Si |
| SLU 40 | 896 | -25680 | -4426 | 271329 | | 2.27 | 404.5 | 0.86 | 9716 | | | 2.2 | Si |
| SLU 40 | 1106 | -23898 | -4467 | 645416 | | 2.11 | 404.5 | 0.84 | 9479 | | | 2.12 | Si |

## Verifica a taglio nel piano secondo D.M. 17-01-18 (N.T.C.) §7.8.2.2.2 con rottura per scorrimento in combinazioni sismiche, γM = 2

| Comb. | Quota | N | V par | M | σ0 | σN | l' | fvd | Vt scorr. | Vt fess.diag. | Vt,lim | c.s. | Verifica |
|---|---|---|---|---|---|---|---|---|---|---|---|---|---|
| SLV 14 | 896 | -25817 | -17532 | -788550 | | 2.28 | 404.5 | 1.29 | 14602 | | | 0.83 | No, Vu<V |
| SLV 14 | 1106 | -26699 | -15659 | 1569674 | | 2.36 | 404.5 | 1.3 | 14778 | | | 0.94 | No, Vu<V |
| SLV 2 | 896 | -17496 | 13663 | 1211000 | | 1.57 | 399.1 | 1.15 | 12811 | | | 0.94 | No, Vu<V |
| SLV 2 | 1106 | -9831 | 11886 | -780752 | | 0.95 | 368.51 | 1.02 | 10565 | | | 0.89 | No, Vu<V |
| SLV 15 | 896 | -26237 | -18363 | -801592 | | 2.32 | 404.5 | 1.3 | 14686 | | | 0.8 | No, Vu<V |
| SLV 15 | 1106 | -27468 | -16593 | 1672906 | | 2.43 | 404.5 | 1.32 | 14932 | | | 0.9 | No, Vu<V |
| SLV 3 | 896 | -17916 | 12832 | 1197958 | | 1.58 | 404.5 | 1.15 | 13021 | | | 1.01 | Si |
| SLV 3 | 1106 | -10600 | 10952 | -677520 | | 0.94 | 404.5 | 1.02 | 11558 | | | 1.06 | Si |
| SLV 4 | 896 | -17916 | 12832 | 1197958 | | 1.58 | 404.5 | 1.15 | 13021 | | | 1.01 | Si |
| SLV 4 | 1106 | -10600 | 10952 | -677520 | | 0.94 | 404.5 | 1.02 | 11558 | | | 1.06 | Si |
| SLD 15 | 896 | -23726 | -9182 | -226135 | | 2.09 | 404.5 | 1.25 | 14183 | | | 1.54 | Si |

| Comb. | Quota | N | V par | M | σ0 | σN | l' | fvd | Vt scorr. | Vt fess.diag. | Vt,lim | c.s. | Verifica |
|---|---|---|---|---|---|---|---|---|---|---|---|---|---|
| SLD 15 | 1106 | -22407 | -8431 | 968672 | | 1.98 | 404.5 | 1.23 | 13920 | | | 1.65 | Si |
| SLV 1 | 896 | -17496 | 13663 | 1211000 | | 1.57 | 399.1 | 1.15 | 12811 | | | 0.94 | No, Vu<V |
| SLV 1 | 1106 | -9831 | 11886 | -780752 | | 0.95 | 368.51 | 1.02 | 10565 | | | 0.89 | No, Vu<V |
| SLV 13 | 896 | -25817 | -17532 | -788550 | | 2.28 | 404.5 | 1.29 | 14602 | | | 0.83 | No, Vu<V |
| SLV 13 | 1106 | -26699 | -15659 | 1569674 | | 2.36 | 404.5 | 1.3 | 14778 | | | 0.94 | No, Vu<V |
| SLD 16 | 896 | -23726 | -9182 | -226135 | | 2.09 | 404.5 | 1.25 | 14183 | | | 1.54 | Si |
| SLD 16 | 1106 | -22407 | -8431 | 968672 | | 1.98 | 404.5 | 1.23 | 13920 | | | 1.65 | Si |
| SLV 16 | 896 | -26237 | -18363 | -801592 | | 2.32 | 404.5 | 1.3 | 14686 | | | 0.8 | No, Vu<V |
| SLV 16 | 1106 | -27468 | -16593 | 1672906 | | 2.43 | 404.5 | 1.32 | 14932 | | | 0.9 | No, Vu<V |

### Verifica a pressoflessione fuori piano D.M. 17-01-18 (N.T.C.)

quota 1072 Wa 0.05 denominatore 8 γM = 2

| Comb. | fd | Sa | σ0 | N | M | Mc | Coeff.s. | Verifica |
|---|---|---|---|---|---|---|---|---|
| SLV 1 | 14 | 0.46 | 0.93 | -10566 | 50871 | 136630 | 2.69 | Si |
| SLV 2 | 14 | 0.46 | 0.93 | -10566 | 50871 | 136630 | 2.69 | Si |
| SLV 3 | 14 | 0.46 | 1 | -11328 | 50871 | 145608 | 2.86 | Si |
| SLV 4 | 14 | 0.46 | 1 | -11328 | 50871 | 145608 | 2.86 | Si |
| SLV 6 | 14 | 0.46 | 1.37 | -15571 | 50871 | 193469 | 3.8 | Si |
| SLV 5 | 14 | 0.46 | 1.37 | -15571 | 50871 | 193469 | 3.8 | Si |
| SLV 7 | 14 | 0.46 | 1.6 | -18111 | 50871 | 220368 | 4.33 | Si |
| SLV 8 | 14 | 0.46 | 1.6 | -18111 | 50871 | 220368 | 4.33 | Si |
| SLV 9 | 14 | 0.46 | 1.82 | -20623 | 50871 | 245700 | 4.83 | Si |
| SLV 10 | 14 | 0.46 | 1.82 | -20623 | 50871 | 245700 | 4.83 | Si |

### Verifica dei meccanismi locali di collasso con analisi cinematica lineare

forza di aggancio al piano = 0 quota mezzeria = 1072 Wa = 0.05 Ta = 0.0739

| Comb. | N top | N base | V orto | α0 | M* | e* | a0* | aLim | Verifica |
|---|---|---|---|---|---|---|---|---|---|
| SLV 6 | -13019 | -19918 | 542 | 0.016 | 18.979 | 0.922 | 24.827 | 1733.979 | No |
| SLV 5 | -13019 | -19918 | 542 | 0.016 | 18.979 | 0.922 | 24.827 | 1733.979 | No |
| SLV 7 | -14593 | -21318 | -571 | 0.016 | 20.562 | 0.927 | 25.472 | 1733.979 | No |
| SLV 8 | -14593 | -21318 | -571 | 0.016 | 20.562 | 0.927 | 25.472 | 1733.979 | No |
| SLV 10 | -14968 | -22415 | 571 | 0.017 | 20.94 | 0.928 | 26.189 | 1733.979 | No |
| SLV 9 | -14968 | -22415 | 571 | 0.017 | 20.94 | 0.928 | 26.189 | 1733.979 | No |
| SLV 12 | -16542 | -23814 | -542 | 0.02 | 22.528 | 0.932 | 31.123 | 1733.979 | No |
| SLV 11 | -16542 | -23814 | -542 | 0.02 | 22.528 | 0.932 | 31.123 | 1733.979 | No |
| SLV 3 | -11768 | -17916 | -215 | 0.035 | 17.724 | 0.918 | 55.528 | 956.161 | No |
| SLV 4 | -11768 | -17916 | -215 | 0.035 | 17.724 | 0.918 | 55.528 | 956.161 | No |

### Tabella dei coefficienti di sicurezza minimi

| Stato limite | Coeff.s. | Comb. | Verifica |
|---|---|---|---|
| PF_SLU | 5.016 | SLU 77 | Si |
| V_SLU | 1.983 | SLU 41 | Si |
| PF_SLV | 2.366 | SLV 1 | Si |
| V_SLV | 0.8 | SLV 15 | No |
| PFFP_SLV | 2.686 | SLV 1 | Si |
| R_SLV | 0.014 | SLV 5 | No |

## Maschio 162

Verifiche condotte secondo D.M. 17-01-18 (N.T.C.)

### Dati geometrici

| X ini. | Y ini. | X fin. | Y fin. | Quota i. | Quota.s | l | Sp. | h netta | h ini. | h fin. | a | a.s.,sx | a.s.,dx |
|---|---|---|---|---|---|---|---|---|---|---|---|---|---|
| -1100.3 | -350.9 | -1100.3 | -331.4 | L5 | L6 | 19.6 | 28 | 352 | 352 | 352 | | | |

### Caratteristiche del materiale

(Circolare 7 21-01-19 C8.5.I) Muratura in mattoni pieni e malta di calce LC2_Corti

| fb | fk | fvk0 | fmedio | τ0 | fv0 | μ | ϕ | fv,lim | E | G | FC |
|---|---|---|---|---|---|---|---|---|---|---|---|
| 60 | | | 34.5 | 0.9 | 2 | 0.58 | 0.77 | 3.25 | 32000 | 12800 | 1.2 |

### Verifica a pressoflessione nel piano secondo D.M. 17-01-18 NTC §7.8.2.2.1 in combinazioni non sismiche, γM = 3

| Comb. | Quota | N | M | σ0 | Mu | c.s. | Verifica |
|---|---|---|---|---|---|---|---|
| SLU 80 | 896 | -1528 | -10928 | 2.79 | 9834 | 0.9 | No, M>Mu |
| SLU 80 | 1248 | -585 | 4348 | 1.07 | 4972 | 1.144 | Si |
| SLU 58 | 896 | -1416 | -10266 | 2.58 | 9461 | 0.922 | No, M>Mu |
| SLU 58 | 1248 | -545 | 4252 | 0.99 | 4683 | 1.101 | Si |
| SLU 71 | 896 | -1332 | -9778 | 2.43 | 9144 | 0.935 | No, M>Mu |
| SLU 71 | 1248 | -616 | 4852 | 1.12 | 5194 | 1.071 | Si |
| SLU 79 | 896 | -1523 | -10991 | 2.78 | 9816 | 0.893 | No, M>Mu |
| SLU 79 | 1248 | -586 | 4400 | 1.07 | 4978 | 1.131 | Si |
| SLU 84 | 896 | -1557 | -10632 | 2.84 | 9920 | 0.933 | No, M>Mu |
| SLU 84 | 1248 | -527 | 3544 | 0.96 | 4549 | 1.284 | Si |
| SLU 83 | 896 | -1551 | -10695 | 2.83 | 9903 | 0.926 | No, M>Mu |
| SLU 83 | 1248 | -528 | 3596 | 0.96 | 4556 | 1.267 | Si |
| SLU 59 | 896 | -1422 | -10202 | 2.6 | 9481 | 0.929 | No, M>Mu |
| SLU 59 | 1248 | -544 | 4200 | 0.99 | 4677 | 1.114 | Si |
| SLU 78 | 896 | -1533 | -10857 | 2.8 | 9848 | 0.907 | No, M>Mu |
| SLU 78 | 1248 | -587 | 4221 | 1.07 | 4991 | 1.182 | Si |
| SLU 77 | 896 | -1527 | -10921 | 2.79 | 9831 | 0.9 | No, M>Mu |
| SLU 77 | 1248 | -588 | 4273 | 1.07 | 4997 | 1.169 | Si |
| SLU 56 | 896 | -1421 | -10195 | 2.59 | 9478 | 0.93 | No, M>Mu |
| SLU 56 | 1248 | -548 | 4125 | 1 | 4702 | 1.14 | Si |

## Verifica a pressoflessione nel piano secondo D.M. 17-01-18 NTC §7.8.2.2.1 in combinazioni sismiche, γM = 2

| Comb. | Quota | N | M | σ0 | Mu | c.s. | Verifica |
|---|---|---|---|---|---|---|---|
| SLV 6 | 896 | -1205 | -19907 | 0 | 0 | 0 | No, e>l/2 |
| SLV 6 | 1248 | -474 | 8830 | 0 | 0 | 0 | No, e>l/2 |
| SLD 1 | 896 | -1074 | -10786 | 0 | 0 | 0 | No, e>l/2 |
| SLD 1 | 1248 | -388 | 3404 | 0.71 | 3572 | 1.049 | Si |
| SLV 1 | 896 | -1211 | -16669 | 0 | 0 | 0 | No, e>l/2 |
| SLV 1 | 1248 | -388 | 4451 | 0 | 0 | 0 | No, e>l/2 |
| SLV 9 | 896 | -1094 | -15833 | 0 | 0 | 0 | No, e>l/2 |
| SLV 9 | 1248 | -491 | 8856 | 0 | 0 | 0 | No, e>l/2 |
| SLV 10 | 896 | -1094 | -15833 | 0 | 0 | 0 | No, e>l/2 |
| SLV 10 | 1248 | -491 | 8856 | 0 | 0 | 0 | No, e>l/2 |
| SLV 7 | 896 | -853 | 2928 | 1.56 | 7286 | 2.489 | Si |
| SLV 7 | 1248 | -285 | -3594 | 0 | 0 | 0 | No, e>l/2 |
| SLV 12 | 896 | -743 | 7002 | 1.36 | 6461 | 0.923 | No, M>Mu |
| SLV 12 | 1248 | -301 | -3567 | 0 | 0 | 0 | No, e>l/2 |
| SLV 11 | 896 | -743 | 7002 | 1.36 | 6461 | 0.923 | No, M>Mu |
| SLV 11 | 1248 | -301 | -3567 | 0 | 0 | 0 | No, e>l/2 |
| SLV 2 | 896 | -1211 | -16669 | 0 | 0 | 0 | No, e>l/2 |
| SLV 2 | 1248 | -388 | 4451 | 0 | 0 | 0 | No, e>l/2 |
| SLV 5 | 896 | -1205 | -19907 | 0 | 0 | 0 | No, e>l/2 |
| SLV 5 | 1248 | -474 | 8830 | 0 | 0 | 0 | No, e>l/2 |

## Verifica a taglio nel piano secondo D.M. 17-01-18 (N.T.C.) §7.8.2.2.2 con rottura per scorrimento in combinazioni non sismiche, γM = 3

| Comb. | Quota | N | V par | M | σ0 | σN | l' | fvd | Vt scorr. | Vt fess.diag. | Vt,lim | c.s. | Verifica |
|---|---|---|---|---|---|---|---|---|---|---|---|---|---|
| SLU 64 | 896 | -1226 | -42 | -8145 | | 4.65 | 9.42 | 1.08 | 286 | | | 6.82 | Si |
| SLU 64 | 1248 | -527 | 89 | 3631 | | 2.17 | 8.67 | 0.84 | 205 | | | 2.3 | Si |
| SLU 67 | 896 | -1289 | -54 | -8827 | | 5.22 | 8.81 | 1.08 | 267 | | | 4.95 | Si |
| SLU 67 | 1248 | -573 | 90 | 4062 | | 2.53 | 8.08 | 0.89 | 202 | | | 2.24 | Si |
| SLU 75 | 896 | -1480 | -65 | -10041 | | 5.87 | 9 | 1.08 | 273 | | | 4.21 | Si |
| SLU 75 | 1248 | -543 | 97 | 3611 | | 2.06 | 9.4 | 0.83 | 219 | | | 2.26 | Si |
| SLU 68 | 896 | -1288 | -53 | -8856 | | 5.27 | 8.73 | 1.08 | 265 | | | 4.98 | Si |
| SLU 68 | 1248 | -570 | 83 | 4155 | | 2.72 | 7.48 | 0.92 | 192 | | | 2.32 | Si |
| SLU 73 | 896 | -1426 | -45 | -9253 | | 5.15 | 9.88 | 1.08 | 300 | | | 6.63 | Si |
| SLU 73 | 1248 | -495 | 100 | 3093 | | 1.67 | 10.61 | 0.78 | 231 | | | 2.31 | Si |
| SLU 76 | 896 | -1479 | -64 | -10069 | | 5.92 | 8.93 | 1.08 | 271 | | | 4.23 | Si |
| SLU 76 | 1248 | -540 | 90 | 3703 | | 2.2 | 8.77 | 0.85 | 208 | | | 2.33 | Si |
| SLU 74 | 896 | -1474 | -69 | -10104 | | 5.99 | 8.79 | 1.08 | 267 | | | 3.85 | Si |
| SLU 74 | 1248 | -544 | 94 | 3663 | | 2.12 | 9.14 | 0.84 | 215 | | | 2.27 | Si |
| SLU 65 | 896 | -1235 | -34 | -8039 | | 4.49 | 9.83 | 1.08 | 298 | | | 8.65 | Si |
| SLU 65 | 1248 | -525 | 93 | 3544 | | 2.06 | 9.11 | 0.83 | 212 | | | 2.27 | Si |
| SLU 66 | 896 | -1284 | -58 | -8891 | | 5.35 | 8.57 | 1.08 | 260 | | | 4.45 | Si |
| SLU 66 | 1248 | -574 | 88 | 4114 | | 2.61 | 7.84 | 0.9 | 199 | | | 2.26 | Si |
| SLU 78 | 896 | -1533 | -84 | -10857 | | 6.75 | 8.11 | 1.08 | 246 | | | 2.94 | Si |
| SLU 78 | 1248 | -587 | 87 | 4221 | | 2.69 | 7.79 | 0.91 | 200 | | | 2.31 | Si |

## Verifica a taglio nel piano secondo D.M. 17-01-18 (N.T.C.) §7.8.2.2.2 con rottura per scorrimento in combinazioni sismiche, γM = 2

| Comb. | Quota | N | V par | M | σ0 | σN | l' | fvd | Vt scorr. | Vt fess.diag. | Vt,lim | c.s. | Verifica |
|---|---|---|---|---|---|---|---|---|---|---|---|---|---|
| SLV 1 | 896 | -1211 | -464 | -16669 | | 0 | 0 | 0.83 | 0 | | | 0 | No, Vu<V |
| SLV 1 | 1248 | -388 | -167 | 4451 | | 0 | 0 | 0.83 | 0 | | | 0 | No, Vu<V |
| SLV 10 | 896 | -1094 | -365 | -15833 | | 0 | 0 | 0.83 | 0 | | | 0 | No, Vu<V |
| SLV 10 | 1248 | -491 | -184 | 8856 | | 0 | 0 | 0.83 | 0 | | | 0 | No, Vu<V |
| SLD 10 | 896 | -1022 | -171 | -10340 | | 0 | 0 | 0.83 | 0 | | | 0 | No, Vu<V |
| SLD 10 | 1248 | -430 | -38 | 5232 | | 0 | 0 | 0.83 | 0 | | | 0 | No, Vu<V |
| SLV 5 | 896 | -1205 | -547 | -19907 | | 0 | 0 | 0.83 | 0 | | | 0 | No, Vu<V |
| SLV 5 | 1248 | -474 | -271 | 8830 | | 0 | 0 | 0.83 | 0 | | | 0 | No, Vu<V |
| SLD 1 | 896 | -1074 | -216 | -10786 | | 0 | 0 | 0.83 | 0 | | | 0 | No, Vu<V |
| SLD 1 | 1248 | -388 | -32 | 3404 | | 4.61 | 3 | 1.63 | 136 | | | 4.33 | Si |
| SLV 2 | 896 | -1211 | -464 | -16669 | | 0 | 0 | 0.83 | 0 | | | 0 | No, Vu<V |
| SLV 2 | 1248 | -388 | -167 | 4451 | | 0 | 0 | 0.83 | 0 | | | 0 | No, Vu<V |
| SLV 8 | 896 | -853 | 299 | 2928 | | 1.6 | 19.06 | 1.15 | 615 | | | 2.06 | Si |
| SLV 8 | 1248 | -285 | 319 | -3594 | | 0 | 0 | 0.83 | 0 | | | 0 | No, Vu<V |
| SLV 6 | 896 | -1205 | -547 | -19907 | | 0 | 0 | 0.83 | 0 | | | 0 | No, Vu<V |
| SLV 6 | 1248 | -474 | -271 | 8830 | | 0 | 0 | 0.83 | 0 | | | 0 | No, Vu<V |
| SLV 7 | 896 | -853 | 299 | 2928 | | 1.6 | 19.06 | 1.15 | 615 | | | 2.06 | Si |
| SLV 7 | 1248 | -285 | 319 | -3594 | | 0 | 0 | 0.83 | 0 | | | 0 | No, Vu<V |
| SLV 9 | 896 | -1094 | -365 | -15833 | | 0 | 0 | 0.83 | 0 | | | 0 | No, Vu<V |
| SLV 9 | 1248 | -491 | -184 | 8856 | | 0 | 0 | 0.83 | 0 | | | 0 | No, Vu<V |

## Verifica a pressoflessione fuori piano D.M. 17-01-18 (N.T.C.)

quota 1072 Wa 0.05 denominatore 8 γM = 2

| Comb. | fd | Sa | σ0 | N | M | Mc | Coeff.s. | Verifica |
|---|---|---|---|---|---|---|---|---|
| SLV 4 | 14 | 0.46 | 0 | 202 | 2461 | 0 | 0 | No, Trazione |
| SLV 2 | 14 | 0.46 | 0 | -29 | 2461 | 0 | 0 | No, e>t/2 |
| SLV 8 | 14 | 0.46 | 0 | 262 | 2461 | 0 | 0 | No, Trazione |
| SLV 11 | 14 | 0.46 | 0 | 84 | 2461 | 0 | 0 | No, Trazione |
| SLV 1 | 14 | 0.46 | 0 | -29 | 2461 | 0 | 0 | No, e>t/2 |
| SLV 12 | 14 | 0.46 | 0 | 84 | 2461 | 0 | 0 | No, Trazione |
| SLV 3 | 14 | 0.46 | 0 | 202 | 2461 | 0 | 0 | No, Trazione |
| SLV 7 | 14 | 0.46 | 0 | 262 | 2461 | 0 | 0 | No, Trazione |
| SLV 15 | 14 | 0.46 | 0.72 | -393 | 2461 | 5176 | 2.1 | Si |
| SLV 16 | 14 | 0.46 | 0.72 | -393 | 2461 | 5176 | 2.1 | Si |

## Verifica dei meccanismi locali di collasso con analisi cinematica lineare

forza di aggancio al piano = 0 quota mezzeria = 1072 Wa = 0.05 Ta = 0.0739

| Comb. | N top | N base | V orto | α0 | M* | e* | a0* | aLim | Verifica |
|---|---|---|---|---|---|---|---|---|---|
| SLV 6 | -474 | -1205 | 55 | 0 | 0.762 | 0.911 | 0 | 1733.979 | No |

| Comb. | N top | N base | V orto | α0 | M* | e* | a0* | aLim | Verifica |
|---|---|---|---|---|---|---|---|---|---|
| SLV 8 | -285 | -853 | -49 | 0 | 0.576 | 0.895 | 0 | 1733.979 | No |
| SLV 5 | -474 | -1205 | 55 | 0 | 0.762 | 0.911 | 0 | 1733.979 | No |
| SLV 10 | -491 | -1094 | 54 | 0 | 0.779 | 0.912 | 0 | 1733.979 | No |
| SLV 12 | -301 | -743 | -50 | 0 | 0.592 | 0.896 | 0 | 1733.979 | No |
| SLV 11 | -301 | -743 | -50 | 0 | 0.592 | 0.896 | 0 | 1733.979 | No |
| SLV 7 | -285 | -853 | -49 | 0 | 0.576 | 0.895 | 0 | 1733.979 | No |
| SLV 9 | -491 | -1094 | 54 | 0 | 0.779 | 0.912 | 0 | 1733.979 | No |
| SLV 1 | -388 | -1211 | 19 | 0.018 | 0.677 | 0.904 | 28.159 | 956.161 | No |
| SLV 2 | -388 | -1211 | 19 | 0.018 | 0.677 | 0.904 | 28.159 | 956.161 | No |

### Tabella dei coefficienti di sicurezza minimi

| Stato limite | Coeff.s. | Comb. | Verifica |
|---|---|---|---|
| PF_SLU | 0.893 | SLU 79 | No |
| V_SLU | 2.242 | SLU 67 | Si |
| PF_SLV | 0 | SLD 1 | No |
| V_SLV | 0 | SLD 1 | No |
| PFFP_SLV | 0 | SLV 12 | No |
| R_SLV | 0 | SLV 5 | No |

## Maschio 163

Verifiche condotte secondo D.M. 17-01-18 (N.T.C.)

### Dati geometrici

| X ini. | Y ini. | X fin. | Y fin. | Quota i. | Quota.s | l | Sp. | h netta | h ini. | h fin. | a | a.s.,sx | a.s.,dx |
|---|---|---|---|---|---|---|---|---|---|---|---|---|---|
| -1100.3 | -331.4 | -1100.3 | -35.4 | L5 | Z medio 1159 cm | 296 | 28 | 263 | 174 | 352 | | | |

### Caratteristiche del materiale

(Circolare 7 21-01-19 C8.5.I) Muratura in mattoni pieni e malta di calce LC2_Corti

| fb | fk | fvk0 | fmedio | τ0 | fv0 | μ | ϕ | fv,lim | E | G | FC |
|---|---|---|---|---|---|---|---|---|---|---|---|
| 60 | | | 34.5 | 0.9 | 2 | 0.58 | 0.77 | 3.25 | 32000 | 12800 | 1.2 |

### Verifica a pressoflessione nel piano secondo D.M. 17-01-18 NTC §7.8.2.2.1 in combinazioni non sismiche, γM = 3

| Comb. | Quota | N | M | σ0 | Mu | c.s. | Verifica |
|---|---|---|---|---|---|---|---|
| SLU 24 | 896 | -19080 | 73684 | 2.3 | 2025811 | 27.493 | Si |
| SLU 24 | 1070 | -15364 | 110748 | 1.85 | 1756414 | 15.86 | Si |
| SLU 70 | 896 | -23894 | 72495 | 2.88 | 2284724 | 31.516 | Si |
| SLU 70 | 1070 | -19268 | 131610 | 2.32 | 2037795 | 15.484 | Si |
| SLU 49 | 896 | -21675 | 53153 | 2.62 | 2177983 | 40.976 | Si |
| SLU 49 | 1070 | -17464 | 120280 | 2.11 | 1916090 | 15.93 | Si |
| SLU 67 | 896 | -22999 | 81688 | 2.78 | 2244292 | 27.474 | Si |
| SLU 67 | 1070 | -18466 | 128417 | 2.23 | 1985457 | 15.461 | Si |
| SLU 48 | 896 | -21691 | 53800 | 2.62 | 2178818 | 40.498 | Si |
| SLU 48 | 1070 | -17482 | 123308 | 2.11 | 1917334 | 15.549 | Si |
| SLU 46 | 896 | -20780 | 62347 | 2.51 | 2128848 | 34.145 | Si |
| SLU 46 | 1070 | -16663 | 117088 | 2.01 | 1857412 | 15.863 | Si |
| SLU 27 | 896 | -19975 | 64490 | 2.41 | 2081611 | 32.278 | Si |
| SLU 27 | 1070 | -16166 | 113940 | 1.95 | 1819656 | 15.97 | Si |
| SLU 66 | 896 | -23015 | 82335 | 2.78 | 2245035 | 27.267 | Si |
| SLU 66 | 1070 | -18484 | 131444 | 2.23 | 1986625 | 15.114 | Si |
| SLU 45 | 896 | -20796 | 62994 | 2.51 | 2129745 | 33.809 | Si |
| SLU 45 | 1070 | -16680 | 120115 | 2.01 | 1858717 | 15.474 | Si |
| SLU 69 | 896 | -23909 | 73141 | 2.88 | 2285406 | 31.246 | Si |
| SLU 69 | 1070 | -19285 | 134637 | 2.33 | 2038901 | 15.144 | Si |

### Verifica a pressoflessione nel piano secondo D.M. 17-01-18 NTC §7.8.2.2.1 in combinazioni sismiche, γM = 2

| Comb. | Quota | N | M | σ0 | Mu | c.s. | Verifica |
|---|---|---|---|---|---|---|---|
| SLV 5 | 896 | -18585 | -217813 | 2.24 | 2245766 | 10.311 | Si |
| SLV 5 | 1070 | -14891 | 14172 | 1.8 | 1879760 | 132.643 | Si |
| SLV 11 | 896 | -15490 | 305387 | 1.87 | 1941862 | 6.359 | Si |
| SLV 11 | 1070 | -12588 | 83879 | 1.52 | 1631489 | 19.451 | Si |
| SLV 7 | 896 | -14667 | 236563 | 1.77 | 1856349 | 7.847 | Si |
| SLV 7 | 1070 | -11675 | 59348 | 1.41 | 1528748 | 25.759 | Si |
| SLD 12 | 896 | -16405 | 153700 | 1.98 | 2034645 | 13.238 | Si |
| SLD 12 | 1070 | -13273 | 63380 | 1.6 | 1706916 | 26.931 | Si |
| SLV 16 | 896 | -17821 | 226649 | 2.15 | 2173379 | 9.589 | Si |
| SLV 16 | 1070 | -14779 | 96686 | 1.78 | 1868059 | 19.321 | Si |
| SLV 15 | 896 | -17821 | 226649 | 2.15 | 2173379 | 9.589 | Si |
| SLV 15 | 1070 | -14779 | 96686 | 1.78 | 1868059 | 19.321 | Si |
| SLV 12 | 896 | -15490 | 305387 | 1.87 | 1941862 | 6.359 | Si |
| SLV 12 | 1070 | -12588 | 83879 | 1.52 | 1631489 | 19.451 | Si |
| SLV 8 | 896 | -14667 | 236563 | 1.77 | 1856349 | 7.847 | Si |
| SLV 8 | 1070 | -11675 | 59348 | 1.41 | 1528748 | 25.759 | Si |
| SLD 11 | 896 | -16405 | 153700 | 1.98 | 2034645 | 13.238 | Si |
| SLD 11 | 1070 | -13273 | 63380 | 1.6 | 1706916 | 26.931 | Si |
| SLV 6 | 896 | -18585 | -217813 | 2.24 | 2245766 | 10.311 | Si |
| SLV 6 | 1070 | -14891 | 14172 | 1.8 | 1879760 | 132.643 | Si |

### Verifica a taglio nel piano secondo D.M. 17-01-18 (N.T.C.) §7.8.2.2.2 con rottura per scorrimento in combinazioni non sismiche, γM = 3

| Comb. | Quota | N | V par | M | σ0 | σN | l' | fvd | Vt scorr. | Vt fess.diag. | Vt,lim | c.s. | Verifica |
|---|---|---|---|---|---|---|---|---|---|---|---|---|---|
| SLU 18 | 896 | -19414 | 344 | -12465 | | 2.34 | 296 | 0.87 | 7193 | | | 20.91 | Si |
| SLU 18 | 1070 | -16283 | 1265 | -98803 | | 1.96 | 296 | 0.82 | 6776 | | | 5.35 | Si |
| SLU 52 | 896 | -22193 | 557 | 14130 | | 2.68 | 296 | 0.91 | 7564 | | | 13.57 | Si |

| Comb. | Quota | N | V par | M | σ0 | σN | l' | fvd | Vt scorr. | Vt fess.diag. | Vt,lim | c.s. | Verifica |
|---|---|---|---|---|---|---|---|---|---|---|---|---|---|
| SLU 52 | 1070 | -18227 | 1287 | -28930 | | 2.2 | 296 | 0.85 | 7035 | | | 5.46 | Si |
| SLU 19 | 896 | -19398 | 468 | -13112 | | 2.34 | 296 | 0.87 | 7191 | | | 15.37 | Si |
| SLU 19 | 1070 | -16266 | 1372 | -101830 | | 1.96 | 296 | 0.82 | 6773 | | | 4.94 | Si |
| SLU 82 | 896 | -25552 | 498 | 14881 | | 3.08 | 296 | 0.97 | 8011 | | | 16.09 | Si |
| SLU 82 | 1070 | -21189 | 1503 | -69804 | | 2.56 | 296 | 0.9 | 7430 | | | 4.94 | Si |
| SLU 73 | 896 | -24412 | 527 | 33472 | | 2.95 | 296 | 0.95 | 7859 | | | 14.91 | Si |
| SLU 73 | 1070 | -20030 | 1310 | -17601 | | 2.42 | 296 | 0.88 | 7275 | | | 5.55 | Si |
| SLU 81 | 896 | -25568 | 374 | 15528 | | 3.08 | 296 | 0.97 | 8013 | | | 21.44 | Si |
| SLU 81 | 1070 | -21207 | 1396 | -66777 | | 2.56 | 296 | 0.9 | 7432 | | | 5.32 | Si |
| SLU 39 | 896 | -21633 | 314 | 6876 | | 2.61 | 296 | 0.9 | 7489 | | | 23.88 | Si |
| SLU 39 | 1070 | -18087 | 1288 | -87473 | | 2.18 | 296 | 0.85 | 7016 | | | 5.45 | Si |
| SLU 60 | 896 | -23349 | 404 | -3813 | | 2.82 | 296 | 0.93 | 7718 | | | 19.1 | Si |
| SLU 60 | 1070 | -19403 | 1373 | -78106 | | 2.34 | 296 | 0.87 | 7191 | | | 5.24 | Si |
| SLU 40 | 896 | -21617 | 438 | 6229 | | 2.61 | 296 | 0.9 | 7487 | | | 17.11 | Si |
| SLU 40 | 1070 | -18070 | 1395 | -90501 | | 2.18 | 296 | 0.85 | 7014 | | | 5.03 | Si |
| SLU 61 | 896 | -23333 | 528 | -4460 | | 2.82 | 296 | 0.93 | 7715 | | | 14.61 | Si |
| SLU 61 | 1070 | -19385 | 1480 | -81133 | | 2.34 | 296 | 0.87 | 7189 | | | 4.86 | Si |

### Verifica a taglio nel piano secondo D.M. 17-01-18 (N.T.C.) §7.8.2.2.2 con rottura per scorrimento in combinazioni sismiche, γM = 2

| Comb. | Quota | N | V par | M | σ0 | σN | l' | fvd | Vt scorr. | Vt fess.diag. | Vt,lim | c.s. | Verifica |
|---|---|---|---|---|---|---|---|---|---|---|---|---|---|
| SLV 9 | 896 | -19408 | -9255 | -148989 | | 2.34 | 296 | 1.3 | 10788 | | | 1.17 | Si |
| SLV 9 | 1070 | -15804 | -8011 | 38702 | | 1.91 | 296 | 1.21 | 10067 | | | 1.26 | Si |
| SLV 7 | 896 | -14667 | 9640 | 236563 | | 1.77 | 296 | 1.19 | 9840 | | | 1.02 | Si |
| SLV 7 | 1070 | -11675 | 9148 | 59348 | | 1.41 | 296 | 1.12 | 9242 | | | 1.01 | Si |
| SLV 4 | 896 | -15078 | 4660 | -2762 | | 1.82 | 296 | 1.2 | 9922 | | | 2.13 | Si |
| SLV 4 | 1070 | -11736 | 4662 | 14917 | | 1.42 | 296 | 1.12 | 9254 | | | 1.99 | Si |
| SLV 12 | 896 | -15490 | 8564 | 305387 | | 1.87 | 296 | 1.21 | 10005 | | | 1.17 | Si |
| SLV 12 | 1070 | -12588 | 8146 | 83879 | | 1.52 | 296 | 1.14 | 9424 | | | 1.16 | Si |
| SLV 11 | 896 | -15490 | 8564 | 305387 | | 1.87 | 296 | 1.21 | 10005 | | | 1.17 | Si |
| SLV 11 | 1070 | -12588 | 8146 | 83879 | | 1.52 | 296 | 1.14 | 9424 | | | 1.16 | Si |
| SLV 10 | 896 | -19408 | -9255 | -148989 | | 2.34 | 296 | 1.3 | 10788 | | | 1.17 | Si |
| SLV 10 | 1070 | -15804 | -8011 | 38702 | | 1.91 | 296 | 1.21 | 10067 | | | 1.26 | Si |
| SLV 6 | 896 | -18585 | -8178 | -217813 | | 2.24 | 296 | 1.28 | 10624 | | | 1.3 | Si |
| SLV 6 | 1070 | -14891 | -7009 | 14172 | | 1.8 | 296 | 1.19 | 9885 | | | 1.41 | Si |
| SLV 3 | 896 | -15078 | 4660 | -2762 | | 1.82 | 296 | 1.2 | 9922 | | | 2.13 | Si |
| SLV 3 | 1070 | -11736 | 4662 | 14917 | | 1.42 | 296 | 1.12 | 9254 | | | 1.99 | Si |
| SLV 5 | 896 | -18585 | -8178 | -217813 | | 2.24 | 296 | 1.28 | 10624 | | | 1.3 | Si |
| SLV 5 | 1070 | -14891 | -7009 | 14172 | | 1.8 | 296 | 1.19 | 9885 | | | 1.41 | Si |
| SLV 8 | 896 | -14667 | 9640 | 236563 | | 1.77 | 296 | 1.19 | 9840 | | | 1.02 | Si |
| SLV 8 | 1070 | -11675 | 9148 | 59348 | | 1.41 | 296 | 1.12 | 9242 | | | 1.01 | Si |

### Verifica a pressoflessione fuori piano D.M. 17-01-18 (N.T.C.)

quota 983 Wa 0.05 denominatore 8 γM = 2

| Comb. | fd | Sa | σ0 | N | M | Mc | Coeff.s. | Verifica |
|---|---|---|---|---|---|---|---|---|
| SLV 7 | 14 | 0.44 | 1.48 | -12300 | 19970 | 151284 | 7.58 | Si |
| SLV 8 | 14 | 0.44 | 1.48 | -12300 | 19970 | 151284 | 7.58 | Si |
| SLV 4 | 14 | 0.44 | 1.51 | -12548 | 19970 | 153906 | 7.71 | Si |
| SLV 3 | 14 | 0.44 | 1.51 | -12548 | 19970 | 153906 | 7.71 | Si |
| SLV 11 | 14 | 0.44 | 1.6 | -13264 | 19970 | 161370 | 8.08 | Si |
| SLV 12 | 14 | 0.44 | 1.6 | -13264 | 19970 | 161370 | 8.08 | Si |
| SLV 2 | 14 | 0.44 | 1.66 | -13724 | 19970 | 166102 | 8.32 | Si |
| SLV 1 | 14 | 0.44 | 1.66 | -13724 | 19970 | 166102 | 8.32 | Si |
| SLV 16 | 14 | 0.44 | 1.9 | -15760 | 19970 | 186306 | 9.33 | Si |
| SLV 15 | 14 | 0.44 | 1.9 | -15760 | 19970 | 186306 | 9.33 | Si |

### Verifica dei meccanismi locali di collasso con analisi cinematica lineare

forza di aggancio al piano = 0 quota mezzeria = 983 Wa = 0.05 Ta = 0.0413

| Comb. | N top | N base | V orto | α0 | M* | e* | a0* | aLim | Verifica |
|---|---|---|---|---|---|---|---|---|---|
| SLV 5 | -14891 | -18585 | -3365 | 0 | 18.24 | 0.951 | 0 | 870.42 | No |
| SLV 9 | -15804 | -19408 | -3421 | 0 | 19.168 | 0.953 | 0 | 870.42 | No |
| SLV 8 | -11675 | -14667 | -3652 | 0 | 14.979 | 0.942 | 0 | 870.42 | No |
| SLV 4 | -11736 | -15078 | -3486 | 0 | 15.04 | 0.942 | 0 | 601.343 | No |
| SLV 3 | -11736 | -15078 | -3486 | 0 | 15.04 | 0.942 | 0 | 601.343 | No |
| SLV 2 | -12700 | -16254 | -3399 | 0 | 16.018 | 0.945 | 0 | 601.343 | No |
| SLV 6 | -14891 | -18585 | -3365 | 0 | 18.24 | 0.951 | 0 | 870.42 | No |
| SLV 7 | -11675 | -14667 | -3652 | 0 | 14.979 | 0.942 | 0 | 870.42 | No |
| SLV 10 | -15804 | -19408 | -3421 | 0 | 19.168 | 0.953 | 0 | 870.42 | No |
| SLV 1 | -12700 | -16254 | -3399 | 0 | 16.018 | 0.945 | 0 | 601.343 | No |

### Tabella dei coefficienti di sicurezza minimi

| Stato limite | Coeff.s. | Comb. | Verifica |
|---|---|---|---|
| PF_SLU | 15.114 | SLU 66 | Si |
| V_SLU | 4.857 | SLU 61 | Si |
| PF_SLV | 6.359 | SLV 11 | Si |
| V_SLV | 1.01 | SLV 7 | Si |
| PFFP_SLV | 7.576 | SLV 7 | Si |
| R_SLV | 0 | SLV 1 | No |

## Maschio 165

Verifiche condotte secondo D.M. 17-01-18 (N.T.C.)

## Dati geometrici

| X ini. | Y ini. | X fin. | Y fin. | Quota i. | Quota.s | l | Sp. | h netta | h ini. | h fin. | a | a.s.,sx | a.s.,dx |
|---|---|---|---|---|---|---|---|---|---|---|---|---|---|
| -1100.3 | -35.4 | -1100.3 | 104.6 | L5 | L6 | 140 | 28 | 352 | 352 | 352 | | | |

## Caratteristiche del materiale

(Circolare 7 21-01-19 C8.5.I) Muratura in mattoni pieni e malta di calce LC2_Corti

| fb | fk | fvk0 | fmedio | τ0 | fv0 | μ | ϕ | fv,lim | E | G | FC |
|---|---|---|---|---|---|---|---|---|---|---|---|
| 60 | | | 34.5 | 0.9 | 2 | 0.58 | 0.77 | 3.25 | 32000 | 12800 | 1.2 |

## Verifica a pressoflessione nel piano secondo D.M. 17-01-18 NTC §7.8.2.2.1 in combinazioni non sismiche, γM = 3

| Comb. | Quota | N | M | σ0 | Mu | c.s. | Verifica |
|---|---|---|---|---|---|---|---|
| SLU 70 | 896 | -14463 | -28267 | 3.69 | 553858 | 19.594 | Si |
| SLU 70 | 1248 | -9595 | 37066 | 2.45 | 469822 | 12.675 | Si |
| SLU 69 | 896 | -14509 | -29128 | 3.7 | 554152 | 19.025 | Si |
| SLU 69 | 1248 | -9647 | 38018 | 2.46 | 471270 | 12.396 | Si |
| SLU 28 | 896 | -12183 | -27247 | 3.11 | 527439 | 19.358 | Si |
| SLU 28 | 1248 | -8198 | 36191 | 2.09 | 426533 | 11.786 | Si |
| SLU 71 | 896 | -14157 | -30731 | 3.61 | 551634 | 17.95 | Si |
| SLU 71 | 1248 | -9324 | 36483 | 2.38 | 462104 | 12.666 | Si |
| SLU 8 | 896 | -10349 | -22996 | 2.64 | 489654 | 21.293 | Si |
| SLU 8 | 1248 | -6962 | 28172 | 1.78 | 381078 | 13.527 | Si |
| SLU 72 | 896 | -14112 | -29871 | 3.6 | 551270 | 18.455 | Si |
| SLU 72 | 1248 | -9272 | 35531 | 2.37 | 460582 | 12.963 | Si |
| SLU 27 | 896 | -12228 | -28107 | 3.12 | 528186 | 18.792 | Si |
| SLU 27 | 1248 | -8250 | 37143 | 2.1 | 428300 | 11.531 | Si |
| SLU 6 | 896 | -10701 | -21393 | 2.73 | 498043 | 23.281 | Si |
| SLU 6 | 1248 | -7284 | 29708 | 1.86 | 393586 | 13.249 | Si |
| SLU 29 | 896 | -11877 | -29711 | 3.03 | 522152 | 17.575 | Si |
| SLU 29 | 1248 | -7927 | 35608 | 2.02 | 417158 | 11.715 | Si |
| SLU 30 | 896 | -11831 | -28850 | 3.02 | 521335 | 18.071 | Si |
| SLU 30 | 1248 | -7875 | 34656 | 2.01 | 415317 | 11.984 | Si |

## Verifica a pressoflessione nel piano secondo D.M. 17-01-18 NTC §7.8.2.2.1 in combinazioni sismiche, γM = 2

| Comb. | Quota | N | M | σ0 | Mu | c.s. | Verifica |
|---|---|---|---|---|---|---|---|
| SLV 3 | 896 | -10098 | 111076 | 2.58 | 557853 | 5.022 | Si |
| SLV 3 | 1248 | -4519 | 58 | 1.15 | 286505 | 1000 | Si |
| SLV 8 | 896 | -10215 | 113113 | 2.61 | 562556 | 4.973 | Si |
| SLV 8 | 1248 | -3774 | -48877 | 0.96 | 243370 | 4.979 | Si |
| SLV 10 | 896 | -10048 | -129663 | 2.56 | 555804 | 4.287 | Si |
| SLV 10 | 1248 | -8776 | 65762 | 2.24 | 501752 | 7.63 | Si |
| SLV 9 | 896 | -10048 | -129663 | 2.56 | 555804 | 4.287 | Si |
| SLV 9 | 1248 | -8776 | 65762 | 2.24 | 501752 | 7.63 | Si |
| SLV 4 | 896 | -10098 | 111076 | 2.58 | 557853 | 5.022 | Si |
| SLV 4 | 1248 | -4519 | 58 | 1.15 | 286505 | 1000 | Si |
| SLV 12 | 896 | -10253 | 58431 | 2.62 | 564093 | 9.654 | Si |
| SLV 12 | 1248 | -4437 | -54687 | 1.13 | 281816 | 5.153 | Si |
| SLV 14 | 896 | -10164 | -127626 | 2.59 | 560524 | 4.392 | Si |
| SLV 14 | 1248 | -8030 | 16827 | 2.05 | 467889 | 27.805 | Si |
| SLV 13 | 896 | -10164 | -127626 | 2.59 | 560524 | 4.392 | Si |
| SLV 13 | 1248 | -8030 | 16827 | 2.05 | 467889 | 27.805 | Si |
| SLV 7 | 896 | -10215 | 113113 | 2.61 | 562556 | 4.973 | Si |
| SLV 7 | 1248 | -3774 | -48877 | 0.96 | 243370 | 4.979 | Si |
| SLV 11 | 896 | -10253 | 58431 | 2.62 | 564093 | 9.654 | Si |
| SLV 11 | 1248 | -4437 | -54687 | 1.13 | 281816 | 5.153 | Si |

## Verifica a taglio nel piano secondo D.M. 17-01-18 (N.T.C.) §7.8.2.2.2 con rottura per scorrimento in combinazioni non sismiche, γM = 3

| Comb. | Quota | N | V par | M | σ0 | σN | l' | fvd | Vt scorr. | Vt fess.diag. | Vt,lim | c.s. | Verifica |
|---|---|---|---|---|---|---|---|---|---|---|---|---|---|
| SLU 30 | 896 | -11831 | -1134 | -28850 | | 3.02 | 140 | 0.96 | 3755 | | | 3.31 | Si |
| SLU 30 | 1248 | -7875 | -2023 | 34656 | | 2.01 | 140 | 0.82 | 3228 | | | 1.6 | Si |
| SLU 29 | 896 | -11877 | -1190 | -29711 | | 3.03 | 140 | 0.96 | 3761 | | | 3.16 | Si |
| SLU 29 | 1248 | -7927 | -2063 | 35608 | | 2.02 | 140 | 0.83 | 3235 | | | 1.57 | Si |
| SLU 71 | 896 | -14157 | -1201 | -30731 | | 3.61 | 140 | 1.04 | 4065 | | | 3.39 | Si |
| SLU 71 | 1248 | -9324 | -2199 | 36483 | | 2.38 | 140 | 0.87 | 3421 | | | 1.56 | Si |
| SLU 27 | 896 | -12228 | -1159 | -28107 | | 3.12 | 140 | 0.97 | 3808 | | | 3.29 | Si |
| SLU 27 | 1248 | -8250 | -2077 | 37143 | | 2.1 | 140 | 0.84 | 3278 | | | 1.58 | Si |
| SLU 79 | 896 | -15378 | -1138 | -14215 | | 3.92 | 140 | 1.08 | 4228 | | | 3.72 | Si |
| SLU 79 | 1248 | -10164 | -2184 | 18645 | | 2.59 | 140 | 0.9 | 3533 | | | 1.62 | Si |
| SLU 69 | 896 | -14509 | -1170 | -29128 | | 3.7 | 140 | 1.05 | 4112 | | | 3.51 | Si |
| SLU 69 | 1248 | -9647 | -2213 | 38018 | | 2.46 | 140 | 0.88 | 3464 | | | 1.57 | Si |
| SLU 28 | 896 | -12183 | -1103 | -27247 | | 3.11 | 140 | 0.97 | 3802 | | | 3.45 | Si |
| SLU 28 | 1248 | -8198 | -2037 | 36191 | | 2.09 | 140 | 0.83 | 3271 | | | 1.61 | Si |
| SLU 72 | 896 | -14112 | -1145 | -29871 | | 3.6 | 140 | 1.04 | 4059 | | | 3.55 | Si |
| SLU 72 | 1248 | -9272 | -2160 | 35531 | | 2.37 | 140 | 0.87 | 3414 | | | 1.58 | Si |
| SLU 77 | 896 | -15729 | -1107 | -12611 | | 4.01 | 140 | 1.08 | 4247 | | | 3.83 | Si |
| SLU 77 | 1248 | -10486 | -2198 | 20181 | | 2.68 | 140 | 0.91 | 3576 | | | 1.63 | Si |
| SLU 70 | 896 | -14463 | -1114 | -28267 | | 3.69 | 140 | 1.05 | 4106 | | | 3.69 | Si |
| SLU 70 | 1248 | -9595 | -2173 | 37066 | | 2.45 | 140 | 0.88 | 3457 | | | 1.59 | Si |

## Verifica a taglio nel piano secondo D.M. 17-01-18 (N.T.C.) §7.8.2.2.2 con rottura per scorrimento in combinazioni sismiche, γM = 2

| Comb. | Quota | N | V par | M | σ0 | σN | l' | fvd | Vt scorr. | Vt fess.diag. | Vt,lim | c.s. | Verifica |
|---|---|---|---|---|---|---|---|---|---|---|---|---|---|
| SLV 6 | 896 | -10009 | -3972 | -74981 | | 2.55 | 140 | 1.34 | 5269 | | | 1.33 | Si |
| SLV 6 | 1248 | -8113 | -4005 | 71572 | | 2.07 | 140 | 1.25 | 4889 | | | 1.22 | Si |
| SLV 14 | 896 | -10164 | -2009 | -127626 | | 2.59 | 140 | 1.35 | 5300 | | | 2.64 | Si |
| SLV 14 | 1248 | -8030 | -3085 | 16827 | | 2.05 | 140 | 1.24 | 4873 | | | 1.58 | Si |
| SLV 11 | 896 | -10253 | 3071 | 58431 | | 2.62 | 140 | 1.36 | 5317 | | | 1.73 | Si |
| SLV 11 | 1248 | -4437 | 1989 | -54687 | | 1.13 | 140 | 1.06 | 4154 | | | 2.09 | Si |
| SLV 8 | 896 | -10215 | 3347 | 113113 | | 2.61 | 140 | 1.35 | 5310 | | | 1.59 | Si |

| Comb. | Quota | N | V par | M | σ0 | σN | l' | fvd | Vt scorr. | Vt fess.diag. | Vt,lim | c.s. | Verifica |
|---|---|---|---|---|---|---|---|---|---|---|---|---|---|
| SLV 8 | 1248 | -3774 | 2637 | -48877 | | 0.96 | 140 | 1.03 | 4021 | | | 1.53 | Si |
| SLV 13 | 896 | -10164 | -2009 | -127626 | | 2.59 | 140 | 1.35 | 5300 | | | 2.64 | Si |
| SLV 13 | 1248 | -8030 | -3085 | 16827 | | 2.05 | 140 | 1.24 | 4873 | | | 1.58 | Si |
| SLV 10 | 896 | -10048 | -4248 | -129663 | | 2.56 | 140 | 1.35 | 5276 | | | 1.24 | Si |
| SLV 10 | 1248 | -8776 | -4653 | 65762 | | 2.24 | 140 | 1.28 | 5022 | | | 1.08 | Si |
| SLV 9 | 896 | -10048 | -4248 | -129663 | | 2.56 | 140 | 1.35 | 5276 | | | 1.24 | Si |
| SLV 9 | 1248 | -8776 | -4653 | 65762 | | 2.24 | 140 | 1.28 | 5022 | | | 1.08 | Si |
| SLV 12 | 896 | -10253 | 3071 | 58431 | | 2.62 | 140 | 1.36 | 5317 | | | 1.73 | Si |
| SLV 12 | 1248 | -4437 | 1989 | -54687 | | 1.13 | 140 | 1.06 | 4154 | | | 2.09 | Si |
| SLV 7 | 896 | -10215 | 3347 | 113113 | | 2.61 | 140 | 1.35 | 5310 | | | 1.59 | Si |
| SLV 7 | 1248 | -3774 | 2637 | -48877 | | 0.96 | 140 | 1.03 | 4021 | | | 1.53 | Si |
| SLV 5 | 896 | -10009 | -3972 | -74981 | | 2.55 | 140 | 1.34 | 5269 | | | 1.33 | Si |
| SLV 5 | 1248 | -8113 | -4005 | 71572 | | 2.07 | 140 | 1.25 | 4889 | | | 1.22 | Si |

### Verifica a pressoflessione fuori piano D.M. 17-01-18 (N.T.C.)

quota 1072 Wa 0.05 denominatore 8 γM = 2

| Comb. | fd | Sa | σ0 | N | M | Mc | Coeff.s. | Verifica |
|---|---|---|---|---|---|---|---|---|
| SLV 3 | 14 | 0.46 | 1.16 | -4566 | 17607 | 57825 | 3.28 | Si |
| SLV 4 | 14 | 0.46 | 1.16 | -4566 | 17607 | 57825 | 3.28 | Si |
| SLV 7 | 14 | 0.46 | 1.36 | -5326 | 17607 | 66276 | 3.76 | Si |
| SLV 8 | 14 | 0.46 | 1.36 | -5326 | 17607 | 66276 | 3.76 | Si |
| SLV 2 | 14 | 0.46 | 1.48 | -5797 | 17607 | 71340 | 4.05 | Si |
| SLV 1 | 14 | 0.46 | 1.48 | -5797 | 17607 | 71340 | 4.05 | Si |
| SLV 11 | 14 | 0.46 | 1.84 | -7210 | 17607 | 85749 | 4.87 | Si |
| SLV 12 | 14 | 0.46 | 1.84 | -7210 | 17607 | 85749 | 4.87 | Si |
| SLV 5 | 14 | 0.46 | 2.41 | -9433 | 17607 | 106051 | 6.02 | Si |
| SLV 6 | 14 | 0.46 | 2.41 | -9433 | 17607 | 106051 | 6.02 | Si |

### Verifica dei meccanismi locali di collasso con analisi cinematica lineare

forza di aggancio al piano = 0 quota mezzeria = 1072 Wa = 0.05 Ta = 0.0739

| Comb. | N top | N base | V orto | α0 | M* | e* | a0* | aLim | Verifica |
|---|---|---|---|---|---|---|---|---|---|
| SLV 12 | -4437 | -10253 | -149 | 0.022 | 6.499 | 0.921 | 34.953 | 1733.979 | No |
| SLV 11 | -4437 | -10253 | -149 | 0.022 | 6.499 | 0.921 | 34.953 | 1733.979 | No |
| SLV 15 | -6729 | -10226 | -230 | 0.017 | 8.812 | 0.938 | 26.54 | 956.161 | No |
| SLV 16 | -6729 | -10226 | -230 | 0.017 | 8.812 | 0.938 | 26.54 | 956.161 | No |
| SLV 6 | -8113 | -10009 | 90 | 0.035 | 10.214 | 0.946 | 54.398 | 1733.979 | No |
| SLV 5 | -8113 | -10009 | 90 | 0.035 | 10.214 | 0.946 | 54.398 | 1733.979 | No |
| SLV 1 | -5821 | -10037 | 171 | 0.023 | 7.894 | 0.932 | 35.203 | 956.161 | No |
| SLV 2 | -5821 | -10037 | 171 | 0.023 | 7.894 | 0.932 | 35.203 | 956.161 | No |
| SLV 9 | -8776 | -10048 | -18 | 0.043 | 10.886 | 0.948 | 65.746 | 1733.979 | No |
| SLV 10 | -8776 | -10048 | -18 | 0.043 | 10.886 | 0.948 | 65.746 | 1733.979 | No |

### Tabella dei coefficienti di sicurezza minimi

| Stato limite | Coeff.s. | Comb. | Verifica |
|---|---|---|---|
| PF_SLU | 11.531 | SLU 27 | Si |
| V_SLU | 1.556 | SLU 71 | Si |
| PF_SLV | 4.287 | SLV 9 | Si |
| V_SLV | 1.079 | SLV 9 | Si |
| PFFP_SLV | 3.284 | SLV 3 | Si |
| R_SLV | 0.02 | SLV 11 | No |

## Maschio 166

Verifiche condotte secondo D.M. 17-01-18 (N.T.C.)

### Dati geometrici

| X ini. | Y ini. | X fin. | Y fin. | Quota i. | Quota.s | l | Sp. | h netta | h ini. | h fin. | a | a.s.,sx | a.s.,dx |
|---|---|---|---|---|---|---|---|---|---|---|---|---|---|
| -944.8 | -335.9 | -1100.3 | -335.9 | L5 | L6 | 155.5 | 28 | 352 | 352 | 352 | | | |

### Caratteristiche del materiale

(Circolare 7 21-01-19 C8.5.I) Muratura in mattoni pieni e malta di calce LC2_Corti

| fb | fk | fvk0 | fmedio | τ0 | fv0 | μ | ϕ | fv,lim | E | G | FC |
|---|---|---|---|---|---|---|---|---|---|---|---|
| 60 | | | 34.5 | 0.9 | 2 | 0.58 | 0.77 | 3.25 | 32000 | 12800 | 1.2 |

### Verifica a pressoflessione nel piano secondo D.M. 17-01-18 NTC §7.8.2.2.1 in combinazioni non sismiche, γM = 3

| Comb. | Quota | N | M | σ0 | Mu | c.s. | Verifica |
|---|---|---|---|---|---|---|---|
| SLU 21 | 896 | -7456 | 73228 | 1.71 | 457849 | 6.252 | Si |
| SLU 21 | 1106 | -7878 | -428844 | 1.81 | 476479 | 1.111 | Si |
| SLU 40 | 896 | -7389 | 96526 | 1.7 | 454813 | 4.712 | Si |
| SLU 40 | 1106 | -8365 | -478708 | 1.92 | 496971 | 1.038 | Si |
| SLU 18 | 896 | -7035 | 75328 | 1.62 | 438457 | 5.821 | Si |
| SLU 18 | 1106 | -7536 | -433526 | 1.73 | 461407 | 1.064 | Si |
| SLU 19 | 896 | -6935 | 81802 | 1.59 | 433768 | 5.303 | Si |
| SLU 19 | 1106 | -7504 | -435143 | 1.72 | 459975 | 1.057 | Si |
| SLU 39 | 896 | -7489 | 90052 | 1.72 | 459305 | 5.1 | Si |
| SLU 39 | 1106 | -8397 | -477090 | 1.93 | 498282 | 1.044 | Si |
| SLU 82 | 896 | -9111 | 103060 | 2.09 | 526388 | 5.108 | Si |
| SLU 82 | 1106 | -9820 | -508308 | 2.26 | 552093 | 1.086 | Si |
| SLU 81 | 896 | -9210 | 96586 | 2.12 | 530128 | 5.489 | Si |
| SLU 81 | 1106 | -9852 | -506691 | 2.26 | 553200 | 1.092 | Si |
| SLU 20 | 896 | -7556 | 66754 | 1.74 | 462312 | 6.926 | Si |
| SLU 20 | 1106 | -7910 | -427226 | 1.82 | 477858 | 1.119 | Si |
| SLU 42 | 896 | -7910 | 87952 | 1.82 | 477857 | 5.433 | Si |
| SLU 42 | 1106 | -8740 | -472408 | 2.01 | 512060 | 1.084 | Si |

| Comb. | Quota | N | M | σ0 | Mu | c.s. | Verifica |
|---|---|---|---|---|---|---|---|
| SLU 41 | 896 | -8010 | 81478 | 1.84 | 482121 | 5.917 | Si |
| SLU 41 | 1106 | -8772 | -470791 | 2.01 | 513318 | 1.09 | Si |

Verifica a pressoflessione nel piano secondo D.M. 17-01-18 NTC §7.8.2.2.1 in combinazioni sismiche, γM = 2

| Comb. | Quota | N | M | σ0 | Mu | c.s. | Verifica |
|---|---|---|---|---|---|---|---|
| SLD 3 | 896 | -5043 | 198719 | 1.16 | 354931 | 1.786 | Si |
| SLD 3 | 1106 | -7672 | -349993 | 1.76 | 510483 | 1.459 | Si |
| SLV 4 | 896 | -2972 | 397562 | 0 | 0 | 0 | No, e>l/2 |
| SLV 4 | 1106 | -9301 | -524857 | 2.14 | 596709 | 1.137 | Si |
| SLD 4 | 896 | -5043 | 198719 | 1.16 | 354931 | 1.786 | Si |
| SLD 4 | 1106 | -7672 | -349993 | 1.76 | 510483 | 1.459 | Si |
| SLV 1 | 896 | -5371 | 367166 | 1.23 | 375412 | 1.022 | Si |
| SLV 1 | 1106 | -11030 | -572096 | 2.53 | 679797 | 1.188 | Si |
| SLV 8 | 896 | -1834 | 200479 | 0 | 0 | 0 | No, e>l/2 |
| SLV 8 | 1106 | -4661 | -238353 | 1.07 | 330646 | 1.387 | Si |
| SLV 7 | 896 | -1834 | 200479 | 0 | 0 | 0 | No, e>l/2 |
| SLV 7 | 1106 | -4661 | -238353 | 1.07 | 330646 | 1.387 | Si |
| SLV 16 | 896 | -7714 | -266851 | 1.77 | 512785 | 1.922 | Si |
| SLV 16 | 1106 | -1810 | 136263 | 0.42 | 135946 | 0.998 | No, M>Mu |
| SLV 3 | 896 | -2972 | 397562 | 0 | 0 | 0 | No, e>l/2 |
| SLV 3 | 1106 | -9301 | -524857 | 2.14 | 596709 | 1.137 | Si |
| SLV 15 | 896 | -7714 | -266851 | 1.77 | 512785 | 1.922 | Si |
| SLV 15 | 1106 | -1810 | 136263 | 0.42 | 135946 | 0.998 | No, M>Mu |
| SLV 2 | 896 | -5371 | 367166 | 1.23 | 375412 | 1.022 | Si |
| SLV 2 | 1106 | -11030 | -572096 | 2.53 | 679797 | 1.188 | Si |

Verifica a taglio nel piano secondo D.M. 17-01-18 (N.T.C.) §7.8.2.2.2 con rottura per scorrimento in combinazioni non sismiche, γM = 3

| Comb. | Quota | N | V par | M | σ0 | σN | l' | fvd | Vt scorr. | Vt fess.diag. | Vt,lim | c.s. | Verifica |
|---|---|---|---|---|---|---|---|---|---|---|---|---|---|
| SLU 19 | 896 | -6935 | -301 | 81802 | | 1.59 | 155.5 | 0.77 | 3344 | | | 11.11 | Si |
| SLU 19 | 1106 | -7504 | 12050 | -435143 | | 4.52 | 59.28 | 1.08 | 1798 | | | 0.15 | No, Vu<V |
| SLU 42 | 896 | -7910 | -255 | 87952 | | 1.82 | 155.5 | 0.8 | 3474 | | | 13.63 | Si |
| SLU 42 | 1106 | -8740 | 13001 | -472408 | | 4.39 | 71.09 | 1.08 | 2156 | | | 0.17 | No, Vu<V |
| SLU 81 | 896 | -9210 | -52 | 96586 | | 2.12 | 155.5 | 0.84 | 3647 | | | 70.47 | Si |
| SLU 81 | 1106 | -9852 | 13649 | -506691 | | 4.46 | 78.95 | 1.08 | 2395 | | | 0.18 | No, Vu<V |
| SLU 82 | 896 | -9111 | 1 | 103060 | | 2.09 | 155.5 | 0.83 | 3634 | | | 1000 | Si |
| SLU 82 | 1106 | -9820 | 13724 | -508308 | | 4.5 | 77.96 | 1.08 | 2365 | | | 0.17 | No, Vu<V |
| SLU 41 | 896 | -8010 | -307 | 81478 | | 1.84 | 155.5 | 0.8 | 3487 | | | 11.35 | Si |
| SLU 41 | 1106 | -8772 | 12926 | -470791 | | 4.34 | 72.23 | 1.08 | 2191 | | | 0.17 | No, Vu<V |
| SLU 21 | 896 | -7456 | -425 | 73228 | | 1.71 | 155.5 | 0.78 | 3413 | | | 8.03 | Si |
| SLU 21 | 1106 | -7878 | 11923 | -428844 | | 4.02 | 69.95 | 1.08 | 2122 | | | 0.18 | No, Vu<V |
| SLU 39 | 896 | -7489 | -183 | 90052 | | 1.72 | 155.5 | 0.78 | 3417 | | | 18.68 | Si |
| SLU 39 | 1106 | -8397 | 13053 | -477090 | | 4.78 | 62.79 | 1.08 | 1905 | | | 0.15 | No, Vu<V |
| SLU 40 | 896 | -7389 | -131 | 96526 | | 1.7 | 155.5 | 0.78 | 3404 | | | 26.06 | Si |
| SLU 40 | 1106 | -8365 | 13128 | -478708 | | 4.85 | 61.56 | 1.08 | 1867 | | | 0.14 | No, Vu<V |
| SLU 20 | 896 | -7556 | -477 | 66754 | | 1.74 | 155.5 | 0.79 | 3426 | | | 7.18 | Si |
| SLU 20 | 1106 | -7910 | 11848 | -427226 | | 3.97 | 71.23 | 1.08 | 2160 | | | 0.18 | No, Vu<V |
| SLU 18 | 896 | -7035 | -353 | 75328 | | 1.62 | 155.5 | 0.77 | 3357 | | | 9.51 | Si |
| SLU 18 | 1106 | -7536 | 11975 | -433526 | | 4.44 | 60.66 | 1.08 | 1840 | | | 0.15 | No, Vu<V |

Verifica a taglio nel piano secondo D.M. 17-01-18 (N.T.C.) §7.8.2.2.2 con rottura per scorrimento in combinazioni sismiche, γM = 2

| Comb. | Quota | N | V par | M | σ0 | σN | l' | fvd | Vt scorr. | Vt fess.diag. | Vt,lim | c.s. | Verifica |
|---|---|---|---|---|---|---|---|---|---|---|---|---|---|
| SLV 16 | 896 | -7714 | -4585 | -266851 | | 2.13 | 129.47 | 1.26 | 4564 | | | 1 | No, Vu<V |
| SLV 16 | 1106 | -1810 | 1742 | 136263 | | 8.72 | 7.41 | 1.63 | 337 | | | 0.19 | No, Vu<V |
| SLD 4 | 896 | -5043 | 3048 | 198719 | | 1.57 | 115.04 | 1.15 | 3693 | | | 1.21 | Si |
| SLD 4 | 1106 | -7672 | 7129 | -349993 | | 2.84 | 96.39 | 1.4 | 3784 | | | 0.53 | No, Vu<V |
| SLV 1 | 896 | -5371 | 5552 | 367166 | | 6.81 | 28.15 | 1.63 | 1281 | | | 0.23 | No, Vu<V |
| SLV 1 | 1106 | -11030 | 8816 | -572096 | | 5.07 | 77.65 | 1.63 | 3533 | | | 0.4 | No, Vu<V |
| SLV 4 | 896 | -2972 | 6485 | 397562 | | 0 | 0 | 0.83 | 0 | | | 0 | No, Vu<V |
| SLV 4 | 1106 | -9301 | 9620 | -524857 | | 5.19 | 63.95 | 1.63 | 2910 | | | 0.3 | No, Vu<V |
| SLV 15 | 896 | -7714 | -4585 | -266851 | | 2.13 | 129.47 | 1.26 | 4564 | | | 1 | No, Vu<V |
| SLV 15 | 1106 | -1810 | 1742 | 136263 | | 8.72 | 7.41 | 1.63 | 337 | | | 0.19 | No, Vu<V |
| SLV 7 | 896 | -1834 | 3699 | 200479 | | 0 | 0 | 0.83 | 0 | | | 0 | No, Vu<V |
| SLV 7 | 1106 | -4661 | 7801 | -238353 | | 2.09 | 79.84 | 1.25 | 2795 | | | 0.36 | No, Vu<V |
| SLV 2 | 896 | -5371 | 5552 | 367166 | | 6.81 | 28.15 | 1.63 | 1281 | | | 0.23 | No, Vu<V |
| SLV 2 | 1106 | -11030 | 8816 | -572096 | | 5.07 | 77.65 | 1.63 | 3533 | | | 0.4 | No, Vu<V |
| SLD 3 | 896 | -5043 | 3048 | 198719 | | 1.57 | 115.04 | 1.15 | 3693 | | | 1.21 | Si |
| SLD 3 | 1106 | -7672 | 7129 | -349993 | | 2.84 | 96.39 | 1.4 | 3784 | | | 0.53 | No, Vu<V |
| SLV 3 | 896 | -2972 | 6485 | 397562 | | 0 | 0 | 0.83 | 0 | | | 0 | No, Vu<V |
| SLV 3 | 1106 | -9301 | 9620 | -524857 | | 5.19 | 63.95 | 1.63 | 2910 | | | 0.3 | No, Vu<V |
| SLV 8 | 896 | -1834 | 3699 | 200479 | | 0 | 0 | 0.83 | 0 | | | 0 | No, Vu<V |
| SLV 8 | 1106 | -4661 | 7801 | -238353 | | 2.09 | 79.84 | 1.25 | 2795 | | | 0.36 | No, Vu<V |

Verifica a pressoflessione fuori piano D.M. 17-01-18 (N.T.C.)

quota 1072 Wa 0.05 denominatore 8 γM = 2

| Comb. | fd | Sa | σ0 | N | M | Mc | Coeff.s. | Verifica |
|---|---|---|---|---|---|---|---|---|
| SLV 16 | 14 | 0.46 | 0.47 | -2035 | 19112 | 27399 | 1.43 | Si |
| SLV 15 | 14 | 0.46 | 0.47 | -2035 | 19112 | 27399 | 1.43 | Si |
| SLV 12 | 14 | 0.46 | 0.72 | -3122 | 19112 | 41139 | 2.15 | Si |
| SLV 11 | 14 | 0.46 | 0.72 | -3122 | 19112 | 41139 | 2.15 | Si |
| SLV 14 | 14 | 0.46 | 0.8 | -3494 | 19112 | 45705 | 2.39 | Si |
| SLV 13 | 14 | 0.46 | 0.8 | -3494 | 19112 | 45705 | 2.39 | Si |
| SLV 8 | 14 | 0.46 | 1.27 | -5512 | 19112 | 69176 | 3.62 | Si |
| SLV 7 | 14 | 0.46 | 1.27 | -5512 | 19112 | 69176 | 3.62 | Si |
| SLV 9 | 14 | 0.46 | 1.83 | -7986 | 19112 | 95017 | 4.97 | Si |
| SLV 10 | 14 | 0.46 | 1.83 | -7986 | 19112 | 95017 | 4.97 | Si |

### Verifica dei meccanismi locali di collasso con analisi cinematica lineare

forza di aggancio al piano = 0 quota mezzeria = 1072 Wa = 0.05 Ta = 0.0739

| Comb. | N top | N base | V orto | α0 | M* | e* | a0* | aLim | Verifica |
|---|---|---|---|---|---|---|---|---|---|
| SLV 7 | -2445 | -1834 | -202 | 0.001 | 4.756 | 0.897 | 2.232 | 1733.979 | No |
| SLV 8 | -2445 | -1834 | -202 | 0.001 | 4.756 | 0.897 | 2.232 | 1733.979 | No |
| SLV 12 | -2472 | -3256 | -179 | 0.007 | 4.783 | 0.897 | 12.14 | 1733.979 | No |
| SLV 11 | -2472 | -3256 | -179 | 0.007 | 4.783 | 0.897 | 12.14 | 1733.979 | No |
| SLV 9 | -4998 | -11251 | 205 | 0.016 | 7.289 | 0.922 | 25.642 | 1733.979 | No |
| SLV 10 | -4998 | -11251 | 205 | 0.016 | 7.289 | 0.922 | 25.642 | 1733.979 | No |
| SLV 6 | -4970 | -9828 | 182 | 0.02 | 7.262 | 0.922 | 31.08 | 1733.979 | No |
| SLV 5 | -4970 | -9828 | 182 | 0.02 | 7.262 | 0.922 | 31.08 | 1733.979 | No |
| SLV 4 | -3297 | -2972 | -94 | 0.031 | 5.592 | 0.906 | 50.529 | 956.161 | No |
| SLV 3 | -3297 | -2972 | -94 | 0.031 | 5.592 | 0.906 | 50.529 | 956.161 | No |

### Tabella dei coefficienti di sicurezza minimi

| Stato limite | Coeff.s. | Comb. | Verifica |
|---|---|---|---|
| PF_SLU | 1.038 | SLU 40 | Si |
| V_SLU | 0.142 | SLU 40 | No |
| PF_SLV | 0 | SLV 3 | No |
| V_SLV | 0 | SLV 3 | No |
| PFFP_SLV | 1.434 | SLV 15 | Si |
| R_SLV | 0.001 | SLV 7 | No |

## Maschio 167

Verifiche condotte secondo D.M. 17-01-18 (N.T.C.)

### Dati geometrici

| X ini. | Y ini. | X fin. | Y fin. | Quota i. | Quota.s | l | Sp. | h netta | h ini. | h fin. | a | a.s.,sx | a.s.,dx |
|---|---|---|---|---|---|---|---|---|---|---|---|---|---|
| -626.8 | -335.9 | -626.8 | 104.6 | L5 | L6 | 440.5 | 14 | 352 | 352 | 352 | | | |

### Caratteristiche del materiale

(Circolare 7 21-01-19 C8.5.I) Muratura in mattoni pieni e malta di calce LC2_Corti

| fb | fk | fvk0 | fmedio | τ0 | fv0 | μ | ϕ | fv,lim | E | G | FC |
|---|---|---|---|---|---|---|---|---|---|---|---|
| 60 | | | 34.5 | 0.9 | 2 | 0.58 | 0.77 | 3.25 | 32000 | 12800 | 1.2 |

### Verifica a pressoflessione nel piano secondo D.M. 17-01-18 NTC §7.8.2.2.1 in combinazioni non sismiche, γM = 3

| Comb. | Quota | N | M | σ0 | Mu | c.s. | Verifica |
|---|---|---|---|---|---|---|---|
| SLU 5 | 896 | -12860 | 312627 | 2.09 | 2107313 | 6.741 | Si |
| SLU 5 | 1248 | -6953 | 249523 | 1.13 | 1319499 | 5.288 | Si |
| SLU 68 | 896 | -17890 | 424675 | 2.9 | 2537061 | 5.974 | Si |
| SLU 68 | 1248 | -9559 | 319964 | 1.55 | 1704713 | 5.328 | Si |
| SLU 34 | 896 | -16829 | 413266 | 2.73 | 2464859 | 5.964 | Si |
| SLU 34 | 1248 | -8827 | 292326 | 1.43 | 1602495 | 5.482 | Si |
| SLU 26 | 896 | -14879 | 372096 | 2.41 | 2306437 | 6.199 | Si |
| SLU 26 | 1248 | -8005 | 280968 | 1.3 | 1482150 | 5.275 | Si |
| SLU 28 | 896 | -15894 | 391734 | 2.58 | 2393055 | 6.109 | Si |
| SLU 28 | 1248 | -8938 | 295508 | 1.45 | 1618315 | 5.476 | Si |
| SLU 70 | 896 | -18905 | 444313 | 3.07 | 2596874 | 5.845 | Si |
| SLU 70 | 1248 | -10492 | 334505 | 1.7 | 1828168 | 5.465 | Si |
| SLU 2 | 896 | -12264 | 286281 | 1.99 | 2041756 | 7.132 | Si |
| SLU 2 | 1248 | -6340 | 223357 | 1.03 | 1220089 | 5.462 | Si |
| SLU 47 | 896 | -15871 | 365206 | 2.57 | 2391249 | 6.548 | Si |
| SLU 47 | 1248 | -8507 | 288519 | 1.38 | 1556389 | 5.394 | Si |
| SLU 76 | 896 | -19840 | 465845 | 3.22 | 2643983 | 5.676 | Si |
| SLU 76 | 1248 | -10380 | 331323 | 1.68 | 1813863 | 5.475 | Si |
| SLU 23 | 896 | -14283 | 345750 | 2.32 | 2251421 | 6.512 | Si |
| SLU 23 | 1248 | -7391 | 254803 | 1.2 | 1388400 | 5.449 | Si |

### Verifica a pressoflessione nel piano secondo D.M. 17-01-18 NTC §7.8.2.2.1 in combinazioni sismiche, γM = 2

| Comb. | Quota | N | M | σ0 | Mu | c.s. | Verifica |
|---|---|---|---|---|---|---|---|
| SLV 7 | 896 | -12173 | 577390 | 1.97 | 2248049 | 3.893 | Si |
| SLV 7 | 1248 | -6199 | 75973 | 1.01 | 1252979 | 16.493 | Si |
| SLV 8 | 896 | -12173 | 577390 | 1.97 | 2248049 | 3.893 | Si |
| SLV 8 | 1248 | -6199 | 75973 | 1.01 | 1252979 | 16.493 | Si |
| SLV 12 | 896 | -12421 | 436183 | 2.01 | 2284711 | 5.238 | Si |
| SLV 12 | 1248 | -7068 | 57186 | 1.15 | 1410707 | 24.669 | Si |
| SLV 2 | 896 | -13423 | 436887 | 2.18 | 2429738 | 5.561 | Si |
| SLV 2 | 1248 | -5552 | 242940 | 0.9 | 1132811 | 4.663 | Si |
| SLV 6 | 896 | -14539 | 107782 | 2.36 | 2584357 | 23.978 | Si |
| SLV 6 | 1248 | -6764 | 299126 | 1.1 | 1356114 | 4.534 | Si |
| SLV 3 | 896 | -12713 | 577769 | 2.06 | 2327649 | 4.029 | Si |
| SLV 3 | 1248 | -5383 | 175994 | 0.87 | 1100865 | 6.255 | Si |
| SLV 11 | 896 | -12421 | 436183 | 2.01 | 2284711 | 5.238 | Si |
| SLV 11 | 1248 | -7068 | 57186 | 1.15 | 1410707 | 24.669 | Si |
| SLV 4 | 896 | -12713 | 577769 | 2.06 | 2327649 | 4.029 | Si |
| SLV 4 | 1248 | -5383 | 175994 | 0.87 | 1100865 | 6.255 | Si |
| SLV 1 | 896 | -13423 | 436887 | 2.18 | 2429738 | 5.561 | Si |
| SLV 1 | 1248 | -5552 | 242940 | 0.9 | 1132811 | 4.663 | Si |
| SLV 5 | 896 | -14539 | 107782 | 2.36 | 2584357 | 23.978 | Si |
| SLV 5 | 1248 | -6764 | 299126 | 1.1 | 1356114 | 4.534 | Si |

Verifica a taglio nel piano secondo D.M. 17-01-18 (N.T.C.) §7.8.2.2.2 con rottura per scorrimento in combinazioni non sismiche, γM = 3

| Comb. | Quota | N | V par | M | σ0 | σN | l' | fvd | Vt scorr. | Vt fess.diag. | Vt,lim | c.s. | Verifica |
|---|---|---|---|---|---|---|---|---|---|---|---|---|---|
| SLU 27 | 896 | -15943 | 1125 | 365902 | | 2.59 | 440.5 | 0.9 | 5552 | | | 4.94 | Si |
| SLU 27 | 1248 | -8963 | 1114 | 261050 | | 1.45 | 440.5 | 0.75 | 4621 | | | 4.15 | Si |
| SLU 71 | 896 | -18567 | 1257 | 407967 | | 3.01 | 440.5 | 0.96 | 5902 | | | 4.69 | Si |
| SLU 71 | 1248 | -10214 | 1243 | 288698 | | 1.66 | 440.5 | 0.78 | 4788 | | | 3.85 | Si |
| SLU 29 | 896 | -15555 | 1194 | 355388 | | 2.52 | 440.5 | 0.89 | 5500 | | | 4.61 | Si |
| SLU 29 | 1248 | -8660 | 1183 | 249701 | | 1.4 | 440.5 | 0.74 | 4581 | | | 3.87 | Si |
| SLU 72 | 896 | -18518 | 758 | 433799 | | 3 | 440.5 | 0.96 | 5895 | | | 7.78 | Si |
| SLU 72 | 1248 | -10189 | 1143 | 323157 | | 1.65 | 440.5 | 0.78 | 4785 | | | 4.19 | Si |
| SLU 37 | 896 | -17506 | 1184 | 396558 | | 2.84 | 440.5 | 0.93 | 5760 | | | 4.86 | Si |
| SLU 37 | 1248 | -9482 | 1173 | 261060 | | 1.54 | 440.5 | 0.76 | 4690 | | | 4 | Si |
| SLU 79 | 896 | -20517 | 1248 | 449138 | | 3.33 | 440.5 | 1 | 6162 | | | 4.94 | Si |
| SLU 79 | 1248 | -11036 | 1233 | 300056 | | 1.79 | 440.5 | 0.79 | 4898 | | | 3.97 | Si |
| SLU 30 | 896 | -15507 | 694 | 381220 | | 2.51 | 440.5 | 0.89 | 5494 | | | 7.91 | Si |
| SLU 30 | 1248 | -8635 | 1083 | 284160 | | 1.4 | 440.5 | 0.74 | 4577 | | | 4.23 | Si |
| SLU 50 | 896 | -16548 | 1133 | 348498 | | 2.68 | 440.5 | 0.91 | 5633 | | | 4.97 | Si |
| SLU 50 | 1248 | -9162 | 1118 | 257253 | | 1.49 | 440.5 | 0.75 | 4648 | | | 4.16 | Si |
| SLU 69 | 896 | -18954 | 1189 | 418482 | | 3.07 | 440.5 | 0.97 | 5953 | | | 5.01 | Si |
| SLU 69 | 1248 | -10516 | 1174 | 300046 | | 1.71 | 440.5 | 0.78 | 4828 | | | 4.11 | Si |
| SLU 8 | 896 | -13537 | 1069 | 295919 | | 2.2 | 440.5 | 0.85 | 5231 | | | 4.89 | Si |
| SLU 8 | 1248 | -7608 | 1058 | 218256 | | 1.23 | 440.5 | 0.72 | 4441 | | | 4.2 | Si |

Verifica a taglio nel piano secondo D.M. 17-01-18 (N.T.C.) §7.8.2.2.2 con rottura per scorrimento in combinazioni sismiche, γM = 2

| Comb. | Quota | N | V par | M | σ0 | σN | l' | fvd | Vt scorr. | Vt fess.diag. | Vt,lim | c.s. | Verifica |
|---|---|---|---|---|---|---|---|---|---|---|---|---|---|
| SLD 7 | 896 | -12943 | 3725 | 398144 | | 2.1 | 440.5 | 1.25 | 7728 | | | 2.07 | Si |
| SLD 7 | 1248 | -6622 | 2947 | 134336 | | 1.07 | 440.5 | 1.05 | 6464 | | | 2.19 | Si |
| SLV 9 | 896 | -14786 | -7607 | -33425 | | 2.4 | 440.5 | 1.31 | 8096 | | | 1.06 | Si |
| SLV 9 | 1248 | -7634 | -5827 | 280339 | | 1.24 | 440.5 | 1.08 | 6666 | | | 1.14 | Si |
| SLV 8 | 896 | -12173 | 8383 | 577390 | | 1.97 | 440.5 | 1.23 | 7574 | | | 0.9 | No, Vu<V |
| SLV 8 | 1248 | -6199 | 6579 | 75973 | | 1.01 | 440.5 | 1.03 | 6379 | | | 0.97 | No, Vu<V |
| SLD 8 | 896 | -12943 | 3725 | 398144 | | 2.1 | 440.5 | 1.25 | 7728 | | | 2.07 | Si |
| SLD 8 | 1248 | -6622 | 2947 | 134336 | | 1.07 | 440.5 | 1.05 | 6464 | | | 2.19 | Si |
| SLV 6 | 896 | -14539 | -7572 | 107782 | | 2.36 | 440.5 | 1.3 | 8047 | | | 1.06 | Si |
| SLV 6 | 1248 | -6764 | -5726 | 299126 | | 1.1 | 440.5 | 1.05 | 6492 | | | 1.13 | Si |
| SLV 11 | 896 | -12421 | 8348 | 436183 | | 2.01 | 440.5 | 1.24 | 7623 | | | 0.91 | No, Vu<V |
| SLV 11 | 1248 | -7068 | 6478 | 57186 | | 1.15 | 440.5 | 1.06 | 6553 | | | 1.01 | Si |
| SLV 5 | 896 | -14539 | -7572 | 107782 | | 2.36 | 440.5 | 1.3 | 8047 | | | 1.06 | Si |
| SLV 5 | 1248 | -6764 | -5726 | 299126 | | 1.1 | 440.5 | 1.05 | 6492 | | | 1.13 | Si |
| SLV 10 | 896 | -14786 | -7607 | -33425 | | 2.4 | 440.5 | 1.31 | 8096 | | | 1.06 | Si |
| SLV 10 | 1248 | -7634 | -5827 | 280339 | | 1.24 | 440.5 | 1.08 | 6666 | | | 1.14 | Si |
| SLV 12 | 896 | -12421 | 8348 | 436183 | | 2.01 | 440.5 | 1.24 | 7623 | | | 0.91 | No, Vu<V |
| SLV 12 | 1248 | -7068 | 6478 | 57186 | | 1.15 | 440.5 | 1.06 | 6553 | | | 1.01 | Si |
| SLV 7 | 896 | -12173 | 8383 | 577390 | | 1.97 | 440.5 | 1.23 | 7574 | | | 0.9 | No, Vu<V |
| SLV 7 | 1248 | -6199 | 6579 | 75973 | | 1.01 | 440.5 | 1.03 | 6379 | | | 0.97 | No, Vu<V |

Verifica a pressoflessione fuori piano D.M. 17-01-18 (N.T.C.)

quota 1072 Wa 0.03 denominatore 8 γM = 2

| Comb. | fd | Sa | σ0 | N | M | Mc | Coeff.s. | Verifica |
|---|---|---|---|---|---|---|---|---|
| SLV 4 | 14 | 0.46 | 1.22 | -7548 | 28959 | 47545 | 1.64 | Si |
| SLV 3 | 14 | 0.46 | 1.22 | -7548 | 28959 | 47545 | 1.64 | Si |
| SLV 2 | 14 | 0.46 | 1.28 | -7878 | 28959 | 49381 | 1.71 | Si |
| SLV 1 | 14 | 0.46 | 1.28 | -7878 | 28959 | 49381 | 1.71 | Si |
| SLV 8 | 14 | 0.46 | 1.49 | -9175 | 28959 | 56407 | 1.95 | Si |
| SLV 7 | 14 | 0.46 | 1.49 | -9175 | 28959 | 56407 | 1.95 | Si |
| SLV 5 | 14 | 0.46 | 1.67 | -10275 | 28959 | 62116 | 2.14 | Si |
| SLV 6 | 14 | 0.46 | 1.67 | -10275 | 28959 | 62116 | 2.14 | Si |
| SLV 12 | 14 | 0.46 | 1.77 | -10900 | 28959 | 65261 | 2.25 | Si |
| SLV 11 | 14 | 0.46 | 1.77 | -10900 | 28959 | 65261 | 2.25 | Si |

Verifica dei meccanismi locali di collasso con analisi cinematica lineare

forza di aggancio al piano = 0 quota mezzeria = 1072 Wa = 0.03 Ta = 0.1478

| Comb. | N top | N base | V orto | α0 | M* | e* | a0* | aLim | Verifica |
|---|---|---|---|---|---|---|---|---|---|
| SLV 7 | -6199 | -12173 | -64 | 0.017 | 9.442 | 0.917 | 26.667 | 1908.13 | No |
| SLV 8 | -6199 | -12173 | -64 | 0.017 | 9.442 | 0.917 | 26.667 | 1908.13 | No |
| SLV 5 | -6764 | -14539 | 63 | 0.017 | 10.008 | 0.92 | 26.993 | 1908.13 | No |
| SLV 6 | -6764 | -14539 | 63 | 0.017 | 10.008 | 0.92 | 26.993 | 1908.13 | No |
| SLV 12 | -7068 | -12421 | -64 | 0.017 | 10.313 | 0.922 | 27.019 | 1908.13 | No |
| SLV 11 | -7068 | -12421 | -64 | 0.017 | 10.313 | 0.922 | 27.019 | 1908.13 | No |
| SLV 9 | -7634 | -14786 | 63 | 0.017 | 10.882 | 0.925 | 27.211 | 1908.13 | No |
| SLV 10 | -7634 | -14786 | 63 | 0.017 | 10.882 | 0.925 | 27.211 | 1908.13 | No |
| SLV 13 | -8450 | -14246 | 19 | 0.022 | 11.704 | 0.929 | 34.054 | 1908.13 | No |
| SLV 14 | -8450 | -14246 | 19 | 0.022 | 11.704 | 0.929 | 34.054 | 1908.13 | No |

Tabella dei coefficienti di sicurezza minimi

| Stato limite | Coeff.s. | Comb. | Verifica |
|---|---|---|---|
| PF_SLU | 5.275 | SLU 26 | Si |
| V_SLU | 3.853 | SLU 71 | Si |
| PF_SLV | 3.893 | SLV 7 | Si |
| V_SLV | 0.904 | SLV 7 | No |
| PFFP_SLV | 1.642 | SLV 3 | Si |
| R_SLV | 0.014 | SLV 7 | No |

## Maschio 168

Verifiche condotte secondo D.M. 17-01-18 (N.T.C.)

### Dati geometrici

| X ini. | Y ini. | X fin. | Y fin. | Quota i. | Quota.s | l | Sp. | h netta | h ini. | h fin. | a | a.s.,sx | a.s.,dx |
|---|---|---|---|---|---|---|---|---|---|---|---|---|---|
| -741.3 | -335.9 | -854.8 | -335.9 | L5 | L6 | 113.5 | 28 | 352 | 352 | 352 | | | |

### Caratteristiche del materiale

(Circolare 7 21-01-19 C8.5.I) Muratura in mattoni pieni e malta di calce LC2_Corti

| fb | fk | fvk0 | fmedio | τ0 | fv0 | μ | ϕ | fv,lim | E | G | FC |
|---|---|---|---|---|---|---|---|---|---|---|---|
| 60 | | | 34.5 | 0.9 | 2 | 0.58 | 0.77 | 3.25 | 32000 | 12800 | 1.2 |

### Verifica a pressoflessione nel piano secondo D.M. 17-01-18 NTC §7.8.2.2.1 in combinazioni non sismiche, γM = 3

| Comb. | Quota | N | M | σ0 | Mu | c.s. | Verifica |
|---|---|---|---|---|---|---|---|
| SLU 81 | 986 | -6629 | 47146 | 2.09 | 279859 | 5.936 | Si |
| SLU 81 | 1166 | -5835 | -88153 | 1.84 | 256495 | 2.91 | Si |
| SLU 52 | 986 | -5271 | 52581 | 1.66 | 238218 | 4.53 | Si |
| SLU 52 | 1166 | -4876 | -83148 | 1.53 | 224576 | 2.701 | Si |
| SLU 19 | 986 | -4437 | 48143 | 1.4 | 208638 | 4.334 | Si |
| SLU 19 | 1166 | -4320 | -74745 | 1.36 | 204254 | 2.733 | Si |
| SLU 10 | 986 | -4043 | 47899 | 1.27 | 193622 | 4.042 | Si |
| SLU 10 | 1166 | -4023 | -71249 | 1.27 | 192834 | 2.706 | Si |
| SLU 31 | 986 | -4534 | 50975 | 1.43 | 212238 | 4.164 | Si |
| SLU 31 | 1166 | -4624 | -77730 | 1.46 | 215553 | 2.773 | Si |
| SLU 40 | 986 | -4927 | 51218 | 1.55 | 226408 | 4.42 | Si |
| SLU 40 | 1166 | -4921 | -81226 | 1.55 | 226190 | 2.785 | Si |
| SLU 82 | 986 | -6155 | 55900 | 1.94 | 266246 | 4.763 | Si |
| SLU 82 | 1166 | -5774 | -93125 | 1.82 | 254576 | 2.734 | Si |
| SLU 61 | 986 | -5664 | 52825 | 1.78 | 251117 | 4.754 | Si |
| SLU 61 | 1166 | -5172 | -86645 | 1.63 | 234886 | 2.711 | Si |
| SLU 73 | 986 | -5761 | 55657 | 1.81 | 254194 | 4.567 | Si |
| SLU 73 | 1166 | -5477 | -89629 | 1.72 | 245048 | 2.734 | Si |
| SLU 60 | 986 | -6138 | 44070 | 1.93 | 265749 | 6.03 | Si |
| SLU 60 | 1166 | -5234 | -81673 | 1.65 | 236967 | 2.901 | Si |

### Verifica a pressoflessione nel piano secondo D.M. 17-01-18 NTC §7.8.2.2.1 in combinazioni sismiche, γM = 2

| Comb. | Quota | N | M | σ0 | Mu | c.s. | Verifica |
|---|---|---|---|---|---|---|---|
| SLV 16 | 986 | -4969 | -280053 | 1.56 | 245889 | 0.878 | No, M>Mu |
| SLV 16 | 1166 | -456 | 170824 | 0 | 0 | 0 | No, e>l/2 |
| SLV 4 | 986 | -493 | 326940 | 0 | 0 | 0 | No, e>l/2 |
| SLV 4 | 1166 | -5090 | -235507 | 1.6 | 251007 | 1.066 | Si |
| SLV 2 | 986 | -4720 | 328161 | 0 | 0 | 0 | No, e>l/2 |
| SLV 2 | 1166 | -7285 | -277750 | 2.29 | 335872 | 1.209 | Si |
| SLV 8 | 986 | 2872 | 113069 | 0 | 0 | 0 | No, Trazione |
| SLV 8 | 1166 | -907 | -44008 | 0.29 | 50292 | 1.143 | Si |
| SLV 11 | 986 | 1530 | -69029 | 0 | 0 | 0 | No, Trazione |
| SLV 11 | 1166 | 483 | 77892 | 0 | 0 | 0 | No, Trazione |
| SLV 3 | 986 | -493 | 326940 | 0 | 0 | 0 | No, e>l/2 |
| SLV 3 | 1166 | -5090 | -235507 | 1.6 | 251007 | 1.066 | Si |
| SLV 1 | 986 | -4720 | 328161 | 0 | 0 | 0 | No, e>l/2 |
| SLV 1 | 1166 | -7285 | -277750 | 2.29 | 335872 | 1.209 | Si |
| SLV 7 | 986 | 2872 | 113069 | 0 | 0 | 0 | No, Trazione |
| SLV 7 | 1166 | -907 | -44008 | 0.29 | 50292 | 1.143 | Si |
| SLV 12 | 986 | 1530 | -69029 | 0 | 0 | 0 | No, Trazione |
| SLV 12 | 1166 | 483 | 77892 | 0 | 0 | 0 | No, Trazione |
| SLV 15 | 986 | -4969 | -280053 | 1.56 | 245889 | 0.878 | No, M>Mu |
| SLV 15 | 1166 | -456 | 170824 | 0 | 0 | 0 | No, e>l/2 |

### Verifica a taglio nel piano secondo D.M. 17-01-18 (N.T.C.) §7.8.2.2.2 con rottura per scorrimento in combinazioni non sismiche, γM = 3

| Comb. | Quota | N | V par | M | σ0 | σN | l' | fvd | Vt scorr. | Vt fess.diag. | Vt,lim | c.s. | Verifica |
|---|---|---|---|---|---|---|---|---|---|---|---|---|---|
| SLU 19 | 986 | -4437 | 913 | 48143 | | 1.4 | 113.5 | 0.74 | 2357 | | | 2.58 | Si |
| SLU 19 | 1166 | -4320 | -1 | -74745 | | 1.36 | 113.5 | 0.74 | 2342 | | | 1000 | Si |
| SLU 31 | 986 | -4534 | 880 | 50975 | | 1.43 | 113.5 | 0.75 | 2370 | | | 2.69 | Si |
| SLU 31 | 1166 | -4624 | 21 | -77730 | | 1.46 | 113.5 | 0.75 | 2382 | | | 115.16 | Si |
| SLU 60 | 986 | -6138 | 968 | 44070 | | 1.93 | 113.5 | 0.81 | 2584 | | | 2.67 | Si |
| SLU 60 | 1166 | -5234 | -51 | -81673 | | 1.65 | 113.5 | 0.78 | 2463 | | | 48.51 | Si |
| SLU 40 | 986 | -4927 | 986 | 51218 | | 1.55 | 113.5 | 0.76 | 2423 | | | 2.46 | Si |
| SLU 40 | 1166 | -4921 | -46 | -81226 | | 1.55 | 113.5 | 0.76 | 2422 | | | 52.82 | Si |
| SLU 81 | 986 | -6629 | 1041 | 47146 | | 2.09 | 113.5 | 0.83 | 2649 | | | 2.54 | Si |
| SLU 81 | 1166 | -5835 | -96 | -88153 | | 1.84 | 113.5 | 0.8 | 2544 | | | 26.54 | Si |
| SLU 61 | 986 | -5664 | 1013 | 52825 | | 1.78 | 113.5 | 0.79 | 2521 | | | 2.49 | Si |
| SLU 61 | 1166 | -5172 | 16 | -86645 | | 1.63 | 113.5 | 0.77 | 2455 | | | 151.54 | Si |
| SLU 39 | 986 | -5401 | 941 | 42464 | | 1.7 | 113.5 | 0.78 | 2486 | | | 2.64 | Si |
| SLU 39 | 1166 | -4983 | -113 | -76254 | | 1.57 | 113.5 | 0.76 | 2430 | | | 21.54 | Si |
| SLU 82 | 986 | -6155 | 1086 | 55900 | | 1.94 | 113.5 | 0.81 | 2586 | | | 2.38 | Si |
| SLU 82 | 1166 | -5774 | -29 | -93125 | | 1.82 | 113.5 | 0.8 | 2535 | | | 87.87 | Si |
| SLU 52 | 986 | -5271 | 907 | 52581 | | 1.66 | 113.5 | 0.78 | 2468 | | | 2.72 | Si |
| SLU 52 | 1166 | -4876 | 83 | -83148 | | 1.53 | 113.5 | 0.76 | 2416 | | | 29.2 | Si |
| SLU 73 | 986 | -5761 | 980 | 55657 | | 1.81 | 113.5 | 0.8 | 2534 | | | 2.59 | Si |
| SLU 73 | 1166 | -5477 | 38 | -89629 | | 1.72 | 113.5 | 0.79 | 2496 | | | 66.24 | Si |

### Verifica a taglio nel piano secondo D.M. 17-01-18 (N.T.C.) §7.8.2.2.2 con rottura per scorrimento in combinazioni sismiche, γM = 2

| Comb. | Quota | N | V par | M | σ0 | σN | l' | fvd | Vt scorr. | Vt fess.diag. | Vt,lim | c.s. | Verifica |
|---|---|---|---|---|---|---|---|---|---|---|---|---|---|
| SLV 11 | 986 | 1530 | -1665 | -69029 | | 0 | 0 | 0.83 | 0 | | | 0 | No, Vu<V |
| SLV 11 | 1166 | 483 | -403 | 77892 | | 0 | 0 | 0.83 | 0 | | | 0 | No, Vu<V |
| SLV 8 | 986 | 2872 | 1481 | 113069 | | 0 | 0 | 0.83 | 0 | | | 0 | No, Vu<V |

| Comb. | Quota | N | V par | M | σ0 | σN | l' | fvd | Vt scorr. | Vt fess.diag. | Vt,lim | c.s. | Verifica |
|---|---|---|---|---|---|---|---|---|---|---|---|---|---|
| SLV 8 | 1166 | -907 | 560 | -44008 | | 1.31 | 24.76 | 1.1 | 759 | | | 1.35 | Si |
| SLV 1 | 986 | -4720 | 5958 | 328161 | | 0 | 0 | 0.83 | 0 | | | 0 | No, Vu<V |
| SLV 1 | 1166 | -7285 | 1553 | -277750 | | 4.66 | 55.88 | 1.63 | 2542 | | | 1.64 | Si |
| SLV 4 | 986 | -493 | 5586 | 326940 | | 0 | 0 | 0.83 | 0 | | | 0 | No, Vu<V |
| SLV 4 | 1166 | -5090 | 1614 | -235507 | | 5.78 | 31.45 | 1.63 | 1431 | | | 0.89 | No, Vu<V |
| SLV 3 | 986 | -493 | 5586 | 326940 | | 0 | 0 | 0.83 | 0 | | | 0 | No, Vu<V |
| SLV 3 | 1166 | -5090 | 1614 | -235507 | | 5.78 | 31.45 | 1.63 | 1431 | | | 0.89 | No, Vu<V |
| SLV 15 | 986 | -4969 | -4903 | -280053 | | 153.5 | 1.16 | 1.63 | 53 | | | 0.01 | No, Vu<V |
| SLV 15 | 1166 | -456 | -1598 | 170824 | | 0 | 0 | 0.83 | 0 | | | 0 | No, Vu<V |
| SLV 16 | 986 | -4969 | -4903 | -280053 | | 153.5 | 1.16 | 1.63 | 53 | | | 0.01 | No, Vu<V |
| SLV 16 | 1166 | -456 | -1598 | 170824 | | 0 | 0 | 0.83 | 0 | | | 0 | No, Vu<V |
| SLV 2 | 986 | -4720 | 5958 | 328161 | | 0 | 0 | 0.83 | 0 | | | 0 | No, Vu<V |
| SLV 2 | 1166 | -7285 | 1553 | -277750 | | 4.66 | 55.88 | 1.63 | 2542 | | | 1.64 | Si |
| SLV 12 | 986 | 1530 | -1665 | -69029 | | 0 | 0 | 0.83 | 0 | | | 0 | No, Vu<V |
| SLV 12 | 1166 | 483 | -403 | 77892 | | 0 | 0 | 0.83 | 0 | | | 0 | No, Vu<V |
| SLV 7 | 986 | 2872 | 1481 | 113069 | | 0 | 0 | 0.83 | 0 | | | 0 | No, Vu<V |
| SLV 7 | 1166 | -907 | 560 | -44008 | | 1.31 | 24.76 | 1.1 | 759 | | | 1.35 | Si |

### Verifica a pressoflessione fuori piano D.M. 17-01-18 (N.T.C.)

quota 1072 Wa 0.05 denominatore 8 γM = 2

| Comb. | fd | Sa | σ0 | N | M | Mc | Coeff.s. | Verifica |
|---|---|---|---|---|---|---|---|---|
| SLV 3 | 14 | 0.46 | 0 | -947 | 13950 | 0 | 0 | No, e>t/2 |
| SLV 7 | 14 | 0.46 | 0 | 550 | 13950 | 0 | 0 | No, Trazione |
| SLV 12 | 14 | 0.46 | 0 | -771 | 13950 | 0 | 0 | No, e>t/2 |
| SLV 4 | 14 | 0.46 | 0 | -947 | 13950 | 0 | 0 | No, e>t/2 |
| SLV 11 | 14 | 0.46 | 0 | -771 | 13950 | 0 | 0 | No, e>t/2 |
| SLV 8 | 14 | 0.46 | 0 | 550 | 13950 | 0 | 0 | No, Trazione |
| SLV 2 | 14 | 0.46 | 1.12 | -3552 | 13950 | 45181 | 3.24 | Si |
| SLV 1 | 14 | 0.46 | 1.12 | -3552 | 13950 | 45181 | 3.24 | Si |
| SLV 15 | 14 | 0.46 | 1.68 | -5351 | 13950 | 64590 | 4.63 | Si |
| SLV 16 | 14 | 0.46 | 1.68 | -5351 | 13950 | 64590 | 4.63 | Si |

### Verifica dei meccanismi locali di collasso con analisi cinematica lineare

forza di aggancio al piano = 0 quota mezzeria = 1072 Wa = 0.05 Ta = 0.0739

| Comb. | N top | N base | V orto | α0 | M* | e* | a0* | aLim | Verifica |
|---|---|---|---|---|---|---|---|---|---|
| SLV 7 | -315 | -280 | -111 | 0 | 2.176 | 0.917 | 0 | 1733.979 | No |
| SLV 8 | -315 | -280 | -111 | 0 | 2.176 | 0.917 | 0 | 1733.979 | No |
| SLV 11 | 799 | 1211 | -68 | 0 | 0 | 0 | 0 | 1733.979 | No, Trazione |
| SLV 12 | 799 | 1211 | -68 | 0 | 0 | 0 | 0 | 1733.979 | No, Trazione |
| SLV 9 | -5655 | -9583 | 107 | 0.03 | 7.346 | 0.94 | 45.939 | 1733.979 | No |
| SLV 10 | -5655 | -9583 | 107 | 0.03 | 7.346 | 0.94 | 45.939 | 1733.979 | No |
| SLV 5 | -6769 | -11074 | 64 | 0.037 | 8.475 | 0.947 | 56.318 | 1733.979 | No |
| SLV 6 | -6769 | -11074 | 64 | 0.037 | 8.475 | 0.947 | 56.318 | 1733.979 | No |
| SLV 13 | -2096 | -4065 | 96 | 0.022 | 3.776 | 0.901 | 35.052 | 956.161 | No |
| SLV 14 | -2096 | -4065 | 96 | 0.022 | 3.776 | 0.901 | 35.052 | 956.161 | No |

### Tabella dei coefficienti di sicurezza minimi

| Stato limite | Coeff.s. | Comb. | Verifica |
|---|---|---|---|
| PF_SLU | 2.701 | SLU 52 | Si |
| V_SLU | 2.382 | SLU 82 | Si |
| PF_SLV | 0 | SLV 12 | No |
| V_SLV | 0 | SLV 1 | No |
| PFFP_SLV | 0 | SLV 8 | No |
| R_SLV | 0 | SLV 12 | No |

## Maschio 169

Verifiche condotte secondo D.M. 17-01-18 (N.T.C.)

### Dati geometrici

| X ini. | Y ini. | X fin. | Y fin. | Quota i. | Quota.s | l | Sp. | h netta | h ini. | h fin. | a | a.s.,sx | a.s.,dx |
|---|---|---|---|---|---|---|---|---|---|---|---|---|---|
| -515.8 | 104.6 | -515.8 | 581.1 | L5 | L6 | 476.5 | 14 | 352 | 352 | 352 | | | |

### Caratteristiche del materiale

(Circolare 7 21-01-19 C8.5.I) Muratura in mattoni pieni e malta di calce LC2_Corti

| fb | fk | fvk0 | fmedio | τ0 | fv0 | μ | ϕ | fv,lim | E | G | FC |
|---|---|---|---|---|---|---|---|---|---|---|---|
| 60 | | | 34.5 | 0.9 | 2 | 0.58 | 0.77 | 3.25 | 32000 | 12800 | 1.2 |

### Verifica a pressoflessione nel piano secondo D.M. 17-01-18 NTC §7.8.2.2.1 in combinazioni non sismiche, γM = 3

| Comb. | Quota | N | M | σ0 | Mu | c.s. | Verifica |
|---|---|---|---|---|---|---|---|
| SLU 27 | 896 | -24116 | 254407 | 3.62 | 3195782 | 12.562 | Si |
| SLU 27 | 1248 | -16959 | 644296 | 2.54 | 2779477 | 4.314 | Si |
| SLU 37 | 896 | -25973 | 233057 | 3.89 | 3230394 | 13.861 | Si |
| SLU 37 | 1248 | -17861 | 674926 | 2.68 | 2856714 | 4.233 | Si |
| SLU 9 | 896 | -21048 | 267646 | 3.16 | 3072314 | 11.479 | Si |
| SLU 9 | 1248 | -15052 | 617676 | 2.26 | 2592771 | 4.198 | Si |
| SLU 72 | 896 | -27464 | 234263 | 4.12 | 3236299 | 13.815 | Si |
| SLU 72 | 1248 | -18940 | 677531 | 2.84 | 2939654 | 4.339 | Si |
| SLU 8 | 896 | -21048 | 289186 | 3.16 | 3072342 | 10.624 | Si |
| SLU 8 | 1248 | -15025 | 634643 | 2.25 | 2589968 | 4.081 | Si |
| SLU 30 | 896 | -24237 | 297096 | 3.63 | 3198939 | 10.767 | Si |
| SLU 30 | 1248 | -17258 | 709765 | 2.59 | 2805924 | 3.953 | Si |
| SLU 29 | 896 | -24237 | 318636 | 3.63 | 3198952 | 10.04 | Si |
| SLU 29 | 1248 | -17232 | 726732 | 2.58 | 2803632 | 3.858 | Si |

| Comb. | Quota | N | M | σ0 | Mu | c.s. | Verifica |
|---|---|---|---|---|---|---|---|
| SLU 71 | 896 | -27464 | 255804 | 4.12 | 3236298 | 12.651 | Si |
| SLU 71 | 1248 | -18913 | 694498 | 2.84 | 2937749 | 4.23 | Si |
| SLU 38 | 896 | -25973 | 211517 | 3.89 | 3230388 | 15.273 | Si |
| SLU 38 | 1248 | -17887 | 657959 | 2.68 | 2858861 | 4.345 | Si |
| SLU 28 | 896 | -24116 | 232866 | 3.62 | 3195768 | 13.724 | Si |
| SLU 28 | 1248 | -16985 | 627329 | 2.55 | 2781833 | 4.434 | Si |

Verifica a pressoflessione nel piano secondo D.M. 17-01-18 NTC §7.8.2.2.1 in combinazioni sismiche, γM = 2

| Comb. | Quota | N | M | σ0 | Mu | c.s. | Verifica |
|---|---|---|---|---|---|---|---|
| SLV 1 | 896 | -12721 | -496660 | 1.91 | 2557750 | 5.15 | Si |
| SLV 1 | 1248 | -7901 | -18087 | 1.18 | 1699979 | 93.99 | Si |
| SLD 5 | 896 | -13586 | -419127 | 2.04 | 2697328 | 6.436 | Si |
| SLD 5 | 1248 | -8036 | 435 | 1.2 | 1725768 | 1000 | Si |
| SLV 2 | 896 | -12721 | -496660 | 1.91 | 2557750 | 5.15 | Si |
| SLV 2 | 1248 | -7901 | -18087 | 1.18 | 1699979 | 93.99 | Si |
| SLD 9 | 896 | -14010 | -378501 | 2.1 | 2764137 | 7.303 | Si |
| SLD 9 | 1248 | -8143 | 5731 | 1.22 | 1746309 | 304.735 | Si |
| SLV 10 | 896 | -11540 | -632795 | 1.73 | 2360188 | 3.73 | Si |
| SLV 10 | 1248 | -7054 | -2036 | 1.06 | 1535105 | 754.116 | Si |
| SLV 5 | 896 | -10545 | -727774 | 1.58 | 2187331 | 3.006 | Si |
| SLV 5 | 1248 | -6795 | -15243 | 1.02 | 1483908 | 97.352 | Si |
| SLV 6 | 896 | -10545 | -727774 | 1.58 | 2187331 | 3.006 | Si |
| SLV 6 | 1248 | -6795 | -15243 | 1.02 | 1483908 | 97.352 | Si |
| SLD 6 | 896 | -13586 | -419127 | 2.04 | 2697328 | 6.436 | Si |
| SLD 6 | 1248 | -8036 | 435 | 1.2 | 1725768 | 1000 | Si |
| SLD 10 | 896 | -14010 | -378501 | 2.1 | 2764137 | 7.303 | Si |
| SLD 10 | 1248 | -8143 | 5731 | 1.22 | 1746309 | 304.735 | Si |
| SLV 9 | 896 | -11540 | -632795 | 1.73 | 2360188 | 3.73 | Si |
| SLV 9 | 1248 | -7054 | -2036 | 1.06 | 1535105 | 754.116 | Si |

Verifica a taglio nel piano secondo D.M. 17-01-18 (N.T.C.) §7.8.2.2.2 con rottura per scorrimento in combinazioni non sismiche, γM = 3

| Comb. | Quota | N | V par | M | σ0 | σN | l' | fvd | Vt scorr. | Vt fess.diag. | Vt,lim | c.s. | Verifica |
|---|---|---|---|---|---|---|---|---|---|---|---|---|---|
| SLU 79 | 896 | -29201 | 272 | 170225 | | 4.38 | 476.5 | 1.08 | 7227 | | | 26.55 | Si |
| SLU 79 | 1248 | -19542 | 1147 | 642693 | | 2.93 | 476.5 | 0.95 | 6312 | | | 5.5 | Si |
| SLU 30 | 896 | -24237 | 126 | 297096 | | 3.63 | 476.5 | 1.04 | 6938 | | | 55.12 | Si |
| SLU 30 | 1248 | -17258 | 1133 | 709765 | | 2.59 | 476.5 | 0.9 | 6007 | | | 5.3 | Si |
| SLU 35 | 896 | -25853 | 420 | 168828 | | 3.88 | 476.5 | 1.07 | 7153 | | | 17.01 | Si |
| SLU 35 | 1248 | -17588 | 1229 | 592491 | | 2.64 | 476.5 | 0.91 | 6051 | | | 4.92 | Si |
| SLU 37 | 896 | -25973 | 401 | 233057 | | 3.89 | 476.5 | 1.07 | 7169 | | | 17.88 | Si |
| SLU 37 | 1248 | -17861 | 1301 | 674926 | | 2.68 | 476.5 | 0.91 | 6088 | | | 4.68 | Si |
| SLU 28 | 896 | -24116 | 145 | 232866 | | 3.62 | 476.5 | 1.04 | 6922 | | | 47.63 | Si |
| SLU 28 | 1248 | -16985 | 1061 | 627329 | | 2.55 | 476.5 | 0.9 | 5971 | | | 5.63 | Si |
| SLU 71 | 896 | -27464 | 84 | 255804 | | 4.12 | 476.5 | 1.08 | 7227 | | | 85.86 | Si |
| SLU 71 | 1248 | -18913 | 1097 | 694498 | | 2.84 | 476.5 | 0.93 | 6228 | | | 5.68 | Si |
| SLU 29 | 896 | -24237 | 213 | 318636 | | 3.63 | 476.5 | 1.04 | 6938 | | | 32.59 | Si |
| SLU 29 | 1248 | -17232 | 1251 | 726732 | | 2.58 | 476.5 | 0.9 | 6004 | | | 4.8 | Si |
| SLU 36 | 896 | -25852 | 333 | 147287 | | 3.88 | 476.5 | 1.07 | 7153 | | | 21.46 | Si |
| SLU 36 | 1248 | -17614 | 1111 | 575523 | | 2.64 | 476.5 | 0.91 | 6055 | | | 5.45 | Si |
| SLU 27 | 896 | -24116 | 232 | 254407 | | 3.62 | 476.5 | 1.04 | 6922 | | | 29.79 | Si |
| SLU 27 | 1248 | -16959 | 1179 | 644296 | | 2.54 | 476.5 | 0.89 | 5967 | | | 5.06 | Si |
| SLU 38 | 896 | -25973 | 314 | 211517 | | 3.89 | 476.5 | 1.07 | 7169 | | | 22.84 | Si |
| SLU 38 | 1248 | -17887 | 1183 | 657959 | | 2.68 | 476.5 | 0.91 | 6091 | | | 5.15 | Si |

Verifica a taglio nel piano secondo D.M. 17-01-18 (N.T.C.) §7.8.2.2.2 con rottura per scorrimento in combinazioni sismiche, γM = 2

| Comb. | Quota | N | V par | M | σ0 | σN | l' | fvd | Vt scorr. | Vt fess.diag. | Vt,lim | c.s. | Verifica |
|---|---|---|---|---|---|---|---|---|---|---|---|---|---|
| SLV 9 | 896 | -11540 | -6831 | -632795 | | 1.73 | 476.5 | 1.18 | 7867 | | | 1.15 | Si |
| SLV 9 | 1248 | -7054 | -6379 | -2036 | | 1.06 | 476.5 | 1.04 | 6970 | | | 1.09 | Si |
| SLV 11 | 896 | -21074 | 8967 | 344132 | | 3.16 | 476.5 | 1.47 | 9774 | | | 1.09 | Si |
| SLV 11 | 1248 | -11078 | 7540 | 33862 | | 1.66 | 476.5 | 1.17 | 7775 | | | 1.03 | Si |
| SLV 8 | 896 | -20079 | 6612 | 249152 | | 3.01 | 476.5 | 1.44 | 9575 | | | 1.45 | Si |
| SLV 8 | 1248 | -10819 | 6187 | 20655 | | 1.62 | 476.5 | 1.16 | 7723 | | | 1.25 | Si |
| SLV 5 | 896 | -10545 | -9186 | -727774 | | 1.58 | 476.5 | 1.15 | 7668 | | | 0.83 | No, Vu<V |
| SLV 5 | 1248 | -6795 | -7732 | -15243 | | 1.02 | 476.5 | 1.04 | 6918 | | | 0.89 | No, Vu<V |
| SLV 6 | 896 | -10545 | -9186 | -727774 | | 1.58 | 476.5 | 1.15 | 7668 | | | 0.83 | No, Vu<V |
| SLV 6 | 1248 | -6795 | -7732 | -15243 | | 1.02 | 476.5 | 1.04 | 6918 | | | 0.89 | No, Vu<V |
| SLV 7 | 896 | -20079 | 6612 | 249152 | | 3.01 | 476.5 | 1.44 | 9575 | | | 1.45 | Si |
| SLV 7 | 1248 | -10819 | 6187 | 20655 | | 1.62 | 476.5 | 1.16 | 7723 | | | 1.25 | Si |
| SLV 12 | 896 | -21074 | 8967 | 344132 | | 3.16 | 476.5 | 1.47 | 9774 | | | 1.09 | Si |
| SLV 12 | 1248 | -11078 | 7540 | 33862 | | 1.66 | 476.5 | 1.17 | 7775 | | | 1.03 | Si |
| SLV 2 | 896 | -12721 | -6403 | -496660 | | 1.91 | 476.5 | 1.21 | 8103 | | | 1.27 | Si |
| SLV 2 | 1248 | -7901 | -4439 | -18087 | | 1.18 | 476.5 | 1.07 | 7139 | | | 1.61 | Si |
| SLV 1 | 896 | -12721 | -6403 | -496660 | | 1.91 | 476.5 | 1.21 | 8103 | | | 1.27 | Si |
| SLV 1 | 1248 | -7901 | -4439 | -18087 | | 1.18 | 476.5 | 1.07 | 7139 | | | 1.61 | Si |
| SLV 10 | 896 | -11540 | -6831 | -632795 | | 1.73 | 476.5 | 1.18 | 7867 | | | 1.15 | Si |
| SLV 10 | 1248 | -7054 | -6379 | -2036 | | 1.06 | 476.5 | 1.04 | 6970 | | | 1.09 | Si |

Verifica a pressoflessione fuori piano D.M. 17-01-18 (N.T.C.)

quota 1072 Wa 0.03 denominatore 8 γM = 2

| Comb. | fd | Sa | σ0 | N | M | Mc | Coeff.s. | Verifica |
|---|---|---|---|---|---|---|---|---|
| SLV 9 | 14 | 0.46 | 1.3 | -8696 | 31325 | 54380 | 1.74 | Si |
| SLV 10 | 14 | 0.46 | 1.3 | -8696 | 31325 | 54380 | 1.74 | Si |
| SLV 6 | 14 | 0.46 | 1.34 | -8934 | 31325 | 55685 | 1.78 | Si |
| SLV 5 | 14 | 0.46 | 1.34 | -8934 | 31325 | 55685 | 1.78 | Si |
| SLV 14 | 14 | 0.46 | 1.64 | -10948 | 31325 | 66344 | 2.12 | Si |
| SLV 13 | 14 | 0.46 | 1.64 | -10948 | 31325 | 66344 | 2.12 | Si |
| SLV 1 | 14 | 0.46 | 1.76 | -11741 | 31325 | 70350 | 2.25 | Si |
| SLV 2 | 14 | 0.46 | 1.76 | -11741 | 31325 | 70350 | 2.25 | Si |

| Comb. | fd | Sa | σ0 | N | M | Mc | Coeff.s. | Verifica |
|---|---|---|---|---|---|---|---|---|
| SLV 15 | 14 | 0.46 | 1.97 | -13116 | 31325 | 77041 | 2.46 | Si |
| SLV 16 | 14 | 0.46 | 1.97 | -13116 | 31325 | 77041 | 2.46 | Si |

### Verifica dei meccanismi locali di collasso con analisi cinematica lineare

forza di aggancio al piano = 0 quota mezzeria = 1072 Wa = 0.03 Ta = 0.1478

| Comb. | N top | N base | V orto | α0 | M* | e* | a0* | aLim | Verifica |
|---|---|---|---|---|---|---|---|---|---|
| SLV 7 | -10819 | -20079 | 11 | 0.022 | 14.356 | 0.936 | 34.655 | 1908.13 | No |
| SLV 8 | -10819 | -20079 | 11 | 0.022 | 14.356 | 0.936 | 34.655 | 1908.13 | No |
| SLV 12 | -11078 | -21074 | 7 | 0.023 | 14.617 | 0.937 | 34.941 | 1908.13 | No |
| SLV 11 | -11078 | -21074 | 7 | 0.023 | 14.617 | 0.937 | 34.941 | 1908.13 | No |
| SLV 3 | -9108 | -15581 | 8 | 0.023 | 12.628 | 0.929 | 35.846 | 1908.13 | No |
| SLV 4 | -9108 | -15581 | 8 | 0.023 | 12.628 | 0.929 | 35.846 | 1908.13 | No |
| SLV 14 | -8764 | -16038 | -9 | 0.023 | 12.281 | 0.927 | 35.97 | 1908.13 | No |
| SLV 13 | -8764 | -16038 | -9 | 0.023 | 12.281 | 0.927 | 35.97 | 1908.13 | No |
| SLV 16 | -9971 | -18898 | -3 | 0.023 | 13.499 | 0.933 | 35.999 | 1908.13 | No |
| SLV 15 | -9971 | -18898 | -3 | 0.023 | 13.499 | 0.933 | 35.999 | 1908.13 | No |

### Tabella dei coefficienti di sicurezza minimi

| Stato limite | Coeff.s. | Comb. | Verifica |
|---|---|---|---|
| PF_SLU | 3.858 | SLU 29 | Si |
| V_SLU | 4.679 | SLU 37 | Si |
| PF_SLV | 3.006 | SLV 5 | Si |
| V_SLV | 0.835 | SLV 5 | No |
| PFFP_SLV | 1.736 | SLV 9 | Si |
| R_SLV | 0.018 | SLV 7 | No |

## Maschio 170

Verifiche condotte secondo D.M. 17-01-18 (N.T.C.)

### Dati geometrici

| X ini. | Y ini. | X fin. | Y fin. | Quota i. | Quota.s | l | Sp. | h netta | h ini. | h fin. | a | a.s.,sx | a.s.,dx |
|---|---|---|---|---|---|---|---|---|---|---|---|---|---|
| -515.8 | 581.1 | -515.8 | 600.6 | L5 | L6 | 19.5 | 28 | 352 | 352 | 352 | | | |

### Caratteristiche del materiale

(Circolare 7 21-01-19 C8.5.I) Muratura in mattoni pieni e malta di calce LC2_Corti

| fb | fk | fvk0 | fmedio | τ0 | fv0 | μ | ϕ | fv,lim | E | G | FC |
|---|---|---|---|---|---|---|---|---|---|---|---|
| 60 | | | 34.5 | 0.9 | 2 | 0.58 | 0.77 | 3.25 | 32000 | 12800 | 1.2 |

### Verifica a pressoflessione nel piano secondo D.M. 17-01-18 NTC §7.8.2.2.1 in combinazioni non sismiche, γM = 3

| Comb. | Quota | N | M | σ0 | Mu | c.s. | Verifica |
|---|---|---|---|---|---|---|---|
| SLU 36 | 1096 | -4333 | 9696 | 7.94 | 1088 | 0.112 | No, M>Mu |
| SLU 36 | 1176 | -4496 | 14753 | 8.23 | 0 | 0 | No, Rottura per schiacciamento |
| SLU 30 | 1096 | -4635 | 11016 | 8.49 | 0 | 0 | No, Rottura per schiacciamento |
| SLU 30 | 1176 | -4744 | 15173 | 8.69 | 0 | 0 | No, Rottura per schiacciamento |
| SLU 71 | 1096 | -4894 | 11504 | 8.96 | 0 | 0 | No, Rottura per schiacciamento |
| SLU 71 | 1176 | -5000 | 16001 | 9.16 | 0 | 0 | No, Rottura per schiacciamento |
| SLU 72 | 1096 | -4845 | 11309 | 8.87 | 0 | 0 | No, Rottura per schiacciamento |
| SLU 72 | 1176 | -4957 | 15915 | 9.08 | 0 | 0 | No, Rottura per schiacciamento |
| SLU 29 | 1096 | -4684 | 11212 | 8.58 | 0 | 0 | No, Rottura per schiacciamento |
| SLU 29 | 1176 | -4787 | 15259 | 8.77 | 0 | 0 | No, Rottura per schiacciamento |
| SLU 27 | 1096 | -4448 | 10500 | 8.15 | 0 | 0 | No, Rottura per schiacciamento |
| SLU 27 | 1176 | -4557 | 14602 | 8.35 | 0 | 0 | No, Rottura per schiacciamento |
| SLU 70 | 1096 | -4608 | 10597 | 8.44 | 0 | 0 | No, Rottura per schiacciamento |
| SLU 70 | 1176 | -4726 | 15258 | 8.66 | 0 | 0 | No, Rottura per schiacciamento |
| SLU 38 | 1096 | -4569 | 10407 | 8.37 | 0 | 0 | No, Rottura per schiacciamento |
| SLU 38 | 1176 | -4727 | 15410 | 8.66 | 0 | 0 | No, Rottura per schiacciamento |
| SLU 69 | 1096 | -4657 | 10793 | 8.53 | 0 | 0 | No, Rottura per schiacciamento |
| SLU 69 | 1176 | -4769 | 15344 | 8.74 | 0 | 0 | No, Rottura per schiacciamento |
| SLU 28 | 1096 | -4399 | 10305 | 8.06 | 471 | 0.046 | No, M>Mu |
| SLU 28 | 1176 | -4514 | 14516 | 8.27 | 0 | 0 | No, Rottura per schiacciamento |

### Verifica a pressoflessione nel piano secondo D.M. 17-01-18 NTC §7.8.2.2.1 in combinazioni sismiche, γM = 2

| Comb. | Quota | N | M | σ0 | Mu | c.s. | Verifica |
|---|---|---|---|---|---|---|---|
| SLD 5 | 1096 | -917 | -449 | 1.68 | 7713 | 17.192 | Si |
| SLD 5 | 1176 | -1170 | 5531 | 2.14 | 9404 | 1.7 | Si |
| SLV 11 | 1096 | -2890 | 9809 | 5.29 | 15972 | 1.628 | Si |

| Comb. | Quota | N | M | σ0 | Mu | c.s. | Verifica |
|---|---|---|---|---|---|---|---|
| SLV 11 | 1176 | -2553 | 5362 | 4.68 | 15366 | 2.866 | Si |
| SLV 6 | 1096 | -115 | -4583 | 0 | 0 | 0 | No, e>l/2 |
| SLV 6 | 1176 | -602 | 5548 | 1.1 | 5338 | 0.962 | No, M>Mu |
| SLV 9 | 1096 | -414 | -3083 | 0.76 | 3790 | 1.229 | Si |
| SLV 9 | 1176 | -826 | 5649 | 1.51 | 7058 | 1.249 | Si |
| SLV 2 | 1096 | -633 | -1820 | 1.16 | 5583 | 3.067 | Si |
| SLV 2 | 1176 | -944 | 5329 | 1.73 | 7904 | 1.483 | Si |
| SLV 12 | 1096 | -2890 | 9809 | 5.29 | 15972 | 1.628 | Si |
| SLV 12 | 1176 | -2553 | 5362 | 4.68 | 15366 | 2.866 | Si |
| SLV 1 | 1096 | -633 | -1820 | 1.16 | 5583 | 3.067 | Si |
| SLV 1 | 1176 | -944 | 5329 | 1.73 | 7904 | 1.483 | Si |
| SLV 10 | 1096 | -414 | -3083 | 0.76 | 3790 | 1.229 | Si |
| SLV 10 | 1176 | -826 | 5649 | 1.51 | 7058 | 1.249 | Si |
| SLV 5 | 1096 | -115 | -4583 | 0 | 0 | 0 | No, e>l/2 |
| SLV 5 | 1176 | -602 | 5548 | 1.1 | 5338 | 0.962 | No, M>Mu |
| SLD 6 | 1096 | -917 | -449 | 1.68 | 7713 | 17.192 | Si |
| SLD 6 | 1176 | -1170 | 5531 | 2.14 | 9404 | 1.7 | Si |

### Verifica a taglio nel piano secondo D.M. 17-01-18 (N.T.C.) §7.8.2.2.2 con rottura per scorrimento in combinazioni non sismiche, γM = 3

| Comb. | Quota | N | V par | M | σ0 | σN | l' | fvd | Vt scorr. | Vt fess.diag. | Vt,lim | c.s. | Verifica |
|---|---|---|---|---|---|---|---|---|---|---|---|---|---|
| SLU 69 | 1096 | -4657 | 410 | 10793 | | 8.53 | 19.5 | 1.08 | 591 | | | 1.44 | Si |
| SLU 69 | 1176 | -4769 | -577 | 15344 | | 8.74 | 19.5 | 1.08 | 591 | | | 1.03 | Si |
| SLU 80 | 1096 | -4779 | 406 | 10699 | | 8.75 | 19.5 | 1.08 | 591 | | | 1.46 | Si |
| SLU 80 | 1176 | -4939 | -608 | 16151 | | 9.07 | 19.44 | 1.08 | 590 | | | 0.97 | No, Vu<V |
| SLU 70 | 1096 | -4608 | 403 | 10597 | | 8.44 | 19.5 | 1.08 | 591 | | | 1.47 | Si |
| SLU 70 | 1176 | -4726 | -574 | 15258 | | 8.66 | 19.5 | 1.08 | 591 | | | 1.03 | Si |
| SLU 78 | 1096 | -4543 | 378 | 9988 | | 8.32 | 19.5 | 1.08 | 591 | | | 1.56 | Si |
| SLU 78 | 1176 | -4709 | -584 | 15495 | | 8.68 | 19.38 | 1.08 | 588 | | | 1.01 | Si |
| SLU 72 | 1096 | -4845 | 430 | 11309 | | 8.87 | 19.5 | 1.08 | 591 | | | 1.38 | Si |
| SLU 72 | 1176 | -4957 | -598 | 15915 | | 9.08 | 19.5 | 1.08 | 591 | | | 0.99 | No, Vu<V |
| SLU 38 | 1096 | -4569 | 395 | 10407 | | 8.37 | 19.5 | 1.08 | 591 | | | 1.5 | Si |
| SLU 38 | 1176 | -4727 | -579 | 15410 | | 8.67 | 19.47 | 1.08 | 591 | | | 1.02 | Si |
| SLU 77 | 1096 | -4592 | 386 | 10184 | | 8.41 | 19.5 | 1.08 | 591 | | | 1.53 | Si |
| SLU 77 | 1176 | -4752 | -587 | 15581 | | 8.74 | 19.41 | 1.08 | 589 | | | 1 | Si |
| SLU 79 | 1096 | -4828 | 413 | 10895 | | 8.84 | 19.5 | 1.08 | 591 | | | 1.43 | Si |
| SLU 79 | 1176 | -4982 | -611 | 16237 | | 9.14 | 19.47 | 1.08 | 591 | | | 0.97 | No, Vu<V |
| SLU 71 | 1096 | -4894 | 437 | 11504 | | 8.96 | 19.5 | 1.08 | 591 | | | 1.35 | Si |
| SLU 71 | 1176 | -5000 | -601 | 16001 | | 9.16 | 19.5 | 1.08 | 591 | | | 0.98 | No, Vu<V |
| SLU 37 | 1096 | -4618 | 403 | 10603 | | 8.46 | 19.5 | 1.08 | 591 | | | 1.47 | Si |
| SLU 37 | 1176 | -4769 | -582 | 15496 | | 8.74 | 19.5 | 1.08 | 591 | | | 1.02 | Si |

### Verifica a taglio nel piano secondo D.M. 17-01-18 (N.T.C.) §7.8.2.2.2 con rottura per scorrimento in combinazioni sismiche, γM = 2

| Comb. | Quota | N | V par | M | σ0 | σN | l' | fvd | Vt scorr. | Vt fess.diag. | Vt,lim | c.s. | Verifica |
|---|---|---|---|---|---|---|---|---|---|---|---|---|---|
| SLV 7 | 1096 | -2591 | 331 | 8310 | | 4.75 | 19.5 | 1.63 | 887 | | | 2.68 | Si |
| SLV 7 | 1176 | -2328 | -250 | 5261 | | 4.26 | 19.5 | 1.63 | 887 | | | 3.55 | Si |
| SLV 2 | 1096 | -633 | -78 | -1820 | | 1.16 | 19.5 | 1.07 | 582 | | | 7.43 | Si |
| SLV 2 | 1176 | -944 | -183 | 5329 | | 2.74 | 12.32 | 1.38 | 476 | | | 2.6 | Si |
| SLV 11 | 1096 | -2890 | 389 | 9809 | | 5.41 | 19.07 | 1.63 | 868 | | | 2.23 | Si |
| SLV 11 | 1176 | -2553 | -257 | 5362 | | 4.68 | 19.5 | 1.63 | 887 | | | 3.46 | Si |
| SLV 12 | 1096 | -2890 | 389 | 9809 | | 5.41 | 19.07 | 1.63 | 868 | | | 2.23 | Si |
| SLV 12 | 1176 | -2553 | -257 | 5362 | | 4.68 | 19.5 | 1.63 | 887 | | | 3.46 | Si |
| SLV 1 | 1096 | -633 | -78 | -1820 | | 1.16 | 19.5 | 1.07 | 582 | | | 7.43 | Si |
| SLV 1 | 1176 | -944 | -183 | 5329 | | 2.74 | 12.32 | 1.38 | 476 | | | 2.6 | Si |
| SLV 9 | 1096 | -414 | -138 | -3083 | | 2.14 | 6.93 | 1.26 | 245 | | | 1.77 | Si |
| SLV 9 | 1176 | -826 | -167 | 5649 | | 3.38 | 8.74 | 1.51 | 369 | | | 2.21 | Si |
| SLV 8 | 1096 | -2591 | 331 | 8310 | | 4.75 | 19.5 | 1.63 | 887 | | | 2.68 | Si |
| SLV 8 | 1176 | -2328 | -250 | 5261 | | 4.26 | 19.5 | 1.63 | 887 | | | 3.55 | Si |
| SLV 5 | 1096 | -115 | -196 | -4583 | | 0 | 0 | 0.83 | 0 | | | 0 | No, Vu<V |
| SLV 5 | 1176 | -602 | -160 | 5548 | | 13.49 | 1.59 | 1.63 | 72 | | | 0.45 | No, Vu<V |
| SLV 6 | 1096 | -115 | -196 | -4583 | | 0 | 0 | 0.83 | 0 | | | 0 | No, Vu<V |
| SLV 6 | 1176 | -602 | -160 | 5548 | | 13.49 | 1.59 | 1.63 | 72 | | | 0.45 | No, Vu<V |
| SLV 10 | 1096 | -414 | -138 | -3083 | | 2.14 | 6.93 | 1.26 | 245 | | | 1.77 | Si |
| SLV 10 | 1176 | -826 | -167 | 5649 | | 3.38 | 8.74 | 1.51 | 369 | | | 2.21 | Si |

### Verifica a pressoflessione fuori piano D.M. 17-01-18 (N.T.C.)

quota 1072 Wa 0.05 denominatore 8 γM = 2

| Comb. | fd | Sa | σ0 | N | M | Mc | Coeff.s. | Verifica |
|---|---|---|---|---|---|---|---|---|
| SLV 10 | 14 | 0.46 | 0 | -156 | 2452 | 0 | 0 | No, e>t/2 |
| SLV 6 | 14 | 0.46 | 0 | 3 | 2452 | 0 | 0 | No, Trazione |
| SLV 9 | 14 | 0.46 | 0 | -156 | 2452 | 0 | 0 | No, e>t/2 |
| SLV 5 | 14 | 0.46 | 0 | 3 | 2452 | 0 | 0 | No, Trazione |
| SLV 1 | 14 | 0.46 | 0.58 | -315 | 2452 | 4199 | 1.71 | Si |
| SLV 2 | 14 | 0.46 | 0.58 | -315 | 2452 | 4199 | 1.71 | Si |
| SLV 3 | 14 | 0.46 | 1.37 | -747 | 2452 | 9285 | 3.79 | Si |
| SLV 4 | 14 | 0.46 | 1.37 | -747 | 2452 | 9285 | 3.79 | Si |
| SLV 13 | 14 | 0.46 | 1.55 | -846 | 2452 | 10342 | 4.22 | Si |
| SLV 14 | 14 | 0.46 | 1.55 | -846 | 2452 | 10342 | 4.22 | Si |

### Verifica dei meccanismi locali di collasso con analisi cinematica lineare

forza di aggancio al piano = 0 quota mezzeria = 1072 Wa = 0.05 Ta = 0.0739

| Comb. | N top | N base | V orto | α0 | M* | e* | a0* | aLim | Verifica |
|---|---|---|---|---|---|---|---|---|---|
| SLV 1 | -507 | 483 | 3 | 0 | 0 | 0 | 0 | 956.161 | No, Trazione |
| SLV 2 | -507 | 483 | 3 | 0 | 0 | 0 | 0 | 956.161 | No, Trazione |
| SLV 6 | -390 | 554 | -3 | 0 | 0 | 0 | 0 | 1733.979 | No, Trazione |
| SLV 5 | -390 | 554 | -3 | 0 | 0 | 0 | 0 | 1733.979 | No, Trazione |
| SLV 10 | -466 | 52 | -6 | 0 | 0 | 0 | 0 | 1733.979 | No, Trazione |
| SLV 9 | -466 | 52 | -6 | 0 | 0 | 0 | 0 | 1733.979 | No, Trazione |

| Comb. | N top | N base | V orto | α0 | M* | e* | a0* | aLim | Verifica |
|---|---|---|---|---|---|---|---|---|---|
| SLV 8 | -978 | -1320 | 5 | 0.041 | 1.269 | 0.94 | 63.683 | 1733.979 | No |
| SLV 7 | -978 | -1320 | 5 | 0.041 | 1.269 | 0.94 | 63.683 | 1733.979 | No |
| SLV 12 | -1055 | -1822 | 3 | 0.043 | 1.346 | 0.943 | 66.765 | 1733.979 | No |
| SLV 11 | -1055 | -1822 | 3 | 0.043 | 1.346 | 0.943 | 66.765 | 1733.979 | No |

### Tabella dei coefficienti di sicurezza minimi

| Stato limite | Coeff.s. | Comb. | Verifica |
|---|---|---|---|
| PF_SLU | 0 | SLU 27 | No |
| V_SLU | 0.967 | SLU 79 | No |
| PF_SLV | 0 | SLV 5 | No |
| V_SLV | 0 | SLV 5 | No |
| PFFP_SLV | 0 | SLV 6 | No |
| R_SLV | 0 | SLV 10 | No |

## Maschio 171

Verifiche condotte secondo D.M. 17-01-18 (N.T.C.)

### Dati geometrici

| X ini. | Y ini. | X fin. | Y fin. | Quota i. | Quota.s | l | Sp. | h netta | h ini. | h fin. | a | a.s.,sx | a.s.,dx |
|---|---|---|---|---|---|---|---|---|---|---|---|---|---|
| -515.8 | 650.6 | -515.8 | 652.1 | L5 | L6 | 1.5 | 28 | 352 | 352 | 352 | | | |

### Caratteristiche del materiale

(Circolare 7 21-01-19 C8.5.I) Muratura in mattoni pieni e malta di calce LC2_Corti

| fb | fk | fvk0 | fmedio | τ0 | fv0 | μ | ϕ | fv,lim | E | G | FC |
|---|---|---|---|---|---|---|---|---|---|---|---|
| 60 | | | 34.5 | 0.9 | 2 | 0.58 | 0.77 | 3.25 | 32000 | 12800 | 1.2 |

### Verifica a pressoflessione nel piano secondo D.M. 17-01-18 NTC §7.8.2.2.1 in combinazioni non sismiche, γM = 3

| Comb. | Quota | N | M | σ0 | Mu | c.s. | Verifica |
|---|---|---|---|---|---|---|---|
| SLU 54 | 1096 | -441 | -1 | 10.51 | 0 | 0 | No, Rottura per schiacciamento |
| SLU 54 | 1176 | -433 | 2 | 10.32 | 0 | 0 | No, Rottura per schiacciamento |
| SLU 58 | 1096 | -733 | -2 | 17.46 | 0 | 0 | No, Rottura per schiacciamento |
| SLU 58 | 1176 | -725 | 3 | 17.27 | 0 | 0 | No, Rottura per schiacciamento |
| SLU 55 | 1096 | -477 | -1 | 11.37 | 0 | 0 | No, Rottura per schiacciamento |
| SLU 55 | 1176 | -469 | 2 | 11.18 | 0 | 0 | No, Rottura per schiacciamento |
| SLU 51 | 1096 | -734 | -2 | 17.49 | 0 | 0 | No, Rottura per schiacciamento |
| SLU 51 | 1176 | -726 | 3 | 17.3 | 0 | 0 | No, Rottura per schiacciamento |
| SLU 50 | 1096 | -743 | -2 | 17.69 | 0 | 0 | No, Rottura per schiacciamento |
| SLU 50 | 1176 | -735 | 3 | 17.5 | 0 | 0 | No, Rottura per schiacciamento |
| SLU 42 | 1096 | -547 | -2 | 13.03 | 0 | 0 | No, Rottura per schiacciamento |
| SLU 42 | 1176 | -541 | 3 | 12.88 | 0 | 0 | No, Rottura per schiacciamento |
| SLU 57 | 1096 | -683 | -2 | 16.26 | 0 | 0 | No, Rottura per schiacciamento |
| SLU 57 | 1176 | -675 | 3 | 16.07 | 0 | 0 | No, Rottura per schiacciamento |
| SLU 56 | 1096 | -692 | -2 | 16.46 | 0 | 0 | No, Rottura per schiacciamento |
| SLU 56 | 1176 | -684 | 3 | 16.27 | 0 | 0 | No, Rottura per schiacciamento |
| SLU 53 | 1096 | -450 | -1 | 10.71 | 0 | 0 | No, Rottura per schiacciamento |
| SLU 53 | 1176 | -442 | 2 | 10.52 | 0 | 0 | No, Rottura per schiacciamento |
| SLU 59 | 1096 | -725 | -2 | 17.25 | 0 | 0 | No, Rottura per schiacciamento |
| SLU 59 | 1176 | -717 | 3 | 17.06 | 0 | 0 | No, Rottura per schiacciamento |

### Verifica a pressoflessione nel piano secondo D.M. 17-01-18 NTC §7.8.2.2.1 in combinazioni sismiche, γM = 2

| Comb. | Quota | N | M | σ0 | Mu | c.s. | Verifica |
|---|---|---|---|---|---|---|---|
| SLV 8 | 1096 | -420 | 12 | 9.99 | 57 | 4.614 | Si |
| SLV 8 | 1176 | -417 | 18 | 9.94 | 58 | 3.288 | Si |
| SLV 7 | 1096 | -420 | 12 | 9.99 | 57 | 4.614 | Si |
| SLV 7 | 1176 | -417 | 18 | 9.94 | 58 | 3.288 | Si |
| SLV 12 | 1096 | -476 | 21 | 11.32 | 26 | 1.223 | Si |
| SLV 12 | 1176 | -462 | 12 | 11 | 35 | 2.981 | Si |
| SLV 5 | 1096 | -31 | -23 | 0 | 0 | 0 | No, e>l/2 |
| SLV 5 | 1176 | -32 | -9 | 0.76 | 22 | 2.432 | Si |
| SLV 6 | 1096 | -31 | -23 | 0 | 0 | 0 | No, e>l/2 |
| SLV 6 | 1176 | -32 | -9 | 0.76 | 22 | 2.432 | Si |
| SLV 1 | 1096 | -101 | -21 | 2.42 | 61 | 2.902 | Si |
| SLV 1 | 1176 | -115 | 7 | 2.74 | 67 | 9.075 | Si |
| SLV 10 | 1096 | -86 | -14 | 2.06 | 54 | 3.842 | Si |
| SLV 10 | 1176 | -76 | -15 | 1.82 | 49 | 3.171 | Si |

| Comb. | Quota | N | M | σ0 | Mu | c.s. | Verifica |
|---|---|---|---|---|---|---|---|
| SLV 11 | 1096 | -476 | 21 | 11.32 | 26 | 1.223 | Si |
| SLV 11 | 1176 | -462 | 12 | 11 | 35 | 2.981 | Si |
| SLV 9 | 1096 | -86 | -14 | 2.06 | 54 | 3.842 | Si |
| SLV 9 | 1176 | -76 | -15 | 1.82 | 49 | 3.171 | Si |
| SLV 2 | 1096 | -101 | -21 | 2.42 | 61 | 2.902 | Si |
| SLV 2 | 1176 | -115 | 7 | 2.74 | 67 | 9.075 | Si |

Verifica a taglio nel piano secondo D.M. 17-01-18 (N.T.C.) §7.8.2.2.2 con rottura per scorrimento in combinazioni non sismiche, γM = 3

| Comb. | Quota | N | V par | M | σ0 | σN | l' | fvd | Vt scorr. | Vt fess.diag. | Vt,lim | c.s. | Verifica |
|---|---|---|---|---|---|---|---|---|---|---|---|---|---|
| SLU 71 | 1096 | -845 | 0 | -2 | | 20.11 | 1.5 | 1.08 | 46 | | | 617.17 | Si |
| SLU 71 | 1176 | -837 | 0 | 4 | | 19.92 | 1.5 | 1.08 | 46 | | | 617.07 | Si |
| SLU 78 | 1096 | -784 | 0 | -2 | | 18.68 | 1.5 | 1.08 | 46 | | | 605.55 | Si |
| SLU 78 | 1176 | -776 | 0 | 4 | | 18.48 | 1.5 | 1.08 | 46 | | | 605.44 | Si |
| SLU 72 | 1096 | -836 | 0 | -2 | | 19.9 | 1.5 | 1.08 | 46 | | | 610.78 | Si |
| SLU 72 | 1176 | -828 | 0 | 4 | | 19.71 | 1.5 | 1.08 | 46 | | | 610.69 | Si |
| SLU 38 | 1096 | -793 | 0 | -2 | | 18.88 | 1.5 | 1.08 | 46 | | | 603.9 | Si |
| SLU 38 | 1176 | -787 | 0 | 4 | | 18.73 | 1.5 | 1.08 | 46 | | | 603.81 | Si |
| SLU 77 | 1096 | -793 | 0 | -2 | | 18.88 | 1.5 | 1.08 | 46 | | | 611.83 | Si |
| SLU 77 | 1176 | -785 | 0 | 4 | | 18.69 | 1.5 | 1.08 | 46 | | | 611.71 | Si |
| SLU 37 | 1096 | -802 | 0 | -2 | | 19.09 | 1.5 | 1.08 | 46 | | | 610.15 | Si |
| SLU 37 | 1176 | -795 | 0 | 4 | | 18.94 | 1.5 | 1.08 | 46 | | | 610.05 | Si |
| SLU 36 | 1096 | -751 | 0 | -2 | | 17.88 | 1.5 | 1.08 | 46 | | | 627.57 | Si |
| SLU 36 | 1176 | -745 | 0 | 4 | | 17.73 | 1.5 | 1.08 | 46 | | | 627.45 | Si |
| SLU 30 | 1096 | -803 | 0 | -2 | | 19.11 | 1.5 | 1.08 | 46 | | | 633.19 | Si |
| SLU 30 | 1176 | -796 | 0 | 4 | | 18.96 | 1.5 | 1.08 | 46 | | | 633.09 | Si |
| SLU 79 | 1096 | -835 | 0 | -2 | | 19.88 | 1.5 | 1.08 | 46 | | | 589.32 | Si |
| SLU 79 | 1176 | -827 | 0 | 4 | | 19.69 | 1.5 | 1.08 | 46 | | | 589.23 | Si |
| SLU 80 | 1096 | -826 | 0 | -2 | | 19.67 | 1.5 | 1.08 | 46 | | | 583.49 | Si |
| SLU 80 | 1176 | -818 | 0 | 4 | | 19.48 | 1.5 | 1.08 | 46 | | | 583.41 | Si |

Verifica a taglio nel piano secondo D.M. 17-01-18 (N.T.C.) §7.8.2.2.2 con rottura per scorrimento in combinazioni sismiche, γM = 2

| Comb. | Quota | N | V par | M | σ0 | σN | l' | fvd | Vt scorr. | Vt fess.diag. | Vt,lim | c.s. | Verifica |
|---|---|---|---|---|---|---|---|---|---|---|---|---|---|
| SLV 15 | 1096 | -405 | -1 | 19 | | 9.63 | 1.5 | 1.63 | 68 | | | 60.7 | Si |
| SLV 15 | 1176 | -379 | 0 | -5 | | 9.01 | 1.5 | 1.63 | 68 | | | 206.92 | Si |
| SLV 9 | 1096 | -86 | 1 | -14 | | 2.06 | 1.5 | 1.25 | 52 | | | 99.22 | Si |
| SLV 9 | 1176 | -76 | 0 | -15 | | 1.82 | 1.5 | 1.2 | 50 | | | 164.12 | Si |
| SLV 11 | 1096 | -476 | -1 | 21 | | 11.32 | 1.5 | 1.63 | 68 | | | 62.55 | Si |
| SLV 11 | 1176 | -462 | 0 | 12 | | 11 | 1.5 | 1.63 | 68 | | | 642.46 | Si |
| SLV 10 | 1096 | -86 | 1 | -14 | | 2.06 | 1.5 | 1.25 | 52 | | | 99.22 | Si |
| SLV 10 | 1176 | -76 | 0 | -15 | | 1.82 | 1.5 | 1.2 | 50 | | | 164.12 | Si |
| SLV 1 | 1096 | -101 | 1 | -21 | | 2.42 | 1.5 | 1.32 | 55 | | | 51.47 | Si |
| SLV 1 | 1176 | -115 | 0 | 7 | | 2.74 | 1.5 | 1.38 | 58 | | | 152.69 | Si |
| SLV 2 | 1096 | -101 | 1 | -21 | | 2.42 | 1.5 | 1.32 | 55 | | | 51.47 | Si |
| SLV 2 | 1176 | -115 | 0 | 7 | | 2.74 | 1.5 | 1.38 | 58 | | | 152.69 | Si |
| SLV 6 | 1096 | -31 | 1 | -23 | | 0 | 0 | 0.83 | 0 | | | 0 | No, Vu<V |
| SLV 6 | 1176 | -32 | 0 | -9 | | 0.82 | 1.38 | 1 | 39 | | | 688.49 | Si |
| SLV 5 | 1096 | -31 | 1 | -23 | | 0 | 0 | 0.83 | 0 | | | 0 | No, Vu<V |
| SLV 5 | 1176 | -32 | 0 | -9 | | 0.82 | 1.38 | 1 | 39 | | | 688.49 | Si |
| SLV 12 | 1096 | -476 | -1 | 21 | | 11.32 | 1.5 | 1.63 | 68 | | | 62.55 | Si |
| SLV 12 | 1176 | -462 | 0 | 12 | | 11 | 1.5 | 1.63 | 68 | | | 642.46 | Si |
| SLV 16 | 1096 | -405 | -1 | 19 | | 9.63 | 1.5 | 1.63 | 68 | | | 60.7 | Si |
| SLV 16 | 1176 | -379 | 0 | -5 | | 9.01 | 1.5 | 1.63 | 68 | | | 206.92 | Si |

Verifica a pressoflessione fuori piano D.M. 17-01-18 (N.T.C.)

quota 1072 Wa 0.05 denominatore 8 γM = 2

| Comb. | fd | Sa | σ0 | N | M | Mc | Coeff.s. | Verifica |
|---|---|---|---|---|---|---|---|---|
| SLV 6 | 14 | 0.46 | 0 | -3 | 189 | 0 | 0 | No, e>t/2 |
| SLV 4 | 14 | 0.46 | 0 | -7 | 189 | 0 | 0 | No, e>t/2 |
| SLV 1 | 14 | 0.46 | 0 | -4 | 189 | 0 | 0 | No, e>t/2 |
| SLV 7 | 14 | 0.46 | 0 | -13 | 189 | 0 | 0 | No, e>t/2 |
| SLV 8 | 14 | 0.46 | 0 | -13 | 189 | 0 | 0 | No, e>t/2 |
| SLV 2 | 14 | 0.46 | 0 | -4 | 189 | 0 | 0 | No, e>t/2 |
| SLV 5 | 14 | 0.46 | 0 | -3 | 189 | 0 | 0 | No, e>t/2 |
| SLV 10 | 14 | 0.46 | 0 | -5 | 189 | 0 | 0 | No, e>t/2 |
| SLV 9 | 14 | 0.46 | 0 | -5 | 189 | 0 | 0 | No, e>t/2 |
| SLV 3 | 14 | 0.46 | 0 | -7 | 189 | 0 | 0 | No, e>t/2 |

Verifica dei meccanismi locali di collasso con analisi cinematica lineare

forza di aggancio al piano = 0 quota mezzeria = 1072 Wa = 0.05 Ta = 0.0739

| Comb. | N top | N base | V orto | α0 | M* | e* | a0* | aLim | Verifica |
|---|---|---|---|---|---|---|---|---|---|
| SLV 13 | -20 | 36 | -2 | 0 | 0 | 0 | 0 | 956.161 | No, Trazione |
| SLV 1 | -10 | -38 | 2 | 0 | 0.034 | 0.89 | 0 | 956.161 | No |
| SLV 3 | -16 | -89 | 2 | 0 | 0.039 | 0.89 | 0 | 956.161 | No |
| SLV 2 | -10 | -38 | 2 | 0 | 0.034 | 0.89 | 0 | 956.161 | No |
| SLV 10 | -10 | 70 | -1 | 0 | 0 | 0 | 0 | 1733.979 | No, Trazione |
| SLV 9 | -10 | 70 | -1 | 0 | 0 | 0 | 0 | 1733.979 | No, Trazione |
| SLV 6 | -7 | 47 | 0 | 0 | 0 | 0 | 0 | 1733.979 | No, Trazione |
| SLV 4 | -16 | -89 | 2 | 0 | 0.039 | 0.89 | 0 | 956.161 | No |
| SLV 14 | -20 | 36 | -2 | 0 | 0 | 0 | 0 | 956.161 | No, Trazione |
| SLV 5 | -7 | 47 | 0 | 0 | 0 | 0 | 0 | 1733.979 | No, Trazione |

Tabella dei coefficienti di sicurezza minimi

| Stato limite | Coeff.s. | Comb. | Verifica |
|---|---|---|---|
| PF_SLU | 0 | SLU 3 | No |
| V_SLU | 583.407 | SLU 80 | Si |
| PF_SLV | 0 | SLV 5 | No |

| Stato limite | Coeff.s. | Comb. | Verifica |
|---|---|---|---|
| V_SLV | 0 | SLV 5 | No |
| PFFP_SLV | 0 | SLV 1 | No |
| R_SLV | 0 | SLV 14 | No |

## Maschio 172

Verifiche condotte secondo D.M. 17-01-18 (N.T.C.)

### Dati geometrici

| X ini. | Y ini. | X fin. | Y fin. | Quota i. | Quota.s | l | Sp. | h netta | h ini. | h fin. | a | a.s.,sx | a.s.,dx |
|---|---|---|---|---|---|---|---|---|---|---|---|---|---|
| -600.8 | -335.9 | -651.3 | -335.9 | L5 | L6 | 50.5 | 28 | 352 | 352 | 352 | | | |

### Caratteristiche del materiale

(Circolare 7 21-01-19 C8.5.I) Muratura in mattoni pieni e malta di calce LC2_Corti

| fb | fk | fvk0 | fmedio | τ0 | fv0 | μ | ϕ | fv,lim | E | G | FC |
|---|---|---|---|---|---|---|---|---|---|---|---|
| 60 | | | 34.5 | 0.9 | 2 | 0.58 | 0.77 | 3.25 | 32000 | 12800 | 1.2 |

### Verifica a pressoflessione nel piano secondo D.M. 17-01-18 NTC §7.8.2.2.1 in combinazioni non sismiche, γM = 3

| Comb. | Quota | N | M | σ0 | Mu | c.s. | Verifica |
|---|---|---|---|---|---|---|---|
| SLU 10 | 1096 | -1968 | -215 | 1.39 | 41201 | 191.691 | Si |
| SLU 10 | 1176 | -1760 | -13824 | 1.24 | 37648 | 2.723 | Si |
| SLU 73 | 1096 | -2787 | -1461 | 1.97 | 53349 | 36.514 | Si |
| SLU 73 | 1176 | -2501 | -18058 | 1.77 | 49443 | 2.738 | Si |
| SLU 61 | 1096 | -2716 | -311 | 1.92 | 52411 | 168.584 | Si |
| SLU 61 | 1176 | -2458 | -18390 | 1.74 | 48821 | 2.655 | Si |
| SLU 81 | 1096 | -3226 | -1072 | 2.28 | 58638 | 54.684 | Si |
| SLU 81 | 1176 | -2988 | -20601 | 2.11 | 55869 | 2.712 | Si |
| SLU 31 | 1096 | -2278 | -571 | 1.61 | 46148 | 80.81 | Si |
| SLU 31 | 1176 | -2085 | -15624 | 1.47 | 43124 | 2.76 | Si |
| SLU 19 | 1096 | -2207 | 579 | 1.56 | 45051 | 77.793 | Si |
| SLU 19 | 1176 | -2042 | -15957 | 1.44 | 42424 | 2.659 | Si |
| SLU 82 | 1096 | -3026 | -667 | 2.14 | 56339 | 84.465 | Si |
| SLU 82 | 1176 | -2784 | -20191 | 1.97 | 53300 | 2.64 | Si |
| SLU 60 | 1096 | -2915 | -716 | 2.06 | 54980 | 76.769 | Si |
| SLU 60 | 1176 | -2662 | -18801 | 1.88 | 51681 | 2.749 | Si |
| SLU 52 | 1096 | -2477 | -1105 | 1.75 | 49095 | 44.433 | Si |
| SLU 52 | 1176 | -2176 | -16257 | 1.54 | 44561 | 2.741 | Si |
| SLU 40 | 1096 | -2517 | 223 | 1.78 | 49672 | 222.76 | Si |
| SLU 40 | 1176 | -2368 | -17758 | 1.67 | 47496 | 2.675 | Si |

### Verifica a pressoflessione nel piano secondo D.M. 17-01-18 NTC §7.8.2.2.1 in combinazioni sismiche, γM = 2

| Comb. | Quota | N | M | σ0 | Mu | c.s. | Verifica |
|---|---|---|---|---|---|---|---|
| SLV 4 | 1096 | 128 | 51797 | 0 | 0 | 0 | No, Trazione |
| SLV 4 | 1176 | -1580 | -60046 | 0 | 0 | 0 | No, e>l/2 |
| SLV 7 | 1096 | -662 | 24105 | 0 | 0 | 0 | No, e>l/2 |
| SLV 7 | 1176 | -2937 | -33400 | 2.08 | 61554 | 1.843 | Si |
| SLV 3 | 1096 | 128 | 51797 | 0 | 0 | 0 | No, Trazione |
| SLV 3 | 1176 | -1580 | -60046 | 0 | 0 | 0 | No, e>l/2 |
| SLV 1 | 1096 | -430 | 44872 | 0 | 0 | 0 | No, e>l/2 |
| SLV 1 | 1176 | -856 | -55404 | 0 | 0 | 0 | No, e>l/2 |
| SLV 2 | 1096 | -430 | 44872 | 0 | 0 | 0 | No, e>l/2 |
| SLV 2 | 1176 | -856 | -55404 | 0 | 0 | 0 | No, e>l/2 |
| SLV 5 | 1096 | -2524 | 1024 | 1.78 | 54413 | 53.163 | Si |
| SLV 5 | 1176 | -522 | -17927 | 0 | 0 | 0 | No, e>l/2 |
| SLD 2 | 1096 | -1442 | 17559 | 1.02 | 33363 | 1.9 | Si |
| SLD 2 | 1176 | -1487 | -30483 | 1.05 | 34319 | 1.126 | Si |
| SLV 8 | 1096 | -662 | 24105 | 0 | 0 | 0 | No, e>l/2 |
| SLV 8 | 1176 | -2937 | -33400 | 2.08 | 61554 | 1.843 | Si |
| SLD 1 | 1096 | -1442 | 17559 | 1.02 | 33363 | 1.9 | Si |
| SLD 1 | 1176 | -1487 | -30483 | 1.05 | 34319 | 1.126 | Si |
| SLV 6 | 1096 | -2524 | 1024 | 1.78 | 54413 | 53.163 | Si |
| SLV 6 | 1176 | -522 | -17927 | 0 | 0 | 0 | No, e>l/2 |

### Verifica a taglio nel piano secondo D.M. 17-01-18 (N.T.C.) §7.8.2.2.2 con rottura per scorrimento in combinazioni non sismiche, γM = 3

| Comb. | Quota | N | V par | M | σ0 | σN | l' | fvd | Vt scorr. | Vt fess.diag. | Vt,lim | c.s. | Verifica |
|---|---|---|---|---|---|---|---|---|---|---|---|---|---|
| SLU 77 | 1096 | -3517 | -44 | -4038 | | 2.49 | 50.5 | 0.89 | 1254 | | | 28.45 | Si |
| SLU 77 | 1176 | -3235 | 139 | -18596 | | 2.29 | 50.5 | 0.86 | 1217 | | | 8.78 | Si |
| SLU 8 | 1096 | -2371 | -128 | -5239 | | 1.68 | 50.5 | 0.78 | 1102 | | | 8.61 | Si |
| SLU 8 | 1176 | -2079 | 83 | -9384 | | 1.47 | 50.5 | 0.75 | 1063 | | | 12.85 | Si |
| SLU 79 | 1096 | -3438 | -50 | -4002 | | 2.43 | 50.5 | 0.88 | 1244 | | | 24.85 | Si |
| SLU 79 | 1176 | -3162 | 139 | -17957 | | 2.24 | 50.5 | 0.85 | 1207 | | | 8.65 | Si |
| SLU 50 | 1096 | -2880 | -136 | -6129 | | 2.04 | 50.5 | 0.83 | 1170 | | | 8.63 | Si |
| SLU 50 | 1176 | -2495 | 89 | -11817 | | 1.76 | 50.5 | 0.79 | 1118 | | | 12.63 | Si |
| SLU 37 | 1096 | -2929 | -42 | -3112 | | 2.07 | 50.5 | 0.83 | 1176 | | | 27.69 | Si |
| SLU 37 | 1176 | -2746 | 134 | -15524 | | 1.94 | 50.5 | 0.81 | 1152 | | | 8.61 | Si |
| SLU 29 | 1096 | -2681 | -136 | -5595 | | 1.9 | 50.5 | 0.81 | 1143 | | | 8.43 | Si |
| SLU 29 | 1176 | -2405 | 104 | -11185 | | 1.7 | 50.5 | 0.78 | 1106 | | | 10.61 | Si |
| SLU 19 | 1096 | -2207 | 124 | 579 | | 1.56 | 50.5 | 0.76 | 1080 | | | 8.71 | Si |
| SLU 19 | 1176 | -2042 | 69 | -15957 | | 1.44 | 50.5 | 0.75 | 1058 | | | 15.26 | Si |
| SLU 35 | 1096 | -3008 | -36 | -3148 | | 2.13 | 50.5 | 0.84 | 1187 | | | 32.51 | Si |
| SLU 35 | 1176 | -2819 | 133 | -16162 | | 1.99 | 50.5 | 0.82 | 1161 | | | 8.74 | Si |
| SLU 71 | 1096 | -3190 | -143 | -6485 | | 2.26 | 50.5 | 0.86 | 1211 | | | 8.46 | Si |
| SLU 71 | 1176 | -2820 | 110 | -13618 | | 1.99 | 50.5 | 0.82 | 1162 | | | 10.56 | Si |
| SLU 27 | 1096 | -2759 | -130 | -5631 | | 1.95 | 50.5 | 0.82 | 1153 | | | 8.9 | Si |

| Comb. | Quota | N | V par | M | σ0 | σN | l' | fvd | Vt scorr. | Vt fess.diag. | Vt,lim | c.s. | Verifica |
|---|---|---|---|---|---|---|---|---|---|---|---|---|---|
| SLU 27 | 1176 | -2478 | 103 | -11823 | | 1.75 | 50.5 | 0.79 | 1116 | | | 10.79 | Si |

### Verifica a taglio nel piano secondo D.M. 17-01-18 (N.T.C.) §7.8.2.2.2 con rottura per scorrimento in combinazioni sismiche, γM = 2

| Comb. | Quota | N | V par | M | σ0 | σN | l' | fvd | Vt scorr. | Vt fess.diag. | Vt,lim | c.s. | Verifica |
|---|---|---|---|---|---|---|---|---|---|---|---|---|---|
| SLV 2 | 1096 | -430 | 1842 | 44872 | | 0 | 0 | 0.83 | 0 | | | 0 | No, Vu<V |
| SLV 2 | 1176 | -856 | 125 | -55404 | | 0 | 0 | 0.83 | 0 | | | 0 | No, Vu<V |
| SLV 8 | 1096 | -662 | 851 | 24105 | | 0 | 0 | 0.83 | 0 | | | 0 | No, Vu<V |
| SLV 8 | 1176 | -2937 | 513 | -33400 | | 2.52 | 41.63 | 1.34 | 1559 | | | 3.04 | Si |
| SLV 14 | 1096 | -4551 | -2029 | -57328 | | 4.28 | 37.96 | 1.63 | 1727 | | | 0.85 | No, Vu<V |
| SLV 14 | 1176 | -2317 | -247 | 36200 | | 2.87 | 28.89 | 1.41 | 1138 | | | 4.6 | Si |
| SLV 1 | 1096 | -430 | 1842 | 44872 | | 0 | 0 | 0.83 | 0 | | | 0 | No, Vu<V |
| SLV 1 | 1176 | -856 | 125 | -55404 | | 0 | 0 | 0.83 | 0 | | | 0 | No, Vu<V |
| SLV 13 | 1096 | -4551 | -2029 | -57328 | | 4.28 | 37.96 | 1.63 | 1727 | | | 0.85 | No, Vu<V |
| SLV 13 | 1176 | -2317 | -247 | 36200 | | 2.87 | 28.89 | 1.41 | 1138 | | | 4.6 | Si |
| SLV 4 | 1096 | 128 | 2010 | 51797 | | 0 | 0 | 0.83 | 0 | | | 0 | No, Vu<V |
| SLV 4 | 1176 | -1580 | 364 | -60046 | | 0 | 0 | 0.83 | 0 | | | 0 | No, Vu<V |
| SLV 3 | 1096 | 128 | 2010 | 51797 | | 0 | 0 | 0.83 | 0 | | | 0 | No, Vu<V |
| SLV 3 | 1176 | -1580 | 364 | -60046 | | 0 | 0 | 0.83 | 0 | | | 0 | No, Vu<V |
| SLV 7 | 1096 | -662 | 851 | 24105 | | 0 | 0 | 0.83 | 0 | | | 0 | No, Vu<V |
| SLV 7 | 1176 | -2937 | 513 | -33400 | | 2.52 | 41.63 | 1.34 | 1559 | | | 3.04 | Si |
| SLV 5 | 1096 | -2524 | 291 | 1024 | | 1.78 | 50.5 | 1.19 | 1683 | | | 5.78 | Si |
| SLV 5 | 1176 | -522 | -285 | -17927 | | 0 | 0 | 0.83 | 0 | | | 0 | No, Vu<V |
| SLV 6 | 1096 | -2524 | 291 | 1024 | | 1.78 | 50.5 | 1.19 | 1683 | | | 5.78 | Si |
| SLV 6 | 1176 | -522 | -285 | -17927 | | 0 | 0 | 0.83 | 0 | | | 0 | No, Vu<V |

### Verifica a pressoflessione fuori piano D.M. 17-01-18 (N.T.C.)

quota 1072 Wa 0.05 denominatore 8 γM = 2

| Comb. | fd | Sa | σ0 | N | M | Mc | Coeff.s. | Verifica |
|---|---|---|---|---|---|---|---|---|
| SLV 7 | 14 | 0.46 | 0 | -402 | 6207 | 0 | 0 | No, e>t/2 |
| SLV 8 | 14 | 0.46 | 0 | -402 | 6207 | 0 | 0 | No, e>t/2 |
| SLV 3 | 14 | 0.46 | 0.53 | -750 | 6207 | 10041 | 1.62 | Si |
| SLV 4 | 14 | 0.46 | 0.53 | -750 | 6207 | 10041 | 1.62 | Si |
| SLV 12 | 14 | 0.46 | 0.56 | -786 | 6207 | 10503 | 1.69 | Si |
| SLV 11 | 14 | 0.46 | 0.56 | -786 | 6207 | 10503 | 1.69 | Si |
| SLV 2 | 14 | 0.46 | 1.01 | -1431 | 6207 | 18379 | 2.96 | Si |
| SLV 1 | 14 | 0.46 | 1.01 | -1431 | 6207 | 18379 | 2.96 | Si |
| SLV 16 | 14 | 0.46 | 1.43 | -2029 | 6207 | 25070 | 4.04 | Si |
| SLV 15 | 14 | 0.46 | 1.43 | -2029 | 6207 | 25070 | 4.04 | Si |

### Verifica dei meccanismi locali di collasso con analisi cinematica lineare

forza di aggancio al piano = 0 quota mezzeria = 1072 Wa = 0.05 Ta = 0.0739

| Comb. | N top | N base | V orto | α0 | M* | e* | a0* | aLim | Verifica |
|---|---|---|---|---|---|---|---|---|---|
| SLV 11 | -1206 | -1087 | -13 | 0.043 | 1.95 | 0.91 | 68.328 | 1733.979 | No |
| SLV 12 | -1206 | -1087 | -13 | 0.043 | 1.95 | 0.91 | 68.328 | 1733.979 | No |
| SLV 7 | -726 | -1197 | -12 | 0.045 | 1.479 | 0.894 | 72.557 | 1733.979 | No |
| SLV 8 | -726 | -1197 | -12 | 0.045 | 1.479 | 0.894 | 72.557 | 1733.979 | No |
| SLV 9 | -1040 | -1620 | 8 | 0.046 | 1.786 | 0.905 | 74.292 | 1733.979 | No |
| SLV 10 | -1040 | -1620 | 8 | 0.046 | 1.786 | 0.905 | 74.292 | 1733.979 | No |
| SLV 6 | -560 | -1731 | 9 | 0.049 | 1.321 | 0.89 | 79.361 | 1733.979 | No |
| SLV 5 | -560 | -1731 | 9 | 0.049 | 1.321 | 0.89 | 79.361 | 1733.979 | No |
| SLV 15 | -1709 | -1144 | -6 | 0.045 | 2.453 | 0.924 | 70.93 | 956.161 | No |
| SLV 16 | -1709 | -1144 | -6 | 0.045 | 2.453 | 0.924 | 70.93 | 956.161 | No |

### Tabella dei coefficienti di sicurezza minimi

| Stato limite | Coeff.s. | Comb. | Verifica |
|---|---|---|---|
| PF_SLU | 2.64 | SLU 82 | Si |
| V_SLU | 8.432 | SLU 29 | Si |
| PF_SLV | 0 | SLV 4 | No |
| V_SLV | 0 | SLV 1 | No |
| PFFP_SLV | 0 | SLV 7 | No |
| R_SLV | 0.039 | SLV 11 | No |

## Maschio 173

Verifiche condotte secondo D.M. 17-01-18 (N.T.C.)

### Dati geometrici

| X ini. | Y ini. | X fin. | Y fin. | Quota i. | Quota.s | l | Sp. | h netta | h ini. | h fin. | a | a.s.,sx | a.s.,dx |
|---|---|---|---|---|---|---|---|---|---|---|---|---|---|
| -318.3 | -335.9 | -550.8 | -335.9 | L5 | L6 | 232.5 | 28 | 352 | 352 | 352 | | | |

### Caratteristiche del materiale

(Circolare 7 21-01-19 C8.5.I) Muratura in mattoni pieni e malta di calce LC2_Corti

| fb | fk | fvk0 | fmedio | τ0 | fv0 | μ | ϕ | fv,lim | E | G | FC |
|---|---|---|---|---|---|---|---|---|---|---|---|
| 60 | | | 34.5 | 0.9 | 2 | 0.58 | 0.77 | 3.25 | 32000 | 12800 | 1.2 |

### Verifica a pressoflessione nel piano secondo D.M. 17-01-18 NTC §7.8.2.2.1 in combinazioni non sismiche, γM = 3

| Comb. | Quota | N | M | σ0 | Mu | c.s. | Verifica |
|---|---|---|---|---|---|---|---|
| SLU 66 | 1096 | -11166 | 71499 | 1.72 | 1024725 | 14.332 | Si |
| SLU 66 | 1176 | -9179 | 119602 | 1.41 | 882365 | 7.377 | Si |
| SLU 46 | 1096 | -9629 | 59273 | 1.48 | 916102 | 15.456 | Si |
| SLU 46 | 1176 | -7800 | 103446 | 1.2 | 773403 | 7.476 | Si |
| SLU 72 | 1096 | -10761 | 62325 | 1.65 | 997127 | 15.999 | Si |
| SLU 72 | 1176 | -8834 | 114846 | 1.36 | 855867 | 7.452 | Si |

| Comb. | Quota | N | M | σ0 | Mu | c.s. | Verifica |
|---|---|---|---|---|---|---|---|
| SLU 65 | 1096 | -9739 | 63672 | 1.5 | 924200 | 14.515 | Si |
| SLU 65 | 1176 | -7943 | 107480 | 1.22 | 785087 | 7.304 | Si |
| SLU 64 | 1096 | -10440 | 71804 | 1.6 | 974717 | 13.575 | Si |
| SLU 64 | 1176 | -8511 | 112293 | 1.31 | 830571 | 7.396 | Si |
| SLU 44 | 1096 | -8622 | 56325 | 1.32 | 839362 | 14.902 | Si |
| SLU 44 | 1176 | -6905 | 94211 | 1.06 | 698171 | 7.411 | Si |
| SLU 67 | 1096 | -10745 | 66620 | 1.65 | 996013 | 14.951 | Si |
| SLU 67 | 1176 | -8839 | 116714 | 1.36 | 856242 | 7.336 | Si |
| SLU 69 | 1096 | -11537 | 69199 | 1.77 | 1049392 | 15.165 | Si |
| SLU 69 | 1176 | -9511 | 122322 | 1.46 | 907348 | 7.418 | Si |
| SLU 68 | 1096 | -10110 | 61372 | 1.55 | 951189 | 15.499 | Si |
| SLU 68 | 1176 | -8275 | 110200 | 1.27 | 811867 | 7.367 | Si |
| SLU 70 | 1096 | -11116 | 64320 | 1.71 | 1021365 | 15.88 | Si |
| SLU 70 | 1176 | -9171 | 119435 | 1.41 | 881719 | 7.382 | Si |

Verifica a pressoflessione nel piano secondo D.M. 17-01-18 NTC §7.8.2.2.1 in combinazioni sismiche, γM = 2

| Comb. | Quota | N | M | σ0 | Mu | c.s. | Verifica |
|---|---|---|---|---|---|---|---|
| SLD 14 | 1096 | -7683 | 6689 | 1.18 | 806844 | 120.63 | Si |
| SLD 14 | 1176 | -6918 | 221397 | 1.06 | 734308 | 3.317 | Si |
| SLV 13 | 1096 | -7127 | -63894 | 1.09 | 754242 | 11.805 | Si |
| SLV 13 | 1176 | -7367 | 407460 | 1.13 | 777101 | 1.907 | Si |
| SLV 3 | 1096 | -9093 | 182531 | 1.4 | 936215 | 5.129 | Si |
| SLV 3 | 1176 | -5845 | -239352 | 0.9 | 629585 | 2.63 | Si |
| SLV 15 | 1096 | -5920 | -18392 | 0.91 | 636947 | 34.632 | Si |
| SLV 15 | 1176 | -5944 | 331806 | 0.91 | 639333 | 1.927 | Si |
| SLV 9 | 1096 | -9645 | -46656 | 1.48 | 985307 | 21.118 | Si |
| SLV 9 | 1176 | -8993 | 295817 | 1.38 | 927250 | 3.135 | Si |
| SLD 13 | 1096 | -7683 | 6689 | 1.18 | 806844 | 120.63 | Si |
| SLD 13 | 1176 | -6918 | 221397 | 1.06 | 734308 | 3.317 | Si |
| SLV 4 | 1096 | -9093 | 182531 | 1.4 | 936215 | 5.129 | Si |
| SLV 4 | 1176 | -5845 | -239352 | 0.9 | 629585 | 2.63 | Si |
| SLV 16 | 1096 | -5920 | -18392 | 0.91 | 636947 | 34.632 | Si |
| SLV 16 | 1176 | -5944 | 331806 | 0.91 | 639333 | 1.927 | Si |
| SLV 10 | 1096 | -9645 | -46656 | 1.48 | 985307 | 21.118 | Si |
| SLV 10 | 1176 | -8993 | 295817 | 1.38 | 927250 | 3.135 | Si |
| SLV 14 | 1096 | -7127 | -63894 | 1.09 | 754242 | 11.805 | Si |
| SLV 14 | 1176 | -7367 | 407460 | 1.13 | 777101 | 1.907 | Si |

Verifica a taglio nel piano secondo D.M. 17-01-18 (N.T.C.) §7.8.2.2.2 con rottura per scorrimento in combinazioni non sismiche, γM = 3

| Comb. | Quota | N | V par | M | σ0 | σN | l' | fvd | Vt scorr. | Vt fess.diag. | Vt,lim | c.s. | Verifica |
|---|---|---|---|---|---|---|---|---|---|---|---|---|---|
| SLU 39 | 1096 | -10204 | 742 | 87365 | | 1.57 | 232.5 | 0.76 | 4977 | | | 6.7 | Si |
| SLU 39 | 1176 | -8499 | 713 | 95894 | | 1.31 | 232.5 | 0.73 | 4750 | | | 6.66 | Si |
| SLU 82 | 1096 | -11641 | 649 | 95422 | | 1.79 | 232.5 | 0.79 | 5169 | | | 7.97 | Si |
| SLU 82 | 1176 | -9609 | 667 | 112359 | | 1.48 | 232.5 | 0.75 | 4898 | | | 7.35 | Si |
| SLU 60 | 1096 | -10945 | 778 | 92955 | | 1.68 | 232.5 | 0.78 | 5076 | | | 6.52 | Si |
| SLU 60 | 1176 | -8911 | 728 | 101978 | | 1.37 | 232.5 | 0.74 | 4805 | | | 6.6 | Si |
| SLU 62 | 1096 | -11316 | 768 | 90655 | | 1.74 | 232.5 | 0.79 | 5126 | | | 6.67 | Si |
| SLU 62 | 1176 | -9243 | 722 | 104698 | | 1.42 | 232.5 | 0.74 | 4849 | | | 6.72 | Si |
| SLU 20 | 1096 | -9459 | 723 | 77718 | | 1.45 | 232.5 | 0.75 | 4878 | | | 6.75 | Si |
| SLU 20 | 1176 | -7793 | 680 | 85346 | | 1.2 | 232.5 | 0.72 | 4656 | | | 6.85 | Si |
| SLU 61 | 1096 | -10524 | 639 | 88075 | | 1.62 | 232.5 | 0.77 | 5020 | | | 7.86 | Si |
| SLU 61 | 1176 | -8571 | 639 | 99090 | | 1.32 | 232.5 | 0.73 | 4759 | | | 7.45 | Si |
| SLU 81 | 1096 | -12062 | 788 | 100302 | | 1.85 | 232.5 | 0.8 | 5225 | | | 6.63 | Si |
| SLU 81 | 1176 | -9950 | 756 | 115247 | | 1.53 | 232.5 | 0.76 | 4943 | | | 6.54 | Si |
| SLU 83 | 1096 | -12433 | 778 | 98002 | | 1.91 | 232.5 | 0.81 | 5274 | | | 6.78 | Si |
| SLU 83 | 1176 | -10282 | 750 | 117967 | | 1.58 | 232.5 | 0.77 | 4988 | | | 6.65 | Si |
| SLU 18 | 1096 | -9088 | 732 | 80018 | | 1.4 | 232.5 | 0.74 | 4828 | | | 6.59 | Si |
| SLU 18 | 1176 | -7461 | 685 | 82626 | | 1.15 | 232.5 | 0.71 | 4611 | | | 6.73 | Si |
| SLU 41 | 1096 | -10575 | 733 | 85065 | | 1.62 | 232.5 | 0.77 | 5027 | | | 6.86 | Si |
| SLU 41 | 1176 | -8831 | 708 | 98615 | | 1.36 | 232.5 | 0.74 | 4794 | | | 6.78 | Si |

Verifica a taglio nel piano secondo D.M. 17-01-18 (N.T.C.) §7.8.2.2.2 con rottura per scorrimento in combinazioni sismiche, γM = 2

| Comb. | Quota | N | V par | M | σ0 | σN | l' | fvd | Vt scorr. | Vt fess.diag. | Vt,lim | c.s. | Verifica |
|---|---|---|---|---|---|---|---|---|---|---|---|---|---|
| SLV 15 | 1096 | -5920 | -6120 | -18392 | | 0.91 | 232.5 | 1.02 | 6609 | | | 1.08 | Si |
| SLV 15 | 1176 | -5944 | -4638 | 331806 | | 1.17 | 181.28 | 1.07 | 5419 | | | 1.17 | Si |
| SLV 7 | 1096 | -6574 | 5076 | 165294 | | 1.01 | 232.5 | 1.04 | 6740 | | | 1.33 | Si |
| SLV 7 | 1176 | -4219 | 4149 | -127709 | | 0.65 | 232.5 | 0.96 | 6269 | | | 1.51 | Si |
| SLV 3 | 1096 | -9093 | 8264 | 182531 | | 1.4 | 232.5 | 1.11 | 7244 | | | 0.88 | No, Vu<V |
| SLV 3 | 1176 | -5845 | 6520 | -239352 | | 0.92 | 225.91 | 1.02 | 6440 | | | 0.99 | No, Vu<V |
| SLV 4 | 1096 | -9093 | 8264 | 182531 | | 1.4 | 232.5 | 1.11 | 7244 | | | 0.88 | No, Vu<V |
| SLV 4 | 1176 | -5845 | 6520 | -239352 | | 0.92 | 225.91 | 1.02 | 6440 | | | 0.99 | No, Vu<V |
| SLV 1 | 1096 | -10300 | 6681 | 137029 | | 1.58 | 232.5 | 1.15 | 7485 | | | 1.12 | Si |
| SLV 1 | 1176 | -7269 | 5206 | -163699 | | 1.12 | 232.5 | 1.06 | 6879 | | | 1.32 | Si |
| SLV 14 | 1096 | -7127 | -7703 | -63894 | | 1.09 | 232.5 | 1.05 | 6850 | | | 0.89 | No, Vu<V |
| SLV 14 | 1176 | -7367 | -5953 | 407460 | | 1.44 | 182.82 | 1.12 | 5739 | | | 0.96 | No, Vu<V |
| SLV 8 | 1096 | -6574 | 5076 | 165294 | | 1.01 | 232.5 | 1.04 | 6740 | | | 1.33 | Si |
| SLV 8 | 1176 | -4219 | 4149 | -127709 | | 0.65 | 232.5 | 0.96 | 6269 | | | 1.51 | Si |
| SLV 16 | 1096 | -5920 | -6120 | -18392 | | 0.91 | 232.5 | 1.02 | 6609 | | | 1.08 | Si |
| SLV 16 | 1176 | -5944 | -4638 | 331806 | | 1.17 | 181.28 | 1.07 | 5419 | | | 1.17 | Si |
| SLV 13 | 1096 | -7127 | -7703 | -63894 | | 1.09 | 232.5 | 1.05 | 6850 | | | 0.89 | No, Vu<V |
| SLV 13 | 1176 | -7367 | -5953 | 407460 | | 1.44 | 182.82 | 1.12 | 5739 | | | 0.96 | No, Vu<V |
| SLV 2 | 1096 | -10300 | 6681 | 137029 | | 1.58 | 232.5 | 1.15 | 7485 | | | 1.12 | Si |
| SLV 2 | 1176 | -7269 | 5206 | -163699 | | 1.12 | 232.5 | 1.06 | 6879 | | | 1.32 | Si |

Verifica a pressoflessione fuori piano D.M. 17-01-18 (N.T.C.)

quota 1072 Wa 0.05 denominatore 8 γM = 2

| Comb. | fd | Sa | σ0 | N | M | Mc | Coeff.s. | Verifica |
|---|---|---|---|---|---|---|---|---|
| SLV 11 | 14 | 0.46 | 0.84 | -5466 | 28576 | 71265 | 2.49 | Si |
| SLV 12 | 14 | 0.46 | 0.84 | -5466 | 28576 | 71265 | 2.49 | Si |
| SLV 8 | 14 | 0.46 | 0.87 | -5656 | 28576 | 73553 | 2.57 | Si |
| SLV 7 | 14 | 0.46 | 0.87 | -5656 | 28576 | 73553 | 2.57 | Si |
| SLV 15 | 14 | 0.46 | 1.05 | -6852 | 28576 | 87666 | 3.07 | Si |
| SLV 16 | 14 | 0.46 | 1.05 | -6852 | 28576 | 87666 | 3.07 | Si |
| SLV 4 | 14 | 0.46 | 1.15 | -7485 | 28576 | 94935 | 3.32 | Si |
| SLV 3 | 14 | 0.46 | 1.15 | -7485 | 28576 | 94935 | 3.32 | Si |
| SLV 13 | 14 | 0.46 | 1.26 | -8230 | 28576 | 103303 | 3.62 | Si |
| SLV 14 | 14 | 0.46 | 1.26 | -8230 | 28576 | 103303 | 3.62 | Si |

### Verifica dei meccanismi locali di collasso con analisi cinematica lineare

forza di aggancio al piano = 0 quota mezzeria = 1072 Wa = 0.05 Ta = 0.0739

| Comb. | N top | N base | V orto | α0 | M* | e* | a0* | aLim | Verifica |
|---|---|---|---|---|---|---|---|---|---|
| SLV 12 | -4111 | -5247 | 155 | 0.028 | 7.555 | 0.9 | 45.137 | 1733.979 | No |
| SLV 11 | -4111 | -5247 | 155 | 0.028 | 7.555 | 0.9 | 45.137 | 1733.979 | No |
| SLV 6 | -6913 | -10381 | -152 | 0.032 | 10.337 | 0.919 | 50.509 | 1733.979 | No |
| SLV 5 | -6913 | -10381 | -152 | 0.032 | 10.337 | 0.919 | 50.509 | 1733.979 | No |
| SLV 10 | -6633 | -11006 | -66 | 0.042 | 10.056 | 0.917 | 66.026 | 1733.979 | No |
| SLV 9 | -6633 | -11006 | -66 | 0.042 | 10.056 | 0.917 | 66.026 | 1733.979 | No |
| SLV 7 | -4391 | -4622 | 68 | 0.042 | 7.83 | 0.902 | 67.541 | 1733.979 | No |
| SLV 8 | -4391 | -4622 | 68 | 0.042 | 7.83 | 0.902 | 67.541 | 1733.979 | No |
| SLV 15 | -4666 | -7991 | 179 | 0.025 | 8.101 | 0.904 | 40.75 | 956.161 | No |
| SLV 16 | -4666 | -7991 | 179 | 0.025 | 8.101 | 0.904 | 40.75 | 956.161 | No |

### Tabella dei coefficienti di sicurezza minimi

| Stato limite | Coeff.s. | Comb. | Verifica |
|---|---|---|---|
| PF_SLU | 7.304 | SLU 65 | Si |
| V_SLU | 6.524 | SLU 60 | Si |
| PF_SLV | 1.907 | SLV 13 | Si |
| V_SLV | 0.877 | SLV 3 | No |
| PFFP_SLV | 2.494 | SLV 11 | Si |
| R_SLV | 0.026 | SLV 11 | No |

## Maschio 174

Verifiche condotte secondo D.M. 17-01-18 (N.T.C.)

### Dati geometrici

| X ini. | Y ini. | X fin. | Y fin. | Quota i. | Quota.s | l | Sp. | h netta | h ini. | h fin. | a | a.s.,sx | a.s.,dx |
|---|---|---|---|---|---|---|---|---|---|---|---|---|---|
| -12.3 | -335.9 | -228.3 | -335.9 | L5 | L6 | 216 | 28 | 352 | 352 | 352 | | | |

### Caratteristiche del materiale

(Circolare 7 21-01-19 C8.5.I) Muratura in mattoni pieni e malta di calce LC2_Corti

| fb | fk | fvk0 | fmedio | τ0 | fv0 | μ | ϕ | fv,lim | E | G | FC |
|---|---|---|---|---|---|---|---|---|---|---|---|
| 60 | | | 34.5 | 0.9 | 2 | 0.58 | 0.77 | 3.25 | 32000 | 12800 | 1.2 |

### Verifica a pressoflessione nel piano secondo D.M. 17-01-18 NTC §7.8.2.2.1 in combinazioni non sismiche, γM = 3

| Comb. | Quota | N | M | σ0 | Mu | c.s. | Verifica |
|---|---|---|---|---|---|---|---|
| SLU 81 | 986 | -11009 | -50086 | 1.82 | 923303 | 18.434 | Si |
| SLU 81 | 1166 | -10897 | 150864 | 1.8 | 916564 | 6.075 | Si |
| SLU 31 | 986 | -8801 | -71886 | 1.46 | 780725 | 10.861 | Si |
| SLU 31 | 1166 | -9081 | 135802 | 1.5 | 799977 | 5.891 | Si |
| SLU 40 | 986 | -9089 | -62546 | 1.5 | 800534 | 12.799 | Si |
| SLU 40 | 1166 | -9405 | 136840 | 1.56 | 821810 | 6.006 | Si |
| SLU 23 | 986 | -8168 | -68859 | 1.35 | 735919 | 10.687 | Si |
| SLU 23 | 1166 | -8155 | 123916 | 1.35 | 734966 | 5.931 | Si |
| SLU 73 | 986 | -10696 | -75379 | 1.77 | 904382 | 11.998 | Si |
| SLU 73 | 1166 | -10683 | 155909 | 1.77 | 903594 | 5.796 | Si |
| SLU 65 | 986 | -10063 | -72352 | 1.66 | 864834 | 11.953 | Si |
| SLU 65 | 1166 | -9757 | 144023 | 1.61 | 845087 | 5.868 | Si |
| SLU 52 | 986 | -9812 | -61089 | 1.62 | 848661 | 13.892 | Si |
| SLU 52 | 1166 | -9455 | 134090 | 1.56 | 825179 | 6.154 | Si |
| SLU 75 | 986 | -11377 | -64668 | 1.88 | 944985 | 14.613 | Si |
| SLU 75 | 1166 | -11359 | 155170 | 1.88 | 943949 | 6.083 | Si |
| SLU 76 | 986 | -11147 | -74914 | 1.84 | 931476 | 12.434 | Si |
| SLU 76 | 1166 | -11171 | 152010 | 1.85 | 932921 | 6.137 | Si |
| SLU 82 | 986 | -10984 | -66040 | 1.82 | 921799 | 13.958 | Si |
| SLU 82 | 1166 | -11007 | 156947 | 1.82 | 923153 | 5.882 | Si |

### Verifica a pressoflessione nel piano secondo D.M. 17-01-18 NTC §7.8.2.2.1 in combinazioni sismiche, γM = 2

| Comb. | Quota | N | M | σ0 | Mu | c.s. | Verifica |
|---|---|---|---|---|---|---|---|
| SLV 3 | 986 | -6122 | 214120 | 1.01 | 606399 | 2.832 | Si |
| SLV 3 | 1166 | -3253 | -176357 | 0.54 | 335822 | 1.904 | Si |
| SLV 1 | 986 | -8540 | 191687 | 1.41 | 815739 | 4.256 | Si |
| SLV 1 | 1166 | -5129 | -161762 | 0.85 | 515529 | 3.187 | Si |
| SLV 2 | 986 | -8540 | 191687 | 1.41 | 815739 | 4.256 | Si |
| SLV 2 | 1166 | -5129 | -161762 | 0.85 | 515529 | 3.187 | Si |
| SLV 12 | 986 | -3858 | -66286 | 0.64 | 394942 | 5.958 | Si |
| SLV 12 | 1166 | -5182 | 158459 | 0.86 | 520404 | 3.284 | Si |
| SLV 13 | 986 | -9398 | -279970 | 1.55 | 885879 | 3.164 | Si |
| SLV 13 | 1166 | -11466 | 379535 | 1.9 | 1046213 | 2.757 | Si |
| SLV 14 | 986 | -9398 | -279970 | 1.55 | 885879 | 3.164 | Si |
| SLV 14 | 1166 | -11466 | 379535 | 1.9 | 1046213 | 2.757 | Si |

| Comb. | Quota | N | M | σ0 | Mu | c.s. | Verifica |
|---|---|---|---|---|---|---|---|
| SLV 4 | 986 | -6122 | 214120 | 1.01 | 606399 | 2.832 | Si |
| SLV 4 | 1166 | -3253 | -176357 | 0.54 | 335822 | 1.904 | Si |
| SLV 16 | 986 | -6980 | -257537 | 1.15 | 682601 | 2.65 | Si |
| SLV 16 | 1166 | -9589 | 364940 | 1.59 | 901269 | 2.47 | Si |
| SLV 15 | 986 | -6980 | -257537 | 1.15 | 682601 | 2.65 | Si |
| SLV 15 | 1166 | -9589 | 364940 | 1.59 | 901269 | 2.47 | Si |
| SLV 11 | 986 | -3858 | -66286 | 0.64 | 394942 | 5.958 | Si |
| SLV 11 | 1166 | -5182 | 158459 | 0.86 | 520404 | 3.284 | Si |

Verifica a taglio nel piano secondo D.M. 17-01-18 (N.T.C.) §7.8.2.2.2 con rottura per scorrimento in combinazioni non sismiche, γM = 3

| Comb. | Quota | N | V par | M | σ0 | σN | l' | fvd | Vt scorr. | Vt fess.diag. | Vt,lim | c.s. | Verifica |
|---|---|---|---|---|---|---|---|---|---|---|---|---|---|
| SLU 34 | 986 | -9252 | -2592 | -71420 | | 1.53 | 216 | 0.76 | 4594 | | | 1.77 | Si |
| SLU 34 | 1166 | -9569 | -2543 | 131903 | | 1.58 | 216 | 0.77 | 4636 | | | 1.82 | Si |
| SLU 80 | 986 | -11614 | -2762 | -63812 | | 1.92 | 216 | 0.81 | 4909 | | | 1.78 | Si |
| SLU 80 | 1166 | -11586 | -2735 | 144055 | | 1.92 | 216 | 0.81 | 4905 | | | 1.79 | Si |
| SLU 84 | 986 | -11435 | -2875 | -65575 | | 1.89 | 216 | 0.81 | 4885 | | | 1.7 | Si |
| SLU 84 | 1166 | -11495 | -2847 | 153048 | | 1.9 | 216 | 0.81 | 4893 | | | 1.72 | Si |
| SLU 76 | 986 | -11147 | -2911 | -74914 | | 1.84 | 216 | 0.8 | 4846 | | | 1.66 | Si |
| SLU 76 | 1166 | -11171 | -2862 | 152010 | | 1.85 | 216 | 0.8 | 4850 | | | 1.69 | Si |
| SLU 82 | 986 | -10984 | -2878 | -66040 | | 1.82 | 216 | 0.8 | 4825 | | | 1.68 | Si |
| SLU 82 | 1166 | -11007 | -2848 | 156947 | | 1.82 | 216 | 0.8 | 4828 | | | 1.7 | Si |
| SLU 78 | 986 | -11828 | -2833 | -64203 | | 1.96 | 216 | 0.82 | 4937 | | | 1.74 | Si |
| SLU 78 | 1166 | -11848 | -2805 | 151271 | | 1.96 | 216 | 0.82 | 4940 | | | 1.76 | Si |
| SLU 75 | 986 | -11377 | -2835 | -64668 | | 1.88 | 216 | 0.81 | 4877 | | | 1.72 | Si |
| SLU 75 | 1166 | -11359 | -2807 | 155170 | | 1.88 | 216 | 0.81 | 4875 | | | 1.74 | Si |
| SLU 73 | 986 | -10696 | -2913 | -75379 | | 1.77 | 216 | 0.79 | 4786 | | | 1.64 | Si |
| SLU 73 | 1166 | -10683 | -2863 | 155909 | | 1.77 | 216 | 0.79 | 4784 | | | 1.67 | Si |
| SLU 31 | 986 | -8801 | -2595 | -71886 | | 1.46 | 216 | 0.75 | 4534 | | | 1.75 | Si |
| SLU 31 | 1166 | -9081 | -2545 | 135802 | | 1.5 | 216 | 0.76 | 4571 | | | 1.8 | Si |
| SLU 65 | 986 | -10063 | -2655 | -72352 | | 1.66 | 216 | 0.78 | 4702 | | | 1.77 | Si |
| SLU 65 | 1166 | -9757 | -2605 | 144023 | | 1.61 | 216 | 0.77 | 4661 | | | 1.79 | Si |

Verifica a taglio nel piano secondo D.M. 17-01-18 (N.T.C.) §7.8.2.2.2 con rottura per scorrimento in combinazioni sismiche, γM = 2

| Comb. | Quota | N | V par | M | σ0 | σN | l' | fvd | Vt scorr. | Vt fess.diag. | Vt,lim | c.s. | Verifica |
|---|---|---|---|---|---|---|---|---|---|---|---|---|---|
| SLV 16 | 986 | -6980 | -6635 | -257537 | | 1.17 | 213.3 | 1.07 | 6373 | | | 0.96 | No, Vu<V |
| SLV 16 | 1166 | -9589 | -5873 | 364940 | | 1.63 | 209.83 | 1.16 | 6814 | | | 1.16 | Si |
| SLD 13 | 986 | -8456 | -3827 | -138411 | | 1.4 | 216 | 1.11 | 6731 | | | 1.76 | Si |
| SLD 13 | 1166 | -9111 | -3365 | 220099 | | 1.51 | 216 | 1.13 | 6862 | | | 2.04 | Si |
| SLV 11 | 986 | -3858 | -3221 | -66286 | | 0.64 | 216 | 0.96 | 5812 | | | 1.8 | Si |
| SLV 11 | 1166 | -5182 | -3480 | 158459 | | 0.86 | 216 | 1 | 6076 | | | 1.75 | Si |
| SLV 14 | 986 | -9398 | -6628 | -279970 | | 1.55 | 216 | 1.14 | 6920 | | | 1.04 | Si |
| SLV 14 | 1166 | -11466 | -5544 | 379535 | | 1.9 | 216 | 1.21 | 7333 | | | 1.32 | Si |
| SLD 15 | 986 | -7431 | -3828 | -128747 | | 1.23 | 216 | 1.08 | 6526 | | | 1.7 | Si |
| SLD 15 | 1166 | -8315 | -3502 | 214102 | | 1.37 | 216 | 1.11 | 6703 | | | 1.91 | Si |
| SLV 12 | 986 | -3858 | -3221 | -66286 | | 0.64 | 216 | 0.96 | 5812 | | | 1.8 | Si |
| SLV 12 | 1166 | -5182 | -3480 | 158459 | | 0.86 | 216 | 1 | 6076 | | | 1.75 | Si |
| SLD 16 | 986 | -7431 | -3828 | -128747 | | 1.23 | 216 | 1.08 | 6526 | | | 1.7 | Si |
| SLD 16 | 1166 | -8315 | -3502 | 214102 | | 1.37 | 216 | 1.11 | 6703 | | | 1.91 | Si |
| SLV 13 | 986 | -9398 | -6628 | -279970 | | 1.55 | 216 | 1.14 | 6920 | | | 1.04 | Si |
| SLV 13 | 1166 | -11466 | -5544 | 379535 | | 1.9 | 216 | 1.21 | 7333 | | | 1.32 | Si |
| SLV 15 | 986 | -6980 | -6635 | -257537 | | 1.17 | 213.3 | 1.07 | 6373 | | | 0.96 | No, Vu<V |
| SLV 15 | 1166 | -9589 | -5873 | 364940 | | 1.63 | 209.83 | 1.16 | 6814 | | | 1.16 | Si |
| SLD 14 | 986 | -8456 | -3827 | -138411 | | 1.4 | 216 | 1.11 | 6731 | | | 1.76 | Si |
| SLD 14 | 1166 | -9111 | -3365 | 220099 | | 1.51 | 216 | 1.13 | 6862 | | | 2.04 | Si |

Verifica a pressoflessione fuori piano D.M. 17-01-18 (N.T.C.)

quota 1072 Wa 0.05 denominatore 8 γM = 2

| Comb. | fd | Sa | σ0 | N | M | Mc | Coeff.s. | Verifica |
|---|---|---|---|---|---|---|---|---|
| SLV 8 | 14 | 0.46 | 0.61 | -3695 | 26548 | 49145 | 1.85 | Si |
| SLV 7 | 14 | 0.46 | 0.61 | -3695 | 26548 | 49145 | 1.85 | Si |
| SLV 3 | 14 | 0.46 | 0.75 | -4528 | 26548 | 59513 | 2.24 | Si |
| SLV 4 | 14 | 0.46 | 0.75 | -4528 | 26548 | 59513 | 2.24 | Si |
| SLV 11 | 14 | 0.46 | 0.83 | -5020 | 26548 | 65505 | 2.47 | Si |
| SLV 12 | 14 | 0.46 | 0.83 | -5020 | 26548 | 65505 | 2.47 | Si |
| SLV 2 | 14 | 0.46 | 1.09 | -6567 | 26548 | 83773 | 3.16 | Si |
| SLV 1 | 14 | 0.46 | 1.09 | -6567 | 26548 | 83773 | 3.16 | Si |
| SLV 16 | 14 | 0.46 | 1.48 | -8944 | 26548 | 110066 | 4.15 | Si |
| SLV 15 | 14 | 0.46 | 1.48 | -8944 | 26548 | 110066 | 4.15 | Si |

Verifica dei meccanismi locali di collasso con analisi cinematica lineare

forza di aggancio al piano = 0 quota mezzeria = 1072 Wa = 0.05 Ta = 0.0739

| Comb. | N top | N base | V orto | α0 | M* | e* | a0* | aLim | Verifica |
|---|---|---|---|---|---|---|---|---|---|
| SLV 6 | -7221 | -11714 | -45 | 0.043 | 10.405 | 0.923 | 67.952 | 1733.979 | No |
| SLV 5 | -7221 | -11714 | -45 | 0.043 | 10.405 | 0.923 | 67.952 | 1733.979 | No |
| SLV 10 | -8069 | -13307 | -22 | 0.045 | 11.259 | 0.928 | 70.806 | 1733.979 | No |
| SLV 9 | -8069 | -13307 | -22 | 0.045 | 11.259 | 0.928 | 70.806 | 1733.979 | No |
| SLV 12 | -3939 | -4335 | 44 | 0.045 | 7.136 | 0.901 | 72.984 | 1733.979 | No |
| SLV 11 | -3939 | -4335 | 44 | 0.045 | 7.136 | 0.901 | 72.984 | 1733.979 | No |
| SLV 7 | -3090 | -2742 | 21 | 0.051 | 6.311 | 0.894 | 82.556 | 1733.979 | No |
| SLV 8 | -3090 | -2742 | 21 | 0.051 | 6.311 | 0.894 | 82.556 | 1733.979 | No |
| SLV 16 | -6374 | -9333 | 48 | 0.043 | 9.555 | 0.918 | 68.29 | 956.161 | No |
| SLV 15 | -6374 | -9333 | 48 | 0.043 | 9.555 | 0.918 | 68.29 | 956.161 | No |

Tabella dei coefficienti di sicurezza minimi

| Stato limite | Coeff.s. | Comb. | Verifica |
|---|---|---|---|
| PF_SLU | 5.796 | SLU 73 | Si |

| Stato limite | Coeff.s. | Comb. | Verifica |
|---|---|---|---|
| V_SLU | 1.643 | SLU 73 | Si |
| PF_SLV | 1.904 | SLV 3 | Si |
| V_SLV | 0.96 | SLV 15 | No |
| PFFP_SLV | 1.851 | SLV 7 | Si |
| R_SLV | 0.039 | SLV 5 | No |

## Maschio 175

Verifiche condotte secondo D.M. 17-01-18 (N.T.C.)

### Dati geometrici

| X ini. | Y ini. | X fin. | Y fin. | Quota i. | Quota.s | l | Sp. | h netta | h ini. | h fin. | a | a.s.,sx | a.s.,dx |
|---|---|---|---|---|---|---|---|---|---|---|---|---|---|
| -296.3 | 595.1 | -515.8 | 595.1 | L5 | L6 | 219.5 | 28 | 352 | 352 | 352 | | | |

### Caratteristiche del materiale

(Circolare 7 21-01-19 C8.5.I) Muratura in mattoni pieni e malta di calce LC2_Corti

| fb | fk | fvk0 | fmedio | τ0 | fv0 | μ | ϕ | fv,lim | E | G | FC |
|---|---|---|---|---|---|---|---|---|---|---|---|
| 60 | | | 34.5 | 0.9 | 2 | 0.58 | 0.77 | 3.25 | 32000 | 12800 | 1.2 |

### Verifica a pressoflessione nel piano secondo D.M. 17-01-18 NTC §7.8.2.2.1 in combinazioni non sismiche, γM = 3

| Comb. | Quota | N | M | σ0 | Mu | c.s. | Verifica |
|---|---|---|---|---|---|---|---|
| SLU 30 | 986 | -4413 | -191877 | 0.72 | 441622 | 2.302 | Si |
| SLU 30 | 1166 | -2428 | -108977 | 0.4 | 253557 | 2.327 | Si |
| SLU 29 | 986 | -4476 | -195582 | 0.73 | 447341 | 2.287 | Si |
| SLU 29 | 1166 | -2491 | -110035 | 0.41 | 259827 | 2.361 | Si |
| SLU 8 | 986 | -3965 | -178651 | 0.65 | 400709 | 2.243 | Si |
| SLU 8 | 1166 | -2013 | -97927 | 0.33 | 212065 | 2.166 | Si |
| SLU 27 | 986 | -5130 | -187707 | 0.83 | 505330 | 2.692 | Si |
| SLU 27 | 1166 | -3145 | -107719 | 0.51 | 323505 | 3.003 | Si |
| SLU 28 | 986 | -5067 | -184002 | 0.82 | 499793 | 2.716 | Si |
| SLU 28 | 1166 | -3082 | -106662 | 0.5 | 317417 | 2.976 | Si |
| SLU 7 | 986 | -4556 | -167070 | 0.74 | 454483 | 2.72 | Si |
| SLU 7 | 1166 | -2604 | -94554 | 0.42 | 270892 | 2.865 | Si |
| SLU 9 | 986 | -3902 | -174945 | 0.63 | 394848 | 2.257 | Si |
| SLU 9 | 1166 | -1950 | -96870 | 0.32 | 205662 | 2.123 | Si |
| SLU 6 | 986 | -4619 | -170775 | 0.75 | 460162 | 2.695 | Si |
| SLU 6 | 1166 | -2667 | -95611 | 0.43 | 277114 | 2.898 | Si |
| SLU 72 | 986 | -6270 | -209446 | 1.02 | 601915 | 2.874 | Si |
| SLU 72 | 1166 | -3710 | -122813 | 0.6 | 377042 | 3.07 | Si |
| SLU 71 | 986 | -6333 | -213151 | 1.03 | 607118 | 2.848 | Si |
| SLU 71 | 1166 | -3774 | -123870 | 0.61 | 382955 | 3.092 | Si |

### Verifica a pressoflessione nel piano secondo D.M. 17-01-18 NTC §7.8.2.2.1 in combinazioni sismiche, γM = 2

| Comb. | Quota | N | M | σ0 | Mu | c.s. | Verifica |
|---|---|---|---|---|---|---|---|
| SLD 16 | 986 | -4734 | -373977 | 0.77 | 486842 | 1.302 | Si |
| SLD 16 | 1166 | -2521 | 68356 | 0.41 | 267437 | 3.912 | Si |
| SLV 16 | 986 | -1356 | -767996 | 0 | 0 | 0 | No, e>l/2 |
| SLV 16 | 1166 | 1206 | 245089 | 0 | 0 | 0 | No, Trazione |
| SLV 11 | 986 | -4657 | -542927 | 0 | 0 | 0 | No, e>l/2 |
| SLV 11 | 1166 | -2191 | 73218 | 0.36 | 233480 | 3.189 | Si |
| SLD 14 | 986 | -4968 | -301907 | 0.81 | 509139 | 1.686 | Si |
| SLD 14 | 1166 | -2843 | 55138 | 0.46 | 300192 | 5.444 | Si |
| SLV 13 | 986 | -1902 | -598907 | 0 | 0 | 0 | No, e>l/2 |
| SLV 13 | 1166 | 447 | 215554 | 0 | 0 | 0 | No, Trazione |
| SLV 15 | 986 | -1356 | -767996 | 0 | 0 | 0 | No, e>l/2 |
| SLV 15 | 1166 | 1206 | 245089 | 0 | 0 | 0 | No, Trazione |
| SLV 14 | 986 | -1902 | -598907 | 0 | 0 | 0 | No, e>l/2 |
| SLV 14 | 1166 | 447 | 215554 | 0 | 0 | 0 | No, Trazione |
| SLD 15 | 986 | -4734 | -373977 | 0.77 | 486842 | 1.302 | Si |
| SLD 15 | 1166 | -2521 | 68356 | 0.41 | 267437 | 3.912 | Si |
| SLV 12 | 986 | -4657 | -542927 | 0 | 0 | 0 | No, e>l/2 |
| SLV 12 | 1166 | -2191 | 73218 | 0.36 | 233480 | 3.189 | Si |
| SLD 13 | 986 | -4968 | -301907 | 0.81 | 509139 | 1.686 | Si |
| SLD 13 | 1166 | -2843 | 55138 | 0.46 | 300192 | 5.444 | Si |

### Verifica a taglio nel piano secondo D.M. 17-01-18 (N.T.C.) §7.8.2.2.2 con rottura per scorrimento in combinazioni non sismiche, γM = 3

| Comb. | Quota | N | V par | M | σ0 | σN | l' | fvd | Vt scorr. | Vt fess.diag. | Vt,lim | c.s. | Verifica |
|---|---|---|---|---|---|---|---|---|---|---|---|---|---|
| SLU 27 | 986 | -5130 | -463 | -187707 | | 0.83 | 219.48 | 0.67 | 4098 | | | 8.86 | Si |
| SLU 27 | 1166 | -3145 | -463 | -107719 | | 0.51 | 219.5 | 0.62 | 3834 | | | 8.29 | Si |
| SLU 9 | 986 | -3902 | -452 | -174945 | | 0.72 | 194.74 | 0.65 | 3550 | | | 7.86 | Si |
| SLU 9 | 1166 | -1950 | -452 | -96870 | | 0.39 | 180.21 | 0.61 | 3063 | | | 6.78 | Si |
| SLU 51 | 986 | -5758 | -478 | -192514 | | 0.94 | 219.5 | 0.68 | 4182 | | | 8.75 | Si |
| SLU 51 | 1166 | -3232 | -478 | -110705 | | 0.53 | 219.5 | 0.63 | 3845 | | | 8.05 | Si |
| SLU 30 | 986 | -4413 | -479 | -191877 | | 0.79 | 198.81 | 0.66 | 3681 | | | 7.69 | Si |
| SLU 30 | 1166 | -2428 | -479 | -108977 | | 0.45 | 194.6 | 0.61 | 3351 | | | 7 | Si |
| SLU 50 | 986 | -5822 | -493 | -196219 | | 0.95 | 219.5 | 0.68 | 4191 | | | 8.51 | Si |
| SLU 50 | 1166 | -3296 | -493 | -111762 | | 0.54 | 219.5 | 0.63 | 3854 | | | 7.82 | Si |
| SLU 29 | 986 | -4476 | -493 | -195582 | | 0.81 | 198.17 | 0.66 | 3679 | | | 7.46 | Si |
| SLU 29 | 1166 | -2491 | -493 | -110035 | | 0.45 | 196.75 | 0.62 | 3393 | | | 6.88 | Si |
| SLU 71 | 986 | -6333 | -520 | -213151 | | 1.03 | 219.5 | 0.69 | 4259 | | | 8.2 | Si |
| SLU 71 | 1166 | -3774 | -520 | -123870 | | 0.61 | 219.5 | 0.64 | 3918 | | | 7.54 | Si |
| SLU 8 | 986 | -3965 | -467 | -178651 | | 0.73 | 194.08 | 0.65 | 3548 | | | 7.6 | Si |
| SLU 8 | 1166 | -2013 | -467 | -97927 | | 0.39 | 183.32 | 0.61 | 3120 | | | 6.69 | Si |
| SLU 72 | 986 | -6270 | -505 | -209446 | | 1.02 | 219.5 | 0.69 | 4250 | | | 8.42 | Si |

| Comb. | Quota | N | V par | M | σ0 | σN | l' | fvd | Vt scorr. | Vt fess.diag. | Vt,lim | c.s. | Verifica |
|---|---|---|---|---|---|---|---|---|---|---|---|---|---|
| SLU 72 | 1166 | -3710 | -505 | -122813 | | 0.6 | 219.5 | 0.64 | 3909 | | | 7.74 | Si |
| SLU 69 | 986 | -6987 | -489 | -205276 | | 1.14 | 219.5 | 0.71 | 4346 | | | 8.89 | Si |
| SLU 69 | 1166 | -4428 | -489 | -121554 | | 0.72 | 219.5 | 0.65 | 4005 | | | 8.19 | Si |

### Verifica a taglio nel piano secondo D.M. 17-01-18 (N.T.C.) §7.8.2.2.2 con rottura per scorrimento in combinazioni sismiche, γM = 2

| Comb. | Quota | N | V par | M | σ0 | σN | l' | fvd | Vt scorr. | Vt fess.diag. | Vt,lim | c.s. | Verifica |
|---|---|---|---|---|---|---|---|---|---|---|---|---|---|
| SLV 15 | 986 | -1356 | -6150 | -767996 | | 0 | 0 | 0.83 | 0 | | | 0 | No, Vu<V |
| SLV 15 | 1166 | 1206 | -5413 | 245089 | | 0 | 0 | 0.83 | 0 | | | 0 | No, Vu<V |
| SLD 15 | 986 | -4734 | -2688 | -373977 | | 1.83 | 92.28 | 1.2 | 3100 | | | 1.15 | Si |
| SLD 15 | 1166 | -2521 | -2374 | 68356 | | 0.41 | 219.5 | 0.92 | 5626 | | | 2.37 | Si |
| SLV 1 | 986 | -13152 | 5940 | 607779 | | 2.46 | 190.61 | 1.33 | 7078 | | | 1.19 | Si |
| SLV 1 | 1166 | -11792 | 5203 | -373959 | | 1.92 | 219.5 | 1.22 | 7480 | | | 1.44 | Si |
| SLD 16 | 986 | -4734 | -2688 | -373977 | | 1.83 | 92.28 | 1.2 | 3100 | | | 1.15 | Si |
| SLD 16 | 1166 | -2521 | -2374 | 68356 | | 0.41 | 219.5 | 0.92 | 5626 | | | 2.37 | Si |
| SLV 2 | 986 | -13152 | 5940 | 607779 | | 2.46 | 190.61 | 1.33 | 7078 | | | 1.19 | Si |
| SLV 2 | 1166 | -11792 | 5203 | -373959 | | 1.92 | 219.5 | 1.22 | 7480 | | | 1.44 | Si |
| SLV 16 | 986 | -1356 | -6150 | -767996 | | 0 | 0 | 0.83 | 0 | | | 0 | No, Vu<V |
| SLV 16 | 1166 | 1206 | -5413 | 245089 | | 0 | 0 | 0.83 | 0 | | | 0 | No, Vu<V |
| SLV 13 | 986 | -1902 | -4901 | -598907 | | 0 | 0 | 0.83 | 0 | | | 0 | No, Vu<V |
| SLV 13 | 1166 | 447 | -4340 | 215554 | | 0 | 0 | 0.83 | 0 | | | 0 | No, Vu<V |
| SLV 11 | 986 | -4657 | -3813 | -542927 | | 0 | 0 | 0.83 | 0 | | | 0 | No, Vu<V |
| SLV 11 | 1166 | -2191 | -3326 | 73218 | | 0.36 | 219.5 | 0.9 | 5560 | | | 1.67 | Si |
| SLV 14 | 986 | -1902 | -4901 | -598907 | | 0 | 0 | 0.83 | 0 | | | 0 | No, Vu<V |
| SLV 14 | 1166 | 447 | -4340 | 215554 | | 0 | 0 | 0.83 | 0 | | | 0 | No, Vu<V |
| SLV 12 | 986 | -4657 | -3813 | -542927 | | 0 | 0 | 0.83 | 0 | | | 0 | No, Vu<V |
| SLV 12 | 1166 | -2191 | -3326 | 73218 | | 0.36 | 219.5 | 0.9 | 5560 | | | 1.67 | Si |

### Verifica a pressoflessione fuori piano D.M. 17-01-18 (N.T.C.)

quota 1072 Wa 0.05 denominatore 8 γM = 2

| Comb. | fd | Sa | σ0 | N | M | Mc | Coeff.s. | Verifica |
|---|---|---|---|---|---|---|---|---|
| SLV 14 | 14 | 0.46 | 0 | -1084 | 26978 | 0 | 0 | No, e>t/2 |
| SLV 16 | 14 | 0.46 | 0 | -462 | 26978 | 0 | 0 | No, e>t/2 |
| SLV 13 | 14 | 0.46 | 0 | -1084 | 26978 | 0 | 0 | No, e>t/2 |
| SLV 15 | 14 | 0.46 | 0 | -462 | 26978 | 0 | 0 | No, e>t/2 |
| SLV 12 | 14 | 0.46 | 0.6 | -3675 | 26978 | 48935 | 1.81 | Si |
| SLV 11 | 14 | 0.46 | 0.6 | -3675 | 26978 | 48935 | 1.81 | Si |
| SLV 9 | 14 | 0.46 | 0.94 | -5749 | 26978 | 74319 | 2.75 | Si |
| SLV 10 | 14 | 0.46 | 0.94 | -5749 | 26978 | 74319 | 2.75 | Si |
| SLV 7 | 14 | 0.46 | 1.15 | -7051 | 26978 | 89451 | 3.32 | Si |
| SLV 8 | 14 | 0.46 | 1.15 | -7051 | 26978 | 89451 | 3.32 | Si |

### Verifica dei meccanismi locali di collasso con analisi cinematica lineare

forza di aggancio al piano = 0 quota mezzeria = 1072 Wa = 0.05 Ta = 0.0739

| Comb. | N top | N base | V orto | α0 | M* | e* | a0* | aLim | Verifica |
|---|---|---|---|---|---|---|---|---|---|
| SLV 16 | -1376 | 2093 | -69 | 0 | 0 | 0 | 0 | 956.161 | No, Trazione |
| SLV 15 | -1376 | 2093 | -69 | 0 | 0 | 0 | 0 | 956.161 | No, Trazione |
| SLV 14 | -1555 | 1334 | -9 | 0 | 0 | 0 | 0 | 956.161 | No, Trazione |
| SLV 13 | -1555 | 1334 | -9 | 0 | 0 | 0 | 0 | 956.161 | No, Trazione |
| SLV 12 | -2954 | -3536 | -115 | 0.032 | 6.235 | 0.893 | 52.205 | 1733.979 | No |
| SLV 11 | -2954 | -3536 | -115 | 0.032 | 6.235 | 0.893 | 52.205 | 1733.979 | No |
| SLV 6 | -5079 | -11649 | 105 | 0.036 | 8.314 | 0.909 | 57.301 | 1733.979 | No |
| SLV 5 | -5079 | -11649 | 105 | 0.036 | 8.314 | 0.909 | 57.301 | 1733.979 | No |
| SLV 7 | -4485 | -9119 | -95 | 0.037 | 7.726 | 0.905 | 59.592 | 1733.979 | No |
| SLV 8 | -4485 | -9119 | -95 | 0.037 | 7.726 | 0.905 | 59.592 | 1733.979 | No |

### Tabella dei coefficienti di sicurezza minimi

| Stato limite | Coeff.s. | Comb. | Verifica |
|---|---|---|---|
| PF_SLU | 2.123 | SLU 9 | Si |
| V_SLU | 6.688 | SLU 8 | Si |
| PF_SLV | 0 | SLV 16 | No |
| V_SLV | 0 | SLV 11 | No |
| PFFP_SLV | 0 | SLV 13 | No |
| R_SLV | 0 | SLV 16 | No |

## Maschio 176

Verifiche condotte secondo D.M. 17-01-18 (N.T.C.)

### Dati geometrici

| X ini. | Y ini. | X fin. | Y fin. | Quota i. | Quota.s | l | Sp. | h netta | h ini. | h fin. | a | a.s.,sx | a.s.,dx |
|---|---|---|---|---|---|---|---|---|---|---|---|---|---|
| -12.3 | 595.1 | -206.3 | 595.1 | L5 | L6 | 194 | 28 | 352 | 352 | 352 | | | |

### Caratteristiche del materiale

(Circolare 7 21-01-19 C8.5.I) Muratura in mattoni pieni e malta di calce LC2_Corti

| fb | fk | fvk0 | fmedio | τ0 | fv0 | μ | ϕ | fv,lim | E | G | FC |
|---|---|---|---|---|---|---|---|---|---|---|---|
| 60 | | | 34.5 | 0.9 | 2 | 0.58 | 0.77 | 3.25 | 32000 | 12800 | 1.2 |

### Verifica a pressoflessione nel piano secondo D.M. 17-01-18 NTC §7.8.2.2.1 in combinazioni non sismiche, γM = 3

| Comb. | Quota | N | M | σ0 | Mu | c.s. | Verifica |
|---|---|---|---|---|---|---|---|
| SLU 73 | 986 | -9867 | -28551 | 1.82 | 743697 | 26.048 | Si |
| SLU 73 | 1166 | -9665 | 78994 | 1.78 | 732737 | 9.276 | Si |
| SLU 40 | 986 | -8479 | -30547 | 1.56 | 664878 | 21.765 | Si |
| SLU 40 | 1166 | -8657 | 74317 | 1.59 | 675458 | 9.089 | Si |

| Comb. | Quota | N | M | σ0 | Mu | c.s. | Verifica |
|---|---|---|---|---|---|---|---|
| SLU 18 | 986 | -7865 | -22893 | 1.45 | 627296 | 27.401 | Si |
| SLU 18 | 1166 | -7695 | 68421 | 1.42 | 616595 | 9.012 | Si |
| SLU 52 | 986 | -9056 | -21349 | 1.67 | 698641 | 32.724 | Si |
| SLU 52 | 1166 | -8607 | 74057 | 1.58 | 672478 | 9.081 | Si |
| SLU 82 | 986 | -10280 | -31597 | 1.89 | 765479 | 24.226 | Si |
| SLU 82 | 1166 | -10166 | 85753 | 1.87 | 759542 | 8.857 | Si |
| SLU 61 | 986 | -9468 | -24396 | 1.74 | 721891 | 29.591 | Si |
| SLU 61 | 1166 | -9108 | 80815 | 1.68 | 701607 | 8.682 | Si |
| SLU 60 | 986 | -9665 | -23943 | 1.78 | 732747 | 30.604 | Si |
| SLU 60 | 1166 | -9203 | 79856 | 1.69 | 707046 | 8.854 | Si |
| SLU 10 | 986 | -7255 | -20299 | 1.34 | 588380 | 28.985 | Si |
| SLU 10 | 1166 | -7098 | 62621 | 1.31 | 578083 | 9.231 | Si |
| SLU 19 | 986 | -7668 | -23346 | 1.41 | 614883 | 26.338 | Si |
| SLU 19 | 1166 | -7599 | 69380 | 1.4 | 610524 | 8.8 | Si |
| SLU 81 | 986 | -10477 | -31144 | 1.93 | 775634 | 24.904 | Si |
| SLU 81 | 1166 | -10262 | 84793 | 1.89 | 764537 | 9.016 | Si |

Verifica a pressoflessione nel piano secondo D.M. 17-01-18 NTC §7.8.2.2.1 in combinazioni sismiche, γM = 2

| Comb. | Quota | N | M | σ0 | Mu | c.s. | Verifica |
|---|---|---|---|---|---|---|---|
| SLV 1 | 986 | -5693 | 338238 | 1.05 | 504847 | 1.493 | Si |
| SLV 1 | 1166 | -1882 | -234981 | 0 | 0 | 0 | No, e>l/2 |
| SLV 6 | 986 | -3346 | 117407 | 0.62 | 308193 | 2.625 | Si |
| SLV 6 | 1166 | -2566 | -92422 | 0.47 | 239306 | 2.589 | Si |
| SLV 16 | 986 | -9003 | -370279 | 1.66 | 754835 | 2.039 | Si |
| SLV 16 | 1166 | -11782 | 335187 | 2.17 | 939972 | 2.804 | Si |
| SLV 15 | 986 | -9003 | -370279 | 1.66 | 754835 | 2.039 | Si |
| SLV 15 | 1166 | -11782 | 335187 | 2.17 | 939972 | 2.804 | Si |
| SLV 13 | 986 | -6692 | -352378 | 1.23 | 583651 | 1.656 | Si |
| SLV 13 | 1166 | -9949 | 297605 | 1.83 | 820367 | 2.757 | Si |
| SLV 14 | 986 | -6692 | -352378 | 1.23 | 583651 | 1.656 | Si |
| SLV 14 | 1166 | -9949 | 297605 | 1.83 | 820367 | 2.757 | Si |
| SLV 3 | 986 | -8004 | 320337 | 1.47 | 682778 | 2.131 | Si |
| SLV 3 | 1166 | -3715 | -197399 | 0.68 | 340179 | 1.723 | Si |
| SLV 2 | 986 | -5693 | 338238 | 1.05 | 504847 | 1.493 | Si |
| SLV 2 | 1166 | -1882 | -234981 | 0 | 0 | 0 | No, e>l/2 |
| SLV 5 | 986 | -3346 | 117407 | 0.62 | 308193 | 2.625 | Si |
| SLV 5 | 1166 | -2566 | -92422 | 0.47 | 239306 | 2.589 | Si |
| SLV 4 | 986 | -8004 | 320337 | 1.47 | 682778 | 2.131 | Si |
| SLV 4 | 1166 | -3715 | -197399 | 0.68 | 340179 | 1.723 | Si |

Verifica a taglio nel piano secondo D.M. 17-01-18 (N.T.C.) §7.8.2.2.2 con rottura per scorrimento in combinazioni non sismiche, γM = 3

| Comb. | Quota | N | V par | M | σ0 | σN | l' | fvd | Vt scorr. | Vt fess.diag. | Vt,lim | c.s. | Verifica |
|---|---|---|---|---|---|---|---|---|---|---|---|---|---|
| SLU 83 | 986 | -10784 | -1584 | -34497 | | 1.99 | 194 | 0.82 | 4456 | | | 2.81 | Si |
| SLU 83 | 1166 | -10498 | -1583 | 61230 | | 1.93 | 194 | 0.81 | 4418 | | | 2.79 | Si |
| SLU 82 | 986 | -10280 | -1798 | -31597 | | 1.89 | 194 | 0.81 | 4388 | | | 2.44 | Si |
| SLU 82 | 1166 | -10166 | -1794 | 85753 | | 1.87 | 194 | 0.81 | 4373 | | | 2.44 | Si |
| SLU 31 | 986 | -8067 | -1515 | -27501 | | 1.49 | 194 | 0.75 | 4093 | | | 2.7 | Si |
| SLU 31 | 1166 | -8157 | -1508 | 67559 | | 1.5 | 194 | 0.76 | 4105 | | | 2.72 | Si |
| SLU 60 | 986 | -9665 | -1518 | -23943 | | 1.78 | 194 | 0.79 | 4306 | | | 2.84 | Si |
| SLU 60 | 1166 | -9203 | -1517 | 79856 | | 1.69 | 194 | 0.78 | 4245 | | | 2.8 | Si |
| SLU 61 | 986 | -9468 | -1582 | -24396 | | 1.74 | 194 | 0.79 | 4280 | | | 2.71 | Si |
| SLU 61 | 1166 | -9108 | -1578 | 80815 | | 1.68 | 194 | 0.78 | 4232 | | | 2.68 | Si |
| SLU 39 | 986 | -8676 | -1551 | -30094 | | 1.6 | 194 | 0.77 | 4175 | | | 2.69 | Si |
| SLU 39 | 1166 | -8753 | -1550 | 73358 | | 1.61 | 194 | 0.77 | 4185 | | | 2.7 | Si |
| SLU 73 | 986 | -9867 | -1697 | -28551 | | 1.82 | 194 | 0.8 | 4333 | | | 2.55 | Si |
| SLU 73 | 1166 | -9665 | -1690 | 78994 | | 1.78 | 194 | 0.79 | 4306 | | | 2.55 | Si |
| SLU 81 | 986 | -10477 | -1734 | -31144 | | 1.93 | 194 | 0.81 | 4415 | | | 2.55 | Si |
| SLU 81 | 1166 | -10262 | -1733 | 84793 | | 1.89 | 194 | 0.81 | 4386 | | | 2.53 | Si |
| SLU 84 | 986 | -10587 | -1649 | -34950 | | 1.95 | 194 | 0.82 | 4429 | | | 2.69 | Si |
| SLU 84 | 1166 | -10402 | -1643 | 62189 | | 1.92 | 194 | 0.81 | 4405 | | | 2.68 | Si |
| SLU 40 | 986 | -8479 | -1616 | -30547 | | 1.56 | 194 | 0.76 | 4148 | | | 2.57 | Si |
| SLU 40 | 1166 | -8657 | -1611 | 74317 | | 1.59 | 194 | 0.77 | 4172 | | | 2.59 | Si |

Verifica a taglio nel piano secondo D.M. 17-01-18 (N.T.C.) §7.8.2.2.2 con rottura per scorrimento in combinazioni sismiche, γM = 2

| Comb. | Quota | N | V par | M | σ0 | σN | l' | fvd | Vt scorr. | Vt fess.diag. | Vt,lim | c.s. | Verifica |
|---|---|---|---|---|---|---|---|---|---|---|---|---|---|
| SLV 2 | 986 | -5693 | 4997 | 338238 | | 1.8 | 112.76 | 1.19 | 3770 | | | 0.75 | No, Vu<V |
| SLV 2 | 1166 | -1882 | 3913 | -234981 | | 0 | 0 | 0.83 | 0 | | | 0 | No, Vu<V |
| SLD 16 | 986 | -8053 | -3582 | -167296 | | 1.48 | 194 | 1.13 | 6137 | | | 1.71 | Si |
| SLD 16 | 1166 | -8946 | -3118 | 171969 | | 1.65 | 194 | 1.16 | 6316 | | | 2.03 | Si |
| SLV 15 | 986 | -9003 | -7023 | -370279 | | 1.92 | 167.61 | 1.22 | 5712 | | | 0.81 | No, Vu<V |
| SLV 15 | 1166 | -11782 | -5938 | 335187 | | 2.17 | 194 | 1.27 | 6883 | | | 1.16 | Si |
| SLV 16 | 986 | -9003 | -7023 | -370279 | | 1.92 | 167.61 | 1.22 | 5712 | | | 0.81 | No, Vu<V |
| SLV 16 | 1166 | -11782 | -5938 | 335187 | | 2.17 | 194 | 1.27 | 6883 | | | 1.16 | Si |
| SLV 14 | 986 | -6692 | -6537 | -352378 | | 1.8 | 133.02 | 1.19 | 4442 | | | 0.68 | No, Vu<V |
| SLV 14 | 1166 | -9949 | -5816 | 297605 | | 1.83 | 194 | 1.2 | 6516 | | | 1.12 | Si |
| SLV 1 | 986 | -5693 | 4997 | 338238 | | 1.8 | 112.76 | 1.19 | 3770 | | | 0.75 | No, Vu<V |
| SLV 1 | 1166 | -1882 | 3913 | -234981 | | 0 | 0 | 0.83 | 0 | | | 0 | No, Vu<V |
| SLV 4 | 986 | -8004 | 4510 | 320337 | | 1.67 | 170.94 | 1.17 | 5589 | | | 1.24 | Si |
| SLV 4 | 1166 | -3715 | 3791 | -197399 | | 1.01 | 131.59 | 1.03 | 3813 | | | 1.01 | Si |
| SLV 3 | 986 | -8004 | 4510 | 320337 | | 1.67 | 170.94 | 1.17 | 5589 | | | 1.24 | Si |
| SLV 3 | 1166 | -3715 | 3791 | -197399 | | 1.01 | 131.59 | 1.03 | 3813 | | | 1.01 | Si |
| SLD 15 | 986 | -8053 | -3582 | -167296 | | 1.48 | 194 | 1.13 | 6137 | | | 1.71 | Si |
| SLD 15 | 1166 | -8946 | -3118 | 171969 | | 1.65 | 194 | 1.16 | 6316 | | | 2.03 | Si |
| SLV 13 | 986 | -6692 | -6537 | -352378 | | 1.8 | 133.02 | 1.19 | 4442 | | | 0.68 | No, Vu<V |
| SLV 13 | 1166 | -9949 | -5816 | 297605 | | 1.83 | 194 | 1.2 | 6516 | | | 1.12 | Si |

### Verifica a pressoflessione fuori piano D.M. 17-01-18 (N.T.C.)

quota 1072 Wa 0.05 denominatore 8 γM = 2

| Comb. | fd | Sa | σ0 | N | M | Mc | Coeff.s. | Verifica |
|---|---|---|---|---|---|---|---|---|
| SLV 5 | 14 | 0.46 | 0.61 | -3314 | 23844 | 44076 | 1.85 | Si |
| SLV 6 | 14 | 0.46 | 0.61 | -3314 | 23844 | 44076 | 1.85 | Si |
| SLV 2 | 14 | 0.46 | 0.69 | -3736 | 23844 | 49366 | 2.07 | Si |
| SLV 1 | 14 | 0.46 | 0.69 | -3736 | 23844 | 49366 | 2.07 | Si |
| SLV 9 | 14 | 0.46 | 0.9 | -4910 | 23844 | 63651 | 2.67 | Si |
| SLV 10 | 14 | 0.46 | 0.9 | -4910 | 23844 | 63651 | 2.67 | Si |
| SLV 3 | 14 | 0.46 | 1.05 | -5695 | 23844 | 72886 | 3.06 | Si |
| SLV 4 | 14 | 0.46 | 1.05 | -5695 | 23844 | 72886 | 3.06 | Si |
| SLV 13 | 14 | 0.46 | 1.67 | -9056 | 23844 | 109489 | 4.59 | Si |
| SLV 14 | 14 | 0.46 | 1.67 | -9056 | 23844 | 109489 | 4.59 | Si |

### Verifica dei meccanismi locali di collasso con analisi cinematica lineare

forza di aggancio al piano = 0 quota mezzeria = 1072 Wa = 0.05 Ta = 0.0739

| Comb. | N top | N base | V orto | α0 | M* | e* | a0* | aLim | Verifica |
|---|---|---|---|---|---|---|---|---|---|
| SLV 6 | -2990 | -2482 | 161 | 0.02 | 5.875 | 0.896 | 32.769 | 1733.979 | No |
| SLV 5 | -2990 | -2482 | 161 | 0.02 | 5.875 | 0.896 | 32.769 | 1733.979 | No |
| SLV 9 | -4083 | -4426 | 140 | 0.027 | 6.946 | 0.906 | 44.029 | 1733.979 | No |
| SLV 10 | -4083 | -4426 | 140 | 0.027 | 6.946 | 0.906 | 44.029 | 1733.979 | No |
| SLV 11 | -7662 | -12300 | -160 | 0.03 | 10.53 | 0.93 | 46.92 | 1733.979 | No |
| SLV 12 | -7662 | -12300 | -160 | 0.03 | 10.53 | 0.93 | 46.92 | 1733.979 | No |
| SLV 7 | -6569 | -10355 | -139 | 0.031 | 9.429 | 0.924 | 49.125 | 1733.979 | No |
| SLV 8 | -6569 | -10355 | -139 | 0.031 | 9.429 | 0.924 | 49.125 | 1733.979 | No |
| SLV 15 | -7685 | -11812 | -79 | 0.039 | 10.553 | 0.93 | 60.395 | 956.161 | No |
| SLV 16 | -7685 | -11812 | -79 | 0.039 | 10.553 | 0.93 | 60.395 | 956.161 | No |

### Tabella dei coefficienti di sicurezza minimi

| Stato limite | Coeff.s. | Comb. | Verifica |
|---|---|---|---|
| PF_SLU | 8.682 | SLU 61 | Si |
| V_SLU | 2.438 | SLU 82 | Si |
| PF_SLV | 0 | SLV 1 | No |
| V_SLV | 0 | SLV 1 | No |
| PFFP_SLV | 1.849 | SLV 5 | Si |
| R_SLV | 0.019 | SLV 5 | No |

## Maschio 177

Verifiche condotte secondo D.M. 17-01-18 (N.T.C.)

### Dati geometrici

| X ini. | Y ini. | X fin. | Y fin. | Quota i. | Quota.s | l | Sp. | h netta | h ini. | h fin. | a | a.s.,sx | a.s.,dx |
|---|---|---|---|---|---|---|---|---|---|---|---|---|---|
| -12.3 | -335.9 | -12.3 | 595.1 | L5 | L6 | 931 | 28 | 352 | 352 | 352 | | | |

### Caratteristiche del materiale

(Circolare 7 21-01-19 C8.5.I) Muratura in mattoni pieni e malta di calce LC2_Corti

| fb | fk | fvk0 | fmedio | τ0 | fv0 | μ | ϕ | fv,lim | E | G | FC |
|---|---|---|---|---|---|---|---|---|---|---|---|
| 60 | | | 34.5 | 0.9 | 2 | 0.58 | 0.77 | 3.25 | 32000 | 12800 | 1.2 |

### Verifica a pressoflessione nel piano secondo D.M. 17-01-18 NTC §7.8.2.2.1 in combinazioni non sismiche, γM = 3

| Comb. | Quota | N | M | σ0 | Mu | c.s. | Verifica |
|---|---|---|---|---|---|---|---|
| SLU 29 | 896 | -51755 | 87472 | 1.99 | 18220014 | 208.296 | Si |
| SLU 29 | 1248 | -26537 | 472908 | 1.02 | 10809249 | 22.857 | Si |
| SLU 16 | 896 | -50955 | 166182 | 1.95 | 18027789 | 108.482 | Si |
| SLU 16 | 1248 | -25625 | 445719 | 0.98 | 10488980 | 23.533 | Si |
| SLU 8 | 896 | -45865 | 106330 | 1.76 | 16738800 | 157.423 | Si |
| SLU 8 | 1248 | -23417 | 420533 | 0.9 | 9698420 | 23.062 | Si |
| SLU 37 | 896 | -56845 | 147323 | 2.18 | 19377575 | 131.531 | Si |
| SLU 37 | 1248 | -28745 | 498093 | 1.1 | 11569597 | 23.228 | Si |
| SLU 50 | 896 | -56766 | 146474 | 2.18 | 19360638 | 132.178 | Si |
| SLU 50 | 1248 | -28518 | 479294 | 1.09 | 11492368 | 23.978 | Si |
| SLU 71 | 896 | -62656 | 127616 | 2.4 | 20560365 | 161.112 | Si |
| SLU 71 | 1248 | -31639 | 531668 | 1.21 | 12533403 | 23.574 | Si |
| SLU 79 | 896 | -67746 | 187467 | 2.6 | 21474666 | 114.552 | Si |
| SLU 79 | 1248 | -33847 | 556854 | 1.3 | 13244358 | 23.784 | Si |
| SLU 58 | 896 | -61856 | 206326 | 2.37 | 20406366 | 98.904 | Si |
| SLU 58 | 1248 | -30727 | 504479 | 1.18 | 12233534 | 24.25 | Si |
| SLU 35 | 896 | -57765 | 137472 | 2.22 | 19574714 | 142.39 | Si |
| SLU 35 | 1248 | -29269 | 483408 | 1.12 | 11746862 | 24.3 | Si |
| SLU 27 | 896 | -52675 | 77620 | 2.02 | 18437685 | 237.536 | Si |
| SLU 27 | 1248 | -27061 | 458222 | 1.04 | 10991587 | 23.987 | Si |

### Verifica a pressoflessione nel piano secondo D.M. 17-01-18 NTC §7.8.2.2.1 in combinazioni sismiche, γM = 2

| Comb. | Quota | N | M | σ0 | Mu | c.s. | Verifica |
|---|---|---|---|---|---|---|---|
| SLV 6 | 896 | -39140 | -4348664 | 1.5 | 15980785 | 3.675 | Si |
| SLV 6 | 1248 | -20605 | -1472357 | 0.79 | 8971256 | 6.093 | Si |
| SLV 11 | 896 | -53270 | 4596611 | 2.04 | 20649876 | 4.492 | Si |
| SLV 11 | 1248 | -23582 | 2028124 | 0.9 | 10164755 | 5.012 | Si |
| SLV 9 | 896 | -51598 | -3633680 | 1.98 | 20128061 | 5.539 | Si |
| SLV 9 | 1248 | -23017 | -1140811 | 0.88 | 9939973 | 8.713 | Si |
| SLV 7 | 896 | -40811 | 3881626 | 1.57 | 16563455 | 4.267 | Si |
| SLV 7 | 1248 | -21171 | 1696578 | 0.81 | 9200024 | 5.423 | Si |
| SLV 1 | 896 | -25190 | -2302212 | 0.97 | 10798621 | 4.691 | Si |

| Comb. | Quota | N | M | σ0 | Mu | c.s. | Verifica |
|---|---|---|---|---|---|---|---|
| SLV 1 | 1248 | -17990 | -750034 | 0.69 | 7901411 | 10.535 | Si |
| SLV 5 | 896 | -39140 | -4348664 | 1.5 | 15980785 | 3.675 | Si |
| SLV 5 | 1248 | -20605 | -1472357 | 0.79 | 8971256 | 6.093 | Si |
| SLV 8 | 896 | -40811 | 3881626 | 1.57 | 16563455 | 4.267 | Si |
| SLV 8 | 1248 | -21171 | 1696578 | 0.81 | 9200024 | 5.423 | Si |
| SLV 10 | 896 | -51598 | -3633680 | 1.98 | 20128061 | 5.539 | Si |
| SLV 10 | 1248 | -23017 | -1140811 | 0.88 | 9939973 | 8.713 | Si |
| SLV 12 | 896 | -53270 | 4596611 | 2.04 | 20649876 | 4.492 | Si |
| SLV 12 | 1248 | -23582 | 2028124 | 0.9 | 10164755 | 5.012 | Si |
| SLV 2 | 896 | -25190 | -2302212 | 0.97 | 10798621 | 4.691 | Si |
| SLV 2 | 1248 | -17990 | -750034 | 0.69 | 7901411 | 10.535 | Si |

### Verifica a taglio nel piano secondo D.M. 17-01-18 (N.T.C.) §7.8.2.2.2 con rottura per scorrimento in combinazioni non sismiche, γM = 3

| Comb. | Quota | N | V par | M | σ0 | σN | l' | fvd | Vt scorr. | Vt fess.diag. | Vt,lim | c.s. | Verifica |
|---|---|---|---|---|---|---|---|---|---|---|---|---|---|
| SLU 83 | 896 | -68528 | 918 | 216083 | | 2.63 | 931 | 0.91 | 23619 | | | 25.73 | Si |
| SLU 83 | 1248 | -33371 | 912 | 485243 | | 1.28 | 931 | 0.73 | 18932 | | | 20.75 | Si |
| SLU 77 | 896 | -68666 | 882 | 177616 | | 2.63 | 931 | 0.91 | 23638 | | | 26.8 | Si |
| SLU 77 | 1248 | -34371 | 875 | 542168 | | 1.32 | 931 | 0.73 | 19065 | | | 21.8 | Si |
| SLU 79 | 896 | -67746 | 866 | 187467 | | 2.6 | 931 | 0.9 | 23515 | | | 27.17 | Si |
| SLU 79 | 1248 | -33847 | 858 | 556854 | | 1.3 | 931 | 0.73 | 18995 | | | 22.15 | Si |
| SLU 64 | 896 | -59858 | 835 | 133547 | | 2.3 | 931 | 0.86 | 22463 | | | 26.9 | Si |
| SLU 64 | 1248 | -28793 | 831 | 366858 | | 1.1 | 931 | 0.7 | 18321 | | | 22.04 | Si |
| SLU 66 | 896 | -62177 | 830 | 120730 | | 2.39 | 931 | 0.87 | 22773 | | | 27.42 | Si |
| SLU 66 | 1248 | -30740 | 825 | 434577 | | 1.18 | 931 | 0.71 | 18581 | | | 22.52 | Si |
| SLU 62 | 896 | -62639 | 816 | 234942 | | 2.4 | 931 | 0.88 | 22834 | | | 27.97 | Si |
| SLU 62 | 1248 | -30250 | 812 | 432868 | | 1.16 | 931 | 0.71 | 18516 | | | 22.81 | Si |
| SLU 60 | 896 | -61240 | 838 | 237907 | | 2.35 | 931 | 0.87 | 22648 | | | 27.04 | Si |
| SLU 60 | 1248 | -28828 | 835 | 350463 | | 1.11 | 931 | 0.7 | 18326 | | | 21.95 | Si |
| SLU 81 | 896 | -67129 | 939 | 219049 | | 2.58 | 931 | 0.9 | 23433 | | | 24.95 | Si |
| SLU 81 | 1248 | -31948 | 935 | 402838 | | 1.23 | 931 | 0.72 | 18742 | | | 20.04 | Si |
| SLU 39 | 896 | -56228 | 797 | 178905 | | 2.16 | 931 | 0.84 | 21979 | | | 27.59 | Si |
| SLU 39 | 1248 | -26846 | 793 | 344077 | | 1.03 | 931 | 0.69 | 18062 | | | 22.77 | Si |
| SLU 74 | 896 | -67267 | 903 | 180582 | | 2.58 | 931 | 0.9 | 23451 | | | 25.96 | Si |
| SLU 74 | 1248 | -32948 | 898 | 459763 | | 1.26 | 931 | 0.72 | 18875 | | | 21.02 | Si |

### Verifica a taglio nel piano secondo D.M. 17-01-18 (N.T.C.) §7.8.2.2.2 con rottura per scorrimento in combinazioni sismiche, γM = 2

| Comb. | Quota | N | V par | M | σ0 | σN | l' | fvd | Vt scorr. | Vt fess.diag. | Vt,lim | c.s. | Verifica |
|---|---|---|---|---|---|---|---|---|---|---|---|---|---|
| SLD 7 | 896 | -43900 | 6151 | 1717690 | | 1.68 | 931 | 1.17 | 30503 | | | 4.96 | Si |
| SLD 7 | 1248 | -21695 | 4614 | 879967 | | 0.83 | 931 | 1 | 26062 | | | 5.65 | Si |
| SLV 8 | 896 | -40811 | 13617 | 3881626 | | 1.57 | 931 | 1.15 | 29886 | | | 2.19 | Si |
| SLV 8 | 1248 | -21171 | 10025 | 1696578 | | 0.81 | 931 | 1 | 25958 | | | 2.59 | Si |
| SLV 7 | 896 | -40811 | 13617 | 3881626 | | 1.57 | 931 | 1.15 | 29886 | | | 2.19 | Si |
| SLV 7 | 1248 | -21171 | 10025 | 1696578 | | 0.81 | 931 | 1 | 25958 | | | 2.59 | Si |
| SLV 11 | 896 | -53270 | 13789 | 4596611 | | 2.04 | 931 | 1.24 | 32377 | | | 2.35 | Si |
| SLV 11 | 1248 | -23582 | 10071 | 2028124 | | 0.9 | 931 | 1.01 | 26440 | | | 2.63 | Si |
| SLD 8 | 896 | -43900 | 6151 | 1717690 | | 1.68 | 931 | 1.17 | 30503 | | | 4.96 | Si |
| SLD 8 | 1248 | -21695 | 4614 | 879967 | | 0.83 | 931 | 1 | 26062 | | | 5.65 | Si |
| SLV 5 | 896 | -39140 | -12507 | -4348664 | | 1.5 | 931 | 1.13 | 29551 | | | 2.36 | Si |
| SLV 5 | 1248 | -20605 | -8795 | -1472357 | | 0.79 | 931 | 0.99 | 25844 | | | 2.94 | Si |
| SLV 12 | 896 | -53270 | 13789 | 4596611 | | 2.04 | 931 | 1.24 | 32377 | | | 2.35 | Si |
| SLV 12 | 1248 | -23582 | 10071 | 2028124 | | 0.9 | 931 | 1.01 | 26440 | | | 2.63 | Si |
| SLV 9 | 896 | -51598 | -12335 | -3633680 | | 1.98 | 931 | 1.23 | 32043 | | | 2.6 | Si |
| SLV 9 | 1248 | -23017 | -8749 | -1140811 | | 0.88 | 931 | 1.01 | 26327 | | | 3.01 | Si |
| SLV 10 | 896 | -51598 | -12335 | -3633680 | | 1.98 | 931 | 1.23 | 32043 | | | 2.6 | Si |
| SLV 10 | 1248 | -23017 | -8749 | -1140811 | | 0.88 | 931 | 1.01 | 26327 | | | 3.01 | Si |
| SLV 6 | 896 | -39140 | -12507 | -4348664 | | 1.5 | 931 | 1.13 | 29551 | | | 2.36 | Si |
| SLV 6 | 1248 | -20605 | -8795 | -1472357 | | 0.79 | 931 | 0.99 | 25844 | | | 2.94 | Si |

### Verifica a pressoflessione fuori piano D.M. 17-01-18 (N.T.C.)

quota 1072 Wa 0.05 denominatore 8 γM = 2

| Comb. | fd | Sa | σ0 | N | M | Mc | Coeff.s. | Verifica |
|---|---|---|---|---|---|---|---|---|
| SLV 1 | 14 | 0.46 | 0.87 | -22643 | 114425 | 294462 | 2.57 | Si |
| SLV 2 | 14 | 0.46 | 0.87 | -22643 | 114425 | 294462 | 2.57 | Si |
| SLV 3 | 14 | 0.46 | 0.88 | -22968 | 114425 | 298361 | 2.61 | Si |
| SLV 4 | 14 | 0.46 | 0.88 | -22968 | 114425 | 298361 | 2.61 | Si |
| SLV 5 | 14 | 0.46 | 1.14 | -29693 | 114425 | 376954 | 3.29 | Si |
| SLV 6 | 14 | 0.46 | 1.14 | -29693 | 114425 | 376954 | 3.29 | Si |
| SLV 8 | 14 | 0.46 | 1.18 | -30777 | 114425 | 389244 | 3.4 | Si |
| SLV 7 | 14 | 0.46 | 1.18 | -30777 | 114425 | 389244 | 3.4 | Si |
| SLV 9 | 14 | 0.46 | 1.38 | -36062 | 114425 | 447708 | 3.91 | Si |
| SLV 10 | 14 | 0.46 | 1.38 | -36062 | 114425 | 447708 | 3.91 | Si |

### Verifica dei meccanismi locali di collasso con analisi cinematica lineare

forza di aggancio al piano = 0 quota mezzeria = 1072 Wa = 0.05 Ta = 0.0739

| Comb. | N top | N base | V orto | α0 | M* | e* | a0* | aLim | Verifica |
|---|---|---|---|---|---|---|---|---|---|
| SLV 12 | -23582 | -53270 | -124 | 0.046 | 37.294 | 0.912 | 73.559 | 1733.979 | No |
| SLV 11 | -23582 | -53270 | -124 | 0.046 | 37.294 | 0.912 | 73.559 | 1733.979 | No |
| SLV 5 | -20605 | -39140 | 136 | 0.046 | 34.334 | 0.907 | 74.384 | 1733.979 | No |
| SLV 6 | -20605 | -39140 | 136 | 0.046 | 34.334 | 0.907 | 74.384 | 1733.979 | No |
| SLV 9 | -23017 | -51598 | -8 | 0.05 | 36.73 | 0.911 | 79.758 | 1733.979 | No |
| SLV 10 | -23017 | -51598 | -8 | 0.05 | 36.73 | 0.911 | 79.758 | 1733.979 | No |
| SLV 7 | -21171 | -40811 | 20 | 0.05 | 34.895 | 0.908 | 80.432 | 1733.979 | No |
| SLV 8 | -21171 | -40811 | 20 | 0.05 | 34.895 | 0.908 | 80.432 | 1733.979 | No |
| SLV 15 | -26197 | -67219 | -252 | 0.042 | 39.905 | 0.916 | 66.6 | 956.161 | No |
| SLV 16 | -26197 | -67219 | -252 | 0.042 | 39.905 | 0.916 | 66.6 | 956.161 | No |

### Tabella dei coefficienti di sicurezza minimi

| Stato limite | Coeff.s. | Comb. | Verifica |
|---|---|---|---|
| PF_SLU | 22.857 | SLU 29 | Si |
| V_SLU | 20.036 | SLU 81 | Si |
| PF_SLV | 3.675 | SLV 5 | Si |
| V_SLV | 2.195 | SLV 7 | Si |
| PFFP_SLV | 2.573 | SLV 1 | Si |
| R_SLV | 0.042 | SLV 11 | No |

## Maschio 178

Verifiche condotte secondo D.M. 17-01-18 (N.T.C.)

### Dati geometrici

| X ini. | Y ini. | X fin. | Y fin. | Quota i. | Quota.s | l | Sp. | h netta | h ini. | h fin. | a | a.s.,sx | a.s.,dx |
|---|---|---|---|---|---|---|---|---|---|---|---|---|---|
| -2467.8 | -335.9 | -2467.8 | 126.6 | L6 | L7 | 462.6 | 28 | 316 | 316 | 316 | | | |

### Caratteristiche del materiale

(Circolare 7 21-01-19 C8.5.I) Muratura in mattoni pieni e malta di calce LC2_Corti

| fb | fk | fvk0 | fmedio | τ0 | fv0 | μ | ϕ | fv,lim | E | G | FC |
|---|---|---|---|---|---|---|---|---|---|---|---|
| 60 | | | 34.5 | 0.9 | 2 | 0.58 | 0.77 | 3.25 | 32000 | 12800 | 1.2 |

### Verifica a pressoflessione nel piano secondo D.M. 17-01-18 NTC §7.8.2.2.1 in combinazioni non sismiche, γM = 3

| Comb. | Quota | N | M | σ0 | Mu | c.s. | Verifica |
|---|---|---|---|---|---|---|---|
| SLU 32 | 1248 | -10446 | -489305 | 0.81 | 2176843 | 4.449 | Si |
| SLU 32 | 1458 | -4244 | -357067 | 0.33 | 942129 | 2.639 | Si |
| SLU 35 | 1248 | -11065 | -601938 | 0.85 | 2290780 | 3.806 | Si |
| SLU 35 | 1458 | -4752 | -451741 | 0.37 | 1049511 | 2.323 | Si |
| SLU 42 | 1248 | -10766 | -529951 | 0.83 | 2235886 | 4.219 | Si |
| SLU 42 | 1458 | -4467 | -376448 | 0.34 | 989428 | 2.628 | Si |
| SLU 29 | 1248 | -10802 | -468083 | 0.83 | 2242465 | 4.791 | Si |
| SLU 29 | 1458 | -4786 | -375271 | 0.37 | 1056709 | 2.816 | Si |
| SLU 33 | 1248 | -10704 | -494144 | 0.83 | 2224546 | 4.502 | Si |
| SLU 33 | 1458 | -4444 | -354044 | 0.34 | 984448 | 2.781 | Si |
| SLU 27 | 1248 | -10838 | -483174 | 0.84 | 2249077 | 4.655 | Si |
| SLU 27 | 1458 | -4759 | -382529 | 0.37 | 1051086 | 2.748 | Si |
| SLU 38 | 1248 | -11287 | -591686 | 0.87 | 2331248 | 3.94 | Si |
| SLU 38 | 1458 | -4978 | -441459 | 0.38 | 1096985 | 2.485 | Si |
| SLU 41 | 1248 | -10508 | -525113 | 0.81 | 2188252 | 4.167 | Si |
| SLU 41 | 1458 | -4268 | -379471 | 0.33 | 947130 | 2.496 | Si |
| SLU 37 | 1248 | -11029 | -586847 | 0.85 | 2284204 | 3.892 | Si |
| SLU 37 | 1458 | -4778 | -444483 | 0.37 | 1055134 | 2.374 | Si |
| SLU 36 | 1248 | -11323 | -606777 | 0.87 | 2337784 | 3.853 | Si |
| SLU 36 | 1458 | -4951 | -448717 | 0.38 | 1091385 | 2.432 | Si |

### Verifica a pressoflessione nel piano secondo D.M. 17-01-18 NTC §7.8.2.2.1 in combinazioni sismiche, γM = 2

| Comb. | Quota | N | M | σ0 | Mu | c.s. | Verifica |
|---|---|---|---|---|---|---|---|
| SLV 3 | 1248 | -8921 | 26906 | 0.69 | 1947009 | 72.363 | Si |
| SLV 3 | 1458 | -2055 | -200056 | 0.16 | 469181 | 2.345 | Si |
| SLV 7 | 1248 | -8022 | 390311 | 0.62 | 1761260 | 4.512 | Si |
| SLV 7 | 1458 | -1712 | -229732 | 0.13 | 391690 | 1.705 | Si |
| SLV 6 | 1248 | -10423 | -710591 | 0.8 | 2251815 | 3.169 | Si |
| SLV 6 | 1458 | -4813 | -62818 | 0.37 | 1079412 | 17.183 | Si |
| SLV 11 | 1248 | -7971 | 371531 | 0.62 | 1750724 | 4.712 | Si |
| SLV 11 | 1458 | -2348 | -205094 | 0.18 | 535064 | 2.609 | Si |
| SLV 4 | 1248 | -8921 | 26906 | 0.69 | 1947009 | 72.363 | Si |
| SLV 4 | 1458 | -2055 | -200056 | 0.16 | 469181 | 2.345 | Si |
| SLV 5 | 1248 | -10423 | -710591 | 0.8 | 2251815 | 3.169 | Si |
| SLV 5 | 1458 | -4813 | -62818 | 0.37 | 1079412 | 17.183 | Si |
| SLV 8 | 1248 | -8022 | 390311 | 0.62 | 1761260 | 4.512 | Si |
| SLV 8 | 1458 | -1712 | -229732 | 0.13 | 391690 | 1.705 | Si |
| SLV 10 | 1248 | -10372 | -729372 | 0.8 | 2241635 | 3.073 | Si |
| SLV 10 | 1458 | -5450 | -38180 | 0.42 | 1217018 | 31.876 | Si |
| SLV 12 | 1248 | -7971 | 371531 | 0.62 | 1750724 | 4.712 | Si |
| SLV 12 | 1458 | -2348 | -205094 | 0.18 | 535064 | 2.609 | Si |
| SLV 9 | 1248 | -10372 | -729372 | 0.8 | 2241635 | 3.073 | Si |
| SLV 9 | 1458 | -5450 | -38180 | 0.42 | 1217018 | 31.876 | Si |

### Verifica a taglio nel piano secondo D.M. 17-01-18 (N.T.C.) §7.8.2.2.2 con rottura per scorrimento in combinazioni non sismiche, γM = 3

| Comb. | Quota | N | V par | M | σ0 | σN | l' | fvd | Vt scorr. | Vt fess.diag. | Vt,lim | c.s. | Verifica |
|---|---|---|---|---|---|---|---|---|---|---|---|---|---|
| SLU 78 | 1248 | -13803 | 1000 | -583124 | | 1.07 | 462.57 | 0.7 | 9036 | | | 9.03 | Si |
| SLU 78 | 1458 | -5913 | 1159 | -439926 | | 0.46 | 462.57 | 0.62 | 7984 | | | 6.89 | Si |
| SLU 76 | 1248 | -13320 | 919 | -458626 | | 1.03 | 462.57 | 0.69 | 8972 | | | 9.76 | Si |
| SLU 76 | 1458 | -5565 | 1129 | -335978 | | 0.43 | 462.57 | 0.61 | 7938 | | | 7.03 | Si |
| SLU 72 | 1248 | -13540 | 945 | -449269 | | 1.05 | 462.57 | 0.69 | 9001 | | | 9.53 | Si |
| SLU 72 | 1458 | -5948 | 1107 | -363456 | | 0.46 | 462.57 | 0.62 | 7989 | | | 7.22 | Si |
| SLU 68 | 1248 | -13093 | 897 | -339862 | | 1.01 | 462.57 | 0.69 | 8941 | | | 9.97 | Si |
| SLU 68 | 1458 | -5573 | 1106 | -266767 | | 0.43 | 462.57 | 0.61 | 7939 | | | 7.18 | Si |
| SLU 84 | 1248 | -13246 | 947 | -506299 | | 1.02 | 462.57 | 0.69 | 8962 | | | 9.46 | Si |
| SLU 84 | 1458 | -5429 | 1089 | -367656 | | 0.42 | 462.57 | 0.61 | 7919 | | | 7.27 | Si |
| SLU 70 | 1248 | -13576 | 978 | -464360 | | 1.05 | 462.57 | 0.7 | 9006 | | | 9.21 | Si |
| SLU 70 | 1458 | -5921 | 1136 | -370714 | | 0.46 | 462.57 | 0.62 | 7985 | | | 7.03 | Si |
| SLU 80 | 1248 | -13767 | 967 | -568033 | | 1.06 | 462.57 | 0.7 | 9031 | | | 9.34 | Si |
| SLU 80 | 1458 | -5940 | 1130 | -432668 | | 0.46 | 462.57 | 0.62 | 7988 | | | 7.07 | Si |
| SLU 67 | 1248 | -12957 | 948 | -351727 | | 1 | 462.57 | 0.69 | 8923 | | | 9.41 | Si |

| Comb. | Quota | N | V par | M | σ0 | σN | l' | fvd | Vt scorr. | Vt fess.diag. | Vt,lim | c.s. | Verifica |
|---|---|---|---|---|---|---|---|---|---|---|---|---|---|
| SLU 67 | 1458 | -5413 | 1086 | -276040 | | 0.42 | 462.57 | 0.61 | 7917 | | | 7.29 | Si |
| SLU 75 | 1248 | -13184 | 971 | -470491 | | 1.02 | 462.57 | 0.69 | 8953 | | | 9.22 | Si |
| SLU 75 | 1458 | -5406 | 1109 | -345252 | | 0.42 | 462.57 | 0.61 | 7916 | | | 7.14 | Si |
| SLU 57 | 1248 | -13198 | 949 | -433017 | | 1.02 | 462.57 | 0.69 | 8955 | | | 9.44 | Si |
| SLU 57 | 1458 | -5650 | 1099 | -339485 | | 0.44 | 462.57 | 0.61 | 7949 | | | 7.23 | Si |

### Verifica a taglio nel piano secondo D.M. 17-01-18 (N.T.C.) §7.8.2.2.2 con rottura per scorrimento in combinazioni sismiche, γM = 2

| Comb. | Quota | N | V par | M | σ0 | σN | l' | fvd | Vt scorr. | Vt fess.diag. | Vt,lim | c.s. | Verifica |
|---|---|---|---|---|---|---|---|---|---|---|---|---|---|
| SLV 7 | 1248 | -8022 | 5195 | 390311 | | 0.62 | 462.57 | 0.96 | 12398 | | | 2.39 | Si |
| SLV 7 | 1458 | -1712 | 3930 | -229732 | | 0.21 | 291.3 | 0.88 | 7139 | | | 1.82 | Si |
| SLV 6 | 1248 | -10423 | -3201 | -710591 | | 0.8 | 462.57 | 0.99 | 12878 | | | 4.02 | Si |
| SLV 6 | 1458 | -4813 | -1739 | -62818 | | 0.37 | 462.57 | 0.91 | 11756 | | | 6.76 | Si |
| SLV 5 | 1248 | -10423 | -3201 | -710591 | | 0.8 | 462.57 | 0.99 | 12878 | | | 4.02 | Si |
| SLV 5 | 1458 | -4813 | -1739 | -62818 | | 0.37 | 462.57 | 0.91 | 11756 | | | 6.76 | Si |
| SLV 4 | 1248 | -8921 | 2957 | 26906 | | 0.69 | 462.57 | 0.97 | 12578 | | | 4.25 | Si |
| SLV 4 | 1458 | -2055 | 2842 | -200056 | | 0.18 | 401.84 | 0.87 | 9787 | | | 3.44 | Si |
| SLV 10 | 1248 | -10372 | -3801 | -729372 | | 0.8 | 462.57 | 0.99 | 12868 | | | 3.39 | Si |
| SLV 10 | 1458 | -5450 | -2508 | -38180 | | 0.42 | 462.57 | 0.92 | 11883 | | | 4.74 | Si |
| SLV 12 | 1248 | -7971 | 4595 | 371531 | | 0.62 | 462.57 | 0.96 | 12387 | | | 2.7 | Si |
| SLV 12 | 1458 | -2348 | 3162 | -205094 | | 0.19 | 431.84 | 0.87 | 10546 | | | 3.34 | Si |
| SLV 8 | 1248 | -8022 | 5195 | 390311 | | 0.62 | 462.57 | 0.96 | 12398 | | | 2.39 | Si |
| SLV 8 | 1458 | -1712 | 3930 | -229732 | | 0.21 | 291.3 | 0.88 | 7139 | | | 1.82 | Si |
| SLV 11 | 1248 | -7971 | 4595 | 371531 | | 0.62 | 462.57 | 0.96 | 12387 | | | 2.7 | Si |
| SLV 11 | 1458 | -2348 | 3162 | -205094 | | 0.19 | 431.84 | 0.87 | 10546 | | | 3.34 | Si |
| SLV 3 | 1248 | -8921 | 2957 | 26906 | | 0.69 | 462.57 | 0.97 | 12578 | | | 4.25 | Si |
| SLV 3 | 1458 | -2055 | 2842 | -200056 | | 0.18 | 401.84 | 0.87 | 9787 | | | 3.44 | Si |
| SLV 9 | 1248 | -10372 | -3801 | -729372 | | 0.8 | 462.57 | 0.99 | 12868 | | | 3.39 | Si |
| SLV 9 | 1458 | -5450 | -2508 | -38180 | | 0.42 | 462.57 | 0.92 | 11883 | | | 4.74 | Si |

### Verifica a pressoflessione fuori piano D.M. 17-01-18 (N.T.C.)

quota 1406 Wa 0.05 denominatore 8 γM = 2

| Comb. | fd | Sa | σ0 | N | M | Mc | Coeff.s. | Verifica |
|---|---|---|---|---|---|---|---|---|
| SLV 8 | 14 | 0.53 | 0 | -2945 | 52534 | 0 | 0 | No, e>t/2 |
| SLV 11 | 14 | 0.53 | 0 | -3093 | 52534 | 0 | 0 | No, e>t/2 |
| SLV 12 | 14 | 0.53 | 0 | -3093 | 52534 | 0 | 0 | No, e>t/2 |
| SLV 7 | 14 | 0.53 | 0 | -2945 | 52534 | 0 | 0 | No, e>t/2 |
| SLV 3 | 14 | 0.53 | 0.3 | -3862 | 52534 | 52746 | 1 | Si |
| SLV 4 | 14 | 0.53 | 0.3 | -3862 | 52534 | 52746 | 1 | Si |
| SLV 16 | 14 | 0.53 | 0.34 | -4354 | 52534 | 59280 | 1.13 | Si |
| SLV 15 | 14 | 0.53 | 0.34 | -4354 | 52534 | 59280 | 1.13 | Si |
| SLV 2 | 14 | 0.53 | 0.37 | -4795 | 52534 | 65097 | 1.24 | Si |
| SLV 1 | 14 | 0.53 | 0.37 | -4795 | 52534 | 65097 | 1.24 | Si |

### Verifica dei meccanismi locali di collasso con analisi cinematica lineare

forza di aggancio al piano = 0 quota mezzeria = 1406 Wa = 0.05 Ta = 0.0596

| Comb. | N top | N base | V orto | α0 | M* | e* | a0* | aLim | Verifica |
|---|---|---|---|---|---|---|---|---|---|
| SLV 12 | 19 | -7971 | 129 | 0 | 0 | 0 | 0 | 1505.645 | No, Trazione |
| SLV 8 | 420 | -8022 | -262 | 0 | 0 | 0 | 0 | 1505.645 | No, Trazione |
| SLV 3 | 488 | -8921 | -614 | 0 | 0 | 0 | 0 | 879.274 | No, Trazione |
| SLV 9 | -1127 | -10372 | 425 | 0 | 7.946 | 0.918 | 0 | 1505.645 | No |
| SLV 7 | 420 | -8022 | -262 | 0 | 0 | 0 | 0 | 1505.645 | No, Trazione |
| SLV 2 | 144 | -9641 | -525 | 0 | 0 | 0 | 0 | 879.274 | No, Trazione |
| SLV 11 | 19 | -7971 | 129 | 0 | 0 | 0 | 0 | 1505.645 | No, Trazione |
| SLV 1 | 144 | -9641 | -525 | 0 | 0 | 0 | 0 | 879.274 | No, Trazione |
| SLV 10 | -1127 | -10372 | 425 | 0 | 7.946 | 0.918 | 0 | 1505.645 | No |
| SLV 4 | 488 | -8921 | -614 | 0 | 0 | 0 | 0 | 879.274 | No, Trazione |

### Tabella dei coefficienti di sicurezza minimi

| Stato limite | Coeff.s. | Comb. | Verifica |
|---|---|---|---|
| PF_SLU | 2.323 | SLU 35 | Si |
| V_SLU | 6.888 | SLU 78 | Si |
| PF_SLV | 1.705 | SLV 7 | Si |
| V_SLV | 1.817 | SLV 7 | Si |
| PFFP_SLV | 0 | SLV 7 | No |
| R_SLV | 0 | SLV 12 | No |

## Maschio 179

Verifiche condotte secondo D.M. 17-01-18 (N.T.C.)

### Dati geometrici

| X ini. | Y ini. | X fin. | Y fin. | Quota i. | Quota.s | l | Sp. | h netta | h ini. | h fin. | a | a.s.,sx | a.s.,dx |
|---|---|---|---|---|---|---|---|---|---|---|---|---|---|
| -2467.8 | 206.6 | -2467.8 | 595.1 | L6 | L7 | 388.5 | 28 | 316 | 316 | 316 | | | |

### Caratteristiche del materiale

(Circolare 7 21-01-19 C8.5.I) Muratura in mattoni pieni e malta di calce LC2_Corti

| fb | fk | fvk0 | fmedio | τ0 | fv0 | μ | ϕ | fv,lim | E | G | FC |
|---|---|---|---|---|---|---|---|---|---|---|---|
| 60 | | | 34.5 | 0.9 | 2 | 0.58 | 0.77 | 3.25 | 32000 | 12800 | 1.2 |

### Verifica a pressoflessione nel piano secondo D.M. 17-01-18 NTC §7.8.2.2.1 in combinazioni non sismiche, γM = 3

| Comb. | Quota | N | M | σ0 | Mu | c.s. | Verifica |
|---|---|---|---|---|---|---|---|
| SLU 29 | 1248 | -11216 | 314797 | 1.03 | 1902999 | 6.045 | Si |
| SLU 29 | 1458 | -5184 | 203958 | 0.48 | 948077 | 4.648 | Si |

| Comb. | Quota | N | M | σ0 | Mu | c.s. | Verifica |
|---|---|---|---|---|---|---|---|
| SLU 27 | 1248 | -11237 | 319723 | 1.03 | 1905935 | 5.961 | Si |
| SLU 27 | 1458 | -5162 | 200014 | 0.47 | 944293 | 4.721 | Si |
| SLU 7 | 1248 | -10254 | 225022 | 0.94 | 1761280 | 7.827 | Si |
| SLU 7 | 1458 | -4552 | 186225 | 0.42 | 838778 | 4.504 | Si |
| SLU 17 | 1248 | -10716 | 261921 | 0.99 | 1829843 | 6.986 | Si |
| SLU 17 | 1458 | -4791 | 184901 | 0.44 | 880258 | 4.761 | Si |
| SLU 30 | 1248 | -11193 | 291495 | 1.03 | 1899603 | 6.517 | Si |
| SLU 30 | 1458 | -5099 | 214715 | 0.47 | 933500 | 4.348 | Si |
| SLU 28 | 1248 | -11213 | 296421 | 1.03 | 1902541 | 6.418 | Si |
| SLU 28 | 1458 | -5077 | 210771 | 0.47 | 929709 | 4.411 | Si |
| SLU 8 | 1248 | -10257 | 243398 | 0.94 | 1761752 | 7.238 | Si |
| SLU 8 | 1458 | -4659 | 179412 | 0.43 | 857392 | 4.779 | Si |
| SLU 9 | 1248 | -10233 | 220096 | 0.94 | 1758257 | 7.989 | Si |
| SLU 9 | 1458 | -4574 | 190168 | 0.42 | 842620 | 4.431 | Si |
| SLU 38 | 1248 | -11676 | 333320 | 1.07 | 1969158 | 5.908 | Si |
| SLU 38 | 1458 | -5316 | 209447 | 0.49 | 970639 | 4.634 | Si |
| SLU 36 | 1248 | -11696 | 338246 | 1.08 | 1972053 | 5.83 | Si |
| SLU 36 | 1458 | -5294 | 205503 | 0.49 | 966869 | 4.705 | Si |

Verifica a pressoflessione nel piano secondo D.M. 17-01-18 NTC §7.8.2.2.1 in combinazioni sismiche, γM = 2

| Comb. | Quota | N | M | σ0 | Mu | c.s. | Verifica |
|---|---|---|---|---|---|---|---|
| SLV 7 | 1248 | -10826 | 481305 | 1 | 1931638 | 4.013 | Si |
| SLV 7 | 1458 | -5256 | -51483 | 0.48 | 980673 | 19.049 | Si |
| SLV 10 | 1248 | -6517 | -234521 | 0.6 | 1203786 | 5.133 | Si |
| SLV 10 | 1458 | -1783 | 163527 | 0.16 | 341762 | 2.09 | Si |
| SLV 14 | 1248 | -5996 | 8183 | 0.55 | 1112153 | 135.906 | Si |
| SLV 14 | 1458 | -2383 | 128393 | 0.22 | 454596 | 3.541 | Si |
| SLV 11 | 1248 | -9488 | 476139 | 0.87 | 1711487 | 3.595 | Si |
| SLV 11 | 1458 | -4850 | -25030 | 0.45 | 907789 | 36.267 | Si |
| SLV 5 | 1248 | -7854 | -229354 | 0.72 | 1435556 | 6.259 | Si |
| SLV 5 | 1458 | -2189 | 137075 | 0.2 | 418287 | 3.052 | Si |
| SLV 12 | 1248 | -9488 | 476139 | 0.87 | 1711487 | 3.595 | Si |
| SLV 12 | 1458 | -4850 | -25030 | 0.45 | 907789 | 36.267 | Si |
| SLV 13 | 1248 | -5996 | 8183 | 0.55 | 1112153 | 135.906 | Si |
| SLV 13 | 1458 | -2383 | 128393 | 0.22 | 454596 | 3.541 | Si |
| SLV 9 | 1248 | -6517 | -234521 | 0.6 | 1203786 | 5.133 | Si |
| SLV 9 | 1458 | -1783 | 163527 | 0.16 | 341762 | 2.09 | Si |
| SLV 6 | 1248 | -7854 | -229354 | 0.72 | 1435556 | 6.259 | Si |
| SLV 6 | 1458 | -2189 | 137075 | 0.2 | 418287 | 3.052 | Si |
| SLV 8 | 1248 | -10826 | 481305 | 1 | 1931638 | 4.013 | Si |
| SLV 8 | 1458 | -5256 | -51483 | 0.48 | 980673 | 19.049 | Si |

Verifica a taglio nel piano secondo D.M. 17-01-18 (N.T.C.) §7.8.2.2.2 con rottura per scorrimento in combinazioni non sismiche, γM = 3

| Comb. | Quota | N | V par | M | σ0 | σN | l' | fvd | Vt scorr. | Vt fess.diag. | Vt,lim | c.s. | Verifica |
|---|---|---|---|---|---|---|---|---|---|---|---|---|---|
| SLU 68 | 1248 | -12327 | -1560 | 202615 | | 1.13 | 388.5 | 0.71 | 7687 | | | 4.93 | Si |
| SLU 68 | 1458 | -5179 | -1660 | 164175 | | 0.48 | 388.5 | 0.62 | 6734 | | | 4.06 | Si |
| SLU 78 | 1248 | -13845 | -1664 | 341079 | | 1.27 | 388.5 | 0.73 | 7889 | | | 4.74 | Si |
| SLU 78 | 1458 | -6106 | -1804 | 212242 | | 0.56 | 388.5 | 0.63 | 6857 | | | 3.8 | Si |
| SLU 57 | 1248 | -12885 | -1550 | 269680 | | 1.18 | 388.5 | 0.71 | 7761 | | | 5.01 | Si |
| SLU 57 | 1458 | -5581 | -1669 | 187696 | | 0.51 | 388.5 | 0.62 | 6787 | | | 4.07 | Si |
| SLU 59 | 1248 | -12865 | -1550 | 264754 | | 1.18 | 388.5 | 0.71 | 7759 | | | 5 | Si |
| SLU 59 | 1458 | -5603 | -1678 | 191639 | | 0.52 | 388.5 | 0.62 | 6790 | | | 4.05 | Si |
| SLU 51 | 1248 | -12382 | -1529 | 222929 | | 1.14 | 388.5 | 0.71 | 7694 | | | 5.03 | Si |
| SLU 51 | 1458 | -5386 | -1656 | 196907 | | 0.5 | 388.5 | 0.62 | 6761 | | | 4.08 | Si |
| SLU 80 | 1248 | -13824 | -1665 | 336153 | | 1.27 | 388.5 | 0.73 | 7887 | | | 4.74 | Si |
| SLU 80 | 1458 | -6128 | -1813 | 216186 | | 0.56 | 388.5 | 0.63 | 6860 | | | 3.78 | Si |
| SLU 70 | 1248 | -13362 | -1643 | 299254 | | 1.23 | 388.5 | 0.72 | 7825 | | | 4.76 | Si |
| SLU 70 | 1458 | -5889 | -1783 | 217509 | | 0.54 | 388.5 | 0.63 | 6829 | | | 3.83 | Si |
| SLU 76 | 1248 | -12810 | -1582 | 244440 | | 1.18 | 388.5 | 0.71 | 7751 | | | 4.9 | Si |
| SLU 76 | 1458 | -5396 | -1682 | 158908 | | 0.5 | 388.5 | 0.62 | 6763 | | | 4.02 | Si |
| SLU 72 | 1248 | -13342 | -1643 | 294328 | | 1.23 | 388.5 | 0.72 | 7822 | | | 4.76 | Si |
| SLU 72 | 1458 | -5911 | -1792 | 221453 | | 0.54 | 388.5 | 0.63 | 6832 | | | 3.81 | Si |
| SLU 38 | 1248 | -11676 | -1499 | 333320 | | 1.07 | 388.5 | 0.7 | 7600 | | | 5.07 | Si |
| SLU 38 | 1458 | -5316 | -1646 | 209447 | | 0.49 | 388.5 | 0.62 | 6752 | | | 4.1 | Si |

Verifica a taglio nel piano secondo D.M. 17-01-18 (N.T.C.) §7.8.2.2.2 con rottura per scorrimento in combinazioni sismiche, γM = 2

| Comb. | Quota | N | V par | M | σ0 | σN | l' | fvd | Vt scorr. | Vt fess.diag. | Vt,lim | c.s. | Verifica |
|---|---|---|---|---|---|---|---|---|---|---|---|---|---|
| SLV 2 | 1248 | -10455 | -2584 | 25403 | | 0.96 | 388.5 | 1.03 | 11156 | | | 4.32 | Si |
| SLV 2 | 1458 | -3737 | -2615 | 40219 | | 0.34 | 388.5 | 0.9 | 9812 | | | 3.75 | Si |
| SLV 1 | 1248 | -10455 | -2584 | 25403 | | 0.96 | 388.5 | 1.03 | 11156 | | | 4.32 | Si |
| SLV 1 | 1458 | -3737 | -2615 | 40219 | | 0.34 | 388.5 | 0.9 | 9812 | | | 3.75 | Si |
| SLV 5 | 1248 | -7854 | -3964 | -229354 | | 0.72 | 388.5 | 0.98 | 10636 | | | 2.68 | Si |
| SLV 5 | 1458 | -2189 | -2663 | 137075 | | 0.2 | 388.5 | 0.87 | 9503 | | | 3.57 | Si |
| SLV 6 | 1248 | -7854 | -3964 | -229354 | | 0.72 | 388.5 | 0.98 | 10636 | | | 2.68 | Si |
| SLV 6 | 1458 | -2189 | -2663 | 137075 | | 0.2 | 388.5 | 0.87 | 9503 | | | 3.57 | Si |
| SLV 10 | 1248 | -6517 | -3378 | -234521 | | 0.6 | 388.5 | 0.95 | 10368 | | | 3.07 | Si |
| SLV 10 | 1458 | -1783 | -1815 | 163527 | | 0.21 | 307.65 | 0.87 | 7535 | | | 4.15 | Si |
| SLV 9 | 1248 | -6517 | -3378 | -234521 | | 0.6 | 388.5 | 0.95 | 10368 | | | 3.07 | Si |
| SLV 9 | 1458 | -1783 | -1815 | 163527 | | 0.21 | 307.65 | 0.87 | 7535 | | | 4.15 | Si |
| SLD 6 | 1248 | -8336 | -2097 | -26140 | | 0.77 | 388.5 | 0.99 | 10732 | | | 5.12 | Si |
| SLD 6 | 1458 | -2962 | -1571 | 90759 | | 0.27 | 388.5 | 0.89 | 9657 | | | 6.15 | Si |
| SLV 12 | 1248 | -9488 | 2516 | 476139 | | 0.87 | 388.5 | 1.01 | 10963 | | | 4.36 | Si |
| SLV 12 | 1458 | -4850 | 1146 | -25030 | | 0.45 | 388.5 | 0.92 | 10035 | | | 8.75 | Si |
| SLV 11 | 1248 | -9488 | 2516 | 476139 | | 0.87 | 388.5 | 1.01 | 10963 | | | 4.36 | Si |
| SLV 11 | 1458 | -4850 | 1146 | -25030 | | 0.45 | 388.5 | 0.92 | 10035 | | | 8.75 | Si |
| SLD 5 | 1248 | -8336 | -2097 | -26140 | | 0.77 | 388.5 | 0.99 | 10732 | | | 5.12 | Si |
| SLD 5 | 1458 | -2962 | -1571 | 90759 | | 0.27 | 388.5 | 0.89 | 9657 | | | 6.15 | Si |

### Verifica a pressoflessione fuori piano D.M. 17-01-18 (N.T.C.)

quota 1406 Wa 0.05 denominatore 8 γM = 2

| Comb. | fd | Sa | σ0 | N | M | Mc | Coeff.s. | Verifica |
|---|---|---|---|---|---|---|---|---|
| SLV 9 | 14 | 0.53 | 0 | -2726 | 44122 | 0 | 0 | No, e>t/2 |
| SLV 10 | 14 | 0.53 | 0 | -2726 | 44122 | 0 | 0 | No, e>t/2 |
| SLV 13 | 14 | 0.53 | 0.29 | -3180 | 44122 | 43450 | 0.98 | No, M>Mu |
| SLV 14 | 14 | 0.53 | 0.29 | -3180 | 44122 | 43450 | 0.98 | No, M>Mu |
| SLV 5 | 14 | 0.53 | 0.3 | -3283 | 44122 | 44827 | 1.02 | Si |
| SLV 6 | 14 | 0.53 | 0.3 | -3283 | 44122 | 44827 | 1.02 | Si |
| SLV 15 | 14 | 0.53 | 0.38 | -4125 | 44122 | 55957 | 1.27 | Si |
| SLV 16 | 14 | 0.53 | 0.38 | -4125 | 44122 | 55957 | 1.27 | Si |
| SLV 1 | 14 | 0.53 | 0.46 | -5035 | 44122 | 67825 | 1.54 | Si |
| SLV 2 | 14 | 0.53 | 0.46 | -5035 | 44122 | 67825 | 1.54 | Si |

### Verifica dei meccanismi locali di collasso con analisi cinematica lineare

forza di aggancio al piano = 0 quota mezzeria = 1406 Wa = 0.05 Ta = 0.0596

| Comb. | N top | N base | V orto | α0 | M* | e* | a0* | aLim | Verifica |
|---|---|---|---|---|---|---|---|---|---|
| SLV 2 | 677 | -10455 | -267 | 0 | 0 | 0 | 0 | 879.274 | No, Trazione |
| SLV 4 | 218 | -11347 | -140 | 0 | 0 | 0 | 0 | 879.274 | No, Trazione |
| SLV 6 | 776 | -7854 | -178 | 0 | 0 | 0 | 0 | 1505.645 | No, Trazione |
| SLV 10 | 401 | -6517 | 25 | 0 | 0 | 0 | 0 | 1505.645 | No, Trazione |
| SLV 3 | 218 | -11347 | -140 | 0 | 0 | 0 | 0 | 879.274 | No, Trazione |
| SLV 5 | 776 | -7854 | -178 | 0 | 0 | 0 | 0 | 1505.645 | No, Trazione |
| SLV 12 | -1130 | -9488 | 449 | 0 | 6.793 | 0.911 | 0 | 1505.645 | No |
| SLV 9 | 401 | -6517 | 25 | 0 | 0 | 0 | 0 | 1505.645 | No, Trazione |
| SLV 1 | 677 | -10455 | -267 | 0 | 0 | 0 | 0 | 879.274 | No, Trazione |
| SLV 11 | -1130 | -9488 | 449 | 0 | 6.793 | 0.911 | 0 | 1505.645 | No |

### Tabella dei coefficienti di sicurezza minimi

| Stato limite | Coeff.s. | Comb. | Verifica |
|---|---|---|---|
| PF_SLU | 4.348 | SLU 30 | Si |
| V_SLU | 3.783 | SLU 80 | Si |
| PF_SLV | 2.09 | SLV 9 | Si |
| V_SLV | 2.683 | SLV 5 | Si |
| PFFP_SLV | 0 | SLV 9 | No |
| R_SLV | 0 | SLV 10 | No |

## Maschio 180

Verifiche condotte secondo D.M. 17-01-18 (N.T.C.)

### Dati geometrici

| X ini. | Y ini. | X fin. | Y fin. | Quota i. | Quota.s | l | Sp. | h netta | h ini. | h fin. | a | a.s.,sx | a.s.,dx |
|---|---|---|---|---|---|---|---|---|---|---|---|---|---|
| -2271.3 | 595.1 | -2467.8 | 595.1 | L6 | L7 | 196.5 | 28 | 316 | 316 | 316 | | | |

### Caratteristiche del materiale

(Circolare 7 21-01-19 C8.5.I) Muratura in mattoni pieni e malta di calce LC2_Corti

| fb | fk | fvk0 | fmedio | τ0 | fv0 | μ | ϕ | fv,lim | E | G | FC |
|---|---|---|---|---|---|---|---|---|---|---|---|
| 60 | | | 34.5 | 0.9 | 2 | 0.58 | 0.77 | 3.25 | 32000 | 12800 | 1.2 |

### Verifica a pressoflessione nel piano secondo D.M. 17-01-18 NTC §7.8.2.2.1 in combinazioni non sismiche, γM = 3

| Comb. | Quota | N | M | σ0 | Mu | c.s. | Verifica |
|---|---|---|---|---|---|---|---|
| SLU 37 | 1338 | -3453 | 221349 | 0.63 | 313128 | 1.415 | Si |
| SLU 37 | 1518 | -2665 | -95347 | 0.48 | 246310 | 2.583 | Si |
| SLU 17 | 1338 | -3270 | 187367 | 0.59 | 297826 | 1.59 | Si |
| SLU 17 | 1518 | -2355 | -86180 | 0.43 | 219185 | 2.543 | Si |
| SLU 41 | 1338 | -3068 | 184097 | 0.56 | 280826 | 1.525 | Si |
| SLU 41 | 1518 | -2251 | -62730 | 0.41 | 210054 | 3.349 | Si |
| SLU 34 | 1338 | -3048 | 177352 | 0.55 | 279142 | 1.574 | Si |
| SLU 34 | 1518 | -2230 | -68374 | 0.41 | 208152 | 3.044 | Si |
| SLU 38 | 1338 | -3407 | 222092 | 0.62 | 309285 | 1.393 | Si |
| SLU 38 | 1518 | -2662 | -97744 | 0.48 | 246013 | 2.517 | Si |
| SLU 80 | 1338 | -4198 | 233444 | 0.76 | 373832 | 1.601 | Si |
| SLU 80 | 1518 | -2995 | -101488 | 0.54 | 274580 | 2.706 | Si |
| SLU 36 | 1338 | -3726 | 210101 | 0.68 | 335608 | 1.597 | Si |
| SLU 36 | 1518 | -3043 | -101885 | 0.55 | 278638 | 2.735 | Si |
| SLU 29 | 1338 | -3586 | 202723 | 0.65 | 324166 | 1.599 | Si |
| SLU 29 | 1518 | -2629 | -99196 | 0.48 | 243117 | 2.451 | Si |
| SLU 42 | 1338 | -3022 | 184839 | 0.55 | 276905 | 1.498 | Si |
| SLU 42 | 1518 | -2248 | -65127 | 0.41 | 209751 | 3.221 | Si |
| SLU 30 | 1338 | -3540 | 203465 | 0.64 | 320350 | 1.574 | Si |
| SLU 30 | 1518 | -2625 | -101592 | 0.48 | 242820 | 2.39 | Si |

### Verifica a pressoflessione nel piano secondo D.M. 17-01-18 NTC §7.8.2.2.1 in combinazioni sismiche, γM = 2

| Comb. | Quota | N | M | σ0 | Mu | c.s. | Verifica |
|---|---|---|---|---|---|---|---|
| SLD 3 | 1338 | -2420 | 177673 | 0.44 | 229164 | 1.29 | Si |
| SLD 3 | 1518 | -1596 | -54661 | 0.29 | 153119 | 2.801 | Si |
| SLV 1 | 1338 | -1814 | 219175 | 0 | 0 | 0 | No, e>l/2 |
| SLV 1 | 1518 | -1350 | -119370 | 0.25 | 130006 | 1.089 | Si |
| SLV 3 | 1338 | -1911 | 291968 | 0 | 0 | 0 | No, e>l/2 |
| SLV 3 | 1518 | -1644 | -91066 | 0.3 | 157573 | 1.73 | Si |
| SLV 2 | 1338 | -1814 | 219175 | 0 | 0 | 0 | No, e>l/2 |
| SLV 2 | 1518 | -1350 | -119370 | 0.25 | 130006 | 1.089 | Si |
| SLV 7 | 1338 | -2678 | 262933 | 0.49 | 252598 | 0.961 | No, M>Mu |

| Comb. | Quota | N | M | σ0 | Mu | c.s. | Verifica |
|---|---|---|---|---|---|---|---|
| SLV 7 | 1518 | -2030 | -3923 | 0.37 | 193414 | 49.309 | Si |
| SLV 5 | 1338 | -2353 | 20289 | 0.43 | 223113 | 10.997 | Si |
| SLV 5 | 1518 | -1051 | -98269 | 0.19 | 101649 | 1.034 | Si |
| SLD 4 | 1338 | -2420 | 177673 | 0.44 | 229164 | 1.29 | Si |
| SLD 4 | 1518 | -1596 | -54661 | 0.29 | 153119 | 2.801 | Si |
| SLV 8 | 1338 | -2678 | 262933 | 0.49 | 252598 | 0.961 | No, M>Mu |
| SLV 8 | 1518 | -2030 | -3923 | 0.37 | 193414 | 49.309 | Si |
| SLV 6 | 1338 | -2353 | 20289 | 0.43 | 223113 | 10.997 | Si |
| SLV 6 | 1518 | -1051 | -98269 | 0.19 | 101649 | 1.034 | Si |
| SLV 4 | 1338 | -1911 | 291968 | 0 | 0 | 0 | No, e>l/2 |
| SLV 4 | 1518 | -1644 | -91066 | 0.3 | 157573 | 1.73 | Si |

### Verifica a taglio nel piano secondo D.M. 17-01-18 (N.T.C.) §7.8.2.2.2 con rottura per scorrimento in combinazioni non sismiche, γM = 3

| Comb. | Quota | N | V par | M | σ0 | σN | l' | fvd | Vt scorr. | Vt fess.diag. | Vt,lim | c.s. | Verifica |
|---|---|---|---|---|---|---|---|---|---|---|---|---|---|
| SLU 29 | 1338 | -3586 | 2267 | 202723 | | 1.02 | 125.17 | 0.69 | 2425 | | | 1.07 | Si |
| SLU 29 | 1518 | -2629 | 2048 | -99196 | | 0.52 | 181.54 | 0.62 | 3174 | | | 1.55 | Si |
| SLU 36 | 1338 | -3726 | 2468 | 210101 | | 1.06 | 125.57 | 0.7 | 2450 | | | 0.99 | No, Vu<V |
| SLU 36 | 1518 | -3043 | 2262 | -101885 | | 0.56 | 194.29 | 0.63 | 3428 | | | 1.52 | Si |
| SLU 38 | 1338 | -3407 | 2482 | 222092 | | 1.23 | 99.18 | 0.72 | 1997 | | | 0.8 | No, Vu<V |
| SLU 38 | 1518 | -2662 | 2264 | -97744 | | 0.52 | 184.6 | 0.62 | 3226 | | | 1.43 | Si |
| SLU 37 | 1338 | -3453 | 2441 | 221349 | | 1.2 | 102.45 | 0.72 | 2054 | | | 0.84 | No, Vu<V |
| SLU 37 | 1518 | -2665 | 2223 | -95347 | | 0.51 | 187.44 | 0.62 | 3271 | | | 1.47 | Si |
| SLU 35 | 1338 | -3772 | 2427 | 209359 | | 1.05 | 128.23 | 0.7 | 2498 | | | 1.03 | Si |
| SLU 35 | 1518 | -3046 | 2221 | -99488 | | 0.55 | 196.5 | 0.63 | 3463 | | | 1.56 | Si |
| SLU 41 | 1338 | -3068 | 2009 | 184097 | | 0.95 | 114.75 | 0.68 | 2194 | | | 1.09 | Si |
| SLU 41 | 1518 | -2251 | 1864 | -62730 | | 0.41 | 196.5 | 0.61 | 3357 | | | 1.8 | Si |
| SLU 80 | 1338 | -4198 | 2616 | 233444 | | 1.17 | 127.93 | 0.71 | 2550 | | | 0.97 | No, Vu<V |
| SLU 80 | 1518 | -2995 | 2396 | -101488 | | 0.55 | 193.09 | 0.63 | 3403 | | | 1.42 | Si |
| SLU 79 | 1338 | -4244 | 2575 | 232701 | | 1.16 | 130.27 | 0.71 | 2592 | | | 1.01 | Si |
| SLU 79 | 1518 | -2998 | 2355 | -99091 | | 0.55 | 195.6 | 0.63 | 3442 | | | 1.46 | Si |
| SLU 30 | 1338 | -3540 | 2308 | 203465 | | 1.03 | 122.33 | 0.69 | 2375 | | | 1.03 | Si |
| SLU 30 | 1518 | -2625 | 2089 | -101592 | | 0.52 | 178.65 | 0.63 | 3129 | | | 1.5 | Si |
| SLU 42 | 1338 | -3022 | 2050 | 184839 | | 0.97 | 111.27 | 0.68 | 2134 | | | 1.04 | Si |
| SLU 42 | 1518 | -2248 | 1904 | -65127 | | 0.41 | 196.5 | 0.61 | 3356 | | | 1.76 | Si |

### Verifica a taglio nel piano secondo D.M. 17-01-18 (N.T.C.) §7.8.2.2.2 con rottura per scorrimento in combinazioni sismiche, γM = 2

| Comb. | Quota | N | V par | M | σ0 | σN | l' | fvd | Vt scorr. | Vt fess.diag. | Vt,lim | c.s. | Verifica |
|---|---|---|---|---|---|---|---|---|---|---|---|---|---|
| SLD 4 | 1338 | -2420 | 2151 | 177673 | | 1.16 | 74.45 | 1.07 | 2221 | | | 1.03 | Si |
| SLD 4 | 1518 | -1596 | 1476 | -54661 | | 0.3 | 192.03 | 0.89 | 4800 | | | 3.25 | Si |
| SLV 8 | 1338 | -2678 | 2439 | 262933 | | 0 | 0 | 0.83 | 0 | | | 0 | No, Vu<V |
| SLV 8 | 1518 | -2030 | 2195 | -3923 | | 0.37 | 196.5 | 0.91 | 4991 | | | 2.27 | Si |
| SLD 1 | 1338 | -2374 | 1983 | 147274 | | 0.78 | 108.62 | 0.99 | 3009 | | | 1.52 | Si |
| SLD 1 | 1518 | -1475 | 1239 | -66528 | | 0.33 | 159.42 | 0.9 | 4015 | | | 3.24 | Si |
| SLD 3 | 1338 | -2420 | 2151 | 177673 | | 1.16 | 74.45 | 1.07 | 2221 | | | 1.03 | Si |
| SLD 3 | 1518 | -1596 | 1476 | -54661 | | 0.3 | 192.03 | 0.89 | 4800 | | | 3.25 | Si |
| SLV 7 | 1338 | -2678 | 2439 | 262933 | | 0 | 0 | 0.83 | 0 | | | 0 | No, Vu<V |
| SLV 7 | 1518 | -2030 | 2195 | -3923 | | 0.37 | 196.5 | 0.91 | 4991 | | | 2.27 | Si |
| SLV 2 | 1338 | -1814 | 3251 | 219175 | | 0 | 0 | 0.83 | 0 | | | 0 | No, Vu<V |
| SLV 2 | 1518 | -1350 | 1584 | -119370 | | 1.63 | 29.55 | 1.16 | 960 | | | 0.61 | No, Vu<V |
| SLD 2 | 1338 | -2374 | 1983 | 147274 | | 0.78 | 108.62 | 0.99 | 3009 | | | 1.52 | Si |
| SLD 2 | 1518 | -1475 | 1239 | -66528 | | 0.33 | 159.42 | 0.9 | 4015 | | | 3.24 | Si |
| SLV 3 | 1338 | -1911 | 3658 | 291968 | | 0 | 0 | 0.83 | 0 | | | 0 | No, Vu<V |
| SLV 3 | 1518 | -1644 | 2153 | -91066 | | 0.46 | 128.57 | 0.92 | 3329 | | | 1.55 | Si |
| SLV 1 | 1338 | -1814 | 3251 | 219175 | | 0 | 0 | 0.83 | 0 | | | 0 | No, Vu<V |
| SLV 1 | 1518 | -1350 | 1584 | -119370 | | 1.63 | 29.55 | 1.16 | 960 | | | 0.61 | No, Vu<V |
| SLV 4 | 1338 | -1911 | 3658 | 291968 | | 0 | 0 | 0.83 | 0 | | | 0 | No, Vu<V |
| SLV 4 | 1518 | -1644 | 2153 | -91066 | | 0.46 | 128.57 | 0.92 | 3329 | | | 1.55 | Si |

### Verifica a pressoflessione fuori piano D.M. 17-01-18 (N.T.C.)

quota 1406 Wa 0.05 denominatore 8 γM = 2

| Comb. | fd | Sa | σ0 | N | M | Mc | Coeff.s. | Verifica |
|---|---|---|---|---|---|---|---|---|
| SLV 6 | 14 | 0.53 | 0.38 | -2112 | 22317 | 28640 | 1.28 | Si |
| SLV 5 | 14 | 0.53 | 0.38 | -2112 | 22317 | 28640 | 1.28 | Si |
| SLV 2 | 14 | 0.53 | 0.39 | -2129 | 22317 | 28865 | 1.29 | Si |
| SLV 1 | 14 | 0.53 | 0.39 | -2129 | 22317 | 28865 | 1.29 | Si |
| SLV 10 | 14 | 0.53 | 0.42 | -2315 | 22317 | 31288 | 1.4 | Si |
| SLV 9 | 14 | 0.53 | 0.42 | -2315 | 22317 | 31288 | 1.4 | Si |
| SLV 4 | 14 | 0.53 | 0.43 | -2346 | 22317 | 31704 | 1.42 | Si |
| SLV 3 | 14 | 0.53 | 0.43 | -2346 | 22317 | 31704 | 1.42 | Si |
| SLV 13 | 14 | 0.53 | 0.51 | -2804 | 22317 | 37622 | 1.69 | Si |
| SLV 14 | 14 | 0.53 | 0.51 | -2804 | 22317 | 37622 | 1.69 | Si |

### Verifica dei meccanismi locali di collasso con analisi cinematica lineare

forza di aggancio al piano = 0 quota mezzeria = 1406 Wa = 0.05 Ta = 0.0596

| Comb. | N top | N base | V orto | α0 | M* | e* | a0* | aLim | Verifica |
|---|---|---|---|---|---|---|---|---|---|
| SLV 5 | -1781 | -2423 | -169 | 0.014 | 4.451 | 0.889 | 23.586 | 1505.645 | No |
| SLV 6 | -1781 | -2423 | -169 | 0.014 | 4.451 | 0.889 | 23.586 | 1505.645 | No |
| SLV 9 | -1533 | -1912 | -150 | 0.018 | 4.225 | 0.889 | 29.757 | 1505.645 | No |
| SLV 10 | -1533 | -1912 | -150 | 0.018 | 4.225 | 0.889 | 29.757 | 1505.645 | No |
| SLV 2 | -1988 | -3937 | -148 | 0.022 | 4.644 | 0.89 | 36.346 | 879.274 | No |
| SLV 1 | -1988 | -3937 | -148 | 0.022 | 4.644 | 0.89 | 36.346 | 879.274 | No |
| SLV 8 | -1547 | -5048 | -44 | 0.052 | 4.237 | 0.889 | 85.823 | 1505.645 | No |
| SLV 7 | -1547 | -5048 | -44 | 0.052 | 4.237 | 0.889 | 85.823 | 1505.645 | No |
| SLV 4 | -1918 | -4725 | -110 | 0.033 | 4.579 | 0.89 | 53.28 | 879.274 | No |
| SLV 3 | -1918 | -4725 | -110 | 0.033 | 4.579 | 0.89 | 53.28 | 879.274 | No |

### Tabella dei coefficienti di sicurezza minimi

| Stato limite | Coeff.s. | Comb. | Verifica |
|---|---|---|---|
| PF_SLU | 1.393 | SLU 38 | Si |
| V_SLU | 0.804 | SLU 38 | No |
| PF_SLV | 0 | SLV 1 | No |
| V_SLV | 0 | SLV 1 | No |
| PFFP_SLV | 1.283 | SLV 5 | Si |
| R_SLV | 0.016 | SLV 5 | No |

## Maschio 181

Verifiche condotte secondo D.M. 17-01-18 (N.T.C.)

### Dati geometrici

| X ini. | Y ini. | X fin. | Y fin. | Quota i. | Quota.s | l | Sp. | h netta | h ini. | h fin. | a | a.s.,sx | a.s.,dx |
|---|---|---|---|---|---|---|---|---|---|---|---|---|---|
| -1975.8 | 595.1 | -2181.3 | 595.1 | L6 | L7 | 205.5 | 28 | 316 | 316 | 316 | | | |

### Caratteristiche del materiale

(Circolare 7 21-01-19 C8.5.I) Muratura in mattoni pieni e malta di calce LC2_Corti

| fb | fk | fvk0 | fmedio | τ0 | fv0 | μ | ϕ | fv,lim | E | G | FC |
|---|---|---|---|---|---|---|---|---|---|---|---|
| 60 | | | 34.5 | 0.9 | 2 | 0.58 | 0.77 | 3.25 | 32000 | 12800 | 1.2 |

### Verifica a pressoflessione nel piano secondo D.M. 17-01-18 NTC §7.8.2.2.1 in combinazioni non sismiche, γM = 3

| Comb. | Quota | N | M | σ0 | Mu | c.s. | Verifica |
|---|---|---|---|---|---|---|---|
| SLU 56 | 1338 | 913 | 224883 | 0 | 0 | 0 | No, Trazione |
| SLU 56 | 1518 | 3504 | 452772 | 0 | 0 | 0 | No, Trazione |
| SLU 58 | 1338 | 1679 | 233049 | 0 | 0 | 0 | No, Trazione |
| SLU 58 | 1518 | 4271 | 465625 | 0 | 0 | 0 | No, Trazione |
| SLU 59 | 1338 | 1681 | 237428 | 0 | 0 | 0 | No, Trazione |
| SLU 59 | 1518 | 4272 | 466957 | 0 | 0 | 0 | No, Trazione |
| SLU 55 | 1338 | -254 | 165771 | 0 | 0 | 0 | No, e>l/2 |
| SLU 55 | 1518 | 2338 | 310956 | 0 | 0 | 0 | No, Trazione |
| SLU 54 | 1338 | -1022 | 154686 | 0 | 0 | 0 | No, e>l/2 |
| SLU 54 | 1518 | 1570 | 297215 | 0 | 0 | 0 | No, Trazione |
| SLU 60 | 1338 | -2162 | 84793 | 0.38 | 211922 | 2.499 | Si |
| SLU 60 | 1518 | 429 | 152682 | 0 | 0 | 0 | No, Trazione |
| SLU 53 | 1338 | -1023 | 150307 | 0 | 0 | 0 | No, e>l/2 |
| SLU 53 | 1518 | 1569 | 295884 | 0 | 0 | 0 | No, Trazione |
| SLU 57 | 1338 | 914 | 229263 | 0 | 0 | 0 | No, Trazione |
| SLU 57 | 1518 | 3505 | 454103 | 0 | 0 | 0 | No, Trazione |
| SLU 61 | 1338 | -2161 | 89172 | 0.38 | 211793 | 2.375 | Si |
| SLU 61 | 1518 | 431 | 154013 | 0 | 0 | 0 | No, Trazione |
| SLU 1 | 1338 | -1539 | 72124 | 0.27 | 152939 | 2.12 | Si |
| SLU 1 | 1518 | 462 | 133625 | 0 | 0 | 0 | No, Trazione |

### Verifica a pressoflessione nel piano secondo D.M. 17-01-18 NTC §7.8.2.2.1 in combinazioni sismiche, γM = 2

| Comb. | Quota | N | M | σ0 | Mu | c.s. | Verifica |
|---|---|---|---|---|---|---|---|
| SLV 3 | 1338 | -1997 | 247175 | 0 | 0 | 0 | No, e>l/2 |
| SLV 3 | 1518 | -441 | -95093 | 0 | 0 | 0 | No, e>l/2 |
| SLV 14 | 1338 | -611 | -81793 | 0 | 0 | 0 | No, e>l/2 |
| SLV 14 | 1518 | 1851 | 403133 | 0 | 0 | 0 | No, Trazione |
| SLV 13 | 1338 | -611 | -81793 | 0 | 0 | 0 | No, e>l/2 |
| SLV 13 | 1518 | 1851 | 403133 | 0 | 0 | 0 | No, Trazione |
| SLD 1 | 1338 | -1262 | 129580 | 0.22 | 127340 | 0.983 | No, M>Mu |
| SLD 1 | 1518 | 736 | 107450 | 0 | 0 | 0 | No, Trazione |
| SLV 2 | 1338 | -1139 | 192326 | 0 | 0 | 0 | No, e>l/2 |
| SLV 2 | 1518 | 832 | 50373 | 0 | 0 | 0 | No, Trazione |
| SLV 5 | 1338 | 46 | 32394 | 0 | 0 | 0 | No, Trazione |
| SLV 5 | 1518 | 2675 | 343549 | 0 | 0 | 0 | No, Trazione |
| SLV 4 | 1338 | -1997 | 247175 | 0 | 0 | 0 | No, e>l/2 |
| SLV 4 | 1518 | -441 | -95093 | 0 | 0 | 0 | No, e>l/2 |
| SLV 10 | 1338 | 205 | -49842 | 0 | 0 | 0 | No, Trazione |
| SLV 10 | 1518 | 2980 | 449377 | 0 | 0 | 0 | No, Trazione |
| SLV 6 | 1338 | 46 | 32394 | 0 | 0 | 0 | No, Trazione |
| SLV 6 | 1518 | 2675 | 343549 | 0 | 0 | 0 | No, Trazione |
| SLV 9 | 1338 | 205 | -49842 | 0 | 0 | 0 | No, Trazione |
| SLV 9 | 1518 | 2980 | 449377 | 0 | 0 | 0 | No, Trazione |

### Verifica a taglio nel piano secondo D.M. 17-01-18 (N.T.C.) §7.8.2.2.2 con rottura per scorrimento in combinazioni non sismiche, γM = 3

| Comb. | Quota | N | V par | M | σ0 | σN | l' | fvd | Vt scorr. | Vt fess.diag. | Vt,lim | c.s. | Verifica |
|---|---|---|---|---|---|---|---|---|---|---|---|---|---|
| SLU 53 | 1338 | -1023 | -766 | 150307 | | 0 | 0 | 0.56 | 0 | | | 0 | No, Vu<V |
| SLU 53 | 1518 | 1569 | -766 | 295884 | | 0 | 0 | 0.56 | 0 | | | 0 | No, Vu<V |
| SLU 60 | 1338 | -2162 | -334 | 84793 | | 0.41 | 190.6 | 0.61 | 3253 | | | 9.74 | Si |
| SLU 60 | 1518 | 429 | -334 | 152682 | | 0 | 0 | 0.56 | 0 | | | 0 | No, Vu<V |
| SLU 58 | 1338 | 1679 | -1249 | 233049 | | 0 | 0 | 0.56 | 0 | | | 0 | No, Vu<V |
| SLU 58 | 1518 | 4271 | -1249 | 465625 | | 0 | 0 | 0.56 | 0 | | | 0 | No, Vu<V |
| SLU 61 | 1338 | -2161 | -317 | 89172 | | 0.42 | 184.45 | 0.61 | 3157 | | | 9.95 | Si |
| SLU 61 | 1518 | 431 | -317 | 154013 | | 0 | 0 | 0.56 | 0 | | | 0 | No, Vu<V |
| SLU 59 | 1338 | 1681 | -1232 | 237428 | | 0 | 0 | 0.56 | 0 | | | 0 | No, Vu<V |
| SLU 59 | 1518 | 4272 | -1232 | 466957 | | 0 | 0 | 0.56 | 0 | | | 0 | No, Vu<V |
| SLU 56 | 1338 | 913 | -1223 | 224883 | | 0 | 0 | 0.56 | 0 | | | 0 | No, Vu<V |
| SLU 56 | 1518 | 3504 | -1223 | 452772 | | 0 | 0 | 0.56 | 0 | | | 0 | No, Vu<V |
| SLU 57 | 1338 | 914 | -1206 | 229263 | | 0 | 0 | 0.56 | 0 | | | 0 | No, Vu<V |
| SLU 57 | 1518 | 3505 | -1206 | 454103 | | 0 | 0 | 0.56 | 0 | | | 0 | No, Vu<V |
| SLU 55 | 1338 | -254 | -764 | 165771 | | 0 | 0 | 0.56 | 0 | | | 0 | No, Vu<V |

| Comb. | Quota | N | V par | M | σ0 | σN | l' | fvd | Vt scorr. | Vt fess.diag. | Vt,lim | c.s. | Verifica |
|---|---|---|---|---|---|---|---|---|---|---|---|---|---|
| SLU 55 | 1518 | 2338 | -764 | 310956 | | 0 | 0 | 0.56 | 0 | | | 0 | No, Vu<V |
| SLU 54 | 1338 | -1022 | -749 | 154686 | | 0 | 0 | 0.56 | 0 | | | 0 | No, Vu<V |
| SLU 54 | 1518 | 1570 | -749 | 297215 | | 0 | 0 | 0.56 | 0 | | | 0 | No, Vu<V |
| SLU 1 | 1338 | -1539 | -309 | 72124 | | 0.33 | 167.66 | 0.6 | 2813 | | | 9.12 | Si |
| SLU 1 | 1518 | 462 | -309 | 133625 | | 0 | 0 | 0.56 | 0 | | | 0 | No, Vu<V |

### Verifica a taglio nel piano secondo D.M. 17-01-18 (N.T.C.) §7.8.2.2.2 con rottura per scorrimento in combinazioni sismiche, γM = 2

| Comb. | Quota | N | V par | M | σ0 | σN | l' | fvd | Vt scorr. | Vt fess.diag. | Vt,lim | c.s. | Verifica |
|---|---|---|---|---|---|---|---|---|---|---|---|---|---|
| SLV 6 | 1338 | 46 | -1352 | 32394 | | 0 | 0 | 0.83 | 0 | | | 0 | No, Vu<V |
| SLV 6 | 1518 | 2675 | -2146 | 343549 | | 0 | 0 | 0.83 | 0 | | | 0 | No, Vu<V |
| SLV 13 | 1338 | -611 | -3088 | -81793 | | 0 | 0 | 0.83 | 0 | | | 0 | No, Vu<V |
| SLV 13 | 1518 | 1851 | -2398 | 403133 | | 0 | 0 | 0.83 | 0 | | | 0 | No, Vu<V |
| SLV 9 | 1338 | 205 | -2689 | -49842 | | 0 | 0 | 0.83 | 0 | | | 0 | No, Vu<V |
| SLV 9 | 1518 | 2980 | -2971 | 449377 | | 0 | 0 | 0.83 | 0 | | | 0 | No, Vu<V |
| SLV 3 | 1338 | -1997 | 2362 | 247175 | | 0 | 0 | 0.83 | 0 | | | 0 | No, Vu<V |
| SLV 3 | 1518 | -441 | 1672 | -95093 | | 0 | 0 | 0.83 | 0 | | | 0 | No, Vu<V |
| SLV 14 | 1338 | -611 | -3088 | -81793 | | 0 | 0 | 0.83 | 0 | | | 0 | No, Vu<V |
| SLV 14 | 1518 | 1851 | -2398 | 403133 | | 0 | 0 | 0.83 | 0 | | | 0 | No, Vu<V |
| SLV 2 | 1338 | -1139 | 1367 | 192326 | | 0 | 0 | 0.83 | 0 | | | 0 | No, Vu<V |
| SLV 2 | 1518 | 832 | 355 | 50373 | | 0 | 0 | 0.83 | 0 | | | 0 | No, Vu<V |
| SLV 5 | 1338 | 46 | -1352 | 32394 | | 0 | 0 | 0.83 | 0 | | | 0 | No, Vu<V |
| SLV 5 | 1518 | 2675 | -2146 | 343549 | | 0 | 0 | 0.83 | 0 | | | 0 | No, Vu<V |
| SLV 4 | 1338 | -1997 | 2362 | 247175 | | 0 | 0 | 0.83 | 0 | | | 0 | No, Vu<V |
| SLV 4 | 1518 | -441 | 1672 | -95093 | | 0 | 0 | 0.83 | 0 | | | 0 | No, Vu<V |
| SLD 1 | 1338 | -1262 | 389 | 129580 | | 0 | 0 | 0.83 | 0 | | | 0 | No, Vu<V |
| SLD 1 | 1518 | 736 | -39 | 107450 | | 0 | 0 | 0.83 | 0 | | | 0 | No, Vu<V |
| SLV 10 | 1338 | 205 | -2689 | -49842 | | 0 | 0 | 0.83 | 0 | | | 0 | No, Vu<V |
| SLV 10 | 1518 | 2980 | -2971 | 449377 | | 0 | 0 | 0.83 | 0 | | | 0 | No, Vu<V |

### Verifica a pressoflessione fuori piano D.M. 17-01-18 (N.T.C.)

quota 1406 Wa 0.05 denominatore 8 γM = 2

| Comb. | fd | Sa | σ0 | N | M | Mc | Coeff.s. | Verifica |
|---|---|---|---|---|---|---|---|---|
| SLV 13 | 14 | 0.53 | 0 | -198 | 23339 | 0 | 0 | No, e>t/2 |
| SLV 14 | 14 | 0.53 | 0 | -198 | 23339 | 0 | 0 | No, e>t/2 |
| SLV 4 | 14 | 0.53 | 0 | -1006 | 23339 | 0 | 0 | No, e>t/2 |
| SLV 3 | 14 | 0.53 | 0 | -1006 | 23339 | 0 | 0 | No, e>t/2 |
| SLV 10 | 14 | 0.53 | 0 | 1034 | 23339 | 0 | 0 | No, Trazione |
| SLV 5 | 14 | 0.53 | 0 | 1091 | 23339 | 0 | 0 | No, Trazione |
| SLV 1 | 14 | 0.53 | 0 | -7 | 23339 | 0 | 0 | No, e>t/2 |
| SLV 9 | 14 | 0.53 | 0 | 1034 | 23339 | 0 | 0 | No, Trazione |
| SLV 2 | 14 | 0.53 | 0 | -7 | 23339 | 0 | 0 | No, e>t/2 |
| SLV 6 | 14 | 0.53 | 0 | 1091 | 23339 | 0 | 0 | No, Trazione |

### Verifica dei meccanismi locali di collasso con analisi cinematica lineare

forza di aggancio al piano = 0 quota mezzeria = 1406 Wa = 0.05 Ta = 0.0596

| Comb. | N top | N base | V orto | α0 | M* | e* | a0* | aLim | Verifica |
|---|---|---|---|---|---|---|---|---|---|
| SLV 9 | 3425 | -2681 | -511 | 0 | 0 | 0 | 0 | 1505.645 | No, Trazione |
| SLV 7 | -1165 | -1014 | 497 | 0 | 4.034 | 0.892 | 0 | 1505.645 | No |
| SLV 10 | 3425 | -2681 | -511 | 0 | 0 | 0 | 0 | 1505.645 | No, Trazione |
| SLV 12 | -284 | -2002 | 473 | 0 | 3.411 | 0.941 | 0 | 1505.645 | No |
| SLV 1 | 219 | -302 | -116 | 0 | 0 | 0 | 0 | 879.274 | No, Trazione |
| SLV 2 | 219 | -302 | -116 | 0 | 0 | 0 | 0 | 879.274 | No, Trazione |
| SLV 5 | 2544 | -1692 | -488 | 0 | 0 | 0 | 0 | 1505.645 | No, Trazione |
| SLV 6 | 2544 | -1692 | -488 | 0 | 0 | 0 | 0 | 1505.645 | No, Trazione |
| SLV 8 | -1165 | -1014 | 497 | 0 | 4.034 | 0.892 | 0 | 1505.645 | No |
| SLV 11 | -284 | -2002 | 473 | 0 | 3.411 | 0.941 | 0 | 1505.645 | No |

### Tabella dei coefficienti di sicurezza minimi

| Stato limite | Coeff.s. | Comb. | Verifica |
|---|---|---|---|
| PF_SLU | 0 | SLU 84 | No |
| V_SLU | 0 | SLU 1 | No |
| PF_SLV | 0 | SLV 16 | No |
| V_SLV | 0 | SLD 1 | No |
| PFFP_SLV | 0 | SLV 10 | No |
| R_SLV | 0 | SLV 16 | No |

## Maschio 182

Verifiche condotte secondo D.M. 17-01-18 (N.T.C.)

### Dati geometrici

| X ini. | Y ini. | X fin. | Y fin. | Quota i. | Quota.s | l | Sp. | h netta | h ini. | h fin. | a | a.s.,sx | a.s.,dx |
|---|---|---|---|---|---|---|---|---|---|---|---|---|---|
| -2249.3 | -335.9 | -2467.8 | -335.9 | L6 | L7 | 218.5 | 28 | 316 | 316 | 316 | | | |

### Caratteristiche del materiale

(Circolare 7 21-01-19 C8.5.I) Muratura in mattoni pieni e malta di calce LC2_Corti

| fb | fk | fvk0 | fmedio | τ0 | fv0 | μ | ϕ | fv,lim | E | G | FC |
|---|---|---|---|---|---|---|---|---|---|---|---|
| 60 | | | 34.5 | 0.9 | 2 | 0.58 | 0.77 | 3.25 | 32000 | 12800 | 1.2 |

### Verifica a pressoflessione nel piano secondo D.M. 17-01-18 NTC §7.8.2.2.1 in combinazioni non sismiche, γM = 3

| Comb. | Quota | N | M | σ0 | Mu | c.s. | Verifica |
|---|---|---|---|---|---|---|---|
| SLU 42 | 1338 | -3465 | 177806 | 0.57 | 352245 | 1.981 | Si |
| SLU 42 | 1518 | -2275 | 33640 | 0.37 | 237246 | 7.053 | Si |

| Comb. | Quota | N | M | σ0 | Mu | c.s. | Verifica |
|---|---|---|---|---|---|---|---|
| SLU 80 | 1338 | -4840 | 207857 | 0.79 | 477385 | 2.297 | Si |
| SLU 80 | 1518 | -3046 | 41852 | 0.5 | 312401 | 7.464 | Si |
| SLU 17 | 1338 | -3781 | 169641 | 0.62 | 381779 | 2.251 | Si |
| SLU 17 | 1518 | -2392 | 37284 | 0.39 | 248808 | 6.673 | Si |
| SLU 37 | 1338 | -4059 | 192807 | 0.66 | 407343 | 2.113 | Si |
| SLU 37 | 1518 | -2778 | 35058 | 0.45 | 286552 | 8.174 | Si |
| SLU 31 | 1338 | -3017 | 134450 | 0.49 | 309678 | 2.303 | Si |
| SLU 31 | 1518 | -1746 | 25897 | 0.29 | 184091 | 7.109 | Si |
| SLU 38 | 1338 | -3958 | 210690 | 0.65 | 398049 | 1.889 | Si |
| SLU 38 | 1518 | -2728 | 42428 | 0.45 | 281728 | 6.64 | Si |
| SLU 34 | 1338 | -3454 | 178531 | 0.56 | 351171 | 1.967 | Si |
| SLU 34 | 1518 | -2221 | 36620 | 0.36 | 231792 | 6.33 | Si |
| SLU 41 | 1338 | -3567 | 159924 | 0.58 | 361758 | 2.262 | Si |
| SLU 41 | 1518 | -2325 | 26269 | 0.38 | 242169 | 9.219 | Si |
| SLU 30 | 1338 | -4089 | 184563 | 0.67 | 410056 | 2.222 | Si |
| SLU 30 | 1518 | -2677 | 37916 | 0.44 | 276777 | 7.3 | Si |
| SLU 36 | 1338 | -4255 | 199433 | 0.7 | 425192 | 2.132 | Si |
| SLU 36 | 1518 | -3104 | 31730 | 0.51 | 318014 | 10.023 | Si |

Verifica a pressoflessione nel piano secondo D.M. 17-01-18 NTC §7.8.2.2.1 in combinazioni sismiche, γM = 2

| Comb. | Quota | N | M | σ0 | Mu | c.s. | Verifica |
|---|---|---|---|---|---|---|---|
| SLV 1 | 1338 | -2817 | 168759 | 0.46 | 296208 | 1.755 | Si |
| SLV 1 | 1518 | -2009 | -18794 | 0.33 | 213617 | 11.366 | Si |
| SLV 14 | 1338 | -3818 | 29023 | 0.62 | 395831 | 13.638 | Si |
| SLV 14 | 1518 | -1280 | 79943 | 0.21 | 137486 | 1.72 | Si |
| SLV 13 | 1338 | -3818 | 29023 | 0.62 | 395831 | 13.638 | Si |
| SLV 13 | 1518 | -1280 | 79943 | 0.21 | 137486 | 1.72 | Si |
| SLV 10 | 1338 | -3850 | 176463 | 0.63 | 398991 | 2.261 | Si |
| SLV 10 | 1518 | -1750 | 101056 | 0.29 | 186747 | 1.848 | Si |
| SLV 5 | 1338 | -3550 | 218384 | 0.58 | 369440 | 1.692 | Si |
| SLV 5 | 1518 | -1969 | 71435 | 0.32 | 209449 | 2.932 | Si |
| SLV 2 | 1338 | -2817 | 168759 | 0.46 | 296208 | 1.755 | Si |
| SLV 2 | 1518 | -2009 | -18794 | 0.33 | 213617 | 11.366 | Si |
| SLV 9 | 1338 | -3850 | 176463 | 0.63 | 398991 | 2.261 | Si |
| SLV 9 | 1518 | -1750 | 101056 | 0.29 | 186747 | 1.848 | Si |
| SLV 7 | 1338 | -2457 | -63136 | 0.4 | 259647 | 4.112 | Si |
| SLV 7 | 1518 | -1355 | -87626 | 0.22 | 145374 | 1.659 | Si |
| SLV 8 | 1338 | -2457 | -63136 | 0.4 | 259647 | 4.112 | Si |
| SLV 8 | 1518 | -1355 | -87626 | 0.22 | 145374 | 1.659 | Si |
| SLV 6 | 1338 | -3550 | 218384 | 0.58 | 369440 | 1.692 | Si |
| SLV 6 | 1518 | -1969 | 71435 | 0.32 | 209449 | 2.932 | Si |

Verifica a taglio nel piano secondo D.M. 17-01-18 (N.T.C.) §7.8.2.2.2 con rottura per scorrimento in combinazioni non sismiche, γM = 3

| Comb. | Quota | N | V par | M | σ0 | σN | I' | fvd | Vt scorr. | Vt fess.diag. | Vt,lim | c.s. | Verifica |
|---|---|---|---|---|---|---|---|---|---|---|---|---|---|
| SLU 35 | 1338 | -4357 | 1499 | 181551 | | 0.77 | 202.73 | 0.66 | 3735 | | | 2.49 | Si |
| SLU 35 | 1518 | -3154 | 1374 | 24359 | | 0.52 | 218.5 | 0.62 | 3819 | | | 2.78 | Si |
| SLU 36 | 1338 | -4255 | 1599 | 199433 | | 0.81 | 187.15 | 0.66 | 3479 | | | 2.18 | Si |
| SLU 36 | 1518 | -3104 | 1454 | 31730 | | 0.51 | 218.5 | 0.62 | 3813 | | | 2.62 | Si |
| SLU 38 | 1338 | -3958 | 1557 | 210690 | | 0.84 | 168.05 | 0.67 | 3142 | | | 2.02 | Si |
| SLU 38 | 1518 | -2728 | 1405 | 42428 | | 0.45 | 218.5 | 0.62 | 3763 | | | 2.68 | Si |
| SLU 34 | 1338 | -3454 | 1400 | 178531 | | 0.71 | 172.67 | 0.65 | 3147 | | | 2.25 | Si |
| SLU 34 | 1518 | -2221 | 1279 | 36620 | | 0.36 | 218.5 | 0.6 | 3695 | | | 2.89 | Si |
| SLU 42 | 1338 | -3465 | 1432 | 177806 | | 0.71 | 173.81 | 0.65 | 3166 | | | 2.21 | Si |
| SLU 42 | 1518 | -2275 | 1324 | 33640 | | 0.37 | 218.5 | 0.61 | 3702 | | | 2.8 | Si |
| SLU 80 | 1338 | -4840 | 1584 | 207857 | | 0.87 | 198.9 | 0.67 | 3739 | | | 2.36 | Si |
| SLU 80 | 1518 | -3046 | 1430 | 41852 | | 0.5 | 218.5 | 0.62 | 3805 | | | 2.66 | Si |
| SLU 41 | 1338 | -3567 | 1332 | 159924 | | 0.66 | 193.23 | 0.64 | 3481 | | | 2.61 | Si |
| SLU 41 | 1518 | -2325 | 1244 | 26269 | | 0.38 | 218.5 | 0.61 | 3709 | | | 2.98 | Si |
| SLU 78 | 1338 | -5137 | 1626 | 196601 | | 0.86 | 212.94 | 0.67 | 3997 | | | 2.46 | Si |
| SLU 78 | 1518 | -3422 | 1480 | 31153 | | 0.56 | 218.5 | 0.63 | 3855 | | | 2.61 | Si |
| SLU 84 | 1338 | -4347 | 1458 | 174973 | | 0.75 | 207 | 0.66 | 3800 | | | 2.61 | Si |
| SLU 84 | 1518 | -2593 | 1350 | 33063 | | 0.42 | 218.5 | 0.61 | 3745 | | | 2.77 | Si |
| SLU 37 | 1338 | -4059 | 1457 | 192807 | | 0.78 | 185.25 | 0.66 | 3423 | | | 2.35 | Si |
| SLU 37 | 1518 | -2778 | 1324 | 35058 | | 0.45 | 218.5 | 0.62 | 3769 | | | 2.85 | Si |

Verifica a taglio nel piano secondo D.M. 17-01-18 (N.T.C.) §7.8.2.2.2 con rottura per scorrimento in combinazioni sismiche, γM = 2

| Comb. | Quota | N | V par | M | σ0 | σN | I' | fvd | Vt scorr. | Vt fess.diag. | Vt,lim | c.s. | Verifica |
|---|---|---|---|---|---|---|---|---|---|---|---|---|---|
| SLD 2 | 1338 | -3010 | 1310 | 104586 | | 0.49 | 218.5 | 0.93 | 5700 | | | 4.35 | Si |
| SLD 2 | 1518 | -1746 | 373 | -4027 | | 0.29 | 218.5 | 0.89 | 5448 | | | 14.61 | Si |
| SLV 6 | 1338 | -3550 | 1396 | 218384 | | 0.89 | 143.21 | 1.01 | 4052 | | | 2.9 | Si |
| SLV 6 | 1518 | -1969 | 452 | 71435 | | 0.32 | 218.5 | 0.9 | 5492 | | | 12.14 | Si |
| SLV 3 | 1338 | -2490 | 2042 | 84303 | | 0.41 | 218.5 | 0.91 | 5596 | | | 2.74 | Si |
| SLV 3 | 1518 | -1825 | 80 | -66513 | | 0.3 | 218.42 | 0.89 | 5462 | | | 68.11 | Si |
| SLV 2 | 1338 | -2817 | 2237 | 168759 | | 0.68 | 148.06 | 0.97 | 4018 | | | 1.8 | Si |
| SLV 2 | 1518 | -2009 | 91 | -18794 | | 0.33 | 218.5 | 0.9 | 5500 | | | 60.43 | Si |
| SLV 1 | 1338 | -2817 | 2237 | 168759 | | 0.68 | 148.06 | 0.97 | 4018 | | | 1.8 | Si |
| SLV 1 | 1518 | -2009 | 91 | -18794 | | 0.33 | 218.5 | 0.9 | 5500 | | | 60.43 | Si |
| SLD 1 | 1338 | -3010 | 1310 | 104586 | | 0.49 | 218.5 | 0.93 | 5700 | | | 4.35 | Si |
| SLD 1 | 1518 | -1746 | 373 | -4027 | | 0.29 | 218.5 | 0.89 | 5448 | | | 14.61 | Si |
| SLV 4 | 1338 | -2490 | 2042 | 84303 | | 0.41 | 218.5 | 0.91 | 5596 | | | 2.74 | Si |
| SLV 4 | 1518 | -1825 | 80 | -66513 | | 0.3 | 218.42 | 0.89 | 5462 | | | 68.11 | Si |
| SLV 13 | 1338 | -3818 | -814 | 29023 | | 0.62 | 218.5 | 0.96 | 5862 | | | 7.2 | Si |
| SLV 13 | 1518 | -1280 | 1087 | 79943 | | 0.33 | 140.44 | 0.9 | 3533 | | | 3.25 | Si |
| SLV 5 | 1338 | -3550 | 1396 | 218384 | | 0.89 | 143.21 | 1.01 | 4052 | | | 2.9 | Si |
| SLV 5 | 1518 | -1969 | 452 | 71435 | | 0.32 | 218.5 | 0.9 | 5492 | | | 12.14 | Si |
| SLV 14 | 1338 | -3818 | -814 | 29023 | | 0.62 | 218.5 | 0.96 | 5862 | | | 7.2 | Si |
| SLV 14 | 1518 | -1280 | 1087 | 79943 | | 0.33 | 140.44 | 0.9 | 3533 | | | 3.25 | Si |

### Verifica a pressoflessione fuori piano D.M. 17-01-18 (N.T.C.)

quota 1406 Wa 0.05 denominatore 8 γM = 2

| Comb. | fd | Sa | σ0 | N | M | Mc | Coeff.s. | Verifica |
|---|---|---|---|---|---|---|---|---|
| SLV 7 | 14 | 0.53 | 0.41 | -2500 | 24815 | 33836 | 1.36 | Si |
| SLV 8 | 14 | 0.53 | 0.41 | -2500 | 24815 | 33836 | 1.36 | Si |
| SLV 4 | 14 | 0.53 | 0.41 | -2519 | 24815 | 34083 | 1.37 | Si |
| SLV 3 | 14 | 0.53 | 0.41 | -2519 | 24815 | 34083 | 1.37 | Si |
| SLV 12 | 14 | 0.53 | 0.43 | -2607 | 24815 | 35222 | 1.42 | Si |
| SLV 11 | 14 | 0.53 | 0.43 | -2607 | 24815 | 35222 | 1.42 | Si |
| SLV 2 | 14 | 0.53 | 0.43 | -2642 | 24815 | 35679 | 1.44 | Si |
| SLV 1 | 14 | 0.53 | 0.43 | -2642 | 24815 | 35679 | 1.44 | Si |
| SLV 15 | 14 | 0.53 | 0.47 | -2874 | 24815 | 38683 | 1.56 | Si |
| SLV 16 | 14 | 0.53 | 0.47 | -2874 | 24815 | 38683 | 1.56 | Si |

### Verifica dei meccanismi locali di collasso con analisi cinematica lineare

forza di aggancio al piano = 0 quota mezzeria = 1406 Wa = 0.05 Ta = 0.0596

| Comb. | N top | N base | V orto | α0 | M* | e* | a0* | aLim | Verifica |
|---|---|---|---|---|---|---|---|---|---|
| SLV 3 | -1384 | -4400 | 339 | 0 | 4.414 | 0.89 | 0 | 879.274 | No |
| SLV 13 | -867 | -3160 | -196 | 0 | 3.989 | 0.9 | 0 | 879.274 | No |
| SLV 4 | -1384 | -4400 | 339 | 0 | 4.414 | 0.89 | 0 | 879.274 | No |
| SLV 2 | -1234 | -5352 | 278 | 0 | 4.285 | 0.892 | 0 | 879.274 | No |
| SLV 7 | -1431 | -2522 | 245 | 0 | 4.455 | 0.89 | 0 | 1505.645 | No |
| SLV 14 | -867 | -3160 | -196 | 0 | 3.989 | 0.9 | 0 | 879.274 | No |
| SLV 8 | -1431 | -2522 | 245 | 0 | 4.455 | 0.89 | 0 | 1505.645 | No |
| SLV 1 | -1234 | -5352 | 278 | 0 | 4.285 | 0.892 | 0 | 879.274 | No |
| SLV 10 | -820 | -5037 | -102 | 0.034 | 3.953 | 0.902 | 55.543 | 1505.645 | No |
| SLV 9 | -820 | -5037 | -102 | 0.034 | 3.953 | 0.902 | 55.543 | 1505.645 | No |

### Tabella dei coefficienti di sicurezza minimi

| Stato limite | Coeff.s. | Comb. | Verifica |
|---|---|---|---|
| PF_SLU | 1.889 | SLU 38 | Si |
| V_SLU | 2.018 | SLU 38 | Si |
| PF_SLV | 1.659 | SLV 7 | Si |
| V_SLV | 1.797 | SLV 1 | Si |
| PFFP_SLV | 1.364 | SLV 7 | Si |
| R_SLV | 0 | SLV 1 | No |

## Maschio 183

Verifiche condotte secondo D.M. 17-01-18 (N.T.C.)

### Dati geometrici

| X ini. | Y ini. | X fin. | Y fin. | Quota i. | Quota.s | l | Sp. | h netta | h ini. | h fin. | a | a.s.,sx | a.s.,dx |
|---|---|---|---|---|---|---|---|---|---|---|---|---|---|
| -1936.8 | -335.9 | -2159.3 | -335.9 | L6 | L7 | 222.5 | 28 | 316 | 316 | 316 | | | |

### Caratteristiche del materiale

(Circolare 7 21-01-19 C8.5.I) Muratura in mattoni pieni e malta di calce LC2_Corti

| fb | fk | fvk0 | fmedio | τ0 | fv0 | μ | ϕ | fv,lim | E | G | FC |
|---|---|---|---|---|---|---|---|---|---|---|---|
| 60 | | | 34.5 | 0.9 | 2 | 0.58 | 0.77 | 3.25 | 32000 | 12800 | 1.2 |

### Verifica a pressoflessione nel piano secondo D.M. 17-01-18 NTC §7.8.2.2.1 in combinazioni non sismiche, γM = 3

| Comb. | Quota | N | M | σ0 | Mu | c.s. | Verifica |
|---|---|---|---|---|---|---|---|
| SLU 43 | 1448 | -2405 | -29948 | 0.39 | 254892 | 8.511 | Si |
| SLU 43 | 1528 | -1051 | 18003 | 0.17 | 114547 | 6.363 | Si |
| SLU 44 | 1448 | -2152 | -31362 | 0.35 | 229238 | 7.309 | Si |
| SLU 44 | 1528 | -862 | 12145 | 0.14 | 94241 | 7.76 | Si |
| SLU 52 | 1448 | -2112 | -33643 | 0.34 | 225206 | 6.694 | Si |
| SLU 52 | 1528 | -848 | 10362 | 0.14 | 92738 | 8.95 | Si |
| SLU 19 | 1448 | -1681 | -26018 | 0.27 | 180781 | 6.948 | Si |
| SLU 19 | 1528 | -719 | 6838 | 0.12 | 78849 | 11.531 | Si |
| SLU 1 | 1448 | -1889 | -21912 | 0.3 | 202349 | 9.235 | Si |
| SLU 1 | 1528 | -853 | 12900 | 0.14 | 93270 | 7.23 | Si |
| SLU 61 | 1448 | -2197 | -34055 | 0.35 | 233796 | 6.865 | Si |
| SLU 61 | 1528 | -918 | 11941 | 0.15 | 100242 | 8.395 | Si |
| SLU 60 | 1448 | -2349 | -33206 | 0.38 | 249192 | 7.504 | Si |
| SLU 60 | 1528 | -1031 | 15456 | 0.17 | 112417 | 7.273 | Si |
| SLU 10 | 1448 | -1596 | -25606 | 0.26 | 172000 | 6.717 | Si |
| SLU 10 | 1528 | -649 | 5259 | 0.1 | 71284 | 13.555 | Si |
| SLU 18 | 1448 | -1833 | -25170 | 0.29 | 196521 | 7.808 | Si |
| SLU 18 | 1528 | -833 | 10353 | 0.13 | 91123 | 8.802 | Si |
| SLU 2 | 1448 | -1636 | -23325 | 0.26 | 176121 | 7.551 | Si |
| SLU 2 | 1528 | -663 | 7042 | 0.11 | 72799 | 10.338 | Si |

### Verifica a pressoflessione nel piano secondo D.M. 17-01-18 NTC §7.8.2.2.1 in combinazioni sismiche, γM = 2

| Comb. | Quota | N | M | σ0 | Mu | c.s. | Verifica |
|---|---|---|---|---|---|---|---|
| SLD 12 | 1448 | -2044 | -44618 | 0.33 | 221336 | 4.961 | Si |
| SLD 12 | 1528 | -894 | 37016 | 0.14 | 98330 | 2.656 | Si |
| SLV 8 | 1448 | -1940 | -86618 | 0.31 | 210361 | 2.429 | Si |
| SLV 8 | 1528 | -890 | 58539 | 0.14 | 97842 | 1.671 | Si |
| SLV 15 | 1448 | -2386 | -23605 | 0.38 | 257081 | 10.891 | Si |
| SLV 15 | 1528 | -870 | 54485 | 0.14 | 95678 | 1.756 | Si |
| SLV 16 | 1448 | -2386 | -23605 | 0.38 | 257081 | 10.891 | Si |
| SLV 16 | 1528 | -870 | 54485 | 0.14 | 95678 | 1.756 | Si |
| SLV 7 | 1448 | -1940 | -86618 | 0.31 | 210361 | 2.429 | Si |

| Comb. | Quota | N | M | σ0 | Mu | c.s. | Verifica |
|---|---|---|---|---|---|---|---|
| SLV 7 | 1528 | -890 | 58539 | 0.14 | 97842 | 1.671 | Si |
| SLD 11 | 1448 | -2044 | -44618 | 0.33 | 221336 | 4.961 | Si |
| SLD 11 | 1528 | -894 | 37016 | 0.14 | 98330 | 2.656 | Si |
| SLV 12 | 1448 | -2193 | -77083 | 0.35 | 236963 | 3.074 | Si |
| SLV 12 | 1528 | -876 | 74485 | 0.14 | 96382 | 1.294 | Si |
| SLV 11 | 1448 | -2193 | -77083 | 0.35 | 236963 | 3.074 | Si |
| SLV 11 | 1528 | -876 | 74485 | 0.14 | 96382 | 1.294 | Si |
| SLV 6 | 1448 | -1647 | 34395 | 0.26 | 179290 | 5.213 | Si |
| SLV 6 | 1528 | -916 | -51758 | 0.15 | 100697 | 1.946 | Si |
| SLV 5 | 1448 | -1647 | 34395 | 0.26 | 179290 | 5.213 | Si |
| SLV 5 | 1528 | -916 | -51758 | 0.15 | 100697 | 1.946 | Si |

## Verifica a taglio nel piano secondo D.M. 17-01-18 (N.T.C.) §7.8.2.2.2 con rottura per scorrimento in combinazioni non sismiche, γM = 3

| Comb. | Quota | N | V par | M | σ0 | σN | l' | fvd | Vt scorr. | Vt fess.diag. | Vt,lim | c.s. | Verifica |
|---|---|---|---|---|---|---|---|---|---|---|---|---|---|
| SLU 45 | 1448 | -3034 | -735 | -20328 | | 0.49 | 222.5 | 0.62 | 3866 | | | 5.26 | Si |
| SLU 45 | 1528 | -1664 | -1058 | 16570 | | 0.27 | 222.5 | 0.59 | 3683 | | | 3.48 | Si |
| SLU 43 | 1448 | -2405 | -872 | -29948 | | 0.39 | 222.5 | 0.61 | 3782 | | | 4.34 | Si |
| SLU 43 | 1528 | -1051 | -1026 | 18003 | | 0.17 | 222.5 | 0.58 | 3601 | | | 3.51 | Si |
| SLU 49 | 1448 | -3031 | -437 | -11117 | | 0.49 | 222.5 | 0.62 | 3865 | | | 8.85 | Si |
| SLU 49 | 1528 | -1733 | -1031 | 12612 | | 0.28 | 222.5 | 0.59 | 3692 | | | 3.58 | Si |
| SLU 51 | 1448 | -2552 | -366 | -10679 | | 0.41 | 222.5 | 0.61 | 3801 | | | 10.37 | Si |
| SLU 51 | 1528 | -1305 | -1021 | 13600 | | 0.21 | 222.5 | 0.58 | 3635 | | | 3.56 | Si |
| SLU 48 | 1448 | -3183 | -528 | -10269 | | 0.51 | 222.5 | 0.62 | 3886 | | | 7.36 | Si |
| SLU 48 | 1528 | -1847 | -1081 | 16126 | | 0.3 | 222.5 | 0.6 | 3707 | | | 3.43 | Si |
| SLU 56 | 1448 | -3144 | -498 | -12550 | | 0.5 | 222.5 | 0.62 | 3880 | | | 7.79 | Si |
| SLU 56 | 1528 | -1833 | -1059 | 14343 | | 0.29 | 222.5 | 0.59 | 3706 | | | 3.5 | Si |
| SLU 58 | 1448 | -2664 | -428 | -12111 | | 0.43 | 222.5 | 0.61 | 3816 | | | 8.92 | Si |
| SLU 58 | 1528 | -1404 | -1049 | 15332 | | 0.23 | 222.5 | 0.59 | 3648 | | | 3.48 | Si |
| SLU 50 | 1448 | -2704 | -458 | -9830 | | 0.43 | 222.5 | 0.61 | 3822 | | | 8.35 | Si |
| SLU 50 | 1528 | -1418 | -1071 | 17115 | | 0.23 | 222.5 | 0.59 | 3650 | | | 3.41 | Si |
| SLU 53 | 1448 | -2995 | -705 | -22609 | | 0.48 | 222.5 | 0.62 | 3860 | | | 5.47 | Si |
| SLU 53 | 1528 | -1650 | -1036 | 14787 | | 0.26 | 222.5 | 0.59 | 3681 | | | 3.55 | Si |
| SLU 62 | 1448 | -2498 | -622 | -23148 | | 0.4 | 222.5 | 0.61 | 3794 | | | 6.1 | Si |
| SLU 62 | 1528 | -1215 | -1018 | 15012 | | 0.2 | 222.5 | 0.58 | 3623 | | | 3.56 | Si |

## Verifica a taglio nel piano secondo D.M. 17-01-18 (N.T.C.) §7.8.2.2.2 con rottura per scorrimento in combinazioni sismiche, γM = 2

| Comb. | Quota | N | V par | M | σ0 | σN | l' | fvd | Vt scorr. | Vt fess.diag. | Vt,lim | c.s. | Verifica |
|---|---|---|---|---|---|---|---|---|---|---|---|---|---|
| SLV 12 | 1448 | -2193 | -2440 | -77083 | | 0.35 | 222.5 | 0.9 | 5630 | | | 2.31 | Si |
| SLV 12 | 1528 | -876 | -1441 | 74485 | | 0.4 | 78.79 | 0.91 | 2014 | | | 1.4 | Si |
| SLV 11 | 1448 | -2193 | -2440 | -77083 | | 0.35 | 222.5 | 0.9 | 5630 | | | 2.31 | Si |
| SLV 11 | 1528 | -876 | -1441 | 74485 | | 0.4 | 78.79 | 0.91 | 2014 | | | 1.4 | Si |
| SLD 12 | 1448 | -2044 | -1355 | -44618 | | 0.33 | 222.5 | 0.9 | 5601 | | | 4.13 | Si |
| SLD 12 | 1528 | -894 | -1039 | 37016 | | 0.15 | 209.59 | 0.86 | 5069 | | | 4.88 | Si |
| SLV 3 | 1448 | -1543 | -416 | -55387 | | 0.25 | 222.5 | 0.88 | 5500 | | | 13.21 | Si |
| SLV 3 | 1528 | -915 | -1422 | 1331 | | 0.15 | 222.5 | 0.86 | 5375 | | | 3.78 | Si |
| SLV 7 | 1448 | -1940 | -2044 | -86618 | | 0.35 | 199.83 | 0.9 | 5051 | | | 2.47 | Si |
| SLV 7 | 1528 | -890 | -1696 | 58539 | | 0.23 | 136.4 | 0.88 | 3361 | | | 1.98 | Si |
| SLV 15 | 1448 | -2386 | -1737 | -23605 | | 0.38 | 222.5 | 0.91 | 5669 | | | 3.26 | Si |
| SLV 15 | 1528 | -870 | -571 | 54485 | | 0.21 | 145.86 | 0.88 | 3577 | | | 6.26 | Si |
| SLV 8 | 1448 | -1940 | -2044 | -86618 | | 0.35 | 199.83 | 0.9 | 5051 | | | 2.47 | Si |
| SLV 8 | 1528 | -890 | -1696 | 58539 | | 0.23 | 136.4 | 0.88 | 3361 | | | 1.98 | Si |
| SLD 11 | 1448 | -2044 | -1355 | -44618 | | 0.33 | 222.5 | 0.9 | 5601 | | | 4.13 | Si |
| SLD 11 | 1528 | -894 | -1039 | 37016 | | 0.15 | 209.59 | 0.86 | 5069 | | | 4.88 | Si |
| SLV 16 | 1448 | -2386 | -1737 | -23605 | | 0.38 | 222.5 | 0.91 | 5669 | | | 3.26 | Si |
| SLV 16 | 1528 | -870 | -571 | 54485 | | 0.21 | 145.86 | 0.88 | 3577 | | | 6.26 | Si |
| SLV 4 | 1448 | -1543 | -416 | -55387 | | 0.25 | 222.5 | 0.88 | 5500 | | | 13.21 | Si |
| SLV 4 | 1528 | -915 | -1422 | 1331 | | 0.15 | 222.5 | 0.86 | 5375 | | | 3.78 | Si |

## Verifica a pressoflessione fuori piano D.M. 17-01-18 (N.T.C.)

quota 1406 Wa 0.05 denominatore 8 γM = 2

| Comb. | fd | Sa | σ0 | N | M | Mc | Coeff.s. | Verifica |
|---|---|---|---|---|---|---|---|---|
| SLV 7 | 14 | 0.53 | 0 | -1765 | 25269 | 0 | 0 | No, e>t/2 |
| SLV 8 | 14 | 0.53 | 0 | -1765 | 25269 | 0 | 0 | No, e>t/2 |
| SLV 4 | 14 | 0.53 | 0.29 | -1829 | 25269 | 24993 | 0.99 | No, M>Mu |
| SLV 3 | 14 | 0.53 | 0.29 | -1829 | 25269 | 24993 | 0.99 | No, M>Mu |
| SLV 12 | 14 | 0.53 | 0.3 | -1883 | 25269 | 25709 | 1.02 | Si |
| SLV 11 | 14 | 0.53 | 0.3 | -1883 | 25269 | 25709 | 1.02 | Si |
| SLV 1 | 14 | 0.53 | 0.32 | -2002 | 25269 | 27284 | 1.08 | Si |
| SLV 2 | 14 | 0.53 | 0.32 | -2002 | 25269 | 27284 | 1.08 | Si |
| SLV 15 | 14 | 0.53 | 0.36 | -2221 | 25269 | 30190 | 1.19 | Si |
| SLV 16 | 14 | 0.53 | 0.36 | -2221 | 25269 | 30190 | 1.19 | Si |

## Verifica dei meccanismi locali di collasso con analisi cinematica lineare

forza di aggancio al piano = 0 quota mezzeria = 1406 Wa = 0.05 Ta = 0.0596

| Comb. | N top | N base | V orto | α0 | M* | e* | a0* | aLim | Verifica |
|---|---|---|---|---|---|---|---|---|---|
| SLV 6 | -366 | -3174 | -265 | 0 | 3.722 | 0.934 | 0 | 1505.645 | No |
| SLV 7 | -832 | -1737 | 302 | 0 | 4.023 | 0.902 | 0 | 1505.645 | No |
| SLV 5 | -366 | -3174 | -265 | 0 | 3.722 | 0.934 | 0 | 1505.645 | No |
| SLV 11 | -791 | -2713 | 311 | 0 | 3.992 | 0.904 | 0 | 1505.645 | No |
| SLV 9 | -325 | -4150 | -256 | 0 | 3.701 | 0.939 | 0 | 1505.645 | No |
| SLV 8 | -832 | -1737 | 302 | 0 | 4.023 | 0.902 | 0 | 1505.645 | No |
| SLV 10 | -325 | -4150 | -256 | 0 | 3.701 | 0.939 | 0 | 1505.645 | No |
| SLV 12 | -791 | -2713 | 311 | 0 | 3.992 | 0.904 | 0 | 1505.645 | No |
| SLV 15 | -579 | -4354 | 124 | 0.025 | 3.846 | 0.915 | 39.901 | 879.274 | No |
| SLV 16 | -579 | -4354 | 124 | 0.025 | 3.846 | 0.915 | 39.901 | 879.274 | No |

### Tabella dei coefficienti di sicurezza minimi

| Stato limite | Coeff.s. | Comb. | Verifica |
|---|---|---|---|
| PF_SLU | 6.363 | SLU 43 | Si |
| V_SLU | 3.408 | SLU 50 | Si |
| PF_SLV | 1.294 | SLV 11 | Si |
| V_SLV | 1.397 | SLV 11 | Si |
| PFFP_SLV | 0 | SLV 7 | No |
| R_SLV | 0 | SLV 5 | No |

## Maschio 184

Verifiche condotte secondo D.M. 17-01-18 (N.T.C.)

### Dati geometrici

| X ini. | Y ini. | X fin. | Y fin. | Quota i. | Quota.s | l | Sp. | h netta | h ini. | h fin. | a | a.s.,sx | a.s.,dx |
|---|---|---|---|---|---|---|---|---|---|---|---|---|---|
| -1826.3 | -335.9 | -1886.8 | -335.9 | L6 | L7 | 60.5 | 28 | 316 | 316 | 316 | | | |

### Caratteristiche del materiale

(Circolare 7 21-01-19 C8.5.I) Muratura in mattoni pieni e malta di calce LC2_Corti

| fb | fk | fvk0 | fmedio | τ0 | fv0 | μ | ϕ | fv,lim | E | G | FC |
|---|---|---|---|---|---|---|---|---|---|---|---|
| 60 | | | 34.5 | 0.9 | 2 | 0.58 | 0.77 | 3.25 | 32000 | 12800 | 1.2 |

### Verifica a pressoflessione nel piano secondo D.M. 17-01-18 NTC §7.8.2.2.1 in combinazioni non sismiche, γM = 3

| Comb. | Quota | N | M | σ0 | Mu | c.s. | Verifica |
|---|---|---|---|---|---|---|---|
| SLU 1 | 1448 | -235 | -14392 | 0 | 0 | 0 | No, e>l/2 |
| SLU 1 | 1528 | -84 | 14559 | 0 | 0 | 0 | No, e>l/2 |
| SLU 56 | 1448 | -141 | -23501 | 0 | 0 | 0 | No, e>l/2 |
| SLU 56 | 1528 | 570 | 25331 | 0 | 0 | 0 | No, Trazione |
| SLU 61 | 1448 | -164 | -18440 | 0 | 0 | 0 | No, e>l/2 |
| SLU 61 | 1528 | -20 | 17744 | 0 | 0 | 0 | No, e>l/2 |
| SLU 58 | 1448 | 68 | -24574 | 0 | 0 | 0 | No, Trazione |
| SLU 58 | 1528 | 826 | 25756 | 0 | 0 | 0 | No, Trazione |
| SLU 60 | 1448 | -301 | -18501 | 0 | 0 | 0 | No, e>l/2 |
| SLU 60 | 1528 | -171 | 17696 | 0 | 0 | 0 | No, e>l/2 |
| SLU 53 | 1448 | -329 | -20501 | 0 | 0 | 0 | No, e>l/2 |
| SLU 53 | 1528 | 70 | 21462 | 0 | 0 | 0 | No, Trazione |
| SLU 54 | 1448 | -192 | -20439 | 0 | 0 | 0 | No, e>l/2 |
| SLU 54 | 1528 | 221 | 21510 | 0 | 0 | 0 | No, Trazione |
| SLU 57 | 1448 | -5 | -23439 | 0 | 0 | 0 | No, e>l/2 |
| SLU 57 | 1528 | 721 | 25379 | 0 | 0 | 0 | No, Trazione |
| SLU 55 | 1448 | 108 | -21471 | 0 | 0 | 0 | No, Trazione |
| SLU 55 | 1528 | 578 | 21966 | 0 | 0 | 0 | No, Trazione |
| SLU 59 | 1448 | 205 | -24512 | 0 | 0 | 0 | No, Trazione |
| SLU 59 | 1528 | 977 | 25804 | 0 | 0 | 0 | No, Trazione |

### Verifica a pressoflessione nel piano secondo D.M. 17-01-18 NTC §7.8.2.2.1 in combinazioni sismiche, γM = 2

| Comb. | Quota | N | M | σ0 | Mu | c.s. | Verifica |
|---|---|---|---|---|---|---|---|
| SLV 14 | 1448 | 51 | -7001 | 0 | 0 | 0 | No, Trazione |
| SLV 14 | 1528 | 381 | 14008 | 0 | 0 | 0 | No, Trazione |
| SLV 7 | 1448 | 1544 | -34946 | 0 | 0 | 0 | No, Trazione |
| SLV 7 | 1528 | 1343 | 27367 | 0 | 0 | 0 | No, Trazione |
| SLV 12 | 1448 | 2071 | -34205 | 0 | 0 | 0 | No, Trazione |
| SLV 12 | 1528 | 1881 | 29607 | 0 | 0 | 0 | No, Trazione |
| SLV 11 | 1448 | 2071 | -34205 | 0 | 0 | 0 | No, Trazione |
| SLV 11 | 1528 | 1881 | 29607 | 0 | 0 | 0 | No, Trazione |
| SLD 16 | 1448 | 400 | -16211 | 0 | 0 | 0 | No, Trazione |
| SLD 16 | 1528 | 554 | 17789 | 0 | 0 | 0 | No, Trazione |
| SLV 4 | 1448 | -489 | -21628 | 0 | 0 | 0 | No, e>l/2 |
| SLV 4 | 1528 | -431 | 14947 | 0 | 0 | 0 | No, e>l/2 |
| SLV 3 | 1448 | -489 | -21628 | 0 | 0 | 0 | No, e>l/2 |
| SLV 3 | 1528 | -431 | 14947 | 0 | 0 | 0 | No, e>l/2 |
| SLV 8 | 1448 | 1544 | -34946 | 0 | 0 | 0 | No, Trazione |
| SLV 8 | 1528 | 1343 | 27367 | 0 | 0 | 0 | No, Trazione |
| SLV 15 | 1448 | 1267 | -19157 | 0 | 0 | 0 | No, Trazione |
| SLV 15 | 1528 | 1363 | 22414 | 0 | 0 | 0 | No, Trazione |
| SLV 13 | 1448 | 51 | -7001 | 0 | 0 | 0 | No, Trazione |
| SLV 13 | 1528 | 381 | 14008 | 0 | 0 | 0 | No, Trazione |

### Verifica a taglio nel piano secondo D.M. 17-01-18 (N.T.C.) §7.8.2.2.2 con rottura per scorrimento in combinazioni non sismiche, γM = 3

| Comb. | Quota | N | V par | M | σ0 | σN | l' | fvd | Vt scorr. | Vt fess.diag. | Vt,lim | c.s. | Verifica |
|---|---|---|---|---|---|---|---|---|---|---|---|---|---|
| SLU 58 | 1448 | 68 | -608 | -24574 | | 0 | 0 | 0.56 | 0 | | | 0 | No, Vu<V |
| SLU 58 | 1528 | 826 | -403 | 25756 | | 0 | 0 | 0.56 | 0 | | | 0 | No, Vu<V |
| SLU 59 | 1448 | 205 | -606 | -24512 | | 0 | 0 | 0.56 | 0 | | | 0 | No, Vu<V |
| SLU 59 | 1528 | 977 | -428 | 25804 | | 0 | 0 | 0.56 | 0 | | | 0 | No, Vu<V |
| SLU 53 | 1448 | -329 | -549 | -20501 | | 0 | 0 | 0.56 | 0 | | | 0 | No, Vu<V |
| SLU 53 | 1528 | 70 | -322 | 21462 | | 0 | 0 | 0.56 | 0 | | | 0 | No, Vu<V |
| SLU 61 | 1448 | -164 | -528 | -18440 | | 0 | 0 | 0.56 | 0 | | | 0 | No, Vu<V |
| SLU 61 | 1528 | -20 | -274 | 17744 | | 0 | 0 | 0.56 | 0 | | | 0 | No, Vu<V |
| SLU 57 | 1448 | -5 | -581 | -23439 | | 0 | 0 | 0.56 | 0 | | | 0 | No, Vu<V |
| SLU 57 | 1528 | 721 | -430 | 25379 | | 0 | 0 | 0.56 | 0 | | | 0 | No, Vu<V |
| SLU 56 | 1448 | -141 | -584 | -23501 | | 0 | 0 | 0.56 | 0 | | | 0 | No, Vu<V |
| SLU 56 | 1528 | 570 | -405 | 25331 | | 0 | 0 | 0.56 | 0 | | | 0 | No, Vu<V |
| SLU 55 | 1448 | 108 | -569 | -21471 | | 0 | 0 | 0.56 | 0 | | | 0 | No, Vu<V |
| SLU 55 | 1528 | 578 | -362 | 21966 | | 0 | 0 | 0.56 | 0 | | | 0 | No, Vu<V |
| SLU 1 | 1448 | -235 | -419 | -14392 | | 0 | 0 | 0.56 | 0 | | | 0 | No, Vu<V |

| Comb. | Quota | N | V par | M | σ0 | σN | l' | fvd | Vt scorr. | Vt fess.diag. | Vt,lim | c.s. | Verifica |
|---|---|---|---|---|---|---|---|---|---|---|---|---|---|
| SLU 1 | 1528 | -84 | -177 | 14559 | | 0 | 0 | 0.56 | 0 | | | 0 | No, Vu<V |
| SLU 60 | 1448 | -301 | -530 | -18501 | | 0 | 0 | 0.56 | 0 | | | 0 | No, Vu<V |
| SLU 60 | 1528 | -171 | -249 | 17696 | | 0 | 0 | 0.56 | 0 | | | 0 | No, Vu<V |
| SLU 54 | 1448 | -192 | -546 | -20439 | | 0 | 0 | 0.56 | 0 | | | 0 | No, Vu<V |
| SLU 54 | 1528 | 221 | -348 | 21510 | | 0 | 0 | 0.56 | 0 | | | 0 | No, Vu<V |

### Verifica a taglio nel piano secondo D.M. 17-01-18 (N.T.C.) §7.8.2.2.2 con rottura per scorrimento in combinazioni sismiche, γM = 2

| Comb. | Quota | N | V par | M | σ0 | σN | l' | fvd | Vt scorr. | Vt fess.diag. | Vt,lim | c.s. | Verifica |
|---|---|---|---|---|---|---|---|---|---|---|---|---|---|
| SLV 3 | 1448 | -489 | -333 | -21628 | | 0 | 0 | 0.83 | 0 | | | 0 | No, Vu<V |
| SLV 3 | 1528 | -431 | -100 | 14947 | | 0 | 0 | 0.83 | 0 | | | 0 | No, Vu<V |
| SLV 15 | 1448 | 1267 | -849 | -19157 | | 0 | 0 | 0.83 | 0 | | | 0 | No, Vu<V |
| SLV 15 | 1528 | 1363 | -655 | 22414 | | 0 | 0 | 0.83 | 0 | | | 0 | No, Vu<V |
| SLV 13 | 1448 | 51 | -477 | -7001 | | 0 | 0 | 0.83 | 0 | | | 0 | No, Vu<V |
| SLV 13 | 1528 | 381 | -297 | 14008 | | 0 | 0 | 0.83 | 0 | | | 0 | No, Vu<V |
| SLV 12 | 1448 | 2071 | -1103 | -34205 | | 0 | 0 | 0.83 | 0 | | | 0 | No, Vu<V |
| SLV 12 | 1528 | 1881 | -878 | 29607 | | 0 | 0 | 0.83 | 0 | | | 0 | No, Vu<V |
| SLV 14 | 1448 | 51 | -477 | -7001 | | 0 | 0 | 0.83 | 0 | | | 0 | No, Vu<V |
| SLV 14 | 1528 | 381 | -297 | 14008 | | 0 | 0 | 0.83 | 0 | | | 0 | No, Vu<V |
| SLV 8 | 1448 | 1544 | -948 | -34946 | | 0 | 0 | 0.83 | 0 | | | 0 | No, Vu<V |
| SLV 8 | 1528 | 1343 | -711 | 27367 | | 0 | 0 | 0.83 | 0 | | | 0 | No, Vu<V |
| SLD 16 | 1448 | 400 | -589 | -16211 | | 0 | 0 | 0.83 | 0 | | | 0 | No, Vu<V |
| SLD 16 | 1528 | 554 | -390 | 17789 | | 0 | 0 | 0.83 | 0 | | | 0 | No, Vu<V |
| SLV 4 | 1448 | -489 | -333 | -21628 | | 0 | 0 | 0.83 | 0 | | | 0 | No, Vu<V |
| SLV 4 | 1528 | -431 | -100 | 14947 | | 0 | 0 | 0.83 | 0 | | | 0 | No, Vu<V |
| SLV 11 | 1448 | 2071 | -1103 | -34205 | | 0 | 0 | 0.83 | 0 | | | 0 | No, Vu<V |
| SLV 11 | 1528 | 1881 | -878 | 29607 | | 0 | 0 | 0.83 | 0 | | | 0 | No, Vu<V |
| SLV 7 | 1448 | 1544 | -948 | -34946 | | 0 | 0 | 0.83 | 0 | | | 0 | No, Vu<V |
| SLV 7 | 1528 | 1343 | -711 | 27367 | | 0 | 0 | 0.83 | 0 | | | 0 | No, Vu<V |

### Verifica a pressoflessione fuori piano D.M. 17-01-18 (N.T.C.)

quota 1406 Wa 0.05 denominatore 8 γM = 2

| Comb. | fd | Sa | σ0 | N | M | Mc | Coeff.s. | Verifica |
|---|---|---|---|---|---|---|---|---|
| SLV 12 | 14 | 0.53 | 0 | 554 | 6871 | 0 | 0 | No, Trazione |
| SLV 7 | 14 | 0.53 | 0 | 360 | 6871 | 0 | 0 | No, Trazione |
| SLV 15 | 14 | 0.53 | 0 | 84 | 6871 | 0 | 0 | No, Trazione |
| SLV 16 | 14 | 0.53 | 0 | 84 | 6871 | 0 | 0 | No, Trazione |
| SLV 11 | 14 | 0.53 | 0 | 554 | 6871 | 0 | 0 | No, Trazione |
| SLV 8 | 14 | 0.53 | 0 | 360 | 6871 | 0 | 0 | No, Trazione |
| SLV 13 | 14 | 0.53 | 0.3 | -513 | 6871 | 7004 | 1.02 | Si |
| SLV 14 | 14 | 0.53 | 0.3 | -513 | 6871 | 7004 | 1.02 | Si |
| SLV 4 | 14 | 0.53 | 0.33 | -564 | 6871 | 7679 | 1.12 | Si |
| SLV 3 | 14 | 0.53 | 0.33 | -564 | 6871 | 7679 | 1.12 | Si |

### Verifica dei meccanismi locali di collasso con analisi cinematica lineare

forza di aggancio al piano = 0 quota mezzeria = 1406 Wa = 0.05 Ta = 0.0596

| Comb. | N top | N base | V orto | α0 | M* | e* | a0* | aLim | Verifica |
|---|---|---|---|---|---|---|---|---|---|
| SLV 12 | 2681 | -543 | -86 | 0 | 0 | 0 | 0 | 1505.645 | No, Trazione |
| SLV 16 | 1799 | -129 | -70 | 0 | 0 | 0 | 0 | 879.274 | No, Trazione |
| SLV 14 | 643 | -160 | -46 | 0 | 0 | 0 | 0 | 879.274 | No, Trazione |
| SLV 15 | 1799 | -129 | -70 | 0 | 0 | 0 | 0 | 879.274 | No, Trazione |
| SLV 11 | 2681 | -543 | -86 | 0 | 0 | 0 | 0 | 1505.645 | No, Trazione |
| SLV 4 | 463 | -1413 | -40 | 0 | 0 | 0 | 0 | 879.274 | No, Trazione |
| SLV 3 | 463 | -1413 | -40 | 0 | 0 | 0 | 0 | 879.274 | No, Trazione |
| SLV 7 | 2280 | -928 | -77 | 0 | 0 | 0 | 0 | 1505.645 | No, Trazione |
| SLV 8 | 2280 | -928 | -77 | 0 | 0 | 0 | 0 | 1505.645 | No, Trazione |
| SLV 13 | 643 | -160 | -46 | 0 | 0 | 0 | 0 | 879.274 | No, Trazione |

### Tabella dei coefficienti di sicurezza minimi

| Stato limite | Coeff.s. | Comb. | Verifica |
|---|---|---|---|
| PF_SLU | 0 | SLU 84 | No |
| V_SLU | 0 | SLU 1 | No |
| PF_SLV | 0 | SLV 16 | No |
| V_SLV | 0 | SLD 3 | No |
| PFFP_SLV | 0 | SLV 16 | No |
| R_SLV | 0 | SLV 16 | No |

## Maschio 185

Verifiche condotte secondo D.M. 17-01-18 (N.T.C.)

### Dati geometrici

| X ini. | Y ini. | X fin. | Y fin. | Quota i. | Quota.s | l | Sp. | h netta | h ini. | h fin. | a | a.s.,sx | a.s.,dx |
|---|---|---|---|---|---|---|---|---|---|---|---|---|---|
| -1720.3 | -335.9 | -1736.3 | -335.9 | L6 | L7 | 16 | 28 | 316 | 316 | 316 | | | |

### Caratteristiche del materiale

(Circolare 7 21-01-19 C8.5.I) Muratura in mattoni pieni e malta di calce LC2_Corti

| fb | fk | fvk0 | fmedio | τ0 | fv0 | μ | ϕ | fv,lim | E | G | FC |
|---|---|---|---|---|---|---|---|---|---|---|---|
| 60 | | | 34.5 | 0.9 | 2 | 0.58 | 0.77 | 3.25 | 32000 | 12800 | 1.2 |

### Verifica a pressoflessione nel piano secondo D.M. 17-01-18 NTC §7.8.2.2.1 in combinazioni non sismiche, γM = 3

| Comb. | Quota | N | M | σ0 | Mu | c.s. | Verifica |
|---|---|---|---|---|---|---|---|
| SLU 23 | 1338 | -226 | -2565 | 0 | 0 | 0 | No, e>l/2 |
| SLU 23 | 1518 | -525 | -653 | 1.17 | 3597 | 5.511 | Si |

| Comb. | Quota | N | M | σ0 | Mu | c.s. | Verifica |
|---|---|---|---|---|---|---|---|
| SLU 52 | 1338 | -156 | -3701 | 0 | 0 | 0 | No, e>l/2 |
| SLU 52 | 1518 | -618 | -459 | 1.38 | 4105 | 8.938 | Si |
| SLU 61 | 1338 | -178 | -3213 | 0 | 0 | 0 | No, e>l/2 |
| SLU 61 | 1518 | -590 | -361 | 1.32 | 3958 | 10.951 | Si |
| SLU 31 | 1338 | -235 | -2756 | 0 | 0 | 0 | No, e>l/2 |
| SLU 31 | 1518 | -522 | -920 | 1.17 | 3581 | 3.895 | Si |
| SLU 40 | 1338 | -257 | -2268 | 0 | 0 | 0 | No, e>l/2 |
| SLU 40 | 1518 | -495 | -822 | 1.1 | 3422 | 4.165 | Si |
| SLU 18 | 1338 | -186 | -1780 | 0 | 0 | 0 | No, e>l/2 |
| SLU 18 | 1518 | -429 | -201 | 0.96 | 3030 | 15.097 | Si |
| SLU 1 | 1338 | -174 | -1506 | 0 | 0 | 0 | No, e>l/2 |
| SLU 1 | 1518 | -433 | 180 | 0.97 | 3054 | 16.923 | Si |
| SLU 43 | 1338 | -192 | -2084 | 0 | 0 | 0 | No, e>l/2 |
| SLU 43 | 1518 | -554 | 338 | 1.24 | 3761 | 11.117 | Si |
| SLU 19 | 1338 | -159 | -2635 | 0 | 0 | 0 | No, e>l/2 |
| SLU 19 | 1518 | -469 | -519 | 1.05 | 3270 | 6.298 | Si |
| SLU 44 | 1338 | -147 | -3510 | 0 | 0 | 0 | No, e>l/2 |
| SLU 44 | 1518 | -620 | -192 | 1.39 | 4120 | 21.404 | Si |

Verifica a pressoflessione nel piano secondo D.M. 17-01-18 NTC §7.8.2.2.1 in combinazioni sismiche, γM = 2

| Comb. | Quota | N | M | σ0 | Mu | c.s. | Verifica |
|---|---|---|---|---|---|---|---|
| SLV 12 | 1338 | -358 | -843 | 0.8 | 2675 | 3.173 | Si |
| SLV 12 | 1518 | -53 | 1485 | 0 | 0 | 0 | No, e>l/2 |
| SLV 14 | 1338 | 612 | -11408 | 0 | 0 | 0 | No, Trazione |
| SLV 14 | 1518 | -988 | -1357 | 2.21 | 6477 | 4.774 | Si |
| SLV 8 | 1338 | -782 | 4534 | 1.75 | 5361 | 1.183 | Si |
| SLV 8 | 1518 | 185 | 1999 | 0 | 0 | 0 | No, Trazione |
| SLV 11 | 1338 | -358 | -843 | 0.8 | 2675 | 3.173 | Si |
| SLV 11 | 1518 | -53 | 1485 | 0 | 0 | 0 | No, e>l/2 |
| SLV 7 | 1338 | -782 | 4534 | 1.75 | 5361 | 1.183 | Si |
| SLV 7 | 1518 | 185 | 1999 | 0 | 0 | 0 | No, Trazione |
| SLV 13 | 1338 | 612 | -11408 | 0 | 0 | 0 | No, Trazione |
| SLV 13 | 1518 | -988 | -1357 | 2.21 | 6477 | 4.774 | Si |
| SLD 16 | 1338 | 55 | -4845 | 0 | 0 | 0 | No, Trazione |
| SLD 16 | 1518 | -547 | -128 | 1.22 | 3941 | 30.729 | Si |
| SLV 9 | 1338 | 373 | -7446 | 0 | 0 | 0 | No, Trazione |
| SLV 9 | 1518 | -1065 | -1964 | 2.38 | 6861 | 3.494 | Si |
| SLV 6 | 1338 | -51 | -2069 | 0 | 0 | 0 | No, e>l/2 |
| SLV 6 | 1518 | -827 | -1449 | 1.85 | 5616 | 3.875 | Si |
| SLV 10 | 1338 | 373 | -7446 | 0 | 0 | 0 | No, Trazione |
| SLV 10 | 1518 | -1065 | -1964 | 2.38 | 6861 | 3.494 | Si |

Verifica a taglio nel piano secondo D.M. 17-01-18 (N.T.C.) §7.8.2.2.2 con rottura per scorrimento in combinazioni non sismiche, γM = 3

| Comb. | Quota | N | V par | M | σ0 | σN | l' | fvd | Vt scorr. | Vt fess.diag. | Vt,lim | c.s. | Verifica |
|---|---|---|---|---|---|---|---|---|---|---|---|---|---|
| SLU 44 | 1338 | -147 | -185 | -3510 | | 0 | 0 | 0.56 | 0 | | | 0 | No, Vu<V |
| SLU 44 | 1518 | -620 | 34 | -192 | | 1.39 | 16 | 0.74 | 332 | | | 9.89 | Si |
| SLU 60 | 1338 | -205 | -124 | -2358 | | 0 | 0 | 0.56 | 0 | | | 0 | No, Vu<V |
| SLU 60 | 1518 | -550 | 23 | -43 | | 1.23 | 16 | 0.72 | 322 | | | 13.77 | Si |
| SLU 1 | 1338 | -174 | -79 | -1506 | | 0 | 0 | 0.56 | 0 | | | 0 | No, Vu<V |
| SLU 1 | 1518 | -433 | 8 | 180 | | 0.97 | 16 | 0.68 | 307 | | | 37.91 | Si |
| SLU 19 | 1338 | -159 | -141 | -2635 | | 0 | 0 | 0.56 | 0 | | | 0 | No, Vu<V |
| SLU 19 | 1518 | -469 | 42 | -519 | | 1.05 | 16 | 0.7 | 311 | | | 7.35 | Si |
| SLU 40 | 1338 | -257 | -124 | -2268 | | 0 | 0 | 0.56 | 0 | | | 0 | No, Vu<V |
| SLU 40 | 1518 | -495 | 56 | -822 | | 1.1 | 16 | 0.7 | 315 | | | 5.6 | Si |
| SLU 23 | 1338 | -226 | -138 | -2565 | | 0 | 0 | 0.56 | 0 | | | 0 | No, Vu<V |
| SLU 23 | 1518 | -525 | 50 | -653 | | 1.17 | 16 | 0.71 | 319 | | | 6.42 | Si |
| SLU 43 | 1338 | -192 | -109 | -2084 | | 0 | 0 | 0.56 | 0 | | | 0 | No, Vu<V |
| SLU 43 | 1518 | -554 | 6 | 338 | | 1.24 | 16 | 0.72 | 323 | | | 56.01 | Si |
| SLU 52 | 1338 | -156 | -196 | -3701 | | 0 | 0 | 0.56 | 0 | | | 0 | No, Vu<V |
| SLU 52 | 1518 | -618 | 46 | -459 | | 1.38 | 16 | 0.74 | 331 | | | 7.22 | Si |
| SLU 61 | 1338 | -178 | -170 | -3213 | | 0 | 0 | 0.56 | 0 | | | 0 | No, Vu<V |
| SLU 61 | 1518 | -590 | 40 | -361 | | 1.32 | 16 | 0.73 | 328 | | | 8.18 | Si |
| SLU 18 | 1338 | -186 | -95 | -1780 | | 0 | 0 | 0.56 | 0 | | | 0 | No, Vu<V |
| SLU 18 | 1518 | -429 | 26 | -201 | | 0.96 | 16 | 0.68 | 306 | | | 11.89 | Si |

Verifica a taglio nel piano secondo D.M. 17-01-18 (N.T.C.) §7.8.2.2.2 con rottura per scorrimento in combinazioni sismiche, γM = 2

| Comb. | Quota | N | V par | M | σ0 | σN | l' | fvd | Vt scorr. | Vt fess.diag. | Vt,lim | c.s. | Verifica |
|---|---|---|---|---|---|---|---|---|---|---|---|---|---|
| SLV 8 | 1338 | -782 | 385 | 4534 | | 4.23 | 6.6 | 1.63 | 300 | | | 0.78 | No, Vu<V |
| SLV 8 | 1518 | 185 | 132 | 1999 | | 0 | 0 | 0.83 | 0 | | | 0 | No, Vu<V |
| SLV 13 | 1338 | 612 | -602 | -11408 | | 0 | 0 | 0.83 | 0 | | | 0 | No, Vu<V |
| SLV 13 | 1518 | -988 | 14 | -1357 | | 2.21 | 16 | 1.27 | 571 | | | 41.74 | Si |
| SLV 10 | 1338 | 373 | -540 | -7446 | | 0 | 0 | 0.83 | 0 | | | 0 | No, Vu<V |
| SLV 10 | 1518 | -1065 | -101 | -1964 | | 2.38 | 16 | 1.31 | 586 | | | 5.8 | Si |
| SLD 16 | 1338 | 55 | -218 | -4845 | | 0 | 0 | 0.83 | 0 | | | 0 | No, Vu<V |
| SLD 16 | 1518 | -547 | 47 | -128 | | 1.22 | 16 | 1.08 | 483 | | | 10.36 | Si |
| SLV 11 | 1338 | -358 | 131 | -843 | | 0.8 | 16 | 0.99 | 445 | | | 3.39 | Si |
| SLV 11 | 1518 | -53 | 154 | 1485 | | 0 | 0 | 0.83 | 0 | | | 0 | No, Vu<V |
| SLV 12 | 1338 | -358 | 131 | -843 | | 0.8 | 16 | 0.99 | 445 | | | 3.39 | Si |
| SLV 12 | 1518 | -53 | 154 | 1485 | | 0 | 0 | 0.83 | 0 | | | 0 | No, Vu<V |
| SLV 7 | 1338 | -782 | 385 | 4534 | | 4.23 | 6.6 | 1.63 | 300 | | | 0.78 | No, Vu<V |
| SLV 7 | 1518 | 185 | 132 | 1999 | | 0 | 0 | 0.83 | 0 | | | 0 | No, Vu<V |
| SLV 6 | 1338 | -51 | -286 | -2069 | | 0 | 0 | 0.83 | 0 | | | 0 | No, Vu<V |
| SLV 6 | 1518 | -827 | -123 | -1449 | | 1.85 | 16 | 1.2 | 539 | | | 4.39 | Si |
| SLV 9 | 1338 | 373 | -540 | -7446 | | 0 | 0 | 0.83 | 0 | | | 0 | No, Vu<V |
| SLV 9 | 1518 | -1065 | -101 | -1964 | | 2.38 | 16 | 1.31 | 586 | | | 5.8 | Si |
| SLV 14 | 1338 | 612 | -602 | -11408 | | 0 | 0 | 0.83 | 0 | | | 0 | No, Vu<V |
| SLV 14 | 1518 | -988 | 14 | -1357 | | 2.21 | 16 | 1.27 | 571 | | | 41.74 | Si |

### Verifica a pressoflessione fuori piano D.M. 17-01-18 (N.T.C.)

quota 1406 Wa 0.05 denominatore 8 γM = 2

| Comb. | fd | Sa | σ0 | N | M | Mc | Coeff.s. | Verifica |
|---|---|---|---|---|---|---|---|---|
| SLV 7 | 14 | 0.53 | 0 | 93 | 1817 | 0 | 0 | No, Trazione |
| SLV 11 | 14 | 0.53 | 0 | 61 | 1817 | 0 | 0 | No, Trazione |
| SLV 12 | 14 | 0.53 | 0 | 61 | 1817 | 0 | 0 | No, Trazione |
| SLV 8 | 14 | 0.53 | 0 | 93 | 1817 | 0 | 0 | No, Trazione |
| SLV 3 | 14 | 0.53 | 0.3 | -137 | 1817 | 1864 | 1.03 | Si |
| SLV 4 | 14 | 0.53 | 0.3 | -137 | 1817 | 1864 | 1.03 | Si |
| SLV 16 | 14 | 0.53 | 0.54 | -243 | 1817 | 3253 | 1.79 | Si |
| SLV 15 | 14 | 0.53 | 0.54 | -243 | 1817 | 3253 | 1.79 | Si |
| SLV 1 | 14 | 0.53 | 0.81 | -365 | 1817 | 4768 | 2.62 | Si |
| SLV 2 | 14 | 0.53 | 0.81 | -365 | 1817 | 4768 | 2.62 | Si |

### Verifica dei meccanismi locali di collasso con analisi cinematica lineare

forza di aggancio al piano = 0 quota mezzeria = 1406 Wa = 0.05 Ta = 0.0596

| Comb. | N top | N base | V orto | α0 | M* | e* | a0* | aLim | Verifica |
|---|---|---|---|---|---|---|---|---|---|
| SLV 7 | -5 | 224 | -46 | 0 | 0 | 0 | 0 | 1505.645 | No, Trazione |
| SLV 2 | -30 | -447 | -23 | 0 | 0.27 | 0.928 | 0 | 879.274 | No |
| SLV 3 | 5 | -196 | -36 | 0 | 0 | 0 | 0 | 879.274 | No, Trazione |
| SLV 11 | -49 | 333 | -43 | 0 | 0 | 0 | 0 | 1505.645 | No, Trazione |
| SLV 12 | -49 | 333 | -43 | 0 | 0 | 0 | 0 | 1505.645 | No, Trazione |
| SLV 15 | -142 | 168 | -24 | 0 | 0 | 0 | 0 | 879.274 | No, Trazione |
| SLV 4 | 5 | -196 | -36 | 0 | 0 | 0 | 0 | 879.274 | No, Trazione |
| SLV 1 | -30 | -447 | -23 | 0 | 0.27 | 0.928 | 0 | 879.274 | No |
| SLV 16 | -142 | 168 | -24 | 0 | 0 | 0 | 0 | 879.274 | No, Trazione |
| SLV 8 | -5 | 224 | -46 | 0 | 0 | 0 | 0 | 1505.645 | No, Trazione |

### Tabella dei coefficienti di sicurezza minimi

| Stato limite | Coeff.s. | Comb. | Verifica |
|---|---|---|---|
| PF_SLU | 0 | SLU 1 | No |
| V_SLU | 0 | SLU 1 | No |
| PF_SLV | 0 | SLV 16 | No |
| V_SLV | 0 | SLD 5 | No |
| PFFP_SLV | 0 | SLV 12 | No |
| R_SLV | 0 | SLV 16 | No |

## Maschio 186

Verifiche condotte secondo D.M. 17-01-18 (N.T.C.)

### Dati geometrici

| X ini. | Y ini. | X fin. | Y fin. | Quota i. | Quota.s | l | Sp. | h netta | h ini. | h fin. | a | a.s.,sx | a.s.,dx |
|---|---|---|---|---|---|---|---|---|---|---|---|---|---|
| -1961.8 | 104.6 | -1961.8 | 581.1 | L6 | L7 | 476.5 | 14 | 316 | 316 | 316 | | | |

### Caratteristiche del materiale

(Circolare 7 21-01-19 C8.5.I) Muratura in mattoni pieni e malta di calce LC2_Corti

| fb | fk | fvk0 | fmedio | τ0 | fv0 | μ | ϕ | fv,lim | E | G | FC |
|---|---|---|---|---|---|---|---|---|---|---|---|
| 60 | | | 34.5 | 0.9 | 2 | 0.58 | 0.77 | 3.25 | 32000 | 12800 | 1.2 |

### Verifica a pressoflessione nel piano secondo D.M. 17-01-18 NTC §7.8.2.2.1 in combinazioni non sismiche, γM = 3

| Comb. | Quota | N | M | σ0 | Mu | c.s. | Verifica |
|---|---|---|---|---|---|---|---|
| SLU 29 | 1248 | -15594 | 714542 | 2.34 | 2649191 | 3.708 | Si |
| SLU 29 | 1564 | -5049 | 904531 | 0.76 | 1091256 | 1.206 | Si |
| SLU 71 | 1248 | -17162 | 692463 | 2.57 | 2797597 | 4.04 | Si |
| SLU 71 | 1564 | -5176 | 921270 | 0.78 | 1115671 | 1.211 | Si |
| SLU 38 | 1248 | -16055 | 696999 | 2.41 | 2695078 | 3.867 | Si |
| SLU 38 | 1564 | -5044 | 903876 | 0.76 | 1090230 | 1.206 | Si |
| SLU 80 | 1248 | -17623 | 674920 | 2.64 | 2837143 | 4.204 | Si |
| SLU 80 | 1564 | -5170 | 920615 | 0.78 | 1114651 | 1.211 | Si |
| SLU 72 | 1248 | -17192 | 679076 | 2.58 | 2800218 | 4.124 | Si |
| SLU 72 | 1564 | -5187 | 922987 | 0.78 | 1117922 | 1.211 | Si |
| SLU 17 | 1248 | -14167 | 585383 | 2.12 | 2495485 | 4.263 | Si |
| SLU 17 | 1564 | -4363 | 781339 | 0.65 | 956051 | 1.224 | Si |
| SLU 16 | 1248 | -14138 | 598770 | 2.12 | 2492071 | 4.162 | Si |
| SLU 16 | 1564 | -4351 | 779622 | 0.65 | 953715 | 1.223 | Si |
| SLU 30 | 1248 | -15624 | 701155 | 2.34 | 2652223 | 3.783 | Si |
| SLU 30 | 1564 | -5061 | 906248 | 0.76 | 1093519 | 1.207 | Si |
| SLU 79 | 1248 | -17593 | 688308 | 2.64 | 2834635 | 4.118 | Si |
| SLU 79 | 1564 | -5159 | 918897 | 0.77 | 1112399 | 1.211 | Si |
| SLU 37 | 1248 | -16025 | 710387 | 2.4 | 2692159 | 3.79 | Si |
| SLU 37 | 1564 | -5032 | 902159 | 0.75 | 1087965 | 1.206 | Si |

### Verifica a pressoflessione nel piano secondo D.M. 17-01-18 NTC §7.8.2.2.1 in combinazioni sismiche, γM = 2

| Comb. | Quota | N | M | σ0 | Mu | c.s. | Verifica |
|---|---|---|---|---|---|---|---|
| SLV 9 | 1248 | -7573 | -195788 | 1.14 | 1636659 | 8.359 | Si |
| SLV 9 | 1564 | -2369 | 714987 | 0 | 0 | 0 | No, e>l/2 |
| SLV 6 | 1248 | -7575 | -141978 | 1.14 | 1637099 | 11.531 | Si |
| SLV 6 | 1564 | -2104 | 627033 | 0 | 0 | 0 | No, e>l/2 |
| SLV 12 | 1248 | -8517 | 311314 | 1.28 | 1817240 | 5.837 | Si |
| SLV 12 | 1564 | -674 | -166691 | 0 | 0 | 0 | No, e>l/2 |
| SLV 5 | 1248 | -7575 | -141978 | 1.14 | 1637099 | 11.531 | Si |
| SLV 5 | 1564 | -2104 | 627033 | 0 | 0 | 0 | No, e>l/2 |
| SLD 9 | 1248 | -7830 | -27555 | 1.17 | 1686269 | 61.197 | Si |

| Comb. | Quota | N | M | σ0 | Mu | c.s. | Verifica |
|---|---|---|---|---|---|---|---|
| SLD 9 | 1564 | -1768 | 425775 | 0 | 0 | 0 | No, e>l/2 |
| SLD 10 | 1248 | -7830 | -27555 | 1.17 | 1686269 | 61.197 | Si |
| SLD 10 | 1564 | -1768 | 425775 | 0 | 0 | 0 | No, e>l/2 |
| SLV 8 | 1248 | -8519 | 365125 | 1.28 | 1817668 | 4.978 | Si |
| SLV 8 | 1564 | -409 | -254646 | 0 | 0 | 0 | No, e>l/2 |
| SLV 7 | 1248 | -8519 | 365125 | 1.28 | 1817668 | 4.978 | Si |
| SLV 7 | 1564 | -409 | -254646 | 0 | 0 | 0 | No, e>l/2 |
| SLV 13 | 1248 | -7901 | -81082 | 1.18 | 1699947 | 20.966 | Si |
| SLV 13 | 1564 | -2084 | 509014 | 0 | 0 | 0 | No, e>l/2 |
| SLV 10 | 1248 | -7573 | -195788 | 1.14 | 1636659 | 8.359 | Si |
| SLV 10 | 1564 | -2369 | 714987 | 0 | 0 | 0 | No, e>l/2 |

## Verifica a taglio nel piano secondo D.M. 17-01-18 (N.T.C.) §7.8.2.2.2 con rottura per scorrimento in combinazioni non sismiche, γM = 3

| Comb. | Quota | N | V par | M | σ0 | σN | l' | fvd | Vt scorr. | Vt fess.diag. | Vt,lim | c.s. | Verifica |
|---|---|---|---|---|---|---|---|---|---|---|---|---|---|
| SLU 48 | 1248 | -15010 | -362 | 513142 | | 2.25 | 476.52 | 0.86 | 5708 | | | 15.79 | Si |
| SLU 48 | 1564 | -4269 | -317 | 744841 | | 1.59 | 191.3 | 0.77 | 2057 | | | 6.49 | Si |
| SLU 72 | 1248 | -17192 | -412 | 679076 | | 2.58 | 476.52 | 0.9 | 5998 | | | 14.54 | Si |
| SLU 72 | 1564 | -5187 | -355 | 922987 | | 2.05 | 180.97 | 0.83 | 2099 | | | 5.91 | Si |
| SLU 51 | 1248 | -15304 | -478 | 567459 | | 2.29 | 476.52 | 0.86 | 5747 | | | 12.02 | Si |
| SLU 51 | 1564 | -4506 | -377 | 800451 | | 1.77 | 181.87 | 0.79 | 2015 | | | 5.35 | Si |
| SLU 9 | 1248 | -13736 | -427 | 589538 | | 2.06 | 476.52 | 0.83 | 5538 | | | 12.97 | Si |
| SLU 9 | 1564 | -4380 | -330 | 783712 | | 1.76 | 177.97 | 0.79 | 1968 | | | 5.96 | Si |
| SLU 50 | 1248 | -15274 | -419 | 580847 | | 2.29 | 476.52 | 0.86 | 5743 | | | 13.72 | Si |
| SLU 50 | 1564 | -4494 | -342 | 798733 | | 1.77 | 181.63 | 0.79 | 2012 | | | 5.88 | Si |
| SLU 47 | 1248 | -12163 | -381 | 284054 | | 1.82 | 476.52 | 0.8 | 5328 | | | 13.97 | Si |
| SLU 47 | 1564 | -2929 | -318 | 508517 | | 1.08 | 193.99 | 0.7 | 1899 | | | 5.98 | Si |
| SLU 49 | 1248 | -15040 | -421 | 499754 | | 2.25 | 476.52 | 0.86 | 5712 | | | 13.57 | Si |
| SLU 49 | 1564 | -4280 | -352 | 746558 | | 1.6 | 191.52 | 0.77 | 2060 | | | 5.85 | Si |
| SLU 71 | 1248 | -17162 | -353 | 692463 | | 2.57 | 476.52 | 0.9 | 5994 | | | 16.98 | Si |
| SLU 71 | 1564 | -5176 | -320 | 921270 | | 2.05 | 180.76 | 0.83 | 2096 | | | 6.54 | Si |
| SLU 7 | 1248 | -13472 | -370 | 521833 | | 2.02 | 476.52 | 0.82 | 5503 | | | 14.87 | Si |
| SLU 7 | 1564 | -4154 | -305 | 729819 | | 1.58 | 187.71 | 0.77 | 2014 | | | 6.6 | Si |
| SLU 70 | 1248 | -16928 | -355 | 611371 | | 2.54 | 476.52 | 0.89 | 5963 | | | 16.78 | Si |
| SLU 70 | 1564 | -4961 | -330 | 869095 | | 1.87 | 189.26 | 0.81 | 2134 | | | 6.46 | Si |

## Verifica a taglio nel piano secondo D.M. 17-01-18 (N.T.C.) §7.8.2.2.2 con rottura per scorrimento in combinazioni sismiche, γM = 2

| Comb. | Quota | N | V par | M | σ0 | σN | l' | fvd | Vt scorr. | Vt fess.diag. | Vt,lim | c.s. | Verifica |
|---|---|---|---|---|---|---|---|---|---|---|---|---|---|
| SLV 14 | 1248 | -7901 | -4137 | -81082 | | 1.18 | 476.52 | 1.07 | 7139 | | | 1.73 | Si |
| SLV 14 | 1564 | -2084 | -2336 | 509014 | | 0 | 0 | 0.83 | 0 | | | 0 | No, Vu<V |
| SLV 9 | 1248 | -7573 | -7410 | -195788 | | 1.14 | 476.52 | 1.06 | 7074 | | | 0.95 | No, Vu<V |
| SLV 9 | 1564 | -2369 | -3685 | 714987 | | 0 | 0 | 0.83 | 0 | | | 0 | No, Vu<V |
| SLV 7 | 1248 | -8519 | 7352 | 365125 | | 1.28 | 476.52 | 1.09 | 7263 | | | 0.99 | No, Vu<V |
| SLV 7 | 1564 | -409 | 3478 | -254646 | | 0 | 0 | 0.83 | 0 | | | 0 | No, Vu<V |
| SLD 10 | 1248 | -7830 | -3075 | -27555 | | 1.17 | 476.52 | 1.07 | 7125 | | | 2.32 | Si |
| SLD 10 | 1564 | -1768 | -1554 | 425775 | | 0 | 0 | 0.83 | 0 | | | 0 | No, Vu<V |
| SLV 12 | 1248 | -8517 | 6103 | 311314 | | 1.28 | 476.52 | 1.09 | 7263 | | | 1.19 | Si |
| SLV 12 | 1564 | -674 | 2714 | -166691 | | 0 | 0 | 0.83 | 0 | | | 0 | No, Vu<V |
| SLV 8 | 1248 | -8519 | 7352 | 365125 | | 1.28 | 476.52 | 1.09 | 7263 | | | 0.99 | No, Vu<V |
| SLV 8 | 1564 | -409 | 3478 | -254646 | | 0 | 0 | 0.83 | 0 | | | 0 | No, Vu<V |
| SLV 5 | 1248 | -7575 | -6161 | -141978 | | 1.14 | 476.52 | 1.06 | 7074 | | | 1.15 | Si |
| SLV 5 | 1564 | -2104 | -2921 | 627033 | | 0 | 0 | 0.83 | 0 | | | 0 | No, Vu<V |
| SLV 6 | 1248 | -7575 | -6161 | -141978 | | 1.14 | 476.52 | 1.06 | 7074 | | | 1.15 | Si |
| SLV 6 | 1564 | -2104 | -2921 | 627033 | | 0 | 0 | 0.83 | 0 | | | 0 | No, Vu<V |
| SLV 10 | 1248 | -7573 | -7410 | -195788 | | 1.14 | 476.52 | 1.06 | 7074 | | | 0.95 | No, Vu<V |
| SLV 10 | 1564 | -2369 | -3685 | 714987 | | 0 | 0 | 0.83 | 0 | | | 0 | No, Vu<V |
| SLD 9 | 1248 | -7830 | -3075 | -27555 | | 1.17 | 476.52 | 1.07 | 7125 | | | 2.32 | Si |
| SLD 9 | 1564 | -1768 | -1554 | 425775 | | 0 | 0 | 0.83 | 0 | | | 0 | No, Vu<V |

## Verifica a pressoflessione fuori piano D.M. 17-01-18 (N.T.C.)

quota 1406 Wa 0.03 denominatore 8 γM = 2

| Comb. | fd | Sa | σ0 | N | M | Mc | Coeff.s. | Verifica |
|---|---|---|---|---|---|---|---|---|
| SLV 4 | 14 | 0.53 | 0 | -3014 | 28947 | 0 | 0 | No, e>t/2 |
| SLV 7 | 14 | 0.53 | 0 | -2939 | 28947 | 0 | 0 | No, e>t/2 |
| SLV 1 | 14 | 0.53 | 0 | -3731 | 28947 | 0 | 0 | No, e>t/2 |
| SLV 8 | 14 | 0.53 | 0 | -2939 | 28947 | 0 | 0 | No, e>t/2 |
| SLV 12 | 14 | 0.53 | 0 | -3592 | 28947 | 0 | 0 | No, e>t/2 |
| SLV 11 | 14 | 0.53 | 0 | -3592 | 28947 | 0 | 0 | No, e>t/2 |
| SLV 3 | 14 | 0.53 | 0 | -3014 | 28947 | 0 | 0 | No, e>t/2 |
| SLV 2 | 14 | 0.53 | 0 | -3731 | 28947 | 0 | 0 | No, e>t/2 |
| SLV 16 | 14 | 0.53 | 0.78 | -5192 | 28947 | 34028 | 1.18 | Si |
| SLV 15 | 14 | 0.53 | 0.78 | -5192 | 28947 | 34028 | 1.18 | Si |

## Verifica dei meccanismi locali di collasso con analisi cinematica lineare

forza di aggancio al piano = 0 quota mezzeria = 1406 Wa = 0.03 Ta = 0.1191

| Comb. | N top | N base | V orto | α0 | M* | e* | a0* | aLim | Verifica |
|---|---|---|---|---|---|---|---|---|---|
| SLV 11 | -674 | -8517 | 30 | 0.027 | 4.153 | 0.912 | 42.923 | 2129.268 | No |
| SLV 12 | -674 | -8517 | 30 | 0.027 | 4.153 | 0.912 | 42.923 | 2129.268 | No |
| SLV 6 | -2104 | -7575 | -25 | 0.026 | 5.346 | 0.889 | 43.045 | 2129.268 | No |
| SLV 5 | -2104 | -7575 | -25 | 0.026 | 5.346 | 0.889 | 43.045 | 2129.268 | No |
| SLV 10 | -2369 | -7573 | -24 | 0.026 | 5.592 | 0.89 | 43.182 | 2129.268 | No |
| SLV 9 | -2369 | -7573 | -24 | 0.026 | 5.592 | 0.89 | 43.182 | 2129.268 | No |
| SLV 8 | -409 | -8519 | 28 | 0.028 | 3.994 | 0.932 | 43.921 | 2129.268 | No |
| SLV 7 | -409 | -8519 | 28 | 0.028 | 3.994 | 0.932 | 43.921 | 2129.268 | No |
| SLV 15 | -1576 | -8184 | 13 | 0.031 | 4.871 | 0.89 | 49.889 | 1854.855 | No |
| SLV 16 | -1576 | -8184 | 13 | 0.031 | 4.871 | 0.89 | 49.889 | 1854.855 | No |

Tabella dei coefficienti di sicurezza minimi

| Stato limite | Coeff.s. | Comb. | Verifica |
|---|---|---|---|
| PF_SLU | 1.206 | SLU 37 | Si |
| V_SLU | 5.346 | SLU 51 | Si |
| PF_SLV | 0 | SLD 9 | No |
| V_SLV | 0 | SLD 9 | No |
| PFFP_SLV | 0 | SLV 1 | No |
| R_SLV | 0.02 | SLV 11 | No |

## Maschio 187

Verifiche condotte secondo D.M. 17-01-18 (N.T.C.)

### Dati geometrici

| X ini. | Y ini. | X fin. | Y fin. | Quota i. | Quota.s | l | Sp. | h netta | h ini. | h fin. | a | a.s.,sx | a.s.,dx |
|---|---|---|---|---|---|---|---|---|---|---|---|---|---|
| -1961.8 | 581.1 | -1961.8 | 652.1 | L6 | L7 | 71 | 28 | 316 | 316 | 316 | | | |

### Caratteristiche del materiale

(Circolare 7 21-01-19 C8.5.I) Muratura in mattoni pieni e malta di calce LC2_Corti

| fb | fk | fvk0 | fmedio | τ0 | fv0 | μ | ϕ | fv,lim | E | G | FC |
|---|---|---|---|---|---|---|---|---|---|---|---|
| 60 | | | 34.5 | 0.9 | 2 | 0.58 | 0.77 | 3.25 | 32000 | 12800 | 1.2 |

### Verifica a pressoflessione nel piano secondo D.M. 17-01-18 NTC §7.8.2.2.1 in combinazioni non sismiche, γM = 3

| Comb. | Quota | N | M | σ0 | Mu | c.s. | Verifica |
|---|---|---|---|---|---|---|---|
| SLU 72 | 1248 | -10794 | -1843 | 5.43 | 127780 | 69.331 | Si |
| SLU 72 | 1564 | -12131 | 123991 | 6.1 | 108046 | 0.871 | No, M>Mu |
| SLU 80 | 1248 | -10907 | -2097 | 5.49 | 126406 | 60.268 | Si |
| SLU 80 | 1564 | -12358 | 127735 | 6.22 | 103927 | 0.814 | No, M>Mu |
| SLU 78 | 1248 | -10444 | -2257 | 5.25 | 131647 | 58.33 | Si |
| SLU 78 | 1564 | -11816 | 122914 | 5.94 | 113397 | 0.923 | No, M>Mu |
| SLU 29 | 1248 | -10410 | -1335 | 5.24 | 131993 | 98.876 | Si |
| SLU 29 | 1564 | -11977 | 116920 | 6.02 | 110723 | 0.947 | No, M>Mu |
| SLU 71 | 1248 | -10843 | -1681 | 5.45 | 127192 | 75.652 | Si |
| SLU 71 | 1564 | -12169 | 120784 | 6.12 | 107369 | 0.889 | No, M>Mu |
| SLU 30 | 1248 | -10361 | -1497 | 5.21 | 132488 | 88.52 | Si |
| SLU 30 | 1564 | -11939 | 120126 | 6.01 | 111368 | 0.927 | No, M>Mu |
| SLU 77 | 1248 | -10493 | -2095 | 5.28 | 131134 | 62.59 | Si |
| SLU 77 | 1564 | -11854 | 119708 | 5.96 | 112773 | 0.942 | No, M>Mu |
| SLU 37 | 1248 | -10524 | -1589 | 5.29 | 130811 | 82.307 | Si |
| SLU 37 | 1564 | -12203 | 120664 | 6.14 | 106757 | 0.885 | No, M>Mu |
| SLU 79 | 1248 | -10957 | -1936 | 5.51 | 125793 | 64.988 | Si |
| SLU 79 | 1564 | -12396 | 124529 | 6.24 | 103212 | 0.829 | No, M>Mu |
| SLU 38 | 1248 | -10474 | -1751 | 5.27 | 131330 | 75 | Si |
| SLU 38 | 1564 | -12165 | 123870 | 6.12 | 107440 | 0.867 | No, M>Mu |

### Verifica a pressoflessione nel piano secondo D.M. 17-01-18 NTC §7.8.2.2.1 in combinazioni sismiche, γM = 2

| Comb. | Quota | N | M | σ0 | Mu | c.s. | Verifica |
|---|---|---|---|---|---|---|---|
| SLV 3 | 1248 | -4865 | 2608 | 2.45 | 138128 | 52.972 | Si |
| SLV 3 | 1564 | -5249 | 79359 | 2.64 | 146066 | 1.841 | Si |
| SLV 4 | 1248 | -4865 | 2608 | 2.45 | 138128 | 52.972 | Si |
| SLV 4 | 1564 | -5249 | 79359 | 2.64 | 146066 | 1.841 | Si |
| SLV 11 | 1248 | -4938 | 3417 | 2.48 | 139664 | 40.874 | Si |
| SLV 11 | 1564 | -3405 | 61200 | 1.71 | 103932 | 1.698 | Si |
| SLV 8 | 1248 | -5457 | 4842 | 2.74 | 150196 | 31.021 | Si |
| SLV 8 | 1564 | -4482 | 79744 | 2.25 | 129744 | 1.627 | Si |
| SLV 7 | 1248 | -5457 | 4842 | 2.74 | 150196 | 31.021 | Si |
| SLV 7 | 1564 | -4482 | 79744 | 2.25 | 129744 | 1.627 | Si |
| SLD 12 | 1248 | -4045 | 522 | 2.03 | 119675 | 229.16 | Si |
| SLD 12 | 1564 | -3280 | 47639 | 1.65 | 100710 | 2.114 | Si |
| SLD 11 | 1248 | -4045 | 522 | 2.03 | 119675 | 229.16 | Si |
| SLD 11 | 1564 | -3280 | 47639 | 1.65 | 100710 | 2.114 | Si |
| SLD 7 | 1248 | -4263 | 1130 | 2.14 | 124775 | 110.445 | Si |
| SLD 7 | 1564 | -3733 | 55667 | 1.88 | 112152 | 2.015 | Si |
| SLV 12 | 1248 | -4938 | 3417 | 2.48 | 139664 | 40.874 | Si |
| SLV 12 | 1564 | -3405 | 61200 | 1.71 | 103932 | 1.698 | Si |
| SLD 8 | 1248 | -4263 | 1130 | 2.14 | 124775 | 110.445 | Si |
| SLD 8 | 1564 | -3733 | 55667 | 1.88 | 112152 | 2.015 | Si |

### Verifica a taglio nel piano secondo D.M. 17-01-18 (N.T.C.) §7.8.2.2.2 con rottura per scorrimento in combinazioni non sismiche, γM = 3

| Comb. | Quota | N | V par | M | σ0 | σN | l' | fvd | Vt scorr. | Vt fess.diag. | Vt,lim | c.s. | Verifica |
|---|---|---|---|---|---|---|---|---|---|---|---|---|---|
| SLU 78 | 1248 | -10444 | -519 | -2257 | | 5.25 | 71 | 1.08 | 2154 | | | 4.15 | Si |
| SLU 78 | 1564 | -11816 | -296 | 122914 | | 5.94 | 71 | 1.08 | 2154 | | | 7.27 | Si |
| SLU 80 | 1248 | -10907 | -532 | -2097 | | 5.49 | 71 | 1.08 | 2154 | | | 4.05 | Si |
| SLU 80 | 1564 | -12358 | -334 | 127735 | | 6.22 | 71 | 1.08 | 2154 | | | 6.45 | Si |
| SLU 36 | 1248 | -10011 | -500 | -1911 | | 5.04 | 71 | 1.08 | 2154 | | | 4.31 | Si |
| SLU 36 | 1564 | -11624 | -277 | 119050 | | 5.85 | 71 | 1.08 | 2154 | | | 7.77 | Si |
| SLU 71 | 1248 | -10843 | -502 | -1681 | | 5.45 | 71 | 1.08 | 2154 | | | 4.29 | Si |
| SLU 71 | 1564 | -12169 | -367 | 120784 | | 6.12 | 71 | 1.08 | 2154 | | | 5.86 | Si |
| SLU 38 | 1248 | -10474 | -514 | -1751 | | 5.27 | 71 | 1.08 | 2154 | | | 4.19 | Si |
| SLU 38 | 1564 | -12165 | -315 | 123870 | | 6.12 | 71 | 1.08 | 2154 | | | 6.84 | Si |
| SLU 72 | 1248 | -10794 | -504 | -1843 | | 5.43 | 71 | 1.08 | 2154 | | | 4.27 | Si |
| SLU 72 | 1564 | -12131 | -399 | 123991 | | 6.1 | 71 | 1.08 | 2154 | | | 5.4 | Si |
| SLU 35 | 1248 | -10060 | -498 | -1749 | | 5.06 | 71 | 1.08 | 2154 | | | 4.33 | Si |
| SLU 35 | 1564 | -11662 | -246 | 115844 | | 5.87 | 71 | 1.08 | 2154 | | | 8.75 | Si |
| SLU 37 | 1248 | -10524 | -511 | -1589 | | 5.29 | 71 | 1.08 | 2154 | | | 4.21 | Si |

| Comb. | Quota | N | V par | M | σ0 | σN | l' | fvd | Vt scorr. | Vt fess.diag. | Vt,lim | c.s. | Verifica |
|---|---|---|---|---|---|---|---|---|---|---|---|---|---|
| SLU 37 | 1564 | -12203 | -284 | 120664 | | 6.14 | 71 | 1.08 | 2154 | | | 7.59 | Si |
| SLU 79 | 1248 | -10957 | -530 | -1936 | | 5.51 | 71 | 1.08 | 2154 | | | 4.07 | Si |
| SLU 79 | 1564 | -12396 | -302 | 124529 | | 6.24 | 71 | 1.08 | 2154 | | | 7.12 | Si |
| SLU 77 | 1248 | -10493 | -516 | -2095 | | 5.28 | 71 | 1.08 | 2154 | | | 4.17 | Si |
| SLU 77 | 1564 | -11854 | -265 | 119708 | | 5.96 | 71 | 1.08 | 2154 | | | 8.13 | Si |

### Verifica a taglio nel piano secondo D.M. 17-01-18 (N.T.C.) §7.8.2.2.2 con rottura per scorrimento in combinazioni sismiche, γM = 2

| Comb. | Quota | N | V par | M | σ0 | σN | l' | fvd | Vt scorr. | Vt fess.diag. | Vt,lim | c.s. | Verifica |
|---|---|---|---|---|---|---|---|---|---|---|---|---|---|
| SLV 10 | 1248 | -1520 | -346 | -7716 | | 0.76 | 71 | 0.99 | 1961 | | | 5.67 | Si |
| SLV 10 | 1564 | -2008 | -2674 | -1712 | | 1.01 | 71 | 1.04 | 2058 | | | 0.77 | No, Vu<V |
| SLV 13 | 1248 | -2111 | -186 | -5482 | | 1.06 | 71 | 1.05 | 2079 | | | 11.18 | Si |
| SLV 13 | 1564 | -1241 | -1552 | -1327 | | 0.62 | 71 | 0.96 | 1905 | | | 1.23 | Si |
| SLV 5 | 1248 | -2039 | -373 | -6291 | | 1.03 | 71 | 1.04 | 2064 | | | 5.54 | Si |
| SLV 5 | 1564 | -3084 | -2205 | 16832 | | 1.55 | 71 | 1.14 | 2274 | | | 1.03 | Si |
| SLV 11 | 1248 | -4938 | 21 | 3417 | | 2.48 | 71 | 1.33 | 2644 | | | 126.52 | Si |
| SLV 11 | 1564 | -3405 | 2095 | 61200 | | 2.31 | 52.58 | 1.3 | 1908 | | | 0.91 | No, Vu<V |
| SLV 8 | 1248 | -5457 | -6 | 4842 | | 2.74 | 71 | 1.38 | 2748 | | | 457.46 | Si |
| SLV 8 | 1564 | -4482 | 2564 | 79744 | | 3.01 | 53.12 | 1.44 | 2136 | | | 0.83 | No, Vu<V |
| SLV 14 | 1248 | -2111 | -186 | -5482 | | 1.06 | 71 | 1.05 | 2079 | | | 11.18 | Si |
| SLV 14 | 1564 | -1241 | -1552 | -1327 | | 0.62 | 71 | 0.96 | 1905 | | | 1.23 | Si |
| SLV 6 | 1248 | -2039 | -373 | -6291 | | 1.03 | 71 | 1.04 | 2064 | | | 5.54 | Si |
| SLV 6 | 1564 | -3084 | -2205 | 16832 | | 1.55 | 71 | 1.14 | 2274 | | | 1.03 | Si |
| SLV 12 | 1248 | -4938 | 21 | 3417 | | 2.48 | 71 | 1.33 | 2644 | | | 126.52 | Si |
| SLV 12 | 1564 | -3405 | 2095 | 61200 | | 2.31 | 52.58 | 1.3 | 1908 | | | 0.91 | No, Vu<V |
| SLV 7 | 1248 | -5457 | -6 | 4842 | | 2.74 | 71 | 1.38 | 2748 | | | 457.46 | Si |
| SLV 7 | 1564 | -4482 | 2564 | 79744 | | 3.01 | 53.12 | 1.44 | 2136 | | | 0.83 | No, Vu<V |
| SLV 9 | 1248 | -1520 | -346 | -7716 | | 0.76 | 71 | 0.99 | 1961 | | | 5.67 | Si |
| SLV 9 | 1564 | -2008 | -2674 | -1712 | | 1.01 | 71 | 1.04 | 2058 | | | 0.77 | No, Vu<V |

### Verifica a pressoflessione fuori piano D.M. 17-01-18 (N.T.C.)

quota 1406 Wa 0.05 denominatore 8 γM = 2

| Comb. | fd | Sa | σ0 | N | M | Mc | Coeff.s. | Verifica |
|---|---|---|---|---|---|---|---|---|
| SLV 9 | 14 | 0.53 | 0.77 | -1536 | 8251 | 20149 | 2.44 | Si |
| SLV 10 | 14 | 0.53 | 0.77 | -1536 | 8251 | 20149 | 2.44 | Si |
| SLV 13 | 14 | 0.53 | 1.02 | -2031 | 8251 | 26054 | 3.16 | Si |
| SLV 14 | 14 | 0.53 | 1.02 | -2031 | 8251 | 26054 | 3.16 | Si |
| SLV 5 | 14 | 0.53 | 1.1 | -2183 | 8251 | 27813 | 3.37 | Si |
| SLV 6 | 14 | 0.53 | 1.1 | -2183 | 8251 | 27813 | 3.37 | Si |
| SLV 15 | 14 | 0.53 | 1.56 | -3101 | 8251 | 37872 | 4.59 | Si |
| SLV 16 | 14 | 0.53 | 1.56 | -3101 | 8251 | 37872 | 4.59 | Si |
| SLV 2 | 14 | 0.53 | 2.11 | -4186 | 8251 | 48500 | 5.88 | Si |
| SLV 1 | 14 | 0.53 | 2.11 | -4186 | 8251 | 48500 | 5.88 | Si |

### Verifica dei meccanismi locali di collasso con analisi cinematica lineare

forza di aggancio al piano = 0 quota mezzeria = 1406 Wa = 0.05 Ta = 0.0596

| Comb. | N top | N base | V orto | α0 | M* | e* | a0* | aLim | Verifica |
|---|---|---|---|---|---|---|---|---|---|
| SLV 14 | -1241 | -2111 | 173 | 0 | 2.183 | 0.903 | 0 | 879.274 | No |
| SLV 15 | -1660 | -3137 | 152 | 0 | 2.598 | 0.913 | 0 | 879.274 | No |
| SLV 16 | -1660 | -3137 | 152 | 0 | 2.598 | 0.913 | 0 | 879.274 | No |
| SLV 13 | -1241 | -2111 | 173 | 0 | 2.183 | 0.903 | 0 | 879.274 | No |
| SLV 9 | -2008 | -1520 | 84 | 0.021 | 2.947 | 0.921 | 33.691 | 1505.645 | No |
| SLV 10 | -2008 | -1520 | 84 | 0.021 | 2.947 | 0.921 | 33.691 | 1505.645 | No |
| SLV 4 | -5249 | -4865 | -175 | 0.018 | 6.23 | 0.958 | 28.048 | 879.274 | No |
| SLV 3 | -5249 | -4865 | -175 | 0.018 | 6.23 | 0.958 | 28.048 | 879.274 | No |
| SLV 8 | -4482 | -5457 | -86 | 0.032 | 5.45 | 0.953 | 49.22 | 1505.645 | No |
| SLV 7 | -4482 | -5457 | -86 | 0.032 | 5.45 | 0.953 | 49.22 | 1505.645 | No |

### Tabella dei coefficienti di sicurezza minimi

| Stato limite | Coeff.s. | Comb. | Verifica |
|---|---|---|---|
| PF_SLU | 0.814 | SLU 80 | No |
| V_SLU | 4.048 | SLU 80 | Si |
| PF_SLV | 1.627 | SLV 7 | Si |
| V_SLV | 0.77 | SLV 9 | No |
| PFFP_SLV | 2.442 | SLV 9 | Si |
| R_SLV | 0 | SLV 13 | No |

## Maschio 188

Verifiche condotte secondo D.M. 17-01-18 (N.T.C.)

### Dati geometrici

| X ini. | Y ini. | X fin. | Y fin. | Quota i. | Quota.s | l | Sp. | h netta | h ini. | h fin. | a | a.s.,sx | a.s.,dx |
|---|---|---|---|---|---|---|---|---|---|---|---|---|---|
| -1844.8 | -335.9 | -1844.8 | 104.6 | L6 | L7 | 440.6 | 14 | 316 | 316 | 316 | | | |

### Caratteristiche del materiale

(Circolare 7 21-01-19 C8.5.I) Muratura in mattoni pieni e malta di calce LC2_Corti

| fb | fk | fvk0 | fmedio | τ0 | fv0 | μ | ϕ | fv,lim | E | G | FC |
|---|---|---|---|---|---|---|---|---|---|---|---|
| 60 | | | 34.5 | 0.9 | 2 | 0.58 | 0.77 | 3.25 | 32000 | 12800 | 1.2 |

### Verifica a pressoflessione nel piano secondo D.M. 17-01-18 NTC §7.8.2.2.1 in combinazioni non sismiche, γM = 3

| Comb. | Quota | N | M | σ0 | Mu | c.s. | Verifica |
|---|---|---|---|---|---|---|---|
| SLU 9 | 1248 | -6827 | 271184 | 1.11 | 1299564 | 4.792 | Si |
| SLU 9 | 1564 | -1902 | -374414 | 0.31 | 403160 | 1.077 | Si |

| Comb. | Quota | N | M | σ0 | Mu | c.s. | Verifica |
|---|---|---|---|---|---|---|---|
| SLU 16 | 1248 | -7383 | 258378 | 1.2 | 1387353 | 5.369 | Si |
| SLU 16 | 1564 | -1821 | -358402 | 0.3 | 386664 | 1.079 | Si |
| SLU 17 | 1248 | -7353 | 283855 | 1.19 | 1382760 | 4.871 | Si |
| SLU 17 | 1564 | -1899 | -376018 | 0.31 | 402454 | 1.07 | Si |
| SLU 30 | 1248 | -7594 | 306013 | 1.23 | 1420027 | 4.64 | Si |
| SLU 30 | 1564 | -2163 | -432448 | 0.35 | 456041 | 1.055 | Si |
| SLU 80 | 1248 | -9624 | 351940 | 1.56 | 1713884 | 4.87 | Si |
| SLU 80 | 1564 | -2263 | -439058 | 0.37 | 475985 | 1.084 | Si |
| SLU 72 | 1248 | -9097 | 339270 | 1.47 | 1641163 | 4.837 | Si |
| SLU 72 | 1564 | -2266 | -437454 | 0.37 | 476681 | 1.09 | Si |
| SLU 38 | 1248 | -8120 | 318683 | 1.32 | 1499684 | 4.706 | Si |
| SLU 38 | 1564 | -2160 | -434052 | 0.35 | 455343 | 1.049 | Si |
| SLU 37 | 1248 | -8150 | 293207 | 1.32 | 1504078 | 5.13 | Si |
| SLU 37 | 1564 | -2083 | -416436 | 0.34 | 439731 | 1.056 | Si |
| SLU 29 | 1248 | -7624 | 280537 | 1.24 | 1424558 | 5.078 | Si |
| SLU 29 | 1564 | -2086 | -414832 | 0.34 | 440432 | 1.062 | Si |
| SLU 8 | 1248 | -6857 | 245708 | 1.11 | 1304294 | 5.308 | Si |
| SLU 8 | 1564 | -1825 | -356798 | 0.3 | 387373 | 1.086 | Si |

Verifica a pressoflessione nel piano secondo D.M. 17-01-18 NTC §7.8.2.2.1 in combinazioni sismiche, γM = 2

| Comb. | Quota | N | M | σ0 | Mu | c.s. | Verifica |
|---|---|---|---|---|---|---|---|
| SLV 9 | 1248 | -6642 | 144656 | 1.08 | 1334137 | 9.223 | Si |
| SLV 9 | 1564 | -351 | 198336 | 0 | 0 | 0 | No, e>l/2 |
| SLD 12 | 1248 | -6055 | 204788 | 0.98 | 1226619 | 5.99 | Si |
| SLD 12 | 1564 | -957 | -230255 | 0 | 0 | 0 | No, e>l/2 |
| SLD 11 | 1248 | -6055 | 204788 | 0.98 | 1226619 | 5.99 | Si |
| SLD 11 | 1564 | -957 | -230255 | 0 | 0 | 0 | No, e>l/2 |
| SLV 5 | 1248 | -6774 | 67113 | 1.1 | 1358020 | 20.235 | Si |
| SLV 5 | 1564 | -122 | 220006 | 0 | 0 | 0 | No, e>l/2 |
| SLD 7 | 1248 | -6111 | 172091 | 0.99 | 1236948 | 7.188 | Si |
| SLD 7 | 1564 | -860 | -221184 | 0 | 0 | 0 | No, e>l/2 |
| SLV 8 | 1248 | -5872 | 183808 | 0.95 | 1192772 | 6.489 | Si |
| SLV 8 | 1564 | -1078 | -398435 | 0 | 0 | 0 | No, e>l/2 |
| SLV 4 | 1248 | -6342 | 52499 | 1.03 | 1279410 | 24.37 | Si |
| SLV 4 | 1564 | -475 | -156700 | 0 | 0 | 0 | No, e>l/2 |
| SLV 3 | 1248 | -6342 | 52499 | 1.03 | 1279410 | 24.37 | Si |
| SLV 3 | 1564 | -475 | -156700 | 0 | 0 | 0 | No, e>l/2 |
| SLV 6 | 1248 | -6774 | 67113 | 1.1 | 1358020 | 20.235 | Si |
| SLV 6 | 1564 | -122 | 220006 | 0 | 0 | 0 | No, e>l/2 |
| SLV 7 | 1248 | -5872 | 183808 | 0.95 | 1192772 | 6.489 | Si |
| SLV 7 | 1564 | -1078 | -398435 | 0 | 0 | 0 | No, e>l/2 |

Verifica a taglio nel piano secondo D.M. 17-01-18 (N.T.C.) §7.8.2.2.2 con rottura per scorrimento in combinazioni non sismiche, γM = 3

| Comb. | Quota | N | V par | M | σ0 | σN | l' | fvd | Vt scorr. | Vt fess.diag. | Vt,lim | c.s. | Verifica |
|---|---|---|---|---|---|---|---|---|---|---|---|---|---|
| SLU 37 | 1248 | -8150 | 1301 | 293207 | | 1.32 | 440.57 | 0.73 | 4513 | | | 3.47 | Si |
| SLU 37 | 1564 | -2083 | 2198 | -416436 | | 2.44 | 60.95 | 0.88 | 752 | | | 0.34 | No, Vu<V |
| SLU 80 | 1248 | -9624 | 1432 | 351940 | | 1.56 | 440.57 | 0.76 | 4710 | | | 3.29 | Si |
| SLU 80 | 1564 | -2263 | 2514 | -439058 | | 2.05 | 78.72 | 0.83 | 914 | | | 0.36 | No, Vu<V |
| SLU 36 | 1248 | -8389 | 1258 | 323838 | | 1.36 | 440.57 | 0.74 | 4545 | | | 3.61 | Si |
| SLU 36 | 1564 | -2103 | 2297 | -406668 | | 1.86 | 80.78 | 0.8 | 909 | | | 0.4 | No, Vu<V |
| SLU 9 | 1248 | -6827 | 1171 | 271184 | | 1.11 | 440.57 | 0.7 | 4337 | | | 3.7 | Si |
| SLU 9 | 1564 | -1902 | 2125 | -374414 | | 1.93 | 70.36 | 0.81 | 801 | | | 0.38 | No, Vu<V |
| SLU 30 | 1248 | -7594 | 1307 | 306013 | | 1.23 | 440.57 | 0.72 | 4439 | | | 3.4 | Si |
| SLU 30 | 1564 | -2163 | 2397 | -432448 | | 2.53 | 61.17 | 0.89 | 764 | | | 0.32 | No, Vu<V |
| SLU 72 | 1248 | -9097 | 1421 | 339270 | | 1.47 | 440.57 | 0.75 | 4640 | | | 3.26 | Si |
| SLU 72 | 1564 | -2266 | 2503 | -437454 | | 1.98 | 81.74 | 0.82 | 938 | | | 0.37 | No, Vu<V |
| SLU 29 | 1248 | -7624 | 1290 | 280537 | | 1.24 | 440.57 | 0.72 | 4443 | | | 3.44 | Si |
| SLU 29 | 1564 | -2086 | 2186 | -414832 | | 2.32 | 64.25 | 0.86 | 778 | | | 0.36 | No, Vu<V |
| SLU 38 | 1248 | -8120 | 1317 | 318683 | | 1.32 | 440.57 | 0.73 | 4509 | | | 3.42 | Si |
| SLU 38 | 1564 | -2160 | 2408 | -434052 | | 2.66 | 57.98 | 0.91 | 739 | | | 0.31 | No, Vu<V |
| SLU 79 | 1248 | -9653 | 1415 | 326464 | | 1.57 | 440.57 | 0.76 | 4714 | | | 3.33 | Si |
| SLU 79 | 1564 | -2185 | 2304 | -421442 | | 1.9 | 82.28 | 0.81 | 931 | | | 0.4 | No, Vu<V |
| SLU 17 | 1248 | -7353 | 1181 | 283855 | | 1.19 | 440.57 | 0.71 | 4407 | | | 3.73 | Si |
| SLU 17 | 1564 | -1899 | 2136 | -376018 | | 2.03 | 66.74 | 0.83 | 772 | | | 0.36 | No, Vu<V |

Verifica a taglio nel piano secondo D.M. 17-01-18 (N.T.C.) §7.8.2.2.2 con rottura per scorrimento in combinazioni sismiche, γM = 2

| Comb. | Quota | N | V par | M | σ0 | σN | l' | fvd | Vt scorr. | Vt fess.diag. | Vt,lim | c.s. | Verifica |
|---|---|---|---|---|---|---|---|---|---|---|---|---|---|
| SLV 8 | 1248 | -5872 | 5870 | 183808 | | 0.95 | 440.57 | 1.02 | 6314 | | | 1.08 | Si |
| SLV 8 | 1564 | -1078 | 3830 | -398435 | | 0 | 0 | 0.83 | 0 | | | 0 | No, Vu<V |
| SLD 11 | 1248 | -6055 | 3072 | 204788 | | 0.98 | 440.57 | 1.03 | 6351 | | | 2.07 | Si |
| SLD 11 | 1564 | -957 | 2173 | -230255 | | 0 | 0 | 0.83 | 0 | | | 0 | No, Vu<V |
| SLV 9 | 1248 | -6642 | -4713 | 144656 | | 1.08 | 440.57 | 1.05 | 6468 | | | 1.37 | Si |
| SLV 9 | 1564 | -351 | -2338 | 198336 | | 0 | 0 | 0.83 | 0 | | | 0 | No, Vu<V |
| SLV 4 | 1248 | -6342 | 1037 | 52499 | | 1.03 | 440.57 | 1.04 | 6408 | | | 6.18 | Si |
| SLV 4 | 1564 | -475 | 1037 | -156700 | | 0 | 0 | 0.83 | 0 | | | 0 | No, Vu<V |
| SLV 5 | 1248 | -6774 | -5457 | 67113 | | 1.1 | 440.57 | 1.05 | 6495 | | | 1.19 | Si |
| SLV 5 | 1564 | -122 | -2756 | 220006 | | 0 | 0 | 0.83 | 0 | | | 0 | No, Vu<V |
| SLV 3 | 1248 | -6342 | 1037 | 52499 | | 1.03 | 440.57 | 1.04 | 6408 | | | 6.18 | Si |
| SLV 3 | 1564 | -475 | 1037 | -156700 | | 0 | 0 | 0.83 | 0 | | | 0 | No, Vu<V |
| SLV 7 | 1248 | -5872 | 5870 | 183808 | | 0.95 | 440.57 | 1.02 | 6314 | | | 1.08 | Si |
| SLV 7 | 1564 | -1078 | 3830 | -398435 | | 0 | 0 | 0.83 | 0 | | | 0 | No, Vu<V |
| SLD 12 | 1248 | -6055 | 3072 | 204788 | | 0.98 | 440.57 | 1.03 | 6351 | | | 2.07 | Si |
| SLD 12 | 1564 | -957 | 2173 | -230255 | | 0 | 0 | 0.83 | 0 | | | 0 | No, Vu<V |
| SLD 7 | 1248 | -6111 | 2762 | 172091 | | 0.99 | 440.57 | 1.03 | 6362 | | | 2.3 | Si |
| SLD 7 | 1564 | -860 | 1996 | -221184 | | 0 | 0 | 0.83 | 0 | | | 0 | No, Vu<V |
| SLV 6 | 1248 | -6774 | -5457 | 67113 | | 1.1 | 440.57 | 1.05 | 6495 | | | 1.19 | Si |
| SLV 6 | 1564 | -122 | -2756 | 220006 | | 0 | 0 | 0.83 | 0 | | | 0 | No, Vu<V |

### Verifica a pressoflessione fuori piano D.M. 17-01-18 (N.T.C.)

quota 1406 Wa 0.03 denominatore 8 γM = 2

| Comb. | fd | Sa | σ0 | N | M | Mc | Coeff.s. | Verifica |
|---|---|---|---|---|---|---|---|---|
| SLV 2 | 14 | 0.53 | 0 | -3274 | 26763 | 0 | 0 | No, e>t/2 |
| SLV 9 | 14 | 0.53 | 0 | -3500 | 26763 | 0 | 0 | No, e>t/2 |
| SLV 6 | 14 | 0.53 | 0 | -3411 | 26763 | 0 | 0 | No, e>t/2 |
| SLV 4 | 14 | 0.53 | 0 | -3244 | 26763 | 0 | 0 | No, e>t/2 |
| SLV 10 | 14 | 0.53 | 0 | -3500 | 26763 | 0 | 0 | No, e>t/2 |
| SLV 8 | 14 | 0.53 | 0 | -3313 | 26763 | 0 | 0 | No, e>t/2 |
| SLV 1 | 14 | 0.53 | 0 | -3274 | 26763 | 0 | 0 | No, e>t/2 |
| SLV 5 | 14 | 0.53 | 0 | -3411 | 26763 | 0 | 0 | No, e>t/2 |
| SLV 7 | 14 | 0.53 | 0 | -3313 | 26763 | 0 | 0 | No, e>t/2 |
| SLV 3 | 14 | 0.53 | 0 | -3244 | 26763 | 0 | 0 | No, e>t/2 |

### Verifica dei meccanismi locali di collasso con analisi cinematica lineare

forza di aggancio al piano = 0 quota mezzeria = 1406 Wa = 0.03 Ta = 0.1191

| Comb. | N top | N base | V orto | α0 | M* | e* | a0* | aLim | Verifica |
|---|---|---|---|---|---|---|---|---|---|
| SLV 4 | -475 | -6342 | 28 | 0.027 | 3.747 | 0.923 | 42.851 | 1854.855 | No |
| SLV 3 | -475 | -6342 | 28 | 0.027 | 3.747 | 0.923 | 42.851 | 1854.855 | No |
| SLV 14 | -954 | -6172 | -27 | 0.027 | 4.083 | 0.898 | 43.041 | 1854.855 | No |
| SLV 13 | -954 | -6172 | -27 | 0.027 | 4.083 | 0.898 | 43.041 | 1854.855 | No |
| SLV 16 | -1241 | -5902 | -24 | 0.027 | 4.317 | 0.892 | 44.159 | 1854.855 | No |
| SLV 15 | -1241 | -5902 | -24 | 0.027 | 4.317 | 0.892 | 44.159 | 1854.855 | No |
| SLV 8 | -1078 | -5872 | 13 | 0.031 | 4.182 | 0.895 | 50.936 | 2129.268 | No |
| SLV 7 | -1078 | -5872 | 13 | 0.031 | 4.182 | 0.895 | 50.936 | 2129.268 | No |
| SLV 2 | -189 | -6612 | 25 | 0.029 | 3.61 | 0.958 | 44.594 | 1854.855 | No |
| SLV 1 | -189 | -6612 | 25 | 0.029 | 3.61 | 0.958 | 44.594 | 1854.855 | No |

### Tabella dei coefficienti di sicurezza minimi

| Stato limite | Coeff.s. | Comb. | Verifica |
|---|---|---|---|
| PF_SLU | 1.049 | SLU 38 | Si |
| V_SLU | 0.307 | SLU 38 | No |
| PF_SLV | 0 | SLD 7 | No |
| V_SLV | 0 | SLD 7 | No |
| PFFP_SLV | 0 | SLV 1 | No |
| R_SLV | 0.023 | SLV 3 | No |

## Maschio 189

Verifiche condotte secondo D.M. 17-01-18 (N.T.C.)

### Dati geometrici

| X ini. | Y ini. | X fin. | Y fin. | Quota i. | Quota.s | l | Sp. | h netta | h ini. | h fin. | a | a.s.,sx | a.s.,dx |
|---|---|---|---|---|---|---|---|---|---|---|---|---|---|
| -1505.8 | 104.6 | -1505.8 | 140.6 | L6 | L7 | 36 | 14 | 316 | 316 | 316 | | | |

### Caratteristiche del materiale

(Circolare 7 21-01-19 C8.5.I) Muratura in mattoni pieni e malta di calce LC2_Corti

| fb | fk | fvk0 | fmedio | τ0 | fv0 | μ | ϕ | fv,lim | E | G | FC |
|---|---|---|---|---|---|---|---|---|---|---|---|
| 60 | | | 34.5 | 0.9 | 2 | 0.58 | 0.77 | 3.25 | 32000 | 12800 | 1.2 |

### Verifica a pressoflessione nel piano secondo D.M. 17-01-18 NTC §7.8.2.2.1 in combinazioni non sismiche, γM = 3

| Comb. | Quota | N | M | σ0 | Mu | c.s. | Verifica |
|---|---|---|---|---|---|---|---|
| SLU 53 | 1248 | -2581 | 15351 | 5.12 | 17249 | 1.124 | Si |
| SLU 53 | 1458 | 399 | -13226 | 0 | 0 | 0 | No, Trazione |
| SLU 54 | 1248 | -2583 | 15393 | 5.13 | 17242 | 1.12 | Si |
| SLU 54 | 1458 | 404 | -13179 | 0 | 0 | 0 | No, Trazione |
| SLU 58 | 1248 | -2689 | 16272 | 5.34 | 16700 | 1.026 | Si |
| SLU 58 | 1458 | 441 | -13439 | 0 | 0 | 0 | No, Trazione |
| SLU 55 | 1248 | -2478 | 14896 | 4.92 | 17680 | 1.187 | Si |
| SLU 55 | 1458 | 408 | -12504 | 0 | 0 | 0 | No, Trazione |
| SLU 61 | 1248 | -2393 | 14720 | 4.75 | 17967 | 1.221 | Si |
| SLU 61 | 1458 | 467 | -12851 | 0 | 0 | 0 | No, Trazione |
| SLU 56 | 1248 | -2795 | 16798 | 5.54 | 16062 | 0.956 | No, M>Mu |
| SLU 56 | 1458 | 440 | -14084 | 0 | 0 | 0 | No, Trazione |
| SLU 57 | 1248 | -2796 | 16840 | 5.55 | 16052 | 0.953 | No, M>Mu |
| SLU 57 | 1458 | 445 | -14038 | 0 | 0 | 0 | No, Trazione |
| SLU 1 | 1248 | -1598 | 8706 | 3.17 | 17570 | 2.018 | Si |
| SLU 1 | 1458 | 136 | -7524 | 0 | 0 | 0 | No, Trazione |
| SLU 60 | 1248 | -2391 | 14678 | 4.74 | 17972 | 1.224 | Si |
| SLU 60 | 1458 | 462 | -12897 | 0 | 0 | 0 | No, Trazione |
| SLU 59 | 1248 | -2691 | 16315 | 5.34 | 16691 | 1.023 | Si |
| SLU 59 | 1458 | 446 | -13392 | 0 | 0 | 0 | No, Trazione |

### Verifica a pressoflessione nel piano secondo D.M. 17-01-18 NTC §7.8.2.2.1 in combinazioni sismiche, γM = 2

| Comb. | Quota | N | M | σ0 | Mu | c.s. | Verifica |
|---|---|---|---|---|---|---|---|
| SLV 6 | 1248 | 605 | -19758 | 0 | 0 | 0 | No, Trazione |
| SLV 6 | 1458 | -1069 | -2887 | 2.12 | 15900 | 5.508 | Si |
| SLV 12 | 1248 | -4166 | 40522 | 8.27 | 24258 | 0.599 | No, M>Mu |
| SLV 12 | 1458 | 1576 | -15060 | 0 | 0 | 0 | No, Trazione |
| SLV 13 | 1248 | -1390 | 4981 | 2.76 | 19370 | 3.889 | Si |
| SLV 13 | 1458 | 123 | -9931 | 0 | 0 | 0 | No, Trazione |
| SLV 8 | 1248 | -3987 | 38518 | 7.91 | 25302 | 0.657 | No, M>Mu |
| SLV 8 | 1458 | 1429 | -13527 | 0 | 0 | 0 | No, Trazione |
| SLV 7 | 1248 | -3987 | 38518 | 7.91 | 25302 | 0.657 | No, M>Mu |

| Comb. | Quota | N | M | σ0 | Mu | c.s. | Verifica |
|---|---|---|---|---|---|---|---|
| SLV 7 | 1458 | 1429 | -13527 | 0 | 0 | 0 | No, Trazione |
| SLV 9 | 1248 | 426 | -17754 | 0 | 0 | 0 | No, Trazione |
| SLV 9 | 1458 | -922 | -4419 | 1.83 | 14114 | 3.194 | Si |
| SLV 14 | 1248 | -1390 | 4981 | 2.76 | 19370 | 3.889 | Si |
| SLV 14 | 1458 | 123 | -9931 | 0 | 0 | 0 | No, Trazione |
| SLV 11 | 1248 | -4166 | 40522 | 8.27 | 24258 | 0.599 | No, M>Mu |
| SLV 11 | 1458 | 1576 | -15060 | 0 | 0 | 0 | No, Trazione |
| SLV 10 | 1248 | 426 | -17754 | 0 | 0 | 0 | No, Trazione |
| SLV 10 | 1458 | -922 | -4419 | 1.83 | 14114 | 3.194 | Si |
| SLD 1 | 1248 | -1372 | 5426 | 2.72 | 19192 | 3.537 | Si |
| SLD 1 | 1458 | -4 | -7204 | 0 | 0 | 0 | No, e>l/2 |

Verifica a taglio nel piano secondo D.M. 17-01-18 (N.T.C.) §7.8.2.2.2 con rottura per scorrimento in combinazioni non sismiche, γM = 3

| Comb. | Quota | N | V par | M | σ0 | σN | l' | fvd | Vt scorr. | Vt fess.diag. | Vt,lim | c.s. | Verifica |
|---|---|---|---|---|---|---|---|---|---|---|---|---|---|
| SLU 60 | 1248 | -2391 | 371 | 14678 | | 4.8 | 35.59 | 1.08 | 540 | | | 1.46 | Si |
| SLU 60 | 1458 | 462 | 369 | -12897 | | 0 | 0 | 0.56 | 0 | | | 0 | No, Vu<V |
| SLU 58 | 1248 | -2689 | 388 | 16272 | | 5.36 | 35.85 | 1.08 | 544 | | | 1.4 | Si |
| SLU 58 | 1458 | 441 | 422 | -13439 | | 0 | 0 | 0.56 | 0 | | | 0 | No, Vu<V |
| SLU 56 | 1248 | -2795 | 404 | 16798 | | 5.55 | 35.97 | 1.08 | 546 | | | 1.35 | Si |
| SLU 56 | 1458 | 440 | 436 | -14084 | | 0 | 0 | 0.56 | 0 | | | 0 | No, Vu<V |
| SLU 59 | 1248 | -2691 | 389 | 16315 | | 5.37 | 35.81 | 1.08 | 543 | | | 1.4 | Si |
| SLU 59 | 1458 | 446 | 422 | -13392 | | 0 | 0 | 0.56 | 0 | | | 0 | No, Vu<V |
| SLU 54 | 1248 | -2583 | 380 | 15393 | | 5.13 | 36 | 1.08 | 546 | | | 1.44 | Si |
| SLU 54 | 1458 | 404 | 392 | -13179 | | 0 | 0 | 0.56 | 0 | | | 0 | No, Vu<V |
| SLU 53 | 1248 | -2581 | 379 | 15351 | | 5.12 | 36 | 1.08 | 546 | | | 1.44 | Si |
| SLU 53 | 1458 | 399 | 393 | -13226 | | 0 | 0 | 0.56 | 0 | | | 0 | No, Vu<V |
| SLU 57 | 1248 | -2796 | 405 | 16840 | | 5.56 | 35.93 | 1.08 | 545 | | | 1.35 | Si |
| SLU 57 | 1458 | 445 | 435 | -14038 | | 0 | 0 | 0.56 | 0 | | | 0 | No, Vu<V |
| SLU 1 | 1248 | -1598 | 220 | 8706 | | 3.17 | 36 | 0.98 | 493 | | | 2.24 | Si |
| SLU 1 | 1458 | 136 | 220 | -7524 | | 0 | 0 | 0.56 | 0 | | | 0 | No, Vu<V |
| SLU 55 | 1248 | -2478 | 365 | 14896 | | 4.92 | 35.97 | 1.08 | 546 | | | 1.49 | Si |
| SLU 55 | 1458 | 408 | 378 | -12504 | | 0 | 0 | 0.56 | 0 | | | 0 | No, Vu<V |
| SLU 61 | 1248 | -2393 | 372 | 14720 | | 4.81 | 35.55 | 1.08 | 539 | | | 1.45 | Si |
| SLU 61 | 1458 | 467 | 368 | -12851 | | 0 | 0 | 0.56 | 0 | | | 0 | No, Vu<V |

Verifica a taglio nel piano secondo D.M. 17-01-18 (N.T.C.) §7.8.2.2.2 con rottura per scorrimento in combinazioni sismiche, γM = 2

| Comb. | Quota | N | V par | M | σ0 | σN | l' | fvd | Vt scorr. | Vt fess.diag. | Vt,lim | c.s. | Verifica |
|---|---|---|---|---|---|---|---|---|---|---|---|---|---|
| SLD 1 | 1248 | -1372 | 53 | 5426 | | 2.72 | 36 | 1.38 | 694 | | | 13.21 | Si |
| SLD 1 | 1458 | -4 | 250 | -7204 | | 0 | 0 | 0.83 | 0 | | | 0 | No, Vu<V |
| SLV 8 | 1248 | -3987 | 1372 | 38518 | | 11.38 | 25.02 | 1.63 | 569 | | | 0.41 | No, Vu<V |
| SLV 8 | 1458 | 1429 | -66 | -13527 | | 0 | 0 | 0.83 | 0 | | | 0 | No, Vu<V |
| SLV 9 | 1248 | 426 | -852 | -17754 | | 0 | 0 | 0.83 | 0 | | | 0 | No, Vu<V |
| SLV 9 | 1458 | -922 | 591 | -4419 | | 1.83 | 36 | 1.2 | 604 | | | 1.02 | Si |
| SLV 13 | 1248 | -1390 | 70 | 4981 | | 2.76 | 36 | 1.38 | 698 | | | 9.95 | Si |
| SLV 13 | 1458 | 123 | 466 | -9931 | | 0 | 0 | 0.83 | 0 | | | 0 | No, Vu<V |
| SLV 14 | 1248 | -1390 | 70 | 4981 | | 2.76 | 36 | 1.38 | 698 | | | 9.95 | Si |
| SLV 14 | 1458 | 123 | 466 | -9931 | | 0 | 0 | 0.83 | 0 | | | 0 | No, Vu<V |
| SLV 11 | 1248 | -4166 | 1467 | 40522 | | 11.99 | 24.82 | 1.63 | 565 | | | 0.38 | No, Vu<V |
| SLV 11 | 1458 | 1576 | 3 | -15060 | | 0 | 0 | 0.83 | 0 | | | 0 | No, Vu<V |
| SLV 10 | 1248 | 426 | -852 | -17754 | | 0 | 0 | 0.83 | 0 | | | 0 | No, Vu<V |
| SLV 10 | 1458 | -922 | 591 | -4419 | | 1.83 | 36 | 1.2 | 604 | | | 1.02 | Si |
| SLV 6 | 1248 | 605 | -947 | -19758 | | 0 | 0 | 0.83 | 0 | | | 0 | No, Vu<V |
| SLV 6 | 1458 | -1069 | 521 | -2887 | | 2.12 | 36 | 1.26 | 634 | | | 1.22 | Si |
| SLV 7 | 1248 | -3987 | 1372 | 38518 | | 11.38 | 25.02 | 1.63 | 569 | | | 0.41 | No, Vu<V |
| SLV 7 | 1458 | 1429 | -66 | -13527 | | 0 | 0 | 0.83 | 0 | | | 0 | No, Vu<V |
| SLV 12 | 1248 | -4166 | 1467 | 40522 | | 11.99 | 24.82 | 1.63 | 565 | | | 0.38 | No, Vu<V |
| SLV 12 | 1458 | 1576 | 3 | -15060 | | 0 | 0 | 0.83 | 0 | | | 0 | No, Vu<V |

Verifica a pressoflessione fuori piano D.M. 17-01-18 (N.T.C.)

quota 1406 Wa 0.03 denominatore 8 γM = 2

| Comb. | fd | Sa | σ0 | N | M | Mc | Coeff.s. | Verifica |
|---|---|---|---|---|---|---|---|---|
| SLV 11 | 14 | 0.53 | 0 | 884 | 2187 | 0 | 0 | No, Trazione |
| SLV 13 | 14 | 0.53 | 0 | -296 | 2187 | 0 | 0 | No, e>t/2 |
| SLV 8 | 14 | 0.53 | 0 | 771 | 2187 | 0 | 0 | No, Trazione |
| SLV 14 | 14 | 0.53 | 0 | -296 | 2187 | 0 | 0 | No, e>t/2 |
| SLV 3 | 14 | 0.53 | 0 | -66 | 2187 | 0 | 0 | No, e>t/2 |
| SLV 7 | 14 | 0.53 | 0 | 771 | 2187 | 0 | 0 | No, Trazione |
| SLV 16 | 14 | 0.53 | 0 | 310 | 2187 | 0 | 0 | No, Trazione |
| SLV 15 | 14 | 0.53 | 0 | 310 | 2187 | 0 | 0 | No, Trazione |
| SLV 4 | 14 | 0.53 | 0 | -66 | 2187 | 0 | 0 | No, e>t/2 |
| SLV 12 | 14 | 0.53 | 0 | 884 | 2187 | 0 | 0 | No, Trazione |

Verifica dei meccanismi locali di collasso con analisi cinematica lineare

forza di aggancio al piano = 0 quota mezzeria = 1406 Wa = 0.03 Ta = 0.1191

| Comb. | N top | N base | V orto | α0 | M* | e* | a0* | aLim | Verifica |
|---|---|---|---|---|---|---|---|---|---|
| SLV 2 | 83 | -793 | 48 | 0 | 0 | 0 | 0 | 1854.855 | No, Trazione |
| SLV 4 | -203 | -2171 | 49 | 0 | 0.445 | 0.892 | 0 | 1854.855 | No |
| SLV 5 | 330 | 605 | 12 | 0 | 0 | 0 | 0 | 2129.268 | No, Trazione |
| SLV 9 | 255 | 426 | -17 | 0 | 0 | 0 | 0 | 2129.268 | No, Trazione |
| SLV 3 | -203 | -2171 | 49 | 0 | 0.445 | 0.892 | 0 | 1854.855 | No |
| SLV 1 | 83 | -793 | 48 | 0 | 0 | 0 | 0 | 1854.855 | No, Trazione |
| SLV 6 | 330 | 605 | 12 | 0 | 0 | 0 | 0 | 2129.268 | No, Trazione |
| SLV 14 | -166 | -1390 | -49 | 0 | 0.411 | 0.889 | 0 | 1854.855 | No |
| SLV 13 | -166 | -1390 | -49 | 0 | 0.411 | 0.889 | 0 | 1854.855 | No |
| SLV 10 | 255 | 426 | -17 | 0 | 0 | 0 | 0 | 2129.268 | No, Trazione |

### Tabella dei coefficienti di sicurezza minimi

| Stato limite | Coeff.s. | Comb. | Verifica |
|---|---|---|---|
| PF_SLU | 0 | SLU 84 | No |
| V_SLU | 0 | SLU 1 | No |
| PF_SLV | 0 | SLV 16 | No |
| V_SLV | 0 | SLD 1 | No |
| PFFP_SLV | 0 | SLV 16 | No |
| R_SLV | 0 | SLV 10 | No |

## Maschio 190

Verifiche condotte secondo D.M. 17-01-18 (N.T.C.)

### Dati geometrici

| X ini. | Y ini. | X fin. | Y fin. | Quota i. | Quota.s | l | Sp. | h netta | h ini. | h fin. | a | a.s.,sx | a.s.,dx |
|---|---|---|---|---|---|---|---|---|---|---|---|---|---|
| -1505.8 | 220.6 | -1505.8 | 666.1 | L6 | L7 | 445.5 | 14 | 316 | 316 | 316 | | | |

### Caratteristiche del materiale

(Circolare 7 21-01-19 C8.5.I) Muratura in mattoni pieni e malta di calce LC2_Corti

| fb | fk | fvk0 | fmedio | τ0 | fv0 | μ | ϕ | fv,lim | E | G | FC |
|---|---|---|---|---|---|---|---|---|---|---|---|
| 60 | | | 34.5 | 0.9 | 2 | 0.58 | 0.77 | 3.25 | 32000 | 12800 | 1.2 |

### Verifica a pressoflessione nel piano secondo D.M. 17-01-18 NTC §7.8.2.2.1 in combinazioni non sismiche, γM = 3

| Comb. | Quota | N | M | σ0 | Mu | c.s. | Verifica |
|---|---|---|---|---|---|---|---|
| SLU 82 | 1248 | -11584 | 433455 | 1.86 | 1991947 | 4.596 | Si |
| SLU 82 | 1458 | -4639 | -247681 | 0.74 | 938916 | 3.791 | Si |
| SLU 61 | 1248 | -10407 | 368635 | 1.67 | 1843347 | 5 | Si |
| SLU 61 | 1458 | -4052 | -218866 | 0.65 | 830621 | 3.795 | Si |
| SLU 40 | 1248 | -9882 | 402374 | 1.58 | 1773072 | 4.407 | Si |
| SLU 40 | 1458 | -3983 | -218610 | 0.64 | 817695 | 3.74 | Si |
| SLU 39 | 1248 | -9901 | 403681 | 1.59 | 1775614 | 4.399 | Si |
| SLU 39 | 1458 | -3981 | -216454 | 0.64 | 817265 | 3.776 | Si |
| SLU 18 | 1248 | -8724 | 338860 | 1.4 | 1609658 | 4.75 | Si |
| SLU 18 | 1458 | -3394 | -187638 | 0.54 | 705588 | 3.76 | Si |
| SLU 31 | 1248 | -9357 | 353150 | 1.5 | 1700408 | 4.815 | Si |
| SLU 31 | 1458 | -3823 | -202706 | 0.61 | 787478 | 3.885 | Si |
| SLU 19 | 1248 | -8706 | 337553 | 1.4 | 1606923 | 4.761 | Si |
| SLU 19 | 1458 | -3397 | -189794 | 0.54 | 706030 | 3.72 | Si |
| SLU 60 | 1248 | -10426 | 369942 | 1.67 | 1845803 | 4.989 | Si |
| SLU 60 | 1458 | -4050 | -216710 | 0.65 | 830192 | 3.831 | Si |
| SLU 81 | 1248 | -11602 | 434763 | 1.86 | 1994210 | 4.587 | Si |
| SLU 81 | 1458 | -4636 | -245525 | 0.74 | 938499 | 3.822 | Si |
| SLU 10 | 1248 | -8181 | 288329 | 1.31 | 1528843 | 5.302 | Si |
| SLU 10 | 1458 | -3236 | -173891 | 0.52 | 674988 | 3.882 | Si |

### Verifica a pressoflessione nel piano secondo D.M. 17-01-18 NTC §7.8.2.2.1 in combinazioni sismiche, γM = 2

| Comb. | Quota | N | M | σ0 | Mu | c.s. | Verifica |
|---|---|---|---|---|---|---|---|
| SLV 10 | 1248 | -10584 | 891668 | 1.7 | 2030091 | 2.277 | Si |
| SLV 10 | 1458 | -2013 | 264850 | 0.32 | 436515 | 1.648 | Si |
| SLV 8 | 1248 | -4804 | -434784 | 0.77 | 1002597 | 2.306 | Si |
| SLV 8 | 1458 | -4248 | -564109 | 0.68 | 893523 | 1.584 | Si |
| SLV 6 | 1248 | -11045 | 916088 | 1.77 | 2103643 | 2.296 | Si |
| SLV 6 | 1458 | -2167 | 317270 | 0.35 | 469057 | 1.478 | Si |
| SLV 11 | 1248 | -4343 | -459205 | 0.7 | 912224 | 1.987 | Si |
| SLV 11 | 1458 | -4094 | -616529 | 0.66 | 862861 | 1.4 | Si |
| SLV 15 | 1248 | -5989 | -14890 | 0.96 | 1229239 | 82.553 | Si |
| SLV 15 | 1458 | -3185 | -369203 | 0.51 | 679802 | 1.841 | Si |
| SLV 16 | 1248 | -5989 | -14890 | 0.96 | 1229239 | 82.553 | Si |
| SLV 16 | 1458 | -3185 | -369203 | 0.51 | 679802 | 1.841 | Si |
| SLV 7 | 1248 | -4804 | -434784 | 0.77 | 1002597 | 2.306 | Si |
| SLV 7 | 1458 | -4248 | -564109 | 0.68 | 893523 | 1.584 | Si |
| SLV 5 | 1248 | -11045 | 916088 | 1.77 | 2103643 | 2.296 | Si |
| SLV 5 | 1458 | -2167 | 317270 | 0.35 | 469057 | 1.478 | Si |
| SLV 9 | 1248 | -10584 | 891668 | 1.7 | 2030091 | 2.277 | Si |
| SLV 9 | 1458 | -2013 | 264850 | 0.32 | 436515 | 1.648 | Si |
| SLV 12 | 1248 | -4343 | -459205 | 0.7 | 912224 | 1.987 | Si |
| SLV 12 | 1458 | -4094 | -616529 | 0.66 | 862861 | 1.4 | Si |

### Verifica a taglio nel piano secondo D.M. 17-01-18 (N.T.C.) §7.8.2.2.2 con rottura per scorrimento in combinazioni non sismiche, γM = 3

| Comb. | Quota | N | V par | M | σ0 | σN | l' | fvd | Vt scorr. | Vt fess.diag. | Vt,lim | c.s. | Verifica |
|---|---|---|---|---|---|---|---|---|---|---|---|---|---|
| SLU 84 | 1248 | -11774 | -322 | 404318 | | 1.89 | 445.5 | 0.81 | 5035 | | | 15.66 | Si |
| SLU 84 | 1458 | -5168 | -821 | -243208 | | 0.83 | 445.5 | 0.67 | 4154 | | | 5.06 | Si |
| SLU 83 | 1248 | -11793 | -348 | 405626 | | 1.89 | 445.5 | 0.81 | 5037 | | | 14.49 | Si |
| SLU 83 | 1458 | -5166 | -848 | -241052 | | 0.83 | 445.5 | 0.67 | 4154 | | | 4.9 | Si |
| SLU 60 | 1248 | -10426 | -623 | 369942 | | 1.67 | 445.5 | 0.78 | 4855 | | | 7.79 | Si |
| SLU 60 | 1458 | -4050 | -772 | -216710 | | 0.65 | 445.5 | 0.64 | 4005 | | | 5.19 | Si |
| SLU 82 | 1248 | -11584 | -590 | 433455 | | 1.86 | 445.5 | 0.8 | 5009 | | | 8.49 | Si |
| SLU 82 | 1458 | -4639 | -844 | -247681 | | 0.74 | 445.5 | 0.65 | 4083 | | | 4.84 | Si |
| SLU 77 | 1248 | -11746 | -91 | 357380 | | 1.88 | 445.5 | 0.81 | 5031 | | | 55.02 | Si |
| SLU 77 | 1458 | -5587 | -796 | -226676 | | 0.9 | 445.5 | 0.67 | 4210 | | | 5.29 | Si |
| SLU 81 | 1248 | -11602 | -616 | 434763 | | 1.86 | 445.5 | 0.8 | 5012 | | | 8.13 | Si |
| SLU 81 | 1458 | -4636 | -870 | -245525 | | 0.74 | 445.5 | 0.65 | 4083 | | | 4.69 | Si |
| SLU 73 | 1248 | -11059 | -514 | 384232 | | 1.77 | 445.5 | 0.79 | 4939 | | | 9.62 | Si |
| SLU 73 | 1458 | -4478 | -767 | -231778 | | 0.72 | 445.5 | 0.65 | 4062 | | | 5.29 | Si |
| SLU 75 | 1248 | -11536 | -334 | 385210 | | 1.85 | 445.5 | 0.8 | 5003 | | | 14.99 | Si |

| Comb. | Quota | N | V par | M | σ0 | σN | l' | fvd | Vt scorr. | Vt fess.diag. | Vt,lim | c.s. | Verifica |
|---|---|---|---|---|---|---|---|---|---|---|---|---|---|
| SLU 75 | 1458 | -5060 | -792 | -233305 | | 0.81 | 445.5 | 0.66 | 4140 | | | 5.22 | Si |
| SLU 39 | 1248 | -9901 | -516 | 403681 | | 1.59 | 445.5 | 0.77 | 4785 | | | 9.28 | Si |
| SLU 39 | 1458 | -3981 | -763 | -216454 | | 0.64 | 445.5 | 0.64 | 3996 | | | 5.23 | Si |
| SLU 74 | 1248 | -11555 | -360 | 386517 | | 1.85 | 445.5 | 0.8 | 5006 | | | 13.9 | Si |
| SLU 74 | 1458 | -5058 | -819 | -231149 | | 0.81 | 445.5 | 0.66 | 4139 | | | 5.06 | Si |

### Verifica a taglio nel piano secondo D.M. 17-01-18 (N.T.C.) §7.8.2.2.2 con rottura per scorrimento in combinazioni sismiche, γM = 2

| Comb. | Quota | N | V par | M | σ0 | σN | l' | fvd | Vt scorr. | Vt fess.diag. | Vt,lim | c.s. | Verifica |
|---|---|---|---|---|---|---|---|---|---|---|---|---|---|
| SLV 8 | 1248 | -4804 | 2799 | -434784 | | 0.86 | 396.73 | 1.01 | 5589 | | | 2 | Si |
| SLV 8 | 1458 | -4248 | 1387 | -564109 | | 1.12 | 269.88 | 1.06 | 3998 | | | 2.88 | Si |
| SLV 2 | 1248 | -9398 | -2204 | 471774 | | 1.51 | 445.5 | 1.13 | 7077 | | | 3.21 | Si |
| SLV 2 | 1458 | -3076 | -1903 | 69944 | | 0.49 | 445.5 | 0.93 | 5813 | | | 3.05 | Si |
| SLV 7 | 1248 | -4804 | 2799 | -434784 | | 0.86 | 396.73 | 1.01 | 5589 | | | 2 | Si |
| SLV 7 | 1458 | -4248 | 1387 | -564109 | | 1.12 | 269.88 | 1.06 | 3998 | | | 2.88 | Si |
| SLV 10 | 1248 | -10584 | -3526 | 891668 | | 1.82 | 415.5 | 1.2 | 6964 | | | 1.97 | Si |
| SLV 10 | 1458 | -2013 | -2459 | 264850 | | 0.53 | 273.51 | 0.94 | 3593 | | | 1.46 | Si |
| SLV 5 | 1248 | -11045 | -4017 | 916088 | | 1.88 | 419.42 | 1.21 | 7102 | | | 1.77 | Si |
| SLV 5 | 1458 | -2167 | -2894 | 317270 | | 0.68 | 229.1 | 0.97 | 3106 | | | 1.07 | Si |
| SLV 12 | 1248 | -4343 | 3290 | -459205 | | 0.88 | 351.03 | 1.01 | 4964 | | | 1.51 | Si |
| SLV 12 | 1458 | -4094 | 1822 | -616529 | | 1.35 | 216.42 | 1.1 | 3344 | | | 1.83 | Si |
| SLV 11 | 1248 | -4343 | 3290 | -459205 | | 0.88 | 351.03 | 1.01 | 4964 | | | 1.51 | Si |
| SLV 11 | 1458 | -4094 | 1822 | -616529 | | 1.35 | 216.42 | 1.1 | 3344 | | | 1.83 | Si |
| SLV 9 | 1248 | -10584 | -3526 | 891668 | | 1.82 | 415.5 | 1.2 | 6964 | | | 1.97 | Si |
| SLV 9 | 1458 | -2013 | -2459 | 264850 | | 0.53 | 273.51 | 0.94 | 3593 | | | 1.46 | Si |
| SLV 6 | 1248 | -11045 | -4017 | 916088 | | 1.88 | 419.42 | 1.21 | 7102 | | | 1.77 | Si |
| SLV 6 | 1458 | -2167 | -2894 | 317270 | | 0.68 | 229.1 | 0.97 | 3106 | | | 1.07 | Si |
| SLV 1 | 1248 | -9398 | -2204 | 471774 | | 1.51 | 445.5 | 1.13 | 7077 | | | 3.21 | Si |
| SLV 1 | 1458 | -3076 | -1903 | 69944 | | 0.49 | 445.5 | 0.93 | 5813 | | | 3.05 | Si |

### Verifica a pressoflessione fuori piano D.M. 17-01-18 (N.T.C.)

quota 1406 Wa 0.03 denominatore 8 γM = 2

| Comb. | fd | Sa | σ0 | N | M | Mc | Coeff.s. | Verifica |
|---|---|---|---|---|---|---|---|---|
| SLV 9 | 14 | 0.53 | 0 | -3402 | 27063 | 0 | 0 | No, e>t/2 |
| SLV 10 | 14 | 0.53 | 0 | -3402 | 27063 | 0 | 0 | No, e>t/2 |
| SLV 13 | 14 | 0.53 | 0 | -3451 | 27063 | 0 | 0 | No, e>t/2 |
| SLV 5 | 14 | 0.53 | 0 | -3593 | 27063 | 0 | 0 | No, e>t/2 |
| SLV 6 | 14 | 0.53 | 0 | -3593 | 27063 | 0 | 0 | No, e>t/2 |
| SLV 14 | 14 | 0.53 | 0 | -3451 | 27063 | 0 | 0 | No, e>t/2 |
| SLV 16 | 14 | 0.53 | 0 | -3682 | 27063 | 0 | 0 | No, e>t/2 |
| SLV 15 | 14 | 0.53 | 0 | -3682 | 27063 | 0 | 0 | No, e>t/2 |
| SLV 2 | 14 | 0.53 | 0.66 | -4086 | 27063 | 27067 | 1 | Si |
| SLV 1 | 14 | 0.53 | 0.66 | -4086 | 27063 | 27067 | 1 | Si |

### Verifica dei meccanismi locali di collasso con analisi cinematica lineare

forza di aggancio al piano = 0 quota mezzeria = 1406 Wa = 0.03 Ta = 0.1191

| Comb. | N top | N base | V orto | α0 | M* | e* | a0* | aLim | Verifica |
|---|---|---|---|---|---|---|---|---|---|
| SLV 8 | -1162 | -4804 | -5 | 0.034 | 4.288 | 0.893 | 55.198 | 2129.268 | No |
| SLV 7 | -1162 | -4804 | -5 | 0.034 | 4.288 | 0.893 | 55.198 | 2129.268 | No |
| SLV 12 | -1014 | -4343 | -5 | 0.035 | 4.168 | 0.896 | 56.002 | 2129.268 | No |
| SLV 11 | -1014 | -4343 | -5 | 0.035 | 4.168 | 0.896 | 56.002 | 2129.268 | No |
| SLV 5 | -361 | -11045 | 5 | 0.038 | 3.723 | 0.934 | 59.396 | 2129.268 | No |
| SLV 6 | -361 | -11045 | 5 | 0.038 | 3.723 | 0.934 | 59.396 | 2129.268 | No |
| SLV 9 | -213 | -10584 | 5 | 0.039 | 3.658 | 0.954 | 59.991 | 2129.268 | No |
| SLV 10 | -213 | -10584 | 5 | 0.039 | 3.658 | 0.954 | 59.991 | 2129.268 | No |
| SLV 4 | -1053 | -7526 | -1 | 0.036 | 4.199 | 0.895 | 57.786 | 1854.855 | No |
| SLV 3 | -1053 | -7526 | -1 | 0.036 | 4.199 | 0.895 | 57.786 | 1854.855 | No |

### Tabella dei coefficienti di sicurezza minimi

| Stato limite | Coeff.s. | Comb. | Verifica |
|---|---|---|---|
| PF_SLU | 3.72 | SLU 19 | Si |
| V_SLU | 4.691 | SLU 81 | Si |
| PF_SLV | 1.4 | SLV 11 | Si |
| V_SLV | 1.073 | SLV 5 | Si |
| PFFP_SLV | 0 | SLV 5 | No |
| R_SLV | 0.026 | SLV 7 | No |

## Maschio 191

Verifiche condotte secondo D.M. 17-01-18 (N.T.C.)

### Dati geometrici

| X ini. | Y ini. | X fin. | Y fin. | Quota i. | Quota.s | l | Sp. | h netta | h ini. | h fin. | a | a.s.,sx | a.s.,dx |
|---|---|---|---|---|---|---|---|---|---|---|---|---|---|
| -1375.3 | -485.9 | -1375.3 | -349.9 | L6 | Z medio 1531 cm | 135.9 | 28 | 282.9 | 249.8 | 316 | | | |

### Caratteristiche del materiale

(Circolare 7 21-01-19 C8.5.I) Muratura in mattoni pieni e malta di calce LC2_Corti

| fb | fk | fvk0 | fmedio | τ0 | fv0 | μ | ϕ | fv,lim | E | G | FC |
|---|---|---|---|---|---|---|---|---|---|---|---|
| 60 | | | 34.5 | 0.9 | 2 | 0.58 | 0.77 | 3.25 | 32000 | 12800 | 1.2 |

### Verifica a pressoflessione nel piano secondo D.M. 17-01-18 NTC §7.8.2.2.1 in combinazioni non sismiche, γM = 3

| Comb. | Quota | N | M | σ0 | Mu | c.s. | Verifica |
|---|---|---|---|---|---|---|---|
| SLU 60 | 1248 | -862 | -1701 | 0.23 | 56944 | 33.478 | Si |

| Comb. | Quota | N | M | σ0 | Mu | c.s. | Verifica |
|---|---|---|---|---|---|---|---|
| SLU 60 | 1498 | -421 | 8091 | 0.11 | 28215 | 3.487 | Si |
| SLU 52 | 1248 | -912 | -4796 | 0.24 | 60159 | 12.544 | Si |
| SLU 52 | 1498 | -449 | 8497 | 0.12 | 30064 | 3.538 | Si |
| SLU 2 | 1248 | -712 | -4924 | 0.19 | 47284 | 9.603 | Si |
| SLU 2 | 1498 | -348 | 6512 | 0.09 | 23416 | 3.596 | Si |
| SLU 43 | 1248 | -829 | -2036 | 0.22 | 54826 | 26.927 | Si |
| SLU 43 | 1498 | -404 | 8322 | 0.11 | 27095 | 3.256 | Si |
| SLU 61 | 1248 | -898 | -3498 | 0.24 | 59254 | 16.942 | Si |
| SLU 61 | 1498 | -441 | 8293 | 0.12 | 29526 | 3.56 | Si |
| SLU 44 | 1248 | -889 | -5030 | 0.23 | 58683 | 11.666 | Si |
| SLU 44 | 1498 | -437 | 8659 | 0.11 | 29282 | 3.382 | Si |
| SLU 1 | 1248 | -652 | -1930 | 0.17 | 43381 | 22.481 | Si |
| SLU 1 | 1498 | -315 | 6175 | 0.08 | 21216 | 3.436 | Si |
| SLU 64 | 1248 | -884 | -3414 | 0.23 | 58339 | 17.087 | Si |
| SLU 64 | 1498 | -422 | 7463 | 0.11 | 28265 | 3.787 | Si |
| SLU 18 | 1248 | -685 | -1595 | 0.18 | 45524 | 28.55 | Si |
| SLU 18 | 1498 | -332 | 5944 | 0.09 | 22343 | 3.759 | Si |
| SLU 10 | 1248 | -735 | -4689 | 0.19 | 48779 | 10.402 | Si |
| SLU 10 | 1498 | -360 | 6351 | 0.09 | 24203 | 3.811 | Si |

Verifica a pressoflessione nel piano secondo D.M. 17-01-18 NTC §7.8.2.2.1 in combinazioni sismiche, γM = 2

| Comb. | Quota | N | M | σ0 | Mu | c.s. | Verifica |
|---|---|---|---|---|---|---|---|
| SLV 2 | 1248 | -168 | 53548 | 0 | 0 | 0 | No, e>l/2 |
| SLV 2 | 1498 | 122 | 5421 | 0 | 0 | 0 | No, Trazione |
| SLV 5 | 1248 | -358 | 51531 | 0 | 0 | 0 | No, e>l/2 |
| SLV 5 | 1498 | 805 | -16532 | 0 | 0 | 0 | No, Trazione |
| SLV 1 | 1248 | -168 | 53548 | 0 | 0 | 0 | No, e>l/2 |
| SLV 1 | 1498 | 122 | 5421 | 0 | 0 | 0 | No, Trazione |
| SLV 6 | 1248 | -358 | 51531 | 0 | 0 | 0 | No, e>l/2 |
| SLV 6 | 1498 | 805 | -16532 | 0 | 0 | 0 | No, Trazione |
| SLV 9 | 1248 | -629 | 25376 | 0.17 | 42157 | 1.661 | Si |
| SLV 9 | 1498 | 734 | -20661 | 0 | 0 | 0 | No, Trazione |
| SLD 6 | 1248 | -540 | 19496 | 0.14 | 36297 | 1.862 | Si |
| SLD 6 | 1498 | 122 | -2783 | 0 | 0 | 0 | No, Trazione |
| SLD 9 | 1248 | -658 | 8396 | 0.17 | 44058 | 5.248 | Si |
| SLD 9 | 1498 | 91 | -4506 | 0 | 0 | 0 | No, Trazione |
| SLV 3 | 1248 | -277 | 29122 | 0 | 0 | 0 | No, e>l/2 |
| SLV 3 | 1498 | -534 | 20109 | 0.14 | 35863 | 1.783 | Si |
| SLV 4 | 1248 | -277 | 29122 | 0 | 0 | 0 | No, e>l/2 |
| SLV 4 | 1498 | -534 | 20109 | 0.14 | 35863 | 1.783 | Si |
| SLD 10 | 1248 | -658 | 8396 | 0.17 | 44058 | 5.248 | Si |
| SLD 10 | 1498 | 91 | -4506 | 0 | 0 | 0 | No, Trazione |

Verifica a taglio nel piano secondo D.M. 17-01-18 (N.T.C.) §7.8.2.2.2 con rottura per scorrimento in combinazioni non sismiche, γM = 3

| Comb. | Quota | N | V par | M | σ0 | σN | l' | fvd | Vt scorr. | Vt fess.diag. | Vt,lim | c.s. | Verifica |
|---|---|---|---|---|---|---|---|---|---|---|---|---|---|
| SLU 56 | 1248 | -924 | 455 | -3257 | | 0.24 | 135.93 | 0.59 | 2238 | | | 4.91 | Si |
| SLU 56 | 1498 | -424 | 145 | 4955 | | 0.11 | 135.93 | 0.57 | 2171 | | | 14.98 | Si |
| SLU 77 | 1248 | -979 | 452 | -4636 | | 0.26 | 135.93 | 0.59 | 2245 | | | 4.96 | Si |
| SLU 77 | 1498 | -442 | 109 | 4096 | | 0.12 | 135.93 | 0.57 | 2173 | | | 20.02 | Si |
| SLU 83 | 1248 | -951 | 453 | -3823 | | 0.25 | 135.93 | 0.59 | 2241 | | | 4.95 | Si |
| SLU 83 | 1498 | -438 | 93 | 5361 | | 0.12 | 135.93 | 0.57 | 2173 | | | 23.44 | Si |
| SLU 53 | 1248 | -890 | 448 | -2514 | | 0.23 | 135.93 | 0.59 | 2233 | | | 4.98 | Si |
| SLU 53 | 1498 | -425 | 115 | 6826 | | 0.11 | 135.93 | 0.57 | 2171 | | | 18.95 | Si |
| SLU 62 | 1248 | -896 | 456 | -2445 | | 0.24 | 135.93 | 0.59 | 2234 | | | 4.9 | Si |
| SLU 62 | 1498 | -420 | 129 | 6219 | | 0.11 | 135.93 | 0.57 | 2171 | | | 16.82 | Si |
| SLU 60 | 1248 | -862 | 449 | -1701 | | 0.23 | 135.93 | 0.59 | 2229 | | | 4.97 | Si |
| SLU 60 | 1498 | -421 | 99 | 8091 | | 0.11 | 135.93 | 0.57 | 2171 | | | 21.98 | Si |
| SLU 79 | 1248 | -976 | 455 | -4667 | | 0.26 | 135.93 | 0.59 | 2245 | | | 4.94 | Si |
| SLU 79 | 1498 | -432 | 130 | 3559 | | 0.11 | 135.93 | 0.57 | 2172 | | | 16.75 | Si |
| SLU 81 | 1248 | -917 | 446 | -3079 | | 0.24 | 135.93 | 0.59 | 2237 | | | 5.02 | Si |
| SLU 81 | 1498 | -439 | 62 | 7232 | | 0.12 | 135.93 | 0.57 | 2173 | | | 34.83 | Si |
| SLU 50 | 1248 | -898 | 445 | -3524 | | 0.24 | 135.93 | 0.59 | 2234 | | | 5.02 | Si |
| SLU 50 | 1498 | -403 | 182 | 4579 | | 0.11 | 135.93 | 0.57 | 2168 | | | 11.94 | Si |
| SLU 58 | 1248 | -921 | 458 | -3289 | | 0.24 | 135.93 | 0.59 | 2237 | | | 4.89 | Si |
| SLU 58 | 1498 | -415 | 166 | 4418 | | 0.11 | 135.93 | 0.57 | 2170 | | | 13.07 | Si |

Verifica a taglio nel piano secondo D.M. 17-01-18 (N.T.C.) §7.8.2.2.2 con rottura per scorrimento in combinazioni sismiche, γM = 2

| Comb. | Quota | N | V par | M | σ0 | σN | l' | fvd | Vt scorr. | Vt fess.diag. | Vt,lim | c.s. | Verifica |
|---|---|---|---|---|---|---|---|---|---|---|---|---|---|
| SLD 6 | 1248 | -540 | 651 | 19496 | | 0.2 | 95.65 | 0.87 | 2340 | | | 3.59 | Si |
| SLD 6 | 1498 | 122 | 774 | -2783 | | 0 | 0 | 0.83 | 0 | | | 0 | No, Vu<V |
| SLV 1 | 1248 | -168 | 1048 | 53548 | | 0 | 0 | 0.83 | 0 | | | 0 | No, Vu<V |
| SLV 1 | 1498 | 122 | 1471 | 5421 | | 0 | 0 | 0.83 | 0 | | | 0 | No, Vu<V |
| SLV 6 | 1248 | -358 | 1124 | 51531 | | 0 | 0 | 0.83 | 0 | | | 0 | No, Vu<V |
| SLV 6 | 1498 | 805 | 1827 | -16532 | | 0 | 0 | 0.83 | 0 | | | 0 | No, Vu<V |
| SLD 10 | 1248 | -658 | 517 | 8396 | | 0.17 | 135.93 | 0.87 | 3303 | | | 6.4 | Si |
| SLD 10 | 1498 | 91 | 529 | -4506 | | 0 | 0 | 0.83 | 0 | | | 0 | No, Vu<V |
| SLV 2 | 1248 | -168 | 1048 | 53548 | | 0 | 0 | 0.83 | 0 | | | 0 | No, Vu<V |
| SLV 2 | 1498 | 122 | 1471 | 5421 | | 0 | 0 | 0.83 | 0 | | | 0 | No, Vu<V |
| SLV 4 | 1248 | -277 | 668 | 29122 | | 0 | 0 | 0.83 | 0 | | | 0 | No, Vu<V |
| SLV 4 | 1498 | -534 | 590 | 20109 | | 0.21 | 90.88 | 0.88 | 2227 | | | 3.78 | Si |
| SLV 5 | 1248 | -358 | 1124 | 51531 | | 0 | 0 | 0.83 | 0 | | | 0 | No, Vu<V |
| SLV 5 | 1498 | 805 | 1827 | -16532 | | 0 | 0 | 0.83 | 0 | | | 0 | No, Vu<V |
| SLD 9 | 1248 | -658 | 517 | 8396 | | 0.17 | 135.93 | 0.87 | 3303 | | | 6.4 | Si |
| SLD 9 | 1498 | 91 | 529 | -4506 | | 0 | 0 | 0.83 | 0 | | | 0 | No, Vu<V |
| SLV 9 | 1248 | -629 | 810 | 25376 | | 0.27 | 82.82 | 0.89 | 2058 | | | 2.54 | Si |
| SLV 9 | 1498 | 734 | 1250 | -20661 | | 0 | 0 | 0.83 | 0 | | | 0 | No, Vu<V |
| SLV 3 | 1248 | -277 | 668 | 29122 | | 0 | 0 | 0.83 | 0 | | | 0 | No, Vu<V |
| SLV 3 | 1498 | -534 | 590 | 20109 | | 0.21 | 90.88 | 0.88 | 2227 | | | 3.78 | Si |

### Verifica a pressoflessione fuori piano D.M. 17-01-18 (N.T.C.)

quota 1372.9 Wa 0.05 denominatore 8 γM = 2

| Comb. | fd | Sa | σ0 | N | M | Mc | Coeff.s. | Verifica |
|---|---|---|---|---|---|---|---|---|
| SLV 3 | 14 | 0.52 | 0 | -427 | 12499 | 0 | 0 | No, e>t/2 |
| SLV 2 | 14 | 0.52 | 0 | 39 | 12499 | 0 | 0 | No, Trazione |
| SLV 9 | 14 | 0.52 | 0 | -573 | 12499 | 0 | 0 | No, e>t/2 |
| SLV 5 | 14 | 0.52 | 0 | -40 | 12499 | 0 | 0 | No, e>t/2 |
| SLV 6 | 14 | 0.52 | 0 | -40 | 12499 | 0 | 0 | No, e>t/2 |
| SLV 1 | 14 | 0.52 | 0 | 39 | 12499 | 0 | 0 | No, Trazione |
| SLV 4 | 14 | 0.52 | 0 | -427 | 12499 | 0 | 0 | No, e>t/2 |
| SLV 10 | 14 | 0.52 | 0 | -573 | 12499 | 0 | 0 | No, e>t/2 |
| SLV 8 | 14 | 0.52 | 0.42 | -1592 | 12499 | 21520 | 1.72 | Si |
| SLV 7 | 14 | 0.52 | 0.42 | -1592 | 12499 | 21520 | 1.72 | Si |

### Verifica dei meccanismi locali di collasso con analisi cinematica lineare

forza di aggancio al piano = 0 quota mezzeria = 1372.9 Wa = 0.05 Ta = 0.0477

| Comb. | N top | N base | V orto | α0 | M* | e* | a0* | aLim | Verifica |
|---|---|---|---|---|---|---|---|---|---|
| SLV 1 | 122 | -168 | 77 | 0 | 0 | 0 | 0 | 744.698 | No, Trazione |
| SLV 2 | 122 | -168 | 77 | 0 | 0 | 0 | 0 | 744.698 | No, Trazione |
| SLV 9 | 734 | -629 | 91 | 0 | 0 | 0 | 0 | 1149.398 | No, Trazione |
| SLV 5 | 805 | -358 | 115 | 0 | 0 | 0 | 0 | 1149.398 | No, Trazione |
| SLV 6 | 805 | -358 | 115 | 0 | 0 | 0 | 0 | 1149.398 | No, Trazione |
| SLV 10 | 734 | -629 | 91 | 0 | 0 | 0 | 0 | 1149.398 | No, Trazione |
| SLV 12 | -1452 | -991 | -100 | 0.028 | 3.086 | 0.893 | 45.654 | 1149.398 | No |
| SLV 11 | -1452 | -991 | -100 | 0.028 | 3.086 | 0.893 | 45.654 | 1149.398 | No |
| SLV 7 | -1381 | -720 | -76 | 0.038 | 3.018 | 0.892 | 61.442 | 1149.398 | No |
| SLV 8 | -1381 | -720 | -76 | 0.038 | 3.018 | 0.892 | 61.442 | 1149.398 | No |

### Tabella dei coefficienti di sicurezza minimi

| Stato limite | Coeff.s. | Comb. | Verifica |
|---|---|---|---|
| PF_SLU | 3.256 | SLU 43 | Si |
| V_SLU | 4.886 | SLU 58 | Si |
| PF_SLV | 0 | SLV 10 | No |
| V_SLV | 0 | SLD 5 | No |
| PFFP_SLV | 0 | SLV 2 | No |
| R_SLV | 0 | SLV 10 | No |

## Maschio 193

Verifiche condotte secondo D.M. 17-01-18 (N.T.C.)

### Dati geometrici

| X ini. | Y ini. | X fin. | Y fin. | Quota i. | Quota.s | l | Sp. | h netta | h ini. | h fin. | a | a.s.,sx | a.s.,dx |
|---|---|---|---|---|---|---|---|---|---|---|---|---|---|
| -1375.3 | -349.9 | -1375.3 | -22.8 | L6 | L7 | 327.1 | 28 | 316 | 316 | 316 | | | |

### Caratteristiche del materiale

(Circolare 7 21-01-19 C8.5.I) Muratura in mattoni pieni e malta di calce LC2_Corti

| fb | fk | fvk0 | fmedio | τ0 | fv0 | μ | ϕ | fv,lim | E | G | FC |
|---|---|---|---|---|---|---|---|---|---|---|---|
| 60 | | | 34.5 | 0.9 | 2 | 0.58 | 0.77 | 3.25 | 32000 | 12800 | 1.2 |

### Verifica a pressoflessione nel piano secondo D.M. 17-01-18 NTC §7.8.2.2.1 in combinazioni non sismiche, γM = 3

| Comb. | Quota | N | M | σ0 | Mu | c.s. | Verifica |
|---|---|---|---|---|---|---|---|
| SLU 53 | 1248 | -484 | -212953 | 0 | 0 | 0 | No, e>l/2 |
| SLU 53 | 1458 | 1186 | -578085 | 0 | 0 | 0 | No, Trazione |
| SLU 59 | 1248 | -495 | -214536 | 0 | 0 | 0 | No, e>l/2 |
| SLU 59 | 1458 | 1089 | -578541 | 0 | 0 | 0 | No, Trazione |
| SLU 56 | 1248 | -503 | -215913 | 0 | 0 | 0 | No, e>l/2 |
| SLU 56 | 1458 | 1102 | -583129 | 0 | 0 | 0 | No, Trazione |
| SLU 54 | 1248 | -482 | -212518 | 0 | 0 | 0 | No, e>l/2 |
| SLU 54 | 1458 | 1178 | -576654 | 0 | 0 | 0 | No, Trazione |
| SLU 61 | 1248 | -339 | -231580 | 0 | 0 | 0 | No, e>l/2 |
| SLU 61 | 1458 | 1359 | -593624 | 0 | 0 | 0 | No, Trazione |
| SLU 58 | 1248 | -497 | -214971 | 0 | 0 | 0 | No, e>l/2 |
| SLU 58 | 1458 | 1097 | -579972 | 0 | 0 | 0 | No, Trazione |
| SLU 60 | 1248 | -341 | -232015 | 0 | 0 | 0 | No, e>l/2 |
| SLU 60 | 1458 | 1366 | -595055 | 0 | 0 | 0 | No, Trazione |
| SLU 1 | 1248 | -564 | -123341 | 0 | 0 | 0 | No, e>l/2 |
| SLU 1 | 1458 | 798 | -401794 | 0 | 0 | 0 | No, Trazione |
| SLU 55 | 1248 | -474 | -211285 | 0 | 0 | 0 | No, e>l/2 |
| SLU 55 | 1458 | 1168 | -572543 | 0 | 0 | 0 | No, Trazione |
| SLU 57 | 1248 | -501 | -215478 | 0 | 0 | 0 | No, e>l/2 |
| SLU 57 | 1458 | 1095 | -581698 | 0 | 0 | 0 | No, Trazione |

### Verifica a pressoflessione nel piano secondo D.M. 17-01-18 NTC §7.8.2.2.1 in combinazioni sismiche, γM = 2

| Comb. | Quota | N | M | σ0 | Mu | c.s. | Verifica |
|---|---|---|---|---|---|---|---|
| SLV 8 | 1248 | -358 | -125176 | 0 | 0 | 0 | No, e>l/2 |
| SLV 8 | 1458 | 374 | -261646 | 0 | 0 | 0 | No, Trazione |
| SLV 11 | 1248 | -304 | -112677 | 0 | 0 | 0 | No, e>l/2 |
| SLV 11 | 1458 | 977 | -383961 | 0 | 0 | 0 | No, Trazione |
| SLV 12 | 1248 | -304 | -112677 | 0 | 0 | 0 | No, e>l/2 |
| SLV 12 | 1458 | 977 | -383961 | 0 | 0 | 0 | No, Trazione |
| SLV 13 | 1248 | -442 | -129022 | 0 | 0 | 0 | No, e>l/2 |
| SLV 13 | 1458 | 1943 | -663276 | 0 | 0 | 0 | No, Trazione |
| SLV 14 | 1248 | -442 | -129022 | 0 | 0 | 0 | No, e>l/2 |

| Comb. | Quota | N | M | σ0 | Mu | c.s. | Verifica |
|---|---|---|---|---|---|---|---|
| SLV 14 | 1458 | 1943 | -663276 | 0 | 0 | 0 | No, Trazione |
| SLV 9 | 1248 | -613 | -160258 | 0 | 0 | 0 | No, e>l/2 |
| SLV 9 | 1458 | 1381 | -594135 | 0 | 0 | 0 | No, Trazione |
| SLD 1 | 1248 | -543 | -154306 | 0 | 0 | 0 | No, e>l/2 |
| SLD 1 | 1458 | 471 | -353167 | 0 | 0 | 0 | No, Trazione |
| SLV 10 | 1248 | -613 | -160258 | 0 | 0 | 0 | No, e>l/2 |
| SLV 10 | 1458 | 1381 | -594135 | 0 | 0 | 0 | No, Trazione |
| SLV 6 | 1248 | -667 | -172757 | 0 | 0 | 0 | No, e>l/2 |
| SLV 6 | 1458 | 778 | -471819 | 0 | 0 | 0 | No, Trazione |
| SLV 7 | 1248 | -358 | -125176 | 0 | 0 | 0 | No, e>l/2 |
| SLV 7 | 1458 | 374 | -261646 | 0 | 0 | 0 | No, Trazione |

### Verifica a taglio nel piano secondo D.M. 17-01-18 (N.T.C.) §7.8.2.2.2 con rottura per scorrimento in combinazioni non sismiche, γM = 3

| Comb. | Quota | N | V par | M | σ0 | σN | l' | fvd | Vt scorr. | Vt fess.diag. | Vt,lim | c.s. | Verifica |
|---|---|---|---|---|---|---|---|---|---|---|---|---|---|
| SLU 60 | 1248 | -341 | -492 | -232015 | | 0 | 0 | 0.56 | 0 | | | 0 | No, Vu<V |
| SLU 60 | 1458 | 1366 | -74 | -595055 | | 0 | 0 | 0.56 | 0 | | | 0 | No, Vu<V |
| SLU 55 | 1248 | -474 | -508 | -211285 | | 0 | 0 | 0.56 | 0 | | | 0 | No, Vu<V |
| SLU 55 | 1458 | 1168 | -146 | -572543 | | 0 | 0 | 0.56 | 0 | | | 0 | No, Vu<V |
| SLU 57 | 1248 | -501 | -526 | -215478 | | 0 | 0 | 0.56 | 0 | | | 0 | No, Vu<V |
| SLU 57 | 1458 | 1095 | -134 | -581698 | | 0 | 0 | 0.56 | 0 | | | 0 | No, Vu<V |
| SLU 59 | 1248 | -495 | -530 | -214536 | | 0 | 0 | 0.56 | 0 | | | 0 | No, Vu<V |
| SLU 59 | 1458 | 1089 | -158 | -578541 | | 0 | 0 | 0.56 | 0 | | | 0 | No, Vu<V |
| SLU 1 | 1248 | -564 | -362 | -123341 | | 0 | 0 | 0.56 | 0 | | | 0 | No, Vu<V |
| SLU 1 | 1458 | 798 | -59 | -401794 | | 0 | 0 | 0.56 | 0 | | | 0 | No, Vu<V |
| SLU 53 | 1248 | -484 | -503 | -212953 | | 0 | 0 | 0.56 | 0 | | | 0 | No, Vu<V |
| SLU 53 | 1458 | 1186 | -85 | -578085 | | 0 | 0 | 0.56 | 0 | | | 0 | No, Vu<V |
| SLU 54 | 1248 | -482 | -503 | -212518 | | 0 | 0 | 0.56 | 0 | | | 0 | No, Vu<V |
| SLU 54 | 1458 | 1178 | -107 | -576654 | | 0 | 0 | 0.56 | 0 | | | 0 | No, Vu<V |
| SLU 56 | 1248 | -503 | -525 | -215913 | | 0 | 0 | 0.56 | 0 | | | 0 | No, Vu<V |
| SLU 56 | 1458 | 1102 | -112 | -583129 | | 0 | 0 | 0.56 | 0 | | | 0 | No, Vu<V |
| SLU 58 | 1248 | -497 | -530 | -214971 | | 0 | 0 | 0.56 | 0 | | | 0 | No, Vu<V |
| SLU 58 | 1458 | 1097 | -136 | -579972 | | 0 | 0 | 0.56 | 0 | | | 0 | No, Vu<V |
| SLU 61 | 1248 | -339 | -492 | -231580 | | 0 | 0 | 0.56 | 0 | | | 0 | No, Vu<V |
| SLU 61 | 1458 | 1359 | -97 | -593624 | | 0 | 0 | 0.56 | 0 | | | 0 | No, Vu<V |

### Verifica a taglio nel piano secondo D.M. 17-01-18 (N.T.C.) §7.8.2.2.2 con rottura per scorrimento in combinazioni sismiche, γM = 2

| Comb. | Quota | N | V par | M | σ0 | σN | l' | fvd | Vt scorr. | Vt fess.diag. | Vt,lim | c.s. | Verifica |
|---|---|---|---|---|---|---|---|---|---|---|---|---|---|
| SLV 13 | 1248 | -442 | 318 | -129022 | | 0 | 0 | 0.83 | 0 | | | 0 | No, Vu<V |
| SLV 13 | 1458 | 1943 | 2192 | -663276 | | 0 | 0 | 0.83 | 0 | | | 0 | No, Vu<V |
| SLV 14 | 1248 | -442 | 318 | -129022 | | 0 | 0 | 0.83 | 0 | | | 0 | No, Vu<V |
| SLV 14 | 1458 | 1943 | 2192 | -663276 | | 0 | 0 | 0.83 | 0 | | | 0 | No, Vu<V |
| SLV 10 | 1248 | -613 | 296 | -160258 | | 0 | 0 | 0.83 | 0 | | | 0 | No, Vu<V |
| SLV 10 | 1458 | 1381 | 1559 | -594135 | | 0 | 0 | 0.83 | 0 | | | 0 | No, Vu<V |
| SLV 9 | 1248 | -613 | 296 | -160258 | | 0 | 0 | 0.83 | 0 | | | 0 | No, Vu<V |
| SLV 9 | 1458 | 1381 | 1559 | -594135 | | 0 | 0 | 0.83 | 0 | | | 0 | No, Vu<V |
| SLV 12 | 1248 | -304 | -712 | -112677 | | 0 | 0 | 0.83 | 0 | | | 0 | No, Vu<V |
| SLV 12 | 1458 | 977 | -477 | -383961 | | 0 | 0 | 0.83 | 0 | | | 0 | No, Vu<V |
| SLV 11 | 1248 | -304 | -712 | -112677 | | 0 | 0 | 0.83 | 0 | | | 0 | No, Vu<V |
| SLV 11 | 1458 | 977 | -477 | -383961 | | 0 | 0 | 0.83 | 0 | | | 0 | No, Vu<V |
| SLD 1 | 1248 | -543 | -541 | -154306 | | 0 | 0 | 0.83 | 0 | | | 0 | No, Vu<V |
| SLD 1 | 1458 | 471 | -733 | -353167 | | 0 | 0 | 0.83 | 0 | | | 0 | No, Vu<V |
| SLV 8 | 1248 | -358 | -1033 | -125176 | | 0 | 0 | 0.83 | 0 | | | 0 | No, Vu<V |
| SLV 8 | 1458 | 374 | -1631 | -261646 | | 0 | 0 | 0.83 | 0 | | | 0 | No, Vu<V |
| SLV 6 | 1248 | -667 | -25 | -172757 | | 0 | 0 | 0.83 | 0 | | | 0 | No, Vu<V |
| SLV 6 | 1458 | 778 | 406 | -471819 | | 0 | 0 | 0.83 | 0 | | | 0 | No, Vu<V |
| SLV 7 | 1248 | -358 | -1033 | -125176 | | 0 | 0 | 0.83 | 0 | | | 0 | No, Vu<V |
| SLV 7 | 1458 | 374 | -1631 | -261646 | | 0 | 0 | 0.83 | 0 | | | 0 | No, Vu<V |

### Verifica a pressoflessione fuori piano D.M. 17-01-18 (N.T.C.)

quota 1406 Wa 0.05 denominatore 8 γM = 2

| Comb. | fd | Sa | σ0 | N | M | Mc | Coeff.s. | Verifica |
|---|---|---|---|---|---|---|---|---|
| SLV 2 | 14 | 0.53 | 0 | -182 | 38017 | 0 | 0 | No, e>t/2 |
| SLV 1 | 14 | 0.53 | 0 | -182 | 38017 | 0 | 0 | No, e>t/2 |
| SLV 8 | 14 | 0.53 | 0 | 174 | 38017 | 0 | 0 | No, Trazione |
| SLV 7 | 14 | 0.53 | 0 | 174 | 38017 | 0 | 0 | No, Trazione |
| SLV 4 | 14 | 0.53 | 0 | -270 | 38017 | 0 | 0 | No, e>t/2 |
| SLV 5 | 14 | 0.53 | 0 | 467 | 38017 | 0 | 0 | No, Trazione |
| SLV 10 | 14 | 0.53 | 0 | 936 | 38017 | 0 | 0 | No, Trazione |
| SLV 3 | 14 | 0.53 | 0 | -270 | 38017 | 0 | 0 | No, e>t/2 |
| SLV 6 | 14 | 0.53 | 0 | 467 | 38017 | 0 | 0 | No, Trazione |
| SLV 9 | 14 | 0.53 | 0 | 936 | 38017 | 0 | 0 | No, Trazione |

### Verifica dei meccanismi locali di collasso con analisi cinematica lineare

forza di aggancio al piano = 0 quota mezzeria = 1406 Wa = 0.05 Ta = 0.0596

| Comb. | N top | N base | V orto | α0 | M* | e* | a0* | aLim | Verifica |
|---|---|---|---|---|---|---|---|---|---|
| SLV 8 | 76 | -358 | 119 | 0 | 0 | 0 | 0 | 1505.645 | No, Trazione |
| SLV 10 | 437 | -613 | -115 | 0 | 0 | 0 | 0 | 1505.645 | No, Trazione |
| SLV 6 | 335 | -667 | -83 | 0 | 0 | 0 | 0 | 1505.645 | No, Trazione |
| SLV 1 | 125 | -623 | 24 | 0 | 0 | 0 | 0 | 879.274 | No, Trazione |
| SLV 5 | 335 | -667 | -83 | 0 | 0 | 0 | 0 | 1505.645 | No, Trazione |
| SLV 9 | 437 | -613 | -115 | 0 | 0 | 0 | 0 | 1505.645 | No, Trazione |
| SLV 2 | 125 | -623 | 24 | 0 | 0 | 0 | 0 | 879.274 | No, Trazione |
| SLV 7 | 76 | -358 | 119 | 0 | 0 | 0 | 0 | 1505.645 | No, Trazione |
| SLV 3 | 48 | -530 | 85 | 0 | 0 | 0 | 0 | 879.274 | No, Trazione |
| SLV 4 | 48 | -530 | 85 | 0 | 0 | 0 | 0 | 879.274 | No, Trazione |

### Tabella dei coefficienti di sicurezza minimi

| Stato limite | Coeff.s. | Comb. | Verifica |
|---|---|---|---|
| PF_SLU | 0 | SLU 84 | No |
| V_SLU | 0 | SLU 1 | No |
| PF_SLV | 0 | SLV 16 | No |
| V_SLV | 0 | SLD 1 | No |
| PFFP_SLV | 0 | SLV 16 | No |
| R_SLV | 0 | SLV 16 | No |

## Maschio 194

Verifiche condotte secondo D.M. 17-01-18 (N.T.C.)
Maschio considerato membratura sismica secondaria

### Dati geometrici

| X ini. | Y ini. | X fin. | Y fin. | Quota i. | Quota.s | l | Sp. | h netta | h ini. | h fin. | a | a.s.,sx | a.s.,dx |
|---|---|---|---|---|---|---|---|---|---|---|---|---|---|
| -1375.3 | 67.2 | -1375.3 | 90.6 | L6 | L7 | 23.4 | 28 | 316 | 316 | 316 | | | |

### Caratteristiche del materiale

(Circolare 7 21-01-19 C8.5.I) Muratura in mattoni pieni e malta di calce LC2_Corti

| fb | fk | fvk0 | fmedio | τ0 | fv0 | μ | ϕ | fv,lim | E | G | FC |
|---|---|---|---|---|---|---|---|---|---|---|---|
| 60 | | | 34.5 | 0.9 | 2 | 0.58 | 0.77 | 3.25 | 32000 | 12800 | 1.2 |

### Verifica a pressoflessione nel piano secondo D.M. 17-01-18 NTC §7.8.2.2.1 in combinazioni non sismiche, γM = 3

| Comb. | Quota | N | M | σ0 | Mu | c.s. | Verifica |
|---|---|---|---|---|---|---|---|
| SLU 57 | 1248 | -322 | 2566 | 0.49 | 3543 | 1.381 | Si |
| SLU 57 | 1458 | -514 | 10797 | 0 | 0 | 0 | No, e>l/2 |
| SLU 53 | 1248 | -335 | 2571 | 0.51 | 3679 | 1.431 | Si |
| SLU 53 | 1458 | -585 | 11592 | 0 | 0 | 0 | No, e>l/2 |
| SLU 56 | 1248 | -319 | 2562 | 0.49 | 3518 | 1.373 | Si |
| SLU 56 | 1458 | -501 | 10655 | 0 | 0 | 0 | No, e>l/2 |
| SLU 60 | 1248 | -350 | 2568 | 0.53 | 3830 | 1.492 | Si |
| SLU 60 | 1458 | -664 | 12473 | 0 | 0 | 0 | No, e>l/2 |
| SLU 61 | 1248 | -352 | 2571 | 0.54 | 3855 | 1.499 | Si |
| SLU 61 | 1458 | -677 | 12615 | 0 | 0 | 0 | No, e>l/2 |
| SLU 1 | 1248 | -253 | 1874 | 0.39 | 2819 | 1.505 | Si |
| SLU 1 | 1458 | -458 | 8984 | 0 | 0 | 0 | No, e>l/2 |
| SLU 54 | 1248 | -337 | 2574 | 0.51 | 3703 | 1.439 | Si |
| SLU 54 | 1458 | -598 | 11734 | 0 | 0 | 0 | No, e>l/2 |
| SLU 55 | 1248 | -331 | 2516 | 0.51 | 3640 | 1.447 | Si |
| SLU 55 | 1458 | -582 | 11530 | 0 | 0 | 0 | No, e>l/2 |
| SLU 59 | 1248 | -314 | 2505 | 0.48 | 3463 | 1.382 | Si |
| SLU 59 | 1458 | -490 | 10498 | 0 | 0 | 0 | No, e>l/2 |
| SLU 58 | 1248 | -312 | 2502 | 0.48 | 3438 | 1.374 | Si |
| SLU 58 | 1458 | -477 | 10356 | 0 | 0 | 0 | No, e>l/2 |

### Verifica a taglio nel piano secondo D.M. 17-01-18 (N.T.C.) §7.8.2.2.2 con rottura per scorrimento in combinazioni non sismiche, γM = 3

| Comb. | Quota | N | V par | M | σ0 | σN | l' | fvd | Vt scorr. | Vt fess.diag. | Vt,lim | c.s. | Verifica |
|---|---|---|---|---|---|---|---|---|---|---|---|---|---|
| SLU 59 | 1248 | -314 | 15 | 2505 | | 1 | 11.21 | 0.69 | 216 | | | 14.05 | Si |
| SLU 59 | 1458 | -490 | -79 | 10498 | | 0 | 0 | 0.56 | 0 | | | 0 | No, Vu<V |
| SLU 1 | 1248 | -253 | 7 | 1874 | | 0.7 | 12.89 | 0.65 | 234 | | | 33.62 | Si |
| SLU 1 | 1458 | -458 | -56 | 8984 | | 0 | 0 | 0.56 | 0 | | | 0 | No, Vu<V |
| SLU 55 | 1248 | -331 | 12 | 2516 | | 0.96 | 12.36 | 0.68 | 236 | | | 20.25 | Si |
| SLU 55 | 1458 | -582 | -77 | 11530 | | 0 | 0 | 0.56 | 0 | | | 0 | No, Vu<V |
| SLU 56 | 1248 | -319 | 15 | 2562 | | 1.03 | 11.08 | 0.69 | 215 | | | 14.04 | Si |
| SLU 56 | 1458 | -501 | -80 | 10655 | | 0 | 0 | 0.56 | 0 | | | 0 | No, Vu<V |
| SLU 54 | 1248 | -337 | 11 | 2574 | | 0.98 | 12.26 | 0.69 | 236 | | | 20.75 | Si |
| SLU 54 | 1458 | -598 | -78 | 11734 | | 0 | 0 | 0.56 | 0 | | | 0 | No, Vu<V |
| SLU 60 | 1248 | -350 | 10 | 2568 | | 0.95 | 13.13 | 0.68 | 251 | | | 24.94 | Si |
| SLU 60 | 1458 | -664 | -79 | 12473 | | 0 | 0 | 0.56 | 0 | | | 0 | No, Vu<V |
| SLU 58 | 1248 | -312 | 16 | 2502 | | 1.01 | 11.06 | 0.69 | 214 | | | 13.28 | Si |
| SLU 58 | 1458 | -477 | -79 | 10356 | | 0 | 0 | 0.56 | 0 | | | 0 | No, Vu<V |
| SLU 61 | 1248 | -352 | 9 | 2571 | | 0.95 | 13.25 | 0.68 | 253 | | | 27 | Si |
| SLU 61 | 1458 | -677 | -78 | 12615 | | 0 | 0 | 0.56 | 0 | | | 0 | No, Vu<V |
| SLU 57 | 1248 | -322 | 15 | 2566 | | 1.02 | 11.23 | 0.69 | 218 | | | 14.88 | Si |
| SLU 57 | 1458 | -514 | -79 | 10797 | | 0 | 0 | 0.56 | 0 | | | 0 | No, Vu<V |
| SLU 53 | 1248 | -335 | 12 | 2571 | | 0.99 | 12.12 | 0.69 | 233 | | | 19.37 | Si |
| SLU 53 | 1458 | -585 | -78 | 11592 | | 0 | 0 | 0.56 | 0 | | | 0 | No, Vu<V |

### Verifica a pressoflessione fuori piano D.M. 17-01-18 (N.T.C.)

quota 1406 Wa 0.05 denominatore 8 γM = 2

| Comb. | fd | Sa | σ0 | N | M | Mc | Coeff.s. | Verifica |
|---|---|---|---|---|---|---|---|---|
| SLV 2 | 14 | 0.53 | 0 | 1563 | 2722 | 0 | 0 | No, Trazione |
| SLV 6 | 14 | 0.53 | 0 | 1664 | 2722 | 0 | 0 | No, Trazione |
| SLV 9 | 14 | 0.53 | 0 | 769 | 2722 | 0 | 0 | No, Trazione |
| SLV 5 | 14 | 0.53 | 0 | 1664 | 2722 | 0 | 0 | No, Trazione |
| SLV 3 | 14 | 0.53 | 0 | 581 | 2722 | 0 | 0 | No, Trazione |
| SLV 1 | 14 | 0.53 | 0 | 1563 | 2722 | 0 | 0 | No, Trazione |
| SLV 10 | 14 | 0.53 | 0 | 769 | 2722 | 0 | 0 | No, Trazione |
| SLV 4 | 14 | 0.53 | 0 | 581 | 2722 | 0 | 0 | No, Trazione |
| SLV 13 | 14 | 0.53 | 2.17 | -1423 | 2722 | 16382 | 6.02 | Si |
| SLV 14 | 14 | 0.53 | 2.17 | -1423 | 2722 | 16382 | 6.02 | Si |

### Verifica dei meccanismi locali di collasso con analisi cinematica lineare

forza di aggancio al piano = 0 quota mezzeria = 1406 Wa = 0.05 Ta = 0.0596

| Comb. | N top | N base | V orto | α0 | M* | e* | a0* | aLim | Verifica |
|---|---|---|---|---|---|---|---|---|---|
| SLV 1 | 296 | 126 | -51 | 0 | 0 | 0 | 0 | 879.274 | No, Trazione |
| SLV 5 | 458 | 185 | -129 | 0 | 0 | 0 | 0 | 1505.645 | No, Trazione |
| SLV 8 | 646 | -536 | 124 | 0 | 0 | 0 | 0 | 1505.645 | No, Trazione |
| SLV 9 | 653 | 19 | -121 | 0 | 0 | 0 | 0 | 1505.645 | No, Trazione |
| SLV 6 | 458 | 185 | -129 | 0 | 0 | 0 | 0 | 1505.645 | No, Trazione |
| SLV 2 | 296 | 126 | -51 | 0 | 0 | 0 | 0 | 879.274 | No, Trazione |
| SLV 10 | 653 | 19 | -121 | 0 | 0 | 0 | 0 | 1505.645 | No, Trazione |
| SLV 4 | 352 | -90 | 25 | 0 | 0 | 0 | 0 | 879.274 | No, Trazione |
| SLV 3 | 352 | -90 | 25 | 0 | 0 | 0 | 0 | 879.274 | No, Trazione |
| SLV 7 | 646 | -536 | 124 | 0 | 0 | 0 | 0 | 1505.645 | No, Trazione |

### Tabella dei coefficienti di sicurezza minimi

| Stato limite | Coeff.s. | Comb. | Verifica |
|---|---|---|---|
| PF_SLU | 0 | SLU 1 | No |
| V_SLU | 0 | SLU 1 | No |
| PFFP_SLV | 0 | SLV 10 | No |
| R_SLV | 0 | SLV 16 | No |

## Maschio 195

Verifiche condotte secondo D.M. 17-01-18 (N.T.C.)

### Dati geometrici

| X ini. | Y ini. | X fin. | Y fin. | Quota i. | Quota.s | l | Sp. | h netta | h ini. | h fin. | a | a.s.,sx | a.s.,dx |
|---|---|---|---|---|---|---|---|---|---|---|---|---|---|
| -1375.3 | -349.9 | -1375.3 | -22.8 | L6 | L7 | 327.1 | 28 | 316 | 316 | 316 | | | |

### Caratteristiche del materiale

(Circolare 7 21-01-19 C8.5.I) Muratura in mattoni pieni e malta di calce LC2_Corti

| fb | fk | fvk0 | fmedio | τ0 | fv0 | μ | ϕ | fv,lim | E | G | FC |
|---|---|---|---|---|---|---|---|---|---|---|---|
| 60 | | | 34.5 | 0.9 | 2 | 0.58 | 0.77 | 3.25 | 32000 | 12800 | 1.2 |

### Verifica a pressoflessione nel piano secondo D.M. 17-01-18 NTC §7.8.2.2.1 in combinazioni non sismiche, γM = 3

| Comb. | Quota | N | M | σ0 | Mu | c.s. | Verifica |
|---|---|---|---|---|---|---|---|
| SLU 57 | 1248 | -501 | -215478 | 0 | 0 | 0 | No, e>l/2 |
| SLU 57 | 1458 | 1095 | -581697 | 0 | 0 | 0 | No, Trazione |
| SLU 54 | 1248 | -482 | -212517 | 0 | 0 | 0 | No, e>l/2 |
| SLU 54 | 1458 | 1178 | -576653 | 0 | 0 | 0 | No, Trazione |
| SLU 61 | 1248 | -339 | -231579 | 0 | 0 | 0 | No, e>l/2 |
| SLU 61 | 1458 | 1359 | -593623 | 0 | 0 | 0 | No, Trazione |
| SLU 55 | 1248 | -474 | -211285 | 0 | 0 | 0 | No, e>l/2 |
| SLU 55 | 1458 | 1168 | -572543 | 0 | 0 | 0 | No, Trazione |
| SLU 56 | 1248 | -503 | -215913 | 0 | 0 | 0 | No, e>l/2 |
| SLU 56 | 1458 | 1102 | -583128 | 0 | 0 | 0 | No, Trazione |
| SLU 53 | 1248 | -484 | -212952 | 0 | 0 | 0 | No, e>l/2 |
| SLU 53 | 1458 | 1186 | -578084 | 0 | 0 | 0 | No, Trazione |
| SLU 60 | 1248 | -341 | -232014 | 0 | 0 | 0 | No, e>l/2 |
| SLU 60 | 1458 | 1366 | -595054 | 0 | 0 | 0 | No, Trazione |
| SLU 58 | 1248 | -497 | -214970 | 0 | 0 | 0 | No, e>l/2 |
| SLU 58 | 1458 | 1097 | -579971 | 0 | 0 | 0 | No, Trazione |
| SLU 1 | 1248 | -564 | -123341 | 0 | 0 | 0 | No, e>l/2 |
| SLU 1 | 1458 | 798 | -401793 | 0 | 0 | 0 | No, Trazione |
| SLU 59 | 1248 | -495 | -214535 | 0 | 0 | 0 | No, e>l/2 |
| SLU 59 | 1458 | 1089 | -578540 | 0 | 0 | 0 | No, Trazione |

### Verifica a pressoflessione nel piano secondo D.M. 17-01-18 NTC §7.8.2.2.1 in combinazioni sismiche, γM = 2

| Comb. | Quota | N | M | σ0 | Mu | c.s. | Verifica |
|---|---|---|---|---|---|---|---|
| SLV 14 | 1248 | -445 | -128279 | 0 | 0 | 0 | No, e>l/2 |
| SLV 14 | 1458 | 1945 | -663123 | 0 | 0 | 0 | No, Trazione |
| SLV 12 | 1248 | -308 | -113069 | 0 | 0 | 0 | No, e>l/2 |
| SLV 12 | 1458 | 975 | -383226 | 0 | 0 | 0 | No, Trazione |
| SLV 8 | 1248 | -359 | -125913 | 0 | 0 | 0 | No, e>l/2 |
| SLV 8 | 1458 | 371 | -261116 | 0 | 0 | 0 | No, Trazione |
| SLV 10 | 1248 | -612 | -159521 | 0 | 0 | 0 | No, e>l/2 |
| SLV 10 | 1458 | 1383 | -594663 | 0 | 0 | 0 | No, Trazione |
| SLV 13 | 1248 | -445 | -128279 | 0 | 0 | 0 | No, e>l/2 |
| SLV 13 | 1458 | 1945 | -663123 | 0 | 0 | 0 | No, Trazione |
| SLV 11 | 1248 | -308 | -113069 | 0 | 0 | 0 | No, e>l/2 |
| SLV 11 | 1458 | 975 | -383226 | 0 | 0 | 0 | No, Trazione |
| SLD 1 | 1248 | -541 | -154455 | 0 | 0 | 0 | No, e>l/2 |
| SLD 1 | 1458 | 471 | -353395 | 0 | 0 | 0 | No, Trazione |
| SLV 7 | 1248 | -359 | -125913 | 0 | 0 | 0 | No, e>l/2 |
| SLV 7 | 1458 | 371 | -261116 | 0 | 0 | 0 | No, Trazione |
| SLV 9 | 1248 | -612 | -159521 | 0 | 0 | 0 | No, e>l/2 |
| SLV 9 | 1458 | 1383 | -594663 | 0 | 0 | 0 | No, Trazione |
| SLV 6 | 1248 | -664 | -172365 | 0 | 0 | 0 | No, e>l/2 |
| SLV 6 | 1458 | 779 | -472553 | 0 | 0 | 0 | No, Trazione |

### Verifica a taglio nel piano secondo D.M. 17-01-18 (N.T.C.) §7.8.2.2.2 con rottura per scorrimento in combinazioni non sismiche, γM = 3

| Comb. | Quota | N | V par | M | σ0 | σN | l' | fvd | Vt scorr. | Vt fess.diag. | Vt,lim | c.s. | Verifica |
|---|---|---|---|---|---|---|---|---|---|---|---|---|---|
| SLU 58 | 1248 | -497 | -530 | -214970 | | 0 | 0 | 0.56 | 0 | | | 0 | No, Vu<V |
| SLU 58 | 1458 | 1097 | -136 | -579971 | | 0 | 0 | 0.56 | 0 | | | 0 | No, Vu<V |

| Comb. | Quota | N | V par | M | σ0 | σN | l' | fvd | Vt scorr. | Vt fess.diag. | Vt,lim | c.s. | Verifica |
|---|---|---|---|---|---|---|---|---|---|---|---|---|---|
| SLU 57 | 1248 | -501 | -526 | -215478 | | 0 | 0 | 0.56 | 0 | | | 0 | No, Vu<V |
| SLU 57 | 1458 | 1095 | -134 | -581697 | | 0 | 0 | 0.56 | 0 | | | 0 | No, Vu<V |
| SLU 56 | 1248 | -503 | -525 | -215913 | | 0 | 0 | 0.56 | 0 | | | 0 | No, Vu<V |
| SLU 56 | 1458 | 1102 | -112 | -583128 | | 0 | 0 | 0.56 | 0 | | | 0 | No, Vu<V |
| SLU 61 | 1248 | -339 | -492 | -231579 | | 0 | 0 | 0.56 | 0 | | | 0 | No, Vu<V |
| SLU 61 | 1458 | 1359 | -97 | -593623 | | 0 | 0 | 0.56 | 0 | | | 0 | No, Vu<V |
| SLU 59 | 1248 | -495 | -530 | -214535 | | 0 | 0 | 0.56 | 0 | | | 0 | No, Vu<V |
| SLU 59 | 1458 | 1089 | -158 | -578540 | | 0 | 0 | 0.56 | 0 | | | 0 | No, Vu<V |
| SLU 1 | 1248 | -564 | -362 | -123341 | | 0 | 0 | 0.56 | 0 | | | 0 | No, Vu<V |
| SLU 1 | 1458 | 798 | -59 | -401793 | | 0 | 0 | 0.56 | 0 | | | 0 | No, Vu<V |
| SLU 55 | 1248 | -474 | -508 | -211285 | | 0 | 0 | 0.56 | 0 | | | 0 | No, Vu<V |
| SLU 55 | 1458 | 1168 | -146 | -572543 | | 0 | 0 | 0.56 | 0 | | | 0 | No, Vu<V |
| SLU 54 | 1248 | -482 | -503 | -212517 | | 0 | 0 | 0.56 | 0 | | | 0 | No, Vu<V |
| SLU 54 | 1458 | 1178 | -107 | -576653 | | 0 | 0 | 0.56 | 0 | | | 0 | No, Vu<V |
| SLU 53 | 1248 | -484 | -503 | -212952 | | 0 | 0 | 0.56 | 0 | | | 0 | No, Vu<V |
| SLU 53 | 1458 | 1186 | -85 | -578084 | | 0 | 0 | 0.56 | 0 | | | 0 | No, Vu<V |
| SLU 60 | 1248 | -341 | -492 | -232014 | | 0 | 0 | 0.56 | 0 | | | 0 | No, Vu<V |
| SLU 60 | 1458 | 1366 | -74 | -595054 | | 0 | 0 | 0.56 | 0 | | | 0 | No, Vu<V |

### Verifica a taglio nel piano secondo D.M. 17-01-18 (N.T.C.) §7.8.2.2.2 con rottura per scorrimento in combinazioni sismiche, γM = 2

| Comb. | Quota | N | V par | M | σ0 | σN | l' | fvd | Vt scorr. | Vt fess.diag. | Vt,lim | c.s. | Verifica |
|---|---|---|---|---|---|---|---|---|---|---|---|---|---|
| SLV 9 | 1248 | -612 | 283 | -159521 | | 0 | 0 | 0.83 | 0 | | | 0 | No, Vu<V |
| SLV 9 | 1458 | 1383 | 1560 | -594663 | | 0 | 0 | 0.83 | 0 | | | 0 | No, Vu<V |
| SLV 10 | 1248 | -612 | 283 | -159521 | | 0 | 0 | 0.83 | 0 | | | 0 | No, Vu<V |
| SLV 10 | 1458 | 1383 | 1560 | -594663 | | 0 | 0 | 0.83 | 0 | | | 0 | No, Vu<V |
| SLD 1 | 1248 | -541 | -581 | -154455 | | 0 | 0 | 0.83 | 0 | | | 0 | No, Vu<V |
| SLD 1 | 1458 | 471 | -732 | -353395 | | 0 | 0 | 0.83 | 0 | | | 0 | No, Vu<V |
| SLV 6 | 1248 | -664 | -92 | -172365 | | 0 | 0 | 0.83 | 0 | | | 0 | No, Vu<V |
| SLV 6 | 1458 | 779 | 408 | -472553 | | 0 | 0 | 0.83 | 0 | | | 0 | No, Vu<V |
| SLV 7 | 1248 | -359 | -1020 | -125913 | | 0 | 0 | 0.83 | 0 | | | 0 | No, Vu<V |
| SLV 7 | 1458 | 371 | -1632 | -261116 | | 0 | 0 | 0.83 | 0 | | | 0 | No, Vu<V |
| SLV 14 | 1248 | -445 | 395 | -128279 | | 0 | 0 | 0.83 | 0 | | | 0 | No, Vu<V |
| SLV 14 | 1458 | 1945 | 2191 | -663123 | | 0 | 0 | 0.83 | 0 | | | 0 | No, Vu<V |
| SLV 12 | 1248 | -308 | -646 | -113069 | | 0 | 0 | 0.83 | 0 | | | 0 | No, Vu<V |
| SLV 12 | 1458 | 975 | -480 | -383226 | | 0 | 0 | 0.83 | 0 | | | 0 | No, Vu<V |
| SLV 8 | 1248 | -359 | -1020 | -125913 | | 0 | 0 | 0.83 | 0 | | | 0 | No, Vu<V |
| SLV 8 | 1458 | 371 | -1632 | -261116 | | 0 | 0 | 0.83 | 0 | | | 0 | No, Vu<V |
| SLV 11 | 1248 | -308 | -646 | -113069 | | 0 | 0 | 0.83 | 0 | | | 0 | No, Vu<V |
| SLV 11 | 1458 | 975 | -480 | -383226 | | 0 | 0 | 0.83 | 0 | | | 0 | No, Vu<V |
| SLV 13 | 1248 | -445 | 395 | -128279 | | 0 | 0 | 0.83 | 0 | | | 0 | No, Vu<V |
| SLV 13 | 1458 | 1945 | 2191 | -663123 | | 0 | 0 | 0.83 | 0 | | | 0 | No, Vu<V |

### Verifica a pressoflessione fuori piano D.M. 17-01-18 (N.T.C.)

quota 1406 Wa 0.05 denominatore 8 γM = 2

| Comb. | fd | Sa | σ0 | N | M | Mc | Coeff.s. | Verifica |
|---|---|---|---|---|---|---|---|---|
| SLV 4 | 14 | 0.53 | 0 | -274 | 38017 | 0 | 0 | No, e>t/2 |
| SLV 2 | 14 | 0.53 | 0 | -183 | 38017 | 0 | 0 | No, e>t/2 |
| SLV 9 | 14 | 0.53 | 0 | 941 | 38017 | 0 | 0 | No, Trazione |
| SLV 5 | 14 | 0.53 | 0 | 471 | 38017 | 0 | 0 | No, Trazione |
| SLV 10 | 14 | 0.53 | 0 | 941 | 38017 | 0 | 0 | No, Trazione |
| SLV 3 | 14 | 0.53 | 0 | -274 | 38017 | 0 | 0 | No, e>t/2 |
| SLV 1 | 14 | 0.53 | 0 | -183 | 38017 | 0 | 0 | No, e>t/2 |
| SLV 7 | 14 | 0.53 | 0 | 168 | 38017 | 0 | 0 | No, Trazione |
| SLV 6 | 14 | 0.53 | 0 | 471 | 38017 | 0 | 0 | No, Trazione |
| SLV 8 | 14 | 0.53 | 0 | 168 | 38017 | 0 | 0 | No, Trazione |

### Verifica dei meccanismi locali di collasso con analisi cinematica lineare

forza di aggancio al piano = 0 quota mezzeria = 1406 Wa = 0.05 Ta = 0.0596

| Comb. | N top | N base | V orto | α0 | M* | e* | a0* | aLim | Verifica |
|---|---|---|---|---|---|---|---|---|---|
| SLV 9 | 435 | -612 | -115 | 0 | 0 | 0 | 0 | 1505.645 | No, Trazione |
| SLV 10 | 435 | -612 | -115 | 0 | 0 | 0 | 0 | 1505.645 | No, Trazione |
| SLV 1 | 126 | -617 | 24 | 0 | 0 | 0 | 0 | 879.274 | No, Trazione |
| SLV 3 | 49 | -526 | 85 | 0 | 0 | 0 | 0 | 879.274 | No, Trazione |
| SLV 5 | 334 | -664 | -84 | 0 | 0 | 0 | 0 | 1505.645 | No, Trazione |
| SLV 2 | 126 | -617 | 24 | 0 | 0 | 0 | 0 | 879.274 | No, Trazione |
| SLV 7 | 78 | -359 | 119 | 0 | 0 | 0 | 0 | 1505.645 | No, Trazione |
| SLV 8 | 78 | -359 | 119 | 0 | 0 | 0 | 0 | 1505.645 | No, Trazione |
| SLV 4 | 49 | -526 | 85 | 0 | 0 | 0 | 0 | 879.274 | No, Trazione |
| SLV 6 | 334 | -664 | -84 | 0 | 0 | 0 | 0 | 1505.645 | No, Trazione |

### Tabella dei coefficienti di sicurezza minimi

| Stato limite | Coeff.s. | Comb. | Verifica |
|---|---|---|---|
| PF_SLU | 0 | SLU 84 | No |
| V_SLU | 0 | SLU 1 | No |
| PF_SLV | 0 | SLV 16 | No |
| V_SLV | 0 | SLD 1 | No |
| PFFP_SLV | 0 | SLV 16 | No |
| R_SLV | 0 | SLV 16 | No |

## Maschio 196

Verifiche condotte secondo D.M. 17-01-18 (N.T.C.)
Maschio considerato membratura sismica secondaria

## Dati geometrici

| X ini. | Y ini. | X fin. | Y fin. | Quota i. | Quota.s | l | Sp. | h netta | h ini. | h fin. | a | a.s.,sx | a.s.,dx |
|---|---|---|---|---|---|---|---|---|---|---|---|---|---|
| -1375.3 | 67.2 | -1375.3 | 90.6 | L6 | L7 | 23.4 | 28 | 316 | 316 | 316 | | | |

## Caratteristiche del materiale

(Circolare 7 21-01-19 C8.5.I) Muratura in mattoni pieni e malta di calce LC2_Corti

| fb | fk | fvk0 | fmedio | τ0 | fv0 | μ | ϕ | fv,lim | E | G | FC |
|---|---|---|---|---|---|---|---|---|---|---|---|
| 60 | | | 34.5 | 0.9 | 2 | 0.58 | 0.77 | 3.25 | 32000 | 12800 | 1.2 |

## Verifica a pressoflessione nel piano secondo D.M. 17-01-18 NTC §7.8.2.2.1 in combinazioni non sismiche, γM = 3

| Comb. | Quota | N | M | σ0 | Mu | c.s. | Verifica |
|---|---|---|---|---|---|---|---|
| SLU 55 | 1248 | -18 | 1823 | 0 | 0 | 0 | No, e>l/2 |
| SLU 55 | 1458 | -777 | 11278 | 0 | 0 | 0 | No, e>l/2 |
| SLU 57 | 1248 | -26 | 1875 | 0 | 0 | 0 | No, e>l/2 |
| SLU 57 | 1458 | -693 | 10528 | 0 | 0 | 0 | No, e>l/2 |
| SLU 60 | 1248 | -12 | 1844 | 0 | 0 | 0 | No, e>l/2 |
| SLU 60 | 1458 | -877 | 12223 | 0 | 0 | 0 | No, e>l/2 |
| SLU 58 | 1248 | -26 | 1813 | 0 | 0 | 0 | No, e>l/2 |
| SLU 58 | 1458 | -649 | 10086 | 0 | 0 | 0 | No, e>l/2 |
| SLU 56 | 1248 | -27 | 1870 | 0 | 0 | 0 | No, e>l/2 |
| SLU 56 | 1458 | -678 | 10383 | 0 | 0 | 0 | No, e>l/2 |
| SLU 59 | 1248 | -25 | 1819 | 0 | 0 | 0 | No, e>l/2 |
| SLU 59 | 1458 | -664 | 10231 | 0 | 0 | 0 | No, e>l/2 |
| SLU 1 | 1248 | -10 | 1359 | 0 | 0 | 0 | No, e>l/2 |
| SLU 1 | 1458 | -611 | 8803 | 0 | 0 | 0 | No, e>l/2 |
| SLU 61 | 1248 | -11 | 1850 | 0 | 0 | 0 | No, e>l/2 |
| SLU 61 | 1458 | -892 | 12368 | 0 | 0 | 0 | No, e>l/2 |
| SLU 54 | 1248 | -19 | 1875 | 0 | 0 | 0 | No, e>l/2 |
| SLU 54 | 1458 | -795 | 11478 | 0 | 0 | 0 | No, e>l/2 |
| SLU 53 | 1248 | -20 | 1870 | 0 | 0 | 0 | No, e>l/2 |
| SLU 53 | 1458 | -780 | 11333 | 0 | 0 | 0 | No, e>l/2 |

## Verifica a taglio nel piano secondo D.M. 17-01-18 (N.T.C.) §7.8.2.2.2 con rottura per scorrimento in combinazioni non sismiche, γM = 3

| Comb. | Quota | N | V par | M | σ0 | σN | l' | fvd | Vt scorr. | Vt fess.diag. | Vt,lim | c.s. | Verifica |
|---|---|---|---|---|---|---|---|---|---|---|---|---|---|
| SLU 56 | 1248 | -27 | 52 | 1870 | | 0 | 0 | 0.56 | 0 | | | 0 | No, Vu<V |
| SLU 56 | 1458 | -678 | -47 | 10383 | | 0 | 0 | 0.56 | 0 | | | 0 | No, Vu<V |
| SLU 54 | 1248 | -19 | 56 | 1875 | | 0 | 0 | 0.56 | 0 | | | 0 | No, Vu<V |
| SLU 54 | 1458 | -795 | -46 | 11478 | | 0 | 0 | 0.56 | 0 | | | 0 | No, Vu<V |
| SLU 55 | 1248 | -18 | 56 | 1823 | | 0 | 0 | 0.56 | 0 | | | 0 | No, Vu<V |
| SLU 55 | 1458 | -777 | -45 | 11278 | | 0 | 0 | 0.56 | 0 | | | 0 | No, Vu<V |
| SLU 57 | 1248 | -26 | 53 | 1875 | | 0 | 0 | 0.56 | 0 | | | 0 | No, Vu<V |
| SLU 57 | 1458 | -693 | -46 | 10528 | | 0 | 0 | 0.56 | 0 | | | 0 | No, Vu<V |
| SLU 60 | 1248 | -12 | 61 | 1844 | | 0 | 0 | 0.56 | 0 | | | 0 | No, Vu<V |
| SLU 60 | 1458 | -877 | -46 | 12223 | | 0 | 0 | 0.56 | 0 | | | 0 | No, Vu<V |
| SLU 1 | 1248 | -10 | 43 | 1359 | | 0 | 0 | 0.56 | 0 | | | 0 | No, Vu<V |
| SLU 1 | 1458 | -611 | -33 | 8803 | | 0 | 0 | 0.56 | 0 | | | 0 | No, Vu<V |
| SLU 53 | 1248 | -20 | 56 | 1870 | | 0 | 0 | 0.56 | 0 | | | 0 | No, Vu<V |
| SLU 53 | 1458 | -780 | -46 | 11333 | | 0 | 0 | 0.56 | 0 | | | 0 | No, Vu<V |
| SLU 61 | 1248 | -11 | 61 | 1850 | | 0 | 0 | 0.56 | 0 | | | 0 | No, Vu<V |
| SLU 61 | 1458 | -892 | -46 | 12368 | | 0 | 0 | 0.56 | 0 | | | 0 | No, Vu<V |
| SLU 58 | 1248 | -26 | 52 | 1813 | | 0 | 0 | 0.56 | 0 | | | 0 | No, Vu<V |
| SLU 58 | 1458 | -649 | -47 | 10086 | | 0 | 0 | 0.56 | 0 | | | 0 | No, Vu<V |
| SLU 59 | 1248 | -25 | 52 | 1819 | | 0 | 0 | 0.56 | 0 | | | 0 | No, Vu<V |
| SLU 59 | 1458 | -664 | -46 | 10231 | | 0 | 0 | 0.56 | 0 | | | 0 | No, Vu<V |

## Verifica a pressoflessione fuori piano D.M. 17-01-18 (N.T.C.)

quota 1406 Wa 0.05 denominatore 8 γM = 2

| Comb. | fd | Sa | σ0 | N | M | Mc | Coeff.s. | Verifica |
|---|---|---|---|---|---|---|---|---|
| SLV 10 | 14 | 0.53 | 0 | 900 | 2723 | 0 | 0 | No, Trazione |
| SLV 9 | 14 | 0.53 | 0 | 900 | 2723 | 0 | 0 | No, Trazione |
| SLV 2 | 14 | 0.53 | 0 | 1893 | 2723 | 0 | 0 | No, Trazione |
| SLV 4 | 14 | 0.53 | 0 | 655 | 2723 | 0 | 0 | No, Trazione |
| SLV 6 | 14 | 0.53 | 0 | 2025 | 2723 | 0 | 0 | No, Trazione |
| SLV 5 | 14 | 0.53 | 0 | 2025 | 2723 | 0 | 0 | No, Trazione |
| SLV 1 | 14 | 0.53 | 0 | 1893 | 2723 | 0 | 0 | No, Trazione |
| SLV 3 | 14 | 0.53 | 0 | 655 | 2723 | 0 | 0 | No, Trazione |
| SLV 13 | 14 | 0.53 | 2.83 | -1855 | 2723 | 19963 | 7.33 | Si |
| SLV 14 | 14 | 0.53 | 2.83 | -1855 | 2723 | 19963 | 7.33 | Si |

## Verifica dei meccanismi locali di collasso con analisi cinematica lineare

forza di aggancio al piano = 0 quota mezzeria = 1406 Wa = 0.05 Ta = 0.0596

| Comb. | N top | N base | V orto | α0 | M* | e* | a0* | aLim | Verifica |
|---|---|---|---|---|---|---|---|---|---|
| SLV 9 | 658 | 577 | -121 | 0 | 0 | 0 | 0 | 1505.645 | No, Trazione |
| SLV 8 | 648 | -598 | 124 | 0 | 0 | 0 | 0 | 1505.645 | No, Trazione |
| SLV 1 | 298 | -89 | -51 | 0 | 0 | 0 | 0 | 879.274 | No, Trazione |
| SLV 2 | 298 | -89 | -51 | 0 | 0 | 0 | 0 | 879.274 | No, Trazione |
| SLV 5 | 462 | 437 | -129 | 0 | 0 | 0 | 0 | 1505.645 | No, Trazione |
| SLV 4 | 354 | -400 | 25 | 0 | 0 | 0 | 0 | 879.274 | No, Trazione |
| SLV 7 | 648 | -598 | 124 | 0 | 0 | 0 | 0 | 1505.645 | No, Trazione |
| SLV 6 | 462 | 437 | -129 | 0 | 0 | 0 | 0 | 1505.645 | No, Trazione |
| SLV 3 | 354 | -400 | 25 | 0 | 0 | 0 | 0 | 879.274 | No, Trazione |
| SLV 10 | 658 | 577 | -121 | 0 | 0 | 0 | 0 | 1505.645 | No, Trazione |

## Tabella dei coefficienti di sicurezza minimi

| Stato limite | Coeff.s. | Comb. | Verifica |
|---|---|---|---|
| PF_SLU | 0 | SLU 1 | No |

| Stato limite | Coeff.s. | Comb. | Verifica |
|---|---|---|---|
| V_SLU | 0 | SLU 1 | No |
| PFFP_SLV | 0 | SLV 10 | No |
| R_SLV | 0 | SLV 16 | No |

## Maschio 197

Verifiche condotte secondo D.M. 17-01-18 (N.T.C.)

### Dati geometrici

| X ini. | Y ini. | X fin. | Y fin. | Quota i. | Quota.s | l | Sp. | h netta | h ini. | h fin. | a | a.s.,sx | a.s.,dx |
|---|---|---|---|---|---|---|---|---|---|---|---|---|---|
| -1975.8 | 666.1 | -1771.8 | 666.1 | L6 | L7 | 204 | 28 | 316 | 316 | 316 | | | |

### Caratteristiche del materiale

(Circolare 7 21-01-19 C8.5.I) Muratura in mattoni pieni e malta di calce LC2_Corti

| fb | fk | fvk0 | fmedio | τ0 | fv0 | μ | ϕ | fv,lim | E | G | FC |
|---|---|---|---|---|---|---|---|---|---|---|---|
| 60 | | | 34.5 | 0.9 | 2 | 0.58 | 0.77 | 3.25 | 32000 | 12800 | 1.2 |

### Verifica a pressoflessione nel piano secondo D.M. 17-01-18 NTC §7.8.2.2.1 in combinazioni non sismiche, γM = 3

| Comb. | Quota | N | M | σ0 | Mu | c.s. | Verifica |
|---|---|---|---|---|---|---|---|
| SLU 57 | 1338 | 854 | 189360 | 0 | 0 | 0 | No, Trazione |
| SLU 57 | 1518 | 3428 | 638865 | 0 | 0 | 0 | No, Trazione |
| SLU 1 | 1338 | -1664 | 42926 | 0.29 | 163633 | 3.812 | Si |
| SLU 1 | 1518 | 323 | 175531 | 0 | 0 | 0 | No, Trazione |
| SLU 61 | 1338 | -2276 | 31898 | 0.4 | 220813 | 6.922 | Si |
| SLU 61 | 1518 | 297 | 200410 | 0 | 0 | 0 | No, Trazione |
| SLU 59 | 1338 | 1695 | 197531 | 0 | 0 | 0 | No, Trazione |
| SLU 59 | 1518 | 4268 | 665320 | 0 | 0 | 0 | No, Trazione |
| SLU 55 | 1338 | -312 | 114862 | 0 | 0 | 0 | No, e>l/2 |
| SLU 55 | 1518 | 2262 | 431730 | 0 | 0 | 0 | No, Trazione |
| SLU 54 | 1338 | -1155 | 108322 | 0.2 | 114897 | 1.061 | Si |
| SLU 54 | 1518 | 1418 | 405152 | 0 | 0 | 0 | No, Trazione |
| SLU 58 | 1338 | 1690 | 199977 | 0 | 0 | 0 | No, Trazione |
| SLU 58 | 1518 | 4264 | 665134 | 0 | 0 | 0 | No, Trazione |
| SLU 56 | 1338 | 850 | 191807 | 0 | 0 | 0 | No, Trazione |
| SLU 56 | 1518 | 3423 | 638679 | 0 | 0 | 0 | No, Trazione |
| SLU 60 | 1338 | -2281 | 34345 | 0.4 | 221227 | 6.441 | Si |
| SLU 60 | 1518 | 293 | 200224 | 0 | 0 | 0 | No, Trazione |
| SLU 53 | 1338 | -1160 | 110769 | 0.2 | 115332 | 1.041 | Si |
| SLU 53 | 1518 | 1414 | 404966 | 0 | 0 | 0 | No, Trazione |

### Verifica a pressoflessione nel piano secondo D.M. 17-01-18 NTC §7.8.2.2.1 in combinazioni sismiche, γM = 2

| Comb. | Quota | N | M | σ0 | Mu | c.s. | Verifica |
|---|---|---|---|---|---|---|---|
| SLV 3 | 1338 | -2227 | -184323 | 0.39 | 219916 | 1.193 | Si |
| SLV 3 | 1518 | -366 | 145942 | 0 | 0 | 0 | No, e>l/2 |
| SLV 9 | 1338 | 671 | 335760 | 0 | 0 | 0 | No, Trazione |
| SLV 9 | 1518 | 2588 | 406302 | 0 | 0 | 0 | No, Trazione |
| SLV 4 | 1338 | -2227 | -184323 | 0.39 | 219916 | 1.193 | Si |
| SLV 4 | 1518 | -366 | 145942 | 0 | 0 | 0 | No, e>l/2 |
| SLV 6 | 1338 | 536 | 239022 | 0 | 0 | 0 | No, Trazione |
| SLV 6 | 1518 | 2349 | 405031 | 0 | 0 | 0 | No, Trazione |
| SLV 5 | 1338 | 536 | 239022 | 0 | 0 | 0 | No, Trazione |
| SLV 5 | 1518 | 2349 | 405031 | 0 | 0 | 0 | No, Trazione |
| SLD 1 | 1338 | -1256 | 8347 | 0.22 | 125812 | 15.074 | Si |
| SLD 1 | 1518 | 655 | 230879 | 0 | 0 | 0 | No, Trazione |
| SLV 14 | 1338 | -574 | 281439 | 0 | 0 | 0 | No, e>l/2 |
| SLV 14 | 1518 | 1553 | 269074 | 0 | 0 | 0 | No, Trazione |
| SLV 13 | 1338 | -574 | 281439 | 0 | 0 | 0 | No, e>l/2 |
| SLV 13 | 1518 | 1553 | 269074 | 0 | 0 | 0 | No, Trazione |
| SLV 10 | 1338 | 671 | 335760 | 0 | 0 | 0 | No, Trazione |
| SLV 10 | 1518 | 2588 | 406302 | 0 | 0 | 0 | No, Trazione |
| SLV 2 | 1338 | -1025 | -41023 | 0.18 | 103000 | 2.511 | Si |
| SLV 2 | 1518 | 759 | 264837 | 0 | 0 | 0 | No, Trazione |

### Verifica a taglio nel piano secondo D.M. 17-01-18 (N.T.C.) §7.8.2.2.2 con rottura per scorrimento in combinazioni non sismiche, γM = 3

| Comb. | Quota | N | V par | M | σ0 | σN | l' | fvd | Vt scorr. | Vt fess.diag. | Vt,lim | c.s. | Verifica |
|---|---|---|---|---|---|---|---|---|---|---|---|---|---|
| SLU 55 | 1338 | -312 | -1718 | 114862 | | 0 | 0 | 0.56 | 0 | | | 0 | No, Vu<V |
| SLU 55 | 1518 | 2262 | -1718 | 431730 | | 0 | 0 | 0.56 | 0 | | | 0 | No, Vu<V |
| SLU 56 | 1338 | 850 | -2441 | 191807 | | 0 | 0 | 0.56 | 0 | | | 0 | No, Vu<V |
| SLU 56 | 1518 | 3423 | -2441 | 638679 | | 0 | 0 | 0.56 | 0 | | | 0 | No, Vu<V |
| SLU 54 | 1338 | -1155 | -1607 | 108322 | | 1.67 | 24.67 | 0.78 | 538 | | | 0.33 | No, Vu<V |
| SLU 54 | 1518 | 1418 | -1607 | 405152 | | 0 | 0 | 0.56 | 0 | | | 0 | No, Vu<V |
| SLU 59 | 1338 | 1695 | -2557 | 197531 | | 0 | 0 | 0.56 | 0 | | | 0 | No, Vu<V |
| SLU 59 | 1518 | 4268 | -2557 | 665320 | | 0 | 0 | 0.56 | 0 | | | 0 | No, Vu<V |
| SLU 61 | 1338 | -2276 | -894 | 31898 | | 0.4 | 204 | 0.61 | 3477 | | | 3.89 | Si |
| SLU 61 | 1518 | 297 | -894 | 200410 | | 0 | 0 | 0.56 | 0 | | | 0 | No, Vu<V |
| SLU 58 | 1338 | 1690 | -2542 | 199977 | | 0 | 0 | 0.56 | 0 | | | 0 | No, Vu<V |
| SLU 58 | 1518 | 4264 | -2542 | 665134 | | 0 | 0 | 0.56 | 0 | | | 0 | No, Vu<V |
| SLU 57 | 1338 | 854 | -2455 | 189360 | | 0 | 0 | 0.56 | 0 | | | 0 | No, Vu<V |
| SLU 57 | 1518 | 3428 | -2455 | 638865 | | 0 | 0 | 0.56 | 0 | | | 0 | No, Vu<V |
| SLU 53 | 1338 | -1160 | -1592 | 110769 | | 2.13 | 19.43 | 0.84 | 457 | | | 0.29 | No, Vu<V |
| SLU 53 | 1518 | 1414 | -1592 | 404966 | | 0 | 0 | 0.56 | 0 | | | 0 | No, Vu<V |
| SLU 1 | 1338 | -1664 | -704 | 42926 | | 0.29 | 204 | 0.59 | 3395 | | | 4.82 | Si |
| SLU 1 | 1518 | 323 | -704 | 175531 | | 0 | 0 | 0.56 | 0 | | | 0 | No, Vu<V |
| SLU 60 | 1338 | -2281 | -879 | 34345 | | 0.4 | 204 | 0.61 | 3477 | | | 3.95 | Si |

| Comb. | Quota | N | V par | M | σ0 | σN | l' | fvd | Vt scorr. | Vt fess.diag. | Vt,lim | c.s. | Verifica |
|---|---|---|---|---|---|---|---|---|---|---|---|---|---|
| SLU 60 | 1518 | 293 | -879 | 200224 | | 0 | 0 | 0.56 | 0 | | | 0 | No, Vu<V |

### Verifica a taglio nel piano secondo D.M. 17-01-18 (N.T.C.) §7.8.2.2.2 con rottura per scorrimento in combinazioni sismiche, γM = 2

| Comb. | Quota | N | V par | M | σ0 | σN | l' | fvd | Vt scorr. | Vt fess.diag. | Vt,lim | c.s. | Verifica |
|---|---|---|---|---|---|---|---|---|---|---|---|---|---|
| SLV 3 | 1338 | -2227 | -2332 | -184323 | | 1.38 | 57.71 | 1.11 | 1792 | | | 0.77 | No, Vu<V |
| SLV 3 | 1518 | -366 | -1276 | 145942 | | 0 | 0 | 0.83 | 0 | | | 0 | No, Vu<V |
| SLV 4 | 1338 | -2227 | -2332 | -184323 | | 1.38 | 57.71 | 1.11 | 1792 | | | 0.77 | No, Vu<V |
| SLV 4 | 1518 | -366 | -1276 | 145942 | | 0 | 0 | 0.83 | 0 | | | 0 | No, Vu<V |
| SLV 14 | 1338 | -574 | 631 | 281439 | | 0 | 0 | 0.83 | 0 | | | 0 | No, Vu<V |
| SLV 14 | 1518 | 1553 | -425 | 269074 | | 0 | 0 | 0.83 | 0 | | | 0 | No, Vu<V |
| SLV 9 | 1338 | 671 | -169 | 335760 | | 0 | 0 | 0.83 | 0 | | | 0 | No, Vu<V |
| SLV 9 | 1518 | 2588 | -381 | 406302 | | 0 | 0 | 0.83 | 0 | | | 0 | No, Vu<V |
| SLV 5 | 1338 | 536 | -1011 | 239022 | | 0 | 0 | 0.83 | 0 | | | 0 | No, Vu<V |
| SLV 5 | 1518 | 2349 | -569 | 405031 | | 0 | 0 | 0.83 | 0 | | | 0 | No, Vu<V |
| SLV 6 | 1338 | 536 | -1011 | 239022 | | 0 | 0 | 0.83 | 0 | | | 0 | No, Vu<V |
| SLV 6 | 1518 | 2349 | -569 | 405031 | | 0 | 0 | 0.83 | 0 | | | 0 | No, Vu<V |
| SLV 13 | 1338 | -574 | 631 | 281439 | | 0 | 0 | 0.83 | 0 | | | 0 | No, Vu<V |
| SLV 13 | 1518 | 1553 | -425 | 269074 | | 0 | 0 | 0.83 | 0 | | | 0 | No, Vu<V |
| SLV 2 | 1338 | -1025 | -2176 | -41023 | | 0.2 | 185.91 | 0.87 | 4543 | | | 2.09 | Si |
| SLV 2 | 1518 | 759 | -1051 | 264837 | | 0 | 0 | 0.83 | 0 | | | 0 | No, Vu<V |
| SLD 1 | 1338 | -1256 | -1419 | 8347 | | 0.22 | 204 | 0.88 | 5011 | | | 3.53 | Si |
| SLD 1 | 1518 | 655 | -942 | 230879 | | 0 | 0 | 0.83 | 0 | | | 0 | No, Vu<V |
| SLV 10 | 1338 | 671 | -169 | 335760 | | 0 | 0 | 0.83 | 0 | | | 0 | No, Vu<V |
| SLV 10 | 1518 | 2588 | -381 | 406302 | | 0 | 0 | 0.83 | 0 | | | 0 | No, Vu<V |

### Verifica a pressoflessione fuori piano D.M. 17-01-18 (N.T.C.)

quota 1406 Wa 0.05 denominatore 8 γM = 2

| Comb. | fd | Sa | σ0 | N | M | Mc | Coeff.s. | Verifica |
|---|---|---|---|---|---|---|---|---|
| SLV 13 | 14 | 0.53 | 0 | 279 | 23168 | 0 | 0 | No, Trazione |
| SLV 6 | 14 | 0.53 | 0 | 1270 | 23168 | 0 | 0 | No, Trazione |
| SLV 1 | 14 | 0.53 | 0 | -436 | 23168 | 0 | 0 | No, e>t/2 |
| SLV 16 | 14 | 0.53 | 0 | -969 | 23168 | 0 | 0 | No, e>t/2 |
| SLV 15 | 14 | 0.53 | 0 | -969 | 23168 | 0 | 0 | No, e>t/2 |
| SLV 9 | 14 | 0.53 | 0 | 1484 | 23168 | 0 | 0 | No, Trazione |
| SLV 14 | 14 | 0.53 | 0 | 279 | 23168 | 0 | 0 | No, Trazione |
| SLV 5 | 14 | 0.53 | 0 | 1270 | 23168 | 0 | 0 | No, Trazione |
| SLV 10 | 14 | 0.53 | 0 | 1484 | 23168 | 0 | 0 | No, Trazione |
| SLV 2 | 14 | 0.53 | 0 | -436 | 23168 | 0 | 0 | No, e>t/2 |

### Verifica dei meccanismi locali di collasso con analisi cinematica lineare

forza di aggancio al piano = 0 quota mezzeria = 1406 Wa = 0.05 Ta = 0.0596

| Comb. | N top | N base | V orto | α0 | M* | e* | a0* | aLim | Verifica |
|---|---|---|---|---|---|---|---|---|---|
| SLV 3 | 1273 | -4832 | -155 | 0 | 0 | 0 | 0 | 879.274 | No, Trazione |
| SLV 8 | -368 | -5321 | -279 | 0 | 3.429 | 0.93 | 0 | 1505.645 | No |
| SLV 5 | 3079 | -256 | 231 | 0 | 0 | 0 | 0 | 1505.645 | No, Trazione |
| SLV 7 | -368 | -5321 | -279 | 0 | 3.429 | 0.93 | 0 | 1505.645 | No |
| SLV 1 | 2307 | -3313 | -2 | 0 | 0 | 0 | 0 | 879.274 | No, Trazione |
| SLV 4 | 1273 | -4832 | -155 | 0 | 0 | 0 | 0 | 879.274 | No, Trazione |
| SLV 2 | 2307 | -3313 | -2 | 0 | 0 | 0 | 0 | 879.274 | No, Trazione |
| SLV 10 | 2706 | 845 | 277 | 0 | 0 | 0 | 0 | 1505.645 | No, Trazione |
| SLV 6 | 3079 | -256 | 231 | 0 | 0 | 0 | 0 | 1505.645 | No, Trazione |
| SLV 9 | 2706 | 845 | 277 | 0 | 0 | 0 | 0 | 1505.645 | No, Trazione |

### Tabella dei coefficienti di sicurezza minimi

| Stato limite | Coeff.s. | Comb. | Verifica |
|---|---|---|---|
| PF_SLU | 0 | SLU 84 | No |
| V_SLU | 0 | SLU 1 | No |
| PF_SLV | 0 | SLV 16 | No |
| V_SLV | 0 | SLD 1 | No |
| PFFP_SLV | 0 | SLV 14 | No |
| R_SLV | 0 | SLV 16 | No |

## Maschio 198

Verifiche condotte secondo D.M. 17-01-18 (N.T.C.)

### Dati geometrici

| X ini. | Y ini. | X fin. | Y fin. | Quota i. | Quota.s | l | Sp. | h netta | h ini. | h fin. | a | a.s.,sx | a.s.,dx |
|---|---|---|---|---|---|---|---|---|---|---|---|---|---|
| -1681.8 | 666.1 | -1283.8 | 666.1 | L6 | L7 | 398 | 28 | 316 | 316 | 316 | | | |

### Caratteristiche del materiale

(Circolare 7 21-01-19 C8.5.I) Muratura in mattoni pieni e malta di calce LC2_Corti

| fb | fk | fvk0 | fmedio | τ0 | fv0 | μ | ϕ | fv,lim | E | G | FC |
|---|---|---|---|---|---|---|---|---|---|---|---|
| 60 | | | 34.5 | 0.9 | 2 | 0.58 | 0.77 | 3.25 | 32000 | 12800 | 1.2 |

### Verifica a pressoflessione nel piano secondo D.M. 17-01-18 NTC §7.8.2.2.1 in combinazioni non sismiche, γM = 3

| Comb. | Quota | N | M | σ0 | Mu | c.s. | Verifica |
|---|---|---|---|---|---|---|---|
| SLU 8 | 1338 | -6437 | 146341 | 0.58 | 1190078 | 8.132 | Si |
| SLU 8 | 1518 | -2905 | 19804 | 0.26 | 559629 | 28.258 | Si |
| SLU 16 | 1338 | -5939 | 138116 | 0.53 | 1104491 | 7.997 | Si |
| SLU 16 | 1518 | -2828 | 25138 | 0.25 | 545175 | 21.687 | Si |
| SLU 30 | 1338 | -6607 | 164009 | 0.59 | 1219161 | 7.434 | Si |
| SLU 30 | 1518 | -3193 | 25560 | 0.29 | 612966 | 23.982 | Si |

| Comb. | Quota | N | M | σ0 | Mu | c.s. | Verifica |
|---|---|---|---|---|---|---|---|
| SLU 38 | 1338 | -6109 | 155784 | 0.55 | 1133947 | 7.279 | Si |
| SLU 38 | 1518 | -3115 | 30893 | 0.28 | 598609 | 19.377 | Si |
| SLU 37 | 1338 | -6093 | 159102 | 0.55 | 1131197 | 7.11 | Si |
| SLU 37 | 1518 | -3111 | 29965 | 0.28 | 597797 | 19.95 | Si |
| SLU 9 | 1338 | -6453 | 143023 | 0.58 | 1192803 | 8.34 | Si |
| SLU 9 | 1518 | -2910 | 20733 | 0.26 | 560445 | 27.032 | Si |
| SLU 29 | 1338 | -6591 | 167327 | 0.59 | 1216447 | 7.27 | Si |
| SLU 29 | 1518 | -3188 | 24632 | 0.29 | 612155 | 24.853 | Si |
| SLU 17 | 1338 | -5955 | 134798 | 0.53 | 1107251 | 8.214 | Si |
| SLU 17 | 1518 | -2832 | 26066 | 0.25 | 545992 | 20.946 | Si |
| SLU 35 | 1338 | -6912 | 149311 | 0.62 | 1270786 | 8.511 | Si |
| SLU 35 | 1518 | -4092 | 30436 | 0.37 | 777561 | 25.547 | Si |
| SLU 27 | 1338 | -7410 | 157536 | 0.66 | 1354248 | 8.596 | Si |
| SLU 27 | 1518 | -4169 | 25103 | 0.37 | 791585 | 31.534 | Si |

Verifica a pressoflessione nel piano secondo D.M. 17-01-18 NTC §7.8.2.2.1 in combinazioni sismiche, γM = 2

| Comb. | Quota | N | M | σ0 | Mu | c.s. | Verifica |
|---|---|---|---|---|---|---|---|
| SLV 7 | 1338 | -5744 | -395473 | 0.52 | 1094870 | 2.769 | Si |
| SLV 7 | 1518 | -889 | 117843 | 0.08 | 175719 | 1.491 | Si |
| SLV 8 | 1338 | -5744 | -395473 | 0.52 | 1094870 | 2.769 | Si |
| SLV 8 | 1518 | -889 | 117843 | 0.08 | 175719 | 1.491 | Si |
| SLV 3 | 1338 | -4928 | -538728 | 0.44 | 945177 | 1.754 | Si |
| SLV 3 | 1518 | -1066 | 244805 | 0 | 0 | 0 | No, e>l/2 |
| SLV 2 | 1338 | -4470 | -375465 | 0.4 | 860407 | 2.292 | Si |
| SLV 2 | 1518 | -1743 | 224947 | 0.16 | 342386 | 1.522 | Si |
| SLV 4 | 1338 | -4928 | -538728 | 0.44 | 945177 | 1.754 | Si |
| SLV 4 | 1518 | -1066 | 244805 | 0 | 0 | 0 | No, e>l/2 |
| SLV 14 | 1338 | -5277 | 578048 | 0.47 | 1009465 | 1.746 | Si |
| SLV 14 | 1518 | -3493 | -203999 | 0.31 | 677217 | 3.32 | Si |
| SLV 10 | 1338 | -4461 | 434793 | 0.4 | 858658 | 1.975 | Si |
| SLV 10 | 1518 | -3670 | -77036 | 0.33 | 710624 | 9.225 | Si |
| SLV 1 | 1338 | -4470 | -375465 | 0.4 | 860407 | 2.292 | Si |
| SLV 1 | 1518 | -1743 | 224947 | 0.16 | 342386 | 1.522 | Si |
| SLV 9 | 1338 | -4461 | 434793 | 0.4 | 858658 | 1.975 | Si |
| SLV 9 | 1518 | -3670 | -77036 | 0.33 | 710624 | 9.225 | Si |
| SLV 13 | 1338 | -5277 | 578048 | 0.47 | 1009465 | 1.746 | Si |
| SLV 13 | 1518 | -3493 | -203999 | 0.31 | 677217 | 3.32 | Si |

Verifica a taglio nel piano secondo D.M. 17-01-18 (N.T.C.) §7.8.2.2.2 con rottura per scorrimento in combinazioni non sismiche, γM = 3

| Comb. | Quota | N | V par | M | σ0 | σN | l' | fvd | Vt scorr. | Vt fess.diag. | Vt,lim | c.s. | Verifica |
|---|---|---|---|---|---|---|---|---|---|---|---|---|---|
| SLU 28 | 1338 | -7426 | 608 | 154218 | | 0.67 | 398 | 0.64 | 7181 | | | 11.8 | Si |
| SLU 28 | 1518 | -4174 | 612 | 26031 | | 0.37 | 398 | 0.61 | 6748 | | | 11.02 | Si |
| SLU 9 | 1338 | -6453 | 621 | 143023 | | 0.58 | 398 | 0.63 | 7051 | | | 11.36 | Si |
| SLU 9 | 1518 | -2910 | 624 | 20733 | | 0.26 | 398 | 0.59 | 6579 | | | 10.54 | Si |
| SLU 27 | 1338 | -7410 | 631 | 157536 | | 0.66 | 398 | 0.64 | 7179 | | | 11.38 | Si |
| SLU 27 | 1518 | -4169 | 634 | 25103 | | 0.37 | 398 | 0.61 | 6747 | | | 10.64 | Si |
| SLU 29 | 1338 | -6591 | 708 | 167327 | | 0.59 | 398 | 0.63 | 7070 | | | 9.98 | Si |
| SLU 29 | 1518 | -3188 | 712 | 24632 | | 0.29 | 398 | 0.59 | 6616 | | | 9.29 | Si |
| SLU 72 | 1338 | -8115 | 623 | 161618 | | 0.73 | 398 | 0.65 | 7273 | | | 11.68 | Si |
| SLU 72 | 1518 | -3762 | 626 | 29155 | | 0.34 | 398 | 0.6 | 6693 | | | 10.68 | Si |
| SLU 30 | 1338 | -6607 | 686 | 164009 | | 0.59 | 398 | 0.63 | 7072 | | | 10.31 | Si |
| SLU 30 | 1518 | -3193 | 690 | 25560 | | 0.29 | 398 | 0.59 | 6617 | | | 9.59 | Si |
| SLU 8 | 1338 | -6437 | 643 | 146341 | | 0.58 | 398 | 0.63 | 7049 | | | 10.96 | Si |
| SLU 8 | 1518 | -2905 | 646 | 19804 | | 0.26 | 398 | 0.59 | 6578 | | | 10.18 | Si |
| SLU 50 | 1338 | -7944 | 579 | 143950 | | 0.71 | 398 | 0.65 | 7250 | | | 12.51 | Si |
| SLU 50 | 1518 | -3474 | 583 | 23400 | | 0.31 | 398 | 0.6 | 6654 | | | 11.42 | Si |
| SLU 37 | 1338 | -6093 | 579 | 159102 | | 0.55 | 398 | 0.63 | 7004 | | | 12.09 | Si |
| SLU 37 | 1518 | -3111 | 583 | 29965 | | 0.28 | 398 | 0.59 | 6606 | | | 11.33 | Si |
| SLU 71 | 1338 | -8099 | 645 | 164936 | | 0.73 | 398 | 0.65 | 7271 | | | 11.28 | Si |
| SLU 71 | 1518 | -3757 | 648 | 28227 | | 0.34 | 398 | 0.6 | 6692 | | | 10.32 | Si |

Verifica a taglio nel piano secondo D.M. 17-01-18 (N.T.C.) §7.8.2.2.2 con rottura per scorrimento in combinazioni sismiche, γM = 2

| Comb. | Quota | N | V par | M | σ0 | σN | l' | fvd | Vt scorr. | Vt fess.diag. | Vt,lim | c.s. | Verifica |
|---|---|---|---|---|---|---|---|---|---|---|---|---|---|
| SLV 2 | 1338 | -4470 | -4158 | -375465 | | 0.46 | 345.03 | 0.93 | 8945 | | | 2.15 | Si |
| SLV 2 | 1518 | -1743 | -2159 | 224947 | | 0.3 | 209.79 | 0.89 | 5244 | | | 2.43 | Si |
| SLV 4 | 1338 | -4928 | -5129 | -538728 | | 0.65 | 269.04 | 0.96 | 7263 | | | 1.42 | Si |
| SLV 4 | 1518 | -1066 | -2790 | 244805 | | 0 | 0 | 0.83 | 0 | | | 0 | No, Vu<V |
| SLV 7 | 1338 | -5744 | -3121 | -395473 | | 0.53 | 390.46 | 0.94 | 10260 | | | 3.29 | Si |
| SLV 7 | 1518 | -889 | -1901 | 117843 | | 0.16 | 199.24 | 0.87 | 4827 | | | 2.54 | Si |
| SLV 13 | 1338 | -5277 | 4818 | 578048 | | 0.7 | 268.39 | 0.97 | 7318 | | | 1.52 | Si |
| SLV 13 | 1518 | -3493 | 2480 | -203999 | | 0.31 | 398 | 0.9 | 9985 | | | 4.03 | Si |
| SLV 15 | 1338 | -5735 | 3847 | 414785 | | 0.54 | 380.02 | 0.94 | 10014 | | | 2.6 | Si |
| SLV 15 | 1518 | -2816 | 1850 | -184140 | | 0.25 | 398 | 0.88 | 9850 | | | 5.32 | Si |
| SLV 3 | 1338 | -4928 | -5129 | -538728 | | 0.65 | 269.04 | 0.96 | 7263 | | | 1.42 | Si |
| SLV 3 | 1518 | -1066 | -2790 | 244805 | | 0 | 0 | 0.83 | 0 | | | 0 | No, Vu<V |
| SLV 14 | 1338 | -5277 | 4818 | 578048 | | 0.7 | 268.39 | 0.97 | 7318 | | | 1.52 | Si |
| SLV 14 | 1518 | -3493 | 2480 | -203999 | | 0.31 | 398 | 0.9 | 9985 | | | 4.03 | Si |
| SLV 8 | 1338 | -5744 | -3121 | -395473 | | 0.53 | 390.46 | 0.94 | 10260 | | | 3.29 | Si |
| SLV 8 | 1518 | -889 | -1901 | 117843 | | 0.16 | 199.24 | 0.87 | 4827 | | | 2.54 | Si |
| SLV 16 | 1338 | -5735 | 3847 | 414785 | | 0.54 | 380.02 | 0.94 | 10014 | | | 2.6 | Si |
| SLV 16 | 1518 | -2816 | 1850 | -184140 | | 0.25 | 398 | 0.88 | 9850 | | | 5.32 | Si |
| SLV 1 | 1338 | -4470 | -4158 | -375465 | | 0.46 | 345.03 | 0.93 | 8945 | | | 2.15 | Si |
| SLV 1 | 1518 | -1743 | -2159 | 224947 | | 0.3 | 209.79 | 0.89 | 5244 | | | 2.43 | Si |

Verifica a pressoflessione fuori piano D.M. 17-01-18 (N.T.C.)

quota 1406 Wa 0.05 denominatore 8 γM = 2

| Comb. | fd | Sa | σ0 | N | M | Mc | Coeff.s. | Verifica |
|---|---|---|---|---|---|---|---|---|
| SLV 4 | 14 | 0.53 | 0.36 | -4040 | 45201 | 54879 | 1.21 | Si |
| SLV 3 | 14 | 0.53 | 0.36 | -4040 | 45201 | 54879 | 1.21 | Si |
| SLV 8 | 14 | 0.53 | 0.37 | -4138 | 45201 | 56174 | 1.24 | Si |
| SLV 7 | 14 | 0.53 | 0.37 | -4138 | 45201 | 56174 | 1.24 | Si |
| SLV 1 | 14 | 0.53 | 0.37 | -4173 | 45201 | 56630 | 1.25 | Si |
| SLV 2 | 14 | 0.53 | 0.37 | -4173 | 45201 | 56630 | 1.25 | Si |
| SLV 11 | 14 | 0.53 | 0.39 | -4356 | 45201 | 59029 | 1.31 | Si |
| SLV 12 | 14 | 0.53 | 0.39 | -4356 | 45201 | 59029 | 1.31 | Si |
| SLV 6 | 14 | 0.53 | 0.41 | -4582 | 45201 | 61988 | 1.37 | Si |
| SLV 5 | 14 | 0.53 | 0.41 | -4582 | 45201 | 61988 | 1.37 | Si |

### Verifica dei meccanismi locali di collasso con analisi cinematica lineare

forza di aggancio al piano = 0 quota mezzeria = 1406 Wa = 0.05 Ta = 0.0596

| Comb. | N top | N base | V orto | α0 | M* | e* | a0* | aLim | Verifica |
|---|---|---|---|---|---|---|---|---|---|
| SLV 6 | -1482 | -3499 | 386 | 0 | 7.192 | 0.902 | 0 | 1505.645 | No |
| SLV 9 | -1922 | -3394 | 366 | 0 | 7.535 | 0.895 | 0 | 1505.645 | No |
| SLV 3 | -50 | -6629 | 337 | 0 | 6.463 | 0.992 | 0 | 879.274 | No |
| SLV 2 | -474 | -5240 | 371 | 0 | 6.573 | 0.946 | 0 | 879.274 | No |
| SLV 10 | -1922 | -3394 | 366 | 0 | 7.535 | 0.895 | 0 | 1505.645 | No |
| SLV 1 | -474 | -5240 | 371 | 0 | 6.573 | 0.946 | 0 | 879.274 | No |
| SLV 5 | -1482 | -3499 | 386 | 0 | 7.192 | 0.902 | 0 | 1505.645 | No |
| SLV 4 | -50 | -6629 | 337 | 0 | 6.463 | 0.992 | 0 | 879.274 | No |
| SLV 7 | -68 | -8127 | 275 | 0.003 | 6.464 | 0.99 | 4.212 | 1505.645 | No |
| SLV 8 | -68 | -8127 | 275 | 0.003 | 6.464 | 0.99 | 4.212 | 1505.645 | No |

### Tabella dei coefficienti di sicurezza minimi

| Stato limite | Coeff.s. | Comb. | Verifica |
|---|---|---|---|
| PF_SLU | 7.11 | SLU 37 | Si |
| V_SLU | 9.293 | SLU 29 | Si |
| PF_SLV | 0 | SLV 3 | No |
| V_SLV | 0 | SLV 3 | No |
| PFFP_SLV | 1.214 | SLV 3 | Si |
| R_SLV | 0 | SLV 1 | No |

## Maschio 199

Verifiche condotte secondo D.M. 17-01-18 (N.T.C.)

### Dati geometrici

| X ini. | Y ini. | X fin. | Y fin. | Quota i. | Quota.s | l | Sp. | h netta | h ini. | h fin. | a | a.s.,sx | a.s.,dx |
|---|---|---|---|---|---|---|---|---|---|---|---|---|---|
| -1193.8 | 666.1 | -795.8 | 666.1 | L6 | L7 | 398 | 28 | 316 | 316 | 316 | | | |

### Caratteristiche del materiale

(Circolare 7 21-01-19 C8.5.I) Muratura in mattoni pieni e malta di calce LC2_Corti

| fb | fk | fvk0 | fmedio | τ0 | fv0 | μ | ϕ | fv,lim | E | G | FC |
|---|---|---|---|---|---|---|---|---|---|---|---|
| 60 | | | 34.5 | 0.9 | 2 | 0.58 | 0.77 | 3.25 | 32000 | 12800 | 1.2 |

### Verifica a pressoflessione nel piano secondo D.M. 17-01-18 NTC §7.8.2.2.1 in combinazioni non sismiche, γM = 3

| Comb. | Quota | N | M | σ0 | Mu | c.s. | Verifica |
|---|---|---|---|---|---|---|---|
| SLU 16 | 1338 | -7452 | 55618 | 0.67 | 1361214 | 24.475 | Si |
| SLU 16 | 1518 | -3814 | -46185 | 0.34 | 727054 | 15.742 | Si |
| SLU 29 | 1338 | -7984 | 66418 | 0.72 | 1449075 | 21.817 | Si |
| SLU 29 | 1518 | -4287 | -57005 | 0.38 | 812907 | 14.26 | Si |
| SLU 71 | 1338 | -9701 | 63810 | 0.87 | 1724212 | 27.021 | Si |
| SLU 71 | 1518 | -4933 | -53585 | 0.44 | 928337 | 17.325 | Si |
| SLU 9 | 1338 | -7499 | 54684 | 0.67 | 1368941 | 25.034 | Si |
| SLU 9 | 1518 | -3860 | -47326 | 0.35 | 735522 | 15.541 | Si |
| SLU 17 | 1338 | -7450 | 55448 | 0.67 | 1360799 | 24.542 | Si |
| SLU 17 | 1518 | -3811 | -46179 | 0.34 | 726599 | 15.735 | Si |
| SLU 38 | 1338 | -7933 | 67013 | 0.71 | 1440627 | 21.498 | Si |
| SLU 38 | 1518 | -4236 | -55851 | 0.38 | 803625 | 14.389 | Si |
| SLU 8 | 1338 | -7501 | 54854 | 0.67 | 1369356 | 24.964 | Si |
| SLU 8 | 1518 | -3863 | -47332 | 0.35 | 735977 | 15.549 | Si |
| SLU 30 | 1338 | -7981 | 66249 | 0.72 | 1448666 | 21.867 | Si |
| SLU 30 | 1518 | -4285 | -56999 | 0.38 | 812457 | 14.254 | Si |
| SLU 72 | 1338 | -9699 | 63641 | 0.87 | 1723821 | 27.087 | Si |
| SLU 72 | 1518 | -4931 | -53579 | 0.44 | 927894 | 17.318 | Si |
| SLU 37 | 1338 | -7935 | 67182 | 0.71 | 1441037 | 21.45 | Si |
| SLU 37 | 1518 | -4238 | -55857 | 0.38 | 804075 | 14.395 | Si |

### Verifica a pressoflessione nel piano secondo D.M. 17-01-18 NTC §7.8.2.2.1 in combinazioni sismiche, γM = 2

| Comb. | Quota | N | M | σ0 | Mu | c.s. | Verifica |
|---|---|---|---|---|---|---|---|
| SLV 2 | 1338 | -7023 | -483265 | 0.63 | 1325419 | 2.743 | Si |
| SLV 2 | 1518 | -3316 | 178944 | 0.3 | 643878 | 3.598 | Si |
| SLV 1 | 1338 | -7023 | -483265 | 0.63 | 1325419 | 2.743 | Si |
| SLV 1 | 1518 | -3316 | 178944 | 0.3 | 643878 | 3.598 | Si |
| SLV 14 | 1338 | -6581 | 459439 | 0.59 | 1246370 | 2.713 | Si |
| SLV 14 | 1518 | -2825 | -182943 | 0.25 | 550504 | 3.009 | Si |
| SLV 4 | 1338 | -6218 | -443346 | 0.56 | 1180917 | 2.664 | Si |
| SLV 4 | 1518 | -2665 | 178761 | 0.24 | 519899 | 2.908 | Si |
| SLV 16 | 1338 | -5777 | 499358 | 0.52 | 1100830 | 2.204 | Si |
| SLV 16 | 1518 | -2173 | -183126 | 0.2 | 425588 | 2.324 | Si |
| SLV 15 | 1338 | -5777 | 499358 | 0.52 | 1100830 | 2.204 | Si |
| SLV 15 | 1518 | -2173 | -183126 | 0.2 | 425588 | 2.324 | Si |

| Comb. | Quota | N | M | σ0 | Mu | c.s. | Verifica |
|---|---|---|---|---|---|---|---|
| SLV 12 | 1338 | -4993 | 215984 | 0.45 | 957162 | 4.432 | Si |
| SLV 12 | 1518 | -1585 | -56678 | 0.14 | 311756 | 5.5 | Si |
| SLV 11 | 1338 | -4993 | 215984 | 0.45 | 957162 | 4.432 | Si |
| SLV 11 | 1518 | -1585 | -56678 | 0.14 | 311756 | 5.5 | Si |
| SLV 3 | 1338 | -6218 | -443346 | 0.56 | 1180917 | 2.664 | Si |
| SLV 3 | 1518 | -2665 | 178761 | 0.24 | 519899 | 2.908 | Si |
| SLV 13 | 1338 | -6581 | 459439 | 0.59 | 1246370 | 2.713 | Si |
| SLV 13 | 1518 | -2825 | -182943 | 0.25 | 550504 | 3.009 | Si |

### Verifica a taglio nel piano secondo D.M. 17-01-18 (N.T.C.) §7.8.2.2.2 con rottura per scorrimento in combinazioni non sismiche, γM = 3

| Comb. | Quota | N | V par | M | σ0 | σN | l' | fvd | Vt scorr. | Vt fess.diag. | Vt,lim | c.s. | Verifica |
|---|---|---|---|---|---|---|---|---|---|---|---|---|---|
| SLU 27 | 1338 | -8954 | 610 | 62775 | | 0.8 | 398 | 0.66 | 7385 | | | 12.1 | Si |
| SLU 27 | 1518 | -5258 | 610 | -52682 | | 0.47 | 398 | 0.62 | 6892 | | | 11.3 | Si |
| SLU 37 | 1338 | -7935 | 652 | 67182 | | 0.71 | 398 | 0.65 | 7249 | | | 11.11 | Si |
| SLU 37 | 1518 | -4238 | 652 | -55857 | | 0.38 | 398 | 0.61 | 6756 | | | 10.36 | Si |
| SLU 28 | 1338 | -8952 | 609 | 62605 | | 0.8 | 398 | 0.66 | 7385 | | | 12.12 | Si |
| SLU 28 | 1518 | -5255 | 609 | -52676 | | 0.47 | 398 | 0.62 | 6892 | | | 11.31 | Si |
| SLU 38 | 1338 | -7933 | 651 | 67013 | | 0.71 | 398 | 0.65 | 7249 | | | 11.13 | Si |
| SLU 38 | 1518 | -4236 | 651 | -55851 | | 0.38 | 398 | 0.61 | 6756 | | | 10.37 | Si |
| SLU 80 | 1338 | -9650 | 607 | 64405 | | 0.87 | 398 | 0.67 | 7478 | | | 12.32 | Si |
| SLU 80 | 1518 | -4882 | 607 | -52431 | | 0.44 | 398 | 0.61 | 6842 | | | 11.27 | Si |
| SLU 79 | 1338 | -9652 | 608 | 64574 | | 0.87 | 398 | 0.67 | 7478 | | | 12.3 | Si |
| SLU 79 | 1518 | -4884 | 608 | -52437 | | 0.44 | 398 | 0.61 | 6842 | | | 11.25 | Si |
| SLU 29 | 1338 | -7984 | 654 | 66418 | | 0.72 | 398 | 0.65 | 7256 | | | 11.09 | Si |
| SLU 29 | 1518 | -4287 | 654 | -57005 | | 0.38 | 398 | 0.61 | 6763 | | | 10.33 | Si |
| SLU 72 | 1338 | -9699 | 609 | 63641 | | 0.87 | 398 | 0.67 | 7484 | | | 12.28 | Si |
| SLU 72 | 1518 | -4931 | 609 | -53579 | | 0.44 | 398 | 0.61 | 6849 | | | 11.24 | Si |
| SLU 30 | 1338 | -7981 | 653 | 66249 | | 0.72 | 398 | 0.65 | 7255 | | | 11.1 | Si |
| SLU 30 | 1518 | -4285 | 653 | -56999 | | 0.38 | 398 | 0.61 | 6762 | | | 10.35 | Si |
| SLU 71 | 1338 | -9701 | 610 | 63810 | | 0.87 | 398 | 0.67 | 7485 | | | 12.26 | Si |
| SLU 71 | 1518 | -4933 | 610 | -53585 | | 0.44 | 398 | 0.61 | 6849 | | | 11.22 | Si |

### Verifica a taglio nel piano secondo D.M. 17-01-18 (N.T.C.) §7.8.2.2.2 con rottura per scorrimento in combinazioni sismiche, γM = 2

| Comb. | Quota | N | V par | M | σ0 | σN | l' | fvd | Vt scorr. | Vt fess.diag. | Vt,lim | c.s. | Verifica |
|---|---|---|---|---|---|---|---|---|---|---|---|---|---|
| SLV 4 | 1338 | -6218 | -4312 | -443346 | | 0.58 | 383.11 | 0.95 | 10183 | | | 2.36 | Si |
| SLV 4 | 1518 | -2665 | -3177 | 178761 | | 0.24 | 395.75 | 0.88 | 9767 | | | 3.07 | Si |
| SLD 16 | 1338 | -6136 | 2018 | 217940 | | 0.55 | 398 | 0.94 | 10514 | | | 5.21 | Si |
| SLD 16 | 1518 | -2504 | 1542 | -79476 | | 0.22 | 398 | 0.88 | 9788 | | | 6.35 | Si |
| SLD 15 | 1338 | -6136 | 2018 | 217940 | | 0.55 | 398 | 0.94 | 10514 | | | 5.21 | Si |
| SLD 15 | 1518 | -2504 | 1542 | -79476 | | 0.22 | 398 | 0.88 | 9788 | | | 6.35 | Si |
| SLV 13 | 1338 | -6581 | 4359 | 459439 | | 0.61 | 387.57 | 0.95 | 10360 | | | 2.38 | Si |
| SLV 13 | 1518 | -2825 | 3224 | -182943 | | 0.25 | 398 | 0.88 | 9852 | | | 3.06 | Si |
| SLV 16 | 1338 | -5777 | 4691 | 499358 | | 0.61 | 337.68 | 0.96 | 9035 | | | 1.93 | Si |
| SLV 16 | 1518 | -2173 | 3578 | -183126 | | 0.23 | 344.22 | 0.88 | 8466 | | | 2.37 | Si |
| SLV 2 | 1338 | -7023 | -4644 | -483265 | | 0.64 | 390.55 | 0.96 | 10517 | | | 2.26 | Si |
| SLV 2 | 1518 | -3316 | -3531 | 178944 | | 0.3 | 398 | 0.89 | 9950 | | | 2.82 | Si |
| SLV 14 | 1338 | -6581 | 4359 | 459439 | | 0.61 | 387.57 | 0.95 | 10360 | | | 2.38 | Si |
| SLV 14 | 1518 | -2825 | 3224 | -182943 | | 0.25 | 398 | 0.88 | 9852 | | | 3.06 | Si |
| SLV 1 | 1338 | -7023 | -4644 | -483265 | | 0.64 | 390.55 | 0.96 | 10517 | | | 2.26 | Si |
| SLV 1 | 1518 | -3316 | -3531 | 178944 | | 0.3 | 398 | 0.89 | 9950 | | | 2.82 | Si |
| SLV 3 | 1338 | -6218 | -4312 | -443346 | | 0.58 | 383.11 | 0.95 | 10183 | | | 2.36 | Si |
| SLV 3 | 1518 | -2665 | -3177 | 178761 | | 0.24 | 395.75 | 0.88 | 9767 | | | 3.07 | Si |
| SLV 15 | 1338 | -5777 | 4691 | 499358 | | 0.61 | 337.68 | 0.96 | 9035 | | | 1.93 | Si |
| SLV 15 | 1518 | -2173 | 3578 | -183126 | | 0.23 | 344.22 | 0.88 | 8466 | | | 2.37 | Si |

### Verifica a pressoflessione fuori piano D.M. 17-01-18 (N.T.C.)

quota 1406 Wa 0.05 denominatore 8 γM = 2

| Comb. | fd | Sa | σ0 | N | M | Mc | Coeff.s. | Verifica |
|---|---|---|---|---|---|---|---|---|
| SLV 12 | 14 | 0.53 | 0.34 | -3735 | 45201 | 50862 | 1.13 | Si |
| SLV 11 | 14 | 0.53 | 0.34 | -3735 | 45201 | 50862 | 1.13 | Si |
| SLV 7 | 14 | 0.53 | 0.35 | -3861 | 45201 | 52515 | 1.16 | Si |
| SLV 8 | 14 | 0.53 | 0.35 | -3861 | 45201 | 52515 | 1.16 | Si |
| SLV 16 | 14 | 0.53 | 0.4 | -4413 | 45201 | 59778 | 1.32 | Si |
| SLV 15 | 14 | 0.53 | 0.4 | -4413 | 45201 | 59778 | 1.32 | Si |
| SLV 3 | 14 | 0.53 | 0.43 | -4830 | 45201 | 65215 | 1.44 | Si |
| SLV 4 | 14 | 0.53 | 0.43 | -4830 | 45201 | 65215 | 1.44 | Si |
| SLV 13 | 14 | 0.53 | 0.46 | -5118 | 45201 | 68964 | 1.53 | Si |
| SLV 14 | 14 | 0.53 | 0.46 | -5118 | 45201 | 68964 | 1.53 | Si |

### Verifica dei meccanismi locali di collasso con analisi cinematica lineare

forza di aggancio al piano = 0 quota mezzeria = 1406 Wa = 0.05 Ta = 0.0596

| Comb. | N top | N base | V orto | α0 | M* | e* | a0* | aLim | Verifica |
|---|---|---|---|---|---|---|---|---|---|
| SLV 11 | -787 | -6167 | -457 | 0 | 6.728 | 0.926 | 0 | 1505.645 | No |
| SLV 12 | -787 | -6167 | -457 | 0 | 6.728 | 0.926 | 0 | 1505.645 | No |
| SLV 5 | -2310 | -8054 | 546 | 0 | 7.858 | 0.891 | 0 | 1505.645 | No |
| SLV 6 | -2310 | -8054 | 546 | 0 | 7.858 | 0.891 | 0 | 1505.645 | No |
| SLV 8 | -916 | -5851 | -452 | 0 | 6.804 | 0.92 | 0 | 1505.645 | No |
| SLV 9 | -2181 | -8370 | 542 | 0 | 7.749 | 0.892 | 0 | 1505.645 | No |
| SLV 10 | -2181 | -8370 | 542 | 0 | 7.749 | 0.892 | 0 | 1505.645 | No |
| SLV 7 | -916 | -5851 | -452 | 0 | 6.804 | 0.92 | 0 | 1505.645 | No |
| SLV 1 | -1973 | -6915 | 202 | 0.032 | 7.577 | 0.894 | 52.554 | 879.274 | No |
| SLV 2 | -1973 | -6915 | 202 | 0.032 | 7.577 | 0.894 | 52.554 | 879.274 | No |

### Tabella dei coefficienti di sicurezza minimi

| Stato limite | Coeff.s. | Comb. | Verifica |
|---|---|---|---|
| PF_SLU | 14.254 | SLU 30 | Si |

| Stato limite | Coeff.s. | Comb. | Verifica |
|---|---|---|---|
| V_SLU | 10.335 | SLU 29 | Si |
| PF_SLV | 2.204 | SLV 15 | Si |
| V_SLV | 1.926 | SLV 15 | Si |
| PFFP_SLV | 1.125 | SLV 11 | Si |
| R_SLV | 0 | SLV 5 | No |

## Maschio 200

Verifiche condotte secondo D.M. 17-01-18 (N.T.C.)

### Dati geometrici

| X ini. | Y ini. | X fin. | Y fin. | Quota i. | Quota.s | l | Sp. | h netta | h ini. | h fin. | a | a.s.,sx | a.s.,dx |
|---|---|---|---|---|---|---|---|---|---|---|---|---|---|
| -705.8 | 666.1 | -501.8 | 666.1 | L6 | L7 | 204 | 28 | 316 | 316 | 316 | | | |

### Caratteristiche del materiale

(Circolare 7 21-01-19 C8.5.I) Muratura in mattoni pieni e malta di calce LC2_Corti

| fb | fk | fvk0 | fmedio | τ0 | fv0 | μ | ϕ | fv,lim | E | G | FC |
|---|---|---|---|---|---|---|---|---|---|---|---|
| 60 | | | 34.5 | 0.9 | 2 | 0.58 | 0.77 | 3.25 | 32000 | 12800 | 1.2 |

### Verifica a pressoflessione nel piano secondo D.M. 17-01-18 NTC §7.8.2.2.1 in combinazioni non sismiche, γM = 3

| Comb. | Quota | N | M | σ0 | Mu | c.s. | Verifica |
|---|---|---|---|---|---|---|---|
| SLU 1 | 1338 | -2065 | -11105 | 0.36 | 201254 | 18.123 | Si |
| SLU 1 | 1518 | 13 | -155749 | 0 | 0 | 0 | No, Trazione |
| SLU 58 | 1338 | -857 | -33533 | 0.15 | 85838 | 2.56 | Si |
| SLU 58 | 1518 | 1833 | -469187 | 0 | 0 | 0 | No, Trazione |
| SLU 56 | 1338 | -1528 | -35096 | 0.27 | 150740 | 4.295 | Si |
| SLU 56 | 1518 | 1163 | -458696 | 0 | 0 | 0 | No, Trazione |
| SLU 57 | 1338 | -1503 | -35185 | 0.26 | 148372 | 4.217 | Si |
| SLU 57 | 1518 | 1188 | -460608 | 0 | 0 | 0 | No, Trazione |
| SLU 55 | 1338 | -1727 | -18968 | 0.3 | 169583 | 8.941 | Si |
| SLU 55 | 1518 | 964 | -333655 | 0 | 0 | 0 | No, Trazione |
| SLU 59 | 1338 | -833 | -33622 | 0.15 | 83397 | 2.48 | Si |
| SLU 59 | 1518 | 1858 | -471099 | 0 | 0 | 0 | No, Trazione |
| SLU 60 | 1338 | -2625 | 704 | 0.46 | 252638 | 358.685 | Si |
| SLU 60 | 1518 | 66 | -197621 | 0 | 0 | 0 | No, Trazione |
| SLU 53 | 1338 | -2439 | -20384 | 0.43 | 235711 | 11.564 | Si |
| SLU 53 | 1518 | 252 | -319978 | 0 | 0 | 0 | No, Trazione |
| SLU 61 | 1338 | -2600 | 616 | 0.46 | 250390 | 406.434 | Si |
| SLU 61 | 1518 | 91 | -199533 | 0 | 0 | 0 | No, Trazione |
| SLU 54 | 1338 | -2414 | -20472 | 0.42 | 233442 | 11.403 | Si |
| SLU 54 | 1518 | 277 | -321890 | 0 | 0 | 0 | No, Trazione |

### Verifica a pressoflessione nel piano secondo D.M. 17-01-18 NTC §7.8.2.2.1 in combinazioni sismiche, γM = 2

| Comb. | Quota | N | M | σ0 | Mu | c.s. | Verifica |
|---|---|---|---|---|---|---|---|
| SLV 12 | 1338 | -3116 | 178016 | 0.55 | 303631 | 1.706 | Si |
| SLV 12 | 1518 | 1380 | -278257 | 0 | 0 | 0 | No, Trazione |
| SLV 14 | 1338 | -2117 | 114838 | 0.37 | 209416 | 1.824 | Si |
| SLV 14 | 1518 | 869 | -304738 | 0 | 0 | 0 | No, Trazione |
| SLV 8 | 1338 | -2816 | 80292 | 0.49 | 275646 | 3.433 | Si |
| SLV 8 | 1518 | 785 | -193377 | 0 | 0 | 0 | No, Trazione |
| SLV 11 | 1338 | -3116 | 178016 | 0.55 | 303631 | 1.706 | Si |
| SLV 11 | 1518 | 1380 | -278257 | 0 | 0 | 0 | No, Trazione |
| SLV 7 | 1338 | -2816 | 80292 | 0.49 | 275646 | 3.433 | Si |
| SLV 7 | 1518 | 785 | -193377 | 0 | 0 | 0 | No, Trazione |
| SLD 1 | 1338 | -1579 | -94161 | 0.28 | 157442 | 1.672 | Si |
| SLD 1 | 1518 | -385 | -112141 | 0 | 0 | 0 | No, e>l/2 |
| SLV 6 | 1338 | -742 | -192308 | 0 | 0 | 0 | No, e>l/2 |
| SLV 6 | 1518 | -1066 | -81768 | 0.19 | 107087 | 1.31 | Si |
| SLV 9 | 1338 | -1041 | -94584 | 0.18 | 104646 | 1.106 | Si |
| SLV 9 | 1518 | -472 | -166648 | 0 | 0 | 0 | No, e>l/2 |
| SLV 13 | 1338 | -2117 | 114838 | 0.37 | 209416 | 1.824 | Si |
| SLV 13 | 1518 | 869 | -304738 | 0 | 0 | 0 | No, Trazione |
| SLV 10 | 1338 | -1041 | -94584 | 0.18 | 104646 | 1.106 | Si |
| SLV 10 | 1518 | -472 | -166648 | 0 | 0 | 0 | No, e>l/2 |

### Verifica a taglio nel piano secondo D.M. 17-01-18 (N.T.C.) §7.8.2.2.2 con rottura per scorrimento in combinazioni non sismiche, γM = 3

| Comb. | Quota | N | V par | M | σ0 | σN | l' | fvd | Vt scorr. | Vt fess.diag. | Vt,lim | c.s. | Verifica |
|---|---|---|---|---|---|---|---|---|---|---|---|---|---|
| SLU 55 | 1338 | -1727 | 1736 | -18968 | | 0.3 | 204 | 0.6 | 3404 | | | 1.96 | Si |
| SLU 55 | 1518 | 964 | 1736 | -333655 | | 0 | 0 | 0.56 | 0 | | | 0 | No, Vu<V |
| SLU 60 | 1338 | -2625 | 1089 | 704 | | 0.46 | 204 | 0.62 | 3523 | | | 3.23 | Si |
| SLU 60 | 1518 | 66 | 1089 | -197621 | | 0 | 0 | 0.56 | 0 | | | 0 | No, Vu<V |
| SLU 59 | 1338 | -833 | 2418 | -33622 | | 0.16 | 184.84 | 0.58 | 2986 | | | 1.24 | Si |
| SLU 59 | 1518 | 1858 | 2418 | -471099 | | 0 | 0 | 0.56 | 0 | | | 0 | No, Vu<V |
| SLU 56 | 1338 | -1528 | 2341 | -35096 | | 0.27 | 204 | 0.59 | 3377 | | | 1.44 | Si |
| SLU 56 | 1518 | 1163 | 2341 | -458696 | | 0 | 0 | 0.56 | 0 | | | 0 | No, Vu<V |
| SLU 57 | 1338 | -1503 | 2351 | -35185 | | 0.26 | 204 | 0.59 | 3374 | | | 1.44 | Si |
| SLU 57 | 1518 | 1188 | 2351 | -460608 | | 0 | 0 | 0.56 | 0 | | | 0 | No, Vu<V |
| SLU 53 | 1338 | -2439 | 1652 | -20384 | | 0.43 | 204 | 0.61 | 3498 | | | 2.12 | Si |
| SLU 53 | 1518 | 252 | 1652 | -319978 | | 0 | 0 | 0.56 | 0 | | | 0 | No, Vu<V |
| SLU 54 | 1338 | -2414 | 1662 | -20472 | | 0.42 | 204 | 0.61 | 3495 | | | 2.1 | Si |
| SLU 54 | 1518 | 277 | 1662 | -321890 | | 0 | 0 | 0.56 | 0 | | | 0 | No, Vu<V |
| SLU 1 | 1338 | -2065 | 794 | -11105 | | 0.36 | 204 | 0.6 | 3449 | | | 4.34 | Si |
| SLU 1 | 1518 | 13 | 794 | -155749 | | 0 | 0 | 0.56 | 0 | | | 0 | No, Vu<V |
| SLU 61 | 1338 | -2600 | 1099 | 616 | | 0.46 | 204 | 0.62 | 3520 | | | 3.2 | Si |

| Comb. | Quota | N | V par | M | σ0 | σN | l' | fvd | Vt scorr. | Vt fess.diag. | Vt,lim | c.s. | Verifica |
|---|---|---|---|---|---|---|---|---|---|---|---|---|---|
| SLU 61 | 1518 | 91 | 1099 | -199533 | | 0 | 0 | 0.56 | 0 | | | 0 | No, Vu<V |
| SLU 58 | 1338 | -857 | 2408 | -33533 | | 0.16 | 188.66 | 0.58 | 3049 | | | 1.27 | Si |
| SLU 58 | 1518 | 1833 | 2408 | -469187 | | 0 | 0 | 0.56 | 0 | | | 0 | No, Vu<V |

### Verifica a taglio nel piano secondo D.M. 17-01-18 (N.T.C.) §7.8.2.2.2 con rottura per scorrimento in combinazioni sismiche, γM = 2

| Comb. | Quota | N | V par | M | σ0 | σN | l' | fvd | Vt scorr. | Vt fess.diag. | Vt,lim | c.s. | Verifica |
|---|---|---|---|---|---|---|---|---|---|---|---|---|---|
| SLV 14 | 1338 | -2117 | 2184 | 114838 | | 0.53 | 143.29 | 0.94 | 3767 | | | 1.72 | Si |
| SLV 14 | 1518 | 869 | 1885 | -304738 | | 0 | 0 | 0.83 | 0 | | | 0 | No, Vu<V |
| SLV 6 | 1338 | -742 | 543 | -192308 | | 0 | 0 | 0.83 | 0 | | | 0 | No, Vu<V |
| SLV 6 | 1518 | -1066 | -134 | -81768 | | 0.5 | 75.92 | 0.93 | 1985 | | | 14.82 | Si |
| SLV 9 | 1338 | -1041 | 1289 | -94584 | | 1.11 | 33.55 | 1.06 | 991 | | | 0.77 | No, Vu<V |
| SLV 9 | 1518 | -472 | 560 | -166648 | | 0 | 0 | 0.83 | 0 | | | 0 | No, Vu<V |
| SLV 13 | 1338 | -2117 | 2184 | 114838 | | 0.53 | 143.29 | 0.94 | 3767 | | | 1.72 | Si |
| SLV 13 | 1518 | 869 | 1885 | -304738 | | 0 | 0 | 0.83 | 0 | | | 0 | No, Vu<V |
| SLV 7 | 1338 | -2816 | 613 | 80292 | | 0.49 | 204 | 0.93 | 5323 | | | 8.69 | Si |
| SLV 7 | 1518 | 785 | 1342 | -193377 | | 0 | 0 | 0.83 | 0 | | | 0 | No, Vu<V |
| SLD 1 | 1338 | -1579 | 416 | -94161 | | 0.44 | 127.13 | 0.92 | 3282 | | | 7.89 | Si |
| SLD 1 | 1518 | -385 | 362 | -112141 | | 0 | 0 | 0.83 | 0 | | | 0 | No, Vu<V |
| SLV 12 | 1338 | -3116 | 1359 | 178016 | | 0.83 | 134.6 | 1 | 3764 | | | 2.77 | Si |
| SLV 12 | 1518 | 1380 | 2035 | -278257 | | 0 | 0 | 0.83 | 0 | | | 0 | No, Vu<V |
| SLV 10 | 1338 | -1041 | 1289 | -94584 | | 1.11 | 33.55 | 1.06 | 991 | | | 0.77 | No, Vu<V |
| SLV 10 | 1518 | -472 | 560 | -166648 | | 0 | 0 | 0.83 | 0 | | | 0 | No, Vu<V |
| SLV 8 | 1338 | -2816 | 613 | 80292 | | 0.49 | 204 | 0.93 | 5323 | | | 8.69 | Si |
| SLV 8 | 1518 | 785 | 1342 | -193377 | | 0 | 0 | 0.83 | 0 | | | 0 | No, Vu<V |
| SLV 11 | 1338 | -3116 | 1359 | 178016 | | 0.83 | 134.6 | 1 | 3764 | | | 2.77 | Si |
| SLV 11 | 1518 | 1380 | 2035 | -278257 | | 0 | 0 | 0.83 | 0 | | | 0 | No, Vu<V |

### Verifica a pressoflessione fuori piano D.M. 17-01-18 (N.T.C.)

quota 1406 Wa 0.05 denominatore 8 γM = 2

| Comb. | fd | Sa | σ0 | N | M | Mc | Coeff.s. | Verifica |
|---|---|---|---|---|---|---|---|---|
| SLV 6 | 14 | 0.53 | 0 | 272 | 23168 | 0 | 0 | No, Trazione |
| SLV 2 | 14 | 0.53 | 0 | -502 | 23168 | 0 | 0 | No, e>t/2 |
| SLV 4 | 14 | 0.53 | 0 | -1267 | 23168 | 0 | 0 | No, e>t/2 |
| SLV 14 | 14 | 0.53 | 0 | -841 | 23168 | 0 | 0 | No, e>t/2 |
| SLV 13 | 14 | 0.53 | 0 | -841 | 23168 | 0 | 0 | No, e>t/2 |
| SLV 3 | 14 | 0.53 | 0 | -1267 | 23168 | 0 | 0 | No, e>t/2 |
| SLV 10 | 14 | 0.53 | 0 | 170 | 23168 | 0 | 0 | No, Trazione |
| SLV 1 | 14 | 0.53 | 0 | -502 | 23168 | 0 | 0 | No, e>t/2 |
| SLV 5 | 14 | 0.53 | 0 | 272 | 23168 | 0 | 0 | No, Trazione |
| SLV 9 | 14 | 0.53 | 0 | 170 | 23168 | 0 | 0 | No, Trazione |

### Verifica dei meccanismi locali di collasso con analisi cinematica lineare

forza di aggancio al piano = 0 quota mezzeria = 1406 Wa = 0.05 Ta = 0.0596

| Comb. | N top | N base | V orto | α0 | M* | e* | a0* | aLim | Verifica |
|---|---|---|---|---|---|---|---|---|---|
| SLV 9 | 2343 | -2548 | -62 | 0 | 0 | 0 | 0 | 1505.645 | No, Trazione |
| SLV 6 | 1991 | -1542 | 12 | 0 | 0 | 0 | 0 | 1505.645 | No, Trazione |
| SLV 14 | 1781 | -4456 | -145 | 0 | 0 | 0 | 0 | 879.274 | No, Trazione |
| SLV 1 | 608 | -1103 | 102 | 0 | 0 | 0 | 0 | 879.274 | No, Trazione |
| SLV 2 | 608 | -1103 | 102 | 0 | 0 | 0 | 0 | 879.274 | No, Trazione |
| SLV 5 | 1991 | -1542 | 12 | 0 | 0 | 0 | 0 | 1505.645 | No, Trazione |
| SLV 13 | 1781 | -4456 | -145 | 0 | 0 | 0 | 0 | 879.274 | No, Trazione |
| SLV 16 | 948 | -5085 | -143 | 0 | 0 | 0 | 0 | 879.274 | No, Trazione |
| SLV 10 | 2343 | -2548 | -62 | 0 | 0 | 0 | 0 | 1505.645 | No, Trazione |
| SLV 15 | 948 | -5085 | -143 | 0 | 0 | 0 | 0 | 879.274 | No, Trazione |

### Tabella dei coefficienti di sicurezza minimi

| Stato limite | Coeff.s. | Comb. | Verifica |
|---|---|---|---|
| PF_SLU | 0 | SLU 84 | No |
| V_SLU | 0 | SLU 1 | No |
| PF_SLV | 0 | SLV 16 | No |
| V_SLV | 0 | SLD 1 | No |
| PFFP_SLV | 0 | SLV 10 | No |
| R_SLV | 0 | SLV 16 | No |

## Maschio 201

Verifiche condotte secondo D.M. 17-01-18 (N.T.C.)

### Dati geometrici

| X ini. | Y ini. | X fin. | Y fin. | Quota i. | Quota.s | l | Sp. | h netta | h ini. | h fin. | a | a.s.,sx | a.s.,dx |
|---|---|---|---|---|---|---|---|---|---|---|---|---|---|
| -2066.8 | 104.6 | -2452.8 | 104.6 | L6 | L7 | 386 | 28 | 316 | 316 | 316 | | | |

### Caratteristiche del materiale

(Circolare 7 21-01-19 C8.5.I) Muratura in mattoni pieni e malta di calce LC2_Corti

| fb | fk | fvk0 | fmedio | τ0 | fv0 | μ | ϕ | fv,lim | E | G | FC |
|---|---|---|---|---|---|---|---|---|---|---|---|
| 60 | | | 34.5 | 0.9 | 2 | 0.58 | 0.77 | 3.25 | 32000 | 12800 | 1.2 |

### Verifica a pressoflessione nel piano secondo D.M. 17-01-18 NTC §7.8.2.2.1 in combinazioni non sismiche, γM = 3

| Comb. | Quota | N | M | σ0 | Mu | c.s. | Verifica |
|---|---|---|---|---|---|---|---|
| SLU 16 | 1248 | -10177 | 69168 | 0.94 | 1737106 | 25.114 | Si |
| SLU 16 | 1458 | -5979 | -372102 | 0.55 | 1075574 | 2.891 | Si |
| SLU 71 | 1248 | -13261 | -13711 | 1.23 | 2173915 | 158.547 | Si |
| SLU 71 | 1458 | -7724 | -463647 | 0.71 | 1359980 | 2.933 | Si |

| Comb. | Quota | N | M | σ0 | Mu | c.s. | Verifica |
|---|---|---|---|---|---|---|---|
| SLU 8 | 1248 | -10085 | -82684 | 0.93 | 1723411 | 20.843 | Si |
| SLU 8 | 1458 | -5887 | -387313 | 0.54 | 1060181 | 2.737 | Si |
| SLU 72 | 1248 | -13249 | -38434 | 1.23 | 2172229 | 56.519 | Si |
| SLU 72 | 1458 | -7712 | -465929 | 0.71 | 1357990 | 2.915 | Si |
| SLU 37 | 1248 | -10988 | 185715 | 1.02 | 1856027 | 9.994 | Si |
| SLU 37 | 1458 | -6669 | -413543 | 0.62 | 1189584 | 2.877 | Si |
| SLU 38 | 1248 | -10976 | 160993 | 1.02 | 1854215 | 11.517 | Si |
| SLU 38 | 1458 | -6656 | -415825 | 0.62 | 1187536 | 2.856 | Si |
| SLU 9 | 1248 | -10072 | -107406 | 0.93 | 1721550 | 16.028 | Si |
| SLU 9 | 1458 | -5874 | -389594 | 0.54 | 1058090 | 2.716 | Si |
| SLU 30 | 1248 | -10883 | 9141 | 1.01 | 1840843 | 201.389 | Si |
| SLU 30 | 1458 | -6564 | -431035 | 0.61 | 1172417 | 2.72 | Si |
| SLU 29 | 1248 | -10896 | 33863 | 1.01 | 1842659 | 54.415 | Si |
| SLU 29 | 1458 | -6577 | -428754 | 0.61 | 1174470 | 2.739 | Si |
| SLU 17 | 1248 | -10164 | 44446 | 0.94 | 1735251 | 39.042 | Si |
| SLU 17 | 1458 | -5966 | -374383 | 0.55 | 1073488 | 2.867 | Si |

Verifica a pressoflessione nel piano secondo D.M. 17-01-18 NTC §7.8.2.2.1 in combinazioni sismiche, γM = 2

| Comb. | Quota | N | M | σ0 | Mu | c.s. | Verifica |
|---|---|---|---|---|---|---|---|
| SLV 5 | 1248 | -11478 | 360434 | 1.06 | 2022673 | 5.612 | Si |
| SLV 5 | 1458 | -7001 | -487079 | 0.65 | 1279524 | 2.627 | Si |
| SLV 14 | 1248 | -4625 | -387730 | 0.43 | 861373 | 2.222 | Si |
| SLV 14 | 1458 | -1072 | 408744 | 0 | 0 | 0 | No, e>l/2 |
| SLV 13 | 1248 | -4625 | -387730 | 0.43 | 861373 | 2.222 | Si |
| SLV 13 | 1458 | -1072 | 408744 | 0 | 0 | 0 | No, e>l/2 |
| SLV 15 | 1248 | -4034 | -485394 | 0.37 | 754704 | 1.555 | Si |
| SLV 15 | 1458 | -503 | 486875 | 0 | 0 | 0 | No, e>l/2 |
| SLV 2 | 1248 | -14106 | 587995 | 1.31 | 2431663 | 4.136 | Si |
| SLV 2 | 1458 | -9172 | -829210 | 0.85 | 1647184 | 1.986 | Si |
| SLV 16 | 1248 | -4034 | -485394 | 0.37 | 754704 | 1.555 | Si |
| SLV 16 | 1458 | -503 | 486875 | 0 | 0 | 0 | No, e>l/2 |
| SLV 1 | 1248 | -14106 | 587995 | 1.31 | 2431663 | 4.136 | Si |
| SLV 1 | 1458 | -9172 | -829210 | 0.85 | 1647184 | 1.986 | Si |
| SLV 4 | 1248 | -13515 | 490330 | 1.25 | 2341386 | 4.775 | Si |
| SLV 4 | 1458 | -8602 | -751079 | 0.8 | 1552113 | 2.067 | Si |
| SLV 3 | 1248 | -13515 | 490330 | 1.25 | 2341386 | 4.775 | Si |
| SLV 3 | 1458 | -8602 | -751079 | 0.8 | 1552113 | 2.067 | Si |
| SLV 6 | 1248 | -11478 | 360434 | 1.06 | 2022673 | 5.612 | Si |
| SLV 6 | 1458 | -7001 | -487079 | 0.65 | 1279524 | 2.627 | Si |

Verifica a taglio nel piano secondo D.M. 17-01-18 (N.T.C.) §7.8.2.2.2 con rottura per scorrimento in combinazioni non sismiche, γM = 3

| Comb. | Quota | N | V par | M | σ0 | σN | l' | fvd | Vt scorr. | Vt fess.diag. | Vt,lim | c.s. | Verifica |
|---|---|---|---|---|---|---|---|---|---|---|---|---|---|
| SLU 83 | 1248 | -12756 | 2662 | 231869 | | 1.18 | 386 | 0.71 | 7705 | | | 2.89 | Si |
| SLU 83 | 1458 | -7219 | 2662 | -330098 | | 0.67 | 386 | 0.64 | 6967 | | | 2.62 | Si |
| SLU 35 | 1248 | -12307 | 2888 | 205473 | | 1.14 | 386 | 0.71 | 7645 | | | 2.65 | Si |
| SLU 35 | 1458 | -7988 | 2888 | -403111 | | 0.74 | 386 | 0.65 | 7070 | | | 2.45 | Si |
| SLU 41 | 1248 | -10391 | 2726 | 279444 | | 0.96 | 386 | 0.68 | 7390 | | | 2.71 | Si |
| SLU 41 | 1458 | -6072 | 2726 | -295204 | | 0.56 | 386 | 0.63 | 6814 | | | 2.5 | Si |
| SLU 37 | 1248 | -10988 | 2843 | 185715 | | 1.02 | 386 | 0.69 | 7470 | | | 2.63 | Si |
| SLU 37 | 1458 | -6669 | 2843 | -413543 | | 0.62 | 386 | 0.64 | 6894 | | | 2.42 | Si |
| SLU 79 | 1248 | -13354 | 2779 | 138141 | | 1.24 | 386 | 0.72 | 7785 | | | 2.8 | Si |
| SLU 79 | 1458 | -7816 | 2779 | -448437 | | 0.72 | 386 | 0.65 | 7047 | | | 2.54 | Si |
| SLU 36 | 1248 | -12295 | 2781 | 180751 | | 1.14 | 386 | 0.71 | 7644 | | | 2.75 | Si |
| SLU 36 | 1458 | -7976 | 2781 | -405393 | | 0.74 | 386 | 0.65 | 7068 | | | 2.54 | Si |
| SLU 42 | 1248 | -10379 | 2619 | 254722 | | 0.96 | 386 | 0.68 | 7388 | | | 2.82 | Si |
| SLU 42 | 1458 | -6059 | 2619 | -297486 | | 0.56 | 386 | 0.63 | 6812 | | | 2.6 | Si |
| SLU 80 | 1248 | -13341 | 2673 | 113418 | | 1.23 | 386 | 0.72 | 7783 | | | 2.91 | Si |
| SLU 80 | 1458 | -7804 | 2673 | -450718 | | 0.72 | 386 | 0.65 | 7045 | | | 2.64 | Si |
| SLU 38 | 1248 | -10976 | 2736 | 160993 | | 1.02 | 386 | 0.69 | 7468 | | | 2.73 | Si |
| SLU 38 | 1458 | -6656 | 2736 | -415825 | | 0.62 | 386 | 0.64 | 6892 | | | 2.52 | Si |
| SLU 77 | 1248 | -14673 | 2824 | 157899 | | 1.36 | 386 | 0.74 | 7961 | | | 2.82 | Si |
| SLU 77 | 1458 | -9136 | 2824 | -438005 | | 0.85 | 386 | 0.67 | 7223 | | | 2.56 | Si |

Verifica a taglio nel piano secondo D.M. 17-01-18 (N.T.C.) §7.8.2.2.2 con rottura per scorrimento in combinazioni sismiche, γM = 2

| Comb. | Quota | N | V par | M | σ0 | σN | l' | fvd | Vt scorr. | Vt fess.diag. | Vt,lim | c.s. | Verifica |
|---|---|---|---|---|---|---|---|---|---|---|---|---|---|
| SLV 14 | 1248 | -4625 | -2862 | -387730 | | 0.5 | 327.5 | 0.93 | 8567 | | | 2.99 | Si |
| SLV 14 | 1458 | -1072 | -2537 | 408744 | | 0 | 0 | 0.83 | 0 | | | 0 | No, Vu<V |
| SLV 4 | 1248 | -13515 | 4959 | 490330 | | 1.25 | 386 | 1.08 | 11710 | | | 2.36 | Si |
| SLV 4 | 1458 | -8602 | 4634 | -751079 | | 0.97 | 317.07 | 1.03 | 9119 | | | 1.97 | Si |
| SLV 13 | 1248 | -4625 | -2862 | -387730 | | 0.5 | 327.5 | 0.93 | 8567 | | | 2.99 | Si |
| SLV 13 | 1458 | -1072 | -2537 | 408744 | | 0 | 0 | 0.83 | 0 | | | 0 | No, Vu<V |
| SLV 2 | 1248 | -14106 | 5817 | 587995 | | 1.31 | 386 | 1.09 | 11828 | | | 2.03 | Si |
| SLV 2 | 1458 | -9172 | 5452 | -829210 | | 1.06 | 307.77 | 1.05 | 9016 | | | 1.65 | Si |
| SLV 15 | 1248 | -4034 | -3720 | -485394 | | 0.66 | 217.99 | 0.97 | 5893 | | | 1.58 | Si |
| SLV 15 | 1458 | -503 | -3355 | 486875 | | 0 | 0 | 0.83 | 0 | | | 0 | No, Vu<V |
| SLV 16 | 1248 | -4034 | -3720 | -485394 | | 0.66 | 217.99 | 0.97 | 5893 | | | 1.58 | Si |
| SLV 16 | 1458 | -503 | -3355 | 486875 | | 0 | 0 | 0.83 | 0 | | | 0 | No, Vu<V |
| SLV 6 | 1248 | -11478 | 3779 | 360434 | | 1.06 | 386 | 1.05 | 11302 | | | 2.99 | Si |
| SLV 6 | 1458 | -7001 | 3609 | -487079 | | 0.68 | 370.28 | 0.97 | 10040 | | | 2.78 | Si |
| SLV 1 | 1248 | -14106 | 5817 | 587995 | | 1.31 | 386 | 1.09 | 11828 | | | 2.03 | Si |
| SLV 1 | 1458 | -9172 | 5452 | -829210 | | 1.06 | 307.77 | 1.05 | 9016 | | | 1.65 | Si |
| SLV 3 | 1248 | -13515 | 4959 | 490330 | | 1.25 | 386 | 1.08 | 11710 | | | 2.36 | Si |
| SLV 3 | 1458 | -8602 | 4634 | -751079 | | 0.97 | 317.07 | 1.03 | 9119 | | | 1.97 | Si |
| SLV 5 | 1248 | -11478 | 3779 | 360434 | | 1.06 | 386 | 1.05 | 11302 | | | 2.99 | Si |
| SLV 5 | 1458 | -7001 | 3609 | -487079 | | 0.68 | 370.28 | 0.97 | 10040 | | | 2.78 | Si |

### Verifica a pressoflessione fuori piano D.M. 17-01-18 (N.T.C.)

quota 1406 Wa 0.05 denominatore 8 γM = 2

| Comb. | fd | Sa | σ0 | N | M | Mc | Coeff.s. | Verifica |
|---|---|---|---|---|---|---|---|---|
| SLV 14 | 14 | 0.53 | 0 | -2114 | 44858 | 0 | 0 | No, e>t/2 |
| SLV 13 | 14 | 0.53 | 0 | -2114 | 44858 | 0 | 0 | No, e>t/2 |
| SLV 16 | 14 | 0.53 | 0 | -1531 | 44858 | 0 | 0 | No, e>t/2 |
| SLV 15 | 14 | 0.53 | 0 | -1531 | 44858 | 0 | 0 | No, e>t/2 |
| SLV 11 | 14 | 0.53 | 0.34 | -3719 | 44858 | 50596 | 1.13 | Si |
| SLV 12 | 14 | 0.53 | 0.34 | -3719 | 44858 | 50596 | 1.13 | Si |
| SLV 9 | 14 | 0.53 | 0.52 | -5662 | 44858 | 75866 | 1.69 | Si |
| SLV 10 | 14 | 0.53 | 0.52 | -5662 | 44858 | 75866 | 1.69 | Si |
| SLV 8 | 14 | 0.53 | 0.57 | -6177 | 44858 | 82433 | 1.84 | Si |
| SLV 7 | 14 | 0.53 | 0.57 | -6177 | 44858 | 82433 | 1.84 | Si |

### Verifica dei meccanismi locali di collasso con analisi cinematica lineare

forza di aggancio al piano = 0 quota mezzeria = 1406 Wa = 0.05 Ta = 0.0596

| Comb. | N top | N base | V orto | α0 | M* | e* | a0* | aLim | Verifica |
|---|---|---|---|---|---|---|---|---|---|
| SLV 10 | -1577 | -8633 | 329 | 0.003 | 7.081 | 0.899 | 4.746 | 1505.645 | No |
| SLV 9 | -1577 | -8633 | 329 | 0.003 | 7.081 | 0.899 | 4.746 | 1505.645 | No |
| SLV 7 | -1621 | -9506 | -327 | 0.004 | 7.115 | 0.898 | 5.828 | 1505.645 | No |
| SLV 8 | -1621 | -9506 | -327 | 0.004 | 7.115 | 0.898 | 5.828 | 1505.645 | No |
| SLV 12 | -1446 | -6662 | -269 | 0.015 | 6.981 | 0.902 | 24.13 | 1505.645 | No |
| SLV 11 | -1446 | -6662 | -269 | 0.015 | 6.981 | 0.902 | 24.13 | 1505.645 | No |
| SLV 6 | -1752 | -11478 | 270 | 0.017 | 7.218 | 0.896 | 26.855 | 1505.645 | No |
| SLV 5 | -1752 | -11478 | 270 | 0.017 | 7.218 | 0.896 | 26.855 | 1505.645 | No |
| SLV 13 | -1327 | -4625 | 188 | 0.033 | 6.893 | 0.905 | 52.337 | 879.274 | No |
| SLV 14 | -1327 | -4625 | 188 | 0.033 | 6.893 | 0.905 | 52.337 | 879.274 | No |

### Tabella dei coefficienti di sicurezza minimi

| Stato limite | Coeff.s. | Comb. | Verifica |
|---|---|---|---|
| PF_SLU | 2.716 | SLU 9 | Si |
| V_SLU | 2.424 | SLU 37 | Si |
| PF_SLV | 0 | SLV 13 | No |
| V_SLV | 0 | SLV 13 | No |
| PFFP_SLV | 0 | SLV 13 | No |
| R_SLV | 0.003 | SLV 9 | No |

## Maschio 202

Verifiche condotte secondo D.M. 17-01-18 (N.T.C.)

### Dati geometrici

| X ini. | Y ini. | X fin. | Y fin. | Quota i. | Quota.s | l | Sp. | h netta | h ini. | h fin. | a | a.s.,sx | a.s.,dx |
|---|---|---|---|---|---|---|---|---|---|---|---|---|---|
| -1228.3 | 104.6 | -1986.8 | 104.6 | L6 | L7 | 758.5 | 28 | 316 | 316 | 316 | | | |

### Caratteristiche del materiale

(Circolare 7 21-01-19 C8.5.I) Muratura in mattoni pieni e malta di calce LC2_Corti

| fb | fk | fvk0 | fmedio | τ0 | fv0 | μ | ϕ | fv,lim | E | G | FC |
|---|---|---|---|---|---|---|---|---|---|---|---|
| 60 | | | 34.5 | 0.9 | 2 | 0.58 | 0.77 | 3.25 | 32000 | 12800 | 1.2 |

### Verifica a pressoflessione nel piano secondo D.M. 17-01-18 NTC §7.8.2.2.1 in combinazioni non sismiche, γM = 3

| Comb. | Quota | N | M | σ0 | Mu | c.s. | Verifica |
|---|---|---|---|---|---|---|---|
| SLU 40 | 1248 | -32146 | -1382966 | 1.51 | 9926109 | 7.177 | Si |
| SLU 40 | 1498 | -25428 | -974945 | 1.2 | 8226158 | 8.438 | Si |
| SLU 77 | 1248 | -51708 | -1891369 | 2.43 | 13748961 | 7.269 | Si |
| SLU 77 | 1498 | -43688 | -1014056 | 2.06 | 12384524 | 12.213 | Si |
| SLU 39 | 1248 | -31994 | -1457987 | 1.51 | 9889858 | 6.783 | Si |
| SLU 39 | 1498 | -25360 | -1043157 | 1.19 | 8208000 | 7.868 | Si |
| SLU 82 | 1248 | -40482 | -1685803 | 1.91 | 11760291 | 6.976 | Si |
| SLU 82 | 1498 | -30904 | -1225259 | 1.46 | 9626770 | 7.857 | Si |
| SLU 64 | 1248 | -41460 | -1681429 | 1.95 | 11955420 | 7.11 | Si |
| SLU 64 | 1498 | -30597 | -1164881 | 1.44 | 9551745 | 8.2 | Si |
| SLU 74 | 1248 | -47275 | -1860091 | 2.23 | 13029684 | 7.005 | Si |
| SLU 74 | 1498 | -38402 | -1210230 | 1.81 | 11331042 | 9.363 | Si |
| SLU 18 | 1248 | -29503 | -1285725 | 1.39 | 9280999 | 7.218 | Si |
| SLU 18 | 1498 | -22156 | -1005737 | 1.04 | 7326485 | 7.285 | Si |
| SLU 60 | 1248 | -37839 | -1588562 | 1.78 | 11211768 | 7.058 | Si |
| SLU 60 | 1498 | -27632 | -1256051 | 1.3 | 8805665 | 7.011 | Si |
| SLU 83 | 1248 | -44763 | -1792102 | 2.11 | 12583843 | 7.022 | Si |
| SLU 83 | 1498 | -36123 | -1097297 | 1.7 | 10839048 | 9.878 | Si |
| SLU 81 | 1248 | -40330 | -1760825 | 1.9 | 11729593 | 6.661 | Si |
| SLU 81 | 1498 | -30837 | -1293471 | 1.45 | 9610240 | 7.43 | Si |

### Verifica a pressoflessione nel piano secondo D.M. 17-01-18 NTC §7.8.2.2.1 in combinazioni sismiche, γM = 2

| Comb. | Quota | N | M | σ0 | Mu | c.s. | Verifica |
|---|---|---|---|---|---|---|---|
| SLV 1 | 1248 | -36783 | -1333031 | 1.73 | 11972535 | 8.981 | Si |
| SLV 1 | 1498 | -31246 | -4441092 | 1.47 | 10423256 | 2.347 | Si |
| SLV 8 | 1248 | -28974 | -1515263 | 1.36 | 9761413 | 6.442 | Si |
| SLV 8 | 1498 | -25260 | -2874764 | 1.19 | 8647318 | 3.008 | Si |
| SLV 7 | 1248 | -28974 | -1515263 | 1.36 | 9761413 | 6.442 | Si |
| SLV 7 | 1498 | -25260 | -2874764 | 1.19 | 8647318 | 3.008 | Si |
| SLV 2 | 1248 | -36783 | -1333031 | 1.73 | 11972535 | 8.981 | Si |
| SLV 2 | 1498 | -31246 | -4441092 | 1.47 | 10423256 | 2.347 | Si |
| SLV 3 | 1248 | -34667 | -1457080 | 1.63 | 11390973 | 7.818 | Si |

| Comb. | Quota | N | M | σ0 | Mu | c.s. | Verifica |
|---|---|---|---|---|---|---|---|
| SLV 3 | 1498 | -31175 | -4938127 | 1.47 | 10402651 | 2.107 | Si |
| SLV 14 | 1248 | -27571 | -1085772 | 1.3 | 9345294 | 8.607 | Si |
| SLV 14 | 1498 | -14585 | 3111015 | 0.69 | 5220616 | 1.678 | Si |
| SLV 4 | 1248 | -34667 | -1457080 | 1.63 | 11390973 | 7.818 | Si |
| SLV 4 | 1498 | -31175 | -4938127 | 1.47 | 10402651 | 2.107 | Si |
| SLV 13 | 1248 | -27571 | -1085772 | 1.3 | 9345294 | 8.607 | Si |
| SLV 13 | 1498 | -14585 | 3111015 | 0.69 | 5220616 | 1.678 | Si |
| SLV 16 | 1248 | -25455 | -1209821 | 1.2 | 8706755 | 7.197 | Si |
| SLV 16 | 1498 | -14514 | 2613980 | 0.68 | 5196528 | 1.988 | Si |
| SLV 15 | 1248 | -25455 | -1209821 | 1.2 | 8706755 | 7.197 | Si |
| SLV 15 | 1498 | -14514 | 2613980 | 0.68 | 5196528 | 1.988 | Si |

Verifica a taglio nel piano secondo D.M. 17-01-18 (N.T.C.) §7.8.2.2.2 con rottura per scorrimento in combinazioni non sismiche, γM = 3

| Comb. | Quota | N | V par | M | σ0 | σN | l' | fvd | Vt scorr. | Vt fess.diag. | Vt,lim | c.s. | Verifica |
|---|---|---|---|---|---|---|---|---|---|---|---|---|---|
| SLU 83 | 1248 | -44763 | 2372 | -1792102 | | 2.11 | 758.5 | 0.84 | 17767 | | | 7.49 | Si |
| SLU 83 | 1498 | -36123 | 2787 | -1097297 | | 1.7 | 758.5 | 0.78 | 16615 | | | 5.96 | Si |
| SLU 61 | 1248 | -37991 | 2645 | -1513541 | | 1.79 | 758.5 | 0.79 | 16864 | | | 6.38 | Si |
| SLU 61 | 1498 | -27700 | 2922 | -1187838 | | 1.3 | 758.5 | 0.73 | 15492 | | | 5.3 | Si |
| SLU 19 | 1248 | -29655 | 2280 | -1210703 | | 1.4 | 758.5 | 0.74 | 15753 | | | 6.91 | Si |
| SLU 19 | 1498 | -22224 | 2594 | -937524 | | 1.05 | 758.5 | 0.7 | 14762 | | | 5.69 | Si |
| SLU 60 | 1248 | -37839 | 2697 | -1588562 | | 1.78 | 758.5 | 0.79 | 16844 | | | 6.25 | Si |
| SLU 60 | 1498 | -27632 | 3010 | -1256051 | | 1.3 | 758.5 | 0.73 | 15483 | | | 5.14 | Si |
| SLU 82 | 1248 | -40482 | 2709 | -1685803 | | 1.91 | 758.5 | 0.81 | 17197 | | | 6.35 | Si |
| SLU 82 | 1498 | -30904 | 3143 | -1225259 | | 1.46 | 758.5 | 0.75 | 15919 | | | 5.06 | Si |
| SLU 40 | 1248 | -32146 | 2344 | -1382966 | | 1.51 | 758.5 | 0.76 | 16085 | | | 6.86 | Si |
| SLU 40 | 1498 | -25428 | 2815 | -974945 | | 1.2 | 758.5 | 0.72 | 15189 | | | 5.39 | Si |
| SLU 73 | 1248 | -40922 | 2363 | -1611970 | | 1.93 | 758.5 | 0.81 | 17255 | | | 7.3 | Si |
| SLU 73 | 1498 | -30878 | 2684 | -1141207 | | 1.45 | 758.5 | 0.75 | 15916 | | | 5.93 | Si |
| SLU 39 | 1248 | -31994 | 2395 | -1457987 | | 1.51 | 758.5 | 0.76 | 16065 | | | 6.71 | Si |
| SLU 39 | 1498 | -25360 | 2903 | -1043157 | | 1.19 | 758.5 | 0.71 | 15180 | | | 5.23 | Si |
| SLU 81 | 1248 | -40330 | 2761 | -1760825 | | 1.9 | 758.5 | 0.81 | 17176 | | | 6.22 | Si |
| SLU 81 | 1498 | -30837 | 3231 | -1293471 | | 1.45 | 758.5 | 0.75 | 15910 | | | 4.92 | Si |
| SLU 18 | 1248 | -29503 | 2331 | -1285725 | | 1.39 | 758.5 | 0.74 | 15733 | | | 6.75 | Si |
| SLU 18 | 1498 | -22156 | 2682 | -1005737 | | 1.04 | 758.5 | 0.69 | 14753 | | | 5.5 | Si |

Verifica a taglio nel piano secondo D.M. 17-01-18 (N.T.C.) §7.8.2.2.2 con rottura per scorrimento in combinazioni sismiche, γM = 2

| Comb. | Quota | N | V par | M | σ0 | σN | l' | fvd | Vt scorr. | Vt fess.diag. | Vt,lim | c.s. | Verifica |
|---|---|---|---|---|---|---|---|---|---|---|---|---|---|
| SLV 1 | 1248 | -36783 | 20938 | -1333031 | | 1.73 | 758.5 | 1.18 | 25055 | | | 1.2 | Si |
| SLV 1 | 1498 | -31246 | 14457 | -4441092 | | 1.57 | 711.35 | 1.15 | 22847 | | | 1.58 | Si |
| SLV 4 | 1248 | -34667 | 24010 | -1457080 | | 1.63 | 758.5 | 1.16 | 24632 | | | 1.03 | Si |
| SLV 4 | 1498 | -31175 | 16273 | -4938127 | | 1.68 | 662.54 | 1.17 | 21694 | | | 1.33 | Si |
| SLV 13 | 1248 | -27571 | -20975 | -1085772 | | 1.3 | 758.5 | 1.09 | 23212 | | | 1.11 | Si |
| SLV 13 | 1498 | -14585 | -12921 | 3111015 | | 1.05 | 497.86 | 1.04 | 14534 | | | 1.12 | Si |
| SLV 8 | 1248 | -28974 | 12926 | -1515263 | | 1.36 | 758.5 | 1.11 | 23493 | | | 1.82 | Si |
| SLV 8 | 1498 | -25260 | 8808 | -2874764 | | 1.19 | 758.5 | 1.07 | 22750 | | | 2.58 | Si |
| SLV 3 | 1248 | -34667 | 24010 | -1457080 | | 1.63 | 758.5 | 1.16 | 24632 | | | 1.03 | Si |
| SLV 3 | 1498 | -31175 | 16273 | -4938127 | | 1.68 | 662.54 | 1.17 | 21694 | | | 1.33 | Si |
| SLV 2 | 1248 | -36783 | 20938 | -1333031 | | 1.73 | 758.5 | 1.18 | 25055 | | | 1.2 | Si |
| SLV 2 | 1498 | -31246 | 14457 | -4441092 | | 1.57 | 711.35 | 1.15 | 22847 | | | 1.58 | Si |
| SLV 14 | 1248 | -27571 | -20975 | -1085772 | | 1.3 | 758.5 | 1.09 | 23212 | | | 1.11 | Si |
| SLV 14 | 1498 | -14585 | -12921 | 3111015 | | 1.05 | 497.86 | 1.04 | 14534 | | | 1.12 | Si |
| SLV 7 | 1248 | -28974 | 12926 | -1515263 | | 1.36 | 758.5 | 1.11 | 23493 | | | 1.82 | Si |
| SLV 7 | 1498 | -25260 | 8808 | -2874764 | | 1.19 | 758.5 | 1.07 | 22750 | | | 2.58 | Si |
| SLV 16 | 1248 | -25455 | -17902 | -1209821 | | 1.2 | 758.5 | 1.07 | 22789 | | | 1.27 | Si |
| SLV 16 | 1498 | -14514 | -11105 | 2613980 | | 0.87 | 597.44 | 1.01 | 16843 | | | 1.52 | Si |
| SLV 15 | 1248 | -25455 | -17902 | -1209821 | | 1.2 | 758.5 | 1.07 | 22789 | | | 1.27 | Si |
| SLV 15 | 1498 | -14514 | -11105 | 2613980 | | 0.87 | 597.44 | 1.01 | 16843 | | | 1.52 | Si |

Verifica a pressoflessione fuori piano D.M. 17-01-18 (N.T.C.)

quota 1406 Wa 0.05 denominatore 8 γM = 2

| Comb. | fd | Sa | σ0 | N | M | Mc | Coeff.s. | Verifica |
|---|---|---|---|---|---|---|---|---|
| SLV 14 | 14 | 0.53 | 0.9 | -19216 | 88146 | 249106 | 2.83 | Si |
| SLV 13 | 14 | 0.53 | 0.9 | -19216 | 88146 | 249106 | 2.83 | Si |
| SLV 16 | 14 | 0.53 | 0.93 | -19778 | 88146 | 255787 | 2.9 | Si |
| SLV 15 | 14 | 0.53 | 0.93 | -19778 | 88146 | 255787 | 2.9 | Si |
| SLV 10 | 14 | 0.53 | 1.1 | -23420 | 88146 | 298286 | 3.38 | Si |
| SLV 9 | 14 | 0.53 | 1.1 | -23420 | 88146 | 298286 | 3.38 | Si |
| SLV 12 | 14 | 0.53 | 1.19 | -25292 | 88146 | 319575 | 3.63 | Si |
| SLV 11 | 14 | 0.53 | 1.19 | -25292 | 88146 | 319575 | 3.63 | Si |
| SLV 5 | 14 | 0.53 | 1.3 | -27584 | 88146 | 345131 | 3.92 | Si |
| SLV 6 | 14 | 0.53 | 1.3 | -27584 | 88146 | 345131 | 3.92 | Si |

Verifica dei meccanismi locali di collasso con analisi cinematica lineare

forza di aggancio al piano = 0 quota mezzeria = 1406 Wa = 0.05 Ta = 0.0596

| Comb. | N top | N base | V orto | α0 | M* | e* | a0* | aLim | Verifica |
|---|---|---|---|---|---|---|---|---|---|
| SLV 10 | -16971 | -33264 | -1510 | 0 | 27.001 | 0.912 | 0 | 1505.645 | No |
| SLV 6 | -19480 | -36027 | -1506 | 0 | 29.506 | 0.917 | 0 | 1505.645 | No |
| SLV 5 | -19480 | -36027 | -1506 | 0 | 29.506 | 0.917 | 0 | 1505.645 | No |
| SLV 9 | -16971 | -33264 | -1510 | 0 | 27.001 | 0.912 | 0 | 1505.645 | No |
| SLV 13 | -13503 | -27571 | -973 | 0.008 | 23.563 | 0.904 | 13.204 | 879.274 | No |
| SLV 14 | -13503 | -27571 | -973 | 0.008 | 23.563 | 0.904 | 13.204 | 879.274 | No |
| SLV 2 | -21864 | -36783 | -957 | 0.02 | 31.897 | 0.922 | 30.874 | 879.274 | No |
| SLV 1 | -21864 | -36783 | -957 | 0.02 | 31.897 | 0.922 | 30.874 | 879.274 | No |
| SLV 7 | -17931 | -28974 | 45 | 0.054 | 27.958 | 0.914 | 85.199 | 1505.645 | No |
| SLV 8 | -17931 | -28974 | 45 | 0.054 | 27.958 | 0.914 | 85.199 | 1505.645 | No |

### Tabella dei coefficienti di sicurezza minimi

| Stato limite | Coeff.s. | Comb. | Verifica |
|---|---|---|---|
| PF_SLU | 6.661 | SLU 81 | Si |
| V_SLU | 4.925 | SLU 81 | Si |
| PF_SLV | 1.678 | SLV 13 | Si |
| V_SLV | 1.026 | SLV 3 | Si |
| PFFP_SLV | 2.826 | SLV 13 | Si |
| R_SLV | 0 | SLV 5 | No |

## Maschio 203

Verifiche condotte secondo D.M. 17-01-18 (N.T.C.)

### Dati geometrici

| X ini. | Y ini. | X fin. | Y fin. | Quota i. | Quota.s | l | Sp. | h netta | h ini. | h fin. | a | a.s.,sx | a.s.,dx |
|---|---|---|---|---|---|---|---|---|---|---|---|---|---|
| -1046.6 | 104.6 | -1116.3 | 104.6 | L6 | L7 | 69.6 | 28 | 316 | 316 | 316 | | | |

### Caratteristiche del materiale

(Circolare 7 21-01-19 C8.5.I) Muratura in mattoni pieni e malta di calce LC2_Corti

| fb | fk | fvk0 | fmedio | τ0 | fv0 | μ | ϕ | fv,lim | E | G | FC |
|---|---|---|---|---|---|---|---|---|---|---|---|
| 60 | | | 34.5 | 0.9 | 2 | 0.58 | 0.77 | 3.25 | 32000 | 12800 | 1.2 |

### Verifica a pressoflessione nel piano secondo D.M. 17-01-18 NTC §7.8.2.2.1 in combinazioni non sismiche, γM = 3

| Comb. | Quota | N | M | σ0 | Mu | c.s. | Verifica |
|---|---|---|---|---|---|---|---|
| SLU 40 | 1248 | -2436 | 30525 | 1.25 | 71812 | 2.353 | Si |
| SLU 40 | 1498 | -3949 | -10958 | 2.03 | 103313 | 9.428 | Si |
| SLU 39 | 1248 | -2449 | 31289 | 1.26 | 72116 | 2.305 | Si |
| SLU 39 | 1498 | -4013 | -11527 | 2.06 | 104423 | 9.059 | Si |
| SLU 81 | 1248 | -3255 | 30612 | 1.67 | 90106 | 2.943 | Si |
| SLU 81 | 1498 | -4878 | -9670 | 2.5 | 117683 | 12.17 | Si |
| SLU 31 | 1248 | -2539 | 26711 | 1.3 | 74271 | 2.781 | Si |
| SLU 31 | 1498 | -3982 | -9174 | 2.04 | 103891 | 11.325 | Si |
| SLU 37 | 1248 | -3266 | 33144 | 1.67 | 90327 | 2.725 | Si |
| SLU 37 | 1498 | -5976 | -13247 | 3.06 | 129783 | 9.798 | Si |
| SLU 83 | 1248 | -3608 | 33192 | 1.85 | 97084 | 2.925 | Si |
| SLU 83 | 1498 | -5822 | -11232 | 2.99 | 128403 | 11.432 | Si |
| SLU 38 | 1248 | -3253 | 32379 | 1.67 | 90068 | 2.782 | Si |
| SLU 38 | 1498 | -5912 | -12677 | 3.03 | 129223 | 10.193 | Si |
| SLU 34 | 1248 | -2892 | 29290 | 1.48 | 82356 | 2.812 | Si |
| SLU 34 | 1498 | -4926 | -10736 | 2.53 | 118317 | 11.021 | Si |
| SLU 42 | 1248 | -2789 | 33104 | 1.43 | 80056 | 2.418 | Si |
| SLU 42 | 1498 | -4892 | -12520 | 2.51 | 117876 | 9.415 | Si |
| SLU 41 | 1248 | -2802 | 33869 | 1.44 | 80340 | 2.372 | Si |
| SLU 41 | 1498 | -4956 | -13089 | 2.54 | 118721 | 9.07 | Si |

### Verifica a pressoflessione nel piano secondo D.M. 17-01-18 NTC §7.8.2.2.1 in combinazioni sismiche, γM = 2

| Comb. | Quota | N | M | σ0 | Mu | c.s. | Verifica |
|---|---|---|---|---|---|---|---|
| SLV 2 | 1248 | -1648 | 314367 | 0 | 0 | 0 | No, e>l/2 |
| SLV 2 | 1498 | -4022 | -255143 | 0 | 0 | 0 | No, e>l/2 |
| SLV 3 | 1248 | -1282 | 334948 | 0 | 0 | 0 | No, e>l/2 |
| SLV 3 | 1498 | -2097 | -264630 | 0 | 0 | 0 | No, e>l/2 |
| SLV 14 | 1248 | -4121 | -305013 | 0 | 0 | 0 | No, e>l/2 |
| SLV 14 | 1498 | -5412 | 257758 | 0 | 0 | 0 | No, e>l/2 |
| SLV 4 | 1248 | -1282 | 334948 | 0 | 0 | 0 | No, e>l/2 |
| SLV 4 | 1498 | -2097 | -264630 | 0 | 0 | 0 | No, e>l/2 |
| SLV 13 | 1248 | -4121 | -305013 | 0 | 0 | 0 | No, e>l/2 |
| SLV 13 | 1498 | -5412 | 257758 | 0 | 0 | 0 | No, e>l/2 |
| SLD 1 | 1248 | -2249 | 142975 | 0 | 0 | 0 | No, e>l/2 |
| SLD 1 | 1498 | -3861 | -111111 | 1.98 | 112656 | 1.014 | Si |
| SLV 11 | 1248 | -2463 | -43637 | 1.26 | 76882 | 1.762 | Si |
| SLV 11 | 1498 | -754 | 57687 | 0 | 0 | 0 | No, e>l/2 |
| SLV 12 | 1248 | -2463 | -43637 | 1.26 | 76882 | 1.762 | Si |
| SLV 12 | 1498 | -754 | 57687 | 0 | 0 | 0 | No, e>l/2 |
| SLV 7 | 1248 | -1721 | 142177 | 0 | 0 | 0 | No, e>l/2 |
| SLV 7 | 1498 | -337 | -96183 | 0 | 0 | 0 | No, e>l/2 |
| SLV 8 | 1248 | -1721 | 142177 | 0 | 0 | 0 | No, e>l/2 |
| SLV 8 | 1498 | -337 | -96183 | 0 | 0 | 0 | No, e>l/2 |

### Verifica a taglio nel piano secondo D.M. 17-01-18 (N.T.C.) §7.8.2.2.2 con rottura per scorrimento in combinazioni non sismiche, γM = 3

| Comb. | Quota | N | V par | M | σ0 | σN | l' | fvd | Vt scorr. | Vt fess.diag. | Vt,lim | c.s. | Verifica |
|---|---|---|---|---|---|---|---|---|---|---|---|---|---|
| SLU 35 | 1248 | -3535 | 486 | 32334 | | 1.81 | 69.64 | 0.8 | 1555 | | | 3.2 | Si |
| SLU 35 | 1498 | -6351 | 451 | -11925 | | 3.26 | 69.64 | 0.99 | 1930 | | | 4.28 | Si |
| SLU 77 | 1248 | -4342 | 502 | 31658 | | 2.23 | 69.64 | 0.85 | 1662 | | | 3.31 | Si |
| SLU 77 | 1498 | -7216 | 464 | -10068 | | 3.7 | 69.64 | 1.05 | 2045 | | | 4.4 | Si |
| SLU 41 | 1248 | -2802 | 452 | 33869 | | 1.47 | 68.19 | 0.75 | 1434 | | | 3.17 | Si |
| SLU 41 | 1498 | -4956 | 407 | -13089 | | 2.54 | 69.64 | 0.89 | 1744 | | | 4.29 | Si |
| SLU 42 | 1248 | -2789 | 443 | 33104 | | 1.45 | 68.85 | 0.75 | 1443 | | | 3.26 | Si |
| SLU 42 | 1498 | -4892 | 398 | -12520 | | 2.51 | 69.64 | 0.89 | 1736 | | | 4.36 | Si |
| SLU 80 | 1248 | -4059 | 493 | 31702 | | 2.08 | 69.64 | 0.83 | 1624 | | | 3.29 | Si |
| SLU 80 | 1498 | -6777 | 455 | -10820 | | 3.48 | 69.64 | 1.02 | 1987 | | | 4.36 | Si |
| SLU 36 | 1248 | -3523 | 476 | 31570 | | 1.81 | 69.64 | 0.8 | 1553 | | | 3.26 | Si |
| SLU 36 | 1498 | -6287 | 441 | -11356 | | 3.22 | 69.64 | 0.99 | 1921 | | | 4.35 | Si |
| SLU 79 | 1248 | -4072 | 502 | 32467 | | 2.09 | 69.64 | 0.83 | 1626 | | | 3.24 | Si |
| SLU 79 | 1498 | -6841 | 465 | -11389 | | 3.51 | 69.64 | 1.02 | 1995 | | | 4.29 | Si |
| SLU 38 | 1248 | -3253 | 477 | 32379 | | 1.67 | 69.64 | 0.78 | 1517 | | | 3.18 | Si |

| Comb. | Quota | N | V par | M | σ0 | σN | l' | fvd | Vt scorr. | Vt fess.diag. | Vt,lim | c.s. | Verifica |
|---|---|---|---|---|---|---|---|---|---|---|---|---|---|
| SLU 38 | 1498 | -5912 | 442 | -12677 | | 3.03 | 69.64 | 0.96 | 1871 | | | 4.24 | Si |
| SLU 83 | 1248 | -3608 | 468 | 33192 | | 1.85 | 69.64 | 0.8 | 1564 | | | 3.34 | Si |
| SLU 83 | 1498 | -5822 | 421 | -11232 | | 2.99 | 69.64 | 0.95 | 1859 | | | 4.42 | Si |
| SLU 37 | 1248 | -3266 | 487 | 33144 | | 1.67 | 69.64 | 0.78 | 1519 | | | 3.12 | Si |
| SLU 37 | 1498 | -5976 | 451 | -13247 | | 3.06 | 69.64 | 0.96 | 1880 | | | 4.17 | Si |

### Verifica a taglio nel piano secondo D.M. 17-01-18 (N.T.C.) §7.8.2.2.2 con rottura per scorrimento in combinazioni sismiche, γM = 2

| Comb. | Quota | N | V par | M | σ0 | σN | l' | fvd | Vt scorr. | Vt fess.diag. | Vt,lim | c.s. | Verifica |
|---|---|---|---|---|---|---|---|---|---|---|---|---|---|
| SLV 12 | 1248 | -2463 | -575 | -43637 | | 1.71 | 51.3 | 1.18 | 1689 | | | 2.94 | Si |
| SLV 12 | 1498 | -754 | -486 | 57687 | | 0 | 0 | 0.83 | 0 | | | 0 | No, Vu<V |
| SLV 8 | 1248 | -1721 | 986 | 142177 | | 0 | 0 | 0.83 | 0 | | | 0 | No, Vu<V |
| SLV 8 | 1498 | -337 | 658 | -96183 | | 0 | 0 | 0.83 | 0 | | | 0 | No, Vu<V |
| SLV 7 | 1248 | -1721 | 986 | 142177 | | 0 | 0 | 0.83 | 0 | | | 0 | No, Vu<V |
| SLV 7 | 1498 | -337 | 658 | -96183 | | 0 | 0 | 0.83 | 0 | | | 0 | No, Vu<V |
| SLV 4 | 1248 | -1282 | 2828 | 334948 | | 0 | 0 | 0.83 | 0 | | | 0 | No, Vu<V |
| SLV 4 | 1498 | -2097 | 2084 | -264630 | | 0 | 0 | 0.83 | 0 | | | 0 | No, Vu<V |
| SLV 14 | 1248 | -4121 | -2358 | -305013 | | 0 | 0 | 0.83 | 0 | | | 0 | No, Vu<V |
| SLV 14 | 1498 | -5412 | -1649 | 257758 | | 0 | 0 | 0.83 | 0 | | | 0 | No, Vu<V |
| SLD 1 | 1248 | -2249 | 1349 | 142975 | | 0 | 0 | 0.83 | 0 | | | 0 | No, Vu<V |
| SLD 1 | 1498 | -3861 | 1050 | -111111 | | 7.61 | 18.13 | 1.63 | 825 | | | 0.79 | No, Vu<V |
| SLV 3 | 1248 | -1282 | 2828 | 334948 | | 0 | 0 | 0.83 | 0 | | | 0 | No, Vu<V |
| SLV 3 | 1498 | -2097 | 2084 | -264630 | | 0 | 0 | 0.83 | 0 | | | 0 | No, Vu<V |
| SLV 13 | 1248 | -4121 | -2358 | -305013 | | 0 | 0 | 0.83 | 0 | | | 0 | No, Vu<V |
| SLV 13 | 1498 | -5412 | -1649 | 257758 | | 0 | 0 | 0.83 | 0 | | | 0 | No, Vu<V |
| SLV 11 | 1248 | -2463 | -575 | -43637 | | 1.71 | 51.3 | 1.18 | 1689 | | | 2.94 | Si |
| SLV 11 | 1498 | -754 | -486 | 57687 | | 0 | 0 | 0.83 | 0 | | | 0 | No, Vu<V |
| SLV 2 | 1248 | -1648 | 2846 | 314367 | | 0 | 0 | 0.83 | 0 | | | 0 | No, Vu<V |
| SLV 2 | 1498 | -4022 | 2162 | -255143 | | 0 | 0 | 0.83 | 0 | | | 0 | No, Vu<V |

### Verifica a pressoflessione fuori piano D.M. 17-01-18 (N.T.C.)

quota 1406 Wa 0.05 denominatore 8 γM = 2

| Comb. | fd | Sa | σ0 | N | M | Mc | Coeff.s. | Verifica |
|---|---|---|---|---|---|---|---|---|
| SLV 8 | 14 | 0.53 | 0.45 | -886 | 8093 | 11946 | 1.48 | Si |
| SLV 7 | 14 | 0.53 | 0.45 | -886 | 8093 | 11946 | 1.48 | Si |
| SLV 12 | 14 | 0.53 | 0.66 | -1277 | 8093 | 16923 | 2.09 | Si |
| SLV 11 | 14 | 0.53 | 0.66 | -1277 | 8093 | 16923 | 2.09 | Si |
| SLV 3 | 14 | 0.53 | 0.96 | -1863 | 8093 | 24044 | 2.97 | Si |
| SLV 4 | 14 | 0.53 | 0.96 | -1863 | 8093 | 24044 | 2.97 | Si |
| SLV 1 | 14 | 0.53 | 1.59 | -3091 | 8093 | 37664 | 4.65 | Si |
| SLV 2 | 14 | 0.53 | 1.59 | -3091 | 8093 | 37664 | 4.65 | Si |
| SLV 16 | 14 | 0.53 | 1.62 | -3167 | 8093 | 38440 | 4.75 | Si |
| SLV 15 | 14 | 0.53 | 1.62 | -3167 | 8093 | 38440 | 4.75 | Si |

### Verifica dei meccanismi locali di collasso con analisi cinematica lineare

forza di aggancio al piano = 0 quota mezzeria = 1406 Wa = 0.05 Ta = 0.0596

| Comb. | N top | N base | V orto | α0 | M* | e* | a0* | aLim | Verifica |
|---|---|---|---|---|---|---|---|---|---|
| SLV 6 | -3461 | -2940 | 34 | 0.042 | 4.396 | 0.944 | 64.529 | 1505.645 | No |
| SLV 5 | -3461 | -2940 | 34 | 0.042 | 4.396 | 0.944 | 64.529 | 1505.645 | No |
| SLV 9 | -3707 | -3682 | 11 | 0.047 | 4.647 | 0.946 | 72.787 | 1505.645 | No |
| SLV 10 | -3707 | -3682 | 11 | 0.047 | 4.647 | 0.946 | 72.787 | 1505.645 | No |
| SLV 12 | -344 | -2463 | -16 | 0.054 | 1.324 | 0.894 | 88.361 | 1505.645 | No |
| SLV 11 | -344 | -2463 | -16 | 0.054 | 1.324 | 0.894 | 88.361 | 1505.645 | No |
| SLV 4 | -986 | -1282 | 43 | 0.032 | 1.915 | 0.897 | 52.065 | 879.274 | No |
| SLV 3 | -986 | -1282 | 43 | 0.032 | 1.915 | 0.897 | 52.065 | 879.274 | No |
| SLV 2 | -1996 | -1648 | 51 | 0.034 | 2.917 | 0.922 | 53.271 | 879.274 | No |
| SLV 1 | -1996 | -1648 | 51 | 0.034 | 2.917 | 0.922 | 53.271 | 879.274 | No |

### Tabella dei coefficienti di sicurezza minimi

| Stato limite | Coeff.s. | Comb. | Verifica |
|---|---|---|---|
| PF_SLU | 2.305 | SLU 39 | Si |
| V_SLU | 3.121 | SLU 37 | Si |
| PF_SLV | 0 | SLD 1 | No |
| V_SLV | 0 | SLD 1 | No |
| PFFP_SLV | 1.476 | SLV 7 | Si |
| R_SLV | 0.043 | SLV 5 | No |

## Maschio 204

Verifiche condotte secondo D.M. 17-01-18 (N.T.C.)

### Dati geometrici

| X ini. | Y ini. | X fin. | Y fin. | Quota i. | Quota.s | l | Sp. | h netta | h ini. | h fin. | a | a.s.,sx | a.s.,dx |
|---|---|---|---|---|---|---|---|---|---|---|---|---|---|
| -727.8 | 104.6 | -938.6 | 104.6 | L6 | L7 | 210.9 | 28 | 316 | 316 | 316 | | | |

### Caratteristiche del materiale

(Circolare 7 21-01-19 C8.5.I) Muratura in mattoni pieni e malta di calce LC2_Corti

| fb | fk | fvk0 | fmedio | τ0 | fv0 | μ | ϕ | fv,lim | E | G | FC |
|---|---|---|---|---|---|---|---|---|---|---|---|
| 60 | | | 34.5 | 0.9 | 2 | 0.58 | 0.77 | 3.25 | 32000 | 12800 | 1.2 |

### Verifica a pressoflessione nel piano secondo D.M. 17-01-18 NTC §7.8.2.2.1 in combinazioni non sismiche, γM = 3

| Comb. | Quota | N | M | σ0 | Mu | c.s. | Verifica |
|---|---|---|---|---|---|---|---|
| SLU 61 | 1248 | -9875 | -104213 | 1.67 | 827347 | 7.939 | Si |
| SLU 61 | 1498 | -6206 | 123387 | 1.05 | 569914 | 4.619 | Si |

| Comb. | Quota | N | M | σ0 | Mu | c.s. | Verifica |
|---|---|---|---|---|---|---|---|
| SLU 40 | 1248 | -7647 | -90230 | 1.3 | 678073 | 7.515 | Si |
| SLU 40 | 1498 | -4731 | 83275 | 0.8 | 449740 | 5.401 | Si |
| SLU 82 | 1248 | -10105 | -102774 | 1.71 | 841537 | 8.188 | Si |
| SLU 82 | 1498 | -6320 | 112011 | 1.07 | 578750 | 5.167 | Si |
| SLU 52 | 1248 | -10267 | -92873 | 1.74 | 851382 | 9.167 | Si |
| SLU 52 | 1498 | -6515 | 120953 | 1.1 | 593868 | 4.91 | Si |
| SLU 10 | 1248 | -7809 | -80330 | 1.32 | 689663 | 8.585 | Si |
| SLU 10 | 1498 | -4927 | 92216 | 0.83 | 466220 | 5.056 | Si |
| SLU 81 | 1248 | -10021 | -98521 | 1.7 | 836407 | 8.49 | Si |
| SLU 81 | 1498 | -6251 | 110848 | 1.06 | 573376 | 5.173 | Si |
| SLU 39 | 1248 | -7564 | -85977 | 1.28 | 672041 | 7.817 | Si |
| SLU 39 | 1498 | -4662 | 82111 | 0.79 | 443885 | 5.406 | Si |
| SLU 19 | 1248 | -7417 | -91669 | 1.26 | 661402 | 7.215 | Si |
| SLU 19 | 1498 | -4618 | 94651 | 0.78 | 440114 | 4.65 | Si |
| SLU 60 | 1248 | -9791 | -99960 | 1.66 | 822132 | 8.225 | Si |
| SLU 60 | 1498 | -6137 | 122224 | 1.04 | 564505 | 4.619 | Si |
| SLU 18 | 1248 | -7333 | -87417 | 1.24 | 655285 | 7.496 | Si |
| SLU 18 | 1498 | -4549 | 93487 | 0.77 | 434225 | 4.645 | Si |

Verifica a pressoflessione nel piano secondo D.M. 17-01-18 NTC §7.8.2.2.1 in combinazioni sismiche, γM = 2

| Comb. | Quota | N | M | σ0 | Mu | c.s. | Verifica |
|---|---|---|---|---|---|---|---|
| SLV 4 | 1248 | -3211 | 409693 | 0 | 0 | 0 | No, e>l/2 |
| SLV 4 | 1498 | 1565 | -700549 | 0 | 0 | 0 | No, Trazione |
| SLD 3 | 1248 | -6127 | 147025 | 1.04 | 591103 | 4.02 | Si |
| SLD 3 | 1498 | -2358 | -252674 | 0 | 0 | 0 | No, e>l/2 |
| SLD 4 | 1248 | -6127 | 147025 | 1.04 | 591103 | 4.02 | Si |
| SLD 4 | 1498 | -2358 | -252674 | 0 | 0 | 0 | No, e>l/2 |
| SLV 6 | 1248 | -7141 | 281176 | 1.21 | 678353 | 2.413 | Si |
| SLV 6 | 1498 | -3031 | -273105 | 0.51 | 306135 | 1.121 | Si |
| SLD 2 | 1248 | -6213 | 191856 | 1.05 | 598649 | 3.12 | Si |
| SLD 2 | 1498 | -2313 | -280521 | 0 | 0 | 0 | No, e>l/2 |
| SLV 1 | 1248 | -3415 | 515773 | 0 | 0 | 0 | No, e>l/2 |
| SLV 1 | 1498 | 1673 | -766667 | 0 | 0 | 0 | No, Trazione |
| SLV 5 | 1248 | -7141 | 281176 | 1.21 | 678353 | 2.413 | Si |
| SLV 5 | 1498 | -3031 | -273105 | 0.51 | 306135 | 1.121 | Si |
| SLV 3 | 1248 | -3211 | 409693 | 0 | 0 | 0 | No, e>l/2 |
| SLV 3 | 1498 | 1565 | -700549 | 0 | 0 | 0 | No, Trazione |
| SLD 1 | 1248 | -6213 | 191856 | 1.05 | 598649 | 3.12 | Si |
| SLD 1 | 1498 | -2313 | -280521 | 0 | 0 | 0 | No, e>l/2 |
| SLV 2 | 1248 | -3415 | 515773 | 0 | 0 | 0 | No, e>l/2 |
| SLV 2 | 1498 | 1673 | -766667 | 0 | 0 | 0 | No, Trazione |

Verifica a taglio nel piano secondo D.M. 17-01-18 (N.T.C.) §7.8.2.2.2 con rottura per scorrimento in combinazioni non sismiche, γM = 3

| Comb. | Quota | N | V par | M | σ0 | σN | l' | fvd | Vt scorr. | Vt fess.diag. | Vt,lim | c.s. | Verifica |
|---|---|---|---|---|---|---|---|---|---|---|---|---|---|
| SLU 82 | 1248 | -10105 | -796 | -102774 | | 1.71 | 210.86 | 0.78 | 4627 | | | 5.81 | Si |
| SLU 82 | 1498 | -6320 | -762 | 112011 | | 1.07 | 210.86 | 0.7 | 4123 | | | 5.41 | Si |
| SLU 39 | 1248 | -7564 | -642 | -85977 | | 1.28 | 210.86 | 0.73 | 4289 | | | 6.68 | Si |
| SLU 39 | 1498 | -4662 | -652 | 82111 | | 0.79 | 210.86 | 0.66 | 3902 | | | 5.98 | Si |
| SLU 61 | 1248 | -9875 | -873 | -104213 | | 1.67 | 210.86 | 0.78 | 4597 | | | 5.27 | Si |
| SLU 61 | 1498 | -6206 | -759 | 123387 | | 1.05 | 210.86 | 0.7 | 4108 | | | 5.41 | Si |
| SLU 52 | 1248 | -10267 | -780 | -92873 | | 1.74 | 210.86 | 0.79 | 4649 | | | 5.96 | Si |
| SLU 52 | 1498 | -6515 | -671 | 120953 | | 1.1 | 210.86 | 0.7 | 4149 | | | 6.18 | Si |
| SLU 60 | 1248 | -9791 | -857 | -99960 | | 1.66 | 210.86 | 0.78 | 4586 | | | 5.35 | Si |
| SLU 60 | 1498 | -6137 | -748 | 122224 | | 1.04 | 210.86 | 0.69 | 4098 | | | 5.48 | Si |
| SLU 81 | 1248 | -10021 | -780 | -98521 | | 1.7 | 210.86 | 0.78 | 4616 | | | 5.92 | Si |
| SLU 81 | 1498 | -6251 | -751 | 110848 | | 1.06 | 210.86 | 0.7 | 4114 | | | 5.48 | Si |
| SLU 73 | 1248 | -10497 | -703 | -91434 | | 1.78 | 210.86 | 0.79 | 4680 | | | 6.66 | Si |
| SLU 73 | 1498 | -6629 | -675 | 109577 | | 1.12 | 210.86 | 0.71 | 4164 | | | 6.17 | Si |
| SLU 19 | 1248 | -7417 | -735 | -91669 | | 1.26 | 210.86 | 0.72 | 4269 | | | 5.81 | Si |
| SLU 19 | 1498 | -4618 | -660 | 94651 | | 0.78 | 210.86 | 0.66 | 3896 | | | 5.9 | Si |
| SLU 40 | 1248 | -7647 | -658 | -90230 | | 1.3 | 210.86 | 0.73 | 4300 | | | 6.54 | Si |
| SLU 40 | 1498 | -4731 | -663 | 83275 | | 0.8 | 210.86 | 0.66 | 3911 | | | 5.9 | Si |
| SLU 18 | 1248 | -7333 | -719 | -87417 | | 1.24 | 210.86 | 0.72 | 4258 | | | 5.92 | Si |
| SLU 18 | 1498 | -4549 | -649 | 93487 | | 0.77 | 210.86 | 0.66 | 3887 | | | 5.99 | Si |

Verifica a taglio nel piano secondo D.M. 17-01-18 (N.T.C.) §7.8.2.2.2 con rottura per scorrimento in combinazioni sismiche, γM = 2

| Comb. | Quota | N | V par | M | σ0 | σN | l' | fvd | Vt scorr. | Vt fess.diag. | Vt,lim | c.s. | Verifica |
|---|---|---|---|---|---|---|---|---|---|---|---|---|---|
| SLD 1 | 1248 | -6213 | 2719 | 191856 | | 1.05 | 210.86 | 1.04 | 6163 | | | 2.27 | Si |
| SLD 1 | 1498 | -2313 | 1643 | -280521 | | 0 | 0 | 0.83 | 0 | | | 0 | No, Vu<V |
| SLV 1 | 1248 | -3415 | 6932 | 515773 | | 0 | 0 | 0.83 | 0 | | | 0 | No, Vu<V |
| SLV 1 | 1498 | 1673 | 4390 | -766667 | | 0 | 0 | 0.83 | 0 | | | 0 | No, Vu<V |
| SLV 2 | 1248 | -3415 | 6932 | 515773 | | 0 | 0 | 0.83 | 0 | | | 0 | No, Vu<V |
| SLV 2 | 1498 | 1673 | 4390 | -766667 | | 0 | 0 | 0.83 | 0 | | | 0 | No, Vu<V |
| SLV 3 | 1248 | -3211 | 6104 | 409693 | | 0 | 0 | 0.83 | 0 | | | 0 | No, Vu<V |
| SLV 3 | 1498 | 1565 | 3688 | -700549 | | 0 | 0 | 0.83 | 0 | | | 0 | No, Vu<V |
| SLD 3 | 1248 | -6127 | 2369 | 147025 | | 1.04 | 210.86 | 1.04 | 6146 | | | 2.59 | Si |
| SLD 3 | 1498 | -2358 | 1350 | -252674 | | 0 | 0 | 0.83 | 0 | | | 0 | No, Vu<V |
| SLD 2 | 1248 | -6213 | 2719 | 191856 | | 1.05 | 210.86 | 1.04 | 6163 | | | 2.27 | Si |
| SLD 2 | 1498 | -2313 | 1643 | -280521 | | 0 | 0 | 0.83 | 0 | | | 0 | No, Vu<V |
| SLV 16 | 1248 | -13178 | -7772 | -614185 | | 2.67 | 176.47 | 1.37 | 6753 | | | 0.87 | No, Vu<V |
| SLV 16 | 1498 | -12238 | -5184 | 930021 | | 4.95 | 88.31 | 1.63 | 4018 | | | 0.78 | No, Vu<V |
| SLV 15 | 1248 | -13178 | -7772 | -614185 | | 2.67 | 176.47 | 1.37 | 6753 | | | 0.87 | No, Vu<V |
| SLV 15 | 1498 | -12238 | -5184 | 930021 | | 4.95 | 88.31 | 1.63 | 4018 | | | 0.78 | No, Vu<V |
| SLD 4 | 1248 | -6127 | 2369 | 147025 | | 1.04 | 210.86 | 1.04 | 6146 | | | 2.59 | Si |
| SLD 4 | 1498 | -2358 | 1350 | -252674 | | 0 | 0 | 0.83 | 0 | | | 0 | No, Vu<V |
| SLV 4 | 1248 | -3211 | 6104 | 409693 | | 0 | 0 | 0.83 | 0 | | | 0 | No, Vu<V |
| SLV 4 | 1498 | 1565 | 3688 | -700549 | | 0 | 0 | 0.83 | 0 | | | 0 | No, Vu<V |

### Verifica a pressoflessione fuori piano D.M. 17-01-18 (N.T.C.)

quota 1406 Wa 0.05 denominatore 8 γM = 2

| Comb. | fd | Sa | σ0 | N | M | Mc | Coeff.s. | Verifica |
|---|---|---|---|---|---|---|---|---|
| SLV 2 | 14 | 0.53 | 0 | -1602 | 24505 | 0 | 0 | No, e>t/2 |
| SLV 3 | 14 | 0.53 | 0 | -1498 | 24505 | 0 | 0 | No, e>t/2 |
| SLV 4 | 14 | 0.53 | 0 | -1498 | 24505 | 0 | 0 | No, e>t/2 |
| SLV 1 | 14 | 0.53 | 0 | -1602 | 24505 | 0 | 0 | No, e>t/2 |
| SLV 7 | 14 | 0.53 | 0.82 | -4867 | 24505 | 63542 | 2.59 | Si |
| SLV 8 | 14 | 0.53 | 0.82 | -4867 | 24505 | 63542 | 2.59 | Si |
| SLV 6 | 14 | 0.53 | 0.88 | -5215 | 24505 | 67733 | 2.76 | Si |
| SLV 5 | 14 | 0.53 | 0.88 | -5215 | 24505 | 67733 | 2.76 | Si |
| SLV 12 | 14 | 0.53 | 1.33 | -7860 | 24505 | 98047 | 4 | Si |
| SLV 11 | 14 | 0.53 | 1.33 | -7860 | 24505 | 98047 | 4 | Si |

### Verifica dei meccanismi locali di collasso con analisi cinematica lineare

forza di aggancio al piano = 0 quota mezzeria = 1406 Wa = 0.05 Ta = 0.0596

| Comb. | N top | N base | V orto | α0 | M* | e* | a0* | aLim | Verifica |
|---|---|---|---|---|---|---|---|---|---|
| SLV 2 | 1 | -3415 | -7 | 0 | 0 | 0 | 0 | 879.274 | No, Trazione |
| SLV 1 | 1 | -3415 | -7 | 0 | 0 | 0 | 0 | 879.274 | No, Trazione |
| SLV 11 | -5026 | -9452 | -52 | 0.048 | 7.813 | 0.914 | 75.699 | 1505.645 | No |
| SLV 12 | -5026 | -9452 | -52 | 0.048 | 7.813 | 0.914 | 75.699 | 1505.645 | No |
| SLV 7 | -2737 | -6462 | -60 | 0.048 | 5.558 | 0.895 | 77.21 | 1505.645 | No |
| SLV 8 | -2737 | -6462 | -60 | 0.048 | 5.558 | 0.895 | 77.21 | 1505.645 | No |
| SLV 10 | -4923 | -10131 | 44 | 0.049 | 7.71 | 0.913 | 77.764 | 1505.645 | No |
| SLV 9 | -4923 | -10131 | 44 | 0.049 | 7.71 | 0.913 | 77.764 | 1505.645 | No |
| SLV 5 | -2634 | -7141 | 36 | 0.053 | 5.459 | 0.894 | 86.428 | 1505.645 | No |
| SLV 6 | -2634 | -7141 | 36 | 0.053 | 5.459 | 0.894 | 86.428 | 1505.645 | No |

### Tabella dei coefficienti di sicurezza minimi

| Stato limite | Coeff.s. | Comb. | Verifica |
|---|---|---|---|
| PF_SLU | 4.619 | SLU 60 | Si |
| V_SLU | 5.266 | SLU 61 | Si |
| PF_SLV | 0 | SLV 4 | No |
| V_SLV | 0 | SLD 1 | No |
| PFFP_SLV | 0 | SLV 1 | No |
| R_SLV | 0 | SLV 2 | No |

## Maschio 205

Verifiche condotte secondo D.M. 17-01-18 (N.T.C.)

### Dati geometrici

| X ini. | Y ini. | X fin. | Y fin. | Quota i. | Quota.s | l | Sp. | h netta | h ini. | h fin. | a | a.s.,sx | a.s.,dx |
|---|---|---|---|---|---|---|---|---|---|---|---|---|---|
| -496.8 | 104.6 | -647.8 | 104.6 | L6 | L7 | 151 | 28 | 316 | 316 | 316 | | | |

### Caratteristiche del materiale

(Circolare 7 21-01-19 C8.5.I) Muratura in mattoni pieni e malta di calce LC2_Corti

| fb | fk | fvk0 | fmedio | τ0 | fv0 | μ | ϕ | fv,lim | E | G | FC |
|---|---|---|---|---|---|---|---|---|---|---|---|
| 60 | | | 34.5 | 0.9 | 2 | 0.58 | 0.77 | 3.25 | 32000 | 12800 | 1.2 |

### Verifica a pressoflessione nel piano secondo D.M. 17-01-18 NTC §7.8.2.2.1 in combinazioni non sismiche, γM = 3

| Comb. | Quota | N | M | σ0 | Mu | c.s. | Verifica |
|---|---|---|---|---|---|---|---|
| SLU 60 | 1248 | -6376 | -76008 | 1.51 | 392291 | 5.161 | Si |
| SLU 60 | 1458 | -6327 | 94092 | 1.5 | 389910 | 4.144 | Si |
| SLU 40 | 1248 | -5449 | -74678 | 1.29 | 346334 | 4.638 | Si |
| SLU 40 | 1458 | -6221 | 78084 | 1.47 | 384844 | 4.929 | Si |
| SLU 61 | 1248 | -6561 | -74158 | 1.55 | 401009 | 5.407 | Si |
| SLU 61 | 1458 | -6470 | 92809 | 1.53 | 396707 | 4.274 | Si |
| SLU 18 | 1248 | -4900 | -67260 | 1.16 | 317322 | 4.718 | Si |
| SLU 18 | 1458 | -5166 | 77148 | 1.22 | 331522 | 4.297 | Si |
| SLU 39 | 1248 | -5265 | -76528 | 1.25 | 336714 | 4.4 | Si |
| SLU 39 | 1458 | -6078 | 79367 | 1.44 | 377892 | 4.761 | Si |
| SLU 19 | 1248 | -5085 | -65410 | 1.2 | 327237 | 5.003 | Si |
| SLU 19 | 1458 | -5309 | 75865 | 1.26 | 339048 | 4.469 | Si |
| SLU 82 | 1248 | -6926 | -83427 | 1.64 | 417747 | 5.007 | Si |
| SLU 82 | 1458 | -7382 | 95028 | 1.75 | 437863 | 4.608 | Si |
| SLU 81 | 1248 | -6741 | -85277 | 1.59 | 409325 | 4.8 | Si |
| SLU 81 | 1458 | -7238 | 96311 | 1.71 | 431639 | 4.482 | Si |
| SLU 10 | 1248 | -5340 | -55925 | 1.26 | 340639 | 6.091 | Si |
| SLU 10 | 1458 | -5328 | 69570 | 1.26 | 340040 | 4.888 | Si |
| SLU 52 | 1248 | -6816 | -64674 | 1.61 | 412763 | 6.382 | Si |
| SLU 52 | 1458 | -6489 | 86514 | 1.53 | 397602 | 4.596 | Si |

### Verifica a pressoflessione nel piano secondo D.M. 17-01-18 NTC §7.8.2.2.1 in combinazioni sismiche, γM = 2

| Comb. | Quota | N | M | σ0 | Mu | c.s. | Verifica |
|---|---|---|---|---|---|---|---|
| SLV 1 | 1248 | -4651 | 378797 | 0 | 0 | 0 | No, e>l/2 |
| SLV 1 | 1458 | -3520 | -338495 | 0 | 0 | 0 | No, e>l/2 |
| SLV 2 | 1248 | -4651 | 378797 | 0 | 0 | 0 | No, e>l/2 |
| SLV 2 | 1458 | -3520 | -338495 | 0 | 0 | 0 | No, e>l/2 |
| SLV 13 | 1248 | -5789 | -408460 | 1.37 | 388092 | 0.95 | No, M>Mu |
| SLV 13 | 1458 | -6104 | 440244 | 1.44 | 406421 | 0.923 | No, M>Mu |
| SLV 3 | 1248 | -4920 | 312651 | 1.16 | 336053 | 1.075 | Si |
| SLV 3 | 1458 | -4340 | -313692 | 1.03 | 300174 | 0.957 | No, M>Mu |
| SLV 4 | 1248 | -4920 | 312651 | 1.16 | 336053 | 1.075 | Si |

| Comb. | Quota | N | M | σ0 | Mu | c.s. | Verifica |
|---|---|---|---|---|---|---|---|
| SLV 4 | 1458 | -4340 | -313692 | 1.03 | 300174 | 0.957 | No, M>Mu |
| SLV 12 | 1248 | -5973 | -276236 | 1.41 | 398799 | 1.444 | Si |
| SLV 12 | 1458 | -6978 | 221424 | 1.65 | 455653 | 2.058 | Si |
| SLV 14 | 1248 | -5789 | -408460 | 1.37 | 388092 | 0.95 | No, M>Mu |
| SLV 14 | 1458 | -6104 | 440244 | 1.44 | 406421 | 0.923 | No, M>Mu |
| SLV 15 | 1248 | -6058 | -474606 | 0 | 0 | 0 | No, e>l/2 |
| SLV 15 | 1458 | -6925 | 465046 | 1.64 | 452744 | 0.974 | No, M>Mu |
| SLV 16 | 1248 | -6058 | -474606 | 0 | 0 | 0 | No, e>l/2 |
| SLV 16 | 1458 | -6925 | 465046 | 1.64 | 452744 | 0.974 | No, M>Mu |
| SLV 11 | 1248 | -5973 | -276236 | 1.41 | 398799 | 1.444 | Si |
| SLV 11 | 1458 | -6978 | 221424 | 1.65 | 455653 | 2.058 | Si |

### Verifica a taglio nel piano secondo D.M. 17-01-18 (N.T.C.) §7.8.2.2.2 con rottura per scorrimento in combinazioni non sismiche, γM = 3

| Comb. | Quota | N | V par | M | σ0 | σN | l' | fvd | Vt scorr. | Vt fess.diag. | Vt,lim | c.s. | Verifica |
|---|---|---|---|---|---|---|---|---|---|---|---|---|---|
| SLU 79 | 1248 | -8659 | -1302 | -70818 | | 2.05 | 151 | 0.83 | 3503 | | | 2.69 | Si |
| SLU 79 | 1458 | -10085 | -1302 | 80502 | | 2.39 | 151 | 0.87 | 3694 | | | 2.84 | Si |
| SLU 83 | 1248 | -7634 | -1242 | -82173 | | 1.81 | 151 | 0.8 | 3367 | | | 2.71 | Si |
| SLU 83 | 1458 | -8700 | -1241 | 91126 | | 2.06 | 151 | 0.83 | 3509 | | | 2.83 | Si |
| SLU 37 | 1248 | -7182 | -1173 | -62069 | | 1.7 | 151 | 0.78 | 3307 | | | 2.82 | Si |
| SLU 37 | 1458 | -8924 | -1172 | 63558 | | 2.11 | 151 | 0.84 | 3539 | | | 3.02 | Si |
| SLU 38 | 1248 | -7367 | -1156 | -60219 | | 1.74 | 151 | 0.79 | 3331 | | | 2.88 | Si |
| SLU 38 | 1458 | -9067 | -1154 | 62275 | | 2.14 | 151 | 0.84 | 3558 | | | 3.08 | Si |
| SLU 35 | 1248 | -7599 | -1183 | -65345 | | 1.8 | 151 | 0.8 | 3362 | | | 2.84 | Si |
| SLU 35 | 1458 | -9425 | -1182 | 67938 | | 2.23 | 151 | 0.85 | 3606 | | | 3.05 | Si |
| SLU 84 | 1248 | -7819 | -1224 | -80323 | | 1.85 | 151 | 0.8 | 3391 | | | 2.77 | Si |
| SLU 84 | 1458 | -8843 | -1223 | 89843 | | 2.09 | 151 | 0.83 | 3528 | | | 2.89 | Si |
| SLU 41 | 1248 | -6158 | -1112 | -73424 | | 1.46 | 151 | 0.75 | 3170 | | | 2.85 | Si |
| SLU 41 | 1458 | -7539 | -1112 | 74182 | | 1.78 | 151 | 0.79 | 3354 | | | 3.02 | Si |
| SLU 78 | 1248 | -9260 | -1295 | -72244 | | 2.19 | 151 | 0.85 | 3584 | | | 2.77 | Si |
| SLU 78 | 1458 | -10729 | -1293 | 83599 | | 2.54 | 151 | 0.89 | 3779 | | | 2.92 | Si |
| SLU 77 | 1248 | -9075 | -1312 | -74094 | | 2.15 | 151 | 0.84 | 3559 | | | 2.71 | Si |
| SLU 77 | 1458 | -10585 | -1312 | 84882 | | 2.5 | 151 | 0.89 | 3760 | | | 2.87 | Si |
| SLU 80 | 1248 | -8844 | -1285 | -68968 | | 2.09 | 151 | 0.83 | 3528 | | | 2.74 | Si |
| SLU 80 | 1458 | -10228 | -1283 | 79218 | | 2.42 | 151 | 0.88 | 3713 | | | 2.89 | Si |

### Verifica a taglio nel piano secondo D.M. 17-01-18 (N.T.C.) §7.8.2.2.2 con rottura per scorrimento in combinazioni sismiche, γM = 2

| Comb. | Quota | N | V par | M | σ0 | σN | l' | fvd | Vt scorr. | Vt fess.diag. | Vt,lim | c.s. | Verifica |
|---|---|---|---|---|---|---|---|---|---|---|---|---|---|
| SLV 11 | 1248 | -5973 | -4018 | -276236 | | 2.43 | 87.75 | 1.32 | 3242 | | | 0.81 | No, Vu<V |
| SLV 11 | 1458 | -6978 | -3583 | 221424 | | 1.9 | 131.3 | 1.21 | 4459 | | | 1.24 | Si |
| SLV 15 | 1248 | -6058 | -6164 | -474606 | | 0 | 0 | 0.83 | 0 | | | 0 | No, Vu<V |
| SLV 15 | 1458 | -6925 | -4952 | 465046 | | 9.88 | 25.03 | 1.63 | 1139 | | | 0.23 | No, Vu<V |
| SLV 3 | 1248 | -4920 | 3688 | 312651 | | 4.9 | 35.84 | 1.63 | 1631 | | | 0.44 | No, Vu<V |
| SLV 3 | 1458 | -4340 | 2523 | -313692 | | 16 | 9.69 | 1.63 | 441 | | | 0.17 | No, Vu<V |
| SLV 4 | 1248 | -4920 | 3688 | 312651 | | 4.9 | 35.84 | 1.63 | 1631 | | | 0.44 | No, Vu<V |
| SLV 4 | 1458 | -4340 | 2523 | -313692 | | 16 | 9.69 | 1.63 | 441 | | | 0.17 | No, Vu<V |
| SLV 13 | 1248 | -5789 | -5048 | -408460 | | 13.94 | 14.83 | 1.63 | 675 | | | 0.13 | No, Vu<V |
| SLV 13 | 1458 | -6104 | -3884 | 440244 | | 21.5 | 10.14 | 1.63 | 461 | | | 0.12 | No, Vu<V |
| SLV 16 | 1248 | -6058 | -6164 | -474606 | | 0 | 0 | 0.83 | 0 | | | 0 | No, Vu<V |
| SLV 16 | 1458 | -6925 | -4952 | 465046 | | 9.88 | 25.03 | 1.63 | 1139 | | | 0.23 | No, Vu<V |
| SLV 2 | 1248 | -4651 | 4804 | 378797 | | 0 | 0 | 0.83 | 0 | | | 0 | No, Vu<V |
| SLV 2 | 1458 | -3520 | 3592 | -338495 | | 0 | 0 | 0.83 | 0 | | | 0 | No, Vu<V |
| SLV 14 | 1248 | -5789 | -5048 | -408460 | | 13.94 | 14.83 | 1.63 | 675 | | | 0.13 | No, Vu<V |
| SLV 14 | 1458 | -6104 | -3884 | 440244 | | 21.5 | 10.14 | 1.63 | 461 | | | 0.12 | No, Vu<V |
| SLV 1 | 1248 | -4651 | 4804 | 378797 | | 0 | 0 | 0.83 | 0 | | | 0 | No, Vu<V |
| SLV 1 | 1458 | -3520 | 3592 | -338495 | | 0 | 0 | 0.83 | 0 | | | 0 | No, Vu<V |
| SLV 12 | 1248 | -5973 | -4018 | -276236 | | 2.43 | 87.75 | 1.32 | 3242 | | | 0.81 | No, Vu<V |
| SLV 12 | 1458 | -6978 | -3583 | 221424 | | 1.9 | 131.3 | 1.21 | 4459 | | | 1.24 | Si |

### Verifica a pressoflessione fuori piano D.M. 17-01-18 (N.T.C.)

quota 1406 Wa 0.05 denominatore 8 γM = 2

| Comb. | fd | Sa | σ0 | N | M | Mc | Coeff.s. | Verifica |
|---|---|---|---|---|---|---|---|---|
| SLV 2 | 14 | 0.53 | 0.91 | -3854 | 17548 | 49932 | 2.85 | Si |
| SLV 1 | 14 | 0.53 | 0.91 | -3854 | 17548 | 49932 | 2.85 | Si |
| SLV 5 | 14 | 0.53 | 0.96 | -4051 | 17548 | 52269 | 2.98 | Si |
| SLV 6 | 14 | 0.53 | 0.96 | -4051 | 17548 | 52269 | 2.98 | Si |
| SLV 3 | 14 | 0.53 | 1.04 | -4381 | 17548 | 56127 | 3.2 | Si |
| SLV 4 | 14 | 0.53 | 1.04 | -4381 | 17548 | 56127 | 3.2 | Si |
| SLV 10 | 14 | 0.53 | 1.12 | -4747 | 17548 | 60346 | 3.44 | Si |
| SLV 9 | 14 | 0.53 | 1.12 | -4747 | 17548 | 60346 | 3.44 | Si |
| SLV 8 | 14 | 0.53 | 1.37 | -5806 | 17548 | 72147 | 4.11 | Si |
| SLV 7 | 14 | 0.53 | 1.37 | -5806 | 17548 | 72147 | 4.11 | Si |

### Verifica dei meccanismi locali di collasso con analisi cinematica lineare

forza di aggancio al piano = 0 quota mezzeria = 1406 Wa = 0.05 Ta = 0.0596

| Comb. | N top | N base | V orto | α0 | M* | e* | a0* | aLim | Verifica |
|---|---|---|---|---|---|---|---|---|---|
| SLV 10 | -2950 | -5077 | 163 | 0.018 | 4.949 | 0.907 | 28.472 | 1505.645 | No |
| SLV 9 | -2950 | -5077 | 163 | 0.018 | 4.949 | 0.907 | 28.472 | 1505.645 | No |
| SLV 6 | -2438 | -4736 | 134 | 0.022 | 4.446 | 0.9 | 35.876 | 1505.645 | No |
| SLV 5 | -2438 | -4736 | 134 | 0.022 | 4.446 | 0.9 | 35.876 | 1505.645 | No |
| SLV 8 | -3830 | -5631 | -133 | 0.029 | 5.826 | 0.917 | 45.21 | 1505.645 | No |
| SLV 7 | -3830 | -5631 | -133 | 0.029 | 5.826 | 0.917 | 45.21 | 1505.645 | No |
| SLV 11 | -4341 | -5973 | -103 | 0.035 | 6.338 | 0.922 | 55.743 | 1505.645 | No |
| SLV 12 | -4341 | -5973 | -103 | 0.035 | 6.338 | 0.922 | 55.743 | 1505.645 | No |
| SLV 13 | -4034 | -5789 | 105 | 0.034 | 6.03 | 0.919 | 54.442 | 879.274 | No |
| SLV 14 | -4034 | -5789 | 105 | 0.034 | 6.03 | 0.919 | 54.442 | 879.274 | No |

### Tabella dei coefficienti di sicurezza minimi

| Stato limite | Coeff.s. | Comb. | Verifica |
|---|---|---|---|
| PF_SLU | 4.144 | SLU 60 | Si |
| V_SLU | 2.69 | SLU 79 | Si |
| PF_SLV | 0 | SLV 1 | No |
| V_SLV | 0 | SLV 1 | No |
| PFFP_SLV | 2.845 | SLV 1 | Si |
| R_SLV | 0.019 | SLV 9 | No |

## Maschio 206

Verifiche condotte secondo D.M. 17-01-18 (N.T.C.)

### Dati geometrici

| X ini. | Y ini. | X fin. | Y fin. | Quota i. | Quota.s | l | Sp. | h netta | h ini. | h fin. | a | a.s.,sx | a.s.,dx |
|---|---|---|---|---|---|---|---|---|---|---|---|---|---|
| -12.3 | 104.6 | -416.8 | 104.6 | L6 | L7 | 404.5 | 28 | 316 | 316 | 316 | | | |

### Caratteristiche del materiale

(Circolare 7 21-01-19 C8.5.I) Muratura in mattoni pieni e malta di calce LC2_Corti

| fb | fk | fvk0 | fmedio | τ0 | fv0 | μ | ϕ | fv,lim | E | G | FC |
|---|---|---|---|---|---|---|---|---|---|---|---|
| 60 | | | 34.5 | 0.9 | 2 | 0.58 | 0.77 | 3.25 | 32000 | 12800 | 1.2 |

### Verifica a pressoflessione nel piano secondo D.M. 17-01-18 NTC §7.8.2.2.1 in combinazioni non sismiche, γM = 3

| Comb. | Quota | N | M | σ0 | Mu | c.s. | Verifica |
|---|---|---|---|---|---|---|---|
| SLU 80 | 1248 | -11752 | 180029 | 1.04 | 2074042 | 11.521 | Si |
| SLU 80 | 1458 | -7663 | 589633 | 0.68 | 1421158 | 2.41 | Si |
| SLU 41 | 1248 | -8246 | 109334 | 0.73 | 1518745 | 13.891 | Si |
| SLU 41 | 1458 | -5989 | 463502 | 0.53 | 1132568 | 2.444 | Si |
| SLU 16 | 1248 | -8956 | 138606 | 0.79 | 1635520 | 11.8 | Si |
| SLU 16 | 1458 | -5787 | 465230 | 0.51 | 1097056 | 2.358 | Si |
| SLU 42 | 1248 | -8374 | 115955 | 0.74 | 1539961 | 13.281 | Si |
| SLU 42 | 1458 | -6017 | 462794 | 0.53 | 1137584 | 2.458 | Si |
| SLU 38 | 1248 | -9155 | 146995 | 0.81 | 1667814 | 11.346 | Si |
| SLU 38 | 1458 | -6367 | 536296 | 0.56 | 1198910 | 2.236 | Si |
| SLU 29 | 1248 | -9750 | 159547 | 0.86 | 1763483 | 11.053 | Si |
| SLU 29 | 1458 | -6265 | 505554 | 0.55 | 1181089 | 2.336 | Si |
| SLU 30 | 1248 | -9878 | 166169 | 0.87 | 1783856 | 10.735 | Si |
| SLU 30 | 1458 | -6294 | 504846 | 0.56 | 1186071 | 2.349 | Si |
| SLU 79 | 1248 | -11624 | 173408 | 1.03 | 2054721 | 11.849 | Si |
| SLU 79 | 1458 | -7635 | 590341 | 0.67 | 1416348 | 2.399 | Si |
| SLU 17 | 1248 | -9084 | 145227 | 0.8 | 1656339 | 11.405 | Si |
| SLU 17 | 1458 | -5816 | 464522 | 0.51 | 1102098 | 2.373 | Si |
| SLU 37 | 1248 | -9027 | 140374 | 0.8 | 1647035 | 11.733 | Si |
| SLU 37 | 1458 | -6339 | 537004 | 0.56 | 1193937 | 2.223 | Si |

### Verifica a pressoflessione nel piano secondo D.M. 17-01-18 NTC §7.8.2.2.1 in combinazioni sismiche, γM = 2

| Comb. | Quota | N | M | σ0 | Mu | c.s. | Verifica |
|---|---|---|---|---|---|---|---|
| SLV 16 | 1248 | -10448 | -70985 | 0.92 | 1953630 | 27.522 | Si |
| SLV 16 | 1458 | -7936 | 876350 | 0.7 | 1513017 | 1.726 | Si |
| SLV 14 | 1248 | -10120 | -64369 | 0.89 | 1897127 | 29.473 | Si |
| SLV 14 | 1458 | -7336 | 761756 | 0.65 | 1405133 | 1.845 | Si |
| SLV 12 | 1248 | -9618 | 43682 | 0.85 | 1810065 | 41.437 | Si |
| SLV 12 | 1458 | -6880 | 639223 | 0.61 | 1322362 | 2.069 | Si |
| SLV 1 | 1248 | -6654 | 285308 | 0.59 | 1281123 | 4.49 | Si |
| SLV 1 | 1458 | -2322 | -297729 | 0.2 | 461652 | 1.551 | Si |
| SLD 16 | 1248 | -9355 | 30627 | 0.83 | 1764147 | 57.601 | Si |
| SLD 16 | 1458 | -6321 | 538604 | 0.56 | 1220040 | 2.265 | Si |
| SLD 15 | 1248 | -9355 | 30627 | 0.83 | 1764147 | 57.601 | Si |
| SLD 15 | 1458 | -6321 | 538604 | 0.56 | 1220040 | 2.265 | Si |
| SLV 15 | 1248 | -10448 | -70985 | 0.92 | 1953630 | 27.522 | Si |
| SLV 15 | 1458 | -7936 | 876350 | 0.7 | 1513017 | 1.726 | Si |
| SLV 2 | 1248 | -6654 | 285308 | 0.59 | 1281123 | 4.49 | Si |
| SLV 2 | 1458 | -2322 | -297729 | 0.2 | 461652 | 1.551 | Si |
| SLV 13 | 1248 | -10120 | -64369 | 0.89 | 1897127 | 29.473 | Si |
| SLV 13 | 1458 | -7336 | 761756 | 0.65 | 1405133 | 1.845 | Si |
| SLV 11 | 1248 | -9618 | 43682 | 0.85 | 1810065 | 41.437 | Si |
| SLV 11 | 1458 | -6880 | 639223 | 0.61 | 1322362 | 2.069 | Si |

### Verifica a taglio nel piano secondo D.M. 17-01-18 (N.T.C.) §7.8.2.2.2 con rottura per scorrimento in combinazioni non sismiche, γM = 3

| Comb. | Quota | N | V par | M | σ0 | σN | l' | fvd | Vt scorr. | Vt fess.diag. | Vt,lim | c.s. | Verifica |
|---|---|---|---|---|---|---|---|---|---|---|---|---|---|
| SLU 38 | 1248 | -9155 | -3585 | 146995 | | 0.81 | 404.5 | 0.66 | 7513 | | | 2.1 | Si |
| SLU 38 | 1458 | -6367 | -3452 | 536296 | | 0.64 | 354.07 | 0.64 | 6357 | | | 1.84 | Si |
| SLU 37 | 1248 | -9027 | -3724 | 140374 | | 0.8 | 404.5 | 0.66 | 7496 | | | 2.01 | Si |
| SLU 37 | 1458 | -6339 | -3575 | 537004 | | 0.64 | 352.6 | 0.64 | 6330 | | | 1.77 | Si |
| SLU 36 | 1248 | -10221 | -3765 | 184993 | | 0.9 | 404.5 | 0.68 | 7655 | | | 2.03 | Si |
| SLU 36 | 1458 | -7665 | -3640 | 565858 | | 0.71 | 385.27 | 0.65 | 7015 | | | 1.93 | Si |
| SLU 83 | 1248 | -10843 | -4008 | 142368 | | 0.96 | 404.5 | 0.68 | 7738 | | | 1.93 | Si |
| SLU 83 | 1458 | -7285 | -3906 | 516839 | | 0.66 | 393.9 | 0.64 | 7099 | | | 1.82 | Si |
| SLU 41 | 1248 | -8246 | -3925 | 109334 | | 0.73 | 404.5 | 0.65 | 7392 | | | 1.88 | Si |
| SLU 41 | 1458 | -5989 | -3825 | 463502 | | 0.57 | 374.56 | 0.63 | 6625 | | | 1.73 | Si |
| SLU 42 | 1248 | -8374 | -3785 | 115955 | | 0.74 | 404.5 | 0.65 | 7409 | | | 1.96 | Si |
| SLU 42 | 1458 | -6017 | -3701 | 462794 | | 0.57 | 376.01 | 0.63 | 6651 | | | 1.8 | Si |
| SLU 77 | 1248 | -12690 | -3988 | 211406 | | 1.12 | 404.5 | 0.7 | 7984 | | | 2 | Si |
| SLU 77 | 1458 | -8932 | -3844 | 619903 | | 0.8 | 398.54 | 0.66 | 7391 | | | 1.92 | Si |
| SLU 79 | 1248 | -11624 | -3808 | 173408 | | 1.03 | 404.5 | 0.69 | 7842 | | | 2.06 | Si |

| Comb. | Quota | N | V par | M | σ0 | σN | l' | fvd | Vt scorr. | Vt fess.diag. | Vt,lim | c.s. | Verifica |
|---|---|---|---|---|---|---|---|---|---|---|---|---|---|
| SLU 79 | 1458 | -7635 | -3656 | 590341 | | 0.73 | 374.78 | 0.65 | 6848 | | | 1.87 | Si |
| SLU 35 | 1248 | -10093 | -3904 | 178372 | | 0.89 | 404.5 | 0.67 | 7638 | | | 1.96 | Si |
| SLU 35 | 1458 | -7636 | -3763 | 566566 | | 0.71 | 384.16 | 0.65 | 6994 | | | 1.86 | Si |
| SLU 84 | 1248 | -10971 | -3869 | 148989 | | 0.97 | 404.5 | 0.68 | 7755 | | | 2 | Si |
| SLU 84 | 1458 | -7313 | -3782 | 516131 | | 0.66 | 395.02 | 0.64 | 7120 | | | 1.88 | Si |

### Verifica a taglio nel piano secondo D.M. 17-01-18 (N.T.C.) §7.8.2.2.2 con rottura per scorrimento in combinazioni sismiche, γM = 2

| Comb. | Quota | N | V par | M | σ0 | σN | l' | fvd | Vt scorr. | Vt fess.diag. | Vt,lim | c.s. | Verifica |
|---|---|---|---|---|---|---|---|---|---|---|---|---|---|
| SLD 15 | 1248 | -9355 | -4245 | 30627 | | 0.83 | 404.5 | 1 | 11309 | | | 2.66 | Si |
| SLD 15 | 1458 | -6321 | -2906 | 538604 | | 0.64 | 351.13 | 0.96 | 9457 | | | 3.25 | Si |
| SLV 15 | 1248 | -10448 | -7414 | -70985 | | 0.92 | 404.5 | 1.02 | 11528 | | | 1.55 | Si |
| SLV 15 | 1458 | -7936 | -4344 | 876350 | | 1.03 | 275.47 | 1.04 | 8015 | | | 1.85 | Si |
| SLD 16 | 1248 | -9355 | -4245 | 30627 | | 0.83 | 404.5 | 1 | 11309 | | | 2.66 | Si |
| SLD 16 | 1458 | -6321 | -2906 | 538604 | | 0.64 | 351.13 | 0.96 | 9457 | | | 3.25 | Si |
| SLD 14 | 1248 | -9223 | -3921 | 33342 | | 0.81 | 404.5 | 1 | 11283 | | | 2.88 | Si |
| SLD 14 | 1458 | -6081 | -2604 | 492804 | | 0.6 | 363.64 | 0.95 | 9701 | | | 3.73 | Si |
| SLV 12 | 1248 | -9618 | -4775 | 43682 | | 0.85 | 404.5 | 1 | 11362 | | | 2.38 | Si |
| SLV 12 | 1458 | -6880 | -3751 | 639223 | | 0.75 | 328.03 | 0.98 | 9030 | | | 2.41 | Si |
| SLV 11 | 1248 | -9618 | -4775 | 43682 | | 0.85 | 404.5 | 1 | 11362 | | | 2.38 | Si |
| SLV 11 | 1458 | -6880 | -3751 | 639223 | | 0.75 | 328.03 | 0.98 | 9030 | | | 2.41 | Si |
| SLV 13 | 1248 | -10120 | -6602 | -64369 | | 0.89 | 404.5 | 1.01 | 11462 | | | 1.74 | Si |
| SLV 13 | 1458 | -7336 | -3582 | 761756 | | 0.89 | 295.25 | 1.01 | 8357 | | | 2.33 | Si |
| SLD 13 | 1248 | -9223 | -3921 | 33342 | | 0.81 | 404.5 | 1 | 11283 | | | 2.88 | Si |
| SLD 13 | 1458 | -6081 | -2604 | 492804 | | 0.6 | 363.64 | 0.95 | 9701 | | | 3.73 | Si |
| SLV 14 | 1248 | -10120 | -6602 | -64369 | | 0.89 | 404.5 | 1.01 | 11462 | | | 1.74 | Si |
| SLV 14 | 1458 | -7336 | -3582 | 761756 | | 0.89 | 295.25 | 1.01 | 8357 | | | 2.33 | Si |
| SLV 16 | 1248 | -10448 | -7414 | -70985 | | 0.92 | 404.5 | 1.02 | 11528 | | | 1.55 | Si |
| SLV 16 | 1458 | -7936 | -4344 | 876350 | | 1.03 | 275.47 | 1.04 | 8015 | | | 1.85 | Si |

### Verifica a pressoflessione fuori piano D.M. 17-01-18 (N.T.C.)

quota 1406 Wa 0.05 denominatore 8 γM = 2

| Comb. | fd | Sa | σ0 | N | M | Mc | Coeff.s. | Verifica |
|---|---|---|---|---|---|---|---|---|
| SLV 1 | 14 | 0.53 | 0 | -3350 | 47007 | 0 | 0 | No, e>t/2 |
| SLV 2 | 14 | 0.53 | 0 | -3350 | 47007 | 0 | 0 | No, e>t/2 |
| SLV 3 | 14 | 0.53 | 0.34 | -3896 | 47007 | 53013 | 1.13 | Si |
| SLV 4 | 14 | 0.53 | 0.34 | -3896 | 47007 | 53013 | 1.13 | Si |
| SLV 6 | 14 | 0.53 | 0.4 | -4510 | 47007 | 61088 | 1.3 | Si |
| SLV 5 | 14 | 0.53 | 0.4 | -4510 | 47007 | 61088 | 1.3 | Si |
| SLV 9 | 14 | 0.53 | 0.53 | -6052 | 47007 | 81017 | 1.72 | Si |
| SLV 10 | 14 | 0.53 | 0.53 | -6052 | 47007 | 81017 | 1.72 | Si |
| SLV 7 | 14 | 0.53 | 0.56 | -6332 | 47007 | 84589 | 1.8 | Si |
| SLV 8 | 14 | 0.53 | 0.56 | -6332 | 47007 | 84589 | 1.8 | Si |

### Verifica dei meccanismi locali di collasso con analisi cinematica lineare

forza di aggancio al piano = 0 quota mezzeria = 1406 Wa = 0.05 Ta = 0.0596

| Comb. | N top | N base | V orto | α0 | M* | e* | a0* | aLim | Verifica |
|---|---|---|---|---|---|---|---|---|---|
| SLV 5 | -1588 | -7485 | 26 | 0.069 | 7.371 | 0.9 | 110.752 | 1505.645 | No |
| SLV 6 | -1588 | -7485 | 26 | 0.069 | 7.371 | 0.9 | 110.752 | 1505.645 | No |
| SLV 11 | -1819 | -9618 | -21 | 0.068 | 7.551 | 0.897 | 110.925 | 1505.645 | No |
| SLV 12 | -1819 | -9618 | -21 | 0.068 | 7.551 | 0.897 | 110.925 | 1505.645 | No |
| SLV 8 | -1745 | -8578 | 3 | 0.073 | 7.492 | 0.898 | 117.382 | 1505.645 | No |
| SLV 7 | -1745 | -8578 | 3 | 0.073 | 7.492 | 0.898 | 117.382 | 1505.645 | No |
| SLV 9 | -1663 | -8524 | 2 | 0.073 | 7.428 | 0.899 | 118.18 | 1505.645 | No |
| SLV 10 | -1663 | -8524 | 2 | 0.073 | 7.428 | 0.899 | 118.18 | 1505.645 | No |
| SLV 2 | -1556 | -6654 | 45 | 0.065 | 7.347 | 0.901 | 104.315 | 879.274 | No |
| SLV 1 | -1556 | -6654 | 45 | 0.065 | 7.347 | 0.901 | 104.315 | 879.274 | No |

### Tabella dei coefficienti di sicurezza minimi

| Stato limite | Coeff.s. | Comb. | Verifica |
|---|---|---|---|
| PF_SLU | 2.223 | SLU 37 | Si |
| V_SLU | 1.732 | SLU 41 | Si |
| PF_SLV | 1.551 | SLV 1 | Si |
| V_SLV | 1.555 | SLV 15 | Si |
| PFFP_SLV | 0 | SLV 1 | No |
| R_SLV | 0.074 | SLV 5 | No |

## Maschio 207

Verifiche condotte secondo D.M. 17-01-18 (N.T.C.)

### Dati geometrici

| X ini. | Y ini. | X fin. | Y fin. | Quota i. | Quota.s | l | Sp. | h netta | h ini. | h fin. | a | a.s.,sx | a.s.,dx |
|---|---|---|---|---|---|---|---|---|---|---|---|---|---|
| -1100.3 | -350.9 | -1100.3 | 104.6 | L6 | L7 | 455.6 | 28 | 316 | 316 | 316 | | | |

### Caratteristiche del materiale

(Circolare 7 21-01-19 C8.5.I) Muratura in mattoni pieni e malta di calce LC2_Corti

| fb | fk | fvk0 | fmedio | τ0 | fv0 | μ | ϕ | fv,lim | E | G | FC |
|---|---|---|---|---|---|---|---|---|---|---|---|
| 60 | | | 34.5 | 0.9 | 2 | 0.58 | 0.77 | 3.25 | 32000 | 12800 | 1.2 |

### Verifica a pressoflessione nel piano secondo D.M. 17-01-18 NTC §7.8.2.2.1 in combinazioni non sismiche, γM = 3

| Comb. | Quota | N | M | σ0 | Mu | c.s. | Verifica |
|---|---|---|---|---|---|---|---|
| SLU 50 | 1248 | -17968 | 584804 | 1.41 | 3385103 | 5.788 | Si |
| SLU 50 | 1564 | -1050 | 237290 | 0.08 | 236683 | 0.997 | No, M>Mu |

| Comb. | Quota | N | M | σ0 | Mu | c.s. | Verifica |
|---|---|---|---|---|---|---|---|
| SLU 49 | 1248 | -18413 | 632172 | 1.44 | 3450903 | 5.459 | Si |
| SLU 49 | 1564 | -1116 | 252360 | 0.09 | 251453 | 0.996 | No, M>Mu |
| SLU 48 | 1248 | -18486 | 638265 | 1.45 | 3461639 | 5.424 | Si |
| SLU 48 | 1564 | -1131 | 255763 | 0.09 | 254862 | 0.996 | No, M>Mu |
| SLU 56 | 1248 | -18515 | 644306 | 1.45 | 3465896 | 5.379 | Si |
| SLU 56 | 1564 | -1080 | 244108 | 0.08 | 243433 | 0.997 | No, M>Mu |
| SLU 51 | 1248 | -17895 | 578710 | 1.4 | 3374202 | 5.831 | Si |
| SLU 51 | 1564 | -1034 | 233888 | 0.08 | 233269 | 0.997 | No, M>Mu |
| SLU 6 | 1248 | -15254 | 540039 | 1.2 | 2964519 | 5.489 | Si |
| SLU 6 | 1564 | -978 | 220830 | 0.08 | 220602 | 0.999 | No, M>Mu |
| SLU 59 | 1248 | -17924 | 584750 | 1.41 | 3378534 | 5.778 | Si |
| SLU 59 | 1564 | -983 | 222233 | 0.08 | 221819 | 0.998 | No, M>Mu |
| SLU 7 | 1248 | -15181 | 533945 | 1.19 | 2952748 | 5.53 | Si |
| SLU 7 | 1564 | -962 | 217428 | 0.08 | 217183 | 0.999 | No, M>Mu |
| SLU 57 | 1248 | -18442 | 638212 | 1.45 | 3455170 | 5.414 | Si |
| SLU 57 | 1564 | -1065 | 240706 | 0.08 | 240021 | 0.997 | No, M>Mu |
| SLU 58 | 1248 | -17997 | 590844 | 1.41 | 3389427 | 5.737 | Si |
| SLU 58 | 1564 | -998 | 225635 | 0.08 | 225237 | 0.998 | No, M>Mu |

Verifica a pressoflessione nel piano secondo D.M. 17-01-18 NTC §7.8.2.2.1 in combinazioni sismiche, γM = 2

| Comb. | Quota | N | M | σ0 | Mu | c.s. | Verifica |
|---|---|---|---|---|---|---|---|
| SLV 13 | 1248 | -15711 | 412274 | 1.23 | 3217965 | 7.805 | Si |
| SLV 13 | 1564 | -1603 | 361509 | 0.13 | 361374 | 1 | No, M>Mu |
| SLV 4 | 1248 | -10135 | 411931 | 0.79 | 2158541 | 5.24 | Si |
| SLV 4 | 1564 | 326 | -77646 | 0 | 0 | 0 | No, Trazione |
| SLV 15 | 1248 | -13853 | 380915 | 1.09 | 2874992 | 7.548 | Si |
| SLV 15 | 1564 | -885 | 202188 | 0 | 0 | 0 | No, e>l/2 |
| SLV 8 | 1248 | -9269 | 364489 | 0.73 | 1985692 | 5.448 | Si |
| SLV 8 | 1564 | 740 | -165579 | 0 | 0 | 0 | No, Trazione |
| SLV 7 | 1248 | -9269 | 364489 | 0.73 | 1985692 | 5.448 | Si |
| SLV 7 | 1564 | 740 | -165579 | 0 | 0 | 0 | No, Trazione |
| SLV 16 | 1248 | -13853 | 380915 | 1.09 | 2874992 | 7.548 | Si |
| SLV 16 | 1564 | -885 | 202188 | 0 | 0 | 0 | No, e>l/2 |
| SLV 12 | 1248 | -10384 | 355184 | 0.81 | 2207693 | 6.216 | Si |
| SLV 12 | 1564 | 376 | -81629 | 0 | 0 | 0 | No, Trazione |
| SLV 14 | 1248 | -15711 | 412274 | 1.23 | 3217965 | 7.805 | Si |
| SLV 14 | 1564 | -1603 | 361509 | 0.13 | 361374 | 1 | No, M>Mu |
| SLV 11 | 1248 | -10384 | 355184 | 0.81 | 2207693 | 6.216 | Si |
| SLV 11 | 1564 | 376 | -81629 | 0 | 0 | 0 | No, Trazione |
| SLV 3 | 1248 | -10135 | 411931 | 0.79 | 2158541 | 5.24 | Si |
| SLV 3 | 1564 | 326 | -77646 | 0 | 0 | 0 | No, Trazione |

Verifica a taglio nel piano secondo D.M. 17-01-18 (N.T.C.) §7.8.2.2.2 con rottura per scorrimento in combinazioni non sismiche, γM = 3

| Comb. | Quota | N | V par | M | σ0 | σN | l' | fvd | Vt scorr. | Vt fess.diag. | Vt,lim | c.s. | Verifica |
|---|---|---|---|---|---|---|---|---|---|---|---|---|---|
| SLU 17 | 1248 | -14692 | -2036 | 486524 | | 1.15 | 455.57 | 0.71 | 9046 | | | 4.44 | Si |
| SLU 17 | 1564 | -830 | 150 | 187301 | | 4.91 | 6.03 | 1.08 | 183 | | | 1.22 | Si |
| SLU 48 | 1248 | -18486 | -2210 | 638265 | | 1.45 | 455.57 | 0.75 | 9551 | | | 4.32 | Si |
| SLU 48 | 1564 | -1131 | 127 | 255763 | | 8 | 5.05 | 1.08 | 153 | | | 1.21 | Si |
| SLU 56 | 1248 | -18515 | -2084 | 644306 | | 1.45 | 455.57 | 0.75 | 9555 | | | 4.59 | Si |
| SLU 56 | 1564 | -1080 | 134 | 244108 | | 7.38 | 5.23 | 1.08 | 159 | | | 1.19 | Si |
| SLU 58 | 1248 | -17997 | -2180 | 590844 | | 1.41 | 455.57 | 0.74 | 9486 | | | 4.35 | Si |
| SLU 58 | 1564 | -998 | 142 | 225635 | | 6.64 | 5.37 | 1.08 | 163 | | | 1.15 | Si |
| SLU 57 | 1248 | -18442 | -1991 | 638212 | | 1.45 | 455.57 | 0.75 | 9546 | | | 4.79 | Si |
| SLU 57 | 1564 | -1065 | 141 | 240706 | | 7.5 | 5.07 | 1.08 | 154 | | | 1.09 | Si |
| SLU 59 | 1248 | -17924 | -2088 | 584750 | | 1.41 | 455.57 | 0.74 | 9477 | | | 4.54 | Si |
| SLU 59 | 1564 | -983 | 149 | 222233 | | 6.75 | 5.2 | 1.08 | 158 | | | 1.06 | Si |
| SLU 51 | 1248 | -17895 | -2214 | 578710 | | 1.4 | 455.57 | 0.74 | 9473 | | | 4.28 | Si |
| SLU 51 | 1564 | -1034 | 142 | 233888 | | 7.37 | 5.01 | 1.08 | 152 | | | 1.07 | Si |
| SLU 9 | 1248 | -14663 | -2162 | 480483 | | 1.15 | 455.57 | 0.71 | 9042 | | | 4.18 | Si |
| SLU 9 | 1564 | -881 | 143 | 198955 | | 5.47 | 5.76 | 1.08 | 175 | | | 1.22 | Si |
| SLU 50 | 1248 | -17968 | -2306 | 584804 | | 1.41 | 455.57 | 0.74 | 9482 | | | 4.11 | Si |
| SLU 50 | 1564 | -1050 | 135 | 237290 | | 7.25 | 5.17 | 1.08 | 157 | | | 1.16 | Si |
| SLU 49 | 1248 | -18413 | -2118 | 632172 | | 1.44 | 455.57 | 0.75 | 9542 | | | 4.51 | Si |
| SLU 49 | 1564 | -1116 | 134 | 252360 | | 8.13 | 4.9 | 1.08 | 149 | | | 1.11 | Si |

Verifica a taglio nel piano secondo D.M. 17-01-18 (N.T.C.) §7.8.2.2.2 con rottura per scorrimento in combinazioni sismiche, γM = 2

| Comb. | Quota | N | V par | M | σ0 | σN | l' | fvd | Vt scorr. | Vt fess.diag. | Vt,lim | c.s. | Verifica |
|---|---|---|---|---|---|---|---|---|---|---|---|---|---|
| SLV 7 | 1248 | -9269 | 7860 | 364489 | | 0.73 | 455.57 | 0.98 | 12484 | | | 1.59 | Si |
| SLV 7 | 1564 | 740 | 1187 | -165579 | | 0 | 0 | 0.83 | 0 | | | 0 | No, Vu<V |
| SLV 12 | 1248 | -10384 | 6736 | 355184 | | 0.81 | 455.57 | 1 | 12707 | | | 1.89 | Si |
| SLV 12 | 1564 | 376 | 1049 | -81629 | | 0 | 0 | 0.83 | 0 | | | 0 | No, Vu<V |
| SLD 12 | 1248 | -11872 | 2419 | 387535 | | 0.93 | 455.57 | 1.02 | 13004 | | | 5.38 | Si |
| SLD 12 | 1564 | -222 | 454 | 50266 | | 1.44 | 5.52 | 1.12 | 173 | | | 0.38 | No, Vu<V |
| SLD 11 | 1248 | -11872 | 2419 | 387535 | | 0.93 | 455.57 | 1.02 | 13004 | | | 5.38 | Si |
| SLD 11 | 1564 | -222 | 454 | 50266 | | 1.44 | 5.52 | 1.12 | 173 | | | 0.38 | No, Vu<V |
| SLV 15 | 1248 | -13853 | -172 | 380915 | | 1.09 | 455.57 | 1.05 | 13400 | | | 77.96 | Si |
| SLV 15 | 1564 | -885 | 133 | 202188 | | 0 | 0 | 0.83 | 0 | | | 0 | No, Vu<V |
| SLV 3 | 1248 | -10135 | 3574 | 411931 | | 0.79 | 455.57 | 0.99 | 12657 | | | 3.54 | Si |
| SLV 3 | 1564 | 326 | 591 | -77646 | | 0 | 0 | 0.83 | 0 | | | 0 | No, Vu<V |
| SLV 4 | 1248 | -10135 | 3574 | 411931 | | 0.79 | 455.57 | 0.99 | 12657 | | | 3.54 | Si |
| SLV 4 | 1564 | 326 | 591 | -77646 | | 0 | 0 | 0.83 | 0 | | | 0 | No, Vu<V |
| SLV 16 | 1248 | -13853 | -172 | 380915 | | 1.09 | 455.57 | 1.05 | 13400 | | | 77.96 | Si |
| SLV 16 | 1564 | -885 | 133 | 202188 | | 0 | 0 | 0.83 | 0 | | | 0 | No, Vu<V |
| SLV 11 | 1248 | -10384 | 6736 | 355184 | | 0.81 | 455.57 | 1 | 12707 | | | 1.89 | Si |
| SLV 11 | 1564 | 376 | 1049 | -81629 | | 0 | 0 | 0.83 | 0 | | | 0 | No, Vu<V |
| SLV 8 | 1248 | -9269 | 7860 | 364489 | | 0.73 | 455.57 | 0.98 | 12484 | | | 1.59 | Si |
| SLV 8 | 1564 | 740 | 1187 | -165579 | | 0 | 0 | 0.83 | 0 | | | 0 | No, Vu<V |

### Verifica a pressoflessione fuori piano D.M. 17-01-18 (N.T.C.)

quota 1406 Wa 0.05 denominatore 8 γM = 2

| Comb. | fd | Sa | σ0 | N | M | Mc | Coeff.s. | Verifica |
|---|---|---|---|---|---|---|---|---|
| SLV 8 | 14 | 0.53 | 0 | -3485 | 52942 | 0 | 0 | No, e>t/2 |
| SLV 7 | 14 | 0.53 | 0 | -3485 | 52942 | 0 | 0 | No, e>t/2 |
| SLV 4 | 14 | 0.53 | 0.35 | -4442 | 52942 | 60413 | 1.14 | Si |
| SLV 3 | 14 | 0.53 | 0.35 | -4442 | 52942 | 60413 | 1.14 | Si |
| SLV 11 | 14 | 0.53 | 0.36 | -4551 | 52942 | 61849 | 1.17 | Si |
| SLV 12 | 14 | 0.53 | 0.36 | -4551 | 52942 | 61849 | 1.17 | Si |
| SLV 1 | 14 | 0.53 | 0.5 | -6328 | 52942 | 84995 | 1.61 | Si |
| SLV 2 | 14 | 0.53 | 0.5 | -6328 | 52942 | 84995 | 1.61 | Si |
| SLV 15 | 14 | 0.53 | 0.63 | -7995 | 52942 | 106184 | 2.01 | Si |
| SLV 16 | 14 | 0.53 | 0.63 | -7995 | 52942 | 106184 | 2.01 | Si |

### Verifica dei meccanismi locali di collasso con analisi cinematica lineare

forza di aggancio al piano = 0 quota mezzeria = 1406 Wa = 0.05 Ta = 0.0596

| Comb. | N top | N base | V orto | α0 | M* | e* | a0* | aLim | Verifica |
|---|---|---|---|---|---|---|---|---|---|
| SLV 8 | 740 | -9269 | -26 | 0 | 0 | 0 | 0 | 1505.645 | No, Trazione |
| SLV 4 | 326 | -10135 | 27 | 0 | 0 | 0 | 0 | 879.274 | No, Trazione |
| SLV 7 | 740 | -9269 | -26 | 0 | 0 | 0 | 0 | 1505.645 | No, Trazione |
| SLV 3 | 326 | -10135 | 27 | 0 | 0 | 0 | 0 | 879.274 | No, Trazione |
| SLV 11 | 376 | -10384 | -47 | 0 | 0 | 0 | 0 | 1505.645 | No, Trazione |
| SLV 12 | 376 | -10384 | -47 | 0 | 0 | 0 | 0 | 1505.645 | No, Trazione |
| SLV 5 | -1653 | -15462 | 52 | 0.065 | 8.2 | 0.903 | 104.479 | 1505.645 | No |
| SLV 6 | -1653 | -15462 | 52 | 0.065 | 8.2 | 0.903 | 104.479 | 1505.645 | No |
| SLV 10 | -2017 | -16578 | 30 | 0.067 | 8.478 | 0.897 | 109.28 | 1505.645 | No |
| SLV 9 | -2017 | -16578 | 30 | 0.067 | 8.478 | 0.897 | 109.28 | 1505.645 | No |

### Tabella dei coefficienti di sicurezza minimi

| Stato limite | Coeff.s. | Comb. | Verifica |
|---|---|---|---|
| PF_SLU | 0.996 | SLU 49 | No |
| V_SLU | 1.058 | SLU 59 | Si |
| PF_SLV | 0 | SLV 12 | No |
| V_SLV | 0 | SLV 3 | No |
| PFFP_SLV | 0 | SLV 7 | No |
| R_SLV | 0 | SLV 12 | No |

## Maschio 208

Verifiche condotte secondo D.M. 17-01-18 (N.T.C.)

### Dati geometrici

| X ini. | Y ini. | X fin. | Y fin. | Quota i. | Quota.s | l | Sp. | h netta | h ini. | h fin. | a | a.s.,sx | a.s.,dx |
|---|---|---|---|---|---|---|---|---|---|---|---|---|---|
| -626.8 | -335.9 | -626.8 | 104.6 | L6 | L7 | 440.5 | 14 | 316 | 316 | 316 | | | |

### Caratteristiche del materiale

(Circolare 7 21-01-19 C8.5.I) Muratura in mattoni pieni e malta di calce LC2_Corti

| fb | fk | fvk0 | fmedio | τ0 | fv0 | μ | ϕ | fv,lim | E | G | FC |
|---|---|---|---|---|---|---|---|---|---|---|---|
| 60 | | | 34.5 | 0.9 | 2 | 0.58 | 0.77 | 3.25 | 32000 | 12800 | 1.2 |

### Verifica a pressoflessione nel piano secondo D.M. 17-01-18 NTC §7.8.2.2.1 in combinazioni non sismiche, γM = 3

| Comb. | Quota | N | M | σ0 | Mu | c.s. | Verifica |
|---|---|---|---|---|---|---|---|
| SLU 17 | 1248 | -7714 | 307281 | 1.25 | 1438078 | 4.68 | Si |
| SLU 17 | 1564 | -1013 | -125483 | 0.16 | 218552 | 1.742 | Si |
| SLU 16 | 1248 | -7712 | 279597 | 1.25 | 1437765 | 5.142 | Si |
| SLU 16 | 1564 | -969 | -115991 | 0.16 | 209256 | 1.804 | Si |
| SLU 28 | 1248 | -8274 | 345191 | 1.34 | 1522186 | 4.41 | Si |
| SLU 28 | 1564 | -1148 | -134418 | 0.19 | 247022 | 1.838 | Si |
| SLU 8 | 1248 | -7153 | 276523 | 1.16 | 1351079 | 4.886 | Si |
| SLU 8 | 1564 | -966 | -117109 | 0.16 | 208566 | 1.781 | Si |
| SLU 29 | 1248 | -7989 | 308061 | 1.3 | 1479781 | 4.804 | Si |
| SLU 29 | 1564 | -1097 | -137992 | 0.18 | 236396 | 1.713 | Si |
| SLU 72 | 1248 | -9493 | 380260 | 1.54 | 1695713 | 4.459 | Si |
| SLU 72 | 1564 | -1215 | -142039 | 0.2 | 261047 | 1.838 | Si |
| SLU 38 | 1248 | -8550 | 338819 | 1.39 | 1562664 | 4.612 | Si |
| SLU 38 | 1564 | -1144 | -146366 | 0.19 | 246328 | 1.683 | Si |
| SLU 37 | 1248 | -8548 | 311135 | 1.39 | 1562366 | 5.022 | Si |
| SLU 37 | 1564 | -1101 | -136874 | 0.18 | 237081 | 1.732 | Si |
| SLU 9 | 1248 | -7155 | 304207 | 1.16 | 1351403 | 4.442 | Si |
| SLU 9 | 1564 | -1009 | -126601 | 0.16 | 217864 | 1.721 | Si |
| SLU 30 | 1248 | -7991 | 335745 | 1.3 | 1480089 | 4.408 | Si |
| SLU 30 | 1564 | -1141 | -147484 | 0.19 | 245643 | 1.666 | Si |

### Verifica a pressoflessione nel piano secondo D.M. 17-01-18 NTC §7.8.2.2.1 in combinazioni sismiche, γM = 2

| Comb. | Quota | N | M | σ0 | Mu | c.s. | Verifica |
|---|---|---|---|---|---|---|---|
| SLV 13 | 1248 | -7193 | 81078 | 1.17 | 1433113 | 17.676 | Si |
| SLV 13 | 1564 | -459 | 127215 | 0 | 0 | 0 | No, e>l/2 |
| SLV 4 | 1248 | -5527 | 307548 | 0.9 | 1127980 | 3.668 | Si |
| SLV 4 | 1564 | -409 | -149943 | 0 | 0 | 0 | No, e>l/2 |
| SLV 11 | 1248 | -6341 | 280113 | 1.03 | 1279018 | 4.566 | Si |
| SLV 11 | 1564 | -576 | -215318 | 0 | 0 | 0 | No, e>l/2 |
| SLV 8 | 1248 | -5885 | 328275 | 0.95 | 1194966 | 3.64 | Si |
| SLV 8 | 1564 | -539 | -257920 | 0 | 0 | 0 | No, e>l/2 |
| SLV 7 | 1248 | -5885 | 328275 | 0.95 | 1194966 | 3.64 | Si |

| Comb. | Quota | N | M | σ0 | Mu | c.s. | Verifica |
|---|---|---|---|---|---|---|---|
| SLV 7 | 1564 | -539 | -257920 | 0 | 0 | 0 | No, e>l/2 |
| SLV 14 | 1248 | -7193 | 81078 | 1.17 | 1433113 | 17.676 | Si |
| SLV 14 | 1564 | -459 | 127215 | 0 | 0 | 0 | No, e>l/2 |
| SLV 5 | 1248 | -6380 | 108514 | 1.03 | 1286133 | 11.852 | Si |
| SLV 5 | 1564 | -291 | 192590 | 0 | 0 | 0 | No, e>l/2 |
| SLV 12 | 1248 | -6341 | 280113 | 1.03 | 1279018 | 4.566 | Si |
| SLV 12 | 1564 | -576 | -215318 | 0 | 0 | 0 | No, e>l/2 |
| SLV 3 | 1248 | -5527 | 307548 | 0.9 | 1127980 | 3.668 | Si |
| SLV 3 | 1564 | -409 | -149943 | 0 | 0 | 0 | No, e>l/2 |
| SLV 9 | 1248 | -6835 | 60351 | 1.11 | 1368869 | 22.682 | Si |
| SLV 9 | 1564 | -329 | 235192 | 0 | 0 | 0 | No, e>l/2 |

Verifica a taglio nel piano secondo D.M. 17-01-18 (N.T.C.) §7.8.2.2.2 con rottura per scorrimento in combinazioni non sismiche, γM = 3

| Comb. | Quota | N | V par | M | σ0 | σN | l' | fvd | Vt scorr. | Vt fess.diag. | Vt,lim | c.s. | Verifica |
|---|---|---|---|---|---|---|---|---|---|---|---|---|---|
| SLU 36 | 1248 | -8833 | 1100 | 348265 | | 1.43 | 440.5 | 0.75 | 4604 | | | 4.19 | Si |
| SLU 36 | 1564 | -1151 | 1733 | -133300 | | 0.26 | 313.32 | 0.59 | 2590 | | | 1.49 | Si |
| SLU 29 | 1248 | -7989 | 1193 | 308061 | | 1.3 | 440.5 | 0.73 | 4491 | | | 3.76 | Si |
| SLU 29 | 1564 | -1097 | 1650 | -137992 | | 0.28 | 283.47 | 0.59 | 2351 | | | 1.42 | Si |
| SLU 17 | 1248 | -7714 | 1042 | 307281 | | 1.25 | 440.5 | 0.72 | 4455 | | | 4.28 | Si |
| SLU 17 | 1564 | -1013 | 1631 | -125483 | | 0.25 | 289.02 | 0.59 | 2383 | | | 1.46 | Si |
| SLU 38 | 1248 | -8550 | 1169 | 338819 | | 1.39 | 440.5 | 0.74 | 4566 | | | 3.91 | Si |
| SLU 38 | 1564 | -1144 | 1827 | -146366 | | 0.3 | 277.08 | 0.59 | 2308 | | | 1.26 | Si |
| SLU 37 | 1248 | -8548 | 1184 | 311135 | | 1.39 | 440.5 | 0.74 | 4566 | | | 3.85 | Si |
| SLU 37 | 1564 | -1101 | 1643 | -136874 | | 0.27 | 287.64 | 0.59 | 2384 | | | 1.45 | Si |
| SLU 9 | 1248 | -7155 | 1050 | 304207 | | 1.16 | 440.5 | 0.71 | 4380 | | | 4.17 | Si |
| SLU 9 | 1564 | -1009 | 1638 | -126601 | | 0.25 | 284.5 | 0.59 | 2347 | | | 1.43 | Si |
| SLU 72 | 1248 | -9493 | 1237 | 380260 | | 1.54 | 440.5 | 0.76 | 4692 | | | 3.79 | Si |
| SLU 72 | 1564 | -1215 | 1895 | -142039 | | 0.28 | 309.92 | 0.59 | 2572 | | | 1.36 | Si |
| SLU 80 | 1248 | -10052 | 1228 | 383334 | | 1.63 | 440.5 | 0.77 | 4766 | | | 3.88 | Si |
| SLU 80 | 1564 | -1218 | 1888 | -140921 | | 0.28 | 313.61 | 0.59 | 2602 | | | 1.38 | Si |
| SLU 28 | 1248 | -8274 | 1108 | 345191 | | 1.34 | 440.5 | 0.73 | 4529 | | | 4.09 | Si |
| SLU 28 | 1564 | -1148 | 1740 | -134418 | | 0.26 | 309.42 | 0.59 | 2560 | | | 1.47 | Si |
| SLU 30 | 1248 | -7991 | 1178 | 335745 | | 1.3 | 440.5 | 0.73 | 4492 | | | 3.81 | Si |
| SLU 30 | 1564 | -1141 | 1834 | -147484 | | 0.3 | 273.05 | 0.6 | 2276 | | | 1.24 | Si |

Verifica a taglio nel piano secondo D.M. 17-01-18 (N.T.C.) §7.8.2.2.2 con rottura per scorrimento in combinazioni sismiche, γM = 2

| Comb. | Quota | N | V par | M | σ0 | σN | l' | fvd | Vt scorr. | Vt fess.diag. | Vt,lim | c.s. | Verifica |
|---|---|---|---|---|---|---|---|---|---|---|---|---|---|
| SLV 11 | 1248 | -6341 | 5198 | 280113 | | 1.03 | 440.5 | 1.04 | 6407 | | | 1.23 | Si |
| SLV 11 | 1564 | -576 | 3557 | -215318 | | 0 | 0 | 0.83 | 0 | | | 0 | No, Vu<V |
| SLV 9 | 1248 | -6835 | -4492 | 60351 | | 1.11 | 440.5 | 1.05 | 6506 | | | 1.45 | Si |
| SLV 9 | 1564 | -329 | -2824 | 235192 | | 0 | 0 | 0.83 | 0 | | | 0 | No, Vu<V |
| SLV 4 | 1248 | -5527 | 1917 | 307548 | | 0.9 | 440.5 | 1.01 | 6245 | | | 3.26 | Si |
| SLV 4 | 1564 | -409 | 1812 | -149943 | | 0 | 0 | 0.83 | 0 | | | 0 | No, Vu<V |
| SLV 12 | 1248 | -6341 | 5198 | 280113 | | 1.03 | 440.5 | 1.04 | 6407 | | | 1.23 | Si |
| SLV 12 | 1564 | -576 | 3557 | -215318 | | 0 | 0 | 0.83 | 0 | | | 0 | No, Vu<V |
| SLV 6 | 1248 | -6380 | -4441 | 108514 | | 1.03 | 440.5 | 1.04 | 6415 | | | 1.44 | Si |
| SLV 6 | 1564 | -291 | -2599 | 192590 | | 0 | 0 | 0.83 | 0 | | | 0 | No, Vu<V |
| SLV 8 | 1248 | -5885 | 5249 | 328275 | | 0.95 | 440.5 | 1.02 | 6316 | | | 1.2 | Si |
| SLV 8 | 1564 | -539 | 3782 | -257920 | | 0 | 0 | 0.83 | 0 | | | 0 | No, Vu<V |
| SLV 13 | 1248 | -7193 | -1160 | 81078 | | 1.17 | 440.5 | 1.07 | 6578 | | | 5.67 | Si |
| SLV 13 | 1564 | -459 | -853 | 127215 | | 0 | 0 | 0.83 | 0 | | | 0 | No, Vu<V |
| SLV 3 | 1248 | -5527 | 1917 | 307548 | | 0.9 | 440.5 | 1.01 | 6245 | | | 3.26 | Si |
| SLV 3 | 1564 | -409 | 1812 | -149943 | | 0 | 0 | 0.83 | 0 | | | 0 | No, Vu<V |
| SLV 5 | 1248 | -6380 | -4441 | 108514 | | 1.03 | 440.5 | 1.04 | 6415 | | | 1.44 | Si |
| SLV 5 | 1564 | -291 | -2599 | 192590 | | 0 | 0 | 0.83 | 0 | | | 0 | No, Vu<V |
| SLV 7 | 1248 | -5885 | 5249 | 328275 | | 0.95 | 440.5 | 1.02 | 6316 | | | 1.2 | Si |
| SLV 7 | 1564 | -539 | 3782 | -257920 | | 0 | 0 | 0.83 | 0 | | | 0 | No, Vu<V |

Verifica a pressoflessione fuori piano D.M. 17-01-18 (N.T.C.)

quota 1406 Wa 0.03 denominatore 8 γM = 2

| Comb. | fd | Sa | σ0 | N | M | Mc | Coeff.s. | Verifica |
|---|---|---|---|---|---|---|---|---|
| SLV 3 | 14 | 0.53 | 0 | -3246 | 26759 | 0 | 0 | No, e>t/2 |
| SLV 10 | 14 | 0.53 | 0 | -3773 | 26759 | 0 | 0 | No, e>t/2 |
| SLV 8 | 14 | 0.53 | 0 | -3591 | 26759 | 0 | 0 | No, e>t/2 |
| SLV 9 | 14 | 0.53 | 0 | -3773 | 26759 | 0 | 0 | No, e>t/2 |
| SLV 7 | 14 | 0.53 | 0 | -3591 | 26759 | 0 | 0 | No, e>t/2 |
| SLV 5 | 14 | 0.53 | 0 | -3503 | 26759 | 0 | 0 | No, e>t/2 |
| SLV 2 | 14 | 0.53 | 0 | -3219 | 26759 | 0 | 0 | No, e>t/2 |
| SLV 1 | 14 | 0.53 | 0 | -3219 | 26759 | 0 | 0 | No, e>t/2 |
| SLV 4 | 14 | 0.53 | 0 | -3246 | 26759 | 0 | 0 | No, e>t/2 |
| SLV 6 | 14 | 0.53 | 0 | -3503 | 26759 | 0 | 0 | No, e>t/2 |

Verifica dei meccanismi locali di collasso con analisi cinematica lineare

forza di aggancio al piano = 0 quota mezzeria = 1406 Wa = 0.03 Ta = 0.1191

| Comb. | N top | N base | V orto | α0 | M* | e* | a0* | aLim | Verifica |
|---|---|---|---|---|---|---|---|---|---|
| SLV 8 | -539 | -5885 | -2 | 0.038 | 3.785 | 0.918 | 60.492 | 2129.268 | No |
| SLV 7 | -539 | -5885 | -2 | 0.038 | 3.785 | 0.918 | 60.492 | 2129.268 | No |
| SLV 11 | -576 | -6341 | 0 | 0.039 | 3.809 | 0.915 | 61.438 | 2129.268 | No |
| SLV 12 | -576 | -6341 | 0 | 0.039 | 3.809 | 0.915 | 61.438 | 2129.268 | No |
| SLV 10 | -329 | -6835 | 1 | 0.04 | 3.667 | 0.938 | 62.185 | 2129.268 | No |
| SLV 9 | -329 | -6835 | 1 | 0.04 | 3.667 | 0.938 | 62.185 | 2129.268 | No |
| SLV 5 | -291 | -6380 | 0 | 0.041 | 3.65 | 0.942 | 63.228 | 2129.268 | No |
| SLV 6 | -291 | -6380 | 0 | 0.041 | 3.65 | 0.942 | 63.228 | 2129.268 | No |
| SLV 3 | -409 | -5527 | -3 | 0.039 | 3.708 | 0.929 | 60.257 | 1854.855 | No |
| SLV 4 | -409 | -5527 | -3 | 0.039 | 3.708 | 0.929 | 60.257 | 1854.855 | No |

### Tabella dei coefficienti di sicurezza minimi

| Stato limite | Coeff.s. | Comb. | Verifica |
|---|---|---|---|
| PF_SLU | 1.666 | SLU 30 | Si |
| V_SLU | 1.241 | SLU 30 | Si |
| PF_SLV | 0 | SLD 7 | No |
| V_SLV | 0 | SLD 7 | No |
| PFFP_SLV | 0 | SLV 1 | No |
| R_SLV | 0.028 | SLV 7 | No |

## Maschio 209

Verifiche condotte secondo D.M. 17-01-18 (N.T.C.)

### Dati geometrici

| X ini. | Y ini. | X fin. | Y fin. | Quota i. | Quota.s | l | Sp. | h netta | h ini. | h fin. | a | a.s.,sx | a.s.,dx |
|---|---|---|---|---|---|---|---|---|---|---|---|---|---|
| -515.8 | 104.6 | -515.8 | 581.1 | L6 | L7 | 476.5 | 14 | 316 | 316 | 316 | | | |

### Caratteristiche del materiale

(Circolare 7 21-01-19 C8.5.I) Muratura in mattoni pieni e malta di calce LC2_Corti

| fb | fk | fvk0 | fmedio | τ0 | fv0 | μ | ϕ | fv,lim | E | G | FC |
|---|---|---|---|---|---|---|---|---|---|---|---|
| 60 | | | 34.5 | 0.9 | 2 | 0.58 | 0.77 | 3.25 | 32000 | 12800 | 1.2 |

### Verifica a pressoflessione nel piano secondo D.M. 17-01-18 NTC §7.8.2.2.1 in combinazioni non sismiche, γM = 3

| Comb. | Quota | N | M | σ0 | Mu | c.s. | Verifica |
|---|---|---|---|---|---|---|---|
| SLU 72 | 1248 | -17988 | 678312 | 2.7 | 2866967 | 4.227 | Si |
| SLU 72 | 1564 | -5178 | 908552 | 0.78 | 1116038 | 1.228 | Si |
| SLU 37 | 1248 | -16779 | 709554 | 2.52 | 2763262 | 3.894 | Si |
| SLU 37 | 1564 | -4991 | 882557 | 0.75 | 1079903 | 1.224 | Si |
| SLU 30 | 1248 | -16331 | 717534 | 2.45 | 2721528 | 3.793 | Si |
| SLU 30 | 1564 | -5053 | 893832 | 0.76 | 1091958 | 1.222 | Si |
| SLU 80 | 1248 | -18469 | 651191 | 2.77 | 2904703 | 4.461 | Si |
| SLU 80 | 1564 | -5134 | 900416 | 0.77 | 1107652 | 1.23 | Si |
| SLU 9 | 1248 | -14344 | 608108 | 2.15 | 2515321 | 4.136 | Si |
| SLU 9 | 1564 | -4386 | 776669 | 0.66 | 960559 | 1.237 | Si |
| SLU 8 | 1248 | -14311 | 627249 | 2.15 | 2511614 | 4.004 | Si |
| SLU 8 | 1564 | -4367 | 773530 | 0.65 | 956835 | 1.237 | Si |
| SLU 29 | 1248 | -16298 | 736675 | 2.44 | 2718395 | 3.69 | Si |
| SLU 29 | 1564 | -5035 | 890693 | 0.75 | 1088343 | 1.222 | Si |
| SLU 71 | 1248 | -17955 | 697454 | 2.69 | 2864312 | 4.107 | Si |
| SLU 71 | 1564 | -5159 | 905413 | 0.77 | 1112443 | 1.229 | Si |
| SLU 38 | 1248 | -16812 | 690412 | 2.52 | 2766256 | 4.007 | Si |
| SLU 38 | 1564 | -5010 | 885696 | 0.75 | 1083525 | 1.223 | Si |
| SLU 79 | 1248 | -18436 | 670332 | 2.76 | 2902188 | 4.329 | Si |
| SLU 79 | 1564 | -5116 | 897277 | 0.77 | 1104050 | 1.23 | Si |

### Verifica a pressoflessione nel piano secondo D.M. 17-01-18 NTC §7.8.2.2.1 in combinazioni sismiche, γM = 2

| Comb. | Quota | N | M | σ0 | Mu | c.s. | Verifica |
|---|---|---|---|---|---|---|---|
| SLV 16 | 1248 | -9428 | 64261 | 1.41 | 1986326 | 30.91 | Si |
| SLV 16 | 1564 | -341 | -138639 | 0 | 0 | 0 | No, e>l/2 |
| SLV 6 | 1248 | -6749 | -169583 | 1.01 | 1474753 | 8.696 | Si |
| SLV 6 | 1564 | -2229 | 687605 | 0 | 0 | 0 | No, e>l/2 |
| SLV 12 | 1248 | -10249 | 205255 | 1.54 | 2134856 | 10.401 | Si |
| SLV 12 | 1564 | -483 | -259372 | 0 | 0 | 0 | No, e>l/2 |
| SLD 5 | 1248 | -7764 | -60279 | 1.16 | 1673500 | 27.762 | Si |
| SLD 5 | 1564 | -1714 | 412414 | 0 | 0 | 0 | No, e>l/2 |
| SLV 10 | 1248 | -7015 | -176045 | 1.05 | 1527425 | 8.676 | Si |
| SLV 10 | 1564 | -1732 | 548676 | 0 | 0 | 0 | No, e>l/2 |
| SLV 9 | 1248 | -7015 | -176045 | 1.05 | 1527425 | 8.676 | Si |
| SLV 9 | 1564 | -1732 | 548676 | 0 | 0 | 0 | No, e>l/2 |
| SLV 11 | 1248 | -10249 | 205255 | 1.54 | 2134856 | 10.401 | Si |
| SLV 11 | 1564 | -483 | -259372 | 0 | 0 | 0 | No, e>l/2 |
| SLD 6 | 1248 | -7764 | -60279 | 1.16 | 1673500 | 27.762 | Si |
| SLD 6 | 1564 | -1714 | 412414 | 0 | 0 | 0 | No, e>l/2 |
| SLV 5 | 1248 | -6749 | -169583 | 1.01 | 1474753 | 8.696 | Si |
| SLV 5 | 1564 | -2229 | 687605 | 0 | 0 | 0 | No, e>l/2 |
| SLV 2 | 1248 | -7571 | -28588 | 1.13 | 1636153 | 57.232 | Si |
| SLV 2 | 1564 | -2371 | 566872 | 0 | 0 | 0 | No, e>l/2 |

### Verifica a taglio nel piano secondo D.M. 17-01-18 (N.T.C.) §7.8.2.2.2 con rottura per scorrimento in combinazioni non sismiche, γM = 3

| Comb. | Quota | N | V par | M | σ0 | σN | l' | fvd | Vt scorr. | Vt fess.diag. | Vt,lim | c.s. | Verifica |
|---|---|---|---|---|---|---|---|---|---|---|---|---|---|
| SLU 37 | 1248 | -16779 | 1106 | 709554 | | 2.52 | 476.5 | 0.89 | 5943 | | | 5.37 | Si |
| SLU 37 | 1564 | -4991 | 1775 | 882557 | | 1.93 | 184.27 | 0.81 | 2099 | | | 1.18 | Si |
| SLU 29 | 1248 | -16298 | 1056 | 736675 | | 2.44 | 476.5 | 0.88 | 5879 | | | 5.57 | Si |
| SLU 29 | 1564 | -5035 | 1656 | 890693 | | 1.95 | 184 | 0.82 | 2102 | | | 1.27 | Si |
| SLU 36 | 1248 | -16560 | 928 | 607908 | | 2.48 | 476.5 | 0.89 | 5914 | | | 6.37 | Si |
| SLU 36 | 1564 | -4776 | 1656 | 829733 | | 1.76 | 193.55 | 0.79 | 2142 | | | 1.29 | Si |
| SLU 71 | 1248 | -17955 | 893 | 697454 | | 2.69 | 476.5 | 0.91 | 6100 | | | 6.83 | Si |
| SLU 71 | 1564 | -5159 | 1612 | 905413 | | 1.96 | 188.25 | 0.82 | 2152 | | | 1.33 | Si |
| SLU 38 | 1248 | -16812 | 990 | 690412 | | 2.52 | 476.5 | 0.89 | 5948 | | | 6.01 | Si |
| SLU 38 | 1564 | -5010 | 1715 | 885696 | | 1.94 | 184.36 | 0.81 | 2102 | | | 1.23 | Si |
| SLU 79 | 1248 | -18436 | 943 | 670332 | | 2.76 | 476.5 | 0.92 | 6164 | | | 6.54 | Si |
| SLU 79 | 1564 | -5116 | 1731 | 897277 | | 1.94 | 188.55 | 0.81 | 2149 | | | 1.24 | Si |
| SLU 30 | 1248 | -16331 | 940 | 717534 | | 2.45 | 476.5 | 0.88 | 5884 | | | 6.26 | Si |
| SLU 30 | 1564 | -5053 | 1597 | 893832 | | 1.96 | 184.09 | 0.82 | 2106 | | | 1.32 | Si |
| SLU 77 | 1248 | -18184 | 881 | 587829 | | 2.73 | 476.5 | 0.92 | 6131 | | | 6.96 | Si |

| Comb. | Quota | N | V par | M | σ0 | σN | l' | fvd | Vt scorr. | Vt fess.diag. | Vt,lim | c.s. | Verifica |
|---|---|---|---|---|---|---|---|---|---|---|---|---|---|
| SLU 77 | 1564 | -4882 | 1671 | 841314 | | 1.76 | 197.74 | 0.79 | 2189 | | | 1.31 | Si |
| SLU 80 | 1248 | -18469 | 826 | 651191 | | 2.77 | 476.5 | 0.92 | 6169 | | | 7.47 | Si |
| SLU 80 | 1564 | -5134 | 1671 | 900416 | | 1.94 | 188.62 | 0.81 | 2152 | | | 1.29 | Si |
| SLU 35 | 1248 | -16527 | 1045 | 627050 | | 2.48 | 476.5 | 0.89 | 5910 | | | 5.66 | Si |
| SLU 35 | 1564 | -4757 | 1715 | 826594 | | 1.76 | 193.49 | 0.79 | 2139 | | | 1.25 | Si |

### Verifica a taglio nel piano secondo D.M. 17-01-18 (N.T.C.) §7.8.2.2.2 con rottura per scorrimento in combinazioni sismiche, γM = 2

| Comb. | Quota | N | V par | M | σ0 | σN | l' | fvd | Vt scorr. | Vt fess.diag. | Vt,lim | c.s. | Verifica |
|---|---|---|---|---|---|---|---|---|---|---|---|---|---|
| SLV 5 | 1248 | -6749 | -7198 | -169583 | | 1.01 | 476.5 | 1.04 | 6909 | | | 0.96 | No, Vu<V |
| SLV 5 | 1564 | -2229 | -2933 | 687605 | | 0 | 0 | 0.83 | 0 | | | 0 | No, Vu<V |
| SLV 12 | 1248 | -10249 | 6873 | 205255 | | 1.54 | 476.5 | 1.14 | 7609 | | | 1.11 | Si |
| SLV 12 | 1564 | -483 | 3643 | -259372 | | 0 | 0 | 0.83 | 0 | | | 0 | No, Vu<V |
| SLV 16 | 1248 | -9428 | 4134 | 64261 | | 1.41 | 476.5 | 1.12 | 7445 | | | 1.8 | Si |
| SLV 16 | 1564 | -341 | 2829 | -138639 | | 0 | 0 | 0.83 | 0 | | | 0 | No, Vu<V |
| SLV 10 | 1248 | -7015 | -5757 | -176045 | | 1.05 | 476.5 | 1.04 | 6962 | | | 1.21 | Si |
| SLV 10 | 1564 | -1732 | -1952 | 548676 | | 0 | 0 | 0.83 | 0 | | | 0 | No, Vu<V |
| SLV 6 | 1248 | -6749 | -7198 | -169583 | | 1.01 | 476.5 | 1.04 | 6909 | | | 0.96 | No, Vu<V |
| SLV 6 | 1564 | -2229 | -2933 | 687605 | | 0 | 0 | 0.83 | 0 | | | 0 | No, Vu<V |
| SLD 6 | 1248 | -7764 | -3150 | -60279 | | 1.16 | 476.5 | 1.07 | 7112 | | | 2.26 | Si |
| SLD 6 | 1564 | -1714 | -1037 | 412414 | | 0 | 0 | 0.83 | 0 | | | 0 | No, Vu<V |
| SLD 5 | 1248 | -7764 | -3150 | -60279 | | 1.16 | 476.5 | 1.07 | 7112 | | | 2.26 | Si |
| SLD 5 | 1564 | -1714 | -1037 | 412414 | | 0 | 0 | 0.83 | 0 | | | 0 | No, Vu<V |
| SLV 9 | 1248 | -7015 | -5757 | -176045 | | 1.05 | 476.5 | 1.04 | 6962 | | | 1.21 | Si |
| SLV 9 | 1564 | -1732 | -1952 | 548676 | | 0 | 0 | 0.83 | 0 | | | 0 | No, Vu<V |
| SLV 2 | 1248 | -7571 | -4460 | -28588 | | 1.13 | 476.5 | 1.06 | 7073 | | | 1.59 | Si |
| SLV 2 | 1564 | -2371 | -2119 | 566872 | | 0 | 0 | 0.83 | 0 | | | 0 | No, Vu<V |
| SLV 11 | 1248 | -10249 | 6873 | 205255 | | 1.54 | 476.5 | 1.14 | 7609 | | | 1.11 | Si |
| SLV 11 | 1564 | -483 | 3643 | -259372 | | 0 | 0 | 0.83 | 0 | | | 0 | No, Vu<V |

### Verifica a pressoflessione fuori piano D.M. 17-01-18 (N.T.C.)

quota 1406 Wa 0.03 denominatore 8 γM = 2

| Comb. | fd | Sa | σ0 | N | M | Mc | Coeff.s. | Verifica |
|---|---|---|---|---|---|---|---|---|
| SLV 9 | 14 | 0.53 | 0 | -4116 | 28946 | 0 | 0 | No, e>t/2 |
| SLV 14 | 14 | 0.53 | 0 | -3907 | 28946 | 0 | 0 | No, e>t/2 |
| SLV 10 | 14 | 0.53 | 0 | -4116 | 28946 | 0 | 0 | No, e>t/2 |
| SLV 13 | 14 | 0.53 | 0 | -3907 | 28946 | 0 | 0 | No, e>t/2 |
| SLV 16 | 14 | 0.53 | 0.63 | -4181 | 28946 | 27768 | 0.96 | No, M>Mu |
| SLV 15 | 14 | 0.53 | 0.63 | -4181 | 28946 | 27768 | 0.96 | No, M>Mu |
| SLV 5 | 14 | 0.53 | 0.68 | -4570 | 28946 | 30194 | 1.04 | Si |
| SLV 6 | 14 | 0.53 | 0.68 | -4570 | 28946 | 30194 | 1.04 | Si |
| SLV 11 | 14 | 0.53 | 0.75 | -5030 | 28946 | 33035 | 1.14 | Si |
| SLV 12 | 14 | 0.53 | 0.75 | -5030 | 28946 | 33035 | 1.14 | Si |

### Verifica dei meccanismi locali di collasso con analisi cinematica lineare

forza di aggancio al piano = 0 quota mezzeria = 1406 Wa = 0.03 Ta = 0.1191

| Comb. | N top | N base | V orto | α0 | M* | e* | a0* | aLim | Verifica |
|---|---|---|---|---|---|---|---|---|---|
| SLV 5 | -2229 | -6749 | -14 | 0.029 | 5.462 | 0.89 | 47.136 | 2129.268 | No |
| SLV 6 | -2229 | -6749 | -14 | 0.029 | 5.462 | 0.89 | 47.136 | 2129.268 | No |
| SLV 10 | -1732 | -7015 | -17 | 0.029 | 5.009 | 0.889 | 47.704 | 2129.268 | No |
| SLV 9 | -1732 | -7015 | -17 | 0.029 | 5.009 | 0.889 | 47.704 | 2129.268 | No |
| SLV 8 | -980 | -9983 | 16 | 0.031 | 4.376 | 0.899 | 50.203 | 2129.268 | No |
| SLV 7 | -980 | -9983 | 16 | 0.031 | 4.376 | 0.899 | 50.203 | 2129.268 | No |
| SLV 12 | -483 | -10249 | 14 | 0.034 | 4.034 | 0.925 | 53.101 | 2129.268 | No |
| SLV 11 | -483 | -10249 | 14 | 0.034 | 4.034 | 0.925 | 53.101 | 2129.268 | No |
| SLV 4 | -1996 | -8541 | 8 | 0.031 | 5.248 | 0.889 | 50.462 | 1854.855 | No |
| SLV 3 | -1996 | -8541 | 8 | 0.031 | 5.248 | 0.889 | 50.462 | 1854.855 | No |

### Tabella dei coefficienti di sicurezza minimi

| Stato limite | Coeff.s. | Comb. | Verifica |
|---|---|---|---|
| PF_SLU | 1.222 | SLU 30 | Si |
| V_SLU | 1.182 | SLU 37 | Si |
| PF_SLV | 0 | SLD 5 | No |
| V_SLV | 0 | SLD 5 | No |
| PFFP_SLV | 0 | SLV 9 | No |
| R_SLV | 0.022 | SLV 5 | No |

## Maschio 210

Verifiche condotte secondo D.M. 17-01-18 (N.T.C.)

### Dati geometrici

| X ini. | Y ini. | X fin. | Y fin. | Quota i. | Quota.s | l | Sp. | h netta | h ini. | h fin. | a | a.s.,sx | a.s.,dx |
|---|---|---|---|---|---|---|---|---|---|---|---|---|---|
| -515.8 | 581.1 | -515.8 | 600.6 | L6 | L7 | 19.5 | 28 | 316 | 316 | 316 | | | |

### Caratteristiche del materiale

(Circolare 7 21-01-19 C8.5.I) Muratura in mattoni pieni e malta di calce LC2_Corti

| fb | fk | fvk0 | fmedio | τ0 | fv0 | μ | ϕ | fv,lim | E | G | FC |
|---|---|---|---|---|---|---|---|---|---|---|---|
| 60 | | | 34.5 | 0.9 | 2 | 0.58 | 0.77 | 3.25 | 32000 | 12800 | 1.2 |

### Verifica a pressoflessione nel piano secondo D.M. 17-01-18 NTC §7.8.2.2.1 in combinazioni non sismiche, γM = 3

| Comb. | Quota | N | M | σ0 | Mu | c.s. | Verifica |
|---|---|---|---|---|---|---|---|
| SLU 48 | 1448 | -5355 | -4574 | 9.81 | 0 | 0 | No, Rottura per schiacciamento |

| Comb. | Quota | N | M | σ0 | Mu | c.s. | Verifica |
|---|---|---|---|---|---|---|---|
| SLU 48 | 1528 | -6673 | 31166 | 12.22 | 0 | 0 | No, Rottura per schiacciamento |
| SLU 41 | 1448 | -4552 | -3419 | 8.34 | 0 | 0 | No, Rottura per schiacciamento |
| SLU 41 | 1528 | -5777 | 29423 | 10.58 | 0 | 0 | No, Rottura per schiacciamento |
| SLU 49 | 1448 | -5319 | -4723 | 9.74 | 0 | 0 | No, Rottura per schiacciamento |
| SLU 49 | 1528 | -6653 | 31397 | 12.18 | 0 | 0 | No, Rottura per schiacciamento |
| SLU 83 | 1448 | -4664 | -3621 | 8.54 | 0 | 0 | No, Rottura per schiacciamento |
| SLU 83 | 1528 | -5939 | 30972 | 10.88 | 0 | 0 | No, Rottura per schiacciamento |
| SLU 38 | 1448 | -6533 | -5299 | 11.97 | 0 | 0 | No, Rottura per schiacciamento |
| SLU 38 | 1528 | -8181 | 38419 | 14.98 | 0 | 0 | No, Rottura per schiacciamento |
| SLU 50 | 1448 | -5660 | -4900 | 10.37 | 0 | 0 | No, Rottura per schiacciamento |
| SLU 50 | 1528 | -7031 | 32254 | 12.88 | 0 | 0 | No, Rottura per schiacciamento |
| SLU 37 | 1448 | -6569 | -5150 | 12.03 | 0 | 0 | No, Rottura per schiacciamento |
| SLU 37 | 1528 | -8202 | 38188 | 15.02 | 0 | 0 | No, Rottura per schiacciamento |
| SLU 47 | 1448 | -3548 | -3482 | 6.5 | 7000 | 2.011 | Si |
| SLU 47 | 1528 | -4506 | 23062 | 8.25 | 0 | 0 | No, Rottura per schiacciamento |
| SLU 42 | 1448 | -4516 | -3568 | 8.27 | 0 | 0 | No, Rottura per schiacciamento |
| SLU 42 | 1528 | -5757 | 29654 | 10.54 | 0 | 0 | No, Rottura per schiacciamento |
| SLU 51 | 1448 | -5624 | -5049 | 10.3 | 0 | 0 | No, Rottura per schiacciamento |
| SLU 51 | 1528 | -7011 | 32485 | 12.84 | 0 | 0 | No, Rottura per schiacciamento |

Verifica a pressoflessione nel piano secondo D.M. 17-01-18 NTC §7.8.2.2.1 in combinazioni sismiche, γM = 2

| Comb. | Quota | N | M | σ0 | Mu | c.s. | Verifica |
|---|---|---|---|---|---|---|---|
| SLV 15 | 1448 | -2226 | 87 | 4.08 | 14463 | 166.308 | Si |
| SLV 15 | 1528 | -2993 | 28221 | 5.48 | 16090 | 0.57 | No, M>Mu |
| SLD 13 | 1448 | -1808 | -557 | 3.31 | 12849 | 23.08 | Si |
| SLD 13 | 1528 | -2319 | 17916 | 4.25 | 14750 | 0.823 | No, M>Mu |
| SLD 15 | 1448 | -1935 | -852 | 3.54 | 13393 | 15.728 | Si |
| SLD 15 | 1528 | -2566 | 19874 | 4.7 | 15397 | 0.775 | No, M>Mu |
| SLV 14 | 1448 | -1904 | 814 | 3.49 | 13265 | 16.295 | Si |
| SLV 14 | 1528 | -2384 | 23611 | 0 | 0 | 0 | No, e>l/2 |
| SLV 11 | 1448 | -2372 | -2122 | 4.34 | 14903 | 7.023 | Si |
| SLV 11 | 1528 | -3409 | 25041 | 6.24 | 16254 | 0.649 | No, M>Mu |
| SLD 14 | 1448 | -1808 | -557 | 3.31 | 12849 | 23.08 | Si |
| SLD 14 | 1528 | -2319 | 17916 | 4.25 | 14750 | 0.823 | No, M>Mu |
| SLV 13 | 1448 | -1904 | 814 | 3.49 | 13265 | 16.295 | Si |
| SLV 13 | 1528 | -2384 | 23611 | 0 | 0 | 0 | No, e>l/2 |
| SLD 16 | 1448 | -1935 | -852 | 3.54 | 13393 | 15.728 | Si |
| SLD 16 | 1528 | -2566 | 19874 | 4.7 | 15397 | 0.775 | No, M>Mu |
| SLV 12 | 1448 | -2372 | -2122 | 4.34 | 14903 | 7.023 | Si |
| SLV 12 | 1528 | -3409 | 25041 | 6.24 | 16254 | 0.649 | No, M>Mu |
| SLV 16 | 1448 | -2226 | 87 | 4.08 | 14463 | 166.308 | Si |
| SLV 16 | 1528 | -2993 | 28221 | 5.48 | 16090 | 0.57 | No, M>Mu |

Verifica a taglio nel piano secondo D.M. 17-01-18 (N.T.C.) §7.8.2.2.2 con rottura per scorrimento in combinazioni non sismiche, γM = 3

| Comb. | Quota | N | V par | M | σ0 | σN | l' | fvd | Vt scorr. | Vt fess.diag. | Vt,lim | c.s. | Verifica |
|---|---|---|---|---|---|---|---|---|---|---|---|---|---|
| SLU 77 | 1448 | -6375 | -325 | -5027 | | 11.68 | 19.5 | 1.08 | 591 | | | 1.82 | Si |
| SLU 77 | 1528 | -8006 | -1217 | 38649 | | 19.36 | 14.77 | 1.08 | 448 | | | 0.37 | No, Vu<V |
| SLU 38 | 1448 | -6533 | -345 | -5299 | | 11.97 | 19.5 | 1.08 | 591 | | | 1.72 | Si |
| SLU 38 | 1528 | -8181 | -1198 | 38419 | | 19.27 | 15.16 | 1.08 | 460 | | | 0.38 | No, Vu<V |
| SLU 72 | 1448 | -6562 | -358 | -5652 | | 12.02 | 19.5 | 1.08 | 591 | | | 1.65 | Si |
| SLU 72 | 1528 | -8189 | -1186 | 38073 | | 19.11 | 15.3 | 1.08 | 464 | | | 0.39 | No, Vu<V |
| SLU 70 | 1448 | -6256 | -337 | -5326 | | 11.46 | 19.5 | 1.08 | 591 | | | 1.76 | Si |
| SLU 70 | 1528 | -7831 | -1158 | 36986 | | 18.54 | 15.08 | 1.08 | 457 | | | 0.4 | No, Vu<V |
| SLU 79 | 1448 | -6681 | -347 | -5353 | | 12.24 | 19.5 | 1.08 | 591 | | | 1.71 | Si |
| SLU 79 | 1528 | -8364 | -1245 | 39737 | | 19.92 | 15 | 1.08 | 455 | | | 0.37 | No, Vu<V |
| SLU 80 | 1448 | -6645 | -350 | -5502 | | 12.17 | 19.5 | 1.08 | 591 | | | 1.69 | Si |
| SLU 80 | 1528 | -8344 | -1256 | 39968 | | 20.03 | 14.88 | 1.08 | 451 | | | 0.36 | No, Vu<V |
| SLU 78 | 1448 | -6339 | -328 | -5176 | | 11.61 | 19.5 | 1.08 | 591 | | | 1.8 | Si |
| SLU 78 | 1528 | -7985 | -1228 | 38880 | | 19.48 | 14.64 | 1.08 | 444 | | | 0.36 | No, Vu<V |
| SLU 36 | 1448 | -6228 | -323 | -4973 | | 11.41 | 19.5 | 1.08 | 591 | | | 1.83 | Si |
| SLU 36 | 1528 | -7823 | -1170 | 37331 | | 18.71 | 14.93 | 1.08 | 453 | | | 0.39 | No, Vu<V |
| SLU 37 | 1448 | -6569 | -342 | -5150 | | 12.03 | 19.5 | 1.08 | 591 | | | 1.73 | Si |
| SLU 37 | 1528 | -8202 | -1187 | 38188 | | 19.17 | 15.28 | 1.08 | 464 | | | 0.39 | No, Vu<V |
| SLU 35 | 1448 | -6264 | -320 | -4824 | | 11.47 | 19.5 | 1.08 | 591 | | | 1.85 | Si |
| SLU 35 | 1528 | -7844 | -1159 | 37100 | | 18.6 | 15.06 | 1.08 | 457 | | | 0.39 | No, Vu<V |

Verifica a taglio nel piano secondo D.M. 17-01-18 (N.T.C.) §7.8.2.2.2 con rottura per scorrimento in combinazioni sismiche, γM = 2

| Comb. | Quota | N | V par | M | σ0 | σN | l' | fvd | Vt scorr. | Vt fess.diag. | Vt,lim | c.s. | Verifica |
|---|---|---|---|---|---|---|---|---|---|---|---|---|---|
| SLV 12 | 1448 | -2372 | -105 | -2122 | | 4.34 | 19.5 | 1.63 | 887 | | | 8.48 | Si |
| SLV 12 | 1528 | -3409 | -845 | 25041 | | 16.88 | 7.21 | 1.63 | 328 | | | 0.39 | No, Vu<V |
| SLV 16 | 1448 | -2226 | -57 | 87 | | 4.08 | 19.5 | 1.63 | 887 | | | 15.68 | Si |

| Comb. | Quota | N | V par | M | σ0 | σN | l' | fvd | Vt scorr. | Vt fess.diag. | Vt,lim | c.s. | Verifica |
|---|---|---|---|---|---|---|---|---|---|---|---|---|---|
| SLV 16 | 1528 | -2993 | -819 | 28221 | | 110.83 | 0.96 | 1.63 | 44 | | | 0.05 | No, Vu<V |
| SLV 15 | 1448 | -2226 | -57 | 87 | | 4.08 | 19.5 | 1.63 | 887 | | | 15.68 | Si |
| SLV 15 | 1528 | -2993 | -819 | 28221 | | 110.83 | 0.96 | 1.63 | 44 | | | 0.05 | No, Vu<V |
| SLV 14 | 1448 | -1904 | -35 | 814 | | 3.49 | 19.5 | 1.53 | 836 | | | 24.17 | Si |
| SLV 14 | 1528 | -2384 | -636 | 23611 | | 0 | 0 | 0.83 | 0 | | | 0 | No, Vu<V |
| SLD 13 | 1448 | -1808 | -60 | -557 | | 3.31 | 19.5 | 1.5 | 817 | | | 13.52 | Si |
| SLD 13 | 1528 | -2319 | -537 | 17916 | | 13.65 | 6.07 | 1.63 | 276 | | | 0.51 | No, Vu<V |
| SLD 16 | 1448 | -1935 | -68 | -852 | | 3.54 | 19.5 | 1.54 | 842 | | | 12.33 | Si |
| SLD 16 | 1528 | -2566 | -613 | 19874 | | 15.23 | 6.02 | 1.63 | 274 | | | 0.45 | No, Vu<V |
| SLD 14 | 1448 | -1808 | -60 | -557 | | 3.31 | 19.5 | 1.5 | 817 | | | 13.52 | Si |
| SLD 14 | 1528 | -2319 | -537 | 17916 | | 13.65 | 6.07 | 1.63 | 276 | | | 0.51 | No, Vu<V |
| SLD 15 | 1448 | -1935 | -68 | -852 | | 3.54 | 19.5 | 1.54 | 842 | | | 12.33 | Si |
| SLD 15 | 1528 | -2566 | -613 | 19874 | | 15.23 | 6.02 | 1.63 | 274 | | | 0.45 | No, Vu<V |
| SLV 13 | 1448 | -1904 | -35 | 814 | | 3.49 | 19.5 | 1.53 | 836 | | | 24.17 | Si |
| SLV 13 | 1528 | -2384 | -636 | 23611 | | 0 | 0 | 0.83 | 0 | | | 0 | No, Vu<V |
| SLV 11 | 1448 | -2372 | -105 | -2122 | | 4.34 | 19.5 | 1.63 | 887 | | | 8.48 | Si |
| SLV 11 | 1528 | -3409 | -845 | 25041 | | 16.88 | 7.21 | 1.63 | 328 | | | 0.39 | No, Vu<V |

### Verifica a pressoflessione fuori piano D.M. 17-01-18 (N.T.C.)

quota 1406 Wa 0.05 denominatore 8 γM = 2

| Comb. | fd | Sa | σ0 | N | M | Mc | Coeff.s. | Verifica |
|---|---|---|---|---|---|---|---|---|
| SLV 6 | 14 | 0.53 | 0.84 | -459 | 2266 | 5980 | 2.64 | Si |
| SLV 5 | 14 | 0.53 | 0.84 | -459 | 2266 | 5980 | 2.64 | Si |
| SLV 1 | 14 | 0.53 | 0.93 | -507 | 2266 | 6554 | 2.89 | Si |
| SLV 2 | 14 | 0.53 | 0.93 | -507 | 2266 | 6554 | 2.89 | Si |
| SLV 9 | 14 | 0.53 | 0.97 | -528 | 2266 | 6810 | 3 | Si |
| SLV 10 | 14 | 0.53 | 0.97 | -528 | 2266 | 6810 | 3 | Si |
| SLV 3 | 14 | 0.53 | 1.13 | -617 | 2266 | 7843 | 3.46 | Si |
| SLV 4 | 14 | 0.53 | 1.13 | -617 | 2266 | 7843 | 3.46 | Si |
| SLV 13 | 14 | 0.53 | 1.35 | -739 | 2266 | 9195 | 4.06 | Si |
| SLV 14 | 14 | 0.53 | 1.35 | -739 | 2266 | 9195 | 4.06 | Si |

### Verifica dei meccanismi locali di collasso con analisi cinematica lineare

forza di aggancio al piano = 0 quota mezzeria = 1406 Wa = 0.05 Ta = 0.0596

| Comb. | N top | N base | V orto | α0 | M* | e* | a0* | aLim | Verifica |
|---|---|---|---|---|---|---|---|---|---|
| SLV 7 | -514 | -879 | -45 | 0 | 0.771 | 0.918 | 0 | 1505.645 | No |
| SLV 9 | -913 | -482 | 124 | 0 | 1.175 | 0.942 | 0 | 1505.645 | No |
| SLV 14 | -1531 | -711 | 214 | 0 | 1.802 | 0.96 | 0 | 879.274 | No |
| SLV 13 | -1531 | -711 | 214 | 0 | 1.802 | 0.96 | 0 | 879.274 | No |
| SLV 3 | 104 | -650 | -135 | 0 | 0 | 0 | 0 | 879.274 | No, Trazione |
| SLV 4 | 104 | -650 | -135 | 0 | 0 | 0 | 0 | 879.274 | No, Trazione |
| SLV 8 | -514 | -879 | -45 | 0 | 0.771 | 0.918 | 0 | 1505.645 | No |
| SLV 10 | -913 | -482 | 124 | 0 | 1.175 | 0.942 | 0 | 1505.645 | No |
| SLV 1 | 134 | -514 | -114 | 0 | 0 | 0 | 0 | 879.274 | No, Trazione |
| SLV 2 | 134 | -514 | -114 | 0 | 0 | 0 | 0 | 879.274 | No, Trazione |

### Tabella dei coefficienti di sicurezza minimi

| Stato limite | Coeff.s. | Comb. | Verifica |
|---|---|---|---|
| PF_SLU | 0 | SLU 6 | No |
| V_SLU | 0.359 | SLU 80 | No |
| PF_SLV | 0 | SLV 13 | No |
| V_SLV | 0 | SLV 13 | No |
| PFFP_SLV | 2.639 | SLV 5 | Si |
| R_SLV | 0 | SLV 4 | No |

## Maschio 211

Verifiche condotte secondo D.M. 17-01-18 (N.T.C.)

### Dati geometrici

| X ini. | Y ini. | X fin. | Y fin. | Quota i. | Quota.s | l | Sp. | h netta | h ini. | h fin. | a | a.s.,sx | a.s.,dx |
|---|---|---|---|---|---|---|---|---|---|---|---|---|---|
| -515.8 | 650.6 | -515.8 | 652.1 | L6 | L7 | 1.5 | 28 | 316 | 316 | 316 | | | |

### Caratteristiche del materiale

(Circolare 7 21-01-19 C8.5.I) Muratura in mattoni pieni e malta di calce LC2_Corti

| fb | fk | fvk0 | fmedio | τ0 | fv0 | μ | ϕ | fv,lim | E | G | FC |
|---|---|---|---|---|---|---|---|---|---|---|---|
| 60 | | | 34.5 | 0.9 | 2 | 0.58 | 0.77 | 3.25 | 32000 | 12800 | 1.2 |

### Verifica a pressoflessione nel piano secondo D.M. 17-01-18 NTC §7.8.2.2.1 in combinazioni non sismiche, γM = 3

| Comb. | Quota | N | M | σ0 | Mu | c.s. | Verifica |
|---|---|---|---|---|---|---|---|
| SLU 60 | 1448 | -637 | -16 | 15.17 | 0 | 0 | No, Rottura per schiacciamento |
| SLU 60 | 1528 | -629 | 22 | 14.98 | 0 | 0 | No, Rottura per schiacciamento |
| SLU 58 | 1448 | -1620 | -55 | 38.56 | 0 | 0 | No, Rottura per schiacciamento |
| SLU 58 | 1528 | -1612 | 78 | 38.37 | 0 | 0 | No, Rottura per schiacciamento |
| SLU 57 | 1448 | -1558 | -52 | 37.1 | 0 | 0 | No, Rottura per schiacciamento |
| SLU 57 | 1528 | -1550 | 74 | 36.91 | 0 | 0 | No, Rottura per schiacciamento |
| SLU 54 | 1448 | -1050 | -33 | 25.01 | 0 | 0 | No, Rottura per schiacciamento |

| Comb. | Quota | N | M | σ0 | Mu | c.s. | Verifica |
|---|---|---|---|---|---|---|---|
| SLU 54 | 1528 | -1042 | 46 | 24.82 | 0 | 0 | No, Rottura per schiacciamento |
| SLU 55 | 1448 | -1112 | -36 | 26.48 | 0 | 0 | No, Rottura per schiacciamento |
| SLU 55 | 1528 | -1104 | 51 | 26.29 | 0 | 0 | No, Rottura per schiacciamento |
| SLU 61 | 1448 | -637 | -17 | 15.18 | 0 | 0 | No, Rottura per schiacciamento |
| SLU 61 | 1528 | -629 | 22 | 14.99 | 0 | 0 | No, Rottura per schiacciamento |
| SLU 56 | 1448 | -1558 | -52 | 37.1 | 0 | 0 | No, Rottura per schiacciamento |
| SLU 56 | 1528 | -1550 | 73 | 36.91 | 0 | 0 | No, Rottura per schiacciamento |
| SLU 53 | 1448 | -1050 | -32 | 25 | 0 | 0 | No, Rottura per schiacciamento |
| SLU 53 | 1528 | -1042 | 45 | 24.81 | 0 | 0 | No, Rottura per schiacciamento |
| SLU 1 | 1448 | -478 | -14 | 11.38 | 0 | 0 | No, Rottura per schiacciamento |
| SLU 1 | 1528 | -472 | 20 | 11.23 | 0 | 0 | No, Rottura per schiacciamento |
| SLU 59 | 1448 | -1620 | -56 | 38.57 | 0 | 0 | No, Rottura per schiacciamento |
| SLU 59 | 1528 | -1612 | 78 | 38.38 | 0 | 0 | No, Rottura per schiacciamento |

Verifica a pressoflessione nel piano secondo D.M. 17-01-18 NTC §7.8.2.2.1 in combinazioni sismiche, γM = 2

| Comb. | Quota | N | M | σ0 | Mu | c.s. | Verifica |
|---|---|---|---|---|---|---|---|
| SLV 13 | 1448 | -983 | 8 | 23.4 | 0 | 0 | No, Rottura per schiacciamento |
| SLV 13 | 1528 | -954 | 18 | 22.72 | 0 | 0 | No, Rottura per schiacciamento |
| SLV 12 | 1448 | -903 | -55 | 21.51 | 0 | 0 | No, Rottura per schiacciamento |
| SLV 12 | 1528 | -825 | 54 | 19.64 | 0 | 0 | No, Rottura per schiacciamento |
| SLV 10 | 1448 | -531 | 28 | 12.65 | 0 | 0 | No, Rottura per schiacciamento |
| SLV 10 | 1528 | -573 | -5 | 13.65 | 0 | 0 | No, Rottura per schiacciamento |
| SLD 16 | 1448 | -797 | -18 | 18.97 | 0 | 0 | No, Rottura per schiacciamento |
| SLD 16 | 1528 | -767 | 29 | 18.27 | 0 | 0 | No, Rottura per schiacciamento |
| SLV 7 | 1448 | -628 | -62 | 14.96 | 0 | 0 | No, Rottura per schiacciamento |
| SLV 7 | 1528 | -574 | 52 | 13.66 | 0 | 0 | No, Rottura per schiacciamento |
| SLV 8 | 1448 | -628 | -62 | 14.96 | 0 | 0 | No, Rottura per schiacciamento |
| SLV 8 | 1528 | -574 | 52 | 13.66 | 0 | 0 | No, Rottura per schiacciamento |
| SLV 14 | 1448 | -983 | 8 | 23.4 | 0 | 0 | No, Rottura per schiacciamento |
| SLV 14 | 1528 | -954 | 18 | 22.72 | 0 | 0 | No, Rottura per schiacciamento |
| SLV 9 | 1448 | -531 | 28 | 12.65 | 0 | 0 | No, Rottura per schiacciamento |
| SLV 9 | 1528 | -573 | -5 | 13.65 | 0 | 0 | No, Rottura per schiacciamento |
| SLV 11 | 1448 | -903 | -55 | 21.51 | 0 | 0 | No, Rottura per schiacciamento |
| SLV 11 | 1528 | -825 | 54 | 19.64 | 0 | 0 | No, Rottura per schiacciamento |
| SLV 15 | 1448 | -1094 | -17 | 26.05 | 0 | 0 | No, Rottura per schiacciamento |
| SLV 15 | 1528 | -1030 | 36 | 24.52 | 0 | 0 | No, Rottura per schiacciamento |

Verifica a taglio nel piano secondo D.M. 17-01-18 (N.T.C.) §7.8.2.2.2 con rottura per scorrimento in combinazioni non sismiche, γM = 3

| Comb. | Quota | N | V par | M | σ0 | σN | l' | fvd | Vt scorr. | Vt fess.diag. | Vt,lim | c.s. | Verifica |
|---|---|---|---|---|---|---|---|---|---|---|---|---|---|
| SLU 38 | 1448 | -1851 | -2 | -63 | | 44.06 | 1.5 | 1.08 | 46 | | | 23.89 | Si |
| SLU 38 | 1528 | -1844 | -2 | 89 | | 43.91 | 1.5 | 1.08 | 46 | | | 23.89 | Si |
| SLU 29 | 1448 | -1772 | -2 | -62 | | 42.2 | 1.5 | 1.08 | 46 | | | 24.15 | Si |
| SLU 29 | 1528 | -1766 | -2 | 88 | | 42.05 | 1.5 | 1.08 | 46 | | | 24.14 | Si |
| SLU 72 | 1448 | -1820 | -2 | -64 | | 43.35 | 1.5 | 1.08 | 46 | | | 23.59 | Si |
| SLU 72 | 1528 | -1812 | -2 | 90 | | 43.15 | 1.5 | 1.08 | 46 | | | 23.58 | Si |
| SLU 78 | 1448 | -1837 | -2 | -61 | | 43.74 | 1.5 | 1.08 | 46 | | | 24.68 | Si |
| SLU 78 | 1528 | -1829 | -2 | 86 | | 43.55 | 1.5 | 1.08 | 46 | | | 24.68 | Si |
| SLU 71 | 1448 | -1820 | -2 | -64 | | 43.34 | 1.5 | 1.08 | 46 | | | 23.69 | Si |
| SLU 71 | 1528 | -1812 | -2 | 90 | | 43.15 | 1.5 | 1.08 | 46 | | | 23.69 | Si |
| SLU 37 | 1448 | -1851 | -2 | -63 | | 44.06 | 1.5 | 1.08 | 46 | | | 24 | Si |
| SLU 37 | 1528 | -1844 | -2 | 89 | | 43.91 | 1.5 | 1.08 | 46 | | | 23.99 | Si |
| SLU 80 | 1448 | -1899 | -2 | -64 | | 45.2 | 1.5 | 1.08 | 46 | | | 23.45 | Si |
| SLU 80 | 1528 | -1890 | -2 | 91 | | 45.01 | 1.5 | 1.08 | 46 | | | 23.44 | Si |
| SLU 77 | 1448 | -1837 | -2 | -61 | | 43.73 | 1.5 | 1.08 | 46 | | | 24.8 | Si |
| SLU 77 | 1528 | -1829 | -2 | 86 | | 43.54 | 1.5 | 1.08 | 46 | | | 24.8 | Si |
| SLU 79 | 1448 | -1898 | -2 | -64 | | 45.2 | 1.5 | 1.08 | 46 | | | 23.55 | Si |
| SLU 79 | 1528 | -1890 | -2 | 91 | | 45.01 | 1.5 | 1.08 | 46 | | | 23.55 | Si |

| Comb. | Quota | N | V par | M | σ0 | σN | l' | fvd | Vt scorr. | Vt fess.diag. | Vt,lim | c.s. | Verifica |
|---|---|---|---|---|---|---|---|---|---|---|---|---|---|
| SLU 30 | 1448 | -1773 | -2 | -63 | | 42.21 | 1.5 | 1.08 | 46 | | | 24.04 | Si |
| SLU 30 | 1528 | -1766 | -2 | 89 | | 42.06 | 1.5 | 1.08 | 46 | | | 24.03 | Si |

### Verifica a taglio nel piano secondo D.M. 17-01-18 (N.T.C.) §7.8.2.2.2 con rottura per scorrimento in combinazioni sismiche, γM = 2

| Comb. | Quota | N | V par | M | σ0 | σN | l' | fvd | Vt scorr. | Vt fess.diag. | Vt,lim | c.s. | Verifica |
|---|---|---|---|---|---|---|---|---|---|---|---|---|---|
| SLV 15 | 1448 | -1094 | -1 | -17 | | 26.05 | 1.5 | 1.63 | 68 | | | 58.91 | Si |
| SLV 15 | 1528 | -1030 | -1 | 36 | | 24.52 | 1.5 | 1.63 | 68 | | | 101.89 | Si |
| SLV 9 | 1448 | -531 | -1 | 28 | | 12.65 | 1.5 | 1.63 | 68 | | | 65.18 | Si |
| SLV 9 | 1528 | -573 | 0 | -5 | | 13.65 | 1.5 | 1.63 | 68 | | | 918.26 | Si |
| SLV 12 | 1448 | -903 | 0 | -55 | | 21.51 | 1.5 | 1.63 | 68 | | | 165.65 | Si |
| SLV 12 | 1528 | -825 | -1 | 54 | | 19.64 | 1.5 | 1.63 | 68 | | | 71.45 | Si |
| SLV 11 | 1448 | -903 | 0 | -55 | | 21.51 | 1.5 | 1.63 | 68 | | | 165.65 | Si |
| SLV 11 | 1528 | -825 | -1 | 54 | | 19.64 | 1.5 | 1.63 | 68 | | | 71.45 | Si |
| SLV 7 | 1448 | -628 | 0 | -62 | | 14.96 | 1.5 | 1.63 | 68 | | | 1000 | Si |
| SLV 7 | 1528 | -574 | -1 | 52 | | 13.66 | 1.5 | 1.63 | 68 | | | 72.96 | Si |
| SLV 8 | 1448 | -628 | 0 | -62 | | 14.96 | 1.5 | 1.63 | 68 | | | 1000 | Si |
| SLV 8 | 1528 | -574 | -1 | 52 | | 13.66 | 1.5 | 1.63 | 68 | | | 72.96 | Si |
| SLV 10 | 1448 | -531 | -1 | 28 | | 12.65 | 1.5 | 1.63 | 68 | | | 65.18 | Si |
| SLV 10 | 1528 | -573 | 0 | -5 | | 13.65 | 1.5 | 1.63 | 68 | | | 918.26 | Si |
| SLV 13 | 1448 | -983 | -1 | 8 | | 23.4 | 1.5 | 1.63 | 68 | | | 50.59 | Si |
| SLV 13 | 1528 | -954 | 0 | 18 | | 22.72 | 1.5 | 1.63 | 68 | | | 168.27 | Si |
| SLV 14 | 1448 | -983 | -1 | 8 | | 23.4 | 1.5 | 1.63 | 68 | | | 50.59 | Si |
| SLV 14 | 1528 | -954 | 0 | 18 | | 22.72 | 1.5 | 1.63 | 68 | | | 168.27 | Si |
| SLV 16 | 1448 | -1094 | -1 | -17 | | 26.05 | 1.5 | 1.63 | 68 | | | 58.91 | Si |
| SLV 16 | 1528 | -1030 | -1 | 36 | | 24.52 | 1.5 | 1.63 | 68 | | | 101.89 | Si |

### Verifica a pressoflessione fuori piano D.M. 17-01-18 (N.T.C.)

quota 1406 Wa 0.05 denominatore 8 γM = 2

| Comb. | fd | Sa | σ0 | N | M | Mc | Coeff.s. | Verifica |
|---|---|---|---|---|---|---|---|---|
| SLV 1 | 14 | 0.53 | 0 | -4 | 174 | 0 | 0 | No, e>t/2 |
| SLV 6 | 14 | 0.53 | 0 | -7 | 174 | 0 | 0 | No, e>t/2 |
| SLV 5 | 14 | 0.53 | 0 | -7 | 174 | 0 | 0 | No, e>t/2 |
| SLV 2 | 14 | 0.53 | 0 | -4 | 174 | 0 | 0 | No, e>t/2 |
| SLV 3 | 14 | 0.53 | 0.36 | -15 | 174 | 207 | 1.19 | Si |
| SLV 4 | 14 | 0.53 | 0.36 | -15 | 174 | 207 | 1.19 | Si |
| SLV 10 | 14 | 0.53 | 0.51 | -21 | 174 | 286 | 1.64 | Si |
| SLV 9 | 14 | 0.53 | 0.51 | -21 | 174 | 286 | 1.64 | Si |
| SLV 7 | 14 | 0.53 | 1.07 | -45 | 174 | 576 | 3.31 | Si |
| SLV 8 | 14 | 0.53 | 1.07 | -45 | 174 | 576 | 3.31 | Si |

### Verifica dei meccanismi locali di collasso con analisi cinematica lineare

forza di aggancio al piano = 0 quota mezzeria = 1406 Wa = 0.05 Ta = 0.0596

| Comb. | N top | N base | V orto | α0 | M* | e* | a0* | aLim | Verifica |
|---|---|---|---|---|---|---|---|---|---|
| SLV 1 | 38 | -23 | -8 | 0 | 0 | 0 | 0 | 879.274 | No, Trazione |
| SLV 10 | -42 | -23 | 4 | 0 | 0.062 | 0.921 | 0 | 1505.645 | No |
| SLV 9 | -42 | -23 | 4 | 0 | 0.062 | 0.921 | 0 | 1505.645 | No |
| SLV 5 | 0 | -19 | -1 | 0 | 0.024 | 0.988 | 0 | 1505.645 | No |
| SLV 7 | -29 | -46 | -4 | 0 | 0.049 | 0.906 | 0 | 1505.645 | No |
| SLV 4 | 30 | -31 | -9 | 0 | 0 | 0 | 0 | 879.274 | No, Trazione |
| SLV 6 | 0 | -19 | -1 | 0 | 0.024 | 0.988 | 0 | 1505.645 | No |
| SLV 8 | -29 | -46 | -4 | 0 | 0.049 | 0.906 | 0 | 1505.645 | No |
| SLV 2 | 38 | -23 | -8 | 0 | 0 | 0 | 0 | 879.274 | No, Trazione |
| SLV 3 | 30 | -31 | -9 | 0 | 0 | 0 | 0 | 879.274 | No, Trazione |

### Tabella dei coefficienti di sicurezza minimi

| Stato limite | Coeff.s. | Comb. | Verifica |
|---|---|---|---|
| PF_SLU | 0 | SLU 1 | No |
| V_SLU | 23.442 | SLU 80 | Si |
| PF_SLV | 0 | SLD 7 | No |
| V_SLV | 50.591 | SLV 13 | Si |
| PFFP_SLV | 0 | SLV 1 | No |
| R_SLV | 0 | SLV 4 | No |

## Maschio 212

Verifiche condotte secondo D.M. 17-01-18 (N.T.C.)

### Dati geometrici

| X ini. | Y ini. | X fin. | Y fin. | Quota i. | Quota.s | l | Sp. | h netta | h ini. | h fin. | a | a.s.,sx | a.s.,dx |
|---|---|---|---|---|---|---|---|---|---|---|---|---|---|
| -296.3 | 595.1 | -501.8 | 595.1 | L6 | L7 | 205.5 | 28 | 316 | 316 | 316 | | | |

### Caratteristiche del materiale

(Circolare 7 21-01-19 C8.5.I) Muratura in mattoni pieni e malta di calce LC2_Corti

| fb | fk | fvk0 | fmedio | τ0 | fv0 | μ | ϕ | fv,lim | E | G | FC |
|---|---|---|---|---|---|---|---|---|---|---|---|
| 60 | | | 34.5 | 0.9 | 2 | 0.58 | 0.77 | 3.25 | 32000 | 12800 | 1.2 |

### Verifica a pressoflessione nel piano secondo D.M. 17-01-18 NTC §7.8.2.2.1 in combinazioni non sismiche, γM = 3

| Comb. | Quota | N | M | σ0 | Mu | c.s. | Verifica |
|---|---|---|---|---|---|---|---|
| SLU 60 | 1338 | -2407 | -108785 | 0.42 | 234589 | 2.156 | Si |
| SLU 60 | 1518 | 179 | -109893 | 0 | 0 | 0 | No, Trazione |
| SLU 61 | 1338 | -2369 | -113413 | 0.41 | 231140 | 2.038 | Si |
| SLU 61 | 1518 | 217 | -114134 | 0 | 0 | 0 | No, Trazione |
| SLU 53 | 1338 | -1722 | -144437 | 0.3 | 170419 | 1.18 | Si |

| Comb. | Quota | N | M | σ0 | Mu | c.s. | Verifica |
|---|---|---|---|---|---|---|---|
| SLU 53 | 1518 | 864 | -210076 | 0 | 0 | 0 | No, Trazione |
| SLU 57 | 1338 | -290 | -190058 | 0 | 0 | 0 | No, e>l/2 |
| SLU 57 | 1518 | 2296 | -318998 | 0 | 0 | 0 | No, Trazione |
| SLU 56 | 1338 | -328 | -185430 | 0 | 0 | 0 | No, e>l/2 |
| SLU 56 | 1518 | 2258 | -314757 | 0 | 0 | 0 | No, Trazione |
| SLU 54 | 1338 | -1684 | -149065 | 0.29 | 166857 | 1.119 | Si |
| SLU 54 | 1518 | 902 | -214317 | 0 | 0 | 0 | No, Trazione |
| SLU 1 | 1338 | -1794 | -81241 | 0.31 | 177244 | 2.182 | Si |
| SLU 1 | 1518 | 203 | -96593 | 0 | 0 | 0 | No, Trazione |
| SLU 58 | 1338 | 350 | -187158 | 0 | 0 | 0 | No, Trazione |
| SLU 58 | 1518 | 2936 | -319264 | 0 | 0 | 0 | No, Trazione |
| SLU 59 | 1338 | 387 | -191786 | 0 | 0 | 0 | No, Trazione |
| SLU 59 | 1518 | 2973 | -323505 | 0 | 0 | 0 | No, Trazione |
| SLU 55 | 1338 | -982 | -153877 | 0 | 0 | 0 | No, e>l/2 |
| SLU 55 | 1518 | 1604 | -221651 | 0 | 0 | 0 | No, Trazione |

Verifica a pressoflessione nel piano secondo D.M. 17-01-18 NTC §7.8.2.2.1 in combinazioni sismiche, γM = 2

| Comb. | Quota | N | M | σ0 | Mu | c.s. | Verifica |
|---|---|---|---|---|---|---|---|
| SLD 1 | 1338 | -1362 | -29028 | 0.24 | 137254 | 4.728 | Si |
| SLD 1 | 1518 | 763 | -218585 | 0 | 0 | 0 | No, Trazione |
| SLV 4 | 1338 | -1770 | 39015 | 0.31 | 177288 | 4.544 | Si |
| SLV 4 | 1518 | 589 | -243239 | 0 | 0 | 0 | No, Trazione |
| SLV 12 | 1338 | -2921 | -159935 | 0.51 | 287630 | 1.798 | Si |
| SLV 12 | 1518 | -903 | 150547 | 0 | 0 | 0 | No, e>l/2 |
| SLV 11 | 1338 | -2921 | -159935 | 0.51 | 287630 | 1.798 | Si |
| SLV 11 | 1518 | -903 | 150547 | 0 | 0 | 0 | No, e>l/2 |
| SLV 5 | 1338 | -325 | -22158 | 0.06 | 33238 | 1.5 | Si |
| SLV 5 | 1518 | 1666 | -369798 | 0 | 0 | 0 | No, Trazione |
| SLV 9 | 1338 | -458 | -105127 | 0 | 0 | 0 | No, e>l/2 |
| SLV 9 | 1518 | 1340 | -253285 | 0 | 0 | 0 | No, Trazione |
| SLV 14 | 1338 | -1476 | -221107 | 0 | 0 | 0 | No, e>l/2 |
| SLV 14 | 1518 | 174 | 23988 | 0 | 0 | 0 | No, Trazione |
| SLV 10 | 1338 | -458 | -105127 | 0 | 0 | 0 | No, e>l/2 |
| SLV 10 | 1518 | 1340 | -253285 | 0 | 0 | 0 | No, Trazione |
| SLV 6 | 1338 | -325 | -22158 | 0.06 | 33238 | 1.5 | Si |
| SLV 6 | 1518 | 1666 | -369798 | 0 | 0 | 0 | No, Trazione |
| SLV 13 | 1338 | -1476 | -221107 | 0 | 0 | 0 | No, e>l/2 |
| SLV 13 | 1518 | 174 | 23988 | 0 | 0 | 0 | No, Trazione |

Verifica a taglio nel piano secondo D.M. 17-01-18 (N.T.C.) §7.8.2.2.2 con rottura per scorrimento in combinazioni non sismiche, γM = 3

| Comb. | Quota | N | V par | M | σ0 | σN | l' | fvd | Vt scorr. | Vt fess.diag. | Vt,lim | c.s. | Verifica |
|---|---|---|---|---|---|---|---|---|---|---|---|---|---|
| SLU 55 | 1338 | -982 | 332 | -153877 | | 0 | 0 | 0.56 | 0 | | | 0 | No, Vu<V |
| SLU 55 | 1518 | 1604 | 332 | -221651 | | 0 | 0 | 0.56 | 0 | | | 0 | No, Vu<V |
| SLU 1 | 1338 | -1794 | 51 | -81241 | | 0.37 | 172.37 | 0.61 | 2920 | | | 57.16 | Si |
| SLU 1 | 1518 | 203 | 51 | -96593 | | 0 | 0 | 0.56 | 0 | | | 0 | No, Vu<V |
| SLU 58 | 1338 | 350 | 690 | -187158 | | 0 | 0 | 0.56 | 0 | | | 0 | No, Vu<V |
| SLU 58 | 1518 | 2936 | 690 | -319264 | | 0 | 0 | 0.56 | 0 | | | 0 | No, Vu<V |
| SLU 57 | 1338 | -290 | 672 | -190058 | | 0 | 0 | 0.56 | 0 | | | 0 | No, Vu<V |
| SLU 57 | 1518 | 2296 | 672 | -318998 | | 0 | 0 | 0.56 | 0 | | | 0 | No, Vu<V |
| SLU 56 | 1338 | -328 | 674 | -185430 | | 0 | 0 | 0.56 | 0 | | | 0 | No, Vu<V |
| SLU 56 | 1518 | 2258 | 674 | -314757 | | 0 | 0 | 0.56 | 0 | | | 0 | No, Vu<V |
| SLU 53 | 1338 | -1722 | 320 | -144437 | | 1.09 | 56.59 | 0.7 | 1110 | | | 3.47 | Si |
| SLU 53 | 1518 | 864 | 320 | -210076 | | 0 | 0 | 0.56 | 0 | | | 0 | No, Vu<V |
| SLU 60 | 1338 | -2407 | -38 | -108785 | | 0.5 | 172.65 | 0.62 | 3007 | | | 78.59 | Si |
| SLU 60 | 1518 | 179 | -38 | -109893 | | 0 | 0 | 0.56 | 0 | | | 0 | No, Vu<V |
| SLU 61 | 1338 | -2369 | -40 | -113413 | | 0.51 | 164.65 | 0.62 | 2877 | | | 71.21 | Si |
| SLU 61 | 1518 | 217 | -40 | -114134 | | 0 | 0 | 0.56 | 0 | | | 0 | No, Vu<V |
| SLU 54 | 1338 | -1684 | 318 | -149065 | | 1.41 | 42.77 | 0.74 | 890 | | | 2.8 | Si |
| SLU 54 | 1518 | 902 | 318 | -214317 | | 0 | 0 | 0.56 | 0 | | | 0 | No, Vu<V |
| SLU 59 | 1338 | 387 | 687 | -191786 | | 0 | 0 | 0.56 | 0 | | | 0 | No, Vu<V |
| SLU 59 | 1518 | 2973 | 687 | -323505 | | 0 | 0 | 0.56 | 0 | | | 0 | No, Vu<V |

Verifica a taglio nel piano secondo D.M. 17-01-18 (N.T.C.) §7.8.2.2.2 con rottura per scorrimento in combinazioni sismiche, γM = 2

| Comb. | Quota | N | V par | M | σ0 | σN | l' | fvd | Vt scorr. | Vt fess.diag. | Vt,lim | c.s. | Verifica |
|---|---|---|---|---|---|---|---|---|---|---|---|---|---|
| SLV 9 | 1338 | -458 | 637 | -105127 | | 0 | 0 | 0.83 | 0 | | | 0 | No, Vu<V |
| SLV 9 | 1518 | 1340 | 642 | -253285 | | 0 | 0 | 0.83 | 0 | | | 0 | No, Vu<V |
| SLV 5 | 1338 | -325 | 2101 | -22158 | | 0.11 | 103.71 | 0.86 | 2485 | | | 1.18 | Si |
| SLV 5 | 1518 | 1666 | 1360 | -369798 | | 0 | 0 | 0.83 | 0 | | | 0 | No, Vu<V |
| SLV 12 | 1338 | -2921 | -1963 | -159935 | | 0.72 | 143.97 | 0.98 | 3943 | | | 2.01 | Si |
| SLV 12 | 1518 | -903 | -1222 | 150547 | | 0 | 0 | 0.83 | 0 | | | 0 | No, Vu<V |
| SLV 6 | 1338 | -325 | 2101 | -22158 | | 0.11 | 103.71 | 0.86 | 2485 | | | 1.18 | Si |
| SLV 6 | 1518 | 1666 | 1360 | -369798 | | 0 | 0 | 0.83 | 0 | | | 0 | No, Vu<V |
| SLD 1 | 1338 | -1362 | 1279 | -29028 | | 0.24 | 205.5 | 0.88 | 5067 | | | 3.96 | Si |
| SLD 1 | 1518 | 763 | 703 | -218585 | | 0 | 0 | 0.83 | 0 | | | 0 | No, Vu<V |
| SLV 13 | 1338 | -1476 | -1981 | -221107 | | 0 | 0 | 0.83 | 0 | | | 0 | No, Vu<V |
| SLV 13 | 1518 | 174 | -848 | 23988 | | 0 | 0 | 0.83 | 0 | | | 0 | No, Vu<V |
| SLV 14 | 1338 | -1476 | -1981 | -221107 | | 0 | 0 | 0.83 | 0 | | | 0 | No, Vu<V |
| SLV 14 | 1518 | 174 | -848 | 23988 | | 0 | 0 | 0.83 | 0 | | | 0 | No, Vu<V |
| SLV 4 | 1338 | -1770 | 2119 | 39015 | | 0.31 | 205.5 | 0.89 | 5149 | | | 2.43 | Si |
| SLV 4 | 1518 | 589 | 986 | -243239 | | 0 | 0 | 0.83 | 0 | | | 0 | No, Vu<V |
| SLV 11 | 1338 | -2921 | -1963 | -159935 | | 0.72 | 143.97 | 0.98 | 3943 | | | 2.01 | Si |
| SLV 11 | 1518 | -903 | -1222 | 150547 | | 0 | 0 | 0.83 | 0 | | | 0 | No, Vu<V |
| SLV 10 | 1338 | -458 | 637 | -105127 | | 0 | 0 | 0.83 | 0 | | | 0 | No, Vu<V |
| SLV 10 | 1518 | 1340 | 642 | -253285 | | 0 | 0 | 0.83 | 0 | | | 0 | No, Vu<V |

Verifica a pressoflessione fuori piano D.M. 17-01-18 (N.T.C.)

quota 1406 Wa 0.05 denominatore 8 γM = 2

| Comb. | fd | Sa | σ0 | N | M | Mc | Coeff.s. | Verifica |
|---|---|---|---|---|---|---|---|---|
| SLV 5 | 14 | 0.53 | 0 | 329 | 23339 | 0 | 0 | No, Trazione |
| SLV 2 | 14 | 0.53 | 0 | -586 | 23339 | 0 | 0 | No, e>t/2 |
| SLV 14 | 14 | 0.53 | 0 | -507 | 23339 | 0 | 0 | No, e>t/2 |
| SLV 9 | 14 | 0.53 | 0 | 352 | 23339 | 0 | 0 | No, Trazione |
| SLV 4 | 14 | 0.53 | 0 | -1346 | 23339 | 0 | 0 | No, e>t/2 |
| SLV 13 | 14 | 0.53 | 0 | -507 | 23339 | 0 | 0 | No, e>t/2 |
| SLV 3 | 14 | 0.53 | 0 | -1346 | 23339 | 0 | 0 | No, e>t/2 |
| SLV 10 | 14 | 0.53 | 0 | 352 | 23339 | 0 | 0 | No, Trazione |
| SLV 1 | 14 | 0.53 | 0 | -586 | 23339 | 0 | 0 | No, e>t/2 |
| SLV 6 | 14 | 0.53 | 0 | 329 | 23339 | 0 | 0 | No, Trazione |

### Verifica dei meccanismi locali di collasso con analisi cinematica lineare

forza di aggancio al piano = 0 quota mezzeria = 1406 Wa = 0.05 Ta = 0.0596

| Comb. | N top | N base | V orto | α0 | M* | e* | a0* | aLim | Verifica |
|---|---|---|---|---|---|---|---|---|---|
| SLV 9 | 1711 | -1340 | -548 | 0 | 0 | 0 | 0 | 1505.645 | No, Trazione |
| SLV 1 | 2784 | -3464 | -2 | 0 | 0 | 0 | 0 | 879.274 | No, Trazione |
| SLV 3 | 1951 | -3570 | 293 | 0 | 0 | 0 | 0 | 879.274 | No, Trazione |
| SLV 8 | -121 | -2618 | 529 | 0 | 3.352 | 0.969 | 0 | 1505.645 | No |
| SLV 10 | 1711 | -1340 | -548 | 0 | 0 | 0 | 0 | 1505.645 | No, Trazione |
| SLV 6 | 2654 | -2263 | -455 | 0 | 0 | 0 | 0 | 1505.645 | No, Trazione |
| SLV 5 | 2654 | -2263 | -455 | 0 | 0 | 0 | 0 | 1505.645 | No, Trazione |
| SLV 4 | 1951 | -3570 | 293 | 0 | 0 | 0 | 0 | 879.274 | No, Trazione |
| SLV 7 | -121 | -2618 | 529 | 0 | 3.352 | 0.969 | 0 | 1505.645 | No |
| SLV 2 | 2784 | -3464 | -2 | 0 | 0 | 0 | 0 | 879.274 | No, Trazione |

### Tabella dei coefficienti di sicurezza minimi

| Stato limite | Coeff.s. | Comb. | Verifica |
|---|---|---|---|
| PF_SLU | 0 | SLU 84 | No |
| V_SLU | 0 | SLU 1 | No |
| PF_SLV | 0 | SLV 14 | No |
| V_SLV | 0 | SLD 1 | No |
| PFFP_SLV | 0 | SLV 10 | No |
| R_SLV | 0 | SLV 10 | No |

## Maschio 213

Verifiche condotte secondo D.M. 17-01-18 (N.T.C.)

### Dati geometrici

| X ini. | Y ini. | X fin. | Y fin. | Quota i. | Quota.s | l | Sp. | h netta | h ini. | h fin. | a | a.s.,sx | a.s.,dx |
|---|---|---|---|---|---|---|---|---|---|---|---|---|---|
| -12.3 | 595.1 | -206.3 | 595.1 | L6 | L7 | 194 | 28 | 316 | 316 | 316 | | | |

### Caratteristiche del materiale

(Circolare 7 21-01-19 C8.5.I) Muratura in mattoni pieni e malta di calce LC2_Corti

| fb | fk | fvk0 | fmedio | τ0 | fv0 | μ | ϕ | fv,lim | E | G | FC |
|---|---|---|---|---|---|---|---|---|---|---|---|
| 60 | | | 34.5 | 0.9 | 2 | 0.58 | 0.77 | 3.25 | 32000 | 12800 | 1.2 |

### Verifica a pressoflessione nel piano secondo D.M. 17-01-18 NTC §7.8.2.2.1 in combinazioni non sismiche, γM = 3

| Comb. | Quota | N | M | σ0 | Mu | c.s. | Verifica |
|---|---|---|---|---|---|---|---|
| SLU 40 | 1338 | -2679 | -156558 | 0.49 | 244156 | 1.56 | Si |
| SLU 40 | 1518 | -1932 | 39010 | 0.36 | 179198 | 4.594 | Si |
| SLU 39 | 1338 | -2721 | -155146 | 0.5 | 247695 | 1.597 | Si |
| SLU 39 | 1518 | -1931 | 37231 | 0.36 | 179095 | 4.81 | Si |
| SLU 41 | 1338 | -3031 | -173372 | 0.56 | 273898 | 1.58 | Si |
| SLU 41 | 1518 | -2289 | 76134 | 0.42 | 210513 | 2.765 | Si |
| SLU 34 | 1338 | -3016 | -165188 | 0.56 | 272637 | 1.65 | Si |
| SLU 34 | 1518 | -2262 | 80915 | 0.42 | 208173 | 2.573 | Si |
| SLU 31 | 1338 | -2706 | -146962 | 0.5 | 246413 | 1.677 | Si |
| SLU 31 | 1518 | -1904 | 42011 | 0.35 | 176713 | 4.206 | Si |
| SLU 21 | 1338 | -2853 | -147317 | 0.53 | 258896 | 1.757 | Si |
| SLU 21 | 1518 | -1994 | 62544 | 0.37 | 184711 | 2.953 | Si |
| SLU 38 | 1338 | -3355 | -182473 | 0.62 | 300720 | 1.648 | Si |
| SLU 38 | 1518 | -2619 | 118632 | 0.48 | 239005 | 2.015 | Si |
| SLU 84 | 1338 | -3772 | -193133 | 0.69 | 334719 | 1.733 | Si |
| SLU 84 | 1518 | -2650 | 81018 | 0.49 | 241660 | 2.983 | Si |
| SLU 42 | 1338 | -2990 | -174785 | 0.55 | 270416 | 1.547 | Si |
| SLU 42 | 1518 | -2290 | 77914 | 0.42 | 210614 | 2.703 | Si |
| SLU 37 | 1338 | -3396 | -181061 | 0.63 | 304136 | 1.68 | Si |
| SLU 37 | 1518 | -2618 | 116853 | 0.48 | 238906 | 2.044 | Si |

### Verifica a pressoflessione nel piano secondo D.M. 17-01-18 NTC §7.8.2.2.1 in combinazioni sismiche, γM = 2

| Comb. | Quota | N | M | σ0 | Mu | c.s. | Verifica |
|---|---|---|---|---|---|---|---|
| SLV 13 | 1338 | -1831 | -256318 | 0 | 0 | 0 | No, e>l/2 |
| SLV 13 | 1518 | -1959 | 111814 | 0.36 | 184454 | 1.65 | Si |
| SLV 14 | 1338 | -1831 | -256318 | 0 | 0 | 0 | No, e>l/2 |
| SLV 14 | 1518 | -1959 | 111814 | 0.36 | 184454 | 1.65 | Si |
| SLV 16 | 1338 | -2030 | -315765 | 0 | 0 | 0 | No, e>l/2 |
| SLV 16 | 1518 | -2045 | 88786 | 0.38 | 192242 | 2.165 | Si |
| SLV 12 | 1338 | -2848 | -260090 | 0.52 | 264386 | 1.017 | Si |
| SLV 12 | 1518 | -1893 | 13475 | 0.35 | 178368 | 13.237 | Si |
| SLD 16 | 1338 | -2452 | -196557 | 0.45 | 229058 | 1.165 | Si |
| SLD 16 | 1518 | -1818 | 55768 | 0.33 | 171510 | 3.075 | Si |
| SLD 13 | 1338 | -2368 | -171313 | 0.44 | 221531 | 1.293 | Si |
| SLD 13 | 1518 | -1780 | 65210 | 0.33 | 168049 | 2.577 | Si |

| Comb. | Quota | N | M | σ0 | Mu | c.s. | Verifica |
|---|---|---|---|---|---|---|---|
| SLD 15 | 1338 | -2452 | -196557 | 0.45 | 229058 | 1.165 | Si |
| SLD 15 | 1518 | -1818 | 55768 | 0.33 | 171510 | 3.075 | Si |
| SLV 11 | 1338 | -2848 | -260090 | 0.52 | 264386 | 1.017 | Si |
| SLV 11 | 1518 | -1893 | 13475 | 0.35 | 178368 | 13.237 | Si |
| SLD 14 | 1338 | -2368 | -171313 | 0.44 | 221531 | 1.293 | Si |
| SLD 14 | 1518 | -1780 | 65210 | 0.33 | 168049 | 2.577 | Si |
| SLV 15 | 1338 | -2030 | -315765 | 0 | 0 | 0 | No, e>l/2 |
| SLV 15 | 1518 | -2045 | 88786 | 0.38 | 192242 | 2.165 | Si |

## Verifica a taglio nel piano secondo D.M. 17-01-18 (N.T.C.) §7.8.2.2.2 con rottura per scorrimento in combinazioni non sismiche, γM = 3

| Comb. | Quota | N | V par | M | σ0 | σN | l' | fvd | Vt scorr. | Vt fess.diag. | Vt,lim | c.s. | Verifica |
|---|---|---|---|---|---|---|---|---|---|---|---|---|---|
| SLU 79 | 1338 | -4179 | -2511 | -199409 | | 1.01 | 147.83 | 0.69 | 2857 | | | 1.14 | Si |
| SLU 79 | 1518 | -2978 | -2304 | 119957 | | 0.63 | 170.16 | 0.64 | 3044 | | | 1.32 | Si |
| SLU 36 | 1338 | -3655 | -2385 | -175822 | | 0.89 | 146.7 | 0.67 | 2769 | | | 1.16 | Si |
| SLU 36 | 1518 | -2996 | -2192 | 122209 | | 0.63 | 168.64 | 0.64 | 3023 | | | 1.38 | Si |
| SLU 84 | 1338 | -3772 | -2275 | -193133 | | 0.98 | 137.41 | 0.69 | 2640 | | | 1.16 | Si |
| SLU 84 | 1518 | -2650 | -2136 | 81018 | | 0.49 | 194 | 0.62 | 3371 | | | 1.58 | Si |
| SLU 42 | 1338 | -2990 | -2089 | -174785 | | 0.92 | 115.62 | 0.68 | 2197 | | | 1.05 | Si |
| SLU 42 | 1518 | -2290 | -1952 | 77914 | | 0.43 | 188.92 | 0.61 | 3244 | | | 1.66 | Si |
| SLU 41 | 1338 | -3031 | -2048 | -173372 | | 0.91 | 119.42 | 0.68 | 2262 | | | 1.1 | Si |
| SLU 41 | 1518 | -2289 | -1911 | 76134 | | 0.43 | 191.2 | 0.61 | 3279 | | | 1.72 | Si |
| SLU 80 | 1338 | -4137 | -2552 | -200822 | | 1.02 | 145.37 | 0.69 | 2813 | | | 1.1 | Si |
| SLU 80 | 1518 | -2979 | -2345 | 121736 | | 0.63 | 168.42 | 0.64 | 3017 | | | 1.29 | Si |
| SLU 37 | 1338 | -3396 | -2325 | -181061 | | 0.93 | 131.06 | 0.68 | 2491 | | | 1.07 | Si |
| SLU 37 | 1518 | -2618 | -2120 | 116853 | | 0.6 | 157.09 | 0.63 | 2793 | | | 1.32 | Si |
| SLU 78 | 1338 | -4438 | -2571 | -194170 | | 0.99 | 159.74 | 0.69 | 3077 | | | 1.2 | Si |
| SLU 78 | 1518 | -3357 | -2376 | 125313 | | 0.67 | 179 | 0.64 | 3232 | | | 1.36 | Si |
| SLU 38 | 1338 | -3355 | -2366 | -182473 | | 0.94 | 127.81 | 0.68 | 2435 | | | 1.03 | Si |
| SLU 38 | 1518 | -2619 | -2161 | 118632 | | 0.6 | 155.11 | 0.64 | 2762 | | | 1.28 | Si |
| SLU 34 | 1338 | -3016 | -2023 | -165188 | | 0.85 | 126.7 | 0.67 | 2373 | | | 1.17 | Si |
| SLU 34 | 1518 | -2262 | -1886 | 80915 | | 0.44 | 183.67 | 0.61 | 3159 | | | 1.68 | Si |

## Verifica a taglio nel piano secondo D.M. 17-01-18 (N.T.C.) §7.8.2.2.2 con rottura per scorrimento in combinazioni sismiche, γM = 2

| Comb. | Quota | N | V par | M | σ0 | σN | l' | fvd | Vt scorr. | Vt fess.diag. | Vt,lim | c.s. | Verifica |
|---|---|---|---|---|---|---|---|---|---|---|---|---|---|
| SLV 13 | 1338 | -1831 | -3563 | -256318 | | 0 | 0 | 0.83 | 0 | | | 0 | No, Vu<V |
| SLV 13 | 1518 | -1959 | -2025 | 111814 | | 0.58 | 119.81 | 0.95 | 3187 | | | 1.57 | Si |
| SLD 16 | 1338 | -2452 | -2317 | -196557 | | 1.73 | 50.52 | 1.18 | 1669 | | | 0.72 | No, Vu<V |
| SLD 16 | 1518 | -1818 | -1480 | 55768 | | 0.33 | 194 | 0.9 | 4890 | | | 3.3 | Si |
| SLV 12 | 1338 | -2848 | -2396 | -260090 | | 5.98 | 17.01 | 1.63 | 774 | | | 0.32 | No, Vu<V |
| SLV 12 | 1518 | -1893 | -1256 | 13475 | | 0.35 | 194 | 0.9 | 4905 | | | 3.91 | Si |
| SLV 14 | 1338 | -1831 | -3563 | -256318 | | 0 | 0 | 0.83 | 0 | | | 0 | No, Vu<V |
| SLV 14 | 1518 | -1959 | -2025 | 111814 | | 0.58 | 119.81 | 0.95 | 3187 | | | 1.57 | Si |
| SLD 13 | 1338 | -2368 | -2198 | -171313 | | 1.14 | 74 | 1.06 | 2200 | | | 1 | Si |
| SLD 13 | 1518 | -1780 | -1512 | 65210 | | 0.35 | 181.11 | 0.9 | 4582 | | | 3.03 | Si |
| SLV 16 | 1338 | -2030 | -3838 | -315765 | | 0 | 0 | 0.83 | 0 | | | 0 | No, Vu<V |
| SLV 16 | 1518 | -2045 | -1946 | 88786 | | 0.45 | 160.74 | 0.92 | 4160 | | | 2.14 | Si |
| SLD 14 | 1338 | -2368 | -2198 | -171313 | | 1.14 | 74 | 1.06 | 2200 | | | 1 | Si |
| SLD 14 | 1518 | -1780 | -1512 | 65210 | | 0.35 | 181.11 | 0.9 | 4582 | | | 3.03 | Si |
| SLD 15 | 1338 | -2452 | -2317 | -196557 | | 1.73 | 50.52 | 1.18 | 1669 | | | 0.72 | No, Vu<V |
| SLD 15 | 1518 | -1818 | -1480 | 55768 | | 0.33 | 194 | 0.9 | 4890 | | | 3.3 | Si |
| SLV 11 | 1338 | -2848 | -2396 | -260090 | | 5.98 | 17.01 | 1.63 | 774 | | | 0.32 | No, Vu<V |
| SLV 11 | 1518 | -1893 | -1256 | 13475 | | 0.35 | 194 | 0.9 | 4905 | | | 3.91 | Si |
| SLV 15 | 1338 | -2030 | -3838 | -315765 | | 0 | 0 | 0.83 | 0 | | | 0 | No, Vu<V |
| SLV 15 | 1518 | -2045 | -1946 | 88786 | | 0.45 | 160.74 | 0.92 | 4160 | | | 2.14 | Si |

## Verifica a pressoflessione fuori piano D.M. 17-01-18 (N.T.C.)

quota 1406 Wa 0.05 denominatore 8 γM = 2

| Comb. | fd | Sa | σ0 | N | M | Mc | Coeff.s. | Verifica |
|---|---|---|---|---|---|---|---|---|
| SLV 10 | 14 | 0.53 | 0.41 | -2216 | 22033 | 29983 | 1.36 | Si |
| SLV 9 | 14 | 0.53 | 0.41 | -2216 | 22033 | 29983 | 1.36 | Si |
| SLV 5 | 14 | 0.53 | 0.42 | -2268 | 22033 | 30665 | 1.39 | Si |
| SLV 6 | 14 | 0.53 | 0.42 | -2268 | 22033 | 30665 | 1.39 | Si |
| SLV 14 | 14 | 0.53 | 0.44 | -2392 | 22033 | 32287 | 1.47 | Si |
| SLV 13 | 14 | 0.53 | 0.44 | -2392 | 22033 | 32287 | 1.47 | Si |
| SLV 1 | 14 | 0.53 | 0.47 | -2567 | 22033 | 34544 | 1.57 | Si |
| SLV 2 | 14 | 0.53 | 0.47 | -2567 | 22033 | 34544 | 1.57 | Si |
| SLV 16 | 14 | 0.53 | 0.48 | -2596 | 22033 | 34927 | 1.59 | Si |
| SLV 15 | 14 | 0.53 | 0.48 | -2596 | 22033 | 34927 | 1.59 | Si |

## Verifica dei meccanismi locali di collasso con analisi cinematica lineare

forza di aggancio al piano = 0 quota mezzeria = 1406 Wa = 0.05 Ta = 0.0596

| Comb. | N top | N base | V orto | α0 | M* | e* | a0* | aLim | Verifica |
|---|---|---|---|---|---|---|---|---|---|
| SLV 10 | -1010 | -2548 | -149 | 0.013 | 3.733 | 0.893 | 20.844 | 1505.645 | No |
| SLV 9 | -1010 | -2548 | -149 | 0.013 | 3.733 | 0.893 | 20.844 | 1505.645 | No |
| SLV 5 | -887 | -1934 | -133 | 0.018 | 3.633 | 0.896 | 28.885 | 1505.645 | No |
| SLV 6 | -887 | -1934 | -133 | 0.018 | 3.633 | 0.896 | 28.885 | 1505.645 | No |
| SLV 14 | -1162 | -4196 | -114 | 0.028 | 3.861 | 0.891 | 45.005 | 879.274 | No |
| SLV 13 | -1162 | -4196 | -114 | 0.028 | 3.861 | 0.891 | 45.005 | 879.274 | No |
| SLV 8 | -908 | -4599 | 21 | 0.064 | 3.65 | 0.896 | 103.107 | 1505.645 | No |
| SLV 7 | -908 | -4599 | 21 | 0.064 | 3.65 | 0.896 | 103.107 | 1505.645 | No |
| SLV 12 | -1032 | -5213 | 5 | 0.069 | 3.751 | 0.893 | 112.064 | 1505.645 | No |
| SLV 11 | -1032 | -5213 | 5 | 0.069 | 3.751 | 0.893 | 112.064 | 1505.645 | No |

## Tabella dei coefficienti di sicurezza minimi

| Stato limite | Coeff.s. | Comb. | Verifica |
|---|---|---|---|
| PF_SLU | 1.547 | SLU 42 | Si |

| Stato limite | Coeff.s. | Comb. | Verifica |
|---|---|---|---|
| V_SLU | 1.029 | SLU 38 | Si |
| PF_SLV | 0 | SLV 13 | No |
| V_SLV | 0 | SLV 13 | No |
| PFFP_SLV | 1.361 | SLV 9 | Si |
| R_SLV | 0.014 | SLV 9 | No |

## Maschio 214

Verifiche condotte secondo D.M. 17-01-18 (N.T.C.)

### Dati geometrici

| X ini. | Y ini. | X fin. | Y fin. | Quota i. | Quota.s | l | Sp. | h netta | h ini. | h fin. | a | a.s.,sx | a.s.,dx |
|---|---|---|---|---|---|---|---|---|---|---|---|---|---|
| -12.3 | -335.9 | -12.3 | 595.1 | L6 | L7 | 931 | 28 | 316 | 316 | 316 | | | |

### Caratteristiche del materiale

(Circolare 7 21-01-19 C8.5.I) Muratura in mattoni pieni e malta di calce LC2_Corti

| fb | fk | fvk0 | fmedio | τ0 | fv0 | μ | ϕ | fv,lim | E | G | FC |
|---|---|---|---|---|---|---|---|---|---|---|---|
| 60 | | | 34.5 | 0.9 | 2 | 0.58 | 0.77 | 3.25 | 32000 | 12800 | 1.2 |

### Verifica a pressoflessione nel piano secondo D.M. 17-01-18 NTC §7.8.2.2.1 in combinazioni non sismiche, γM = 3

| Comb. | Quota | N | M | σ0 | Mu | c.s. | Verifica |
|---|---|---|---|---|---|---|---|
| SLU 39 | 1248 | -24865 | 357220 | 0.95 | 10219333 | 28.608 | Si |
| SLU 39 | 1564 | -1830 | 131363 | 0.07 | 844620 | 6.43 | Si |
| SLU 62 | 1248 | -28597 | 438032 | 1.1 | 11519287 | 26.298 | Si |
| SLU 62 | 1564 | -2384 | 167019 | 0.09 | 1097421 | 6.571 | Si |
| SLU 60 | 1248 | -27242 | 364880 | 1.05 | 11054335 | 30.296 | Si |
| SLU 60 | 1564 | -1371 | 114705 | 0.05 | 633960 | 5.527 | Si |
| SLU 22 | 1248 | -22402 | 319226 | 0.86 | 9328126 | 29.221 | Si |
| SLU 22 | 1564 | -1637 | 124402 | 0.06 | 756256 | 6.079 | Si |
| SLU 18 | 1248 | -22221 | 303589 | 0.85 | 9261487 | 30.507 | Si |
| SLU 18 | 1564 | -1252 | 98506 | 0.05 | 579167 | 5.879 | Si |
| SLU 64 | 1248 | -27423 | 380517 | 1.05 | 11116984 | 29.215 | Si |
| SLU 64 | 1564 | -1756 | 140600 | 0.07 | 810848 | 5.767 | Si |
| SLU 45 | 1248 | -26613 | 387266 | 1.02 | 10835624 | 27.98 | Si |
| SLU 45 | 1564 | -2132 | 152257 | 0.08 | 982327 | 6.452 | Si |
| SLU 1 | 1248 | -19758 | 265596 | 0.76 | 8341733 | 31.408 | Si |
| SLU 1 | 1564 | -1059 | 91545 | 0.04 | 490314 | 5.356 | Si |
| SLU 43 | 1248 | -24779 | 326887 | 0.95 | 10188795 | 31.169 | Si |
| SLU 43 | 1564 | -1178 | 107744 | 0.05 | 545208 | 5.06 | Si |
| SLU 81 | 1248 | -29886 | 418511 | 1.15 | 11953976 | 28.563 | Si |
| SLU 81 | 1564 | -1949 | 147561 | 0.07 | 899111 | 6.093 | Si |

### Verifica a pressoflessione nel piano secondo D.M. 17-01-18 NTC §7.8.2.2.1 in combinazioni sismiche, γM = 2

| Comb. | Quota | N | M | σ0 | Mu | c.s. | Verifica |
|---|---|---|---|---|---|---|---|
| SLV 10 | 1248 | -21701 | -1259649 | 0.83 | 9413376 | 7.473 | Si |
| SLV 10 | 1564 | -1216 | -212105 | 0.05 | 563819 | 2.658 | Si |
| SLV 12 | 1248 | -22175 | 2168695 | 0.85 | 9603931 | 4.428 | Si |
| SLV 12 | 1564 | -1207 | 408307 | 0.05 | 559538 | 1.37 | Si |
| SLD 8 | 1248 | -20706 | 944873 | 0.79 | 9011886 | 9.538 | Si |
| SLD 8 | 1564 | -1273 | 234499 | 0.05 | 589985 | 2.516 | Si |
| SLD 12 | 1248 | -21504 | 1087009 | 0.82 | 9334220 | 8.587 | Si |
| SLD 12 | 1564 | -1234 | 230491 | 0.05 | 572401 | 2.483 | Si |
| SLD 11 | 1248 | -21504 | 1087009 | 0.82 | 9334220 | 8.587 | Si |
| SLD 11 | 1564 | -1234 | 230491 | 0.05 | 572401 | 2.483 | Si |
| SLD 7 | 1248 | -20706 | 944873 | 0.79 | 9011886 | 9.538 | Si |
| SLD 7 | 1564 | -1273 | 234499 | 0.05 | 589985 | 2.516 | Si |
| SLV 11 | 1248 | -22175 | 2168695 | 0.85 | 9603931 | 4.428 | Si |
| SLV 11 | 1564 | -1207 | 408307 | 0.05 | 559538 | 1.37 | Si |
| SLV 9 | 1248 | -21701 | -1259649 | 0.83 | 9413376 | 7.473 | Si |
| SLV 9 | 1564 | -1216 | -212105 | 0.05 | 563819 | 2.658 | Si |
| SLV 7 | 1248 | -20312 | 1836684 | 0.78 | 8852376 | 4.82 | Si |
| SLV 7 | 1564 | -1309 | 416755 | 0.05 | 606909 | 1.456 | Si |
| SLV 8 | 1248 | -20312 | 1836684 | 0.78 | 8852376 | 4.82 | Si |
| SLV 8 | 1564 | -1309 | 416755 | 0.05 | 606909 | 1.456 | Si |

### Verifica a taglio nel piano secondo D.M. 17-01-18 (N.T.C.) §7.8.2.2.2 con rottura per scorrimento in combinazioni non sismiche, γM = 3

| Comb. | Quota | N | V par | M | σ0 | σN | l' | fvd | Vt scorr. | Vt fess.diag. | Vt,lim | c.s. | Verifica |
|---|---|---|---|---|---|---|---|---|---|---|---|---|---|
| SLU 53 | 1248 | -28337 | 799 | 413862 | | 1.09 | 931 | 0.7 | 18260 | | | 22.84 | Si |
| SLU 53 | 1564 | -2267 | 727 | 157130 | | 0.09 | 931 | 0.57 | 14784 | | | 20.33 | Si |
| SLU 60 | 1248 | -27242 | 836 | 364880 | | 1.05 | 931 | 0.69 | 18115 | | | 21.67 | Si |
| SLU 60 | 1564 | -1371 | 804 | 114705 | | 0.05 | 931 | 0.56 | 14665 | | | 18.25 | Si |
| SLU 81 | 1248 | -29886 | 937 | 418511 | | 1.15 | 931 | 0.71 | 18467 | | | 19.71 | Si |
| SLU 81 | 1564 | -1949 | 884 | 147561 | | 0.07 | 931 | 0.57 | 14742 | | | 16.68 | Si |
| SLU 74 | 1248 | -30981 | 901 | 467492 | | 1.19 | 931 | 0.71 | 18613 | | | 20.67 | Si |
| SLU 74 | 1564 | -2845 | 807 | 189987 | | 0.11 | 931 | 0.57 | 14862 | | | 18.41 | Si |
| SLU 83 | 1248 | -31241 | 915 | 491662 | | 1.2 | 931 | 0.72 | 18648 | | | 20.38 | Si |
| SLU 83 | 1564 | -2963 | 814 | 199876 | | 0.11 | 931 | 0.57 | 14877 | | | 18.28 | Si |
| SLU 62 | 1248 | -28597 | 814 | 438032 | | 1.1 | 931 | 0.7 | 18295 | | | 22.47 | Si |
| SLU 62 | 1564 | -2384 | 734 | 167019 | | 0.09 | 931 | 0.57 | 14800 | | | 20.18 | Si |
| SLU 66 | 1248 | -29257 | 828 | 440897 | | 1.12 | 931 | 0.71 | 18383 | | | 22.21 | Si |
| SLU 66 | 1564 | -2710 | 735 | 185114 | | 0.1 | 931 | 0.57 | 14844 | | | 20.2 | Si |
| SLU 64 | 1248 | -27423 | 833 | 380517 | | 1.05 | 931 | 0.7 | 18139 | | | 21.78 | Si |
| SLU 64 | 1564 | -1756 | 780 | 140600 | | 0.07 | 931 | 0.56 | 14716 | | | 18.86 | Si |
| SLU 82 | 1248 | -29981 | 699 | 339956 | | 1.15 | 931 | 0.71 | 18480 | | | 26.45 | Si |

| Comb. | Quota | N | V par | M | σ0 | σN | l' | fvd | Vt scorr. | Vt fess.diag. | Vt,lim | c.s. | Verifica |
|---|---|---|---|---|---|---|---|---|---|---|---|---|---|
| SLU 82 | 1564 | -2010 | 765 | 117822 | | 0.08 | 931 | 0.57 | 14750 | | | 19.27 | Si |
| SLU 39 | 1248 | -24865 | 795 | 357220 | | 0.95 | 931 | 0.68 | 17798 | | | 22.39 | Si |
| SLU 39 | 1564 | -1830 | 743 | 131363 | | 0.07 | 931 | 0.56 | 14726 | | | 19.81 | Si |

### Verifica a taglio nel piano secondo D.M. 17-01-18 (N.T.C.) §7.8.2.2.2 con rottura per scorrimento in combinazioni sismiche, γM = 2

| Comb. | Quota | N | V par | M | σ0 | σN | l' | fvd | Vt scorr. | Vt fess.diag. | Vt,lim | c.s. | Verifica |
|---|---|---|---|---|---|---|---|---|---|---|---|---|---|
| SLV 11 | 1248 | -22175 | 9168 | 2168695 | | 0.85 | 931 | 1 | 26158 | | | 2.85 | Si |
| SLV 11 | 1564 | -1207 | 4403 | 408307 | | 0.11 | 381.3 | 0.86 | 9138 | | | 2.08 | Si |
| SLV 10 | 1248 | -21701 | -7770 | -1259649 | | 0.83 | 931 | 1 | 26063 | | | 3.35 | Si |
| SLV 10 | 1564 | -1216 | -2920 | -212105 | | 0.05 | 873.15 | 0.84 | 20617 | | | 7.06 | Si |
| SLV 6 | 1248 | -19838 | -7890 | -1591660 | | 0.76 | 931 | 0.99 | 25691 | | | 3.26 | Si |
| SLV 6 | 1564 | -1318 | -3196 | -203657 | | 0.05 | 931 | 0.84 | 21987 | | | 6.88 | Si |
| SLD 12 | 1248 | -21504 | 4248 | 1087009 | | 0.82 | 931 | 1 | 26024 | | | 6.13 | Si |
| SLD 12 | 1564 | -1234 | 2212 | 230491 | | 0.05 | 836.35 | 0.84 | 19762 | | | 8.94 | Si |
| SLV 9 | 1248 | -21701 | -7770 | -1259649 | | 0.83 | 931 | 1 | 26063 | | | 3.35 | Si |
| SLV 9 | 1564 | -1216 | -2920 | -212105 | | 0.05 | 873.15 | 0.84 | 20617 | | | 7.06 | Si |
| SLV 8 | 1248 | -20312 | 9049 | 1836684 | | 0.78 | 931 | 0.99 | 25786 | | | 2.85 | Si |
| SLV 8 | 1564 | -1309 | 4127 | 416755 | | 0.11 | 441.49 | 0.85 | 10563 | | | 2.56 | Si |
| SLV 7 | 1248 | -20312 | 9049 | 1836684 | | 0.78 | 931 | 0.99 | 25786 | | | 2.85 | Si |
| SLV 7 | 1564 | -1309 | 4127 | 416755 | | 0.11 | 441.49 | 0.85 | 10563 | | | 2.56 | Si |
| SLD 11 | 1248 | -21504 | 4248 | 1087009 | | 0.82 | 931 | 1 | 26024 | | | 6.13 | Si |
| SLD 11 | 1564 | -1234 | 2212 | 230491 | | 0.05 | 836.35 | 0.84 | 19762 | | | 8.94 | Si |
| SLV 5 | 1248 | -19838 | -7890 | -1591660 | | 0.76 | 931 | 0.99 | 25691 | | | 3.26 | Si |
| SLV 5 | 1564 | -1318 | -3196 | -203657 | | 0.05 | 931 | 0.84 | 21987 | | | 6.88 | Si |
| SLV 12 | 1248 | -22175 | 9168 | 2168695 | | 0.85 | 931 | 1 | 26158 | | | 2.85 | Si |
| SLV 12 | 1564 | -1207 | 4403 | 408307 | | 0.11 | 381.3 | 0.86 | 9138 | | | 2.08 | Si |

### Verifica a pressoflessione fuori piano D.M. 17-01-18 (N.T.C.)

quota 1406 Wa 0.05 denominatore 8 γM = 2

| Comb. | fd | Sa | σ0 | N | M | Mc | Coeff.s. | Verifica |
|---|---|---|---|---|---|---|---|---|
| SLV 1 | 14 | 0.53 | 0.39 | -10088 | 109422 | 136753 | 1.25 | Si |
| SLV 2 | 14 | 0.53 | 0.39 | -10088 | 109422 | 136753 | 1.25 | Si |
| SLV 3 | 14 | 0.53 | 0.39 | -10093 | 109422 | 136831 | 1.25 | Si |
| SLV 4 | 14 | 0.53 | 0.39 | -10093 | 109422 | 136831 | 1.25 | Si |
| SLV 5 | 14 | 0.53 | 0.39 | -10210 | 109422 | 138353 | 1.26 | Si |
| SLV 6 | 14 | 0.53 | 0.39 | -10210 | 109422 | 138353 | 1.26 | Si |
| SLV 7 | 14 | 0.53 | 0.39 | -10229 | 109422 | 138612 | 1.27 | Si |
| SLV 8 | 14 | 0.53 | 0.39 | -10229 | 109422 | 138612 | 1.27 | Si |
| SLV 9 | 14 | 0.53 | 0.4 | -10320 | 109422 | 139802 | 1.28 | Si |
| SLV 10 | 14 | 0.53 | 0.4 | -10320 | 109422 | 139802 | 1.28 | Si |

### Verifica dei meccanismi locali di collasso con analisi cinematica lineare

forza di aggancio al piano = 0 quota mezzeria = 1406 Wa = 0.05 Ta = 0.0596

| Comb. | N top | N base | V orto | α0 | M* | e* | a0* | aLim | Verifica |
|---|---|---|---|---|---|---|---|---|---|
| SLV 2 | -1435 | -17830 | -708 | 0.001 | 15.523 | 0.936 | 2.241 | 879.274 | No |
| SLV 1 | -1435 | -17830 | -708 | 0.001 | 15.523 | 0.936 | 2.241 | 879.274 | No |
| SLV 3 | -1432 | -17973 | -689 | 0.004 | 15.521 | 0.936 | 5.59 | 879.274 | No |
| SLV 4 | -1432 | -17973 | -689 | 0.004 | 15.521 | 0.936 | 5.59 | 879.274 | No |
| SLV 6 | -1318 | -19838 | -442 | 0.031 | 15.467 | 0.94 | 48.343 | 1505.645 | No |
| SLV 5 | -1318 | -19838 | -442 | 0.031 | 15.467 | 0.94 | 48.343 | 1505.645 | No |
| SLV 7 | -1309 | -20312 | -378 | 0.039 | 15.463 | 0.94 | 59.653 | 1505.645 | No |
| SLV 8 | -1309 | -20312 | -378 | 0.039 | 15.463 | 0.94 | 59.653 | 1505.645 | No |
| SLV 9 | -1216 | -21701 | -196 | 0.06 | 15.421 | 0.943 | 91.994 | 1505.645 | No |
| SLV 10 | -1216 | -21701 | -196 | 0.06 | 15.421 | 0.943 | 91.994 | 1505.645 | No |

### Tabella dei coefficienti di sicurezza minimi

| Stato limite | Coeff.s. | Comb. | Verifica |
|---|---|---|---|
| PF_SLU | 5.06 | SLU 43 | Si |
| V_SLU | 16.679 | SLU 81 | Si |
| PF_SLV | 1.37 | SLV 11 | Si |
| V_SLV | 2.076 | SLV 11 | Si |
| PFFP_SLV | 1.25 | SLV 1 | Si |
| R_SLV | 0.003 | SLV 1 | No |

## Maschio 215

Verifiche condotte secondo D.M. 17-01-18 (N.T.C.)

### Dati geometrici

| X ini. | Y ini. | X fin. | Y fin. | Quota i. | Quota.s | l | Sp. | h netta | h ini. | h fin. | a | a.s.,sx | a.s.,dx |
|---|---|---|---|---|---|---|---|---|---|---|---|---|---|
| -1633.3 | -335.9 | -1720.3 | -335.9 | L6 | F1 | 87 | 28 | 319.3 | 319.3 | 319.3 | | | |

### Caratteristiche del materiale

(Circolare 7 21-01-19 C8.5.I) Muratura in mattoni pieni e malta di calce LC2_Corti

| fb | fk | fvk0 | fmedio | τ0 | fv0 | μ | ϕ | fv,lim | E | G | FC |
|---|---|---|---|---|---|---|---|---|---|---|---|
| 60 | | | 34.5 | 0.9 | 2 | 0.58 | 0.77 | 3.25 | 32000 | 12800 | 1.2 |

### Verifica a pressoflessione nel piano secondo D.M. 17-01-18 NTC §7.8.2.2.1 in combinazioni non sismiche, γM = 3

| Comb. | Quota | N | M | σ0 | Mu | c.s. | Verifica |
|---|---|---|---|---|---|---|---|
| SLU 65 | 1248 | -2876 | -33400 | 1.18 | 106978 | 3.203 | Si |
| SLU 65 | 1458 | -2133 | 18987 | 0.88 | 82803 | 4.361 | Si |
| SLU 43 | 1248 | -3071 | -35038 | 1.26 | 112916 | 3.223 | Si |
| SLU 43 | 1458 | -1446 | 16711 | 0.59 | 58306 | 3.489 | Si |

| Comb. | Quota | N | M | σ0 | Mu | c.s. | Verifica |
|---|---|---|---|---|---|---|---|
| SLU 44 | 1248 | -2773 | -33738 | 1.14 | 103767 | 3.076 | Si |
| SLU 44 | 1458 | -1811 | 20780 | 0.74 | 71595 | 3.445 | Si |
| SLU 73 | 1248 | -2778 | -32614 | 1.14 | 103918 | 3.186 | Si |
| SLU 73 | 1458 | -2169 | 21035 | 0.89 | 84024 | 3.994 | Si |
| SLU 61 | 1248 | -2752 | -33135 | 1.13 | 103099 | 3.111 | Si |
| SLU 61 | 1458 | -1716 | 22079 | 0.7 | 68198 | 3.089 | Si |
| SLU 52 | 1248 | -2675 | -32952 | 1.1 | 100663 | 3.055 | Si |
| SLU 52 | 1458 | -1847 | 22829 | 0.76 | 72867 | 3.192 | Si |
| SLU 60 | 1248 | -2931 | -33915 | 1.2 | 108652 | 3.204 | Si |
| SLU 60 | 1458 | -1497 | 19637 | 0.61 | 60203 | 3.066 | Si |
| SLU 2 | 1248 | -2091 | -25563 | 0.86 | 81390 | 3.184 | Si |
| SLU 2 | 1458 | -1562 | 16451 | 0.64 | 62612 | 3.806 | Si |
| SLU 10 | 1248 | -1993 | -24777 | 0.82 | 77991 | 3.148 | Si |
| SLU 10 | 1458 | -1598 | 18499 | 0.66 | 63923 | 3.455 | Si |
| SLU 19 | 1248 | -2070 | -24960 | 0.85 | 80658 | 3.231 | Si |
| SLU 19 | 1458 | -1467 | 17749 | 0.6 | 59111 | 3.33 | Si |

Verifica a pressoflessione nel piano secondo D.M. 17-01-18 NTC §7.8.2.2.1 in combinazioni sismiche, γM = 2

| Comb. | Quota | N | M | σ0 | Mu | c.s. | Verifica |
|---|---|---|---|---|---|---|---|
| SLV 9 | 1248 | -5233 | -54750 | 2.15 | 187610 | 3.427 | Si |
| SLV 9 | 1458 | -1330 | 98940 | 0 | 0 | 0 | No, e>l/2 |
| SLV 12 | 1248 | 196 | -9901 | 0 | 0 | 0 | No, Trazione |
| SLV 12 | 1458 | -497 | -21129 | 0.2 | 21254 | 1.006 | Si |
| SLD 16 | 1248 | -2255 | -31649 | 0.93 | 90646 | 2.864 | Si |
| SLD 16 | 1458 | -694 | 42832 | 0 | 0 | 0 | No, e>l/2 |
| SLV 7 | 1248 | 451 | 1665 | 0 | 0 | 0 | No, Trazione |
| SLV 7 | 1458 | -1268 | -74031 | 0 | 0 | 0 | No, e>l/2 |
| SLV 10 | 1248 | -5233 | -54750 | 2.15 | 187610 | 3.427 | Si |
| SLV 10 | 1458 | -1330 | 98940 | 0 | 0 | 0 | No, e>l/2 |
| SLV 15 | 1248 | -2001 | -39092 | 0.82 | 81209 | 2.077 | Si |
| SLV 15 | 1458 | 112 | 82614 | 0 | 0 | 0 | No, Trazione |
| SLV 11 | 1248 | 196 | -9901 | 0 | 0 | 0 | No, Trazione |
| SLV 11 | 1458 | -497 | -21129 | 0.2 | 21254 | 1.006 | Si |
| SLV 13 | 1248 | -3630 | -52546 | 1.49 | 138651 | 2.639 | Si |
| SLV 13 | 1458 | -138 | 118635 | 0 | 0 | 0 | No, e>l/2 |
| SLV 14 | 1248 | -3630 | -52546 | 1.49 | 138651 | 2.639 | Si |
| SLV 14 | 1458 | -138 | 118635 | 0 | 0 | 0 | No, e>l/2 |
| SLV 8 | 1248 | 451 | 1665 | 0 | 0 | 0 | No, Trazione |
| SLV 8 | 1458 | -1268 | -74031 | 0 | 0 | 0 | No, e>l/2 |

Verifica a taglio nel piano secondo D.M. 17-01-18 (N.T.C.) §7.8.2.2.2 con rottura per scorrimento in combinazioni non sismiche, γM = 3

| Comb. | Quota | N | V par | M | σ0 | σN | l' | fvd | Vt scorr. | Vt fess.diag. | Vt,lim | c.s. | Verifica |
|---|---|---|---|---|---|---|---|---|---|---|---|---|---|
| SLU 43 | 1248 | -3071 | -371 | -35038 | | 1.26 | 87 | 0.72 | 1763 | | | 4.75 | Si |
| SLU 43 | 1458 | -1446 | -483 | 16711 | | 0.59 | 87 | 0.63 | 1546 | | | 3.2 | Si |
| SLU 64 | 1248 | -3174 | -329 | -34700 | | 1.3 | 87 | 0.73 | 1777 | | | 5.41 | Si |
| SLU 64 | 1458 | -1767 | -408 | 14917 | | 0.73 | 87 | 0.65 | 1589 | | | 3.9 | Si |
| SLU 52 | 1248 | -2675 | -219 | -32952 | | 1.1 | 87 | 0.7 | 1710 | | | 7.81 | Si |
| SLU 52 | 1458 | -1847 | -511 | 22829 | | 0.76 | 87 | 0.66 | 1600 | | | 3.13 | Si |
| SLU 65 | 1248 | -2876 | -217 | -33400 | | 1.18 | 87 | 0.71 | 1737 | | | 8.01 | Si |
| SLU 65 | 1458 | -2133 | -427 | 18987 | | 0.88 | 87 | 0.67 | 1638 | | | 3.84 | Si |
| SLU 82 | 1248 | -2855 | -204 | -32797 | | 1.17 | 87 | 0.71 | 1734 | | | 8.52 | Si |
| SLU 82 | 1458 | -2038 | -431 | 20285 | | 0.84 | 87 | 0.67 | 1625 | | | 3.77 | Si |
| SLU 60 | 1248 | -2931 | -313 | -33915 | | 1.2 | 87 | 0.72 | 1744 | | | 5.57 | Si |
| SLU 60 | 1458 | -1497 | -495 | 19637 | | 0.61 | 87 | 0.64 | 1553 | | | 3.14 | Si |
| SLU 81 | 1248 | -3034 | -271 | -33577 | | 1.25 | 87 | 0.72 | 1758 | | | 6.5 | Si |
| SLU 81 | 1458 | -1818 | -420 | 17844 | | 0.75 | 87 | 0.66 | 1596 | | | 3.8 | Si |
| SLU 44 | 1248 | -2773 | -260 | -33738 | | 1.14 | 87 | 0.71 | 1723 | | | 6.64 | Si |
| SLU 44 | 1458 | -1811 | -502 | 20780 | | 0.74 | 87 | 0.65 | 1595 | | | 3.18 | Si |
| SLU 61 | 1248 | -2752 | -246 | -33135 | | 1.13 | 87 | 0.71 | 1720 | | | 6.99 | Si |
| SLU 61 | 1458 | -1716 | -507 | 22079 | | 0.7 | 87 | 0.65 | 1582 | | | 3.12 | Si |
| SLU 73 | 1248 | -2778 | -176 | -32614 | | 1.14 | 87 | 0.71 | 1724 | | | 9.78 | Si |
| SLU 73 | 1458 | -2169 | -435 | 21035 | | 0.89 | 87 | 0.67 | 1642 | | | 3.77 | Si |

Verifica a taglio nel piano secondo D.M. 17-01-18 (N.T.C.) §7.8.2.2.2 con rottura per scorrimento in combinazioni sismiche, γM = 2

| Comb. | Quota | N | V par | M | σ0 | σN | l' | fvd | Vt scorr. | Vt fess.diag. | Vt,lim | c.s. | Verifica |
|---|---|---|---|---|---|---|---|---|---|---|---|---|---|
| SLV 10 | 1248 | -5233 | -1161 | -54750 | | 2.15 | 87 | 1.26 | 3077 | | | 2.65 | Si |
| SLV 10 | 1458 | -1330 | -1473 | 98940 | | 0 | 0 | 0.83 | 0 | | | 0 | No, Vu<V |
| SLV 14 | 1248 | -3630 | 157 | -52546 | | 1.49 | 87 | 1.13 | 2756 | | | 17.59 | Si |
| SLV 14 | 1458 | -138 | -1974 | 118635 | | 0 | 0 | 0.83 | 0 | | | 0 | No, Vu<V |
| SLV 11 | 1248 | 196 | 1108 | -9901 | | 0 | 0 | 0.83 | 0 | | | 0 | No, Vu<V |
| SLV 11 | 1458 | -497 | -49 | -21129 | | 6.06 | 2.93 | 1.63 | 133 | | | 2.72 | Si |
| SLV 9 | 1248 | -5233 | -1161 | -54750 | | 2.15 | 87 | 1.26 | 3077 | | | 2.65 | Si |
| SLV 9 | 1458 | -1330 | -1473 | 98940 | | 0 | 0 | 0.83 | 0 | | | 0 | No, Vu<V |
| SLV 12 | 1248 | 196 | 1108 | -9901 | | 0 | 0 | 0.83 | 0 | | | 0 | No, Vu<V |
| SLV 12 | 1458 | -497 | -49 | -21129 | | 6.06 | 2.93 | 1.63 | 133 | | | 2.72 | Si |
| SLV 13 | 1248 | -3630 | 157 | -52546 | | 1.49 | 87 | 1.13 | 2756 | | | 17.59 | Si |
| SLV 13 | 1458 | -138 | -1974 | 118635 | | 0 | 0 | 0.83 | 0 | | | 0 | No, Vu<V |
| SLV 15 | 1248 | -2001 | 837 | -39092 | | 0.99 | 71.91 | 1.03 | 2078 | | | 2.48 | Si |
| SLV 15 | 1458 | 112 | -1546 | 82614 | | 0 | 0 | 0.83 | 0 | | | 0 | No, Vu<V |
| SLV 8 | 1248 | 451 | 660 | 1665 | | 0 | 0 | 0.83 | 0 | | | 0 | No, Vu<V |
| SLV 8 | 1458 | -1268 | 807 | -74031 | | 0 | 0 | 0.83 | 0 | | | 0 | No, Vu<V |
| SLV 7 | 1248 | 451 | 660 | 1665 | | 0 | 0 | 0.83 | 0 | | | 0 | No, Vu<V |
| SLV 7 | 1458 | -1268 | 807 | -74031 | | 0 | 0 | 0.83 | 0 | | | 0 | No, Vu<V |
| SLD 16 | 1248 | -2255 | 201 | -31649 | | 0.93 | 87 | 1.02 | 2481 | | | 12.35 | Si |
| SLD 16 | 1458 | -694 | -858 | 42832 | | 0 | 0 | 0.83 | 0 | | | 0 | No, Vu<V |

### Verifica a pressoflessione fuori piano D.M. 17-01-18 (N.T.C.)

quota 1407.6 Wa 0.05 denominatore 8 γM = 2

| Comb. | fd | Sa | σ0 | N | M | Mc | Coeff.s. | Verifica |
|---|---|---|---|---|---|---|---|---|
| SLV 16 | 14 | 0.53 | 0 | -164 | 10094 | 0 | 0 | No, e>t/2 |
| SLV 15 | 14 | 0.53 | 0 | -164 | 10094 | 0 | 0 | No, e>t/2 |
| SLV 13 | 14 | 0.53 | 0 | 53 | 10094 | 0 | 0 | No, Trazione |
| SLV 14 | 14 | 0.53 | 0 | 53 | 10094 | 0 | 0 | No, Trazione |
| SLV 9 | 14 | 0.53 | 0.32 | -786 | 10094 | 10710 | 1.06 | Si |
| SLV 10 | 14 | 0.53 | 0.32 | -786 | 10094 | 10710 | 1.06 | Si |
| SLV 11 | 14 | 0.53 | 0.62 | -1508 | 10094 | 20041 | 1.99 | Si |
| SLV 12 | 14 | 0.53 | 0.62 | -1508 | 10094 | 20041 | 1.99 | Si |
| SLV 5 | 14 | 0.53 | 0.71 | -1721 | 10094 | 22705 | 2.25 | Si |
| SLV 6 | 14 | 0.53 | 0.71 | -1721 | 10094 | 22705 | 2.25 | Si |

### Verifica dei meccanismi locali di collasso con analisi cinematica lineare

forza di aggancio al piano = 0 quota mezzeria = 1407.6 Wa = 0.05 Ta = 0.0608

| Comb. | N top | N base | V orto | α0 | M* | e* | a0* | aLim | Verifica |
|---|---|---|---|---|---|---|---|---|---|
| SLV 8 | -383 | 451 | 20 | 0 | 0 | 0 | 0 | 1545.527 | No, Trazione |
| SLV 15 | -250 | -2001 | 73 | 0 | 1.533 | 0.912 | 0 | 894.532 | No |
| SLV 16 | -250 | -2001 | 73 | 0 | 1.533 | 0.912 | 0 | 894.532 | No |
| SLV 11 | -351 | 196 | 49 | 0 | 0 | 0 | 0 | 1545.527 | No, Trazione |
| SLV 12 | -351 | 196 | 49 | 0 | 0 | 0 | 0 | 1545.527 | No, Trazione |
| SLV 7 | -383 | 451 | 20 | 0 | 0 | 0 | 0 | 1545.527 | No, Trazione |
| SLV 14 | -196 | -3630 | 66 | 0.005 | 1.499 | 0.921 | 7.808 | 894.532 | No |
| SLV 13 | -196 | -3630 | 66 | 0.005 | 1.499 | 0.921 | 7.808 | 894.532 | No |
| SLV 9 | -170 | -5233 | 24 | 0.051 | 1.484 | 0.927 | 80.59 | 1545.527 | No |
| SLV 10 | -170 | -5233 | 24 | 0.051 | 1.484 | 0.927 | 80.59 | 1545.527 | No |

### Tabella dei coefficienti di sicurezza minimi

| Stato limite | Coeff.s. | Comb. | Verifica |
|---|---|---|---|
| PF_SLU | 3.055 | SLU 52 | Si |
| V_SLU | 3.122 | SLU 61 | Si |
| PF_SLV | 0 | SLV 16 | No |
| V_SLV | 0 | SLD 13 | No |
| PFFP_SLV | 0 | SLV 14 | No |
| R_SLV | 0 | SLV 12 | No |

## Maschio 216

Verifiche condotte secondo D.M. 17-01-18 (N.T.C.)

### Dati geometrici

| X ini. | Y ini. | X fin. | Y fin. | Quota i. | Quota.s | l | Sp. | h netta | h ini. | h fin. | a | a.s.,sx | a.s.,dx |
|---|---|---|---|---|---|---|---|---|---|---|---|---|---|
| -1375.3 | -335.9 | -1543.3 | -335.9 | L6 | F1 | 168 | 28 | 319.1 | 319.1 | 319.2 | | | |

### Caratteristiche del materiale

(Circolare 7 21-01-19 C8.5.I) Muratura in mattoni pieni e malta di calce LC2_Corti

| fb | fk | fvk0 | fmedio | τ0 | fv0 | μ | ϕ | fv,lim | E | G | FC |
|---|---|---|---|---|---|---|---|---|---|---|---|
| 60 | | | 34.5 | 0.9 | 2 | 0.58 | 0.77 | 3.25 | 32000 | 12800 | 1.2 |

### Verifica a pressoflessione nel piano secondo D.M. 17-01-18 NTC §7.8.2.2.1 in combinazioni non sismiche, γM = 3

| Comb. | Quota | N | M | σ0 | Mu | c.s. | Verifica |
|---|---|---|---|---|---|---|---|
| SLU 74 | 1248 | -17740 | -133536 | 3.77 | 800265 | 5.993 | Si |
| SLU 74 | 1458 | -6625 | 102916 | 1.41 | 460305 | 4.473 | Si |
| SLU 32 | 1248 | -14126 | -122310 | 3 | 749148 | 6.125 | Si |
| SLU 32 | 1458 | -5455 | 86785 | 1.16 | 393014 | 4.529 | Si |
| SLU 33 | 1248 | -14070 | -129703 | 2.99 | 747894 | 5.766 | Si |
| SLU 33 | 1458 | -5436 | 87176 | 1.16 | 391849 | 4.495 | Si |
| SLU 40 | 1248 | -13139 | -160752 | 2.79 | 725229 | 4.511 | Si |
| SLU 40 | 1458 | -4645 | 74801 | 0.99 | 342867 | 4.584 | Si |
| SLU 78 | 1248 | -18542 | -116996 | 3.94 | 803845 | 6.871 | Si |
| SLU 78 | 1458 | -7226 | 109173 | 1.54 | 492545 | 4.512 | Si |
| SLU 67 | 1248 | -17568 | -106789 | 3.73 | 799127 | 7.483 | Si |
| SLU 67 | 1458 | -6574 | 101151 | 1.4 | 457491 | 4.523 | Si |
| SLU 77 | 1248 | -18599 | -109602 | 3.95 | 803990 | 7.336 | Si |
| SLU 77 | 1458 | -7246 | 108782 | 1.54 | 493558 | 4.537 | Si |
| SLU 75 | 1248 | -17684 | -140930 | 3.76 | 799906 | 5.676 | Si |
| SLU 75 | 1458 | -6606 | 103307 | 1.4 | 459239 | 4.445 | Si |
| SLU 82 | 1248 | -16753 | -171979 | 3.56 | 791988 | 4.605 | Si |
| SLU 82 | 1458 | -5815 | 90931 | 1.24 | 414316 | 4.556 | Si |
| SLU 66 | 1248 | -17624 | -99395 | 3.75 | 799514 | 8.044 | Si |
| SLU 66 | 1458 | -6594 | 100760 | 1.4 | 458559 | 4.551 | Si |

### Verifica a pressoflessione nel piano secondo D.M. 17-01-18 NTC §7.8.2.2.1 in combinazioni sismiche, γM = 2

| Comb. | Quota | N | M | σ0 | Mu | c.s. | Verifica |
|---|---|---|---|---|---|---|---|
| SLV 16 | 1248 | -5993 | -711424 | 0 | 0 | 0 | No, e>l/2 |
| SLV 16 | 1458 | -3443 | 168818 | 0.73 | 271880 | 1.61 | Si |
| SLV 2 | 1248 | -19478 | 527519 | 4.14 | 1081681 | 2.051 | Si |
| SLV 2 | 1458 | -5334 | -36634 | 1.13 | 406443 | 11.095 | Si |
| SLV 13 | 1248 | -7413 | -652216 | 0 | 0 | 0 | No, e>l/2 |
| SLV 13 | 1458 | -4186 | 205879 | 0.89 | 326014 | 1.584 | Si |
| SLD 16 | 1248 | -9872 | -355868 | 2.1 | 686837 | 1.93 | Si |
| SLD 16 | 1458 | -3991 | 110391 | 0.85 | 311964 | 2.826 | Si |
| SLV 12 | 1248 | -8558 | -367592 | 1.82 | 611842 | 1.664 | Si |

| Comb. | Quota | N | M | σ0 | Mu | c.s. | Verifica |
|---|---|---|---|---|---|---|---|
| SLV 12 | 1458 | -2978 | 40700 | 0.63 | 237161 | 5.827 | Si |
| SLD 15 | 1248 | -9872 | -355868 | 2.1 | 686837 | 1.93 | Si |
| SLD 15 | 1458 | -3991 | 110391 | 0.85 | 311964 | 2.826 | Si |
| SLV 14 | 1248 | -7413 | -652216 | 0 | 0 | 0 | No, e>l/2 |
| SLV 14 | 1458 | -4186 | 205879 | 0.89 | 326014 | 1.584 | Si |
| SLV 15 | 1248 | -5993 | -711424 | 0 | 0 | 0 | No, e>l/2 |
| SLV 15 | 1458 | -3443 | 168818 | 0.73 | 271880 | 1.61 | Si |
| SLV 11 | 1248 | -8558 | -367592 | 1.82 | 611842 | 1.664 | Si |
| SLV 11 | 1458 | -2978 | 40700 | 0.63 | 237161 | 5.827 | Si |
| SLV 1 | 1248 | -19478 | 527519 | 4.14 | 1081681 | 2.051 | Si |
| SLV 1 | 1458 | -5334 | -36634 | 1.13 | 406443 | 11.095 | Si |

Verifica a taglio nel piano secondo D.M. 17-01-18 (N.T.C.) §7.8.2.2.2 con rottura per scorrimento in combinazioni non sismiche, γM = 3

| Comb. | Quota | N | V par | M | σ0 | σN | l' | fvd | Vt scorr. | Vt fess.diag. | Vt,lim | c.s. | Verifica |
|---|---|---|---|---|---|---|---|---|---|---|---|---|---|
| SLU 45 | 1248 | -17166 | 2645 | -68052 | | 3.65 | 168 | 1.04 | 4902 | | | 1.85 | Si |
| SLU 45 | 1458 | -6258 | 2644 | 92565 | | 1.33 | 168 | 0.73 | 3448 | | | 1.3 | Si |
| SLU 72 | 1248 | -18305 | 2718 | -75338 | | 3.89 | 168 | 1.07 | 5054 | | | 1.86 | Si |
| SLU 72 | 1458 | -7010 | 2738 | 99585 | | 1.49 | 168 | 0.75 | 3548 | | | 1.3 | Si |
| SLU 71 | 1248 | -18361 | 2763 | -67945 | | 3.9 | 168 | 1.08 | 5062 | | | 1.83 | Si |
| SLU 71 | 1458 | -7030 | 2795 | 99193 | | 1.49 | 168 | 0.75 | 3551 | | | 1.27 | Si |
| SLU 59 | 1248 | -17962 | 2732 | -78136 | | 3.82 | 168 | 1.06 | 5008 | | | 1.83 | Si |
| SLU 59 | 1458 | -6707 | 2744 | 93546 | | 1.43 | 168 | 0.75 | 3508 | | | 1.28 | Si |
| SLU 47 | 1248 | -16950 | 2666 | -72858 | | 3.6 | 168 | 1.04 | 4873 | | | 1.83 | Si |
| SLU 47 | 1458 | -6041 | 2648 | 85784 | | 1.28 | 168 | 0.73 | 3419 | | | 1.29 | Si |
| SLU 48 | 1248 | -18024 | 2819 | -44118 | | 3.83 | 168 | 1.07 | 5017 | | | 1.78 | Si |
| SLU 48 | 1458 | -6879 | 2840 | 98432 | | 1.46 | 168 | 0.75 | 3530 | | | 1.24 | Si |
| SLU 49 | 1248 | -17968 | 2775 | -51511 | | 3.82 | 168 | 1.06 | 5009 | | | 1.81 | Si |
| SLU 49 | 1458 | -6859 | 2783 | 98823 | | 1.46 | 168 | 0.75 | 3528 | | | 1.27 | Si |
| SLU 50 | 1248 | -17903 | 2914 | -36601 | | 3.81 | 168 | 1.06 | 5000 | | | 1.72 | Si |
| SLU 50 | 1458 | -6694 | 2938 | 90999 | | 1.42 | 168 | 0.75 | 3506 | | | 1.19 | Si |
| SLU 51 | 1248 | -17846 | 2869 | -43995 | | 3.79 | 168 | 1.06 | 4993 | | | 1.74 | Si |
| SLU 51 | 1458 | -6675 | 2881 | 91390 | | 1.42 | 168 | 0.74 | 3503 | | | 1.22 | Si |
| SLU 58 | 1248 | -18019 | 2776 | -70742 | | 3.83 | 168 | 1.07 | 5016 | | | 1.81 | Si |
| SLU 58 | 1458 | -6726 | 2801 | 93155 | | 1.43 | 168 | 0.75 | 3510 | | | 1.25 | Si |

Verifica a taglio nel piano secondo D.M. 17-01-18 (N.T.C.) §7.8.2.2.2 con rottura per scorrimento in combinazioni sismiche, γM = 2

| Comb. | Quota | N | V par | M | σ0 | σN | l' | fvd | Vt scorr. | Vt fess.diag. | Vt,lim | c.s. | Verifica |
|---|---|---|---|---|---|---|---|---|---|---|---|---|---|
| SLV 4 | 1248 | -18057 | 8218 | 468311 | | 3.84 | 168 | 1.6 | 7531 | | | 0.92 | No, Vu<V |
| SLV 4 | 1458 | -4590 | 6016 | -73695 | | 0.98 | 168 | 1.03 | 4838 | | | 0.8 | No, Vu<V |
| SLV 3 | 1248 | -18057 | 8218 | 468311 | | 3.84 | 168 | 1.6 | 7531 | | | 0.92 | No, Vu<V |
| SLV 3 | 1458 | -4590 | 6016 | -73695 | | 0.98 | 168 | 1.03 | 4838 | | | 0.8 | No, Vu<V |
| SLD 1 | 1248 | -15598 | 4738 | 171963 | | 3.32 | 168 | 1.5 | 7040 | | | 1.49 | Si |
| SLD 1 | 1458 | -4785 | 3773 | 21793 | | 1.02 | 168 | 1.04 | 4877 | | | 1.29 | Si |
| SLV 14 | 1248 | -7413 | -4515 | -652216 | | 0 | 0 | 0.83 | 0 | | | 0 | No, Vu<V |
| SLV 14 | 1458 | -4186 | -2334 | 205879 | | 1.43 | 104.45 | 1.12 | 3274 | | | 1.4 | Si |
| SLV 13 | 1248 | -7413 | -4515 | -652216 | | 0 | 0 | 0.83 | 0 | | | 0 | No, Vu<V |
| SLV 13 | 1458 | -4186 | -2334 | 205879 | | 1.43 | 104.45 | 1.12 | 3274 | | | 1.4 | Si |
| SLV 15 | 1248 | -5993 | -4898 | -711424 | | 0 | 0 | 0.83 | 0 | | | 0 | No, Vu<V |
| SLV 15 | 1458 | -3443 | -2711 | 168818 | | 1.17 | 104.9 | 1.07 | 3136 | | | 1.16 | Si |
| SLD 2 | 1248 | -15598 | 4738 | 171963 | | 3.32 | 168 | 1.5 | 7040 | | | 1.49 | Si |
| SLD 2 | 1458 | -4785 | 3773 | 21793 | | 1.02 | 168 | 1.04 | 4877 | | | 1.29 | Si |
| SLV 1 | 1248 | -19478 | 8602 | 527519 | | 4.14 | 168 | 1.63 | 7644 | | | 0.89 | No, Vu<V |
| SLV 1 | 1458 | -5334 | 6394 | -36634 | | 1.13 | 168 | 1.06 | 4987 | | | 0.78 | No, Vu<V |
| SLV 16 | 1248 | -5993 | -4898 | -711424 | | 0 | 0 | 0.83 | 0 | | | 0 | No, Vu<V |
| SLV 16 | 1458 | -3443 | -2711 | 168818 | | 1.17 | 104.9 | 1.07 | 3136 | | | 1.16 | Si |
| SLV 2 | 1248 | -19478 | 8602 | 527519 | | 4.14 | 168 | 1.63 | 7644 | | | 0.89 | No, Vu<V |
| SLV 2 | 1458 | -5334 | 6394 | -36634 | | 1.13 | 168 | 1.06 | 4987 | | | 0.78 | No, Vu<V |

Verifica a pressoflessione fuori piano D.M. 17-01-18 (N.T.C.)

quota 1407.5 Wa 0.05 denominatore 8 γM = 2

| Comb. | fd | Sa | σ0 | N | M | Mc | Coeff.s. | Verifica |
|---|---|---|---|---|---|---|---|---|
| SLV 16 | 14 | 0.53 | 0.79 | -3719 | 19471 | 48699 | 2.5 | Si |
| SLV 15 | 14 | 0.53 | 0.79 | -3719 | 19471 | 48699 | 2.5 | Si |
| SLV 11 | 14 | 0.53 | 0.9 | -4253 | 19471 | 55133 | 2.83 | Si |
| SLV 12 | 14 | 0.53 | 0.9 | -4253 | 19471 | 55133 | 2.83 | Si |
| SLV 13 | 14 | 0.53 | 0.92 | -4328 | 19471 | 56030 | 2.88 | Si |
| SLV 14 | 14 | 0.53 | 0.92 | -4328 | 19471 | 56030 | 2.88 | Si |
| SLV 7 | 14 | 0.53 | 1.13 | -5319 | 19471 | 67574 | 3.47 | Si |
| SLV 8 | 14 | 0.53 | 1.13 | -5319 | 19471 | 67574 | 3.47 | Si |
| SLV 10 | 14 | 0.53 | 1.34 | -6282 | 19471 | 78339 | 4.02 | Si |
| SLV 9 | 14 | 0.53 | 1.34 | -6282 | 19471 | 78339 | 4.02 | Si |

Verifica dei meccanismi locali di collasso con analisi cinematica lineare

forza di aggancio al piano = 0 quota mezzeria = 1407.5 Wa = 0.05 Ta = 0.0607

| Comb. | N top | N base | V orto | α0 | M* | e* | a0* | aLim | Verifica |
|---|---|---|---|---|---|---|---|---|---|
| SLV 8 | -1784 | -12177 | 271 | 0 | 4.073 | 0.891 | 0 | 1543.529 | No |
| SLV 5 | -575 | -16912 | -253 | 0 | 3.024 | 0.905 | 0 | 1543.529 | No |
| SLV 1 | -1124 | -19478 | -181 | 0 | 3.47 | 0.89 | 0 | 893.76 | No |
| SLV 6 | -575 | -16912 | -253 | 0 | 3.024 | 0.905 | 0 | 1543.529 | No |
| SLV 10 | -467 | -13293 | -158 | 0 | 2.949 | 0.913 | 0 | 1543.529 | No |
| SLV 11 | -1676 | -8558 | 366 | 0 | 3.972 | 0.89 | 0 | 1543.529 | No |
| SLV 7 | -1784 | -12177 | 271 | 0 | 4.073 | 0.891 | 0 | 1543.529 | No |
| SLV 9 | -467 | -13293 | -158 | 0 | 2.949 | 0.913 | 0 | 1543.529 | No |
| SLV 12 | -1676 | -8558 | 366 | 0 | 3.972 | 0.89 | 0 | 1543.529 | No |
| SLV 2 | -1124 | -19478 | -181 | 0 | 3.47 | 0.89 | 0 | 893.76 | No |

### Tabella dei coefficienti di sicurezza minimi

| Stato limite | Coeff.s. | Comb. | Verifica |
|---|---|---|---|
| PF_SLU | 4.445 | SLU 75 | Si |
| V_SLU | 1.193 | SLU 50 | Si |
| PF_SLV | 0 | SLV 13 | No |
| V_SLV | 0 | SLV 13 | No |
| PFFP_SLV | 2.501 | SLV 15 | Si |
| R_SLV | 0 | SLV 1 | No |

## Maschio 217

Verifiche condotte secondo D.M. 17-01-18 (N.T.C.)

### Dati geometrici

| X ini. | Y ini. | X fin. | Y fin. | Quota i. | Quota.s | l | Sp. | h netta | h ini. | h fin. | a | a.s.,sx | a.s.,dx |
|---|---|---|---|---|---|---|---|---|---|---|---|---|---|
| -1375.3 | -485.9 | -1375.3 | -349.9 | L6 | F1 | 135.9 | 28 | 281.2 | 249.8 | 312.6 | | | |

### Caratteristiche del materiale

(Circolare 7 21-01-19 C8.5.I) Muratura in mattoni pieni e malta di calce LC2_Corti

| fb | fk | fvk0 | fmedio | τ0 | fv0 | μ | ϕ | fv,lim | E | G | FC |
|---|---|---|---|---|---|---|---|---|---|---|---|
| 60 | | | 34.5 | 0.9 | 2 | 0.58 | 0.77 | 3.25 | 32000 | 12800 | 1.2 |

### Verifica a pressoflessione nel piano secondo D.M. 17-01-18 NTC §7.8.2.2.1 in combinazioni non sismiche, γM = 3

| Comb. | Quota | N | M | σ0 | Mu | c.s. | Verifica |
|---|---|---|---|---|---|---|---|
| SLU 52 | 1248 | -914 | -4749 | 0.24 | 60303 | 12.697 | Si |
| SLU 52 | 1498 | -457 | 8865 | 0.12 | 30605 | 3.452 | Si |
| SLU 43 | 1248 | -831 | -1993 | 0.22 | 54964 | 27.574 | Si |
| SLU 43 | 1498 | -412 | 8687 | 0.11 | 27641 | 3.182 | Si |
| SLU 44 | 1248 | -891 | -4989 | 0.23 | 58821 | 11.791 | Si |
| SLU 44 | 1498 | -445 | 9027 | 0.12 | 29825 | 3.304 | Si |
| SLU 1 | 1248 | -654 | -1896 | 0.17 | 43490 | 22.941 | Si |
| SLU 1 | 1498 | -322 | 6478 | 0.08 | 21661 | 3.344 | Si |
| SLU 2 | 1248 | -714 | -4891 | 0.19 | 47394 | 9.69 | Si |
| SLU 2 | 1498 | -355 | 6818 | 0.09 | 23858 | 3.499 | Si |
| SLU 64 | 1248 | -886 | -3367 | 0.23 | 58482 | 17.368 | Si |
| SLU 64 | 1498 | -431 | 7912 | 0.11 | 28895 | 3.652 | Si |
| SLU 61 | 1248 | -900 | -3449 | 0.24 | 59400 | 17.223 | Si |
| SLU 61 | 1498 | -449 | 8660 | 0.12 | 30067 | 3.472 | Si |
| SLU 18 | 1248 | -687 | -1554 | 0.18 | 45640 | 29.371 | Si |
| SLU 18 | 1498 | -339 | 6247 | 0.09 | 22785 | 3.647 | Si |
| SLU 10 | 1248 | -737 | -4652 | 0.19 | 48894 | 10.511 | Si |
| SLU 10 | 1498 | -367 | 6656 | 0.1 | 24643 | 3.702 | Si |
| SLU 60 | 1248 | -864 | -1652 | 0.23 | 57088 | 34.566 | Si |
| SLU 60 | 1498 | -429 | 8456 | 0.11 | 28758 | 3.401 | Si |

### Verifica a pressoflessione nel piano secondo D.M. 17-01-18 NTC §7.8.2.2.1 in combinazioni sismiche, γM = 2

| Comb. | Quota | N | M | σ0 | Mu | c.s. | Verifica |
|---|---|---|---|---|---|---|---|
| SLD 10 | 1248 | -658 | 8425 | 0.17 | 44075 | 5.231 | Si |
| SLD 10 | 1498 | 86 | -4292 | 0 | 0 | 0 | No, Trazione |
| SLV 4 | 1248 | -280 | 29129 | 0 | 0 | 0 | No, e>l/2 |
| SLV 4 | 1498 | -543 | 20523 | 0.14 | 36506 | 1.779 | Si |
| SLV 1 | 1248 | -169 | 53536 | 0 | 0 | 0 | No, e>l/2 |
| SLV 1 | 1498 | 114 | 5662 | 0 | 0 | 0 | No, Trazione |
| SLD 6 | 1248 | -541 | 19517 | 0.14 | 36320 | 1.861 | Si |
| SLD 6 | 1498 | 116 | -2567 | 0 | 0 | 0 | No, Trazione |
| SLV 3 | 1248 | -280 | 29129 | 0 | 0 | 0 | No, e>l/2 |
| SLV 3 | 1498 | -543 | 20523 | 0.14 | 36506 | 1.779 | Si |
| SLV 9 | 1248 | -627 | 25394 | 0.16 | 42027 | 1.655 | Si |
| SLV 9 | 1498 | 731 | -20623 | 0 | 0 | 0 | No, Trazione |
| SLV 6 | 1248 | -356 | 51525 | 0 | 0 | 0 | No, e>l/2 |
| SLV 6 | 1498 | 801 | -16493 | 0 | 0 | 0 | No, Trazione |
| SLV 2 | 1248 | -169 | 53536 | 0 | 0 | 0 | No, e>l/2 |
| SLV 2 | 1498 | 114 | 5662 | 0 | 0 | 0 | No, Trazione |
| SLD 9 | 1248 | -658 | 8425 | 0.17 | 44075 | 5.231 | Si |
| SLD 9 | 1498 | 86 | -4292 | 0 | 0 | 0 | No, Trazione |
| SLV 5 | 1248 | -356 | 51525 | 0 | 0 | 0 | No, e>l/2 |
| SLV 5 | 1498 | 801 | -16493 | 0 | 0 | 0 | No, Trazione |

### Verifica a taglio nel piano secondo D.M. 17-01-18 (N.T.C.) §7.8.2.2.2 con rottura per scorrimento in combinazioni non sismiche, γM = 3

| Comb. | Quota | N | V par | M | σ0 | σN | l' | fvd | Vt scorr. | Vt fess.diag. | Vt,lim | c.s. | Verifica |
|---|---|---|---|---|---|---|---|---|---|---|---|---|---|
| SLU 77 | 1248 | -982 | 453 | -4583 | | 0.26 | 135.93 | 0.59 | 2245 | | | 4.96 | Si |
| SLU 77 | 1498 | -456 | 115 | 4883 | | 0.12 | 135.93 | 0.57 | 2175 | | | 18.93 | Si |
| SLU 60 | 1248 | -864 | 450 | -1652 | | 0.23 | 135.93 | 0.59 | 2230 | | | 4.96 | Si |
| SLU 60 | 1498 | -429 | 101 | 8456 | | 0.11 | 135.93 | 0.57 | 2172 | | | 21.5 | Si |
| SLU 56 | 1248 | -927 | 456 | -3209 | | 0.24 | 135.93 | 0.59 | 2238 | | | 4.91 | Si |
| SLU 56 | 1498 | -437 | 151 | 5658 | | 0.11 | 135.93 | 0.57 | 2173 | | | 14.43 | Si |
| SLU 53 | 1248 | -892 | 449 | -2465 | | 0.23 | 135.93 | 0.59 | 2233 | | | 4.98 | Si |
| SLU 53 | 1498 | -435 | 118 | 7342 | | 0.11 | 135.93 | 0.57 | 2173 | | | 18.36 | Si |
| SLU 62 | 1248 | -899 | 457 | -2395 | | 0.24 | 135.93 | 0.59 | 2234 | | | 4.89 | Si |
| SLU 62 | 1498 | -431 | 133 | 6771 | | 0.11 | 135.93 | 0.57 | 2172 | | | 16.31 | Si |
| SLU 58 | 1248 | -924 | 459 | -3242 | | 0.24 | 135.93 | 0.59 | 2238 | | | 4.88 | Si |
| SLU 58 | 1498 | -428 | 172 | 5156 | | 0.11 | 135.93 | 0.57 | 2172 | | | 12.62 | Si |
| SLU 81 | 1248 | -919 | 447 | -3026 | | 0.24 | 135.93 | 0.59 | 2237 | | | 5.01 | Si |
| SLU 81 | 1498 | -448 | 65 | 7681 | | 0.12 | 135.93 | 0.57 | 2174 | | | 33.26 | Si |
| SLU 50 | 1248 | -900 | 446 | -3481 | | 0.24 | 135.93 | 0.59 | 2235 | | | 5.01 | Si |

| Comb. | Quota | N | V par | M | σ0 | σN | l' | fvd | Vt scorr. | Vt fess.diag. | Vt,lim | c.s. | Verifica |
|---|---|---|---|---|---|---|---|---|---|---|---|---|---|
| SLU 50 | 1498 | -416 | 188 | 5318 | | 0.11 | 135.93 | 0.57 | 2170 | | | 11.57 | Si |
| SLU 79 | 1248 | -978 | 456 | -4616 | | 0.26 | 135.93 | 0.59 | 2245 | | | 4.93 | Si |
| SLU 79 | 1498 | -447 | 136 | 4381 | | 0.12 | 135.93 | 0.57 | 2174 | | | 15.94 | Si |
| SLU 83 | 1248 | -954 | 454 | -3769 | | 0.25 | 135.93 | 0.59 | 2242 | | | 4.94 | Si |
| SLU 83 | 1498 | -450 | 98 | 5996 | | 0.12 | 135.93 | 0.57 | 2174 | | | 22.29 | Si |

### Verifica a taglio nel piano secondo D.M. 17-01-18 (N.T.C.) §7.8.2.2.2 con rottura per scorrimento in combinazioni sismiche, γM = 2

| Comb. | Quota | N | V par | M | σ0 | σN | l' | fvd | Vt scorr. | Vt fess.diag. | Vt,lim | c.s. | Verifica |
|---|---|---|---|---|---|---|---|---|---|---|---|---|---|
| SLV 2 | 1248 | -169 | 1044 | 53536 | | 0 | 0 | 0.83 | 0 | | | 0 | No, Vu<V |
| SLV 2 | 1498 | 114 | 1480 | 5662 | | 0 | 0 | 0.83 | 0 | | | 0 | No, Vu<V |
| SLD 9 | 1248 | -658 | 518 | 8425 | | 0.17 | 135.93 | 0.87 | 3303 | | | 6.37 | Si |
| SLD 9 | 1498 | 86 | 528 | -4292 | | 0 | 0 | 0.83 | 0 | | | 0 | No, Vu<V |
| SLD 10 | 1248 | -658 | 518 | 8425 | | 0.17 | 135.93 | 0.87 | 3303 | | | 6.37 | Si |
| SLD 10 | 1498 | 86 | 528 | -4292 | | 0 | 0 | 0.83 | 0 | | | 0 | No, Vu<V |
| SLV 9 | 1248 | -627 | 812 | 25394 | | 0.27 | 82.36 | 0.89 | 2047 | | | 2.52 | Si |
| SLV 9 | 1498 | 731 | 1246 | -20623 | | 0 | 0 | 0.83 | 0 | | | 0 | No, Vu<V |
| SLV 6 | 1248 | -356 | 1124 | 51525 | | 0 | 0 | 0.83 | 0 | | | 0 | No, Vu<V |
| SLV 6 | 1498 | 801 | 1828 | -16493 | | 0 | 0 | 0.83 | 0 | | | 0 | No, Vu<V |
| SLV 4 | 1248 | -280 | 664 | 29129 | | 0 | 0 | 0.83 | 0 | | | 0 | No, Vu<V |
| SLV 4 | 1498 | -543 | 601 | 20523 | | 0.21 | 90.61 | 0.88 | 2223 | | | 3.7 | Si |
| SLV 3 | 1248 | -280 | 664 | 29129 | | 0 | 0 | 0.83 | 0 | | | 0 | No, Vu<V |
| SLV 3 | 1498 | -543 | 601 | 20523 | | 0.21 | 90.61 | 0.88 | 2223 | | | 3.7 | Si |
| SLV 5 | 1248 | -356 | 1124 | 51525 | | 0 | 0 | 0.83 | 0 | | | 0 | No, Vu<V |
| SLV 5 | 1498 | 801 | 1828 | -16493 | | 0 | 0 | 0.83 | 0 | | | 0 | No, Vu<V |
| SLD 6 | 1248 | -541 | 652 | 19517 | | 0.2 | 95.6 | 0.87 | 2339 | | | 3.59 | Si |
| SLD 6 | 1498 | 116 | 775 | -2567 | | 0 | 0 | 0.83 | 0 | | | 0 | No, Vu<V |
| SLV 1 | 1248 | -169 | 1044 | 53536 | | 0 | 0 | 0.83 | 0 | | | 0 | No, Vu<V |
| SLV 1 | 1498 | 114 | 1480 | 5662 | | 0 | 0 | 0.83 | 0 | | | 0 | No, Vu<V |

### Verifica a pressoflessione fuori piano D.M. 17-01-18 (N.T.C.)

quota 1372.9 Wa 0.05 denominatore 8 γM = 2

| Comb. | fd | Sa | σ0 | N | M | Mc | Coeff.s. | Verifica |
|---|---|---|---|---|---|---|---|---|
| SLV 4 | 14 | 0.52 | 0 | -427 | 12350 | 0 | 0 | No, e>t/2 |
| SLV 6 | 14 | 0.52 | 0 | -43 | 12350 | 0 | 0 | No, e>t/2 |
| SLV 3 | 14 | 0.52 | 0 | -427 | 12350 | 0 | 0 | No, e>t/2 |
| SLV 2 | 14 | 0.52 | 0 | 38 | 12350 | 0 | 0 | No, Trazione |
| SLV 9 | 14 | 0.52 | 0 | -576 | 12350 | 0 | 0 | No, e>t/2 |
| SLV 5 | 14 | 0.52 | 0 | -43 | 12350 | 0 | 0 | No, e>t/2 |
| SLV 1 | 14 | 0.52 | 0 | 38 | 12350 | 0 | 0 | No, Trazione |
| SLV 10 | 14 | 0.52 | 0 | -576 | 12350 | 0 | 0 | No, e>t/2 |
| SLV 8 | 14 | 0.52 | 0.42 | -1591 | 12350 | 21514 | 1.74 | Si |
| SLV 7 | 14 | 0.52 | 0.42 | -1591 | 12350 | 21514 | 1.74 | Si |

### Verifica dei meccanismi locali di collasso con analisi cinematica lineare

forza di aggancio al piano = 0 quota mezzeria = 1372.9 Wa = 0.05 Ta = 0.0472

| Comb. | N top | N base | V orto | α0 | M* | e* | a0* | aLim | Verifica |
|---|---|---|---|---|---|---|---|---|---|
| SLV 9 | 731 | -627 | 88 | 0 | 0 | 0 | 0 | 1134.573 | No, Trazione |
| SLV 6 | 801 | -356 | 113 | 0 | 0 | 0 | 0 | 1134.573 | No, Trazione |
| SLV 5 | 801 | -356 | 113 | 0 | 0 | 0 | 0 | 1134.573 | No, Trazione |
| SLV 2 | 114 | -169 | 78 | 0 | 0 | 0 | 0 | 739.2 | No, Trazione |
| SLV 10 | 731 | -627 | 88 | 0 | 0 | 0 | 0 | 1134.573 | No, Trazione |
| SLV 1 | 114 | -169 | 78 | 0 | 0 | 0 | 0 | 739.2 | No, Trazione |
| SLV 11 | -1462 | -996 | -98 | 0.029 | 3.085 | 0.893 | 47.394 | 1134.573 | No |
| SLV 12 | -1462 | -996 | -98 | 0.029 | 3.085 | 0.893 | 47.394 | 1134.573 | No |
| SLV 8 | -1392 | -725 | -73 | 0.039 | 3.018 | 0.892 | 63.935 | 1134.573 | No |
| SLV 7 | -1392 | -725 | -73 | 0.039 | 3.018 | 0.892 | 63.935 | 1134.573 | No |

### Tabella dei coefficienti di sicurezza minimi

| Stato limite | Coeff.s. | Comb. | Verifica |
|---|---|---|---|
| PF_SLU | 3.182 | SLU 43 | Si |
| V_SLU | 4.878 | SLU 58 | Si |
| PF_SLV | 0 | SLV 10 | No |
| V_SLV | 0 | SLD 5 | No |
| PFFP_SLV | 0 | SLV 2 | No |
| R_SLV | 0 | SLV 10 | No |

## Maschio 218

Verifiche condotte secondo D.M. 17-01-18 (N.T.C.)

### Dati geometrici

| X ini. | Y ini. | X fin. | Y fin. | Quota i. | Quota.s | l | Sp. | h netta | h ini. | h fin. | a | a.s.,sx | a.s.,dx |
|---|---|---|---|---|---|---|---|---|---|---|---|---|---|
| -944.8 | -335.9 | -1100.3 | -335.9 | L6 | F1 | 155.5 | 28 | 318.8 | 318.8 | 318.9 | | | |

### Caratteristiche del materiale

(Circolare 7 21-01-19 C8.5.I) Muratura in mattoni pieni e malta di calce LC2_Corti

| fb | fk | fvk0 | fmedio | τ0 | fv0 | μ | ϕ | fv,lim | E | G | FC |
|---|---|---|---|---|---|---|---|---|---|---|---|
| 60 | | | 34.5 | 0.9 | 2 | 0.58 | 0.77 | 3.25 | 32000 | 12800 | 1.2 |

### Verifica a pressoflessione nel piano secondo D.M. 17-01-18 NTC §7.8.2.2.1 in combinazioni non sismiche, γM = 3

| Comb. | Quota | N | M | σ0 | Mu | c.s. | Verifica |
|---|---|---|---|---|---|---|---|
| SLU 2 | 1248 | -2709 | 21551 | 0.62 | 194523 | 9.026 | Si |
| SLU 2 | 1458 | -2090 | -44792 | 0.48 | 152946 | 3.415 | Si |

| Comb. | Quota | N | M | σ0 | Mu | c.s. | Verifica |
|---|---|---|---|---|---|---|---|
| SLU 73 | 1248 | -3391 | 22339 | 0.78 | 238450 | 10.674 | Si |
| SLU 73 | 1458 | -2958 | -62664 | 0.68 | 210823 | 3.364 | Si |
| SLU 65 | 1248 | -3591 | 33177 | 0.82 | 250920 | 7.563 | Si |
| SLU 65 | 1458 | -2984 | -63289 | 0.69 | 212480 | 3.357 | Si |
| SLU 61 | 1248 | -3233 | 8935 | 0.74 | 228465 | 25.57 | Si |
| SLU 61 | 1458 | -2544 | -53697 | 0.58 | 183611 | 3.419 | Si |
| SLU 82 | 1248 | -3321 | 17271 | 0.76 | 234035 | 13.551 | Si |
| SLU 82 | 1458 | -2948 | -61929 | 0.68 | 210178 | 3.394 | Si |
| SLU 23 | 1248 | -2797 | 29887 | 0.64 | 200294 | 6.702 | Si |
| SLU 23 | 1458 | -2495 | -53024 | 0.57 | 180317 | 3.401 | Si |
| SLU 44 | 1248 | -3503 | 24841 | 0.8 | 245454 | 9.881 | Si |
| SLU 44 | 1458 | -2580 | -55056 | 0.59 | 185976 | 3.378 | Si |
| SLU 52 | 1248 | -3303 | 14003 | 0.76 | 232908 | 16.633 | Si |
| SLU 52 | 1458 | -2554 | -54432 | 0.59 | 184273 | 3.385 | Si |
| SLU 10 | 1248 | -2509 | 10713 | 0.58 | 181281 | 16.921 | Si |
| SLU 10 | 1458 | -2065 | -44168 | 0.47 | 151188 | 3.423 | Si |
| SLU 31 | 1248 | -2597 | 19050 | 0.6 | 187130 | 9.823 | Si |
| SLU 31 | 1458 | -2469 | -52400 | 0.57 | 178605 | 3.408 | Si |

Verifica a pressoflessione nel piano secondo D.M. 17-01-18 NTC §7.8.2.2.1 in combinazioni sismiche, γM = 2

| Comb. | Quota | N | M | σ0 | Mu | c.s. | Verifica |
|---|---|---|---|---|---|---|---|
| SLV 3 | 1248 | -1525 | 175255 | 0 | 0 | 0 | No, e>l/2 |
| SLV 3 | 1458 | -3725 | -179799 | 0.86 | 269351 | 1.498 | Si |
| SLV 13 | 1248 | -3906 | -135699 | 0.9 | 281416 | 2.074 | Si |
| SLV 13 | 1458 | -677 | 88207 | 0 | 0 | 0 | No, e>l/2 |
| SLV 2 | 1248 | -2539 | 162463 | 0.58 | 187981 | 1.157 | Si |
| SLV 2 | 1458 | -4249 | -203219 | 0.98 | 304002 | 1.496 | Si |
| SLV 8 | 1248 | -821 | 85823 | 0 | 0 | 0 | No, e>l/2 |
| SLV 8 | 1458 | -1863 | -50476 | 0.43 | 139789 | 2.769 | Si |
| SLV 4 | 1248 | -1525 | 175255 | 0 | 0 | 0 | No, e>l/2 |
| SLV 4 | 1458 | -3725 | -179799 | 0.86 | 269351 | 1.498 | Si |
| SLV 1 | 1248 | -2539 | 162463 | 0.58 | 187981 | 1.157 | Si |
| SLV 1 | 1458 | -4249 | -203219 | 0.98 | 304002 | 1.496 | Si |
| SLV 16 | 1248 | -2892 | -122907 | 0.66 | 212659 | 1.73 | Si |
| SLV 16 | 1458 | -153 | 111627 | 0 | 0 | 0 | No, e>l/2 |
| SLV 15 | 1248 | -2892 | -122907 | 0.66 | 212659 | 1.73 | Si |
| SLV 15 | 1458 | -153 | 111627 | 0 | 0 | 0 | No, e>l/2 |
| SLV 7 | 1248 | -821 | 85823 | 0 | 0 | 0 | No, e>l/2 |
| SLV 7 | 1458 | -1863 | -50476 | 0.43 | 139789 | 2.769 | Si |
| SLV 14 | 1248 | -3906 | -135699 | 0.9 | 281416 | 2.074 | Si |
| SLV 14 | 1458 | -677 | 88207 | 0 | 0 | 0 | No, e>l/2 |

Verifica a taglio nel piano secondo D.M. 17-01-18 (N.T.C.) §7.8.2.2.2 con rottura per scorrimento in combinazioni non sismiche, γM = 3

| Comb. | Quota | N | V par | M | σ0 | σN | l' | fvd | Vt scorr. | Vt fess.diag. | Vt,lim | c.s. | Verifica |
|---|---|---|---|---|---|---|---|---|---|---|---|---|---|
| SLU 77 | 1248 | -4596 | 1140 | 8823 | | 1.06 | 155.5 | 0.7 | 3032 | | | 2.66 | Si |
| SLU 77 | 1458 | -4439 | 1079 | -70953 | | 1.02 | 155.5 | 0.69 | 3011 | | | 2.79 | Si |
| SLU 67 | 1248 | -4228 | 1120 | 27190 | | 0.97 | 155.5 | 0.69 | 2983 | | | 2.66 | Si |
| SLU 67 | 1458 | -3815 | 1091 | -71116 | | 0.88 | 155.5 | 0.67 | 2928 | | | 2.68 | Si |
| SLU 75 | 1248 | -4028 | 1133 | 16352 | | 0.93 | 155.5 | 0.68 | 2956 | | | 2.61 | Si |
| SLU 75 | 1458 | -3789 | 1096 | -70492 | | 0.87 | 155.5 | 0.67 | 2924 | | | 2.67 | Si |
| SLU 73 | 1248 | -3391 | 1044 | 22339 | | 0.78 | 155.5 | 0.66 | 2871 | | | 2.75 | Si |
| SLU 73 | 1458 | -2958 | 1026 | -62664 | | 0.68 | 155.5 | 0.65 | 2813 | | | 2.74 | Si |
| SLU 74 | 1248 | -4051 | 1125 | 15717 | | 0.93 | 155.5 | 0.68 | 2959 | | | 2.63 | Si |
| SLU 74 | 1458 | -3791 | 1077 | -69790 | | 0.87 | 155.5 | 0.67 | 2924 | | | 2.72 | Si |
| SLU 70 | 1248 | -4772 | 1135 | 20296 | | 1.1 | 155.5 | 0.7 | 3055 | | | 2.69 | Si |
| SLU 70 | 1458 | -4463 | 1093 | -72279 | | 1.03 | 155.5 | 0.69 | 3014 | | | 2.76 | Si |
| SLU 69 | 1248 | -4795 | 1128 | 19661 | | 1.1 | 155.5 | 0.7 | 3058 | | | 2.71 | Si |
| SLU 69 | 1458 | -4465 | 1074 | -71577 | | 1.03 | 155.5 | 0.69 | 3014 | | | 2.81 | Si |
| SLU 82 | 1248 | -3321 | 1045 | 17271 | | 0.76 | 155.5 | 0.66 | 2862 | | | 2.74 | Si |
| SLU 82 | 1458 | -2948 | 1015 | -61929 | | 0.68 | 155.5 | 0.65 | 2812 | | | 2.77 | Si |
| SLU 66 | 1248 | -4251 | 1113 | 26555 | | 0.98 | 155.5 | 0.69 | 2986 | | | 2.68 | Si |
| SLU 66 | 1458 | -3817 | 1073 | -70414 | | 0.88 | 155.5 | 0.67 | 2928 | | | 2.73 | Si |
| SLU 78 | 1248 | -4572 | 1147 | 9458 | | 1.05 | 155.5 | 0.7 | 3029 | | | 2.64 | Si |
| SLU 78 | 1458 | -4438 | 1097 | -71655 | | 1.02 | 155.5 | 0.69 | 3011 | | | 2.74 | Si |

Verifica a taglio nel piano secondo D.M. 17-01-18 (N.T.C.) §7.8.2.2.2 con rottura per scorrimento in combinazioni sismiche, γM = 2

| Comb. | Quota | N | V par | M | σ0 | σN | l' | fvd | Vt scorr. | Vt fess.diag. | Vt,lim | c.s. | Verifica |
|---|---|---|---|---|---|---|---|---|---|---|---|---|---|
| SLV 16 | 1248 | -2892 | -1954 | -122907 | | 0.98 | 105.77 | 1.03 | 3046 | | | 1.56 | Si |
| SLV 16 | 1458 | -153 | -366 | 111627 | | 0 | 0 | 0.83 | 0 | | | 0 | No, Vu<V |
| SLV 14 | 1248 | -3906 | -2773 | -135699 | | 1.08 | 129.04 | 1.05 | 3792 | | | 1.37 | Si |
| SLV 14 | 1458 | -677 | -812 | 88207 | | 0 | 0 | 0.83 | 0 | | | 0 | No, Vu<V |
| SLV 15 | 1248 | -2892 | -1954 | -122907 | | 0.98 | 105.77 | 1.03 | 3046 | | | 1.56 | Si |
| SLV 15 | 1458 | -153 | -366 | 111627 | | 0 | 0 | 0.83 | 0 | | | 0 | No, Vu<V |
| SLV 4 | 1248 | -1525 | 4258 | 175255 | | 0 | 0 | 0.83 | 0 | | | 0 | No, Vu<V |
| SLV 4 | 1458 | -3725 | 2250 | -179799 | | 1.5 | 88.45 | 1.13 | 2809 | | | 1.25 | Si |
| SLV 8 | 1248 | -821 | 3039 | 85823 | | 0 | 0 | 0.83 | 0 | | | 0 | No, Vu<V |
| SLV 8 | 1458 | -1863 | 1854 | -50476 | | 0.44 | 151.98 | 0.92 | 3919 | | | 2.11 | Si |
| SLV 7 | 1248 | -821 | 3039 | 85823 | | 0 | 0 | 0.83 | 0 | | | 0 | No, Vu<V |
| SLV 7 | 1458 | -1863 | 1854 | -50476 | | 0.44 | 151.98 | 0.92 | 3919 | | | 2.11 | Si |
| SLV 3 | 1248 | -1525 | 4258 | 175255 | | 0 | 0 | 0.83 | 0 | | | 0 | No, Vu<V |
| SLV 3 | 1458 | -3725 | 2250 | -179799 | | 1.5 | 88.45 | 1.13 | 2809 | | | 1.25 | Si |
| SLV 13 | 1248 | -3906 | -2773 | -135699 | | 1.08 | 129.04 | 1.05 | 3792 | | | 1.37 | Si |
| SLV 13 | 1458 | -677 | -812 | 88207 | | 0 | 0 | 0.83 | 0 | | | 0 | No, Vu<V |
| SLV 1 | 1248 | -2539 | 3439 | 162463 | | 2.2 | 41.28 | 1.27 | 1471 | | | 0.43 | No, Vu<V |
| SLV 1 | 1458 | -4249 | 1804 | -203219 | | 1.69 | 89.78 | 1.17 | 2945 | | | 1.63 | Si |
| SLV 2 | 1248 | -2539 | 3439 | 162463 | | 2.2 | 41.28 | 1.27 | 1471 | | | 0.43 | No, Vu<V |
| SLV 2 | 1458 | -4249 | 1804 | -203219 | | 1.69 | 89.78 | 1.17 | 2945 | | | 1.63 | Si |

### Verifica a pressoflessione fuori piano D.M. 17-01-18 (N.T.C.)

quota 1407.4 Wa 0.05 denominatore 8 γM = 2

| Comb. | fd | Sa | σ0 | N | M | Mc | Coeff.s. | Verifica |
|---|---|---|---|---|---|---|---|---|
| SLV 12 | 14 | 0.53 | 0 | -963 | 17988 | 0 | 0 | No, e>t/2 |
| SLV 13 | 14 | 0.53 | 0 | -1051 | 17988 | 0 | 0 | No, e>t/2 |
| SLV 15 | 14 | 0.53 | 0 | -500 | 17988 | 0 | 0 | No, e>t/2 |
| SLV 14 | 14 | 0.53 | 0 | -1051 | 17988 | 0 | 0 | No, e>t/2 |
| SLV 16 | 14 | 0.53 | 0 | -500 | 17988 | 0 | 0 | No, e>t/2 |
| SLV 11 | 14 | 0.53 | 0 | -963 | 17988 | 0 | 0 | No, e>t/2 |
| SLV 8 | 14 | 0.53 | 0.44 | -1910 | 17988 | 25779 | 1.43 | Si |
| SLV 7 | 14 | 0.53 | 0.44 | -1910 | 17988 | 25779 | 1.43 | Si |
| SLV 9 | 14 | 0.53 | 0.64 | -2799 | 17988 | 37126 | 2.06 | Si |
| SLV 10 | 14 | 0.53 | 0.64 | -2799 | 17988 | 37126 | 2.06 | Si |

### Verifica dei meccanismi locali di collasso con analisi cinematica lineare

forza di aggancio al piano = 0 quota mezzeria = 1407.4 Wa = 0.05 Ta = 0.0606

| Comb. | N top | N base | V orto | α0 | M* | e* | a0* | aLim | Verifica |
|---|---|---|---|---|---|---|---|---|---|
| SLV 11 | -1188 | -1231 | 324 | 0 | 3.341 | 0.889 | 0 | 1539.943 | No |
| SLV 3 | -1200 | -1525 | 256 | 0 | 3.352 | 0.889 | 0 | 892.381 | No |
| SLV 12 | -1188 | -1231 | 324 | 0 | 3.341 | 0.889 | 0 | 1539.943 | No |
| SLV 7 | -1296 | -821 | 392 | 0 | 3.439 | 0.889 | 0 | 1539.943 | No |
| SLV 9 | -554 | -4611 | -289 | 0 | 2.813 | 0.904 | 0 | 1539.943 | No |
| SLV 10 | -554 | -4611 | -289 | 0 | 2.813 | 0.904 | 0 | 1539.943 | No |
| SLV 6 | -663 | -4200 | -221 | 0 | 2.895 | 0.898 | 0 | 1539.943 | No |
| SLV 5 | -663 | -4200 | -221 | 0 | 2.895 | 0.898 | 0 | 1539.943 | No |
| SLV 8 | -1296 | -821 | 392 | 0 | 3.439 | 0.889 | 0 | 1539.943 | No |
| SLV 4 | -1200 | -1525 | 256 | 0 | 3.352 | 0.889 | 0 | 892.381 | No |

### Tabella dei coefficienti di sicurezza minimi

| Stato limite | Coeff.s. | Comb. | Verifica |
|---|---|---|---|
| PF_SLU | 3.357 | SLU 65 | Si |
| V_SLU | 2.61 | SLU 75 | Si |
| PF_SLV | 0 | SLV 3 | No |
| V_SLV | 0 | SLV 3 | No |
| PFFP_SLV | 0 | SLV 11 | No |
| R_SLV | 0 | SLV 3 | No |

## Maschio 219

Verifiche condotte secondo D.M. 17-01-18 (N.T.C.)

### Dati geometrici

| X ini. | Y ini. | X fin. | Y fin. | Quota i. | Quota.s | l | Sp. | h netta | h ini. | h fin. | a | a.s.,sx | a.s.,dx |
|---|---|---|---|---|---|---|---|---|---|---|---|---|---|
| -741.3 | -335.9 | -854.8 | -335.9 | L6 | F1 | 113.5 | 28 | 318.7 | 318.6 | 318.7 | | | |

### Caratteristiche del materiale

(Circolare 7 21-01-19 C8.5.I) Muratura in mattoni pieni e malta di calce LC2_Corti

| fb | fk | fvk0 | fmedio | τ0 | fv0 | μ | ϕ | fv,lim | E | G | FC |
|---|---|---|---|---|---|---|---|---|---|---|---|
| 60 | | | 34.5 | 0.9 | 2 | 0.58 | 0.77 | 3.25 | 32000 | 12800 | 1.2 |

### Verifica a pressoflessione nel piano secondo D.M. 17-01-18 NTC §7.8.2.2.1 in combinazioni non sismiche, γM = 3

| Comb. | Quota | N | M | σ0 | Mu | c.s. | Verifica |
|---|---|---|---|---|---|---|---|
| SLU 82 | 1338 | -3121 | -1886 | 0.98 | 155759 | 82.609 | Si |
| SLU 82 | 1518 | -1782 | -18600 | 0.56 | 94186 | 5.064 | Si |
| SLU 73 | 1338 | -3130 | -1866 | 0.98 | 156165 | 83.676 | Si |
| SLU 73 | 1518 | -1882 | -20573 | 0.59 | 99052 | 4.815 | Si |
| SLU 65 | 1338 | -3087 | -6135 | 0.97 | 154314 | 25.152 | Si |
| SLU 65 | 1518 | -1817 | -19354 | 0.57 | 95876 | 4.954 | Si |
| SLU 19 | 1338 | -2288 | 2186 | 0.72 | 118361 | 54.156 | Si |
| SLU 19 | 1518 | -1296 | -15034 | 0.41 | 69891 | 4.649 | Si |
| SLU 10 | 1338 | -2297 | 2205 | 0.72 | 118801 | 53.884 | Si |
| SLU 10 | 1518 | -1396 | -17006 | 0.44 | 74970 | 4.408 | Si |
| SLU 31 | 1338 | -2568 | -938 | 0.81 | 131257 | 139.922 | Si |
| SLU 31 | 1518 | -1674 | -18073 | 0.53 | 88860 | 4.917 | Si |
| SLU 52 | 1338 | -2860 | 1277 | 0.9 | 144375 | 113.099 | Si |
| SLU 52 | 1518 | -1605 | -19506 | 0.5 | 85416 | 4.379 | Si |
| SLU 44 | 1338 | -2817 | -2992 | 0.89 | 142474 | 47.613 | Si |
| SLU 44 | 1518 | -1539 | -18287 | 0.48 | 82160 | 4.493 | Si |
| SLU 2 | 1338 | -2254 | -2064 | 0.71 | 116793 | 56.583 | Si |
| SLU 2 | 1518 | -1331 | -15788 | 0.42 | 71654 | 4.539 | Si |
| SLU 61 | 1338 | -2851 | 1257 | 0.9 | 143958 | 114.495 | Si |
| SLU 61 | 1518 | -1505 | -17533 | 0.47 | 80428 | 4.587 | Si |

### Verifica a pressoflessione nel piano secondo D.M. 17-01-18 NTC §7.8.2.2.1 in combinazioni sismiche, γM = 2

| Comb. | Quota | N | M | σ0 | Mu | c.s. | Verifica |
|---|---|---|---|---|---|---|---|
| SLV 2 | 1338 | -1501 | 153850 | 0 | 0 | 0 | No, e>l/2 |
| SLV 2 | 1518 | -1990 | -118158 | 0 | 0 | 0 | No, e>l/2 |
| SLV 14 | 1338 | -3707 | -142713 | 1.17 | 190267 | 1.333 | Si |
| SLV 14 | 1518 | -892 | 61410 | 0 | 0 | 0 | No, e>l/2 |
| SLV 12 | 1338 | -1508 | -90624 | 0 | 0 | 0 | No, e>l/2 |
| SLV 12 | 1518 | 160 | 77298 | 0 | 0 | 0 | No, Trazione |
| SLV 4 | 1338 | -842 | 129985 | 0 | 0 | 0 | No, e>l/2 |
| SLV 4 | 1518 | -1327 | -81818 | 0 | 0 | 0 | No, e>l/2 |
| SLV 3 | 1338 | -842 | 129985 | 0 | 0 | 0 | No, e>l/2 |

| Comb. | Quota | N | M | σ0 | Mu | c.s. | Verifica |
|---|---|---|---|---|---|---|---|
| SLV 3 | 1518 | -1327 | -81818 | 0 | 0 | 0 | No, e>l/2 |
| SLV 11 | 1338 | -1508 | -90624 | 0 | 0 | 0 | No, e>l/2 |
| SLV 11 | 1518 | 160 | 77298 | 0 | 0 | 0 | No, Trazione |
| SLV 7 | 1338 | -846 | -1655 | 0.27 | 46953 | 28.37 | Si |
| SLV 7 | 1518 | -169 | 23428 | 0 | 0 | 0 | No, e>l/2 |
| SLV 8 | 1338 | -846 | -1655 | 0.27 | 46953 | 28.37 | Si |
| SLV 8 | 1518 | -169 | 23428 | 0 | 0 | 0 | No, e>l/2 |
| SLV 13 | 1338 | -3707 | -142713 | 1.17 | 190267 | 1.333 | Si |
| SLV 13 | 1518 | -892 | 61410 | 0 | 0 | 0 | No, e>l/2 |
| SLV 16 | 1338 | -3048 | -166578 | 0.96 | 159394 | 0.957 | No, M>Mu |
| SLV 16 | 1518 | -229 | 97751 | 0 | 0 | 0 | No, e>l/2 |

### Verifica a taglio nel piano secondo D.M. 17-01-18 (N.T.C.) §7.8.2.2.2 con rottura per scorrimento in combinazioni non sismiche, γM = 3

| Comb. | Quota | N | V par | M | σ0 | σN | l' | fvd | Vt scorr. | Vt fess.diag. | Vt,lim | c.s. | Verifica |
|---|---|---|---|---|---|---|---|---|---|---|---|---|---|
| SLU 29 | 1338 | -3657 | -343 | -26904 | | 1.15 | 113.5 | 0.71 | 2253 | | | 6.56 | Si |
| SLU 29 | 1518 | -2303 | -245 | -4280 | | 0.72 | 113.5 | 0.65 | 2073 | | | 8.47 | Si |
| SLU 27 | 1338 | -3848 | -336 | -26873 | | 1.21 | 113.5 | 0.72 | 2279 | | | 6.78 | Si |
| SLU 27 | 1518 | -2464 | -223 | -6781 | | 0.78 | 113.5 | 0.66 | 2094 | | | 9.41 | Si |
| SLU 8 | 1338 | -3387 | -312 | -23761 | | 1.07 | 113.5 | 0.7 | 2217 | | | 7.1 | Si |
| SLU 8 | 1518 | -2025 | -243 | -3213 | | 0.64 | 113.5 | 0.64 | 2036 | | | 8.36 | Si |
| SLU 28 | 1338 | -3890 | -333 | -24100 | | 1.22 | 113.5 | 0.72 | 2284 | | | 6.85 | Si |
| SLU 28 | 1518 | -2656 | -198 | -10523 | | 0.84 | 113.5 | 0.67 | 2120 | | | 10.69 | Si |
| SLU 72 | 1338 | -4261 | -335 | -25059 | | 1.34 | 113.5 | 0.73 | 2334 | | | 6.96 | Si |
| SLU 72 | 1518 | -2703 | -212 | -10522 | | 0.85 | 113.5 | 0.67 | 2126 | | | 10.04 | Si |
| SLU 69 | 1338 | -4411 | -331 | -27802 | | 1.39 | 113.5 | 0.74 | 2354 | | | 7.11 | Si |
| SLU 69 | 1518 | -2673 | -214 | -9281 | | 0.84 | 113.5 | 0.67 | 2122 | | | 9.92 | Si |
| SLU 71 | 1338 | -4220 | -338 | -27832 | | 1.33 | 113.5 | 0.73 | 2328 | | | 6.89 | Si |
| SLU 71 | 1518 | -2511 | -236 | -6780 | | 0.79 | 113.5 | 0.66 | 2100 | | | 8.9 | Si |
| SLU 30 | 1338 | -3699 | -340 | -24131 | | 1.16 | 113.5 | 0.71 | 2259 | | | 6.64 | Si |
| SLU 30 | 1518 | -2495 | -221 | -8022 | | 0.79 | 113.5 | 0.66 | 2098 | | | 9.51 | Si |
| SLU 70 | 1338 | -4453 | -328 | -25028 | | 1.4 | 113.5 | 0.74 | 2359 | | | 7.19 | Si |
| SLU 70 | 1518 | -2864 | -190 | -13023 | | 0.9 | 113.5 | 0.68 | 2147 | | | 11.32 | Si |
| SLU 9 | 1338 | -3428 | -309 | -20988 | | 1.08 | 113.5 | 0.7 | 2223 | | | 7.18 | Si |
| SLU 9 | 1518 | -2217 | -219 | -6956 | | 0.7 | 113.5 | 0.65 | 2061 | | | 9.4 | Si |

### Verifica a taglio nel piano secondo D.M. 17-01-18 (N.T.C.) §7.8.2.2.2 con rottura per scorrimento in combinazioni sismiche, γM = 2

| Comb. | Quota | N | V par | M | σ0 | σN | l' | fvd | Vt scorr. | Vt fess.diag. | Vt,lim | c.s. | Verifica |
|---|---|---|---|---|---|---|---|---|---|---|---|---|---|
| SLV 7 | 1338 | -846 | -1153 | -1655 | | 0.27 | 113.5 | 0.89 | 2817 | | | 2.44 | Si |
| SLV 7 | 1518 | -169 | -1420 | 23428 | | 0 | 0 | 0.83 | 0 | | | 0 | No, Vu<V |
| SLV 11 | 1338 | -1508 | -2659 | -90624 | | 0 | 0 | 0.83 | 0 | | | 0 | No, Vu<V |
| SLV 11 | 1518 | 160 | -1506 | 77298 | | 0 | 0 | 0.83 | 0 | | | 0 | No, Vu<V |
| SLV 13 | 1338 | -3707 | -1954 | -142713 | | 2.42 | 54.74 | 1.32 | 2019 | | | 1.03 | Si |
| SLV 13 | 1518 | -892 | 331 | 61410 | | 0 | 0 | 0.83 | 0 | | | 0 | No, Vu<V |
| SLV 16 | 1338 | -3048 | -3090 | -166578 | | 17.3 | 6.29 | 1.63 | 286 | | | 0.09 | No, Vu<V |
| SLV 16 | 1518 | -229 | -563 | 97751 | | 0 | 0 | 0.83 | 0 | | | 0 | No, Vu<V |
| SLV 14 | 1338 | -3707 | -1954 | -142713 | | 2.42 | 54.74 | 1.32 | 2019 | | | 1.03 | Si |
| SLV 14 | 1518 | -892 | 331 | 61410 | | 0 | 0 | 0.83 | 0 | | | 0 | No, Vu<V |
| SLV 2 | 1338 | -1501 | 3064 | 153850 | | 0 | 0 | 0.83 | 0 | | | 0 | No, Vu<V |
| SLV 2 | 1518 | -1990 | 615 | -118158 | | 0 | 0 | 0.83 | 0 | | | 0 | No, Vu<V |
| SLV 4 | 1338 | -842 | 1928 | 129985 | | 0 | 0 | 0.83 | 0 | | | 0 | No, Vu<V |
| SLV 4 | 1518 | -1327 | -278 | -81818 | | 0 | 0 | 0.83 | 0 | | | 0 | No, Vu<V |
| SLV 12 | 1338 | -1508 | -2659 | -90624 | | 0 | 0 | 0.83 | 0 | | | 0 | No, Vu<V |
| SLV 12 | 1518 | 160 | -1506 | 77298 | | 0 | 0 | 0.83 | 0 | | | 0 | No, Vu<V |
| SLV 8 | 1338 | -846 | -1153 | -1655 | | 0.27 | 113.5 | 0.89 | 2817 | | | 2.44 | Si |
| SLV 8 | 1518 | -169 | -1420 | 23428 | | 0 | 0 | 0.83 | 0 | | | 0 | No, Vu<V |
| SLV 3 | 1338 | -842 | 1928 | 129985 | | 0 | 0 | 0.83 | 0 | | | 0 | No, Vu<V |
| SLV 3 | 1518 | -1327 | -278 | -81818 | | 0 | 0 | 0.83 | 0 | | | 0 | No, Vu<V |

### Verifica a pressoflessione fuori piano D.M. 17-01-18 (N.T.C.)

quota 1407.3 Wa 0.05 denominatore 8 γM = 2

| Comb. | fd | Sa | σ0 | N | M | Mc | Coeff.s. | Verifica |
|---|---|---|---|---|---|---|---|---|
| SLV 4 | 14 | 0.53 | 0 | -637 | 13116 | 0 | 0 | No, e>t/2 |
| SLV 3 | 14 | 0.53 | 0 | -637 | 13116 | 0 | 0 | No, e>t/2 |
| SLV 7 | 14 | 0.53 | 0 | -674 | 13116 | 0 | 0 | No, e>t/2 |
| SLV 8 | 14 | 0.53 | 0 | -674 | 13116 | 0 | 0 | No, e>t/2 |
| SLV 2 | 14 | 0.53 | 0.39 | -1225 | 13116 | 16609 | 1.27 | Si |
| SLV 1 | 14 | 0.53 | 0.39 | -1225 | 13116 | 16609 | 1.27 | Si |
| SLV 12 | 14 | 0.53 | 0.41 | -1293 | 13116 | 17505 | 1.33 | Si |
| SLV 11 | 14 | 0.53 | 0.41 | -1293 | 13116 | 17505 | 1.33 | Si |
| SLV 5 | 14 | 0.53 | 0.83 | -2634 | 13116 | 34380 | 2.62 | Si |
| SLV 6 | 14 | 0.53 | 0.83 | -2634 | 13116 | 34380 | 2.62 | Si |

### Verifica dei meccanismi locali di collasso con analisi cinematica lineare

forza di aggancio al piano = 0 quota mezzeria = 1407.3 Wa = 0.05 Ta = 0.0606

| Comb. | N top | N base | V orto | α0 | M* | e* | a0* | aLim | Verifica |
|---|---|---|---|---|---|---|---|---|---|
| SLV 15 | -646 | 314 | -12 | 0 | 0 | 0 | 0 | 891.605 | No, Trazione |
| SLV 12 | -576 | 1933 | 50 | 0 | 0 | 0 | 0 | 1537.915 | No, Trazione |
| SLV 8 | -572 | 984 | 68 | 0 | 0 | 0 | 0 | 1537.915 | No, Trazione |
| SLV 7 | -572 | 984 | 68 | 0 | 0 | 0 | 0 | 1537.915 | No, Trazione |
| SLV 16 | -646 | 314 | -12 | 0 | 0 | 0 | 0 | 891.605 | No, Trazione |
| SLV 11 | -576 | 1933 | 50 | 0 | 0 | 0 | 0 | 1537.915 | No, Trazione |
| SLV 9 | -764 | -5854 | -63 | 0.03 | 2.346 | 0.89 | 49.139 | 1537.915 | No |
| SLV 10 | -764 | -5854 | -63 | 0.03 | 2.346 | 0.89 | 49.139 | 1537.915 | No |
| SLV 5 | -760 | -6802 | -45 | 0.041 | 2.343 | 0.89 | 67.408 | 1537.915 | No |
| SLV 6 | -760 | -6802 | -45 | 0.041 | 2.343 | 0.89 | 67.408 | 1537.915 | No |

### Tabella dei coefficienti di sicurezza minimi

| Stato limite | Coeff.s. | Comb. | Verifica |
|---|---|---|---|
| PF_SLU | 4.379 | SLU 52 | Si |
| V_SLU | 6.562 | SLU 29 | Si |
| PF_SLV | 0 | SLV 12 | No |
| V_SLV | 0 | SLV 1 | No |
| PFFP_SLV | 0 | SLV 3 | No |
| R_SLV | 0 | SLV 16 | No |

## Maschio 220

Verifiche condotte secondo D.M. 17-01-18 (N.T.C.)

### Dati geometrici

| X ini. | Y ini. | X fin. | Y fin. | Quota i. | Quota.s | l | Sp. | h netta | h ini. | h fin. | a | a.s.,sx | a.s.,dx |
|---|---|---|---|---|---|---|---|---|---|---|---|---|---|
| -600.8 | -335.9 | -651.3 | -335.9 | L6 | F1 | 50.5 | 28 | 318.5 | 318.5 | 318.6 | | | |

### Caratteristiche del materiale

(Circolare 7 21-01-19 C8.5.I) Muratura in mattoni pieni e malta di calce LC2_Corti

| fb | fk | fvk0 | fmedio | τ0 | fv0 | μ | ϕ | fv,lim | E | G | FC |
|---|---|---|---|---|---|---|---|---|---|---|---|
| 60 | | | 34.5 | 0.9 | 2 | 0.58 | 0.77 | 3.25 | 32000 | 12800 | 1.2 |

### Verifica a pressoflessione nel piano secondo D.M. 17-01-18 NTC §7.8.2.2.1 in combinazioni non sismiche, γM = 3

| Comb. | Quota | N | M | σ0 | Mu | c.s. | Verifica |
|---|---|---|---|---|---|---|---|
| SLU 34 | 1448 | -221 | -2598 | 0.16 | 5473 | 2.107 | Si |
| SLU 34 | 1528 | -651 | 3316 | 0.46 | 15503 | 4.676 | Si |
| SLU 23 | 1448 | -286 | -3846 | 0.2 | 7038 | 1.83 | Si |
| SLU 23 | 1528 | -363 | 2661 | 0.26 | 8888 | 3.339 | Si |
| SLU 2 | 1448 | -272 | -3175 | 0.19 | 6697 | 2.109 | Si |
| SLU 2 | 1528 | -218 | 1791 | 0.15 | 5407 | 3.019 | Si |
| SLU 40 | 1448 | -334 | -3456 | 0.24 | 8201 | 2.373 | Si |
| SLU 40 | 1528 | -450 | 2146 | 0.32 | 10908 | 5.083 | Si |
| SLU 10 | 1448 | -258 | -2804 | 0.18 | 6361 | 2.269 | Si |
| SLU 10 | 1528 | -232 | 1522 | 0.16 | 5733 | 3.767 | Si |
| SLU 73 | 1448 | -400 | -4303 | 0.28 | 9748 | 2.266 | Si |
| SLU 73 | 1528 | -443 | 2533 | 0.31 | 10750 | 4.244 | Si |
| SLU 26 | 1448 | -235 | -2969 | 0.17 | 5812 | 1.958 | Si |
| SLU 26 | 1528 | -637 | 3585 | 0.45 | 15201 | 4.241 | Si |
| SLU 31 | 1448 | -272 | -3475 | 0.19 | 6702 | 1.929 | Si |
| SLU 31 | 1528 | -377 | 2393 | 0.27 | 9205 | 3.848 | Si |
| SLU 68 | 1448 | -363 | -3797 | 0.26 | 8879 | 2.338 | Si |
| SLU 68 | 1528 | -703 | 3725 | 0.5 | 16671 | 4.476 | Si |
| SLU 65 | 1448 | -414 | -4674 | 0.29 | 10076 | 2.156 | Si |
| SLU 65 | 1528 | -429 | 2802 | 0.3 | 10436 | 3.725 | Si |

### Verifica a pressoflessione nel piano secondo D.M. 17-01-18 NTC §7.8.2.2.1 in combinazioni sismiche, γM = 2

| Comb. | Quota | N | M | σ0 | Mu | c.s. | Verifica |
|---|---|---|---|---|---|---|---|
| SLD 4 | 1448 | 52 | 1055 | 0 | 0 | 0 | No, Trazione |
| SLD 4 | 1528 | -205 | -5644 | 0 | 0 | 0 | No, e>l/2 |
| SLV 11 | 1448 | 829 | 8172 | 0 | 0 | 0 | No, Trazione |
| SLV 11 | 1528 | 802 | 2272 | 0 | 0 | 0 | No, Trazione |
| SLV 12 | 1448 | 829 | 8172 | 0 | 0 | 0 | No, Trazione |
| SLV 12 | 1528 | 802 | 2272 | 0 | 0 | 0 | No, Trazione |
| SLV 7 | 1448 | 1273 | 12368 | 0 | 0 | 0 | No, Trazione |
| SLV 7 | 1528 | 895 | -7251 | 0 | 0 | 0 | No, Trazione |
| SLD 8 | 1448 | 264 | 2901 | 0 | 0 | 0 | No, Trazione |
| SLD 8 | 1528 | 116 | -2091 | 0 | 0 | 0 | No, Trazione |
| SLV 8 | 1448 | 1273 | 12368 | 0 | 0 | 0 | No, Trazione |
| SLV 8 | 1528 | 895 | -7251 | 0 | 0 | 0 | No, Trazione |
| SLV 16 | 1448 | -735 | -6440 | 0.52 | 17777 | 2.76 | Si |
| SLV 16 | 1528 | -203 | 16269 | 0 | 0 | 0 | No, e>l/2 |
| SLD 3 | 1448 | 52 | 1055 | 0 | 0 | 0 | No, Trazione |
| SLD 3 | 1528 | -205 | -5644 | 0 | 0 | 0 | No, e>l/2 |
| SLV 4 | 1448 | 745 | 7545 | 0 | 0 | 0 | No, Trazione |
| SLV 4 | 1528 | 109 | -15474 | 0 | 0 | 0 | No, Trazione |
| SLD 7 | 1448 | 264 | 2901 | 0 | 0 | 0 | No, Trazione |
| SLD 7 | 1528 | 116 | -2091 | 0 | 0 | 0 | No, Trazione |

### Verifica a taglio nel piano secondo D.M. 17-01-18 (N.T.C.) §7.8.2.2.2 con rottura per scorrimento in combinazioni non sismiche, γM = 3

| Comb. | Quota | N | V par | M | σ0 | σN | l' | fvd | Vt scorr. | Vt fess.diag. | Vt,lim | c.s. | Verifica |
|---|---|---|---|---|---|---|---|---|---|---|---|---|---|
| SLU 72 | 1448 | -381 | -252 | -3061 | | 0.27 | 50.5 | 0.59 | 836 | | | 3.32 | Si |
| SLU 72 | 1528 | -1044 | 403 | 4517 | | 0.74 | 50.5 | 0.65 | 925 | | | 2.3 | Si |
| SLU 30 | 1448 | -253 | -221 | -2233 | | 0.18 | 49.25 | 0.58 | 800 | | | 3.62 | Si |
| SLU 30 | 1528 | -978 | 378 | 4376 | | 0.69 | 50.5 | 0.65 | 916 | | | 2.43 | Si |
| SLU 77 | 1448 | -637 | -268 | -3671 | | 0.45 | 50.5 | 0.62 | 870 | | | 3.24 | Si |
| SLU 77 | 1528 | -1265 | 403 | 3659 | | 0.89 | 50.5 | 0.67 | 954 | | | 2.37 | Si |
| SLU 80 | 1448 | -367 | -246 | -2689 | | 0.26 | 50.5 | 0.59 | 834 | | | 3.39 | Si |
| SLU 80 | 1528 | -1057 | 424 | 4248 | | 0.75 | 50.5 | 0.66 | 927 | | | 2.19 | Si |
| SLU 38 | 1448 | -239 | -215 | -1861 | | 0.17 | 50.5 | 0.58 | 817 | | | 3.8 | Si |
| SLU 38 | 1528 | -991 | 399 | 4108 | | 0.7 | 50.5 | 0.65 | 918 | | | 2.3 | Si |
| SLU 36 | 1448 | -406 | -236 | -2632 | | 0.29 | 50.5 | 0.59 | 840 | | | 3.56 | Si |
| SLU 36 | 1528 | -1099 | 397 | 3716 | | 0.78 | 50.5 | 0.66 | 932 | | | 2.35 | Si |
| SLU 79 | 1448 | -470 | -247 | -2900 | | 0.33 | 50.5 | 0.6 | 848 | | | 3.43 | Si |
| SLU 79 | 1528 | -1158 | 405 | 4051 | | 0.82 | 50.5 | 0.66 | 940 | | | 2.32 | Si |
| SLU 76 | 1448 | -349 | -229 | -3426 | | 0.27 | 46.31 | 0.59 | 767 | | | 3.35 | Si |

| Comb. | Quota | N | V par | M | σ0 | σN | l' | fvd | Vt scorr. | Vt fess.diag. | Vt,lim | c.s. | Verifica |
|---|---|---|---|---|---|---|---|---|---|---|---|---|---|
| SLU 76 | 1528 | -717 | 362 | 3456 | | 0.51 | 50.5 | 0.62 | 881 | | | 2.43 | Si |
| SLU 70 | 1448 | -548 | -273 | -3831 | | 0.39 | 50.5 | 0.61 | 859 | | | 3.15 | Si |
| SLU 70 | 1528 | -1151 | 401 | 4125 | | 0.81 | 50.5 | 0.66 | 939 | | | 2.34 | Si |
| SLU 78 | 1448 | -534 | -267 | -3460 | | 0.38 | 50.5 | 0.61 | 857 | | | 3.21 | Si |
| SLU 78 | 1528 | -1165 | 422 | 3856 | | 0.82 | 50.5 | 0.67 | 941 | | | 2.23 | Si |

### Verifica a taglio nel piano secondo D.M. 17-01-18 (N.T.C.) §7.8.2.2.2 con rottura per scorrimento in combinazioni sismiche, γM = 2

| Comb. | Quota | N | V par | M | σ0 | σN | l' | fvd | Vt scorr. | Vt fess.diag. | Vt,lim | c.s. | Verifica |
|---|---|---|---|---|---|---|---|---|---|---|---|---|---|
| SLV 16 | 1448 | -735 | -582 | -6440 | | 0.53 | 49.47 | 0.94 | 1301 | | | 2.24 | Si |
| SLV 16 | 1528 | -203 | 382 | 16269 | | 0 | 0 | 0.83 | 0 | | | 0 | No, Vu<V |
| SLV 7 | 1448 | 1273 | 306 | 12368 | | 0 | 0 | 0.83 | 0 | | | 0 | No, Vu<V |
| SLV 7 | 1528 | 895 | 614 | -7251 | | 0 | 0 | 0.83 | 0 | | | 0 | No, Vu<V |
| SLV 12 | 1448 | 829 | -3 | 8172 | | 0 | 0 | 0.83 | 0 | | | 0 | No, Vu<V |
| SLV 12 | 1528 | 802 | 656 | 2272 | | 0 | 0 | 0.83 | 0 | | | 0 | No, Vu<V |
| SLD 7 | 1448 | 264 | 33 | 2901 | | 0 | 0 | 0.83 | 0 | | | 0 | No, Vu<V |
| SLD 7 | 1528 | 116 | 356 | -2091 | | 0 | 0 | 0.83 | 0 | | | 0 | No, Vu<V |
| SLV 4 | 1448 | 745 | 449 | 7545 | | 0 | 0 | 0.83 | 0 | | | 0 | No, Vu<V |
| SLV 4 | 1528 | 109 | 242 | -15474 | | 0 | 0 | 0.83 | 0 | | | 0 | No, Vu<V |
| SLD 3 | 1448 | 52 | 98 | 1055 | | 0 | 0 | 0.83 | 0 | | | 0 | No, Vu<V |
| SLD 3 | 1528 | -205 | 203 | -5644 | | 0 | 0 | 0.83 | 0 | | | 0 | No, Vu<V |
| SLV 11 | 1448 | 829 | -3 | 8172 | | 0 | 0 | 0.83 | 0 | | | 0 | No, Vu<V |
| SLV 11 | 1528 | 802 | 656 | 2272 | | 0 | 0 | 0.83 | 0 | | | 0 | No, Vu<V |
| SLD 8 | 1448 | 264 | 33 | 2901 | | 0 | 0 | 0.83 | 0 | | | 0 | No, Vu<V |
| SLD 8 | 1528 | 116 | 356 | -2091 | | 0 | 0 | 0.83 | 0 | | | 0 | No, Vu<V |
| SLV 8 | 1448 | 1273 | 306 | 12368 | | 0 | 0 | 0.83 | 0 | | | 0 | No, Vu<V |
| SLV 8 | 1528 | 895 | 614 | -7251 | | 0 | 0 | 0.83 | 0 | | | 0 | No, Vu<V |
| SLD 4 | 1448 | 52 | 98 | 1055 | | 0 | 0 | 0.83 | 0 | | | 0 | No, Vu<V |
| SLD 4 | 1528 | -205 | 203 | -5644 | | 0 | 0 | 0.83 | 0 | | | 0 | No, Vu<V |

### Verifica a pressoflessione fuori piano D.M. 17-01-18 (N.T.C.)

quota 1407.3 Wa 0.05 denominatore 8 γM = 2

| Comb. | fd | Sa | σ0 | N | M | Mc | Coeff.s. | Verifica |
|---|---|---|---|---|---|---|---|---|
| SLV 8 | 14 | 0.53 | 0 | 564 | 5831 | 0 | 0 | No, Trazione |
| SLV 11 | 14 | 0.53 | 0 | 712 | 5831 | 0 | 0 | No, Trazione |
| SLV 4 | 14 | 0.53 | 0 | -261 | 5831 | 0 | 0 | No, e>t/2 |
| SLV 12 | 14 | 0.53 | 0 | 712 | 5831 | 0 | 0 | No, Trazione |
| SLV 13 | 14 | 0.53 | 0 | -328 | 5831 | 0 | 0 | No, e>t/2 |
| SLV 16 | 14 | 0.53 | 0 | 231 | 5831 | 0 | 0 | No, Trazione |
| SLV 7 | 14 | 0.53 | 0 | 564 | 5831 | 0 | 0 | No, Trazione |
| SLV 3 | 14 | 0.53 | 0 | -261 | 5831 | 0 | 0 | No, e>t/2 |
| SLV 14 | 14 | 0.53 | 0 | -328 | 5831 | 0 | 0 | No, e>t/2 |
| SLV 15 | 14 | 0.53 | 0 | 231 | 5831 | 0 | 0 | No, Trazione |

### Verifica dei meccanismi locali di collasso con analisi cinematica lineare

forza di aggancio al piano = 0 quota mezzeria = 1407.3 Wa = 0.05 Ta = 0.0605

| Comb. | N top | N base | V orto | α0 | M* | e* | a0* | aLim | Verifica |
|---|---|---|---|---|---|---|---|---|---|
| SLV 7 | 1541 | -419 | -45 | 0 | 0 | 0 | 0 | 1536.351 | No, Trazione |
| SLV 15 | 15 | -530 | -30 | 0 | 0 | 0 | 0 | 891.004 | No, Trazione |
| SLV 4 | 984 | -446 | -33 | 0 | 0 | 0 | 0 | 891.004 | No, Trazione |
| SLV 3 | 984 | -446 | -33 | 0 | 0 | 0 | 0 | 891.004 | No, Trazione |
| SLV 16 | 15 | -530 | -30 | 0 | 0 | 0 | 0 | 891.004 | No, Trazione |
| SLV 8 | 1541 | -419 | -45 | 0 | 0 | 0 | 0 | 1536.351 | No, Trazione |
| SLV 2 | 217 | -494 | -22 | 0 | 0 | 0 | 0 | 891.004 | No, Trazione |
| SLV 11 | 1250 | -444 | -44 | 0 | 0 | 0 | 0 | 1536.351 | No, Trazione |
| SLV 12 | 1250 | -444 | -44 | 0 | 0 | 0 | 0 | 1536.351 | No, Trazione |
| SLV 1 | 217 | -494 | -22 | 0 | 0 | 0 | 0 | 891.004 | No, Trazione |

### Tabella dei coefficienti di sicurezza minimi

| Stato limite | Coeff.s. | Comb. | Verifica |
|---|---|---|---|
| PF_SLU | 1.83 | SLU 23 | Si |
| V_SLU | 2.186 | SLU 80 | Si |
| PF_SLV | 0 | SLV 12 | No |
| V_SLV | 0 | SLD 3 | No |
| PFFP_SLV | 0 | SLV 16 | No |
| R_SLV | 0 | SLV 16 | No |

## Maschio 221

Verifiche condotte secondo D.M. 17-01-18 (N.T.C.)

### Dati geometrici

| X ini. | Y ini. | X fin. | Y fin. | Quota i. | Quota.s | l | Sp. | h netta | h ini. | h fin. | a | a.s.,sx | a.s.,dx |
|---|---|---|---|---|---|---|---|---|---|---|---|---|---|
| -318.3 | -335.9 | -550.8 | -335.9 | L6 | F1 | 232.5 | 28 | 318.4 | 318.3 | 318.5 | | | |

### Caratteristiche del materiale

(Circolare 7 21-01-19 C8.5.I) Muratura in mattoni pieni e malta di calce LC2_Corti

| fb | fk | fvk0 | fmedio | τ0 | fv0 | μ | ϕ | fv,lim | E | G | FC |
|---|---|---|---|---|---|---|---|---|---|---|---|
| 60 | | | 34.5 | 0.9 | 2 | 0.58 | 0.77 | 3.25 | 32000 | 12800 | 1.2 |

### Verifica a pressoflessione nel piano secondo D.M. 17-01-18 NTC §7.8.2.2.1 in combinazioni non sismiche, γM = 3

| Comb. | Quota | N | M | σ0 | Mu | c.s. | Verifica |
|---|---|---|---|---|---|---|---|
| SLU 23 | 1448 | -2260 | 1523 | 0.35 | 251511 | 165.182 | Si |
| SLU 23 | 1528 | -1332 | 12931 | 0.2 | 150950 | 11.673 | Si |

| Comb. | Quota | N | M | σ0 | Mu | c.s. | Verifica |
|---|---|---|---|---|---|---|---|
| SLU 2 | 1448 | -1959 | 2287 | 0.3 | 219323 | 95.89 | Si |
| SLU 2 | 1528 | -1039 | 12700 | 0.16 | 118412 | 9.324 | Si |
| SLU 65 | 1448 | -2826 | 1585 | 0.43 | 311027 | 196.258 | Si |
| SLU 65 | 1528 | -1604 | 15654 | 0.25 | 180843 | 11.552 | Si |
| SLU 44 | 1448 | -2525 | 2349 | 0.39 | 279586 | 119.003 | Si |
| SLU 44 | 1528 | -1311 | 15423 | 0.2 | 148655 | 9.638 | Si |
| SLU 61 | 1448 | -2580 | 4834 | 0.4 | 285361 | 59.034 | Si |
| SLU 61 | 1528 | -1364 | 15005 | 0.21 | 154536 | 10.299 | Si |
| SLU 73 | 1448 | -2788 | 4151 | 0.43 | 307101 | 73.982 | Si |
| SLU 73 | 1528 | -1585 | 16302 | 0.24 | 178698 | 10.962 | Si |
| SLU 10 | 1448 | -1921 | 4853 | 0.3 | 215253 | 44.35 | Si |
| SLU 10 | 1528 | -1019 | 13348 | 0.16 | 116218 | 8.707 | Si |
| SLU 52 | 1448 | -2488 | 4916 | 0.38 | 275609 | 56.068 | Si |
| SLU 52 | 1528 | -1292 | 16071 | 0.2 | 146485 | 9.115 | Si |
| SLU 19 | 1448 | -2014 | 4772 | 0.31 | 225235 | 47.202 | Si |
| SLU 19 | 1528 | -1092 | 12282 | 0.17 | 124357 | 10.125 | Si |
| SLU 31 | 1448 | -2222 | 4089 | 0.34 | 247491 | 60.528 | Si |
| SLU 31 | 1528 | -1312 | 13579 | 0.2 | 148781 | 10.956 | Si |

Verifica a pressoflessione nel piano secondo D.M. 17-01-18 NTC §7.8.2.2.1 in combinazioni sismiche, γM = 2

| Comb. | Quota | N | M | σ0 | Mu | c.s. | Verifica |
|---|---|---|---|---|---|---|---|
| SLV 10 | 1448 | -2033 | -73595 | 0.31 | 230269 | 3.129 | Si |
| SLV 10 | 1528 | -1344 | 81732 | 0.21 | 153636 | 1.88 | Si |
| SLV 5 | 1448 | -2346 | -34830 | 0.36 | 264734 | 7.601 | Si |
| SLV 5 | 1528 | -1378 | 69008 | 0.21 | 157377 | 2.281 | Si |
| SLV 6 | 1448 | -2346 | -34830 | 0.36 | 264734 | 7.601 | Si |
| SLV 6 | 1528 | -1378 | 69008 | 0.21 | 157377 | 2.281 | Si |
| SLV 14 | 1448 | -1749 | -80979 | 0.27 | 198802 | 2.455 | Si |
| SLV 14 | 1528 | -1277 | 50531 | 0.2 | 146068 | 2.891 | Si |
| SLV 13 | 1448 | -1749 | -80979 | 0.27 | 198802 | 2.455 | Si |
| SLV 13 | 1528 | -1277 | 50531 | 0.2 | 146068 | 2.891 | Si |
| SLV 7 | 1448 | -2580 | 73291 | 0.4 | 290231 | 3.96 | Si |
| SLV 7 | 1528 | -1296 | -62549 | 0.2 | 148252 | 2.37 | Si |
| SLV 12 | 1448 | -2267 | 34526 | 0.35 | 255981 | 7.414 | Si |
| SLV 12 | 1528 | -1263 | -49825 | 0.19 | 144503 | 2.9 | Si |
| SLV 9 | 1448 | -2033 | -73595 | 0.31 | 230269 | 3.129 | Si |
| SLV 9 | 1528 | -1344 | 81732 | 0.21 | 153636 | 1.88 | Si |
| SLV 8 | 1448 | -2580 | 73291 | 0.4 | 290231 | 3.96 | Si |
| SLV 8 | 1528 | -1296 | -62549 | 0.2 | 148252 | 2.37 | Si |
| SLV 11 | 1448 | -2267 | 34526 | 0.35 | 255981 | 7.414 | Si |
| SLV 11 | 1528 | -1263 | -49825 | 0.19 | 144503 | 2.9 | Si |

Verifica a taglio nel piano secondo D.M. 17-01-18 (N.T.C.) §7.8.2.2.2 con rottura per scorrimento in combinazioni non sismiche, γM = 3

| Comb. | Quota | N | V par | M | σ0 | σN | l' | fvd | Vt scorr. | Vt fess.diag. | Vt,lim | c.s. | Verifica |
|---|---|---|---|---|---|---|---|---|---|---|---|---|---|
| SLU 31 | 1448 | -2222 | -128 | 4089 | | 0.34 | 232.5 | 0.6 | 3913 | | | 30.6 | Si |
| SLU 31 | 1528 | -1312 | -65 | 13579 | | 0.2 | 232.5 | 0.58 | 3792 | | | 58.56 | Si |
| SLU 58 | 1448 | -3723 | 31 | -21636 | | 0.57 | 232.5 | 0.63 | 4113 | | | 131.82 | Si |
| SLU 58 | 1528 | -2428 | 128 | -8037 | | 0.37 | 232.5 | 0.61 | 3940 | | | 30.9 | Si |
| SLU 23 | 1448 | -2260 | -124 | 1523 | | 0.35 | 232.5 | 0.6 | 3918 | | | 31.68 | Si |
| SLU 23 | 1528 | -1332 | -68 | 12931 | | 0.2 | 232.5 | 0.58 | 3794 | | | 55.44 | Si |
| SLU 14 | 1448 | -3597 | 59 | -20800 | | 0.55 | 232.5 | 0.63 | 4096 | | | 70.02 | Si |
| SLU 14 | 1528 | -2552 | 130 | -7560 | | 0.39 | 232.5 | 0.61 | 3957 | | | 30.48 | Si |
| SLU 56 | 1448 | -4164 | 69 | -20738 | | 0.64 | 232.5 | 0.64 | 4172 | | | 60.77 | Si |
| SLU 56 | 1528 | -2825 | 126 | -4837 | | 0.43 | 232.5 | 0.61 | 3993 | | | 31.64 | Si |
| SLU 8 | 1448 | -3195 | 25 | -24264 | | 0.49 | 232.5 | 0.62 | 4043 | | | 159.89 | Si |
| SLU 8 | 1528 | -2175 | 127 | -11408 | | 0.33 | 232.5 | 0.6 | 3907 | | | 30.66 | Si |
| SLU 37 | 1448 | -3458 | 2 | -22463 | | 0.53 | 232.5 | 0.63 | 4078 | | | 1000 | Si |
| SLU 37 | 1528 | -2448 | 121 | -10529 | | 0.38 | 232.5 | 0.61 | 3943 | | | 32.51 | Si |
| SLU 16 | 1448 | -3157 | 21 | -21698 | | 0.48 | 232.5 | 0.62 | 4038 | | | 191.82 | Si |
| SLU 16 | 1528 | -2155 | 131 | -10760 | | 0.33 | 232.5 | 0.6 | 3904 | | | 29.77 | Si |
| SLU 50 | 1448 | -3761 | 35 | -24202 | | 0.58 | 232.5 | 0.63 | 4118 | | | 116.21 | Si |
| SLU 50 | 1528 | -2447 | 124 | -8685 | | 0.38 | 232.5 | 0.61 | 3943 | | | 31.85 | Si |
| SLU 6 | 1448 | -3635 | 63 | -23366 | | 0.56 | 232.5 | 0.63 | 4101 | | | 65.37 | Si |
| SLU 6 | 1528 | -2572 | 126 | -8208 | | 0.4 | 232.5 | 0.61 | 3960 | | | 31.39 | Si |

Verifica a taglio nel piano secondo D.M. 17-01-18 (N.T.C.) §7.8.2.2.2 con rottura per scorrimento in combinazioni sismiche, γM = 2

| Comb. | Quota | N | V par | M | σ0 | σN | l' | fvd | Vt scorr. | Vt fess.diag. | Vt,lim | c.s. | Verifica |
|---|---|---|---|---|---|---|---|---|---|---|---|---|---|
| SLV 13 | 1448 | -1749 | -2552 | -80979 | | 0.3 | 209.81 | 0.89 | 5245 | | | 2.06 | Si |
| SLV 13 | 1528 | -1277 | -1380 | 50531 | | 0.2 | 230.04 | 0.87 | 5623 | | | 4.07 | Si |
| SLV 3 | 1448 | -2865 | 2562 | 80675 | | 0.44 | 232.5 | 0.92 | 5998 | | | 2.34 | Si |
| SLV 3 | 1528 | -1364 | 1330 | -31348 | | 0.21 | 232.5 | 0.88 | 5698 | | | 4.28 | Si |
| SLV 16 | 1448 | -1819 | -1406 | -48543 | | 0.28 | 232.5 | 0.89 | 5789 | | | 4.12 | Si |
| SLV 16 | 1528 | -1253 | -671 | 11064 | | 0.19 | 232.5 | 0.87 | 5676 | | | 8.46 | Si |
| SLV 4 | 1448 | -2865 | 2562 | 80675 | | 0.44 | 232.5 | 0.92 | 5998 | | | 2.34 | Si |
| SLV 4 | 1528 | -1364 | 1330 | -31348 | | 0.21 | 232.5 | 0.88 | 5698 | | | 4.28 | Si |
| SLV 14 | 1448 | -1749 | -2552 | -80979 | | 0.3 | 209.81 | 0.89 | 5245 | | | 2.06 | Si |
| SLV 14 | 1528 | -1277 | -1380 | 50531 | | 0.2 | 230.04 | 0.87 | 5623 | | | 4.07 | Si |
| SLV 15 | 1448 | -1819 | -1406 | -48543 | | 0.28 | 232.5 | 0.89 | 5789 | | | 4.12 | Si |
| SLV 15 | 1528 | -1253 | -671 | 11064 | | 0.19 | 232.5 | 0.87 | 5676 | | | 8.46 | Si |
| SLV 9 | 1448 | -2033 | -2499 | -73595 | | 0.31 | 232.5 | 0.9 | 5832 | | | 2.33 | Si |
| SLV 9 | 1528 | -1344 | -1507 | 81732 | | 0.29 | 166.35 | 0.89 | 4150 | | | 2.75 | Si |
| SLV 8 | 1448 | -2580 | 2510 | 73291 | | 0.4 | 232.5 | 0.91 | 5941 | | | 2.37 | Si |
| SLV 8 | 1528 | -1296 | 1457 | -62549 | | 0.23 | 204.01 | 0.88 | 5019 | | | 3.44 | Si |
| SLV 10 | 1448 | -2033 | -2499 | -73595 | | 0.31 | 232.5 | 0.9 | 5832 | | | 2.33 | Si |
| SLV 10 | 1528 | -1344 | -1507 | 81732 | | 0.29 | 166.35 | 0.89 | 4150 | | | 2.75 | Si |
| SLV 7 | 1448 | -2580 | 2510 | 73291 | | 0.4 | 232.5 | 0.91 | 5941 | | | 2.37 | Si |
| SLV 7 | 1528 | -1296 | 1457 | -62549 | | 0.23 | 204.01 | 0.88 | 5019 | | | 3.44 | Si |

### Verifica a pressoflessione fuori piano D.M. 17-01-18 (N.T.C.)

quota 1407.2 Wa 0.05 denominatore 8 γM = 2

| Comb. | fd | Sa | σ0 | N | M | Mc | Coeff.s. | Verifica |
|---|---|---|---|---|---|---|---|---|
| SLV 7 | 14 | 0.53 | 0.35 | -2278 | 26819 | 30980 | 1.16 | Si |
| SLV 8 | 14 | 0.53 | 0.35 | -2278 | 26819 | 30980 | 1.16 | Si |
| SLV 4 | 14 | 0.53 | 0.35 | -2282 | 26819 | 31032 | 1.16 | Si |
| SLV 3 | 14 | 0.53 | 0.35 | -2282 | 26819 | 31032 | 1.16 | Si |
| SLV 12 | 14 | 0.53 | 0.38 | -2485 | 26819 | 33704 | 1.26 | Si |
| SLV 11 | 14 | 0.53 | 0.38 | -2485 | 26819 | 33704 | 1.26 | Si |
| SLV 2 | 14 | 0.53 | 0.38 | -2492 | 26819 | 33800 | 1.26 | Si |
| SLV 1 | 14 | 0.53 | 0.38 | -2492 | 26819 | 33800 | 1.26 | Si |
| SLV 15 | 14 | 0.53 | 0.46 | -2972 | 26819 | 40052 | 1.49 | Si |
| SLV 16 | 14 | 0.53 | 0.46 | -2972 | 26819 | 40052 | 1.49 | Si |

### Verifica dei meccanismi locali di collasso con analisi cinematica lineare

forza di aggancio al piano = 0 quota mezzeria = 1407.2 Wa = 0.05 Ta = 0.0605

| Comb. | N top | N base | V orto | α0 | M* | e* | a0* | aLim | Verifica |
|---|---|---|---|---|---|---|---|---|---|
| SLV 11 | -1038 | -2572 | 318 | 0 | 4.36 | 0.897 | 0 | 1534.591 | No |
| SLV 10 | -506 | -4694 | -229 | 0 | 3.985 | 0.923 | 0 | 1534.591 | No |
| SLV 7 | -1054 | -2565 | 313 | 0 | 4.373 | 0.897 | 0 | 1534.591 | No |
| SLV 6 | -522 | -4687 | -234 | 0 | 3.994 | 0.921 | 0 | 1534.591 | No |
| SLV 5 | -522 | -4687 | -234 | 0 | 3.994 | 0.921 | 0 | 1534.591 | No |
| SLV 9 | -506 | -4694 | -229 | 0 | 3.985 | 0.923 | 0 | 1534.591 | No |
| SLV 12 | -1038 | -2572 | 318 | 0 | 4.36 | 0.897 | 0 | 1534.591 | No |
| SLV 8 | -1054 | -2565 | 313 | 0 | 4.373 | 0.897 | 0 | 1534.591 | No |
| SLV 16 | -832 | -3323 | 134 | 0.025 | 4.203 | 0.904 | 39.887 | 890.325 | No |
| SLV 15 | -832 | -3323 | 134 | 0.025 | 4.203 | 0.904 | 39.887 | 890.325 | No |

### Tabella dei coefficienti di sicurezza minimi

| Stato limite | Coeff.s. | Comb. | Verifica |
|---|---|---|---|
| PF_SLU | 8.707 | SLU 10 | Si |
| V_SLU | 29.774 | SLU 16 | Si |
| PF_SLV | 1.88 | SLV 9 | Si |
| V_SLV | 2.055 | SLV 13 | Si |
| PFFP_SLV | 1.155 | SLV 7 | Si |
| R_SLV | 0 | SLV 5 | No |

## Maschio 222

Verifiche condotte secondo D.M. 17-01-18 (N.T.C.)

### Dati geometrici

| X ini. | Y ini. | X fin. | Y fin. | Quota i. | Quota.s | l | Sp. | h netta | h ini. | h fin. | a | a.s.,sx | a.s.,dx |
|---|---|---|---|---|---|---|---|---|---|---|---|---|---|
| -12.3 | -335.9 | -228.3 | -335.9 | L6 | F1 | 216 | 28 | 318.2 | 318.1 | 318.2 | | | |

### Caratteristiche del materiale

(Circolare 7 21-01-19 C8.5.I) Muratura in mattoni pieni e malta di calce LC2_Corti

| fb | fk | fvk0 | fmedio | τ0 | fv0 | μ | ϕ | fv,lim | E | G | FC |
|---|---|---|---|---|---|---|---|---|---|---|---|
| 60 | | | 34.5 | 0.9 | 2 | 0.58 | 0.77 | 3.25 | 32000 | 12800 | 1.2 |

### Verifica a pressoflessione nel piano secondo D.M. 17-01-18 NTC §7.8.2.2.1 in combinazioni non sismiche, γM = 3

| Comb. | Quota | N | M | σ0 | Mu | c.s. | Verifica |
|---|---|---|---|---|---|---|---|
| SLU 10 | 1338 | -2573 | -96274 | 0.43 | 263348 | 2.735 | Si |
| SLU 10 | 1518 | -1596 | 14910 | 0.26 | 166824 | 11.189 | Si |
| SLU 82 | 1338 | -3550 | -121158 | 0.59 | 355736 | 2.936 | Si |
| SLU 82 | 1518 | -2379 | 32580 | 0.39 | 244518 | 7.505 | Si |
| SLU 42 | 1338 | -3291 | -119794 | 0.54 | 331682 | 2.769 | Si |
| SLU 42 | 1518 | -2677 | 37442 | 0.44 | 273388 | 7.302 | Si |
| SLU 23 | 1338 | -2901 | -96586 | 0.48 | 294834 | 3.053 | Si |
| SLU 23 | 1518 | -1945 | 27209 | 0.32 | 201728 | 7.414 | Si |
| SLU 39 | 1338 | -2844 | -96598 | 0.47 | 289420 | 2.996 | Si |
| SLU 39 | 1518 | -2065 | 33157 | 0.34 | 213717 | 6.446 | Si |
| SLU 34 | 1338 | -3294 | -122597 | 0.54 | 331984 | 2.708 | Si |
| SLU 34 | 1518 | -2635 | 34428 | 0.44 | 269361 | 7.824 | Si |
| SLU 73 | 1338 | -3553 | -123961 | 0.59 | 356035 | 2.872 | Si |
| SLU 73 | 1518 | -2337 | 29567 | 0.39 | 240435 | 8.132 | Si |
| SLU 31 | 1338 | -2764 | -116241 | 0.46 | 281808 | 2.424 | Si |
| SLU 31 | 1518 | -1990 | 22771 | 0.33 | 206277 | 9.059 | Si |
| SLU 19 | 1338 | -2570 | -93471 | 0.42 | 263036 | 2.814 | Si |
| SLU 19 | 1518 | -1638 | 17923 | 0.27 | 171042 | 9.543 | Si |
| SLU 40 | 1338 | -2761 | -113438 | 0.46 | 281499 | 2.482 | Si |
| SLU 40 | 1518 | -2032 | 25784 | 0.34 | 210423 | 8.161 | Si |

### Verifica a pressoflessione nel piano secondo D.M. 17-01-18 NTC §7.8.2.2.1 in combinazioni sismiche, γM = 2

| Comb. | Quota | N | M | σ0 | Mu | c.s. | Verifica |
|---|---|---|---|---|---|---|---|
| SLV 11 | 1338 | -1997 | 68522 | 0.33 | 209833 | 3.062 | Si |
| SLV 11 | 1518 | -1504 | 141509 | 0.25 | 159099 | 1.124 | Si |
| SLV 12 | 1338 | -1997 | 68522 | 0.33 | 209833 | 3.062 | Si |
| SLV 12 | 1518 | -1504 | 141509 | 0.25 | 159099 | 1.124 | Si |
| SLV 7 | 1338 | -2384 | 116320 | 0.39 | 249178 | 2.142 | Si |
| SLV 7 | 1518 | -1239 | 98929 | 0.2 | 131574 | 1.33 | Si |
| SLV 13 | 1338 | -2419 | -185225 | 0.4 | 252709 | 1.364 | Si |
| SLV 13 | 1518 | -2281 | 77299 | 0.38 | 238741 | 3.089 | Si |
| SLV 15 | 1338 | -2016 | -93848 | 0.33 | 211757 | 2.256 | Si |

| Comb. | Quota | N | M | σ0 | Mu | c.s. | Verifica |
|---|---|---|---|---|---|---|---|
| SLV 15 | 1518 | -2065 | 129861 | 0.34 | 216765 | 1.669 | Si |
| SLV 8 | 1338 | -2384 | 116320 | 0.39 | 249178 | 2.142 | Si |
| SLV 8 | 1518 | -1239 | 98929 | 0.2 | 131574 | 1.33 | Si |
| SLV 14 | 1338 | -2419 | -185225 | 0.4 | 252709 | 1.364 | Si |
| SLV 14 | 1518 | -2281 | 77299 | 0.38 | 238741 | 3.089 | Si |
| SLV 16 | 1338 | -2016 | -93848 | 0.33 | 211757 | 2.256 | Si |
| SLV 16 | 1518 | -2065 | 129861 | 0.34 | 216765 | 1.669 | Si |
| SLV 10 | 1338 | -3342 | -236068 | 0.55 | 344566 | 1.46 | Si |
| SLV 10 | 1518 | -2224 | -33700 | 0.37 | 233003 | 6.914 | Si |
| SLV 9 | 1338 | -3342 | -236068 | 0.55 | 344566 | 1.46 | Si |
| SLV 9 | 1518 | -2224 | -33700 | 0.37 | 233003 | 6.914 | Si |

Verifica a taglio nel piano secondo D.M. 17-01-18 (N.T.C.) §7.8.2.2.2 con rottura per scorrimento in combinazioni non sismiche, γM = 3

| Comb. | Quota | N | V par | M | σ0 | σN | l' | fvd | Vt scorr. | Vt fess.diag. | Vt,lim | c.s. | Verifica |
|---|---|---|---|---|---|---|---|---|---|---|---|---|---|
| SLU 78 | 1338 | -4925 | -2081 | -120092 | | 0.81 | 216 | 0.66 | 4017 | | | 1.93 | Si |
| SLU 78 | 1518 | -3976 | -1954 | 66391 | | 0.66 | 216 | 0.64 | 3890 | | | 1.99 | Si |
| SLU 84 | 1338 | -4079 | -1925 | -127515 | | 0.67 | 216 | 0.65 | 3904 | | | 2.03 | Si |
| SLU 84 | 1518 | -3024 | -1828 | 44238 | | 0.5 | 216 | 0.62 | 3763 | | | 2.06 | Si |
| SLU 80 | 1338 | -4667 | -2023 | -125447 | | 0.77 | 216 | 0.66 | 3982 | | | 1.97 | Si |
| SLU 80 | 1518 | -3649 | -1890 | 57798 | | 0.6 | 216 | 0.64 | 3846 | | | 2.03 | Si |
| SLU 79 | 1338 | -4750 | -1929 | -108608 | | 0.79 | 216 | 0.66 | 3993 | | | 2.07 | Si |
| SLU 79 | 1518 | -3682 | -1818 | 65171 | | 0.61 | 216 | 0.64 | 3851 | | | 2.12 | Si |
| SLU 75 | 1338 | -4396 | -1899 | -113736 | | 0.73 | 216 | 0.65 | 3946 | | | 2.08 | Si |
| SLU 75 | 1518 | -3331 | -1808 | 54733 | | 0.55 | 216 | 0.63 | 3804 | | | 2.1 | Si |
| SLU 83 | 1338 | -4162 | -1831 | -110675 | | 0.69 | 216 | 0.65 | 3915 | | | 2.14 | Si |
| SLU 83 | 1518 | -3057 | -1755 | 51611 | | 0.51 | 216 | 0.62 | 3768 | | | 2.15 | Si |
| SLU 76 | 1338 | -4083 | -1904 | -130318 | | 0.68 | 216 | 0.65 | 3904 | | | 2.05 | Si |
| SLU 76 | 1518 | -2982 | -1793 | 41225 | | 0.49 | 216 | 0.62 | 3758 | | | 2.1 | Si |
| SLU 36 | 1338 | -4137 | -1912 | -112372 | | 0.68 | 216 | 0.65 | 3912 | | | 2.05 | Si |
| SLU 36 | 1518 | -3629 | -1786 | 59595 | | 0.6 | 216 | 0.64 | 3844 | | | 2.15 | Si |
| SLU 38 | 1338 | -3879 | -1854 | -117727 | | 0.64 | 216 | 0.64 | 3877 | | | 2.09 | Si |
| SLU 38 | 1518 | -3302 | -1723 | 51002 | | 0.55 | 216 | 0.63 | 3800 | | | 2.21 | Si |
| SLU 77 | 1338 | -5008 | -1987 | -103253 | | 0.83 | 216 | 0.67 | 4028 | | | 2.03 | Si |
| SLU 77 | 1518 | -4009 | -1881 | 73764 | | 0.66 | 216 | 0.64 | 3895 | | | 2.07 | Si |

Verifica a taglio nel piano secondo D.M. 17-01-18 (N.T.C.) §7.8.2.2.2 con rottura per scorrimento in combinazioni sismiche, γM = 2

| Comb. | Quota | N | V par | M | σ0 | σN | l' | fvd | Vt scorr. | Vt fess.diag. | Vt,lim | c.s. | Verifica |
|---|---|---|---|---|---|---|---|---|---|---|---|---|---|
| SLV 9 | 1338 | -3342 | -1800 | -236068 | | 1.06 | 112.06 | 1.05 | 3283 | | | 1.82 | Si |
| SLV 9 | 1518 | -2224 | -636 | -33700 | | 0.37 | 216 | 0.91 | 5485 | | | 8.62 | Si |
| SLV 16 | 1338 | -2016 | -2534 | -93848 | | 0.39 | 184.32 | 0.91 | 4704 | | | 1.86 | Si |
| SLV 16 | 1518 | -2065 | -965 | 129861 | | 0.54 | 135.32 | 0.94 | 3570 | | | 3.7 | Si |
| SLV 13 | 1338 | -2419 | -2703 | -185225 | | 0.92 | 94.3 | 1.02 | 2684 | | | 0.99 | No, Vu<V |
| SLV 13 | 1518 | -2281 | -764 | 77299 | | 0.38 | 216 | 0.91 | 5496 | | | 7.2 | Si |
| SLV 11 | 1338 | -1997 | -1236 | 68522 | | 0.33 | 216 | 0.9 | 5439 | | | 4.4 | Si |
| SLV 11 | 1518 | -1504 | -1308 | 141509 | | 1.29 | 41.69 | 1.09 | 1273 | | | 0.97 | No, Vu<V |
| SLV 8 | 1338 | -2384 | -292 | 116320 | | 0.48 | 177.63 | 0.93 | 4622 | | | 15.82 | Si |
| SLV 8 | 1518 | -1239 | -1400 | 98929 | | 0.52 | 84.47 | 0.94 | 2219 | | | 1.58 | Si |
| SLV 7 | 1338 | -2384 | -292 | 116320 | | 0.48 | 177.63 | 0.93 | 4622 | | | 15.82 | Si |
| SLV 7 | 1518 | -1239 | -1400 | 98929 | | 0.52 | 84.47 | 0.94 | 2219 | | | 1.58 | Si |
| SLV 10 | 1338 | -3342 | -1800 | -236068 | | 1.06 | 112.06 | 1.05 | 3283 | | | 1.82 | Si |
| SLV 10 | 1518 | -2224 | -636 | -33700 | | 0.37 | 216 | 0.91 | 5485 | | | 8.62 | Si |
| SLV 15 | 1338 | -2016 | -2534 | -93848 | | 0.39 | 184.32 | 0.91 | 4704 | | | 1.86 | Si |
| SLV 15 | 1518 | -2065 | -965 | 129861 | | 0.54 | 135.32 | 0.94 | 3570 | | | 3.7 | Si |
| SLV 12 | 1338 | -1997 | -1236 | 68522 | | 0.33 | 216 | 0.9 | 5439 | | | 4.4 | Si |
| SLV 12 | 1518 | -1504 | -1308 | 141509 | | 1.29 | 41.69 | 1.09 | 1273 | | | 0.97 | No, Vu<V |
| SLV 14 | 1338 | -2419 | -2703 | -185225 | | 0.92 | 94.3 | 1.02 | 2684 | | | 0.99 | No, Vu<V |
| SLV 14 | 1518 | -2281 | -764 | 77299 | | 0.38 | 216 | 0.91 | 5496 | | | 7.2 | Si |

Verifica a pressoflessione fuori piano D.M. 17-01-18 (N.T.C.)

quota 1407 Wa 0.05 denominatore 8 γM = 2

| Comb. | fd | Sa | σ0 | N | M | Mc | Coeff.s. | Verifica |
|---|---|---|---|---|---|---|---|---|
| SLV 16 | 14 | 0.53 | 0.32 | -1952 | 24878 | 26601 | 1.07 | Si |
| SLV 15 | 14 | 0.53 | 0.32 | -1952 | 24878 | 26601 | 1.07 | Si |
| SLV 12 | 14 | 0.53 | 0.34 | -2039 | 24878 | 27755 | 1.12 | Si |
| SLV 11 | 14 | 0.53 | 0.34 | -2039 | 24878 | 27755 | 1.12 | Si |
| SLV 13 | 14 | 0.53 | 0.35 | -2126 | 24878 | 28910 | 1.16 | Si |
| SLV 14 | 14 | 0.53 | 0.35 | -2126 | 24878 | 28910 | 1.16 | Si |
| SLV 8 | 14 | 0.53 | 0.38 | -2288 | 24878 | 31041 | 1.25 | Si |
| SLV 7 | 14 | 0.53 | 0.38 | -2288 | 24878 | 31041 | 1.25 | Si |
| SLV 10 | 14 | 0.53 | 0.43 | -2621 | 24878 | 35390 | 1.42 | Si |
| SLV 9 | 14 | 0.53 | 0.43 | -2621 | 24878 | 35390 | 1.42 | Si |

Verifica dei meccanismi locali di collasso con analisi cinematica lineare

forza di aggancio al piano = 0 quota mezzeria = 1407 Wa = 0.05 Ta = 0.0604

| Comb. | N top | N base | V orto | α0 | M* | e* | a0* | aLim | Verifica |
|---|---|---|---|---|---|---|---|---|---|
| SLV 6 | -352 | -5353 | -170 | 0 | 3.635 | 0.934 | 0 | 1531.741 | No |
| SLV 12 | -1257 | -2230 | 237 | 0 | 4.289 | 0.891 | 0 | 1531.741 | No |
| SLV 11 | -1257 | -2230 | 237 | 0 | 4.289 | 0.891 | 0 | 1531.741 | No |
| SLV 5 | -352 | -5353 | -170 | 0 | 3.635 | 0.934 | 0 | 1531.741 | No |
| SLV 16 | -1197 | -4038 | 193 | 0.004 | 4.238 | 0.892 | 6.902 | 889.232 | No |
| SLV 15 | -1197 | -4038 | 193 | 0.004 | 4.238 | 0.892 | 6.902 | 889.232 | No |
| SLV 7 | -1087 | -1759 | 173 | 0.01 | 4.148 | 0.894 | 15.822 | 1531.741 | No |
| SLV 8 | -1087 | -1759 | 173 | 0.01 | 4.148 | 0.894 | 15.822 | 1531.741 | No |
| SLV 10 | -521 | -5825 | -106 | 0.031 | 3.73 | 0.918 | 49.041 | 1531.741 | No |
| SLV 9 | -521 | -5825 | -106 | 0.031 | 3.73 | 0.918 | 49.041 | 1531.741 | No |

### Tabella dei coefficienti di sicurezza minimi

| Stato limite | Coeff.s. | Comb. | Verifica |
|---|---|---|---|
| PF_SLU | 2.424 | SLU 31 | Si |
| V_SLU | 1.931 | SLU 78 | Si |
| PF_SLV | 1.124 | SLV 11 | Si |
| V_SLV | 0.974 | SLV 11 | No |
| PFFP_SLV | 1.069 | SLV 15 | Si |
| R_SLV | 0 | SLV 5 | No |

## Maschio 225

Verifiche condotte secondo D.M. 17-01-18 (N.T.C.)

### Dati geometrici

| X ini. | Y ini. | X fin. | Y fin. | Quota i. | Quota.s | l | Sp. | h netta | h ini. | h fin. | a | a.s.,sx | a.s.,dx |
|---|---|---|---|---|---|---|---|---|---|---|---|---|---|
| -1376.3 | -485.9 | -1314.3 | -485.9 | L2 | Z medio 373 cm | 62 | 30 | 273 | 273 | 273 | | | |

### Caratteristiche del materiale

(Circolare 7 21-01-19 C8.5.I) Muratura in mattoni pieni e malta di calce LC2_Corti

| fb | fk | fvk0 | fmedio | τ0 | fv0 | μ | ϕ | fv,lim | E | G | FC |
|---|---|---|---|---|---|---|---|---|---|---|---|
| 60 | | | 34.5 | 0.9 | 2 | 0.58 | 0.77 | 3.25 | 32000 | 12800 | 1.2 |

### Verifica a pressoflessione nel piano secondo D.M. 17-01-18 NTC §7.8.2.2.1 in combinazioni non sismiche, γM = 3

| Comb. | Quota | N | M | σ0 | Mu | c.s. | Verifica |
|---|---|---|---|---|---|---|---|
| SLU 82 | 100 | -6088 | 7305 | 3.27 | 112892 | 15.454 | Si |
| SLU 82 | 350 | -11710 | 71860 | 6.3 | 82453 | 1.147 | Si |
| SLU 76 | 100 | -6021 | 8003 | 3.24 | 112475 | 14.055 | Si |
| SLU 76 | 350 | -11715 | 72380 | 6.3 | 82361 | 1.138 | Si |
| SLU 81 | 100 | -6075 | 6837 | 3.27 | 112814 | 16.5 | Si |
| SLU 81 | 350 | -11609 | 70799 | 6.24 | 84140 | 1.188 | Si |
| SLU 84 | 100 | -6157 | 6936 | 3.31 | 113304 | 16.336 | Si |
| SLU 84 | 350 | -12030 | 74758 | 6.47 | 76834 | 1.028 | Si |
| SLU 78 | 100 | -6080 | 7404 | 3.27 | 112845 | 15.241 | Si |
| SLU 78 | 350 | -11941 | 74215 | 6.42 | 78440 | 1.057 | Si |
| SLU 75 | 100 | -6011 | 7773 | 3.23 | 112411 | 14.462 | Si |
| SLU 75 | 350 | -11621 | 71316 | 6.25 | 83942 | 1.177 | Si |
| SLU 77 | 100 | -6067 | 6936 | 3.26 | 112766 | 16.257 | Si |
| SLU 77 | 350 | -11840 | 73154 | 6.37 | 80222 | 1.097 | Si |
| SLU 83 | 100 | -6144 | 6468 | 3.3 | 113230 | 17.505 | Si |
| SLU 83 | 350 | -11929 | 73698 | 6.41 | 78653 | 1.067 | Si |
| SLU 80 | 100 | -6081 | 7322 | 3.27 | 112854 | 15.413 | Si |
| SLU 80 | 350 | -11968 | 74571 | 6.43 | 77954 | 1.045 | Si |
| SLU 79 | 100 | -6069 | 6855 | 3.26 | 112776 | 16.453 | Si |
| SLU 79 | 350 | -11867 | 73511 | 6.38 | 79747 | 1.085 | Si |

### Verifica a pressoflessione nel piano secondo D.M. 17-01-18 NTC §7.8.2.2.1 in combinazioni sismiche, γM = 2

| Comb. | Quota | N | M | σ0 | Mu | c.s. | Verifica |
|---|---|---|---|---|---|---|---|
| SLD 16 | 100 | -4376 | 35579 | 2.35 | 109543 | 3.079 | Si |
| SLD 16 | 350 | -791 | -45154 | 0 | 0 | 0 | No, e>l/2 |
| SLD 15 | 100 | -4376 | 35579 | 2.35 | 109543 | 3.079 | Si |
| SLD 15 | 350 | -791 | -45154 | 0 | 0 | 0 | No, e>l/2 |
| SLV 15 | 100 | -4413 | 74366 | 2.37 | 110242 | 1.482 | Si |
| SLV 15 | 350 | 9071 | -170669 | 0 | 0 | 0 | No, Trazione |
| SLV 14 | 100 | -5195 | 87727 | 2.79 | 124229 | 1.416 | Si |
| SLV 14 | 350 | 5884 | -129935 | 0 | 0 | 0 | No, Trazione |
| SLV 11 | 100 | -3186 | 6748 | 1.71 | 84925 | 12.585 | Si |
| SLV 11 | 350 | 1886 | -79498 | 0 | 0 | 0 | No, Trazione |
| SLV 16 | 100 | -4413 | 74366 | 2.37 | 110242 | 1.482 | Si |
| SLV 16 | 350 | 9071 | -170669 | 0 | 0 | 0 | No, Trazione |
| SLV 12 | 100 | -3186 | 6748 | 1.71 | 84925 | 12.585 | Si |
| SLV 12 | 350 | 1886 | -79498 | 0 | 0 | 0 | No, Trazione |
| SLV 2 | 100 | -4295 | -60932 | 2.31 | 107976 | 1.772 | Si |
| SLV 2 | 350 | -25272 | 266336 | 13.59 | 0 | 0 | No, Rottura per schiacciamento |
| SLV 1 | 100 | -4295 | -60932 | 2.31 | 107976 | 1.772 | Si |
| SLV 1 | 350 | -25272 | 266336 | 13.59 | 0 | 0 | No, Rottura per schiacciamento |
| SLV 13 | 100 | -5195 | 87727 | 2.79 | 124229 | 1.416 | Si |
| SLV 13 | 350 | 5884 | -129935 | 0 | 0 | 0 | No, Trazione |

### Verifica a taglio nel piano secondo D.M. 17-01-18 (N.T.C.) §7.8.2.2.2 con rottura per scorrimento in combinazioni non sismiche, γM = 3

| Comb. | Quota | N | V par | M | σ0 | σN | l' | fvd | Vt scorr. | Vt fess.diag. | Vt,lim | c.s. | Verifica |
|---|---|---|---|---|---|---|---|---|---|---|---|---|---|
| SLU 82 | 100 | -6088 | 193 | 7305 | | 3.27 | 62 | 0.99 | 1845 | | | 9.55 | Si |
| SLU 82 | 350 | -11710 | -2103 | 71860 | | 6.3 | 62 | 1.08 | 2015 | | | 0.96 | No, Vu<V |
| SLU 76 | 100 | -6021 | 200 | 8003 | | 3.24 | 62 | 0.99 | 1836 | | | 9.2 | Si |
| SLU 76 | 350 | -11715 | -2116 | 72380 | | 6.3 | 62 | 1.08 | 2015 | | | 0.95 | No, Vu<V |
| SLU 63 | 100 | -5954 | 185 | 7049 | | 3.2 | 62 | 0.98 | 1827 | | | 9.87 | Si |
| SLU 63 | 350 | -11549 | -2081 | 71239 | | 6.21 | 62 | 1.08 | 2015 | | | 0.97 | No, Vu<V |
| SLU 75 | 100 | -6011 | 188 | 7773 | | 3.23 | 62 | 0.99 | 1835 | | | 9.75 | Si |
| SLU 75 | 350 | -11621 | -2082 | 71316 | | 6.25 | 62 | 1.08 | 2015 | | | 0.97 | No, Vu<V |
| SLU 84 | 100 | -6157 | 178 | 6936 | | 3.31 | 62 | 1 | 1854 | | | 10.44 | Si |
| SLU 84 | 350 | -12030 | -2181 | 74758 | | 6.47 | 62 | 1.08 | 2015 | | | 0.92 | No, Vu<V |
| SLU 83 | 100 | -6144 | 157 | 6468 | | 3.3 | 62 | 1 | 1853 | | | 11.8 | Si |
| SLU 83 | 350 | -11929 | -2144 | 73698 | | 6.41 | 62 | 1.08 | 2015 | | | 0.94 | No, Vu<V |

| Comb. | Quota | N | V par | M | σ0 | σN | l' | fvd | Vt scorr. | Vt fess.diag. | Vt,lim | c.s. | Verifica |
|---|---|---|---|---|---|---|---|---|---|---|---|---|---|
| SLU 80 | 100 | -6081 | 170 | 7322 | | 3.27 | 62 | 0.99 | 1844 | | | 10.82 | Si |
| SLU 80 | 350 | -11968 | -2169 | 74571 | | 6.43 | 62 | 1.08 | 2015 | | | 0.93 | No, Vu<V |
| SLU 77 | 100 | -6067 | 152 | 6936 | | 3.26 | 62 | 0.99 | 1842 | | | 12.12 | Si |
| SLU 77 | 350 | -11840 | -2123 | 73154 | | 6.37 | 62 | 1.08 | 2015 | | | 0.95 | No, Vu<V |
| SLU 78 | 100 | -6080 | 173 | 7404 | | 3.27 | 62 | 0.99 | 1844 | | | 10.68 | Si |
| SLU 78 | 350 | -11941 | -2161 | 74215 | | 6.42 | 62 | 1.08 | 2015 | | | 0.93 | No, Vu<V |
| SLU 79 | 100 | -6069 | 150 | 6855 | | 3.26 | 62 | 0.99 | 1842 | | | 12.3 | Si |
| SLU 79 | 350 | -11867 | -2131 | 73511 | | 6.38 | 62 | 1.08 | 2015 | | | 0.95 | No, Vu<V |

### Verifica a taglio nel piano secondo D.M. 17-01-18 (N.T.C.) §7.8.2.2.2 con rottura per scorrimento in combinazioni sismiche, γM = 2

| Comb. | Quota | N | V par | M | σ0 | σN | l' | fvd | Vt scorr. | Vt fess.diag. | Vt,lim | c.s. | Verifica |
|---|---|---|---|---|---|---|---|---|---|---|---|---|---|
| SLV 16 | 100 | -4413 | 680 | 74366 | | 3.47 | 42.45 | 1.53 | 1944 | | | 2.86 | Si |
| SLV 16 | 350 | 9071 | 5712 | -170669 | | 0 | 0 | 0.83 | 0 | | | 0 | No, Vu<V |
| SLV 2 | 100 | -4295 | -380 | -60932 | | 2.84 | 50.44 | 1.4 | 2120 | | | 5.58 | Si |
| SLV 2 | 350 | -25272 | -8500 | 266336 | | 13.72 | 61.38 | 1.63 | 2992 | | | 0.35 | No, Vu<V |
| SLD 16 | 100 | -4376 | 373 | 35579 | | 2.35 | 62 | 1.3 | 2425 | | | 6.5 | Si |
| SLD 16 | 350 | -791 | 1631 | -45154 | | 0 | 0 | 0.83 | 0 | | | 0 | No, Vu<V |
| SLV 1 | 100 | -4295 | -380 | -60932 | | 2.84 | 50.44 | 1.4 | 2120 | | | 5.58 | Si |
| SLV 1 | 350 | -25272 | -8500 | 266336 | | 13.72 | 61.38 | 1.63 | 2992 | | | 0.35 | No, Vu<V |
| SLV 15 | 100 | -4413 | 680 | 74366 | | 3.47 | 42.45 | 1.53 | 1944 | | | 2.86 | Si |
| SLV 15 | 350 | 9071 | 5712 | -170669 | | 0 | 0 | 0.83 | 0 | | | 0 | No, Vu<V |
| SLV 13 | 100 | -5195 | -85 | 87727 | | 4.09 | 42.34 | 1.63 | 2064 | | | 24.23 | Si |
| SLV 13 | 350 | 5884 | 4480 | -129935 | | 0 | 0 | 0.83 | 0 | | | 0 | No, Vu<V |
| SLV 12 | 100 | -3186 | 1469 | 6748 | | 1.71 | 62 | 1.18 | 2187 | | | 1.49 | Si |
| SLV 12 | 350 | 1886 | 2606 | -79498 | | 0 | 0 | 0.83 | 0 | | | 0 | No, Vu<V |
| SLV 11 | 100 | -3186 | 1469 | 6748 | | 1.71 | 62 | 1.18 | 2187 | | | 1.49 | Si |
| SLV 11 | 350 | 1886 | 2606 | -79498 | | 0 | 0 | 0.83 | 0 | | | 0 | No, Vu<V |
| SLD 15 | 100 | -4376 | 373 | 35579 | | 2.35 | 62 | 1.3 | 2425 | | | 6.5 | Si |
| SLD 15 | 350 | -791 | 1631 | -45154 | | 0 | 0 | 0.83 | 0 | | | 0 | No, Vu<V |
| SLV 14 | 100 | -5195 | -85 | 87727 | | 4.09 | 42.34 | 1.63 | 2064 | | | 24.23 | Si |
| SLV 14 | 350 | 5884 | 4480 | -129935 | | 0 | 0 | 0.83 | 0 | | | 0 | No, Vu<V |

### Verifica a pressoflessione fuori piano D.M. 17-01-18 (N.T.C.)

quota 236.5 Wa 0.05 denominatore 8 γM = 2

| Comb. | fd | Sa | σ0 | N | M | Mc | Coeff.s. | Verifica |
|---|---|---|---|---|---|---|---|---|
| SLV 15 | 14 | 0.29 | 0 | -124 | 3105 | 0 | 0 | No, e>t/2 |
| SLV 16 | 14 | 0.29 | 0 | -124 | 3105 | 0 | 0 | No, e>t/2 |
| SLV 13 | 14 | 0.29 | 0.85 | -1583 | 3105 | 22097 | 7.12 | Si |
| SLV 14 | 14 | 0.29 | 0.85 | -1583 | 3105 | 22097 | 7.12 | Si |
| SLV 12 | 14 | 0.29 | 1.02 | -1891 | 3105 | 26006 | 8.37 | Si |
| SLV 11 | 14 | 0.29 | 1.02 | -1891 | 3105 | 26006 | 8.37 | Si |
| SLV 8 | 14 | 0.29 | 2.62 | -4866 | 3105 | 57362 | 18.47 | Si |
| SLV 7 | 14 | 0.29 | 2.62 | -4866 | 3105 | 57362 | 18.47 | Si |
| SLV 9 | 14 | 0.29 | 3.63 | -6757 | 3105 | 71224 | 22.94 | Si |
| SLV 10 | 14 | 0.29 | 3.63 | -6757 | 3105 | 71224 | 22.94 | Si |

### Verifica dei meccanismi locali di collasso con analisi cinematica lineare

forza di aggancio al piano = 0 quota mezzeria = 236.5 Wa = 0.05 Ta = 0.0415

| Comb. | N top | N base | V orto | α0 | M* | e* | a0* | aLim | Verifica |
|---|---|---|---|---|---|---|---|---|---|
| SLV 16 | 5337 | -4413 | -4 | 0 | 0 | 0 | 0 | 441.927 | No, Trazione |
| SLV 15 | 5337 | -4413 | -4 | 0 | 0 | 0 | 0 | 441.927 | No, Trazione |
| SLV 13 | 3153 | -5195 | 7 | 0 | 0 | 0 | 0 | 441.927 | No, Trazione |
| SLV 14 | 3153 | -5195 | 7 | 0 | 0 | 0 | 0 | 441.927 | No, Trazione |
| SLV 12 | 477 | -3186 | -19 | 0 | 0 | 0 | 0 | 641.171 | No, Trazione |
| SLV 11 | 477 | -3186 | -19 | 0 | 0 | 0 | 0 | 641.171 | No, Trazione |
| SLV 6 | -13153 | -5522 | 14 | 0.056 | 14.111 | 0.984 | 82.324 | 641.171 | No |
| SLV 5 | -13153 | -5522 | 14 | 0.056 | 14.111 | 0.984 | 82.324 | 641.171 | No |
| SLV 8 | -5873 | -2916 | -21 | 0.056 | 6.694 | 0.968 | 83.56 | 641.171 | No |
| SLV 7 | -5873 | -2916 | -21 | 0.056 | 6.694 | 0.968 | 83.56 | 641.171 | No |

### Tabella dei coefficienti di sicurezza minimi

| Stato limite | Coeff.s. | Comb. | Verifica |
|---|---|---|---|
| PF_SLU | 1.028 | SLU 84 | Si |
| V_SLU | 0.924 | SLU 84 | No |
| PF_SLV | 0 | SLV 16 | No |
| V_SLV | 0 | SLD 15 | No |
| PFFP_SLV | 0 | SLV 15 | No |
| R_SLV | 0 | SLV 16 | No |

## Maschio 226

Verifiche condotte secondo D.M. 17-01-18 (N.T.C.)

### Dati geometrici

| X ini. | Y ini. | X fin. | Y fin. | Quota i. | Quota.s | l | Sp. | h netta | h ini. | h fin. | a | a.s.,sx | a.s.,dx |
|---|---|---|---|---|---|---|---|---|---|---|---|---|---|
| -1174.3 | -485.9 | -1101.3 | -485.9 | L2 | Z medio 373 cm | 73 | 30 | 273 | 273 | 273 | | | |

### Caratteristiche del materiale

(Circolare 7 21-01-19 C8.5.I) Muratura in mattoni pieni e malta di calce LC2_Corti

| fb | fk | fvk0 | fmedio | τ0 | fv0 | μ | ϕ | fv,lim | E | G | FC |
|---|---|---|---|---|---|---|---|---|---|---|---|
| 60 | | | 34.5 | 0.9 | 2 | 0.58 | 0.77 | 3.25 | 32000 | 12800 | 1.2 |

Verifica a pressoflessione nel piano secondo D.M. 17-01-18 NTC §7.8.2.2.1 in combinazioni non sismiche, γM = 3

| Comb. | Quota | N | M | σ0 | Mu | c.s. | Verifica |
|---|---|---|---|---|---|---|---|
| SLU 76 | 100 | -7858 | 2993 | 3.59 | 160479 | 53.611 | Si |
| SLU 76 | 350 | -11037 | -35983 | 5.04 | 153608 | 4.269 | Si |
| SLU 63 | 100 | -7713 | 5828 | 3.52 | 159804 | 27.422 | Si |
| SLU 63 | 350 | -10965 | -35821 | 5.01 | 154229 | 4.306 | Si |
| SLU 84 | 100 | -8092 | 6141 | 3.69 | 161382 | 26.278 | Si |
| SLU 84 | 350 | -11454 | -36502 | 5.23 | 149645 | 4.1 | Si |
| SLU 61 | 100 | -7422 | 6445 | 3.39 | 158194 | 24.545 | Si |
| SLU 61 | 350 | -10651 | -36332 | 4.86 | 156654 | 4.312 | Si |
| SLU 83 | 100 | -8096 | 7559 | 3.7 | 161395 | 21.35 | Si |
| SLU 83 | 350 | -11455 | -35854 | 5.23 | 149629 | 4.173 | Si |
| SLU 82 | 100 | -7801 | 6759 | 3.56 | 160224 | 23.706 | Si |
| SLU 82 | 350 | -11140 | -37012 | 5.09 | 152697 | 4.126 | Si |
| SLU 80 | 100 | -8152 | 3321 | 3.72 | 161577 | 48.65 | Si |
| SLU 80 | 350 | -11352 | -35041 | 5.18 | 150678 | 4.3 | Si |
| SLU 78 | 100 | -8121 | 3396 | 3.71 | 161479 | 47.55 | Si |
| SLU 78 | 350 | -11317 | -35165 | 5.17 | 151022 | 4.295 | Si |
| SLU 81 | 100 | -7805 | 8177 | 3.56 | 160241 | 19.597 | Si |
| SLU 81 | 350 | -11142 | -36365 | 5.09 | 152684 | 4.199 | Si |
| SLU 73 | 100 | -7567 | 3611 | 3.46 | 159042 | 44.045 | Si |
| SLU 73 | 350 | -10724 | -36494 | 4.9 | 156126 | 4.278 | Si |

Verifica a pressoflessione nel piano secondo D.M. 17-01-18 NTC §7.8.2.2.1 in combinazioni sismiche, γM = 2

| Comb. | Quota | N | M | σ0 | Mu | c.s. | Verifica |
|---|---|---|---|---|---|---|---|
| SLV 8 | 100 | -2527 | 3816 | 1.15 | 83520 | 21.889 | Si |
| SLV 8 | 350 | -410 | 39158 | 0 | 0 | 0 | No, e>l/2 |
| SLV 7 | 100 | -2527 | 3816 | 1.15 | 83520 | 21.889 | Si |
| SLV 7 | 350 | -410 | 39158 | 0 | 0 | 0 | No, e>l/2 |
| SLV 11 | 100 | -424 | 51523 | 0 | 0 | 0 | No, e>l/2 |
| SLV 11 | 350 | -6310 | -86725 | 2.88 | 176000 | 2.029 | Si |
| SLV 2 | 100 | -10188 | -85159 | 4.65 | 230281 | 2.704 | Si |
| SLV 2 | 350 | 864 | 183113 | 0 | 0 | 0 | No, Trazione |
| SLV 15 | 100 | -775 | 89241 | 0 | 0 | 0 | No, e>l/2 |
| SLV 15 | 350 | -16213 | -235155 | 7.4 | 233227 | 0.992 | No, M>Mu |
| SLV 3 | 100 | -7784 | -69782 | 3.55 | 201471 | 2.887 | Si |
| SLV 3 | 350 | 3452 | 184455 | 0 | 0 | 0 | No, Trazione |
| SLV 12 | 100 | -424 | 51523 | 0 | 0 | 0 | No, e>l/2 |
| SLV 12 | 350 | -6310 | -86725 | 2.88 | 176000 | 2.029 | Si |
| SLV 1 | 100 | -10188 | -85159 | 4.65 | 230281 | 2.704 | Si |
| SLV 1 | 350 | 864 | 183113 | 0 | 0 | 0 | No, Trazione |
| SLV 4 | 100 | -7784 | -69782 | 3.55 | 201471 | 2.887 | Si |
| SLV 4 | 350 | 3452 | 184455 | 0 | 0 | 0 | No, Trazione |
| SLV 16 | 100 | -775 | 89241 | 0 | 0 | 0 | No, e>l/2 |
| SLV 16 | 350 | -16213 | -235155 | 7.4 | 233227 | 0.992 | No, M>Mu |

Verifica a taglio nel piano secondo D.M. 17-01-18 (N.T.C.) §7.8.2.2.2 con rottura per scorrimento in combinazioni non sismiche, γM = 3

| Comb. | Quota | N | V par | M | σ0 | σN | l' | fvd | Vt scorr. | Vt fess.diag. | Vt,lim | c.s. | Verifica |
|---|---|---|---|---|---|---|---|---|---|---|---|---|---|
| SLU 61 | 100 | -7422 | 187 | 6445 | | 3.39 | 73 | 1.01 | 2206 | | | 11.83 | Si |
| SLU 61 | 350 | -10651 | 1069 | -36332 | | 4.86 | 73 | 1.08 | 2373 | | | 2.22 | Si |
| SLU 83 | 100 | -8096 | 190 | 7559 | | 3.7 | 73 | 1.05 | 2296 | | | 12.11 | Si |
| SLU 83 | 350 | -11455 | 1084 | -35854 | | 5.23 | 73 | 1.08 | 2373 | | | 2.19 | Si |
| SLU 73 | 100 | -7567 | 145 | 3611 | | 3.46 | 73 | 1.02 | 2226 | | | 15.38 | Si |
| SLU 73 | 350 | -10724 | 1060 | -36494 | | 4.9 | 73 | 1.08 | 2373 | | | 2.24 | Si |
| SLU 84 | 100 | -8092 | 161 | 6141 | | 3.69 | 73 | 1.05 | 2296 | | | 14.29 | Si |
| SLU 84 | 350 | -11454 | 1094 | -36502 | | 5.23 | 73 | 1.08 | 2373 | | | 2.17 | Si |
| SLU 63 | 100 | -7713 | 164 | 5828 | | 3.52 | 73 | 1.03 | 2245 | | | 13.73 | Si |
| SLU 63 | 350 | -10965 | 1066 | -35821 | | 5.01 | 73 | 1.08 | 2373 | | | 2.23 | Si |
| SLU 82 | 100 | -7801 | 184 | 6759 | | 3.56 | 73 | 1.03 | 2257 | | | 12.29 | Si |
| SLU 82 | 350 | -11140 | 1097 | -37012 | | 5.09 | 73 | 1.08 | 2373 | | | 2.16 | Si |
| SLU 62 | 100 | -7716 | 193 | 7245 | | 3.52 | 73 | 1.03 | 2246 | | | 11.66 | Si |
| SLU 62 | 350 | -10966 | 1057 | -35174 | | 5.01 | 73 | 1.08 | 2373 | | | 2.25 | Si |
| SLU 76 | 100 | -7858 | 122 | 2993 | | 3.59 | 73 | 1.03 | 2264 | | | 18.6 | Si |
| SLU 76 | 350 | -11037 | 1057 | -35983 | | 5.04 | 73 | 1.08 | 2373 | | | 2.24 | Si |
| SLU 60 | 100 | -7426 | 216 | 7863 | | 3.39 | 73 | 1.01 | 2207 | | | 10.24 | Si |
| SLU 60 | 350 | -10652 | 1060 | -35684 | | 4.86 | 73 | 1.08 | 2373 | | | 2.24 | Si |
| SLU 81 | 100 | -7805 | 213 | 8177 | | 3.56 | 73 | 1.03 | 2257 | | | 10.62 | Si |
| SLU 81 | 350 | -11142 | 1087 | -36365 | | 5.09 | 73 | 1.08 | 2373 | | | 2.18 | Si |

Verifica a taglio nel piano secondo D.M. 17-01-18 (N.T.C.) §7.8.2.2.2 con rottura per scorrimento in combinazioni sismiche, γM = 2

| Comb. | Quota | N | V par | M | σ0 | σN | l' | fvd | Vt scorr. | Vt fess.diag. | Vt,lim | c.s. | Verifica |
|---|---|---|---|---|---|---|---|---|---|---|---|---|---|
| SLV 16 | 100 | -775 | 1054 | 89241 | | 0 | 0 | 0.83 | 0 | | | 0 | No, Vu<V |
| SLV 16 | 350 | -16213 | 6629 | -235155 | | 8.19 | 65.99 | 1.63 | 3217 | | | 0.49 | No, Vu<V |
| SLV 12 | 100 | -424 | 1241 | 51523 | | 0 | 0 | 0.83 | 0 | | | 0 | No, Vu<V |
| SLV 12 | 350 | -6310 | 3504 | -86725 | | 3.08 | 68.27 | 1.45 | 2969 | | | 0.85 | No, Vu<V |
| SLV 15 | 100 | -775 | 1054 | 89241 | | 0 | 0 | 0.83 | 0 | | | 0 | No, Vu<V |
| SLV 15 | 350 | -16213 | 6629 | -235155 | | 8.19 | 65.99 | 1.63 | 3217 | | | 0.49 | No, Vu<V |
| SLV 2 | 100 | -10188 | -799 | -85159 | | 4.65 | 73 | 1.63 | 3559 | | | 4.45 | Si |
| SLV 2 | 350 | 864 | -5131 | 183113 | | 0 | 0 | 0.83 | 0 | | | 0 | No, Vu<V |
| SLV 4 | 100 | -7784 | -248 | -69782 | | 3.55 | 73 | 1.54 | 3382 | | | 13.63 | Si |
| SLV 4 | 350 | 3452 | -4478 | 184455 | | 0 | 0 | 0.83 | 0 | | | 0 | No, Vu<V |
| SLV 1 | 100 | -10188 | -799 | -85159 | | 4.65 | 73 | 1.63 | 3559 | | | 4.45 | Si |
| SLV 1 | 350 | 864 | -5131 | 183113 | | 0 | 0 | 0.83 | 0 | | | 0 | No, Vu<V |
| SLV 3 | 100 | -7784 | -248 | -69782 | | 3.55 | 73 | 1.54 | 3382 | | | 13.63 | Si |
| SLV 3 | 350 | 3452 | -4478 | 184455 | | 0 | 0 | 0.83 | 0 | | | 0 | No, Vu<V |
| SLV 7 | 100 | -2527 | 851 | 3816 | | 1.15 | 73 | 1.06 | 2330 | | | 2.74 | Si |
| SLV 7 | 350 | -410 | 172 | 39158 | | 0 | 0 | 0.83 | 0 | | | 0 | No, Vu<V |
| SLV 8 | 100 | -2527 | 851 | 3816 | | 1.15 | 73 | 1.06 | 2330 | | | 2.74 | Si |

| Comb. | Quota | N | V par | M | σ0 | σN | l' | fvd | Vt scorr. | Vt fess.diag. | Vt,lim | c.s. | Verifica |
|---|---|---|---|---|---|---|---|---|---|---|---|---|---|
| SLV 8 | 350 | -410 | 172 | 39158 | | 0 | 0 | 0.83 | 0 | | | 0 | No, Vu<V |
| SLV 11 | 100 | -424 | 1241 | 51523 | | 0 | 0 | 0.83 | 0 | | | 0 | No, Vu<V |
| SLV 11 | 350 | -6310 | 3504 | -86725 | | 3.08 | 68.27 | 1.45 | 2969 | | | 0.85 | No, Vu<V |

### Verifica a pressoflessione fuori piano D.M. 17-01-18 (N.T.C.)

quota 236.5 Wa 0.05 denominatore 8 γM = 2

| Comb. | fd | Sa | σ0 | N | M | Mc | Coeff.s. | Verifica |
|---|---|---|---|---|---|---|---|---|
| SLV 7 | 14 | 0.29 | 1.2 | -2637 | 3656 | 35660 | 9.75 | Si |
| SLV 8 | 14 | 0.29 | 1.2 | -2637 | 3656 | 35660 | 9.75 | Si |
| SLV 11 | 14 | 0.29 | 1.66 | -3645 | 3656 | 47224 | 12.92 | Si |
| SLV 12 | 14 | 0.29 | 1.66 | -3645 | 3656 | 47224 | 12.92 | Si |
| SLV 3 | 14 | 0.29 | 1.92 | -4209 | 3656 | 53199 | 14.55 | Si |
| SLV 4 | 14 | 0.29 | 1.92 | -4209 | 3656 | 53199 | 14.55 | Si |
| SLV 2 | 14 | 0.29 | 3 | -6563 | 3656 | 74298 | 20.32 | Si |
| SLV 1 | 14 | 0.29 | 3 | -6563 | 3656 | 74298 | 20.32 | Si |
| SLV 16 | 14 | 0.29 | 3.46 | -7567 | 3656 | 81405 | 22.26 | Si |
| SLV 15 | 14 | 0.29 | 3.46 | -7567 | 3656 | 81405 | 22.26 | Si |

### Verifica dei meccanismi locali di collasso con analisi cinematica lineare

forza di aggancio al piano = 0 quota mezzeria = 236.5 Wa = 0.05 Ta = 0.0415

| Comb. | N top | N base | V orto | α0 | M* | e* | a0* | aLim | Verifica |
|---|---|---|---|---|---|---|---|---|---|
| SLV 10 | -11424 | -8436 | 10 | 0.057 | 12.474 | 0.979 | 84.052 | 641.171 | No |
| SLV 9 | -11424 | -8436 | 10 | 0.057 | 12.474 | 0.979 | 84.052 | 641.171 | No |
| SLV 6 | -8559 | -10539 | 13 | 0.057 | 9.556 | 0.973 | 84.785 | 641.171 | No |
| SLV 5 | -8559 | -10539 | 13 | 0.057 | 9.556 | 0.973 | 84.785 | 641.171 | No |
| SLV 11 | -4215 | -424 | -13 | 0.059 | 5.136 | 0.952 | 89.296 | 641.171 | No |
| SLV 12 | -4215 | -424 | -13 | 0.059 | 5.136 | 0.952 | 89.296 | 641.171 | No |
| SLV 8 | -1351 | -2527 | -9 | 0.066 | 2.245 | 0.908 | 105.309 | 641.171 | No |
| SLV 7 | -1351 | -2527 | -9 | 0.066 | 2.245 | 0.908 | 105.309 | 641.171 | No |
| SLV 14 | -12242 | -3179 | -2 | 0.057 | 13.308 | 0.98 | 84.626 | 441.927 | No |
| SLV 13 | -12242 | -3179 | -2 | 0.057 | 13.308 | 0.98 | 84.626 | 441.927 | No |

### Tabella dei coefficienti di sicurezza minimi

| Stato limite | Coeff.s. | Comb. | Verifica |
|---|---|---|---|
| PF_SLU | 4.1 | SLU 84 | Si |
| V_SLU | 2.163 | SLU 82 | Si |
| PF_SLV | 0 | SLV 4 | No |
| V_SLV | 0 | SLV 1 | No |
| PFFP_SLV | 9.753 | SLV 7 | Si |
| R_SLV | 0.131 | SLV 9 | No |

## Maschio 227

Verifiche condotte secondo D.M. 17-01-18 (N.T.C.)

### Dati geometrici

| X ini. | Y ini. | X fin. | Y fin. | Quota i. | Quota.s | l | Sp. | h netta | h ini. | h fin. | a | a.s.,sx | a.s.,dx |
|---|---|---|---|---|---|---|---|---|---|---|---|---|---|
| -1375.3 | -485.9 | -1293.3 | -485.9 | Z medio 373 cm | Z medio 718 cm | 82 | 30 | 345 | 345 | 345 | | | |

### Caratteristiche del materiale

(Circolare 7 21-01-19 C8.5.I) Muratura in mattoni pieni e malta di calce LC2_Corti

| fb | fk | fvk0 | fmedio | τ0 | fv0 | μ | ϕ | fv,lim | E | G | FC |
|---|---|---|---|---|---|---|---|---|---|---|---|
| 60 | | | 34.5 | 0.9 | 2 | 0.58 | 0.77 | 3.25 | 32000 | 12800 | 1.2 |

### Verifica a pressoflessione nel piano secondo D.M. 17-01-18 NTC §7.8.2.2.1 in combinazioni non sismiche, γM = 3

| Comb. | Quota | N | M | σ0 | Mu | c.s. | Verifica |
|---|---|---|---|---|---|---|---|
| SLU 59 | 468 | -9156 | 6990 | 3.72 | 203887 | 29.167 | Si |
| SLU 59 | 668 | -8763 | 41610 | 3.56 | 202180 | 4.859 | Si |
| SLU 82 | 468 | -9273 | 6991 | 3.77 | 204273 | 29.218 | Si |
| SLU 82 | 668 | -8910 | 41737 | 3.62 | 202894 | 4.861 | Si |
| SLU 80 | 468 | -9506 | 6678 | 3.86 | 204873 | 30.677 | Si |
| SLU 80 | 668 | -9173 | 44303 | 3.73 | 203947 | 4.603 | Si |
| SLU 84 | 468 | -9490 | 6536 | 3.86 | 204839 | 31.34 | Si |
| SLU 84 | 668 | -9185 | 44311 | 3.73 | 203987 | 4.604 | Si |
| SLU 77 | 468 | -9414 | 6687 | 3.83 | 204662 | 30.605 | Si |
| SLU 77 | 668 | -9080 | 43575 | 3.69 | 203605 | 4.673 | Si |
| SLU 63 | 468 | -9140 | 6848 | 3.72 | 203831 | 29.765 | Si |
| SLU 63 | 668 | -8774 | 41618 | 3.57 | 202240 | 4.859 | Si |
| SLU 76 | 468 | -9342 | 7165 | 3.8 | 204473 | 28.536 | Si |
| SLU 76 | 668 | -8946 | 41935 | 3.64 | 203054 | 4.842 | Si |
| SLU 83 | 468 | -9411 | 6488 | 3.83 | 204654 | 31.541 | Si |
| SLU 83 | 668 | -9114 | 44002 | 3.7 | 203733 | 4.63 | Si |
| SLU 78 | 468 | -9493 | 6735 | 3.86 | 204846 | 30.416 | Si |
| SLU 78 | 668 | -9151 | 43884 | 3.72 | 203870 | 4.646 | Si |
| SLU 79 | 468 | -9426 | 6631 | 3.83 | 204693 | 30.87 | Si |
| SLU 79 | 668 | -9102 | 43994 | 3.7 | 203689 | 4.63 | Si |

### Verifica a pressoflessione nel piano secondo D.M. 17-01-18 NTC §7.8.2.2.1 in combinazioni sismiche, γM = 2

| Comb. | Quota | N | M | σ0 | Mu | c.s. | Verifica |
|---|---|---|---|---|---|---|---|
| SLV 15 | 468 | -2527 | 178575 | 0 | 0 | 0 | No, e>l/2 |
| SLV 15 | 668 | 4986 | -169168 | 0 | 0 | 0 | No, Trazione |
| SLV 16 | 468 | -2527 | 178575 | 0 | 0 | 0 | No, e>l/2 |

| Comb. | Quota | N | M | σ0 | Mu | c.s. | Verifica |
|---|---|---|---|---|---|---|---|
| SLV 16 | 668 | 4986 | -169168 | 0 | 0 | 0 | No, Trazione |
| SLV 14 | 468 | -4040 | 171311 | 0 | 0 | 0 | No, e>l/2 |
| SLV 14 | 668 | 2988 | -143141 | 0 | 0 | 0 | No, Trazione |
| SLV 13 | 468 | -4040 | 171311 | 0 | 0 | 0 | No, e>l/2 |
| SLV 13 | 668 | 2988 | -143141 | 0 | 0 | 0 | No, Trazione |
| SLD 15 | 468 | -4873 | 79861 | 1.98 | 167407 | 2.096 | Si |
| SLD 15 | 668 | -1411 | -56980 | 0.57 | 55134 | 0.968 | No, M>Mu |
| SLV 1 | 468 | -10700 | -165487 | 4.35 | 282551 | 1.707 | Si |
| SLV 1 | 668 | -17316 | 221919 | 7.04 | 300991 | 1.356 | Si |
| SLD 16 | 468 | -4873 | 79861 | 1.98 | 167407 | 2.096 | Si |
| SLD 16 | 668 | -1411 | -56980 | 0.57 | 55134 | 0.968 | No, M>Mu |
| SLV 2 | 468 | -10700 | -165487 | 4.35 | 282551 | 1.707 | Si |
| SLV 2 | 668 | -17316 | 221919 | 7.04 | 300991 | 1.356 | Si |
| SLV 11 | 468 | -3092 | 69170 | 1.26 | 113741 | 1.644 | Si |
| SLV 11 | 668 | 211 | -71764 | 0 | 0 | 0 | No, Trazione |
| SLV 12 | 468 | -3092 | 69170 | 1.26 | 113741 | 1.644 | Si |
| SLV 12 | 668 | 211 | -71764 | 0 | 0 | 0 | No, Trazione |

### Verifica a taglio nel piano secondo D.M. 17-01-18 (N.T.C.) §7.8.2.2.2 con rottura per scorrimento in combinazioni non sismiche, γM = 3

| Comb. | Quota | N | V par | M | σ0 | σN | I' | fvd | Vt scorr. | Vt fess.diag. | Vt,lim | c.s. | Verifica |
|---|---|---|---|---|---|---|---|---|---|---|---|---|---|
| SLU 37 | 468 | -7633 | -498 | 4414 | | 3.1 | 82 | 0.97 | 2384 | | | 4.79 | Si |
| SLU 37 | 668 | -7486 | -474 | 37752 | | 3.04 | 82 | 0.96 | 2365 | | | 4.99 | Si |
| SLU 80 | 468 | -9506 | -570 | 6678 | | 3.86 | 82 | 1.07 | 2634 | | | 4.62 | Si |
| SLU 80 | 668 | -9173 | -527 | 44303 | | 3.73 | 82 | 1.05 | 2590 | | | 4.92 | Si |
| SLU 84 | 468 | -9490 | -573 | 6536 | | 3.86 | 82 | 1.07 | 2632 | | | 4.6 | Si |
| SLU 84 | 668 | -9185 | -527 | 44311 | | 3.73 | 82 | 1.05 | 2591 | | | 4.92 | Si |
| SLU 41 | 468 | -7617 | -501 | 4272 | | 3.1 | 82 | 0.97 | 2382 | | | 4.76 | Si |
| SLU 41 | 668 | -7497 | -474 | 37760 | | 3.05 | 82 | 0.96 | 2366 | | | 5 | Si |
| SLU 83 | 468 | -9411 | -570 | 6488 | | 3.83 | 82 | 1.07 | 2621 | | | 4.6 | Si |
| SLU 83 | 668 | -9114 | -520 | 44002 | | 3.7 | 82 | 1.05 | 2582 | | | 4.96 | Si |
| SLU 78 | 468 | -9493 | -564 | 6735 | | 3.86 | 82 | 1.07 | 2633 | | | 4.67 | Si |
| SLU 78 | 668 | -9151 | -518 | 43884 | | 3.72 | 82 | 1.05 | 2587 | | | 4.99 | Si |
| SLU 42 | 468 | -7696 | -504 | 4320 | | 3.13 | 82 | 0.97 | 2393 | | | 4.75 | Si |
| SLU 42 | 668 | -7569 | -480 | 38070 | | 3.08 | 82 | 0.97 | 2376 | | | 4.95 | Si |
| SLU 38 | 468 | -7712 | -501 | 4462 | | 3.13 | 82 | 0.97 | 2395 | | | 4.78 | Si |
| SLU 38 | 668 | -7557 | -480 | 38061 | | 3.07 | 82 | 0.97 | 2374 | | | 4.94 | Si |
| SLU 77 | 468 | -9414 | -561 | 6687 | | 3.83 | 82 | 1.07 | 2622 | | | 4.67 | Si |
| SLU 77 | 668 | -9080 | -511 | 43575 | | 3.69 | 82 | 1.05 | 2577 | | | 5.04 | Si |
| SLU 79 | 468 | -9426 | -567 | 6631 | | 3.83 | 82 | 1.07 | 2624 | | | 4.63 | Si |
| SLU 79 | 668 | -9102 | -520 | 43994 | | 3.7 | 82 | 1.05 | 2580 | | | 4.96 | Si |

### Verifica a taglio nel piano secondo D.M. 17-01-18 (N.T.C.) §7.8.2.2.2 con rottura per scorrimento in combinazioni sismiche, γM = 2

| Comb. | Quota | N | V par | M | σ0 | σN | I' | fvd | Vt scorr. | Vt fess.diag. | Vt,lim | c.s. | Verifica |
|---|---|---|---|---|---|---|---|---|---|---|---|---|---|
| SLV 15 | 468 | -2527 | 4918 | 178575 | | 0 | 0 | 0.83 | 0 | | | 0 | No, Vu<V |
| SLV 15 | 668 | 4986 | 5244 | -169168 | | 0 | 0 | 0.83 | 0 | | | 0 | No, Vu<V |
| SLV 11 | 468 | -3092 | 2271 | 69170 | | 1.84 | 55.9 | 1.2 | 2016 | | | 0.89 | No, Vu<V |
| SLV 11 | 668 | 211 | 2320 | -71764 | | 0 | 0 | 0.83 | 0 | | | 0 | No, Vu<V |
| SLD 16 | 468 | -4873 | 1911 | 79861 | | 2.2 | 73.84 | 1.27 | 2821 | | | 1.48 | Si |
| SLD 16 | 668 | -1411 | 2090 | -56980 | | 25.44 | 1.85 | 1.63 | 90 | | | 0.04 | No, Vu<V |
| SLV 12 | 468 | -3092 | 2271 | 69170 | | 1.84 | 55.9 | 1.2 | 2016 | | | 0.89 | No, Vu<V |
| SLV 12 | 668 | 211 | 2320 | -71764 | | 0 | 0 | 0.83 | 0 | | | 0 | No, Vu<V |
| SLV 1 | 468 | -10700 | -5551 | -165487 | | 4.66 | 76.61 | 1.63 | 3735 | | | 0.67 | No, Vu<V |
| SLV 1 | 668 | -17316 | -5758 | 221919 | | 7.04 | 82 | 1.63 | 3998 | | | 0.69 | No, Vu<V |
| SLV 2 | 468 | -10700 | -5551 | -165487 | | 4.66 | 76.61 | 1.63 | 3735 | | | 0.67 | No, Vu<V |
| SLV 2 | 668 | -17316 | -5758 | 221919 | | 7.04 | 82 | 1.63 | 3998 | | | 0.69 | No, Vu<V |
| SLV 13 | 468 | -4040 | 4247 | 171311 | | 0 | 0 | 0.83 | 0 | | | 0 | No, Vu<V |
| SLV 13 | 668 | 2988 | 4633 | -143141 | | 0 | 0 | 0.83 | 0 | | | 0 | No, Vu<V |
| SLV 14 | 468 | -4040 | 4247 | 171311 | | 0 | 0 | 0.83 | 0 | | | 0 | No, Vu<V |
| SLV 14 | 668 | 2988 | 4633 | -143141 | | 0 | 0 | 0.83 | 0 | | | 0 | No, Vu<V |
| SLD 15 | 468 | -4873 | 1911 | 79861 | | 2.2 | 73.84 | 1.27 | 2821 | | | 1.48 | Si |
| SLD 15 | 668 | -1411 | 2090 | -56980 | | 25.44 | 1.85 | 1.63 | 90 | | | 0.04 | No, Vu<V |
| SLV 16 | 468 | -2527 | 4918 | 178575 | | 0 | 0 | 0.83 | 0 | | | 0 | No, Vu<V |
| SLV 16 | 668 | 4986 | 5244 | -169168 | | 0 | 0 | 0.83 | 0 | | | 0 | No, Vu<V |

### Verifica a pressoflessione fuori piano D.M. 17-01-18 (N.T.C.)

quota 545.5 Wa 0.05 denominatore 8 γM = 2

| Comb. | fd | Sa | σ0 | N | M | Mc | Coeff.s. | Verifica |
|---|---|---|---|---|---|---|---|---|
| SLV 16 | 14 | 0.35 | 0.32 | -786 | 7964 | 11485 | 1.44 | Si |
| SLV 15 | 14 | 0.35 | 0.32 | -786 | 7964 | 11485 | 1.44 | Si |
| SLV 13 | 14 | 0.35 | 1 | -2448 | 7964 | 33735 | 4.24 | Si |
| SLV 14 | 14 | 0.35 | 1 | -2448 | 7964 | 33735 | 4.24 | Si |
| SLV 11 | 14 | 0.35 | 1.01 | -2473 | 7964 | 34043 | 4.27 | Si |
| SLV 12 | 14 | 0.35 | 1.01 | -2473 | 7964 | 34043 | 4.27 | Si |
| SLV 8 | 14 | 0.35 | 2.27 | -5581 | 7964 | 68172 | 8.56 | Si |
| SLV 7 | 14 | 0.35 | 2.27 | -5581 | 7964 | 68172 | 8.56 | Si |
| SLV 9 | 14 | 0.35 | 3.26 | -8014 | 7964 | 88159 | 11.07 | Si |
| SLV 10 | 14 | 0.35 | 3.26 | -8014 | 7964 | 88159 | 11.07 | Si |

### Verifica dei meccanismi locali di collasso con analisi cinematica lineare

forza di aggancio al piano = 0 quota mezzeria = 545.5 Wa = 0.05 Ta = 0.0663

| Comb. | N top | N base | V orto | α0 | M* | e* | a0* | aLim | Verifica |
|---|---|---|---|---|---|---|---|---|---|
| SLV 12 | -663 | 658 | 11 | 0 | 0 | 0 | 0 | 1256.621 | No, Trazione |
| SLV 16 | 2320 | 5968 | 0 | 0 | 0 | 0 | 0 | 704.655 | No, Trazione |
| SLV 13 | 940 | 3548 | -7 | 0 | 0 | 0 | 0 | 704.655 | No, Trazione |
| SLV 15 | 2320 | 5968 | 0 | 0 | 0 | 0 | 0 | 704.655 | No, Trazione |
| SLV 11 | -663 | 658 | 11 | 0 | 0 | 0 | 0 | 1256.621 | No, Trazione |
| SLV 14 | 940 | 3548 | -7 | 0 | 0 | 0 | 0 | 704.655 | No, Trazione |

| Comb. | N top | N base | V orto | α0 | M* | e* | a0* | aLim | Verifica |
|---|---|---|---|---|---|---|---|---|---|
| SLV 5 | -9202 | -14382 | -14 | 0.045 | 10.563 | 0.966 | 68.381 | 1256.621 | No |
| SLV 6 | -9202 | -14382 | -14 | 0.045 | 10.563 | 0.966 | 68.381 | 1256.621 | No |
| SLV 10 | -5264 | -7410 | -15 | 0.047 | 6.56 | 0.948 | 71.371 | 1256.621 | No |
| SLV 9 | -5264 | -7410 | -15 | 0.047 | 6.56 | 0.948 | 71.371 | 1256.621 | No |

### Tabella dei coefficienti di sicurezza minimi

| Stato limite | Coeff.s. | Comb. | Verifica |
|---|---|---|---|
| PF_SLU | 4.603 | SLU 80 | Si |
| V_SLU | 4.596 | SLU 84 | Si |
| PF_SLV | 0 | SLV 16 | No |
| V_SLV | 0 | SLV 11 | No |
| PFFP_SLV | 1.442 | SLV 15 | Si |
| R_SLV | 0 | SLV 16 | No |

## Maschio 228

Verifiche condotte secondo D.M. 17-01-18 (N.T.C.)

### Dati geometrici

| X ini. | Y ini. | X fin. | Y fin. | Quota i. | Quota.s | l | Sp. | h netta | h ini. | h fin. | a | a.s.,sx | a.s.,dx |
|---|---|---|---|---|---|---|---|---|---|---|---|---|---|
| -1193.3 | -485.9 | -1100.3 | -485.9 | Z medio 373 cm | Z medio 718 cm | 93 | 30 | 345 | 345 | 345 | | | |

### Caratteristiche del materiale

(Circolare 7 21-01-19 C8.5.I) Muratura in mattoni pieni e malta di calce LC2_Corti

| fb | fk | fvk0 | fmedio | τ0 | fv0 | μ | ϕ | fv,lim | E | G | FC |
|---|---|---|---|---|---|---|---|---|---|---|---|
| 60 | | | 34.5 | 0.9 | 2 | 0.58 | 0.77 | 3.25 | 32000 | 12800 | 1.2 |

### Verifica a pressoflessione nel piano secondo D.M. 17-01-18 NTC §7.8.2.2.1 in combinazioni non sismiche, γM = 3

| Comb. | Quota | N | M | σ0 | Mu | c.s. | Verifica |
|---|---|---|---|---|---|---|---|
| SLU 43 | 468 | -8770 | -24339 | 3.14 | 250424 | 10.289 | Si |
| SLU 43 | 668 | -7315 | -33780 | 2.62 | 230648 | 6.828 | Si |
| SLU 81 | 468 | -10560 | -28798 | 3.79 | 262862 | 9.128 | Si |
| SLU 81 | 668 | -8827 | -37025 | 3.16 | 251026 | 6.78 | Si |
| SLU 61 | 468 | -10040 | -27845 | 3.6 | 260598 | 9.359 | Si |
| SLU 61 | 668 | -8436 | -36382 | 3.02 | 246656 | 6.78 | Si |
| SLU 73 | 468 | -10204 | -29765 | 3.66 | 261435 | 8.783 | Si |
| SLU 73 | 668 | -8502 | -36178 | 3.05 | 247432 | 6.839 | Si |
| SLU 64 | 468 | -9303 | -26319 | 3.33 | 255501 | 9.708 | Si |
| SLU 64 | 668 | -7711 | -34389 | 2.76 | 236897 | 6.889 | Si |
| SLU 65 | 468 | -9325 | -28030 | 3.34 | 255681 | 9.122 | Si |
| SLU 65 | 668 | -7721 | -34333 | 2.77 | 237036 | 6.904 | Si |
| SLU 44 | 468 | -8791 | -26050 | 3.15 | 250650 | 9.622 | Si |
| SLU 44 | 668 | -7324 | -33724 | 2.63 | 230803 | 6.844 | Si |
| SLU 52 | 468 | -9671 | -27785 | 3.47 | 258325 | 9.297 | Si |
| SLU 52 | 668 | -8105 | -35569 | 2.91 | 242467 | 6.817 | Si |
| SLU 60 | 468 | -10027 | -26818 | 3.59 | 260528 | 9.715 | Si |
| SLU 60 | 668 | -8431 | -36416 | 3.02 | 246589 | 6.771 | Si |
| SLU 82 | 468 | -10573 | -29825 | 3.79 | 262904 | 8.815 | Si |
| SLU 82 | 668 | -8833 | -36991 | 3.17 | 251084 | 6.788 | Si |

### Verifica a pressoflessione nel piano secondo D.M. 17-01-18 NTC §7.8.2.2.1 in combinazioni sismiche, γM = 2

| Comb. | Quota | N | M | σ0 | Mu | c.s. | Verifica |
|---|---|---|---|---|---|---|---|
| SLV 16 | 468 | -2408 | 200052 | 0 | 0 | 0 | No, e>l/2 |
| SLV 16 | 668 | -10839 | -247619 | 3.88 | 343738 | 1.388 | Si |
| SLV 3 | 468 | -8901 | -213794 | 3.19 | 305808 | 1.43 | Si |
| SLV 3 | 668 | 482 | 197215 | 0 | 0 | 0 | No, Trazione |
| SLV 4 | 468 | -8901 | -213794 | 3.19 | 305808 | 1.43 | Si |
| SLV 4 | 668 | 482 | 197215 | 0 | 0 | 0 | No, Trazione |
| SLV 14 | 468 | -5680 | 173182 | 2.04 | 220110 | 1.271 | Si |
| SLV 14 | 668 | -12617 | -250908 | 4.52 | 369536 | 1.473 | Si |
| SLV 2 | 468 | -12173 | -240664 | 4.36 | 363906 | 1.512 | Si |
| SLV 2 | 668 | -1297 | 193926 | 0 | 0 | 0 | No, e>l/2 |
| SLV 1 | 468 | -12173 | -240664 | 4.36 | 363906 | 1.512 | Si |
| SLV 1 | 668 | -1297 | 193926 | 0 | 0 | 0 | No, e>l/2 |
| SLV 12 | 468 | -862 | 86554 | 0 | 0 | 0 | No, e>l/2 |
| SLV 12 | 668 | -4801 | -88091 | 1.72 | 191811 | 2.177 | Si |
| SLV 11 | 468 | -862 | 86554 | 0 | 0 | 0 | No, e>l/2 |
| SLV 11 | 668 | -4801 | -88091 | 1.72 | 191811 | 2.177 | Si |
| SLV 13 | 468 | -5680 | 173182 | 2.04 | 220110 | 1.271 | Si |
| SLV 13 | 668 | -12617 | -250908 | 4.52 | 369536 | 1.473 | Si |
| SLV 15 | 468 | -2408 | 200052 | 0 | 0 | 0 | No, e>l/2 |
| SLV 15 | 668 | -10839 | -247619 | 3.88 | 343738 | 1.388 | Si |

### Verifica a taglio nel piano secondo D.M. 17-01-18 (N.T.C.) §7.8.2.2.2 con rottura per scorrimento in combinazioni non sismiche, γM = 3

| Comb. | Quota | N | V par | M | σ0 | σN | l' | fvd | Vt scorr. | Vt fess.diag. | Vt,lim | c.s. | Verifica |
|---|---|---|---|---|---|---|---|---|---|---|---|---|---|
| SLU 80 | 468 | -11068 | -321 | -33640 | | 3.97 | 93 | 1.08 | 3022 | | | 9.41 | Si |
| SLU 80 | 668 | -9092 | 166 | -34707 | | 3.26 | 93 | 0.99 | 2762 | | | 16.68 | Si |
| SLU 37 | 468 | -9172 | -292 | -27519 | | 3.29 | 93 | 0.99 | 2773 | | | 9.51 | Si |
| SLU 37 | 668 | -7503 | 147 | -27106 | | 2.69 | 93 | 0.91 | 2550 | | | 17.38 | Si |
| SLU 30 | 468 | -8305 | -272 | -26810 | | 2.98 | 93 | 0.95 | 2657 | | | 9.76 | Si |
| SLU 30 | 668 | -6728 | 84 | -25227 | | 2.41 | 93 | 0.88 | 2447 | | | 29.11 | Si |
| SLU 36 | 468 | -9128 | -296 | -28265 | | 3.27 | 93 | 0.99 | 2767 | | | 9.34 | Si |
| SLU 36 | 668 | -7463 | 130 | -27286 | | 2.68 | 93 | 0.91 | 2545 | | | 19.6 | Si |

| Comb. | Quota | N | V par | M | σ0 | σN | l' | fvd | Vt scorr. | Vt fess.diag. | Vt,lim | c.s. | Verifica |
|---|---|---|---|---|---|---|---|---|---|---|---|---|---|
| SLU 38 | 468 | -9185 | -301 | -28545 | | 3.29 | 93 | 0.99 | 2775 | | | 9.23 | Si |
| SLU 38 | 668 | -7509 | 130 | -27072 | | 2.69 | 93 | 0.91 | 2551 | | | 19.68 | Si |
| SLU 79 | 468 | -11055 | -312 | -32613 | | 3.96 | 93 | 1.08 | 3022 | | | 9.68 | Si |
| SLU 79 | 668 | -9087 | 183 | -34741 | | 3.26 | 93 | 0.99 | 2761 | | | 15.11 | Si |
| SLU 28 | 468 | -8249 | -268 | -26529 | | 2.96 | 93 | 0.95 | 2650 | | | 9.89 | Si |
| SLU 28 | 668 | -6682 | 84 | -25441 | | 2.4 | 93 | 0.87 | 2441 | | | 28.98 | Si |
| SLU 77 | 468 | -10999 | -308 | -32333 | | 3.94 | 93 | 1.08 | 3016 | | | 9.8 | Si |
| SLU 77 | 668 | -9041 | 183 | -34955 | | 3.24 | 93 | 0.99 | 2755 | | | 15.07 | Si |
| SLU 35 | 468 | -9115 | -287 | -27238 | | 3.27 | 93 | 0.99 | 2765 | | | 9.62 | Si |
| SLU 35 | 668 | -7458 | 147 | -27320 | | 2.67 | 93 | 0.91 | 2544 | | | 17.31 | Si |
| SLU 78 | 468 | -11011 | -317 | -33359 | | 3.95 | 93 | 1.08 | 3018 | | | 9.53 | Si |
| SLU 78 | 668 | -9047 | 166 | -34921 | | 3.24 | 93 | 0.99 | 2756 | | | 16.63 | Si |

### Verifica a taglio nel piano secondo D.M. 17-01-18 (N.T.C.) §7.8.2.2.2 con rottura per scorrimento in combinazioni sismiche, γM = 2

| Comb. | Quota | N | V par | M | σ0 | σN | l' | fvd | Vt scorr. | Vt fess.diag. | Vt,lim | c.s. | Verifica |
|---|---|---|---|---|---|---|---|---|---|---|---|---|---|
| SLV 15 | 468 | -2408 | 5325 | 200052 | | 0 | 0 | 0.83 | 0 | | | 0 | No, Vu<V |
| SLV 15 | 668 | -10839 | 6636 | -247619 | | 5.09 | 70.96 | 1.63 | 3459 | | | 0.52 | No, Vu<V |
| SLV 2 | 468 | -12173 | -5604 | -240664 | | 5.06 | 80.19 | 1.63 | 3909 | | | 0.7 | No, Vu<V |
| SLV 2 | 668 | -1297 | -6363 | 193926 | | 0 | 0 | 0.83 | 0 | | | 0 | No, Vu<V |
| SLV 12 | 468 | -862 | 2913 | 86554 | | 0 | 0 | 0.83 | 0 | | | 0 | No, Vu<V |
| SLV 12 | 668 | -4801 | 3367 | -88091 | | 1.9 | 84.45 | 1.21 | 3072 | | | 0.91 | No, Vu<V |
| SLV 3 | 468 | -8901 | -4673 | -213794 | | 4.4 | 67.44 | 1.63 | 3287 | | | 0.7 | No, Vu<V |
| SLV 3 | 668 | 482 | -5518 | 197215 | | 0 | 0 | 0.83 | 0 | | | 0 | No, Vu<V |
| SLV 16 | 468 | -2408 | 5325 | 200052 | | 0 | 0 | 0.83 | 0 | | | 0 | No, Vu<V |
| SLV 16 | 668 | -10839 | 6636 | -247619 | | 5.09 | 70.96 | 1.63 | 3459 | | | 0.52 | No, Vu<V |
| SLV 13 | 468 | -5680 | 4394 | 173182 | | 3.94 | 48.03 | 1.62 | 2337 | | | 0.53 | No, Vu<V |
| SLV 13 | 668 | -12617 | 5792 | -250908 | | 5.27 | 79.84 | 1.63 | 3892 | | | 0.67 | No, Vu<V |
| SLV 1 | 468 | -12173 | -5604 | -240664 | | 5.06 | 80.19 | 1.63 | 3909 | | | 0.7 | No, Vu<V |
| SLV 1 | 668 | -1297 | -6363 | 193926 | | 0 | 0 | 0.83 | 0 | | | 0 | No, Vu<V |
| SLV 14 | 468 | -5680 | 4394 | 173182 | | 3.94 | 48.03 | 1.62 | 2337 | | | 0.53 | No, Vu<V |
| SLV 14 | 668 | -12617 | 5792 | -250908 | | 5.27 | 79.84 | 1.63 | 3892 | | | 0.67 | No, Vu<V |
| SLV 4 | 468 | -8901 | -4673 | -213794 | | 4.4 | 67.44 | 1.63 | 3287 | | | 0.7 | No, Vu<V |
| SLV 4 | 668 | 482 | -5518 | 197215 | | 0 | 0 | 0.83 | 0 | | | 0 | No, Vu<V |
| SLV 11 | 468 | -862 | 2913 | 86554 | | 0 | 0 | 0.83 | 0 | | | 0 | No, Vu<V |
| SLV 11 | 668 | -4801 | 3367 | -88091 | | 1.9 | 84.45 | 1.21 | 3072 | | | 0.91 | No, Vu<V |

### Verifica a pressoflessione fuori piano D.M. 17-01-18 (N.T.C.)

quota 545.5 Wa 0.05 denominatore 8 γM = 2

| Comb. | fd | Sa | σ0 | N | M | Mc | Coeff.s. | Verifica |
|---|---|---|---|---|---|---|---|---|
| SLV 12 | 14 | 0.35 | 0.97 | -2719 | 9032 | 37532 | 4.16 | Si |
| SLV 11 | 14 | 0.35 | 0.97 | -2719 | 9032 | 37532 | 4.16 | Si |
| SLV 8 | 14 | 0.35 | 1.3 | -3630 | 9032 | 48646 | 5.39 | Si |
| SLV 7 | 14 | 0.35 | 1.3 | -3630 | 9032 | 48646 | 5.39 | Si |
| SLV 15 | 14 | 0.35 | 1.56 | -4364 | 9032 | 57082 | 6.32 | Si |
| SLV 16 | 14 | 0.35 | 1.56 | -4364 | 9032 | 57082 | 6.32 | Si |
| SLV 13 | 14 | 0.35 | 2.4 | -6685 | 9032 | 80609 | 8.93 | Si |
| SLV 14 | 14 | 0.35 | 2.4 | -6685 | 9032 | 80609 | 8.93 | Si |
| SLV 3 | 14 | 0.35 | 2.65 | -7399 | 9032 | 86897 | 9.62 | Si |
| SLV 4 | 14 | 0.35 | 2.65 | -7399 | 9032 | 86897 | 9.62 | Si |

### Verifica dei meccanismi locali di collasso con analisi cinematica lineare

forza di aggancio al piano = 0 quota mezzeria = 545.5 Wa = 0.05 Ta = 0.0663

| Comb. | N top | N base | V orto | α0 | M* | e* | a0* | aLim | Verifica |
|---|---|---|---|---|---|---|---|---|---|
| SLV 10 | -8071 | -12007 | -17 | 0.046 | 9.574 | 0.958 | 69.47 | 1256.621 | No |
| SLV 9 | -8071 | -12007 | -17 | 0.046 | 9.574 | 0.958 | 69.47 | 1256.621 | No |
| SLV 5 | -6288 | -9057 | -17 | 0.046 | 7.763 | 0.949 | 70.975 | 1256.621 | No |
| SLV 6 | -6288 | -9057 | -17 | 0.046 | 7.763 | 0.949 | 70.975 | 1256.621 | No |
| SLV 11 | -3479 | -4270 | 15 | 0.049 | 4.92 | 0.926 | 76.239 | 1256.621 | No |
| SLV 12 | -3479 | -4270 | 15 | 0.049 | 4.92 | 0.926 | 76.239 | 1256.621 | No |
| SLV 7 | -1696 | -1321 | 15 | 0.052 | 3.143 | 0.899 | 84.261 | 1256.621 | No |
| SLV 8 | -1696 | -1321 | 15 | 0.052 | 3.143 | 0.899 | 84.261 | 1256.621 | No |
| SLV 14 | -8544 | -12740 | -6 | 0.047 | 10.055 | 0.96 | 70.996 | 704.655 | No |
| SLV 13 | -8544 | -12740 | -6 | 0.047 | 10.055 | 0.96 | 70.996 | 704.655 | No |

### Tabella dei coefficienti di sicurezza minimi

| Stato limite | Coeff.s. | Comb. | Verifica |
|---|---|---|---|
| PF_SLU | 6.771 | SLU 60 | Si |
| V_SLU | 9.232 | SLU 38 | Si |
| PF_SLV | 0 | SLV 4 | No |
| V_SLV | 0 | SLV 1 | No |
| PFFP_SLV | 4.156 | SLV 11 | Si |
| R_SLV | 0.055 | SLV 9 | No |

## Maschio 229

Verifiche condotte secondo D.M. 17-01-18 (N.T.C.)

### Dati geometrici

| X ini. | Y ini. | X fin. | Y fin. | Quota i. | Quota.s | l | Sp. | h netta | h ini. | h fin. | a | a.s.,sx | a.s.,dx |
|---|---|---|---|---|---|---|---|---|---|---|---|---|---|
| -1375.3 | -485.9 | -1293.3 | -485.9 | Z medio 718 cm | Z medio 1070 cm | 82 | 30 | 352 | 352 | 352 | | | |

### Caratteristiche del materiale

(Circolare 7 21-01-19 C8.5.I) Muratura in mattoni pieni e malta di calce LC2_Corti

| fb | fk | fvk0 | fmedio | τ0 | fv0 | μ | ϕ | fv,lim | E | G | FC |
|---|---|---|---|---|---|---|---|---|---|---|---|
| 60 | | | 34.5 | 0.9 | 2 | 0.58 | 0.77 | 3.25 | 32000 | 12800 | 1.2 |

Verifica a pressoflessione nel piano secondo D.M. 17-01-18 NTC §7.8.2.2.1 in combinazioni non sismiche, γM = 3

| Comb. | Quota | N | M | σ0 | Mu | c.s. | Verifica |
|---|---|---|---|---|---|---|---|
| SLU 63 | 813 | -6421 | 18604 | 2.61 | 178912 | 9.617 | Si |
| SLU 63 | 1013 | -5896 | 25392 | 2.4 | 170622 | 6.719 | Si |
| SLU 83 | 813 | -6674 | 19313 | 2.71 | 182514 | 9.45 | Si |
| SLU 83 | 1013 | -6153 | 26346 | 2.5 | 174821 | 6.635 | Si |
| SLU 77 | 813 | -6736 | 19520 | 2.74 | 183362 | 9.394 | Si |
| SLU 77 | 1013 | -6186 | 26153 | 2.51 | 175340 | 6.704 | Si |
| SLU 76 | 813 | -6625 | 18950 | 2.69 | 181833 | 9.595 | Si |
| SLU 76 | 1013 | -6099 | 25825 | 2.48 | 173961 | 6.736 | Si |
| SLU 79 | 813 | -6745 | 19556 | 2.74 | 183480 | 9.382 | Si |
| SLU 79 | 1013 | -6201 | 26521 | 2.52 | 175579 | 6.62 | Si |
| SLU 84 | 813 | -6715 | 19105 | 2.73 | 183074 | 9.582 | Si |
| SLU 84 | 1013 | -6227 | 26974 | 2.53 | 175978 | 6.524 | Si |
| SLU 78 | 813 | -6778 | 19312 | 2.75 | 183912 | 9.523 | Si |
| SLU 78 | 1013 | -6259 | 26780 | 2.54 | 176487 | 6.59 | Si |
| SLU 38 | 813 | -5526 | 15212 | 2.25 | 164109 | 10.788 | Si |
| SLU 38 | 1013 | -5206 | 23457 | 2.12 | 158013 | 6.736 | Si |
| SLU 80 | 813 | -6786 | 19348 | 2.76 | 184028 | 9.511 | Si |
| SLU 80 | 1013 | -6275 | 27148 | 2.55 | 176721 | 6.509 | Si |
| SLU 59 | 813 | -6492 | 18847 | 2.64 | 179952 | 9.548 | Si |
| SLU 59 | 1013 | -5944 | 25567 | 2.42 | 171430 | 6.705 | Si |

Verifica a pressoflessione nel piano secondo D.M. 17-01-18 NTC §7.8.2.2.1 in combinazioni sismiche, γM = 2

| Comb. | Quota | N | M | σ0 | Mu | c.s. | Verifica |
|---|---|---|---|---|---|---|---|
| SLV 14 | 813 | -6422 | 142243 | 2.61 | 207060 | 1.456 | Si |
| SLV 14 | 1013 | 526 | -115694 | 0 | 0 | 0 | No, Trazione |
| SLV 2 | 813 | -2126 | -129934 | 0 | 0 | 0 | No, e>l/2 |
| SLV 2 | 1013 | -9186 | 177982 | 3.73 | 261545 | 1.469 | Si |
| SLV 12 | 813 | -6761 | 83213 | 2.75 | 214872 | 2.582 | Si |
| SLV 12 | 1013 | -2098 | -80234 | 0.85 | 80034 | 0.997 | No, M>Mu |
| SLV 3 | 813 | -2977 | -113212 | 1.21 | 109973 | 0.971 | No, M>Mu |
| SLV 3 | 1013 | -8828 | 146908 | 3.59 | 255667 | 1.74 | Si |
| SLV 1 | 813 | -2126 | -129934 | 0 | 0 | 0 | No, e>l/2 |
| SLV 1 | 1013 | -9186 | 177982 | 3.73 | 261545 | 1.469 | Si |
| SLV 4 | 813 | -2977 | -113212 | 1.21 | 109973 | 0.971 | No, M>Mu |
| SLV 4 | 1013 | -8828 | 146908 | 3.59 | 255667 | 1.74 | Si |
| SLV 13 | 813 | -6422 | 142243 | 2.61 | 207060 | 1.456 | Si |
| SLV 13 | 1013 | 526 | -115694 | 0 | 0 | 0 | No, Trazione |
| SLV 11 | 813 | -6761 | 83213 | 2.75 | 214872 | 2.582 | Si |
| SLV 11 | 1013 | -2098 | -80234 | 0.85 | 80034 | 0.997 | No, M>Mu |
| SLV 15 | 813 | -7272 | 158966 | 2.96 | 226046 | 1.422 | Si |
| SLV 15 | 1013 | 883 | -146768 | 0 | 0 | 0 | No, Trazione |
| SLV 16 | 813 | -7272 | 158966 | 2.96 | 226046 | 1.422 | Si |
| SLV 16 | 1013 | 883 | -146768 | 0 | 0 | 0 | No, Trazione |

Verifica a taglio nel piano secondo D.M. 17-01-18 (N.T.C.) §7.8.2.2.2 con rottura per scorrimento in combinazioni non sismiche, γM = 3

| Comb. | Quota | N | V par | M | σ0 | σN | l' | fvd | Vt scorr. | Vt fess.diag. | Vt,lim | c.s. | Verifica |
|---|---|---|---|---|---|---|---|---|---|---|---|---|---|
| SLU 38 | 813 | -5526 | -70 | 15212 | | 2.25 | 82 | 0.86 | 2104 | | | 30.25 | Si |
| SLU 38 | 1013 | -5206 | -226 | 23457 | | 2.12 | 82 | 0.84 | 2061 | | | 9.1 | Si |
| SLU 78 | 813 | -6778 | -51 | 19312 | | 2.75 | 82 | 0.92 | 2270 | | | 44.21 | Si |
| SLU 78 | 1013 | -6259 | -231 | 26780 | | 2.54 | 82 | 0.89 | 2201 | | | 9.51 | Si |
| SLU 42 | 813 | -5455 | -69 | 14969 | | 2.22 | 82 | 0.85 | 2094 | | | 30.24 | Si |
| SLU 42 | 1013 | -5158 | -225 | 23282 | | 2.1 | 82 | 0.84 | 2055 | | | 9.13 | Si |
| SLU 76 | 813 | -6625 | -34 | 18950 | | 2.69 | 82 | 0.91 | 2250 | | | 65.47 | Si |
| SLU 76 | 1013 | -6099 | -223 | 25825 | | 2.48 | 82 | 0.89 | 2180 | | | 9.79 | Si |
| SLU 80 | 813 | -6786 | -55 | 19348 | | 2.76 | 82 | 0.92 | 2272 | | | 41.12 | Si |
| SLU 80 | 1013 | -6275 | -238 | 27148 | | 2.55 | 82 | 0.9 | 2203 | | | 9.28 | Si |
| SLU 37 | 813 | -5485 | -71 | 15419 | | 2.23 | 82 | 0.85 | 2098 | | | 29.68 | Si |
| SLU 37 | 1013 | -5133 | -206 | 22830 | | 2.09 | 82 | 0.83 | 2051 | | | 9.94 | Si |
| SLU 84 | 813 | -6715 | -55 | 19105 | | 2.73 | 82 | 0.92 | 2262 | | | 41.17 | Si |
| SLU 84 | 1013 | -6227 | -236 | 26974 | | 2.53 | 82 | 0.89 | 2197 | | | 9.3 | Si |
| SLU 34 | 813 | -5365 | -49 | 14814 | | 2.18 | 82 | 0.85 | 2082 | | | 42.77 | Si |
| SLU 34 | 1013 | -5030 | -212 | 22134 | | 2.04 | 82 | 0.83 | 2037 | | | 9.63 | Si |
| SLU 17 | 813 | -5232 | -55 | 14710 | | 2.13 | 82 | 0.84 | 2064 | | | 37.76 | Si |
| SLU 17 | 1013 | -4876 | -203 | 21876 | | 1.98 | 82 | 0.82 | 2017 | | | 9.93 | Si |
| SLU 36 | 813 | -5518 | -66 | 15175 | | 2.24 | 82 | 0.85 | 2102 | | | 32.02 | Si |
| SLU 36 | 1013 | -5191 | -220 | 23089 | | 2.11 | 82 | 0.84 | 2059 | | | 9.35 | Si |

Verifica a taglio nel piano secondo D.M. 17-01-18 (N.T.C.) §7.8.2.2.2 con rottura per scorrimento in combinazioni sismiche, γM = 2

| Comb. | Quota | N | V par | M | σ0 | σN | l' | fvd | Vt scorr. | Vt fess.diag. | Vt,lim | c.s. | Verifica |
|---|---|---|---|---|---|---|---|---|---|---|---|---|---|
| SLV 1 | 813 | -2126 | -4737 | -129934 | | 0 | 0 | 0.83 | 0 | | | 0 | No, Vu<V |
| SLV 1 | 1013 | -9186 | -4130 | 177982 | | 4.72 | 64.88 | 1.63 | 3163 | | | 0.77 | No, Vu<V |
| SLV 13 | 813 | -6422 | 4230 | 142243 | | 3.78 | 56.56 | 1.59 | 2698 | | | 0.64 | No, Vu<V |
| SLV 13 | 1013 | 526 | 3534 | -115694 | | 0 | 0 | 0.83 | 0 | | | 0 | No, Vu<V |
| SLV 11 | 813 | -6761 | 2248 | 83213 | | 2.75 | 82 | 1.38 | 3402 | | | 1.51 | Si |
| SLV 11 | 1013 | -2098 | 1760 | -80234 | | 8.43 | 8.3 | 1.63 | 405 | | | 0.23 | No, Vu<V |
| SLV 2 | 813 | -2126 | -4737 | -129934 | | 0 | 0 | 0.83 | 0 | | | 0 | No, Vu<V |
| SLV 2 | 1013 | -9186 | -4130 | 177982 | | 4.72 | 64.88 | 1.63 | 3163 | | | 0.77 | No, Vu<V |
| SLV 3 | 813 | -2977 | -4203 | -113212 | | 11.13 | 8.92 | 1.63 | 435 | | | 0.1 | No, Vu<V |
| SLV 3 | 1013 | -8828 | -3710 | 146908 | | 4.03 | 73.08 | 1.63 | 3563 | | | 0.96 | No, Vu<V |
| SLV 12 | 813 | -6761 | 2248 | 83213 | | 2.75 | 82 | 1.38 | 3402 | | | 1.51 | Si |
| SLV 12 | 1013 | -2098 | 1760 | -80234 | | 8.43 | 8.3 | 1.63 | 405 | | | 0.23 | No, Vu<V |
| SLV 4 | 813 | -2977 | -4203 | -113212 | | 11.13 | 8.92 | 1.63 | 435 | | | 0.1 | No, Vu<V |
| SLV 4 | 1013 | -8828 | -3710 | 146908 | | 4.03 | 73.08 | 1.63 | 3563 | | | 0.96 | No, Vu<V |

| Comb. | Quota | N | V par | M | σ0 | σN | l' | fvd | Vt scorr. | Vt fess.diag. | Vt,lim | c.s. | Verifica |
|---|---|---|---|---|---|---|---|---|---|---|---|---|---|
| SLV 16 | 813 | -7272 | 4764 | 158966 | | 4.22 | 57.43 | 1.63 | 2800 | | | 0.59 | No, Vu<V |
| SLV 16 | 1013 | 883 | 3953 | -146768 | | 0 | 0 | 0.83 | 0 | | | 0 | No, Vu<V |
| SLV 14 | 813 | -6422 | 4230 | 142243 | | 3.78 | 56.56 | 1.59 | 2698 | | | 0.64 | No, Vu<V |
| SLV 14 | 1013 | 526 | 3534 | -115694 | | 0 | 0 | 0.83 | 0 | | | 0 | No, Vu<V |
| SLV 15 | 813 | -7272 | 4764 | 158966 | | 4.22 | 57.43 | 1.63 | 2800 | | | 0.59 | No, Vu<V |
| SLV 15 | 1013 | 883 | 3953 | -146768 | | 0 | 0 | 0.83 | 0 | | | 0 | No, Vu<V |

### Verifica a pressoflessione fuori piano D.M. 17-01-18 (N.T.C.)

quota 894 Wa 0.05 denominatore 8 γM = 2

| Comb. | fd | Sa | σ0 | N | M | Mc | Coeff.s. | Verifica |
|---|---|---|---|---|---|---|---|---|
| SLV 3 | 14 | 0.43 | 1.8 | -4421 | 9940 | 56564 | 5.69 | Si |
| SLV 4 | 14 | 0.43 | 1.8 | -4421 | 9940 | 56564 | 5.69 | Si |
| SLV 1 | 14 | 0.43 | 1.81 | -4461 | 9940 | 56990 | 5.73 | Si |
| SLV 2 | 14 | 0.43 | 1.81 | -4461 | 9940 | 56990 | 5.73 | Si |
| SLV 8 | 14 | 0.43 | 1.81 | -4465 | 9940 | 57024 | 5.74 | Si |
| SLV 7 | 14 | 0.43 | 1.81 | -4465 | 9940 | 57024 | 5.74 | Si |
| SLV 12 | 14 | 0.43 | 1.85 | -4542 | 9940 | 57840 | 5.82 | Si |
| SLV 11 | 14 | 0.43 | 1.85 | -4542 | 9940 | 57840 | 5.82 | Si |
| SLV 6 | 14 | 0.43 | 1.87 | -4599 | 9940 | 58432 | 5.88 | Si |
| SLV 5 | 14 | 0.43 | 1.87 | -4599 | 9940 | 58432 | 5.88 | Si |

### Verifica dei meccanismi locali di collasso con analisi cinematica lineare

forza di aggancio al piano = 0 quota mezzeria = 894 Wa = 0.05 Ta = 0.069

| Comb. | N top | N base | V orto | α0 | M* | e* | a0* | aLim | Verifica |
|---|---|---|---|---|---|---|---|---|---|
| SLV 7 | -4515 | -4520 | 34 | 0.042 | 5.826 | 0.941 | 65.58 | 1511.876 | No |
| SLV 8 | -4515 | -4520 | 34 | 0.042 | 5.826 | 0.941 | 65.58 | 1511.876 | No |
| SLV 6 | -3389 | -6170 | -35 | 0.042 | 4.687 | 0.929 | 65.946 | 1511.876 | No |
| SLV 5 | -3389 | -6170 | -35 | 0.042 | 4.687 | 0.929 | 65.946 | 1511.876 | No |
| SLV 10 | -1993 | -3984 | -37 | 0.041 | 3.288 | 0.908 | 66.011 | 1511.876 | No |
| SLV 9 | -1993 | -3984 | -37 | 0.041 | 3.288 | 0.908 | 66.011 | 1511.876 | No |
| SLV 12 | -3119 | -2334 | 32 | 0.043 | 4.415 | 0.926 | 67.33 | 1511.876 | No |
| SLV 11 | -3119 | -2334 | 32 | 0.043 | 4.415 | 0.926 | 67.33 | 1511.876 | No |
| SLV 3 | -5749 | -7649 | 12 | 0.046 | 7.078 | 0.95 | 70.134 | 839.162 | No |
| SLV 4 | -5749 | -7649 | 12 | 0.046 | 7.078 | 0.95 | 70.134 | 839.162 | No |

### Tabella dei coefficienti di sicurezza minimi

| Stato limite | Coeff.s. | Comb. | Verifica |
|---|---|---|---|
| PF_SLU | 6.509 | SLU 80 | Si |
| V_SLU | 9.104 | SLU 38 | Si |
| PF_SLV | 0 | SLV 16 | No |
| V_SLV | 0 | SLV 1 | No |
| PFFP_SLV | 5.691 | SLV 3 | Si |
| R_SLV | 0.043 | SLV 7 | No |

## Maschio 230

Verifiche condotte secondo D.M. 17-01-18 (N.T.C.)

### Dati geometrici

| X ini. | Y ini. | X fin. | Y fin. | Quota i. | Quota.s | l | Sp. | h netta | h ini. | h fin. | a | a.s.,sx | a.s.,dx |
|---|---|---|---|---|---|---|---|---|---|---|---|---|---|
| -1193.3 | -485.9 | -1114.3 | -485.9 | Z medio 718 cm | Z medio 1070 cm | 79 | 30 | 352 | 352 | 352 | | | |

### Caratteristiche del materiale

(Circolare 7 21-01-19 C8.5.I) Muratura in mattoni pieni e malta di calce LC2_Corti

| fb | fk | fvk0 | fmedio | τ0 | fv0 | μ | ϕ | fv,lim | E | G | FC |
|---|---|---|---|---|---|---|---|---|---|---|---|
| 60 | | | 34.5 | 0.9 | 2 | 0.58 | 0.77 | 3.25 | 32000 | 12800 | 1.2 |

### Verifica a pressoflessione nel piano secondo D.M. 17-01-18 NTC §7.8.2.2.1 in combinazioni non sismiche, γM = 3

| Comb. | Quota | N | M | σ0 | Mu | c.s. | Verifica |
|---|---|---|---|---|---|---|---|
| SLU 61 | 813 | -5876 | -22166 | 2.48 | 161441 | 7.283 | Si |
| SLU 61 | 1013 | -4569 | -23247 | 1.93 | 137743 | 5.925 | Si |
| SLU 81 | 813 | -6180 | -23529 | 2.61 | 165951 | 7.053 | Si |
| SLU 81 | 1013 | -4769 | -23729 | 2.01 | 141839 | 5.978 | Si |
| SLU 64 | 813 | -5463 | -21022 | 2.31 | 154717 | 7.36 | Si |
| SLU 64 | 1013 | -4254 | -22066 | 1.79 | 130991 | 5.936 | Si |
| SLU 60 | 813 | -5850 | -21745 | 2.47 | 161045 | 7.406 | Si |
| SLU 60 | 1013 | -4541 | -23095 | 1.92 | 137161 | 5.939 | Si |
| SLU 82 | 813 | -6205 | -23950 | 2.62 | 166313 | 6.944 | Si |
| SLU 82 | 1013 | -4797 | -23881 | 2.02 | 142395 | 5.963 | Si |
| SLU 52 | 813 | -5678 | -21695 | 2.4 | 158302 | 7.297 | Si |
| SLU 52 | 1013 | -4432 | -22849 | 1.87 | 134874 | 5.903 | Si |
| SLU 73 | 813 | -6008 | -23479 | 2.53 | 163440 | 6.961 | Si |
| SLU 73 | 1013 | -4661 | -23483 | 1.97 | 139654 | 5.947 | Si |
| SLU 44 | 813 | -5176 | -19940 | 2.18 | 149628 | 7.504 | Si |
| SLU 44 | 1013 | -4071 | -21685 | 1.72 | 126896 | 5.852 | Si |
| SLU 65 | 813 | -5506 | -21724 | 2.32 | 155443 | 7.155 | Si |
| SLU 65 | 1013 | -4300 | -22319 | 1.81 | 132014 | 5.915 | Si |
| SLU 43 | 813 | -5134 | -19238 | 2.17 | 148844 | 7.737 | Si |
| SLU 43 | 1013 | -4025 | -21432 | 1.7 | 125830 | 5.871 | Si |

## Verifica a pressoflessione nel piano secondo D.M. 17-01-18 NTC §7.8.2.2.1 in combinazioni sismiche, γM = 2

| Comb. | Quota | N | M | σ0 | Mu | c.s. | Verifica |
|---|---|---|---|---|---|---|---|
| SLV 16 | 813 | 1494 | 121317 | 0 | 0 | 0 | No, Trazione |
| SLV 16 | 1013 | -7734 | -165693 | 3.26 | 223877 | 1.351 | Si |
| SLV 3 | 813 | -8453 | -138548 | 3.57 | 236406 | 1.706 | Si |
| SLV 3 | 1013 | 1094 | 109595 | 0 | 0 | 0 | No, Trazione |
| SLV 14 | 813 | -94 | 105988 | 0 | 0 | 0 | No, e>l/2 |
| SLV 14 | 1013 | -7744 | -143929 | 3.27 | 224069 | 1.557 | Si |
| SLV 4 | 813 | -8453 | -138548 | 3.57 | 236406 | 1.706 | Si |
| SLV 4 | 1013 | 1094 | 109595 | 0 | 0 | 0 | No, Trazione |
| SLV 13 | 813 | -94 | 105988 | 0 | 0 | 0 | No, e>l/2 |
| SLV 13 | 1013 | -7744 | -143929 | 3.27 | 224069 | 1.557 | Si |
| SLV 1 | 813 | -10041 | -153876 | 4.24 | 259073 | 1.684 | Si |
| SLV 1 | 1013 | 1084 | 131359 | 0 | 0 | 0 | No, Trazione |
| SLV 2 | 813 | -10041 | -153876 | 4.24 | 259073 | 1.684 | Si |
| SLV 2 | 1013 | 1084 | 131359 | 0 | 0 | 0 | No, Trazione |
| SLV 11 | 813 | -134 | 48247 | 0 | 0 | 0 | No, e>l/2 |
| SLV 11 | 1013 | -4632 | -94734 | 1.95 | 153677 | 1.622 | Si |
| SLV 12 | 813 | -134 | 48247 | 0 | 0 | 0 | No, e>l/2 |
| SLV 12 | 1013 | -4632 | -94734 | 1.95 | 153677 | 1.622 | Si |
| SLV 15 | 813 | 1494 | 121317 | 0 | 0 | 0 | No, Trazione |
| SLV 15 | 1013 | -7734 | -165693 | 3.26 | 223877 | 1.351 | Si |

## Verifica a taglio nel piano secondo D.M. 17-01-18 (N.T.C.) §7.8.2.2.2 con rottura per scorrimento in combinazioni non sismiche, γM = 3

| Comb. | Quota | N | V par | M | σ0 | σN | l' | fvd | Vt scorr. | Vt fess.diag. | Vt,lim | c.s. | Verifica |
|---|---|---|---|---|---|---|---|---|---|---|---|---|---|
| SLU 80 | 813 | -6644 | -300 | -27138 | | 2.8 | 79 | 0.93 | 2202 | | | 7.35 | Si |
| SLU 80 | 1013 | -5056 | 49 | -22309 | | 2.13 | 79 | 0.84 | 1991 | | | 41.03 | Si |
| SLU 35 | 813 | -5463 | -255 | -22478 | | 2.31 | 79 | 0.86 | 2045 | | | 8.02 | Si |
| SLU 35 | 1013 | -4120 | 23 | -17612 | | 1.74 | 79 | 0.79 | 1866 | | | 82.13 | Si |
| SLU 37 | 813 | -5520 | -261 | -22748 | | 2.33 | 79 | 0.87 | 2053 | | | 7.86 | Si |
| SLU 37 | 1013 | -4159 | 18 | -17378 | | 1.76 | 79 | 0.79 | 1871 | | | 102.67 | Si |
| SLU 78 | 813 | -6586 | -294 | -26868 | | 2.78 | 79 | 0.93 | 2195 | | | 7.47 | Si |
| SLU 78 | 1013 | -5016 | 53 | -22543 | | 2.12 | 79 | 0.84 | 1985 | | | 37.45 | Si |
| SLU 38 | 813 | -5546 | -282 | -23169 | | 2.34 | 79 | 0.87 | 2056 | | | 7.28 | Si |
| SLU 38 | 1013 | -4187 | 25 | -17530 | | 1.77 | 79 | 0.79 | 1875 | | | 76.03 | Si |
| SLU 79 | 813 | -6618 | -278 | -26717 | | 2.79 | 79 | 0.93 | 2199 | | | 7.9 | Si |
| SLU 79 | 1013 | -5028 | 42 | -22157 | | 2.12 | 79 | 0.84 | 1987 | | | 47.21 | Si |
| SLU 36 | 813 | -5489 | -276 | -22899 | | 2.32 | 79 | 0.86 | 2048 | | | 7.41 | Si |
| SLU 36 | 1013 | -4148 | 29 | -17764 | | 1.75 | 79 | 0.79 | 1870 | | | 64.13 | Si |
| SLU 34 | 813 | -5236 | -252 | -21480 | | 2.21 | 79 | 0.85 | 2015 | | | 8 | Si |
| SLU 34 | 1013 | -3999 | 52 | -18168 | | 1.69 | 79 | 0.78 | 1850 | | | 35.49 | Si |
| SLU 42 | 813 | -5434 | -255 | -21951 | | 2.29 | 79 | 0.86 | 2041 | | | 8.01 | Si |
| SLU 42 | 1013 | -4135 | 48 | -18566 | | 1.75 | 79 | 0.79 | 1868 | | | 38.81 | Si |
| SLU 76 | 813 | -6334 | -269 | -25449 | | 2.67 | 79 | 0.91 | 2161 | | | 8.02 | Si |
| SLU 76 | 1013 | -4868 | 76 | -22947 | | 2.05 | 79 | 0.83 | 1966 | | | 25.87 | Si |

## Verifica a taglio nel piano secondo D.M. 17-01-18 (N.T.C.) §7.8.2.2.2 con rottura per scorrimento in combinazioni sismiche, γM = 2

| Comb. | Quota | N | V par | M | σ0 | σN | l' | fvd | Vt scorr. | Vt fess.diag. | Vt,lim | c.s. | Verifica |
|---|---|---|---|---|---|---|---|---|---|---|---|---|---|
| SLV 1 | 813 | -10041 | -5763 | -153876 | | 4.62 | 72.52 | 1.63 | 3535 | | | 0.61 | No, Vu<V |
| SLV 1 | 1013 | 1084 | -4430 | 131359 | | 0 | 0 | 0.83 | 0 | | | 0 | No, Vu<V |
| SLV 15 | 813 | 1494 | 5526 | 121317 | | 0 | 0 | 0.83 | 0 | | | 0 | No, Vu<V |
| SLV 15 | 1013 | -7734 | 4568 | -165693 | | 4.75 | 54.22 | 1.63 | 2643 | | | 0.58 | No, Vu<V |
| SLV 14 | 813 | -94 | 4759 | 105988 | | 0 | 0 | 0.83 | 0 | | | 0 | No, Vu<V |
| SLV 14 | 1013 | -7744 | 4025 | -143929 | | 4.11 | 62.74 | 1.63 | 3058 | | | 0.76 | No, Vu<V |
| SLV 11 | 813 | -134 | 2738 | 48247 | | 0 | 0 | 0.83 | 0 | | | 0 | No, Vu<V |
| SLV 11 | 1013 | -4632 | 2243 | -94734 | | 2.7 | 57.13 | 1.37 | 2355 | | | 1.05 | Si |
| SLV 13 | 813 | -94 | 4759 | 105988 | | 0 | 0 | 0.83 | 0 | | | 0 | No, Vu<V |
| SLV 13 | 1013 | -7744 | 4025 | -143929 | | 4.11 | 62.74 | 1.63 | 3058 | | | 0.76 | No, Vu<V |
| SLV 4 | 813 | -8453 | -4996 | -138548 | | 4.06 | 69.32 | 1.63 | 3379 | | | 0.68 | No, Vu<V |
| SLV 4 | 1013 | 1094 | -3886 | 109595 | | 0 | 0 | 0.83 | 0 | | | 0 | No, Vu<V |
| SLV 2 | 813 | -10041 | -5763 | -153876 | | 4.62 | 72.52 | 1.63 | 3535 | | | 0.61 | No, Vu<V |
| SLV 2 | 1013 | 1084 | -4430 | 131359 | | 0 | 0 | 0.83 | 0 | | | 0 | No, Vu<V |
| SLV 16 | 813 | 1494 | 5526 | 121317 | | 0 | 0 | 0.83 | 0 | | | 0 | No, Vu<V |
| SLV 16 | 1013 | -7734 | 4568 | -165693 | | 4.75 | 54.22 | 1.63 | 2643 | | | 0.58 | No, Vu<V |
| SLV 12 | 813 | -134 | 2738 | 48247 | | 0 | 0 | 0.83 | 0 | | | 0 | No, Vu<V |
| SLV 12 | 1013 | -4632 | 2243 | -94734 | | 2.7 | 57.13 | 1.37 | 2355 | | | 1.05 | Si |
| SLV 3 | 813 | -8453 | -4996 | -138548 | | 4.06 | 69.32 | 1.63 | 3379 | | | 0.68 | No, Vu<V |
| SLV 3 | 1013 | 1094 | -3886 | 109595 | | 0 | 0 | 0.83 | 0 | | | 0 | No, Vu<V |

## Verifica a pressoflessione fuori piano D.M. 17-01-18 (N.T.C.)

quota 894 Wa 0.05 denominatore 8 γM = 2

| Comb. | fd | Sa | σ0 | N | M | Mc | Coeff.s. | Verifica |
|---|---|---|---|---|---|---|---|---|
| SLV 16 | 14 | 0.43 | 0.49 | -1162 | 9575 | 16727 | 1.75 | Si |
| SLV 15 | 14 | 0.43 | 0.49 | -1162 | 9575 | 16727 | 1.75 | Si |
| SLV 11 | 14 | 0.43 | 0.66 | -1564 | 9575 | 22193 | 2.32 | Si |
| SLV 12 | 14 | 0.43 | 0.66 | -1564 | 9575 | 22193 | 2.32 | Si |
| SLV 13 | 14 | 0.43 | 0.94 | -2224 | 9575 | 30802 | 3.22 | Si |
| SLV 14 | 14 | 0.43 | 0.94 | -2224 | 9575 | 30802 | 3.22 | Si |
| SLV 8 | 14 | 0.43 | 1.25 | -2971 | 9575 | 39996 | 4.18 | Si |
| SLV 7 | 14 | 0.43 | 1.25 | -2971 | 9575 | 39996 | 4.18 | Si |
| SLV 10 | 14 | 0.43 | 2.15 | -5106 | 9575 | 63083 | 6.59 | Si |
| SLV 9 | 14 | 0.43 | 2.15 | -5106 | 9575 | 63083 | 6.59 | Si |

## Verifica dei meccanismi locali di collasso con analisi cinematica lineare

forza di aggancio al piano = 0 quota mezzeria = 894 Wa = 0.05 Ta = 0.069

| Comb. | N top | N base | V orto | α0 | M* | e* | a0* | aLim | Verifica |
|---|---|---|---|---|---|---|---|---|---|
| SLV 10 | -3349 | -5200 | -27 | 0.044 | 4.6 | 0.93 | 68.647 | 1511.876 | No |

| Comb. | N top | N base | V orto | α0 | M* | e* | a0* | aLim | Verifica |
|---|---|---|---|---|---|---|---|---|---|
| SLV 9 | -3349 | -5200 | -27 | 0.044 | 4.6 | 0.93 | 68.647 | 1511.876 | No |
| SLV 5 | -2041 | -5110 | -30 | 0.043 | 3.288 | 0.91 | 68.986 | 1511.876 | No |
| SLV 6 | -2041 | -5110 | -30 | 0.043 | 3.288 | 0.91 | 68.986 | 1511.876 | No |
| SLV 12 | -2932 | -2010 | 20 | 0.046 | 4.181 | 0.925 | 72.249 | 1511.876 | No |
| SLV 11 | -2932 | -2010 | 20 | 0.046 | 4.181 | 0.925 | 72.249 | 1511.876 | No |
| SLV 8 | -1625 | -1920 | 16 | 0.049 | 2.876 | 0.902 | 79.597 | 1511.876 | No |
| SLV 7 | -1625 | -1920 | 16 | 0.049 | 2.876 | 0.902 | 79.597 | 1511.876 | No |
| SLV 16 | -4604 | -3231 | 8 | 0.047 | 5.87 | 0.943 | 72.612 | 839.162 | No |
| SLV 15 | -4604 | -3231 | 8 | 0.047 | 5.87 | 0.943 | 72.612 | 839.162 | No |

### Tabella dei coefficienti di sicurezza minimi

| Stato limite | Coeff.s. | Comb. | Verifica |
|---|---|---|---|
| PF_SLU | 5.852 | SLU 44 | Si |
| V_SLU | 7.282 | SLU 38 | Si |
| PF_SLV | 0 | SLV 16 | No |
| V_SLV | 0 | SLV 1 | No |
| PFFP_SLV | 1.747 | SLV 15 | Si |
| R_SLV | 0.045 | SLV 9 | No |

## Maschio 231

Verifiche condotte secondo D.M. 17-01-18 (N.T.C.)

### Dati geometrici

| X ini. | Y ini. | X fin. | Y fin. | Quota i. | Quota.s | l | Sp. | h netta | h ini. | h fin. | a | a.s.,sx | a.s.,dx |
|---|---|---|---|---|---|---|---|---|---|---|---|---|---|
| -1101.3 | -478.4 | -1376.3 | -478.4 | L1 | L2 | 275 | 45 | 198 | 198 | 198 | | | |

### Caratteristiche del materiale

(Circolare 7 21-01-19 C8.5.I) Muratura in mattoni pieni e malta di calce LC2_Corti

| fb | fk | fvk0 | fmedio | τ0 | fv0 | μ | ϕ | fv,lim | E | G | FC |
|---|---|---|---|---|---|---|---|---|---|---|---|
| 60 | | | 34.5 | 0.9 | 2 | 0.58 | 0.77 | 3.25 | 32000 | 12800 | 1.2 |

### Verifica a pressoflessione nel piano secondo D.M. 17-01-18 NTC §7.8.2.2.1 in combinazioni non sismiche, γM = 3

| Comb. | Quota | N | M | σ0 | Mu | c.s. | Verifica |
|---|---|---|---|---|---|---|---|
| SLU 36 | -98 | -28770 | -141735 | 2.32 | 2826842 | 19.945 | Si |
| SLU 36 | 100 | -17205 | -232766 | 1.39 | 1961908 | 8.429 | Si |
| SLU 80 | -98 | -35178 | -152157 | 2.84 | 3149010 | 20.696 | Si |
| SLU 80 | 100 | -20775 | -255180 | 1.68 | 2267832 | 8.887 | Si |
| SLU 77 | -98 | -35222 | -154424 | 2.85 | 3150839 | 20.404 | Si |
| SLU 77 | 100 | -20741 | -255305 | 1.68 | 2265086 | 8.872 | Si |
| SLU 35 | -98 | -28865 | -148008 | 2.33 | 2832472 | 19.137 | Si |
| SLU 35 | 100 | -17211 | -237416 | 1.39 | 1962471 | 8.266 | Si |
| SLU 41 | -98 | -29515 | -128569 | 2.39 | 2870091 | 22.323 | Si |
| SLU 41 | 100 | -17797 | -228383 | 1.44 | 2015050 | 8.823 | Si |
| SLU 37 | -98 | -28917 | -152016 | 2.34 | 2835496 | 18.653 | Si |
| SLU 37 | 100 | -17251 | -241942 | 1.39 | 1966108 | 8.126 | Si |
| SLU 16 | -98 | -27451 | -130850 | 2.22 | 2746666 | 20.991 | Si |
| SLU 16 | 100 | -16271 | -213473 | 1.31 | 1876105 | 8.788 | Si |
| SLU 79 | -98 | -35274 | -158431 | 2.85 | 3152969 | 19.901 | Si |
| SLU 79 | 100 | -20781 | -259831 | 1.68 | 2268335 | 8.73 | Si |
| SLU 14 | -98 | -27400 | -126843 | 2.21 | 2743437 | 21.629 | Si |
| SLU 14 | 100 | -16230 | -208947 | 1.31 | 1872361 | 8.961 | Si |
| SLU 38 | -98 | -28821 | -145742 | 2.33 | 2829879 | 19.417 | Si |
| SLU 38 | 100 | -17245 | -237291 | 1.39 | 1965545 | 8.283 | Si |

### Verifica a pressoflessione nel piano secondo D.M. 17-01-18 NTC §7.8.2.2.1 in combinazioni sismiche, γM = 2

| Comb. | Quota | N | M | σ0 | Mu | c.s. | Verifica |
|---|---|---|---|---|---|---|---|
| SLV 5 | -98 | -39443 | -313549 | 3.19 | 4008724 | 12.785 | Si |
| SLV 5 | 100 | -23325 | -468202 | 1.88 | 2712436 | 5.793 | Si |
| SLV 12 | -98 | -8902 | 198495 | 0.72 | 1151970 | 5.804 | Si |
| SLV 12 | 100 | -4386 | 238621 | 0.35 | 585550 | 2.454 | Si |
| SLV 16 | -98 | -16767 | 221255 | 1.35 | 2049836 | 9.265 | Si |
| SLV 16 | 100 | -6791 | 145581 | 0.55 | 891811 | 6.126 | Si |
| SLV 2 | -98 | -31578 | -336308 | 2.55 | 3435227 | 10.215 | Si |
| SLV 2 | 100 | -20920 | -375162 | 1.69 | 2478497 | 6.606 | Si |
| SLV 15 | -98 | -16767 | 221255 | 1.35 | 2049836 | 9.265 | Si |
| SLV 15 | 100 | -6791 | 145581 | 0.55 | 891811 | 6.126 | Si |
| SLV 6 | -98 | -39443 | -313549 | 3.19 | 4008724 | 12.785 | Si |
| SLV 6 | 100 | -23325 | -468202 | 1.88 | 2712436 | 5.793 | Si |
| SLV 1 | -98 | -31578 | -336308 | 2.55 | 3435227 | 10.215 | Si |
| SLV 1 | 100 | -20920 | -375162 | 1.69 | 2478497 | 6.606 | Si |
| SLV 9 | -98 | -37581 | -180378 | 3.04 | 3883103 | 21.528 | Si |
| SLV 9 | 100 | -20540 | -366433 | 1.66 | 2440612 | 6.66 | Si |
| SLV 10 | -98 | -37581 | -180378 | 3.04 | 3883103 | 21.528 | Si |
| SLV 10 | 100 | -20540 | -366433 | 1.66 | 2440612 | 6.66 | Si |
| SLV 11 | -98 | -8902 | 198495 | 0.72 | 1151970 | 5.804 | Si |
| SLV 11 | 100 | -4386 | 238621 | 0.35 | 585550 | 2.454 | Si |

### Verifica a taglio nel piano secondo D.M. 17-01-18 (N.T.C.) §7.8.2.2.2 con rottura per scorrimento in combinazioni non sismiche, γM = 3

| Comb. | Quota | N | V par | M | σ0 | σN | l' | fvd | Vt scorr. | Vt fess.diag. | Vt,lim | c.s. | Verifica |
|---|---|---|---|---|---|---|---|---|---|---|---|---|---|
| SLU 77 | -98 | -35222 | 525 | -154424 | | 2.85 | 275 | 0.94 | 11571 | | | 22.06 | Si |
| SLU 77 | 100 | -20741 | 306 | -255305 | | 1.68 | 275 | 0.78 | 9640 | | | 31.54 | Si |
| SLU 80 | -98 | -35178 | 548 | -152157 | | 2.84 | 275 | 0.93 | 11565 | | | 21.12 | Si |
| SLU 80 | 100 | -20775 | 320 | -255180 | | 1.68 | 275 | 0.78 | 9645 | | | 30.18 | Si |

| Comb. | Quota | N | V par | M | σ0 | σN | l' | fvd | Vt scorr. | Vt fess.diag. | Vt,lim | c.s. | Verifica |
|---|---|---|---|---|---|---|---|---|---|---|---|---|---|
| SLU 35 | -98 | -28865 | 549 | -148008 | | 2.33 | 275 | 0.87 | 10724 | | | 19.54 | Si |
| SLU 35 | 100 | -17211 | 350 | -237416 | | 1.39 | 275 | 0.74 | 9170 | | | 26.21 | Si |
| SLU 79 | -98 | -35274 | 545 | -158431 | | 2.85 | 275 | 0.94 | 11578 | | | 21.25 | Si |
| SLU 79 | 100 | -20781 | 323 | -259831 | | 1.68 | 275 | 0.78 | 9646 | | | 29.88 | Si |
| SLU 30 | -98 | -25707 | 470 | -125075 | | 2.08 | 275 | 0.83 | 10303 | | | 21.93 | Si |
| SLU 30 | 100 | -14835 | 304 | -186574 | | 1.2 | 275 | 0.72 | 8853 | | | 29.1 | Si |
| SLU 78 | -98 | -35127 | 527 | -148150 | | 2.84 | 275 | 0.93 | 11559 | | | 21.92 | Si |
| SLU 78 | 100 | -20735 | 302 | -250655 | | 1.68 | 275 | 0.78 | 9640 | | | 31.87 | Si |
| SLU 38 | -98 | -28821 | 572 | -145742 | | 2.33 | 275 | 0.87 | 10718 | | | 18.74 | Si |
| SLU 38 | 100 | -17245 | 364 | -237291 | | 1.39 | 275 | 0.74 | 9174 | | | 25.23 | Si |
| SLU 37 | -98 | -28917 | 569 | -152016 | | 2.34 | 275 | 0.87 | 10731 | | | 18.86 | Si |
| SLU 37 | 100 | -17251 | 367 | -241942 | | 1.39 | 275 | 0.74 | 9175 | | | 25.01 | Si |
| SLU 29 | -98 | -25802 | 467 | -131349 | | 2.09 | 275 | 0.83 | 10315 | | | 22.09 | Si |
| SLU 29 | 100 | -14841 | 307 | -191225 | | 1.2 | 275 | 0.72 | 8854 | | | 28.8 | Si |
| SLU 36 | -98 | -28770 | 552 | -141735 | | 2.32 | 275 | 0.87 | 10711 | | | 19.42 | Si |
| SLU 36 | 100 | -17205 | 347 | -232766 | | 1.39 | 275 | 0.74 | 9169 | | | 26.46 | Si |

### Verifica a taglio nel piano secondo D.M. 17-01-18 (N.T.C.) §7.8.2.2.2 con rottura per scorrimento in combinazioni sismiche, γM = 2

| Comb. | Quota | N | V par | M | σ0 | σN | l' | fvd | Vt scorr. | Vt fess.diag. | Vt,lim | c.s. | Verifica |
|---|---|---|---|---|---|---|---|---|---|---|---|---|---|
| SLV 11 | -98 | -8902 | -3113 | 198495 | | 0.72 | 275 | 0.98 | 12093 | | | 3.88 | Si |
| SLV 11 | 100 | -4386 | -1904 | 238621 | | 0.39 | 249.28 | 0.91 | 10225 | | | 5.37 | Si |
| SLV 1 | -98 | -31578 | 7852 | -336308 | | 2.55 | 275 | 1.34 | 16628 | | | 2.12 | Si |
| SLV 1 | 100 | -20920 | 4479 | -375162 | | 1.69 | 275 | 1.17 | 14496 | | | 3.24 | Si |
| SLV 16 | -98 | -16767 | -7655 | 221255 | | 1.35 | 275 | 1.1 | 13666 | | | 1.79 | Si |
| SLV 16 | 100 | -6791 | -4499 | 145581 | | 0.55 | 275 | 0.94 | 11671 | | | 2.59 | Si |
| SLV 2 | -98 | -31578 | 7852 | -336308 | | 2.55 | 275 | 1.34 | 16628 | | | 2.12 | Si |
| SLV 2 | 100 | -20920 | 4479 | -375162 | | 1.69 | 275 | 1.17 | 14496 | | | 3.24 | Si |
| SLV 14 | -98 | -25371 | -7071 | 107593 | | 2.05 | 275 | 1.24 | 15387 | | | 2.18 | Si |
| SLV 14 | 100 | -11637 | -4138 | -35935 | | 0.94 | 275 | 1.02 | 12640 | | | 3.05 | Si |
| SLV 13 | -98 | -25371 | -7071 | 107593 | | 2.05 | 275 | 1.24 | 15387 | | | 2.18 | Si |
| SLV 13 | 100 | -11637 | -4138 | -35935 | | 0.94 | 275 | 1.02 | 12640 | | | 3.05 | Si |
| SLV 12 | -98 | -8902 | -3113 | 198495 | | 0.72 | 275 | 0.98 | 12093 | | | 3.88 | Si |
| SLV 12 | 100 | -4386 | -1904 | 238621 | | 0.39 | 249.28 | 0.91 | 10225 | | | 5.37 | Si |
| SLV 3 | -98 | -22975 | 7268 | -222646 | | 1.86 | 275 | 1.2 | 14907 | | | 2.05 | Si |
| SLV 3 | 100 | -16073 | 4118 | -193645 | | 1.3 | 275 | 1.09 | 13527 | | | 3.28 | Si |
| SLV 15 | -98 | -16767 | -7655 | 221255 | | 1.35 | 275 | 1.1 | 13666 | | | 1.79 | Si |
| SLV 15 | 100 | -6791 | -4499 | 145581 | | 0.55 | 275 | 0.94 | 11671 | | | 2.59 | Si |
| SLV 4 | -98 | -22975 | 7268 | -222646 | | 1.86 | 275 | 1.2 | 14907 | | | 2.05 | Si |
| SLV 4 | 100 | -16073 | 4118 | -193645 | | 1.3 | 275 | 1.09 | 13527 | | | 3.28 | Si |

### Verifica a pressoflessione fuori piano D.M. 17-01-18 (N.T.C.)

quota 1 Wa 0.08 denominatore 8 γM = 2

| Comb. | fd | Sa | σ0 | N | M | Mc | Coeff.s. | Verifica |
|---|---|---|---|---|---|---|---|---|
| SLV 12 | 14 | 0.24 | 0.5 | -6212 | 8897 | 134020 | 15.06 | Si |
| SLV 11 | 14 | 0.24 | 0.5 | -6212 | 8897 | 134020 | 15.06 | Si |
| SLV 7 | 14 | 0.24 | 0.7 | -8612 | 8897 | 182729 | 20.54 | Si |
| SLV 8 | 14 | 0.24 | 0.7 | -8612 | 8897 | 182729 | 20.54 | Si |
| SLV 15 | 14 | 0.24 | 0.95 | -11741 | 8897 | 243652 | 27.39 | Si |
| SLV 16 | 14 | 0.24 | 0.95 | -11741 | 8897 | 243652 | 27.39 | Si |
| SLV 13 | 14 | 0.24 | 1.53 | -18880 | 8897 | 371756 | 41.78 | Si |
| SLV 14 | 14 | 0.24 | 1.53 | -18880 | 8897 | 371756 | 41.78 | Si |
| SLV 3 | 14 | 0.24 | 1.6 | -19741 | 8897 | 386184 | 43.41 | Si |
| SLV 4 | 14 | 0.24 | 1.6 | -19741 | 8897 | 386184 | 43.41 | Si |

### Verifica dei meccanismi locali di collasso con analisi cinematica lineare

forza di aggancio al piano = 0 quota mezzeria = 1 Wa = 0.08 Ta = 0.0145

| Comb. | N top | N base | V orto | α0 | M* | e* | a0* | aLim | Verifica |
|---|---|---|---|---|---|---|---|---|---|
| SLV 10 | -20540 | -37581 | -1185 | 0.073 | 24.367 | 0.958 | 110.075 | 316.838 | No |
| SLV 9 | -20540 | -37581 | -1185 | 0.073 | 24.367 | 0.958 | 110.075 | 316.838 | No |
| SLV 5 | -23325 | -39443 | -1240 | 0.075 | 27.199 | 0.962 | 113.121 | 316.838 | No |
| SLV 6 | -23325 | -39443 | -1240 | 0.075 | 27.199 | 0.962 | 113.121 | 316.838 | No |
| SLV 14 | -11637 | -25371 | -668 | 0.083 | 15.332 | 0.937 | 129.4 | 282.145 | No |
| SLV 13 | -11637 | -25371 | -668 | 0.083 | 15.332 | 0.937 | 129.4 | 282.145 | No |
| SLV 1 | -20920 | -31578 | -852 | 0.088 | 24.753 | 0.959 | 132.818 | 282.145 | No |
| SLV 2 | -20920 | -31578 | -852 | 0.088 | 24.753 | 0.959 | 132.818 | 282.145 | No |
| SLV 4 | -16073 | -22975 | -465 | 0.102 | 19.829 | 0.95 | 155.954 | 282.145 | No |
| SLV 3 | -16073 | -22975 | -465 | 0.102 | 19.829 | 0.95 | 155.954 | 282.145 | No |

### Tabella dei coefficienti di sicurezza minimi

| Stato limite | Coeff.s. | Comb. | Verifica |
|---|---|---|---|
| PF_SLU | 8.126 | SLU 37 | Si |
| V_SLU | 18.743 | SLU 38 | Si |
| PF_SLV | 2.454 | SLV 11 | Si |
| V_SLV | 1.785 | SLV 15 | Si |
| PFFP_SLV | 15.063 | SLV 11 | Si |
| R_SLV | 0.347 | SLV 9 | No |

## Maschio 232

Verifiche condotte secondo D.M. 17-01-18 (N.T.C.)

## Dati geometrici

| X ini. | Y ini. | X fin. | Y fin. | Quota i. | Quota.s | l | Sp. | h netta | h ini. | h fin. | a | a.s.,sx | a.s.,dx |
|---|---|---|---|---|---|---|---|---|---|---|---|---|---|
| -1375.3 | -485.9 | -1293.3 | -485.9 | Z medio 1070 cm | F1 | 82 | 30 | 427.8 | 427.8 | 427.7 | | | |

## Caratteristiche del materiale

(Circolare 7 21-01-19 C8.5.I) Muratura in mattoni pieni e malta di calce LC2_Corti

| fb | fk | fvk0 | fmedio | τ0 | fv0 | μ | ϕ | fv,lim | E | G | FC |
|---|---|---|---|---|---|---|---|---|---|---|---|
| 60 | | | 34.5 | 0.9 | 2 | 0.58 | 0.77 | 3.25 | 32000 | 12800 | 1.2 |

## Verifica a pressoflessione nel piano secondo D.M. 17-01-18 NTC §7.8.2.2.1 in combinazioni non sismiche, γM = 3

| Comb. | Quota | N | M | σ0 | Mu | c.s. | Verifica |
|---|---|---|---|---|---|---|---|
| SLU 37 | 1165 | -3347 | 2542 | 1.36 | 114303 | 44.958 | Si |
| SLU 37 | 1365 | -1933 | 22298 | 0.79 | 71611 | 3.212 | Si |
| SLU 35 | 1165 | -3347 | 2677 | 1.36 | 114314 | 42.71 | Si |
| SLU 35 | 1365 | -1897 | 21067 | 0.77 | 70419 | 3.343 | Si |
| SLU 16 | 1165 | -3110 | 2925 | 1.26 | 107735 | 36.831 | Si |
| SLU 16 | 1365 | -1737 | 19703 | 0.71 | 65039 | 3.301 | Si |
| SLU 15 | 1165 | -3180 | 3822 | 1.29 | 109696 | 28.698 | Si |
| SLU 15 | 1365 | -1687 | 17531 | 0.69 | 63338 | 3.613 | Si |
| SLU 14 | 1165 | -3111 | 3059 | 1.26 | 107747 | 35.22 | Si |
| SLU 14 | 1365 | -1701 | 18471 | 0.69 | 63818 | 3.455 | Si |
| SLU 38 | 1165 | -3416 | 3306 | 1.39 | 116185 | 35.147 | Si |
| SLU 38 | 1365 | -1919 | 21358 | 0.78 | 71145 | 3.331 | Si |
| SLU 79 | 1165 | -4098 | 4654 | 1.67 | 133675 | 28.72 | Si |
| SLU 79 | 1365 | -2201 | 22908 | 0.89 | 80348 | 3.507 | Si |
| SLU 36 | 1165 | -3416 | 3440 | 1.39 | 116196 | 33.781 | Si |
| SLU 36 | 1365 | -1883 | 20127 | 0.77 | 69951 | 3.476 | Si |
| SLU 29 | 1165 | -3331 | 4983 | 1.35 | 113874 | 22.852 | Si |
| SLU 29 | 1365 | -1841 | 19637 | 0.75 | 68552 | 3.491 | Si |
| SLU 17 | 1165 | -3180 | 3688 | 1.29 | 109685 | 29.738 | Si |
| SLU 17 | 1365 | -1723 | 18763 | 0.7 | 64561 | 3.441 | Si |

## Verifica a pressoflessione nel piano secondo D.M. 17-01-18 NTC §7.8.2.2.1 in combinazioni sismiche, γM = 2

| Comb. | Quota | N | M | σ0 | Mu | c.s. | Verifica |
|---|---|---|---|---|---|---|---|
| SLV 3 | 1165 | -10 | -63621 | 0 | 0 | 0 | No, e>l/2 |
| SLV 3 | 1365 | -1803 | 75814 | 0 | 0 | 0 | No, e>l/2 |
| SLV 6 | 1165 | -63 | -33589 | 0 | 0 | 0 | No, e>l/2 |
| SLV 6 | 1365 | -1611 | 69866 | 0 | 0 | 0 | No, e>l/2 |
| SLV 5 | 1165 | -63 | -33589 | 0 | 0 | 0 | No, e>l/2 |
| SLV 5 | 1365 | -1611 | 69866 | 0 | 0 | 0 | No, e>l/2 |
| SLV 2 | 1165 | 1054 | -73837 | 0 | 0 | 0 | No, Trazione |
| SLV 2 | 1365 | -1929 | 99248 | 0 | 0 | 0 | No, e>l/2 |
| SLV 13 | 1165 | -5685 | 75213 | 2.31 | 189022 | 2.513 | Si |
| SLV 13 | 1365 | -599 | -62815 | 0 | 0 | 0 | No, e>l/2 |
| SLV 12 | 1165 | -5633 | 45180 | 2.29 | 187684 | 4.154 | Si |
| SLV 12 | 1365 | -792 | -56866 | 0 | 0 | 0 | No, e>l/2 |
| SLV 4 | 1165 | -10 | -63621 | 0 | 0 | 0 | No, e>l/2 |
| SLV 4 | 1365 | -1803 | 75814 | 0 | 0 | 0 | No, e>l/2 |
| SLV 11 | 1165 | -5633 | 45180 | 2.29 | 187684 | 4.154 | Si |
| SLV 11 | 1365 | -792 | -56866 | 0 | 0 | 0 | No, e>l/2 |
| SLV 16 | 1165 | -6750 | 85429 | 2.74 | 214614 | 2.512 | Si |
| SLV 16 | 1365 | -473 | -86249 | 0 | 0 | 0 | No, e>l/2 |
| SLV 14 | 1165 | -5685 | 75213 | 2.31 | 189022 | 2.513 | Si |
| SLV 14 | 1365 | -599 | -62815 | 0 | 0 | 0 | No, e>l/2 |

## Verifica a taglio nel piano secondo D.M. 17-01-18 (N.T.C.) §7.8.2.2.2 con rottura per scorrimento in combinazioni non sismiche, γM = 3

| Comb. | Quota | N | V par | M | σ0 | σN | l' | fvd | Vt scorr. | Vt fess.diag. | Vt,lim | c.s. | Verifica |
|---|---|---|---|---|---|---|---|---|---|---|---|---|---|
| SLU 52 | 1165 | -3659 | 195 | 7546 | | 1.49 | 82 | 0.75 | 1855 | | | 9.51 | Si |
| SLU 52 | 1365 | -1456 | 159 | 6701 | | 0.59 | 82 | 0.63 | 1561 | | | 9.84 | Si |
| SLU 65 | 1165 | -3879 | 212 | 9604 | | 1.58 | 82 | 0.77 | 1884 | | | 8.89 | Si |
| SLU 65 | 1365 | -1560 | 196 | 6636 | | 0.63 | 82 | 0.64 | 1575 | | | 8.03 | Si |
| SLU 2 | 1165 | -2891 | 193 | 7875 | | 1.18 | 82 | 0.71 | 1752 | | | 9.07 | Si |
| SLU 2 | 1365 | -1096 | 165 | 3431 | | 0.45 | 82 | 0.61 | 1513 | | | 9.16 | Si |
| SLU 43 | 1165 | -3528 | 172 | 8715 | | 1.43 | 82 | 0.75 | 1837 | | | 10.66 | Si |
| SLU 43 | 1365 | -1388 | 189 | 5607 | | 0.56 | 82 | 0.63 | 1552 | | | 8.23 | Si |
| SLU 47 | 1165 | -3802 | 160 | 9368 | | 1.55 | 82 | 0.76 | 1874 | | | 11.75 | Si |
| SLU 47 | 1365 | -1627 | 144 | 10062 | | 0.66 | 82 | 0.64 | 1584 | | | 11.01 | Si |
| SLU 64 | 1165 | -3764 | 144 | 8332 | | 1.53 | 82 | 0.76 | 1869 | | | 12.99 | Si |
| SLU 64 | 1365 | -1584 | 172 | 8203 | | 0.64 | 82 | 0.64 | 1578 | | | 9.2 | Si |
| SLU 23 | 1165 | -3128 | 165 | 7492 | | 1.27 | 82 | 0.73 | 1784 | | | 10.83 | Si |
| SLU 23 | 1365 | -1292 | 148 | 6026 | | 0.53 | 82 | 0.63 | 1539 | | | 10.39 | Si |
| SLU 46 | 1165 | -3757 | 149 | 8993 | | 1.53 | 82 | 0.76 | 1868 | | | 12.53 | Si |
| SLU 46 | 1365 | -1600 | 152 | 9458 | | 0.65 | 82 | 0.64 | 1580 | | | 10.42 | Si |
| SLU 44 | 1165 | -3643 | 240 | 9987 | | 1.48 | 82 | 0.75 | 1852 | | | 7.71 | Si |
| SLU 44 | 1365 | -1364 | 213 | 4040 | | 0.55 | 82 | 0.63 | 1549 | | | 7.26 | Si |
| SLU 1 | 1165 | -2776 | 125 | 6603 | | 1.13 | 82 | 0.71 | 1737 | | | 13.89 | Si |
| SLU 1 | 1365 | -1119 | 141 | 4998 | | 0.45 | 82 | 0.62 | 1516 | | | 10.79 | Si |

## Verifica a taglio nel piano secondo D.M. 17-01-18 (N.T.C.) §7.8.2.2.2 con rottura per scorrimento in combinazioni sismiche, γM = 2

| Comb. | Quota | N | V par | M | σ0 | σN | l' | fvd | Vt scorr. | Vt fess.diag. | Vt,lim | c.s. | Verifica |
|---|---|---|---|---|---|---|---|---|---|---|---|---|---|
| SLV 12 | 1165 | -5633 | 1851 | 45180 | | 2.29 | 82 | 1.29 | 3177 | | | 1.72 | Si |
| SLV 12 | 1365 | -792 | 1259 | -56866 | | 0 | 0 | 0.83 | 0 | | | 0 | No, Vu<V |
| SLV 4 | 1165 | -10 | -2645 | -63621 | | 0 | 0 | 0.83 | 0 | | | 0 | No, Vu<V |
| SLV 4 | 1365 | -1803 | -1022 | 75814 | | 0 | 0 | 0.83 | 0 | | | 0 | No, Vu<V |
| SLV 11 | 1165 | -5633 | 1851 | 45180 | | 2.29 | 82 | 1.29 | 3177 | | | 1.72 | Si |
| SLV 11 | 1365 | -792 | 1259 | -56866 | | 0 | 0 | 0.83 | 0 | | | 0 | No, Vu<V |

| Comb. | Quota | N | V par | M | σ0 | σN | l' | fvd | Vt scorr. | Vt fess.diag. | Vt,lim | c.s. | Verifica |
|---|---|---|---|---|---|---|---|---|---|---|---|---|---|
| SLV 3 | 1165 | -10 | -2645 | -63621 | | 0 | 0 | 0.83 | 0 | | | 0 | No, Vu<V |
| SLV 3 | 1365 | -1803 | -1022 | 75814 | | 0 | 0 | 0.83 | 0 | | | 0 | No, Vu<V |
| SLV 13 | 1165 | -5685 | 2853 | 75213 | | 2.31 | 82 | 1.3 | 3187 | | | 1.12 | Si |
| SLV 13 | 1365 | -599 | 1262 | -62815 | | 0 | 0 | 0.83 | 0 | | | 0 | No, Vu<V |
| SLV 16 | 1165 | -6750 | 3361 | 85429 | | 2.74 | 82 | 1.38 | 3400 | | | 1.01 | Si |
| SLV 16 | 1365 | -473 | 1701 | -86249 | | 0 | 0 | 0.83 | 0 | | | 0 | No, Vu<V |
| SLV 5 | 1165 | -63 | -1643 | -33589 | | 0 | 0 | 0.83 | 0 | | | 0 | No, Vu<V |
| SLV 5 | 1365 | -1611 | -1019 | 69866 | | 0 | 0 | 0.83 | 0 | | | 0 | No, Vu<V |
| SLV 14 | 1165 | -5685 | 2853 | 75213 | | 2.31 | 82 | 1.3 | 3187 | | | 1.12 | Si |
| SLV 14 | 1365 | -599 | 1262 | -62815 | | 0 | 0 | 0.83 | 0 | | | 0 | No, Vu<V |
| SLV 2 | 1165 | 1054 | -3153 | -73837 | | 0 | 0 | 0.83 | 0 | | | 0 | No, Vu<V |
| SLV 2 | 1365 | -1929 | -1460 | 99248 | | 0 | 0 | 0.83 | 0 | | | 0 | No, Vu<V |
| SLV 6 | 1165 | -63 | -1643 | -33589 | | 0 | 0 | 0.83 | 0 | | | 0 | No, Vu<V |
| SLV 6 | 1365 | -1611 | -1019 | 69866 | | 0 | 0 | 0.83 | 0 | | | 0 | No, Vu<V |

### Verifica a pressoflessione fuori piano D.M. 17-01-18 (N.T.C.)

quota 1283.9 Wa 0.05 denominatore 8 γM = 2

| Comb. | fd | Sa | σ0 | N | M | Mc | Coeff.s. | Verifica |
|---|---|---|---|---|---|---|---|---|
| SLV 6 | 14 | 0.5 | 0 | -320 | 17402 | 0 | 0 | No, e>t/2 |
| SLV 5 | 14 | 0.5 | 0 | -320 | 17402 | 0 | 0 | No, e>t/2 |
| SLV 4 | 14 | 0.5 | 0 | -545 | 17402 | 0 | 0 | No, e>t/2 |
| SLV 1 | 14 | 0.5 | 0 | 124 | 17402 | 0 | 0 | No, Trazione |
| SLV 2 | 14 | 0.5 | 0 | 124 | 17402 | 0 | 0 | No, Trazione |
| SLV 3 | 14 | 0.5 | 0 | -545 | 17402 | 0 | 0 | No, e>t/2 |
| SLV 10 | 14 | 0.5 | 0.56 | -1369 | 17402 | 19602 | 1.13 | Si |
| SLV 9 | 14 | 0.5 | 0.56 | -1369 | 17402 | 19602 | 1.13 | Si |
| SLV 7 | 14 | 0.5 | 1.04 | -2549 | 17402 | 34995 | 2.01 | Si |
| SLV 8 | 14 | 0.5 | 1.04 | -2549 | 17402 | 34995 | 2.01 | Si |

### Verifica dei meccanismi locali di collasso con analisi cinematica lineare

forza di aggancio al piano = 0 quota mezzeria = 1283.9 Wa = 0.05 Ta = 0.1018

| Comb. | N top | N base | V orto | α0 | M* | e* | a0* | aLim | Verifica |
|---|---|---|---|---|---|---|---|---|---|
| SLV 10 | 148 | -1327 | 35 | 0 | 0 | 0 | 0 | 2048.411 | No, Trazione |
| SLV 5 | 254 | -1151 | 50 | 0 | 0 | 0 | 0 | 2048.411 | No, Trazione |
| SLV 7 | -318 | -3607 | -143 | 0 | 2.061 | 0.914 | 0 | 2048.411 | No |
| SLV 4 | 6 | -2543 | -59 | 0 | 0 | 0 | 0 | 1481.35 | No, Trazione |
| SLV 6 | 254 | -1151 | 50 | 0 | 0 | 0 | 0 | 2048.411 | No, Trazione |
| SLV 1 | 177 | -1806 | -1 | 0 | 0 | 0 | 0 | 1481.35 | No, Trazione |
| SLV 8 | -318 | -3607 | -143 | 0 | 2.061 | 0.914 | 0 | 2048.411 | No |
| SLV 2 | 177 | -1806 | -1 | 0 | 0 | 0 | 0 | 1481.35 | No, Trazione |
| SLV 3 | 6 | -2543 | -59 | 0 | 0 | 0 | 0 | 1481.35 | No, Trazione |
| SLV 9 | 148 | -1327 | 35 | 0 | 0 | 0 | 0 | 2048.411 | No, Trazione |

### Tabella dei coefficienti di sicurezza minimi

| Stato limite | Coeff.s. | Comb. | Verifica |
|---|---|---|---|
| PF_SLU | 3.212 | SLU 37 | Si |
| V_SLU | 7.264 | SLU 44 | Si |
| PF_SLV | 0 | SLV 2 | No |
| V_SLV | 0 | SLV 1 | No |
| PFFP_SLV | 0 | SLV 2 | No |
| R_SLV | 0 | SLV 10 | No |

## Maschio 233

Verifiche condotte secondo D.M. 17-01-18 (N.T.C.)

### Dati geometrici

| X ini. | Y ini. | X fin. | Y fin. | Quota i. | Quota.s | l | Sp. | h netta | h ini. | h fin. | a | a.s.,sx | a.s.,dx |
|---|---|---|---|---|---|---|---|---|---|---|---|---|---|
| -1193.3 | -485.9 | -1114.3 | -485.9 | Z medio 1070 cm | F1 | 79 | 30 | 427.6 | 427.6 | 427.6 | | | |

### Caratteristiche del materiale

(Circolare 7 21-01-19 C8.5.I) Muratura in mattoni pieni e malta di calce LC2_Corti

| fb | fk | fvk0 | fmedio | τ0 | fv0 | μ | ϕ | fv,lim | E | G | FC |
|---|---|---|---|---|---|---|---|---|---|---|---|
| 60 | | | 34.5 | 0.9 | 2 | 0.58 | 0.77 | 3.25 | 32000 | 12800 | 1.2 |

### Verifica a pressoflessione nel piano secondo D.M. 17-01-18 NTC §7.8.2.2.1 in combinazioni non sismiche, γM = 3

| Comb. | Quota | N | M | σ0 | Mu | c.s. | Verifica |
|---|---|---|---|---|---|---|---|
| SLU 44 | 1165 | -2426 | -8445 | 1.02 | 83791 | 9.922 | Si |
| SLU 44 | 1365 | -1420 | -9469 | 0.6 | 51952 | 5.486 | Si |
| SLU 43 | 1165 | -2408 | -8934 | 1.02 | 83257 | 9.319 | Si |
| SLU 43 | 1365 | -1392 | -8505 | 0.59 | 51023 | 5.999 | Si |
| SLU 5 | 1165 | -2227 | -9067 | 0.94 | 77814 | 8.582 | Si |
| SLU 5 | 1365 | -1434 | -8637 | 0.6 | 52421 | 6.069 | Si |
| SLU 2 | 1165 | -1926 | -6836 | 0.81 | 68482 | 10.018 | Si |
| SLU 2 | 1365 | -1142 | -7671 | 0.48 | 42442 | 5.533 | Si |
| SLU 23 | 1165 | -2136 | -8552 | 0.9 | 75026 | 8.773 | Si |
| SLU 23 | 1365 | -1308 | -8297 | 0.55 | 48154 | 5.804 | Si |
| SLU 65 | 1165 | -2636 | -10161 | 1.11 | 89906 | 8.848 | Si |
| SLU 65 | 1365 | -1585 | -10095 | 0.67 | 57475 | 5.693 | Si |
| SLU 68 | 1165 | -2937 | -12392 | 1.24 | 98363 | 7.938 | Si |
| SLU 68 | 1365 | -1877 | -11061 | 0.79 | 66925 | 6.051 | Si |
| SLU 47 | 1165 | -2727 | -10676 | 1.15 | 92507 | 8.665 | Si |
| SLU 47 | 1365 | -1711 | -10435 | 0.72 | 61599 | 5.903 | Si |

| Comb. | Quota | N | M | σ0 | Mu | c.s. | Verifica |
|---|---|---|---|---|---|---|---|
| SLU 46 | 1165 | -2661 | -10541 | 1.12 | 90608 | 8.596 | Si |
| SLU 46 | 1365 | -1654 | -10040 | 0.7 | 59724 | 5.948 | Si |
| SLU 67 | 1165 | -2871 | -12257 | 1.21 | 96521 | 7.875 | Si |
| SLU 67 | 1365 | -1819 | -10666 | 0.77 | 65088 | 6.102 | Si |

Verifica a pressoflessione nel piano secondo D.M. 17-01-18 NTC §7.8.2.2.1 in combinazioni sismiche, γM = 2

| Comb. | Quota | N | M | σ0 | Mu | c.s. | Verifica |
|---|---|---|---|---|---|---|---|
| SLV 11 | 1165 | -68 | 36828 | 0 | 0 | 0 | No, e>l/2 |
| SLV 11 | 1365 | -2103 | -60441 | 0.89 | 77045 | 1.275 | Si |
| SLV 13 | 1165 | 192 | 52743 | 0 | 0 | 0 | No, Trazione |
| SLV 13 | 1365 | -2333 | -69898 | 0.98 | 84733 | 1.212 | Si |
| SLD 1 | 1165 | -3243 | -40335 | 1.37 | 113752 | 2.82 | Si |
| SLD 1 | 1365 | -521 | 28523 | 0 | 0 | 0 | No, e>l/2 |
| SLV 4 | 1165 | -4205 | -69000 | 1.77 | 141969 | 2.058 | Si |
| SLV 4 | 1365 | 16 | 56822 | 0 | 0 | 0 | No, Trazione |
| SLV 14 | 1165 | 192 | 52743 | 0 | 0 | 0 | No, Trazione |
| SLV 14 | 1365 | -2333 | -69898 | 0.98 | 84733 | 1.212 | Si |
| SLV 2 | 1165 | -4909 | -83694 | 2.07 | 161017 | 1.924 | Si |
| SLV 2 | 1365 | 342 | 76031 | 0 | 0 | 0 | No, Trazione |
| SLV 12 | 1165 | -68 | 36828 | 0 | 0 | 0 | No, e>l/2 |
| SLV 12 | 1365 | -2103 | -60441 | 0.89 | 77045 | 1.275 | Si |
| SLV 3 | 1165 | -4205 | -69000 | 1.77 | 141969 | 2.058 | Si |
| SLV 3 | 1365 | 16 | 56822 | 0 | 0 | 0 | No, Trazione |
| SLV 5 | 1165 | -3944 | -53085 | 1.66 | 134573 | 2.535 | Si |
| SLV 5 | 1365 | -214 | 47366 | 0 | 0 | 0 | No, e>l/2 |
| SLV 6 | 1165 | -3944 | -53085 | 1.66 | 134573 | 2.535 | Si |
| SLV 6 | 1365 | -214 | 47366 | 0 | 0 | 0 | No, e>l/2 |

Verifica a taglio nel piano secondo D.M. 17-01-18 (N.T.C.) §7.8.2.2.2 con rottura per scorrimento in combinazioni non sismiche, γM = 3

| Comb. | Quota | N | V par | M | σ0 | σN | l' | fvd | Vt scorr. | Vt fess.diag. | Vt,lim | c.s. | Verifica |
|---|---|---|---|---|---|---|---|---|---|---|---|---|---|
| SLU 52 | 1165 | -2561 | -151 | -9542 | | 1.08 | 79 | 0.7 | 1658 | | | 11.01 | Si |
| SLU 52 | 1365 | -1408 | 20 | -8249 | | 0.59 | 79 | 0.63 | 1504 | | | 74.45 | Si |
| SLU 61 | 1165 | -2611 | -136 | -10207 | | 1.1 | 79 | 0.7 | 1665 | | | 12.2 | Si |
| SLU 61 | 1365 | -1392 | -10 | -7340 | | 0.59 | 79 | 0.63 | 1502 | | | 155.23 | Si |
| SLU 65 | 1165 | -2636 | -127 | -10161 | | 1.11 | 79 | 0.7 | 1668 | | | 13.13 | Si |
| SLU 65 | 1365 | -1585 | 48 | -10095 | | 0.67 | 79 | 0.64 | 1528 | | | 32.16 | Si |
| SLU 31 | 1165 | -2270 | -132 | -9648 | | 0.96 | 79 | 0.68 | 1619 | | | 12.26 | Si |
| SLU 31 | 1365 | -1296 | 3 | -7077 | | 0.55 | 79 | 0.63 | 1489 | | | 536.04 | Si |
| SLU 10 | 1165 | -2061 | -134 | -7933 | | 0.87 | 79 | 0.67 | 1591 | | | 11.88 | Si |
| SLU 10 | 1365 | -1131 | 13 | -6451 | | 0.48 | 79 | 0.62 | 1467 | | | 117.25 | Si |
| SLU 19 | 1165 | -2111 | -120 | -8598 | | 0.89 | 79 | 0.67 | 1598 | | | 13.34 | Si |
| SLU 19 | 1365 | -1115 | -17 | -5542 | | 0.47 | 79 | 0.62 | 1465 | | | 84.35 | Si |
| SLU 82 | 1165 | -2821 | -135 | -11923 | | 1.19 | 79 | 0.71 | 1693 | | | 12.57 | Si |
| SLU 82 | 1365 | -1558 | -19 | -7966 | | 0.66 | 79 | 0.64 | 1524 | | | 78.52 | Si |
| SLU 40 | 1165 | -2321 | -118 | -10314 | | 0.98 | 79 | 0.69 | 1626 | | | 13.78 | Si |
| SLU 40 | 1365 | -1280 | -27 | -6168 | | 0.54 | 79 | 0.63 | 1487 | | | 54.87 | Si |
| SLU 73 | 1165 | -2771 | -149 | -11258 | | 1.17 | 79 | 0.71 | 1686 | | | 11.33 | Si |
| SLU 73 | 1365 | -1574 | 10 | -8875 | | 0.66 | 79 | 0.64 | 1526 | | | 145.77 | Si |
| SLU 44 | 1165 | -2426 | -129 | -8445 | | 1.02 | 79 | 0.69 | 1640 | | | 12.73 | Si |
| SLU 44 | 1365 | -1420 | 57 | -9469 | | 0.6 | 79 | 0.64 | 1506 | | | 26.31 | Si |

Verifica a taglio nel piano secondo D.M. 17-01-18 (N.T.C.) §7.8.2.2.2 con rottura per scorrimento in combinazioni sismiche, γM = 2

| Comb. | Quota | N | V par | M | σ0 | σN | l' | fvd | Vt scorr. | Vt fess.diag. | Vt,lim | c.s. | Verifica |
|---|---|---|---|---|---|---|---|---|---|---|---|---|---|
| SLV 6 | 1165 | -3944 | -1677 | -53085 | | 1.68 | 78.12 | 1.17 | 2742 | | | 1.63 | Si |
| SLV 6 | 1365 | -214 | -1176 | 47366 | | 0 | 0 | 0.83 | 0 | | | 0 | No, Vu<V |
| SLV 4 | 1165 | -4205 | -2937 | -69000 | | 2.02 | 69.27 | 1.24 | 2573 | | | 0.88 | No, Vu<V |
| SLV 4 | 1365 | 16 | -1096 | 56822 | | 0 | 0 | 0.83 | 0 | | | 0 | No, Vu<V |
| SLV 5 | 1165 | -3944 | -1677 | -53085 | | 1.68 | 78.12 | 1.17 | 2742 | | | 1.63 | Si |
| SLV 5 | 1365 | -214 | -1176 | 47366 | | 0 | 0 | 0.83 | 0 | | | 0 | No, Vu<V |
| SLV 2 | 1165 | -4909 | -3352 | -83694 | | 2.43 | 67.34 | 1.32 | 2665 | | | 0.8 | No, Vu<V |
| SLV 2 | 1365 | 342 | -1563 | 76031 | | 0 | 0 | 0.83 | 0 | | | 0 | No, Vu<V |
| SLD 1 | 1165 | -3243 | -1466 | -40335 | | 1.37 | 79 | 1.11 | 2624 | | | 1.79 | Si |
| SLD 1 | 1365 | -521 | -661 | 28523 | | 0 | 0 | 0.83 | 0 | | | 0 | No, Vu<V |
| SLV 12 | 1165 | -68 | 1559 | 36828 | | 0 | 0 | 0.83 | 0 | | | 0 | No, Vu<V |
| SLV 12 | 1365 | -2103 | 1179 | -60441 | | 2.17 | 32.29 | 1.27 | 1228 | | | 1.04 | Si |
| SLV 14 | 1165 | 192 | 2818 | 52743 | | 0 | 0 | 0.83 | 0 | | | 0 | No, Vu<V |
| SLV 14 | 1365 | -2333 | 1098 | -69898 | | 2.72 | 28.62 | 1.38 | 1182 | | | 1.08 | Si |
| SLV 13 | 1165 | 192 | 2818 | 52743 | | 0 | 0 | 0.83 | 0 | | | 0 | No, Vu<V |
| SLV 13 | 1365 | -2333 | 1098 | -69898 | | 2.72 | 28.62 | 1.38 | 1182 | | | 1.08 | Si |
| SLV 3 | 1165 | -4205 | -2937 | -69000 | | 2.02 | 69.27 | 1.24 | 2573 | | | 0.88 | No, Vu<V |
| SLV 3 | 1365 | 16 | -1096 | 56822 | | 0 | 0 | 0.83 | 0 | | | 0 | No, Vu<V |
| SLV 11 | 1165 | -68 | 1559 | 36828 | | 0 | 0 | 0.83 | 0 | | | 0 | No, Vu<V |
| SLV 11 | 1365 | -2103 | 1179 | -60441 | | 2.17 | 32.29 | 1.27 | 1228 | | | 1.04 | Si |

Verifica a pressoflessione fuori piano D.M. 17-01-18 (N.T.C.)

quota 1283.8 Wa 0.05 denominatore 8 γM = 2

| Comb. | fd | Sa | σ0 | N | M | Mc | Coeff.s. | Verifica |
|---|---|---|---|---|---|---|---|---|
| SLV 14 | 14 | 0.5 | 0.53 | -1261 | 16753 | 18094 | 1.08 | Si |
| SLV 13 | 14 | 0.5 | 0.53 | -1261 | 16753 | 18094 | 1.08 | Si |
| SLV 15 | 14 | 0.5 | 0.56 | -1327 | 16753 | 18987 | 1.13 | Si |
| SLV 16 | 14 | 0.5 | 0.56 | -1327 | 16753 | 18987 | 1.13 | Si |
| SLV 9 | 14 | 0.5 | 0.57 | -1350 | 16753 | 19306 | 1.15 | Si |
| SLV 10 | 14 | 0.5 | 0.57 | -1350 | 16753 | 19306 | 1.15 | Si |
| SLV 5 | 14 | 0.5 | 0.63 | -1492 | 16753 | 21221 | 1.27 | Si |
| SLV 6 | 14 | 0.5 | 0.63 | -1492 | 16753 | 21221 | 1.27 | Si |
| SLV 12 | 14 | 0.5 | 0.66 | -1568 | 16753 | 22247 | 1.33 | Si |
| SLV 11 | 14 | 0.5 | 0.66 | -1568 | 16753 | 22247 | 1.33 | Si |

### Verifica dei meccanismi locali di collasso con analisi cinematica lineare

forza di aggancio al piano = 0 quota mezzeria = 1283.8 Wa = 0.05 Ta = 0.1018

| Comb. | N top | N base | V orto | α0 | M* | e* | a0* | aLim | Verifica |
|---|---|---|---|---|---|---|---|---|---|
| SLV 1 | 156 | -1937 | -63 | 0 | 0 | 0 | 0 | 1480.164 | No, Trazione |
| SLV 11 | -32 | -1371 | -78 | 0 | 1.862 | 0.984 | 0 | 2048.366 | No |
| SLV 8 | 162 | -1116 | -84 | 0 | 0 | 0 | 0 | 2048.366 | No, Trazione |
| SLV 3 | 264 | -1421 | -75 | 0 | 0 | 0 | 0 | 1480.164 | No, Trazione |
| SLV 4 | 264 | -1421 | -75 | 0 | 0 | 0 | 0 | 1480.164 | No, Trazione |
| SLV 7 | 162 | -1116 | -84 | 0 | 0 | 0 | 0 | 2048.366 | No, Trazione |
| SLV 2 | 156 | -1937 | -63 | 0 | 0 | 0 | 0 | 1480.164 | No, Trazione |
| SLV 12 | -32 | -1371 | -78 | 0 | 1.862 | 0.984 | 0 | 2048.366 | No |
| SLV 16 | -384 | -2270 | -58 | 0.015 | 2.039 | 0.906 | 23.881 | 1480.164 | No |
| SLV 15 | -384 | -2270 | -58 | 0.015 | 2.039 | 0.906 | 23.881 | 1480.164 | No |

### Tabella dei coefficienti di sicurezza minimi

| Stato limite | Coeff.s. | Comb. | Verifica |
|---|---|---|---|
| PF_SLU | 5.486 | SLU 44 | Si |
| V_SLU | 11.011 | SLU 52 | Si |
| PF_SLV | 0 | SLV 16 | No |
| V_SLV | 0 | SLD 1 | No |
| PFFP_SLV | 1.08 | SLV 13 | Si |
| R_SLV | 0 | SLV 8 | No |

## Maschio 234

Verifiche condotte secondo D.M. 17-01-18 (N.T.C.)

### Dati geometrici

| X ini. | Y ini. | X fin. | Y fin. | Quota i. | Quota.s | l | Sp. | h netta | h ini. | h fin. | a | a.s.,sx | a.s.,dx |
|---|---|---|---|---|---|---|---|---|---|---|---|---|---|
| -1705.3 | -500.9 | -1705.3 | -486.2 | L3 | F1 | 14.7 | 30 | 1323.5 | 1320.1 | 1326.9 | | | |

### Caratteristiche del materiale

(Circolare 7 21-01-19 C8.5.I) Muratura in mattoni pieni e malta di calce LC2_Corti

| fb | fk | fvk0 | fmedio | τ0 | fv0 | μ | ϕ | fv,lim | E | G | FC |
|---|---|---|---|---|---|---|---|---|---|---|---|
| 60 | | | 34.5 | 0.9 | 2 | 0.58 | 0.77 | 3.25 | 32000 | 12800 | 1.2 |

### Verifica a pressoflessione nel piano secondo D.M. 17-01-18 NTC §7.8.2.2.1 in combinazioni non sismiche, γM = 3

| Comb. | Quota | N | M | σ0 | Mu | c.s. | Verifica |
|---|---|---|---|---|---|---|---|
| SLU 59 | 1248 | -589 | -4365 | 0 | 0 | 0 | No, e>l/2 |
| SLU 59 | 1460 | -37 | 2176 | 0 | 0 | 0 | No, e>l/2 |
| SLU 57 | 1248 | -601 | -4549 | 0 | 0 | 0 | No, e>l/2 |
| SLU 57 | 1460 | -49 | 2300 | 0 | 0 | 0 | No, e>l/2 |
| SLU 61 | 1248 | -700 | -5568 | 0 | 0 | 0 | No, e>l/2 |
| SLU 61 | 1460 | -191 | 3088 | 0 | 0 | 0 | No, e>l/2 |
| SLU 55 | 1248 | -728 | -6007 | 0 | 0 | 0 | No, e>l/2 |
| SLU 55 | 1460 | -142 | 3226 | 0 | 0 | 0 | No, e>l/2 |
| SLU 58 | 1248 | -447 | -2500 | 1.02 | 2873 | 1.149 | Si |
| SLU 58 | 1460 | 10 | 1144 | 0 | 0 | 0 | No, Trazione |
| SLU 56 | 1248 | -459 | -2684 | 1.04 | 2938 | 1.094 | Si |
| SLU 56 | 1460 | -1 | 1267 | 0 | 0 | 0 | No, e>l/2 |
| SLU 54 | 1248 | -645 | -4948 | 0 | 0 | 0 | No, e>l/2 |
| SLU 54 | 1460 | -122 | 2661 | 0 | 0 | 0 | No, e>l/2 |
| SLU 1 | 1248 | -378 | -1970 | 0.86 | 2485 | 1.261 | Si |
| SLU 1 | 1460 | -89 | 1156 | 0 | 0 | 0 | No, e>l/2 |
| SLU 60 | 1248 | -559 | -3703 | 1.27 | 3462 | 0.935 | No, M>Mu |
| SLU 60 | 1460 | -143 | 2056 | 0 | 0 | 0 | No, e>l/2 |
| SLU 53 | 1248 | -503 | -3083 | 1.14 | 3177 | 1.031 | Si |
| SLU 53 | 1460 | -75 | 1629 | 0 | 0 | 0 | No, e>l/2 |

### Verifica a pressoflessione nel piano secondo D.M. 17-01-18 NTC §7.8.2.2.1 in combinazioni sismiche, γM = 2

| Comb. | Quota | N | M | σ0 | Mu | c.s. | Verifica |
|---|---|---|---|---|---|---|---|
| SLV 14 | 1248 | -1242 | -14282 | 0 | 0 | 0 | No, e>l/2 |
| SLV 14 | 1460 | -247 | -150 | 0.56 | 1732 | 11.572 | Si |
| SLV 9 | 1248 | -1740 | -18961 | 0 | 0 | 0 | No, e>l/2 |
| SLV 9 | 1460 | 98 | -6496 | 0 | 0 | 0 | No, Trazione |
| SLV 8 | 1248 | 939 | 14131 | 0 | 0 | 0 | No, Trazione |
| SLV 8 | 1460 | -273 | 9184 | 0 | 0 | 0 | No, e>l/2 |
| SLV 10 | 1248 | -1740 | -18961 | 0 | 0 | 0 | No, e>l/2 |
| SLV 10 | 1460 | 98 | -6496 | 0 | 0 | 0 | No, Trazione |
| SLV 12 | 1248 | 649 | 9579 | 0 | 0 | 0 | No, Trazione |
| SLV 12 | 1460 | -415 | 9750 | 0 | 0 | 0 | No, e>l/2 |
| SLD 1 | 1248 | -345 | -986 | 0.78 | 2373 | 2.407 | Si |
| SLD 1 | 1460 | 40 | -32 | 0 | 0 | 0 | No, Trazione |
| SLV 11 | 1248 | 649 | 9579 | 0 | 0 | 0 | No, Trazione |
| SLV 11 | 1460 | -415 | 9750 | 0 | 0 | 0 | No, e>l/2 |
| SLV 6 | 1248 | -1450 | -14409 | 0 | 0 | 0 | No, e>l/2 |
| SLV 6 | 1460 | 241 | -7061 | 0 | 0 | 0 | No, Trazione |
| SLV 13 | 1248 | -1242 | -14282 | 0 | 0 | 0 | No, e>l/2 |
| SLV 13 | 1460 | -247 | -150 | 0.56 | 1732 | 11.572 | Si |
| SLV 7 | 1248 | 939 | 14131 | 0 | 0 | 0 | No, Trazione |
| SLV 7 | 1460 | -273 | 9184 | 0 | 0 | 0 | No, e>l/2 |

Verifica a taglio nel piano secondo D.M. 17-01-18 (N.T.C.) §7.8.2.2.2 con rottura per scorrimento in combinazioni non sismiche, γM = 3

| Comb. | Quota | N | V par | M | σ0 | σN | l' | fvd | Vt scorr. | Vt fess.diag. | Vt,lim | c.s. | Verifica |
|---|---|---|---|---|---|---|---|---|---|---|---|---|---|
| SLU 54 | 1248 | -645 | -66 | -4948 | | 0 | 0 | 0.56 | 0 | | | 0 | No, Vu<V |
| SLU 54 | 1460 | -122 | 111 | 2661 | | 0 | 0 | 0.56 | 0 | | | 0 | No, Vu<V |
| SLU 53 | 1248 | -503 | -41 | -3083 | | 4.6 | 3.65 | 1.08 | 119 | | | 2.9 | Si |
| SLU 53 | 1460 | -75 | 60 | 1629 | | 0 | 0 | 0.56 | 0 | | | 0 | No, Vu<V |
| SLU 60 | 1248 | -559 | -49 | -3703 | | 8.71 | 2.14 | 1.08 | 69 | | | 1.42 | Si |
| SLU 60 | 1460 | -143 | 82 | 2056 | | 0 | 0 | 0.56 | 0 | | | 0 | No, Vu<V |
| SLU 61 | 1248 | -700 | -74 | -5568 | | 0 | 0 | 0.56 | 0 | | | 0 | No, Vu<V |
| SLU 61 | 1460 | -191 | 134 | 3088 | | 0 | 0 | 0.56 | 0 | | | 0 | No, Vu<V |
| SLU 58 | 1248 | -447 | -33 | -2500 | | 2.84 | 5.25 | 0.93 | 147 | | | 4.43 | Si |
| SLU 58 | 1460 | 10 | 35 | 1144 | | 0 | 0 | 0.56 | 0 | | | 0 | No, Vu<V |
| SLU 55 | 1248 | -728 | -80 | -6007 | | 0 | 0 | 0.56 | 0 | | | 0 | No, Vu<V |
| SLU 55 | 1460 | -142 | 139 | 3226 | | 0 | 0 | 0.56 | 0 | | | 0 | No, Vu<V |
| SLU 57 | 1248 | -601 | -61 | -4549 | | 0 | 0 | 0.56 | 0 | | | 0 | No, Vu<V |
| SLU 57 | 1460 | -49 | 92 | 2300 | | 0 | 0 | 0.56 | 0 | | | 0 | No, Vu<V |
| SLU 59 | 1248 | -589 | -58 | -4365 | | 0 | 0 | 0.56 | 0 | | | 0 | No, Vu<V |
| SLU 59 | 1460 | -37 | 86 | 2176 | | 0 | 0 | 0.56 | 0 | | | 0 | No, Vu<V |
| SLU 56 | 1248 | -459 | -36 | -2684 | | 3.42 | 4.47 | 1.01 | 136 | | | 3.8 | Si |
| SLU 56 | 1460 | -1 | 41 | 1267 | | 0 | 0 | 0.56 | 0 | | | 0 | No, Vu<V |
| SLU 1 | 1248 | -378 | -26 | -1970 | | 1.97 | 6.4 | 0.82 | 157 | | | 5.98 | Si |
| SLU 1 | 1460 | -89 | 40 | 1156 | | 0 | 0 | 0.56 | 0 | | | 0 | No, Vu<V |

Verifica a taglio nel piano secondo D.M. 17-01-18 (N.T.C.) §7.8.2.2.2 con rottura per scorrimento in combinazioni sismiche, γM = 2

| Comb. | Quota | N | V par | M | σ0 | σN | l' | fvd | Vt scorr. | Vt fess.diag. | Vt,lim | c.s. | Verifica |
|---|---|---|---|---|---|---|---|---|---|---|---|---|---|
| SLV 8 | 1248 | 939 | 180 | 14131 | | 0 | 0 | 0.83 | 0 | | | 0 | No, Vu<V |
| SLV 8 | 1460 | -273 | 411 | 9184 | | 0 | 0 | 0.83 | 0 | | | 0 | No, Vu<V |
| SLD 1 | 1248 | -345 | -14 | -986 | | 0.86 | 13.46 | 1 | 406 | | | 29.25 | Si |
| SLD 1 | 1460 | 40 | -51 | -32 | | 0 | 0 | 0.83 | 0 | | | 0 | No, Vu<V |
| SLV 11 | 1248 | 649 | 121 | 9579 | | 0 | 0 | 0.83 | 0 | | | 0 | No, Vu<V |
| SLV 11 | 1460 | -415 | 496 | 9750 | | 0 | 0 | 0.83 | 0 | | | 0 | No, Vu<V |
| SLV 9 | 1248 | -1740 | -244 | -18961 | | 0 | 0 | 0.83 | 0 | | | 0 | No, Vu<V |
| SLV 9 | 1460 | 98 | -310 | -6496 | | 0 | 0 | 0.83 | 0 | | | 0 | No, Vu<V |
| SLV 12 | 1248 | 649 | 121 | 9579 | | 0 | 0 | 0.83 | 0 | | | 0 | No, Vu<V |
| SLV 12 | 1460 | -415 | 496 | 9750 | | 0 | 0 | 0.83 | 0 | | | 0 | No, Vu<V |
| SLV 7 | 1248 | 939 | 180 | 14131 | | 0 | 0 | 0.83 | 0 | | | 0 | No, Vu<V |
| SLV 7 | 1460 | -273 | 411 | 9184 | | 0 | 0 | 0.83 | 0 | | | 0 | No, Vu<V |
| SLV 14 | 1248 | -1242 | -184 | -14282 | | 0 | 0 | 0.83 | 0 | | | 0 | No, Vu<V |
| SLV 14 | 1460 | -247 | 71 | -150 | | 0.56 | 14.68 | 0.95 | 416 | | | 5.87 | Si |
| SLV 10 | 1248 | -1740 | -244 | -18961 | | 0 | 0 | 0.83 | 0 | | | 0 | No, Vu<V |
| SLV 10 | 1460 | 98 | -310 | -6496 | | 0 | 0 | 0.83 | 0 | | | 0 | No, Vu<V |
| SLV 6 | 1248 | -1450 | -186 | -14409 | | 0 | 0 | 0.83 | 0 | | | 0 | No, Vu<V |
| SLV 6 | 1460 | 241 | -395 | -7061 | | 0 | 0 | 0.83 | 0 | | | 0 | No, Vu<V |
| SLV 13 | 1248 | -1242 | -184 | -14282 | | 0 | 0 | 0.83 | 0 | | | 0 | No, Vu<V |
| SLV 13 | 1460 | -247 | 71 | -150 | | 0.56 | 14.68 | 0.95 | 416 | | | 5.87 | Si |

Verifica a pressoflessione fuori piano D.M. 17-01-18 (N.T.C.)

quota 831 Wa 0.05 denominatore 8 γM = 2

| Comb. | fd | Sa | σ0 | N | M | Mc | Coeff.s. | Verifica |
|---|---|---|---|---|---|---|---|---|
| SLV 2 | 14 | 0.41 | 0 | -318 | 23872 | 0 | 0 | No, e>t/2 |
| SLV 1 | 14 | 0.41 | 0 | -318 | 23872 | 0 | 0 | No, e>t/2 |
| SLV 8 | 14 | 0.41 | 0 | -524 | 23872 | 0 | 0 | No, e>t/2 |
| SLV 10 | 14 | 0.41 | 0 | -168 | 23872 | 0 | 0 | No, e>t/2 |
| SLV 6 | 14 | 0.41 | 0 | -182 | 23872 | 0 | 0 | No, e>t/2 |
| SLV 4 | 14 | 0.41 | 0 | -421 | 23872 | 0 | 0 | No, e>t/2 |
| SLV 3 | 14 | 0.41 | 0 | -421 | 23872 | 0 | 0 | No, e>t/2 |
| SLV 9 | 14 | 0.41 | 0 | -168 | 23872 | 0 | 0 | No, e>t/2 |
| SLV 7 | 14 | 0.41 | 0 | -524 | 23872 | 0 | 0 | No, e>t/2 |
| SLV 5 | 14 | 0.41 | 0 | -182 | 23872 | 0 | 0 | No, e>t/2 |

Verifica dei meccanismi locali di collasso con analisi cinematica lineare

forza di aggancio al piano = 0 quota mezzeria = 831 Wa = 0.05 Ta = 0.975

| Comb. | N top | N base | V orto | α0 | M* | e* | a0* | aLim | Verifica |
|---|---|---|---|---|---|---|---|---|---|
| SLV 1 | 99 | 1889 | -39 | 0 | 0 | 0 | 0 | 239.674 | No, Trazione |
| SLV 2 | 99 | 1889 | -39 | 0 | 0 | 0 | 0 | 239.674 | No, Trazione |
| SLV 4 | 209 | 1409 | -5 | 0 | 0 | 0 | 0 | 239.674 | No, Trazione |
| SLV 9 | -168 | 1628 | -44 | 0 | 0 | 0 | 0 | 239.674 | No, Trazione |
| SLV 8 | 264 | 407 | 55 | 0 | 0 | 0 | 0 | 239.674 | No, Trazione |
| SLV 7 | 264 | 407 | 55 | 0 | 0 | 0 | 0 | 239.674 | No, Trazione |
| SLV 3 | 209 | 1409 | -5 | 0 | 0 | 0 | 0 | 239.674 | No, Trazione |
| SLV 6 | -104 | 2007 | -60 | 0 | 0 | 0 | 0 | 239.674 | No, Trazione |
| SLV 5 | -104 | 2007 | -60 | 0 | 0 | 0 | 0 | 239.674 | No, Trazione |
| SLV 10 | -168 | 1628 | -44 | 0 | 0 | 0 | 0 | 239.674 | No, Trazione |

Tabella dei coefficienti di sicurezza minimi

| Stato limite | Coeff.s. | Comb. | Verifica |
|---|---|---|---|
| PF_SLU | 0 | SLU 79 | No |
| V_SLU | 0 | SLU 1 | No |
| PF_SLV | 0 | SLV 12 | No |
| V_SLV | 0 | SLD 1 | No |
| PFFP_SLV | 0 | SLV 1 | No |
| R_SLV | 0 | SLV 16 | No |

## Maschio 235

Verifiche condotte secondo D.M. 17-01-18 (N.T.C.)

### Dati geometrici

| X ini. | Y ini. | X fin. | Y fin. | Quota i. | Quota.s | l | Sp. | h netta | h ini. | h fin. | a | a.s.,sx | a.s.,dx |
|---|---|---|---|---|---|---|---|---|---|---|---|---|---|
| -1705.3 | -377.2 | -1705.3 | -349.9 | L3 | F1 | 27.3 | 30 | 1383.5 | 1377.3 | 1389.8 | | | |

### Caratteristiche del materiale

(Circolare 7 21-01-19 C8.5.I) Muratura in mattoni pieni e malta di calce LC2_Corti

| fb | fk | fvk0 | fmedio | τ0 | fv0 | μ | ϕ | fv,lim | E | G | FC |
|---|---|---|---|---|---|---|---|---|---|---|---|
| 60 | | | 34.5 | 0.9 | 2 | 0.58 | 0.77 | 3.25 | 32000 | 12800 | 1.2 |

### Verifica a pressoflessione nel piano secondo D.M. 17-01-18 NTC §7.8.2.2.1 in combinazioni non sismiche, γM = 3

| Comb. | Quota | N | M | σ0 | Mu | c.s. | Verifica |
|---|---|---|---|---|---|---|---|
| SLU 59 | 1248 | -860 | -6873 | 1.05 | 10200 | 1.484 | Si |
| SLU 59 | 1460 | 196 | 3248 | 0 | 0 | 0 | No, Trazione |
| SLU 57 | 1248 | -891 | -7082 | 1.09 | 10513 | 1.484 | Si |
| SLU 57 | 1460 | 177 | 3394 | 0 | 0 | 0 | No, Trazione |
| SLU 55 | 1248 | -869 | -9637 | 1.06 | 10296 | 1.068 | Si |
| SLU 55 | 1460 | 407 | 4197 | 0 | 0 | 0 | No, Trazione |
| SLU 60 | 1248 | -583 | -4487 | 0.71 | 7249 | 1.616 | Si |
| SLU 60 | 1460 | 110 | 2272 | 0 | 0 | 0 | No, Trazione |
| SLU 58 | 1248 | -738 | -3237 | 0.9 | 8942 | 2.762 | Si |
| SLU 58 | 1460 | -43 | 1922 | 0 | 0 | 0 | No, e>l/2 |
| SLU 54 | 1248 | -819 | -7422 | 1 | 9789 | 1.319 | Si |
| SLU 54 | 1460 | 229 | 3459 | 0 | 0 | 0 | No, Trazione |
| SLU 1 | 1248 | -484 | -2240 | 0.59 | 6114 | 2.73 | Si |
| SLU 1 | 1460 | -24 | 1293 | 0 | 0 | 0 | No, e>l/2 |
| SLU 61 | 1248 | -705 | -8123 | 0.86 | 8585 | 1.057 | Si |
| SLU 61 | 1460 | 349 | 3598 | 0 | 0 | 0 | No, Trazione |
| SLU 62 | 1248 | -655 | -4147 | 0.8 | 8042 | 1.939 | Si |
| SLU 62 | 1460 | 58 | 2207 | 0 | 0 | 0 | No, Trazione |
| SLU 56 | 1248 | -769 | -3446 | 0.94 | 9270 | 2.69 | Si |
| SLU 56 | 1460 | -62 | 2068 | 0 | 0 | 0 | No, e>l/2 |

### Verifica a pressoflessione nel piano secondo D.M. 17-01-18 NTC §7.8.2.2.1 in combinazioni sismiche, γM = 2

| Comb. | Quota | N | M | σ0 | Mu | c.s. | Verifica |
|---|---|---|---|---|---|---|---|
| SLD 14 | 1248 | 379 | 654 | 0 | 0 | 0 | No, Trazione |
| SLD 14 | 1460 | 611 | 6827 | 0 | 0 | 0 | No, Trazione |
| SLD 15 | 1248 | -340 | -5984 | 0 | 0 | 0 | No, e>l/2 |
| SLD 15 | 1460 | 169 | 1463 | 0 | 0 | 0 | No, Trazione |
| SLD 1 | 1248 | -622 | 206 | 0.76 | 7951 | 38.538 | Si |
| SLD 1 | 1460 | -115 | 1655 | 0 | 0 | 0 | No, e>l/2 |
| SLV 14 | 1248 | 1644 | 6424 | 0 | 0 | 0 | No, Trazione |
| SLV 14 | 1460 | 1485 | 15034 | 0 | 0 | 0 | No, Trazione |
| SLV 13 | 1248 | 1644 | 6424 | 0 | 0 | 0 | No, Trazione |
| SLV 13 | 1460 | 1485 | 15034 | 0 | 0 | 0 | No, Trazione |
| SLV 9 | 1248 | 2923 | 25752 | 0 | 0 | 0 | No, Trazione |
| SLV 9 | 1460 | 2180 | 26451 | 0 | 0 | 0 | No, Trazione |
| SLV 15 | 1248 | -181 | -10618 | 0 | 0 | 0 | No, e>l/2 |
| SLV 15 | 1460 | 353 | 1287 | 0 | 0 | 0 | No, Trazione |
| SLV 10 | 1248 | 2923 | 25752 | 0 | 0 | 0 | No, Trazione |
| SLV 10 | 1460 | 2180 | 26451 | 0 | 0 | 0 | No, Trazione |
| SLV 5 | 1248 | 2196 | 25277 | 0 | 0 | 0 | No, Trazione |
| SLV 5 | 1460 | 1645 | 22491 | 0 | 0 | 0 | No, Trazione |
| SLV 6 | 1248 | 2196 | 25277 | 0 | 0 | 0 | No, Trazione |
| SLV 6 | 1460 | 1645 | 22491 | 0 | 0 | 0 | No, Trazione |

### Verifica a taglio nel piano secondo D.M. 17-01-18 (N.T.C.) §7.8.2.2.2 con rottura per scorrimento in combinazioni non sismiche, γM = 3

| Comb. | Quota | N | V par | M | σ0 | σN | l' | fvd | Vt scorr. | Vt fess.diag. | Vt,lim | c.s. | Verifica |
|---|---|---|---|---|---|---|---|---|---|---|---|---|---|
| SLU 58 | 1248 | -738 | -130 | -3237 | | 0.9 | 27.25 | 0.68 | 553 | | | 4.26 | Si |
| SLU 58 | 1460 | -43 | 60 | 1922 | | 0 | 0 | 0.56 | 0 | | | 0 | No, Vu<V |
| SLU 59 | 1248 | -860 | -248 | -6873 | | 1.7 | 16.89 | 0.78 | 396 | | | 1.6 | Si |
| SLU 59 | 1460 | 196 | 162 | 3248 | | 0 | 0 | 0.56 | 0 | | | 0 | No, Vu<V |
| SLU 56 | 1248 | -769 | -136 | -3446 | | 0.94 | 27.25 | 0.68 | 557 | | | 4.09 | Si |
| SLU 56 | 1460 | -62 | 74 | 2068 | | 0 | 0 | 0.56 | 0 | | | 0 | No, Vu<V |
| SLU 1 | 1248 | -484 | -82 | -2240 | | 0.6 | 26.99 | 0.64 | 514 | | | 6.27 | Si |
| SLU 1 | 1460 | -24 | 100 | 1293 | | 0 | 0 | 0.56 | 0 | | | 0 | No, Vu<V |
| SLU 54 | 1248 | -819 | -262 | -7422 | | 1.99 | 13.69 | 0.82 | 337 | | | 1.29 | Si |
| SLU 54 | 1460 | 229 | 234 | 3459 | | 0 | 0 | 0.56 | 0 | | | 0 | No, Vu<V |
| SLU 55 | 1248 | -869 | -335 | -9637 | | 3.81 | 7.61 | 1.06 | 243 | | | 0.73 | No, Vu<V |
| SLU 55 | 1460 | 407 | 288 | 4197 | | 0 | 0 | 0.56 | 0 | | | 0 | No, Vu<V |
| SLU 61 | 1248 | -705 | -286 | -8123 | | 3.73 | 6.29 | 1.05 | 199 | | | 0.69 | No, Vu<V |
| SLU 61 | 1460 | 349 | 300 | 3598 | | 0 | 0 | 0.56 | 0 | | | 0 | No, Vu<V |
| SLU 57 | 1248 | -891 | -254 | -7082 | | 1.74 | 17.02 | 0.79 | 402 | | | 1.58 | Si |
| SLU 57 | 1460 | 177 | 176 | 3394 | | 0 | 0 | 0.56 | 0 | | | 0 | No, Vu<V |
| SLU 60 | 1248 | -583 | -168 | -4487 | | 1.09 | 17.79 | 0.7 | 374 | | | 2.22 | Si |
| SLU 60 | 1460 | 110 | 198 | 2272 | | 0 | 0 | 0.56 | 0 | | | 0 | No, Vu<V |
| SLU 62 | 1248 | -655 | -160 | -4147 | | 1 | 21.87 | 0.69 | 452 | | | 2.82 | Si |
| SLU 62 | 1460 | 58 | 140 | 2207 | | 0 | 0 | 0.56 | 0 | | | 0 | No, Vu<V |

### Verifica a taglio nel piano secondo D.M. 17-01-18 (N.T.C.) §7.8.2.2.2 con rottura per scorrimento in combinazioni sismiche, γM = 2

| Comb. | Quota | N | V par | M | σ0 | σN | l' | fvd | Vt scorr. | Vt fess.diag. | Vt,lim | c.s. | Verifica |
|---|---|---|---|---|---|---|---|---|---|---|---|---|---|
| SLV 5 | 1248 | 2196 | -610 | 25277 | | 0 | 0 | 0.83 | 0 | | | 0 | No, Vu<V |
| SLV 5 | 1460 | 1645 | 1443 | 22491 | | 0 | 0 | 0.83 | 0 | | | 0 | No, Vu<V |
| SLV 9 | 1248 | 2923 | -790 | 25752 | | 0 | 0 | 0.83 | 0 | | | 0 | No, Vu<V |

| Comb. | Quota | N | V par | M | σ0 | σN | l' | fvd | Vt scorr. | Vt fess.diag. | Vt,lim | c.s. | Verifica |
|---|---|---|---|---|---|---|---|---|---|---|---|---|---|
| SLV 9 | 1460 | 2180 | 1787 | 26451 | | 0 | 0 | 0.83 | 0 | | | 0 | No, Vu<V |
| SLV 14 | 1248 | 1644 | -586 | 6424 | | 0 | 0 | 0.83 | 0 | | | 0 | No, Vu<V |
| SLV 14 | 1460 | 1485 | 1143 | 15034 | | 0 | 0 | 0.83 | 0 | | | 0 | No, Vu<V |
| SLD 1 | 1248 | -622 | -58 | 206 | | 0.76 | 27.25 | 0.99 | 806 | | | 13.92 | Si |
| SLD 1 | 1460 | -115 | 65 | 1655 | | 0 | 0 | 0.83 | 0 | | | 0 | No, Vu<V |
| SLV 13 | 1248 | 1644 | -586 | 6424 | | 0 | 0 | 0.83 | 0 | | | 0 | No, Vu<V |
| SLV 13 | 1460 | 1485 | 1143 | 15034 | | 0 | 0 | 0.83 | 0 | | | 0 | No, Vu<V |
| SLV 6 | 1248 | 2196 | -610 | 25277 | | 0 | 0 | 0.83 | 0 | | | 0 | No, Vu<V |
| SLV 6 | 1460 | 1645 | 1443 | 22491 | | 0 | 0 | 0.83 | 0 | | | 0 | No, Vu<V |
| SLV 15 | 1248 | -181 | -231 | -10618 | | 0 | 0 | 0.83 | 0 | | | 0 | No, Vu<V |
| SLV 15 | 1460 | 353 | 246 | 1287 | | 0 | 0 | 0.83 | 0 | | | 0 | No, Vu<V |
| SLV 10 | 1248 | 2923 | -790 | 25752 | | 0 | 0 | 0.83 | 0 | | | 0 | No, Vu<V |
| SLV 10 | 1460 | 2180 | 1787 | 26451 | | 0 | 0 | 0.83 | 0 | | | 0 | No, Vu<V |
| SLD 14 | 1248 | 379 | -298 | 654 | | 0 | 0 | 0.83 | 0 | | | 0 | No, Vu<V |
| SLD 14 | 1460 | 611 | 526 | 6827 | | 0 | 0 | 0.83 | 0 | | | 0 | No, Vu<V |
| SLD 15 | 1248 | -340 | -159 | -5984 | | 0 | 0 | 0.83 | 0 | | | 0 | No, Vu<V |
| SLD 15 | 1460 | 169 | 175 | 1463 | | 0 | 0 | 0.83 | 0 | | | 0 | No, Vu<V |

### Verifica a pressoflessione fuori piano D.M. 17-01-18 (N.T.C.)

quota 859.6 Wa 0.05 denominatore 8 γM = 2

| Comb. | fd | Sa | σ0 | N | M | Mc | Coeff.s. | Verifica |
|---|---|---|---|---|---|---|---|---|
| SLV 7 | 14 | 0.42 | 0 | -2906 | 49102 | 0 | 0 | No, e>t/2 |
| SLV 2 | 14 | 0.42 | 0 | -1415 | 49102 | 0 | 0 | No, e>t/2 |
| SLV 9 | 14 | 0.42 | 0 | -613 | 49102 | 0 | 0 | No, e>t/2 |
| SLV 8 | 14 | 0.42 | 0 | -2906 | 49102 | 0 | 0 | No, e>t/2 |
| SLV 1 | 14 | 0.42 | 0 | -1415 | 49102 | 0 | 0 | No, e>t/2 |
| SLV 3 | 14 | 0.42 | 0 | -2103 | 49102 | 0 | 0 | No, e>t/2 |
| SLV 10 | 14 | 0.42 | 0 | -613 | 49102 | 0 | 0 | No, e>t/2 |
| SLV 6 | 14 | 0.42 | 0 | -613 | 49102 | 0 | 0 | No, e>t/2 |
| SLV 4 | 14 | 0.42 | 0 | -2103 | 49102 | 0 | 0 | No, e>t/2 |
| SLV 5 | 14 | 0.42 | 0 | -613 | 49102 | 0 | 0 | No, e>t/2 |

### Verifica dei meccanismi locali di collasso con analisi cinematica lineare

forza di aggancio al piano = 0 quota mezzeria = 859.6 Wa = 0.05 Ta = 1.0655

| Comb. | N top | N base | V orto | α0 | M* | e* | a0* | aLim | Verifica |
|---|---|---|---|---|---|---|---|---|---|
| SLV 13 | 411 | -15019 | 31 | 0 | 0 | 0 | 0 | 239.674 | No, Trazione |
| SLV 9 | 100 | -21549 | 30 | 0 | 0 | 0 | 0 | 239.674 | No, Trazione |
| SLV 4 | 97 | -836 | -26 | 0 | 0 | 0 | 0 | 239.674 | No, Trazione |
| SLV 11 | 543 | 3713 | -13 | 0 | 0 | 0 | 0 | 239.674 | No, Trazione |
| SLV 14 | 411 | -15019 | 31 | 0 | 0 | 0 | 0 | 239.674 | No, Trazione |
| SLV 12 | 543 | 3713 | -13 | 0 | 0 | 0 | 0 | 239.674 | No, Trazione |
| SLV 3 | 97 | -836 | -26 | 0 | 0 | 0 | 0 | 239.674 | No, Trazione |
| SLV 7 | 409 | 5694 | -26 | 0 | 0 | 0 | 0 | 239.674 | No, Trazione |
| SLV 10 | 100 | -21549 | 30 | 0 | 0 | 0 | 0 | 239.674 | No, Trazione |
| SLV 8 | 409 | 5694 | -26 | 0 | 0 | 0 | 0 | 239.674 | No, Trazione |

### Tabella dei coefficienti di sicurezza minimi

| Stato limite | Coeff.s. | Comb. | Verifica |
|---|---|---|---|
| PF_SLU | 0 | SLU 84 | No |
| V_SLU | 0 | SLU 1 | No |
| PF_SLV | 0 | SLV 16 | No |
| V_SLV | 0 | SLD 1 | No |
| PFFP_SLV | 0 | SLV 1 | No |
| R_SLV | 0 | SLV 16 | No |

## Maschio 236

Verifiche condotte secondo D.M. 17-01-18 (N.T.C.)

### Dati geometrici

| X ini. | Y ini. | X fin. | Y fin. | Quota i. | Quota.s | l | Sp. | h netta | h ini. | h fin. | a | a.s.,sx | a.s.,dx |
|---|---|---|---|---|---|---|---|---|---|---|---|---|---|
| -1627.8 | -485.9 | -1705.3 | -485.9 | L3 | F1 | 77.5 | 30 | 1327 | 1327 | 1327 | | | |

### Caratteristiche del materiale

(Circolare 7 21-01-19 C8.5.I) Muratura in mattoni pieni e malta di calce LC2_Corti

| fb | fk | fvk0 | fmedio | τ0 | fv0 | μ | ϕ | fv,lim | E | G | FC |
|---|---|---|---|---|---|---|---|---|---|---|---|
| 60 | | | 34.5 | 0.9 | 2 | 0.58 | 0.77 | 3.25 | 32000 | 12800 | 1.2 |

### Verifica a pressoflessione nel piano secondo D.M. 17-01-18 NTC §7.8.2.2.1 in combinazioni non sismiche, γM = 3

| Comb. | Quota | N | M | σ0 | Mu | c.s. | Verifica |
|---|---|---|---|---|---|---|---|
| SLU 31 | 1248 | -1736 | -19762 | 0.75 | 61067 | 3.09 | Si |
| SLU 31 | 1460 | -834 | 15255 | 0.36 | 30872 | 2.024 | Si |
| SLU 52 | 1248 | -2091 | -18940 | 0.9 | 72043 | 3.804 | Si |
| SLU 52 | 1460 | -900 | 15316 | 0.39 | 33185 | 2.167 | Si |
| SLU 40 | 1248 | -1658 | -16999 | 0.71 | 58593 | 3.447 | Si |
| SLU 40 | 1460 | -760 | 13381 | 0.33 | 28255 | 2.112 | Si |
| SLU 23 | 1248 | -1671 | -16719 | 0.72 | 58986 | 3.528 | Si |
| SLU 23 | 1460 | -769 | 13381 | 0.33 | 28558 | 2.134 | Si |
| SLU 73 | 1248 | -2132 | -20637 | 0.92 | 73260 | 3.55 | Si |
| SLU 73 | 1460 | -954 | 16500 | 0.41 | 35067 | 2.125 | Si |
| SLU 19 | 1248 | -1618 | -15303 | 0.7 | 57298 | 3.744 | Si |
| SLU 19 | 1460 | -706 | 12197 | 0.3 | 26330 | 2.159 | Si |
| SLU 42 | 1248 | -1616 | -15483 | 0.7 | 57225 | 3.696 | Si |
| SLU 42 | 1460 | -759 | 13019 | 0.33 | 28210 | 2.167 | Si |

| Comb. | Quota | N | M | σ0 | Mu | c.s. | Verifica |
|---|---|---|---|---|---|---|---|
| SLU 13 | 1248 | -1653 | -16550 | 0.71 | 58423 | 3.53 | Si |
| SLU 13 | 1460 | -779 | 13709 | 0.34 | 28918 | 2.109 | Si |
| SLU 10 | 1248 | -1696 | -18066 | 0.73 | 59784 | 3.309 | Si |
| SLU 10 | 1460 | -780 | 14071 | 0.34 | 28963 | 2.058 | Si |
| SLU 34 | 1248 | -1693 | -18247 | 0.73 | 59713 | 3.273 | Si |
| SLU 34 | 1460 | -833 | 14893 | 0.36 | 30827 | 2.07 | Si |

Verifica a pressoflessione nel piano secondo D.M. 17-01-18 NTC §7.8.2.2.1 in combinazioni sismiche, γM = 2

| Comb. | Quota | N | M | σ0 | Mu | c.s. | Verifica |
|---|---|---|---|---|---|---|---|
| SLV 13 | 1248 | -253 | -75536 | 0 | 0 | 0 | No, e>l/2 |
| SLV 13 | 1460 | -196 | 53601 | 0 | 0 | 0 | No, e>l/2 |
| SLV 5 | 1248 | -960 | -41527 | 0 | 0 | 0 | No, e>l/2 |
| SLV 5 | 1460 | 136 | 10901 | 0 | 0 | 0 | No, Trazione |
| SLV 6 | 1248 | -960 | -41527 | 0 | 0 | 0 | No, e>l/2 |
| SLV 6 | 1460 | 136 | 10901 | 0 | 0 | 0 | No, Trazione |
| SLV 2 | 1248 | -2110 | 32231 | 0.91 | 75641 | 2.347 | Si |
| SLV 2 | 1460 | -397 | -30560 | 0 | 0 | 0 | No, e>l/2 |
| SLV 14 | 1248 | -253 | -75536 | 0 | 0 | 0 | No, e>l/2 |
| SLV 14 | 1460 | -196 | 53601 | 0 | 0 | 0 | No, e>l/2 |
| SLV 3 | 1248 | -2538 | 63122 | 1.09 | 89511 | 1.418 | Si |
| SLV 3 | 1460 | -793 | -40850 | 0 | 0 | 0 | No, e>l/2 |
| SLD 16 | 1248 | -1085 | -22821 | 0.47 | 40416 | 1.771 | Si |
| SLD 16 | 1460 | -535 | 22270 | 0 | 0 | 0 | No, e>l/2 |
| SLV 10 | 1248 | -403 | -73857 | 0 | 0 | 0 | No, e>l/2 |
| SLV 10 | 1460 | 196 | 36149 | 0 | 0 | 0 | No, Trazione |
| SLV 9 | 1248 | -403 | -73857 | 0 | 0 | 0 | No, e>l/2 |
| SLV 9 | 1460 | 196 | 36149 | 0 | 0 | 0 | No, Trazione |
| SLV 4 | 1248 | -2538 | 63122 | 1.09 | 89511 | 1.418 | Si |
| SLV 4 | 1460 | -793 | -40850 | 0 | 0 | 0 | No, e>l/2 |

Verifica a taglio nel piano secondo D.M. 17-01-18 (N.T.C.) §7.8.2.2.2 con rottura per scorrimento in combinazioni non sismiche, γM = 3

| Comb. | Quota | N | V par | M | σ0 | σN | l' | fvd | Vt scorr. | Vt fess.diag. | Vt,lim | c.s. | Verifica |
|---|---|---|---|---|---|---|---|---|---|---|---|---|---|
| SLU 44 | 1248 | -2026 | -143 | -15897 | | 0.87 | 77.45 | 0.67 | 1561 | | | 10.94 | Si |
| SLU 44 | 1460 | -834 | -63 | 13441 | | 0.41 | 67.85 | 0.61 | 1242 | | | 19.75 | Si |
| SLU 61 | 1248 | -2014 | -145 | -16177 | | 0.87 | 77.45 | 0.67 | 1559 | | | 10.76 | Si |
| SLU 61 | 1460 | -826 | -54 | 13441 | | 0.41 | 67.36 | 0.61 | 1233 | | | 22.66 | Si |
| SLU 52 | 1248 | -2091 | -170 | -18940 | | 0.9 | 77.45 | 0.68 | 1570 | | | 9.22 | Si |
| SLU 52 | 1460 | -900 | -75 | 15316 | | 0.46 | 65.11 | 0.62 | 1205 | | | 16.09 | Si |
| SLU 31 | 1248 | -1736 | -164 | -19762 | | 0.75 | 77.45 | 0.66 | 1522 | | | 9.27 | Si |
| SLU 31 | 1460 | -834 | -98 | 15255 | | 0.45 | 61.3 | 0.62 | 1133 | | | 11.55 | Si |
| SLU 65 | 1248 | -2066 | -147 | -17593 | | 0.89 | 77.45 | 0.67 | 1566 | | | 10.65 | Si |
| SLU 65 | 1460 | -888 | -81 | 14625 | | 0.44 | 66.79 | 0.61 | 1232 | | | 15.2 | Si |
| SLU 82 | 1248 | -2054 | -149 | -17873 | | 0.88 | 77.45 | 0.67 | 1565 | | | 10.48 | Si |
| SLU 82 | 1460 | -880 | -73 | 14625 | | 0.44 | 66.31 | 0.61 | 1222 | | | 16.85 | Si |
| SLU 40 | 1248 | -1658 | -139 | -16999 | | 0.71 | 77.45 | 0.65 | 1512 | | | 10.88 | Si |
| SLU 40 | 1460 | -760 | -78 | 13381 | | 0.4 | 63.37 | 0.61 | 1157 | | | 14.91 | Si |
| SLU 10 | 1248 | -1696 | -160 | -18066 | | 0.73 | 77.45 | 0.65 | 1517 | | | 9.49 | Si |
| SLU 10 | 1460 | -780 | -80 | 14071 | | 0.42 | 62.06 | 0.61 | 1138 | | | 14.24 | Si |
| SLU 23 | 1248 | -1671 | -137 | -16719 | | 0.72 | 77.45 | 0.65 | 1514 | | | 11.07 | Si |
| SLU 23 | 1460 | -769 | -86 | 13381 | | 0.4 | 63.95 | 0.61 | 1168 | | | 13.57 | Si |
| SLU 73 | 1248 | -2132 | -175 | -20637 | | 0.92 | 77.45 | 0.68 | 1575 | | | 9.02 | Si |
| SLU 73 | 1460 | -954 | -93 | 16500 | | 0.49 | 64.27 | 0.62 | 1198 | | | 12.88 | Si |

Verifica a taglio nel piano secondo D.M. 17-01-18 (N.T.C.) §7.8.2.2.2 con rottura per scorrimento in combinazioni sismiche, γM = 2

| Comb. | Quota | N | V par | M | σ0 | σN | l' | fvd | Vt scorr. | Vt fess.diag. | Vt,lim | c.s. | Verifica |
|---|---|---|---|---|---|---|---|---|---|---|---|---|---|
| SLV 5 | 1248 | -960 | -208 | -41527 | | 0 | 0 | 0.83 | 0 | | | 0 | No, Vu<V |
| SLV 5 | 1460 | 136 | 473 | 10901 | | 0 | 0 | 0.83 | 0 | | | 0 | No, Vu<V |
| SLV 10 | 1248 | -403 | -788 | -73857 | | 0 | 0 | 0.83 | 0 | | | 0 | No, Vu<V |
| SLV 10 | 1460 | 196 | 1150 | 36149 | | 0 | 0 | 0.83 | 0 | | | 0 | No, Vu<V |
| SLD 16 | 1248 | -1085 | -408 | -22821 | | 0.68 | 53.08 | 0.97 | 1544 | | | 3.79 | Si |
| SLD 16 | 1460 | -535 | 368 | 22270 | | 0 | 0 | 0.83 | 0 | | | 0 | No, Vu<V |
| SLV 14 | 1248 | -253 | -1149 | -75536 | | 0 | 0 | 0.83 | 0 | | | 0 | No, Vu<V |
| SLV 14 | 1460 | -196 | 1362 | 53601 | | 0 | 0 | 0.83 | 0 | | | 0 | No, Vu<V |
| SLV 9 | 1248 | -403 | -788 | -73857 | | 0 | 0 | 0.83 | 0 | | | 0 | No, Vu<V |
| SLV 9 | 1460 | 196 | 1150 | 36149 | | 0 | 0 | 0.83 | 0 | | | 0 | No, Vu<V |
| SLV 6 | 1248 | -960 | -208 | -41527 | | 0 | 0 | 0.83 | 0 | | | 0 | No, Vu<V |
| SLV 6 | 1460 | 136 | 473 | 10901 | | 0 | 0 | 0.83 | 0 | | | 0 | No, Vu<V |
| SLV 4 | 1248 | -2538 | 1052 | 63122 | | 2.04 | 41.58 | 1.24 | 1547 | | | 1.47 | Si |
| SLV 4 | 1460 | -793 | -1387 | -40850 | | 0 | 0 | 0.83 | 0 | | | 0 | No, Vu<V |
| SLV 3 | 1248 | -2538 | 1052 | 63122 | | 2.04 | 41.58 | 1.24 | 1547 | | | 1.47 | Si |
| SLV 3 | 1460 | -793 | -1387 | -40850 | | 0 | 0 | 0.83 | 0 | | | 0 | No, Vu<V |
| SLV 2 | 1248 | -2110 | 782 | 32231 | | 1 | 70.35 | 1.03 | 2181 | | | 2.79 | Si |
| SLV 2 | 1460 | -397 | -893 | -30560 | | 0 | 0 | 0.83 | 0 | | | 0 | No, Vu<V |
| SLV 13 | 1248 | -253 | -1149 | -75536 | | 0 | 0 | 0.83 | 0 | | | 0 | No, Vu<V |
| SLV 13 | 1460 | -196 | 1362 | 53601 | | 0 | 0 | 0.83 | 0 | | | 0 | No, Vu<V |

Verifica a pressoflessione fuori piano D.M. 17-01-18 (N.T.C.)

quota 834.5 Wa 0.05 denominatore 8 γM = 2

| Comb. | fd | Sa | σ0 | N | M | Mc | Coeff.s. | Verifica |
|---|---|---|---|---|---|---|---|---|
| SLV 9 | 14 | 0.41 | 0 | -1431 | 126826 | 0 | 0 | No, e>t/2 |
| SLV 8 | 14 | 0.41 | 0 | -6861 | 126826 | 0 | 0 | No, e>t/2 |
| SLV 7 | 14 | 0.41 | 0 | -6861 | 126826 | 0 | 0 | No, e>t/2 |
| SLV 5 | 14 | 0.41 | 0 | -2277 | 126826 | 0 | 0 | No, e>t/2 |
| SLV 3 | 14 | 0.41 | 0 | -6244 | 126826 | 0 | 0 | No, e>t/2 |
| SLV 1 | 14 | 0.41 | 0 | -4869 | 126826 | 0 | 0 | No, e>t/2 |
| SLV 10 | 14 | 0.41 | 0 | -1431 | 126826 | 0 | 0 | No, e>t/2 |
| SLV 4 | 14 | 0.41 | 0 | -6244 | 126826 | 0 | 0 | No, e>t/2 |

| Comb. | fd | Sa | σ0 | N | M | Mc | Coeff.s. | Verifica |
|---|---|---|---|---|---|---|---|---|
| SLV 6 | 14 | 0.41 | 0 | -2277 | 126826 | 0 | 0 | No, e>t/2 |
| SLV 2 | 14 | 0.41 | 0 | -4869 | 126826 | 0 | 0 | No, e>t/2 |

### Verifica dei meccanismi locali di collasso con analisi cinematica lineare

forza di aggancio al piano = 0 quota mezzeria = 834.5 Wa = 0.05 Ta = 0.9802

| Comb. | N top | N base | V orto | α0 | M* | e* | a0* | aLim | Verifica |
|---|---|---|---|---|---|---|---|---|---|
| SLV 5 | 939 | -13316 | -21 | 0 | 0 | 0 | 0 | 239.674 | No, Trazione |
| SLV 13 | 630 | -5640 | -20 | 0 | 0 | 0 | 0 | 239.674 | No, Trazione |
| SLV 10 | 1237 | -10759 | -25 | 0 | 0 | 0 | 0 | 239.674 | No, Trazione |
| SLV 14 | 630 | -5640 | -20 | 0 | 0 | 0 | 0 | 239.674 | No, Trazione |
| SLV 6 | 939 | -13316 | -21 | 0 | 0 | 0 | 0 | 239.674 | No, Trazione |
| SLV 9 | 1237 | -10759 | -25 | 0 | 0 | 0 | 0 | 239.674 | No, Trazione |
| SLV 8 | -1788 | -7216 | 9 | 0.016 | 6.684 | 0.894 | 26.527 | 239.674 | No |
| SLV 7 | -1788 | -7216 | 9 | 0.016 | 6.684 | 0.894 | 26.527 | 239.674 | No |
| SLV 16 | -188 | -3810 | -11 | 0.018 | 5.68 | 0.971 | 27.209 | 239.674 | No |
| SLV 15 | -188 | -3810 | -11 | 0.018 | 5.68 | 0.971 | 27.209 | 239.674 | No |

### Tabella dei coefficienti di sicurezza minimi

| Stato limite | Coeff.s. | Comb. | Verifica |
|---|---|---|---|
| PF_SLU | 2.024 | SLU 31 | Si |
| V_SLU | 9.019 | SLU 73 | Si |
| PF_SLV | 0 | SLV 10 | No |
| V_SLV | 0 | SLD 9 | No |
| PFFP_SLV | 0 | SLV 1 | No |
| R_SLV | 0 | SLV 14 | No |

## Maschio 237

Verifiche condotte secondo D.M. 17-01-18 (N.T.C.)

### Dati geometrici

| X ini. | Y ini. | X fin. | Y fin. | Quota i. | Quota.s | l | Sp. | h netta | h ini. | h fin. | a | a.s.,sx | a.s.,dx |
|---|---|---|---|---|---|---|---|---|---|---|---|---|---|
| -1375.3 | -485.9 | -1443.8 | -485.9 | L3 | F1 | 68.5 | 30 | 1326.8 | 1326.8 | 1326.8 | | | |

### Caratteristiche del materiale

(Circolare 7 21-01-19 C8.5.I) Muratura in mattoni pieni e malta di calce LC2_Corti

| fb | fk | fvk0 | fmedio | τ0 | fv0 | μ | ϕ | fv,lim | E | G | FC |
|---|---|---|---|---|---|---|---|---|---|---|---|
| 60 | | | 34.5 | 0.9 | 2 | 0.58 | 0.77 | 3.25 | 32000 | 12800 | 1.2 |

### Verifica a pressoflessione nel piano secondo D.M. 17-01-18 NTC §7.8.2.2.1 in combinazioni non sismiche, γM = 3

| Comb. | Quota | N | M | σ0 | Mu | c.s. | Verifica |
|---|---|---|---|---|---|---|---|
| SLU 73 | 1248 | -2338 | 1666 | 1.14 | 68936 | 41.367 | Si |
| SLU 73 | 1460 | -400 | 8580 | 0.19 | 13366 | 1.558 | Si |
| SLU 44 | 1248 | -2115 | -57 | 1.03 | 63332 | 1000 | Si |
| SLU 44 | 1460 | -383 | 8209 | 0.19 | 12818 | 1.561 | Si |
| SLU 82 | 1248 | -2345 | 1789 | 1.14 | 69115 | 38.634 | Si |
| SLU 82 | 1460 | -396 | 8325 | 0.19 | 13267 | 1.594 | Si |
| SLU 61 | 1248 | -2189 | 894 | 1.06 | 65229 | 72.968 | Si |
| SLU 61 | 1460 | -380 | 8289 | 0.18 | 12722 | 1.535 | Si |
| SLU 52 | 1248 | -2182 | 771 | 1.06 | 65045 | 84.317 | Si |
| SLU 52 | 1460 | -383 | 8545 | 0.19 | 12822 | 1.501 | Si |
| SLU 19 | 1248 | -1755 | 1277 | 0.85 | 53841 | 42.155 | Si |
| SLU 19 | 1460 | -298 | 6634 | 0.14 | 10021 | 1.51 | Si |
| SLU 2 | 1248 | -1680 | 326 | 0.82 | 51811 | 158.712 | Si |
| SLU 2 | 1460 | -301 | 6554 | 0.15 | 10118 | 1.544 | Si |
| SLU 10 | 1248 | -1747 | 1155 | 0.85 | 53644 | 46.457 | Si |
| SLU 10 | 1460 | -301 | 6890 | 0.15 | 10121 | 1.469 | Si |
| SLU 40 | 1248 | -1910 | 2172 | 0.93 | 58003 | 26.702 | Si |
| SLU 40 | 1460 | -314 | 6670 | 0.15 | 10570 | 1.585 | Si |
| SLU 31 | 1248 | -1903 | 2050 | 0.93 | 57811 | 28.204 | Si |
| SLU 31 | 1460 | -317 | 6925 | 0.15 | 10671 | 1.541 | Si |

### Verifica a pressoflessione nel piano secondo D.M. 17-01-18 NTC §7.8.2.2.1 in combinazioni sismiche, γM = 2

| Comb. | Quota | N | M | σ0 | Mu | c.s. | Verifica |
|---|---|---|---|---|---|---|---|
| SLV 10 | 1248 | -1229 | -13861 | 0.6 | 40068 | 2.891 | Si |
| SLV 10 | 1460 | -93 | 31678 | 0 | 0 | 0 | No, e>l/2 |
| SLV 7 | 1248 | -2151 | 14336 | 1.05 | 67405 | 4.702 | Si |
| SLV 7 | 1460 | -502 | -20352 | 0 | 0 | 0 | No, e>l/2 |
| SLV 4 | 1248 | 631 | 17987 | 0 | 0 | 0 | No, Trazione |
| SLV 4 | 1460 | -56 | -33807 | 0 | 0 | 0 | No, e>l/2 |
| SLV 5 | 1248 | 392 | -4947 | 0 | 0 | 0 | No, Trazione |
| SLV 5 | 1460 | 107 | 10800 | 0 | 0 | 0 | No, Trazione |
| SLD 1 | 1248 | -381 | 5471 | 0.19 | 12865 | 2.351 | Si |
| SLD 1 | 1460 | -118 | -7342 | 0 | 0 | 0 | No, e>l/2 |
| SLV 9 | 1248 | -1229 | -13861 | 0.6 | 40068 | 2.891 | Si |
| SLV 9 | 1460 | -93 | 31678 | 0 | 0 | 0 | No, e>l/2 |
| SLV 8 | 1248 | -2151 | 14336 | 1.05 | 67405 | 4.702 | Si |
| SLV 8 | 1460 | -502 | -20352 | 0 | 0 | 0 | No, e>l/2 |
| SLV 13 | 1248 | -4011 | -17512 | 1.95 | 115524 | 6.597 | Si |
| SLV 13 | 1460 | -540 | 45133 | 0 | 0 | 0 | No, e>l/2 |
| SLV 6 | 1248 | 392 | -4947 | 0 | 0 | 0 | No, Trazione |
| SLV 6 | 1460 | 107 | 10800 | 0 | 0 | 0 | No, Trazione |
| SLV 14 | 1248 | -4011 | -17512 | 1.95 | 115524 | 6.597 | Si |
| SLV 14 | 1460 | -540 | 45133 | 0 | 0 | 0 | No, e>l/2 |

Verifica a taglio nel piano secondo D.M. 17-01-18 (N.T.C.) §7.8.2.2.2 con rottura per scorrimento in combinazioni non sismiche, γM = 3

| Comb. | Quota | N | V par | M | σ0 | σN | l' | fvd | Vt scorr. | Vt fess.diag. | Vt,lim | c.s. | Verifica |
|---|---|---|---|---|---|---|---|---|---|---|---|---|---|
| SLU 52 | 1248 | -2182 | 76 | 771 | | 1.06 | 68.55 | 0.7 | 1433 | | | 18.9 | Si |
| SLU 52 | 1460 | -383 | 181 | 8545 | | 0.36 | 35.87 | 0.6 | 649 | | | 3.59 | Si |
| SLU 31 | 1248 | -1903 | 115 | 2050 | | 0.93 | 68.55 | 0.68 | 1396 | | | 12.11 | Si |
| SLU 31 | 1460 | -317 | 157 | 6925 | | 0.28 | 37.35 | 0.59 | 665 | | | 4.23 | Si |
| SLU 65 | 1248 | -2270 | 85 | 838 | | 1.1 | 68.55 | 0.7 | 1445 | | | 16.96 | Si |
| SLU 65 | 1460 | -399 | 179 | 8245 | | 0.33 | 40.89 | 0.6 | 735 | | | 4.11 | Si |
| SLU 61 | 1248 | -2189 | 90 | 894 | | 1.06 | 68.55 | 0.7 | 1434 | | | 15.92 | Si |
| SLU 61 | 1460 | -380 | 169 | 8289 | | 0.34 | 37.35 | 0.6 | 673 | | | 3.98 | Si |
| SLU 10 | 1248 | -1747 | 75 | 1155 | | 0.85 | 68.55 | 0.67 | 1375 | | | 18.27 | Si |
| SLU 10 | 1460 | -301 | 151 | 6890 | | 0.29 | 34.08 | 0.59 | 608 | | | 4.02 | Si |
| SLU 82 | 1248 | -2345 | 130 | 1789 | | 1.14 | 68.55 | 0.71 | 1455 | | | 11.19 | Si |
| SLU 82 | 1460 | -396 | 175 | 8325 | | 0.33 | 39.83 | 0.6 | 717 | | | 4.1 | Si |
| SLU 73 | 1248 | -2338 | 116 | 1666 | | 1.14 | 68.55 | 0.71 | 1454 | | | 12.56 | Si |
| SLU 73 | 1460 | -400 | 187 | 8580 | | 0.35 | 38.39 | 0.6 | 693 | | | 3.71 | Si |
| SLU 19 | 1248 | -1755 | 90 | 1277 | | 0.85 | 68.55 | 0.67 | 1376 | | | 15.37 | Si |
| SLU 19 | 1460 | -298 | 139 | 6634 | | 0.28 | 35.95 | 0.59 | 639 | | | 4.59 | Si |
| SLU 2 | 1248 | -1680 | 45 | 326 | | 0.82 | 68.55 | 0.66 | 1366 | | | 30.59 | Si |
| SLU 2 | 1460 | -301 | 143 | 6554 | | 0.27 | 37.41 | 0.59 | 664 | | | 4.62 | Si |
| SLU 44 | 1248 | -2115 | 45 | -57 | | 1.03 | 68.55 | 0.69 | 1424 | | | 31.51 | Si |
| SLU 44 | 1460 | -383 | 173 | 8209 | | 0.33 | 38.48 | 0.6 | 692 | | | 4 | Si |

Verifica a taglio nel piano secondo D.M. 17-01-18 (N.T.C.) §7.8.2.2.2 con rottura per scorrimento in combinazioni sismiche, γM = 2

| Comb. | Quota | N | V par | M | σ0 | σN | l' | fvd | Vt scorr. | Vt fess.diag. | Vt,lim | c.s. | Verifica |
|---|---|---|---|---|---|---|---|---|---|---|---|---|---|
| SLD 1 | 1248 | -381 | 377 | 5471 | | 0.21 | 59.75 | 0.88 | 1570 | | | 4.17 | Si |
| SLD 1 | 1460 | -118 | -421 | -7342 | | 0 | 0 | 0.83 | 0 | | | 0 | No, Vu<V |
| SLV 8 | 1248 | -2151 | 540 | 14336 | | 1.05 | 68.55 | 1.04 | 2144 | | | 3.97 | Si |
| SLV 8 | 1460 | -502 | -536 | -20352 | | 0 | 0 | 0.83 | 0 | | | 0 | No, Vu<V |
| SLV 13 | 1248 | -4011 | -794 | -17512 | | 1.95 | 68.55 | 1.22 | 2516 | | | 3.17 | Si |
| SLV 13 | 1460 | -540 | 1515 | 45133 | | 0 | 0 | 0.83 | 0 | | | 0 | No, Vu<V |
| SLV 5 | 1248 | 392 | 70 | -4947 | | 0 | 0 | 0.83 | 0 | | | 0 | No, Vu<V |
| SLV 5 | 1460 | 107 | -45 | 10800 | | 0 | 0 | 0.83 | 0 | | | 0 | No, Vu<V |
| SLV 9 | 1248 | -1229 | -405 | -13861 | | 0.6 | 68.55 | 0.95 | 1960 | | | 4.84 | Si |
| SLV 9 | 1460 | -93 | 755 | 31678 | | 0 | 0 | 0.83 | 0 | | | 0 | No, Vu<V |
| SLV 14 | 1248 | -4011 | -794 | -17512 | | 1.95 | 68.55 | 1.22 | 2516 | | | 3.17 | Si |
| SLV 14 | 1460 | -540 | 1515 | 45133 | | 0 | 0 | 0.83 | 0 | | | 0 | No, Vu<V |
| SLV 4 | 1248 | 631 | 929 | 17987 | | 0 | 0 | 0.83 | 0 | | | 0 | No, Vu<V |
| SLV 4 | 1460 | -56 | -1297 | -33807 | | 0 | 0 | 0.83 | 0 | | | 0 | No, Vu<V |
| SLV 7 | 1248 | -2151 | 540 | 14336 | | 1.05 | 68.55 | 1.04 | 2144 | | | 3.97 | Si |
| SLV 7 | 1460 | -502 | -536 | -20352 | | 0 | 0 | 0.83 | 0 | | | 0 | No, Vu<V |
| SLV 6 | 1248 | 392 | 70 | -4947 | | 0 | 0 | 0.83 | 0 | | | 0 | No, Vu<V |
| SLV 6 | 1460 | 107 | -45 | 10800 | | 0 | 0 | 0.83 | 0 | | | 0 | No, Vu<V |
| SLV 10 | 1248 | -1229 | -405 | -13861 | | 0.6 | 68.55 | 0.95 | 1960 | | | 4.84 | Si |
| SLV 10 | 1460 | -93 | 755 | 31678 | | 0 | 0 | 0.83 | 0 | | | 0 | No, Vu<V |

Verifica a pressoflessione fuori piano D.M. 17-01-18 (N.T.C.)

quota 834.4 Wa 0.05 denominatore 8 γM = 2

| Comb. | fd | Sa | σ0 | N | M | Mc | Coeff.s. | Verifica |
|---|---|---|---|---|---|---|---|---|
| SLV 6 | 14 | 0.41 | 0 | -4635 | 112204 | 0 | 0 | No, e>t/2 |
| SLV 4 | 14 | 0.41 | 0 | -5548 | 112204 | 0 | 0 | No, e>t/2 |
| SLV 1 | 14 | 0.41 | 0 | -5626 | 112204 | 0 | 0 | No, e>t/2 |
| SLV 2 | 14 | 0.41 | 0 | -5626 | 112204 | 0 | 0 | No, e>t/2 |
| SLV 8 | 14 | 0.41 | 0 | -4377 | 112204 | 0 | 0 | No, e>t/2 |
| SLV 5 | 14 | 0.41 | 0 | -4635 | 112204 | 0 | 0 | No, e>t/2 |
| SLV 3 | 14 | 0.41 | 0 | -5548 | 112204 | 0 | 0 | No, e>t/2 |
| SLV 10 | 14 | 0.41 | 0 | -3708 | 112204 | 0 | 0 | No, e>t/2 |
| SLV 9 | 14 | 0.41 | 0 | -3708 | 112204 | 0 | 0 | No, e>t/2 |
| SLV 7 | 14 | 0.41 | 0 | -4377 | 112204 | 0 | 0 | No, e>t/2 |

Verifica dei meccanismi locali di collasso con analisi cinematica lineare

forza di aggancio al piano = 0 quota mezzeria = 834.4 Wa = 0.05 Ta = 0.9799

| Comb. | N top | N base | V orto | α0 | M* | e* | a0* | aLim | Verifica |
|---|---|---|---|---|---|---|---|---|---|
| SLV 1 | 317 | -16165 | 2 | 0 | 0 | 0 | 0 | 239.674 | No, Trazione |
| SLV 3 | 121 | -14209 | 45 | 0 | 0 | 0 | 0 | 239.674 | No, Trazione |
| SLV 4 | 121 | -14209 | 45 | 0 | 0 | 0 | 0 | 239.674 | No, Trazione |
| SLV 8 | -341 | -5487 | 79 | 0 | 5.082 | 0.949 | 0 | 239.674 | No |
| SLV 5 | 309 | -12005 | -65 | 0 | 0 | 0 | 0 | 239.674 | No, Trazione |
| SLV 9 | 108 | -6485 | -79 | 0 | 0 | 0 | 0 | 239.674 | No, Trazione |
| SLV 2 | 317 | -16165 | 2 | 0 | 0 | 0 | 0 | 239.674 | No, Trazione |
| SLV 6 | 309 | -12005 | -65 | 0 | 0 | 0 | 0 | 239.674 | No, Trazione |
| SLV 10 | 108 | -6485 | -79 | 0 | 0 | 0 | 0 | 239.674 | No, Trazione |
| SLV 7 | -341 | -5487 | 79 | 0 | 5.082 | 0.949 | 0 | 239.674 | No |

Tabella dei coefficienti di sicurezza minimi

| Stato limite | Coeff.s. | Comb. | Verifica |
|---|---|---|---|
| PF_SLU | 1.469 | SLU 10 | Si |
| V_SLU | 3.588 | SLU 52 | Si |
| PF_SLV | 0 | SLV 6 | No |
| V_SLV | 0 | SLD 1 | No |
| PFFP_SLV | 0 | SLV 1 | No |
| R_SLV | 0 | SLV 16 | No |

## Maschio 238

Verifiche condotte secondo D.M. 17-01-18 (N.T.C.)
Maschio considerato membratura sismica secondaria

### Dati geometrici

| X ini. | Y ini. | X fin. | Y fin. | Quota i. | Quota.s | l | Sp. | h netta | h ini. | h fin. | a | a.s.,sx | a.s.,dx |
|---|---|---|---|---|---|---|---|---|---|---|---|---|---|
| -1375.3 | -485.9 | -1375.3 | -349.9 | Z medio 373 cm | L5 | 135.9 | 28 | 523 | 523 | 523 | | | |

### Caratteristiche del materiale

(Circolare 7 21-01-19 C8.5.I) Muratura in mattoni pieni e malta di calce LC2_Corti

| fb | fk | fvk0 | fmedio | τ0 | fv0 | μ | ϕ | fv,lim | E | G | FC |
|---|---|---|---|---|---|---|---|---|---|---|---|
| 60 | | | 34.5 | 0.9 | 2 | 0.58 | 0.77 | 3.25 | 32000 | 12800 | 1.2 |

### Verifica a pressoflessione nel piano secondo D.M. 17-01-18 NTC §7.8.2.2.1 in combinazioni non sismiche, γM = 3

| Comb. | Quota | N | M | σ0 | Mu | c.s. | Verifica |
|---|---|---|---|---|---|---|---|
| SLU 57 | 373 | -7099 | 11296 | 1.87 | 371991 | 32.93 | Si |
| SLU 57 | 896 | -625 | -45783 | 0 | 0 | 0 | No, e>l/2 |
| SLU 59 | 373 | -7098 | 11029 | 1.86 | 371968 | 33.725 | Si |
| SLU 59 | 896 | -625 | -45866 | 0 | 0 | 0 | No, e>l/2 |
| SLU 53 | 373 | -7068 | 15118 | 1.86 | 370867 | 24.532 | Si |
| SLU 53 | 896 | -603 | -43905 | 0 | 0 | 0 | No, e>l/2 |
| SLU 56 | 373 | -7105 | 13107 | 1.87 | 372234 | 28.399 | Si |
| SLU 56 | 896 | -623 | -45159 | 0 | 0 | 0 | No, e>l/2 |
| SLU 58 | 373 | -7104 | 12840 | 1.87 | 372210 | 28.987 | Si |
| SLU 58 | 896 | -624 | -45242 | 0 | 0 | 0 | No, e>l/2 |
| SLU 60 | 373 | -7168 | 21270 | 1.88 | 374539 | 17.609 | Si |
| SLU 60 | 896 | -598 | -44052 | 0 | 0 | 0 | No, e>l/2 |
| SLU 55 | 373 | -7056 | 11832 | 1.85 | 370437 | 31.308 | Si |
| SLU 55 | 896 | -606 | -45029 | 0 | 0 | 0 | No, e>l/2 |
| SLU 61 | 373 | -7161 | 19459 | 1.88 | 374298 | 19.235 | Si |
| SLU 61 | 896 | -599 | -44677 | 0 | 0 | 0 | No, e>l/2 |
| SLU 1 | 373 | -5223 | 5517 | 1.37 | 295173 | 53.503 | Si |
| SLU 1 | 896 | -433 | -31034 | 0 | 0 | 0 | No, e>l/2 |
| SLU 54 | 373 | -7061 | 13307 | 1.86 | 370623 | 27.853 | Si |
| SLU 54 | 896 | -605 | -44529 | 0 | 0 | 0 | No, e>l/2 |

### Verifica a taglio nel piano secondo D.M. 17-01-18 (N.T.C.) §7.8.2.2.2 con rottura per scorrimento in combinazioni non sismiche, γM = 3

| Comb. | Quota | N | V par | M | σ0 | σN | l' | fvd | Vt scorr. | Vt fess.diag. | Vt,lim | c.s. | Verifica |
|---|---|---|---|---|---|---|---|---|---|---|---|---|---|
| SLU 54 | 373 | -7061 | 24 | 13307 | | 1.86 | 135.93 | 0.8 | 3056 | | | 126.99 | Si |
| SLU 54 | 896 | -605 | 2 | -44529 | | 0 | 0 | 0.56 | 0 | | | 0 | No, Vu<V |
| SLU 57 | 373 | -7099 | 24 | 11296 | | 1.87 | 135.93 | 0.8 | 3061 | | | 128.51 | Si |
| SLU 57 | 896 | -625 | 2 | -45783 | | 0 | 0 | 0.56 | 0 | | | 0 | No, Vu<V |
| SLU 61 | 373 | -7161 | 26 | 19459 | | 1.88 | 135.93 | 0.81 | 3069 | | | 117.32 | Si |
| SLU 61 | 896 | -599 | 2 | -44677 | | 0 | 0 | 0.56 | 0 | | | 0 | No, Vu<V |
| SLU 53 | 373 | -7068 | 24 | 15118 | | 1.86 | 135.93 | 0.8 | 3057 | | | 125.75 | Si |
| SLU 53 | 896 | -603 | 2 | -43905 | | 0 | 0 | 0.56 | 0 | | | 0 | No, Vu<V |
| SLU 55 | 373 | -7056 | 24 | 11832 | | 1.85 | 135.93 | 0.8 | 3055 | | | 128.2 | Si |
| SLU 55 | 896 | -606 | 2 | -45029 | | 0 | 0 | 0.56 | 0 | | | 0 | No, Vu<V |
| SLU 1 | 373 | -5223 | 16 | 5517 | | 1.37 | 135.93 | 0.74 | 2811 | | | 178.88 | Si |
| SLU 1 | 896 | -433 | 1 | -31034 | | 0 | 0 | 0.56 | 0 | | | 0 | No, Vu<V |
| SLU 60 | 373 | -7168 | 26 | 21270 | | 1.88 | 135.93 | 0.81 | 3070 | | | 116.26 | Si |
| SLU 60 | 896 | -598 | 2 | -44052 | | 0 | 0 | 0.56 | 0 | | | 0 | No, Vu<V |
| SLU 59 | 373 | -7098 | 24 | 11029 | | 1.86 | 135.93 | 0.8 | 3061 | | | 128.89 | Si |
| SLU 59 | 896 | -625 | 2 | -45866 | | 0 | 0 | 0.56 | 0 | | | 0 | No, Vu<V |
| SLU 56 | 373 | -7105 | 24 | 13107 | | 1.87 | 135.93 | 0.8 | 3062 | | | 127.25 | Si |
| SLU 56 | 896 | -623 | 2 | -45159 | | 0 | 0 | 0.56 | 0 | | | 0 | No, Vu<V |
| SLU 58 | 373 | -7104 | 24 | 12840 | | 1.87 | 135.93 | 0.8 | 3062 | | | 127.62 | Si |
| SLU 58 | 896 | -624 | 2 | -45242 | | 0 | 0 | 0.56 | 0 | | | 0 | No, Vu<V |

### Verifica a pressoflessione fuori piano D.M. 17-01-18 (N.T.C.)

quota 634.5 Wa 0.05 denominatore 8 γM = 2

| Comb. | fd | Sa | σ0 | N | M | Mc | Coeff.s. | Verifica |
|---|---|---|---|---|---|---|---|---|
| SLV 15 | 14 | 0.37 | 0 | -1665 | 30493 | 0 | 0 | No, e>t/2 |
| SLV 16 | 14 | 0.37 | 0 | -1665 | 30493 | 0 | 0 | No, e>t/2 |
| SLV 14 | 14 | 0.37 | 0 | -1788 | 30493 | 0 | 0 | No, e>t/2 |
| SLV 11 | 14 | 0.37 | 0 | -1959 | 30493 | 0 | 0 | No, e>t/2 |
| SLV 12 | 14 | 0.37 | 0 | -1959 | 30493 | 0 | 0 | No, e>t/2 |
| SLV 13 | 14 | 0.37 | 0 | -1788 | 30493 | 0 | 0 | No, e>t/2 |
| SLV 7 | 14 | 0.37 | 0.61 | -2334 | 30493 | 31032 | 1.02 | Si |
| SLV 8 | 14 | 0.37 | 0.61 | -2334 | 30493 | 31032 | 1.02 | Si |
| SLV 10 | 14 | 0.37 | 0.62 | -2368 | 30493 | 31464 | 1.03 | Si |
| SLV 9 | 14 | 0.37 | 0.62 | -2368 | 30493 | 31464 | 1.03 | Si |

### Verifica dei meccanismi locali di collasso con analisi cinematica lineare

forza di aggancio al piano = 0 quota mezzeria = 634.5 Wa = 0.05 Ta = 0.1631

| Comb. | N top | N base | V orto | α0 | M* | e* | a0* | aLim | Verifica |
|---|---|---|---|---|---|---|---|---|---|
| SLV 14 | 40 | -4749 | -11 | 0 | 0 | 0 | 0 | 1618.465 | No, Trazione |
| SLV 13 | 40 | -4749 | -11 | 0 | 0 | 0 | 0 | 1618.465 | No, Trazione |
| SLV 5 | -457 | -6782 | -46 | 0.028 | 3.81 | 0.925 | 43.645 | 1594.275 | No |
| SLV 6 | -457 | -6782 | -46 | 0.028 | 3.81 | 0.925 | 43.645 | 1594.275 | No |
| SLV 9 | -186 | -6203 | -39 | 0.031 | 3.685 | 0.959 | 47.053 | 1594.275 | No |
| SLV 10 | -186 | -6203 | -39 | 0.031 | 3.685 | 0.959 | 47.053 | 1594.275 | No |
| SLV 1 | -866 | -6681 | -31 | 0.033 | 4.086 | 0.901 | 53.198 | 1618.465 | No |
| SLV 2 | -866 | -6681 | -31 | 0.033 | 4.086 | 0.901 | 53.198 | 1618.465 | No |

| Comb. | N top | N base | V orto | α0 | M* | e* | a0* | aLim | Verifica |
|---|---|---|---|---|---|---|---|---|---|
| SLV 12 | -446 | -3981 | 22 | 0.038 | 3.804 | 0.926 | 60.32 | 1594.275 | No |
| SLV 11 | -446 | -3981 | 22 | 0.038 | 3.804 | 0.926 | 60.32 | 1594.275 | No |

### Tabella dei coefficienti di sicurezza minimi

| Stato limite | Coeff.s. | Comb. | Verifica |
|---|---|---|---|
| PF_SLU | 0 | SLU 1 | No |
| V_SLU | 0 | SLU 1 | No |
| PFFP_SLV | 0 | SLV 11 | No |
| R_SLV | 0 | SLV 14 | No |

## Maschio 239

Verifiche condotte secondo D.M. 17-01-18 (N.T.C.)

### Dati geometrici

| X ini. | Y ini. | X fin. | Y fin. | Quota i. | Quota.s | l | Sp. | h netta | h ini. | h fin. | a | a.s.,sx | a.s.,dx |
|---|---|---|---|---|---|---|---|---|---|---|---|---|---|
| -1100.3 | -485.9 | -1100.3 | -470.9 | L3 | F1 | 15 | 28 | 1330 | 1326.6 | 1333.5 | | | |

### Caratteristiche del materiale

(Circolare 7 21-01-19 C8.5.I) Muratura in mattoni pieni e malta di calce LC2_Corti

| fb | fk | fvk0 | fmedio | τ0 | fv0 | μ | ϕ | fv,lim | E | G | FC |
|---|---|---|---|---|---|---|---|---|---|---|---|
| 60 | | | 34.5 | 0.9 | 2 | 0.58 | 0.77 | 3.25 | 32000 | 12800 | 1.2 |

### Verifica a pressoflessione nel piano secondo D.M. 17-01-18 NTC §7.8.2.2.1 in combinazioni non sismiche, γM = 3

| Comb. | Quota | N | M | σ0 | Mu | c.s. | Verifica |
|---|---|---|---|---|---|---|---|
| SLU 61 | 171 | -2803 | 38399 | 0 | 0 | 0 | No, e>l/2 |
| SLU 61 | 1498 | -11 | 397 | 0 | 0 | 0 | No, e>l/2 |
| SLU 59 | 171 | -2893 | 39199 | 0 | 0 | 0 | No, e>l/2 |
| SLU 59 | 1498 | -30 | 839 | 0 | 0 | 0 | No, e>l/2 |
| SLU 1 | 171 | -1903 | 26015 | 0 | 0 | 0 | No, e>l/2 |
| SLU 1 | 1498 | -9 | 290 | 0 | 0 | 0 | No, e>l/2 |
| SLU 53 | 171 | -2792 | 37901 | 0 | 0 | 0 | No, e>l/2 |
| SLU 53 | 1498 | -19 | 586 | 0 | 0 | 0 | No, e>l/2 |
| SLU 56 | 171 | -2897 | 39085 | 0 | 0 | 0 | No, e>l/2 |
| SLU 56 | 1498 | -29 | 819 | 0 | 0 | 0 | No, e>l/2 |
| SLU 54 | 171 | -2779 | 37894 | 0 | 0 | 0 | No, e>l/2 |
| SLU 54 | 1498 | -19 | 582 | 0 | 0 | 0 | No, e>l/2 |
| SLU 55 | 171 | -2780 | 38010 | 0 | 0 | 0 | No, e>l/2 |
| SLU 55 | 1498 | -21 | 603 | 0 | 0 | 0 | No, e>l/2 |
| SLU 58 | 171 | -2907 | 39206 | 0 | 0 | 0 | No, e>l/2 |
| SLU 58 | 1498 | -30 | 844 | 0 | 0 | 0 | No, e>l/2 |
| SLU 57 | 171 | -2883 | 39078 | 0 | 0 | 0 | No, e>l/2 |
| SLU 57 | 1498 | -29 | 815 | 0 | 0 | 0 | No, e>l/2 |
| SLU 60 | 171 | -2816 | 38406 | 0 | 0 | 0 | No, e>l/2 |
| SLU 60 | 1498 | -11 | 401 | 0 | 0 | 0 | No, e>l/2 |

### Verifica a pressoflessione nel piano secondo D.M. 17-01-18 NTC §7.8.2.2.1 in combinazioni sismiche, γM = 2

| Comb. | Quota | N | M | σ0 | Mu | c.s. | Verifica |
|---|---|---|---|---|---|---|---|
| SLV 9 | 171 | -3739 | 46116 | 0 | 0 | 0 | No, e>l/2 |
| SLV 9 | 1498 | -44 | 1437 | 0 | 0 | 0 | No, e>l/2 |
| SLV 13 | 171 | -3418 | 46948 | 0 | 0 | 0 | No, e>l/2 |
| SLV 13 | 1498 | 4 | 318 | 0 | 0 | 0 | No, Trazione |
| SLD 1 | 171 | -1797 | 22931 | 0 | 0 | 0 | No, e>l/2 |
| SLD 1 | 1498 | -27 | 657 | 0 | 0 | 0 | No, e>l/2 |
| SLV 14 | 171 | -3418 | 46948 | 0 | 0 | 0 | No, e>l/2 |
| SLV 14 | 1498 | 4 | 318 | 0 | 0 | 0 | No, Trazione |
| SLV 11 | 171 | -893 | 18169 | 0 | 0 | 0 | No, e>l/2 |
| SLV 11 | 1498 | 38 | -971 | 0 | 0 | 0 | No, Trazione |
| SLV 10 | 171 | -3739 | 46116 | 0 | 0 | 0 | No, e>l/2 |
| SLV 10 | 1498 | -44 | 1437 | 0 | 0 | 0 | No, e>l/2 |
| SLV 7 | 171 | -314 | 9071 | 0 | 0 | 0 | No, e>l/2 |
| SLV 7 | 1498 | 22 | -735 | 0 | 0 | 0 | No, Trazione |
| SLV 6 | 171 | -3160 | 37018 | 0 | 0 | 0 | No, e>l/2 |
| SLV 6 | 1498 | -60 | 1673 | 0 | 0 | 0 | No, e>l/2 |
| SLV 12 | 171 | -893 | 18169 | 0 | 0 | 0 | No, e>l/2 |
| SLV 12 | 1498 | 38 | -971 | 0 | 0 | 0 | No, Trazione |
| SLV 8 | 171 | -314 | 9071 | 0 | 0 | 0 | No, e>l/2 |
| SLV 8 | 1498 | 22 | -735 | 0 | 0 | 0 | No, Trazione |

### Verifica a taglio nel piano secondo D.M. 17-01-18 (N.T.C.) §7.8.2.2.2 con rottura per scorrimento in combinazioni non sismiche, γM = 3

| Comb. | Quota | N | V par | M | σ0 | σN | l' | fvd | Vt scorr. | Vt fess.diag. | Vt,lim | c.s. | Verifica |
|---|---|---|---|---|---|---|---|---|---|---|---|---|---|
| SLU 60 | 171 | -2816 | 200 | 38406 | | 0 | 0 | 0.56 | 0 | | | 0 | No, Vu<V |
| SLU 60 | 1498 | -11 | -7 | 401 | | 0 | 0 | 0.56 | 0 | | | 0 | No, Vu<V |
| SLU 57 | 171 | -2883 | 198 | 39078 | | 0 | 0 | 0.56 | 0 | | | 0 | No, Vu<V |
| SLU 57 | 1498 | -29 | -20 | 815 | | 0 | 0 | 0.56 | 0 | | | 0 | No, Vu<V |
| SLU 54 | 171 | -2779 | 200 | 37894 | | 0 | 0 | 0.56 | 0 | | | 0 | No, Vu<V |
| SLU 54 | 1498 | -19 | -12 | 582 | | 0 | 0 | 0.56 | 0 | | | 0 | No, Vu<V |
| SLU 56 | 171 | -2897 | 189 | 39085 | | 0 | 0 | 0.56 | 0 | | | 0 | No, Vu<V |
| SLU 56 | 1498 | -29 | -21 | 819 | | 0 | 0 | 0.56 | 0 | | | 0 | No, Vu<V |
| SLU 53 | 171 | -2792 | 191 | 37901 | | 0 | 0 | 0.56 | 0 | | | 0 | No, Vu<V |
| SLU 53 | 1498 | -19 | -12 | 586 | | 0 | 0 | 0.56 | 0 | | | 0 | No, Vu<V |
| SLU 58 | 171 | -2907 | 189 | 39206 | | 0 | 0 | 0.56 | 0 | | | 0 | No, Vu<V |
| SLU 58 | 1498 | -30 | -22 | 844 | | 0 | 0 | 0.56 | 0 | | | 0 | No, Vu<V |
| SLU 55 | 171 | -2780 | 207 | 38010 | | 0 | 0 | 0.56 | 0 | | | 0 | No, Vu<V |

| Comb. | Quota | N | V par | M | σ0 | σN | l' | fvd | Vt scorr. | Vt fess.diag. | Vt,lim | c.s. | Verifica |
|---|---|---|---|---|---|---|---|---|---|---|---|---|---|
| SLU 55 | 1498 | -21 | -12 | 603 | | 0 | 0 | 0.56 | 0 | | | 0 | No, Vu<V |
| SLU 1 | 171 | -1903 | 140 | 26015 | | 0 | 0 | 0.56 | 0 | | | 0 | No, Vu<V |
| SLU 1 | 1498 | -9 | -1 | 290 | | 0 | 0 | 0.56 | 0 | | | 0 | No, Vu<V |
| SLU 61 | 171 | -2803 | 209 | 38399 | | 0 | 0 | 0.56 | 0 | | | 0 | No, Vu<V |
| SLU 61 | 1498 | -11 | -7 | 397 | | 0 | 0 | 0.56 | 0 | | | 0 | No, Vu<V |
| SLU 59 | 171 | -2893 | 198 | 39199 | | 0 | 0 | 0.56 | 0 | | | 0 | No, Vu<V |
| SLU 59 | 1498 | -30 | -22 | 839 | | 0 | 0 | 0.56 | 0 | | | 0 | No, Vu<V |

### Verifica a taglio nel piano secondo D.M. 17-01-18 (N.T.C.) §7.8.2.2.2 con rottura per scorrimento in combinazioni sismiche, γM = 2

| Comb. | Quota | N | V par | M | σ0 | σN | l' | fvd | Vt scorr. | Vt fess.diag. | Vt,lim | c.s. | Verifica |
|---|---|---|---|---|---|---|---|---|---|---|---|---|---|
| SLV 11 | 171 | -893 | 449 | 18169 | | 0 | 0 | 0.83 | 0 | | | 0 | No, Vu<V |
| SLV 11 | 1498 | 38 | 41 | -971 | | 0 | 0 | 0.83 | 0 | | | 0 | No, Vu<V |
| SLV 13 | 171 | -3418 | 348 | 46948 | | 0 | 0 | 0.83 | 0 | | | 0 | No, Vu<V |
| SLV 13 | 1498 | 4 | 5 | 318 | | 0 | 0 | 0.83 | 0 | | | 0 | No, Vu<V |
| SLV 7 | 171 | -314 | 285 | 9071 | | 0 | 0 | 0.83 | 0 | | | 0 | No, Vu<V |
| SLV 7 | 1498 | 22 | 28 | -735 | | 0 | 0 | 0.83 | 0 | | | 0 | No, Vu<V |
| SLV 12 | 171 | -893 | 449 | 18169 | | 0 | 0 | 0.83 | 0 | | | 0 | No, Vu<V |
| SLV 12 | 1498 | 38 | 41 | -971 | | 0 | 0 | 0.83 | 0 | | | 0 | No, Vu<V |
| SLD 1 | 171 | -1797 | -1 | 22931 | | 0 | 0 | 0.83 | 0 | | | 0 | No, Vu<V |
| SLD 1 | 1498 | -27 | -18 | 657 | | 0 | 0 | 0.83 | 0 | | | 0 | No, Vu<V |
| SLV 9 | 171 | -3739 | 0 | 46116 | | 0 | 0 | 0.83 | 0 | | | 0 | No, Vu<V |
| SLV 9 | 1498 | -44 | -38 | 1437 | | 0 | 0 | 0.83 | 0 | | | 0 | No, Vu<V |
| SLV 14 | 171 | -3418 | 348 | 46948 | | 0 | 0 | 0.83 | 0 | | | 0 | No, Vu<V |
| SLV 14 | 1498 | 4 | 5 | 318 | | 0 | 0 | 0.83 | 0 | | | 0 | No, Vu<V |
| SLV 6 | 171 | -3160 | -164 | 37018 | | 0 | 0 | 0.83 | 0 | | | 0 | No, Vu<V |
| SLV 6 | 1498 | -60 | -50 | 1673 | | 0 | 0 | 0.83 | 0 | | | 0 | No, Vu<V |
| SLV 10 | 171 | -3739 | 0 | 46116 | | 0 | 0 | 0.83 | 0 | | | 0 | No, Vu<V |
| SLV 10 | 1498 | -44 | -38 | 1437 | | 0 | 0 | 0.83 | 0 | | | 0 | No, Vu<V |
| SLV 8 | 171 | -314 | 285 | 9071 | | 0 | 0 | 0.83 | 0 | | | 0 | No, Vu<V |
| SLV 8 | 1498 | 22 | 28 | -735 | | 0 | 0 | 0.83 | 0 | | | 0 | No, Vu<V |

### Verifica a pressoflessione fuori piano D.M. 17-01-18 (N.T.C.)

quota 834.3 Wa 0.05 denominatore 8 γM = 2

| Comb. | fd | Sa | σ0 | N | M | Mc | Coeff.s. | Verifica |
|---|---|---|---|---|---|---|---|---|
| SLV 9 | 14 | 0.41 | 0 | -1059 | 24124 | 0 | 0 | No, e>t/2 |
| SLV 10 | 14 | 0.41 | 0 | -1059 | 24124 | 0 | 0 | No, e>t/2 |
| SLV 1 | 14 | 0.41 | 0 | -811 | 24124 | 0 | 0 | No, e>t/2 |
| SLV 6 | 14 | 0.41 | 0 | -1058 | 24124 | 0 | 0 | No, e>t/2 |
| SLV 8 | 14 | 0.41 | 0 | -357 | 24124 | 0 | 0 | No, e>t/2 |
| SLV 4 | 14 | 0.41 | 0 | -601 | 24124 | 0 | 0 | No, e>t/2 |
| SLV 3 | 14 | 0.41 | 0 | -601 | 24124 | 0 | 0 | No, e>t/2 |
| SLV 2 | 14 | 0.41 | 0 | -811 | 24124 | 0 | 0 | No, e>t/2 |
| SLV 7 | 14 | 0.41 | 0 | -357 | 24124 | 0 | 0 | No, e>t/2 |
| SLV 5 | 14 | 0.41 | 0 | -1058 | 24124 | 0 | 0 | No, e>t/2 |

### Verifica dei meccanismi locali di collasso con analisi cinematica lineare

forza di aggancio al piano = 0 quota mezzeria = 834.3 Wa = 0.05 Ta = 1.055

| Comb. | N top | N base | V orto | α0 | M* | e* | a0* | aLim | Verifica |
|---|---|---|---|---|---|---|---|---|---|
| SLV 8 | 22 | -314 | 2 | 0 | 0 | 0 | 0 | 239.674 | No, Trazione |
| SLV 15 | 28 | -2564 | -6 | 0 | 0 | 0 | 0 | 239.674 | No, Trazione |
| SLV 14 | 4 | -3418 | -8 | 0 | 0 | 0 | 0 | 239.674 | No, Trazione |
| SLV 16 | 28 | -2564 | -6 | 0 | 0 | 0 | 0 | 239.674 | No, Trazione |
| SLV 7 | 22 | -314 | 2 | 0 | 0 | 0 | 0 | 239.674 | No, Trazione |
| SLV 13 | 4 | -3418 | -8 | 0 | 0 | 0 | 0 | 239.674 | No, Trazione |
| SLV 12 | 38 | -893 | -1 | 0 | 0 | 0 | 0 | 239.674 | No, Trazione |
| SLV 11 | 38 | -893 | -1 | 0 | 0 | 0 | 0 | 239.674 | No, Trazione |
| SLV 10 | -44 | -3739 | -6 | 0.009 | 1.032 | 0.964 | 14.051 | 239.674 | No |
| SLV 9 | -44 | -3739 | -6 | 0.009 | 1.032 | 0.964 | 14.051 | 239.674 | No |

### Tabella dei coefficienti di sicurezza minimi

| Stato limite | Coeff.s. | Comb. | Verifica |
|---|---|---|---|
| PF_SLU | 0 | SLU 1 | No |
| V_SLU | 0 | SLU 1 | No |
| PF_SLV | 0 | SLV 16 | No |
| V_SLV | 0 | SLD 1 | No |
| PFFP_SLV | 0 | SLV 1 | No |
| R_SLV | 0 | SLV 16 | No |

## Maschio 240

Verifiche condotte secondo D.M. 17-01-18 (N.T.C.)

### Dati geometrici

| X ini. | Y ini. | X fin. | Y fin. | Quota i. | Quota.s | l | Sp. | h netta | h ini. | h fin. | a | a.s.,sx | a.s.,dx |
|---|---|---|---|---|---|---|---|---|---|---|---|---|---|
| -1100.3 | -470.9 | -1100.3 | -350.9 | Z medio 373 cm | F1 | 120 | 28 | 1159.2 | 1131.5 | 1187 | | | |

### Caratteristiche del materiale

(Circolare 7 21-01-19 C8.5.I) Muratura in mattoni pieni e malta di calce LC2_Corti

| fb | fk | fvk0 | fmedio | τ0 | fv0 | μ | ϕ | fv,lim | E | G | FC |
|---|---|---|---|---|---|---|---|---|---|---|---|
| 60 | | | 34.5 | 0.9 | 2 | 0.58 | 0.77 | 3.25 | 32000 | 12800 | 1.2 |

Verifica a pressoflessione nel piano secondo D.M. 17-01-18 NTC §7.8.2.2.1 in combinazioni non sismiche, γM = 3

| Comb. | Quota | N | M | σ0 | Mu | c.s. | Verifica |
|---|---|---|---|---|---|---|---|
| SLU 46 | 373 | -13460 | -23732 | 4.01 | 410439 | 17.295 | Si |
| SLU 46 | 1505 | -671 | 15885 | 0.2 | 39255 | 2.471 | Si |
| SLU 47 | 373 | -13443 | -24266 | 4 | 410421 | 16.913 | Si |
| SLU 47 | 1505 | -686 | 15963 | 0.2 | 40117 | 2.513 | Si |
| SLU 45 | 373 | -13516 | -24303 | 4.02 | 410488 | 16.89 | Si |
| SLU 45 | 1505 | -689 | 16318 | 0.2 | 40276 | 2.468 | Si |
| SLU 43 | 373 | -13019 | -21964 | 3.87 | 409579 | 18.648 | Si |
| SLU 43 | 1505 | -399 | 10617 | 0.12 | 23618 | 2.225 | Si |
| SLU 61 | 373 | -15133 | -28832 | 4.5 | 405955 | 14.08 | Si |
| SLU 61 | 1505 | -439 | 10483 | 0.13 | 25932 | 2.474 | Si |
| SLU 2 | 373 | -10173 | -16087 | 3.03 | 383517 | 23.84 | Si |
| SLU 2 | 1505 | -328 | 8249 | 0.1 | 19420 | 2.354 | Si |
| SLU 1 | 373 | -10267 | -17039 | 3.06 | 384934 | 22.591 | Si |
| SLU 1 | 1505 | -357 | 8970 | 0.11 | 21165 | 2.359 | Si |
| SLU 60 | 373 | -15189 | -29403 | 4.52 | 405593 | 13.794 | Si |
| SLU 60 | 1505 | -457 | 10916 | 0.14 | 26971 | 2.471 | Si |
| SLU 44 | 373 | -12926 | -21012 | 3.85 | 409288 | 19.479 | Si |
| SLU 44 | 1505 | -370 | 9896 | 0.11 | 21879 | 2.211 | Si |
| SLU 52 | 373 | -14445 | -26220 | 4.3 | 409285 | 15.61 | Si |
| SLU 52 | 1505 | -410 | 10105 | 0.12 | 24232 | 2.398 | Si |

Verifica a pressoflessione nel piano secondo D.M. 17-01-18 NTC §7.8.2.2.1 in combinazioni sismiche, γM = 2

| Comb. | Quota | N | M | σ0 | Mu | c.s. | Verifica |
|---|---|---|---|---|---|---|---|
| SLV 11 | 373 | -5282 | 56109 | 1.57 | 276138 | 4.921 | Si |
| SLV 11 | 1505 | 1141 | 1106 | 0 | 0 | 0 | No, Trazione |
| SLV 15 | 373 | -9322 | 67734 | 2.77 | 432309 | 6.382 | Si |
| SLV 15 | 1505 | -69 | 37764 | 0 | 0 | 0 | No, e>l/2 |
| SLV 8 | 373 | -5245 | 13926 | 1.56 | 274494 | 19.711 | Si |
| SLV 8 | 1505 | 1217 | -19005 | 0 | 0 | 0 | No, Trazione |
| SLV 12 | 373 | -5282 | 56109 | 1.57 | 276138 | 4.921 | Si |
| SLV 12 | 1505 | 1141 | 1106 | 0 | 0 | 0 | No, Trazione |
| SLD 16 | 373 | -10275 | 17873 | 3.06 | 462217 | 25.861 | Si |
| SLD 16 | 1505 | -280 | 21588 | 0 | 0 | 0 | No, e>l/2 |
| SLV 7 | 373 | -5245 | 13926 | 1.56 | 274494 | 19.711 | Si |
| SLV 7 | 1505 | 1217 | -19005 | 0 | 0 | 0 | No, Trazione |
| SLD 15 | 373 | -10275 | 17873 | 3.06 | 462217 | 25.861 | Si |
| SLD 15 | 1505 | -280 | 21588 | 0 | 0 | 0 | No, e>l/2 |
| SLV 4 | 373 | -9199 | -72879 | 2.74 | 428265 | 5.876 | Si |
| SLV 4 | 1505 | 183 | -29272 | 0 | 0 | 0 | No, Trazione |
| SLV 3 | 373 | -9199 | -72879 | 2.74 | 428265 | 5.876 | Si |
| SLV 3 | 1505 | 183 | -29272 | 0 | 0 | 0 | No, Trazione |
| SLD 12 | 373 | -8584 | 12514 | 2.55 | 407357 | 32.553 | Si |
| SLD 12 | 1505 | 202 | 6367 | 0 | 0 | 0 | No, Trazione |

Verifica a taglio nel piano secondo D.M. 17-01-18 (N.T.C.) §7.8.2.2.2 con rottura per scorrimento in combinazioni non sismiche, γM = 3

| Comb. | Quota | N | V par | M | σ0 | σN | l' | fvd | Vt scorr. | Vt fess.diag. | Vt,lim | c.s. | Verifica |
|---|---|---|---|---|---|---|---|---|---|---|---|---|---|
| SLU 37 | 373 | -13773 | -1362 | -29299 | | 4.1 | 120 | 1.08 | 3640 | | | 2.67 | Si |
| SLU 37 | 1505 | -1220 | -876 | 24363 | | 0.36 | 120 | 0.6 | 2029 | | | 2.32 | Si |
| SLU 71 | 373 | -15007 | -1217 | -29016 | | 4.47 | 120 | 1.08 | 3640 | | | 2.99 | Si |
| SLU 71 | 1505 | -1222 | -803 | 25800 | | 0.37 | 116.66 | 0.61 | 1978 | | | 2.46 | Si |
| SLU 78 | 373 | -16450 | -1444 | -32737 | | 4.9 | 120 | 1.08 | 3640 | | | 2.52 | Si |
| SLU 78 | 1505 | -1217 | -825 | 25210 | | 0.37 | 117.87 | 0.6 | 1996 | | | 2.42 | Si |
| SLU 79 | 373 | -16526 | -1490 | -34224 | | 4.92 | 120 | 1.08 | 3640 | | | 2.44 | Si |
| SLU 79 | 1505 | -1262 | -862 | 26009 | | 0.38 | 118.19 | 0.61 | 2007 | | | 2.33 | Si |
| SLU 77 | 373 | -16506 | -1487 | -33309 | | 4.91 | 120 | 1.08 | 3640 | | | 2.45 | Si |
| SLU 77 | 1505 | -1235 | -831 | 25642 | | 0.37 | 117.72 | 0.61 | 1996 | | | 2.4 | Si |
| SLU 36 | 373 | -13697 | -1316 | -27812 | | 4.08 | 120 | 1.08 | 3640 | | | 2.77 | Si |
| SLU 36 | 1505 | -1175 | -840 | 23563 | | 0.35 | 119.85 | 0.6 | 2021 | | | 2.41 | Si |
| SLU 29 | 373 | -12254 | -1089 | -24091 | | 3.65 | 120 | 1.04 | 3501 | | | 3.21 | Si |
| SLU 29 | 1505 | -1180 | -817 | 24153 | | 0.36 | 118.59 | 0.6 | 2002 | | | 2.45 | Si |
| SLU 80 | 373 | -16470 | -1448 | -33652 | | 4.9 | 120 | 1.08 | 3640 | | | 2.51 | Si |
| SLU 80 | 1505 | -1244 | -856 | 25576 | | 0.38 | 118.34 | 0.61 | 2007 | | | 2.34 | Si |
| SLU 38 | 373 | -13717 | -1319 | -28727 | | 4.08 | 120 | 1.08 | 3640 | | | 2.76 | Si |
| SLU 38 | 1505 | -1202 | -871 | 23930 | | 0.36 | 120 | 0.6 | 2027 | | | 2.33 | Si |
| SLU 35 | 373 | -13753 | -1359 | -28384 | | 4.09 | 120 | 1.08 | 3640 | | | 2.68 | Si |
| SLU 35 | 1505 | -1193 | -845 | 23996 | | 0.36 | 119.67 | 0.6 | 2021 | | | 2.39 | Si |

Verifica a taglio nel piano secondo D.M. 17-01-18 (N.T.C.) §7.8.2.2.2 con rottura per scorrimento in combinazioni sismiche, γM = 2

| Comb. | Quota | N | V par | M | σ0 | σN | l' | fvd | Vt scorr. | Vt fess.diag. | Vt,lim | c.s. | Verifica |
|---|---|---|---|---|---|---|---|---|---|---|---|---|---|
| SLD 16 | 373 | -10275 | 579 | 17873 | | 3.06 | 120 | 1.44 | 4855 | | | 8.39 | Si |
| SLD 16 | 1505 | -280 | 384 | 21588 | | 0 | 0 | 0.83 | 0 | | | 0 | No, Vu<V |
| SLV 4 | 373 | -9199 | -2256 | -72879 | | 2.74 | 120 | 1.38 | 4640 | | | 2.06 | Si |
| SLV 4 | 1505 | 183 | -944 | -29272 | | 0 | 0 | 0.83 | 0 | | | 0 | No, Vu<V |
| SLV 11 | 373 | -5282 | 2757 | 56109 | | 1.57 | 120 | 1.15 | 3856 | | | 1.4 | Si |
| SLV 11 | 1505 | 1141 | 1194 | 1106 | | 0 | 0 | 0.83 | 0 | | | 0 | No, Vu<V |
| SLV 3 | 373 | -9199 | -2256 | -72879 | | 2.74 | 120 | 1.38 | 4640 | | | 2.06 | Si |
| SLV 3 | 1505 | 183 | -944 | -29272 | | 0 | 0 | 0.83 | 0 | | | 0 | No, Vu<V |
| SLV 12 | 373 | -5282 | 2757 | 56109 | | 1.57 | 120 | 1.15 | 3856 | | | 1.4 | Si |
| SLV 12 | 1505 | 1141 | 1194 | 1106 | | 0 | 0 | 0.83 | 0 | | | 0 | No, Vu<V |
| SLD 15 | 373 | -10275 | 579 | 17873 | | 3.06 | 120 | 1.44 | 4855 | | | 8.39 | Si |
| SLD 15 | 1505 | -280 | 384 | 21588 | | 0 | 0 | 0.83 | 0 | | | 0 | No, Vu<V |
| SLV 7 | 373 | -5245 | 1358 | 13926 | | 1.56 | 120 | 1.15 | 3849 | | | 2.84 | Si |
| SLV 7 | 1505 | 1217 | 553 | -19005 | | 0 | 0 | 0.83 | 0 | | | 0 | No, Vu<V |
| SLV 15 | 373 | -9322 | 2408 | 67734 | | 2.77 | 120 | 1.39 | 4664 | | | 1.94 | Si |
| SLV 15 | 1505 | -69 | 1191 | 37764 | | 0 | 0 | 0.83 | 0 | | | 0 | No, Vu<V |
| SLD 12 | 373 | -8584 | 718 | 12514 | | 2.55 | 120 | 1.34 | 4517 | | | 6.29 | Si |

| Comb. | Quota | N | V par | M | σ0 | σN | l' | fvd | Vt scorr. | Vt fess.diag. | Vt,lim | c.s. | Verifica |
|---|---|---|---|---|---|---|---|---|---|---|---|---|---|
| SLD 12 | 1505 | 202 | 362 | 6367 | | 0 | 0 | 0.83 | 0 | | | 0 | No, Vu<V |
| SLV 8 | 373 | -5245 | 1358 | 13926 | | 1.56 | 120 | 1.15 | 3849 | | | 2.84 | Si |
| SLV 8 | 1505 | 1217 | 553 | -19005 | | 0 | 0 | 0.83 | 0 | | | 0 | No, Vu<V |

### Verifica a pressoflessione fuori piano D.M. 17-01-18 (N.T.C.)

quota 938.8 Wa 0.05 denominatore 8 γM = 2

| Comb. | fd | Sa | σ0 | N | M | Mc | Coeff.s. | Verifica |
|---|---|---|---|---|---|---|---|---|
| SLV 7 | 14 | 0.43 | 0 | -4254 | 154109 | 0 | 0 | No, e>t/2 |
| SLV 2 | 14 | 0.43 | 0 | -6655 | 154109 | 0 | 0 | No, e>t/2 |
| SLV 5 | 14 | 0.43 | 0 | -6857 | 154109 | 0 | 0 | No, e>t/2 |
| SLV 10 | 14 | 0.43 | 0 | -6249 | 154109 | 0 | 0 | No, e>t/2 |
| SLV 8 | 14 | 0.43 | 0 | -4254 | 154109 | 0 | 0 | No, e>t/2 |
| SLV 4 | 14 | 0.43 | 0 | -5874 | 154109 | 0 | 0 | No, e>t/2 |
| SLV 6 | 14 | 0.43 | 0 | -6857 | 154109 | 0 | 0 | No, e>t/2 |
| SLV 1 | 14 | 0.43 | 0 | -6655 | 154109 | 0 | 0 | No, e>t/2 |
| SLV 9 | 14 | 0.43 | 0 | -6249 | 154109 | 0 | 0 | No, e>t/2 |
| SLV 3 | 14 | 0.43 | 0 | -5874 | 154109 | 0 | 0 | No, e>t/2 |

### Verifica dei meccanismi locali di collasso con analisi cinematica lineare

forza di aggancio al piano = 0 quota mezzeria = 938.8 Wa = 0.05 Ta = 0.8015

| Comb. | N top | N base | V orto | α0 | M* | e* | a0* | aLim | Verifica |
|---|---|---|---|---|---|---|---|---|---|
| SLV 3 | 183 | -9199 | 19 | 0 | 0 | 0 | 0 | 239.674 | No, Trazione |
| SLV 12 | 1141 | -5282 | 9 | 0 | 0 | 0 | 0 | 239.674 | No, Trazione |
| SLV 4 | 183 | -9199 | 19 | 0 | 0 | 0 | 0 | 239.674 | No, Trazione |
| SLV 8 | 1217 | -5245 | 20 | 0 | 0 | 0 | 0 | 239.674 | No, Trazione |
| SLV 11 | 1141 | -5282 | 9 | 0 | 0 | 0 | 0 | 239.674 | No, Trazione |
| SLV 7 | 1217 | -5245 | 20 | 0 | 0 | 0 | 0 | 239.674 | No, Trazione |
| SLV 9 | -2064 | -16701 | -30 | 0.014 | 8.284 | 0.896 | 23.123 | 239.674 | No |
| SLV 10 | -2064 | -16701 | -30 | 0.014 | 8.284 | 0.896 | 23.123 | 239.674 | No |
| SLV 13 | -1030 | -12748 | -29 | 0.015 | 7.535 | 0.919 | 23.631 | 239.674 | No |
| SLV 14 | -1030 | -12748 | -29 | 0.015 | 7.535 | 0.919 | 23.631 | 239.674 | No |

### Tabella dei coefficienti di sicurezza minimi

| Stato limite | Coeff.s. | Comb. | Verifica |
|---|---|---|---|
| PF_SLU | 2.211 | SLU 44 | Si |
| V_SLU | 2.316 | SLU 37 | Si |
| PF_SLV | 0 | SLV 12 | No |
| V_SLV | 0 | SLD 7 | No |
| PFFP_SLV | 0 | SLV 1 | No |
| R_SLV | 0 | SLV 12 | No |

## Maschio 241

Verifiche condotte secondo D.M. 17-01-18 (N.T.C.)

### Dati geometrici

| X ini. | Y ini. | X fin. | Y fin. | Quota i. | Quota.s | l | Sp. | h netta | h ini. | h fin. | a | a.s.,sx | a.s.,dx |
|---|---|---|---|---|---|---|---|---|---|---|---|---|---|
| -1100.3 | -350.9 | -1100.3 | -331.4 | Z medio 373 cm | L5 | 19.5 | 28 | 523 | 523 | 523 | | | |

### Caratteristiche del materiale

(Circolare 7 21-01-19 C8.5.I) Muratura in mattoni pieni e malta di calce LC2_Corti

| fb | fk | fvk0 | fmedio | τ0 | fv0 | μ | ϕ | fv,lim | E | G | FC |
|---|---|---|---|---|---|---|---|---|---|---|---|
| 60 | | | 34.5 | 0.9 | 2 | 0.58 | 0.77 | 3.25 | 32000 | 12800 | 1.2 |

### Verifica a pressoflessione nel piano secondo D.M. 17-01-18 NTC §7.8.2.2.1 in combinazioni non sismiche, γM = 3

| Comb. | Quota | N | M | σ0 | Mu | c.s. | Verifica |
|---|---|---|---|---|---|---|---|
| SLU 41 | 373 | -2125 | -6754 | 3.89 | 10820 | 1.602 | Si |
| SLU 41 | 896 | -1436 | -1781 | 2.63 | 9481 | 5.324 | Si |
| SLU 83 | 373 | -2585 | -6891 | 4.73 | 10555 | 1.532 | Si |
| SLU 83 | 896 | -1692 | -2290 | 3.1 | 10222 | 4.464 | Si |
| SLU 81 | 373 | -2504 | -6379 | 4.59 | 10669 | 1.673 | Si |
| SLU 81 | 896 | -1629 | -2563 | 2.98 | 10065 | 3.927 | Si |
| SLU 82 | 373 | -2493 | -6167 | 4.57 | 10682 | 1.732 | Si |
| SLU 82 | 896 | -1633 | -2696 | 2.99 | 10077 | 3.738 | Si |
| SLU 84 | 373 | -2575 | -6679 | 4.72 | 10571 | 1.583 | Si |
| SLU 84 | 896 | -1697 | -2422 | 3.11 | 10232 | 4.225 | Si |
| SLU 39 | 373 | -2044 | -6242 | 3.74 | 10770 | 1.725 | Si |
| SLU 39 | 896 | -1373 | -2054 | 2.51 | 9253 | 4.504 | Si |
| SLU 42 | 373 | -2115 | -6543 | 3.87 | 10815 | 1.653 | Si |
| SLU 42 | 896 | -1440 | -1913 | 2.64 | 9496 | 4.964 | Si |
| SLU 62 | 373 | -2414 | -6406 | 4.42 | 10761 | 1.68 | Si |
| SLU 62 | 896 | -1573 | -2290 | 2.88 | 9913 | 4.328 | Si |
| SLU 20 | 373 | -1954 | -6269 | 3.58 | 10682 | 1.704 | Si |
| SLU 20 | 896 | -1317 | -1781 | 2.41 | 9037 | 5.073 | Si |
| SLU 63 | 373 | -2404 | -6194 | 4.4 | 10770 | 1.739 | Si |
| SLU 63 | 896 | -1577 | -2423 | 2.89 | 9925 | 4.097 | Si |

### Verifica a pressoflessione nel piano secondo D.M. 17-01-18 NTC §7.8.2.2.1 in combinazioni sismiche, γM = 2

| Comb. | Quota | N | M | σ0 | Mu | c.s. | Verifica |
|---|---|---|---|---|---|---|---|
| SLV 9 | 373 | -2615 | -12860 | 4.79 | 15502 | 1.206 | Si |
| SLV 9 | 896 | -1266 | 5401 | 2.32 | 10003 | 1.852 | Si |
| SLV 10 | 373 | -2615 | -12860 | 4.79 | 15502 | 1.206 | Si |

| Comb. | Quota | N | M | σ0 | Mu | c.s. | Verifica |
|---|---|---|---|---|---|---|---|
| SLV 10 | 896 | -1266 | 5401 | 2.32 | 10003 | 1.852 | Si |
| SLV 5 | 373 | -2396 | -13671 | 4.39 | 14970 | 1.095 | Si |
| SLV 5 | 896 | -1375 | 9498 | 2.52 | 10645 | 1.121 | Si |
| SLV 12 | 373 | -1217 | 9476 | 2.23 | 9701 | 1.024 | Si |
| SLV 12 | 896 | -779 | -13034 | 0 | 0 | 0 | No, e>l/2 |
| SLV 16 | 373 | -1962 | 2605 | 3.59 | 13505 | 5.184 | Si |
| SLV 16 | 896 | -823 | -11361 | 0 | 0 | 0 | No, e>l/2 |
| SLV 15 | 373 | -1962 | 2605 | 3.59 | 13505 | 5.184 | Si |
| SLV 15 | 896 | -823 | -11361 | 0 | 0 | 0 | No, e>l/2 |
| SLV 11 | 373 | -1217 | 9476 | 2.23 | 9701 | 1.024 | Si |
| SLV 11 | 896 | -779 | -13034 | 0 | 0 | 0 | No, e>l/2 |
| SLV 8 | 373 | -998 | 8664 | 1.83 | 8271 | 0.955 | No, M>Mu |
| SLV 8 | 896 | -888 | -8937 | 0 | 0 | 0 | No, e>l/2 |
| SLV 7 | 373 | -998 | 8664 | 1.83 | 8271 | 0.955 | No, M>Mu |
| SLV 7 | 896 | -888 | -8937 | 0 | 0 | 0 | No, e>l/2 |
| SLV 6 | 373 | -2396 | -13671 | 4.39 | 14970 | 1.095 | Si |
| SLV 6 | 896 | -1375 | 9498 | 2.52 | 10645 | 1.121 | Si |

Verifica a taglio nel piano secondo D.M. 17-01-18 (N.T.C.) §7.8.2.2.2 con rottura per scorrimento in combinazioni non sismiche, γM = 3

| Comb. | Quota | N | V par | M | σ0 | σN | l' | fvd | Vt scorr. | Vt fess.diag. | Vt,lim | c.s. | Verifica |
|---|---|---|---|---|---|---|---|---|---|---|---|---|---|
| SLU 41 | 373 | -2125 | -181 | -6754 | | 3.89 | 19.5 | 1.07 | 587 | | | 3.23 | Si |
| SLU 41 | 896 | -1436 | -63 | -1781 | | 2.63 | 19.5 | 0.91 | 495 | | | 7.9 | Si |
| SLU 84 | 373 | -2575 | -177 | -6679 | | 4.72 | 19.5 | 1.08 | 591 | | | 3.34 | Si |
| SLU 84 | 896 | -1697 | -61 | -2422 | | 3.11 | 19.5 | 0.97 | 530 | | | 8.73 | Si |
| SLU 78 | 373 | -2617 | -180 | -5692 | | 4.79 | 19.5 | 1.08 | 591 | | | 3.29 | Si |
| SLU 78 | 896 | -1687 | -79 | -2051 | | 3.09 | 19.5 | 0.97 | 528 | | | 6.7 | Si |
| SLU 83 | 373 | -2585 | -190 | -6891 | | 4.73 | 19.5 | 1.08 | 591 | | | 3.12 | Si |
| SLU 83 | 896 | -1692 | -66 | -2290 | | 3.1 | 19.5 | 0.97 | 529 | | | 7.96 | Si |
| SLU 77 | 373 | -2628 | -192 | -5903 | | 4.81 | 19.5 | 1.08 | 591 | | | 3.07 | Si |
| SLU 77 | 896 | -1682 | -85 | -1918 | | 3.08 | 19.5 | 0.97 | 528 | | | 6.24 | Si |
| SLU 79 | 373 | -2623 | -195 | -5979 | | 4.8 | 19.5 | 1.08 | 591 | | | 3.03 | Si |
| SLU 79 | 896 | -1677 | -87 | -1908 | | 3.07 | 19.5 | 0.97 | 527 | | | 6.03 | Si |
| SLU 58 | 373 | -2453 | -177 | -5493 | | 4.49 | 19.5 | 1.08 | 591 | | | 3.35 | Si |
| SLU 58 | 896 | -1558 | -79 | -1909 | | 2.85 | 19.5 | 0.94 | 511 | | | 6.47 | Si |
| SLU 35 | 373 | -2168 | -184 | -5767 | | 3.97 | 19.5 | 1.08 | 591 | | | 3.21 | Si |
| SLU 35 | 896 | -1426 | -81 | -1409 | | 2.61 | 19.5 | 0.9 | 493 | | | 6.11 | Si |
| SLU 80 | 373 | -2613 | -183 | -5767 | | 4.79 | 19.5 | 1.08 | 591 | | | 3.24 | Si |
| SLU 80 | 896 | -1681 | -82 | -2041 | | 3.08 | 19.5 | 0.97 | 528 | | | 6.46 | Si |
| SLU 37 | 373 | -2163 | -187 | -5842 | | 3.96 | 19.5 | 1.08 | 591 | | | 3.17 | Si |
| SLU 37 | 896 | -1421 | -84 | -1399 | | 2.6 | 19.5 | 0.9 | 493 | | | 5.89 | Si |

Verifica a taglio nel piano secondo D.M. 17-01-18 (N.T.C.) §7.8.2.2.2 con rottura per scorrimento in combinazioni sismiche, γM = 2

| Comb. | Quota | N | V par | M | σ0 | σN | l' | fvd | Vt scorr. | Vt fess.diag. | Vt,lim | c.s. | Verifica |
|---|---|---|---|---|---|---|---|---|---|---|---|---|---|
| SLV 9 | 373 | -2615 | -807 | -12860 | | 6.44 | 14.5 | 1.63 | 660 | | | 0.82 | No, Vu<V |
| SLV 9 | 896 | -1266 | -445 | 5401 | | 2.75 | 16.45 | 1.38 | 637 | | | 1.43 | Si |
| SLV 5 | 373 | -2396 | -775 | -13671 | | 7.05 | 12.13 | 1.63 | 552 | | | 0.71 | No, Vu<V |
| SLV 5 | 896 | -1375 | -612 | 9498 | | 5.76 | 8.53 | 1.63 | 388 | | | 0.63 | No, Vu<V |
| SLV 6 | 373 | -2396 | -775 | -13671 | | 7.05 | 12.13 | 1.63 | 552 | | | 0.71 | No, Vu<V |
| SLV 6 | 896 | -1375 | -612 | 9498 | | 5.76 | 8.53 | 1.63 | 388 | | | 0.63 | No, Vu<V |
| SLV 11 | 373 | -1217 | 634 | 9476 | | 7.38 | 5.89 | 1.63 | 268 | | | 0.42 | No, Vu<V |
| SLV 11 | 896 | -779 | 559 | -13034 | | 0 | 0 | 0.83 | 0 | | | 0 | No, Vu<V |
| SLV 8 | 373 | -998 | 666 | 8664 | | 11.15 | 3.19 | 1.63 | 145 | | | 0.22 | No, Vu<V |
| SLV 8 | 896 | -888 | 392 | -8937 | | 0 | 0 | 0.83 | 0 | | | 0 | No, Vu<V |
| SLV 16 | 373 | -1962 | 93 | 2605 | | 3.59 | 19.5 | 1.55 | 847 | | | 9.13 | Si |
| SLV 16 | 896 | -823 | 402 | -11361 | | 0 | 0 | 0.83 | 0 | | | 0 | No, Vu<V |
| SLV 7 | 373 | -998 | 666 | 8664 | | 11.15 | 3.19 | 1.63 | 145 | | | 0.22 | No, Vu<V |
| SLV 7 | 896 | -888 | 392 | -8937 | | 0 | 0 | 0.83 | 0 | | | 0 | No, Vu<V |
| SLV 10 | 373 | -2615 | -807 | -12860 | | 6.44 | 14.5 | 1.63 | 660 | | | 0.82 | No, Vu<V |
| SLV 10 | 896 | -1266 | -445 | 5401 | | 2.75 | 16.45 | 1.38 | 637 | | | 1.43 | Si |
| SLV 15 | 373 | -1962 | 93 | 2605 | | 3.59 | 19.5 | 1.55 | 847 | | | 9.13 | Si |
| SLV 15 | 896 | -823 | 402 | -11361 | | 0 | 0 | 0.83 | 0 | | | 0 | No, Vu<V |
| SLV 12 | 373 | -1217 | 634 | 9476 | | 7.38 | 5.89 | 1.63 | 268 | | | 0.42 | No, Vu<V |
| SLV 12 | 896 | -779 | 559 | -13034 | | 0 | 0 | 0.83 | 0 | | | 0 | No, Vu<V |

Verifica a pressoflessione fuori piano D.M. 17-01-18 (N.T.C.)

quota 634.5 Wa 0.05 denominatore 8 γM = 2

| Comb. | fd | Sa | σ0 | N | M | Mc | Coeff.s. | Verifica |
|---|---|---|---|---|---|---|---|---|
| SLV 12 | 14 | 0.37 | 1.77 | -967 | 4374 | 11574 | 2.65 | Si |
| SLV 11 | 14 | 0.37 | 1.77 | -967 | 4374 | 11574 | 2.65 | Si |
| SLV 7 | 14 | 0.37 | 1.9 | -1039 | 4374 | 12279 | 2.81 | Si |
| SLV 8 | 14 | 0.37 | 1.9 | -1039 | 4374 | 12279 | 2.81 | Si |
| SLV 15 | 14 | 0.37 | 1.96 | -1069 | 4374 | 12564 | 2.87 | Si |
| SLV 16 | 14 | 0.37 | 1.96 | -1069 | 4374 | 12564 | 2.87 | Si |
| SLV 14 | 14 | 0.37 | 2.25 | -1228 | 4374 | 14027 | 3.21 | Si |
| SLV 13 | 14 | 0.37 | 2.25 | -1228 | 4374 | 14027 | 3.21 | Si |
| SLV 3 | 14 | 0.37 | 2.4 | -1309 | 4374 | 14727 | 3.37 | Si |
| SLV 4 | 14 | 0.37 | 2.4 | -1309 | 4374 | 14727 | 3.37 | Si |

Verifica dei meccanismi locali di collasso con analisi cinematica lineare

forza di aggancio al piano = 0 quota mezzeria = 634.5 Wa = 0.05 Ta = 0.1631

| Comb. | N top | N base | V orto | α0 | M* | e* | a0* | aLim | Verifica |
|---|---|---|---|---|---|---|---|---|---|
| SLV 8 | -888 | -998 | 6 | 0.027 | 1.315 | 0.92 | 43.174 | 1594.275 | No |
| SLV 7 | -888 | -998 | 6 | 0.027 | 1.315 | 0.92 | 43.174 | 1594.275 | No |
| SLV 10 | -1266 | -2615 | -5 | 0.028 | 1.696 | 0.934 | 43.622 | 1594.275 | No |
| SLV 9 | -1266 | -2615 | -5 | 0.028 | 1.696 | 0.934 | 43.622 | 1594.275 | No |
| SLV 6 | -1375 | -2396 | -4 | 0.028 | 1.806 | 0.938 | 44.016 | 1594.275 | No |
| SLV 5 | -1375 | -2396 | -4 | 0.028 | 1.806 | 0.938 | 44.016 | 1594.275 | No |

| Comb. | N top | N base | V orto | α0 | M* | e* | a0* | aLim | Verifica |
|---|---|---|---|---|---|---|---|---|---|
| SLV 12 | -779 | -1217 | 6 | 0.028 | 1.206 | 0.915 | 44.614 | 1594.275 | No |
| SLV 11 | -779 | -1217 | 6 | 0.028 | 1.206 | 0.915 | 44.614 | 1594.275 | No |
| SLV 4 | -1186 | -1231 | 3 | 0.029 | 1.615 | 0.932 | 45.495 | 1618.465 | No |
| SLV 3 | -1186 | -1231 | 3 | 0.029 | 1.615 | 0.932 | 45.495 | 1618.465 | No |

### Tabella dei coefficienti di sicurezza minimi

| Stato limite | Coeff.s. | Comb. | Verifica |
|---|---|---|---|
| PF_SLU | 1.532 | SLU 83 | Si |
| V_SLU | 3.032 | SLU 79 | Si |
| PF_SLV | 0 | SLV 7 | No |
| V_SLV | 0 | SLV 7 | No |
| PFFP_SLV | 2.646 | SLV 11 | Si |
| R_SLV | 0.027 | SLV 7 | No |

## Maschio 242

Verifiche condotte secondo D.M. 17-01-18 (N.T.C.)

### Dati geometrici

| X ini. | Y ini. | X fin. | Y fin. | Quota i. | Quota.s | l | Sp. | h netta | h ini. | h fin. | a | a.s.,sx | a.s.,dx |
|---|---|---|---|---|---|---|---|---|---|---|---|---|---|
| -1100.3 | -331.4 | -1100.3 | -35.4 | Z medio 459 cm | Z medio 807 cm | 296 | 28 | 348.5 | 174 | 352 | | | |

### Caratteristiche del materiale

(Circolare 7 21-01-19 C8.5.I) Muratura in mattoni pieni e malta di calce LC2_Corti

| fb | fk | fvk0 | fmedio | τ0 | fv0 | μ | ϕ | fv,lim | E | G | FC |
|---|---|---|---|---|---|---|---|---|---|---|---|
| 60 | | | 34.5 | 0.9 | 2 | 0.58 | 0.77 | 3.25 | 32000 | 12800 | 1.2 |

### Verifica a pressoflessione nel piano secondo D.M. 17-01-18 NTC §7.8.2.2.1 in combinazioni non sismiche, γM = 3

| Comb. | Quota | N | M | σ0 | Mu | c.s. | Verifica |
|---|---|---|---|---|---|---|---|
| SLU 66 | 544 | -33009 | 131685 | 3.98 | 2496736 | 18.96 | Si |
| SLU 66 | 718 | -28759 | 156098 | 3.47 | 2443206 | 15.652 | Si |
| SLU 28 | 544 | -28170 | 110519 | 3.4 | 2429540 | 21.983 | Si |
| SLU 28 | 718 | -24746 | 143387 | 2.99 | 2320001 | 16.18 | Si |
| SLU 69 | 544 | -33937 | 120369 | 4.09 | 2497889 | 20.752 | Si |
| SLU 69 | 718 | -29678 | 160069 | 3.58 | 2461491 | 15.378 | Si |
| SLU 71 | 544 | -33616 | 107811 | 4.06 | 2497917 | 23.169 | Si |
| SLU 71 | 718 | -29344 | 148084 | 3.54 | 2455288 | 16.58 | Si |
| SLU 72 | 544 | -33583 | 109949 | 4.05 | 2497895 | 22.719 | Si |
| SLU 72 | 718 | -29317 | 145693 | 3.54 | 2454763 | 16.849 | Si |
| SLU 25 | 544 | -27242 | 121835 | 3.29 | 2404927 | 19.739 | Si |
| SLU 25 | 718 | -23827 | 139417 | 2.87 | 2281847 | 16.367 | Si |
| SLU 24 | 544 | -27274 | 119697 | 3.29 | 2405849 | 20.1 | Si |
| SLU 24 | 718 | -23854 | 141807 | 2.88 | 2283025 | 16.099 | Si |
| SLU 27 | 544 | -28202 | 108381 | 3.4 | 2430330 | 22.424 | Si |
| SLU 27 | 718 | -24773 | 145778 | 2.99 | 2321070 | 15.922 | Si |
| SLU 70 | 544 | -33904 | 122507 | 4.09 | 2497913 | 20.39 | Si |
| SLU 70 | 718 | -29650 | 157678 | 3.58 | 2461005 | 15.608 | Si |
| SLU 67 | 544 | -32977 | 133824 | 3.98 | 2496628 | 18.656 | Si |
| SLU 67 | 718 | -28731 | 153708 | 3.47 | 2442610 | 15.891 | Si |

### Verifica a pressoflessione nel piano secondo D.M. 17-01-18 NTC §7.8.2.2.1 in combinazioni sismiche, γM = 2

| Comb. | Quota | N | M | σ0 | Mu | c.s. | Verifica |
|---|---|---|---|---|---|---|---|
| SLV 8 | 544 | -22821 | 399778 | 2.75 | 2616417 | 6.545 | Si |
| SLV 8 | 718 | -19705 | 105579 | 2.38 | 2348869 | 22.247 | Si |
| SLV 16 | 544 | -24652 | 313724 | 2.97 | 2760319 | 8.799 | Si |
| SLV 16 | 718 | -22515 | 180455 | 2.72 | 2591350 | 14.36 | Si |
| SLV 7 | 544 | -22821 | 399778 | 2.75 | 2616417 | 6.545 | Si |
| SLV 7 | 718 | -19705 | 105579 | 2.38 | 2348869 | 22.247 | Si |
| SLV 5 | 544 | -26750 | -285942 | 3.23 | 2913263 | 10.188 | Si |
| SLV 5 | 718 | -22874 | 37176 | 2.76 | 2620661 | 70.494 | Si |
| SLV 15 | 544 | -24652 | 313724 | 2.97 | 2760319 | 8.799 | Si |
| SLV 15 | 718 | -22515 | 180455 | 2.72 | 2591350 | 14.36 | Si |
| SLV 12 | 544 | -23032 | 470831 | 2.78 | 2633432 | 5.593 | Si |
| SLV 12 | 718 | -20490 | 151187 | 2.47 | 2418933 | 16 | Si |
| SLV 6 | 544 | -26750 | -285942 | 3.23 | 2913263 | 10.188 | Si |
| SLV 6 | 718 | -22874 | 37176 | 2.76 | 2620661 | 70.494 | Si |
| SLD 12 | 544 | -24128 | 251219 | 2.91 | 2720115 | 10.828 | Si |
| SLD 12 | 718 | -21204 | 117474 | 2.56 | 2481138 | 21.121 | Si |
| SLV 11 | 544 | -23032 | 470831 | 2.78 | 2633432 | 5.593 | Si |
| SLV 11 | 718 | -20490 | 151187 | 2.47 | 2418933 | 16 | Si |
| SLD 11 | 544 | -24128 | 251219 | 2.91 | 2720115 | 10.828 | Si |
| SLD 11 | 718 | -21204 | 117474 | 2.56 | 2481138 | 21.121 | Si |

### Verifica a taglio nel piano secondo D.M. 17-01-18 (N.T.C.) §7.8.2.2.2 con rottura per scorrimento in combinazioni non sismiche, γM = 3

| Comb. | Quota | N | V par | M | σ0 | σN | l' | fvd | Vt scorr. | Vt fess.diag. | Vt,lim | c.s. | Verifica |
|---|---|---|---|---|---|---|---|---|---|---|---|---|---|
| SLU 8 | 544 | -24657 | -1008 | 59192 | | 2.97 | 296 | 0.95 | 7892 | | | 7.83 | Si |
| SLU 8 | 718 | -21521 | -795 | 97292 | | 2.6 | 296 | 0.9 | 7474 | | | 9.41 | Si |
| SLU 6 | 544 | -24978 | -941 | 71751 | | 3.01 | 296 | 0.96 | 7935 | | | 8.43 | Si |
| SLU 6 | 718 | -21854 | -717 | 109277 | | 2.64 | 296 | 0.91 | 7518 | | | 10.49 | Si |
| SLU 16 | 544 | -28747 | -1020 | 59731 | | 3.47 | 296 | 1.02 | 8437 | | | 8.27 | Si |
| SLU 16 | 718 | -25598 | -532 | 77696 | | 3.09 | 296 | 0.97 | 8017 | | | 15.06 | Si |
| SLU 37 | 544 | -31972 | -1138 | 96361 | | 3.86 | 296 | 1.07 | 8867 | | | 7.79 | Si |
| SLU 37 | 718 | -28517 | -577 | 114197 | | 3.44 | 296 | 1.01 | 8407 | | | 14.56 | Si |

| Comb. | Quota | N | V par | M | σ0 | σN | l' | fvd | Vt scorr. | Vt fess.diag. | Vt,lim | c.s. | Verifica |
|---|---|---|---|---|---|---|---|---|---|---|---|---|---|
| SLU 35 | 544 | -32293 | -1070 | 108919 | | 3.9 | 296 | 1.08 | 8910 | | | 8.32 | Si |
| SLU 35 | 718 | -28850 | -499 | 126182 | | 3.48 | 296 | 1.02 | 8451 | | | 16.93 | Si |
| SLU 27 | 544 | -28202 | -1058 | 108381 | | 3.4 | 296 | 1.01 | 8365 | | | 7.9 | Si |
| SLU 27 | 718 | -24773 | -761 | 145778 | | 2.99 | 296 | 0.95 | 7908 | | | 10.39 | Si |
| SLU 77 | 544 | -38027 | -1030 | 120908 | | 4.59 | 296 | 1.08 | 8979 | | | 8.72 | Si |
| SLU 77 | 718 | -33754 | -408 | 140473 | | 4.07 | 296 | 1.08 | 8979 | | | 21.99 | Si |
| SLU 71 | 544 | -33616 | -1085 | 107811 | | 4.06 | 296 | 1.08 | 8979 | | | 8.27 | Si |
| SLU 71 | 718 | -29344 | -749 | 148084 | | 3.54 | 296 | 1.03 | 8517 | | | 11.38 | Si |
| SLU 79 | 544 | -37706 | -1097 | 108349 | | 4.55 | 296 | 1.08 | 8979 | | | 8.18 | Si |
| SLU 79 | 718 | -33421 | -486 | 128488 | | 4.03 | 296 | 1.08 | 8979 | | | 18.46 | Si |
| SLU 29 | 544 | -27881 | -1126 | 95822 | | 3.36 | 296 | 1 | 8322 | | | 7.39 | Si |
| SLU 29 | 718 | -24440 | -839 | 133793 | | 2.95 | 296 | 0.95 | 7863 | | | 9.37 | Si |

### Verifica a taglio nel piano secondo D.M. 17-01-18 (N.T.C.) §7.8.2.2.2 con rottura per scorrimento in combinazioni sismiche, γM = 2

| Comb. | Quota | N | V par | M | σ0 | σN | l' | fvd | Vt scorr. | Vt fess.diag. | Vt,lim | c.s. | Verifica |
|---|---|---|---|---|---|---|---|---|---|---|---|---|---|
| SLV 5 | 544 | -26750 | -9624 | -285942 | | 3.23 | 296 | 1.48 | 12257 | | | 1.27 | Si |
| SLV 5 | 718 | -22874 | -9335 | 37176 | | 2.76 | 296 | 1.39 | 11481 | | | 1.23 | Si |
| SLV 12 | 544 | -23032 | 9551 | 470831 | | 2.78 | 296 | 1.39 | 11513 | | | 1.21 | Si |
| SLV 12 | 718 | -20490 | 9962 | 151187 | | 2.47 | 296 | 1.33 | 11005 | | | 1.1 | Si |
| SLV 6 | 544 | -26750 | -9624 | -285942 | | 3.23 | 296 | 1.48 | 12257 | | | 1.27 | Si |
| SLV 6 | 718 | -22874 | -9335 | 37176 | | 2.76 | 296 | 1.39 | 11481 | | | 1.23 | Si |
| SLV 3 | 544 | -23951 | 5230 | 76881 | | 2.89 | 296 | 1.41 | 11697 | | | 2.24 | Si |
| SLV 3 | 718 | -19898 | 5726 | 28429 | | 2.4 | 296 | 1.31 | 10886 | | | 1.9 | Si |
| SLV 8 | 544 | -22821 | 10867 | 399778 | | 2.75 | 296 | 1.38 | 11471 | | | 1.06 | Si |
| SLV 8 | 718 | -19705 | 11348 | 105579 | | 2.38 | 296 | 1.31 | 10848 | | | 0.96 | No, Vu<V |
| SLV 4 | 544 | -23951 | 5230 | 76881 | | 2.89 | 296 | 1.41 | 11697 | | | 2.24 | Si |
| SLV 4 | 718 | -19898 | 5726 | 28429 | | 2.4 | 296 | 1.31 | 10886 | | | 1.9 | Si |
| SLV 7 | 544 | -22821 | 10867 | 399778 | | 2.75 | 296 | 1.38 | 11471 | | | 1.06 | Si |
| SLV 7 | 718 | -19705 | 11348 | 105579 | | 2.38 | 296 | 1.31 | 10848 | | | 0.96 | No, Vu<V |
| SLV 11 | 544 | -23032 | 9551 | 470831 | | 2.78 | 296 | 1.39 | 11513 | | | 1.21 | Si |
| SLV 11 | 718 | -20490 | 9962 | 151187 | | 2.47 | 296 | 1.33 | 11005 | | | 1.1 | Si |
| SLV 10 | 544 | -26961 | -10940 | -214889 | | 3.25 | 296 | 1.48 | 12299 | | | 1.12 | Si |
| SLV 10 | 718 | -23659 | -10720 | 82784 | | 2.85 | 296 | 1.4 | 11638 | | | 1.09 | Si |
| SLV 9 | 544 | -26961 | -10940 | -214889 | | 3.25 | 296 | 1.48 | 12299 | | | 1.12 | Si |
| SLV 9 | 718 | -23659 | -10720 | 82784 | | 2.85 | 296 | 1.4 | 11638 | | | 1.09 | Si |

### Verifica a pressoflessione fuori piano D.M. 17-01-18 (N.T.C.)

quota 631 Wa 0.05 denominatore 8 γM = 2

| Comb. | fd | Sa | σ0 | N | M | Mc | Coeff.s. | Verifica |
|---|---|---|---|---|---|---|---|---|
| SLV 8 | 14 | 0.37 | 2.62 | -21726 | 29427 | 238912 | 8.12 | Si |
| SLV 7 | 14 | 0.37 | 2.62 | -21726 | 29427 | 238912 | 8.12 | Si |
| SLV 3 | 14 | 0.37 | 2.66 | -22057 | 29427 | 241542 | 8.21 | Si |
| SLV 4 | 14 | 0.37 | 2.66 | -22057 | 29427 | 241542 | 8.21 | Si |
| SLV 11 | 14 | 0.37 | 2.69 | -22311 | 29427 | 243538 | 8.28 | Si |
| SLV 12 | 14 | 0.37 | 2.69 | -22311 | 29427 | 243538 | 8.28 | Si |
| SLV 1 | 14 | 0.37 | 2.77 | -22926 | 29427 | 248299 | 8.44 | Si |
| SLV 2 | 14 | 0.37 | 2.77 | -22926 | 29427 | 248299 | 8.44 | Si |
| SLV 15 | 14 | 0.37 | 2.9 | -24006 | 29427 | 256415 | 8.71 | Si |
| SLV 16 | 14 | 0.37 | 2.9 | -24006 | 29427 | 256415 | 8.71 | Si |

### Verifica dei meccanismi locali di collasso con analisi cinematica lineare

forza di aggancio al piano = 0 quota mezzeria = 631 Wa = 0.05 Ta = 0.0724

| Comb. | N top | N base | V orto | α0 | M* | e* | a0* | aLim | Verifica |
|---|---|---|---|---|---|---|---|---|---|
| SLV 8 | -19705 | -22821 | -182 | 0.037 | 24.143 | 0.951 | 56.085 | 1439.58 | No |
| SLV 7 | -19705 | -22821 | -182 | 0.037 | 24.143 | 0.951 | 56.085 | 1439.58 | No |
| SLV 11 | -20490 | -23032 | -153 | 0.038 | 24.941 | 0.952 | 58.107 | 1439.58 | No |
| SLV 12 | -20490 | -23032 | -153 | 0.038 | 24.941 | 0.952 | 58.107 | 1439.58 | No |
| SLV 5 | -22874 | -26750 | -29 | 0.043 | 27.363 | 0.956 | 65.57 | 1439.58 | No |
| SLV 6 | -22874 | -26750 | -29 | 0.043 | 27.363 | 0.956 | 65.57 | 1439.58 | No |
| SLV 9 | -23659 | -26961 | 0 | 0.044 | 28.161 | 0.957 | 67.008 | 1439.58 | No |
| SLV 10 | -23659 | -26961 | 0 | 0.044 | 28.161 | 0.957 | 67.008 | 1439.58 | No |
| SLV 4 | -19898 | -23951 | -162 | 0.038 | 24.34 | 0.951 | 57.44 | 793.948 | No |
| SLV 3 | -19898 | -23951 | -162 | 0.038 | 24.34 | 0.951 | 57.44 | 793.948 | No |

### Tabella dei coefficienti di sicurezza minimi

| Stato limite | Coeff.s. | Comb. | Verifica |
|---|---|---|---|
| PF_SLU | 15.378 | SLU 69 | Si |
| V_SLU | 7.393 | SLU 29 | Si |
| PF_SLV | 5.593 | SLV 11 | Si |
| V_SLV | 0.956 | SLV 7 | No |
| PFFP_SLV | 8.119 | SLV 7 | Si |
| R_SLV | 0.039 | SLV 7 | No |

## Maschio 243

Verifiche condotte secondo D.M. 17-01-18 (N.T.C.)

### Dati geometrici

| X ini. | Y ini. | X fin. | Y fin. | Quota i. | Quota.s | l | Sp. | h netta | h ini. | h fin. | a | a.s.,sx | a.s.,dx |
|---|---|---|---|---|---|---|---|---|---|---|---|---|---|
| -1100.3 | -35.4 | -1100.3 | 104.6 | L3 | L5 | 140 | 28 | 725 | 725 | 725 | | | |

### Caratteristiche del materiale

(Circolare 7 21-01-19 C8.5.I) Muratura in mattoni pieni e malta di calce LC2_Corti

| fb | fk | fvk0 | fmedio | τ0 | fv0 | μ | ϕ | fv,lim | E | G | FC |
|---|---|---|---|---|---|---|---|---|---|---|---|
| 60 | | | 34.5 | 0.9 | 2 | 0.58 | 0.77 | 3.25 | 32000 | 12800 | 1.2 |

Verifica a pressoflessione nel piano secondo D.M. 17-01-18 NTC §7.8.2.2.1 in combinazioni non sismiche, γM = 3

| Comb. | Quota | N | M | σ0 | Mu | c.s. | Verifica |
|---|---|---|---|---|---|---|---|
| SLU 73 | 171 | -22006 | 150594 | 5.61 | 478838 | 3.18 | Si |
| SLU 73 | 896 | -16013 | -18646 | 4.08 | 558803 | 29.969 | Si |
| SLU 81 | 171 | -23249 | 157371 | 5.93 | 442521 | 2.812 | Si |
| SLU 81 | 896 | -17034 | -24486 | 4.35 | 556307 | 22.72 | Si |
| SLU 76 | 171 | -22175 | 146100 | 5.66 | 474294 | 3.246 | Si |
| SLU 76 | 896 | -16514 | -15873 | 4.21 | 558150 | 35.162 | Si |
| SLU 83 | 171 | -23418 | 152877 | 5.97 | 437053 | 2.859 | Si |
| SLU 83 | 896 | -17535 | -21713 | 4.47 | 553411 | 25.488 | Si |
| SLU 78 | 171 | -22589 | 143583 | 5.76 | 462644 | 3.222 | Si |
| SLU 78 | 896 | -17389 | -11924 | 4.44 | 554368 | 46.493 | Si |
| SLU 84 | 171 | -23457 | 155341 | 5.98 | 435791 | 2.805 | Si |
| SLU 84 | 896 | -17488 | -22855 | 4.46 | 553729 | 24.228 | Si |
| SLU 77 | 171 | -22551 | 141119 | 5.75 | 463760 | 3.286 | Si |
| SLU 77 | 896 | -17436 | -10781 | 4.45 | 554070 | 51.392 | Si |
| SLU 74 | 171 | -22381 | 145613 | 5.71 | 468584 | 3.218 | Si |
| SLU 74 | 896 | -16935 | -13554 | 4.32 | 556749 | 41.076 | Si |
| SLU 75 | 171 | -22420 | 148078 | 5.72 | 467496 | 3.157 | Si |
| SLU 75 | 896 | -16888 | -14696 | 4.31 | 556944 | 37.897 | Si |
| SLU 82 | 171 | -23288 | 159835 | 5.94 | 441287 | 2.761 | Si |
| SLU 82 | 896 | -16987 | -25628 | 4.33 | 556522 | 21.715 | Si |

Verifica a pressoflessione nel piano secondo D.M. 17-01-18 NTC §7.8.2.2.1 in combinazioni sismiche, γM = 2

| Comb. | Quota | N | M | σ0 | Mu | c.s. | Verifica |
|---|---|---|---|---|---|---|---|
| SLV 8 | 171 | -20991 | 272903 | 5.35 | 825430 | 3.025 | Si |
| SLV 8 | 896 | -10641 | -46549 | 2.71 | 579403 | 12.447 | Si |
| SLD 8 | 171 | -17444 | 170974 | 4.45 | 776369 | 4.541 | Si |
| SLD 8 | 896 | -10802 | -22848 | 2.76 | 585621 | 25.631 | Si |
| SLD 11 | 171 | -16424 | 166309 | 4.19 | 755468 | 4.543 | Si |
| SLD 11 | 896 | -11039 | -30579 | 2.82 | 594659 | 19.447 | Si |
| SLD 7 | 171 | -17444 | 170974 | 4.45 | 776369 | 4.541 | Si |
| SLD 7 | 896 | -10802 | -22848 | 2.76 | 585621 | 25.631 | Si |
| SLV 7 | 171 | -20991 | 272903 | 5.35 | 825430 | 3.025 | Si |
| SLV 7 | 896 | -10641 | -46549 | 2.71 | 579403 | 12.447 | Si |
| SLV 12 | 171 | -18513 | 262249 | 4.72 | 795031 | 3.032 | Si |
| SLV 12 | 896 | -11198 | -64767 | 2.86 | 600613 | 9.273 | Si |
| SLV 11 | 171 | -18513 | 262249 | 4.72 | 795031 | 3.032 | Si |
| SLV 11 | 896 | -11198 | -64767 | 2.86 | 600613 | 9.273 | Si |
| SLV 16 | 171 | -12210 | 130090 | 3.11 | 636829 | 4.895 | Si |
| SLV 16 | 896 | -11845 | -50975 | 3.02 | 624119 | 12.244 | Si |
| SLD 12 | 171 | -16424 | 166309 | 4.19 | 755468 | 4.543 | Si |
| SLD 12 | 896 | -11039 | -30579 | 2.82 | 594659 | 19.447 | Si |
| SLV 15 | 171 | -12210 | 130090 | 3.11 | 636829 | 4.895 | Si |
| SLV 15 | 896 | -11845 | -50975 | 3.02 | 624119 | 12.244 | Si |

Verifica a taglio nel piano secondo D.M. 17-01-18 (N.T.C.) §7.8.2.2.2 con rottura per scorrimento in combinazioni non sismiche, γM = 3

| Comb. | Quota | N | V par | M | σ0 | σN | l' | fvd | Vt scorr. | Vt fess.diag. | Vt,lim | c.s. | Verifica |
|---|---|---|---|---|---|---|---|---|---|---|---|---|---|
| SLU 30 | 171 | -16087 | -523 | 95322 | | 4.1 | 140 | 1.08 | 4247 | | | 8.12 | Si |
| SLU 30 | 896 | -12537 | -1078 | 8684 | | 3.2 | 140 | 0.98 | 3849 | | | 3.57 | Si |
| SLU 37 | 171 | -19100 | -604 | 118255 | | 4.87 | 140 | 1.08 | 4247 | | | 7.03 | Si |
| SLU 37 | 896 | -14784 | -1063 | -8242 | | 3.77 | 140 | 1.06 | 4149 | | | 3.9 | Si |
| SLU 29 | 171 | -16049 | -604 | 92857 | | 4.09 | 140 | 1.08 | 4247 | | | 7.03 | Si |
| SLU 29 | 896 | -12584 | -1135 | 9826 | | 3.21 | 140 | 0.98 | 3856 | | | 3.4 | Si |
| SLU 71 | 171 | -19229 | -596 | 112101 | | 4.91 | 140 | 1.08 | 4247 | | | 7.13 | Si |
| SLU 71 | 896 | -14894 | -1140 | 6871 | | 3.8 | 140 | 1.06 | 4164 | | | 3.65 | Si |
| SLU 28 | 171 | -16358 | -489 | 98943 | | 4.17 | 140 | 1.08 | 4247 | | | 8.69 | Si |
| SLU 28 | 896 | -12880 | -1046 | 9099 | | 3.29 | 140 | 0.99 | 3895 | | | 3.72 | Si |
| SLU 79 | 171 | -22280 | -595 | 137498 | | 5.68 | 140 | 1.08 | 4247 | | | 7.14 | Si |
| SLU 79 | 896 | -17093 | -1068 | -11197 | | 4.36 | 140 | 1.08 | 4247 | | | 3.97 | Si |
| SLU 27 | 171 | -16319 | -570 | 96478 | | 4.16 | 140 | 1.08 | 4247 | | | 7.45 | Si |
| SLU 27 | 896 | -12927 | -1103 | 10241 | | 3.3 | 140 | 1 | 3901 | | | 3.54 | Si |
| SLU 69 | 171 | -19499 | -561 | 115722 | | 4.97 | 140 | 1.08 | 4247 | | | 7.56 | Si |
| SLU 69 | 896 | -15236 | -1108 | 7286 | | 3.89 | 140 | 1.07 | 4209 | | | 3.8 | Si |
| SLU 70 | 171 | -19538 | -480 | 118186 | | 4.98 | 140 | 1.08 | 4247 | | | 8.85 | Si |
| SLU 70 | 896 | -15189 | -1051 | 6144 | | 3.87 | 140 | 1.07 | 4203 | | | 4 | Si |
| SLU 72 | 171 | -19267 | -514 | 114565 | | 4.92 | 140 | 1.08 | 4247 | | | 8.26 | Si |
| SLU 72 | 896 | -14847 | -1083 | 5728 | | 3.79 | 140 | 1.06 | 4157 | | | 3.84 | Si |

Verifica a taglio nel piano secondo D.M. 17-01-18 (N.T.C.) §7.8.2.2.2 con rottura per scorrimento in combinazioni sismiche, γM = 2

| Comb. | Quota | N | V par | M | σ0 | σN | l' | fvd | Vt scorr. | Vt fess.diag. | Vt,lim | c.s. | Verifica |
|---|---|---|---|---|---|---|---|---|---|---|---|---|---|
| SLV 9 | 171 | -8766 | -4470 | -79833 | | 2.24 | 140 | 1.28 | 5020 | | | 1.12 | Si |
| SLV 9 | 896 | -11191 | -4666 | 35365 | | 2.85 | 140 | 1.4 | 5505 | | | 1.18 | Si |
| SLV 13 | 171 | -9286 | -2762 | 27466 | | 2.37 | 140 | 1.31 | 5124 | | | 1.85 | Si |
| SLV 13 | 896 | -11843 | -2498 | -20936 | | 3.02 | 140 | 1.44 | 5635 | | | 2.26 | Si |
| SLV 10 | 171 | -8766 | -4470 | -79833 | | 2.24 | 140 | 1.28 | 5020 | | | 1.12 | Si |
| SLV 10 | 896 | -11191 | -4666 | 35365 | | 2.85 | 140 | 1.4 | 5505 | | | 1.18 | Si |
| SLV 11 | 171 | -18513 | 3276 | 262249 | | 4.72 | 140 | 1.63 | 6370 | | | 1.94 | Si |
| SLV 11 | 896 | -11198 | 3302 | -64767 | | 2.86 | 140 | 1.4 | 5506 | | | 1.67 | Si |
| SLV 6 | 171 | -11244 | -3609 | -69179 | | 2.87 | 140 | 1.41 | 5515 | | | 1.53 | Si |
| SLV 6 | 896 | -10634 | -4134 | 53582 | | 2.71 | 140 | 1.38 | 5393 | | | 1.3 | Si |
| SLV 14 | 171 | -9286 | -2762 | 27466 | | 2.37 | 140 | 1.31 | 5124 | | | 1.85 | Si |
| SLV 14 | 896 | -11843 | -2498 | -20936 | | 3.02 | 140 | 1.44 | 5635 | | | 2.26 | Si |
| SLV 12 | 171 | -18513 | 3276 | 262249 | | 4.72 | 140 | 1.63 | 6370 | | | 1.94 | Si |
| SLV 12 | 896 | -11198 | 3302 | -64767 | | 2.86 | 140 | 1.4 | 5506 | | | 1.67 | Si |

| Comb. | Quota | N | V par | M | σ0 | σN | l' | fvd | Vt scorr. | Vt fess.diag. | Vt,lim | c.s. | Verifica |
|---|---|---|---|---|---|---|---|---|---|---|---|---|---|
| SLV 5 | 171 | -11244 | -3609 | -69179 | | 2.87 | 140 | 1.41 | 5515 | | | 1.53 | Si |
| SLV 5 | 896 | -10634 | -4134 | 53582 | | 2.71 | 140 | 1.38 | 5393 | | | 1.3 | Si |
| SLV 8 | 171 | -20991 | 4136 | 272903 | | 5.35 | 140 | 1.63 | 6370 | | | 1.54 | Si |
| SLV 8 | 896 | -10641 | 3833 | -46549 | | 2.71 | 140 | 1.38 | 5395 | | | 1.41 | Si |
| SLV 7 | 171 | -20991 | 4136 | 272903 | | 5.35 | 140 | 1.63 | 6370 | | | 1.54 | Si |
| SLV 7 | 896 | -10641 | 3833 | -46549 | | 2.71 | 140 | 1.38 | 5395 | | | 1.41 | Si |

### Verifica a pressoflessione fuori piano D.M. 17-01-18 (N.T.C.)

quota 533.5 Wa 0.05 denominatore 8 γM = 2

| Comb. | fd | Sa | σ0 | N | M | Mc | Coeff.s. | Verifica |
|---|---|---|---|---|---|---|---|---|
| SLV 5 | 14 | 0.35 | 2.86 | -11231 | 57041 | 120364 | 2.11 | Si |
| SLV 6 | 14 | 0.35 | 2.86 | -11231 | 57041 | 120364 | 2.11 | Si |
| SLV 9 | 14 | 0.35 | 3.02 | -11843 | 57041 | 124809 | 2.19 | Si |
| SLV 10 | 14 | 0.35 | 3.02 | -11843 | 57041 | 124809 | 2.19 | Si |
| SLV 1 | 14 | 0.35 | 3.13 | -12275 | 57041 | 127808 | 2.24 | Si |
| SLV 2 | 14 | 0.35 | 3.13 | -12275 | 57041 | 127808 | 2.24 | Si |
| SLV 3 | 14 | 0.35 | 3.52 | -13782 | 57041 | 137432 | 2.41 | Si |
| SLV 4 | 14 | 0.35 | 3.52 | -13782 | 57041 | 137432 | 2.41 | Si |
| SLV 13 | 14 | 0.35 | 3.65 | -14317 | 57041 | 140525 | 2.46 | Si |
| SLV 14 | 14 | 0.35 | 3.65 | -14317 | 57041 | 140525 | 2.46 | Si |

### Verifica dei meccanismi locali di collasso con analisi cinematica lineare

forza di aggancio al piano = 0 quota mezzeria = 533.5 Wa = 0.05 Ta = 0.3135

| Comb. | N top | N base | V orto | α0 | M* | e* | a0* | aLim | Verifica |
|---|---|---|---|---|---|---|---|---|---|
| SLV 2 | -9987 | -17547 | 188 | 0.008 | 14.239 | 0.925 | 12.985 | 1310.012 | No |
| SLV 1 | -9987 | -17547 | 188 | 0.008 | 14.239 | 0.925 | 12.985 | 1310.012 | No |
| SLV 16 | -11845 | -12210 | -199 | 0.009 | 16.113 | 0.932 | 13.872 | 1310.012 | No |
| SLV 15 | -11845 | -12210 | -199 | 0.009 | 16.113 | 0.932 | 13.872 | 1310.012 | No |
| SLV 4 | -9989 | -20471 | 177 | 0.009 | 14.241 | 0.925 | 14.359 | 1310.012 | No |
| SLV 3 | -9989 | -20471 | 177 | 0.009 | 14.241 | 0.925 | 14.359 | 1310.012 | No |
| SLV 13 | -11843 | -9286 | -188 | 0.01 | 16.111 | 0.932 | 15.055 | 1310.012 | No |
| SLV 14 | -11843 | -9286 | -188 | 0.01 | 16.111 | 0.932 | 15.055 | 1310.012 | No |
| SLV 12 | -11198 | -18513 | -80 | 0.017 | 15.46 | 0.93 | 26.662 | 291.305 | No |
| SLV 11 | -11198 | -18513 | -80 | 0.017 | 15.46 | 0.93 | 26.662 | 291.305 | No |

### Tabella dei coefficienti di sicurezza minimi

| Stato limite | Coeff.s. | Comb. | Verifica |
|---|---|---|---|
| PF_SLU | 2.761 | SLU 82 | Si |
| V_SLU | 3.396 | SLU 29 | Si |
| PF_SLV | 3.025 | SLV 7 | Si |
| V_SLV | 1.123 | SLV 9 | Si |
| PFFP_SLV | 2.11 | SLV 5 | Si |
| R_SLV | 0.01 | SLV 1 | No |

## Maschio 244

Verifiche condotte secondo D.M. 17-01-18 (N.T.C.)

### Dati geometrici

| X ini. | Y ini. | X fin. | Y fin. | Quota i. | Quota.s | l | Sp. | h netta | h ini. | h fin. | a | a.s.,sx | a.s.,dx |
|---|---|---|---|---|---|---|---|---|---|---|---|---|---|
| -1051.8 | -485.9 | -1100.3 | -485.9 | L3 | F1 | 48.5 | 30 | 1326.6 | 1326.5 | 1326.6 | | | |

### Caratteristiche del materiale

(Circolare 7 21-01-19 C8.5.I) Muratura in mattoni pieni e malta di calce LC2_Corti

| fb | fk | fvk0 | fmedio | τ0 | fv0 | μ | ϕ | fv,lim | E | G | FC |
|---|---|---|---|---|---|---|---|---|---|---|---|
| 60 | | | 34.5 | 0.9 | 2 | 0.58 | 0.77 | 3.25 | 32000 | 12800 | 1.2 |

### Verifica a pressoflessione nel piano secondo D.M. 17-01-18 NTC §7.8.2.2.1 in combinazioni non sismiche, γM = 3

| Comb. | Quota | N | M | σ0 | Mu | c.s. | Verifica |
|---|---|---|---|---|---|---|---|
| SLU 46 | 1248 | -1058 | 3666 | 0.73 | 23349 | 6.369 | Si |
| SLU 46 | 1460 | -316 | -4096 | 0.22 | 7440 | 1.816 | Si |
| SLU 23 | 1248 | -857 | 2565 | 0.59 | 19262 | 7.51 | Si |
| SLU 23 | 1460 | -238 | -3246 | 0.16 | 5648 | 1.74 | Si |
| SLU 44 | 1248 | -964 | 4175 | 0.66 | 21460 | 5.14 | Si |
| SLU 44 | 1460 | -280 | -4721 | 0.19 | 6620 | 1.402 | Si |
| SLU 2 | 1248 | -773 | 3086 | 0.53 | 17497 | 5.67 | Si |
| SLU 2 | 1460 | -219 | -3649 | 0.15 | 5218 | 1.43 | Si |
| SLU 52 | 1248 | -1010 | 2852 | 0.69 | 22386 | 7.85 | Si |
| SLU 52 | 1460 | -271 | -3408 | 0.19 | 6409 | 1.881 | Si |
| SLU 65 | 1248 | -1049 | 3654 | 0.72 | 23159 | 6.338 | Si |
| SLU 65 | 1460 | -298 | -4319 | 0.21 | 7045 | 1.631 | Si |
| SLU 64 | 1248 | -1012 | 3603 | 0.7 | 22416 | 6.221 | Si |
| SLU 64 | 1460 | -301 | -3784 | 0.21 | 7115 | 1.88 | Si |
| SLU 43 | 1248 | -927 | 4125 | 0.64 | 20704 | 5.02 | Si |
| SLU 43 | 1460 | -283 | -4187 | 0.19 | 6690 | 1.598 | Si |
| SLU 47 | 1248 | -1103 | 3516 | 0.76 | 24227 | 6.891 | Si |
| SLU 47 | 1460 | -320 | -4157 | 0.22 | 7547 | 1.815 | Si |
| SLU 1 | 1248 | -736 | 3035 | 0.51 | 16712 | 5.506 | Si |
| SLU 1 | 1460 | -222 | -3114 | 0.15 | 5289 | 1.698 | Si |

### Verifica a pressoflessione nel piano secondo D.M. 17-01-18 NTC §7.8.2.2.1 in combinazioni sismiche, γM = 2

| Comb. | Quota | N | M | σ0 | Mu | c.s. | Verifica |
|---|---|---|---|---|---|---|---|
| SLD 1 | 1248 | -1238 | 6700 | 0.85 | 27893 | 4.163 | Si |

| Comb. | Quota | N | M | σ0 | Mu | c.s. | Verifica |
|---|---|---|---|---|---|---|---|
| SLD 1 | 1460 | -291 | -9870 | 0 | 0 | 0 | No, e>l/2 |
| SLV 3 | 1248 | -1662 | 13255 | 1.14 | 36506 | 2.754 | Si |
| SLV 3 | 1460 | -392 | -23478 | 0 | 0 | 0 | No, e>l/2 |
| SLV 13 | 1248 | 117 | -8239 | 0 | 0 | 0 | No, Trazione |
| SLV 13 | 1460 | -58 | 18229 | 0 | 0 | 0 | No, e>l/2 |
| SLV 7 | 1248 | -734 | 7182 | 0.5 | 17039 | 2.372 | Si |
| SLV 7 | 1460 | -296 | -14750 | 0 | 0 | 0 | No, e>l/2 |
| SLV 8 | 1248 | -734 | 7182 | 0.5 | 17039 | 2.372 | Si |
| SLV 8 | 1460 | -296 | -14750 | 0 | 0 | 0 | No, e>l/2 |
| SLV 14 | 1248 | 117 | -8239 | 0 | 0 | 0 | No, Trazione |
| SLV 14 | 1460 | -58 | 18229 | 0 | 0 | 0 | No, e>l/2 |
| SLV 10 | 1248 | -812 | -2166 | 0.56 | 18771 | 8.667 | Si |
| SLV 10 | 1460 | -155 | 9502 | 0 | 0 | 0 | No, e>l/2 |
| SLV 9 | 1248 | -812 | -2166 | 0.56 | 18771 | 8.667 | Si |
| SLV 9 | 1460 | -155 | 9502 | 0 | 0 | 0 | No, e>l/2 |
| SLV 4 | 1248 | -1662 | 13255 | 1.14 | 36506 | 2.754 | Si |
| SLV 4 | 1460 | -392 | -23478 | 0 | 0 | 0 | No, e>l/2 |
| SLV 2 | 1248 | -1864 | 12299 | 1.28 | 40424 | 3.287 | Si |
| SLV 2 | 1460 | -379 | -19607 | 0 | 0 | 0 | No, e>l/2 |

### Verifica a taglio nel piano secondo D.M. 17-01-18 (N.T.C.) §7.8.2.2.2 con rottura per scorrimento in combinazioni non sismiche, γM = 3

| Comb. | Quota | N | V par | M | σ0 | σN | l' | fvd | Vt scorr. | Vt fess.diag. | Vt,lim | c.s. | Verifica |
|---|---|---|---|---|---|---|---|---|---|---|---|---|---|
| SLU 47 | 1248 | -1103 | 84 | 3516 | | 0.76 | 48.45 | 0.66 | 955 | | | 11.43 | Si |
| SLU 47 | 1460 | -320 | -119 | -4157 | | 0.32 | 33.73 | 0.6 | 605 | | | 5.07 | Si |
| SLU 52 | 1248 | -1010 | 70 | 2852 | | 0.69 | 48.45 | 0.65 | 942 | | | 13.43 | Si |
| SLU 52 | 1460 | -271 | -121 | -3408 | | 0.26 | 34.92 | 0.59 | 618 | | | 5.1 | Si |
| SLU 44 | 1248 | -964 | 107 | 4175 | | 0.66 | 48.45 | 0.64 | 936 | | | 8.74 | Si |
| SLU 44 | 1460 | -280 | -184 | -4721 | | 0.42 | 22.07 | 0.61 | 405 | | | 2.2 | Si |
| SLU 35 | 1248 | -1113 | -21 | 43 | | 0.77 | 48.45 | 0.66 | 956 | | | 45.54 | Si |
| SLU 35 | 1460 | -307 | 141 | -424 | | 0.21 | 48.45 | 0.58 | 848 | | | 6.03 | Si |
| SLU 2 | 1248 | -773 | 78 | 3086 | | 0.53 | 48.45 | 0.63 | 911 | | | 11.68 | Si |
| SLU 2 | 1460 | -219 | -153 | -3649 | | 0.32 | 22.79 | 0.6 | 409 | | | 2.67 | Si |
| SLU 23 | 1248 | -857 | 60 | 2565 | | 0.59 | 48.45 | 0.63 | 922 | | | 15.47 | Si |
| SLU 23 | 1460 | -238 | -123 | -3246 | | 0.25 | 31.74 | 0.59 | 561 | | | 4.55 | Si |
| SLU 46 | 1248 | -1058 | 88 | 3666 | | 0.73 | 48.45 | 0.65 | 949 | | | 10.76 | Si |
| SLU 46 | 1460 | -316 | -100 | -4096 | | 0.31 | 33.73 | 0.6 | 604 | | | 6.07 | Si |
| SLU 43 | 1248 | -927 | 105 | 4125 | | 0.64 | 48.45 | 0.64 | 931 | | | 8.84 | Si |
| SLU 43 | 1460 | -283 | -99 | -4187 | | 0.33 | 28.28 | 0.6 | 509 | | | 5.13 | Si |
| SLU 37 | 1248 | -1143 | -26 | -128 | | 0.79 | 48.45 | 0.66 | 960 | | | 36.49 | Si |
| SLU 37 | 1460 | -313 | 155 | -271 | | 0.21 | 48.45 | 0.58 | 849 | | | 5.49 | Si |
| SLU 65 | 1248 | -1049 | 89 | 3654 | | 0.72 | 48.45 | 0.65 | 947 | | | 10.67 | Si |
| SLU 65 | 1460 | -298 | -154 | -4319 | | 0.34 | 29.25 | 0.6 | 527 | | | 3.42 | Si |

### Verifica a taglio nel piano secondo D.M. 17-01-18 (N.T.C.) §7.8.2.2.2 con rottura per scorrimento in combinazioni sismiche, γM = 2

| Comb. | Quota | N | V par | M | σ0 | σN | l' | fvd | Vt scorr. | Vt fess.diag. | Vt,lim | c.s. | Verifica |
|---|---|---|---|---|---|---|---|---|---|---|---|---|---|
| SLV 2 | 1248 | -1864 | 905 | 12299 | | 1.28 | 48.45 | 1.09 | 1584 | | | 1.75 | Si |
| SLV 2 | 1460 | -379 | 778 | -19607 | | 0 | 0 | 0.83 | 0 | | | 0 | No, Vu<V |
| SLV 13 | 1248 | 117 | -825 | -8239 | | 0 | 0 | 0.83 | 0 | | | 0 | No, Vu<V |
| SLV 13 | 1460 | -58 | -522 | 18229 | | 0 | 0 | 0.83 | 0 | | | 0 | No, Vu<V |
| SLV 14 | 1248 | 117 | -825 | -8239 | | 0 | 0 | 0.83 | 0 | | | 0 | No, Vu<V |
| SLV 14 | 1460 | -58 | -522 | 18229 | | 0 | 0 | 0.83 | 0 | | | 0 | No, Vu<V |
| SLV 3 | 1248 | -1662 | 946 | 13255 | | 1.14 | 48.45 | 1.06 | 1544 | | | 1.63 | Si |
| SLV 3 | 1460 | -392 | 438 | -23478 | | 0 | 0 | 0.83 | 0 | | | 0 | No, Vu<V |
| SLV 8 | 1248 | -734 | 387 | 7182 | | 0.56 | 43.31 | 0.95 | 1229 | | | 3.17 | Si |
| SLV 8 | 1460 | -296 | -414 | -14750 | | 0 | 0 | 0.83 | 0 | | | 0 | No, Vu<V |
| SLV 10 | 1248 | -812 | -267 | -2166 | | 0.56 | 48.45 | 0.95 | 1374 | | | 5.15 | Si |
| SLV 10 | 1460 | -155 | 330 | 9502 | | 0 | 0 | 0.83 | 0 | | | 0 | No, Vu<V |
| SLV 7 | 1248 | -734 | 387 | 7182 | | 0.56 | 43.31 | 0.95 | 1229 | | | 3.17 | Si |
| SLV 7 | 1460 | -296 | -414 | -14750 | | 0 | 0 | 0.83 | 0 | | | 0 | No, Vu<V |
| SLV 4 | 1248 | -1662 | 946 | 13255 | | 1.14 | 48.45 | 1.06 | 1544 | | | 1.63 | Si |
| SLV 4 | 1460 | -392 | 438 | -23478 | | 0 | 0 | 0.83 | 0 | | | 0 | No, Vu<V |
| SLV 9 | 1248 | -812 | -267 | -2166 | | 0.56 | 48.45 | 0.95 | 1374 | | | 5.15 | Si |
| SLV 9 | 1460 | -155 | 330 | 9502 | | 0 | 0 | 0.83 | 0 | | | 0 | No, Vu<V |
| SLD 1 | 1248 | -1238 | 419 | 6700 | | 0.85 | 48.45 | 1 | 1459 | | | 3.48 | Si |
| SLD 1 | 1460 | -291 | 300 | -9870 | | 0 | 0 | 0.83 | 0 | | | 0 | No, Vu<V |

### Verifica a pressoflessione fuori piano D.M. 17-01-18 (N.T.C.)

quota 834.3 Wa 0.05 denominatore 8 γM = 2

| Comb. | fd | Sa | σ0 | N | M | Mc | Coeff.s. | Verifica |
|---|---|---|---|---|---|---|---|---|
| SLV 5 | 14 | 0.41 | 0 | -3433 | 79279 | 0 | 0 | No, e>t/2 |
| SLV 1 | 14 | 0.41 | 0 | -2507 | 79279 | 0 | 0 | No, e>t/2 |
| SLV 7 | 14 | 0.41 | 0 | -1382 | 79279 | 0 | 0 | No, e>t/2 |
| SLV 10 | 14 | 0.41 | 0 | -3612 | 79279 | 0 | 0 | No, e>t/2 |
| SLV 2 | 14 | 0.41 | 0 | -2507 | 79279 | 0 | 0 | No, e>t/2 |
| SLV 6 | 14 | 0.41 | 0 | -3433 | 79279 | 0 | 0 | No, e>t/2 |
| SLV 3 | 14 | 0.41 | 0 | -1892 | 79279 | 0 | 0 | No, e>t/2 |
| SLV 8 | 14 | 0.41 | 0 | -1382 | 79279 | 0 | 0 | No, e>t/2 |
| SLV 9 | 14 | 0.41 | 0 | -3612 | 79279 | 0 | 0 | No, e>t/2 |
| SLV 4 | 14 | 0.41 | 0 | -1892 | 79279 | 0 | 0 | No, e>t/2 |

### Verifica dei meccanismi locali di collasso con analisi cinematica lineare

forza di aggancio al piano = 0 quota mezzeria = 834.3 Wa = 0.05 Ta = 0.9796

| Comb. | N top | N base | V orto | α0 | M* | e* | a0* | aLim | Verifica |
|---|---|---|---|---|---|---|---|---|---|
| SLV 7 | -22 | 500 | -12 | 0 | 0 | 0 | 0 | 239.674 | No, Trazione |
| SLV 3 | -69 | 1333 | -3 | 0 | 0 | 0 | 0 | 239.674 | No, Trazione |
| SLV 4 | -69 | 1333 | -3 | 0 | 0 | 0 | 0 | 239.674 | No, Trazione |
| SLV 8 | -22 | 500 | -12 | 0 | 0 | 0 | 0 | 239.674 | No, Trazione |

| Comb. | N top | N base | V orto | α0 | M* | e* | a0* | aLim | Verifica |
|---|---|---|---|---|---|---|---|---|---|
| SLV 10 | -74 | -10111 | 20 | 0.011 | 3.544 | 0.981 | 16.294 | 239.674 | No |
| SLV 9 | -74 | -10111 | 20 | 0.011 | 3.544 | 0.981 | 16.294 | 239.674 | No |
| SLV 5 | -93 | -7113 | 19 | 0.012 | 3.547 | 0.976 | 17.491 | 239.674 | No |
| SLV 6 | -93 | -7113 | 19 | 0.012 | 3.547 | 0.976 | 17.491 | 239.674 | No |
| SLV 12 | -3 | -2497 | -11 | 0.016 | 3.538 | 0.999 | 23.774 | 239.674 | No |
| SLV 11 | -3 | -2497 | -11 | 0.016 | 3.538 | 0.999 | 23.774 | 239.674 | No |

### Tabella dei coefficienti di sicurezza minimi

| Stato limite | Coeff.s. | Comb. | Verifica |
|---|---|---|---|
| PF_SLU | 1.402 | SLU 44 | Si |
| V_SLU | 2.198 | SLU 44 | Si |
| PF_SLV | 0 | SLV 16 | No |
| V_SLV | 0 | SLD 1 | No |
| PFFP_SLV | 0 | SLV 1 | No |
| R_SLV | 0 | SLV 8 | No |

## Maschio 245

Verifiche condotte secondo D.M. 17-01-18 (N.T.C.)

### Dati geometrici

| X ini. | Y ini. | X fin. | Y fin. | Quota i. | Quota.s | l | Sp. | h netta | h ini. | h fin. | a | a.s.,sx | a.s.,dx |
|---|---|---|---|---|---|---|---|---|---|---|---|---|---|
| -772.3 | -485.9 | -867.8 | -485.9 | L3 | F1 | 95.5 | 30 | 1326.4 | 1326.3 | 1326.4 | | | |

### Caratteristiche del materiale

(Circolare 7 21-01-19 C8.5.I) Muratura in mattoni pieni e malta di calce LC2_Corti

| fb | fk | fvk0 | fmedio | τ0 | fv0 | μ | ϕ | fv,lim | E | G | FC |
|---|---|---|---|---|---|---|---|---|---|---|---|
| 60 | | | 34.5 | 0.9 | 2 | 0.58 | 0.77 | 3.25 | 32000 | 12800 | 1.2 |

### Verifica a pressoflessione nel piano secondo D.M. 17-01-18 NTC §7.8.2.2.1 in combinazioni non sismiche, γM = 3

| Comb. | Quota | N | M | σ0 | Mu | c.s. | Verifica |
|---|---|---|---|---|---|---|---|
| SLU 44 | 1248 | -2719 | 8591 | 0.95 | 114785 | 13.361 | Si |
| SLU 44 | 1460 | -897 | -17832 | 0.31 | 41206 | 2.311 | Si |
| SLU 27 | 1248 | -1885 | -1790 | 0.66 | 82771 | 46.247 | Si |
| SLU 27 | 1460 | -559 | 10580 | 0.19 | 26055 | 2.463 | Si |
| SLU 2 | 1248 | -2216 | 7576 | 0.77 | 95835 | 12.65 | Si |
| SLU 2 | 1460 | -775 | -16608 | 0.27 | 35804 | 2.156 | Si |
| SLU 8 | 1248 | -1795 | -1999 | 0.63 | 79162 | 39.598 | Si |
| SLU 8 | 1460 | -499 | 10428 | 0.17 | 23324 | 2.237 | Si |
| SLU 16 | 1248 | -1963 | -4149 | 0.68 | 85879 | 20.697 | Si |
| SLU 16 | 1460 | -588 | 12192 | 0.21 | 27380 | 2.246 | Si |
| SLU 35 | 1248 | -2052 | -3940 | 0.72 | 89427 | 22.698 | Si |
| SLU 35 | 1460 | -648 | 12343 | 0.23 | 30089 | 2.438 | Si |
| SLU 23 | 1248 | -2304 | 7062 | 0.8 | 99209 | 14.049 | Si |
| SLU 23 | 1460 | -833 | -15031 | 0.29 | 38371 | 2.553 | Si |
| SLU 29 | 1248 | -1883 | -2513 | 0.66 | 82686 | 32.904 | Si |
| SLU 29 | 1460 | -557 | 12005 | 0.19 | 25957 | 2.162 | Si |
| SLU 37 | 1248 | -2050 | -4663 | 0.72 | 89343 | 19.16 | Si |
| SLU 37 | 1460 | -646 | 13769 | 0.23 | 29991 | 2.178 | Si |
| SLU 14 | 1248 | -1965 | -3426 | 0.69 | 85963 | 25.09 | Si |
| SLU 14 | 1460 | -590 | 10767 | 0.21 | 27478 | 2.552 | Si |

### Verifica a pressoflessione nel piano secondo D.M. 17-01-18 NTC §7.8.2.2.1 in combinazioni sismiche, γM = 2

| Comb. | Quota | N | M | σ0 | Mu | c.s. | Verifica |
|---|---|---|---|---|---|---|---|
| SLV 4 | 1248 | -794 | 10245 | 0.28 | 37072 | 3.619 | Si |
| SLV 4 | 1460 | -338 | -58135 | 0 | 0 | 0 | No, e>l/2 |
| SLV 5 | 1248 | -2550 | -90264 | 0.89 | 112973 | 1.252 | Si |
| SLV 5 | 1460 | 1833 | 113392 | 0 | 0 | 0 | No, Trazione |
| SLV 9 | 1248 | -3016 | -79540 | 1.05 | 131669 | 1.655 | Si |
| SLV 9 | 1460 | 1349 | 125722 | 0 | 0 | 0 | No, Trazione |
| SLV 6 | 1248 | -2550 | -90264 | 0.89 | 112973 | 1.252 | Si |
| SLV 6 | 1460 | 1833 | 113392 | 0 | 0 | 0 | No, Trazione |
| SLV 2 | 1248 | -1354 | -41918 | 0.47 | 62191 | 1.484 | Si |
| SLV 2 | 1460 | 925 | 14393 | 0 | 0 | 0 | No, Trazione |
| SLV 8 | 1248 | -683 | 83614 | 0 | 0 | 0 | No, e>l/2 |
| SLV 8 | 1460 | -2376 | -128366 | 0 | 0 | 0 | No, e>l/2 |
| SLD 1 | 1248 | -1641 | -15345 | 0.57 | 74737 | 4.87 | Si |
| SLD 1 | 1460 | 65 | 3677 | 0 | 0 | 0 | No, Trazione |
| SLV 10 | 1248 | -3016 | -79540 | 1.05 | 131669 | 1.655 | Si |
| SLV 10 | 1460 | 1349 | 125722 | 0 | 0 | 0 | No, Trazione |
| SLV 7 | 1248 | -683 | 83614 | 0 | 0 | 0 | No, e>l/2 |
| SLV 7 | 1460 | -2376 | -128366 | 0 | 0 | 0 | No, e>l/2 |
| SLV 3 | 1248 | -794 | 10245 | 0.28 | 37072 | 3.619 | Si |
| SLV 3 | 1460 | -338 | -58135 | 0 | 0 | 0 | No, e>l/2 |

### Verifica a taglio nel piano secondo D.M. 17-01-18 (N.T.C.) §7.8.2.2.2 con rottura per scorrimento in combinazioni non sismiche, γM = 3

| Comb. | Quota | N | V par | M | σ0 | σN | l' | fvd | Vt scorr. | Vt fess.diag. | Vt,lim | c.s. | Verifica |
|---|---|---|---|---|---|---|---|---|---|---|---|---|---|
| SLU 78 | 1248 | -2819 | -50 | -58 | | 0.98 | 95.55 | 0.69 | 1968 | | | 38.98 | Si |
| SLU 78 | 1460 | -952 | 225 | 2521 | | 0.33 | 95.55 | 0.6 | 1719 | | | 7.65 | Si |
| SLU 36 | 1248 | -2316 | -77 | -1073 | | 0.81 | 95.55 | 0.66 | 1901 | | | 24.56 | Si |
| SLU 36 | 1460 | -830 | 239 | 3744 | | 0.29 | 95.55 | 0.59 | 1703 | | | 7.14 | Si |
| SLU 35 | 1248 | -2052 | -158 | -3940 | | 0.72 | 95.55 | 0.65 | 1866 | | | 11.83 | Si |
| SLU 35 | 1460 | -648 | 193 | 12343 | | 0.25 | 86.16 | 0.59 | 1522 | | | 7.88 | Si |
| SLU 80 | 1248 | -2817 | -69 | -781 | | 0.98 | 95.55 | 0.69 | 1968 | | | 28.64 | Si |

| Comb. | Quota | N | V par | M | σ0 | σN | l' | fvd | Vt scorr. | Vt fess.diag. | Vt,lim | c.s. | Verifica |
|---|---|---|---|---|---|---|---|---|---|---|---|---|---|
| SLU 80 | 1460 | -949 | 231 | 3946 | | 0.33 | 95.55 | 0.6 | 1719 | | | 7.44 | Si |
| SLU 38 | 1248 | -2314 | -96 | -1797 | | 0.81 | 95.55 | 0.66 | 1901 | | | 19.87 | Si |
| SLU 38 | 1460 | -828 | 245 | 5170 | | 0.29 | 95.55 | 0.59 | 1703 | | | 6.95 | Si |
| SLU 34 | 1248 | -2481 | 39 | 2513 | | 0.87 | 95.55 | 0.67 | 1923 | | | 49.24 | Si |
| SLU 34 | 1460 | -935 | 240 | -6915 | | 0.33 | 95.55 | 0.6 | 1717 | | | 7.16 | Si |
| SLU 76 | 1248 | -2984 | 66 | 3529 | | 1.04 | 95.55 | 0.69 | 1990 | | | 30.16 | Si |
| SLU 76 | 1460 | -1057 | 226 | -8139 | | 0.37 | 95.55 | 0.6 | 1733 | | | 7.67 | Si |
| SLU 37 | 1248 | -2050 | -176 | -4663 | | 0.72 | 95.55 | 0.65 | 1866 | | | 10.6 | Si |
| SLU 37 | 1460 | -646 | 200 | 13769 | | 0.27 | 79.34 | 0.59 | 1408 | | | 7.06 | Si |
| SLU 42 | 1248 | -2377 | -33 | -319 | | 0.83 | 95.55 | 0.67 | 1909 | | | 57.01 | Si |
| SLU 42 | 1460 | -852 | 246 | -427 | | 0.3 | 95.55 | 0.6 | 1706 | | | 6.94 | Si |
| SLU 84 | 1248 | -2880 | -7 | 696 | | 1 | 95.55 | 0.69 | 1976 | | | 301.11 | Si |
| SLU 84 | 1460 | -974 | 232 | -1650 | | 0.34 | 95.55 | 0.6 | 1722 | | | 7.43 | Si |

### Verifica a taglio nel piano secondo D.M. 17-01-18 (N.T.C.) §7.8.2.2.2 con rottura per scorrimento in combinazioni sismiche, γM = 2

| Comb. | Quota | N | V par | M | σ0 | σN | l' | fvd | Vt scorr. | Vt fess.diag. | Vt,lim | c.s. | Verifica |
|---|---|---|---|---|---|---|---|---|---|---|---|---|---|
| SLV 2 | 1248 | -1354 | 585 | -41918 | | 0.89 | 50.45 | 1.01 | 1532 | | | 2.62 | Si |
| SLV 2 | 1460 | 925 | -130 | 14393 | | 0 | 0 | 0.83 | 0 | | | 0 | No, Vu<V |
| SLV 5 | 1248 | -2550 | -428 | -90264 | | 2.29 | 37.15 | 1.29 | 1439 | | | 3.36 | Si |
| SLV 5 | 1460 | 1833 | 885 | 113392 | | 0 | 0 | 0.83 | 0 | | | 0 | No, Vu<V |
| SLV 10 | 1248 | -3016 | -881 | -79540 | | 1.57 | 64.2 | 1.15 | 2208 | | | 2.51 | Si |
| SLV 10 | 1460 | 1349 | 1164 | 125722 | | 0 | 0 | 0.83 | 0 | | | 0 | No, Vu<V |
| SLV 3 | 1248 | -794 | 1000 | 10245 | | 0.28 | 95.55 | 0.89 | 2547 | | | 2.55 | Si |
| SLV 3 | 1460 | -338 | -722 | -58135 | | 0 | 0 | 0.83 | 0 | | | 0 | No, Vu<V |
| SLV 6 | 1248 | -2550 | -428 | -90264 | | 2.29 | 37.15 | 1.29 | 1439 | | | 3.36 | Si |
| SLV 6 | 1460 | 1833 | 885 | 113392 | | 0 | 0 | 0.83 | 0 | | | 0 | No, Vu<V |
| SLV 4 | 1248 | -794 | 1000 | 10245 | | 0.28 | 95.55 | 0.89 | 2547 | | | 2.55 | Si |
| SLV 4 | 1460 | -338 | -722 | -58135 | | 0 | 0 | 0.83 | 0 | | | 0 | No, Vu<V |
| SLV 7 | 1248 | -683 | 956 | 83614 | | 0 | 0 | 0.83 | 0 | | | 0 | No, Vu<V |
| SLV 7 | 1460 | -2376 | -1087 | -128366 | | 0 | 0 | 0.83 | 0 | | | 0 | No, Vu<V |
| SLV 8 | 1248 | -683 | 956 | 83614 | | 0 | 0 | 0.83 | 0 | | | 0 | No, Vu<V |
| SLV 8 | 1460 | -2376 | -1087 | -128366 | | 0 | 0 | 0.83 | 0 | | | 0 | No, Vu<V |
| SLD 1 | 1248 | -1641 | 278 | -15345 | | 0.57 | 95.55 | 0.95 | 2717 | | | 9.79 | Si |
| SLD 1 | 1460 | 65 | -42 | 3677 | | 0 | 0 | 0.83 | 0 | | | 0 | No, Vu<V |
| SLV 9 | 1248 | -3016 | -881 | -79540 | | 1.57 | 64.2 | 1.15 | 2208 | | | 2.51 | Si |
| SLV 9 | 1460 | 1349 | 1164 | 125722 | | 0 | 0 | 0.83 | 0 | | | 0 | No, Vu<V |

### Verifica a pressoflessione fuori piano D.M. 17-01-18 (N.T.C.)

quota 834.2 Wa 0.05 denominatore 8 γM = 2

| Comb. | fd | Sa | σ0 | N | M | Mc | Coeff.s. | Verifica |
|---|---|---|---|---|---|---|---|---|
| SLV 6 | 14 | 0.41 | 0 | -7834 | 156280 | 0 | 0 | No, e>t/2 |
| SLV 9 | 14 | 0.41 | 0 | -8600 | 156280 | 0 | 0 | No, e>t/2 |
| SLV 8 | 14 | 0.41 | 0 | -714 | 156280 | 0 | 0 | No, e>t/2 |
| SLV 10 | 14 | 0.41 | 0 | -8600 | 156280 | 0 | 0 | No, e>t/2 |
| SLV 1 | 14 | 0.41 | 0 | -4448 | 156280 | 0 | 0 | No, e>t/2 |
| SLV 5 | 14 | 0.41 | 0 | -7834 | 156280 | 0 | 0 | No, e>t/2 |
| SLV 2 | 14 | 0.41 | 0 | -4448 | 156280 | 0 | 0 | No, e>t/2 |
| SLV 3 | 14 | 0.41 | 0 | -2312 | 156280 | 0 | 0 | No, e>t/2 |
| SLV 7 | 14 | 0.41 | 0 | -714 | 156280 | 0 | 0 | No, e>t/2 |
| SLV 4 | 14 | 0.41 | 0 | -2312 | 156280 | 0 | 0 | No, e>t/2 |

### Verifica dei meccanismi locali di collasso con analisi cinematica lineare

forza di aggancio al piano = 0 quota mezzeria = 834.2 Wa = 0.05 Ta = 0.9793

| Comb. | N top | N base | V orto | α0 | M* | e* | a0* | aLim | Verifica |
|---|---|---|---|---|---|---|---|---|---|
| SLV 6 | 986 | -11728 | -19 | 0 | 0 | 0 | 0 | 239.674 | No, Trazione |
| SLV 2 | 353 | -6561 | -57 | 0 | 0 | 0 | 0 | 239.674 | No, Trazione |
| SLV 1 | 353 | -6561 | -57 | 0 | 0 | 0 | 0 | 239.674 | No, Trazione |
| SLV 10 | 887 | -13753 | 11 | 0 | 0 | 0 | 0 | 239.674 | No, Trazione |
| SLV 13 | 23 | -13309 | 41 | 0 | 0 | 0 | 0 | 239.674 | No, Trazione |
| SLV 9 | 887 | -13753 | 11 | 0 | 0 | 0 | 0 | 239.674 | No, Trazione |
| SLV 14 | 23 | -13309 | 41 | 0 | 0 | 0 | 0 | 239.674 | No, Trazione |
| SLV 5 | 986 | -11728 | -19 | 0 | 0 | 0 | 0 | 239.674 | No, Trazione |
| SLV 3 | -288 | -4156 | -61 | 0.005 | 7.018 | 0.965 | 8.107 | 239.674 | No |
| SLV 4 | -288 | -4156 | -61 | 0.005 | 7.018 | 0.965 | 8.107 | 239.674 | No |

### Tabella dei coefficienti di sicurezza minimi

| Stato limite | Coeff.s. | Comb. | Verifica |
|---|---|---|---|
| PF_SLU | 2.156 | SLU 2 | Si |
| V_SLU | 6.942 | SLU 42 | Si |
| PF_SLV | 0 | SLV 10 | No |
| V_SLV | 0 | SLD 1 | No |
| PFFP_SLV | 0 | SLV 1 | No |
| R_SLV | 0 | SLV 14 | No |

## Maschio 246

Verifiche condotte secondo D.M. 17-01-18 (N.T.C.)

### Dati geometrici

| X ini. | Y ini. | X fin. | Y fin. | Quota i. | Quota.s | l | Sp. | h netta | h ini. | h fin. | a | a.s.,sx | a.s.,dx |
|---|---|---|---|---|---|---|---|---|---|---|---|---|---|
| -772.3 | -500.9 | -772.3 | -486.1 | L3 | F1 | 14.7 | 30 | 1322.8 | 1319.4 | 1326.2 | | | |

### Caratteristiche del materiale

(Circolare 7 21-01-19 C8.5.I) Muratura in mattoni pieni e malta di calce LC2_Corti

| fb | fk | fvk0 | fmedio | τ0 | fv0 | μ | ϕ | fv,lim | E | G | FC |
|---|---|---|---|---|---|---|---|---|---|---|---|
| 60 | | | 34.5 | 0.9 | 2 | 0.58 | 0.77 | 3.25 | 32000 | 12800 | 1.2 |

Verifica a pressoflessione nel piano secondo D.M. 17-01-18 NTC §7.8.2.2.1 in combinazioni non sismiche, γM = 3

| Comb. | Quota | N | M | σ0 | Mu | c.s. | Verifica |
|---|---|---|---|---|---|---|---|
| SLU 32 | 1248 | -119 | 730 | 0.27 | 846 | 1.158 | Si |
| SLU 32 | 1460 | -8 | 185 | 0 | 0 | 0 | No, e>l/2 |
| SLU 42 | 1248 | -128 | 770 | 0.29 | 907 | 1.178 | Si |
| SLU 42 | 1460 | -36 | 324 | 0 | 0 | 0 | No, e>l/2 |
| SLU 59 | 1248 | -164 | 978 | 0.37 | 1153 | 1.179 | Si |
| SLU 59 | 1460 | -29 | 320 | 0 | 0 | 0 | No, e>l/2 |
| SLU 29 | 1248 | -116 | 708 | 0.26 | 826 | 1.166 | Si |
| SLU 29 | 1460 | 37 | 213 | 0 | 0 | 0 | No, Trazione |
| SLU 30 | 1248 | -124 | 737 | 0.28 | 882 | 1.196 | Si |
| SLU 30 | 1460 | 3 | 334 | 0 | 0 | 0 | No, Trazione |
| SLU 27 | 1248 | -115 | 703 | 0.26 | 821 | 1.167 | Si |
| SLU 27 | 1460 | 32 | 208 | 0 | 0 | 0 | No, Trazione |
| SLU 35 | 1248 | -115 | 717 | 0.26 | 822 | 1.145 | Si |
| SLU 35 | 1460 | 32 | 236 | 0 | 0 | 0 | No, Trazione |
| SLU 28 | 1248 | -123 | 732 | 0.28 | 876 | 1.197 | Si |
| SLU 28 | 1460 | -3 | 328 | 0 | 0 | 0 | No, e>l/2 |
| SLU 24 | 1248 | -119 | 716 | 0.27 | 845 | 1.18 | Si |
| SLU 24 | 1460 | -8 | 156 | 0 | 0 | 0 | No, e>l/2 |
| SLU 48 | 1248 | -155 | 930 | 0.35 | 1092 | 1.175 | Si |
| SLU 48 | 1460 | -1 | 165 | 0 | 0 | 0 | No, e>l/2 |

Verifica a pressoflessione nel piano secondo D.M. 17-01-18 NTC §7.8.2.2.1 in combinazioni sismiche, γM = 2

| Comb. | Quota | N | M | σ0 | Mu | c.s. | Verifica |
|---|---|---|---|---|---|---|---|
| SLV 15 | 1248 | -206 | 1040 | 0.46 | 1459 | 1.402 | Si |
| SLV 15 | 1460 | -87 | 1807 | 0 | 0 | 0 | No, e>l/2 |
| SLV 13 | 1248 | 117 | -45 | 0 | 0 | 0 | No, Trazione |
| SLV 13 | 1460 | 94 | 892 | 0 | 0 | 0 | No, Trazione |
| SLV 6 | 1248 | 390 | -995 | 0 | 0 | 0 | No, Trazione |
| SLV 6 | 1460 | 234 | -1818 | 0 | 0 | 0 | No, Trazione |
| SLV 9 | 1248 | 438 | -1141 | 0 | 0 | 0 | No, Trazione |
| SLV 9 | 1460 | 267 | -1060 | 0 | 0 | 0 | No, Trazione |
| SLV 5 | 1248 | 390 | -995 | 0 | 0 | 0 | No, Trazione |
| SLV 5 | 1460 | 234 | -1818 | 0 | 0 | 0 | No, Trazione |
| SLV 10 | 1248 | 438 | -1141 | 0 | 0 | 0 | No, Trazione |
| SLV 10 | 1460 | 267 | -1060 | 0 | 0 | 0 | No, Trazione |
| SLV 1 | 1248 | -43 | 442 | 0 | 0 | 0 | No, e>l/2 |
| SLV 1 | 1460 | -15 | -1635 | 0 | 0 | 0 | No, e>l/2 |
| SLV 14 | 1248 | 117 | -45 | 0 | 0 | 0 | No, Trazione |
| SLV 14 | 1460 | 94 | 892 | 0 | 0 | 0 | No, Trazione |
| SLD 1 | 1248 | -90 | 617 | 0.2 | 652 | 1.057 | Si |
| SLD 1 | 1460 | -44 | -632 | 0 | 0 | 0 | No, e>l/2 |
| SLV 2 | 1248 | -43 | 442 | 0 | 0 | 0 | No, e>l/2 |
| SLV 2 | 1460 | -15 | -1635 | 0 | 0 | 0 | No, e>l/2 |

Verifica a taglio nel piano secondo D.M. 17-01-18 (N.T.C.) §7.8.2.2.2 con rottura per scorrimento in combinazioni non sismiche, γM = 3

| Comb. | Quota | N | V par | M | σ0 | σN | l' | fvd | Vt scorr. | Vt fess.diag. | Vt,lim | c.s. | Verifica |
|---|---|---|---|---|---|---|---|---|---|---|---|---|---|
| SLU 57 | 1248 | -163 | 11 | 973 | | 1.29 | 4.21 | 0.73 | 92 | | | 8.24 | Si |
| SLU 57 | 1460 | -35 | 59 | 314 | | 0 | 0 | 0.56 | 0 | | | 0 | No, Vu<V |
| SLU 32 | 1248 | -119 | 9 | 730 | | 1.08 | 3.66 | 0.7 | 77 | | | 8.92 | Si |
| SLU 32 | 1460 | -8 | 33 | 185 | | 0 | 0 | 0.56 | 0 | | | 0 | No, Vu<V |
| SLU 24 | 1248 | -119 | 10 | 716 | | 0.99 | 3.99 | 0.69 | 82 | | | 8.56 | Si |
| SLU 24 | 1460 | -8 | 22 | 156 | | 0 | 0 | 0.56 | 0 | | | 0 | No, Vu<V |
| SLU 28 | 1248 | -123 | 9 | 732 | | 0.96 | 4.28 | 0.68 | 88 | | | 10.17 | Si |
| SLU 28 | 1460 | -3 | 48 | 328 | | 0 | 0 | 0.56 | 0 | | | 0 | No, Vu<V |
| SLU 33 | 1248 | -127 | 7 | 759 | | 1.02 | 4.15 | 0.69 | 86 | | | 11.81 | Si |
| SLU 33 | 1460 | -42 | 69 | 306 | | 0 | 0 | 0.56 | 0 | | | 0 | No, Vu<V |
| SLU 27 | 1248 | -115 | 10 | 703 | | 1.02 | 3.77 | 0.69 | 78 | | | 7.87 | Si |
| SLU 27 | 1460 | 32 | 13 | 208 | | 0 | 0 | 0.56 | 0 | | | 0 | No, Vu<V |
| SLU 56 | 1248 | -155 | 12 | 944 | | 1.35 | 3.84 | 0.73 | 85 | | | 6.78 | Si |
| SLU 56 | 1460 | 0 | 24 | 194 | | 0 | 0 | 0.56 | 0 | | | 0 | No, Vu<V |
| SLU 29 | 1248 | -116 | 10 | 708 | | 1.03 | 3.76 | 0.69 | 78 | | | 7.65 | Si |
| SLU 29 | 1460 | 37 | 10 | 213 | | 0 | 0 | 0.56 | 0 | | | 0 | No, Vu<V |
| SLU 42 | 1248 | -128 | 7 | 770 | | 1.06 | 4.01 | 0.7 | 84 | | | 11.75 | Si |
| SLU 42 | 1460 | -36 | 70 | 324 | | 0 | 0 | 0.56 | 0 | | | 0 | No, Vu<V |
| SLU 30 | 1248 | -124 | 9 | 737 | | 0.97 | 4.26 | 0.68 | 88 | | | 9.84 | Si |
| SLU 30 | 1460 | 3 | 45 | 334 | | 0 | 0 | 0.56 | 0 | | | 0 | No, Vu<V |

Verifica a taglio nel piano secondo D.M. 17-01-18 (N.T.C.) §7.8.2.2.2 con rottura per scorrimento in combinazioni sismiche, γM = 2

| Comb. | Quota | N | V par | M | σ0 | σN | l' | fvd | Vt scorr. | Vt fess.diag. | Vt,lim | c.s. | Verifica |
|---|---|---|---|---|---|---|---|---|---|---|---|---|---|
| SLV 14 | 1248 | 117 | -26 | -45 | | 0 | 0 | 0.83 | 0 | | | 0 | No, Vu<V |
| SLV 14 | 1460 | 94 | 54 | 892 | | 0 | 0 | 0.83 | 0 | | | 0 | No, Vu<V |
| SLV 1 | 1248 | -43 | -10 | 442 | | 0 | 0 | 0.83 | 0 | | | 0 | No, Vu<V |
| SLV 1 | 1460 | -15 | -130 | -1635 | | 0 | 0 | 0.83 | 0 | | | 0 | No, Vu<V |
| SLV 10 | 1248 | 438 | -86 | -1141 | | 0 | 0 | 0.83 | 0 | | | 0 | No, Vu<V |
| SLV 10 | 1460 | 267 | -163 | -1060 | | 0 | 0 | 0.83 | 0 | | | 0 | No, Vu<V |
| SLV 9 | 1248 | 438 | -86 | -1141 | | 0 | 0 | 0.83 | 0 | | | 0 | No, Vu<V |
| SLV 9 | 1460 | 267 | -163 | -1060 | | 0 | 0 | 0.83 | 0 | | | 0 | No, Vu<V |
| SLD 1 | 1248 | -90 | 1 | 617 | | 1.95 | 1.54 | 1.22 | 56 | | | 46.42 | Si |
| SLD 1 | 1460 | -44 | -35 | -632 | | 0 | 0 | 0.83 | 0 | | | 0 | No, Vu<V |
| SLV 5 | 1248 | 390 | -81 | -995 | | 0 | 0 | 0.83 | 0 | | | 0 | No, Vu<V |
| SLV 5 | 1460 | 234 | -218 | -1818 | | 0 | 0 | 0.83 | 0 | | | 0 | No, Vu<V |
| SLV 2 | 1248 | -43 | -10 | 442 | | 0 | 0 | 0.83 | 0 | | | 0 | No, Vu<V |
| SLV 2 | 1460 | -15 | -130 | -1635 | | 0 | 0 | 0.83 | 0 | | | 0 | No, Vu<V |

| Comb. | Quota | N | V par | M | σ0 | σN | l' | fvd | Vt scorr. | Vt fess.diag. | Vt,lim | c.s. | Verifica |
|---|---|---|---|---|---|---|---|---|---|---|---|---|---|
| SLV 13 | 1248 | 117 | -26 | -45 | | 0 | 0 | 0.83 | 0 | | | 0 | No, Vu<V |
| SLV 13 | 1460 | 94 | 54 | 892 | | 0 | 0 | 0.83 | 0 | | | 0 | No, Vu<V |
| SLV 6 | 1248 | 390 | -81 | -995 | | 0 | 0 | 0.83 | 0 | | | 0 | No, Vu<V |
| SLV 6 | 1460 | 234 | -218 | -1818 | | 0 | 0 | 0.83 | 0 | | | 0 | No, Vu<V |
| SLV 15 | 1248 | -206 | 29 | 1040 | | 0.99 | 6.94 | 1.03 | 215 | | | 7.28 | Si |
| SLV 15 | 1460 | -87 | 184 | 1807 | | 0 | 0 | 0.83 | 0 | | | 0 | No, Vu<V |

### Verifica a pressoflessione fuori piano D.M. 17-01-18 (N.T.C.)

quota 830.7 Wa 0.05 denominatore 8 γM = 2

| Comb. | fd | Sa | σ0 | N | M | Mc | Coeff.s. | Verifica |
|---|---|---|---|---|---|---|---|---|
| SLV 6 | 14 | 0.41 | 0 | -217 | 23955 | 0 | 0 | No, e>t/2 |
| SLV 7 | 14 | 0.41 | 0 | -416 | 23955 | 0 | 0 | No, e>t/2 |
| SLV 5 | 14 | 0.41 | 0 | -217 | 23955 | 0 | 0 | No, e>t/2 |
| SLV 3 | 14 | 0.41 | 0 | -334 | 23955 | 0 | 0 | No, e>t/2 |
| SLV 8 | 14 | 0.41 | 0 | -416 | 23955 | 0 | 0 | No, e>t/2 |
| SLV 1 | 14 | 0.41 | 0 | -274 | 23955 | 0 | 0 | No, e>t/2 |
| SLV 10 | 14 | 0.41 | 0 | -228 | 23955 | 0 | 0 | No, e>t/2 |
| SLV 9 | 14 | 0.41 | 0 | -228 | 23955 | 0 | 0 | No, e>t/2 |
| SLV 4 | 14 | 0.41 | 0 | -334 | 23955 | 0 | 0 | No, e>t/2 |
| SLV 2 | 14 | 0.41 | 0 | -274 | 23955 | 0 | 0 | No, e>t/2 |

### Verifica dei meccanismi locali di collasso con analisi cinematica lineare

forza di aggancio al piano = 0 quota mezzeria = 830.7 Wa = 0.05 Ta = 0.974

| Comb. | N top | N base | V orto | α0 | M* | e* | a0* | aLim | Verifica |
|---|---|---|---|---|---|---|---|---|---|
| SLV 10 | 438 | -2745 | 72 | 0 | 0 | 0 | 0 | 239.674 | No, Trazione |
| SLV 8 | -455 | 1558 | -85 | 0 | 0 | 0 | 0 | 239.674 | No, Trazione |
| SLV 4 | -219 | 364 | 89 | 0 | 0 | 0 | 0 | 239.674 | No, Trazione |
| SLV 6 | 387 | -2539 | 151 | 0 | 0 | 0 | 0 | 239.674 | No, Trazione |
| SLV 9 | 438 | -2745 | 72 | 0 | 0 | 0 | 0 | 239.674 | No, Trazione |
| SLV 2 | 34 | -865 | 160 | 0 | 0 | 0 | 0 | 239.674 | No, Trazione |
| SLV 3 | -219 | 364 | 89 | 0 | 0 | 0 | 0 | 239.674 | No, Trazione |
| SLV 1 | 34 | -865 | 160 | 0 | 0 | 0 | 0 | 239.674 | No, Trazione |
| SLV 5 | 387 | -2539 | 151 | 0 | 0 | 0 | 0 | 239.674 | No, Trazione |
| SLV 7 | -455 | 1558 | -85 | 0 | 0 | 0 | 0 | 239.674 | No, Trazione |

### Tabella dei coefficienti di sicurezza minimi

| Stato limite | Coeff.s. | Comb. | Verifica |
|---|---|---|---|
| PF_SLU | 0 | SLU 79 | No |
| V_SLU | 0 | SLU 6 | No |
| PF_SLV | 0 | SLV 14 | No |
| V_SLV | 0 | SLD 1 | No |
| PFFP_SLV | 0 | SLV 1 | No |
| R_SLV | 0 | SLV 14 | No |

## Maschio 247

Verifiche condotte secondo D.M. 17-01-18 (N.T.C.)

### Dati geometrici

| X ini. | Y ini. | X fin. | Y fin. | Quota i. | Quota.s | l | Sp. | h netta | h ini. | h fin. | a | a.s.,sx | a.s.,dx |
|---|---|---|---|---|---|---|---|---|---|---|---|---|---|
| -772.3 | -377.1 | -772.3 | -349.9 | L3 | F1 | 27.3 | 30 | 1382.9 | 1376.6 | 1389.2 | | | |

### Caratteristiche del materiale

(Circolare 7 21-01-19 C8.5.I) Muratura in mattoni pieni e malta di calce LC2_Corti

| fb | fk | fvk0 | fmedio | τ0 | fv0 | μ | ϕ | fv,lim | E | G | FC |
|---|---|---|---|---|---|---|---|---|---|---|---|
| 60 | | | 34.5 | 0.9 | 2 | 0.58 | 0.77 | 3.25 | 32000 | 12800 | 1.2 |

### Verifica a pressoflessione nel piano secondo D.M. 17-01-18 NTC §7.8.2.2.1 in combinazioni non sismiche, γM = 3

| Comb. | Quota | N | M | σ0 | Mu | c.s. | Verifica |
|---|---|---|---|---|---|---|---|
| SLU 49 | 1248 | -951 | -4536 | 1.16 | 11108 | 2.449 | Si |
| SLU 49 | 1460 | -19 | 2446 | 0 | 0 | 0 | No, e>l/2 |
| SLU 57 | 1248 | -951 | -5430 | 1.16 | 11106 | 2.045 | Si |
| SLU 57 | 1460 | 56 | 2865 | 0 | 0 | 0 | No, Trazione |
| SLU 54 | 1248 | -873 | -5878 | 1.07 | 10338 | 1.759 | Si |
| SLU 54 | 1460 | 105 | 3010 | 0 | 0 | 0 | No, Trazione |
| SLU 59 | 1248 | -923 | -5225 | 1.13 | 10828 | 2.072 | Si |
| SLU 59 | 1460 | 77 | 2711 | 0 | 0 | 0 | No, Trazione |
| SLU 60 | 1248 | -640 | -2717 | 0.78 | 7884 | 2.902 | Si |
| SLU 60 | 1460 | -34 | 1690 | 0 | 0 | 0 | No, e>l/2 |
| SLU 55 | 1248 | -929 | -8198 | 1.14 | 10896 | 1.329 | Si |
| SLU 55 | 1460 | 287 | 3850 | 0 | 0 | 0 | No, Trazione |
| SLU 46 | 1248 | -873 | -4983 | 1.07 | 10339 | 2.075 | Si |
| SLU 46 | 1460 | 30 | 2591 | 0 | 0 | 0 | No, Trazione |
| SLU 51 | 1248 | -923 | -4330 | 1.13 | 10829 | 2.501 | Si |
| SLU 51 | 1460 | 2 | 2293 | 0 | 0 | 0 | No, Trazione |
| SLU 52 | 1248 | -852 | -8645 | 1.04 | 10121 | 1.171 | Si |
| SLU 52 | 1460 | 337 | 3995 | 0 | 0 | 0 | No, Trazione |
| SLU 42 | 1248 | -736 | -6536 | 0.9 | 8915 | 1.364 | Si |
| SLU 42 | 1460 | 241 | 3165 | 0 | 0 | 0 | No, Trazione |

### Verifica a pressoflessione nel piano secondo D.M. 17-01-18 NTC §7.8.2.2.1 in combinazioni sismiche, γM = 2

| Comb. | Quota | N | M | σ0 | Mu | c.s. | Verifica |
|---|---|---|---|---|---|---|---|
| SLV 6 | 1248 | 3346 | 32508 | 0 | 0 | 0 | No, Trazione |

| Comb. | Quota | N | M | σ0 | Mu | c.s. | Verifica |
|---|---|---|---|---|---|---|---|
| SLV 6 | 1460 | 2199 | 29130 | 0 | 0 | 0 | No, Trazione |
| SLV 15 | 1248 | -2542 | -16520 | 3.11 | 25821 | 1.563 | Si |
| SLV 15 | 1460 | -161 | -4952 | 0 | 0 | 0 | No, e>l/2 |
| SLV 14 | 1248 | -402 | 3116 | 0.49 | 5260 | 1.688 | Si |
| SLV 14 | 1460 | 1313 | 12310 | 0 | 0 | 0 | No, Trazione |
| SLD 1 | 1248 | 311 | 4030 | 0 | 0 | 0 | No, Trazione |
| SLD 1 | 1460 | -37 | 3488 | 0 | 0 | 0 | No, e>l/2 |
| SLV 1 | 1248 | 1523 | 13090 | 0 | 0 | 0 | No, Trazione |
| SLV 1 | 1460 | 30 | 7203 | 0 | 0 | 0 | No, Trazione |
| SLV 9 | 1248 | 2768 | 29516 | 0 | 0 | 0 | No, Trazione |
| SLV 9 | 1460 | 2584 | 30663 | 0 | 0 | 0 | No, Trazione |
| SLV 5 | 1248 | 3346 | 32508 | 0 | 0 | 0 | No, Trazione |
| SLV 5 | 1460 | 2199 | 29130 | 0 | 0 | 0 | No, Trazione |
| SLV 2 | 1248 | 1523 | 13090 | 0 | 0 | 0 | No, Trazione |
| SLV 2 | 1460 | 30 | 7203 | 0 | 0 | 0 | No, Trazione |
| SLV 10 | 1248 | 2768 | 29516 | 0 | 0 | 0 | No, Trazione |
| SLV 10 | 1460 | 2584 | 30663 | 0 | 0 | 0 | No, Trazione |
| SLV 13 | 1248 | -402 | 3116 | 0.49 | 5260 | 1.688 | Si |
| SLV 13 | 1460 | 1313 | 12310 | 0 | 0 | 0 | No, Trazione |

### Verifica a taglio nel piano secondo D.M. 17-01-18 (N.T.C.) §7.8.2.2.2 con rottura per scorrimento in combinazioni non sismiche, γM = 3

| Comb. | Quota | N | V par | M | σ0 | σN | I' | fvd | Vt scorr. | Vt fess.diag. | Vt,lim | c.s. | Verifica |
|---|---|---|---|---|---|---|---|---|---|---|---|---|---|
| SLU 46 | 1248 | -873 | -169 | -4983 | | 1.23 | 23.76 | 0.72 | 512 | | | 3.03 | Si |
| SLU 46 | 1460 | 30 | 170 | 2591 | | 0 | 0 | 0.56 | 0 | | | 0 | No, Vu<V |
| SLU 42 | 1248 | -736 | -243 | -6536 | | 1.72 | 14.22 | 0.79 | 335 | | | 1.38 | Si |
| SLU 42 | 1460 | 241 | 202 | 3165 | | 0 | 0 | 0.56 | 0 | | | 0 | No, Vu<V |
| SLU 49 | 1248 | -951 | -158 | -4536 | | 1.19 | 26.57 | 0.71 | 570 | | | 3.61 | Si |
| SLU 49 | 1460 | -19 | 129 | 2446 | | 0 | 0 | 0.56 | 0 | | | 0 | No, Vu<V |
| SLU 59 | 1248 | -923 | -190 | -5225 | | 1.29 | 23.88 | 0.73 | 521 | | | 2.74 | Si |
| SLU 59 | 1460 | 77 | 152 | 2711 | | 0 | 0 | 0.56 | 0 | | | 0 | No, Vu<V |
| SLU 51 | 1248 | -923 | -151 | -4330 | | 1.15 | 26.8 | 0.71 | 570 | | | 3.76 | Si |
| SLU 51 | 1460 | 2 | 119 | 2293 | | 0 | 0 | 0.56 | 0 | | | 0 | No, Vu<V |
| SLU 54 | 1248 | -873 | -208 | -5878 | | 1.41 | 20.68 | 0.74 | 461 | | | 2.22 | Si |
| SLU 54 | 1460 | 105 | 204 | 3010 | | 0 | 0 | 0.56 | 0 | | | 0 | No, Vu<V |
| SLU 52 | 1248 | -852 | -298 | -8645 | | 2.72 | 10.43 | 0.92 | 287 | | | 0.96 | No, Vu<V |
| SLU 52 | 1460 | 337 | 306 | 3995 | | 0 | 0 | 0.56 | 0 | | | 0 | No, Vu<V |
| SLU 60 | 1248 | -640 | -104 | -2717 | | 0.78 | 27.25 | 0.66 | 540 | | | 5.21 | Si |
| SLU 60 | 1460 | -34 | 142 | 1690 | | 0 | 0 | 0.56 | 0 | | | 0 | No, Vu<V |
| SLU 57 | 1248 | -951 | -196 | -5430 | | 1.34 | 23.74 | 0.73 | 523 | | | 2.66 | Si |
| SLU 57 | 1460 | 56 | 162 | 2865 | | 0 | 0 | 0.56 | 0 | | | 0 | No, Vu<V |
| SLU 55 | 1248 | -929 | -287 | -8198 | | 2.15 | 14.42 | 0.84 | 364 | | | 1.27 | Si |
| SLU 55 | 1460 | 287 | 265 | 3850 | | 0 | 0 | 0.56 | 0 | | | 0 | No, Vu<V |

### Verifica a taglio nel piano secondo D.M. 17-01-18 (N.T.C.) §7.8.2.2.2 con rottura per scorrimento in combinazioni sismiche, γM = 2

| Comb. | Quota | N | V par | M | σ0 | σN | I' | fvd | Vt scorr. | Vt fess.diag. | Vt,lim | c.s. | Verifica |
|---|---|---|---|---|---|---|---|---|---|---|---|---|---|
| SLV 14 | 1248 | -402 | -551 | 3116 | | 0.76 | 17.64 | 0.99 | 521 | | | 0.95 | No, Vu<V |
| SLV 14 | 1460 | 1313 | 934 | 12310 | | 0 | 0 | 0.83 | 0 | | | 0 | No, Vu<V |
| SLV 5 | 1248 | 3346 | -896 | 32508 | | 0 | 0 | 0.83 | 0 | | | 0 | No, Vu<V |
| SLV 5 | 1460 | 2199 | 2080 | 29130 | | 0 | 0 | 0.83 | 0 | | | 0 | No, Vu<V |
| SLV 9 | 1248 | 2768 | -1027 | 29516 | | 0 | 0 | 0.83 | 0 | | | 0 | No, Vu<V |
| SLV 9 | 1460 | 2584 | 2216 | 30663 | | 0 | 0 | 0.83 | 0 | | | 0 | No, Vu<V |
| SLV 15 | 1248 | -2542 | -12 | -16520 | | 3.96 | 21.38 | 1.63 | 1042 | | | 85.38 | Si |
| SLV 15 | 1460 | -161 | -301 | -4952 | | 0 | 0 | 0.83 | 0 | | | 0 | No, Vu<V |
| SLV 6 | 1248 | 3346 | -896 | 32508 | | 0 | 0 | 0.83 | 0 | | | 0 | No, Vu<V |
| SLV 6 | 1460 | 2199 | 2080 | 29130 | | 0 | 0 | 0.83 | 0 | | | 0 | No, Vu<V |
| SLV 10 | 1248 | 2768 | -1027 | 29516 | | 0 | 0 | 0.83 | 0 | | | 0 | No, Vu<V |
| SLV 10 | 1460 | 2584 | 2216 | 30663 | | 0 | 0 | 0.83 | 0 | | | 0 | No, Vu<V |
| SLV 1 | 1248 | 1523 | -115 | 13090 | | 0 | 0 | 0.83 | 0 | | | 0 | No, Vu<V |
| SLV 1 | 1460 | 30 | 479 | 7203 | | 0 | 0 | 0.83 | 0 | | | 0 | No, Vu<V |
| SLV 13 | 1248 | -402 | -551 | 3116 | | 0.76 | 17.64 | 0.99 | 521 | | | 0.95 | No, Vu<V |
| SLV 13 | 1460 | 1313 | 934 | 12310 | | 0 | 0 | 0.83 | 0 | | | 0 | No, Vu<V |
| SLD 1 | 1248 | 311 | -81 | 4030 | | 0 | 0 | 0.83 | 0 | | | 0 | No, Vu<V |
| SLD 1 | 1460 | -37 | 240 | 3488 | | 0 | 0 | 0.83 | 0 | | | 0 | No, Vu<V |
| SLV 2 | 1248 | 1523 | -115 | 13090 | | 0 | 0 | 0.83 | 0 | | | 0 | No, Vu<V |
| SLV 2 | 1460 | 30 | 479 | 7203 | | 0 | 0 | 0.83 | 0 | | | 0 | No, Vu<V |

### Verifica a pressoflessione fuori piano D.M. 17-01-18 (N.T.C.)

quota 859.3 Wa 0.05 denominatore 8 γM = 2

| Comb. | fd | Sa | σ0 | N | M | Mc | Coeff.s. | Verifica |
|---|---|---|---|---|---|---|---|---|
| SLV 9 | 14 | 0.42 | 0 | -323 | 49047 | 0 | 0 | No, e>t/2 |
| SLV 10 | 14 | 0.42 | 0 | -323 | 49047 | 0 | 0 | No, e>t/2 |
| SLV 4 | 14 | 0.42 | 0 | -1541 | 49047 | 0 | 0 | No, e>t/2 |
| SLV 3 | 14 | 0.42 | 0 | -1541 | 49047 | 0 | 0 | No, e>t/2 |
| SLV 6 | 14 | 0.42 | 0 | -285 | 49047 | 0 | 0 | No, e>t/2 |
| SLV 5 | 14 | 0.42 | 0 | -285 | 49047 | 0 | 0 | No, e>t/2 |
| SLV 2 | 14 | 0.42 | 0 | -940 | 49047 | 0 | 0 | No, e>t/2 |
| SLV 8 | 14 | 0.42 | 0 | -2286 | 49047 | 0 | 0 | No, e>t/2 |
| SLV 7 | 14 | 0.42 | 0 | -2286 | 49047 | 0 | 0 | No, e>t/2 |
| SLV 1 | 14 | 0.42 | 0 | -940 | 49047 | 0 | 0 | No, e>t/2 |

### Verifica dei meccanismi locali di collasso con analisi cinematica lineare

forza di aggancio al piano = 0 quota mezzeria = 859.3 Wa = 0.05 Ta = 1.0645

| Comb. | N top | N base | V orto | α0 | M* | e* | a0* | aLim | Verifica |
|---|---|---|---|---|---|---|---|---|---|
| SLV 10 | 286 | -15707 | 11 | 0 | 0 | 0 | 0 | 239.674 | No, Trazione |
| SLV 6 | 392 | -14798 | -2 | 0 | 0 | 0 | 0 | 239.674 | No, Trazione |
| SLV 9 | 286 | -15707 | 11 | 0 | 0 | 0 | 0 | 239.674 | No, Trazione |
| SLV 3 | 302 | 65 | -40 | 0 | 0 | 0 | 0 | 239.674 | No, Trazione |

| Comb. | N top | N base | V orto | α0 | M* | e* | a0* | aLim | Verifica |
|---|---|---|---|---|---|---|---|---|---|
| SLV 8 | 63 | 6436 | -37 | 0 | 0 | 0 | 0 | 239.674 | No, Trazione |
| SLV 2 | 401 | -6306 | -30 | 0 | 0 | 0 | 0 | 239.674 | No, Trazione |
| SLV 4 | 302 | 65 | -40 | 0 | 0 | 0 | 0 | 239.674 | No, Trazione |
| SLV 1 | 401 | -6306 | -30 | 0 | 0 | 0 | 0 | 239.674 | No, Trazione |
| SLV 7 | 63 | 6436 | -37 | 0 | 0 | 0 | 0 | 239.674 | No, Trazione |
| SLV 5 | 392 | -14798 | -2 | 0 | 0 | 0 | 0 | 239.674 | No, Trazione |

Tabella dei coefficienti di sicurezza minimi

| Stato limite | Coeff.s. | Comb. | Verifica |
|---|---|---|---|
| PF_SLU | 0 | SLU 84 | No |
| V_SLU | 0 | SLU 2 | No |
| PF_SLV | 0 | SLV 14 | No |
| V_SLV | 0 | SLD 1 | No |
| PFFP_SLV | 0 | SLV 1 | No |
| R_SLV | 0 | SLV 14 | No |

# 1.6 Verifiche travi di accoppiamento in muratura

Le unità di misura elencate nel capitolo sono in [cm, daN] ove non espressamente specificato.

***X ini.***: *coordinata punto iniziale. [cm]*
***Y ini.***: *coordinata punto iniziale. [cm]*
***Z ini.inf.***: *coordinata punto iniziale. [cm]*
***Z ini.sup.***: *coordinata punto iniziale. [cm]*
***H ini.***: *altezza della sezione iniziale. [cm]*
***X fin.***: *coordinata punto finale. [cm]*
***Y fin.***: *coordinata punto finale. [cm]*
***Z fin.inf.***: *coordinata punto finale. [cm]*
***Z fin.sup***: *coordinata punto finale. [cm]*
***H fin.***: *altezza della sezione finale. [cm]*
***Luce***: *lunghezza della trave. [cm]*
***Spessore***: *spessore. [cm]*
***R. Trazione***: *resistenza a trazione dell'elemento teso disposto orizzontalmente. [daN]*
***fb_***: *resistenza normalizzata a compressione in direzione orizzontale dei blocchi. [daN/cm²]*
***fhk***: *resistenza caratteristica a compressione della muratura utilizzata in direzione orizzontale. [daN/cm²]*
***fvk0***: *resistenza caratteristica a taglio in assenza di carichi verticali. [daN/cm²]*
***fhmedio***: *resistenza media a compressione della muratura utilizzata in direzione orizzontale. [daN/cm²]*
***τ0***: *resistenza media a taglio in assenza di azioni normali [C8.7.1.16]. [daN/cm²]*
***fv0***: *resistenza media a taglio in assenza di azioni normali [C8.7.1.17]. [daN/cm²]*
***μ***: *coefficiente di attrito [C8.7.1.17].*
***φ***: *coefficiente di ammorsamento o ingranamento secondo Circolare 7 21-01-19 §C8.7.1.3.1.1.*
***fvk,lim***: *valore caratteristico massimo della resistenza a taglio che può essere impiegata nel calcolo (§11.10.3.3). [daN/cm²]*
***E***: *modulo di elasticità longitudinale della muratura utilizzato. [daN/cm²]*
***G***: *modulo di elasticità tangenziale della muratura utilizzato. [daN/cm²]*
***FC***: *fattore di confidenza della muratura.*
***Sezione***: *sezione di verifica.*
***γM***: *fattore parziale di sicurezza del materiale.*
***N***: *sforzo normale. [daN]*
***M***: *momento flettente nel piano. [daN*cm]*
***Mu***: *momento ultimo. [daN*cm]*
***Comb.***: *combinazione.*
***c.s.***: *coefficiente di sicurezza.*
***Verifica***: *stato di verifica.*
***M***: *momento flettente. [daN*cm]*
***V***: *taglio nel piano. [daN]*
***Vt***: *resistenza a taglio secondo [7.8.4]. [daN]*
***Vp***: *resistenza a taglio secondo [7.8.6]. [daN]*
***Vt fess. diag.***: *resistenza a taglio per fessurazione diagonale secondo §C8.7.1.3.1.1 formule [C8.7.1.16] ovvero [C8.7.1.17]. [daN]*
***Vt,lim***: *taglio limite [C8.1.7.18]. [daN]*
***Stato limite***: *pF_SLV=Presso flessione per azioni sismiche; V_SLV=Taglio per azioni sismiche.*
***Coeff.s.***: *coefficiente di sicurezza.*

## Trave di accoppiamento 1

Verifiche condotte secondo D.M. 17-01-18 (N.T.C.)

### Dati geometrici

| X ini. | Y ini. | Z ini.inf. | Z ini.sup. | H ini. | X fin. | Y fin. | Z fin.inf. | Z fin.sup | H fin. | Luce | Spessore | R. Trazione |
|---|---|---|---|---|---|---|---|---|---|---|---|---|
| -2465.3 | 227.1 | 122 | 171 | 49 | -2465.3 | 127.1 | 122 | 171 | 49 | 100 | 45 | 3500 |

## Caratteristiche del materiale

(Circolare 7 21-01-19 C8.5.I) Muratura in mattoni pieni e malta di calce LC2_Corti

| fb_ | fhk | fvk0 | fhmedio | τ0 | fv0 | μ | ϕ | fvk,lim | E | G | FC |
|---|---|---|---|---|---|---|---|---|---|---|---|
| 12 | | | 17.25 | 0.9 | 2 | 0.577 | 0.767 | 0.65 | 32000 | 12800 | 1.2 |

## Verifiche a pressoflessione delle travi in muratura in combinazioni non sismiche

| Sezione | γM | N | M | Mu | Comb. | c.s. | Verifica |
|---|---|---|---|---|---|---|---|
| ini. | 3 | -2693 | -49085 | 52331 | SLU 77 | 1.07 | Si |
| fin. | 3 | -916 | -34992 | 52331 | SLU 77 | 1.5 | Si |
| ini. | 3 | -2670 | -48621 | 52331 | SLU 79 | 1.08 | Si |
| fin. | 3 | -918 | -34874 | 52331 | SLU 79 | 1.5 | Si |
| ini. | 3 | -2723 | -48183 | 52331 | SLU 78 | 1.09 | Si |
| fin. | 3 | -1094 | -35979 | 52331 | SLU 78 | 1.45 | Si |
| ini. | 3 | -2700 | -47718 | 52331 | SLU 80 | 1.1 | Si |
| fin. | 3 | -1095 | -35861 | 52331 | SLU 80 | 1.46 | Si |
| ini. | 3 | -2665 | -48560 | 52331 | SLU 74 | 1.08 | Si |
| fin. | 3 | -895 | -34170 | 52331 | SLU 74 | 1.53 | Si |
| ini. | 3 | -2789 | -49545 | 52331 | SLU 84 | 1.06 | Si |
| fin. | 3 | -1085 | -35355 | 52331 | SLU 84 | 1.48 | Si |
| ini. | 3 | -2761 | -49020 | 52331 | SLU 82 | 1.07 | Si |
| fin. | 3 | -1063 | -34532 | 52331 | SLU 82 | 1.52 | Si |
| ini. | 3 | -2758 | -50448 | 52331 | SLU 83 | 1.04 | Si |
| fin. | 3 | -907 | -34367 | 52331 | SLU 83 | 1.52 | Si |
| ini. | 3 | -2696 | -47658 | 52331 | SLU 75 | 1.1 | Si |
| fin. | 3 | -1072 | -35157 | 52331 | SLU 75 | 1.49 | Si |
| ini. | 3 | -2730 | -49923 | 52331 | SLU 81 | 1.05 | Si |
| fin. | 3 | -885 | -33545 | 52331 | SLU 81 | 1.56 | Si |

## Verifiche a taglio delle travi in muratura secondo §C8.7.1.3.1 in combinazioni non sismiche

| Sezione | γM | N | M | V | Vt | Vp | Vt fess. diag. | Vt,lim | Comb. | c.s. | Verifica |
|---|---|---|---|---|---|---|---|---|---|---|---|
| ini. | 3 | 0 | -49020 | 5300 | | | 566 | 213 | SLU 82 | 0.04 | No |
| fin. | 3 | 0 | -34532 | -3493 | | | 566 | 213 | SLU 82 | 0.06 | No |
| ini. | 3 | 0 | -48560 | 5303 | | | 566 | 213 | SLU 74 | 0.04 | No |
| fin. | 3 | 0 | -34170 | -3441 | | | 566 | 213 | SLU 74 | 0.06 | No |
| ini. | 3 | 0 | -47658 | 5201 | | | 566 | 213 | SLU 75 | 0.04 | No |
| fin. | 3 | 0 | -35157 | -3524 | | | 566 | 213 | SLU 75 | 0.06 | No |
| ini. | 3 | 0 | -48183 | 5266 | | | 566 | 213 | SLU 78 | 0.04 | No |
| fin. | 3 | 0 | -35979 | -3594 | | | 566 | 213 | SLU 78 | 0.06 | No |
| ini. | 3 | 0 | -49085 | 5368 | | | 566 | 213 | SLU 77 | 0.04 | No |
| fin. | 3 | 0 | -34992 | -3512 | | | 566 | 213 | SLU 77 | 0.06 | No |
| ini. | 3 | 0 | -49545 | 5365 | | | 566 | 213 | SLU 84 | 0.04 | No |
| fin. | 3 | 0 | -35355 | -3564 | | | 566 | 213 | SLU 84 | 0.06 | No |
| ini. | 3 | 0 | -48621 | 5322 | | | 566 | 213 | SLU 79 | 0.04 | No |
| fin. | 3 | 0 | -34874 | -3497 | | | 566 | 213 | SLU 79 | 0.06 | No |
| ini. | 3 | 0 | -50448 | 5467 | | | 566 | 213 | SLU 83 | 0.04 | No |
| fin. | 3 | 0 | -34367 | -3481 | | | 566 | 213 | SLU 83 | 0.06 | No |
| ini. | 3 | 0 | -49923 | 5402 | | | 566 | 213 | SLU 81 | 0.04 | No |
| fin. | 3 | 0 | -33545 | -3411 | | | 566 | 213 | SLU 81 | 0.06 | No |
| ini. | 3 | 0 | -47718 | 5220 | | | 566 | 213 | SLU 80 | 0.04 | No |
| fin. | 3 | 0 | -35861 | -3579 | | | 566 | 213 | SLU 80 | 0.06 | No |

## Verifiche a pressoflessione delle travi in muratura in combinazioni sismiche

| Sezione | γM | N | M | Mu | Comb. | c.s. | Verifica |
|---|---|---|---|---|---|---|---|
| ini. | 2 | -3208 | -59294 | 63471 | SLV 12 | 1.07 | Si |
| fin. | 2 | -724 | 20342 | 63471 | SLV 12 | 3.12 | Si |
| ini. | 2 | -4380 | -67252 | 63471 | SLV 7 | 0.94 | No |
| fin. | 2 | 1884 | 13550 | 63471 | SLV 7 | 4.68 | Si |
| ini. | 2 | -4380 | -67252 | 63471 | SLV 8 | 0.94 | No |
| fin. | 2 | 1884 | 13550 | 63471 | SLV 8 | 4.68 | Si |
| ini. | 2 | -4369 | -55220 | 63471 | SLV 3 | 1.15 | Si |
| fin. | 2 | 4065 | -23650 | 63471 | SLV 3 | 2.68 | Si |
| ini. | 2 | 731 | 1613 | 63471 | SLV 10 | 39.36 | Si |
| fin. | 2 | -3187 | -63305 | 63471 | SLV 10 | 1 | Si |
| ini. | 2 | -441 | -6346 | 63471 | SLV 5 | 10 | Si |
| fin. | 2 | -579 | -70097 | 63471 | SLV 5 | 0.91 | No |
| ini. | 2 | 731 | 1613 | 63471 | SLV 9 | 39.36 | Si |
| fin. | 2 | -3187 | -63305 | 63471 | SLV 9 | 1 | Si |
| ini. | 2 | -441 | -6346 | 63471 | SLV 6 | 10 | Si |
| fin. | 2 | -579 | -70097 | 63471 | SLV 6 | 0.91 | No |
| ini. | 2 | -3208 | -59294 | 63471 | SLV 11 | 1.07 | Si |
| fin. | 2 | -724 | 20342 | 63471 | SLV 11 | 3.12 | Si |
| ini. | 2 | -4369 | -55220 | 63471 | SLV 4 | 1.15 | Si |
| fin. | 2 | 4065 | -23650 | 63471 | SLV 4 | 2.68 | Si |

## Verifiche a taglio delle travi in muratura secondo §C8.7.1.3.1 in combinazioni sismiche

| Sezione | γM | N | M | V | Vt | Vp | Vt fess. diag. | Vt,lim | Comb. | c.s. | Verifica |
|---|---|---|---|---|---|---|---|---|---|---|---|
| ini. | 2 | 0 | -67252 | 6831 | | | 849 | 320 | SLV 8 | 0.05 | No |
| fin. | 2 | 0 | 13550 | -572 | | | 849 | 320 | SLV 8 | 0.56 | No |
| ini. | 2 | 0 | -55220 | 6924 | | | 849 | 320 | SLV 4 | 0.05 | No |
| fin. | 2 | 0 | -23650 | -3308 | | | 849 | 320 | SLV 4 | 0.1 | No |
| ini. | 2 | 0 | -67252 | 6831 | | | 849 | 320 | SLV 7 | 0.05 | No |
| fin. | 2 | 0 | 13550 | -572 | | | 849 | 320 | SLV 7 | 0.56 | No |
| ini. | 2 | 0 | -59294 | 5302 | | | 849 | 320 | SLV 11 | 0.06 | No |
| fin. | 2 | 0 | 20342 | 352 | | | 849 | 320 | SLV 11 | 0.91 | No |
| ini. | 2 | 0 | -6346 | 1999 | | | 849 | 320 | SLV 6 | 0.16 | No |
| fin. | 2 | 0 | -70097 | -5310 | | | 849 | 320 | SLV 6 | 0.06 | No |
| ini. | 2 | 0 | -55220 | 6924 | | | 849 | 320 | SLV 3 | 0.05 | No |

| Sezione | γM | N | M | V | Vt | Vp | Vt fess. diag. | Vt,lim | Comb. | c.s. | Verifica |
|---|---|---|---|---|---|---|---|---|---|---|---|
| fin. | 2 | 0 | -23650 | -3308 | | | 849 | 320 | SLV 3 | 0.1 | No |
| ini. | 2 | 0 | -36948 | 5475 | | | 849 | 320 | SLV 1 | 0.06 | No |
| fin. | 2 | 0 | -48744 | -4730 | | | 849 | 320 | SLV 1 | 0.07 | No |
| ini. | 2 | 0 | -59294 | 5302 | | | 849 | 320 | SLV 12 | 0.06 | No |
| fin. | 2 | 0 | 20342 | 352 | | | 849 | 320 | SLV 12 | 0.91 | No |
| ini. | 2 | 0 | -36948 | 5475 | | | 849 | 320 | SLV 2 | 0.06 | No |
| fin. | 2 | 0 | -48744 | -4730 | | | 849 | 320 | SLV 2 | 0.07 | No |
| ini. | 2 | 0 | -6346 | 1999 | | | 849 | 320 | SLV 5 | 0.16 | No |
| fin. | 2 | 0 | -70097 | -5310 | | | 849 | 320 | SLV 5 | 0.06 | No |

### Tabella dei coefficienti di sicurezza minimi

| Stato limite | Coeff.s. | Comb. | Verifica |
|---|---|---|---|
| PF_SLV | 0.905 | SLV 5 | No |
| V_SLV | 0.046 | SLV 3 | No |
| PF_SLU | 1.037 | SLU 83 | Si |
| V_SLU | 0.039 | SLU 83 | No |

## Trave di accoppiamento 2

Verifiche condotte secondo D.M. 17-01-18 (N.T.C.)

### Dati geometrici

| X ini. | Y ini. | Z ini.inf. | Z ini.sup. | H ini. | X fin. | Y fin. | Z fin.inf. | Z fin.sup | H fin. | Luce | Spessore | R. Trazione |
|---|---|---|---|---|---|---|---|---|---|---|---|---|
| -2176.3 | 587.6 | -98 | 102 | 200 | -2276.3 | 587.6 | -98 | 102 | 200 | 100 | 45 | 3500 |

### Caratteristiche del materiale

(Circolare 7 21-01-19 C8.5.I) Muratura in mattoni pieni e malta di calce LC2_Corti

| fb_ | fhk | fvk0 | fhmedio | τ0 | fv0 | μ | ϕ | fvk,lim | E | G | FC |
|---|---|---|---|---|---|---|---|---|---|---|---|
| 12 | | | 17.25 | 0.9 | 2 | 0.577 | 0.767 | 0.65 | 32000 | 12800 | 1.2 |

### Verifiche a pressoflessione delle travi in muratura in combinazioni non sismiche

| Sezione | γM | N | M | Mu | Comb. | c.s. | Verifica |
|---|---|---|---|---|---|---|---|
| ini. | 3 | -2899 | -200002 | 316581 | SLU 82 | 1.58 | Si |
| fin. | 3 | -2675 | -198641 | 316581 | SLU 82 | 1.59 | Si |
| ini. | 3 | -2815 | -191415 | 316581 | SLU 80 | 1.65 | Si |
| fin. | 3 | -2564 | -194854 | 316581 | SLU 80 | 1.62 | Si |
| ini. | 3 | -2836 | -193157 | 316581 | SLU 78 | 1.64 | Si |
| fin. | 3 | -2585 | -196285 | 316581 | SLU 78 | 1.61 | Si |
| ini. | 3 | -2955 | -200141 | 316581 | SLU 83 | 1.58 | Si |
| fin. | 3 | -2732 | -204925 | 316581 | SLU 83 | 1.54 | Si |
| ini. | 3 | -2859 | -191617 | 316581 | SLU 79 | 1.65 | Si |
| fin. | 3 | -2631 | -199305 | 316581 | SLU 79 | 1.59 | Si |
| ini. | 3 | -2824 | -193221 | 316581 | SLU 75 | 1.64 | Si |
| fin. | 3 | -2595 | -194451 | 316581 | SLU 75 | 1.63 | Si |
| ini. | 3 | -2880 | -193359 | 316581 | SLU 77 | 1.64 | Si |
| fin. | 3 | -2652 | -200735 | 316581 | SLU 77 | 1.58 | Si |
| ini. | 3 | -2943 | -200204 | 316581 | SLU 81 | 1.58 | Si |
| fin. | 3 | -2742 | -203092 | 316581 | SLU 81 | 1.56 | Si |
| ini. | 3 | -2912 | -199939 | 316581 | SLU 84 | 1.58 | Si |
| fin. | 3 | -2665 | -200474 | 316581 | SLU 84 | 1.58 | Si |
| ini. | 3 | -2868 | -193423 | 316581 | SLU 74 | 1.64 | Si |
| fin. | 3 | -2662 | -198902 | 316581 | SLU 74 | 1.59 | Si |

### Verifiche a taglio delle travi in muratura secondo §C8.7.1.3.1 in combinazioni non sismiche

| Sezione | γM | N | M | V | Vt | Vp | Vt fess. diag. | Vt,lim | Comb. | c.s. | Verifica |
|---|---|---|---|---|---|---|---|---|---|---|---|
| ini. | 3 | 0 | -191415 | -4581 | | | 3466 | 1304 | SLU 80 | 0.28 | No |
| fin. | 3 | 0 | -194854 | 5483 | | | 3466 | 1304 | SLU 80 | 0.24 | No |
| ini. | 3 | 0 | -200141 | -4807 | | | 3466 | 1304 | SLU 83 | 0.27 | No |
| fin. | 3 | 0 | -204925 | 5832 | | | 3466 | 1304 | SLU 83 | 0.22 | No |
| ini. | 3 | 0 | -191617 | -4648 | | | 3466 | 1304 | SLU 79 | 0.28 | No |
| fin. | 3 | 0 | -199305 | 5550 | | | 3466 | 1304 | SLU 79 | 0.24 | No |
| ini. | 3 | 0 | -200204 | -4749 | | | 3466 | 1304 | SLU 81 | 0.27 | No |
| fin. | 3 | 0 | -203092 | 5853 | | | 3466 | 1304 | SLU 81 | 0.22 | No |
| ini. | 3 | 0 | -199939 | -4740 | | | 3466 | 1304 | SLU 84 | 0.28 | No |
| fin. | 3 | 0 | -200474 | 5765 | | | 3466 | 1304 | SLU 84 | 0.23 | No |
| ini. | 3 | 0 | -193157 | -4607 | | | 3466 | 1304 | SLU 78 | 0.28 | No |
| fin. | 3 | 0 | -196285 | 5523 | | | 3466 | 1304 | SLU 78 | 0.24 | No |
| ini. | 3 | 0 | -193221 | -4550 | | | 3466 | 1304 | SLU 75 | 0.29 | No |
| fin. | 3 | 0 | -194451 | 5545 | | | 3466 | 1304 | SLU 75 | 0.24 | No |
| ini. | 3 | 0 | -193359 | -4674 | | | 3466 | 1304 | SLU 77 | 0.28 | No |
| fin. | 3 | 0 | -200735 | 5591 | | | 3466 | 1304 | SLU 77 | 0.23 | No |
| ini. | 3 | 0 | -193423 | -4616 | | | 3466 | 1304 | SLU 74 | 0.28 | No |
| fin. | 3 | 0 | -198902 | 5612 | | | 3466 | 1304 | SLU 74 | 0.23 | No |
| ini. | 3 | 0 | -200002 | -4683 | | | 3466 | 1304 | SLU 82 | 0.28 | No |
| fin. | 3 | 0 | -198641 | 5786 | | | 3466 | 1304 | SLU 82 | 0.23 | No |

### Verifiche a pressoflessione delle travi in muratura in combinazioni sismiche

| Sezione | γM | N | M | Mu | Comb. | c.s. | Verifica |
|---|---|---|---|---|---|---|---|
| ini. | 2 | -6829 | 247921 | 327721 | SLV 3 | 1.32 | Si |
| fin. | 2 | 910 | -472566 | 327721 | SLV 3 | 0.69 | No |
| ini. | 2 | 2822 | -516035 | 327721 | SLV 13 | 0.64 | No |
| fin. | 2 | -4697 | 195782 | 327721 | SLV 13 | 1.67 | Si |
| ini. | 2 | -7012 | 159618 | 327721 | SLV 11 | 2.05 | Si |
| fin. | 2 | -2571 | -514188 | 327721 | SLV 11 | 0.64 | No |

| Sezione | γM | N | M | Mu | Comb. | c.s. | Verifica |
|---|---|---|---|---|---|---|---|
| ini. | 2 | 4834 | -589498 | 327721 | SLV 9 | 0.56 | No |
| fin. | 2 | -2871 | 359295 | 327721 | SLV 9 | 0.91 | No |
| ini. | 2 | -6829 | 247921 | 327721 | SLV 4 | 1.32 | Si |
| fin. | 2 | 910 | -472566 | 327721 | SLV 4 | 0.69 | No |
| ini. | 2 | 4834 | -589498 | 327721 | SLV 10 | 0.56 | No |
| fin. | 2 | -2871 | 359295 | 327721 | SLV 10 | 0.91 | No |
| ini. | 2 | -8841 | 321384 | 327721 | SLV 7 | 1.02 | Si |
| fin. | 2 | -916 | -636079 | 327721 | SLV 7 | 0.52 | No |
| ini. | 2 | -7012 | 159618 | 327721 | SLV 12 | 2.05 | Si |
| fin. | 2 | -2571 | -514188 | 327721 | SLV 12 | 0.64 | No |
| ini. | 2 | -8841 | 321384 | 327721 | SLV 8 | 1.02 | Si |
| fin. | 2 | -916 | -636079 | 327721 | SLV 8 | 0.52 | No |
| ini. | 2 | 2822 | -516035 | 327721 | SLV 14 | 0.64 | No |
| fin. | 2 | -4697 | 195782 | 327721 | SLV 14 | 1.67 | Si |

### Verifiche a taglio delle travi in muratura secondo §C8.7.1.3.1 in combinazioni sismiche

| Sezione | γM | N | M | V | Vt | Vp | Vt fess. diag. | Vt,lim | Comb. | c.s. | Verifica |
|---|---|---|---|---|---|---|---|---|---|---|---|
| ini. | 2 | 0 | -291300 | 7552 | | | 5199 | 1957 | SLV 15 | 0.26 | No |
| fin. | 2 | 0 | -66263 | 14718 | | | 5199 | 1957 | SLV 15 | 0.13 | No |
| ini. | 2 | 0 | 321384 | -10200 | | | 5199 | 1957 | SLV 8 | 0.19 | No |
| fin. | 2 | 0 | -636079 | 857 | | | 5199 | 1957 | SLV 8 | 2.28 | Si |
| ini. | 2 | 0 | -291300 | 7552 | | | 5199 | 1957 | SLV 16 | 0.26 | No |
| fin. | 2 | 0 | -66263 | 14718 | | | 5199 | 1957 | SLV 16 | 0.13 | No |
| ini. | 2 | 0 | 247921 | -15954 | | | 5199 | 1957 | SLV 4 | 0.12 | No |
| fin. | 2 | 0 | -472566 | -6810 | | | 5199 | 1957 | SLV 4 | 0.29 | No |
| ini. | 2 | 0 | 247921 | -15954 | | | 5199 | 1957 | SLV 3 | 0.12 | No |
| fin. | 2 | 0 | -472566 | -6810 | | | 5199 | 1957 | SLV 3 | 0.29 | No |
| ini. | 2 | 0 | -516035 | 9671 | | | 5199 | 1957 | SLV 13 | 0.2 | No |
| fin. | 2 | 0 | 195782 | 14605 | | | 5199 | 1957 | SLV 13 | 0.13 | No |
| ini. | 2 | 0 | 23186 | -13835 | | | 5199 | 1957 | SLV 2 | 0.14 | No |
| fin. | 2 | 0 | -210521 | -6924 | | | 5199 | 1957 | SLV 2 | 0.28 | No |
| ini. | 2 | 0 | 23186 | -13835 | | | 5199 | 1957 | SLV 1 | 0.14 | No |
| fin. | 2 | 0 | -210521 | -6924 | | | 5199 | 1957 | SLV 1 | 0.28 | No |
| ini. | 2 | 0 | 321384 | -10200 | | | 5199 | 1957 | SLV 7 | 0.19 | No |
| fin. | 2 | 0 | -636079 | 857 | | | 5199 | 1957 | SLV 7 | 2.28 | Si |
| ini. | 2 | 0 | -516035 | 9671 | | | 5199 | 1957 | SLV 14 | 0.2 | No |
| fin. | 2 | 0 | 195782 | 14605 | | | 5199 | 1957 | SLV 14 | 0.13 | No |

### Tabella dei coefficienti di sicurezza minimi

| Stato limite | Coeff.s. | Comb. | Verifica |
|---|---|---|---|
| PF_SLV | 0.515 | SLV 7 | No |
| V_SLV | 0.123 | SLV 3 | No |
| PF_SLU | 1.545 | SLU 83 | Si |
| V_SLU | 0.223 | SLU 81 | No |

## Trave di accoppiamento 3

Verifiche condotte secondo D.M. 17-01-18 (N.T.C.)

### Dati geometrici

| X ini. | Y ini. | Z ini.inf. | Z ini.sup. | H ini. | X fin. | Y fin. | Z fin.inf. | Z fin.sup | H fin. | Luce | Spessore | R. Trazione |
|---|---|---|---|---|---|---|---|---|---|---|---|---|
| -2176.3 | 587.6 | 142 | 171 | 29 | -2276.3 | 587.6 | 142 | 171 | 29 | 100 | 45 | 3500 |

### Caratteristiche del materiale

(Circolare 7 21-01-19 C8.5.I) Muratura in mattoni pieni e malta di calce LC2_Corti

| fb_ | fhk | fvk0 | fhmedio | τ0 | fv0 | μ | ϕ | fvk,lim | E | G | FC |
|---|---|---|---|---|---|---|---|---|---|---|---|
| 12 | | | 17.25 | 0.9 | 2 | 0.577 | 0.767 | 0.65 | 32000 | 12800 | 1.2 |

### Verifiche a pressoflessione delle travi in muratura in combinazioni non sismiche

| Sezione | γM | N | M | Mu | Comb. | c.s. | Verifica |
|---|---|---|---|---|---|---|---|
| ini. | 3 | 1805 | -21519 | 19201 | SLU 78 | 0.89 | No |
| fin. | 3 | 1459 | -23832 | 19201 | SLU 78 | 0.81 | No |
| ini. | 3 | 1838 | -21348 | 19201 | SLU 77 | 0.9 | No |
| fin. | 3 | 1486 | -24242 | 19201 | SLU 77 | 0.79 | No |
| ini. | 3 | 1823 | -22942 | 19201 | SLU 84 | 0.84 | No |
| fin. | 3 | 1477 | -25050 | 19201 | SLU 84 | 0.77 | No |
| ini. | 3 | 1807 | -22974 | 19201 | SLU 82 | 0.84 | No |
| fin. | 3 | 1475 | -24841 | 19201 | SLU 82 | 0.77 | No |
| ini. | 3 | 1822 | -21380 | 19201 | SLU 74 | 0.9 | No |
| fin. | 3 | 1484 | -24033 | 19201 | SLU 74 | 0.8 | No |
| ini. | 3 | 1841 | -22803 | 19201 | SLU 81 | 0.84 | No |
| fin. | 3 | 1502 | -25250 | 19201 | SLU 81 | 0.76 | No |
| ini. | 3 | 1818 | -21238 | 19201 | SLU 79 | 0.9 | No |
| fin. | 3 | 1468 | -24155 | 19201 | SLU 79 | 0.79 | No |
| ini. | 3 | 1785 | -21409 | 19201 | SLU 80 | 0.9 | No |
| fin. | 3 | 1441 | -23746 | 19201 | SLU 80 | 0.81 | No |
| ini. | 3 | 1789 | -21551 | 19201 | SLU 75 | 0.89 | No |
| fin. | 3 | 1457 | -23623 | 19201 | SLU 75 | 0.81 | No |
| ini. | 3 | 1856 | -22771 | 19201 | SLU 83 | 0.84 | No |
| fin. | 3 | 1504 | -25459 | 19201 | SLU 83 | 0.75 | No |

### Verifiche a taglio delle travi in muratura secondo §C8.7.1.3.1 in combinazioni non sismiche

| Sezione | γM | N | M | V | Vt | Vp | Vt fess. diag. | Vt,lim | Comb. | c.s. | Verifica |
|---|---|---|---|---|---|---|---|---|---|---|---|
| ini. | 3 | 0 | -22974 | 1528 | | | 335 | 126 | SLU 82 | 0.08 | No |

| Sezione | γM | N | M | V | Vt | Vp | Vt fess. diag. | Vt,lim | Comb. | c.s. | Verifica |
|---|---|---|---|---|---|---|---|---|---|---|---|
| fin. | 3 | 0 | -24841 | -1497 | | | 335 | 126 | SLU 82 | 0.08 | No |
| ini. | 3 | 0 | -21380 | 1439 | | | 335 | 126 | SLU 74 | 0.09 | No |
| fin. | 3 | 0 | -24033 | -1441 | | | 335 | 126 | SLU 74 | 0.09 | No |
| ini. | 3 | 0 | -22942 | 1531 | | | 335 | 126 | SLU 84 | 0.08 | No |
| fin. | 3 | 0 | -25050 | -1505 | | | 335 | 126 | SLU 84 | 0.08 | No |
| ini. | 3 | 0 | -21519 | 1447 | | | 335 | 126 | SLU 78 | 0.09 | No |
| fin. | 3 | 0 | -23832 | -1429 | | | 335 | 126 | SLU 78 | 0.09 | No |
| ini. | 3 | 0 | -22771 | 1526 | | | 335 | 126 | SLU 83 | 0.08 | No |
| fin. | 3 | 0 | -25459 | -1525 | | | 335 | 126 | SLU 83 | 0.08 | No |
| ini. | 3 | 0 | -21551 | 1444 | | | 335 | 126 | SLU 75 | 0.09 | No |
| fin. | 3 | 0 | -23623 | -1421 | | | 335 | 126 | SLU 75 | 0.09 | No |
| ini. | 3 | 0 | -22803 | 1523 | | | 335 | 126 | SLU 81 | 0.08 | No |
| fin. | 3 | 0 | -25250 | -1517 | | | 335 | 126 | SLU 81 | 0.08 | No |
| ini. | 3 | 0 | -21238 | 1435 | | | 335 | 126 | SLU 79 | 0.09 | No |
| fin. | 3 | 0 | -24155 | -1444 | | | 335 | 126 | SLU 79 | 0.09 | No |
| ini. | 3 | 0 | -21555 | 1441 | | | 335 | 126 | SLU 76 | 0.09 | No |
| fin. | 3 | 0 | -23264 | -1402 | | | 335 | 126 | SLU 76 | 0.09 | No |
| ini. | 3 | 0 | -21348 | 1442 | | | 335 | 126 | SLU 77 | 0.09 | No |
| fin. | 3 | 0 | -24242 | -1449 | | | 335 | 126 | SLU 77 | 0.09 | No |

### Verifiche a pressoflessione delle travi in muratura in combinazioni sismiche

| Sezione | γM | N | M | Mu | Comb. | c.s. | Verifica |
|---|---|---|---|---|---|---|---|
| ini. | 2 | 328 | 92939 | 28471 | SLV 11 | 0.31 | No |
| fin. | 2 | 1581 | -119014 | 28471 | SLV 11 | 0.24 | No |
| ini. | 2 | 1527 | -144292 | 28471 | SLV 9 | 0.2 | No |
| fin. | 2 | 1235 | 113430 | 28471 | SLV 9 | 0.25 | No |
| ini. | 2 | 328 | 92939 | 28471 | SLV 12 | 0.31 | No |
| fin. | 2 | 1581 | -119014 | 28471 | SLV 12 | 0.24 | No |
| ini. | 2 | 1527 | -144292 | 28471 | SLV 10 | 0.2 | No |
| fin. | 2 | 1235 | 113430 | 28471 | SLV 10 | 0.25 | No |
| ini. | 2 | 1039 | 116123 | 28471 | SLV 7 | 0.25 | No |
| fin. | 2 | 886 | -145255 | 28471 | SLV 7 | 0.2 | No |
| ini. | 2 | 1039 | 116123 | 28471 | SLV 8 | 0.25 | No |
| fin. | 2 | 886 | -145255 | 28471 | SLV 8 | 0.2 | No |
| ini. | 2 | 2288 | 60141 | 28471 | SLV 4 | 0.47 | No |
| fin. | 2 | -46 | -94514 | 28471 | SLV 4 | 0.3 | No |
| ini. | 2 | 2238 | -121108 | 28471 | SLV 6 | 0.24 | No |
| fin. | 2 | 540 | 87189 | 28471 | SLV 6 | 0.33 | No |
| ini. | 2 | 2238 | -121108 | 28471 | SLV 5 | 0.24 | No |
| fin. | 2 | 540 | 87189 | 28471 | SLV 5 | 0.33 | No |
| ini. | 2 | 2288 | 60141 | 28471 | SLV 3 | 0.47 | No |
| fin. | 2 | -46 | -94514 | 28471 | SLV 3 | 0.3 | No |

### Verifiche a taglio delle travi in muratura secondo §C8.7.1.3.1 in combinazioni sismiche

| Sezione | γM | N | M | V | Vt | Vp | Vt fess. diag. | Vt,lim | Comb. | c.s. | Verifica |
|---|---|---|---|---|---|---|---|---|---|---|---|
| ini. | 2 | 0 | -11028 | 196 | | | 503 | 189 | SLV 2 | 0.97 | No |
| fin. | 2 | 0 | -24781 | -2189 | | | 503 | 189 | SLV 2 | 0.09 | No |
| ini. | 2 | 0 | 116123 | -402 | | | 503 | 189 | SLV 8 | 0.47 | No |
| fin. | 2 | 0 | -145255 | -1911 | | | 503 | 189 | SLV 8 | 0.1 | No |
| ini. | 2 | 0 | -88310 | 2338 | | | 503 | 189 | SLV 13 | 0.08 | No |
| fin. | 2 | 0 | 62689 | 587 | | | 503 | 189 | SLV 13 | 0.32 | No |
| ini. | 2 | 0 | 60141 | -426 | | | 503 | 189 | SLV 3 | 0.44 | No |
| fin. | 2 | 0 | -94514 | -2509 | | | 503 | 189 | SLV 3 | 0.08 | No |
| ini. | 2 | 0 | -11028 | 196 | | | 503 | 189 | SLV 1 | 0.97 | No |
| fin. | 2 | 0 | -24781 | -2189 | | | 503 | 189 | SLV 1 | 0.09 | No |
| ini. | 2 | 0 | -144292 | 2314 | | | 503 | 189 | SLV 9 | 0.08 | No |
| fin. | 2 | 0 | 113430 | -11 | | | 503 | 189 | SLV 9 | 16.93 | Si |
| ini. | 2 | 0 | -88310 | 2338 | | | 503 | 189 | SLV 14 | 0.08 | No |
| fin. | 2 | 0 | 62689 | 587 | | | 503 | 189 | SLV 14 | 0.32 | No |
| ini. | 2 | 0 | 116123 | -402 | | | 503 | 189 | SLV 7 | 0.47 | No |
| fin. | 2 | 0 | -145255 | -1911 | | | 503 | 189 | SLV 7 | 0.1 | No |
| ini. | 2 | 0 | 60141 | -426 | | | 503 | 189 | SLV 4 | 0.44 | No |
| fin. | 2 | 0 | -94514 | -2509 | | | 503 | 189 | SLV 4 | 0.08 | No |
| ini. | 2 | 0 | -144292 | 2314 | | | 503 | 189 | SLV 10 | 0.08 | No |
| fin. | 2 | 0 | 113430 | -11 | | | 503 | 189 | SLV 10 | 16.93 | Si |

### Tabella dei coefficienti di sicurezza minimi

| Stato limite | Coeff.s. | Comb. | Verifica |
|---|---|---|---|
| PF_SLV | 0.196 | SLV 7 | No |
| V_SLV | 0.075 | SLV 3 | No |
| PF_SLU | 0.754 | SLU 83 | No |
| V_SLU | 0.082 | SLU 84 | No |

## Trave di accoppiamento 4

Verifiche condotte secondo D.M. 17-01-18 (N.T.C.)

### Dati geometrici

| X ini. | Y ini. | Z ini.inf. | Z ini.sup. | H ini. | X fin. | Y fin. | Z fin.inf. | Z fin.sup | H fin. | Luce | Spessore | R. Trazione |
|---|---|---|---|---|---|---|---|---|---|---|---|---|
| -1961.8 | 127.1 | 102 | 171 | 69 | -1961.8 | 207.1 | 102 | 171 | 69 | 80 | 30 | 3500 |

### Caratteristiche del materiale

(Circolare 7 21-01-19 C8.5.I) Muratura in mattoni pieni e malta di calce LC2_Corti

| fb_ | fhk | fvk0 | fhmedio | τ0 | fv0 | μ | ϕ | fvk,lim | E | G | FC |
|---|---|---|---|---|---|---|---|---|---|---|---|
| 12 | | | 17.25 | 0.9 | 2 | 0.577 | 0.767 | 0.65 | 32000 | 12800 | 1.2 |

## Verifiche a pressoflessione delle travi in muratura in combinazioni non sismiche

| Sezione | γM | N | M | Mu | Comb. | c.s. | Verifica |
|---|---|---|---|---|---|---|---|
| ini. | 3 | 668 | 3741 | 70622 | SLU 77 | 18.88 | Si |
| fin. | 3 | -40 | -81608 | 70622 | SLU 77 | 0.87 | No |
| ini. | 3 | 583 | 6238 | 70622 | SLU 81 | 11.32 | Si |
| fin. | 3 | -211 | -85717 | 70622 | SLU 81 | 0.82 | No |
| ini. | 3 | 676 | 3348 | 70622 | SLU 79 | 21.1 | Si |
| fin. | 3 | -16 | -80395 | 70622 | SLU 79 | 0.88 | No |
| ini. | 3 | 608 | 4926 | 70622 | SLU 74 | 14.34 | Si |
| fin. | 3 | -126 | -81919 | 70622 | SLU 74 | 0.86 | No |
| ini. | 3 | 645 | 4786 | 70622 | SLU 84 | 14.76 | Si |
| fin. | 3 | -113 | -84600 | 70622 | SLU 84 | 0.83 | No |
| ini. | 3 | 642 | 5053 | 70622 | SLU 83 | 13.98 | Si |
| fin. | 3 | -125 | -85406 | 70622 | SLU 83 | 0.83 | No |
| ini. | 3 | 670 | 3474 | 70622 | SLU 78 | 20.33 | Si |
| fin. | 3 | -28 | -80801 | 70622 | SLU 78 | 0.87 | No |
| ini. | 3 | 561 | 5273 | 70622 | SLU 73 | 13.39 | Si |
| fin. | 3 | -168 | -79673 | 70622 | SLU 73 | 0.89 | No |
| ini. | 3 | 611 | 4659 | 70622 | SLU 75 | 15.16 | Si |
| fin. | 3 | -114 | -81113 | 70622 | SLU 75 | 0.87 | No |
| ini. | 3 | 585 | 5971 | 70622 | SLU 82 | 11.83 | Si |
| fin. | 3 | -199 | -84911 | 70622 | SLU 82 | 0.83 | No |

## Verifiche a taglio delle travi in muratura secondo §C8.7.1.3.1 in combinazioni non sismiche

| Sezione | γM | N | M | V | Vt | Vp | Vt fess. diag. | Vt,lim | Comb. | c.s. | Verifica |
|---|---|---|---|---|---|---|---|---|---|---|---|
| ini. | 3 | 0 | 3348 | 627 | | | 688 | 259 | SLU 79 | 0.41 | No |
| fin. | 3 | 0 | -80395 | -3441 | | | 688 | 259 | SLU 79 | 0.08 | No |
| ini. | 3 | 0 | 3474 | 622 | | | 688 | 259 | SLU 78 | 0.42 | No |
| fin. | 3 | 0 | -80801 | -3455 | | | 688 | 259 | SLU 78 | 0.07 | No |
| ini. | 3 | 0 | 5971 | 542 | | | 688 | 259 | SLU 82 | 0.48 | No |
| fin. | 3 | 0 | -84911 | -3616 | | | 688 | 259 | SLU 82 | 0.07 | No |
| ini. | 3 | 0 | 3081 | 634 | | | 688 | 259 | SLU 80 | 0.41 | No |
| fin. | 3 | 0 | -79588 | -3412 | | | 688 | 259 | SLU 80 | 0.08 | No |
| ini. | 3 | 0 | 4659 | 564 | | | 688 | 259 | SLU 75 | 0.46 | No |
| fin. | 3 | 0 | -81113 | -3455 | | | 688 | 259 | SLU 75 | 0.07 | No |
| ini. | 3 | 0 | 4926 | 557 | | | 688 | 259 | SLU 74 | 0.46 | No |
| fin. | 3 | 0 | -81919 | -3484 | | | 688 | 259 | SLU 74 | 0.07 | No |
| ini. | 3 | 0 | 5053 | 593 | | | 688 | 259 | SLU 83 | 0.44 | No |
| fin. | 3 | 0 | -85406 | -3645 | | | 688 | 259 | SLU 83 | 0.07 | No |
| ini. | 3 | 0 | 3741 | 615 | | | 688 | 259 | SLU 77 | 0.42 | No |
| fin. | 3 | 0 | -81608 | -3484 | | | 688 | 259 | SLU 77 | 0.07 | No |
| ini. | 3 | 0 | 6238 | 535 | | | 688 | 259 | SLU 81 | 0.48 | No |
| fin. | 3 | 0 | -85717 | -3645 | | | 688 | 259 | SLU 81 | 0.07 | No |
| ini. | 3 | 0 | 4786 | 600 | | | 688 | 259 | SLU 84 | 0.43 | No |
| fin. | 3 | 0 | -84600 | -3616 | | | 688 | 259 | SLU 84 | 0.07 | No |

## Verifiche a pressoflessione delle travi in muratura in combinazioni sismiche

| Sezione | γM | N | M | Mu | Comb. | c.s. | Verifica |
|---|---|---|---|---|---|---|---|
| ini. | 2 | -2203 | 49601 | 87331 | SLV 7 | 1.76 | Si |
| fin. | 2 | -4398 | -169639 | 87331 | SLV 7 | 0.51 | No |
| ini. | 2 | -700 | 23222 | 87331 | SLD 8 | 3.76 | Si |
| fin. | 2 | -1924 | -103611 | 87331 | SLD 8 | 0.84 | No |
| ini. | 2 | -593 | 17198 | 87331 | SLD 12 | 5.08 | Si |
| fin. | 2 | -1637 | -93493 | 87331 | SLD 12 | 0.93 | No |
| ini. | 2 | -700 | 23222 | 87331 | SLD 7 | 3.76 | Si |
| fin. | 2 | -1924 | -103611 | 87331 | SLD 7 | 0.84 | No |
| ini. | 2 | -593 | 17198 | 87331 | SLD 11 | 5.08 | Si |
| fin. | 2 | -1637 | -93493 | 87331 | SLD 11 | 0.93 | No |
| ini. | 2 | -1952 | 35351 | 87331 | SLV 11 | 2.47 | Si |
| fin. | 2 | -3724 | -145889 | 87331 | SLV 11 | 0.6 | No |
| ini. | 2 | -2203 | 49601 | 87331 | SLV 8 | 1.76 | Si |
| fin. | 2 | -4398 | -169639 | 87331 | SLV 8 | 0.51 | No |
| ini. | 2 | -775 | 39093 | 87331 | SLV 3 | 2.23 | Si |
| fin. | 2 | -2424 | -125390 | 87331 | SLV 3 | 0.7 | No |
| ini. | 2 | -1952 | 35351 | 87331 | SLV 12 | 2.47 | Si |
| fin. | 2 | -3724 | -145889 | 87331 | SLV 12 | 0.6 | No |
| ini. | 2 | -775 | 39093 | 87331 | SLV 4 | 2.23 | Si |
| fin. | 2 | -2424 | -125390 | 87331 | SLV 4 | 0.7 | No |

## Verifiche a taglio delle travi in muratura secondo §C8.7.1.3.1 in combinazioni sismiche

| Sezione | γM | N | M | V | Vt | Vp | Vt fess. diag. | Vt,lim | Comb. | c.s. | Verifica |
|---|---|---|---|---|---|---|---|---|---|---|---|
| ini. | 2 | 0 | 39093 | -821 | | | 1031 | 388 | SLV 4 | 0.47 | No |
| fin. | 2 | 0 | -125390 | -4628 | | | 1031 | 388 | SLV 4 | 0.08 | No |
| ini. | 2 | 0 | 23222 | -610 | | | 1031 | 388 | SLD 8 | 0.64 | No |
| fin. | 2 | 0 | -103611 | -3769 | | | 1031 | 388 | SLD 8 | 0.1 | No |
| ini. | 2 | 0 | 17198 | -474 | | | 1031 | 388 | SLD 12 | 0.82 | No |
| fin. | 2 | 0 | -93493 | -3408 | | | 1031 | 388 | SLD 12 | 0.11 | No |
| ini. | 2 | 0 | 39093 | -821 | | | 1031 | 388 | SLV 3 | 0.47 | No |
| fin. | 2 | 0 | -125390 | -4628 | | | 1031 | 388 | SLV 3 | 0.08 | No |
| ini. | 2 | 0 | 35351 | -1620 | | | 1031 | 388 | SLV 12 | 0.24 | No |
| fin. | 2 | 0 | -145889 | -4868 | | | 1031 | 388 | SLV 12 | 0.08 | No |
| ini. | 2 | 0 | 23222 | -610 | | | 1031 | 388 | SLD 7 | 0.64 | No |
| fin. | 2 | 0 | -103611 | -3769 | | | 1031 | 388 | SLD 7 | 0.1 | No |
| ini. | 2 | 0 | 17198 | -474 | | | 1031 | 388 | SLD 11 | 0.82 | No |
| fin. | 2 | 0 | -93493 | -3408 | | | 1031 | 388 | SLD 11 | 0.11 | No |

| Sezione | γM | N | M | V | Vt | Vp | Vt fess. diag. | Vt,lim | Comb. | c.s. | Verifica |
|---|---|---|---|---|---|---|---|---|---|---|---|
| ini. | 2 | 0 | 49601 | -1939 | | | 1031 | 388 | SLV 8 | 0.2 | No |
| fin. | 2 | 0 | -169639 | -5714 | | | 1031 | 388 | SLV 8 | 0.07 | No |
| ini. | 2 | 0 | 35351 | -1620 | | | 1031 | 388 | SLV 11 | 0.24 | No |
| fin. | 2 | 0 | -145889 | -4868 | | | 1031 | 388 | SLV 11 | 0.08 | No |
| ini. | 2 | 0 | 49601 | -1939 | | | 1031 | 388 | SLV 7 | 0.2 | No |
| fin. | 2 | 0 | -169639 | -5714 | | | 1031 | 388 | SLV 7 | 0.07 | No |

### Tabella dei coefficienti di sicurezza minimi

| Stato limite | Coeff.s. | Comb. | Verifica |
|---|---|---|---|
| PF_SLV | 0.515 | SLV 7 | No |
| V_SLV | 0.068 | SLV 7 | No |
| PF_SLU | 0.824 | SLU 81 | No |
| V_SLU | 0.071 | SLU 81 | No |

## Trave di accoppiamento 5

Verifiche condotte secondo D.M. 17-01-18 (N.T.C.)

### Dati geometrici

| X ini. | Y ini. | Z ini.inf. | Z ini.sup. | H ini. | X fin. | Y fin. | Z fin.inf. | Z fin.sup | H fin. | Luce | Spessore | R. Trazione |
|---|---|---|---|---|---|---|---|---|---|---|---|---|
| -1961.8 | 485.1 | 102 | 171 | 69 | -1961.8 | 565.1 | 102 | 171 | 69 | 80 | 30 | 3500 |

### Caratteristiche del materiale

(Circolare 7 21-01-19 C8.5.I) Muratura in mattoni pieni e malta di calce LC2_Corti

| fb_ | fhk | fvk0 | fhmedio | τ0 | fv0 | μ | ϕ | fvk,lim | E | G | FC |
|---|---|---|---|---|---|---|---|---|---|---|---|
| 12 | | | 17.25 | 0.9 | 2 | 0.577 | 0.767 | 0.65 | 32000 | 12800 | 1.2 |

### Verifiche a pressoflessione delle travi in muratura in combinazioni non sismiche

| Sezione | γM | N | M | Mu | Comb. | c.s. | Verifica |
|---|---|---|---|---|---|---|---|
| ini. | 3 | -2505 | -24842 | 70622 | SLU 81 | 2.84 | Si |
| fin. | 3 | -2320 | 1330 | 70622 | SLU 81 | 53.1 | Si |
| ini. | 3 | -2350 | -25535 | 70622 | SLU 80 | 2.77 | Si |
| fin. | 3 | -2105 | 3112 | 70622 | SLU 80 | 22.7 | Si |
| ini. | 3 | -2490 | -25691 | 70622 | SLU 84 | 2.75 | Si |
| fin. | 3 | -2270 | 2191 | 70622 | SLU 84 | 32.23 | Si |
| ini. | 3 | -2387 | -24692 | 70622 | SLU 75 | 2.86 | Si |
| fin. | 3 | -2190 | 1952 | 70622 | SLU 75 | 36.18 | Si |
| ini. | 3 | -2502 | -24815 | 70622 | SLU 82 | 2.85 | Si |
| fin. | 3 | -2319 | 1325 | 70622 | SLU 82 | 53.31 | Si |
| ini. | 3 | -2390 | -24719 | 70622 | SLU 74 | 2.86 | Si |
| fin. | 3 | -2192 | 1957 | 70622 | SLU 74 | 36.09 | Si |
| ini. | 3 | -2376 | -25567 | 70622 | SLU 78 | 2.76 | Si |
| fin. | 3 | -2142 | 2819 | 70622 | SLU 78 | 25.06 | Si |
| ini. | 3 | -2354 | -25562 | 70622 | SLU 79 | 2.76 | Si |
| fin. | 3 | -2106 | 3117 | 70622 | SLU 79 | 22.66 | Si |
| ini. | 3 | -2379 | -25594 | 70622 | SLU 77 | 2.76 | Si |
| fin. | 3 | -2143 | 2824 | 70622 | SLU 77 | 25.01 | Si |
| ini. | 3 | -2493 | -25717 | 70622 | SLU 83 | 2.75 | Si |
| fin. | 3 | -2271 | 2197 | 70622 | SLU 83 | 32.15 | Si |

### Verifiche a taglio delle travi in muratura secondo §C8.7.1.3.1 in combinazioni non sismiche

| Sezione | γM | N | M | V | Vt | Vp | Vt fess. diag. | Vt,lim | Comb. | c.s. | Verifica |
|---|---|---|---|---|---|---|---|---|---|---|---|
| ini. | 3 | 0 | -24719 | 7902 | | | 688 | 259 | SLU 74 | 0.03 | No |
| fin. | 3 | 0 | 1957 | -3136 | | | 688 | 259 | SLU 74 | 0.08 | No |
| ini. | 3 | 0 | -24842 | 8087 | | | 688 | 259 | SLU 81 | 0.03 | No |
| fin. | 3 | 0 | 1330 | -3247 | | | 688 | 259 | SLU 81 | 0.08 | No |
| ini. | 3 | 0 | -24692 | 7890 | | | 688 | 259 | SLU 75 | 0.03 | No |
| fin. | 3 | 0 | 1952 | -3134 | | | 688 | 259 | SLU 75 | 0.08 | No |
| ini. | 3 | 0 | -25594 | 8042 | | | 688 | 259 | SLU 77 | 0.03 | No |
| fin. | 3 | 0 | 2824 | -3134 | | | 688 | 259 | SLU 77 | 0.08 | No |
| ini. | 3 | 0 | -25567 | 8031 | | | 688 | 259 | SLU 78 | 0.03 | No |
| fin. | 3 | 0 | 2819 | -3131 | | | 688 | 259 | SLU 78 | 0.08 | No |
| ini. | 3 | 0 | -25562 | 7992 | | | 688 | 259 | SLU 79 | 0.03 | No |
| fin. | 3 | 0 | 3117 | -3096 | | | 688 | 259 | SLU 79 | 0.08 | No |
| ini. | 3 | 0 | -25717 | 8227 | | | 688 | 259 | SLU 83 | 0.03 | No |
| fin. | 3 | 0 | 2197 | -3245 | | | 688 | 259 | SLU 83 | 0.08 | No |
| ini. | 3 | 0 | -24815 | 8075 | | | 688 | 259 | SLU 82 | 0.03 | No |
| fin. | 3 | 0 | 1325 | -3244 | | | 688 | 259 | SLU 82 | 0.08 | No |
| ini. | 3 | 0 | -25691 | 8216 | | | 688 | 259 | SLU 84 | 0.03 | No |
| fin. | 3 | 0 | 2191 | -3242 | | | 688 | 259 | SLU 84 | 0.08 | No |
| ini. | 3 | 0 | -25535 | 7980 | | | 688 | 259 | SLU 80 | 0.03 | No |
| fin. | 3 | 0 | 3112 | -3093 | | | 688 | 259 | SLU 80 | 0.08 | No |

### Verifiche a pressoflessione delle travi in muratura in combinazioni sismiche

| Sezione | γM | N | M | Mu | Comb. | c.s. | Verifica |
|---|---|---|---|---|---|---|---|
| ini. | 2 | -4683 | -89621 | 87331 | SLV 9 | 0.97 | No |
| fin. | 2 | -67 | 110920 | 87331 | SLV 9 | 0.79 | No |
| ini. | 2 | -4683 | -89621 | 87331 | SLV 10 | 0.97 | No |
| fin. | 2 | -67 | 110920 | 87331 | SLV 10 | 0.79 | No |
| ini. | 2 | 1240 | 50061 | 87331 | SLV 12 | 1.74 | Si |
| fin. | 2 | -2491 | -93336 | 87331 | SLV 12 | 0.94 | No |
| ini. | 2 | -2825 | -48147 | 87331 | SLV 14 | 1.81 | Si |
| fin. | 2 | -361 | 57394 | 87331 | SLV 14 | 1.52 | Si |
| ini. | 2 | -4497 | -83266 | 87331 | SLV 5 | 1.05 | Si |

| Sezione | γM | N | M | Mu | Comb. | c.s. | Verifica |
|---|---|---|---|---|---|---|---|
| fin. | 2 | -542 | 95522 | 87331 | SLV 5 | 0.91 | No |
| ini. | 2 | 1425 | 56417 | 87331 | SLV 7 | 1.55 | Si |
| fin. | 2 | -2965 | -108734 | 87331 | SLV 7 | 0.8 | No |
| ini. | 2 | 1425 | 56417 | 87331 | SLV 8 | 1.55 | Si |
| fin. | 2 | -2965 | -108734 | 87331 | SLV 8 | 0.8 | No |
| ini. | 2 | 1240 | 50061 | 87331 | SLV 11 | 1.74 | Si |
| fin. | 2 | -2491 | -93336 | 87331 | SLV 11 | 0.94 | No |
| ini. | 2 | -2825 | -48147 | 87331 | SLV 13 | 1.81 | Si |
| fin. | 2 | -361 | 57394 | 87331 | SLV 13 | 1.52 | Si |
| ini. | 2 | -4497 | -83266 | 87331 | SLV 6 | 1.05 | Si |
| fin. | 2 | -542 | 95522 | 87331 | SLV 6 | 0.91 | No |

### Verifiche a taglio delle travi in muratura secondo §C8.7.1.3.1 in combinazioni sismiche

| Sezione | γM | N | M | V | Vt | Vp | Vt fess. diag. | Vt,lim | Comb. | c.s. | Verifica |
|---|---|---|---|---|---|---|---|---|---|---|---|
| ini. | 2 | 0 | -47609 | 7290 | | | 1031 | 388 | SLD 9 | 0.05 | No |
| fin. | 2 | 0 | 47554 | -220 | | | 1031 | 388 | SLD 9 | 1.76 | Si |
| ini. | 2 | 0 | -83266 | 9441 | | | 1031 | 388 | SLV 6 | 0.04 | No |
| fin. | 2 | 0 | 95522 | 1747 | | | 1031 | 388 | SLV 6 | 0.22 | No |
| ini. | 2 | 0 | -89621 | 9958 | | | 1031 | 388 | SLV 9 | 0.04 | No |
| fin. | 2 | 0 | 110920 | 2443 | | | 1031 | 388 | SLV 9 | 0.16 | No |
| ini. | 2 | 0 | -89621 | 9958 | | | 1031 | 388 | SLV 10 | 0.04 | No |
| fin. | 2 | 0 | 110920 | 2443 | | | 1031 | 388 | SLV 10 | 0.16 | No |
| ini. | 2 | 0 | -47609 | 7290 | | | 1031 | 388 | SLD 10 | 0.05 | No |
| fin. | 2 | 0 | 47554 | -220 | | | 1031 | 388 | SLD 10 | 1.76 | Si |
| ini. | 2 | 0 | -48147 | 7497 | | | 1031 | 388 | SLV 14 | 0.05 | No |
| fin. | 2 | 0 | 57394 | 282 | | | 1031 | 388 | SLV 14 | 1.38 | Si |
| ini. | 2 | 0 | -44973 | 7072 | | | 1031 | 388 | SLD 5 | 0.05 | No |
| fin. | 2 | 0 | 40979 | -514 | | | 1031 | 388 | SLD 5 | 0.76 | No |
| ini. | 2 | 0 | -83266 | 9441 | | | 1031 | 388 | SLV 5 | 0.04 | No |
| fin. | 2 | 0 | 95522 | 1747 | | | 1031 | 388 | SLV 5 | 0.22 | No |
| ini. | 2 | 0 | -44973 | 7072 | | | 1031 | 388 | SLD 6 | 0.05 | No |
| fin. | 2 | 0 | 40979 | -514 | | | 1031 | 388 | SLD 6 | 0.76 | No |
| ini. | 2 | 0 | -48147 | 7497 | | | 1031 | 388 | SLV 13 | 0.05 | No |
| fin. | 2 | 0 | 57394 | 282 | | | 1031 | 388 | SLV 13 | 1.38 | Si |

### Tabella dei coefficienti di sicurezza minimi

| Stato limite | Coeff.s. | Comb. | Verifica |
|---|---|---|---|
| PF_SLV | 0.787 | SLV 9 | No |
| V_SLV | 0.039 | SLV 9 | No |
| PF_SLU | 2.746 | SLU 83 | Si |
| V_SLU | 0.031 | SLU 83 | No |

## Trave di accoppiamento 6

Verifiche condotte secondo D.M. 17-01-18 (N.T.C.)

### Dati geometrici

| X ini. | Y ini. | Z ini.inf. | Z ini.sup. | H ini. | X fin. | Y fin. | Z fin.inf. | Z fin.sup | H fin. | Luce | Spessore | R. Trazione |
|---|---|---|---|---|---|---|---|---|---|---|---|---|
| -2154.3 | -328.4 | -98 | 102 | 200 | -2254.3 | -328.4 | -98 | 102 | 200 | 100 | 45 | 3500 |

### Caratteristiche del materiale

(Circolare 7 21-01-19 C8.5.I) Muratura in mattoni pieni e malta di calce LC2_Corti

| fb_ | fhk | fvk0 | fhmedio | τ0 | fv0 | μ | ϕ | fvk,lim | E | G | FC |
|---|---|---|---|---|---|---|---|---|---|---|---|
| 12 | | | 17.25 | 0.9 | 2 | 0.577 | 0.767 | 0.65 | 32000 | 12800 | 1.2 |

### Verifiche a pressoflessione delle travi in muratura in combinazioni non sismiche

| Sezione | γM | N | M | Mu | Comb. | c.s. | Verifica |
|---|---|---|---|---|---|---|---|
| ini. | 3 | -3675 | -64451 | 316581 | SLU 62 | 4.91 | Si |
| fin. | 3 | -2510 | -201467 | 316581 | SLU 62 | 1.57 | Si |
| ini. | 3 | -3978 | -61568 | 316581 | SLU 79 | 5.14 | Si |
| fin. | 3 | -2615 | -224193 | 316581 | SLU 79 | 1.41 | Si |
| ini. | 3 | -3900 | -71371 | 316581 | SLU 81 | 4.44 | Si |
| fin. | 3 | -2672 | -214404 | 316581 | SLU 81 | 1.48 | Si |
| ini. | 3 | -3661 | -55100 | 316581 | SLU 69 | 5.75 | Si |
| fin. | 3 | -2400 | -208467 | 316581 | SLU 69 | 1.52 | Si |
| ini. | 3 | -3653 | -58825 | 316581 | SLU 56 | 5.38 | Si |
| fin. | 3 | -2444 | -203641 | 316581 | SLU 56 | 1.55 | Si |
| ini. | 3 | -4009 | -68036 | 316581 | SLU 83 | 4.65 | Si |
| fin. | 3 | -2692 | -222846 | 316581 | SLU 83 | 1.42 | Si |
| ini. | 3 | -3644 | -57984 | 316581 | SLU 58 | 5.46 | Si |
| fin. | 3 | -2433 | -202814 | 316581 | SLU 58 | 1.56 | Si |
| ini. | 3 | -3878 | -65744 | 316581 | SLU 74 | 4.82 | Si |
| fin. | 3 | -2606 | -216578 | 316581 | SLU 74 | 1.46 | Si |
| ini. | 3 | -3987 | -62409 | 316581 | SLU 77 | 5.07 | Si |
| fin. | 3 | -2626 | -225020 | 316581 | SLU 77 | 1.41 | Si |
| ini. | 3 | -3652 | -54260 | 316581 | SLU 71 | 5.83 | Si |
| fin. | 3 | -2389 | -207640 | 316581 | SLU 71 | 1.52 | Si |

### Verifiche a taglio delle travi in muratura secondo §C8.7.1.3.1 in combinazioni non sismiche

| Sezione | γM | N | M | V | Vt | Vp | Vt fess. diag. | Vt,lim | Comb. | c.s. | Verifica |
|---|---|---|---|---|---|---|---|---|---|---|---|
| ini. | 3 | 0 | -68036 | -8641 | | | 3466 | 1304 | SLU 83 | 0.15 | No |
| fin. | 3 | 0 | -222846 | 1307 | | | 3466 | 1304 | SLU 83 | 1 | No |
| ini. | 3 | 0 | -61568 | -8579 | | | 3466 | 1304 | SLU 79 | 0.15 | No |
| fin. | 3 | 0 | -224193 | 1063 | | | 3466 | 1304 | SLU 79 | 1.23 | Si |

| Sezione | γM | N | M | V | Vt | Vp | Vt fess. diag. | Vt,lim | Comb. | c.s. | Verifica |
|---|---|---|---|---|---|---|---|---|---|---|---|
| ini. | 3 | 0 | -65744 | -8332 | | | 3466 | 1304 | SLU 74 | 0.16 | No |
| fin. | 3 | 0 | -216578 | 1230 | | | 3466 | 1304 | SLU 74 | 1.06 | Si |
| ini. | 3 | 0 | -23735 | -8521 | | | 3466 | 1304 | SLU 80 | 0.15 | No |
| fin. | 3 | 0 | -184225 | 1191 | | | 3466 | 1304 | SLU 80 | 1.1 | Si |
| ini. | 3 | 0 | -30203 | -8583 | | | 3466 | 1304 | SLU 84 | 0.15 | No |
| fin. | 3 | 0 | -182877 | 1435 | | | 3466 | 1304 | SLU 84 | 0.91 | No |
| ini. | 3 | 0 | -33538 | -8313 | | | 3466 | 1304 | SLU 82 | 0.16 | No |
| fin. | 3 | 0 | -174435 | 1582 | | | 3466 | 1304 | SLU 82 | 0.82 | No |
| ini. | 3 | 0 | -24576 | -8544 | | | 3466 | 1304 | SLU 78 | 0.15 | No |
| fin. | 3 | 0 | -185051 | 1212 | | | 3466 | 1304 | SLU 78 | 1.08 | Si |
| ini. | 3 | 0 | -71371 | -8371 | | | 3466 | 1304 | SLU 81 | 0.16 | No |
| fin. | 3 | 0 | -214404 | 1454 | | | 3466 | 1304 | SLU 81 | 0.9 | No |
| ini. | 3 | 0 | -62409 | -8602 | | | 3466 | 1304 | SLU 77 | 0.15 | No |
| fin. | 3 | 0 | -225020 | 1083 | | | 3466 | 1304 | SLU 77 | 1.2 | Si |
| ini. | 3 | 0 | -27911 | -8274 | | | 3466 | 1304 | SLU 75 | 0.16 | No |
| fin. | 3 | 0 | -176610 | 1359 | | | 3466 | 1304 | SLU 75 | 0.96 | No |

### Verifiche a pressoflessione delle travi in muratura in combinazioni sismiche

| Sezione | γM | N | M | Mu | Comb. | c.s. | Verifica |
|---|---|---|---|---|---|---|---|
| ini. | 2 | -4257 | 40997 | 327721 | SLV 3 | 7.99 | Si |
| fin. | 2 | 2669 | -545832 | 327721 | SLV 3 | 0.6 | No |
| ini. | 2 | 6568 | -395756 | 327721 | SLV 11 | 0.83 | No |
| fin. | 2 | 6334 | -428660 | 327721 | SLV 11 | 0.76 | No |
| ini. | 2 | -4 | -139468 | 327721 | SLD 7 | 2.35 | Si |
| fin. | 2 | 1866 | -327914 | 327721 | SLD 7 | 1 | No |
| ini. | 2 | -4 | -139468 | 327721 | SLD 8 | 2.35 | Si |
| fin. | 2 | 1866 | -327914 | 327721 | SLD 8 | 1 | No |
| ini. | 2 | -9074 | 217604 | 327721 | SLV 2 | 1.51 | Si |
| fin. | 2 | -2569 | -324760 | 327721 | SLV 2 | 1.01 | Si |
| ini. | 2 | 6568 | -395756 | 327721 | SLV 12 | 0.83 | No |
| fin. | 2 | 6334 | -428660 | 327721 | SLV 12 | 0.76 | No |
| ini. | 2 | 4165 | -289274 | 327721 | SLV 8 | 1.13 | Si |
| fin. | 2 | 7463 | -601778 | 327721 | SLV 8 | 0.54 | No |
| ini. | 2 | -4257 | 40997 | 327721 | SLV 4 | 7.99 | Si |
| fin. | 2 | 2669 | -545832 | 327721 | SLV 4 | 0.6 | No |
| ini. | 2 | 4165 | -289274 | 327721 | SLV 7 | 1.13 | Si |
| fin. | 2 | 7463 | -601778 | 327721 | SLV 7 | 0.54 | No |
| ini. | 2 | -9074 | 217604 | 327721 | SLV 1 | 1.51 | Si |
| fin. | 2 | -2569 | -324760 | 327721 | SLV 1 | 1.01 | Si |

### Verifiche a taglio delle travi in muratura secondo §C8.7.1.3.1 in combinazioni sismiche

| Sezione | γM | N | M | V | Vt | Vp | Vt fess. diag. | Vt,lim | Comb. | c.s. | Verifica |
|---|---|---|---|---|---|---|---|---|---|---|---|
| ini. | 2 | 0 | 217604 | -18040 | | | 5199 | 1957 | SLV 1 | 0.11 | No |
| fin. | 2 | 0 | -324760 | -8809 | | | 5199 | 1957 | SLV 1 | 0.22 | No |
| ini. | 2 | 0 | 299416 | -11389 | | | 5199 | 1957 | SLV 6 | 0.17 | No |
| fin. | 2 | 0 | 135127 | 615 | | | 5199 | 1957 | SLV 6 | 3.18 | Si |
| ini. | 2 | 0 | -137336 | 5444 | | | 5199 | 1957 | SLV 14 | 0.36 | No |
| fin. | 2 | 0 | 252298 | 12375 | | | 5199 | 1957 | SLV 14 | 0.16 | No |
| ini. | 2 | 0 | 217604 | -18040 | | | 5199 | 1957 | SLV 2 | 0.11 | No |
| fin. | 2 | 0 | -324760 | -8809 | | | 5199 | 1957 | SLV 2 | 0.22 | No |
| ini. | 2 | 0 | 299416 | -11389 | | | 5199 | 1957 | SLV 5 | 0.17 | No |
| fin. | 2 | 0 | 135127 | 615 | | | 5199 | 1957 | SLV 5 | 3.18 | Si |
| ini. | 2 | 0 | 62706 | -10996 | | | 5199 | 1957 | SLD 1 | 0.18 | No |
| fin. | 2 | 0 | -228248 | -3332 | | | 5199 | 1957 | SLD 1 | 0.59 | No |
| ini. | 2 | 0 | 40997 | -16695 | | | 5199 | 1957 | SLV 3 | 0.12 | No |
| fin. | 2 | 0 | -545832 | -10531 | | | 5199 | 1957 | SLV 3 | 0.19 | No |
| ini. | 2 | 0 | 62706 | -10996 | | | 5199 | 1957 | SLD 2 | 0.18 | No |
| fin. | 2 | 0 | -228248 | -3332 | | | 5199 | 1957 | SLD 2 | 0.59 | No |
| ini. | 2 | 0 | 40997 | -16695 | | | 5199 | 1957 | SLV 4 | 0.12 | No |
| fin. | 2 | 0 | -545832 | -10531 | | | 5199 | 1957 | SLV 4 | 0.19 | No |
| ini. | 2 | 0 | -137336 | 5444 | | | 5199 | 1957 | SLV 13 | 0.36 | No |
| fin. | 2 | 0 | 252298 | 12375 | | | 5199 | 1957 | SLV 13 | 0.16 | No |

### Tabella dei coefficienti di sicurezza minimi

| Stato limite | Coeff.s. | Comb. | Verifica |
|---|---|---|---|
| PF_SLV | 0.545 | SLV 7 | No |
| V_SLV | 0.108 | SLV 1 | No |
| PF_SLU | 1.407 | SLU 77 | Si |
| V_SLU | 0.151 | SLU 83 | No |

## Trave di accoppiamento 7

Verifiche condotte secondo D.M. 17-01-18 (N.T.C.)

### Dati geometrici

| X ini. | Y ini. | Z ini.inf. | Z ini.sup. | H ini. | X fin. | Y fin. | Z fin.inf. | Z fin.sup | H fin. | Luce | Spessore | R. Trazione |
|---|---|---|---|---|---|---|---|---|---|---|---|---|
| -2154.3 | -328.4 | 142 | 171 | 29 | -2254.3 | -328.4 | 142 | 171 | 29 | 100 | 45 | 3500 |

### Caratteristiche del materiale

(Circolare 7 21-01-19 C8.5.I) Muratura in mattoni pieni e malta di calce LC2_Corti

| fb_ | fhk | fvk0 | fhmedio | τ0 | fv0 | μ | ϕ | fvk,lim | E | G | FC |
|---|---|---|---|---|---|---|---|---|---|---|---|
| 12 | | | 17.25 | 0.9 | 2 | 0.577 | 0.767 | 0.65 | 32000 | 12800 | 1.2 |

## Verifiche a pressoflessione delle travi in muratura in combinazioni non sismiche

| Sezione | γM | N | M | Mu | Comb. | c.s. | Verifica |
|---|---|---|---|---|---|---|---|
| ini. | 3 | 993 | -9343 | 19201 | SLU 69 | 2.06 | Si |
| fin. | 3 | 591 | -24958 | 19201 | SLU 69 | 0.77 | No |
| ini. | 3 | 1022 | -12131 | 19201 | SLU 77 | 1.58 | Si |
| fin. | 3 | 596 | -28129 | 19201 | SLU 77 | 0.68 | No |
| ini. | 3 | 912 | -12597 | 19201 | SLU 62 | 1.52 | Si |
| fin. | 3 | 559 | -24908 | 19201 | SLU 62 | 0.77 | No |
| ini. | 3 | 949 | -10715 | 19201 | SLU 56 | 1.79 | Si |
| fin. | 3 | 573 | -24705 | 19201 | SLU 56 | 0.78 | No |
| ini. | 3 | 985 | -9215 | 19201 | SLU 71 | 2.08 | Si |
| fin. | 3 | 583 | -24942 | 19201 | SLU 71 | 0.77 | No |
| ini. | 3 | 981 | -12946 | 19201 | SLU 74 | 1.48 | Si |
| fin. | 3 | 588 | -26990 | 19201 | SLU 74 | 0.71 | No |
| ini. | 3 | 945 | -14828 | 19201 | SLU 81 | 1.29 | Si |
| fin. | 3 | 574 | -27193 | 19201 | SLU 81 | 0.71 | No |
| ini. | 3 | 1014 | -12003 | 19201 | SLU 79 | 1.6 | Si |
| fin. | 3 | 588 | -28113 | 19201 | SLU 79 | 0.68 | No |
| ini. | 3 | 813 | -12210 | 19201 | SLU 41 | 1.57 | Si |
| fin. | 3 | 463 | -24796 | 19201 | SLU 41 | 0.77 | No |
| ini. | 3 | 985 | -14013 | 19201 | SLU 83 | 1.37 | Si |
| fin. | 3 | 582 | -28333 | 19201 | SLU 83 | 0.68 | No |

## Verifiche a taglio delle travi in muratura secondo §C8.7.1.3.1 in combinazioni non sismiche

| Sezione | γM | N | M | V | Vt | Vp | Vt fess. diag. | Vt,lim | Comb. | c.s. | Verifica |
|---|---|---|---|---|---|---|---|---|---|---|---|
| ini. | 3 | 0 | -12210 | 915 | | | 335 | 126 | SLU 41 | 0.14 | No |
| fin. | 3 | 0 | -24796 | -1140 | | | 335 | 126 | SLU 41 | 0.11 | No |
| ini. | 3 | 0 | -12946 | 1002 | | | 335 | 126 | SLU 74 | 0.13 | No |
| fin. | 3 | 0 | -26990 | -1248 | | | 335 | 126 | SLU 74 | 0.1 | No |
| ini. | 3 | 0 | -12131 | 984 | | | 335 | 126 | SLU 77 | 0.13 | No |
| fin. | 3 | 0 | -28129 | -1284 | | | 335 | 126 | SLU 77 | 0.1 | No |
| ini. | 3 | 0 | -12003 | 977 | | | 335 | 126 | SLU 79 | 0.13 | No |
| fin. | 3 | 0 | -28113 | -1282 | | | 335 | 126 | SLU 79 | 0.1 | No |
| ini. | 3 | 0 | -10587 | 873 | | | 335 | 126 | SLU 58 | 0.14 | No |
| fin. | 3 | 0 | -24688 | -1135 | | | 335 | 126 | SLU 58 | 0.11 | No |
| ini. | 3 | 0 | -10715 | 879 | | | 335 | 126 | SLU 56 | 0.14 | No |
| fin. | 3 | 0 | -24705 | -1137 | | | 335 | 126 | SLU 56 | 0.11 | No |
| ini. | 3 | 0 | -12597 | 958 | | | 335 | 126 | SLU 62 | 0.13 | No |
| fin. | 3 | 0 | -24908 | -1165 | | | 335 | 126 | SLU 62 | 0.11 | No |
| ini. | 3 | 0 | -9343 | 829 | | | 335 | 126 | SLU 69 | 0.15 | No |
| fin. | 3 | 0 | -24958 | -1131 | | | 335 | 126 | SLU 69 | 0.11 | No |
| ini. | 3 | 0 | -14828 | 1080 | | | 335 | 126 | SLU 81 | 0.12 | No |
| fin. | 3 | 0 | -27193 | -1276 | | | 335 | 126 | SLU 81 | 0.1 | No |
| ini. | 3 | 0 | -14013 | 1062 | | | 335 | 126 | SLU 83 | 0.12 | No |
| fin. | 3 | 0 | -28333 | -1312 | | | 335 | 126 | SLU 83 | 0.1 | No |

## Verifiche a pressoflessione delle travi in muratura in combinazioni sismiche

| Sezione | γM | N | M | Mu | Comb. | c.s. | Verifica |
|---|---|---|---|---|---|---|---|
| ini. | 2 | -138 | -112582 | 28471 | SLV 12 | 0.25 | No |
| fin. | 2 | 5832 | -31220 | 28471 | SLV 12 | 0.91 | No |
| ini. | 2 | 513 | -86700 | 28471 | SLV 7 | 0.33 | No |
| fin. | 2 | 5503 | -58805 | 28471 | SLV 7 | 0.48 | No |
| ini. | 2 | 1513 | 94927 | 28471 | SLV 5 | 0.3 | No |
| fin. | 2 | -4968 | -3953 | 28471 | SLV 5 | 7.2 | Si |
| ini. | 2 | 1622 | 7065 | 28471 | SLV 4 | 4.03 | Si |
| fin. | 2 | 1455 | -71789 | 28471 | SLV 4 | 0.4 | No |
| ini. | 2 | -547 | -79209 | 28471 | SLV 15 | 0.36 | No |
| fin. | 2 | 2551 | 20161 | 28471 | SLV 15 | 1.41 | Si |
| ini. | 2 | -547 | -79209 | 28471 | SLV 16 | 0.36 | No |
| fin. | 2 | 2551 | 20161 | 28471 | SLV 16 | 1.41 | Si |
| ini. | 2 | 1622 | 7065 | 28471 | SLV 3 | 4.03 | Si |
| fin. | 2 | 1455 | -71789 | 28471 | SLV 3 | 0.4 | No |
| ini. | 2 | 513 | -86700 | 28471 | SLV 8 | 0.33 | No |
| fin. | 2 | 5503 | -58805 | 28471 | SLV 8 | 0.48 | No |
| ini. | 2 | 1513 | 94927 | 28471 | SLV 6 | 0.3 | No |
| fin. | 2 | -4968 | -3953 | 28471 | SLV 6 | 7.2 | Si |
| ini. | 2 | -138 | -112582 | 28471 | SLV 11 | 0.25 | No |
| fin. | 2 | 5832 | -31220 | 28471 | SLV 11 | 0.91 | No |

## Verifiche a taglio delle travi in muratura secondo §C8.7.1.3.1 in combinazioni sismiche

| Sezione | γM | N | M | V | Vt | Vp | Vt fess. diag. | Vt,lim | Comb. | c.s. | Verifica |
|---|---|---|---|---|---|---|---|---|---|---|---|
| ini. | 2 | 0 | 94927 | -800 | | | 503 | 189 | SLV 5 | 0.24 | No |
| fin. | 2 | 0 | -3953 | -1992 | | | 503 | 189 | SLV 5 | 0.09 | No |
| ini. | 2 | 0 | 94927 | -800 | | | 503 | 189 | SLV 6 | 0.24 | No |
| fin. | 2 | 0 | -3953 | -1992 | | | 503 | 189 | SLV 6 | 0.09 | No |
| ini. | 2 | 0 | 7065 | -113 | | | 503 | 189 | SLV 4 | 1.67 | Si |
| fin. | 2 | 0 | -71789 | -1879 | | | 503 | 189 | SLV 4 | 0.1 | No |
| ini. | 2 | 0 | 7065 | -113 | | | 503 | 189 | SLV 3 | 1.67 | Si |
| fin. | 2 | 0 | -71789 | -1879 | | | 503 | 189 | SLV 3 | 0.1 | No |
| ini. | 2 | 0 | -112582 | 2163 | | | 503 | 189 | SLV 12 | 0.09 | No |
| fin. | 2 | 0 | -31220 | 340 | | | 503 | 189 | SLV 12 | 0.56 | No |
| ini. | 2 | 0 | -79209 | 2161 | | | 503 | 189 | SLV 16 | 0.09 | No |
| fin. | 2 | 0 | 20161 | 695 | | | 503 | 189 | SLV 16 | 0.27 | No |
| ini. | 2 | 0 | -79209 | 2161 | | | 503 | 189 | SLV 15 | 0.09 | No |
| fin. | 2 | 0 | 20161 | 695 | | | 503 | 189 | SLV 15 | 0.27 | No |
| ini. | 2 | 0 | -112582 | 2163 | | | 503 | 189 | SLV 11 | 0.09 | No |
| fin. | 2 | 0 | -31220 | 340 | | | 503 | 189 | SLV 11 | 0.56 | No |
| ini. | 2 | 0 | 61553 | -797 | | | 503 | 189 | SLV 2 | 0.24 | No |

| Sezione | γM | N | M | V | Vt | Vp | Vt fess. diag. | Vt,lim | Comb. | c.s. | Verifica |
|---|---|---|---|---|---|---|---|---|---|---|---|
| fin. | 2 | 0 | -55334 | -2347 | | | 503 | 189 | SLV 2 | 0.08 | No |
| ini. | 2 | 0 | 61553 | -797 | | | 503 | 189 | SLV 1 | 0.24 | No |
| fin. | 2 | 0 | -55334 | -2347 | | | 503 | 189 | SLV 1 | 0.08 | No |

### Tabella dei coefficienti di sicurezza minimi

| Stato limite | Coeff.s. | Comb. | Verifica |
|---|---|---|---|
| PF_SLV | 0.253 | SLV 11 | No |
| V_SLV | 0.081 | SLV 1 | No |
| PF_SLU | 0.678 | SLU 83 | No |
| V_SLU | 0.096 | SLU 83 | No |

## Trave di accoppiamento 8

Verifiche condotte secondo D.M. 17-01-18 (N.T.C.)

### Dati geometrici

| X ini. | Y ini. | Z ini.inf. | Z ini.sup. | H ini. | X fin. | Y fin. | Z fin.inf. | Z fin.sup | H fin. | Luce | Spessore | R. Trazione |
|---|---|---|---|---|---|---|---|---|---|---|---|---|
| -1731.3 | -328.4 | -98 | 102 | 200 | -1831.3 | -328.4 | -98 | 102 | 200 | 100 | 45 | 3500 |

### Caratteristiche del materiale

(Circolare 7 21-01-19 C8.5.I) Muratura in mattoni pieni e malta di calce LC2_Corti

| fb_ | fhk | fvk0 | fhmedio | τ0 | fv0 | μ | ϕ | fvk,lim | E | G | FC |
|---|---|---|---|---|---|---|---|---|---|---|---|
| 12 | | | 17.25 | 0.9 | 2 | 0.577 | 0.767 | 0.65 | 32000 | 12800 | 1.2 |

### Verifiche a pressoflessione delle travi in muratura in combinazioni non sismiche

| Sezione | γM | N | M | Mu | Comb. | c.s. | Verifica |
|---|---|---|---|---|---|---|---|
| ini. | 3 | 472 | -529747 | 316581 | SLU 80 | 0.6 | No |
| fin. | 3 | 1247 | -427971 | 316581 | SLU 80 | 0.74 | No |
| ini. | 3 | 554 | -562326 | 316581 | SLU 84 | 0.56 | No |
| fin. | 3 | 1225 | -440182 | 316581 | SLU 84 | 0.72 | No |
| ini. | 3 | 259 | -532761 | 316581 | SLU 81 | 0.59 | No |
| fin. | 3 | 595 | -397907 | 316581 | SLU 81 | 0.8 | No |
| ini. | 3 | 521 | -536800 | 316581 | SLU 78 | 0.59 | No |
| fin. | 3 | 1275 | -430934 | 316581 | SLU 78 | 0.73 | No |
| ini. | 3 | 652 | -531691 | 316581 | SLU 61 | 0.6 | No |
| fin. | 3 | 1128 | -402830 | 316581 | SLU 61 | 0.79 | No |
| ini. | 3 | 853 | -567947 | 316581 | SLU 76 | 0.56 | No |
| fin. | 3 | 1648 | -450931 | 316581 | SLU 76 | 0.7 | No |
| ini. | 3 | 951 | -537312 | 316581 | SLU 52 | 0.59 | No |
| fin. | 3 | 1551 | -413579 | 316581 | SLU 52 | 0.77 | No |
| ini. | 3 | 963 | -579040 | 316581 | SLU 73 | 0.55 | No |
| fin. | 3 | 1637 | -447797 | 316581 | SLU 73 | 0.71 | No |
| ini. | 3 | 665 | -573420 | 316581 | SLU 82 | 0.55 | No |
| fin. | 3 | 1214 | -437048 | 316581 | SLU 82 | 0.72 | No |
| ini. | 3 | 632 | -547893 | 316581 | SLU 75 | 0.58 | No |
| fin. | 3 | 1263 | -427800 | 316581 | SLU 75 | 0.74 | No |

### Verifiche a taglio delle travi in muratura secondo §C8.7.1.3.1 in combinazioni non sismiche

| Sezione | γM | N | M | V | Vt | Vp | Vt fess. diag. | Vt,lim | Comb. | c.s. | Verifica |
|---|---|---|---|---|---|---|---|---|---|---|---|
| ini. | 3 | 0 | -567947 | -10298 | | | 3466 | 1304 | SLU 76 | 0.13 | No |
| fin. | 3 | 0 | -450931 | 8479 | | | 3466 | 1304 | SLU 76 | 0.15 | No |
| ini. | 3 | 0 | -536800 | -10226 | | | 3466 | 1304 | SLU 78 | 0.13 | No |
| fin. | 3 | 0 | -430934 | 8292 | | | 3466 | 1304 | SLU 78 | 0.16 | No |
| ini. | 3 | 0 | -562326 | -10409 | | | 3466 | 1304 | SLU 84 | 0.13 | No |
| fin. | 3 | 0 | -440182 | 8852 | | | 3466 | 1304 | SLU 84 | 0.15 | No |
| ini. | 3 | 0 | -496141 | -9752 | | | 3466 | 1304 | SLU 77 | 0.13 | No |
| fin. | 3 | 0 | -391793 | 8261 | | | 3466 | 1304 | SLU 77 | 0.16 | No |
| ini. | 3 | 0 | -521667 | -9935 | | | 3466 | 1304 | SLU 83 | 0.13 | No |
| fin. | 3 | 0 | -401041 | 8821 | | | 3466 | 1304 | SLU 83 | 0.15 | No |
| ini. | 3 | 0 | -573420 | -10184 | | | 3466 | 1304 | SLU 82 | 0.13 | No |
| fin. | 3 | 0 | -437048 | 9142 | | | 3466 | 1304 | SLU 82 | 0.14 | No |
| ini. | 3 | 0 | -529747 | -10207 | | | 3466 | 1304 | SLU 80 | 0.13 | No |
| fin. | 3 | 0 | -427971 | 8168 | | | 3466 | 1304 | SLU 80 | 0.16 | No |
| ini. | 3 | 0 | -489088 | -9733 | | | 3466 | 1304 | SLU 79 | 0.13 | No |
| fin. | 3 | 0 | -388830 | 8136 | | | 3466 | 1304 | SLU 79 | 0.16 | No |
| ini. | 3 | 0 | -547893 | -10000 | | | 3466 | 1304 | SLU 75 | 0.13 | No |
| fin. | 3 | 0 | -427800 | 8582 | | | 3466 | 1304 | SLU 75 | 0.15 | No |
| ini. | 3 | 0 | -579040 | -10073 | | | 3466 | 1304 | SLU 73 | 0.13 | No |
| fin. | 3 | 0 | -447797 | 8769 | | | 3466 | 1304 | SLU 73 | 0.15 | No |

### Verifiche a pressoflessione delle travi in muratura in combinazioni sismiche

| Sezione | γM | N | M | Mu | Comb. | c.s. | Verifica |
|---|---|---|---|---|---|---|---|
| ini. | 2 | 6474 | -992606 | 327721 | SLV 14 | 0.33 | No |
| fin. | 2 | 1604 | -289714 | 327721 | SLV 14 | 1.13 | Si |
| ini. | 2 | 3870 | -862110 | 327721 | SLV 10 | 0.38 | No |
| fin. | 2 | 3653 | -545901 | 327721 | SLV 10 | 0.6 | No |
| ini. | 2 | 5319 | -786619 | 327721 | SLV 16 | 0.42 | No |
| fin. | 2 | -276 | -111445 | 327721 | SLV 16 | 2.94 | Si |
| ini. | 2 | 2911 | -629930 | 327721 | SLD 13 | 0.52 | No |
| fin. | 2 | 919 | -275449 | 327721 | SLD 13 | 1.19 | Si |
| ini. | 2 | 2911 | -629930 | 327721 | SLD 14 | 0.52 | No |
| fin. | 2 | 919 | -275449 | 327721 | SLD 14 | 1.19 | Si |
| ini. | 2 | 3870 | -862110 | 327721 | SLV 9 | 0.38 | No |
| fin. | 2 | 3653 | -545901 | 327721 | SLV 9 | 0.6 | No |

| Sezione | γM | N | M | Mu | Comb. | c.s. | Verifica |
|---|---|---|---|---|---|---|---|
| ini. | 2 | 483 | -544269 | 327721 | SLV 6 | 0.6 | No |
| fin. | 2 | 3530 | -587221 | 327721 | SLV 6 | 0.56 | No |
| ini. | 2 | 483 | -544269 | 327721 | SLV 5 | 0.6 | No |
| fin. | 2 | 3530 | -587221 | 327721 | SLV 5 | 0.56 | No |
| ini. | 2 | 5319 | -786619 | 327721 | SLV 15 | 0.42 | No |
| fin. | 2 | -276 | -111445 | 327721 | SLV 15 | 2.94 | Si |
| ini. | 2 | 6474 | -992606 | 327721 | SLV 13 | 0.33 | No |
| fin. | 2 | 1604 | -289714 | 327721 | SLV 13 | 1.13 | Si |

### Verifiche a taglio delle travi in muratura secondo §C8.7.1.3.1 in combinazioni sismiche

| Sezione | γM | N | M | V | Vt | Vp | Vt fess. diag. | Vt,lim | Comb. | c.s. | Verifica |
|---|---|---|---|---|---|---|---|---|---|---|---|
| ini. | 2 | 0 | 66865 | -16071 | | | 5199 | 1957 | SLV 2 | 0.12 | No |
| fin. | 2 | 0 | -427446 | -5715 | | | 5199 | 1957 | SLV 2 | 0.34 | No |
| ini. | 2 | 0 | -786619 | 3132 | | | 5199 | 1957 | SLV 15 | 0.62 | No |
| fin. | 2 | 0 | -111445 | 17955 | | | 5199 | 1957 | SLV 15 | 0.11 | No |
| ini. | 2 | 0 | -786619 | 3132 | | | 5199 | 1957 | SLV 16 | 0.62 | No |
| fin. | 2 | 0 | -111445 | 17955 | | | 5199 | 1957 | SLV 16 | 0.11 | No |
| ini. | 2 | 0 | -862110 | -6639 | | | 5199 | 1957 | SLV 10 | 0.29 | No |
| fin. | 2 | 0 | -545901 | 13606 | | | 5199 | 1957 | SLV 10 | 0.14 | No |
| ini. | 2 | 0 | -992606 | 1453 | | | 5199 | 1957 | SLV 13 | 1.35 | Si |
| fin. | 2 | 0 | -289714 | 20121 | | | 5199 | 1957 | SLV 13 | 0.1 | No |
| ini. | 2 | 0 | 272852 | -14392 | | | 5199 | 1957 | SLV 3 | 0.14 | No |
| fin. | 2 | 0 | -249177 | -7882 | | | 5199 | 1957 | SLV 3 | 0.25 | No |
| ini. | 2 | 0 | 272852 | -14392 | | | 5199 | 1957 | SLV 4 | 0.14 | No |
| fin. | 2 | 0 | -249177 | -7882 | | | 5199 | 1957 | SLV 4 | 0.25 | No |
| ini. | 2 | 0 | -862110 | -6639 | | | 5199 | 1957 | SLV 9 | 0.29 | No |
| fin. | 2 | 0 | -545901 | 13606 | | | 5199 | 1957 | SLV 9 | 0.14 | No |
| ini. | 2 | 0 | 66865 | -16071 | | | 5199 | 1957 | SLV 1 | 0.12 | No |
| fin. | 2 | 0 | -427446 | -5715 | | | 5199 | 1957 | SLV 1 | 0.34 | No |
| ini. | 2 | 0 | -992606 | 1453 | | | 5199 | 1957 | SLV 14 | 1.35 | Si |
| fin. | 2 | 0 | -289714 | 20121 | | | 5199 | 1957 | SLV 14 | 0.1 | No |

### Tabella dei coefficienti di sicurezza minimi

| Stato limite | Coeff.s. | Comb. | Verifica |
|---|---|---|---|
| PF_SLV | 0.33 | SLV 13 | No |
| V_SLV | 0.097 | SLV 13 | No |
| PF_SLU | 0.547 | SLU 73 | No |
| V_SLU | 0.125 | SLU 84 | No |

## Trave di accoppiamento 9

Verifiche condotte secondo D.M. 17-01-18 (N.T.C.)

### Dati geometrici

| X ini. | Y ini. | Z ini.inf. | Z ini.sup. | H ini. | X fin. | Y fin. | Z fin.inf. | Z fin.sup | H fin. | Luce | Spessore | R. Trazione |
|---|---|---|---|---|---|---|---|---|---|---|---|---|
| -1731.3 | -328.4 | 142 | 171 | 29 | -1831.3 | -328.4 | 142 | 171 | 29 | 100 | 45 | 3500 |

### Caratteristiche del materiale

(Circolare 7 21-01-19 C8.5.I) Muratura in mattoni pieni e malta di calce LC2_Corti

| fb_ | fhk | fvk0 | fhmedio | τ0 | fv0 | μ | ϕ | fvk,lim | E | G | FC |
|---|---|---|---|---|---|---|---|---|---|---|---|
| 12 | | | 17.25 | 0.9 | 2 | 0.577 | 0.767 | 0.65 | 32000 | 12800 | 1.2 |

### Verifiche a pressoflessione delle travi in muratura in combinazioni non sismiche

| Sezione | γM | N | M | Mu | Comb. | c.s. | Verifica |
|---|---|---|---|---|---|---|---|
| ini. | 3 | 2538 | -21045 | 19201 | SLU 81 | 0.91 | No |
| fin. | 3 | 2184 | -47568 | 19201 | SLU 81 | 0.4 | No |
| ini. | 3 | 2409 | -18327 | 19201 | SLU 77 | 1.05 | Si |
| fin. | 3 | 1983 | -47244 | 19201 | SLU 77 | 0.41 | No |
| ini. | 3 | 2551 | -20118 | 19201 | SLU 75 | 0.95 | No |
| fin. | 3 | 2760 | -47275 | 19201 | SLU 75 | 0.41 | No |
| ini. | 3 | 2533 | -19448 | 19201 | SLU 78 | 0.99 | No |
| fin. | 3 | 2693 | -48174 | 19201 | SLU 78 | 0.4 | No |
| ini. | 3 | 2520 | -20375 | 19201 | SLU 83 | 0.94 | No |
| fin. | 3 | 2117 | -48466 | 19201 | SLU 83 | 0.4 | No |
| ini. | 3 | 2645 | -21497 | 19201 | SLU 84 | 0.89 | No |
| fin. | 3 | 2827 | -49396 | 19201 | SLU 84 | 0.39 | No |
| ini. | 3 | 2512 | -19248 | 19201 | SLU 80 | 1 | No |
| fin. | 3 | 2662 | -48028 | 19201 | SLU 80 | 0.4 | No |
| ini. | 3 | 2662 | -22166 | 19201 | SLU 82 | 0.87 | No |
| fin. | 3 | 2894 | -48498 | 19201 | SLU 82 | 0.4 | No |
| ini. | 3 | 2613 | -20665 | 19201 | SLU 76 | 0.93 | No |
| fin. | 3 | 3202 | -47749 | 19201 | SLU 76 | 0.4 | No |
| ini. | 3 | 2388 | -18126 | 19201 | SLU 79 | 1.06 | Si |
| fin. | 3 | 1952 | -47098 | 19201 | SLU 79 | 0.41 | No |

### Verifiche a taglio delle travi in muratura secondo §C8.7.1.3.1 in combinazioni non sismiche

| Sezione | γM | N | M | V | Vt | Vp | Vt fess. diag. | Vt,lim | Comb. | c.s. | Verifica |
|---|---|---|---|---|---|---|---|---|---|---|---|
| ini. | 3 | 0 | -19248 | 2186 | | | 335 | 126 | SLU 80 | 0.06 | No |
| fin. | 3 | 0 | -48028 | -5030 | | | 335 | 126 | SLU 80 | 0.03 | No |
| ini. | 3 | 0 | -22166 | 2356 | | | 335 | 126 | SLU 82 | 0.05 | No |
| fin. | 3 | 0 | -48498 | -5200 | | | 335 | 126 | SLU 82 | 0.02 | No |
| ini. | 3 | 0 | -20375 | 2168 | | | 335 | 126 | SLU 83 | 0.06 | No |
| fin. | 3 | 0 | -48466 | -5172 | | | 335 | 126 | SLU 83 | 0.02 | No |
| ini. | 3 | 0 | -21045 | 2189 | | | 335 | 126 | SLU 81 | 0.06 | No |

| Sezione | γM | N | M | V | Vt | Vp | Vt fess. diag. | Vt,lim | Comb. | c.s. | Verifica |
|---|---|---|---|---|---|---|---|---|---|---|---|
| fin. | 3 | 0 | -47568 | -5134 | | | 335 | 126 | SLU 81 | 0.02 | No |
| ini. | 3 | 0 | -18327 | 2034 | | | 335 | 126 | SLU 77 | 0.06 | No |
| fin. | 3 | 0 | -47244 | -4992 | | | 335 | 126 | SLU 77 | 0.03 | No |
| ini. | 3 | 0 | -19448 | 2201 | | | 335 | 126 | SLU 78 | 0.06 | No |
| fin. | 3 | 0 | -48174 | -5058 | | | 335 | 126 | SLU 78 | 0.02 | No |
| ini. | 3 | 0 | -20118 | 2221 | | | 335 | 126 | SLU 75 | 0.06 | No |
| fin. | 3 | 0 | -47275 | -5020 | | | 335 | 126 | SLU 75 | 0.03 | No |
| ini. | 3 | 0 | -21497 | 2335 | | | 335 | 126 | SLU 84 | 0.05 | No |
| fin. | 3 | 0 | -49396 | -5239 | | | 335 | 126 | SLU 84 | 0.02 | No |
| ini. | 3 | 0 | -20665 | 2318 | | | 335 | 126 | SLU 76 | 0.05 | No |
| fin. | 3 | 0 | -47749 | -5036 | | | 335 | 126 | SLU 76 | 0.03 | No |
| ini. | 3 | 0 | -21334 | 2339 | | | 335 | 126 | SLU 73 | 0.05 | No |
| fin. | 3 | 0 | -46850 | -4997 | | | 335 | 126 | SLU 73 | 0.03 | No |

### Verifiche a pressoflessione delle travi in muratura in combinazioni sismiche

| Sezione | γM | N | M | Mu | Comb. | c.s. | Verifica |
|---|---|---|---|---|---|---|---|
| ini. | 2 | 1741 | -58897 | 28471 | SLV 5 | 0.48 | No |
| fin. | 2 | 6928 | -20470 | 28471 | SLV 5 | 1.39 | Si |
| ini. | 2 | 3066 | -47390 | 28471 | SLV 13 | 0.6 | No |
| fin. | 2 | 7518 | -7815 | 28471 | SLV 13 | 3.64 | Si |
| ini. | 2 | 1741 | -58897 | 28471 | SLV 6 | 0.48 | No |
| fin. | 2 | 6928 | -20470 | 28471 | SLV 6 | 1.39 | Si |
| ini. | 2 | 875 | 45063 | 28471 | SLV 8 | 0.63 | No |
| fin. | 2 | -6450 | -53194 | 28471 | SLV 8 | 0.54 | No |
| ini. | 2 | 875 | 45063 | 28471 | SLV 7 | 0.63 | No |
| fin. | 2 | -6450 | -53194 | 28471 | SLV 7 | 0.54 | No |
| ini. | 2 | 301 | 22073 | 28471 | SLV 4 | 1.29 | Si |
| fin. | 2 | -4606 | -54722 | 28471 | SLV 4 | 0.52 | No |
| ini. | 2 | 301 | 22073 | 28471 | SLV 3 | 1.29 | Si |
| fin. | 2 | -4606 | -54722 | 28471 | SLV 3 | 0.52 | No |
| ini. | 2 | 2492 | -70380 | 28471 | SLV 10 | 0.4 | No |
| fin. | 2 | 9361 | -9343 | 28471 | SLV 10 | 3.05 | Si |
| ini. | 2 | 3066 | -47390 | 28471 | SLV 14 | 0.6 | No |
| fin. | 2 | 7518 | -7815 | 28471 | SLV 14 | 3.64 | Si |
| ini. | 2 | 2492 | -70380 | 28471 | SLV 9 | 0.4 | No |
| fin. | 2 | 9361 | -9343 | 28471 | SLV 9 | 3.05 | Si |

### Verifiche a taglio delle travi in muratura secondo §C8.7.1.3.1 in combinazioni sismiche

| Sezione | γM | N | M | V | Vt | Vp | Vt fess. diag. | Vt,lim | Comb. | c.s. | Verifica |
|---|---|---|---|---|---|---|---|---|---|---|---|
| ini. | 2 | 0 | -9115 | 631 | | | 503 | 189 | SLV 2 | 0.3 | No |
| fin. | 2 | 0 | -44905 | -4030 | | | 503 | 189 | SLV 2 | 0.05 | No |
| ini. | 2 | 0 | -70380 | 2185 | | | 503 | 189 | SLV 10 | 0.09 | No |
| fin. | 2 | 0 | -9343 | -4398 | | | 503 | 189 | SLV 10 | 0.04 | No |
| ini. | 2 | 0 | -9115 | 631 | | | 503 | 189 | SLV 1 | 0.3 | No |
| fin. | 2 | 0 | -44905 | -4030 | | | 503 | 189 | SLV 1 | 0.05 | No |
| ini. | 2 | 0 | -70380 | 2185 | | | 503 | 189 | SLV 9 | 0.09 | No |
| fin. | 2 | 0 | -9343 | -4398 | | | 503 | 189 | SLV 9 | 0.04 | No |
| ini. | 2 | 0 | -36163 | 1724 | | | 503 | 189 | SLD 10 | 0.11 | No |
| fin. | 2 | 0 | -22506 | -3795 | | | 503 | 189 | SLD 10 | 0.05 | No |
| ini. | 2 | 0 | -58897 | 1635 | | | 503 | 189 | SLV 5 | 0.12 | No |
| fin. | 2 | 0 | -20470 | -4591 | | | 503 | 189 | SLV 5 | 0.04 | No |
| ini. | 2 | 0 | -36163 | 1724 | | | 503 | 189 | SLD 9 | 0.11 | No |
| fin. | 2 | 0 | -22506 | -3795 | | | 503 | 189 | SLD 9 | 0.05 | No |
| ini. | 2 | 0 | -31212 | 1484 | | | 503 | 189 | SLD 6 | 0.13 | No |
| fin. | 2 | 0 | -27368 | -3877 | | | 503 | 189 | SLD 6 | 0.05 | No |
| ini. | 2 | 0 | -58897 | 1635 | | | 503 | 189 | SLV 6 | 0.12 | No |
| fin. | 2 | 0 | -20470 | -4591 | | | 503 | 189 | SLV 6 | 0.04 | No |
| ini. | 2 | 0 | -31212 | 1484 | | | 503 | 189 | SLD 5 | 0.13 | No |
| fin. | 2 | 0 | -27368 | -3877 | | | 503 | 189 | SLD 5 | 0.05 | No |

### Tabella dei coefficienti di sicurezza minimi

| Stato limite | Coeff.s. | Comb. | Verifica |
|---|---|---|---|
| PF_SLV | 0.405 | SLV 9 | No |
| V_SLV | 0.041 | SLV 5 | No |
| PF_SLU | 0.389 | SLU 84 | No |
| V_SLU | 0.024 | SLU 84 | No |

## Trave di accoppiamento 10

Verifiche condotte secondo D.M. 17-01-18 (N.T.C.)

### Dati geometrici

| X ini. | Y ini. | Z ini.inf. | Z ini.sup. | H ini. | X fin. | Y fin. | Z fin.inf. | Z fin.sup | H fin. | Luce | Spessore | R. Trazione |
|---|---|---|---|---|---|---|---|---|---|---|---|---|
| -1422.3 | -328.4 | 112 | 171 | 59 | -1652.3 | -328.4 | 112 | 171 | 59 | 230 | 45 | 3500 |

### Caratteristiche del materiale

(Circolare 7 21-01-19 C8.5.I) Muratura in mattoni pieni e malta di calce LC2_Corti

| fb_ | fhk | fvk0 | fhmedio | τ0 | fv0 | μ | ϕ | fvk,lim | E | G | FC |
|---|---|---|---|---|---|---|---|---|---|---|---|
| 12 | | | 17.25 | 0.9 | 2 | 0.577 | 0.767 | 0.65 | 32000 | 12800 | 1.2 |

### Verifiche a pressoflessione delle travi in muratura in combinazioni non sismiche

| Sezione | γM | N | M | Mu | Comb. | c.s. | Verifica |
|---|---|---|---|---|---|---|---|
| ini. | 3 | 1657 | -152750 | 69831 | SLU 81 | 0.46 | No |
| fin. | 3 | 4359 | -75952 | 69831 | SLU 81 | 0.92 | No |

| Sezione | γM | N | M | Mu | Comb. | c.s. | Verifica |
|---|---|---|---|---|---|---|---|
| ini. | 3 | 1611 | -151170 | 69831 | SLU 83 | 0.46 | No |
| fin. | 3 | 4276 | -79297 | 69831 | SLU 83 | 0.88 | No |
| ini. | 3 | 1623 | -149178 | 69831 | SLU 76 | 0.47 | No |
| fin. | 3 | 4174 | -67711 | 69831 | SLU 76 | 1.03 | Si |
| ini. | 3 | 1576 | -146623 | 69831 | SLU 78 | 0.48 | No |
| fin. | 3 | 4119 | -73014 | 69831 | SLU 78 | 0.96 | No |
| ini. | 3 | 1622 | -148203 | 69831 | SLU 75 | 0.47 | No |
| fin. | 3 | 4202 | -69669 | 69831 | SLU 75 | 1 | Si |
| ini. | 3 | 1655 | -154531 | 69831 | SLU 84 | 0.45 | No |
| fin. | 3 | 4319 | -75262 | 69831 | SLU 84 | 0.93 | No |
| ini. | 3 | 1669 | -150757 | 69831 | SLU 73 | 0.46 | No |
| fin. | 3 | 4257 | -64365 | 69831 | SLU 73 | 1.08 | Si |
| ini. | 3 | 1578 | -144842 | 69831 | SLU 74 | 0.48 | No |
| fin. | 3 | 4159 | -73704 | 69831 | SLU 74 | 0.95 | No |
| ini. | 3 | 1700 | -156111 | 69831 | SLU 82 | 0.45 | No |
| fin. | 3 | 4402 | -71916 | 69831 | SLU 82 | 0.97 | No |
| ini. | 3 | 1549 | -145357 | 69831 | SLU 80 | 0.48 | No |
| fin. | 3 | 4062 | -73746 | 69831 | SLU 80 | 0.95 | No |

## Verifiche a taglio delle travi in muratura secondo §C8.7.1.3.1 in combinazioni non sismiche

| Sezione | γM | N | M | V | Vt | Vp | Vt fess. diag. | Vt,lim | Comb. | c.s. | Verifica |
|---|---|---|---|---|---|---|---|---|---|---|---|
| ini. | 3 | 0 | -148203 | 3944 | | | 682 | 257 | SLU 75 | 0.07 | No |
| fin. | 3 | 0 | -69669 | -3131 | | | 682 | 257 | SLU 75 | 0.08 | No |
| ini. | 3 | 0 | -152750 | 4099 | | | 682 | 257 | SLU 81 | 0.06 | No |
| fin. | 3 | 0 | -75952 | -3274 | | | 682 | 257 | SLU 81 | 0.08 | No |
| ini. | 3 | 0 | -144842 | 3894 | | | 682 | 257 | SLU 74 | 0.07 | No |
| fin. | 3 | 0 | -73704 | -3114 | | | 682 | 257 | SLU 74 | 0.08 | No |
| ini. | 3 | 0 | -156111 | 4149 | | | 682 | 257 | SLU 82 | 0.06 | No |
| fin. | 3 | 0 | -71916 | -3291 | | | 682 | 257 | SLU 82 | 0.08 | No |
| ini. | 3 | 0 | -154531 | 4124 | | | 682 | 257 | SLU 84 | 0.06 | No |
| fin. | 3 | 0 | -75262 | -3335 | | | 682 | 257 | SLU 84 | 0.08 | No |
| ini. | 3 | 0 | -150757 | 3977 | | | 682 | 257 | SLU 73 | 0.06 | No |
| fin. | 3 | 0 | -64365 | -3100 | | | 682 | 257 | SLU 73 | 0.08 | No |
| ini. | 3 | 0 | -149178 | 3952 | | | 682 | 257 | SLU 76 | 0.06 | No |
| fin. | 3 | 0 | -67711 | -3144 | | | 682 | 257 | SLU 76 | 0.08 | No |
| ini. | 3 | 0 | -146623 | 3919 | | | 682 | 257 | SLU 78 | 0.07 | No |
| fin. | 3 | 0 | -73014 | -3175 | | | 682 | 257 | SLU 78 | 0.08 | No |
| ini. | 3 | 0 | -151170 | 4074 | | | 682 | 257 | SLU 83 | 0.06 | No |
| fin. | 3 | 0 | -79297 | -3318 | | | 682 | 257 | SLU 83 | 0.08 | No |
| ini. | 3 | 0 | -145357 | 3895 | | | 682 | 257 | SLU 80 | 0.07 | No |
| fin. | 3 | 0 | -73746 | -3176 | | | 682 | 257 | SLU 80 | 0.08 | No |

## Verifiche a pressoflessione delle travi in muratura in combinazioni sismiche

| Sezione | γM | N | M | Mu | Comb. | c.s. | Verifica |
|---|---|---|---|---|---|---|---|
| ini. | 2 | -1073 | -18893 | 80971 | SLV 3 | 4.29 | Si |
| fin. | 2 | -2438 | -146822 | 80971 | SLV 3 | 0.55 | No |
| ini. | 2 | 2594 | -140942 | 80971 | SLD 15 | 0.57 | No |
| fin. | 2 | 5016 | -8439 | 80971 | SLD 15 | 9.59 | Si |
| ini. | 2 | 3341 | -181758 | 80971 | SLV 14 | 0.45 | No |
| fin. | 2 | 8327 | 51693 | 80971 | SLV 14 | 1.57 | Si |
| ini. | 2 | 2594 | -140942 | 80971 | SLD 16 | 0.57 | No |
| fin. | 2 | 5016 | -8439 | 80971 | SLD 16 | 9.59 | Si |
| ini. | 2 | 4077 | -150009 | 80971 | SLV 12 | 0.54 | No |
| fin. | 2 | 3538 | -34007 | 80971 | SLV 12 | 2.38 | Si |
| ini. | 2 | 3341 | -181758 | 80971 | SLV 13 | 0.45 | No |
| fin. | 2 | 8327 | 51693 | 80971 | SLV 13 | 1.57 | Si |
| ini. | 2 | 4077 | -150009 | 80971 | SLV 11 | 0.54 | No |
| fin. | 2 | 3538 | -34007 | 80971 | SLV 11 | 2.38 | Si |
| ini. | 2 | 4596 | -195659 | 80971 | SLV 16 | 0.41 | No |
| fin. | 2 | 7765 | 42765 | 80971 | SLV 16 | 1.89 | Si |
| ini. | 2 | -1073 | -18893 | 80971 | SLV 4 | 4.29 | Si |
| fin. | 2 | -2438 | -146822 | 80971 | SLV 4 | 0.55 | No |
| ini. | 2 | 4596 | -195659 | 80971 | SLV 15 | 0.41 | No |
| fin. | 2 | 7765 | 42765 | 80971 | SLV 15 | 1.89 | Si |

## Verifiche a taglio delle travi in muratura secondo §C8.7.1.3.1 in combinazioni sismiche

| Sezione | γM | N | M | V | Vt | Vp | Vt fess. diag. | Vt,lim | Comb. | c.s. | Verifica |
|---|---|---|---|---|---|---|---|---|---|---|---|
| ini. | 2 | 0 | -103672 | 3469 | | | 1022 | 385 | SLV 10 | 0.11 | No |
| fin. | 2 | 0 | -4246 | -408 | | | 1022 | 385 | SLV 10 | 0.94 | No |
| ini. | 2 | 0 | -96979 | 1902 | | | 1022 | 385 | SLV 8 | 0.2 | No |
| fin. | 2 | 0 | -90883 | -3706 | | | 1022 | 385 | SLV 8 | 0.1 | No |
| ini. | 2 | 0 | -195659 | 4332 | | | 1022 | 385 | SLV 15 | 0.09 | No |
| fin. | 2 | 0 | 42765 | -1594 | | | 1022 | 385 | SLV 15 | 0.24 | No |
| ini. | 2 | 0 | -103672 | 3469 | | | 1022 | 385 | SLV 9 | 0.11 | No |
| fin. | 2 | 0 | -4246 | -408 | | | 1022 | 385 | SLV 9 | 0.94 | No |
| ini. | 2 | 0 | -181758 | 4492 | | | 1022 | 385 | SLV 13 | 0.09 | No |
| fin. | 2 | 0 | 51693 | -762 | | | 1022 | 385 | SLV 13 | 0.5 | No |
| ini. | 2 | 0 | -195659 | 4332 | | | 1022 | 385 | SLV 16 | 0.09 | No |
| fin. | 2 | 0 | 42765 | -1594 | | | 1022 | 385 | SLV 16 | 0.24 | No |
| ini. | 2 | 0 | -96979 | 1902 | | | 1022 | 385 | SLV 7 | 0.2 | No |
| fin. | 2 | 0 | -90883 | -3706 | | | 1022 | 385 | SLV 7 | 0.1 | No |
| ini. | 2 | 0 | -134954 | 3459 | | | 1022 | 385 | SLD 14 | 0.11 | No |
| fin. | 2 | 0 | -5163 | -1506 | | | 1022 | 385 | SLD 14 | 0.26 | No |
| ini. | 2 | 0 | -181758 | 4492 | | | 1022 | 385 | SLV 14 | 0.09 | No |
| fin. | 2 | 0 | 51693 | -762 | | | 1022 | 385 | SLV 14 | 0.5 | No |
| ini. | 2 | 0 | -134954 | 3459 | | | 1022 | 385 | SLD 13 | 0.11 | No |
| fin. | 2 | 0 | -5163 | -1506 | | | 1022 | 385 | SLD 13 | 0.26 | No |

### Tabella dei coefficienti di sicurezza minimi

| Stato limite | Coeff.s. | Comb. | Verifica |
|---|---|---|---|
| PF_SLV | 0.414 | SLV 15 | No |
| V_SLV | 0.086 | SLV 13 | No |
| PF_SLU | 0.447 | SLU 82 | No |
| V_SLU | 0.062 | SLU 82 | No |

## Trave di accoppiamento 11

Verifiche condotte secondo D.M. 17-01-18 (N.T.C.)

### Dati geometrici

| X ini. | Y ini. | Z ini.inf. | Z ini.sup. | H ini. | X fin. | Y fin. | Z fin.inf. | Z fin.sup | H fin. | Luce | Spessore | R. Trazione |
|---|---|---|---|---|---|---|---|---|---|---|---|---|
| -1883.8 | 104.6 | 112 | 171 | 59 | -1963.8 | 104.6 | 112 | 171 | 59 | 80 | 45 | 3500 |

### Caratteristiche del materiale

(Circolare 7 21-01-19 C8.5.I) Muratura in mattoni pieni e malta di calce LC2_Corti

| fb_ | fhk | fvk0 | fhmedio | τ0 | fv0 | μ | ϕ | fvk,lim | E | G | FC |
|---|---|---|---|---|---|---|---|---|---|---|---|
| 12 | | | 17.25 | 0.9 | 2 | 0.577 | 0.767 | 0.65 | 32000 | 12800 | 1.2 |

### Verifiche a pressoflessione delle travi in muratura in combinazioni non sismiche

| Sezione | γM | N | M | Mu | Comb. | c.s. | Verifica |
|---|---|---|---|---|---|---|---|
| ini. | 3 | -3377 | -41464 | 69831 | SLU 76 | 1.68 | Si |
| fin. | 3 | -5422 | 1117 | 69831 | SLU 76 | 62.51 | Si |
| ini. | 3 | -3401 | -39917 | 69831 | SLU 75 | 1.75 | Si |
| fin. | 3 | -5543 | 449 | 69831 | SLU 75 | 155.57 | Si |
| ini. | 3 | -3575 | -42145 | 69831 | SLU 84 | 1.66 | Si |
| fin. | 3 | -5794 | 644 | 69831 | SLU 84 | 108.36 | Si |
| ini. | 3 | -3574 | -40268 | 69831 | SLU 83 | 1.73 | Si |
| fin. | 3 | -5877 | 72 | 69831 | SLU 83 | 969.3 | Si |
| ini. | 3 | -3415 | -39228 | 69831 | SLU 79 | 1.78 | Si |
| fin. | 3 | -5640 | 1160 | 69831 | SLU 79 | 60.22 | Si |
| ini. | 3 | -3416 | -41106 | 69831 | SLU 80 | 1.7 | Si |
| fin. | 3 | -5557 | 1732 | 69831 | SLU 80 | 40.32 | Si |
| ini. | 3 | -3535 | -39373 | 69831 | SLU 81 | 1.77 | Si |
| fin. | 3 | -5797 | -924 | 69831 | SLU 81 | 75.55 | Si |
| ini. | 3 | -3440 | -40812 | 69831 | SLU 78 | 1.71 | Si |
| fin. | 3 | -5623 | 1445 | 69831 | SLU 78 | 48.32 | Si |
| ini. | 3 | -3338 | -40569 | 69831 | SLU 73 | 1.72 | Si |
| fin. | 3 | -5342 | 121 | 69831 | SLU 73 | 577.87 | Si |
| ini. | 3 | -3536 | -41251 | 69831 | SLU 82 | 1.69 | Si |
| fin. | 3 | -5714 | -352 | 69831 | SLU 82 | 198.43 | Si |

### Verifiche a taglio delle travi in muratura secondo §C8.7.1.3.1 in combinazioni non sismiche

| Sezione | γM | N | M | V | Vt | Vp | Vt fess. diag. | Vt,lim | Comb. | c.s. | Verifica |
|---|---|---|---|---|---|---|---|---|---|---|---|
| ini. | 3 | 0 | -41106 | 4073 | | | 754 | 284 | SLU 80 | 0.07 | No |
| fin. | 3 | 0 | 1732 | -13490 | | | 754 | 284 | SLU 80 | 0.02 | No |
| ini. | 3 | 0 | -39917 | 3955 | | | 754 | 284 | SLU 75 | 0.07 | No |
| fin. | 3 | 0 | 449 | -13209 | | | 754 | 284 | SLU 75 | 0.02 | No |
| ini. | 3 | 0 | -42145 | 4140 | | | 754 | 284 | SLU 84 | 0.07 | No |
| fin. | 3 | 0 | 644 | -13792 | | | 754 | 284 | SLU 84 | 0.02 | No |
| ini. | 3 | 0 | -38934 | 4044 | | | 754 | 284 | SLU 77 | 0.07 | No |
| fin. | 3 | 0 | 873 | -13774 | | | 754 | 284 | SLU 77 | 0.02 | No |
| ini. | 3 | 0 | -41251 | 4015 | | | 754 | 284 | SLU 82 | 0.07 | No |
| fin. | 3 | 0 | -352 | -13395 | | | 754 | 284 | SLU 82 | 0.02 | No |
| ini. | 3 | 0 | -39373 | 3980 | | | 754 | 284 | SLU 81 | 0.07 | No |
| fin. | 3 | 0 | -924 | -13564 | | | 754 | 284 | SLU 81 | 0.02 | No |
| ini. | 3 | 0 | -40268 | 4105 | | | 754 | 284 | SLU 83 | 0.07 | No |
| fin. | 3 | 0 | 72 | -13961 | | | 754 | 284 | SLU 83 | 0.02 | No |
| ini. | 3 | 0 | -40812 | 4079 | | | 754 | 284 | SLU 78 | 0.07 | No |
| fin. | 3 | 0 | 1445 | -13606 | | | 754 | 284 | SLU 78 | 0.02 | No |
| ini. | 3 | 0 | -39228 | 4038 | | | 754 | 284 | SLU 79 | 0.07 | No |
| fin. | 3 | 0 | 1160 | -13658 | | | 754 | 284 | SLU 79 | 0.02 | No |
| ini. | 3 | 0 | -38040 | 3920 | | | 754 | 284 | SLU 74 | 0.07 | No |
| fin. | 3 | 0 | -124 | -13377 | | | 754 | 284 | SLU 74 | 0.02 | No |

### Verifiche a pressoflessione delle travi in muratura in combinazioni sismiche

| Sezione | γM | N | M | Mu | Comb. | c.s. | Verifica |
|---|---|---|---|---|---|---|---|
| ini. | 2 | -856 | -125958 | 80971 | SLV 15 | 0.64 | No |
| fin. | 2 | 3581 | 18001 | 80971 | SLV 15 | 4.5 | Si |
| ini. | 2 | -1815 | -99382 | 80971 | SLV 10 | 0.81 | No |
| fin. | 2 | -156 | 46711 | 80971 | SLV 10 | 1.73 | Si |
| ini. | 2 | -842 | -149973 | 80971 | SLV 13 | 0.54 | No |
| fin. | 2 | 4337 | 40996 | 80971 | SLV 13 | 1.98 | Si |
| ini. | 2 | -1815 | -99382 | 80971 | SLV 9 | 0.81 | No |
| fin. | 2 | -156 | 46711 | 80971 | SLV 9 | 1.73 | Si |
| ini. | 2 | -1658 | -79255 | 80971 | SLD 13 | 1.02 | Si |
| fin. | 2 | -259 | 17325 | 80971 | SLD 13 | 4.67 | Si |
| ini. | 2 | -856 | -125958 | 80971 | SLV 16 | 0.64 | No |
| fin. | 2 | 3581 | 18001 | 80971 | SLV 16 | 4.5 | Si |
| ini. | 2 | -1658 | -79255 | 80971 | SLD 14 | 1.02 | Si |
| fin. | 2 | -259 | 17325 | 80971 | SLD 14 | 4.67 | Si |
| ini. | 2 | -3681 | 98636 | 80971 | SLV 3 | 0.82 | No |
| fin. | 2 | -11776 | -42321 | 80971 | SLV 3 | 1.91 | Si |
| ini. | 2 | -842 | -149973 | 80971 | SLV 14 | 0.54 | No |

| Sezione | γM | N | M | Mu | Comb. | c.s. | Verifica |
|---|---|---|---|---|---|---|---|
| fin. | 2 | 4337 | 40996 | 80971 | SLV 14 | 1.98 | Si |
| ini. | 2 | -3681 | 98636 | 80971 | SLV 4 | 0.82 | No |
| fin. | 2 | -11776 | -42321 | 80971 | SLV 4 | 1.91 | Si |

### Verifiche a taglio delle travi in muratura secondo §C8.7.1.3.1 in combinazioni sismiche

| Sezione | γM | N | M | V | Vt | Vp | Vt fess. diag. | Vt,lim | Comb. | c.s. | Verifica |
|---|---|---|---|---|---|---|---|---|---|---|---|
| ini. | 2 | 0 | -32004 | 3334 | | | 1131 | 426 | SLV 5 | 0.13 | No |
| fin. | 2 | 0 | 28614 | -12213 | | | 1131 | 426 | SLV 5 | 0.03 | No |
| ini. | 2 | 0 | 98636 | -1195 | | | 1131 | 426 | SLV 4 | 0.36 | No |
| fin. | 2 | 0 | -42321 | -15652 | | | 1131 | 426 | SLV 4 | 0.03 | No |
| ini. | 2 | 0 | 27919 | 963 | | | 1131 | 426 | SLD 3 | 0.44 | No |
| fin. | 2 | 0 | -18650 | -11733 | | | 1131 | 426 | SLD 3 | 0.04 | No |
| ini. | 2 | 0 | 17733 | 1395 | | | 1131 | 426 | SLD 1 | 0.31 | No |
| fin. | 2 | 0 | -8935 | -12042 | | | 1131 | 426 | SLD 1 | 0.04 | No |
| ini. | 2 | 0 | 98636 | -1195 | | | 1131 | 426 | SLV 3 | 0.36 | No |
| fin. | 2 | 0 | -42321 | -15652 | | | 1131 | 426 | SLV 3 | 0.03 | No |
| ini. | 2 | 0 | 27919 | 963 | | | 1131 | 426 | SLD 4 | 0.44 | No |
| fin. | 2 | 0 | -18650 | -11733 | | | 1131 | 426 | SLD 4 | 0.04 | No |
| ini. | 2 | 0 | 17733 | 1395 | | | 1131 | 426 | SLD 2 | 0.31 | No |
| fin. | 2 | 0 | -8935 | -12042 | | | 1131 | 426 | SLD 2 | 0.04 | No |
| ini. | 2 | 0 | -32004 | 3334 | | | 1131 | 426 | SLV 6 | 0.13 | No |
| fin. | 2 | 0 | 28614 | -12213 | | | 1131 | 426 | SLV 6 | 0.03 | No |
| ini. | 2 | 0 | 74621 | -163 | | | 1131 | 426 | SLV 1 | 2.61 | Si |
| fin. | 2 | 0 | -19326 | -16416 | | | 1131 | 426 | SLV 1 | 0.03 | No |
| ini. | 2 | 0 | 74621 | -163 | | | 1131 | 426 | SLV 2 | 2.61 | Si |
| fin. | 2 | 0 | -19326 | -16416 | | | 1131 | 426 | SLV 2 | 0.03 | No |

### Tabella dei coefficienti di sicurezza minimi

| Stato limite | Coeff.s. | Comb. | Verifica |
|---|---|---|---|
| PF_SLV | 0.54 | SLV 13 | No |
| V_SLV | 0.026 | SLV 1 | No |
| PF_SLU | 1.657 | SLU 84 | Si |
| V_SLU | 0.02 | SLU 83 | No |

## Trave di accoppiamento 12

Verifiche condotte secondo D.M. 17-01-18 (N.T.C.)

### Dati geometrici

| X ini. | Y ini. | Z ini.inf. | Z ini.sup. | H ini. | X fin. | Y fin. | Z fin.inf. | Z fin.sup | H fin. | Luce | Spessore | R. Trazione |
|---|---|---|---|---|---|---|---|---|---|---|---|---|
| -1406.3 | 104.6 | 112 | 171 | 59 | -1506.3 | 104.6 | 112 | 171 | 59 | 100 | 45 | 3500 |

### Caratteristiche del materiale

(Circolare 7 21-01-19 C8.5.I) Muratura in mattoni pieni e malta di calce LC2_Corti

| fb_ | fhk | fvk0 | fhmedio | τ0 | fv0 | μ | ϕ | fvk,lim | E | G | FC |
|---|---|---|---|---|---|---|---|---|---|---|---|
| 12 | | | 17.25 | 0.9 | 2 | 0.577 | 0.767 | 0.65 | 32000 | 12800 | 1.2 |

### Verifiche a pressoflessione delle travi in muratura in combinazioni non sismiche

| Sezione | γM | N | M | Mu | Comb. | c.s. | Verifica |
|---|---|---|---|---|---|---|---|
| ini. | 3 | -1920 | -44047 | 69831 | SLU 83 | 1.59 | Si |
| fin. | 3 | -1656 | -88190 | 69831 | SLU 83 | 0.79 | No |
| ini. | 3 | -1872 | -43178 | 69831 | SLU 77 | 1.62 | Si |
| fin. | 3 | -1554 | -84575 | 69831 | SLU 77 | 0.83 | No |
| ini. | 3 | -1847 | -42588 | 69831 | SLU 80 | 1.64 | Si |
| fin. | 3 | -1542 | -83614 | 69831 | SLU 80 | 0.84 | No |
| ini. | 3 | -1890 | -43856 | 69831 | SLU 84 | 1.59 | Si |
| fin. | 3 | -1652 | -88337 | 69831 | SLU 84 | 0.79 | No |
| ini. | 3 | -1877 | -42779 | 69831 | SLU 79 | 1.63 | Si |
| fin. | 3 | -1546 | -83467 | 69831 | SLU 79 | 0.84 | No |
| ini. | 3 | -1832 | -42251 | 69831 | SLU 74 | 1.65 | Si |
| fin. | 3 | -1555 | -83806 | 69831 | SLU 74 | 0.83 | No |
| ini. | 3 | -1881 | -43120 | 69831 | SLU 81 | 1.62 | Si |
| fin. | 3 | -1656 | -87420 | 69831 | SLU 81 | 0.8 | No |
| ini. | 3 | -1851 | -42929 | 69831 | SLU 82 | 1.63 | Si |
| fin. | 3 | -1653 | -87568 | 69831 | SLU 82 | 0.8 | No |
| ini. | 3 | -1842 | -42987 | 69831 | SLU 78 | 1.62 | Si |
| fin. | 3 | -1551 | -84723 | 69831 | SLU 78 | 0.82 | No |
| ini. | 3 | -1802 | -42060 | 69831 | SLU 75 | 1.66 | Si |
| fin. | 3 | -1551 | -83953 | 69831 | SLU 75 | 0.83 | No |

### Verifiche a taglio delle travi in muratura secondo §C8.7.1.3.1 in combinazioni non sismiche

| Sezione | γM | N | M | V | Vt | Vp | Vt fess. diag. | Vt,lim | Comb. | c.s. | Verifica |
|---|---|---|---|---|---|---|---|---|---|---|---|
| ini. | 3 | 0 | -42779 | 9892 | | | 682 | 257 | SLU 79 | 0.03 | No |
| fin. | 3 | 0 | -83467 | -5415 | | | 682 | 257 | SLU 79 | 0.05 | No |
| ini. | 3 | 0 | -42987 | 9962 | | | 682 | 257 | SLU 78 | 0.03 | No |
| fin. | 3 | 0 | -84723 | -5482 | | | 682 | 257 | SLU 78 | 0.05 | No |
| ini. | 3 | 0 | -43178 | 9985 | | | 682 | 257 | SLU 77 | 0.03 | No |
| fin. | 3 | 0 | -84575 | -5478 | | | 682 | 257 | SLU 77 | 0.05 | No |
| ini. | 3 | 0 | -42588 | 9869 | | | 682 | 257 | SLU 80 | 0.03 | No |
| fin. | 3 | 0 | -83614 | -5419 | | | 682 | 257 | SLU 80 | 0.05 | No |
| ini. | 3 | 0 | -42060 | 9776 | | | 682 | 257 | SLU 75 | 0.03 | No |
| fin. | 3 | 0 | -83953 | -5413 | | | 682 | 257 | SLU 75 | 0.05 | No |
| ini. | 3 | 0 | -43120 | 10066 | | | 682 | 257 | SLU 81 | 0.03 | No |
| fin. | 3 | 0 | -87420 | -5603 | | | 682 | 257 | SLU 81 | 0.05 | No |

| Sezione | γM | N | M | V | Vt | Vp | Vt fess. diag. | Vt,lim | Comb. | c.s. | Verifica |
|---|---|---|---|---|---|---|---|---|---|---|---|
| ini. | 3 | 0 | -42251 | 9799 | | | 682 | 257 | SLU 74 | 0.03 | No |
| fin. | 3 | 0 | -83806 | -5409 | | | 682 | 257 | SLU 74 | 0.05 | No |
| ini. | 3 | 0 | -42929 | 10043 | | | 682 | 257 | SLU 82 | 0.03 | No |
| fin. | 3 | 0 | -87568 | -5606 | | | 682 | 257 | SLU 82 | 0.05 | No |
| ini. | 3 | 0 | -44047 | 10252 | | | 682 | 257 | SLU 83 | 0.03 | No |
| fin. | 3 | 0 | -88190 | -5672 | | | 682 | 257 | SLU 83 | 0.05 | No |
| ini. | 3 | 0 | -43856 | 10229 | | | 682 | 257 | SLU 84 | 0.03 | No |
| fin. | 3 | 0 | -88337 | -5676 | | | 682 | 257 | SLU 84 | 0.05 | No |

### Verifiche a pressoflessione delle travi in muratura in combinazioni sismiche

| Sezione | γM | N | M | Mu | Comb. | c.s. | Verifica |
|---|---|---|---|---|---|---|---|
| ini. | 2 | -2040 | -11476 | 80971 | SLD 3 | 7.06 | Si |
| fin. | 2 | -4168 | -106063 | 80971 | SLD 3 | 0.76 | No |
| ini. | 2 | -2040 | -11476 | 80971 | SLD 4 | 7.06 | Si |
| fin. | 2 | -4168 | -106063 | 80971 | SLD 4 | 0.76 | No |
| ini. | 2 | -1115 | -10163 | 80971 | SLV 7 | 7.97 | Si |
| fin. | 2 | -3969 | -113819 | 80971 | SLV 7 | 0.71 | No |
| ini. | 2 | -2235 | -13217 | 80971 | SLD 1 | 6.13 | Si |
| fin. | 2 | -3958 | -99426 | 80971 | SLD 1 | 0.81 | No |
| ini. | 2 | -1115 | -10163 | 80971 | SLV 8 | 7.97 | Si |
| fin. | 2 | -3969 | -113819 | 80971 | SLV 8 | 0.71 | No |
| ini. | 2 | -2235 | -13217 | 80971 | SLD 2 | 6.13 | Si |
| fin. | 2 | -3958 | -99426 | 80971 | SLD 2 | 0.81 | No |
| ini. | 2 | -3096 | 10790 | 80971 | SLV 4 | 7.5 | Si |
| fin. | 2 | -8307 | -173279 | 80971 | SLV 4 | 0.47 | No |
| ini. | 2 | -3547 | 6704 | 80971 | SLV 1 | 12.08 | Si |
| fin. | 2 | -7809 | -157793 | 80971 | SLV 1 | 0.51 | No |
| ini. | 2 | -3096 | 10790 | 80971 | SLV 3 | 7.5 | Si |
| fin. | 2 | -8307 | -173279 | 80971 | SLV 3 | 0.47 | No |
| ini. | 2 | -3547 | 6704 | 80971 | SLV 2 | 12.08 | Si |
| fin. | 2 | -7809 | -157793 | 80971 | SLV 2 | 0.51 | No |

### Verifiche a taglio delle travi in muratura secondo §C8.7.1.3.1 in combinazioni sismiche

| Sezione | γM | N | M | V | Vt | Vp | Vt fess. diag. | Vt,lim | Comb. | c.s. | Verifica |
|---|---|---|---|---|---|---|---|---|---|---|---|
| ini. | 2 | 0 | -66781 | 11107 | | | 1022 | 385 | SLV 14 | 0.03 | No |
| fin. | 2 | 0 | 63711 | 342 | | | 1022 | 385 | SLV 14 | 1.13 | Si |
| ini. | 2 | 0 | -44516 | 8442 | | | 1022 | 385 | SLD 14 | 0.05 | No |
| fin. | 2 | 0 | -3505 | -1871 | | | 1022 | 385 | SLD 14 | 0.21 | No |
| ini. | 2 | 0 | -62696 | 10713 | | | 1022 | 385 | SLV 16 | 0.04 | No |
| fin. | 2 | 0 | 48225 | -689 | | | 1022 | 385 | SLV 16 | 0.56 | No |
| ini. | 2 | 0 | -66781 | 11107 | | | 1022 | 385 | SLV 13 | 0.03 | No |
| fin. | 2 | 0 | 63711 | 342 | | | 1022 | 385 | SLV 13 | 1.13 | Si |
| ini. | 2 | 0 | -42774 | 8285 | | | 1022 | 385 | SLD 16 | 0.05 | No |
| fin. | 2 | 0 | -10142 | -2304 | | | 1022 | 385 | SLD 16 | 0.17 | No |
| ini. | 2 | 0 | -62696 | 10713 | | | 1022 | 385 | SLV 15 | 0.04 | No |
| fin. | 2 | 0 | 48225 | -689 | | | 1022 | 385 | SLV 15 | 0.56 | No |
| ini. | 2 | 0 | -44516 | 8442 | | | 1022 | 385 | SLD 13 | 0.05 | No |
| fin. | 2 | 0 | -3505 | -1871 | | | 1022 | 385 | SLD 13 | 0.21 | No |
| ini. | 2 | 0 | -42774 | 8285 | | | 1022 | 385 | SLD 15 | 0.05 | No |
| fin. | 2 | 0 | -10142 | -2304 | | | 1022 | 385 | SLD 15 | 0.17 | No |
| ini. | 2 | 0 | -45828 | 8448 | | | 1022 | 385 | SLV 10 | 0.05 | No |
| fin. | 2 | 0 | 4251 | -825 | | | 1022 | 385 | SLV 10 | 0.47 | No |
| ini. | 2 | 0 | -45828 | 8448 | | | 1022 | 385 | SLV 9 | 0.05 | No |
| fin. | 2 | 0 | 4251 | -825 | | | 1022 | 385 | SLV 9 | 0.47 | No |

### Tabella dei coefficienti di sicurezza minimi

| Stato limite | Coeff.s. | Comb. | Verifica |
|---|---|---|---|
| PF_SLV | 0.467 | SLV 3 | No |
| V_SLV | 0.035 | SLV 13 | No |
| PF_SLU | 0.791 | SLU 84 | No |
| V_SLU | 0.025 | SLU 83 | No |

## Trave di accoppiamento 13

Verifiche condotte secondo D.M. 17-01-18 (N.T.C.)

### Dati geometrici

| X ini. | Y ini. | Z ini.inf. | Z ini.sup. | H ini. | X fin. | Y fin. | Z fin.inf. | Z fin.sup | H fin. | Luce | Spessore | R. Trazione |
|---|---|---|---|---|---|---|---|---|---|---|---|---|
| -1261.3 | 104.6 | 118 | 171 | 53 | -1358.3 | 104.6 | 118 | 171 | 53 | 97 | 45 | 3500 |

### Caratteristiche del materiale

(Circolare 7 21-01-19 C8.5.I) Muratura in mattoni pieni e malta di calce LC2_Corti

| fb_ | fhk | fvk0 | fhmedio | τ0 | fv0 | μ | ϕ | fvk,lim | E | G | FC |
|---|---|---|---|---|---|---|---|---|---|---|---|
| 12 | | | 17.25 | 0.9 | 2 | 0.577 | 0.767 | 0.65 | 32000 | 12800 | 1.2 |

### Verifiche a pressoflessione delle travi in muratura in combinazioni non sismiche

| Sezione | γM | N | M | Mu | Comb. | c.s. | Verifica |
|---|---|---|---|---|---|---|---|
| ini. | 3 | -2823 | -74812 | 59331 | SLU 79 | 0.79 | No |
| fin. | 3 | -1202 | -67311 | 59331 | SLU 79 | 0.88 | No |
| ini. | 3 | -2871 | -78760 | 59331 | SLU 83 | 0.75 | No |
| fin. | 3 | -1217 | -69972 | 59331 | SLU 83 | 0.85 | No |
| ini. | 3 | -2716 | -75281 | 59331 | SLU 75 | 0.79 | No |
| fin. | 3 | -1131 | -66532 | 59331 | SLU 75 | 0.89 | No |
| ini. | 3 | -2840 | -78915 | 59331 | SLU 84 | 0.75 | No |

| Sezione | γM | N | M | Mu | Comb. | c.s. | Verifica |
|---|---|---|---|---|---|---|---|
| fin. | 3 | -1189 | -69725 | 59331 | SLU 84 | 0.85 | No |
| ini. | 3 | -2771 | -78426 | 59331 | SLU 82 | 0.76 | No |
| fin. | 3 | -1161 | -68561 | 59331 | SLU 82 | 0.87 | No |
| ini. | 3 | -2792 | -74967 | 59331 | SLU 80 | 0.79 | No |
| fin. | 3 | -1173 | -67064 | 59331 | SLU 80 | 0.88 | No |
| ini. | 3 | -2746 | -75125 | 59331 | SLU 74 | 0.79 | No |
| fin. | 3 | -1160 | -66779 | 59331 | SLU 74 | 0.89 | No |
| ini. | 3 | -2815 | -75614 | 59331 | SLU 77 | 0.78 | No |
| fin. | 3 | -1188 | -67943 | 59331 | SLU 77 | 0.87 | No |
| ini. | 3 | -2802 | -78271 | 59331 | SLU 81 | 0.76 | No |
| fin. | 3 | -1189 | -68808 | 59331 | SLU 81 | 0.86 | No |
| ini. | 3 | -2784 | -75770 | 59331 | SLU 78 | 0.78 | No |
| fin. | 3 | -1159 | -67696 | 59331 | SLU 78 | 0.88 | No |

## Verifiche a taglio delle travi in muratura secondo §C8.7.1.3.1 in combinazioni non sismiche

| Sezione | γM | N | M | V | Vt | Vp | Vt fess. diag. | Vt,lim | Comb. | c.s. | Verifica |
|---|---|---|---|---|---|---|---|---|---|---|---|
| ini. | 3 | 0 | -78271 | 7794 | | | 612 | 230 | SLU 81 | 0.03 | No |
| fin. | 3 | 0 | -68808 | -6237 | | | 612 | 230 | SLU 81 | 0.04 | No |
| ini. | 3 | 0 | -74812 | 7594 | | | 612 | 230 | SLU 79 | 0.03 | No |
| fin. | 3 | 0 | -67311 | -6085 | | | 612 | 230 | SLU 79 | 0.04 | No |
| ini. | 3 | 0 | -78426 | 7798 | | | 612 | 230 | SLU 82 | 0.03 | No |
| fin. | 3 | 0 | -68561 | -6232 | | | 612 | 230 | SLU 82 | 0.04 | No |
| ini. | 3 | 0 | -78915 | 7912 | | | 612 | 230 | SLU 84 | 0.03 | No |
| fin. | 3 | 0 | -69725 | -6333 | | | 612 | 230 | SLU 84 | 0.04 | No |
| ini. | 3 | 0 | -75125 | 7560 | | | 612 | 230 | SLU 74 | 0.03 | No |
| fin. | 3 | 0 | -66779 | -6052 | | | 612 | 230 | SLU 74 | 0.04 | No |
| ini. | 3 | 0 | -75281 | 7564 | | | 612 | 230 | SLU 75 | 0.03 | No |
| fin. | 3 | 0 | -66532 | -6048 | | | 612 | 230 | SLU 75 | 0.04 | No |
| ini. | 3 | 0 | -78760 | 7908 | | | 612 | 230 | SLU 83 | 0.03 | No |
| fin. | 3 | 0 | -69972 | -6338 | | | 612 | 230 | SLU 83 | 0.04 | No |
| ini. | 3 | 0 | -75614 | 7674 | | | 612 | 230 | SLU 77 | 0.03 | No |
| fin. | 3 | 0 | -67943 | -6154 | | | 612 | 230 | SLU 77 | 0.04 | No |
| ini. | 3 | 0 | -75770 | 7678 | | | 612 | 230 | SLU 78 | 0.03 | No |
| fin. | 3 | 0 | -67696 | -6149 | | | 612 | 230 | SLU 78 | 0.04 | No |
| ini. | 3 | 0 | -74967 | 7598 | | | 612 | 230 | SLU 80 | 0.03 | No |
| fin. | 3 | 0 | -67064 | -6081 | | | 612 | 230 | SLU 80 | 0.04 | No |

## Verifiche a pressoflessione delle travi in muratura in combinazioni sismiche

| Sezione | γM | N | M | Mu | Comb. | c.s. | Verifica |
|---|---|---|---|---|---|---|---|
| ini. | 2 | -1684 | -58032 | 70471 | SLD 8 | 1.21 | Si |
| fin. | 2 | -773 | -44085 | 70471 | SLD 8 | 1.6 | Si |
| ini. | 2 | -2461 | -59773 | 70471 | SLV 3 | 1.18 | Si |
| fin. | 2 | -2963 | -41651 | 70471 | SLV 3 | 1.69 | Si |
| ini. | 2 | -2461 | -59773 | 70471 | SLV 4 | 1.18 | Si |
| fin. | 2 | -2963 | -41651 | 70471 | SLV 4 | 1.69 | Si |
| ini. | 2 | -1483 | -56912 | 70471 | SLD 12 | 1.24 | Si |
| fin. | 2 | -157 | -44757 | 70471 | SLD 12 | 1.57 | Si |
| ini. | 2 | -1684 | -58032 | 70471 | SLD 7 | 1.21 | Si |
| fin. | 2 | -773 | -44085 | 70471 | SLD 7 | 1.6 | Si |
| ini. | 2 | -1483 | -56912 | 70471 | SLD 11 | 1.24 | Si |
| fin. | 2 | -157 | -44757 | 70471 | SLD 11 | 1.57 | Si |
| ini. | 2 | -1450 | -69185 | 70471 | SLV 7 | 1.02 | Si |
| fin. | 2 | -737 | -44277 | 70471 | SLV 7 | 1.59 | Si |
| ini. | 2 | -974 | -66512 | 70471 | SLV 12 | 1.06 | Si |
| fin. | 2 | 701 | -45868 | 70471 | SLV 12 | 1.54 | Si |
| ini. | 2 | -1450 | -69185 | 70471 | SLV 8 | 1.02 | Si |
| fin. | 2 | -737 | -44277 | 70471 | SLV 8 | 1.59 | Si |
| ini. | 2 | -974 | -66512 | 70471 | SLV 11 | 1.06 | Si |
| fin. | 2 | 701 | -45868 | 70471 | SLV 11 | 1.54 | Si |

## Verifiche a taglio delle travi in muratura secondo §C8.7.1.3.1 in combinazioni sismiche

| Sezione | γM | N | M | V | Vt | Vp | Vt fess. diag. | Vt,lim | Comb. | c.s. | Verifica |
|---|---|---|---|---|---|---|---|---|---|---|---|
| ini. | 2 | 0 | -45825 | 6077 | | | 919 | 346 | SLD 14 | 0.06 | No |
| fin. | 2 | 0 | -44958 | -4690 | | | 919 | 346 | SLD 14 | 0.07 | No |
| ini. | 2 | 0 | -50340 | 6361 | | | 919 | 346 | SLD 15 | 0.05 | No |
| fin. | 2 | 0 | -45227 | -4714 | | | 919 | 346 | SLD 15 | 0.07 | No |
| ini. | 2 | 0 | -50340 | 6361 | | | 919 | 346 | SLD 16 | 0.05 | No |
| fin. | 2 | 0 | -45227 | -4714 | | | 919 | 346 | SLD 16 | 0.07 | No |
| ini. | 2 | 0 | -40122 | 7523 | | | 919 | 346 | SLV 13 | 0.05 | No |
| fin. | 2 | 0 | -46292 | -5644 | | | 919 | 346 | SLV 13 | 0.06 | No |
| ini. | 2 | 0 | -45825 | 6077 | | | 919 | 346 | SLD 13 | 0.06 | No |
| fin. | 2 | 0 | -44958 | -4690 | | | 919 | 346 | SLD 13 | 0.07 | No |
| ini. | 2 | 0 | -66512 | 6960 | | | 919 | 346 | SLV 11 | 0.05 | No |
| fin. | 2 | 0 | -45868 | -4579 | | | 919 | 346 | SLV 11 | 0.08 | No |
| ini. | 2 | 0 | -66512 | 6960 | | | 919 | 346 | SLV 12 | 0.05 | No |
| fin. | 2 | 0 | -45868 | -4579 | | | 919 | 346 | SLV 12 | 0.08 | No |
| ini. | 2 | 0 | -40122 | 7523 | | | 919 | 346 | SLV 14 | 0.05 | No |
| fin. | 2 | 0 | -46292 | -5644 | | | 919 | 346 | SLV 14 | 0.06 | No |
| ini. | 2 | 0 | -50863 | 8186 | | | 919 | 346 | SLV 16 | 0.04 | No |
| fin. | 2 | 0 | -46953 | -5700 | | | 919 | 346 | SLV 16 | 0.06 | No |
| ini. | 2 | 0 | -50863 | 8186 | | | 919 | 346 | SLV 15 | 0.04 | No |
| fin. | 2 | 0 | -46953 | -5700 | | | 919 | 346 | SLV 15 | 0.06 | No |

## Tabella dei coefficienti di sicurezza minimi

| Stato limite | Coeff.s. | Comb. | Verifica |
|---|---|---|---|
| PF_SLV | 1.019 | SLV 7 | Si |
| V_SLV | 0.042 | SLV 15 | No |

| Stato limite | Coeff.s. | Comb. | Verifica |
|---|---|---|---|
| PF_SLU | 0.752 | SLU 84 | No |
| V_SLU | 0.029 | SLU 84 | No |

## Trave di accoppiamento 14

Verifiche condotte secondo D.M. 17-01-18 (N.T.C.)

### Dati geometrici

| X ini. | Y ini. | Z ini.inf. | Z ini.sup. | H ini. | X fin. | Y fin. | Z fin.inf. | Z fin.sup | H fin. | Luce | Spessore | R. Trazione |
|---|---|---|---|---|---|---|---|---|---|---|---|---|
| -1123.8 | 104.6 | 118 | 171 | 53 | -1223.8 | 104.6 | 118 | 171 | 53 | 100 | 45 | 3500 |

### Caratteristiche del materiale

(Circolare 7 21-01-19 C8.5.I) Muratura in mattoni pieni e malta di calce LC2_Corti

| fb_ | fhk | fvk0 | fhmedio | τ0 | fv0 | μ | ϕ | fvk,lim | E | G | FC |
|---|---|---|---|---|---|---|---|---|---|---|---|
| 12 | | | 17.25 | 0.9 | 2 | 0.577 | 0.767 | 0.65 | 32000 | 12800 | 1.2 |

### Verifiche a pressoflessione delle travi in muratura in combinazioni non sismiche

| Sezione | γM | N | M | Mu | Comb. | c.s. | Verifica |
|---|---|---|---|---|---|---|---|
| ini. | 3 | -4138 | 5450 | 59331 | SLU 77 | 10.89 | Si |
| fin. | 3 | -4734 | -63442 | 59331 | SLU 77 | 0.94 | No |
| ini. | 3 | -4109 | 5715 | 59331 | SLU 78 | 10.38 | Si |
| fin. | 3 | -4689 | -63928 | 59331 | SLU 78 | 0.93 | No |
| ini. | 3 | -4200 | 6602 | 59331 | SLU 84 | 8.99 | Si |
| fin. | 3 | -4755 | -68162 | 59331 | SLU 84 | 0.87 | No |
| ini. | 3 | -4115 | 7535 | 59331 | SLU 82 | 7.87 | Si |
| fin. | 3 | -4620 | -69057 | 59331 | SLU 82 | 0.86 | No |
| ini. | 3 | -4000 | 6723 | 59331 | SLU 76 | 8.83 | Si |
| fin. | 3 | -4525 | -64117 | 59331 | SLU 76 | 0.93 | No |
| ini. | 3 | -4053 | 6383 | 59331 | SLU 74 | 9.29 | Si |
| fin. | 3 | -4599 | -64337 | 59331 | SLU 74 | 0.92 | No |
| ini. | 3 | -4024 | 6648 | 59331 | SLU 75 | 8.92 | Si |
| fin. | 3 | -4555 | -64823 | 59331 | SLU 75 | 0.92 | No |
| ini. | 3 | -3914 | 7656 | 59331 | SLU 73 | 7.75 | Si |
| fin. | 3 | -4390 | -65013 | 59331 | SLU 73 | 0.91 | No |
| ini. | 3 | -4144 | 7270 | 59331 | SLU 81 | 8.16 | Si |
| fin. | 3 | -4665 | -68570 | 59331 | SLU 81 | 0.87 | No |
| ini. | 3 | -4229 | 6337 | 59331 | SLU 83 | 9.36 | Si |
| fin. | 3 | -4800 | -67675 | 59331 | SLU 83 | 0.88 | No |

### Verifiche a taglio delle travi in muratura secondo §C8.7.1.3.1 in combinazioni non sismiche

| Sezione | γM | N | M | V | Vt | Vp | Vt fess. diag. | Vt,lim | Comb. | c.s. | Verifica |
|---|---|---|---|---|---|---|---|---|---|---|---|
| ini. | 3 | 0 | 6874 | -423 | | | 612 | 230 | SLU 61 | 0.54 | No |
| fin. | 3 | 0 | -62042 | -696 | | | 612 | 230 | SLU 61 | 0.33 | No |
| ini. | 3 | 0 | 7270 | -496 | | | 612 | 230 | SLU 81 | 0.46 | No |
| fin. | 3 | 0 | -68570 | -715 | | | 612 | 230 | SLU 81 | 0.32 | No |
| ini. | 3 | 0 | 7535 | -506 | | | 612 | 230 | SLU 82 | 0.46 | No |
| fin. | 3 | 0 | -69057 | -727 | | | 612 | 230 | SLU 82 | 0.32 | No |
| ini. | 3 | 0 | 6609 | -413 | | | 612 | 230 | SLU 60 | 0.56 | No |
| fin. | 3 | 0 | -61555 | -684 | | | 612 | 230 | SLU 60 | 0.34 | No |
| ini. | 3 | 0 | 5941 | -401 | | | 612 | 230 | SLU 63 | 0.58 | No |
| fin. | 3 | 0 | -61146 | -661 | | | 612 | 230 | SLU 63 | 0.35 | No |
| ini. | 3 | 0 | 6602 | -483 | | | 612 | 230 | SLU 84 | 0.48 | No |
| fin. | 3 | 0 | -68162 | -692 | | | 612 | 230 | SLU 84 | 0.33 | No |
| ini. | 3 | 0 | 6996 | -402 | | | 612 | 230 | SLU 52 | 0.57 | No |
| fin. | 3 | 0 | -57997 | -652 | | | 612 | 230 | SLU 52 | 0.35 | No |
| ini. | 3 | 0 | 6337 | -473 | | | 612 | 230 | SLU 83 | 0.49 | No |
| fin. | 3 | 0 | -67675 | -680 | | | 612 | 230 | SLU 83 | 0.34 | No |
| ini. | 3 | 0 | 7656 | -485 | | | 612 | 230 | SLU 73 | 0.48 | No |
| fin. | 3 | 0 | -65013 | -684 | | | 612 | 230 | SLU 73 | 0.34 | No |
| ini. | 3 | 0 | 6648 | -470 | | | 612 | 230 | SLU 75 | 0.49 | No |
| fin. | 3 | 0 | -64823 | -651 | | | 612 | 230 | SLU 75 | 0.35 | No |

### Verifiche a pressoflessione delle travi in muratura in combinazioni sismiche

| Sezione | γM | N | M | Mu | Comb. | c.s. | Verifica |
|---|---|---|---|---|---|---|---|
| ini. | 2 | -3051 | 36955 | 70471 | SLD 4 | 1.91 | Si |
| fin. | 2 | -2553 | -80327 | 70471 | SLD 4 | 0.88 | No |
| ini. | 2 | -3761 | 65353 | 70471 | SLV 2 | 1.08 | Si |
| fin. | 2 | -2640 | -101953 | 70471 | SLV 2 | 0.69 | No |
| ini. | 2 | -2526 | 49116 | 70471 | SLV 7 | 1.43 | Si |
| fin. | 2 | -1489 | -112594 | 70471 | SLV 7 | 0.63 | No |
| ini. | 2 | -2646 | 23849 | 70471 | SLD 7 | 2.95 | Si |
| fin. | 2 | -2410 | -72449 | 70471 | SLD 7 | 0.97 | No |
| ini. | 2 | -2526 | 49116 | 70471 | SLV 8 | 1.43 | Si |
| fin. | 2 | -1489 | -112594 | 70471 | SLV 8 | 0.63 | No |
| ini. | 2 | -3051 | 36955 | 70471 | SLD 3 | 1.91 | Si |
| fin. | 2 | -2553 | -80327 | 70471 | SLD 3 | 0.88 | No |
| ini. | 2 | -3761 | 65353 | 70471 | SLV 1 | 1.08 | Si |
| fin. | 2 | -2640 | -101953 | 70471 | SLV 1 | 0.69 | No |
| ini. | 2 | -2646 | 23849 | 70471 | SLD 8 | 2.95 | Si |
| fin. | 2 | -2410 | -72449 | 70471 | SLD 8 | 0.97 | No |
| ini. | 2 | -3475 | 79539 | 70471 | SLV 4 | 0.89 | No |
| fin. | 2 | -1834 | -130559 | 70471 | SLV 4 | 0.54 | No |
| ini. | 2 | -3475 | 79539 | 70471 | SLV 3 | 0.89 | No |
| fin. | 2 | -1834 | -130559 | 70471 | SLV 3 | 0.54 | No |

### Verifiche a taglio delle travi in muratura secondo §C8.7.1.3.1 in combinazioni sismiche

| Sezione | γM | N | M | V | Vt | Vp | Vt fess. diag. | Vt,lim | Comb. | c.s. | Verifica |
|---|---|---|---|---|---|---|---|---|---|---|---|
| ini. | 2 | 0 | 36955 | -1075 | | | 919 | 346 | SLD 4 | 0.32 | No |
| fin. | 2 | 0 | -80327 | -1423 | | | 919 | 346 | SLD 4 | 0.24 | No |
| ini. | 2 | 0 | 36955 | -1075 | | | 919 | 346 | SLD 3 | 0.32 | No |
| fin. | 2 | 0 | -80327 | -1423 | | | 919 | 346 | SLD 3 | 0.24 | No |
| ini. | 2 | 0 | 79539 | -2099 | | | 919 | 346 | SLV 4 | 0.16 | No |
| fin. | 2 | 0 | -130559 | -2731 | | | 919 | 346 | SLV 4 | 0.13 | No |
| ini. | 2 | 0 | 49116 | -1607 | | | 919 | 346 | SLV 7 | 0.22 | No |
| fin. | 2 | 0 | -112594 | -2084 | | | 919 | 346 | SLV 7 | 0.17 | No |
| ini. | 2 | 0 | 65353 | -1598 | | | 919 | 346 | SLV 2 | 0.22 | No |
| fin. | 2 | 0 | -101953 | -2103 | | | 919 | 346 | SLV 2 | 0.16 | No |
| ini. | 2 | 0 | 79539 | -2099 | | | 919 | 346 | SLV 3 | 0.16 | No |
| fin. | 2 | 0 | -130559 | -2731 | | | 919 | 346 | SLV 3 | 0.13 | No |
| ini. | 2 | 0 | -68854 | 1478 | | | 919 | 346 | SLV 13 | 0.23 | No |
| fin. | 2 | 0 | 44727 | 1840 | | | 919 | 346 | SLV 13 | 0.19 | No |
| ini. | 2 | 0 | 65353 | -1598 | | | 919 | 346 | SLV 1 | 0.22 | No |
| fin. | 2 | 0 | -101953 | -2103 | | | 919 | 346 | SLV 1 | 0.16 | No |
| ini. | 2 | 0 | -68854 | 1478 | | | 919 | 346 | SLV 14 | 0.23 | No |
| fin. | 2 | 0 | 44727 | 1840 | | | 919 | 346 | SLV 14 | 0.19 | No |
| ini. | 2 | 0 | 49116 | -1607 | | | 919 | 346 | SLV 8 | 0.22 | No |
| fin. | 2 | 0 | -112594 | -2084 | | | 919 | 346 | SLV 8 | 0.17 | No |

### Tabella dei coefficienti di sicurezza minimi

| Stato limite | Coeff.s. | Comb. | Verifica |
|---|---|---|---|
| PF_SLV | 0.54 | SLV 3 | No |
| V_SLV | 0.127 | SLV 3 | No |
| PF_SLU | 0.859 | SLU 82 | No |
| V_SLU | 0.317 | SLU 82 | No |

## Trave di accoppiamento 15

Verifiche condotte secondo D.M. 17-01-18 (N.T.C.)

### Dati geometrici

| X ini. | Y ini. | Z ini.inf. | Z ini.sup. | H ini. | X fin. | Y fin. | Z fin.inf. | Z fin.sup | H fin. | Luce | Spessore | R. Trazione |
|---|---|---|---|---|---|---|---|---|---|---|---|---|
| -971.3 | 104.6 | 112 | 171 | 59 | -1071.3 | 104.6 | 112 | 171 | 59 | 100 | 45 | 3500 |

### Caratteristiche del materiale

(Circolare 7 21-01-19 C8.5.I) Muratura in mattoni pieni e malta di calce LC2_Corti

| fb_ | fhk | fvk0 | fhmedio | τ0 | fv0 | μ | ϕ | fvk,lim | E | G | FC |
|---|---|---|---|---|---|---|---|---|---|---|---|
| 12 | | | 17.25 | 0.9 | 2 | 0.577 | 0.767 | 0.65 | 32000 | 12800 | 1.2 |

### Verifiche a pressoflessione delle travi in muratura in combinazioni non sismiche

| Sezione | γM | N | M | Mu | Comb. | c.s. | Verifica |
|---|---|---|---|---|---|---|---|
| ini. | 3 | -3857 | -35708 | 69831 | SLU 79 | 1.96 | Si |
| fin. | 3 | -2152 | -39338 | 69831 | SLU 79 | 1.78 | Si |
| ini. | 3 | -3877 | -36324 | 69831 | SLU 74 | 1.92 | Si |
| fin. | 3 | -2038 | -37218 | 69831 | SLU 74 | 1.88 | Si |
| ini. | 3 | -4010 | -36847 | 69831 | SLU 81 | 1.9 | Si |
| fin. | 3 | -2023 | -37512 | 69831 | SLU 81 | 1.86 | Si |
| ini. | 3 | -3899 | -36450 | 69831 | SLU 77 | 1.92 | Si |
| fin. | 3 | -2133 | -39148 | 69831 | SLU 77 | 1.78 | Si |
| ini. | 3 | -3896 | -36721 | 69831 | SLU 75 | 1.9 | Si |
| fin. | 3 | -1999 | -36268 | 69831 | SLU 75 | 1.93 | Si |
| ini. | 3 | -4050 | -37370 | 69831 | SLU 84 | 1.87 | Si |
| fin. | 3 | -2080 | -38494 | 69831 | SLU 84 | 1.81 | Si |
| ini. | 3 | -4029 | -37244 | 69831 | SLU 82 | 1.87 | Si |
| fin. | 3 | -1984 | -36563 | 69831 | SLU 82 | 1.91 | Si |
| ini. | 3 | -3876 | -36104 | 69831 | SLU 80 | 1.93 | Si |
| fin. | 3 | -2114 | -38389 | 69831 | SLU 80 | 1.82 | Si |
| ini. | 3 | -4031 | -36973 | 69831 | SLU 83 | 1.89 | Si |
| fin. | 3 | -2118 | -39443 | 69831 | SLU 83 | 1.77 | Si |
| ini. | 3 | -3918 | -36847 | 69831 | SLU 78 | 1.9 | Si |
| fin. | 3 | -2095 | -38199 | 69831 | SLU 78 | 1.83 | Si |

### Verifiche a taglio delle travi in muratura secondo §C8.7.1.3.1 in combinazioni non sismiche

| Sezione | γM | N | M | V | Vt | Vp | Vt fess. diag. | Vt,lim | Comb. | c.s. | Verifica |
|---|---|---|---|---|---|---|---|---|---|---|---|
| ini. | 3 | 0 | -36104 | 11495 | | | 682 | 257 | SLU 80 | 0.02 | No |
| fin. | 3 | 0 | -38389 | -4974 | | | 682 | 257 | SLU 80 | 0.05 | No |
| ini. | 3 | 0 | -37370 | 12156 | | | 682 | 257 | SLU 84 | 0.02 | No |
| fin. | 3 | 0 | -38494 | -5171 | | | 682 | 257 | SLU 84 | 0.05 | No |
| ini. | 3 | 0 | -36324 | 11556 | | | 682 | 257 | SLU 74 | 0.02 | No |
| fin. | 3 | 0 | -37218 | -4946 | | | 682 | 257 | SLU 74 | 0.05 | No |
| ini. | 3 | 0 | -35708 | 11464 | | | 682 | 257 | SLU 79 | 0.02 | No |
| fin. | 3 | 0 | -39338 | -5008 | | | 682 | 257 | SLU 79 | 0.05 | No |
| ini. | 3 | 0 | -36847 | 11645 | | | 682 | 257 | SLU 78 | 0.02 | No |
| fin. | 3 | 0 | -38199 | -5006 | | | 682 | 257 | SLU 78 | 0.05 | No |
| ini. | 3 | 0 | -36973 | 12125 | | | 682 | 257 | SLU 83 | 0.02 | No |
| fin. | 3 | 0 | -39443 | -5205 | | | 682 | 257 | SLU 83 | 0.05 | No |
| ini. | 3 | 0 | -36450 | 11613 | | | 682 | 257 | SLU 77 | 0.02 | No |
| fin. | 3 | 0 | -39148 | -5040 | | | 682 | 257 | SLU 77 | 0.05 | No |
| ini. | 3 | 0 | -36847 | 12067 | | | 682 | 257 | SLU 81 | 0.02 | No |
| fin. | 3 | 0 | -37512 | -5111 | | | 682 | 257 | SLU 81 | 0.05 | No |
| ini. | 3 | 0 | -36721 | 11587 | | | 682 | 257 | SLU 75 | 0.02 | No |

| Sezione | γM | N | M | V | Vt | Vp | Vt fess. diag. | Vt,lim | Comb. | c.s. | Verifica |
|---|---|---|---|---|---|---|---|---|---|---|---|
| fin. | 3 | 0 | -36268 | -4913 | | | 682 | 257 | SLU 75 | 0.05 | No |
| ini. | 3 | 0 | -37244 | 12098 | | | 682 | 257 | SLU 82 | 0.02 | No |
| fin. | 3 | 0 | -36563 | -5077 | | | 682 | 257 | SLU 82 | 0.05 | No |

### Verifiche a pressoflessione delle travi in muratura in combinazioni sismiche

| Sezione | γM | N | M | Mu | Comb. | c.s. | Verifica |
|---|---|---|---|---|---|---|---|
| ini. | 2 | -9566 | -114563 | 80971 | SLV 16 | 0.71 | No |
| fin. | 2 | -2729 | 4481 | 80971 | SLV 16 | 18.07 | Si |
| ini. | 2 | 4302 | 64263 | 80971 | SLV 1 | 1.26 | Si |
| fin. | 2 | -47 | -52218 | 80971 | SLV 1 | 1.55 | Si |
| ini. | 2 | -8941 | -100648 | 80971 | SLV 14 | 0.8 | No |
| fin. | 2 | -3602 | -14930 | 80971 | SLV 14 | 5.42 | Si |
| ini. | 2 | -5660 | -73077 | 80971 | SLV 12 | 1.11 | Si |
| fin. | 2 | -466 | 14078 | 80971 | SLV 12 | 5.75 | Si |
| ini. | 2 | -8941 | -100648 | 80971 | SLV 13 | 0.8 | No |
| fin. | 2 | -3602 | -14930 | 80971 | SLV 13 | 5.42 | Si |
| ini. | 2 | -5660 | -73077 | 80971 | SLV 11 | 1.11 | Si |
| fin. | 2 | -466 | 14078 | 80971 | SLV 11 | 5.75 | Si |
| ini. | 2 | -9566 | -114563 | 80971 | SLV 15 | 0.71 | No |
| fin. | 2 | -2729 | 4481 | 80971 | SLV 15 | 18.07 | Si |
| ini. | 2 | -5615 | -63618 | 80971 | SLD 16 | 1.27 | Si |
| fin. | 2 | -1970 | -11592 | 80971 | SLD 16 | 6.99 | Si |
| ini. | 2 | 4302 | 64263 | 80971 | SLV 2 | 1.26 | Si |
| fin. | 2 | -47 | -52218 | 80971 | SLV 2 | 1.55 | Si |
| ini. | 2 | -5615 | -63618 | 80971 | SLD 15 | 1.27 | Si |
| fin. | 2 | -1970 | -11592 | 80971 | SLD 15 | 6.99 | Si |

### Verifiche a taglio delle travi in muratura secondo §C8.7.1.3.1 in combinazioni sismiche

| Sezione | γM | N | M | V | Vt | Vp | Vt fess. diag. | Vt,lim | Comb. | c.s. | Verifica |
|---|---|---|---|---|---|---|---|---|---|---|---|
| ini. | 2 | 0 | -45690 | 9515 | | | 1022 | 385 | SLD 11 | 0.04 | No |
| fin. | 2 | 0 | -7732 | -2909 | | | 1022 | 385 | SLD 11 | 0.13 | No |
| ini. | 2 | 0 | -63618 | 9967 | | | 1022 | 385 | SLD 15 | 0.04 | No |
| fin. | 2 | 0 | -11592 | -2245 | | | 1022 | 385 | SLD 15 | 0.17 | No |
| ini. | 2 | 0 | -100648 | 11219 | | | 1022 | 385 | SLV 13 | 0.03 | No |
| fin. | 2 | 0 | -14930 | -981 | | | 1022 | 385 | SLV 13 | 0.39 | No |
| ini. | 2 | 0 | -114563 | 13071 | | | 1022 | 385 | SLV 15 | 0.03 | No |
| fin. | 2 | 0 | 4481 | -923 | | | 1022 | 385 | SLV 15 | 0.42 | No |
| ini. | 2 | 0 | -114563 | 13071 | | | 1022 | 385 | SLV 16 | 0.03 | No |
| fin. | 2 | 0 | 4481 | -923 | | | 1022 | 385 | SLV 16 | 0.42 | No |
| ini. | 2 | 0 | -73077 | 12070 | | | 1022 | 385 | SLV 12 | 0.03 | No |
| fin. | 2 | 0 | 14078 | -2460 | | | 1022 | 385 | SLV 12 | 0.16 | No |
| ini. | 2 | 0 | -73077 | 12070 | | | 1022 | 385 | SLV 11 | 0.03 | No |
| fin. | 2 | 0 | 14078 | -2460 | | | 1022 | 385 | SLV 11 | 0.16 | No |
| ini. | 2 | 0 | -45690 | 9515 | | | 1022 | 385 | SLD 12 | 0.04 | No |
| fin. | 2 | 0 | -7732 | -2909 | | | 1022 | 385 | SLD 12 | 0.13 | No |
| ini. | 2 | 0 | -100648 | 11219 | | | 1022 | 385 | SLV 14 | 0.03 | No |
| fin. | 2 | 0 | -14930 | -981 | | | 1022 | 385 | SLV 14 | 0.39 | No |
| ini. | 2 | 0 | -63618 | 9967 | | | 1022 | 385 | SLD 16 | 0.04 | No |
| fin. | 2 | 0 | -11592 | -2245 | | | 1022 | 385 | SLD 16 | 0.17 | No |

### Tabella dei coefficienti di sicurezza minimi

| Stato limite | Coeff.s. | Comb. | Verifica |
|---|---|---|---|
| PF_SLV | 0.707 | SLV 15 | No |
| V_SLV | 0.029 | SLV 15 | No |
| PF_SLU | 1.77 | SLU 83 | Si |
| V_SLU | 0.021 | SLU 84 | No |

## Trave di accoppiamento 16

Verifiche condotte secondo D.M. 17-01-18 (N.T.C.)

### Dati geometrici

| X ini. | Y ini. | Z ini.inf. | Z ini.sup. | H ini. | X fin. | Y fin. | Z fin.inf. | Z fin.sup | H fin. | Luce | Spessore | R. Trazione |
|---|---|---|---|---|---|---|---|---|---|---|---|---|
| -652.8 | 104.6 | 112 | 171 | 59 | -742.8 | 104.6 | 112 | 171 | 59 | 90 | 45 | 3500 |

### Caratteristiche del materiale

(Circolare 7 21-01-19 C8.5.I) Muratura in mattoni pieni e malta di calce LC2_Corti

| fb_ | fhk | fvk0 | fhmedio | τ0 | fv0 | μ | ϕ | fvk,lim | E | G | FC |
|---|---|---|---|---|---|---|---|---|---|---|---|
| 12 | | | 17.25 | 0.9 | 2 | 0.577 | 0.767 | 0.65 | 32000 | 12800 | 1.2 |

### Verifiche a pressoflessione delle travi in muratura in combinazioni non sismiche

| Sezione | γM | N | M | Mu | Comb. | c.s. | Verifica |
|---|---|---|---|---|---|---|---|
| ini. | 3 | -3231 | -71414 | 69831 | SLU 75 | 0.98 | No |
| fin. | 3 | -1915 | -39574 | 69831 | SLU 75 | 1.76 | Si |
| ini. | 3 | -3272 | -71395 | 69831 | SLU 76 | 0.98 | No |
| fin. | 3 | -1913 | -37969 | 69831 | SLU 76 | 1.84 | Si |
| ini. | 3 | -3214 | -71849 | 69831 | SLU 78 | 0.97 | No |
| fin. | 3 | -1908 | -40548 | 69831 | SLU 78 | 1.72 | Si |
| ini. | 3 | -3104 | -70727 | 69831 | SLU 77 | 0.99 | No |
| fin. | 3 | -1908 | -43193 | 69831 | SLU 77 | 1.62 | Si |
| ini. | 3 | -3387 | -74998 | 69831 | SLU 84 | 0.93 | No |
| fin. | 3 | -1993 | -41200 | 69831 | SLU 84 | 1.69 | Si |
| ini. | 3 | -3293 | -73442 | 69831 | SLU 81 | 0.95 | No |
| fin. | 3 | -2000 | -42872 | 69831 | SLU 81 | 1.63 | Si |

| Sezione | γM | N | M | Mu | Comb. | c.s. | Verifica |
|---|---|---|---|---|---|---|---|
| ini. | 3 | -3276 | -73876 | 69831 | SLU 83 | 0.95 | No |
| fin. | 3 | -1993 | -43845 | 69831 | SLU 83 | 1.59 | Si |
| ini. | 3 | -3182 | -71081 | 69831 | SLU 80 | 0.98 | No |
| fin. | 3 | -1906 | -40706 | 69831 | SLU 80 | 1.72 | Si |
| ini. | 3 | -3289 | -70960 | 69831 | SLU 73 | 0.98 | No |
| fin. | 3 | -1920 | -36995 | 69831 | SLU 73 | 1.89 | Si |
| ini. | 3 | -3403 | -74564 | 69831 | SLU 82 | 0.94 | No |
| fin. | 3 | -2000 | -40226 | 69831 | SLU 82 | 1.74 | Si |

## Verifiche a taglio delle travi in muratura secondo §C8.7.1.3.1 in combinazioni non sismiche

| Sezione | γM | N | M | V | Vt | Vp | Vt fess. diag. | Vt,lim | Comb. | c.s. | Verifica |
|---|---|---|---|---|---|---|---|---|---|---|---|
| ini. | 3 | 0 | -70727 | 8236 | | | 682 | 257 | SLU 77 | 0.03 | No |
| fin. | 3 | 0 | -43193 | -3406 | | | 682 | 257 | SLU 77 | 0.08 | No |
| ini. | 3 | 0 | -73876 | 8548 | | | 682 | 257 | SLU 83 | 0.03 | No |
| fin. | 3 | 0 | -43845 | -3483 | | | 682 | 257 | SLU 83 | 0.07 | No |
| ini. | 3 | 0 | -73442 | 8453 | | | 682 | 257 | SLU 81 | 0.03 | No |
| fin. | 3 | 0 | -42872 | -3419 | | | 682 | 257 | SLU 81 | 0.08 | No |
| ini. | 3 | 0 | -69959 | 8151 | | | 682 | 257 | SLU 79 | 0.03 | No |
| fin. | 3 | 0 | -43351 | -3393 | | | 682 | 257 | SLU 79 | 0.08 | No |
| ini. | 3 | 0 | -71849 | 8270 | | | 682 | 257 | SLU 78 | 0.03 | No |
| fin. | 3 | 0 | -40548 | -3300 | | | 682 | 257 | SLU 78 | 0.08 | No |
| ini. | 3 | 0 | -71414 | 8175 | | | 682 | 257 | SLU 75 | 0.03 | No |
| fin. | 3 | 0 | -39574 | -3236 | | | 682 | 257 | SLU 75 | 0.08 | No |
| ini. | 3 | 0 | -74998 | 8582 | | | 682 | 257 | SLU 84 | 0.03 | No |
| fin. | 3 | 0 | -41200 | -3378 | | | 682 | 257 | SLU 84 | 0.08 | No |
| ini. | 3 | 0 | -74564 | 8488 | | | 682 | 257 | SLU 82 | 0.03 | No |
| fin. | 3 | 0 | -40226 | -3314 | | | 682 | 257 | SLU 82 | 0.08 | No |
| ini. | 3 | 0 | -71081 | 8185 | | | 682 | 257 | SLU 80 | 0.03 | No |
| fin. | 3 | 0 | -40706 | -3287 | | | 682 | 257 | SLU 80 | 0.08 | No |
| ini. | 3 | 0 | -70292 | 8141 | | | 682 | 257 | SLU 74 | 0.03 | No |
| fin. | 3 | 0 | -42220 | -3342 | | | 682 | 257 | SLU 74 | 0.08 | No |

## Verifiche a pressoflessione delle travi in muratura in combinazioni sismiche

| Sezione | γM | N | M | Mu | Comb. | c.s. | Verifica |
|---|---|---|---|---|---|---|---|
| ini. | 2 | 1257 | -9170 | 80971 | SLV 4 | 8.83 | Si |
| fin. | 2 | -2424 | -159655 | 80971 | SLV 4 | 0.51 | No |
| ini. | 2 | -4827 | -76914 | 80971 | SLV 16 | 1.05 | Si |
| fin. | 2 | 306 | 101346 | 80971 | SLV 16 | 0.8 | No |
| ini. | 2 | -5462 | -83541 | 80971 | SLV 13 | 0.97 | No |
| fin. | 2 | -278 | 101168 | 80971 | SLV 13 | 0.8 | No |
| ini. | 2 | 1257 | -9170 | 80971 | SLV 3 | 8.83 | Si |
| fin. | 2 | -2424 | -159655 | 80971 | SLV 3 | 0.51 | No |
| ini. | 2 | 622 | -15796 | 80971 | SLV 1 | 5.13 | Si |
| fin. | 2 | -3008 | -159832 | 80971 | SLV 1 | 0.51 | No |
| ini. | 2 | -4827 | -76914 | 80971 | SLV 15 | 1.05 | Si |
| fin. | 2 | 306 | 101346 | 80971 | SLV 15 | 0.8 | No |
| ini. | 2 | -937 | -33226 | 80971 | SLD 2 | 2.44 | Si |
| fin. | 2 | -2074 | -85543 | 80971 | SLD 2 | 0.95 | No |
| ini. | 2 | -937 | -33226 | 80971 | SLD 1 | 2.44 | Si |
| fin. | 2 | -2074 | -85543 | 80971 | SLD 1 | 0.95 | No |
| ini. | 2 | 622 | -15796 | 80971 | SLV 2 | 5.13 | Si |
| fin. | 2 | -3008 | -159832 | 80971 | SLV 2 | 0.51 | No |
| ini. | 2 | -5462 | -83541 | 80971 | SLV 14 | 0.97 | No |
| fin. | 2 | -278 | 101168 | 80971 | SLV 14 | 0.8 | No |

## Verifiche a taglio delle travi in muratura secondo §C8.7.1.3.1 in combinazioni sismiche

| Sezione | γM | N | M | V | Vt | Vp | Vt fess. diag. | Vt,lim | Comb. | c.s. | Verifica |
|---|---|---|---|---|---|---|---|---|---|---|---|
| ini. | 2 | 0 | -83541 | 7952 | | | 1022 | 385 | SLV 13 | 0.05 | No |
| fin. | 2 | 0 | 101168 | 1888 | | | 1022 | 385 | SLV 13 | 0.2 | No |
| ini. | 2 | 0 | -76914 | 7970 | | | 1022 | 385 | SLV 15 | 0.05 | No |
| fin. | 2 | 0 | 101346 | 1520 | | | 1022 | 385 | SLV 15 | 0.25 | No |
| ini. | 2 | 0 | -9170 | 2746 | | | 1022 | 385 | SLV 3 | 0.14 | No |
| fin. | 2 | 0 | -159655 | -6400 | | | 1022 | 385 | SLV 3 | 0.06 | No |
| ini. | 2 | 0 | -76914 | 7970 | | | 1022 | 385 | SLV 16 | 0.05 | No |
| fin. | 2 | 0 | 101346 | 1520 | | | 1022 | 385 | SLV 16 | 0.25 | No |
| ini. | 2 | 0 | -59485 | 6477 | | | 1022 | 385 | SLD 16 | 0.06 | No |
| fin. | 2 | 0 | 27056 | -628 | | | 1022 | 385 | SLD 16 | 0.61 | No |
| ini. | 2 | 0 | -9170 | 2746 | | | 1022 | 385 | SLV 4 | 0.14 | No |
| fin. | 2 | 0 | -159655 | -6400 | | | 1022 | 385 | SLV 4 | 0.06 | No |
| ini. | 2 | 0 | -83541 | 7952 | | | 1022 | 385 | SLV 14 | 0.05 | No |
| fin. | 2 | 0 | 101168 | 1888 | | | 1022 | 385 | SLV 14 | 0.2 | No |
| ini. | 2 | 0 | -62301 | 6469 | | | 1022 | 385 | SLD 14 | 0.06 | No |
| fin. | 2 | 0 | 27016 | -473 | | | 1022 | 385 | SLD 14 | 0.81 | No |
| ini. | 2 | 0 | -59485 | 6477 | | | 1022 | 385 | SLD 15 | 0.06 | No |
| fin. | 2 | 0 | 27056 | -628 | | | 1022 | 385 | SLD 15 | 0.61 | No |
| ini. | 2 | 0 | -62301 | 6469 | | | 1022 | 385 | SLD 13 | 0.06 | No |
| fin. | 2 | 0 | 27016 | -473 | | | 1022 | 385 | SLD 13 | 0.81 | No |

## Tabella dei coefficienti di sicurezza minimi

| Stato limite | Coeff.s. | Comb. | Verifica |
|---|---|---|---|
| PF_SLV | 0.507 | SLV 1 | No |
| V_SLV | 0.048 | SLV 15 | No |
| PF_SLU | 0.931 | SLU 84 | No |
| V_SLU | 0.03 | SLU 84 | No |

# Trave di accoppiamento 17

Verifiche condotte secondo D.M. 17-01-18 (N.T.C.)

## Dati geometrici

| X ini. | Y ini. | Z ini.inf. | Z ini.sup. | H ini. | X fin. | Y fin. | Z fin.inf. | Z fin.sup | H fin. | Luce | Spessore | R. Trazione |
|---|---|---|---|---|---|---|---|---|---|---|---|---|
| -508.8 | 104.6 | 112 | 171 | 59 | -598.8 | 104.6 | 112 | 171 | 59 | 90 | 45 | 3500 |

## Caratteristiche del materiale

(Circolare 7 21-01-19 C8.5.I) Muratura in mattoni pieni e malta di calce LC2_Corti

| fb_ | fhk | fvk0 | fhmedio | τ0 | fv0 | μ | ϕ | fvk,lim | E | G | FC |
|---|---|---|---|---|---|---|---|---|---|---|---|
| 12 | | | 17.25 | 0.9 | 2 | 0.577 | 0.767 | 0.65 | 32000 | 12800 | 1.2 |

## Verifiche a pressoflessione delle travi in muratura in combinazioni non sismiche

| Sezione | γM | N | M | Mu | Comb. | c.s. | Verifica |
|---|---|---|---|---|---|---|---|
| ini. | 3 | -5848 | -52755 | 69831 | SLU 84 | 1.32 | Si |
| fin. | 3 | -3695 | -53048 | 69831 | SLU 84 | 1.32 | Si |
| ini. | 3 | -5762 | -51673 | 69831 | SLU 82 | 1.35 | Si |
| fin. | 3 | -3705 | -52956 | 69831 | SLU 82 | 1.32 | Si |
| ini. | 3 | -5628 | -51902 | 69831 | SLU 79 | 1.35 | Si |
| fin. | 3 | -3360 | -48958 | 69831 | SLU 79 | 1.43 | Si |
| ini. | 3 | -5674 | -51687 | 69831 | SLU 78 | 1.35 | Si |
| fin. | 3 | -3511 | -50458 | 69831 | SLU 78 | 1.38 | Si |
| ini. | 3 | -5497 | -49309 | 69831 | SLU 76 | 1.42 | Si |
| fin. | 3 | -3559 | -50703 | 69831 | SLU 76 | 1.38 | Si |
| ini. | 3 | -5701 | -52595 | 69831 | SLU 77 | 1.33 | Si |
| fin. | 3 | -3397 | -49355 | 69831 | SLU 77 | 1.41 | Si |
| ini. | 3 | -5601 | -50995 | 69831 | SLU 80 | 1.37 | Si |
| fin. | 3 | -3473 | -50060 | 69831 | SLU 80 | 1.39 | Si |
| ini. | 3 | -5875 | -53662 | 69831 | SLU 83 | 1.3 | Si |
| fin. | 3 | -3581 | -51945 | 69831 | SLU 83 | 1.34 | Si |
| ini. | 3 | -5790 | -52581 | 69831 | SLU 81 | 1.33 | Si |
| fin. | 3 | -3591 | -51853 | 69831 | SLU 81 | 1.35 | Si |
| ini. | 3 | -5616 | -51514 | 69831 | SLU 74 | 1.36 | Si |
| fin. | 3 | -3407 | -49264 | 69831 | SLU 74 | 1.42 | Si |

## Verifiche a taglio delle travi in muratura secondo §C8.7.1.3.1 in combinazioni non sismiche

| Sezione | γM | N | M | V | Vt | Vp | Vt fess. diag. | Vt,lim | Comb. | c.s. | Verifica |
|---|---|---|---|---|---|---|---|---|---|---|---|
| ini. | 3 | 0 | -50606 | 10917 | | | 682 | 257 | SLU 75 | 0.02 | No |
| fin. | 3 | 0 | -50366 | -7630 | | | 682 | 257 | SLU 75 | 0.03 | No |
| ini. | 3 | 0 | -51687 | 11125 | | | 682 | 257 | SLU 78 | 0.02 | No |
| fin. | 3 | 0 | -50458 | -7711 | | | 682 | 257 | SLU 78 | 0.03 | No |
| ini. | 3 | 0 | -51902 | 11179 | | | 682 | 257 | SLU 79 | 0.02 | No |
| fin. | 3 | 0 | -48958 | -7634 | | | 682 | 257 | SLU 79 | 0.03 | No |
| ini. | 3 | 0 | -51673 | 11199 | | | 682 | 257 | SLU 82 | 0.02 | No |
| fin. | 3 | 0 | -52956 | -7915 | | | 682 | 257 | SLU 82 | 0.03 | No |
| ini. | 3 | 0 | -52755 | 11406 | | | 682 | 257 | SLU 84 | 0.02 | No |
| fin. | 3 | 0 | -53048 | -7996 | | | 682 | 257 | SLU 84 | 0.03 | No |
| ini. | 3 | 0 | -53662 | 11575 | | | 682 | 257 | SLU 83 | 0.02 | No |
| fin. | 3 | 0 | -51945 | -7980 | | | 682 | 257 | SLU 83 | 0.03 | No |
| ini. | 3 | 0 | -52595 | 11294 | | | 682 | 257 | SLU 77 | 0.02 | No |
| fin. | 3 | 0 | -49355 | -7695 | | | 682 | 257 | SLU 77 | 0.03 | No |
| ini. | 3 | 0 | -52581 | 11368 | | | 682 | 257 | SLU 81 | 0.02 | No |
| fin. | 3 | 0 | -51853 | -7899 | | | 682 | 257 | SLU 81 | 0.03 | No |
| ini. | 3 | 0 | -51514 | 11086 | | | 682 | 257 | SLU 74 | 0.02 | No |
| fin. | 3 | 0 | -49264 | -7614 | | | 682 | 257 | SLU 74 | 0.03 | No |
| ini. | 3 | 0 | -50995 | 11010 | | | 682 | 257 | SLU 80 | 0.02 | No |
| fin. | 3 | 0 | -50060 | -7650 | | | 682 | 257 | SLU 80 | 0.03 | No |

## Verifiche a pressoflessione delle travi in muratura in combinazioni sismiche

| Sezione | γM | N | M | Mu | Comb. | c.s. | Verifica |
|---|---|---|---|---|---|---|---|
| ini. | 2 | -8250 | -68718 | 80971 | SLD 15 | 1.18 | Si |
| fin. | 2 | -3958 | -28852 | 80971 | SLD 15 | 2.81 | Si |
| ini. | 2 | -7778 | -62112 | 80971 | SLD 14 | 1.3 | Si |
| fin. | 2 | -4132 | -31905 | 80971 | SLD 14 | 2.54 | Si |
| ini. | 2 | -8250 | -68718 | 80971 | SLD 16 | 1.18 | Si |
| fin. | 2 | -3958 | -28852 | 80971 | SLD 16 | 2.81 | Si |
| ini. | 2 | -8572 | -81503 | 80971 | SLV 11 | 0.99 | No |
| fin. | 2 | -2832 | -19175 | 80971 | SLV 11 | 4.22 | Si |
| ini. | 2 | -14319 | -114754 | 80971 | SLV 16 | 0.71 | No |
| fin. | 2 | -6195 | -23756 | 80971 | SLV 16 | 3.41 | Si |
| ini. | 2 | -13198 | -99298 | 80971 | SLV 14 | 0.82 | No |
| fin. | 2 | -6606 | -30920 | 80971 | SLV 14 | 2.62 | Si |
| ini. | 2 | -13198 | -99298 | 80971 | SLV 13 | 0.82 | No |
| fin. | 2 | -6606 | -30920 | 80971 | SLV 13 | 2.62 | Si |
| ini. | 2 | -7778 | -62112 | 80971 | SLD 13 | 1.3 | Si |
| fin. | 2 | -4132 | -31905 | 80971 | SLD 13 | 2.54 | Si |
| ini. | 2 | -8572 | -81503 | 80971 | SLV 12 | 0.99 | No |
| fin. | 2 | -2832 | -19175 | 80971 | SLV 12 | 4.22 | Si |
| ini. | 2 | -14319 | -114754 | 80971 | SLV 15 | 0.71 | No |
| fin. | 2 | -6195 | -23756 | 80971 | SLV 15 | 3.41 | Si |

## Verifiche a taglio delle travi in muratura secondo §C8.7.1.3.1 in combinazioni sismiche

| Sezione | γM | N | M | V | Vt | Vp | Vt fess. diag. | Vt,lim | Comb. | c.s. | Verifica |
|---|---|---|---|---|---|---|---|---|---|---|---|
| ini. | 2 | 0 | -114754 | 13433 | | | 1022 | 385 | SLV 15 | 0.03 | No |
| fin. | 2 | 0 | -23756 | -2474 | | | 1022 | 385 | SLV 15 | 0.16 | No |
| ini. | 2 | 0 | -68718 | 9942 | | | 1022 | 385 | SLD 15 | 0.04 | No |

| Sezione | γM | N | M | V | Vt | Vp | Vt fess. diag. | Vt,lim | Comb. | c.s. | Verifica |
|---|---|---|---|---|---|---|---|---|---|---|---|
| fin. | 2 | 0 | -28852 | -3953 | | | 1022 | 385 | SLD 15 | 0.1 | No |
| ini. | 2 | 0 | -62112 | 9742 | | | 1022 | 385 | SLD 14 | 0.04 | No |
| fin. | 2 | 0 | -31905 | -4358 | | | 1022 | 385 | SLD 14 | 0.09 | No |
| ini. | 2 | 0 | -81503 | 9891 | | | 1022 | 385 | SLV 11 | 0.04 | No |
| fin. | 2 | 0 | -19175 | -2841 | | | 1022 | 385 | SLV 11 | 0.14 | No |
| ini. | 2 | 0 | -81503 | 9891 | | | 1022 | 385 | SLV 12 | 0.04 | No |
| fin. | 2 | 0 | -19175 | -2841 | | | 1022 | 385 | SLV 12 | 0.14 | No |
| ini. | 2 | 0 | -99298 | 12940 | | | 1022 | 385 | SLV 13 | 0.03 | No |
| fin. | 2 | 0 | -30920 | -3428 | | | 1022 | 385 | SLV 13 | 0.11 | No |
| ini. | 2 | 0 | -62112 | 9742 | | | 1022 | 385 | SLD 13 | 0.04 | No |
| fin. | 2 | 0 | -31905 | -4358 | | | 1022 | 385 | SLD 13 | 0.09 | No |
| ini. | 2 | 0 | -114754 | 13433 | | | 1022 | 385 | SLV 16 | 0.03 | No |
| fin. | 2 | 0 | -23756 | -2474 | | | 1022 | 385 | SLV 16 | 0.16 | No |
| ini. | 2 | 0 | -99298 | 12940 | | | 1022 | 385 | SLV 14 | 0.03 | No |
| fin. | 2 | 0 | -30920 | -3428 | | | 1022 | 385 | SLV 14 | 0.11 | No |
| ini. | 2 | 0 | -68718 | 9942 | | | 1022 | 385 | SLD 16 | 0.04 | No |
| fin. | 2 | 0 | -28852 | -3953 | | | 1022 | 385 | SLD 16 | 0.1 | No |

### Tabella dei coefficienti di sicurezza minimi

| Stato limite | Coeff.s. | Comb. | Verifica |
|---|---|---|---|
| PF_SLV | 0.706 | SLV 15 | No |
| V_SLV | 0.029 | SLV 15 | No |
| PF_SLU | 1.301 | SLU 83 | Si |
| V_SLU | 0.022 | SLU 83 | No |

## Trave di accoppiamento 18

Verifiche condotte secondo D.M. 17-01-18 (N.T.C.)

### Dati geometrici

| X ini. | Y ini. | Z ini.inf. | Z ini.sup. | H ini. | X fin. | Y fin. | Z fin.inf. | Z fin.sup | H fin. | Luce | Spessore | R. Trazione |
|---|---|---|---|---|---|---|---|---|---|---|---|---|
| -1776.8 | 657.6 | -98 | 102 | 200 | -1676.8 | 657.6 | -98 | 102 | 200 | 100 | 45 | 3500 |

### Caratteristiche del materiale

(Circolare 7 21-01-19 C8.5.I) Muratura in mattoni pieni e malta di calce LC2_Corti

| fb_ | fhk | fvk0 | fhmedio | τ0 | fv0 | μ | ϕ | fvk,lim | E | G | FC |
|---|---|---|---|---|---|---|---|---|---|---|---|
| 12 | | | 17.25 | 0.9 | 2 | 0.577 | 0.767 | 0.65 | 32000 | 12800 | 1.2 |

### Verifiche a pressoflessione delle travi in muratura in combinazioni non sismiche

| Sezione | γM | N | M | Mu | Comb. | c.s. | Verifica |
|---|---|---|---|---|---|---|---|
| ini. | 3 | -3619 | -347299 | 316581 | SLU 81 | 0.91 | No |
| fin. | 3 | -6065 | 44640 | 316581 | SLU 81 | 7.09 | Si |
| ini. | 3 | -3679 | -341638 | 316581 | SLU 84 | 0.93 | No |
| fin. | 3 | -6093 | 42209 | 316581 | SLU 84 | 7.5 | Si |
| ini. | 3 | -3683 | -341056 | 316581 | SLU 83 | 0.93 | No |
| fin. | 3 | -6093 | 42009 | 316581 | SLU 83 | 7.54 | Si |
| ini. | 3 | -3641 | -323248 | 316581 | SLU 77 | 0.98 | No |
| fin. | 3 | -5927 | 37358 | 316581 | SLU 77 | 8.47 | Si |
| ini. | 3 | -3616 | -347882 | 316581 | SLU 82 | 0.91 | No |
| fin. | 3 | -6065 | 44840 | 316581 | SLU 82 | 7.06 | Si |
| ini. | 3 | -3574 | -330074 | 316581 | SLU 75 | 0.96 | No |
| fin. | 3 | -5899 | 40189 | 316581 | SLU 75 | 7.88 | Si |
| ini. | 3 | -3578 | -329492 | 316581 | SLU 74 | 0.96 | No |
| fin. | 3 | -5899 | 39989 | 316581 | SLU 74 | 7.92 | Si |
| ini. | 3 | -3637 | -323830 | 316581 | SLU 78 | 0.98 | No |
| fin. | 3 | -5927 | 37558 | 316581 | SLU 78 | 8.43 | Si |
| ini. | 3 | -3551 | -325280 | 316581 | SLU 76 | 0.97 | No |
| fin. | 3 | -5843 | 39032 | 316581 | SLU 76 | 8.11 | Si |
| ini. | 3 | -3488 | -331524 | 316581 | SLU 73 | 0.95 | No |
| fin. | 3 | -5815 | 41663 | 316581 | SLU 73 | 7.6 | Si |

### Verifiche a taglio delle travi in muratura secondo §C8.7.1.3.1 in combinazioni non sismiche

| Sezione | γM | N | M | V | Vt | Vp | Vt fess. diag. | Vt,lim | Comb. | c.s. | Verifica |
|---|---|---|---|---|---|---|---|---|---|---|---|
| ini. | 3 | 0 | -347299 | 3761 | | | 3466 | 1304 | SLU 81 | 0.35 | No |
| fin. | 3 | 0 | 44640 | 10122 | | | 3466 | 1304 | SLU 81 | 0.13 | No |
| ini. | 3 | 0 | -329492 | 3500 | | | 3466 | 1304 | SLU 74 | 0.37 | No |
| fin. | 3 | 0 | 39989 | 9658 | | | 3466 | 1304 | SLU 74 | 0.14 | No |
| ini. | 3 | 0 | -323248 | 3365 | | | 3466 | 1304 | SLU 77 | 0.39 | No |
| fin. | 3 | 0 | 37358 | 9555 | | | 3466 | 1304 | SLU 77 | 0.14 | No |
| ini. | 3 | 0 | -341638 | 3637 | | | 3466 | 1304 | SLU 84 | 0.36 | No |
| fin. | 3 | 0 | 42209 | 10031 | | | 3466 | 1304 | SLU 84 | 0.13 | No |
| ini. | 3 | 0 | -331524 | 3584 | | | 3466 | 1304 | SLU 73 | 0.36 | No |
| fin. | 3 | 0 | 41663 | 9639 | | | 3466 | 1304 | SLU 73 | 0.14 | No |
| ini. | 3 | 0 | -330074 | 3512 | | | 3466 | 1304 | SLU 75 | 0.37 | No |
| fin. | 3 | 0 | 40189 | 9670 | | | 3466 | 1304 | SLU 75 | 0.13 | No |
| ini. | 3 | 0 | -323830 | 3376 | | | 3466 | 1304 | SLU 78 | 0.39 | No |
| fin. | 3 | 0 | 37558 | 9567 | | | 3466 | 1304 | SLU 78 | 0.14 | No |
| ini. | 3 | 0 | -325280 | 3449 | | | 3466 | 1304 | SLU 76 | 0.38 | No |
| fin. | 3 | 0 | 39032 | 9536 | | | 3466 | 1304 | SLU 76 | 0.14 | No |
| ini. | 3 | 0 | -341056 | 3626 | | | 3466 | 1304 | SLU 83 | 0.36 | No |
| fin. | 3 | 0 | 42009 | 10019 | | | 3466 | 1304 | SLU 83 | 0.13 | No |
| ini. | 3 | 0 | -347882 | 3773 | | | 3466 | 1304 | SLU 82 | 0.35 | No |
| fin. | 3 | 0 | 44840 | 10134 | | | 3466 | 1304 | SLU 82 | 0.13 | No |

### Verifiche a pressoflessione delle travi in muratura in combinazioni sismiche

| Sezione | γM | N | M | Mu | Comb. | c.s. | Verifica |
|---|---|---|---|---|---|---|---|
| ini. | 2 | -3477 | -444127 | 327721 | SLV 7 | 0.74 | No |
| fin. | 2 | -6909 | 130261 | 327721 | SLV 7 | 2.52 | Si |
| ini. | 2 | -1777 | -356927 | 327721 | SLD 1 | 0.92 | No |
| fin. | 2 | -4706 | 120537 | 327721 | SLD 1 | 2.72 | Si |
| ini. | 2 | -863 | -519661 | 327721 | SLV 2 | 0.63 | No |
| fin. | 2 | -5512 | 242611 | 327721 | SLV 2 | 1.35 | Si |
| ini. | 2 | -3477 | -444127 | 327721 | SLV 8 | 0.74 | No |
| fin. | 2 | -6909 | 130261 | 327721 | SLV 8 | 2.52 | Si |
| ini. | 2 | -1678 | -590330 | 327721 | SLV 4 | 0.56 | No |
| fin. | 2 | -6836 | 263909 | 327721 | SLV 4 | 1.24 | Si |
| ini. | 2 | -1777 | -356927 | 327721 | SLD 2 | 0.92 | No |
| fin. | 2 | -4706 | 120537 | 327721 | SLD 2 | 2.72 | Si |
| ini. | 2 | -863 | -519661 | 327721 | SLV 1 | 0.63 | No |
| fin. | 2 | -5512 | 242611 | 327721 | SLV 1 | 1.35 | Si |
| ini. | 2 | -1678 | -590330 | 327721 | SLV 3 | 0.56 | No |
| fin. | 2 | -6836 | 263909 | 327721 | SLV 3 | 1.24 | Si |
| ini. | 2 | -2115 | -385973 | 327721 | SLD 3 | 0.85 | No |
| fin. | 2 | -5253 | 129779 | 327721 | SLD 3 | 2.53 | Si |
| ini. | 2 | -2115 | -385973 | 327721 | SLD 4 | 0.85 | No |
| fin. | 2 | -5253 | 129779 | 327721 | SLD 4 | 2.53 | Si |

### Verifiche a taglio delle travi in muratura secondo §C8.7.1.3.1 in combinazioni sismiche

| Sezione | γM | N | M | V | Vt | Vp | Vt fess. diag. | Vt,lim | Comb. | c.s. | Verifica |
|---|---|---|---|---|---|---|---|---|---|---|---|
| ini. | 2 | 0 | -590330 | 11340 | | | 5199 | 1957 | SLV 4 | 0.17 | No |
| fin. | 2 | 0 | 263909 | 16696 | | | 5199 | 1957 | SLV 4 | 0.12 | No |
| ini. | 2 | 0 | -590330 | 11340 | | | 5199 | 1957 | SLV 3 | 0.17 | No |
| fin. | 2 | 0 | 263909 | 16696 | | | 5199 | 1957 | SLV 3 | 0.12 | No |
| ini. | 2 | 0 | -356927 | 6369 | | | 5199 | 1957 | SLD 1 | 0.31 | No |
| fin. | 2 | 0 | 120537 | 10338 | | | 5199 | 1957 | SLD 1 | 0.19 | No |
| ini. | 2 | 0 | -519661 | 11413 | | | 5199 | 1957 | SLV 1 | 0.17 | No |
| fin. | 2 | 0 | 242611 | 15091 | | | 5199 | 1957 | SLV 1 | 0.13 | No |
| ini. | 2 | 0 | -444127 | 5004 | | | 5199 | 1957 | SLV 7 | 0.39 | No |
| fin. | 2 | 0 | 130261 | 12073 | | | 5199 | 1957 | SLV 7 | 0.16 | No |
| ini. | 2 | 0 | -385973 | 6330 | | | 5199 | 1957 | SLD 3 | 0.31 | No |
| fin. | 2 | 0 | 129779 | 10996 | | | 5199 | 1957 | SLD 3 | 0.18 | No |
| ini. | 2 | 0 | -519661 | 11413 | | | 5199 | 1957 | SLV 2 | 0.17 | No |
| fin. | 2 | 0 | 242611 | 15091 | | | 5199 | 1957 | SLV 2 | 0.13 | No |
| ini. | 2 | 0 | -444127 | 5004 | | | 5199 | 1957 | SLV 8 | 0.39 | No |
| fin. | 2 | 0 | 130261 | 12073 | | | 5199 | 1957 | SLV 8 | 0.16 | No |
| ini. | 2 | 0 | -385973 | 6330 | | | 5199 | 1957 | SLD 4 | 0.31 | No |
| fin. | 2 | 0 | 129779 | 10996 | | | 5199 | 1957 | SLD 4 | 0.18 | No |
| ini. | 2 | 0 | -356927 | 6369 | | | 5199 | 1957 | SLD 2 | 0.31 | No |
| fin. | 2 | 0 | 120537 | 10338 | | | 5199 | 1957 | SLD 2 | 0.19 | No |

### Tabella dei coefficienti di sicurezza minimi

| Stato limite | Coeff.s. | Comb. | Verifica |
|---|---|---|---|
| PF_SLV | 0.555 | SLV 3 | No |
| V_SLV | 0.117 | SLV 3 | No |
| PF_SLU | 0.91 | SLU 82 | No |
| V_SLU | 0.129 | SLU 82 | No |

## Trave di accoppiamento 19

Verifiche condotte secondo D.M. 17-01-18 (N.T.C.)

### Dati geometrici

| X ini. | Y ini. | Z ini.inf. | Z ini.sup. | H ini. | X fin. | Y fin. | Z fin.inf. | Z fin.sup | H fin. | Luce | Spessore | R. Trazione |
|---|---|---|---|---|---|---|---|---|---|---|---|---|
| -1776.8 | 657.6 | 142 | 171 | 29 | -1676.8 | 657.6 | 142 | 171 | 29 | 100 | 45 | 3500 |

### Caratteristiche del materiale

(Circolare 7 21-01-19 C8.5.I) Muratura in mattoni pieni e malta di calce LC2_Corti

| fb_ | fhk | fvk0 | fhmedio | τ0 | fv0 | μ | ϕ | fvk,lim | E | G | FC |
|---|---|---|---|---|---|---|---|---|---|---|---|
| 12 | | | 17.25 | 0.9 | 2 | 0.577 | 0.767 | 0.65 | 32000 | 12800 | 1.2 |

### Verifiche a pressoflessione delle travi in muratura in combinazioni non sismiche

| Sezione | γM | N | M | Mu | Comb. | c.s. | Verifica |
|---|---|---|---|---|---|---|---|
| ini. | 3 | 1137 | -29960 | 19201 | SLU 77 | 0.64 | No |
| fin. | 3 | 2212 | 524 | 19201 | SLU 77 | 36.63 | Si |
| ini. | 3 | 1131 | -30425 | 19201 | SLU 74 | 0.63 | No |
| fin. | 3 | 2247 | 1169 | 19201 | SLU 74 | 16.43 | Si |
| ini. | 3 | 1173 | -31527 | 19201 | SLU 84 | 0.61 | No |
| fin. | 3 | 2338 | 1345 | 19201 | SLU 84 | 14.28 | Si |
| ini. | 3 | 1173 | -31478 | 19201 | SLU 83 | 0.61 | No |
| fin. | 3 | 2334 | 1297 | 19201 | SLU 83 | 14.8 | Si |
| ini. | 3 | 1167 | -31943 | 19201 | SLU 81 | 0.6 | No |
| fin. | 3 | 2369 | 1942 | 19201 | SLU 81 | 9.89 | Si |
| ini. | 3 | 1137 | -30008 | 19201 | SLU 78 | 0.64 | No |
| fin. | 3 | 2216 | 572 | 19201 | SLU 78 | 33.58 | Si |
| ini. | 3 | 1113 | -30507 | 19201 | SLU 73 | 0.63 | No |
| fin. | 3 | 2253 | 1714 | 19201 | SLU 73 | 11.2 | Si |
| ini. | 3 | 1167 | -31992 | 19201 | SLU 82 | 0.6 | No |
| fin. | 3 | 2373 | 1990 | 19201 | SLU 82 | 9.65 | Si |
| ini. | 3 | 1119 | -30043 | 19201 | SLU 76 | 0.64 | No |

| Sezione | γM | N | M | Mu | Comb. | c.s. | Verifica |
|---|---|---|---|---|---|---|---|
| fin. | 3 | 2218 | 1069 | 19201 | SLU 76 | 17.96 | Si |
| ini. | 3 | 1131 | -30473 | 19201 | SLU 75 | 0.63 | No |
| fin. | 3 | 2251 | 1217 | 19201 | SLU 75 | 15.78 | Si |

### Verifiche a taglio delle travi in muratura secondo §C8.7.1.3.1 in combinazioni non sismiche

| Sezione | γM | N | M | V | Vt | Vp | Vt fess. diag. | Vt,lim | Comb. | c.s. | Verifica |
|---|---|---|---|---|---|---|---|---|---|---|---|
| ini. | 3 | 0 | -31943 | 1532 | | | 335 | 126 | SLU 81 | 0.08 | No |
| fin. | 3 | 0 | 1942 | -343 | | | 335 | 126 | SLU 81 | 0.37 | No |
| ini. | 3 | 0 | -30473 | 1472 | | | 335 | 126 | SLU 75 | 0.09 | No |
| fin. | 3 | 0 | 1217 | -357 | | | 335 | 126 | SLU 75 | 0.35 | No |
| ini. | 3 | 0 | -31478 | 1517 | | | 335 | 126 | SLU 83 | 0.08 | No |
| fin. | 3 | 0 | 1297 | -366 | | | 335 | 126 | SLU 83 | 0.34 | No |
| ini. | 3 | 0 | -29960 | 1455 | | | 335 | 126 | SLU 77 | 0.09 | No |
| fin. | 3 | 0 | 524 | -382 | | | 335 | 126 | SLU 77 | 0.33 | No |
| ini. | 3 | 0 | -30043 | 1453 | | | 335 | 126 | SLU 76 | 0.09 | No |
| fin. | 3 | 0 | 1069 | -359 | | | 335 | 126 | SLU 76 | 0.35 | No |
| ini. | 3 | 0 | -31992 | 1533 | | | 335 | 126 | SLU 82 | 0.08 | No |
| fin. | 3 | 0 | 1990 | -341 | | | 335 | 126 | SLU 82 | 0.37 | No |
| ini. | 3 | 0 | -30425 | 1470 | | | 335 | 126 | SLU 74 | 0.09 | No |
| fin. | 3 | 0 | 1169 | -359 | | | 335 | 126 | SLU 74 | 0.35 | No |
| ini. | 3 | 0 | -31527 | 1519 | | | 335 | 126 | SLU 84 | 0.08 | No |
| fin. | 3 | 0 | 1345 | -364 | | | 335 | 126 | SLU 84 | 0.35 | No |
| ini. | 3 | 0 | -30008 | 1457 | | | 335 | 126 | SLU 78 | 0.09 | No |
| fin. | 3 | 0 | 572 | -381 | | | 335 | 126 | SLU 78 | 0.33 | No |
| ini. | 3 | 0 | -30507 | 1467 | | | 335 | 126 | SLU 73 | 0.09 | No |
| fin. | 3 | 0 | 1714 | -336 | | | 335 | 126 | SLU 73 | 0.38 | No |

### Verifiche a pressoflessione delle travi in muratura in combinazioni sismiche

| Sezione | γM | N | M | Mu | Comb. | c.s. | Verifica |
|---|---|---|---|---|---|---|---|
| ini. | 2 | 663 | -34168 | 28471 | SLD 4 | 0.83 | No |
| fin. | 2 | 2333 | 13665 | 28471 | SLD 4 | 2.08 | Si |
| ini. | 2 | 663 | -34168 | 28471 | SLD 3 | 0.83 | No |
| fin. | 2 | 2333 | 13665 | 28471 | SLD 3 | 2.08 | Si |
| ini. | 2 | -678 | -51194 | 28471 | SLV 2 | 0.56 | No |
| fin. | 2 | 2417 | 31833 | 28471 | SLV 2 | 0.89 | No |
| ini. | 2 | 2579 | -30180 | 28471 | SLV 7 | 0.94 | No |
| fin. | 2 | 3521 | 8446 | 28471 | SLV 7 | 3.37 | Si |
| ini. | 2 | 557 | -51245 | 28471 | SLV 3 | 0.56 | No |
| fin. | 2 | 3364 | 30901 | 28471 | SLV 3 | 0.92 | No |
| ini. | 2 | 557 | -51245 | 28471 | SLV 4 | 0.56 | No |
| fin. | 2 | 3364 | 30901 | 28471 | SLV 4 | 0.92 | No |
| ini. | 2 | -678 | -51194 | 28471 | SLV 1 | 0.56 | No |
| fin. | 2 | 2417 | 31833 | 28471 | SLV 1 | 0.89 | No |
| ini. | 2 | 136 | -34168 | 28471 | SLD 2 | 0.83 | No |
| fin. | 2 | 1937 | 14193 | 28471 | SLD 2 | 2.01 | Si |
| ini. | 2 | 2579 | -30180 | 28471 | SLV 8 | 0.94 | No |
| fin. | 2 | 3521 | 8446 | 28471 | SLV 8 | 3.37 | Si |
| ini. | 2 | 136 | -34168 | 28471 | SLD 1 | 0.83 | No |
| fin. | 2 | 1937 | 14193 | 28471 | SLD 1 | 2.01 | Si |

### Verifiche a taglio delle travi in muratura secondo §C8.7.1.3.1 in combinazioni sismiche

| Sezione | γM | N | M | V | Vt | Vp | Vt fess. diag. | Vt,lim | Comb. | c.s. | Verifica |
|---|---|---|---|---|---|---|---|---|---|---|---|
| ini. | 2 | 0 | -30180 | 1905 | | | 503 | 189 | SLV 8 | 0.1 | No |
| fin. | 2 | 0 | 8446 | -371 | | | 503 | 189 | SLV 8 | 0.51 | No |
| ini. | 2 | 0 | -51194 | 1931 | | | 503 | 189 | SLV 1 | 0.1 | No |
| fin. | 2 | 0 | 31833 | 752 | | | 503 | 189 | SLV 1 | 0.25 | No |
| ini. | 2 | 0 | -51245 | 2267 | | | 503 | 189 | SLV 4 | 0.08 | No |
| fin. | 2 | 0 | 30901 | 521 | | | 503 | 189 | SLV 4 | 0.36 | No |
| ini. | 2 | 0 | -34168 | 1562 | | | 503 | 189 | SLD 3 | 0.12 | No |
| fin. | 2 | 0 | 13665 | 86 | | | 503 | 189 | SLD 3 | 2.19 | Si |
| ini. | 2 | 0 | -30180 | 1905 | | | 503 | 189 | SLV 7 | 0.1 | No |
| fin. | 2 | 0 | 8446 | -371 | | | 503 | 189 | SLV 7 | 0.51 | No |
| ini. | 2 | 0 | -51194 | 1931 | | | 503 | 189 | SLV 2 | 0.1 | No |
| fin. | 2 | 0 | 31833 | 752 | | | 503 | 189 | SLV 2 | 0.25 | No |
| ini. | 2 | 0 | -51245 | 2267 | | | 503 | 189 | SLV 3 | 0.08 | No |
| fin. | 2 | 0 | 30901 | 521 | | | 503 | 189 | SLV 3 | 0.36 | No |
| ini. | 2 | 0 | -34168 | 1421 | | | 503 | 189 | SLD 1 | 0.13 | No |
| fin. | 2 | 0 | 14193 | 186 | | | 503 | 189 | SLD 1 | 1.02 | Si |
| ini. | 2 | 0 | -34168 | 1421 | | | 503 | 189 | SLD 2 | 0.13 | No |
| fin. | 2 | 0 | 14193 | 186 | | | 503 | 189 | SLD 2 | 1.02 | Si |
| ini. | 2 | 0 | -34168 | 1562 | | | 503 | 189 | SLD 4 | 0.12 | No |
| fin. | 2 | 0 | 13665 | 86 | | | 503 | 189 | SLD 4 | 2.19 | Si |

### Tabella dei coefficienti di sicurezza minimi

| Stato limite | Coeff.s. | Comb. | Verifica |
|---|---|---|---|
| PF_SLV | 0.556 | SLV 3 | No |
| V_SLV | 0.083 | SLV 3 | No |
| PF_SLU | 0.6 | SLU 82 | No |
| V_SLU | 0.082 | SLU 82 | No |

## Trave di accoppiamento 20

Verifiche condotte secondo D.M. 17-01-18 (N.T.C.)

## Dati geometrici

| X ini. | Y ini. | Z ini.inf. | Z ini.sup. | H ini. | X fin. | Y fin. | Z fin.inf. | Z fin.sup | H fin. | Luce | Spessore | R. Trazione |
|---|---|---|---|---|---|---|---|---|---|---|---|---|
| -1288.8 | 657.6 | -98 | 102 | 200 | -1188.8 | 657.6 | -98 | 102 | 200 | 100 | 45 | 3500 |

## Caratteristiche del materiale

(Circolare 7 21-01-19 C8.5.I) Muratura in mattoni pieni e malta di calce LC2_Corti

| fb_ | fhk | fvk0 | fhmedio | τ0 | fv0 | μ | ϕ | fvk,lim | E | G | FC |
|---|---|---|---|---|---|---|---|---|---|---|---|
| 12 | | | 17.25 | 0.9 | 2 | 0.577 | 0.767 | 0.65 | 32000 | 12800 | 1.2 |

## Verifiche a pressoflessione delle travi in muratura in combinazioni non sismiche

| Sezione | γM | N | M | Mu | Comb. | c.s. | Verifica |
|---|---|---|---|---|---|---|---|
| ini. | 3 | -6243 | -49870 | 316581 | SLU 84 | 6.35 | Si |
| fin. | 3 | -6196 | -1587 | 316581 | SLU 84 | 199.43 | Si |
| ini. | 3 | -5568 | -49461 | 316581 | SLU 61 | 6.4 | Si |
| fin. | 3 | -5577 | -1090 | 316581 | SLU 61 | 290.36 | Si |
| ini. | 3 | -6049 | -48156 | 316581 | SLU 74 | 6.57 | Si |
| fin. | 3 | -6004 | -1379 | 316581 | SLU 74 | 229.6 | Si |
| ini. | 3 | -6130 | -52995 | 316581 | SLU 81 | 5.97 | Si |
| fin. | 3 | -6128 | -952 | 316581 | SLU 81 | 332.67 | Si |
| ini. | 3 | -6001 | -47328 | 316581 | SLU 76 | 6.69 | Si |
| fin. | 3 | -5947 | -1684 | 316581 | SLU 76 | 187.98 | Si |
| ini. | 3 | -5881 | -50679 | 316581 | SLU 73 | 6.25 | Si |
| fin. | 3 | -5873 | -1124 | 316581 | SLU 73 | 281.63 | Si |
| ini. | 3 | -5575 | -49235 | 316581 | SLU 60 | 6.43 | Si |
| fin. | 3 | -5583 | -1015 | 316581 | SLU 60 | 312.04 | Si |
| ini. | 3 | -6124 | -53220 | 316581 | SLU 82 | 5.95 | Si |
| fin. | 3 | -6122 | -1027 | 316581 | SLU 82 | 308.15 | Si |
| ini. | 3 | -6250 | -49644 | 316581 | SLU 83 | 6.38 | Si |
| fin. | 3 | -6203 | -1512 | 316581 | SLU 83 | 209.42 | Si |
| ini. | 3 | -6043 | -48382 | 316581 | SLU 75 | 6.54 | Si |
| fin. | 3 | -5998 | -1455 | 316581 | SLU 75 | 217.64 | Si |

## Verifiche a taglio delle travi in muratura secondo §C8.7.1.3.1 in combinazioni non sismiche

| Sezione | γM | N | M | V | Vt | Vp | Vt fess. diag. | Vt,lim | Comb. | c.s. | Verifica |
|---|---|---|---|---|---|---|---|---|---|---|---|
| ini. | 3 | 0 | -50679 | -4723 | | | 3466 | 1304 | SLU 73 | 0.28 | No |
| fin. | 3 | 0 | -1124 | 5342 | | | 3466 | 1304 | SLU 73 | 0.24 | No |
| ini. | 3 | 0 | -44805 | -5018 | | | 3466 | 1304 | SLU 77 | 0.26 | No |
| fin. | 3 | 0 | -1939 | 5344 | | | 3466 | 1304 | SLU 77 | 0.24 | No |
| ini. | 3 | 0 | -47328 | -4854 | | | 3466 | 1304 | SLU 76 | 0.27 | No |
| fin. | 3 | 0 | -1684 | 5307 | | | 3466 | 1304 | SLU 76 | 0.25 | No |
| ini. | 3 | 0 | -48156 | -4887 | | | 3466 | 1304 | SLU 74 | 0.27 | No |
| fin. | 3 | 0 | -1379 | 5379 | | | 3466 | 1304 | SLU 74 | 0.24 | No |
| ini. | 3 | 0 | -49870 | -5050 | | | 3466 | 1304 | SLU 84 | 0.26 | No |
| fin. | 3 | 0 | -1587 | 5563 | | | 3466 | 1304 | SLU 84 | 0.23 | No |
| ini. | 3 | 0 | -45031 | -5014 | | | 3466 | 1304 | SLU 78 | 0.26 | No |
| fin. | 3 | 0 | -2015 | 5343 | | | 3466 | 1304 | SLU 78 | 0.24 | No |
| ini. | 3 | 0 | -53220 | -4919 | | | 3466 | 1304 | SLU 82 | 0.27 | No |
| fin. | 3 | 0 | -1027 | 5598 | | | 3466 | 1304 | SLU 82 | 0.23 | No |
| ini. | 3 | 0 | -49644 | -5054 | | | 3466 | 1304 | SLU 83 | 0.26 | No |
| fin. | 3 | 0 | -1512 | 5565 | | | 3466 | 1304 | SLU 83 | 0.23 | No |
| ini. | 3 | 0 | -52995 | -4923 | | | 3466 | 1304 | SLU 81 | 0.26 | No |
| fin. | 3 | 0 | -952 | 5599 | | | 3466 | 1304 | SLU 81 | 0.23 | No |
| ini. | 3 | 0 | -48382 | -4883 | | | 3466 | 1304 | SLU 75 | 0.27 | No |
| fin. | 3 | 0 | -1455 | 5378 | | | 3466 | 1304 | SLU 75 | 0.24 | No |

## Verifiche a pressoflessione delle travi in muratura in combinazioni sismiche

| Sezione | γM | N | M | Mu | Comb. | c.s. | Verifica |
|---|---|---|---|---|---|---|---|
| ini. | 2 | -738 | -181222 | 327721 | SLV 6 | 1.81 | Si |
| fin. | 2 | -2534 | -59449 | 327721 | SLV 6 | 5.51 | Si |
| ini. | 2 | -1037 | -242446 | 327721 | SLV 2 | 1.35 | Si |
| fin. | 2 | -5961 | 160660 | 327721 | SLV 2 | 2.04 | Si |
| ini. | 2 | -2112 | -73289 | 327721 | SLV 9 | 4.47 | Si |
| fin. | 2 | -1010 | -177522 | 327721 | SLV 9 | 1.85 | Si |
| ini. | 2 | -2666 | -186992 | 327721 | SLV 4 | 1.75 | Si |
| fin. | 2 | -7375 | 231252 | 327721 | SLV 4 | 1.42 | Si |
| ini. | 2 | -738 | -181222 | 327721 | SLV 5 | 1.81 | Si |
| fin. | 2 | -2534 | -59449 | 327721 | SLV 5 | 5.51 | Si |
| ini. | 2 | -2666 | -186992 | 327721 | SLV 3 | 1.75 | Si |
| fin. | 2 | -7375 | 231252 | 327721 | SLV 3 | 1.42 | Si |
| ini. | 2 | -2112 | -73289 | 327721 | SLV 10 | 4.47 | Si |
| fin. | 2 | -1010 | -177522 | 327721 | SLV 10 | 1.85 | Si |
| ini. | 2 | -5616 | 117329 | 327721 | SLV 13 | 2.79 | Si |
| fin. | 2 | -883 | -232919 | 327721 | SLV 13 | 1.41 | Si |
| ini. | 2 | -1037 | -242446 | 327721 | SLV 1 | 1.35 | Si |
| fin. | 2 | -5961 | 160660 | 327721 | SLV 1 | 2.04 | Si |
| ini. | 2 | -5616 | 117329 | 327721 | SLV 14 | 2.79 | Si |
| fin. | 2 | -883 | -232919 | 327721 | SLV 14 | 1.41 | Si |

## Verifiche a taglio delle travi in muratura secondo §C8.7.1.3.1 in combinazioni sismiche

| Sezione | γM | N | M | V | Vt | Vp | Vt fess. diag. | Vt,lim | Comb. | c.s. | Verifica |
|---|---|---|---|---|---|---|---|---|---|---|---|
| ini. | 2 | 0 | 117329 | -12086 | | | 5199 | 1957 | SLV 13 | 0.16 | No |
| fin. | 2 | 0 | -232919 | -4945 | | | 5199 | 1957 | SLV 13 | 0.4 | No |
| ini. | 2 | 0 | 172784 | -13236 | | | 5199 | 1957 | SLV 15 | 0.15 | No |
| fin. | 2 | 0 | -162327 | -5965 | | | 5199 | 1957 | SLV 15 | 0.33 | No |
| ini. | 2 | 0 | -181222 | 1403 | | | 5199 | 1957 | SLV 5 | 1.39 | Si |
| fin. | 2 | 0 | -59449 | 8163 | | | 5199 | 1957 | SLV 5 | 0.24 | No |
| ini. | 2 | 0 | -242446 | 6602 | | | 5199 | 1957 | SLV 2 | 0.3 | No |

| Sezione | γM | N | M | V | Vt | Vp | Vt fess. diag. | Vt,lim | Comb. | c.s. | Verifica |
|---|---|---|---|---|---|---|---|---|---|---|---|
| fin. | 2 | 0 | 160660 | 13389 | | | 5199 | 1957 | SLV 2 | 0.15 | No |
| ini. | 2 | 0 | 172784 | -13236 | | | 5199 | 1957 | SLV 16 | 0.15 | No |
| fin. | 2 | 0 | -162327 | -5965 | | | 5199 | 1957 | SLV 16 | 0.33 | No |
| ini. | 2 | 0 | -181222 | 1403 | | | 5199 | 1957 | SLV 6 | 1.39 | Si |
| fin. | 2 | 0 | -59449 | 8163 | | | 5199 | 1957 | SLV 6 | 0.24 | No |
| ini. | 2 | 0 | 117329 | -12086 | | | 5199 | 1957 | SLV 14 | 0.16 | No |
| fin. | 2 | 0 | -232919 | -4945 | | | 5199 | 1957 | SLV 14 | 0.4 | No |
| ini. | 2 | 0 | -242446 | 6602 | | | 5199 | 1957 | SLV 1 | 0.3 | No |
| fin. | 2 | 0 | 160660 | 13389 | | | 5199 | 1957 | SLV 1 | 0.15 | No |
| ini. | 2 | 0 | -186992 | 5452 | | | 5199 | 1957 | SLV 4 | 0.36 | No |
| fin. | 2 | 0 | 231252 | 12368 | | | 5199 | 1957 | SLV 4 | 0.16 | No |
| ini. | 2 | 0 | -186992 | 5452 | | | 5199 | 1957 | SLV 3 | 0.36 | No |
| fin. | 2 | 0 | 231252 | 12368 | | | 5199 | 1957 | SLV 3 | 0.16 | No |

### Tabella dei coefficienti di sicurezza minimi

| Stato limite | Coeff.s. | Comb. | Verifica |
|---|---|---|---|
| PF_SLV | 1.352 | SLV 1 | Si |
| V_SLV | 0.146 | SLV 1 | No |
| PF_SLU | 5.949 | SLU 82 | Si |
| V_SLU | 0.233 | SLU 81 | No |

## Trave di accoppiamento 21

Verifiche condotte secondo D.M. 17-01-18 (N.T.C.)

### Dati geometrici

| X ini. | Y ini. | Z ini.inf. | Z ini.sup. | H ini. | X fin. | Y fin. | Z fin.inf. | Z fin.sup | H fin. | Luce | Spessore | R. Trazione |
|---|---|---|---|---|---|---|---|---|---|---|---|---|
| -1288.8 | 657.6 | 142 | 171 | 29 | -1188.8 | 657.6 | 142 | 171 | 29 | 100 | 45 | 3500 |

### Caratteristiche del materiale

(Circolare 7 21-01-19 C8.5.I) Muratura in mattoni pieni e malta di calce LC2_Corti

| fb_ | fhk | fvk0 | fhmedio | τ0 | fv0 | μ | ϕ | fvk,lim | E | G | FC |
|---|---|---|---|---|---|---|---|---|---|---|---|
| 12 | | | 17.25 | 0.9 | 2 | 0.577 | 0.767 | 0.65 | 32000 | 12800 | 1.2 |

### Verifiche a pressoflessione delle travi in muratura in combinazioni non sismiche

| Sezione | γM | N | M | Mu | Comb. | c.s. | Verifica |
|---|---|---|---|---|---|---|---|
| ini. | 3 | 108 | -13413 | 19201 | SLU 80 | 1.43 | Si |
| fin. | 3 | 233 | -16224 | 19201 | SLU 80 | 1.18 | Si |
| ini. | 3 | 117 | -14792 | 19201 | SLU 81 | 1.3 | Si |
| fin. | 3 | 302 | -16018 | 19201 | SLU 81 | 1.2 | Si |
| ini. | 3 | 107 | -13401 | 19201 | SLU 79 | 1.43 | Si |
| fin. | 3 | 230 | -16252 | 19201 | SLU 79 | 1.18 | Si |
| ini. | 3 | 110 | -13642 | 19201 | SLU 78 | 1.41 | Si |
| fin. | 3 | 242 | -16319 | 19201 | SLU 78 | 1.18 | Si |
| ini. | 3 | 107 | -14000 | 19201 | SLU 74 | 1.37 | Si |
| fin. | 3 | 263 | -15903 | 19201 | SLU 74 | 1.21 | Si |
| ini. | 3 | 108 | -13630 | 19201 | SLU 77 | 1.41 | Si |
| fin. | 3 | 240 | -16347 | 19201 | SLU 77 | 1.17 | Si |
| ini. | 3 | 118 | -14804 | 19201 | SLU 82 | 1.3 | Si |
| fin. | 3 | 304 | -15990 | 19201 | SLU 82 | 1.2 | Si |
| ini. | 3 | 120 | -14434 | 19201 | SLU 84 | 1.33 | Si |
| fin. | 3 | 281 | -16434 | 19201 | SLU 84 | 1.17 | Si |
| ini. | 3 | 118 | -14422 | 19201 | SLU 83 | 1.33 | Si |
| fin. | 3 | 279 | -16462 | 19201 | SLU 83 | 1.17 | Si |
| ini. | 3 | 108 | -14012 | 19201 | SLU 75 | 1.37 | Si |
| fin. | 3 | 265 | -15875 | 19201 | SLU 75 | 1.21 | Si |

### Verifiche a taglio delle travi in muratura secondo §C8.7.1.3.1 in combinazioni non sismiche

| Sezione | γM | N | M | V | Vt | Vp | Vt fess. diag. | Vt,lim | Comb. | c.s. | Verifica |
|---|---|---|---|---|---|---|---|---|---|---|---|
| ini. | 3 | 0 | -14000 | 794 | | | 335 | 126 | SLU 74 | 0.16 | No |
| fin. | 3 | 0 | -15903 | -1010 | | | 335 | 126 | SLU 74 | 0.12 | No |
| ini. | 3 | 0 | -14012 | 795 | | | 335 | 126 | SLU 75 | 0.16 | No |
| fin. | 3 | 0 | -15875 | -1009 | | | 335 | 126 | SLU 75 | 0.13 | No |
| ini. | 3 | 0 | -14792 | 831 | | | 335 | 126 | SLU 81 | 0.15 | No |
| fin. | 3 | 0 | -16018 | -1026 | | | 335 | 126 | SLU 81 | 0.12 | No |
| ini. | 3 | 0 | -14422 | 816 | | | 335 | 126 | SLU 83 | 0.15 | No |
| fin. | 3 | 0 | -16462 | -1043 | | | 335 | 126 | SLU 83 | 0.12 | No |
| ini. | 3 | 0 | -13630 | 780 | | | 335 | 126 | SLU 77 | 0.16 | No |
| fin. | 3 | 0 | -16347 | -1027 | | | 335 | 126 | SLU 77 | 0.12 | No |
| ini. | 3 | 0 | -13401 | 769 | | | 335 | 126 | SLU 79 | 0.16 | No |
| fin. | 3 | 0 | -16252 | -1019 | | | 335 | 126 | SLU 79 | 0.12 | No |
| ini. | 3 | 0 | -14434 | 817 | | | 335 | 126 | SLU 84 | 0.15 | No |
| fin. | 3 | 0 | -16434 | -1042 | | | 335 | 126 | SLU 84 | 0.12 | No |
| ini. | 3 | 0 | -13642 | 780 | | | 335 | 126 | SLU 78 | 0.16 | No |
| fin. | 3 | 0 | -16319 | -1025 | | | 335 | 126 | SLU 78 | 0.12 | No |
| ini. | 3 | 0 | -13413 | 770 | | | 335 | 126 | SLU 80 | 0.16 | No |
| fin. | 3 | 0 | -16224 | -1017 | | | 335 | 126 | SLU 80 | 0.12 | No |
| ini. | 3 | 0 | -14804 | 831 | | | 335 | 126 | SLU 82 | 0.15 | No |
| fin. | 3 | 0 | -15990 | -1025 | | | 335 | 126 | SLU 82 | 0.12 | No |

### Verifiche a pressoflessione delle travi in muratura in combinazioni sismiche

| Sezione | γM | N | M | Mu | Comb. | c.s. | Verifica |
|---|---|---|---|---|---|---|---|
| ini. | 2 | 1269 | 10775 | 28471 | SLV 13 | 2.64 | Si |
| fin. | 2 | -589 | -42260 | 28471 | SLV 13 | 0.67 | No |

| Sezione | γM | N | M | Mu | Comb. | c.s. | Verifica |
|---|---|---|---|---|---|---|---|
| ini. | 2 | -1097 | -51896 | 28471 | SLV 2 | 0.55 | No |
| fin. | 2 | 2242 | 18490 | 28471 | SLV 2 | 1.54 | Si |
| ini. | 2 | 502 | -36075 | 28471 | SLV 9 | 0.79 | No |
| fin. | 2 | 1918 | -23681 | 28471 | SLV 9 | 1.2 | Si |
| ini. | 2 | 1217 | 32131 | 28471 | SLV 15 | 0.89 | No |
| fin. | 2 | -1888 | -39959 | 28471 | SLV 15 | 0.71 | No |
| ini. | 2 | -1097 | -51896 | 28471 | SLV 1 | 0.55 | No |
| fin. | 2 | 2242 | 18490 | 28471 | SLV 1 | 1.54 | Si |
| ini. | 2 | -208 | -54877 | 28471 | SLV 6 | 0.52 | No |
| fin. | 2 | 2767 | -5456 | 28471 | SLV 6 | 5.22 | Si |
| ini. | 2 | 502 | -36075 | 28471 | SLV 10 | 0.79 | No |
| fin. | 2 | 1918 | -23681 | 28471 | SLV 10 | 1.2 | Si |
| ini. | 2 | 1217 | 32131 | 28471 | SLV 16 | 0.89 | No |
| fin. | 2 | -1888 | -39959 | 28471 | SLV 16 | 0.71 | No |
| ini. | 2 | 1269 | 10775 | 28471 | SLV 14 | 2.64 | Si |
| fin. | 2 | -589 | -42260 | 28471 | SLV 14 | 0.67 | No |
| ini. | 2 | -208 | -54877 | 28471 | SLV 5 | 0.52 | No |
| fin. | 2 | 2767 | -5456 | 28471 | SLV 5 | 5.22 | Si |

### Verifiche a taglio delle travi in muratura secondo §C8.7.1.3.1 in combinazioni sismiche

| Sezione | γM | N | M | V | Vt | Vp | Vt fess. diag. | Vt,lim | Comb. | c.s. | Verifica |
|---|---|---|---|---|---|---|---|---|---|---|---|
| ini. | 2 | 0 | 10775 | -232 | | | 503 | 189 | SLV 14 | 0.81 | No |
| fin. | 2 | 0 | -42260 | -1908 | | | 503 | 189 | SLV 14 | 0.1 | No |
| ini. | 2 | 0 | -36075 | 1024 | | | 503 | 189 | SLV 10 | 0.18 | No |
| fin. | 2 | 0 | -23681 | -1469 | | | 503 | 189 | SLV 10 | 0.13 | No |
| ini. | 2 | 0 | -54877 | 1639 | | | 503 | 189 | SLV 6 | 0.12 | No |
| fin. | 2 | 0 | -5456 | -821 | | | 503 | 189 | SLV 6 | 0.23 | No |
| ini. | 2 | 0 | 32131 | -694 | | | 503 | 189 | SLV 16 | 0.27 | No |
| fin. | 2 | 0 | -39959 | -1636 | | | 503 | 189 | SLV 16 | 0.12 | No |
| ini. | 2 | 0 | -36075 | 1024 | | | 503 | 189 | SLV 9 | 0.18 | No |
| fin. | 2 | 0 | -23681 | -1469 | | | 503 | 189 | SLV 9 | 0.13 | No |
| ini. | 2 | 0 | 32131 | -694 | | | 503 | 189 | SLV 15 | 0.27 | No |
| fin. | 2 | 0 | -39959 | -1636 | | | 503 | 189 | SLV 15 | 0.12 | No |
| ini. | 2 | 0 | -54877 | 1639 | | | 503 | 189 | SLV 5 | 0.12 | No |
| fin. | 2 | 0 | -5456 | -821 | | | 503 | 189 | SLV 5 | 0.23 | No |
| ini. | 2 | 0 | -51896 | 1818 | | | 503 | 189 | SLV 2 | 0.1 | No |
| fin. | 2 | 0 | 18490 | 254 | | | 503 | 189 | SLV 2 | 0.74 | No |
| ini. | 2 | 0 | 10775 | -232 | | | 503 | 189 | SLV 13 | 0.81 | No |
| fin. | 2 | 0 | -42260 | -1908 | | | 503 | 189 | SLV 13 | 0.1 | No |
| ini. | 2 | 0 | -51896 | 1818 | | | 503 | 189 | SLV 1 | 0.1 | No |
| fin. | 2 | 0 | 18490 | 254 | | | 503 | 189 | SLV 1 | 0.74 | No |

### Tabella dei coefficienti di sicurezza minimi

| Stato limite | Coeff.s. | Comb. | Verifica |
|---|---|---|---|
| PF_SLV | 0.519 | SLV 5 | No |
| V_SLV | 0.099 | SLV 13 | No |
| PF_SLU | 1.166 | SLU 83 | Si |
| V_SLU | 0.121 | SLU 83 | No |

## Trave di accoppiamento 22

Verifiche condotte secondo D.M. 17-01-18 (N.T.C.)

### Dati geometrici

| X ini. | Y ini. | Z ini.inf. | Z ini.sup. | H ini. | X fin. | Y fin. | Z fin.inf. | Z fin.sup | H fin. | Luce | Spessore | R. Trazione |
|---|---|---|---|---|---|---|---|---|---|---|---|---|
| -800.8 | 657.6 | -98 | 102 | 200 | -700.8 | 657.6 | -98 | 102 | 200 | 100 | 45 | 3500 |

### Caratteristiche del materiale

(Circolare 7 21-01-19 C8.5.I) Muratura in mattoni pieni e malta di calce LC2_Corti

| fb_ | fhk | fvk0 | fhmedio | τ0 | fv0 | μ | ϕ | fvk,lim | E | G | FC |
|---|---|---|---|---|---|---|---|---|---|---|---|
| 12 | | | 17.25 | 0.9 | 2 | 0.577 | 0.767 | 0.65 | 32000 | 12800 | 1.2 |

### Verifiche a pressoflessione delle travi in muratura in combinazioni non sismiche

| Sezione | γM | N | M | Mu | Comb. | c.s. | Verifica |
|---|---|---|---|---|---|---|---|
| ini. | 3 | -5121 | 99739 | 316581 | SLU 84 | 3.17 | Si |
| fin. | 3 | -2696 | -223110 | 316581 | SLU 84 | 1.42 | Si |
| ini. | 3 | -5055 | 97674 | 316581 | SLU 78 | 3.24 | Si |
| fin. | 3 | -2697 | -216015 | 316581 | SLU 78 | 1.47 | Si |
| ini. | 3 | -5033 | 96736 | 316581 | SLU 79 | 3.27 | Si |
| fin. | 3 | -2699 | -213072 | 316581 | SLU 79 | 1.49 | Si |
| ini. | 3 | -5011 | 97100 | 316581 | SLU 82 | 3.26 | Si |
| fin. | 3 | -2615 | -221696 | 316581 | SLU 82 | 1.43 | Si |
| ini. | 3 | -5024 | 96635 | 316581 | SLU 80 | 3.28 | Si |
| fin. | 3 | -2691 | -213223 | 316581 | SLU 80 | 1.48 | Si |
| ini. | 3 | -5020 | 97201 | 316581 | SLU 81 | 3.26 | Si |
| fin. | 3 | -2623 | -221546 | 316581 | SLU 81 | 1.43 | Si |
| ini. | 3 | -5129 | 99841 | 316581 | SLU 83 | 3.17 | Si |
| fin. | 3 | -2703 | -222959 | 316581 | SLU 83 | 1.42 | Si |
| ini. | 3 | -5064 | 97776 | 316581 | SLU 77 | 3.24 | Si |
| fin. | 3 | -2705 | -215865 | 316581 | SLU 77 | 1.47 | Si |
| ini. | 3 | -4954 | 95136 | 316581 | SLU 74 | 3.33 | Si |
| fin. | 3 | -2624 | -214451 | 316581 | SLU 74 | 1.48 | Si |
| ini. | 3 | -4946 | 95035 | 316581 | SLU 75 | 3.33 | Si |
| fin. | 3 | -2616 | -214602 | 316581 | SLU 75 | 1.48 | Si |

Verifiche a taglio delle travi in muratura secondo §C8.7.1.3.1 in combinazioni non sismiche

| Sezione | γM | N | M | V | Vt | Vp | Vt fess. diag. | Vt,lim | Comb. | c.s. | Verifica |
|---|---|---|---|---|---|---|---|---|---|---|---|
| ini. | 3 | 0 | 99739 | -8707 | | | 3466 | 1304 | SLU 84 | 0.15 | No |
| fin. | 3 | 0 | -223110 | -2650 | | | 3466 | 1304 | SLU 84 | 0.49 | No |
| ini. | 3 | 0 | 97776 | -8499 | | | 3466 | 1304 | SLU 77 | 0.15 | No |
| fin. | 3 | 0 | -215865 | -2538 | | | 3466 | 1304 | SLU 77 | 0.51 | No |
| ini. | 3 | 0 | 95035 | -8356 | | | 3466 | 1304 | SLU 75 | 0.16 | No |
| fin. | 3 | 0 | -214602 | -2542 | | | 3466 | 1304 | SLU 75 | 0.51 | No |
| ini. | 3 | 0 | 96736 | -8409 | | | 3466 | 1304 | SLU 79 | 0.16 | No |
| fin. | 3 | 0 | -213072 | -2501 | | | 3466 | 1304 | SLU 79 | 0.52 | No |
| ini. | 3 | 0 | 99841 | -8712 | | | 3466 | 1304 | SLU 83 | 0.15 | No |
| fin. | 3 | 0 | -222959 | -2644 | | | 3466 | 1304 | SLU 83 | 0.49 | No |
| ini. | 3 | 0 | 97100 | -8569 | | | 3466 | 1304 | SLU 82 | 0.15 | No |
| fin. | 3 | 0 | -221696 | -2648 | | | 3466 | 1304 | SLU 82 | 0.49 | No |
| ini. | 3 | 0 | 95136 | -8361 | | | 3466 | 1304 | SLU 74 | 0.16 | No |
| fin. | 3 | 0 | -214451 | -2536 | | | 3466 | 1304 | SLU 74 | 0.51 | No |
| ini. | 3 | 0 | 96635 | -8403 | | | 3466 | 1304 | SLU 80 | 0.16 | No |
| fin. | 3 | 0 | -213223 | -2506 | | | 3466 | 1304 | SLU 80 | 0.52 | No |
| ini. | 3 | 0 | 97201 | -8574 | | | 3466 | 1304 | SLU 81 | 0.15 | No |
| fin. | 3 | 0 | -221546 | -2642 | | | 3466 | 1304 | SLU 81 | 0.49 | No |
| ini. | 3 | 0 | 97674 | -8494 | | | 3466 | 1304 | SLU 78 | 0.15 | No |
| fin. | 3 | 0 | -216015 | -2544 | | | 3466 | 1304 | SLU 78 | 0.51 | No |

Verifiche a pressoflessione delle travi in muratura in combinazioni sismiche

| Sezione | γM | N | M | Mu | Comb. | c.s. | Verifica |
|---|---|---|---|---|---|---|---|
| ini. | 2 | -4174 | 256377 | 327721 | SLV 14 | 1.28 | Si |
| fin. | 2 | 639 | -547701 | 327721 | SLV 14 | 0.6 | No |
| ini. | 2 | -3728 | 146731 | 327721 | SLD 13 | 2.23 | Si |
| fin. | 2 | -758 | -319407 | 327721 | SLD 13 | 1.03 | Si |
| ini. | 2 | -5769 | 308455 | 327721 | SLV 16 | 1.06 | Si |
| fin. | 2 | -1050 | -469472 | 327721 | SLV 16 | 0.7 | No |
| ini. | 2 | -3728 | 146731 | 327721 | SLD 14 | 2.23 | Si |
| fin. | 2 | -758 | -319407 | 327721 | SLD 14 | 1.03 | Si |
| ini. | 2 | -5769 | 308455 | 327721 | SLV 15 | 1.06 | Si |
| fin. | 2 | -1050 | -469472 | 327721 | SLV 15 | 0.7 | No |
| ini. | 2 | -4174 | 256377 | 327721 | SLV 13 | 1.28 | Si |
| fin. | 2 | 639 | -547701 | 327721 | SLV 13 | 0.6 | No |
| ini. | 2 | -1189 | 40653 | 327721 | SLV 9 | 8.06 | Si |
| fin. | 2 | 1487 | -383666 | 327721 | SLV 9 | 0.85 | No |
| ini. | 2 | -4404 | 168756 | 327721 | SLD 16 | 1.94 | Si |
| fin. | 2 | -1471 | -286541 | 327721 | SLD 16 | 1.14 | Si |
| ini. | 2 | -1189 | 40653 | 327721 | SLV 10 | 8.06 | Si |
| fin. | 2 | 1487 | -383666 | 327721 | SLV 10 | 0.85 | No |
| ini. | 2 | -4404 | 168756 | 327721 | SLD 15 | 1.94 | Si |
| fin. | 2 | -1471 | -286541 | 327721 | SLD 15 | 1.14 | Si |

Verifiche a taglio delle travi in muratura secondo §C8.7.1.3.1 in combinazioni sismiche

| Sezione | γM | N | M | V | Vt | Vp | Vt fess. diag. | Vt,lim | Comb. | c.s. | Verifica |
|---|---|---|---|---|---|---|---|---|---|---|---|
| ini. | 2 | 0 | 168756 | -9815 | | | 5199 | 1957 | SLD 16 | 0.2 | No |
| fin. | 2 | 0 | -286541 | -5407 | | | 5199 | 1957 | SLD 16 | 0.36 | No |
| ini. | 2 | 0 | 146731 | -9983 | | | 5199 | 1957 | SLD 14 | 0.2 | No |
| fin. | 2 | 0 | -319407 | -5815 | | | 5199 | 1957 | SLD 14 | 0.34 | No |
| ini. | 2 | 0 | 256377 | -15706 | | | 5199 | 1957 | SLV 14 | 0.12 | No |
| fin. | 2 | 0 | -547701 | -11135 | | | 5199 | 1957 | SLV 14 | 0.18 | No |
| ini. | 2 | 0 | 256377 | -15706 | | | 5199 | 1957 | SLV 13 | 0.12 | No |
| fin. | 2 | 0 | -547701 | -11135 | | | 5199 | 1957 | SLV 13 | 0.18 | No |
| ini. | 2 | 0 | 308455 | -15308 | | | 5199 | 1957 | SLV 15 | 0.13 | No |
| fin. | 2 | 0 | -469472 | -10175 | | | 5199 | 1957 | SLV 15 | 0.19 | No |
| ini. | 2 | 0 | 168756 | -9815 | | | 5199 | 1957 | SLD 15 | 0.2 | No |
| fin. | 2 | 0 | -286541 | -5407 | | | 5199 | 1957 | SLD 15 | 0.36 | No |
| ini. | 2 | 0 | 146731 | -9983 | | | 5199 | 1957 | SLD 13 | 0.2 | No |
| fin. | 2 | 0 | -319407 | -5815 | | | 5199 | 1957 | SLD 13 | 0.34 | No |
| ini. | 2 | 0 | 40653 | -9200 | | | 5199 | 1957 | SLV 10 | 0.21 | No |
| fin. | 2 | 0 | -383666 | -5981 | | | 5199 | 1957 | SLV 10 | 0.33 | No |
| ini. | 2 | 0 | 40653 | -9200 | | | 5199 | 1957 | SLV 9 | 0.21 | No |
| fin. | 2 | 0 | -383666 | -5981 | | | 5199 | 1957 | SLV 9 | 0.33 | No |
| ini. | 2 | 0 | 308455 | -15308 | | | 5199 | 1957 | SLV 16 | 0.13 | No |
| fin. | 2 | 0 | -469472 | -10175 | | | 5199 | 1957 | SLV 16 | 0.19 | No |

Tabella dei coefficienti di sicurezza minimi

| Stato limite | Coeff.s. | Comb. | Verifica |
|---|---|---|---|
| PF_SLV | 0.598 | SLV 13 | No |
| V_SLV | 0.125 | SLV 13 | No |
| PF_SLU | 1.419 | SLU 84 | Si |
| V_SLU | 0.15 | SLU 83 | No |

## Trave di accoppiamento 23

Verifiche condotte secondo D.M. 17-01-18 (N.T.C.)

### Dati geometrici

| X ini. | Y ini. | Z ini.inf. | Z ini.sup. | H ini. | X fin. | Y fin. | Z fin.inf. | Z fin.sup | H fin. | Luce | Spessore | R. Trazione |
|---|---|---|---|---|---|---|---|---|---|---|---|---|
| -800.8 | 657.6 | 142 | 171 | 29 | -700.8 | 657.6 | 142 | 171 | 29 | 100 | 45 | 3500 |

## Caratteristiche del materiale

(Circolare 7 21-01-19 C8.5.I) Muratura in mattoni pieni e malta di calce LC2_Corti

| fb_ | fhk | fvk0 | fhmedio | τ0 | fv0 | μ | ϕ | fvk,lim | E | G | FC |
|---|---|---|---|---|---|---|---|---|---|---|---|
| 12 | | | 17.25 | 0.9 | 2 | 0.577 | 0.767 | 0.65 | 32000 | 12800 | 1.2 |

## Verifiche a pressoflessione delle travi in muratura in combinazioni non sismiche

| Sezione | γM | N | M | Mu | Comb. | c.s. | Verifica |
|---|---|---|---|---|---|---|---|
| ini. | 3 | 1068 | 63 | 19201 | SLU 84 | 303.47 | Si |
| fin. | 3 | -389 | -32665 | 19201 | SLU 84 | 0.59 | No |
| ini. | 3 | 1066 | 50 | 19201 | SLU 83 | 386.77 | Si |
| fin. | 3 | -391 | -32702 | 19201 | SLU 83 | 0.59 | No |
| ini. | 3 | 996 | -43 | 19201 | SLU 79 | 444.72 | Si |
| fin. | 3 | -400 | -31802 | 19201 | SLU 79 | 0.6 | No |
| ini. | 3 | 1017 | -113 | 19201 | SLU 74 | 170.03 | Si |
| fin. | 3 | -378 | -31462 | 19201 | SLU 74 | 0.61 | No |
| ini. | 3 | 998 | -30 | 19201 | SLU 80 | 649.82 | Si |
| fin. | 3 | -398 | -31765 | 19201 | SLU 80 | 0.6 | No |
| ini. | 3 | 1016 | 9 | 19201 | SLU 78 | 2083.79 | Si |
| fin. | 3 | -398 | -32071 | 19201 | SLU 78 | 0.6 | No |
| ini. | 3 | 1069 | -59 | 19201 | SLU 81 | 326.17 | Si |
| fin. | 3 | -369 | -32056 | 19201 | SLU 81 | 0.6 | No |
| ini. | 3 | 1014 | -4 | 19201 | SLU 77 | 4351.61 | Si |
| fin. | 3 | -400 | -32108 | 19201 | SLU 77 | 0.6 | No |
| ini. | 3 | 1019 | -99 | 19201 | SLU 75 | 193.37 | Si |
| fin. | 3 | -376 | -31425 | 19201 | SLU 75 | 0.61 | No |
| ini. | 3 | 1071 | -45 | 19201 | SLU 82 | 424.42 | Si |
| fin. | 3 | -367 | -32019 | 19201 | SLU 82 | 0.6 | No |

## Verifiche a taglio delle travi in muratura secondo §C8.7.1.3.1 in combinazioni non sismiche

| Sezione | γM | N | M | V | Vt | Vp | Vt fess. diag. | Vt,lim | Comb. | c.s. | Verifica |
|---|---|---|---|---|---|---|---|---|---|---|---|
| ini. | 3 | 0 | 50 | 432 | | | 335 | 126 | SLU 83 | 0.29 | No |
| fin. | 3 | 0 | -32702 | -1618 | | | 335 | 126 | SLU 83 | 0.08 | No |
| ini. | 3 | 0 | -30 | 419 | | | 335 | 126 | SLU 80 | 0.3 | No |
| fin. | 3 | 0 | -31765 | -1580 | | | 335 | 126 | SLU 80 | 0.08 | No |
| ini. | 3 | 0 | 9 | 422 | | | 335 | 126 | SLU 78 | 0.3 | No |
| fin. | 3 | 0 | -32071 | -1593 | | | 335 | 126 | SLU 78 | 0.08 | No |
| ini. | 3 | 0 | 63 | 431 | | | 335 | 126 | SLU 84 | 0.29 | No |
| fin. | 3 | 0 | -32665 | -1616 | | | 335 | 126 | SLU 84 | 0.08 | No |
| ini. | 3 | 0 | -99 | 424 | | | 335 | 126 | SLU 75 | 0.3 | No |
| fin. | 3 | 0 | -31425 | -1559 | | | 335 | 126 | SLU 75 | 0.08 | No |
| ini. | 3 | 0 | -113 | 425 | | | 335 | 126 | SLU 74 | 0.3 | No |
| fin. | 3 | 0 | -31462 | -1561 | | | 335 | 126 | SLU 74 | 0.08 | No |
| ini. | 3 | 0 | -45 | 434 | | | 335 | 126 | SLU 82 | 0.29 | No |
| fin. | 3 | 0 | -32019 | -1581 | | | 335 | 126 | SLU 82 | 0.08 | No |
| ini. | 3 | 0 | -59 | 434 | | | 335 | 126 | SLU 81 | 0.29 | No |
| fin. | 3 | 0 | -32056 | -1584 | | | 335 | 126 | SLU 81 | 0.08 | No |
| ini. | 3 | 0 | -43 | 419 | | | 335 | 126 | SLU 79 | 0.3 | No |
| fin. | 3 | 0 | -31802 | -1582 | | | 335 | 126 | SLU 79 | 0.08 | No |
| ini. | 3 | 0 | -4 | 422 | | | 335 | 126 | SLU 77 | 0.3 | No |
| fin. | 3 | 0 | -32108 | -1595 | | | 335 | 126 | SLU 77 | 0.08 | No |

## Verifiche a pressoflessione delle travi in muratura in combinazioni sismiche

| Sezione | γM | N | M | Mu | Comb. | c.s. | Verifica |
|---|---|---|---|---|---|---|---|
| ini. | 2 | 915 | 40011 | 28471 | SLV 11 | 0.71 | No |
| fin. | 2 | -3517 | -32345 | 28471 | SLV 11 | 0.88 | No |
| ini. | 2 | -1537 | -35712 | 28471 | SLV 2 | 0.8 | No |
| fin. | 2 | 1121 | 10914 | 28471 | SLV 2 | 2.61 | Si |
| ini. | 2 | -1537 | -35712 | 28471 | SLV 1 | 0.8 | No |
| fin. | 2 | 1121 | 10914 | 28471 | SLV 1 | 2.61 | Si |
| ini. | 2 | 3145 | 14924 | 28471 | SLV 13 | 1.91 | Si |
| fin. | 2 | 265 | -51654 | 28471 | SLV 13 | 0.55 | No |
| ini. | 2 | 421 | -41041 | 28471 | SLV 5 | 0.69 | No |
| fin. | 2 | 3019 | -9590 | 28471 | SLV 5 | 2.97 | Si |
| ini. | 2 | 421 | -41041 | 28471 | SLV 6 | 0.69 | No |
| fin. | 2 | 3019 | -9590 | 28471 | SLV 6 | 2.97 | Si |
| ini. | 2 | 3145 | 14924 | 28471 | SLV 14 | 1.91 | Si |
| fin. | 2 | 265 | -51654 | 28471 | SLV 14 | 0.55 | No |
| ini. | 2 | 2872 | 34683 | 28471 | SLV 15 | 0.82 | No |
| fin. | 2 | -1619 | -52849 | 28471 | SLV 15 | 0.54 | No |
| ini. | 2 | 915 | 40011 | 28471 | SLV 12 | 0.71 | No |
| fin. | 2 | -3517 | -32345 | 28471 | SLV 12 | 0.88 | No |
| ini. | 2 | 2872 | 34683 | 28471 | SLV 16 | 0.82 | No |
| fin. | 2 | -1619 | -52849 | 28471 | SLV 16 | 0.54 | No |

## Verifiche a taglio delle travi in muratura secondo §C8.7.1.3.1 in combinazioni sismiche

| Sezione | γM | N | M | V | Vt | Vp | Vt fess. diag. | Vt,lim | Comb. | c.s. | Verifica |
|---|---|---|---|---|---|---|---|---|---|---|---|
| ini. | 2 | 0 | -41041 | 1533 | | | 503 | 189 | SLV 6 | 0.12 | No |
| fin. | 2 | 0 | -9590 | -1463 | | | 503 | 189 | SLV 6 | 0.13 | No |
| ini. | 2 | 0 | -41041 | 1533 | | | 503 | 189 | SLV 5 | 0.12 | No |
| fin. | 2 | 0 | -9590 | -1463 | | | 503 | 189 | SLV 5 | 0.13 | No |
| ini. | 2 | 0 | -25850 | 982 | | | 503 | 189 | SLV 10 | 0.19 | No |
| fin. | 2 | 0 | -28360 | -2173 | | | 503 | 189 | SLV 10 | 0.09 | No |
| ini. | 2 | 0 | 14924 | -324 | | | 503 | 189 | SLV 13 | 0.58 | No |
| fin. | 2 | 0 | -51654 | -2463 | | | 503 | 189 | SLV 13 | 0.08 | No |
| ini. | 2 | 0 | 6455 | 29 | | | 503 | 189 | SLD 13 | 6.63 | Si |
| fin. | 2 | 0 | -34307 | -1663 | | | 503 | 189 | SLD 13 | 0.11 | No |
| ini. | 2 | 0 | 34683 | -892 | | | 503 | 189 | SLV 16 | 0.21 | No |

| Sezione | γM | N | M | V | Vt | Vp | Vt fess. diag. | Vt,lim | Comb. | c.s. | Verifica |
|---|---|---|---|---|---|---|---|---|---|---|---|
| fin. | 2 | 0 | -52849 | -2001 | | | 503 | 189 | SLV 16 | 0.09 | No |
| ini. | 2 | 0 | 34683 | -892 | | | 503 | 189 | SLV 15 | 0.21 | No |
| fin. | 2 | 0 | -52849 | -2001 | | | 503 | 189 | SLV 15 | 0.09 | No |
| ini. | 2 | 0 | 6455 | 29 | | | 503 | 189 | SLD 14 | 6.63 | Si |
| fin. | 2 | 0 | -34307 | -1663 | | | 503 | 189 | SLD 14 | 0.11 | No |
| ini. | 2 | 0 | 14924 | -324 | | | 503 | 189 | SLV 14 | 0.58 | No |
| fin. | 2 | 0 | -51654 | -2463 | | | 503 | 189 | SLV 14 | 0.08 | No |
| ini. | 2 | 0 | -25850 | 982 | | | 503 | 189 | SLV 9 | 0.19 | No |
| fin. | 2 | 0 | -28360 | -2173 | | | 503 | 189 | SLV 9 | 0.09 | No |

### Tabella dei coefficienti di sicurezza minimi

| Stato limite | Coeff.s. | Comb. | Verifica |
|---|---|---|---|
| PF_SLV | 0.539 | SLV 15 | No |
| V_SLV | 0.077 | SLV 13 | No |
| PF_SLU | 0.587 | SLU 83 | No |
| V_SLU | 0.078 | SLU 83 | No |

## Trave di accoppiamento 24

Verifiche condotte secondo D.M. 17-01-18 (N.T.C.)

### Dati geometrici

| X ini. | Y ini. | Z ini.inf. | Z ini.sup. | H ini. | X fin. | Y fin. | Z fin.inf. | Z fin.sup | H fin. | Luce | Spessore | R. Trazione |
|---|---|---|---|---|---|---|---|---|---|---|---|---|
| -972.8 | 127.1 | 122 | 171 | 49 | -972.8 | 220.1 | 122 | 171 | 49 | 93 | 30 | 3500 |

### Caratteristiche del materiale

(Circolare 7 21-01-19 C8.5.I) Muratura in mattoni pieni e malta di calce LC2_Corti

| fb_ | fhk | fvk0 | fhmedio | τ0 | fv0 | μ | ϕ | fvk,lim | E | G | FC |
|---|---|---|---|---|---|---|---|---|---|---|---|
| 12 | | | 17.25 | 0.9 | 2 | 0.577 | 0.767 | 0.65 | 32000 | 12800 | 1.2 |

### Verifiche a pressoflessione delle travi in muratura in combinazioni non sismiche

| Sezione | γM | N | M | Mu | Comb. | c.s. | Verifica |
|---|---|---|---|---|---|---|---|
| ini. | 3 | -337 | 22978 | 36545 | SLU 78 | 1.59 | Si |
| fin. | 3 | 400 | -59506 | 36545 | SLU 78 | 0.61 | No |
| ini. | 3 | -382 | 25852 | 36545 | SLU 81 | 1.41 | Si |
| fin. | 3 | 401 | -61781 | 36545 | SLU 81 | 0.59 | No |
| ini. | 3 | -339 | 23059 | 36545 | SLU 75 | 1.58 | Si |
| fin. | 3 | 395 | -59050 | 36545 | SLU 75 | 0.62 | No |
| ini. | 3 | -379 | 25747 | 36545 | SLU 84 | 1.42 | Si |
| fin. | 3 | 406 | -62150 | 36545 | SLU 84 | 0.59 | No |
| ini. | 3 | -338 | 23071 | 36545 | SLU 80 | 1.58 | Si |
| fin. | 3 | 395 | -58912 | 36545 | SLU 80 | 0.62 | No |
| ini. | 3 | -380 | 25770 | 36545 | SLU 83 | 1.42 | Si |
| fin. | 3 | 406 | -62237 | 36545 | SLU 83 | 0.59 | No |
| ini. | 3 | -381 | 25828 | 36545 | SLU 82 | 1.41 | Si |
| fin. | 3 | 401 | -61694 | 36545 | SLU 82 | 0.59 | No |
| ini. | 3 | -339 | 23095 | 36545 | SLU 79 | 1.58 | Si |
| fin. | 3 | 395 | -58998 | 36545 | SLU 79 | 0.62 | No |
| ini. | 3 | -340 | 23083 | 36545 | SLU 74 | 1.58 | Si |
| fin. | 3 | 395 | -59136 | 36545 | SLU 74 | 0.62 | No |
| ini. | 3 | -338 | 23001 | 36545 | SLU 77 | 1.59 | Si |
| fin. | 3 | 400 | -59593 | 36545 | SLU 77 | 0.61 | No |

### Verifiche a taglio delle travi in muratura secondo §C8.7.1.3.1 in combinazioni non sismiche

| Sezione | γM | N | M | V | Vt | Vp | Vt fess. diag. | Vt,lim | Comb. | c.s. | Verifica |
|---|---|---|---|---|---|---|---|---|---|---|---|
| ini. | 3 | 0 | 23001 | 1117 | | | 377 | 142 | SLU 77 | 0.13 | No |
| fin. | 3 | 0 | -59593 | -3914 | | | 377 | 142 | SLU 77 | 0.04 | No |
| ini. | 3 | 0 | 23943 | 1178 | | | 377 | 142 | SLU 40 | 0.12 | No |
| fin. | 3 | 0 | -53822 | -3917 | | | 377 | 142 | SLU 40 | 0.04 | No |
| ini. | 3 | 0 | 23885 | 1172 | | | 377 | 142 | SLU 41 | 0.12 | No |
| fin. | 3 | 0 | -54365 | -3920 | | | 377 | 142 | SLU 41 | 0.04 | No |
| ini. | 3 | 0 | 25828 | 1263 | | | 377 | 142 | SLU 82 | 0.11 | No |
| fin. | 3 | 0 | -61694 | -4287 | | | 377 | 142 | SLU 82 | 0.03 | No |
| ini. | 3 | 0 | 22978 | 1118 | | | 377 | 142 | SLU 78 | 0.13 | No |
| fin. | 3 | 0 | -59506 | -3913 | | | 377 | 142 | SLU 78 | 0.04 | No |
| ini. | 3 | 0 | 23862 | 1173 | | | 377 | 142 | SLU 42 | 0.12 | No |
| fin. | 3 | 0 | -54279 | -3919 | | | 377 | 142 | SLU 42 | 0.04 | No |
| ini. | 3 | 0 | 25770 | 1257 | | | 377 | 142 | SLU 83 | 0.11 | No |
| fin. | 3 | 0 | -62237 | -4290 | | | 377 | 142 | SLU 83 | 0.03 | No |
| ini. | 3 | 0 | 25747 | 1259 | | | 377 | 142 | SLU 84 | 0.11 | No |
| fin. | 3 | 0 | -62150 | -4290 | | | 377 | 142 | SLU 84 | 0.03 | No |
| ini. | 3 | 0 | 25852 | 1262 | | | 377 | 142 | SLU 81 | 0.11 | No |
| fin. | 3 | 0 | -61781 | -4288 | | | 377 | 142 | SLU 81 | 0.03 | No |
| ini. | 3 | 0 | 23966 | 1177 | | | 377 | 142 | SLU 39 | 0.12 | No |
| fin. | 3 | 0 | -53909 | -3917 | | | 377 | 142 | SLU 39 | 0.04 | No |

### Verifiche a pressoflessione delle travi in muratura in combinazioni sismiche

| Sezione | γM | N | M | Mu | Comb. | c.s. | Verifica |
|---|---|---|---|---|---|---|---|
| ini. | 2 | -731 | 22772 | 52331 | SLD 12 | 2.3 | Si |
| fin. | 2 | -346 | -72830 | 52331 | SLD 12 | 0.72 | No |
| ini. | 2 | -1304 | 27770 | 52331 | SLV 7 | 1.88 | Si |
| fin. | 2 | -1097 | -128169 | 52331 | SLV 7 | 0.41 | No |
| ini. | 2 | -731 | 22772 | 52331 | SLD 11 | 2.3 | Si |
| fin. | 2 | -346 | -72830 | 52331 | SLD 11 | 0.72 | No |

| Sezione | γM | N | M | Mu | Comb. | c.s. | Verifica |
|---|---|---|---|---|---|---|---|
| ini. | 2 | -295 | 6390 | 52331 | SLV 4 | 8.19 | Si |
| fin. | 2 | -44 | -81134 | 52331 | SLV 4 | 0.64 | No |
| ini. | 2 | -1461 | 35529 | 52331 | SLV 12 | 1.47 | Si |
| fin. | 2 | -1162 | -117997 | 52331 | SLV 12 | 0.44 | No |
| ini. | 2 | -1304 | 27770 | 52331 | SLV 8 | 1.88 | Si |
| fin. | 2 | -1097 | -128169 | 52331 | SLV 8 | 0.41 | No |
| ini. | 2 | -1461 | 35529 | 52331 | SLV 11 | 1.47 | Si |
| fin. | 2 | -1162 | -117997 | 52331 | SLV 11 | 0.44 | No |
| ini. | 2 | -667 | 19587 | 52331 | SLD 7 | 2.67 | Si |
| fin. | 2 | -319 | -77181 | 52331 | SLD 7 | 0.68 | No |
| ini. | 2 | -295 | 6390 | 52331 | SLV 3 | 8.19 | Si |
| fin. | 2 | -44 | -81134 | 52331 | SLV 3 | 0.64 | No |
| ini. | 2 | -667 | 19587 | 52331 | SLD 8 | 2.67 | Si |
| fin. | 2 | -319 | -77181 | 52331 | SLD 8 | 0.68 | No |

### Verifiche a taglio delle travi in muratura secondo §C8.7.1.3.1 in combinazioni sismiche

| Sezione | γM | N | M | V | Vt | Vp | Vt fess. diag. | Vt,lim | Comb. | c.s. | Verifica |
|---|---|---|---|---|---|---|---|---|---|---|---|
| ini. | 2 | 0 | 27770 | -718 | | | 566 | 213 | SLV 7 | 0.3 | No |
| fin. | 2 | 0 | -128169 | -3179 | | | 566 | 213 | SLV 7 | 0.07 | No |
| ini. | 2 | 0 | 22772 | 146 | | | 566 | 213 | SLD 12 | 1.46 | Si |
| fin. | 2 | 0 | -72830 | -2719 | | | 566 | 213 | SLD 12 | 0.08 | No |
| ini. | 2 | 0 | 19587 | 82 | | | 566 | 213 | SLD 7 | 2.59 | Si |
| fin. | 2 | 0 | -77181 | -2749 | | | 566 | 213 | SLD 7 | 0.08 | No |
| ini. | 2 | 0 | 35529 | -568 | | | 566 | 213 | SLV 11 | 0.37 | No |
| fin. | 2 | 0 | -117997 | -3109 | | | 566 | 213 | SLV 11 | 0.07 | No |
| ini. | 2 | 0 | 6390 | 32 | | | 566 | 213 | SLV 3 | 6.73 | Si |
| fin. | 2 | 0 | -81134 | -2762 | | | 566 | 213 | SLV 3 | 0.08 | No |
| ini. | 2 | 0 | 6390 | 32 | | | 566 | 213 | SLV 4 | 6.73 | Si |
| fin. | 2 | 0 | -81134 | -2762 | | | 566 | 213 | SLV 4 | 0.08 | No |
| ini. | 2 | 0 | 27770 | -718 | | | 566 | 213 | SLV 8 | 0.3 | No |
| fin. | 2 | 0 | -128169 | -3179 | | | 566 | 213 | SLV 8 | 0.07 | No |
| ini. | 2 | 0 | 22772 | 146 | | | 566 | 213 | SLD 11 | 1.46 | Si |
| fin. | 2 | 0 | -72830 | -2719 | | | 566 | 213 | SLD 11 | 0.08 | No |
| ini. | 2 | 0 | 19587 | 82 | | | 566 | 213 | SLD 8 | 2.59 | Si |
| fin. | 2 | 0 | -77181 | -2749 | | | 566 | 213 | SLD 8 | 0.08 | No |
| ini. | 2 | 0 | 35529 | -568 | | | 566 | 213 | SLV 12 | 0.37 | No |
| fin. | 2 | 0 | -117997 | -3109 | | | 566 | 213 | SLV 12 | 0.07 | No |

### Tabella dei coefficienti di sicurezza minimi

| Stato limite | Coeff.s. | Comb. | Verifica |
|---|---|---|---|
| PF_SLV | 0.408 | SLV 7 | No |
| V_SLV | 0.067 | SLV 7 | No |
| PF_SLU | 0.587 | SLU 83 | No |
| V_SLU | 0.033 | SLU 83 | No |

## Trave di accoppiamento 25

Verifiche condotte secondo D.M. 17-01-18 (N.T.C.)

### Dati geometrici

| X ini. | Y ini. | Z ini.inf. | Z ini.sup. | H ini. | X fin. | Y fin. | Z fin.inf. | Z fin.sup | H fin. | Luce | Spessore | R. Trazione |
|---|---|---|---|---|---|---|---|---|---|---|---|---|
| -1055.3 | -328.4 | 107 | 171 | 64 | -825.3 | -328.4 | 107 | 171 | 64 | 230 | 45 | 3500 |

### Caratteristiche del materiale

(Circolare 7 21-01-19 C8.5.I) Muratura in mattoni pieni e malta di calce LC2_Corti

| fb_ | fhk | fvk0 | fhmedio | τ0 | fv0 | μ | ϕ | fvk,lim | E | G | FC |
|---|---|---|---|---|---|---|---|---|---|---|---|
| 12 | | | 17.25 | 0.9 | 2 | 0.577 | 0.767 | 0.65 | 32000 | 12800 | 1.2 |

### Verifiche a pressoflessione delle travi in muratura in combinazioni non sismiche

| Sezione | γM | N | M | Mu | Comb. | c.s. | Verifica |
|---|---|---|---|---|---|---|---|
| ini. | 3 | 700 | -101951 | 78581 | SLU 75 | 0.77 | No |
| fin. | 3 | 2181 | -77027 | 78581 | SLU 75 | 1.02 | Si |
| ini. | 3 | 697 | -103110 | 78581 | SLU 81 | 0.76 | No |
| fin. | 3 | 2263 | -83035 | 78581 | SLU 81 | 0.95 | No |
| ini. | 3 | 687 | -102112 | 78581 | SLU 80 | 0.77 | No |
| fin. | 3 | 2174 | -80409 | 78581 | SLU 80 | 0.98 | No |
| ini. | 3 | 695 | -102605 | 78581 | SLU 78 | 0.77 | No |
| fin. | 3 | 2187 | -79987 | 78581 | SLU 78 | 0.98 | No |
| ini. | 3 | 721 | -105765 | 78581 | SLU 82 | 0.74 | No |
| fin. | 3 | 2267 | -79336 | 78581 | SLU 82 | 0.99 | No |
| ini. | 3 | 692 | -103763 | 78581 | SLU 83 | 0.76 | No |
| fin. | 3 | 2269 | -85995 | 78581 | SLU 83 | 0.91 | No |
| ini. | 3 | 716 | -106418 | 78581 | SLU 84 | 0.74 | No |
| fin. | 3 | 2274 | -82296 | 78581 | SLU 84 | 0.95 | No |
| ini. | 3 | 713 | -102575 | 78581 | SLU 73 | 0.77 | No |
| fin. | 3 | 2164 | -72023 | 78581 | SLU 73 | 1.09 | Si |
| ini. | 3 | 708 | -103228 | 78581 | SLU 76 | 0.76 | No |
| fin. | 3 | 2170 | -74983 | 78581 | SLU 76 | 1.05 | Si |
| ini. | 3 | 671 | -99950 | 78581 | SLU 77 | 0.79 | No |
| fin. | 3 | 2183 | -83686 | 78581 | SLU 77 | 0.94 | No |

### Verifiche a taglio delle travi in muratura secondo §C8.7.1.3.1 in combinazioni non sismiche

| Sezione | γM | N | M | V | Vt | Vp | Vt fess. diag. | Vt,lim | Comb. | c.s. | Verifica |
|---|---|---|---|---|---|---|---|---|---|---|---|
| ini. | 3 | 0 | -101951 | 3485 | | | 739 | 278 | SLU 75 | 0.08 | No |

| Sezione | γM | N | M | V | Vt | Vp | Vt fess. diag. | Vt,lim | Comb. | c.s. | Verifica |
|---|---|---|---|---|---|---|---|---|---|---|---|
| fin. | 3 | 0 | -77027 | -2504 | | | 739 | 278 | SLU 75 | 0.11 | No |
| ini. | 3 | 0 | -99457 | 3472 | | | 739 | 278 | SLU 79 | 0.08 | No |
| fin. | 3 | 0 | -84108 | -2540 | | | 739 | 278 | SLU 79 | 0.11 | No |
| ini. | 3 | 0 | -103228 | 3500 | | | 739 | 278 | SLU 76 | 0.08 | No |
| fin. | 3 | 0 | -74983 | -2510 | | | 739 | 278 | SLU 76 | 0.11 | No |
| ini. | 3 | 0 | -103763 | 3625 | | | 739 | 278 | SLU 83 | 0.08 | No |
| fin. | 3 | 0 | -85995 | -2619 | | | 739 | 278 | SLU 83 | 0.11 | No |
| ini. | 3 | 0 | -102605 | 3517 | | | 739 | 278 | SLU 78 | 0.08 | No |
| fin. | 3 | 0 | -79987 | -2547 | | | 739 | 278 | SLU 78 | 0.11 | No |
| ini. | 3 | 0 | -103110 | 3593 | | | 739 | 278 | SLU 81 | 0.08 | No |
| fin. | 3 | 0 | -83035 | -2575 | | | 739 | 278 | SLU 81 | 0.11 | No |
| ini. | 3 | 0 | -106418 | 3661 | | | 739 | 278 | SLU 84 | 0.08 | No |
| fin. | 3 | 0 | -82296 | -2627 | | | 739 | 278 | SLU 84 | 0.11 | No |
| ini. | 3 | 0 | -102112 | 3508 | | | 739 | 278 | SLU 80 | 0.08 | No |
| fin. | 3 | 0 | -80409 | -2548 | | | 739 | 278 | SLU 80 | 0.11 | No |
| ini. | 3 | 0 | -99950 | 3481 | | | 739 | 278 | SLU 77 | 0.08 | No |
| fin. | 3 | 0 | -83686 | -2540 | | | 739 | 278 | SLU 77 | 0.11 | No |
| ini. | 3 | 0 | -105765 | 3629 | | | 739 | 278 | SLU 82 | 0.08 | No |
| fin. | 3 | 0 | -79336 | -2583 | | | 739 | 278 | SLU 82 | 0.11 | No |

### Verifiche a pressoflessione delle travi in muratura in combinazioni sismiche

| Sezione | γM | N | M | Mu | Comb. | c.s. | Verifica |
|---|---|---|---|---|---|---|---|
| ini. | 2 | -1613 | 35057 | 89721 | SLV 16 | 2.56 | Si |
| fin. | 2 | -2563 | -184212 | 89721 | SLV 16 | 0.49 | No |
| ini. | 2 | 2341 | -147447 | 89721 | SLV 4 | 0.61 | No |
| fin. | 2 | 4484 | 109361 | 89721 | SLV 4 | 0.82 | No |
| ini. | 2 | 265 | -80063 | 89721 | SLV 10 | 1.12 | Si |
| fin. | 2 | 2215 | -149645 | 89721 | SLV 10 | 0.6 | No |
| ini. | 2 | 2569 | -171098 | 89721 | SLV 2 | 0.52 | No |
| fin. | 2 | 5551 | 77892 | 89721 | SLV 2 | 1.15 | Si |
| ini. | 2 | -1385 | 11406 | 89721 | SLV 13 | 7.87 | Si |
| fin. | 2 | -1496 | -215682 | 89721 | SLV 13 | 0.42 | No |
| ini. | 2 | 265 | -80063 | 89721 | SLV 9 | 1.12 | Si |
| fin. | 2 | 2215 | -149645 | 89721 | SLV 9 | 0.6 | No |
| ini. | 2 | 2341 | -147447 | 89721 | SLV 3 | 0.61 | No |
| fin. | 2 | 4484 | 109361 | 89721 | SLV 3 | 0.82 | No |
| ini. | 2 | -1385 | 11406 | 89721 | SLV 14 | 7.87 | Si |
| fin. | 2 | -1496 | -215682 | 89721 | SLV 14 | 0.42 | No |
| ini. | 2 | 2569 | -171098 | 89721 | SLV 1 | 0.52 | No |
| fin. | 2 | 5551 | 77892 | 89721 | SLV 1 | 1.15 | Si |
| ini. | 2 | -1613 | 35057 | 89721 | SLV 15 | 2.56 | Si |
| fin. | 2 | -2563 | -184212 | 89721 | SLV 15 | 0.49 | No |

### Verifiche a taglio delle travi in muratura secondo §C8.7.1.3.1 in combinazioni sismiche

| Sezione | γM | N | M | V | Vt | Vp | Vt fess. diag. | Vt,lim | Comb. | c.s. | Verifica |
|---|---|---|---|---|---|---|---|---|---|---|---|
| ini. | 2 | 0 | -147447 | 4026 | | | 1109 | 417 | SLV 4 | 0.1 | No |
| fin. | 2 | 0 | 109361 | 499 | | | 1109 | 417 | SLV 4 | 0.84 | No |
| ini. | 2 | 0 | 35057 | 537 | | | 1109 | 417 | SLV 16 | 0.78 | No |
| fin. | 2 | 0 | -184212 | -3853 | | | 1109 | 417 | SLV 16 | 0.11 | No |
| ini. | 2 | 0 | 35057 | 537 | | | 1109 | 417 | SLV 15 | 0.78 | No |
| fin. | 2 | 0 | -184212 | -3853 | | | 1109 | 417 | SLV 15 | 0.11 | No |
| ini. | 2 | 0 | -171098 | 4152 | | | 1109 | 417 | SLV 1 | 0.1 | No |
| fin. | 2 | 0 | 77892 | 443 | | | 1109 | 417 | SLV 1 | 0.94 | No |
| ini. | 2 | 0 | 11406 | 663 | | | 1109 | 417 | SLV 14 | 0.63 | No |
| fin. | 2 | 0 | -215682 | -3908 | | | 1109 | 417 | SLV 14 | 0.11 | No |
| ini. | 2 | 0 | -111837 | 3120 | | | 1109 | 417 | SLD 2 | 0.13 | No |
| fin. | 2 | 0 | 3680 | -780 | | | 1109 | 417 | SLD 2 | 0.54 | No |
| ini. | 2 | 0 | -171098 | 4152 | | | 1109 | 417 | SLV 2 | 0.1 | No |
| fin. | 2 | 0 | 77892 | 443 | | | 1109 | 417 | SLV 2 | 0.94 | No |
| ini. | 2 | 0 | -147447 | 4026 | | | 1109 | 417 | SLV 3 | 0.1 | No |
| fin. | 2 | 0 | 109361 | 499 | | | 1109 | 417 | SLV 3 | 0.84 | No |
| ini. | 2 | 0 | -111837 | 3120 | | | 1109 | 417 | SLD 1 | 0.13 | No |
| fin. | 2 | 0 | 3680 | -780 | | | 1109 | 417 | SLD 1 | 0.54 | No |
| ini. | 2 | 0 | 11406 | 663 | | | 1109 | 417 | SLV 13 | 0.63 | No |
| fin. | 2 | 0 | -215682 | -3908 | | | 1109 | 417 | SLV 13 | 0.11 | No |

### Tabella dei coefficienti di sicurezza minimi

| Stato limite | Coeff.s. | Comb. | Verifica |
|---|---|---|---|
| PF_SLV | 0.416 | SLV 13 | No |
| V_SLV | 0.101 | SLV 1 | No |
| PF_SLU | 0.738 | SLU 84 | No |
| V_SLU | 0.076 | SLU 84 | No |

## Trave di accoppiamento 26

Verifiche condotte secondo D.M. 17-01-18 (N.T.C.)

### Dati geometrici

| X ini. | Y ini. | Z ini.inf. | Z ini.sup. | H ini. | X fin. | Y fin. | Z fin.inf. | Z fin.sup | H fin. | Luce | Spessore | R. Trazione |
|---|---|---|---|---|---|---|---|---|---|---|---|---|
| -746.3 | -328.4 | -98 | 102 | 200 | -646.3 | -328.4 | -98 | 102 | 200 | 100 | 45 | 3500 |

### Caratteristiche del materiale

(Circolare 7 21-01-19 C8.5.I) Muratura in mattoni pieni e malta di calce LC2_Corti

| fb_ | fhk | fvk0 | fhmedio | τ0 | fv0 | μ | ϕ | fvk,lim | E | G | FC |
|---|---|---|---|---|---|---|---|---|---|---|---|
| 12 | | | 17.25 | 0.9 | 2 | 0.577 | 0.767 | 0.65 | 32000 | 12800 | 1.2 |

## Verifiche a pressoflessione delle travi in muratura in combinazioni non sismiche

| Sezione | γM | N | M | Mu | Comb. | c.s. | Verifica |
|---|---|---|---|---|---|---|---|
| ini. | 3 | -331 | -419426 | 316581 | SLU 61 | 0.75 | No |
| fin. | 3 | -530 | -222162 | 316581 | SLU 61 | 1.43 | Si |
| ini. | 3 | -411 | -436914 | 316581 | SLU 78 | 0.72 | No |
| fin. | 3 | -495 | -241466 | 316581 | SLU 78 | 1.31 | Si |
| ini. | 3 | -421 | -452272 | 316581 | SLU 84 | 0.7 | No |
| fin. | 3 | -565 | -245644 | 316581 | SLU 84 | 1.29 | Si |
| ini. | 3 | -144 | -458534 | 316581 | SLU 76 | 0.69 | No |
| fin. | 3 | -155 | -257747 | 316581 | SLU 76 | 1.23 | Si |
| ini. | 3 | -431 | -433377 | 316581 | SLU 80 | 0.73 | No |
| fin. | 3 | -499 | -240769 | 316581 | SLU 80 | 1.31 | Si |
| ini. | 3 | -54 | -425688 | 316581 | SLU 52 | 0.74 | No |
| fin. | 3 | -120 | -234266 | 316581 | SLU 52 | 1.35 | Si |
| ini. | 3 | -112 | -424248 | 316581 | SLU 55 | 0.75 | No |
| fin. | 3 | -110 | -238624 | 316581 | SLU 55 | 1.33 | Si |
| ini. | 3 | -353 | -438354 | 316581 | SLU 75 | 0.72 | No |
| fin. | 3 | -505 | -237109 | 316581 | SLU 75 | 1.34 | Si |
| ini. | 3 | -363 | -453712 | 316581 | SLU 82 | 0.7 | No |
| fin. | 3 | -575 | -241286 | 316581 | SLU 82 | 1.31 | Si |
| ini. | 3 | -86 | -459974 | 316581 | SLU 73 | 0.69 | No |
| fin. | 3 | -165 | -253390 | 316581 | SLU 73 | 1.25 | Si |

## Verifiche a taglio delle travi in muratura secondo §C8.7.1.3.1 in combinazioni non sismiche

| Sezione | γM | N | M | V | Vt | Vp | Vt fess. diag. | Vt,lim | Comb. | c.s. | Verifica |
|---|---|---|---|---|---|---|---|---|---|---|---|
| ini. | 3 | 0 | -416697 | -6377 | | | 3466 | 1304 | SLU 83 | 0.2 | No |
| fin. | 3 | 0 | -213639 | 9544 | | | 3466 | 1304 | SLU 83 | 0.14 | No |
| ini. | 3 | 0 | -453712 | -6587 | | | 3466 | 1304 | SLU 82 | 0.2 | No |
| fin. | 3 | 0 | -241286 | 9705 | | | 3466 | 1304 | SLU 82 | 0.13 | No |
| ini. | 3 | 0 | -436914 | -6665 | | | 3466 | 1304 | SLU 78 | 0.2 | No |
| fin. | 3 | 0 | -241466 | 9215 | | | 3466 | 1304 | SLU 78 | 0.14 | No |
| ini. | 3 | 0 | -418138 | -6188 | | | 3466 | 1304 | SLU 81 | 0.21 | No |
| fin. | 3 | 0 | -209281 | 9628 | | | 3466 | 1304 | SLU 81 | 0.14 | No |
| ini. | 3 | 0 | -459974 | -6553 | | | 3466 | 1304 | SLU 73 | 0.2 | No |
| fin. | 3 | 0 | -253390 | 9350 | | | 3466 | 1304 | SLU 73 | 0.14 | No |
| ini. | 3 | 0 | -452272 | -6776 | | | 3466 | 1304 | SLU 84 | 0.19 | No |
| fin. | 3 | 0 | -245644 | 9620 | | | 3466 | 1304 | SLU 84 | 0.14 | No |
| ini. | 3 | 0 | -401339 | -6265 | | | 3466 | 1304 | SLU 77 | 0.21 | No |
| fin. | 3 | 0 | -209461 | 9139 | | | 3466 | 1304 | SLU 77 | 0.14 | No |
| ini. | 3 | 0 | -402779 | -6076 | | | 3466 | 1304 | SLU 74 | 0.21 | No |
| fin. | 3 | 0 | -205104 | 9223 | | | 3466 | 1304 | SLU 74 | 0.14 | No |
| ini. | 3 | 0 | -438354 | -6476 | | | 3466 | 1304 | SLU 75 | 0.2 | No |
| fin. | 3 | 0 | -237109 | 9300 | | | 3466 | 1304 | SLU 75 | 0.14 | No |
| ini. | 3 | 0 | -458534 | -6742 | | | 3466 | 1304 | SLU 76 | 0.19 | No |
| fin. | 3 | 0 | -257747 | 9265 | | | 3466 | 1304 | SLU 76 | 0.14 | No |

## Verifiche a pressoflessione delle travi in muratura in combinazioni sismiche

| Sezione | γM | N | M | Mu | Comb. | c.s. | Verifica |
|---|---|---|---|---|---|---|---|
| ini. | 2 | 1801 | -544648 | 327721 | SLD 1 | 0.6 | No |
| fin. | 2 | -908 | -99519 | 327721 | SLD 1 | 3.29 | Si |
| ini. | 2 | 4550 | -712551 | 327721 | SLV 4 | 0.46 | No |
| fin. | 2 | -571 | -52380 | 327721 | SLV 4 | 6.26 | Si |
| ini. | 2 | 334 | -473837 | 327721 | SLD 5 | 0.69 | No |
| fin. | 2 | -1152 | -123886 | 327721 | SLD 5 | 2.65 | Si |
| ini. | 2 | 1450 | -740889 | 327721 | SLV 5 | 0.44 | No |
| fin. | 2 | -1763 | -101011 | 327721 | SLV 5 | 3.24 | Si |
| ini. | 2 | 4769 | -894439 | 327721 | SLV 1 | 0.37 | No |
| fin. | 2 | -1164 | -45671 | 327721 | SLV 1 | 7.18 | Si |
| ini. | 2 | 4769 | -894439 | 327721 | SLV 2 | 0.37 | No |
| fin. | 2 | -1164 | -45671 | 327721 | SLV 2 | 7.18 | Si |
| ini. | 2 | 334 | -473837 | 327721 | SLD 6 | 0.69 | No |
| fin. | 2 | -1152 | -123886 | 327721 | SLD 6 | 2.65 | Si |
| ini. | 2 | 1801 | -544648 | 327721 | SLD 2 | 0.6 | No |
| fin. | 2 | -908 | -99519 | 327721 | SLD 2 | 3.29 | Si |
| ini. | 2 | 1450 | -740889 | 327721 | SLV 6 | 0.44 | No |
| fin. | 2 | -1763 | -101011 | 327721 | SLV 6 | 3.24 | Si |
| ini. | 2 | 4550 | -712551 | 327721 | SLV 3 | 0.46 | No |
| fin. | 2 | -571 | -52380 | 327721 | SLV 3 | 6.26 | Si |

## Verifiche a taglio delle travi in muratura secondo §C8.7.1.3.1 in combinazioni sismiche

| Sezione | γM | N | M | V | Vt | Vp | Vt fess. diag. | Vt,lim | Comb. | c.s. | Verifica |
|---|---|---|---|---|---|---|---|---|---|---|---|
| ini. | 2 | 0 | -740889 | -3964 | | | 5199 | 1957 | SLV 5 | 0.49 | No |
| fin. | 2 | 0 | -101011 | 14190 | | | 5199 | 1957 | SLV 5 | 0.14 | No |
| ini. | 2 | 0 | 150570 | -15781 | | | 5199 | 1957 | SLV 14 | 0.12 | No |
| fin. | 2 | 0 | -226146 | -5268 | | | 5199 | 1957 | SLV 14 | 0.37 | No |
| ini. | 2 | 0 | -894439 | 5767 | | | 5199 | 1957 | SLV 1 | 0.34 | No |
| fin. | 2 | 0 | -45671 | 20524 | | | 5199 | 1957 | SLV 1 | 0.1 | No |
| ini. | 2 | 0 | 332459 | -13905 | | | 5199 | 1957 | SLV 15 | 0.14 | No |
| fin. | 2 | 0 | -232855 | -7576 | | | 5199 | 1957 | SLV 15 | 0.26 | No |
| ini. | 2 | 0 | 150570 | -15781 | | | 5199 | 1957 | SLV 13 | 0.12 | No |
| fin. | 2 | 0 | -226146 | -5268 | | | 5199 | 1957 | SLV 13 | 0.37 | No |
| ini. | 2 | 0 | -894439 | 5767 | | | 5199 | 1957 | SLV 2 | 0.34 | No |
| fin. | 2 | 0 | -45671 | 20524 | | | 5199 | 1957 | SLV 2 | 0.1 | No |
| ini. | 2 | 0 | -740889 | -3964 | | | 5199 | 1957 | SLV 6 | 0.49 | No |
| fin. | 2 | 0 | -101011 | 14190 | | | 5199 | 1957 | SLV 6 | 0.14 | No |

| Sezione | γM | N | M | V | Vt | Vp | Vt fess. diag. | Vt,lim | Comb. | c.s. | Verifica |
|---|---|---|---|---|---|---|---|---|---|---|---|
| ini. | 2 | 0 | 332459 | -13905 | | | 5199 | 1957 | SLV 16 | 0.14 | No |
| fin. | 2 | 0 | -232855 | -7576 | | | 5199 | 1957 | SLV 16 | 0.26 | No |
| ini. | 2 | 0 | -712551 | 7643 | | | 5199 | 1957 | SLV 4 | 0.26 | No |
| fin. | 2 | 0 | -52380 | 18216 | | | 5199 | 1957 | SLV 4 | 0.11 | No |
| ini. | 2 | 0 | -712551 | 7643 | | | 5199 | 1957 | SLV 3 | 0.26 | No |
| fin. | 2 | 0 | -52380 | 18216 | | | 5199 | 1957 | SLV 3 | 0.11 | No |

### Tabella dei coefficienti di sicurezza minimi

| Stato limite | Coeff.s. | Comb. | Verifica |
|---|---|---|---|
| PF_SLV | 0.366 | SLV 1 | No |
| V_SLV | 0.095 | SLV 1 | No |
| PF_SLU | 0.688 | SLU 73 | No |
| V_SLU | 0.134 | SLU 82 | No |

## Trave di accoppiamento 27

Verifiche condotte secondo D.M. 17-01-18 (N.T.C.)

### Dati geometrici

| X ini. | Y ini. | Z ini.inf. | Z ini.sup. | H ini. | X fin. | Y fin. | Z fin.inf. | Z fin.sup | H fin. | Luce | Spessore | R. Trazione |
|---|---|---|---|---|---|---|---|---|---|---|---|---|
| -746.3 | -328.4 | 142 | 171 | 29 | -646.3 | -328.4 | 142 | 171 | 29 | 100 | 45 | 3500 |

### Caratteristiche del materiale

(Circolare 7 21-01-19 C8.5.I) Muratura in mattoni pieni e malta di calce LC2_Corti

| fb_ | fhk | fvk0 | fhmedio | τ0 | fv0 | μ | ϕ | fvk,lim | E | G | FC |
|---|---|---|---|---|---|---|---|---|---|---|---|
| 12 | | | 17.25 | 0.9 | 2 | 0.577 | 0.767 | 0.65 | 32000 | 12800 | 1.2 |

### Verifiche a pressoflessione delle travi in muratura in combinazioni non sismiche

| Sezione | γM | N | M | Mu | Comb. | c.s. | Verifica |
|---|---|---|---|---|---|---|---|
| ini. | 3 | 1341 | -28809 | 19201 | SLU 75 | 0.67 | No |
| fin. | 3 | 2215 | -16768 | 19201 | SLU 75 | 1.15 | Si |
| ini. | 3 | 1277 | -29493 | 19201 | SLU 81 | 0.65 | No |
| fin. | 3 | 1708 | -18404 | 19201 | SLU 81 | 1.04 | Si |
| ini. | 3 | 1362 | -28319 | 19201 | SLU 78 | 0.68 | No |
| fin. | 3 | 2200 | -17644 | 19201 | SLU 78 | 1.09 | Si |
| ini. | 3 | 1415 | -29394 | 19201 | SLU 76 | 0.65 | No |
| fin. | 3 | 2578 | -16206 | 19201 | SLU 76 | 1.18 | Si |
| ini. | 3 | 1409 | -30259 | 19201 | SLU 84 | 0.63 | No |
| fin. | 3 | 2264 | -18220 | 19201 | SLU 84 | 1.05 | Si |
| ini. | 3 | 1388 | -30749 | 19201 | SLU 82 | 0.62 | No |
| fin. | 3 | 2279 | -17344 | 19201 | SLU 82 | 1.11 | Si |
| ini. | 3 | 1394 | -29884 | 19201 | SLU 73 | 0.64 | No |
| fin. | 3 | 2593 | -15330 | 19201 | SLU 73 | 1.25 | Si |
| ini. | 3 | 1265 | -27698 | 19201 | SLU 61 | 0.69 | No |
| fin. | 3 | 2132 | -15113 | 19201 | SLU 61 | 1.27 | Si |
| ini. | 3 | 1297 | -29003 | 19201 | SLU 83 | 0.66 | No |
| fin. | 3 | 1693 | -19280 | 19201 | SLU 83 | 1 | No |
| ini. | 3 | 1361 | -28067 | 19201 | SLU 80 | 0.68 | No |
| fin. | 3 | 2182 | -17789 | 19201 | SLU 80 | 1.08 | Si |

### Verifiche a taglio delle travi in muratura secondo §C8.7.1.3.1 in combinazioni non sismiche

| Sezione | γM | N | M | V | Vt | Vp | Vt fess. diag. | Vt,lim | Comb. | c.s. | Verifica |
|---|---|---|---|---|---|---|---|---|---|---|---|
| ini. | 3 | 0 | -29003 | 2312 | | | 335 | 126 | SLU 83 | 0.05 | No |
| fin. | 3 | 0 | -19280 | -1876 | | | 335 | 126 | SLU 83 | 0.07 | No |
| ini. | 3 | 0 | -29493 | 2316 | | | 335 | 126 | SLU 81 | 0.05 | No |
| fin. | 3 | 0 | -18404 | -1839 | | | 335 | 126 | SLU 81 | 0.07 | No |
| ini. | 3 | 0 | -28319 | 2344 | | | 335 | 126 | SLU 78 | 0.05 | No |
| fin. | 3 | 0 | -17644 | -1789 | | | 335 | 126 | SLU 78 | 0.07 | No |
| ini. | 3 | 0 | -30259 | 2460 | | | 335 | 126 | SLU 84 | 0.05 | No |
| fin. | 3 | 0 | -18220 | -1857 | | | 335 | 126 | SLU 84 | 0.07 | No |
| ini. | 3 | 0 | -27698 | 2238 | | | 335 | 126 | SLU 61 | 0.06 | No |
| fin. | 3 | 0 | -15113 | -1632 | | | 335 | 126 | SLU 61 | 0.08 | No |
| ini. | 3 | 0 | -29394 | 2434 | | | 335 | 126 | SLU 76 | 0.05 | No |
| fin. | 3 | 0 | -16206 | -1739 | | | 335 | 126 | SLU 76 | 0.07 | No |
| ini. | 3 | 0 | -30749 | 2464 | | | 335 | 126 | SLU 82 | 0.05 | No |
| fin. | 3 | 0 | -17344 | -1820 | | | 335 | 126 | SLU 82 | 0.07 | No |
| ini. | 3 | 0 | -28809 | 2348 | | | 335 | 126 | SLU 75 | 0.05 | No |
| fin. | 3 | 0 | -16768 | -1752 | | | 335 | 126 | SLU 75 | 0.07 | No |
| ini. | 3 | 0 | -28067 | 2332 | | | 335 | 126 | SLU 80 | 0.05 | No |
| fin. | 3 | 0 | -17789 | -1788 | | | 335 | 126 | SLU 80 | 0.07 | No |
| ini. | 3 | 0 | -29884 | 2438 | | | 335 | 126 | SLU 73 | 0.05 | No |
| fin. | 3 | 0 | -15330 | -1702 | | | 335 | 126 | SLU 73 | 0.07 | No |

### Verifiche a pressoflessione delle travi in muratura in combinazioni sismiche

| Sezione | γM | N | M | Mu | Comb. | c.s. | Verifica |
|---|---|---|---|---|---|---|---|
| ini. | 2 | 3918 | -49030 | 28471 | SLV 6 | 0.58 | No |
| fin. | 2 | 7862 | 20810 | 28471 | SLV 6 | 1.37 | Si |
| ini. | 2 | 233 | 24875 | 28471 | SLV 15 | 1.14 | Si |
| fin. | 2 | -4162 | -56425 | 28471 | SLV 15 | 0.5 | No |
| ini. | 2 | 2155 | 13572 | 28471 | SLV 13 | 2.1 | Si |
| fin. | 2 | -790 | -44278 | 28471 | SLV 13 | 0.64 | No |
| ini. | 2 | 3918 | -49030 | 28471 | SLV 5 | 0.58 | No |
| fin. | 2 | 7862 | 20810 | 28471 | SLV 5 | 1.37 | Si |
| ini. | 2 | -504 | -51146 | 28471 | SLV 3 | 0.56 | No |

| Sezione | γM | N | M | Mu | Comb. | c.s. | Verifica |
|---|---|---|---|---|---|---|---|
| fin. | 2 | 3098 | 21908 | 28471 | SLV 3 | 1.3 | Si |
| ini. | 2 | 233 | 24875 | 28471 | SLV 16 | 1.14 | Si |
| fin. | 2 | -4162 | -56425 | 28471 | SLV 16 | 0.5 | No |
| ini. | 2 | 2155 | 13572 | 28471 | SLV 14 | 2.1 | Si |
| fin. | 2 | -790 | -44278 | 28471 | SLV 14 | 0.64 | No |
| ini. | 2 | 1418 | -62450 | 28471 | SLV 2 | 0.46 | No |
| fin. | 2 | 6469 | 34055 | 28471 | SLV 2 | 0.84 | No |
| ini. | 2 | 1418 | -62450 | 28471 | SLV 1 | 0.46 | No |
| fin. | 2 | 6469 | 34055 | 28471 | SLV 1 | 0.84 | No |
| ini. | 2 | -504 | -51146 | 28471 | SLV 4 | 0.56 | No |
| fin. | 2 | 3098 | 21908 | 28471 | SLV 4 | 1.3 | Si |

### Verifiche a taglio delle travi in muratura secondo §C8.7.1.3.1 in combinazioni sismiche

| Sezione | γM | N | M | V | Vt | Vp | Vt fess. diag. | Vt,lim | Comb. | c.s. | Verifica |
|---|---|---|---|---|---|---|---|---|---|---|---|
| ini. | 2 | 0 | -62450 | 3838 | | | 503 | 189 | SLV 1 | 0.05 | No |
| fin. | 2 | 0 | 34055 | 100 | | | 503 | 189 | SLV 1 | 1.9 | Si |
| ini. | 2 | 0 | -62450 | 3838 | | | 503 | 189 | SLV 2 | 0.05 | No |
| fin. | 2 | 0 | 34055 | 100 | | | 503 | 189 | SLV 2 | 1.9 | Si |
| ini. | 2 | 0 | -37206 | 2491 | | | 503 | 189 | SLD 2 | 0.08 | No |
| fin. | 2 | 0 | 8035 | -625 | | | 503 | 189 | SLD 2 | 0.3 | No |
| ini. | 2 | 0 | 13572 | -739 | | | 503 | 189 | SLV 14 | 0.26 | No |
| fin. | 2 | 0 | -44278 | -2682 | | | 503 | 189 | SLV 14 | 0.07 | No |
| ini. | 2 | 0 | 13572 | -739 | | | 503 | 189 | SLV 13 | 0.26 | No |
| fin. | 2 | 0 | -44278 | -2682 | | | 503 | 189 | SLV 13 | 0.07 | No |
| ini. | 2 | 0 | -37206 | 2491 | | | 503 | 189 | SLD 1 | 0.08 | No |
| fin. | 2 | 0 | 8035 | -625 | | | 503 | 189 | SLD 1 | 0.3 | No |
| ini. | 2 | 0 | -51146 | 3729 | | | 503 | 189 | SLV 3 | 0.05 | No |
| fin. | 2 | 0 | 21908 | 333 | | | 503 | 189 | SLV 3 | 0.57 | No |
| ini. | 2 | 0 | -51146 | 3729 | | | 503 | 189 | SLV 4 | 0.05 | No |
| fin. | 2 | 0 | 21908 | 333 | | | 503 | 189 | SLV 4 | 0.57 | No |
| ini. | 2 | 0 | 24875 | -849 | | | 503 | 189 | SLV 16 | 0.22 | No |
| fin. | 2 | 0 | -56425 | -2448 | | | 503 | 189 | SLV 16 | 0.08 | No |
| ini. | 2 | 0 | 24875 | -849 | | | 503 | 189 | SLV 15 | 0.22 | No |
| fin. | 2 | 0 | -56425 | -2448 | | | 503 | 189 | SLV 15 | 0.08 | No |

### Tabella dei coefficienti di sicurezza minimi

| Stato limite | Coeff.s. | Comb. | Verifica |
|---|---|---|---|
| PF_SLV | 0.456 | SLV 1 | No |
| V_SLV | 0.049 | SLV 1 | No |
| PF_SLU | 0.624 | SLU 82 | No |
| V_SLU | 0.051 | SLU 82 | No |

## Trave di accoppiamento 28

Verifiche condotte secondo D.M. 17-01-18 (N.T.C.)

### Dati geometrici

| X ini. | Y ini. | Z ini.inf. | Z ini.sup. | H ini. | X fin. | Y fin. | Z fin.inf. | Z fin.sup | H fin. | Luce | Spessore | R. Trazione |
|---|---|---|---|---|---|---|---|---|---|---|---|---|
| -323.3 | -328.4 | -98 | 102 | 200 | -223.3 | -328.4 | -98 | 102 | 200 | 100 | 45 | 3500 |

### Caratteristiche del materiale

(Circolare 7 21-01-19 C8.5.I) Muratura in mattoni pieni e malta di calce LC2_Corti

| fb_ | fhk | fvk0 | fhmedio | τ0 | fv0 | μ | ϕ | fvk,lim | E | G | FC |
|---|---|---|---|---|---|---|---|---|---|---|---|
| 12 | | | 17.25 | 0.9 | 2 | 0.577 | 0.767 | 0.65 | 32000 | 12800 | 1.2 |

### Verifiche a pressoflessione delle travi in muratura in combinazioni non sismiche

| Sezione | γM | N | M | Mu | Comb. | c.s. | Verifica |
|---|---|---|---|---|---|---|---|
| ini. | 3 | -2869 | -42130 | 316581 | SLU 79 | 7.51 | Si |
| fin. | 3 | -2133 | -215284 | 316581 | SLU 79 | 1.47 | Si |
| ini. | 3 | -2892 | -47032 | 316581 | SLU 81 | 6.73 | Si |
| fin. | 3 | -2175 | -215086 | 316581 | SLU 81 | 1.47 | Si |
| ini. | 3 | -2835 | -44131 | 316581 | SLU 74 | 7.17 | Si |
| fin. | 3 | -2123 | -212870 | 316581 | SLU 74 | 1.49 | Si |
| ini. | 3 | -2656 | -40193 | 316581 | SLU 56 | 7.88 | Si |
| fin. | 3 | -1996 | -196692 | 316581 | SLU 56 | 1.61 | Si |
| ini. | 3 | -2623 | -38442 | 316581 | SLU 69 | 8.24 | Si |
| fin. | 3 | -1960 | -198960 | 316581 | SLU 69 | 1.59 | Si |
| ini. | 3 | -2713 | -43094 | 316581 | SLU 62 | 7.35 | Si |
| fin. | 3 | -2048 | -198907 | 316581 | SLU 62 | 1.59 | Si |
| ini. | 3 | -2935 | -45464 | 316581 | SLU 83 | 6.96 | Si |
| fin. | 3 | -2193 | -219006 | 316581 | SLU 83 | 1.45 | Si |
| ini. | 3 | -2878 | -42563 | 316581 | SLU 77 | 7.44 | Si |
| fin. | 3 | -2141 | -216790 | 316581 | SLU 77 | 1.46 | Si |
| ini. | 3 | -2614 | -38009 | 316581 | SLU 71 | 8.33 | Si |
| fin. | 3 | -1952 | -197455 | 316581 | SLU 71 | 1.6 | Si |
| ini. | 3 | -2647 | -39760 | 316581 | SLU 58 | 7.96 | Si |
| fin. | 3 | -1989 | -195186 | 316581 | SLU 58 | 1.62 | Si |

### Verifiche a taglio delle travi in muratura secondo §C8.7.1.3.1 in combinazioni non sismiche

| Sezione | γM | N | M | V | Vt | Vp | Vt fess. diag. | Vt,lim | Comb. | c.s. | Verifica |
|---|---|---|---|---|---|---|---|---|---|---|---|
| ini. | 3 | 0 | -47032 | -5121 | | | 3466 | 1304 | SLU 81 | 0.25 | No |
| fin. | 3 | 0 | -215086 | -483 | | | 3466 | 1304 | SLU 81 | 2.7 | Si |
| ini. | 3 | 0 | -6196 | -5032 | | | 3466 | 1304 | SLU 80 | 0.26 | No |
| fin. | 3 | 0 | -175951 | -536 | | | 3466 | 1304 | SLU 80 | 2.43 | Si |

| Sezione | γM | N | M | V | Vt | Vp | Vt fess. diag. | Vt,lim | Comb. | c.s. | Verifica |
|---|---|---|---|---|---|---|---|---|---|---|---|
| ini. | 3 | 0 | -42130 | -5097 | | | 3466 | 1304 | SLU 79 | 0.26 | No |
| fin. | 3 | 0 | -215284 | -625 | | | 3466 | 1304 | SLU 79 | 2.09 | Si |
| ini. | 3 | 0 | -44131 | -5018 | | | 3466 | 1304 | SLU 74 | 0.26 | No |
| fin. | 3 | 0 | -212870 | -569 | | | 3466 | 1304 | SLU 74 | 2.29 | Si |
| ini. | 3 | 0 | -11098 | -5057 | | | 3466 | 1304 | SLU 82 | 0.26 | No |
| fin. | 3 | 0 | -175752 | -394 | | | 3466 | 1304 | SLU 82 | 3.31 | Si |
| ini. | 3 | 0 | -6629 | -5060 | | | 3466 | 1304 | SLU 78 | 0.26 | No |
| fin. | 3 | 0 | -177457 | -536 | | | 3466 | 1304 | SLU 78 | 2.43 | Si |
| ini. | 3 | 0 | -8196 | -4953 | | | 3466 | 1304 | SLU 75 | 0.26 | No |
| fin. | 3 | 0 | -173537 | -481 | | | 3466 | 1304 | SLU 75 | 2.71 | Si |
| ini. | 3 | 0 | -9530 | -5163 | | | 3466 | 1304 | SLU 84 | 0.25 | No |
| fin. | 3 | 0 | -179672 | -450 | | | 3466 | 1304 | SLU 84 | 2.9 | Si |
| ini. | 3 | 0 | -45464 | -5228 | | | 3466 | 1304 | SLU 83 | 0.25 | No |
| fin. | 3 | 0 | -219006 | -539 | | | 3466 | 1304 | SLU 83 | 2.42 | Si |
| ini. | 3 | 0 | -42563 | -5124 | | | 3466 | 1304 | SLU 77 | 0.25 | No |
| fin. | 3 | 0 | -216790 | -625 | | | 3466 | 1304 | SLU 77 | 2.09 | Si |

### Verifiche a pressoflessione delle travi in muratura in combinazioni sismiche

| Sezione | γM | N | M | Mu | Comb. | c.s. | Verifica |
|---|---|---|---|---|---|---|---|
| ini. | 2 | 3421 | -400436 | 327721 | SLV 4 | 0.82 | No |
| fin. | 2 | -175 | 119634 | 327721 | SLV 4 | 2.74 | Si |
| ini. | 2 | 6776 | -391327 | 327721 | SLV 8 | 0.84 | No |
| fin. | 2 | 6541 | -396962 | 327721 | SLV 8 | 0.83 | No |
| ini. | 2 | -2657 | 171923 | 327721 | SLV 15 | 1.91 | Si |
| fin. | 2 | 2225 | -630468 | 327721 | SLV 15 | 0.52 | No |
| ini. | 2 | -2657 | 171923 | 327721 | SLV 16 | 1.91 | Si |
| fin. | 2 | 2225 | -630468 | 327721 | SLV 16 | 0.52 | No |
| ini. | 2 | -7357 | 335823 | 327721 | SLV 14 | 0.98 | No |
| fin. | 2 | -2812 | -412703 | 327721 | SLV 14 | 0.79 | No |
| ini. | 2 | 4953 | -219619 | 327721 | SLV 12 | 1.49 | Si |
| fin. | 2 | 7262 | -621993 | 327721 | SLV 12 | 0.53 | No |
| ini. | 2 | -7357 | 335823 | 327721 | SLV 13 | 0.98 | No |
| fin. | 2 | -2812 | -412703 | 327721 | SLV 13 | 0.79 | No |
| ini. | 2 | 4953 | -219619 | 327721 | SLV 11 | 1.49 | Si |
| fin. | 2 | 7262 | -621993 | 327721 | SLV 11 | 0.53 | No |
| ini. | 2 | 3421 | -400436 | 327721 | SLV 3 | 0.82 | No |
| fin. | 2 | -175 | 119634 | 327721 | SLV 3 | 2.74 | Si |
| ini. | 2 | 6776 | -391327 | 327721 | SLV 7 | 0.84 | No |
| fin. | 2 | 6541 | -396962 | 327721 | SLV 7 | 0.83 | No |

### Verifiche a taglio delle travi in muratura secondo §C8.7.1.3.1 in combinazioni sismiche

| Sezione | γM | N | M | V | Vt | Vp | Vt fess. diag. | Vt,lim | Comb. | c.s. | Verifica |
|---|---|---|---|---|---|---|---|---|---|---|---|
| ini. | 2 | 0 | 171923 | -14711 | | | 5199 | 1957 | SLV 15 | 0.13 | No |
| fin. | 2 | 0 | -630468 | -11851 | | | 5199 | 1957 | SLV 15 | 0.17 | No |
| ini. | 2 | 0 | 123617 | -8603 | | | 5199 | 1957 | SLD 14 | 0.23 | No |
| fin. | 2 | 0 | -265950 | -4869 | | | 5199 | 1957 | SLD 14 | 0.4 | No |
| ini. | 2 | 0 | 123617 | -8603 | | | 5199 | 1957 | SLD 13 | 0.23 | No |
| fin. | 2 | 0 | -265950 | -4869 | | | 5199 | 1957 | SLD 13 | 0.4 | No |
| ini. | 2 | 0 | -236536 | 7975 | | | 5199 | 1957 | SLV 2 | 0.25 | No |
| fin. | 2 | 0 | 337399 | 10995 | | | 5199 | 1957 | SLV 2 | 0.18 | No |
| ini. | 2 | 0 | -236536 | 7975 | | | 5199 | 1957 | SLV 1 | 0.25 | No |
| fin. | 2 | 0 | 337399 | 10995 | | | 5199 | 1957 | SLV 1 | 0.18 | No |
| ini. | 2 | 0 | -400436 | 8713 | | | 5199 | 1957 | SLV 4 | 0.22 | No |
| fin. | 2 | 0 | 119634 | 9775 | | | 5199 | 1957 | SLV 4 | 0.2 | No |
| ini. | 2 | 0 | 335823 | -15450 | | | 5199 | 1957 | SLV 14 | 0.13 | No |
| fin. | 2 | 0 | -412703 | -10631 | | | 5199 | 1957 | SLV 14 | 0.18 | No |
| ini. | 2 | 0 | -400436 | 8713 | | | 5199 | 1957 | SLV 3 | 0.22 | No |
| fin. | 2 | 0 | 119634 | 9775 | | | 5199 | 1957 | SLV 3 | 0.2 | No |
| ini. | 2 | 0 | 335823 | -15450 | | | 5199 | 1957 | SLV 13 | 0.13 | No |
| fin. | 2 | 0 | -412703 | -10631 | | | 5199 | 1957 | SLV 13 | 0.18 | No |
| ini. | 2 | 0 | 171923 | -14711 | | | 5199 | 1957 | SLV 16 | 0.13 | No |
| fin. | 2 | 0 | -630468 | -11851 | | | 5199 | 1957 | SLV 16 | 0.17 | No |

### Tabella dei coefficienti di sicurezza minimi

| Stato limite | Coeff.s. | Comb. | Verifica |
|---|---|---|---|
| PF_SLV | 0.52 | SLV 15 | No |
| V_SLV | 0.127 | SLV 13 | No |
| PF_SLU | 1.446 | SLU 83 | Si |
| V_SLU | 0.25 | SLU 83 | No |

## Trave di accoppiamento 29

Verifiche condotte secondo D.M. 17-01-18 (N.T.C.)

### Dati geometrici

| X ini. | Y ini. | Z ini.inf. | Z ini.sup. | H ini. | X fin. | Y fin. | Z fin.inf. | Z fin.sup | H fin. | Luce | Spessore | R. Trazione |
|---|---|---|---|---|---|---|---|---|---|---|---|---|
| -323.3 | -328.4 | 142 | 171 | 29 | -223.3 | -328.4 | 142 | 171 | 29 | 100 | 45 | 3500 |

### Caratteristiche del materiale

(Circolare 7 21-01-19 C8.5.I) Muratura in mattoni pieni e malta di calce LC2_Corti

| fb_ | fhk | fvk0 | fhmedio | τ0 | fv0 | μ | ϕ | fvk,lim | E | G | FC |
|---|---|---|---|---|---|---|---|---|---|---|---|
| 12 | | | 17.25 | 0.9 | 2 | 0.577 | 0.767 | 0.65 | 32000 | 12800 | 1.2 |

## Verifiche a pressoflessione delle travi in muratura in combinazioni non sismiche

| Sezione | γM | N | M | Mu | Comb. | c.s. | Verifica |
|---|---|---|---|---|---|---|---|
| ini. | 3 | 879 | -12342 | 19201 | SLU 62 | 1.56 | Si |
| fin. | 3 | 588 | -16776 | 19201 | SLU 62 | 1.14 | Si |
| ini. | 3 | 927 | -14081 | 19201 | SLU 81 | 1.36 | Si |
| fin. | 3 | 608 | -18915 | 19201 | SLU 81 | 1.02 | Si |
| ini. | 3 | 948 | -13899 | 19201 | SLU 83 | 1.38 | Si |
| fin. | 3 | 612 | -19275 | 19201 | SLU 83 | 1 | No |
| ini. | 3 | 948 | -12852 | 19201 | SLU 74 | 1.49 | Si |
| fin. | 3 | 621 | -18213 | 19201 | SLU 74 | 1.05 | Si |
| ini. | 3 | 859 | -12524 | 19201 | SLU 60 | 1.53 | Si |
| fin. | 3 | 584 | -16416 | 19201 | SLU 60 | 1.17 | Si |
| ini. | 3 | 797 | -11016 | 19201 | SLU 35 | 1.74 | Si |
| fin. | 3 | 497 | -16310 | 19201 | SLU 35 | 1.18 | Si |
| ini. | 3 | 756 | -12426 | 19201 | SLU 39 | 1.55 | Si |
| fin. | 3 | 480 | -16652 | 19201 | SLU 39 | 1.15 | Si |
| ini. | 3 | 968 | -12670 | 19201 | SLU 77 | 1.52 | Si |
| fin. | 3 | 625 | -18573 | 19201 | SLU 77 | 1.03 | Si |
| ini. | 3 | 776 | -12244 | 19201 | SLU 41 | 1.57 | Si |
| fin. | 3 | 484 | -17012 | 19201 | SLU 41 | 1.13 | Si |
| ini. | 3 | 956 | -12645 | 19201 | SLU 79 | 1.52 | Si |
| fin. | 3 | 616 | -18508 | 19201 | SLU 79 | 1.04 | Si |

## Verifiche a taglio delle travi in muratura secondo §C8.7.1.3.1 in combinazioni non sismiche

| Sezione | γM | N | M | V | Vt | Vp | Vt fess. diag. | Vt,lim | Comb. | c.s. | Verifica |
|---|---|---|---|---|---|---|---|---|---|---|---|
| ini. | 3 | 0 | -12670 | 1338 | | | 335 | 126 | SLU 77 | 0.09 | No |
| fin. | 3 | 0 | -18573 | -1252 | | | 335 | 126 | SLU 77 | 0.1 | No |
| ini. | 3 | 0 | -12342 | 1273 | | | 335 | 126 | SLU 62 | 0.1 | No |
| fin. | 3 | 0 | -16776 | -1155 | | | 335 | 126 | SLU 62 | 0.11 | No |
| ini. | 3 | 0 | -12524 | 1274 | | | 335 | 126 | SLU 60 | 0.1 | No |
| fin. | 3 | 0 | -16416 | -1140 | | | 335 | 126 | SLU 60 | 0.11 | No |
| ini. | 3 | 0 | -12244 | 1236 | | | 335 | 126 | SLU 41 | 0.1 | No |
| fin. | 3 | 0 | -17012 | -1140 | | | 335 | 126 | SLU 41 | 0.11 | No |
| ini. | 3 | 0 | -12645 | 1333 | | | 335 | 126 | SLU 79 | 0.09 | No |
| fin. | 3 | 0 | -18508 | -1248 | | | 335 | 126 | SLU 79 | 0.1 | No |
| ini. | 3 | 0 | -12852 | 1339 | | | 335 | 126 | SLU 74 | 0.09 | No |
| fin. | 3 | 0 | -18213 | -1237 | | | 335 | 126 | SLU 74 | 0.1 | No |
| ini. | 3 | 0 | -12426 | 1237 | | | 335 | 126 | SLU 39 | 0.1 | No |
| fin. | 3 | 0 | -16652 | -1124 | | | 335 | 126 | SLU 39 | 0.11 | No |
| ini. | 3 | 0 | -13899 | 1423 | | | 335 | 126 | SLU 83 | 0.09 | No |
| fin. | 3 | 0 | -19275 | -1306 | | | 335 | 126 | SLU 83 | 0.1 | No |
| ini. | 3 | 0 | -11273 | 1217 | | | 335 | 126 | SLU 82 | 0.1 | No |
| fin. | 3 | 0 | -14036 | -1003 | | | 335 | 126 | SLU 82 | 0.13 | No |
| ini. | 3 | 0 | -14081 | 1424 | | | 335 | 126 | SLU 81 | 0.09 | No |
| fin. | 3 | 0 | -18915 | -1291 | | | 335 | 126 | SLU 81 | 0.1 | No |

## Verifiche a pressoflessione delle travi in muratura in combinazioni sismiche

| Sezione | γM | N | M | Mu | Comb. | c.s. | Verifica |
|---|---|---|---|---|---|---|---|
| ini. | 2 | 2315 | 10352 | 28471 | SLV 15 | 2.75 | Si |
| fin. | 2 | 365 | -72806 | 28471 | SLV 15 | 0.39 | No |
| ini. | 2 | 2315 | 10352 | 28471 | SLV 16 | 2.75 | Si |
| fin. | 2 | 365 | -72806 | 28471 | SLV 16 | 0.39 | No |
| ini. | 2 | -393 | -113342 | 28471 | SLV 8 | 0.25 | No |
| fin. | 2 | 5710 | -21244 | 28471 | SLV 8 | 1.34 | Si |
| ini. | 2 | -1281 | -81892 | 28471 | SLV 3 | 0.35 | No |
| fin. | 2 | 3431 | 33853 | 28471 | SLV 3 | 0.84 | No |
| ini. | 2 | 686 | -85668 | 28471 | SLV 11 | 0.33 | No |
| fin. | 2 | 4791 | -53242 | 28471 | SLV 11 | 0.53 | No |
| ini. | 2 | -1281 | -81892 | 28471 | SLV 4 | 0.35 | No |
| fin. | 2 | 3431 | 33853 | 28471 | SLV 4 | 0.84 | No |
| ini. | 2 | 1746 | 96432 | 28471 | SLV 10 | 0.3 | No |
| fin. | 2 | -4788 | -2480 | 28471 | SLV 10 | 11.48 | Si |
| ini. | 2 | 686 | -85668 | 28471 | SLV 12 | 0.33 | No |
| fin. | 2 | 4791 | -53242 | 28471 | SLV 12 | 0.53 | No |
| ini. | 2 | -393 | -113342 | 28471 | SLV 7 | 0.25 | No |
| fin. | 2 | 5710 | -21244 | 28471 | SLV 7 | 1.34 | Si |
| ini. | 2 | 1746 | 96432 | 28471 | SLV 9 | 0.3 | No |
| fin. | 2 | -4788 | -2480 | 28471 | SLV 9 | 11.48 | Si |

## Verifiche a taglio delle travi in muratura secondo §C8.7.1.3.1 in combinazioni sismiche

| Sezione | γM | N | M | V | Vt | Vp | Vt fess. diag. | Vt,lim | Comb. | c.s. | Verifica |
|---|---|---|---|---|---|---|---|---|---|---|---|
| ini. | 2 | 0 | -113342 | 2478 | | | 503 | 189 | SLV 8 | 0.08 | No |
| fin. | 2 | 0 | -21244 | -1264 | | | 503 | 189 | SLV 8 | 0.15 | No |
| ini. | 2 | 0 | -81892 | 2633 | | | 503 | 189 | SLV 3 | 0.07 | No |
| fin. | 2 | 0 | 33853 | 638 | | | 503 | 189 | SLV 3 | 0.3 | No |
| ini. | 2 | 0 | 10352 | -143 | | | 503 | 189 | SLV 15 | 1.32 | Si |
| fin. | 2 | 0 | -72806 | -2861 | | | 503 | 189 | SLV 15 | 0.07 | No |
| ini. | 2 | 0 | -85668 | 1645 | | | 503 | 189 | SLV 11 | 0.11 | No |
| fin. | 2 | 0 | -53242 | -2314 | | | 503 | 189 | SLV 11 | 0.08 | No |
| ini. | 2 | 0 | 64982 | -843 | | | 503 | 189 | SLV 13 | 0.22 | No |
| fin. | 2 | 0 | -57578 | -2280 | | | 503 | 189 | SLV 13 | 0.08 | No |
| ini. | 2 | 0 | -85668 | 1645 | | | 503 | 189 | SLV 12 | 0.11 | No |
| fin. | 2 | 0 | -53242 | -2314 | | | 503 | 189 | SLV 12 | 0.08 | No |
| ini. | 2 | 0 | -81892 | 2633 | | | 503 | 189 | SLV 4 | 0.07 | No |
| fin. | 2 | 0 | 33853 | 638 | | | 503 | 189 | SLV 4 | 0.3 | No |
| ini. | 2 | 0 | 64982 | -843 | | | 503 | 189 | SLV 14 | 0.22 | No |
| fin. | 2 | 0 | -57578 | -2280 | | | 503 | 189 | SLV 14 | 0.08 | No |
| ini. | 2 | 0 | -113342 | 2478 | | | 503 | 189 | SLV 7 | 0.08 | No |

| Sezione | γM | N | M | V | Vt | Vp | Vt fess. diag. | Vt,lim | Comb. | c.s. | Verifica |
|---|---|---|---|---|---|---|---|---|---|---|---|
| fin. | 2 | 0 | -21244 | -1264 | | | 503 | 189 | SLV 7 | 0.15 | No |
| ini. | 2 | 0 | 10352 | -143 | | | 503 | 189 | SLV 16 | 1.32 | Si |
| fin. | 2 | 0 | -72806 | -2861 | | | 503 | 189 | SLV 16 | 0.07 | No |

### Tabella dei coefficienti di sicurezza minimi

| Stato limite | Coeff.s. | Comb. | Verifica |
|---|---|---|---|
| PF_SLV | 0.251 | SLV 7 | No |
| V_SLV | 0.066 | SLV 15 | No |
| PF_SLU | 0.996 | SLU 83 | No |
| V_SLU | 0.089 | SLU 81 | No |

## Trave di accoppiamento 30

Verifiche condotte secondo D.M. 17-01-18 (N.T.C.)

### Dati geometrici

| X ini. | Y ini. | Z ini.inf. | Z ini.sup. | H ini. | X fin. | Y fin. | Z fin.inf. | Z fin.sup | H fin. | Luce | Spessore | R. Trazione |
|---|---|---|---|---|---|---|---|---|---|---|---|---|
| -515.8 | 127.1 | 112 | 171 | 59 | -515.8 | 207.1 | 112 | 171 | 59 | 80 | 30 | 3500 |

### Caratteristiche del materiale

(Circolare 7 21-01-19 C8.5.I) Muratura in mattoni pieni e malta di calce LC2_Corti

| fb_ | fhk | fvk0 | fhmedio | τ0 | fv0 | μ | ϕ | fvk,lim | E | G | FC |
|---|---|---|---|---|---|---|---|---|---|---|---|
| 12 | | | 17.25 | 0.9 | 2 | 0.577 | 0.767 | 0.65 | 32000 | 12800 | 1.2 |

### Verifiche a pressoflessione delle travi in muratura in combinazioni non sismiche

| Sezione | γM | N | M | Mu | Comb. | c.s. | Verifica |
|---|---|---|---|---|---|---|---|
| ini. | 3 | 278 | 18604 | 52983 | SLU 83 | 2.85 | Si |
| fin. | 3 | -912 | -81555 | 52983 | SLU 83 | 0.65 | No |
| ini. | 3 | 283 | 17136 | 52983 | SLU 75 | 3.09 | Si |
| fin. | 3 | -827 | -76607 | 52983 | SLU 75 | 0.69 | No |
| ini. | 3 | 287 | 18138 | 52983 | SLU 84 | 2.92 | Si |
| fin. | 3 | -882 | -80392 | 52983 | SLU 84 | 0.66 | No |
| ini. | 3 | 272 | 17842 | 52983 | SLU 78 | 2.97 | Si |
| fin. | 3 | -879 | -79127 | 52983 | SLU 78 | 0.67 | No |
| ini. | 3 | 275 | 17603 | 52983 | SLU 74 | 3.01 | Si |
| fin. | 3 | -857 | -77770 | 52983 | SLU 74 | 0.68 | No |
| ini. | 3 | 298 | 17431 | 52983 | SLU 82 | 3.04 | Si |
| fin. | 3 | -830 | -77872 | 52983 | SLU 82 | 0.68 | No |
| ini. | 3 | 269 | 17708 | 52983 | SLU 80 | 2.99 | Si |
| fin. | 3 | -875 | -78587 | 52983 | SLU 80 | 0.67 | No |
| ini. | 3 | 289 | 17898 | 52983 | SLU 81 | 2.96 | Si |
| fin. | 3 | -860 | -79035 | 52983 | SLU 81 | 0.67 | No |
| ini. | 3 | 260 | 18174 | 52983 | SLU 79 | 2.92 | Si |
| fin. | 3 | -905 | -79750 | 52983 | SLU 79 | 0.66 | No |
| ini. | 3 | 263 | 18309 | 52983 | SLU 77 | 2.89 | Si |
| fin. | 3 | -909 | -80290 | 52983 | SLU 77 | 0.66 | No |

### Verifiche a taglio delle travi in muratura secondo §C8.7.1.3.1 in combinazioni non sismiche

| Sezione | γM | N | M | V | Vt | Vp | Vt fess. diag. | Vt,lim | Comb. | c.s. | Verifica |
|---|---|---|---|---|---|---|---|---|---|---|---|
| ini. | 3 | 0 | 17708 | 144 | | | 503 | 189 | SLU 80 | 1.31 | Si |
| fin. | 3 | 0 | -78587 | -3425 | | | 503 | 189 | SLU 80 | 0.06 | No |
| ini. | 3 | 0 | 17431 | 174 | | | 503 | 189 | SLU 82 | 1.08 | Si |
| fin. | 3 | 0 | -77872 | -3418 | | | 503 | 189 | SLU 82 | 0.06 | No |
| ini. | 3 | 0 | 18138 | 158 | | | 503 | 189 | SLU 84 | 1.2 | Si |
| fin. | 3 | 0 | -80392 | -3515 | | | 503 | 189 | SLU 84 | 0.05 | No |
| ini. | 3 | 0 | 17136 | 161 | | | 503 | 189 | SLU 75 | 1.18 | Si |
| fin. | 3 | 0 | -76607 | -3353 | | | 503 | 189 | SLU 75 | 0.06 | No |
| ini. | 3 | 0 | 17898 | 161 | | | 503 | 189 | SLU 81 | 1.18 | Si |
| fin. | 3 | 0 | -79035 | -3462 | | | 503 | 189 | SLU 81 | 0.05 | No |
| ini. | 3 | 0 | 18604 | 144 | | | 503 | 189 | SLU 83 | 1.31 | Si |
| fin. | 3 | 0 | -81555 | -3558 | | | 503 | 189 | SLU 83 | 0.05 | No |
| ini. | 3 | 0 | 17842 | 144 | | | 503 | 189 | SLU 78 | 1.31 | Si |
| fin. | 3 | 0 | -79127 | -3449 | | | 503 | 189 | SLU 78 | 0.05 | No |
| ini. | 3 | 0 | 18309 | 131 | | | 503 | 189 | SLU 77 | 1.45 | Si |
| fin. | 3 | 0 | -80290 | -3492 | | | 503 | 189 | SLU 77 | 0.05 | No |
| ini. | 3 | 0 | 18174 | 130 | | | 503 | 189 | SLU 79 | 1.45 | Si |
| fin. | 3 | 0 | -79750 | -3468 | | | 503 | 189 | SLU 79 | 0.05 | No |
| ini. | 3 | 0 | 17603 | 147 | | | 503 | 189 | SLU 74 | 1.29 | Si |
| fin. | 3 | 0 | -77770 | -3396 | | | 503 | 189 | SLU 74 | 0.06 | No |

### Verifiche a pressoflessione delle travi in muratura in combinazioni sismiche

| Sezione | γM | N | M | Mu | Comb. | c.s. | Verifica |
|---|---|---|---|---|---|---|---|
| ini. | 2 | -2234 | 41958 | 69831 | SLV 12 | 1.66 | Si |
| fin. | 2 | -4320 | -123435 | 69831 | SLV 12 | 0.57 | No |
| ini. | 2 | -647 | 20125 | 69831 | SLD 7 | 3.47 | Si |
| fin. | 2 | -1850 | -76147 | 69831 | SLD 7 | 0.92 | No |
| ini. | 2 | -1159 | 35550 | 69831 | SLV 16 | 1.96 | Si |
| fin. | 2 | -2679 | -92209 | 69831 | SLV 16 | 0.76 | No |
| ini. | 2 | -1817 | 31927 | 69831 | SLV 8 | 2.19 | Si |
| fin. | 2 | -3648 | -110332 | 69831 | SLV 8 | 0.63 | No |
| ini. | 2 | -1159 | 35550 | 69831 | SLV 15 | 1.96 | Si |
| fin. | 2 | -2679 | -92209 | 69831 | SLV 15 | 0.76 | No |
| ini. | 2 | -823 | 24518 | 69831 | SLD 11 | 2.85 | Si |
| fin. | 2 | -2138 | -81764 | 69831 | SLD 11 | 0.85 | No |

| Sezione | γM | N | M | Mu | Comb. | c.s. | Verifica |
|---|---|---|---|---|---|---|---|
| ini. | 2 | -647 | 20125 | 69831 | SLD 8 | 3.47 | Si |
| fin. | 2 | -1850 | -76147 | 69831 | SLD 8 | 0.92 | No |
| ini. | 2 | -823 | 24518 | 69831 | SLD 12 | 2.85 | Si |
| fin. | 2 | -2138 | -81764 | 69831 | SLD 12 | 0.85 | No |
| ini. | 2 | -1817 | 31927 | 69831 | SLV 7 | 2.19 | Si |
| fin. | 2 | -3648 | -110332 | 69831 | SLV 7 | 0.63 | No |
| ini. | 2 | -2234 | 41958 | 69831 | SLV 11 | 1.66 | Si |
| fin. | 2 | -4320 | -123435 | 69831 | SLV 11 | 0.57 | No |

### Verifiche a taglio delle travi in muratura secondo §C8.7.1.3.1 in combinazioni sismiche

| Sezione | γM | N | M | V | Vt | Vp | Vt fess. diag. | Vt,lim | Comb. | c.s. | Verifica |
|---|---|---|---|---|---|---|---|---|---|---|---|
| ini. | 2 | 0 | 31927 | -1190 | | | 754 | 284 | SLV 8 | 0.24 | No |
| fin. | 2 | 0 | -110332 | -4113 | | | 754 | 284 | SLV 8 | 0.07 | No |
| ini. | 2 | 0 | 24518 | -487 | | | 754 | 284 | SLD 12 | 0.58 | No |
| fin. | 2 | 0 | -81764 | -3263 | | | 754 | 284 | SLD 12 | 0.09 | No |
| ini. | 2 | 0 | 41958 | -1327 | | | 754 | 284 | SLV 12 | 0.21 | No |
| fin. | 2 | 0 | -123435 | -4660 | | | 754 | 284 | SLV 12 | 0.06 | No |
| ini. | 2 | 0 | 20125 | -430 | | | 754 | 284 | SLD 7 | 0.66 | No |
| fin. | 2 | 0 | -76147 | -3030 | | | 754 | 284 | SLD 7 | 0.09 | No |
| ini. | 2 | 0 | 35550 | -516 | | | 754 | 284 | SLV 16 | 0.55 | No |
| fin. | 2 | 0 | -92209 | -3782 | | | 754 | 284 | SLV 16 | 0.08 | No |
| ini. | 2 | 0 | 24518 | -487 | | | 754 | 284 | SLD 11 | 0.58 | No |
| fin. | 2 | 0 | -81764 | -3263 | | | 754 | 284 | SLD 11 | 0.09 | No |
| ini. | 2 | 0 | 41958 | -1327 | | | 754 | 284 | SLV 11 | 0.21 | No |
| fin. | 2 | 0 | -123435 | -4660 | | | 754 | 284 | SLV 11 | 0.06 | No |
| ini. | 2 | 0 | 31927 | -1190 | | | 754 | 284 | SLV 7 | 0.24 | No |
| fin. | 2 | 0 | -110332 | -4113 | | | 754 | 284 | SLV 7 | 0.07 | No |
| ini. | 2 | 0 | 35550 | -516 | | | 754 | 284 | SLV 15 | 0.55 | No |
| fin. | 2 | 0 | -92209 | -3782 | | | 754 | 284 | SLV 15 | 0.08 | No |
| ini. | 2 | 0 | 20125 | -430 | | | 754 | 284 | SLD 8 | 0.66 | No |
| fin. | 2 | 0 | -76147 | -3030 | | | 754 | 284 | SLD 8 | 0.09 | No |

### Tabella dei coefficienti di sicurezza minimi

| Stato limite | Coeff.s. | Comb. | Verifica |
|---|---|---|---|
| PF_SLV | 0.566 | SLV 11 | No |
| V_SLV | 0.061 | SLV 11 | No |
| PF_SLU | 0.65 | SLU 83 | No |
| V_SLU | 0.053 | SLU 83 | No |

## Trave di accoppiamento 31

Verifiche condotte secondo D.M. 17-01-18 (N.T.C.)

### Dati geometrici

| X ini. | Y ini. | Z ini.inf. | Z ini.sup. | H ini. | X fin. | Y fin. | Z fin.inf. | Z fin.sup | H fin. | Luce | Spessore | R. Trazione |
|---|---|---|---|---|---|---|---|---|---|---|---|---|
| -301.3 | 587.6 | -98 | 102 | 200 | -201.3 | 587.6 | -98 | 102 | 200 | 100 | 45 | 3500 |

### Caratteristiche del materiale

(Circolare 7 21-01-19 C8.5.I) Muratura in mattoni pieni e malta di calce LC2_Corti

| fb_ | fhk | fvk0 | fhmedio | τ0 | fv0 | μ | ϕ | fvk,lim | E | G | FC |
|---|---|---|---|---|---|---|---|---|---|---|---|
| 12 | | | 17.25 | 0.9 | 2 | 0.577 | 0.767 | 0.65 | 32000 | 12800 | 1.2 |

### Verifiche a pressoflessione delle travi in muratura in combinazioni non sismiche

| Sezione | γM | N | M | Mu | Comb. | c.s. | Verifica |
|---|---|---|---|---|---|---|---|
| ini. | 3 | -2863 | -6363 | 316581 | SLU 74 | 49.76 | Si |
| fin. | 3 | -2357 | -194238 | 316581 | SLU 74 | 1.63 | Si |
| ini. | 3 | -2915 | -7536 | 316581 | SLU 84 | 42.01 | Si |
| fin. | 3 | -2378 | -197782 | 316581 | SLU 84 | 1.6 | Si |
| ini. | 3 | -2821 | -6671 | 316581 | SLU 75 | 47.46 | Si |
| fin. | 3 | -2305 | -191428 | 316581 | SLU 75 | 1.65 | Si |
| ini. | 3 | -2868 | -7049 | 316581 | SLU 78 | 44.91 | Si |
| fin. | 3 | -2345 | -192059 | 316581 | SLU 78 | 1.65 | Si |
| ini. | 3 | -2910 | -6849 | 316581 | SLU 81 | 46.22 | Si |
| fin. | 3 | -2391 | -199961 | 316581 | SLU 81 | 1.58 | Si |
| ini. | 3 | -2910 | -6741 | 316581 | SLU 77 | 46.96 | Si |
| fin. | 3 | -2397 | -194869 | 316581 | SLU 77 | 1.62 | Si |
| ini. | 3 | -2868 | -7157 | 316581 | SLU 82 | 44.23 | Si |
| fin. | 3 | -2338 | -197151 | 316581 | SLU 82 | 1.61 | Si |
| ini. | 3 | -2890 | -7632 | 316581 | SLU 79 | 41.48 | Si |
| fin. | 3 | -2386 | -192995 | 316581 | SLU 79 | 1.64 | Si |
| ini. | 3 | -2957 | -7228 | 316581 | SLU 83 | 43.8 | Si |
| fin. | 3 | -2431 | -200592 | 316581 | SLU 83 | 1.58 | Si |
| ini. | 3 | -2848 | -7940 | 316581 | SLU 80 | 39.87 | Si |
| fin. | 3 | -2333 | -190185 | 316581 | SLU 80 | 1.66 | Si |

### Verifiche a taglio delle travi in muratura secondo §C8.7.1.3.1 in combinazioni non sismiche

| Sezione | γM | N | M | V | Vt | Vp | Vt fess. diag. | Vt,lim | Comb. | c.s. | Verifica |
|---|---|---|---|---|---|---|---|---|---|---|---|
| ini. | 3 | 0 | -7536 | -5226 | | | 3466 | 1304 | SLU 84 | 0.25 | No |
| fin. | 3 | 0 | -197782 | -224 | | | 3466 | 1304 | SLU 84 | 5.83 | Si |
| ini. | 3 | 0 | -6363 | -5063 | | | 3466 | 1304 | SLU 74 | 0.26 | No |
| fin. | 3 | 0 | -194238 | -255 | | | 3466 | 1304 | SLU 74 | 5.12 | Si |
| ini. | 3 | 0 | -6849 | -5223 | | | 3466 | 1304 | SLU 81 | 0.25 | No |
| fin. | 3 | 0 | -199961 | -242 | | | 3466 | 1304 | SLU 81 | 5.39 | Si |
| ini. | 3 | 0 | -7940 | -5016 | | | 3466 | 1304 | SLU 80 | 0.26 | No |

| Sezione | γM | N | M | V | Vt | Vp | Vt fess. diag. | Vt,lim | Comb. | c.s. | Verifica |
|---|---|---|---|---|---|---|---|---|---|---|---|
| fin. | 3 | 0 | -190185 | -214 | | | 3466 | 1304 | SLU 80 | 6.1 | Si |
| ini. | 3 | 0 | -6671 | -5006 | | | 3466 | 1304 | SLU 75 | 0.26 | No |
| fin. | 3 | 0 | -191428 | -266 | | | 3466 | 1304 | SLU 75 | 4.9 | Si |
| ini. | 3 | 0 | -7157 | -5166 | | | 3466 | 1304 | SLU 82 | 0.25 | No |
| fin. | 3 | 0 | -197151 | -253 | | | 3466 | 1304 | SLU 82 | 5.15 | Si |
| ini. | 3 | 0 | -7049 | -5066 | | | 3466 | 1304 | SLU 78 | 0.26 | No |
| fin. | 3 | 0 | -192059 | -237 | | | 3466 | 1304 | SLU 78 | 5.51 | Si |
| ini. | 3 | 0 | -7228 | -5283 | | | 3466 | 1304 | SLU 83 | 0.25 | No |
| fin. | 3 | 0 | -200592 | -213 | | | 3466 | 1304 | SLU 83 | 6.14 | Si |
| ini. | 3 | 0 | -6741 | -5123 | | | 3466 | 1304 | SLU 77 | 0.25 | No |
| fin. | 3 | 0 | -194869 | -226 | | | 3466 | 1304 | SLU 77 | 5.78 | Si |
| ini. | 3 | 0 | -7632 | -5073 | | | 3466 | 1304 | SLU 79 | 0.26 | No |
| fin. | 3 | 0 | -192995 | -203 | | | 3466 | 1304 | SLU 79 | 6.44 | Si |

### Verifiche a pressoflessione delle travi in muratura in combinazioni sismiche

| Sezione | γM | N | M | Mu | Comb. | c.s. | Verifica |
|---|---|---|---|---|---|---|---|
| ini. | 2 | 8073 | -635993 | 327721 | SLV 6 | 0.52 | No |
| fin. | 2 | 8722 | -472111 | 327721 | SLV 6 | 0.69 | No |
| ini. | 2 | -12007 | 625054 | 327721 | SLV 12 | 0.52 | No |
| fin. | 2 | -11995 | 203203 | 327721 | SLV 12 | 1.61 | Si |
| ini. | 2 | -1101 | 197423 | 327721 | SLV 13 | 1.66 | Si |
| fin. | 2 | 3086 | -667342 | 327721 | SLV 13 | 0.49 | No |
| ini. | 2 | -1101 | 197423 | 327721 | SLV 14 | 1.66 | Si |
| fin. | 2 | 3086 | -667342 | 327721 | SLV 14 | 0.49 | No |
| ini. | 2 | 2837 | -521934 | 327721 | SLV 1 | 0.63 | No |
| fin. | 2 | 123 | 124568 | 327721 | SLV 1 | 2.63 | Si |
| ini. | 2 | 6892 | -420186 | 327721 | SLV 9 | 0.78 | No |
| fin. | 2 | 9611 | -709683 | 327721 | SLV 9 | 0.46 | No |
| ini. | 2 | 6892 | -420186 | 327721 | SLV 10 | 0.78 | No |
| fin. | 2 | 9611 | -709683 | 327721 | SLV 10 | 0.46 | No |
| ini. | 2 | 2837 | -521934 | 327721 | SLV 2 | 0.63 | No |
| fin. | 2 | 123 | 124568 | 327721 | SLV 2 | 2.63 | Si |
| ini. | 2 | -12007 | 625054 | 327721 | SLV 11 | 0.52 | No |
| fin. | 2 | -11995 | 203203 | 327721 | SLV 11 | 1.61 | Si |
| ini. | 2 | 8073 | -635993 | 327721 | SLV 5 | 0.52 | No |
| fin. | 2 | 8722 | -472111 | 327721 | SLV 5 | 0.69 | No |

### Verifiche a taglio delle travi in muratura secondo §C8.7.1.3.1 in combinazioni sismiche

| Sezione | γM | N | M | V | Vt | Vp | Vt fess. diag. | Vt,lim | Comb. | c.s. | Verifica |
|---|---|---|---|---|---|---|---|---|---|---|---|
| ini. | 2 | 0 | -208362 | 7468 | | | 5199 | 1957 | SLV 4 | 0.26 | No |
| fin. | 2 | 0 | 398434 | 11594 | | | 5199 | 1957 | SLV 4 | 0.17 | No |
| ini. | 2 | 0 | 197423 | -14223 | | | 5199 | 1957 | SLV 13 | 0.14 | No |
| fin. | 2 | 0 | -667342 | -12054 | | | 5199 | 1957 | SLV 13 | 0.16 | No |
| ini. | 2 | 0 | 625054 | -10536 | | | 5199 | 1957 | SLV 12 | 0.19 | No |
| fin. | 2 | 0 | 203203 | -3244 | | | 5199 | 1957 | SLV 12 | 0.6 | No |
| ini. | 2 | 0 | 625054 | -10536 | | | 5199 | 1957 | SLV 11 | 0.19 | No |
| fin. | 2 | 0 | 203203 | -3244 | | | 5199 | 1957 | SLV 11 | 0.6 | No |
| ini. | 2 | 0 | -521934 | 9618 | | | 5199 | 1957 | SLV 1 | 0.2 | No |
| fin. | 2 | 0 | 124568 | 11301 | | | 5199 | 1957 | SLV 1 | 0.17 | No |
| ini. | 2 | 0 | 510995 | -16373 | | | 5199 | 1957 | SLV 15 | 0.12 | No |
| fin. | 2 | 0 | -393476 | -11760 | | | 5199 | 1957 | SLV 15 | 0.17 | No |
| ini. | 2 | 0 | -208362 | 7468 | | | 5199 | 1957 | SLV 3 | 0.26 | No |
| fin. | 2 | 0 | 398434 | 11594 | | | 5199 | 1957 | SLV 3 | 0.17 | No |
| ini. | 2 | 0 | 510995 | -16373 | | | 5199 | 1957 | SLV 16 | 0.12 | No |
| fin. | 2 | 0 | -393476 | -11760 | | | 5199 | 1957 | SLV 16 | 0.17 | No |
| ini. | 2 | 0 | 197423 | -14223 | | | 5199 | 1957 | SLV 14 | 0.14 | No |
| fin. | 2 | 0 | -667342 | -12054 | | | 5199 | 1957 | SLV 14 | 0.16 | No |
| ini. | 2 | 0 | -521934 | 9618 | | | 5199 | 1957 | SLV 2 | 0.2 | No |
| fin. | 2 | 0 | 124568 | 11301 | | | 5199 | 1957 | SLV 2 | 0.17 | No |

### Tabella dei coefficienti di sicurezza minimi

| Stato limite | Coeff.s. | Comb. | Verifica |
|---|---|---|---|
| PF_SLV | 0.462 | SLV 9 | No |
| V_SLV | 0.119 | SLV 15 | No |
| PF_SLU | 1.578 | SLU 83 | Si |
| V_SLU | 0.247 | SLU 83 | No |

## Trave di accoppiamento 32

Verifiche condotte secondo D.M. 17-01-18 (N.T.C.)

### Dati geometrici

| X ini. | Y ini. | Z ini.inf. | Z ini.sup. | H ini. | X fin. | Y fin. | Z fin.inf. | Z fin.sup | H fin. | Luce | Spessore | R. Trazione |
|---|---|---|---|---|---|---|---|---|---|---|---|---|
| -301.3 | 587.6 | 142 | 171 | 29 | -201.3 | 587.6 | 142 | 171 | 29 | 100 | 45 | 3500 |

### Caratteristiche del materiale

(Circolare 7 21-01-19 C8.5.I) Muratura in mattoni pieni e malta di calce LC2_Corti

| fb_ | fhk | fvk0 | fhmedio | τ0 | fv0 | μ | ϕ | fvk,lim | E | G | FC |
|---|---|---|---|---|---|---|---|---|---|---|---|
| 12 | | | 17.25 | 0.9 | 2 | 0.577 | 0.767 | 0.65 | 32000 | 12800 | 1.2 |

### Verifiche a pressoflessione delle travi in muratura in combinazioni non sismiche

| Sezione | γM | N | M | Mu | Comb. | c.s. | Verifica |
|---|---|---|---|---|---|---|---|
| ini. | 3 | 246 | -21260 | 19201 | SLU 75 | 0.9 | No |
| fin. | 3 | 64 | -23925 | 19201 | SLU 75 | 0.8 | No |

| Sezione | γM | N | M | Mu | Comb. | c.s. | Verifica |
|---|---|---|---|---|---|---|---|
| ini. | 3 | 249 | -21785 | 19201 | SLU 79 | 0.88 | No |
| fin. | 3 | 77 | -24025 | 19201 | SLU 79 | 0.8 | No |
| ini. | 3 | 249 | -22653 | 19201 | SLU 83 | 0.85 | No |
| fin. | 3 | 58 | -25667 | 19201 | SLU 83 | 0.75 | No |
| ini. | 3 | 239 | -22156 | 19201 | SLU 82 | 0.87 | No |
| fin. | 3 | 44 | -25388 | 19201 | SLU 82 | 0.76 | No |
| ini. | 3 | 256 | -21756 | 19201 | SLU 77 | 0.88 | No |
| fin. | 3 | 78 | -24204 | 19201 | SLU 77 | 0.79 | No |
| ini. | 3 | 229 | -22747 | 19201 | SLU 84 | 0.84 | No |
| fin. | 3 | 40 | -25341 | 19201 | SLU 84 | 0.76 | No |
| ini. | 3 | 229 | -21879 | 19201 | SLU 80 | 0.88 | No |
| fin. | 3 | 59 | -23699 | 19201 | SLU 80 | 0.81 | No |
| ini. | 3 | 236 | -21851 | 19201 | SLU 78 | 0.88 | No |
| fin. | 3 | 60 | -23877 | 19201 | SLU 78 | 0.8 | No |
| ini. | 3 | 266 | -21166 | 19201 | SLU 74 | 0.91 | No |
| fin. | 3 | 81 | -24251 | 19201 | SLU 74 | 0.79 | No |
| ini. | 3 | 259 | -22062 | 19201 | SLU 81 | 0.87 | No |
| fin. | 3 | 61 | -25715 | 19201 | SLU 81 | 0.75 | No |

## Verifiche a taglio delle travi in muratura secondo §C8.7.1.3.1 in combinazioni non sismiche

| Sezione | γM | N | M | V | Vt | Vp | Vt fess. diag. | Vt,lim | Comb. | c.s. | Verifica |
|---|---|---|---|---|---|---|---|---|---|---|---|
| ini. | 3 | 0 | -21879 | 1568 | | | 335 | 126 | SLU 80 | 0.08 | No |
| fin. | 3 | 0 | -23699 | -1291 | | | 335 | 126 | SLU 80 | 0.1 | No |
| ini. | 3 | 0 | -22747 | 1629 | | | 335 | 126 | SLU 84 | 0.08 | No |
| fin. | 3 | 0 | -25341 | -1379 | | | 335 | 126 | SLU 84 | 0.09 | No |
| ini. | 3 | 0 | -21785 | 1566 | | | 335 | 126 | SLU 79 | 0.08 | No |
| fin. | 3 | 0 | -24025 | -1307 | | | 335 | 126 | SLU 79 | 0.1 | No |
| ini. | 3 | 0 | -22062 | 1591 | | | 335 | 126 | SLU 81 | 0.08 | No |
| fin. | 3 | 0 | -25715 | -1398 | | | 335 | 126 | SLU 81 | 0.09 | No |
| ini. | 3 | 0 | -21351 | 1533 | | | 335 | 126 | SLU 76 | 0.08 | No |
| fin. | 3 | 0 | -23529 | -1282 | | | 335 | 126 | SLU 76 | 0.1 | No |
| ini. | 3 | 0 | -21756 | 1568 | | | 335 | 126 | SLU 77 | 0.08 | No |
| fin. | 3 | 0 | -24204 | -1314 | | | 335 | 126 | SLU 77 | 0.1 | No |
| ini. | 3 | 0 | -22156 | 1593 | | | 335 | 126 | SLU 82 | 0.08 | No |
| fin. | 3 | 0 | -25388 | -1382 | | | 335 | 126 | SLU 82 | 0.09 | No |
| ini. | 3 | 0 | -21260 | 1534 | | | 335 | 126 | SLU 75 | 0.08 | No |
| fin. | 3 | 0 | -23925 | -1300 | | | 335 | 126 | SLU 75 | 0.1 | No |
| ini. | 3 | 0 | -21851 | 1570 | | | 335 | 126 | SLU 78 | 0.08 | No |
| fin. | 3 | 0 | -23877 | -1298 | | | 335 | 126 | SLU 78 | 0.1 | No |
| ini. | 3 | 0 | -22653 | 1627 | | | 335 | 126 | SLU 83 | 0.08 | No |
| fin. | 3 | 0 | -25667 | -1396 | | | 335 | 126 | SLU 83 | 0.09 | No |

## Verifiche a pressoflessione delle travi in muratura in combinazioni sismiche

| Sezione | γM | N | M | Mu | Comb. | c.s. | Verifica |
|---|---|---|---|---|---|---|---|
| ini. | 2 | -3541 | -53700 | 28471 | SLV 3 | 0.53 | No |
| fin. | 2 | -991 | 33758 | 28471 | SLV 3 | 0.84 | No |
| ini. | 2 | 1792 | -56552 | 28471 | SLV 2 | 0.5 | No |
| fin. | 2 | 3858 | 27454 | 28471 | SLV 2 | 1.04 | Si |
| ini. | 2 | -1349 | 29424 | 28471 | SLV 15 | 0.97 | No |
| fin. | 2 | -3665 | -59677 | 28471 | SLV 15 | 0.48 | No |
| ini. | 2 | -3541 | -53700 | 28471 | SLV 4 | 0.53 | No |
| fin. | 2 | -991 | 33758 | 28471 | SLV 4 | 0.84 | No |
| ini. | 2 | 1792 | -56552 | 28471 | SLV 1 | 0.5 | No |
| fin. | 2 | 3858 | 27454 | 28471 | SLV 1 | 1.04 | Si |
| ini. | 2 | 9438 | -5848 | 28471 | SLV 9 | 4.87 | Si |
| fin. | 2 | 7778 | -40632 | 28471 | SLV 9 | 0.7 | No |
| ini. | 2 | 9438 | -5848 | 28471 | SLV 10 | 4.87 | Si |
| fin. | 2 | 7778 | -40632 | 28471 | SLV 10 | 0.7 | No |
| ini. | 2 | 3984 | 26572 | 28471 | SLV 13 | 1.07 | Si |
| fin. | 2 | 1184 | -65980 | 28471 | SLV 13 | 0.43 | No |
| ini. | 2 | -1349 | 29424 | 28471 | SLV 16 | 0.97 | No |
| fin. | 2 | -3665 | -59677 | 28471 | SLV 16 | 0.48 | No |
| ini. | 2 | 3984 | 26572 | 28471 | SLV 14 | 1.07 | Si |
| fin. | 2 | 1184 | -65980 | 28471 | SLV 14 | 0.43 | No |

## Verifiche a taglio delle travi in muratura secondo §C8.7.1.3.1 in combinazioni sismiche

| Sezione | γM | N | M | V | Vt | Vp | Vt fess. diag. | Vt,lim | Comb. | c.s. | Verifica |
|---|---|---|---|---|---|---|---|---|---|---|---|
| ini. | 2 | 0 | -56552 | 2011 | | | 503 | 189 | SLV 2 | 0.09 | No |
| fin. | 2 | 0 | 27454 | 711 | | | 503 | 189 | SLV 2 | 0.27 | No |
| ini. | 2 | 0 | -53700 | 2343 | | | 503 | 189 | SLV 3 | 0.08 | No |
| fin. | 2 | 0 | 33758 | 390 | | | 503 | 189 | SLV 3 | 0.48 | No |
| ini. | 2 | 0 | -21280 | 1906 | | | 503 | 189 | SLV 8 | 0.1 | No |
| fin. | 2 | 0 | 8410 | -983 | | | 503 | 189 | SLV 8 | 0.19 | No |
| ini. | 2 | 0 | -56552 | 2011 | | | 503 | 189 | SLV 1 | 0.09 | No |
| fin. | 2 | 0 | 27454 | 711 | | | 503 | 189 | SLV 1 | 0.27 | No |
| ini. | 2 | 0 | 26572 | -346 | | | 503 | 189 | SLV 13 | 0.55 | No |
| fin. | 2 | 0 | -65980 | -2144 | | | 503 | 189 | SLV 13 | 0.09 | No |
| ini. | 2 | 0 | 26572 | -346 | | | 503 | 189 | SLV 14 | 0.55 | No |
| fin. | 2 | 0 | -65980 | -2144 | | | 503 | 189 | SLV 14 | 0.09 | No |
| ini. | 2 | 0 | -21280 | 1906 | | | 503 | 189 | SLV 7 | 0.1 | No |
| fin. | 2 | 0 | 8410 | -983 | | | 503 | 189 | SLV 7 | 0.19 | No |
| ini. | 2 | 0 | -53700 | 2343 | | | 503 | 189 | SLV 4 | 0.08 | No |
| fin. | 2 | 0 | 33758 | 390 | | | 503 | 189 | SLV 4 | 0.48 | No |
| ini. | 2 | 0 | 29424 | -14 | | | 503 | 189 | SLV 15 | 13.8 | Si |
| fin. | 2 | 0 | -59677 | -2465 | | | 503 | 189 | SLV 15 | 0.08 | No |
| ini. | 2 | 0 | 29424 | -14 | | | 503 | 189 | SLV 16 | 13.8 | Si |
| fin. | 2 | 0 | -59677 | -2465 | | | 503 | 189 | SLV 16 | 0.08 | No |

### Tabella dei coefficienti di sicurezza minimi

| Stato limite | Coeff.s. | Comb. | Verifica |
|---|---|---|---|
| PF_SLV | 0.432 | SLV 13 | No |
| V_SLV | 0.077 | SLV 15 | No |
| PF_SLU | 0.747 | SLU 81 | No |
| V_SLU | 0.077 | SLU 84 | No |

## Trave di accoppiamento 33

Verifiche condotte secondo D.M. 17-01-18 (N.T.C.)

### Dati geometrici

| X ini. | Y ini. | Z ini.inf. | Z ini.sup. | H ini. | X fin. | Y fin. | Z fin.inf. | Z fin.sup | H fin. | Luce | Spessore | R. Trazione |
|---|---|---|---|---|---|---|---|---|---|---|---|---|
| -2176.3 | 595.1 | 171 | 261 | 90 | -2276.3 | 595.1 | 171 | 261 | 90 | 100 | 28 | 3500 |

### Caratteristiche del materiale

(Circolare 7 21-01-19 C8.5.I) Muratura in mattoni pieni e malta di calce LC2_Corti

| fb_ | fhk | fvk0 | fhmedio | τ0 | fv0 | μ | ϕ | fvk,lim | E | G | FC |
|---|---|---|---|---|---|---|---|---|---|---|---|
| 12 | | | 17.25 | 0.9 | 2 | 0.577 | 0.767 | 0.65 | 32000 | 12800 | 1.2 |

### Verifiche a pressoflessione delle travi in muratura in combinazioni non sismiche

| Sezione | γM | N | M | Mu | Comb. | c.s. | Verifica |
|---|---|---|---|---|---|---|---|
| ini. | 3 | 5883 | 81667 | 103792 | SLU 75 | 1.27 | Si |
| fin. | 3 | 6215 | 7817 | 103792 | SLU 75 | 13.28 | Si |
| ini. | 3 | 6037 | 83818 | 103792 | SLU 77 | 1.24 | Si |
| fin. | 3 | 6389 | 8389 | 103792 | SLU 77 | 12.37 | Si |
| ini. | 3 | 5973 | 80896 | 103792 | SLU 74 | 1.28 | Si |
| fin. | 3 | 6312 | 10119 | 103792 | SLU 74 | 10.26 | Si |
| ini. | 3 | 6173 | 83753 | 103792 | SLU 83 | 1.24 | Si |
| fin. | 3 | 6525 | 9614 | 103792 | SLU 83 | 10.8 | Si |
| ini. | 3 | 5903 | 84074 | 103792 | SLU 80 | 1.23 | Si |
| fin. | 3 | 6246 | 5841 | 103792 | SLU 80 | 17.77 | Si |
| ini. | 3 | 6082 | 84524 | 103792 | SLU 84 | 1.23 | Si |
| fin. | 3 | 6428 | 7313 | 103792 | SLU 84 | 14.19 | Si |
| ini. | 3 | 6018 | 81602 | 103792 | SLU 82 | 1.27 | Si |
| fin. | 3 | 6351 | 9043 | 103792 | SLU 82 | 11.48 | Si |
| ini. | 3 | 5947 | 84589 | 103792 | SLU 78 | 1.23 | Si |
| fin. | 3 | 6292 | 6087 | 103792 | SLU 78 | 17.05 | Si |
| ini. | 3 | 5778 | 81667 | 103792 | SLU 76 | 1.27 | Si |
| fin. | 3 | 6104 | 6037 | 103792 | SLU 76 | 17.19 | Si |
| ini. | 3 | 5993 | 83303 | 103792 | SLU 79 | 1.25 | Si |
| fin. | 3 | 6343 | 8143 | 103792 | SLU 79 | 12.75 | Si |

### Verifiche a taglio delle travi in muratura secondo §C8.7.1.3.1 in combinazioni non sismiche

| Sezione | γM | N | M | V | Vt | Vp | Vt fess. diag. | Vt,lim | Comb. | c.s. | Verifica |
|---|---|---|---|---|---|---|---|---|---|---|---|
| ini. | 3 | 0 | 81602 | -1182 | | | 873 | 329 | SLU 82 | 0.28 | No |
| fin. | 3 | 0 | 9043 | -815 | | | 873 | 329 | SLU 82 | 0.4 | No |
| ini. | 3 | 0 | 83753 | -1216 | | | 873 | 329 | SLU 83 | 0.27 | No |
| fin. | 3 | 0 | 9614 | -822 | | | 873 | 329 | SLU 83 | 0.4 | No |
| ini. | 3 | 0 | 83818 | -1226 | | | 873 | 329 | SLU 77 | 0.27 | No |
| fin. | 3 | 0 | 8389 | -833 | | | 873 | 329 | SLU 77 | 0.39 | No |
| ini. | 3 | 0 | 83303 | -1216 | | | 873 | 329 | SLU 79 | 0.27 | No |
| fin. | 3 | 0 | 8143 | -835 | | | 873 | 329 | SLU 79 | 0.39 | No |
| ini. | 3 | 0 | 80896 | -1167 | | | 873 | 329 | SLU 74 | 0.28 | No |
| fin. | 3 | 0 | 10119 | -784 | | | 873 | 329 | SLU 74 | 0.42 | No |
| ini. | 3 | 0 | 84589 | -1252 | | | 873 | 329 | SLU 78 | 0.26 | No |
| fin. | 3 | 0 | 6087 | -875 | | | 873 | 329 | SLU 78 | 0.38 | No |
| ini. | 3 | 0 | 84524 | -1242 | | | 873 | 329 | SLU 84 | 0.26 | No |
| fin. | 3 | 0 | 7313 | -863 | | | 873 | 329 | SLU 84 | 0.38 | No |
| ini. | 3 | 0 | 81667 | -1192 | | | 873 | 329 | SLU 75 | 0.28 | No |
| fin. | 3 | 0 | 7817 | -826 | | | 873 | 329 | SLU 75 | 0.4 | No |
| ini. | 3 | 0 | 84074 | -1242 | | | 873 | 329 | SLU 80 | 0.26 | No |
| fin. | 3 | 0 | 5841 | -876 | | | 873 | 329 | SLU 80 | 0.38 | No |
| ini. | 3 | 0 | 81667 | -1199 | | | 873 | 329 | SLU 76 | 0.27 | No |
| fin. | 3 | 0 | 6037 | -855 | | | 873 | 329 | SLU 76 | 0.38 | No |

### Verifiche a pressoflessione delle travi in muratura in combinazioni sismiche

| Sezione | γM | N | M | Mu | Comb. | c.s. | Verifica |
|---|---|---|---|---|---|---|---|
| ini. | 2 | 15978 | 519964 | 121694 | SLV 12 | 0.23 | No |
| fin. | 2 | 24700 | 193915 | 121694 | SLV 12 | 0.63 | No |
| ini. | 2 | 6663 | 376047 | 121694 | SLV 3 | 0.32 | No |
| fin. | 2 | 10571 | -98076 | 121694 | SLV 3 | 1.24 | Si |
| ini. | 2 | 15978 | 519964 | 121694 | SLV 11 | 0.23 | No |
| fin. | 2 | 24700 | 193915 | 121694 | SLV 11 | 0.63 | No |
| ini. | 2 | -7189 | -512678 | 121694 | SLV 9 | 0.24 | No |
| fin. | 2 | -16090 | -85215 | 121694 | SLV 9 | 1.43 | Si |
| ini. | 2 | -7746 | -412290 | 121694 | SLV 5 | 0.3 | No |
| fin. | 2 | -16023 | -174890 | 121694 | SLV 5 | 0.7 | No |
| ini. | 2 | -7189 | -512678 | 121694 | SLV 10 | 0.24 | No |
| fin. | 2 | -16090 | -85215 | 121694 | SLV 10 | 1.43 | Si |
| ini. | 2 | 6663 | 376047 | 121694 | SLV 4 | 0.32 | No |
| fin. | 2 | 10571 | -98076 | 121694 | SLV 4 | 1.24 | Si |
| ini. | 2 | 15421 | 620352 | 121694 | SLV 7 | 0.2 | No |
| fin. | 2 | 24768 | 104240 | 121694 | SLV 7 | 1.17 | Si |
| ini. | 2 | 15421 | 620352 | 121694 | SLV 8 | 0.2 | No |

| Sezione | γM | N | M | Mu | Comb. | c.s. | Verifica |
|---|---|---|---|---|---|---|---|
| fin. | 2 | 24768 | 104240 | 121694 | SLV 8 | 1.17 | Si |
| ini. | 2 | -7746 | -412290 | 121694 | SLV 6 | 0.3 | No |
| fin. | 2 | -16023 | -174890 | 121694 | SLV 6 | 0.7 | No |

### Verifiche a taglio delle travi in muratura secondo §C8.7.1.3.1 in combinazioni sismiche

| Sezione | γM | N | M | V | Vt | Vp | Vt fess. diag. | Vt,lim | Comb. | c.s. | Verifica |
|---|---|---|---|---|---|---|---|---|---|---|---|
| ini. | 2 | 0 | 620352 | -7526 | | | 1310 | 493 | SLV 7 | 0.07 | No |
| fin. | 2 | 0 | 104240 | -5585 | | | 1310 | 493 | SLV 7 | 0.09 | No |
| ini. | 2 | 0 | 519964 | -4968 | | | 1310 | 493 | SLV 11 | 0.1 | No |
| fin. | 2 | 0 | 193915 | -3096 | | | 1310 | 493 | SLV 11 | 0.16 | No |
| ini. | 2 | 0 | -268373 | 5174 | | | 1310 | 493 | SLV 13 | 0.1 | No |
| fin. | 2 | 0 | 117102 | 4795 | | | 1310 | 493 | SLV 13 | 0.1 | No |
| ini. | 2 | 0 | 519964 | -4968 | | | 1310 | 493 | SLV 12 | 0.1 | No |
| fin. | 2 | 0 | 193915 | -3096 | | | 1310 | 493 | SLV 12 | 0.16 | No |
| ini. | 2 | 0 | -512678 | 6045 | | | 1310 | 493 | SLV 9 | 0.08 | No |
| fin. | 2 | 0 | -85215 | 4576 | | | 1310 | 493 | SLV 9 | 0.11 | No |
| ini. | 2 | 0 | 376047 | -6654 | | | 1310 | 493 | SLV 4 | 0.07 | No |
| fin. | 2 | 0 | -98076 | -5805 | | | 1310 | 493 | SLV 4 | 0.08 | No |
| ini. | 2 | 0 | 620352 | -7526 | | | 1310 | 493 | SLV 8 | 0.07 | No |
| fin. | 2 | 0 | 104240 | -5585 | | | 1310 | 493 | SLV 8 | 0.09 | No |
| ini. | 2 | 0 | -512678 | 6045 | | | 1310 | 493 | SLV 10 | 0.08 | No |
| fin. | 2 | 0 | -85215 | 4576 | | | 1310 | 493 | SLV 10 | 0.11 | No |
| ini. | 2 | 0 | 376047 | -6654 | | | 1310 | 493 | SLV 3 | 0.07 | No |
| fin. | 2 | 0 | -98076 | -5805 | | | 1310 | 493 | SLV 3 | 0.08 | No |
| ini. | 2 | 0 | -268373 | 5174 | | | 1310 | 493 | SLV 14 | 0.1 | No |
| fin. | 2 | 0 | 117102 | 4795 | | | 1310 | 493 | SLV 14 | 0.1 | No |

### Tabella dei coefficienti di sicurezza minimi

| Stato limite | Coeff.s. | Comb. | Verifica |
|---|---|---|---|
| PF_SLV | 0.196 | SLV 7 | No |
| V_SLV | 0.066 | SLV 7 | No |
| PF_SLU | 1.227 | SLU 78 | Si |
| V_SLU | 0.262 | SLU 78 | No |

## Trave di accoppiamento 34

Verifiche condotte secondo D.M. 17-01-18 (N.T.C.)

### Dati geometrici

| X ini. | Y ini. | Z ini.inf. | Z ini.sup. | H ini. | X fin. | Y fin. | Z fin.inf. | Z fin.sup | H fin. | Luce | Spessore | R. Trazione |
|---|---|---|---|---|---|---|---|---|---|---|---|---|
| -2176.3 | 595.1 | 451 | 544 | 93 | -2276.3 | 595.1 | 451 | 544 | 93 | 100 | 28 | 3500 |

### Caratteristiche del materiale

(Circolare 7 21-01-19 C8.5.I) Muratura in mattoni pieni e malta di calce LC2_Corti

| fb_ | fhk | fvk0 | fhmedio | τ0 | fv0 | μ | ϕ | fvk,lim | E | G | FC |
|---|---|---|---|---|---|---|---|---|---|---|---|
| 12 | | | 17.25 | 0.9 | 2 | 0.577 | 0.767 | 0.65 | 32000 | 12800 | 1.2 |

### Verifiche a pressoflessione delle travi in muratura in combinazioni non sismiche

| Sezione | γM | N | M | Mu | Comb. | c.s. | Verifica |
|---|---|---|---|---|---|---|---|
| ini. | 3 | -1694 | -4040 | 109042 | SLU 82 | 26.99 | Si |
| fin. | 3 | -2178 | -48715 | 109042 | SLU 82 | 2.24 | Si |
| ini. | 3 | -1882 | -2820 | 109042 | SLU 78 | 38.66 | Si |
| fin. | 3 | -2340 | -49605 | 109042 | SLU 78 | 2.2 | Si |
| ini. | 3 | -1891 | -2583 | 109042 | SLU 80 | 42.21 | Si |
| fin. | 3 | -2338 | -49190 | 109042 | SLU 80 | 2.22 | Si |
| ini. | 3 | -1943 | -3415 | 109042 | SLU 79 | 31.93 | Si |
| fin. | 3 | -2369 | -49014 | 109042 | SLU 79 | 2.22 | Si |
| ini. | 3 | -1815 | -4495 | 109042 | SLU 74 | 24.26 | Si |
| fin. | 3 | -2255 | -48079 | 109042 | SLU 74 | 2.27 | Si |
| ini. | 3 | -1866 | -4029 | 109042 | SLU 83 | 27.06 | Si |
| fin. | 3 | -2325 | -49888 | 109042 | SLU 83 | 2.19 | Si |
| ini. | 3 | -1934 | -3652 | 109042 | SLU 77 | 29.86 | Si |
| fin. | 3 | -2371 | -49428 | 109042 | SLU 77 | 2.21 | Si |
| ini. | 3 | -1763 | -3663 | 109042 | SLU 75 | 29.77 | Si |
| fin. | 3 | -2224 | -48255 | 109042 | SLU 75 | 2.26 | Si |
| ini. | 3 | -1747 | -4872 | 109042 | SLU 81 | 22.38 | Si |
| fin. | 3 | -2209 | -48539 | 109042 | SLU 81 | 2.25 | Si |
| ini. | 3 | -1813 | -3197 | 109042 | SLU 84 | 34.1 | Si |
| fin. | 3 | -2295 | -50065 | 109042 | SLU 84 | 2.18 | Si |

### Verifiche a taglio delle travi in muratura secondo §C8.7.1.3.1 in combinazioni non sismiche

| Sezione | γM | N | M | V | Vt | Vp | Vt fess. diag. | Vt,lim | Comb. | c.s. | Verifica |
|---|---|---|---|---|---|---|---|---|---|---|---|
| ini. | 3 | 0 | -2820 | 3353 | | | 933 | 351 | SLU 78 | 0.1 | No |
| fin. | 3 | 0 | -49605 | -3137 | | | 933 | 351 | SLU 78 | 0.11 | No |
| ini. | 3 | 0 | -3197 | 3476 | | | 933 | 351 | SLU 84 | 0.1 | No |
| fin. | 3 | 0 | -50065 | -3214 | | | 933 | 351 | SLU 84 | 0.11 | No |
| ini. | 3 | 0 | -3652 | 3411 | | | 933 | 351 | SLU 77 | 0.1 | No |
| fin. | 3 | 0 | -49428 | -3143 | | | 933 | 351 | SLU 77 | 0.11 | No |
| ini. | 3 | 0 | -4040 | 3459 | | | 933 | 351 | SLU 82 | 0.1 | No |
| fin. | 3 | 0 | -48715 | -3156 | | | 933 | 351 | SLU 82 | 0.11 | No |
| ini. | 3 | 0 | -4029 | 3534 | | | 933 | 351 | SLU 83 | 0.1 | No |
| fin. | 3 | 0 | -49888 | -3220 | | | 933 | 351 | SLU 83 | 0.11 | No |
| ini. | 3 | 0 | -3663 | 3336 | | | 933 | 351 | SLU 75 | 0.11 | No |
| fin. | 3 | 0 | -48255 | -3079 | | | 933 | 351 | SLU 75 | 0.11 | No |

| Sezione | γM | N | M | V | Vt | Vp | Vt fess. diag. | Vt,lim | Comb. | c.s. | Verifica |
|---|---|---|---|---|---|---|---|---|---|---|---|
| ini. | 3 | 0 | -4495 | 3394 | | | 933 | 351 | SLU 74 | 0.1 | No |
| fin. | 3 | 0 | -48079 | -3086 | | | 933 | 351 | SLU 74 | 0.11 | No |
| ini. | 3 | 0 | -2583 | 3322 | | | 933 | 351 | SLU 80 | 0.11 | No |
| fin. | 3 | 0 | -49190 | -3112 | | | 933 | 351 | SLU 80 | 0.11 | No |
| ini. | 3 | 0 | -3415 | 3380 | | | 933 | 351 | SLU 79 | 0.1 | No |
| fin. | 3 | 0 | -49014 | -3118 | | | 933 | 351 | SLU 79 | 0.11 | No |
| ini. | 3 | 0 | -4872 | 3517 | | | 933 | 351 | SLU 81 | 0.1 | No |
| fin. | 3 | 0 | -48539 | -3163 | | | 933 | 351 | SLU 81 | 0.11 | No |

### Verifiche a pressoflessione delle travi in muratura in combinazioni sismiche

| Sezione | γM | N | M | Mu | Comb. | c.s. | Verifica |
|---|---|---|---|---|---|---|---|
| ini. | 2 | -52 | 31624 | 126944 | SLD 4 | 4.01 | Si |
| fin. | 2 | -2857 | -93189 | 126944 | SLD 4 | 1.36 | Si |
| ini. | 2 | -1158 | 51349 | 126944 | SLV 8 | 2.47 | Si |
| fin. | 2 | -4030 | -127389 | 126944 | SLV 8 | 1 | No |
| ini. | 2 | -1158 | 51349 | 126944 | SLV 7 | 2.47 | Si |
| fin. | 2 | -4030 | -127389 | 126944 | SLV 7 | 1 | No |
| ini. | 2 | 1997 | 59635 | 126944 | SLV 1 | 2.13 | Si |
| fin. | 2 | -3642 | -140872 | 126944 | SLV 1 | 0.9 | No |
| ini. | 2 | 1505 | 79724 | 126944 | SLV 4 | 1.59 | Si |
| fin. | 2 | -4676 | -175432 | 126944 | SLV 4 | 0.72 | No |
| ini. | 2 | -3967 | -88403 | 126944 | SLV 14 | 1.44 | Si |
| fin. | 2 | 1652 | 111594 | 126944 | SLV 14 | 1.14 | Si |
| ini. | 2 | -3967 | -88403 | 126944 | SLV 13 | 1.44 | Si |
| fin. | 2 | 1652 | 111594 | 126944 | SLV 13 | 1.14 | Si |
| ini. | 2 | 1997 | 59635 | 126944 | SLV 2 | 2.13 | Si |
| fin. | 2 | -3642 | -140872 | 126944 | SLV 2 | 0.9 | No |
| ini. | 2 | 1505 | 79724 | 126944 | SLV 3 | 1.59 | Si |
| fin. | 2 | -4676 | -175432 | 126944 | SLV 3 | 0.72 | No |
| ini. | 2 | -52 | 31624 | 126944 | SLD 3 | 4.01 | Si |
| fin. | 2 | -2857 | -93189 | 126944 | SLD 3 | 1.36 | Si |

### Verifiche a taglio delle travi in muratura secondo §C8.7.1.3.1 in combinazioni sismiche

| Sezione | γM | N | M | V | Vt | Vp | Vt fess. diag. | Vt,lim | Comb. | c.s. | Verifica |
|---|---|---|---|---|---|---|---|---|---|---|---|
| ini. | 2 | 0 | -68314 | 6916 | | | 1399 | 526 | SLV 15 | 0.08 | No |
| fin. | 2 | 0 | 77034 | 2222 | | | 1399 | 526 | SLV 15 | 0.24 | No |
| ini. | 2 | 0 | -88403 | 6912 | | | 1399 | 526 | SLV 14 | 0.08 | No |
| fin. | 2 | 0 | 111594 | 3286 | | | 1399 | 526 | SLV 14 | 0.16 | No |
| ini. | 2 | 0 | 59635 | -2318 | | | 1399 | 526 | SLV 1 | 0.23 | No |
| fin. | 2 | 0 | -140872 | -6326 | | | 1399 | 526 | SLV 1 | 0.08 | No |
| ini. | 2 | 0 | 79724 | -2313 | | | 1399 | 526 | SLV 3 | 0.23 | No |
| fin. | 2 | 0 | -175432 | -7391 | | | 1399 | 526 | SLV 3 | 0.07 | No |
| ini. | 2 | 0 | 79724 | -2313 | | | 1399 | 526 | SLV 4 | 0.23 | No |
| fin. | 2 | 0 | -175432 | -7391 | | | 1399 | 526 | SLV 4 | 0.07 | No |
| ini. | 2 | 0 | 51349 | 922 | | | 1399 | 526 | SLV 7 | 0.57 | No |
| fin. | 2 | 0 | -127389 | -5268 | | | 1399 | 526 | SLV 7 | 0.1 | No |
| ini. | 2 | 0 | -88403 | 6912 | | | 1399 | 526 | SLV 13 | 0.08 | No |
| fin. | 2 | 0 | 111594 | 3286 | | | 1399 | 526 | SLV 13 | 0.16 | No |
| ini. | 2 | 0 | 59635 | -2318 | | | 1399 | 526 | SLV 2 | 0.23 | No |
| fin. | 2 | 0 | -140872 | -6326 | | | 1399 | 526 | SLV 2 | 0.08 | No |
| ini. | 2 | 0 | -68314 | 6916 | | | 1399 | 526 | SLV 16 | 0.08 | No |
| fin. | 2 | 0 | 77034 | 2222 | | | 1399 | 526 | SLV 16 | 0.24 | No |
| ini. | 2 | 0 | 51349 | 922 | | | 1399 | 526 | SLV 8 | 0.57 | No |
| fin. | 2 | 0 | -127389 | -5268 | | | 1399 | 526 | SLV 8 | 0.1 | No |

### Tabella dei coefficienti di sicurezza minimi

| Stato limite | Coeff.s. | Comb. | Verifica |
|---|---|---|---|
| PF_SLV | 0.724 | SLV 3 | No |
| V_SLV | 0.071 | SLV 3 | No |
| PF_SLU | 2.178 | SLU 84 | Si |
| V_SLU | 0.099 | SLU 83 | No |

## Trave di accoppiamento 35

Verifiche condotte secondo D.M. 17-01-18 (N.T.C.)

### Dati geometrici

| X ini. | Y ini. | Z ini.inf. | Z ini.sup. | H ini. | X fin. | Y fin. | Z fin.inf. | Z fin.sup | H fin. | Luce | Spessore | R. Trazione |
|---|---|---|---|---|---|---|---|---|---|---|---|---|
| -2154.3 | -335.9 | 171 | 261 | 90 | -2254.3 | -335.9 | 171 | 261 | 90 | 100 | 28 | 3500 |

### Caratteristiche del materiale

(Circolare 7 21-01-19 C8.5.I) Muratura in mattoni pieni e malta di calce LC2_Corti

| fb_ | fhk | fvk0 | fhmedio | τ0 | fv0 | μ | ϕ | fvk,lim | E | G | FC |
|---|---|---|---|---|---|---|---|---|---|---|---|
| 12 | | | 17.25 | 0.9 | 2 | 0.577 | 0.767 | 0.65 | 32000 | 12800 | 1.2 |

### Verifiche a pressoflessione delle travi in muratura in combinazioni non sismiche

| Sezione | γM | N | M | Mu | Comb. | c.s. | Verifica |
|---|---|---|---|---|---|---|---|
| ini. | 3 | 10547 | 142131 | 103792 | SLU 80 | 0.73 | No |
| fin. | 3 | 10947 | -56983 | 103792 | SLU 80 | 1.82 | Si |
| ini. | 3 | 10760 | 142847 | 103792 | SLU 84 | 0.73 | No |
| fin. | 3 | 11138 | -56680 | 103792 | SLU 84 | 1.83 | Si |
| ini. | 3 | 12136 | 144549 | 103792 | SLU 73 | 0.72 | No |
| fin. | 3 | 12455 | -47993 | 103792 | SLU 73 | 2.16 | Si |
| ini. | 3 | 10505 | 139126 | 103792 | SLU 75 | 0.75 | No |

| Sezione | γM | N | M | Mu | Comb. | c.s. | Verifica |
|---|---|---|---|---|---|---|---|
| fin. | 3 | 10873 | -54610 | 103792 | SLU 75 | 1.9 | Si |
| ini. | 3 | 12235 | 148332 | 103792 | SLU 76 | 0.7 | No |
| fin. | 3 | 12586 | -50690 | 103792 | SLU 76 | 2.05 | Si |
| ini. | 3 | 10604 | 142909 | 103792 | SLU 78 | 0.73 | No |
| fin. | 3 | 11004 | -57307 | 103792 | SLU 78 | 1.81 | Si |
| ini. | 3 | 11531 | 135373 | 103792 | SLU 55 | 0.77 | No |
| fin. | 3 | 11831 | -42845 | 103792 | SLU 55 | 2.42 | Si |
| ini. | 3 | 10661 | 139064 | 103792 | SLU 82 | 0.75 | No |
| fin. | 3 | 11007 | -53983 | 103792 | SLU 82 | 1.92 | Si |
| ini. | 3 | 11406 | 134050 | 103792 | SLU 65 | 0.77 | No |
| fin. | 3 | 11702 | -42407 | 103792 | SLU 65 | 2.45 | Si |
| ini. | 3 | 11505 | 137833 | 103792 | SLU 68 | 0.75 | No |
| fin. | 3 | 11833 | -45104 | 103792 | SLU 68 | 2.3 | Si |

## Verifiche a taglio delle travi in muratura secondo §C8.7.1.3.1 in combinazioni non sismiche

| Sezione | γM | N | M | V | Vt | Vp | Vt fess. diag. | Vt,lim | Comb. | c.s. | Verifica |
|---|---|---|---|---|---|---|---|---|---|---|---|
| ini. | 3 | 0 | 127153 | -2327 | | | 873 | 329 | SLU 79 | 0.14 | No |
| fin. | 3 | 0 | -62378 | -1985 | | | 873 | 329 | SLU 79 | 0.17 | No |
| ini. | 3 | 0 | 148332 | -2077 | | | 873 | 329 | SLU 76 | 0.16 | No |
| fin. | 3 | 0 | -50690 | -2397 | | | 873 | 329 | SLU 76 | 0.14 | No |
| ini. | 3 | 0 | 142131 | -2228 | | | 873 | 329 | SLU 80 | 0.15 | No |
| fin. | 3 | 0 | -56983 | -2273 | | | 873 | 329 | SLU 80 | 0.14 | No |
| ini. | 3 | 0 | 127932 | -2343 | | | 873 | 329 | SLU 77 | 0.14 | No |
| fin. | 3 | 0 | -62701 | -1993 | | | 873 | 329 | SLU 77 | 0.16 | No |
| ini. | 3 | 0 | 144549 | -1991 | | | 873 | 329 | SLU 73 | 0.17 | No |
| fin. | 3 | 0 | -47993 | -2328 | | | 873 | 329 | SLU 73 | 0.14 | No |
| ini. | 3 | 0 | 142909 | -2244 | | | 873 | 329 | SLU 78 | 0.15 | No |
| fin. | 3 | 0 | -57307 | -2281 | | | 873 | 329 | SLU 78 | 0.14 | No |
| ini. | 3 | 0 | 124149 | -2258 | | | 873 | 329 | SLU 74 | 0.15 | No |
| fin. | 3 | 0 | -60004 | -1925 | | | 873 | 329 | SLU 74 | 0.17 | No |
| ini. | 3 | 0 | 142847 | -2232 | | | 873 | 329 | SLU 84 | 0.15 | No |
| fin. | 3 | 0 | -56680 | -2270 | | | 873 | 329 | SLU 84 | 0.14 | No |
| ini. | 3 | 0 | 124087 | -2245 | | | 873 | 329 | SLU 81 | 0.15 | No |
| fin. | 3 | 0 | -59378 | -1914 | | | 873 | 329 | SLU 81 | 0.17 | No |
| ini. | 3 | 0 | 127870 | -2331 | | | 873 | 329 | SLU 83 | 0.14 | No |
| fin. | 3 | 0 | -62075 | -1982 | | | 873 | 329 | SLU 83 | 0.17 | No |

## Verifiche a pressoflessione delle travi in muratura in combinazioni sismiche

| Sezione | γM | N | M | Mu | Comb. | c.s. | Verifica |
|---|---|---|---|---|---|---|---|
| ini. | 2 | -299 | 256653 | 121694 | SLV 3 | 0.47 | No |
| fin. | 2 | 1520 | -248252 | 121694 | SLV 3 | 0.49 | No |
| ini. | 2 | 11080 | -88521 | 121694 | SLV 14 | 1.37 | Si |
| fin. | 2 | 9772 | 169435 | 121694 | SLV 14 | 0.72 | No |
| ini. | 2 | 23715 | 208209 | 121694 | SLV 5 | 0.58 | No |
| fin. | 2 | 23705 | -45842 | 121694 | SLV 5 | 2.65 | Si |
| ini. | 2 | 10727 | 296488 | 121694 | SLV 2 | 0.41 | No |
| fin. | 2 | 12142 | -217306 | 121694 | SLV 2 | 0.56 | No |
| ini. | 2 | 23715 | 208209 | 121694 | SLV 6 | 0.58 | No |
| fin. | 2 | 23705 | -45842 | 121694 | SLV 6 | 2.65 | Si |
| ini. | 2 | 10727 | 296488 | 121694 | SLV 1 | 0.41 | No |
| fin. | 2 | 12142 | -217306 | 121694 | SLV 1 | 0.56 | No |
| ini. | 2 | 7462 | 174020 | 121694 | SLD 2 | 0.7 | No |
| fin. | 2 | 8238 | -116041 | 121694 | SLD 2 | 1.05 | Si |
| ini. | 2 | 11080 | -88521 | 121694 | SLV 13 | 1.37 | Si |
| fin. | 2 | 9772 | 169435 | 121694 | SLV 13 | 0.72 | No |
| ini. | 2 | -299 | 256653 | 121694 | SLV 4 | 0.47 | No |
| fin. | 2 | 1520 | -248252 | 121694 | SLV 4 | 0.49 | No |
| ini. | 2 | 7462 | 174020 | 121694 | SLD 1 | 0.7 | No |
| fin. | 2 | 8238 | -116041 | 121694 | SLD 1 | 1.05 | Si |

## Verifiche a taglio delle travi in muratura secondo §C8.7.1.3.1 in combinazioni sismiche

| Sezione | γM | N | M | V | Vt | Vp | Vt fess. diag. | Vt,lim | Comb. | c.s. | Verifica |
|---|---|---|---|---|---|---|---|---|---|---|---|
| ini. | 2 | 0 | 208209 | -2091 | | | 1310 | 493 | SLV 6 | 0.24 | No |
| fin. | 2 | 0 | -45842 | -6996 | | | 1310 | 493 | SLV 6 | 0.07 | No |
| ini. | 2 | 0 | 92706 | 701 | | | 1310 | 493 | SLV 10 | 0.7 | No |
| fin. | 2 | 0 | 70180 | -4378 | | | 1310 | 493 | SLV 10 | 0.11 | No |
| ini. | 2 | 0 | -40078 | -908 | | | 1310 | 493 | SLV 11 | 0.54 | No |
| fin. | 2 | 0 | -32975 | 4389 | | | 1310 | 493 | SLV 11 | 0.11 | No |
| ini. | 2 | 0 | 256653 | -6393 | | | 1310 | 493 | SLV 3 | 0.08 | No |
| fin. | 2 | 0 | -248252 | -4351 | | | 1310 | 493 | SLV 3 | 0.11 | No |
| ini. | 2 | 0 | 92706 | 701 | | | 1310 | 493 | SLV 9 | 0.7 | No |
| fin. | 2 | 0 | 70180 | -4378 | | | 1310 | 493 | SLV 9 | 0.11 | No |
| ini. | 2 | 0 | 296488 | -5910 | | | 1310 | 493 | SLV 2 | 0.08 | No |
| fin. | 2 | 0 | -217306 | -6982 | | | 1310 | 493 | SLV 2 | 0.07 | No |
| ini. | 2 | 0 | -40078 | -908 | | | 1310 | 493 | SLV 12 | 0.54 | No |
| fin. | 2 | 0 | -32975 | 4389 | | | 1310 | 493 | SLV 12 | 0.11 | No |
| ini. | 2 | 0 | 256653 | -6393 | | | 1310 | 493 | SLV 4 | 0.08 | No |
| fin. | 2 | 0 | -248252 | -4351 | | | 1310 | 493 | SLV 4 | 0.11 | No |
| ini. | 2 | 0 | 296488 | -5910 | | | 1310 | 493 | SLV 1 | 0.08 | No |
| fin. | 2 | 0 | -217306 | -6982 | | | 1310 | 493 | SLV 1 | 0.07 | No |
| ini. | 2 | 0 | 208209 | -2091 | | | 1310 | 493 | SLV 5 | 0.24 | No |
| fin. | 2 | 0 | -45842 | -6996 | | | 1310 | 493 | SLV 5 | 0.07 | No |

## Tabella dei coefficienti di sicurezza minimi

| Stato limite | Coeff.s. | Comb. | Verifica |
|---|---|---|---|
| PF_SLV | 0.41 | SLV 1 | No |
| V_SLV | 0.07 | SLV 5 | No |

| Stato limite | Coeff.s. | Comb. | Verifica |
|---|---|---|---|
| PF_SLU | 0.7 | SLU 76 | No |
| V_SLU | 0.137 | SLU 76 | No |

## Trave di accoppiamento 36

Verifiche condotte secondo D.M. 17-01-18 (N.T.C.)

### Dati geometrici

| X ini. | Y ini. | Z ini.inf. | Z ini.sup. | H ini. | X fin. | Y fin. | Z fin.inf. | Z fin.sup | H fin. | Luce | Spessore | R. Trazione |
|---|---|---|---|---|---|---|---|---|---|---|---|---|
| -2154.3 | -335.9 | 451 | 544 | 93 | -2254.3 | -335.9 | 451 | 544 | 93 | 100 | 28 | 3500 |

### Caratteristiche del materiale

(Circolare 7 21-01-19 C8.5.I) Muratura in mattoni pieni e malta di calce LC2_Corti

| fb_ | fhk | fvk0 | fhmedio | τ0 | fv0 | μ | ϕ | fvk,lim | E | G | FC |
|---|---|---|---|---|---|---|---|---|---|---|---|
| 12 | | | 17.25 | 0.9 | 2 | 0.577 | 0.767 | 0.65 | 32000 | 12800 | 1.2 |

### Verifiche a pressoflessione delle travi in muratura in combinazioni non sismiche

| Sezione | γM | N | M | Mu | Comb. | c.s. | Verifica |
|---|---|---|---|---|---|---|---|
| ini. | 3 | -539 | 36320 | 109042 | SLU 83 | 3 | Si |
| fin. | 3 | -3232 | -81855 | 109042 | SLU 83 | 1.33 | Si |
| ini. | 3 | -502 | 41478 | 109042 | SLU 82 | 2.63 | Si |
| fin. | 3 | -3320 | -80313 | 109042 | SLU 82 | 1.36 | Si |
| ini. | 3 | -381 | 43104 | 109042 | SLU 80 | 2.53 | Si |
| fin. | 3 | -3407 | -83520 | 109042 | SLU 80 | 1.31 | Si |
| ini. | 3 | -451 | 43006 | 109042 | SLU 84 | 2.54 | Si |
| fin. | 3 | -3416 | -83392 | 109042 | SLU 84 | 1.31 | Si |
| ini. | 3 | -475 | 36544 | 109042 | SLU 77 | 2.98 | Si |
| fin. | 3 | -3240 | -82476 | 109042 | SLU 77 | 1.32 | Si |
| ini. | 3 | -437 | 41702 | 109042 | SLU 75 | 2.61 | Si |
| fin. | 3 | -3328 | -80934 | 109042 | SLU 75 | 1.35 | Si |
| ini. | 3 | -470 | 36418 | 109042 | SLU 79 | 2.99 | Si |
| fin. | 3 | -3223 | -81984 | 109042 | SLU 79 | 1.33 | Si |
| ini. | 3 | -526 | 35016 | 109042 | SLU 74 | 3.11 | Si |
| fin. | 3 | -3145 | -79397 | 109042 | SLU 74 | 1.37 | Si |
| ini. | 3 | -386 | 43230 | 109042 | SLU 78 | 2.52 | Si |
| fin. | 3 | -3424 | -84013 | 109042 | SLU 78 | 1.3 | Si |
| ini. | 3 | -373 | 46033 | 109042 | SLU 76 | 2.37 | Si |
| fin. | 3 | -3433 | -81466 | 109042 | SLU 76 | 1.34 | Si |

### Verifiche a taglio delle travi in muratura secondo §C8.7.1.3.1 in combinazioni non sismiche

| Sezione | γM | N | M | V | Vt | Vp | Vt fess. diag. | Vt,lim | Comb. | c.s. | Verifica |
|---|---|---|---|---|---|---|---|---|---|---|---|
| ini. | 3 | 0 | 43104 | 692 | | | 933 | 351 | SLU 80 | 0.51 | No |
| fin. | 3 | 0 | -83520 | -5115 | | | 933 | 351 | SLU 80 | 0.07 | No |
| ini. | 3 | 0 | 41702 | 768 | | | 933 | 351 | SLU 75 | 0.46 | No |
| fin. | 3 | 0 | -80934 | -4986 | | | 933 | 351 | SLU 75 | 0.07 | No |
| ini. | 3 | 0 | 43230 | 711 | | | 933 | 351 | SLU 78 | 0.49 | No |
| fin. | 3 | 0 | -84013 | -5146 | | | 933 | 351 | SLU 78 | 0.07 | No |
| ini. | 3 | 0 | 36418 | 1140 | | | 933 | 351 | SLU 79 | 0.31 | No |
| fin. | 3 | 0 | -81984 | -5036 | | | 933 | 351 | SLU 79 | 0.07 | No |
| ini. | 3 | 0 | 34792 | 1356 | | | 933 | 351 | SLU 81 | 0.26 | No |
| fin. | 3 | 0 | -78776 | -4928 | | | 933 | 351 | SLU 81 | 0.07 | No |
| ini. | 3 | 0 | 43006 | 851 | | | 933 | 351 | SLU 84 | 0.41 | No |
| fin. | 3 | 0 | -83392 | -5166 | | | 933 | 351 | SLU 84 | 0.07 | No |
| ini. | 3 | 0 | 36544 | 1159 | | | 933 | 351 | SLU 77 | 0.3 | No |
| fin. | 3 | 0 | -82476 | -5067 | | | 933 | 351 | SLU 77 | 0.07 | No |
| ini. | 3 | 0 | 41478 | 908 | | | 933 | 351 | SLU 82 | 0.39 | No |
| fin. | 3 | 0 | -80313 | -5007 | | | 933 | 351 | SLU 82 | 0.07 | No |
| ini. | 3 | 0 | 46033 | 450 | | | 933 | 351 | SLU 76 | 0.78 | No |
| fin. | 3 | 0 | -81466 | -5008 | | | 933 | 351 | SLU 76 | 0.07 | No |
| ini. | 3 | 0 | 36320 | 1299 | | | 933 | 351 | SLU 83 | 0.27 | No |
| fin. | 3 | 0 | -81855 | -5088 | | | 933 | 351 | SLU 83 | 0.07 | No |

### Verifiche a pressoflessione delle travi in muratura in combinazioni sismiche

| Sezione | γM | N | M | Mu | Comb. | c.s. | Verifica |
|---|---|---|---|---|---|---|---|
| ini. | 2 | 1591 | 68531 | 126944 | SLD 1 | 1.85 | Si |
| fin. | 2 | -3729 | -116958 | 126944 | SLD 1 | 1.09 | Si |
| ini. | 2 | 3891 | 104267 | 126944 | SLV 3 | 1.22 | Si |
| fin. | 2 | -5170 | -187986 | 126944 | SLV 3 | 0.68 | No |
| ini. | 2 | 1628 | 94771 | 126944 | SLV 5 | 1.34 | Si |
| fin. | 2 | -4289 | -120055 | 126944 | SLV 5 | 1.06 | Si |
| ini. | 2 | 1428 | 58168 | 126944 | SLD 4 | 2.18 | Si |
| fin. | 2 | -3440 | -110637 | 126944 | SLD 4 | 1.15 | Si |
| ini. | 2 | 3891 | 104267 | 126944 | SLV 4 | 1.22 | Si |
| fin. | 2 | -5170 | -187986 | 126944 | SLV 4 | 0.68 | No |
| ini. | 2 | 1628 | 94771 | 126944 | SLV 6 | 1.34 | Si |
| fin. | 2 | -4289 | -120055 | 126944 | SLV 6 | 1.06 | Si |
| ini. | 2 | 4306 | 130333 | 126944 | SLV 1 | 0.97 | No |
| fin. | 2 | -5850 | -202587 | 126944 | SLV 1 | 0.63 | No |
| ini. | 2 | 1428 | 58168 | 126944 | SLD 3 | 2.18 | Si |
| fin. | 2 | -3440 | -110637 | 126944 | SLD 3 | 1.15 | Si |
| ini. | 2 | 1591 | 68531 | 126944 | SLD 2 | 1.85 | Si |
| fin. | 2 | -3729 | -116958 | 126944 | SLD 2 | 1.09 | Si |
| ini. | 2 | 4306 | 130333 | 126944 | SLV 2 | 0.97 | No |
| fin. | 2 | -5850 | -202587 | 126944 | SLV 2 | 0.63 | No |

### Verifiche a taglio delle travi in muratura secondo §C8.7.1.3.1 in combinazioni sismiche

| Sezione | γM | N | M | V | Vt | Vp | Vt fess. diag. | Vt,lim | Comb. | c.s. | Verifica |
|---|---|---|---|---|---|---|---|---|---|---|---|
| ini. | 2 | 0 | 104267 | -4256 | | | 1399 | 526 | SLV 3 | 0.12 | No |
| fin. | 2 | 0 | -187986 | -9336 | | | 1399 | 526 | SLV 3 | 0.06 | No |
| ini. | 2 | 0 | -84221 | 6924 | | | 1399 | 526 | SLV 15 | 0.08 | No |
| fin. | 2 | 0 | 96488 | 3450 | | | 1399 | 526 | SLV 15 | 0.15 | No |
| ini. | 2 | 0 | 68531 | -1773 | | | 1399 | 526 | SLD 1 | 0.3 | No |
| fin. | 2 | 0 | -116958 | -6138 | | | 1399 | 526 | SLD 1 | 0.09 | No |
| ini. | 2 | 0 | 94771 | -2564 | | | 1399 | 526 | SLV 6 | 0.21 | No |
| fin. | 2 | 0 | -120055 | -6267 | | | 1399 | 526 | SLV 6 | 0.08 | No |
| ini. | 2 | 0 | 130333 | -5281 | | | 1399 | 526 | SLV 1 | 0.1 | No |
| fin. | 2 | 0 | -202587 | -9985 | | | 1399 | 526 | SLV 1 | 0.05 | No |
| ini. | 2 | 0 | 130333 | -5281 | | | 1399 | 526 | SLV 2 | 0.1 | No |
| fin. | 2 | 0 | -202587 | -9985 | | | 1399 | 526 | SLV 2 | 0.05 | No |
| ini. | 2 | 0 | 68531 | -1773 | | | 1399 | 526 | SLD 2 | 0.3 | No |
| fin. | 2 | 0 | -116958 | -6138 | | | 1399 | 526 | SLD 2 | 0.09 | No |
| ini. | 2 | 0 | 94771 | -2564 | | | 1399 | 526 | SLV 5 | 0.21 | No |
| fin. | 2 | 0 | -120055 | -6267 | | | 1399 | 526 | SLV 5 | 0.08 | No |
| ini. | 2 | 0 | -84221 | 6924 | | | 1399 | 526 | SLV 16 | 0.08 | No |
| fin. | 2 | 0 | 96488 | 3450 | | | 1399 | 526 | SLV 16 | 0.15 | No |
| ini. | 2 | 0 | 104267 | -4256 | | | 1399 | 526 | SLV 4 | 0.12 | No |
| fin. | 2 | 0 | -187986 | -9336 | | | 1399 | 526 | SLV 4 | 0.06 | No |

### Tabella dei coefficienti di sicurezza minimi

| Stato limite | Coeff.s. | Comb. | Verifica |
|---|---|---|---|
| PF_SLV | 0.627 | SLV 1 | No |
| V_SLV | 0.053 | SLV 1 | No |
| PF_SLU | 1.298 | SLU 78 | Si |
| V_SLU | 0.068 | SLU 84 | No |

## Trave di accoppiamento 37

Verifiche condotte secondo D.M. 17-01-18 (N.T.C.)

### Dati geometrici

| X ini. | Y ini. | Z ini.inf. | Z ini.sup. | H ini. | X fin. | Y fin. | Z fin.inf. | Z fin.sup | H fin. | Luce | Spessore | R. Trazione |
|---|---|---|---|---|---|---|---|---|---|---|---|---|
| -1886.8 | -335.9 | 171 | 371 | 200 | -1936.8 | -335.9 | 171 | 371 | 200 | 50 | 28 | 3500 |

### Caratteristiche del materiale

(Circolare 7 21-01-19 C8.5.I) Muratura in mattoni pieni e malta di calce LC2_Corti

| fb_ | fhk | fvk0 | fhmedio | τ0 | fv0 | μ | ϕ | fvk,lim | E | G | FC |
|---|---|---|---|---|---|---|---|---|---|---|---|
| 12 | | | 17.25 | 0.9 | 2 | 0.577 | 0.767 | 0.65 | 32000 | 12800 | 1.2 |

### Verifiche a pressoflessione delle travi in muratura in combinazioni non sismiche

| Sezione | γM | N | M | Mu | Comb. | c.s. | Verifica |
|---|---|---|---|---|---|---|---|
| ini. | 3 | -3730 | -167251 | 296292 | SLU 82 | 1.77 | Si |
| fin. | 3 | 1051 | 481417 | 296292 | SLU 82 | 0.62 | No |
| ini. | 3 | -2904 | -85365 | 296292 | SLU 83 | 3.47 | Si |
| fin. | 3 | 818 | 460663 | 296292 | SLU 83 | 0.64 | No |
| ini. | 3 | -4248 | -226802 | 296292 | SLU 76 | 1.31 | Si |
| fin. | 3 | 1225 | 471093 | 296292 | SLU 76 | 0.63 | No |
| ini. | 3 | -3704 | -169870 | 296292 | SLU 75 | 1.74 | Si |
| fin. | 3 | 1046 | 463691 | 296292 | SLU 75 | 0.64 | No |
| ini. | 3 | -2845 | -83991 | 296292 | SLU 74 | 3.53 | Si |
| fin. | 3 | 777 | 445682 | 296292 | SLU 74 | 0.66 | No |
| ini. | 3 | -3762 | -171244 | 296292 | SLU 84 | 1.73 | Si |
| fin. | 3 | 1086 | 478673 | 296292 | SLU 84 | 0.62 | No |
| ini. | 3 | -3735 | -173863 | 296292 | SLU 78 | 1.7 | Si |
| fin. | 3 | 1081 | 460947 | 296292 | SLU 78 | 0.64 | No |
| ini. | 3 | -2872 | -81372 | 296292 | SLU 81 | 3.64 | Si |
| fin. | 3 | 782 | 463407 | 296292 | SLU 81 | 0.64 | No |
| ini. | 3 | -3708 | -173543 | 296292 | SLU 80 | 1.71 | Si |
| fin. | 3 | 1081 | 456343 | 296292 | SLU 80 | 0.65 | No |
| ini. | 3 | -4216 | -222809 | 296292 | SLU 73 | 1.33 | Si |
| fin. | 3 | 1190 | 473837 | 296292 | SLU 73 | 0.63 | No |

### Verifiche a taglio delle travi in muratura secondo §C8.7.1.3.1 in combinazioni non sismiche

| Sezione | γM | N | M | V | Vt | Vp | Vt fess. diag. | Vt,lim | Comb. | c.s. | Verifica |
|---|---|---|---|---|---|---|---|---|---|---|---|
| ini. | 3 | 0 | -222809 | 96 | | | 2157 | 812 | SLU 73 | 8.44 | Si |
| fin. | 3 | 0 | 473837 | 7485 | | | 2157 | 812 | SLU 73 | 0.11 | No |
| ini. | 3 | 0 | -173863 | -41 | | | 2157 | 812 | SLU 78 | 19.59 | Si |
| fin. | 3 | 0 | 460947 | 7407 | | | 2157 | 812 | SLU 78 | 0.11 | No |
| ini. | 3 | 0 | -87984 | 55 | | | 2157 | 812 | SLU 77 | 14.84 | Si |
| fin. | 3 | 0 | 442938 | 7420 | | | 2157 | 812 | SLU 77 | 0.11 | No |
| ini. | 3 | 0 | -169870 | 64 | | | 2157 | 812 | SLU 75 | 12.73 | Si |
| fin. | 3 | 0 | 463691 | 7492 | | | 2157 | 812 | SLU 75 | 0.11 | No |
| ini. | 3 | 0 | -171244 | 82 | | | 2157 | 812 | SLU 84 | 9.9 | Si |
| fin. | 3 | 0 | 478673 | 7753 | | | 2157 | 812 | SLU 84 | 0.1 | No |
| ini. | 3 | 0 | -167251 | 187 | | | 2157 | 812 | SLU 82 | 4.34 | Si |
| fin. | 3 | 0 | 481417 | 7838 | | | 2157 | 812 | SLU 82 | 0.1 | No |
| ini. | 3 | 0 | -81372 | 283 | | | 2157 | 812 | SLU 81 | 2.86 | Si |
| fin. | 3 | 0 | 463407 | 7852 | | | 2157 | 812 | SLU 81 | 0.1 | No |
| ini. | 3 | 0 | -85365 | 178 | | | 2157 | 812 | SLU 83 | 4.56 | Si |
| fin. | 3 | 0 | 460663 | 7767 | | | 2157 | 812 | SLU 83 | 0.1 | No |
| ini. | 3 | 0 | -226802 | -9 | | | 2157 | 812 | SLU 76 | 89.71 | Si |

| Sezione | γM | N | M | V | Vt | Vp | Vt fess. diag. | Vt,lim | Comb. | c.s. | Verifica |
|---|---|---|---|---|---|---|---|---|---|---|---|
| fin. | 3 | 0 | 471093 | 7399 | | | 2157 | 812 | SLU 76 | 0.11 | No |
| ini. | 3 | 0 | -83991 | 160 | | | 2157 | 812 | SLU 74 | 5.08 | Si |
| fin. | 3 | 0 | 445682 | 7505 | | | 2157 | 812 | SLU 74 | 0.11 | No |

### Verifiche a pressoflessione delle travi in muratura in combinazioni sismiche

| Sezione | γM | N | M | Mu | Comb. | c.s. | Verifica |
|---|---|---|---|---|---|---|---|
| ini. | 2 | 7752 | 624993 | 314194 | SLV 12 | 0.5 | No |
| fin. | 2 | 444 | 202696 | 314194 | SLV 12 | 1.55 | Si |
| ini. | 2 | 7752 | 624993 | 314194 | SLV 11 | 0.5 | No |
| fin. | 2 | 444 | 202696 | 314194 | SLV 11 | 1.55 | Si |
| ini. | 2 | -11755 | -741381 | 314194 | SLV 5 | 0.42 | No |
| fin. | 2 | 553 | 419396 | 314194 | SLV 5 | 0.75 | No |
| ini. | 2 | 7643 | 595187 | 314194 | SLV 8 | 0.53 | No |
| fin. | 2 | 1868 | 85649 | 314194 | SLV 8 | 3.67 | Si |
| ini. | 2 | -11647 | -711575 | 314194 | SLV 9 | 0.44 | No |
| fin. | 2 | -872 | 536443 | 314194 | SLV 9 | 0.59 | No |
| ini. | 2 | 7643 | 595187 | 314194 | SLV 7 | 0.53 | No |
| fin. | 2 | 1868 | 85649 | 314194 | SLV 7 | 3.67 | Si |
| ini. | 2 | -4731 | -209003 | 314194 | SLV 13 | 1.5 | Si |
| fin. | 2 | -2074 | 556186 | 314194 | SLV 13 | 0.56 | No |
| ini. | 2 | -4731 | -209003 | 314194 | SLV 14 | 1.5 | Si |
| fin. | 2 | -2074 | 556186 | 314194 | SLV 14 | 0.56 | No |
| ini. | 2 | -11647 | -711575 | 314194 | SLV 10 | 0.44 | No |
| fin. | 2 | -872 | 536443 | 314194 | SLV 10 | 0.59 | No |
| ini. | 2 | -11755 | -741381 | 314194 | SLV 6 | 0.42 | No |
| fin. | 2 | 553 | 419396 | 314194 | SLV 6 | 0.75 | No |

### Verifiche a taglio delle travi in muratura secondo §C8.7.1.3.1 in combinazioni sismiche

| Sezione | γM | N | M | V | Vt | Vp | Vt fess. diag. | Vt,lim | Comb. | c.s. | Verifica |
|---|---|---|---|---|---|---|---|---|---|---|---|
| ini. | 2 | 0 | -115719 | 3517 | | | 3235 | 1217 | SLD 14 | 0.35 | No |
| fin. | 2 | 0 | 415708 | 9124 | | | 3235 | 1217 | SLD 14 | 0.13 | No |
| ini. | 2 | 0 | -308355 | -8909 | | | 3235 | 1217 | SLV 1 | 0.14 | No |
| fin. | 2 | 0 | 166030 | -2506 | | | 3235 | 1217 | SLV 1 | 0.49 | No |
| ini. | 2 | 0 | -115719 | 3517 | | | 3235 | 1217 | SLD 13 | 0.35 | No |
| fin. | 2 | 0 | 415708 | 9124 | | | 3235 | 1217 | SLD 13 | 0.13 | No |
| ini. | 2 | 0 | -711575 | 429 | | | 3235 | 1217 | SLV 9 | 2.84 | Si |
| fin. | 2 | 0 | 536443 | 9962 | | | 3235 | 1217 | SLV 9 | 0.12 | No |
| ini. | 2 | 0 | 191968 | 9274 | | | 3235 | 1217 | SLV 16 | 0.13 | No |
| fin. | 2 | 0 | 456062 | 13024 | | | 3235 | 1217 | SLV 16 | 0.09 | No |
| ini. | 2 | 0 | -308355 | -8909 | | | 3235 | 1217 | SLV 2 | 0.14 | No |
| fin. | 2 | 0 | 166030 | -2506 | | | 3235 | 1217 | SLV 2 | 0.49 | No |
| ini. | 2 | 0 | 191968 | 9274 | | | 3235 | 1217 | SLV 15 | 0.13 | No |
| fin. | 2 | 0 | 456062 | 13024 | | | 3235 | 1217 | SLV 15 | 0.09 | No |
| ini. | 2 | 0 | -711575 | 429 | | | 3235 | 1217 | SLV 10 | 2.84 | Si |
| fin. | 2 | 0 | 536443 | 9962 | | | 3235 | 1217 | SLV 10 | 0.12 | No |
| ini. | 2 | 0 | -209003 | 7908 | | | 3235 | 1217 | SLV 13 | 0.15 | No |
| fin. | 2 | 0 | 556186 | 14331 | | | 3235 | 1217 | SLV 13 | 0.08 | No |
| ini. | 2 | 0 | -209003 | 7908 | | | 3235 | 1217 | SLV 14 | 0.15 | No |
| fin. | 2 | 0 | 556186 | 14331 | | | 3235 | 1217 | SLV 14 | 0.08 | No |

### Tabella dei coefficienti di sicurezza minimi

| Stato limite | Coeff.s. | Comb. | Verifica |
|---|---|---|---|
| PF_SLV | 0.424 | SLV 5 | No |
| V_SLV | 0.085 | SLV 13 | No |
| PF_SLU | 0.615 | SLU 82 | No |
| V_SLU | 0.103 | SLU 81 | No |

## Trave di accoppiamento 38

Verifiche condotte secondo D.M. 17-01-18 (N.T.C.)

### Dati geometrici

| X ini. | Y ini. | Z ini.inf. | Z ini.sup. | H ini. | X fin. | Y fin. | Z fin.inf. | Z fin.sup | H fin. | Luce | Spessore | R. Trazione |
|---|---|---|---|---|---|---|---|---|---|---|---|---|
| -1886.8 | -335.9 | 451 | 544 | 93 | -1936.8 | -335.9 | 451 | 544 | 93 | 50 | 28 | 3500 |

### Caratteristiche del materiale

(Circolare 7 21-01-19 C8.5.I) Muratura in mattoni pieni e malta di calce LC2_Corti

| fb_ | fhk | fvk0 | fhmedio | τ0 | fv0 | μ | ϕ | fvk,lim | E | G | FC |
|---|---|---|---|---|---|---|---|---|---|---|---|
| 12 | | | 17.25 | 0.9 | 2 | 0.577 | 0.767 | 0.65 | 32000 | 12800 | 1.2 |

### Verifiche a pressoflessione delle travi in muratura in combinazioni non sismiche

| Sezione | γM | N | M | Mu | Comb. | c.s. | Verifica |
|---|---|---|---|---|---|---|---|
| ini. | 3 | 265 | -35811 | 109042 | SLU 84 | 3.04 | Si |
| fin. | 3 | 725 | 31514 | 109042 | SLU 84 | 3.46 | Si |
| ini. | 3 | 89 | -33637 | 109042 | SLU 83 | 3.24 | Si |
| fin. | 3 | 491 | 24840 | 109042 | SLU 83 | 4.39 | Si |
| ini. | 3 | 438 | -34424 | 109042 | SLU 73 | 3.17 | Si |
| fin. | 3 | 912 | 36653 | 109042 | SLU 73 | 2.97 | Si |
| ini. | 3 | 379 | -35642 | 109042 | SLU 76 | 3.06 | Si |
| fin. | 3 | 856 | 34680 | 109042 | SLU 76 | 3.14 | Si |
| ini. | 3 | 203 | -35412 | 109042 | SLU 80 | 3.08 | Si |
| fin. | 3 | 643 | 28257 | 109042 | SLU 80 | 3.86 | Si |
| ini. | 3 | 285 | -34049 | 109042 | SLU 75 | 3.2 | Si |
| fin. | 3 | 723 | 30845 | 109042 | SLU 75 | 3.54 | Si |

| Sezione | γM | N | M | Mu | Comb. | c.s. | Verifica |
|---|---|---|---|---|---|---|---|
| ini. | 3 | 324 | -34593 | 109042 | SLU 82 | 3.15 | Si |
| fin. | 3 | 782 | 33487 | 109042 | SLU 82 | 3.26 | Si |
| ini. | 3 | 226 | -35268 | 109042 | SLU 78 | 3.09 | Si |
| fin. | 3 | 666 | 28872 | 109042 | SLU 78 | 3.78 | Si |
| ini. | 3 | 478 | -31688 | 109042 | SLU 52 | 3.44 | Si |
| fin. | 3 | 918 | 35394 | 109042 | SLU 52 | 3.08 | Si |
| ini. | 3 | 431 | -30648 | 109042 | SLU 65 | 3.56 | Si |
| fin. | 3 | 851 | 33658 | 109042 | SLU 65 | 3.24 | Si |

## Verifiche a taglio delle travi in muratura secondo §C8.7.1.3.1 in combinazioni non sismiche

| Sezione | γM | N | M | V | Vt | Vp | Vt fess. diag. | Vt,lim | Comb. | c.s. | Verifica |
|---|---|---|---|---|---|---|---|---|---|---|---|
| ini. | 3 | 0 | -32419 | 2815 | | | 1003 | 377 | SLU 81 | 0.13 | No |
| fin. | 3 | 0 | 26813 | -1350 | | | 1003 | 377 | SLU 81 | 0.28 | No |
| ini. | 3 | 0 | -34049 | 2906 | | | 1003 | 377 | SLU 75 | 0.13 | No |
| fin. | 3 | 0 | 30845 | -1053 | | | 1003 | 377 | SLU 75 | 0.36 | No |
| ini. | 3 | 0 | -35412 | 2876 | | | 1003 | 377 | SLU 80 | 0.13 | No |
| fin. | 3 | 0 | 28257 | -1060 | | | 1003 | 377 | SLU 80 | 0.36 | No |
| ini. | 3 | 0 | -35811 | 3016 | | | 1003 | 377 | SLU 84 | 0.13 | No |
| fin. | 3 | 0 | 31514 | -1086 | | | 1003 | 377 | SLU 84 | 0.35 | No |
| ini. | 3 | 0 | -34593 | 3024 | | | 1003 | 377 | SLU 82 | 0.12 | No |
| fin. | 3 | 0 | 33487 | -1059 | | | 1003 | 377 | SLU 82 | 0.36 | No |
| ini. | 3 | 0 | -35268 | 2898 | | | 1003 | 377 | SLU 78 | 0.13 | No |
| fin. | 3 | 0 | 28872 | -1081 | | | 1003 | 377 | SLU 78 | 0.35 | No |
| ini. | 3 | 0 | -35642 | 3023 | | | 1003 | 377 | SLU 76 | 0.12 | No |
| fin. | 3 | 0 | 34680 | -838 | | | 1003 | 377 | SLU 76 | 0.45 | No |
| ini. | 3 | 0 | -34424 | 3030 | | | 1003 | 377 | SLU 73 | 0.12 | No |
| fin. | 3 | 0 | 36653 | -811 | | | 1003 | 377 | SLU 73 | 0.47 | No |
| ini. | 3 | 0 | -31688 | 2810 | | | 1003 | 377 | SLU 52 | 0.13 | No |
| fin. | 3 | 0 | 35394 | -646 | | | 1003 | 377 | SLU 52 | 0.58 | No |
| ini. | 3 | 0 | -33637 | 2808 | | | 1003 | 377 | SLU 83 | 0.13 | No |
| fin. | 3 | 0 | 24840 | -1377 | | | 1003 | 377 | SLU 83 | 0.27 | No |

## Verifiche a pressoflessione delle travi in muratura in combinazioni sismiche

| Sezione | γM | N | M | Mu | Comb. | c.s. | Verifica |
|---|---|---|---|---|---|---|---|
| ini. | 2 | 1801 | -32594 | 126944 | SLV 14 | 3.89 | Si |
| fin. | 2 | 2909 | 114559 | 126944 | SLV 14 | 1.11 | Si |
| ini. | 2 | 146 | -64148 | 126944 | SLV 16 | 1.98 | Si |
| fin. | 2 | 1328 | 78856 | 126944 | SLV 16 | 1.61 | Si |
| ini. | 2 | -2385 | -81988 | 126944 | SLV 12 | 1.55 | Si |
| fin. | 2 | -1739 | -17953 | 126944 | SLV 12 | 7.07 | Si |
| ini. | 2 | 1801 | -32594 | 126944 | SLV 13 | 3.89 | Si |
| fin. | 2 | 2909 | 114559 | 126944 | SLV 13 | 1.11 | Si |
| ini. | 2 | -2385 | -81988 | 126944 | SLV 11 | 1.55 | Si |
| fin. | 2 | -1739 | -17953 | 126944 | SLV 11 | 7.07 | Si |
| ini. | 2 | 3133 | 23192 | 126944 | SLV 10 | 5.47 | Si |
| fin. | 2 | 3531 | 101056 | 126944 | SLV 10 | 1.26 | Si |
| ini. | 2 | 3133 | 23192 | 126944 | SLV 9 | 5.47 | Si |
| fin. | 2 | 3531 | 101056 | 126944 | SLV 9 | 1.26 | Si |
| ini. | 2 | -1568 | -9938 | 126944 | SLV 4 | 12.77 | Si |
| fin. | 2 | -2164 | -78733 | 126944 | SLV 4 | 1.61 | Si |
| ini. | 2 | -1568 | -9938 | 126944 | SLV 3 | 12.77 | Si |
| fin. | 2 | -2164 | -78733 | 126944 | SLV 3 | 1.61 | Si |
| ini. | 2 | 146 | -64148 | 126944 | SLV 15 | 1.98 | Si |
| fin. | 2 | 1328 | 78856 | 126944 | SLV 15 | 1.61 | Si |

## Verifiche a taglio delle travi in muratura secondo §C8.7.1.3.1 in combinazioni sismiche

| Sezione | γM | N | M | V | Vt | Vp | Vt fess. diag. | Vt,lim | Comb. | c.s. | Verifica |
|---|---|---|---|---|---|---|---|---|---|---|---|
| ini. | 2 | 0 | 21616 | -1292 | | | 1504 | 566 | SLV 2 | 0.44 | No |
| fin. | 2 | 0 | -43030 | -4389 | | | 1504 | 566 | SLV 2 | 0.13 | No |
| ini. | 2 | 0 | -26405 | 3296 | | | 1504 | 566 | SLD 14 | 0.17 | No |
| fin. | 2 | 0 | 58635 | 136 | | | 1504 | 566 | SLD 14 | 4.16 | Si |
| ini. | 2 | 0 | -32594 | 5234 | | | 1504 | 566 | SLV 13 | 0.11 | No |
| fin. | 2 | 0 | 114559 | 1485 | | | 1504 | 566 | SLV 13 | 0.38 | No |
| ini. | 2 | 0 | -26405 | 3296 | | | 1504 | 566 | SLD 13 | 0.17 | No |
| fin. | 2 | 0 | 58635 | 136 | | | 1504 | 566 | SLD 13 | 4.16 | Si |
| ini. | 2 | 0 | -32594 | 5234 | | | 1504 | 566 | SLV 14 | 0.11 | No |
| fin. | 2 | 0 | 114559 | 1485 | | | 1504 | 566 | SLV 14 | 0.38 | No |
| ini. | 2 | 0 | -64148 | 5025 | | | 1504 | 566 | SLV 15 | 0.11 | No |
| fin. | 2 | 0 | 78856 | 2588 | | | 1504 | 566 | SLV 15 | 0.22 | No |
| ini. | 2 | 0 | 39456 | 1236 | | | 1504 | 566 | SLV 6 | 0.46 | No |
| fin. | 2 | 0 | 53780 | -3620 | | | 1504 | 566 | SLV 6 | 0.16 | No |
| ini. | 2 | 0 | 39456 | 1236 | | | 1504 | 566 | SLV 5 | 0.46 | No |
| fin. | 2 | 0 | 53780 | -3620 | | | 1504 | 566 | SLV 5 | 0.16 | No |
| ini. | 2 | 0 | 21616 | -1292 | | | 1504 | 566 | SLV 1 | 0.44 | No |
| fin. | 2 | 0 | -43030 | -4389 | | | 1504 | 566 | SLV 1 | 0.13 | No |
| ini. | 2 | 0 | -64148 | 5025 | | | 1504 | 566 | SLV 16 | 0.11 | No |
| fin. | 2 | 0 | 78856 | 2588 | | | 1504 | 566 | SLV 16 | 0.22 | No |

## Tabella dei coefficienti di sicurezza minimi

| Stato limite | Coeff.s. | Comb. | Verifica |
|---|---|---|---|
| PF_SLV | 1.108 | SLV 13 | Si |
| V_SLV | 0.108 | SLV 13 | No |
| PF_SLU | 2.975 | SLU 73 | Si |
| V_SLU | 0.125 | SLU 73 | No |

# Trave di accoppiamento 39

Verifiche condotte secondo D.M. 17-01-18 (N.T.C.)

## Dati geometrici

| X ini. | Y ini. | Z ini.inf. | Z ini.sup. | H ini. | X fin. | Y fin. | Z fin.inf. | Z fin.sup | H fin. | Luce | Spessore | R. Trazione |
|---|---|---|---|---|---|---|---|---|---|---|---|---|
| -1731.3 | -335.9 | 171 | 261 | 90 | -1831.3 | -335.9 | 171 | 261 | 90 | 100 | 28 | 3500 |

## Caratteristiche del materiale

(Circolare 7 21-01-19 C8.5.I) Muratura in mattoni pieni e malta di calce LC2_Corti

| fb_ | fhk | fvk0 | fhmedio | τ0 | fv0 | μ | ϕ | fvk,lim | E | G | FC |
|---|---|---|---|---|---|---|---|---|---|---|---|
| 12 | | | 17.25 | 0.9 | 2 | 0.577 | 0.767 | 0.65 | 32000 | 12800 | 1.2 |

## Verifiche a pressoflessione delle travi in muratura in combinazioni non sismiche

| Sezione | γM | N | M | Mu | Comb. | c.s. | Verifica |
|---|---|---|---|---|---|---|---|
| ini. | 3 | -4157 | -116122 | 103792 | SLU 65 | 0.89 | No |
| fin. | 3 | -4834 | -89325 | 103792 | SLU 65 | 1.16 | Si |
| ini. | 3 | -4541 | -122092 | 103792 | SLU 76 | 0.85 | No |
| fin. | 3 | -5130 | -98383 | 103792 | SLU 76 | 1.05 | Si |
| ini. | 3 | -4004 | -120056 | 103792 | SLU 61 | 0.86 | No |
| fin. | 3 | -4294 | -72628 | 103792 | SLU 61 | 1.43 | Si |
| ini. | 3 | -4368 | -121993 | 103792 | SLU 84 | 0.85 | No |
| fin. | 3 | -4550 | -84222 | 103792 | SLU 84 | 1.23 | Si |
| ini. | 3 | -3906 | -113949 | 103792 | SLU 83 | 0.91 | No |
| fin. | 3 | -3503 | -60794 | 103792 | SLU 83 | 1.71 | Si |
| ini. | 3 | -4177 | -120156 | 103792 | SLU 52 | 0.86 | No |
| fin. | 3 | -4875 | -86790 | 103792 | SLU 52 | 1.2 | Si |
| ini. | 3 | -4297 | -128302 | 103792 | SLU 82 | 0.81 | No |
| fin. | 3 | -4528 | -78562 | 103792 | SLU 82 | 1.32 | Si |
| ini. | 3 | -3835 | -120259 | 103792 | SLU 81 | 0.86 | No |
| fin. | 3 | -3481 | -55134 | 103792 | SLU 81 | 1.88 | Si |
| ini. | 3 | -4253 | -119377 | 103792 | SLU 75 | 0.87 | No |
| fin. | 3 | -4462 | -82087 | 103792 | SLU 75 | 1.26 | Si |
| ini. | 3 | -4470 | -128401 | 103792 | SLU 73 | 0.81 | No |
| fin. | 3 | -5109 | -92723 | 103792 | SLU 73 | 1.12 | Si |

## Verifiche a taglio delle travi in muratura secondo §C8.7.1.3.1 in combinazioni non sismiche

| Sezione | γM | N | M | V | Vt | Vp | Vt fess. diag. | Vt,lim | Comb. | c.s. | Verifica |
|---|---|---|---|---|---|---|---|---|---|---|---|
| ini. | 3 | 0 | -128401 | -381 | | | 873 | 329 | SLU 73 | 0.86 | No |
| fin. | 3 | 0 | -92723 | 3943 | | | 873 | 329 | SLU 73 | 0.08 | No |
| ini. | 3 | 0 | -113067 | -664 | | | 873 | 329 | SLU 78 | 0.5 | No |
| fin. | 3 | 0 | -87747 | 3583 | | | 873 | 329 | SLU 78 | 0.09 | No |
| ini. | 3 | 0 | -122092 | -525 | | | 873 | 329 | SLU 76 | 0.63 | No |
| fin. | 3 | 0 | -98383 | 3817 | | | 873 | 329 | SLU 76 | 0.09 | No |
| ini. | 3 | 0 | -116122 | -356 | | | 873 | 329 | SLU 65 | 0.92 | No |
| fin. | 3 | 0 | -89325 | 3578 | | | 873 | 329 | SLU 65 | 0.09 | No |
| ini. | 3 | 0 | -121993 | -555 | | | 873 | 329 | SLU 84 | 0.59 | No |
| fin. | 3 | 0 | -84222 | 3798 | | | 873 | 329 | SLU 84 | 0.09 | No |
| ini. | 3 | 0 | -120156 | -294 | | | 873 | 329 | SLU 52 | 1.12 | Si |
| fin. | 3 | 0 | -86790 | 3684 | | | 873 | 329 | SLU 52 | 0.09 | No |
| ini. | 3 | 0 | -120056 | -325 | | | 873 | 329 | SLU 61 | 1.01 | Si |
| fin. | 3 | 0 | -72628 | 3665 | | | 873 | 329 | SLU 61 | 0.09 | No |
| ini. | 3 | 0 | -128302 | -411 | | | 873 | 329 | SLU 82 | 0.8 | No |
| fin. | 3 | 0 | -78562 | 3924 | | | 873 | 329 | SLU 82 | 0.08 | No |
| ini. | 3 | 0 | -119377 | -519 | | | 873 | 329 | SLU 75 | 0.63 | No |
| fin. | 3 | 0 | -82087 | 3709 | | | 873 | 329 | SLU 75 | 0.09 | No |
| ini. | 3 | 0 | -120259 | -440 | | | 873 | 329 | SLU 81 | 0.75 | No |
| fin. | 3 | 0 | -55134 | 3661 | | | 873 | 329 | SLU 81 | 0.09 | No |

## Verifiche a pressoflessione delle travi in muratura in combinazioni sismiche

| Sezione | γM | N | M | Mu | Comb. | c.s. | Verifica |
|---|---|---|---|---|---|---|---|
| ini. | 2 | -3892 | -313524 | 121694 | SLV 14 | 0.39 | No |
| fin. | 2 | -6008 | 103343 | 121694 | SLV 14 | 1.18 | Si |
| ini. | 2 | 308 | -241838 | 121694 | SLV 16 | 0.5 | No |
| fin. | 2 | 403 | 138551 | 121694 | SLV 16 | 0.88 | No |
| ini. | 2 | -5570 | 80420 | 121694 | SLV 1 | 1.51 | Si |
| fin. | 2 | -5208 | -215237 | 121694 | SLV 1 | 0.57 | No |
| ini. | 2 | -3139 | -180505 | 121694 | SLD 14 | 0.67 | No |
| fin. | 2 | -3856 | 22949 | 121694 | SLD 14 | 5.3 | Si |
| ini. | 2 | 308 | -241838 | 121694 | SLV 15 | 0.5 | No |
| fin. | 2 | 403 | 138551 | 121694 | SLV 15 | 0.88 | No |
| ini. | 2 | -3892 | -313524 | 121694 | SLV 13 | 0.39 | No |
| fin. | 2 | -6008 | 103343 | 121694 | SLV 13 | 1.18 | Si |
| ini. | 2 | -9379 | -259276 | 121694 | SLV 10 | 0.47 | No |
| fin. | 2 | -13207 | -49236 | 121694 | SLV 10 | 2.47 | Si |
| ini. | 2 | -5570 | 80420 | 121694 | SLV 2 | 1.51 | Si |
| fin. | 2 | -5208 | -215237 | 121694 | SLV 2 | 0.57 | No |
| ini. | 2 | -9379 | -259276 | 121694 | SLV 9 | 0.47 | No |
| fin. | 2 | -13207 | -49236 | 121694 | SLV 9 | 2.47 | Si |
| ini. | 2 | -3139 | -180505 | 121694 | SLD 13 | 0.67 | No |
| fin. | 2 | -3856 | 22949 | 121694 | SLD 13 | 5.3 | Si |

## Verifiche a taglio delle travi in muratura secondo §C8.7.1.3.1 in combinazioni sismiche

| Sezione | γM | N | M | V | Vt | Vp | Vt fess. diag. | Vt,lim | Comb. | c.s. | Verifica |
|---|---|---|---|---|---|---|---|---|---|---|---|
| ini. | 2 | 0 | -259276 | 6780 | | | 1310 | 493 | SLV 10 | 0.07 | No |
| fin. | 2 | 0 | -49236 | 7114 | | | 1310 | 493 | SLV 10 | 0.07 | No |
| ini. | 2 | 0 | 152106 | -6806 | | | 1310 | 493 | SLV 3 | 0.07 | No |

| Sezione | γM | N | M | V | Vt | Vp | Vt fess. diag. | Vt,lim | Comb. | c.s. | Verifica |
|---|---|---|---|---|---|---|---|---|---|---|---|
| fin. | 2 | 0 | -180029 | -3258 | | | 1310 | 493 | SLV 3 | 0.15 | No |
| ini. | 2 | 0 | -259276 | 6780 | | | 1310 | 493 | SLV 9 | 0.07 | No |
| fin. | 2 | 0 | -49236 | 7114 | | | 1310 | 493 | SLV 9 | 0.07 | No |
| ini. | 2 | 0 | 97858 | -7380 | | | 1310 | 493 | SLV 8 | 0.07 | No |
| fin. | 2 | 0 | -27450 | -2189 | | | 1310 | 493 | SLV 8 | 0.23 | No |
| ini. | 2 | 0 | 152106 | -6806 | | | 1310 | 493 | SLV 4 | 0.07 | No |
| fin. | 2 | 0 | -180029 | -3258 | | | 1310 | 493 | SLV 4 | 0.15 | No |
| ini. | 2 | 0 | -313524 | 6206 | | | 1310 | 493 | SLV 13 | 0.08 | No |
| fin. | 2 | 0 | 103343 | 8183 | | | 1310 | 493 | SLV 13 | 0.06 | No |
| ini. | 2 | 0 | -241838 | 2824 | | | 1310 | 493 | SLV 16 | 0.17 | No |
| fin. | 2 | 0 | 138551 | 6247 | | | 1310 | 493 | SLV 16 | 0.08 | No |
| ini. | 2 | 0 | -313524 | 6206 | | | 1310 | 493 | SLV 14 | 0.08 | No |
| fin. | 2 | 0 | 103343 | 8183 | | | 1310 | 493 | SLV 14 | 0.06 | No |
| ini. | 2 | 0 | 97858 | -7380 | | | 1310 | 493 | SLV 7 | 0.07 | No |
| fin. | 2 | 0 | -27450 | -2189 | | | 1310 | 493 | SLV 7 | 0.23 | No |
| ini. | 2 | 0 | -241838 | 2824 | | | 1310 | 493 | SLV 15 | 0.17 | No |
| fin. | 2 | 0 | 138551 | 6247 | | | 1310 | 493 | SLV 15 | 0.08 | No |

### Tabella dei coefficienti di sicurezza minimi

| Stato limite | Coeff.s. | Comb. | Verifica |
|---|---|---|---|
| PF_SLV | 0.388 | SLV 13 | No |
| V_SLV | 0.06 | SLV 13 | No |
| PF_SLU | 0.808 | SLU 73 | No |
| V_SLU | 0.083 | SLU 73 | No |

## Trave di accoppiamento 40

Verifiche condotte secondo D.M. 17-01-18 (N.T.C.)

### Dati geometrici

| X ini. | Y ini. | Z ini.inf. | Z ini.sup. | H ini. | X fin. | Y fin. | Z fin.inf. | Z fin.sup | H fin. | Luce | Spessore | R. Trazione |
|---|---|---|---|---|---|---|---|---|---|---|---|---|
| -1731.3 | -335.9 | 451 | 544 | 93 | -1831.3 | -335.9 | 451 | 544 | 93 | 100 | 28 | 3500 |

### Caratteristiche del materiale

(Circolare 7 21-01-19 C8.5.I) Muratura in mattoni pieni e malta di calce LC2_Corti

| fb_ | fhk | fvk0 | fhmedio | τ0 | fv0 | μ | ϕ | fvk,lim | E | G | FC |
|---|---|---|---|---|---|---|---|---|---|---|---|
| 12 | | | 17.25 | 0.9 | 2 | 0.577 | 0.767 | 0.65 | 32000 | 12800 | 1.2 |

### Verifiche a pressoflessione delle travi in muratura in combinazioni non sismiche

| Sezione | γM | N | M | Mu | Comb. | c.s. | Verifica |
|---|---|---|---|---|---|---|---|
| ini. | 3 | -1734 | -27648 | 109042 | SLU 61 | 3.94 | Si |
| fin. | 3 | -217 | -7873 | 109042 | SLU 61 | 13.85 | Si |
| ini. | 3 | -1590 | -28189 | 109042 | SLU 77 | 3.87 | Si |
| fin. | 3 | -564 | -19373 | 109042 | SLU 77 | 5.63 | Si |
| ini. | 3 | -1901 | -28650 | 109042 | SLU 82 | 3.81 | Si |
| fin. | 3 | -320 | -10484 | 109042 | SLU 82 | 10.4 | Si |
| ini. | 3 | -1544 | -27789 | 109042 | SLU 79 | 3.92 | Si |
| fin. | 3 | -579 | -20089 | 109042 | SLU 79 | 5.43 | Si |
| ini. | 3 | -1744 | -29488 | 109042 | SLU 74 | 3.7 | Si |
| fin. | 3 | -507 | -15684 | 109042 | SLU 74 | 6.95 | Si |
| ini. | 3 | -1946 | -31930 | 109042 | SLU 81 | 3.42 | Si |
| fin. | 3 | -494 | -13317 | 109042 | SLU 81 | 8.19 | Si |
| ini. | 3 | -1627 | -29629 | 109042 | SLU 62 | 3.68 | Si |
| fin. | 3 | -448 | -14396 | 109042 | SLU 62 | 7.57 | Si |
| ini. | 3 | -1793 | -30631 | 109042 | SLU 83 | 3.56 | Si |
| fin. | 3 | -551 | -17006 | 109042 | SLU 83 | 6.41 | Si |
| ini. | 3 | -1578 | -28486 | 109042 | SLU 53 | 3.83 | Si |
| fin. | 3 | -404 | -13073 | 109042 | SLU 53 | 8.34 | Si |
| ini. | 3 | -1780 | -30927 | 109042 | SLU 60 | 3.53 | Si |
| fin. | 3 | -391 | -10707 | 109042 | SLU 60 | 10.18 | Si |

### Verifiche a taglio delle travi in muratura secondo §C8.7.1.3.1 in combinazioni non sismiche

| Sezione | γM | N | M | V | Vt | Vp | Vt fess. diag. | Vt,lim | Comb. | c.s. | Verifica |
|---|---|---|---|---|---|---|---|---|---|---|---|
| ini. | 3 | 0 | -28650 | 4746 | | | 933 | 351 | SLU 82 | 0.07 | No |
| fin. | 3 | 0 | -10484 | -3062 | | | 933 | 351 | SLU 82 | 0.11 | No |
| ini. | 3 | 0 | -24920 | 4570 | | | 933 | 351 | SLU 73 | 0.08 | No |
| fin. | 3 | 0 | -7988 | -2881 | | | 933 | 351 | SLU 73 | 0.12 | No |
| ini. | 3 | 0 | -24910 | 4381 | | | 933 | 351 | SLU 78 | 0.08 | No |
| fin. | 3 | 0 | -16539 | -3255 | | | 933 | 351 | SLU 78 | 0.11 | No |
| ini. | 3 | 0 | -26208 | 4494 | | | 933 | 351 | SLU 75 | 0.08 | No |
| fin. | 3 | 0 | -12850 | -3088 | | | 933 | 351 | SLU 75 | 0.11 | No |
| ini. | 3 | 0 | -31930 | 4702 | | | 933 | 351 | SLU 81 | 0.07 | No |
| fin. | 3 | 0 | -13317 | -3132 | | | 933 | 351 | SLU 81 | 0.11 | No |
| ini. | 3 | 0 | -27648 | 4402 | | | 933 | 351 | SLU 61 | 0.08 | No |
| fin. | 3 | 0 | -7873 | -2723 | | | 933 | 351 | SLU 61 | 0.13 | No |
| ini. | 3 | 0 | -23622 | 4457 | | | 933 | 351 | SLU 76 | 0.08 | No |
| fin. | 3 | 0 | -11677 | -3049 | | | 933 | 351 | SLU 76 | 0.12 | No |
| ini. | 3 | 0 | -27351 | 4633 | | | 933 | 351 | SLU 84 | 0.08 | No |
| fin. | 3 | 0 | -14172 | -3229 | | | 933 | 351 | SLU 84 | 0.11 | No |
| ini. | 3 | 0 | -30631 | 4589 | | | 933 | 351 | SLU 83 | 0.08 | No |
| fin. | 3 | 0 | -17006 | -3300 | | | 933 | 351 | SLU 83 | 0.11 | No |
| ini. | 3 | 0 | -29488 | 4451 | | | 933 | 351 | SLU 74 | 0.08 | No |
| fin. | 3 | 0 | -15684 | -3158 | | | 933 | 351 | SLU 74 | 0.11 | No |

### Verifiche a pressoflessione delle travi in muratura in combinazioni sismiche

| Sezione | γM | N | M | Mu | Comb. | c.s. | Verifica |
|---|---|---|---|---|---|---|---|
| ini. | 2 | 1151 | -120433 | 126944 | SLV 5 | 1.05 | Si |
| fin. | 2 | 2449 | 22062 | 126944 | SLV 5 | 5.75 | Si |
| ini. | 2 | -2310 | -141978 | 126944 | SLV 10 | 0.89 | No |
| fin. | 2 | 2837 | 79815 | 126944 | SLV 10 | 1.59 | Si |
| ini. | 2 | 4279 | 47434 | 126944 | SLV 3 | 2.68 | Si |
| fin. | 2 | -1835 | -122613 | 126944 | SLV 3 | 1.04 | Si |
| ini. | 2 | -249 | 99153 | 126944 | SLV 7 | 1.28 | Si |
| fin. | 2 | -3445 | -96855 | 126944 | SLV 7 | 1.31 | Si |
| ini. | 2 | -249 | 99153 | 126944 | SLV 8 | 1.28 | Si |
| fin. | 2 | -3445 | -96855 | 126944 | SLV 8 | 1.31 | Si |
| ini. | 2 | -6837 | -90259 | 126944 | SLV 14 | 1.41 | Si |
| fin. | 2 | 1228 | 105573 | 126944 | SLV 14 | 1.2 | Si |
| ini. | 2 | 4279 | 47434 | 126944 | SLV 4 | 2.68 | Si |
| fin. | 2 | -1835 | -122613 | 126944 | SLV 4 | 1.04 | Si |
| ini. | 2 | -6837 | -90259 | 126944 | SLV 13 | 1.41 | Si |
| fin. | 2 | 1228 | 105573 | 126944 | SLV 13 | 1.2 | Si |
| ini. | 2 | 1151 | -120433 | 126944 | SLV 6 | 1.05 | Si |
| fin. | 2 | 2449 | 22062 | 126944 | SLV 6 | 5.75 | Si |
| ini. | 2 | -2310 | -141978 | 126944 | SLV 9 | 0.89 | No |
| fin. | 2 | 2837 | 79815 | 126944 | SLV 9 | 1.59 | Si |

### Verifiche a taglio delle travi in muratura secondo §C8.7.1.3.1 in combinazioni sismiche

| Sezione | γM | N | M | V | Vt | Vp | Vt fess. diag. | Vt,lim | Comb. | c.s. | Verifica |
|---|---|---|---|---|---|---|---|---|---|---|---|
| ini. | 2 | 0 | -90259 | 7700 | | | 1399 | 526 | SLV 14 | 0.07 | No |
| fin. | 2 | 0 | 105573 | 2568 | | | 1399 | 526 | SLV 14 | 0.2 | No |
| ini. | 2 | 0 | -141978 | 7613 | | | 1399 | 526 | SLV 9 | 0.07 | No |
| fin. | 2 | 0 | 79815 | 1386 | | | 1399 | 526 | SLV 9 | 0.38 | No |
| ini. | 2 | 0 | -24383 | 5659 | | | 1399 | 526 | SLV 16 | 0.09 | No |
| fin. | 2 | 0 | 69898 | 1202 | | | 1399 | 526 | SLV 16 | 0.44 | No |
| ini. | 2 | 0 | -141978 | 7613 | | | 1399 | 526 | SLV 10 | 0.07 | No |
| fin. | 2 | 0 | 79815 | 1386 | | | 1399 | 526 | SLV 10 | 0.38 | No |
| ini. | 2 | 0 | 99153 | -1306 | | | 1399 | 526 | SLV 7 | 0.4 | No |
| fin. | 2 | 0 | -96855 | -5550 | | | 1399 | 526 | SLV 7 | 0.09 | No |
| ini. | 2 | 0 | 47434 | -1393 | | | 1399 | 526 | SLV 3 | 0.38 | No |
| fin. | 2 | 0 | -122613 | -6732 | | | 1399 | 526 | SLV 3 | 0.08 | No |
| ini. | 2 | 0 | -90259 | 7700 | | | 1399 | 526 | SLV 13 | 0.07 | No |
| fin. | 2 | 0 | 105573 | 2568 | | | 1399 | 526 | SLV 13 | 0.2 | No |
| ini. | 2 | 0 | -24383 | 5659 | | | 1399 | 526 | SLV 15 | 0.09 | No |
| fin. | 2 | 0 | 69898 | 1202 | | | 1399 | 526 | SLV 15 | 0.44 | No |
| ini. | 2 | 0 | 99153 | -1306 | | | 1399 | 526 | SLV 8 | 0.4 | No |
| fin. | 2 | 0 | -96855 | -5550 | | | 1399 | 526 | SLV 8 | 0.09 | No |
| ini. | 2 | 0 | 47434 | -1393 | | | 1399 | 526 | SLV 4 | 0.38 | No |
| fin. | 2 | 0 | -122613 | -6732 | | | 1399 | 526 | SLV 4 | 0.08 | No |

### Tabella dei coefficienti di sicurezza minimi

| Stato limite | Coeff.s. | Comb. | Verifica |
|---|---|---|---|
| PF_SLV | 0.894 | SLV 9 | No |
| V_SLV | 0.068 | SLV 13 | No |
| PF_SLU | 3.415 | SLU 81 | Si |
| V_SLU | 0.074 | SLU 82 | No |

## Trave di accoppiamento 41

Verifiche condotte secondo D.M. 17-01-18 (N.T.C.)

### Dati geometrici

| X ini. | Y ini. | Z ini.inf. | Z ini.sup. | H ini. | X fin. | Y fin. | Z fin.inf. | Z fin.sup | H fin. | Luce | Spessore | R. Trazione |
|---|---|---|---|---|---|---|---|---|---|---|---|---|
| -1705.3 | -486.2 | 497 | 544 | 47 | -1705.3 | -377.2 | 497 | 544 | 47 | 109 | 30 | 3500 |

### Caratteristiche del materiale

(Circolare 7 21-01-19 C8.5.I) Muratura in mattoni pieni e malta di calce LC2_Corti

| fb_ | fhk | fvk0 | fhmedio | τ0 | fv0 | μ | ϕ | fvk,lim | E | G | FC |
|---|---|---|---|---|---|---|---|---|---|---|---|
| 12 | | | 17.25 | 0.9 | 2 | 0.577 | 0.767 | 0.65 | 32000 | 12800 | 1.2 |

### Verifiche a pressoflessione delle travi in muratura in combinazioni non sismiche

| Sezione | γM | N | M | Mu | Comb. | c.s. | Verifica |
|---|---|---|---|---|---|---|---|
| ini. | 3 | -498 | 3485 | 33622 | SLU 41 | 9.65 | Si |
| fin. | 3 | -299 | 20469 | 33622 | SLU 41 | 1.64 | Si |
| ini. | 3 | -644 | 4215 | 33622 | SLU 74 | 7.98 | Si |
| fin. | 3 | -261 | 21111 | 33622 | SLU 74 | 1.59 | Si |
| ini. | 3 | -637 | 3995 | 33622 | SLU 79 | 8.42 | Si |
| fin. | 3 | -190 | 18526 | 33622 | SLU 79 | 1.81 | Si |
| ini. | 3 | -645 | 4291 | 33622 | SLU 83 | 7.84 | Si |
| fin. | 3 | -293 | 22494 | 33622 | SLU 83 | 1.49 | Si |
| ini. | 3 | -650 | 4444 | 33622 | SLU 81 | 7.57 | Si |
| fin. | 3 | -341 | 24178 | 33622 | SLU 81 | 1.39 | Si |
| ini. | 3 | -497 | 3410 | 33622 | SLU 32 | 9.86 | Si |
| fin. | 3 | -266 | 19086 | 33622 | SLU 32 | 1.76 | Si |
| ini. | 3 | -503 | 3639 | 33622 | SLU 39 | 9.24 | Si |
| fin. | 3 | -347 | 22153 | 33622 | SLU 39 | 1.52 | Si |
| ini. | 3 | -641 | 4067 | 33622 | SLU 62 | 8.27 | Si |
| fin. | 3 | -209 | 18856 | 33622 | SLU 62 | 1.78 | Si |
| ini. | 3 | -639 | 4062 | 33622 | SLU 77 | 8.28 | Si |

| Sezione | γM | N | M | Mu | Comb. | c.s. | Verifica |
|---|---|---|---|---|---|---|---|
| fin. | 3 | -212 | 19426 | 33622 | SLU 77 | 1.73 | Si |
| ini. | 3 | -646 | 4220 | 33622 | SLU 60 | 7.97 | Si |
| fin. | 3 | -257 | 20541 | 33622 | SLU 60 | 1.64 | Si |

### Verifiche a taglio delle travi in muratura secondo §C8.7.1.3.1 in combinazioni non sismiche

| Sezione | γM | N | M | V | Vt | Vp | Vt fess. diag. | Vt,lim | Comb. | c.s. | Verifica |
|---|---|---|---|---|---|---|---|---|---|---|---|
| ini. | 3 | 0 | 3750 | -117 | | | 362 | 136 | SLU 82 | 1.17 | Si |
| fin. | 3 | 0 | 12384 | 1759 | | | 362 | 136 | SLU 82 | 0.08 | No |
| ini. | 3 | 0 | 2991 | -260 | | | 362 | 136 | SLU 76 | 0.52 | No |
| fin. | 3 | 0 | 555 | 1715 | | | 362 | 136 | SLU 76 | 0.08 | No |
| ini. | 3 | 0 | 3301 | -163 | | | 362 | 136 | SLU 80 | 0.84 | No |
| fin. | 3 | 0 | 6733 | 1647 | | | 362 | 136 | SLU 80 | 0.08 | No |
| ini. | 3 | 0 | 4215 | 22 | | | 362 | 136 | SLU 74 | 6.09 | Si |
| fin. | 3 | 0 | 21111 | 1602 | | | 362 | 136 | SLU 74 | 0.09 | No |
| ini. | 3 | 0 | 4291 | 36 | | | 362 | 136 | SLU 83 | 3.77 | Si |
| fin. | 3 | 0 | 22494 | 1664 | | | 362 | 136 | SLU 83 | 0.08 | No |
| ini. | 3 | 0 | 3521 | -143 | | | 362 | 136 | SLU 75 | 0.95 | No |
| fin. | 3 | 0 | 9317 | 1686 | | | 362 | 136 | SLU 75 | 0.08 | No |
| ini. | 3 | 0 | 4444 | 49 | | | 362 | 136 | SLU 81 | 2.8 | Si |
| fin. | 3 | 0 | 24178 | 1676 | | | 362 | 136 | SLU 81 | 0.08 | No |
| ini. | 3 | 0 | 3144 | -248 | | | 362 | 136 | SLU 73 | 0.55 | No |
| fin. | 3 | 0 | 2239 | 1727 | | | 362 | 136 | SLU 73 | 0.08 | No |
| ini. | 3 | 0 | 3368 | -155 | | | 362 | 136 | SLU 78 | 0.88 | No |
| fin. | 3 | 0 | 7632 | 1673 | | | 362 | 136 | SLU 78 | 0.08 | No |
| ini. | 3 | 0 | 3596 | -129 | | | 362 | 136 | SLU 84 | 1.06 | Si |
| fin. | 3 | 0 | 10700 | 1747 | | | 362 | 136 | SLU 84 | 0.08 | No |

### Verifiche a pressoflessione delle travi in muratura in combinazioni sismiche

| Sezione | γM | N | M | Mu | Comb. | c.s. | Verifica |
|---|---|---|---|---|---|---|---|
| ini. | 2 | -901 | -13473 | 48831 | SLV 11 | 3.62 | Si |
| fin. | 2 | 4514 | -139549 | 48831 | SLV 11 | 0.35 | No |
| ini. | 2 | 155 | 12554 | 48831 | SLV 14 | 3.89 | Si |
| fin. | 2 | -3369 | 121978 | 48831 | SLV 14 | 0.4 | No |
| ini. | 2 | -901 | -13473 | 48831 | SLV 12 | 3.62 | Si |
| fin. | 2 | 4514 | -139549 | 48831 | SLV 12 | 0.35 | No |
| ini. | 2 | -88 | 19669 | 48831 | SLV 5 | 2.48 | Si |
| fin. | 2 | -4791 | 166486 | 48831 | SLV 5 | 0.29 | No |
| ini. | 2 | -88 | 19669 | 48831 | SLV 6 | 2.48 | Si |
| fin. | 2 | -4791 | 166486 | 48831 | SLV 6 | 0.29 | No |
| ini. | 2 | 202 | 22138 | 48831 | SLV 10 | 2.21 | Si |
| fin. | 2 | -5801 | 200947 | 48831 | SLV 10 | 0.24 | No |
| ini. | 2 | -1192 | -15942 | 48831 | SLV 8 | 3.06 | Si |
| fin. | 2 | 5524 | -174011 | 48831 | SLV 8 | 0.28 | No |
| ini. | 2 | -1192 | -15942 | 48831 | SLV 7 | 3.06 | Si |
| fin. | 2 | 5524 | -174011 | 48831 | SLV 7 | 0.28 | No |
| ini. | 2 | 155 | 12554 | 48831 | SLV 13 | 3.89 | Si |
| fin. | 2 | -3369 | 121978 | 48831 | SLV 13 | 0.4 | No |
| ini. | 2 | 202 | 22138 | 48831 | SLV 9 | 2.21 | Si |
| fin. | 2 | -5801 | 200947 | 48831 | SLV 9 | 0.24 | No |

### Verifiche a taglio delle travi in muratura secondo §C8.7.1.3.1 in combinazioni sismiche

| Sezione | γM | N | M | V | Vt | Vp | Vt fess. diag. | Vt,lim | Comb. | c.s. | Verifica |
|---|---|---|---|---|---|---|---|---|---|---|---|
| ini. | 2 | 0 | 1871 | -4 | | | 543 | 204 | SLV 16 | 50.39 | Si |
| fin. | 2 | 0 | 19830 | 2252 | | | 543 | 204 | SLV 16 | 0.09 | No |
| ini. | 2 | 0 | -13473 | -2017 | | | 543 | 204 | SLV 11 | 0.1 | No |
| fin. | 2 | 0 | -139549 | 1252 | | | 543 | 204 | SLV 11 | 0.16 | No |
| ini. | 2 | 0 | 22138 | 2399 | | | 543 | 204 | SLV 9 | 0.09 | No |
| fin. | 2 | 0 | 200947 | 1655 | | | 543 | 204 | SLV 9 | 0.12 | No |
| ini. | 2 | 0 | 1871 | -4 | | | 543 | 204 | SLV 15 | 50.39 | Si |
| fin. | 2 | 0 | 19830 | 2252 | | | 543 | 204 | SLV 15 | 0.09 | No |
| ini. | 2 | 0 | 12554 | 1321 | | | 543 | 204 | SLV 14 | 0.15 | No |
| fin. | 2 | 0 | 121978 | 2373 | | | 543 | 204 | SLV 14 | 0.09 | No |
| ini. | 2 | 0 | 22138 | 2399 | | | 543 | 204 | SLV 10 | 0.09 | No |
| fin. | 2 | 0 | 200947 | 1655 | | | 543 | 204 | SLV 10 | 0.12 | No |
| ini. | 2 | 0 | 12554 | 1321 | | | 543 | 204 | SLV 13 | 0.15 | No |
| fin. | 2 | 0 | 121978 | 2373 | | | 543 | 204 | SLV 13 | 0.09 | No |
| ini. | 2 | 0 | -15942 | -2418 | | | 543 | 204 | SLV 8 | 0.08 | No |
| fin. | 2 | 0 | -174011 | 516 | | | 543 | 204 | SLV 8 | 0.4 | No |
| ini. | 2 | 0 | -13473 | -2017 | | | 543 | 204 | SLV 12 | 0.1 | No |
| fin. | 2 | 0 | -139549 | 1252 | | | 543 | 204 | SLV 12 | 0.16 | No |
| ini. | 2 | 0 | -15942 | -2418 | | | 543 | 204 | SLV 7 | 0.08 | No |
| fin. | 2 | 0 | -174011 | 516 | | | 543 | 204 | SLV 7 | 0.4 | No |

### Tabella dei coefficienti di sicurezza minimi

| Stato limite | Coeff.s. | Comb. | Verifica |
|---|---|---|---|
| PF_SLV | 0.243 | SLV 9 | No |
| V_SLV | 0.085 | SLV 7 | No |
| PF_SLU | 1.391 | SLU 81 | Si |
| V_SLU | 0.077 | SLU 82 | No |

## Trave di accoppiamento 42

Verifiche condotte secondo D.M. 17-01-18 (N.T.C.)

## Dati geometrici

| X ini. | Y ini. | Z ini.inf. | Z ini.sup. | H ini. | X fin. | Y fin. | Z fin.inf. | Z fin.sup | H fin. | Luce | Spessore | R. Trazione |
|---|---|---|---|---|---|---|---|---|---|---|---|---|
| -1548.3 | -335.9 | 381 | 544 | 163 | -1638.3 | -335.9 | 381 | 544 | 163 | 90 | 28 | 3500 |

## Caratteristiche del materiale

(Circolare 7 21-01-19 C8.5.I) Muratura in mattoni pieni e malta di calce LC2_Corti

| fb_ | fhk | fvk0 | fhmedio | τ0 | fv0 | μ | ϕ | fvk,lim | E | G | FC |
|---|---|---|---|---|---|---|---|---|---|---|---|
| 12 | | | 17.25 | 0.9 | 2 | 0.577 | 0.767 | 0.65 | 32000 | 12800 | 1.2 |

## Verifiche a pressoflessione delle travi in muratura in combinazioni non sismiche

| Sezione | γM | N | M | Mu | Comb. | c.s. | Verifica |
|---|---|---|---|---|---|---|---|
| ini. | 3 | -6687 | 281450 | 231542 | SLU 74 | 0.82 | No |
| fin. | 3 | -5761 | -149598 | 231542 | SLU 74 | 1.55 | Si |
| ini. | 3 | -6394 | 286668 | 231542 | SLU 79 | 0.81 | No |
| fin. | 3 | -5573 | -167602 | 231542 | SLU 79 | 1.38 | Si |
| ini. | 3 | -7062 | 281737 | 231542 | SLU 81 | 0.82 | No |
| fin. | 3 | -6057 | -141585 | 231542 | SLU 81 | 1.64 | Si |
| ini. | 3 | -7046 | 278125 | 231542 | SLU 84 | 0.83 | No |
| fin. | 3 | -6058 | -159415 | 231542 | SLU 84 | 1.45 | Si |
| ini. | 3 | -6568 | 276243 | 231542 | SLU 80 | 0.84 | No |
| fin. | 3 | -5689 | -170068 | 231542 | SLU 80 | 1.36 | Si |
| ini. | 3 | -6861 | 271026 | 231542 | SLU 75 | 0.85 | No |
| fin. | 3 | -5876 | -152064 | 231542 | SLU 75 | 1.52 | Si |
| ini. | 3 | -6497 | 288262 | 231542 | SLU 77 | 0.8 | No |
| fin. | 3 | -5646 | -164963 | 231542 | SLU 77 | 1.4 | Si |
| ini. | 3 | -6872 | 288549 | 231542 | SLU 83 | 0.8 | No |
| fin. | 3 | -5942 | -156949 | 231542 | SLU 83 | 1.48 | Si |
| ini. | 3 | -6671 | 277838 | 231542 | SLU 78 | 0.83 | No |
| fin. | 3 | -5761 | -167428 | 231542 | SLU 78 | 1.38 | Si |
| ini. | 3 | -7236 | 271313 | 231542 | SLU 82 | 0.85 | No |
| fin. | 3 | -6172 | -144051 | 231542 | SLU 82 | 1.61 | Si |

## Verifiche a taglio delle travi in muratura secondo §C8.7.1.3.1 in combinazioni non sismiche

| Sezione | γM | N | M | V | Vt | Vp | Vt fess. diag. | Vt,lim | Comb. | c.s. | Verifica |
|---|---|---|---|---|---|---|---|---|---|---|---|
| ini. | 3 | 0 | 288262 | -3068 | | | 1758 | 661 | SLU 77 | 0.22 | No |
| fin. | 3 | 0 | -164963 | -9979 | | | 1758 | 661 | SLU 77 | 0.07 | No |
| ini. | 3 | 0 | 271313 | -2370 | | | 1758 | 661 | SLU 82 | 0.28 | No |
| fin. | 3 | 0 | -144051 | -9892 | | | 1758 | 661 | SLU 82 | 0.07 | No |
| ini. | 3 | 0 | 281450 | -2747 | | | 1758 | 661 | SLU 74 | 0.24 | No |
| fin. | 3 | 0 | -149598 | -9764 | | | 1758 | 661 | SLU 74 | 0.07 | No |
| ini. | 3 | 0 | 271026 | -2598 | | | 1758 | 661 | SLU 75 | 0.25 | No |
| fin. | 3 | 0 | -152064 | -9735 | | | 1758 | 661 | SLU 75 | 0.07 | No |
| ini. | 3 | 0 | 276243 | -2964 | | | 1758 | 661 | SLU 80 | 0.22 | No |
| fin. | 3 | 0 | -170068 | -9908 | | | 1758 | 661 | SLU 80 | 0.07 | No |
| ini. | 3 | 0 | 277838 | -2919 | | | 1758 | 661 | SLU 78 | 0.23 | No |
| fin. | 3 | 0 | -167428 | -9951 | | | 1758 | 661 | SLU 78 | 0.07 | No |
| ini. | 3 | 0 | 278125 | -2691 | | | 1758 | 661 | SLU 84 | 0.25 | No |
| fin. | 3 | 0 | -159415 | -10107 | | | 1758 | 661 | SLU 84 | 0.07 | No |
| ini. | 3 | 0 | 281737 | -2519 | | | 1758 | 661 | SLU 81 | 0.26 | No |
| fin. | 3 | 0 | -141585 | -9921 | | | 1758 | 661 | SLU 81 | 0.07 | No |
| ini. | 3 | 0 | 286668 | -3113 | | | 1758 | 661 | SLU 79 | 0.21 | No |
| fin. | 3 | 0 | -167602 | -9937 | | | 1758 | 661 | SLU 79 | 0.07 | No |
| ini. | 3 | 0 | 288549 | -2841 | | | 1758 | 661 | SLU 83 | 0.23 | No |
| fin. | 3 | 0 | -156949 | -10136 | | | 1758 | 661 | SLU 83 | 0.07 | No |

## Verifiche a pressoflessione delle travi in muratura in combinazioni sismiche

| Sezione | γM | N | M | Mu | Comb. | c.s. | Verifica |
|---|---|---|---|---|---|---|---|
| ini. | 2 | -2364 | 380747 | 249444 | SLV 8 | 0.66 | No |
| fin. | 2 | -1329 | -27783 | 249444 | SLV 8 | 8.98 | Si |
| ini. | 2 | -11924 | 129897 | 249444 | SLV 15 | 1.92 | Si |
| fin. | 2 | -8684 | 452256 | 249444 | SLV 15 | 0.55 | No |
| ini. | 2 | -2800 | 72456 | 249444 | SLV 6 | 3.44 | Si |
| fin. | 2 | -3809 | -461501 | 249444 | SLV 6 | 0.54 | No |
| ini. | 2 | 2418 | 257329 | 249444 | SLV 2 | 0.97 | No |
| fin. | 2 | 552 | -649921 | 249444 | SLV 2 | 0.38 | No |
| ini. | 2 | -11924 | 129897 | 249444 | SLV 16 | 1.92 | Si |
| fin. | 2 | -8684 | 452256 | 249444 | SLV 16 | 0.55 | No |
| ini. | 2 | -2364 | 380747 | 249444 | SLV 7 | 0.66 | No |
| fin. | 2 | -1329 | -27783 | 249444 | SLV 7 | 8.98 | Si |
| ini. | 2 | 2549 | 349817 | 249444 | SLV 4 | 0.71 | No |
| fin. | 2 | 1296 | -519805 | 249444 | SLV 4 | 0.48 | No |
| ini. | 2 | -2800 | 72456 | 249444 | SLV 5 | 3.44 | Si |
| fin. | 2 | -3809 | -461501 | 249444 | SLV 5 | 0.54 | No |
| ini. | 2 | 2549 | 349817 | 249444 | SLV 3 | 0.71 | No |
| fin. | 2 | 1296 | -519805 | 249444 | SLV 3 | 0.48 | No |
| ini. | 2 | 2418 | 257329 | 249444 | SLV 1 | 0.97 | No |
| fin. | 2 | 552 | -649921 | 249444 | SLV 1 | 0.38 | No |

## Verifiche a taglio delle travi in muratura secondo §C8.7.1.3.1 in combinazioni sismiche

| Sezione | γM | N | M | V | Vt | Vp | Vt fess. diag. | Vt,lim | Comb. | c.s. | Verifica |
|---|---|---|---|---|---|---|---|---|---|---|---|
| ini. | 2 | 0 | 221049 | -6184 | | | 2637 | 992 | SLD 2 | 0.16 | No |
| fin. | 2 | 0 | -332825 | -8914 | | | 2637 | 992 | SLD 2 | 0.11 | No |
| ini. | 2 | 0 | 129897 | 8495 | | | 2637 | 992 | SLV 15 | 0.12 | No |
| fin. | 2 | 0 | 452256 | -1301 | | | 2637 | 992 | SLV 15 | 0.76 | No |
| ini. | 2 | 0 | 221049 | -6184 | | | 2637 | 992 | SLD 1 | 0.16 | No |
| fin. | 2 | 0 | -332825 | -8914 | | | 2637 | 992 | SLD 1 | 0.11 | No |
| ini. | 2 | 0 | 257329 | -12107 | | | 2637 | 992 | SLV 1 | 0.08 | No |

| Sezione | γM | N | M | V | Vt | Vp | Vt fess. diag. | Vt,lim | Comb. | c.s. | Verifica |
|---|---|---|---|---|---|---|---|---|---|---|---|
| fin. | 2 | 0 | -649921 | -11996 | | | 2637 | 992 | SLV 1 | 0.08 | No |
| ini. | 2 | 0 | 349817 | -8902 | | | 2637 | 992 | SLV 3 | 0.11 | No |
| fin. | 2 | 0 | -519805 | -10583 | | | 2637 | 992 | SLV 3 | 0.09 | No |
| ini. | 2 | 0 | 129897 | 8495 | | | 2637 | 992 | SLV 16 | 0.12 | No |
| fin. | 2 | 0 | 452256 | -1301 | | | 2637 | 992 | SLV 16 | 0.76 | No |
| ini. | 2 | 0 | 257329 | -12107 | | | 2637 | 992 | SLV 2 | 0.08 | No |
| fin. | 2 | 0 | -649921 | -11996 | | | 2637 | 992 | SLV 2 | 0.08 | No |
| ini. | 2 | 0 | 349817 | -8902 | | | 2637 | 992 | SLV 4 | 0.11 | No |
| fin. | 2 | 0 | -519805 | -10583 | | | 2637 | 992 | SLV 4 | 0.09 | No |
| ini. | 2 | 0 | 72456 | -9758 | | | 2637 | 992 | SLV 6 | 0.1 | No |
| fin. | 2 | 0 | -461501 | -10396 | | | 2637 | 992 | SLV 6 | 0.1 | No |
| ini. | 2 | 0 | 72456 | -9758 | | | 2637 | 992 | SLV 5 | 0.1 | No |
| fin. | 2 | 0 | -461501 | -10396 | | | 2637 | 992 | SLV 5 | 0.1 | No |

### Tabella dei coefficienti di sicurezza minimi

| Stato limite | Coeff.s. | Comb. | Verifica |
|---|---|---|---|
| PF_SLV | 0.384 | SLV 1 | No |
| V_SLV | 0.082 | SLV 1 | No |
| PF_SLU | 0.802 | SLU 83 | No |
| V_SLU | 0.065 | SLU 83 | No |

## Trave di accoppiamento 43

Verifiche condotte secondo D.M. 17-01-18 (N.T.C.)

### Dati geometrici

| X ini. | Y ini. | Z ini.inf. | Z ini.sup. | H ini. | X fin. | Y fin. | Z fin.inf. | Z fin.sup | H fin. | Luce | Spessore | R. Trazione |
|---|---|---|---|---|---|---|---|---|---|---|---|---|
| -1443.8 | -485.9 | 497 | 544 | 47 | -1627.8 | -485.9 | 497 | 544 | 47 | 184 | 30 | 3500 |

### Caratteristiche del materiale

(Circolare 7 21-01-19 C8.5.I) Muratura in mattoni pieni e malta di calce LC2_Corti

| fb_ | fhk | fvk0 | fhmedio | τ0 | fv0 | μ | ϕ | fvk,lim | E | G | FC |
|---|---|---|---|---|---|---|---|---|---|---|---|
| 12 | | | 17.25 | 0.9 | 2 | 0.577 | 0.767 | 0.65 | 32000 | 12800 | 1.2 |

### Verifiche a pressoflessione delle travi in muratura in combinazioni non sismiche

| Sezione | γM | N | M | Mu | Comb. | c.s. | Verifica |
|---|---|---|---|---|---|---|---|
| ini. | 3 | 341 | -26438 | 33622 | SLU 81 | 1.27 | Si |
| fin. | 3 | -371 | 17262 | 33622 | SLU 81 | 1.95 | Si |
| ini. | 3 | 362 | -26705 | 33622 | SLU 66 | 1.26 | Si |
| fin. | 3 | -357 | 17421 | 33622 | SLU 66 | 1.93 | Si |
| ini. | 3 | 379 | -27572 | 33622 | SLU 64 | 1.22 | Si |
| fin. | 3 | -366 | 18246 | 33622 | SLU 64 | 1.84 | Si |
| ini. | 3 | 369 | -26298 | 33622 | SLU 46 | 1.28 | Si |
| fin. | 3 | -345 | 17655 | 33622 | SLU 46 | 1.9 | Si |
| ini. | 3 | 368 | -26663 | 33622 | SLU 45 | 1.26 | Si |
| fin. | 3 | -349 | 17352 | 33622 | SLU 45 | 1.94 | Si |
| ini. | 3 | 388 | -26921 | 33622 | SLU 44 | 1.25 | Si |
| fin. | 3 | -351 | 18682 | 33622 | SLU 44 | 1.8 | Si |
| ini. | 3 | 363 | -26340 | 33622 | SLU 67 | 1.28 | Si |
| fin. | 3 | -353 | 17724 | 33622 | SLU 67 | 1.9 | Si |
| ini. | 3 | 382 | -26963 | 33622 | SLU 65 | 1.25 | Si |
| fin. | 3 | -360 | 18751 | 33622 | SLU 65 | 1.79 | Si |
| ini. | 3 | 347 | -26396 | 33622 | SLU 60 | 1.27 | Si |
| fin. | 3 | -363 | 17192 | 33622 | SLU 60 | 1.96 | Si |
| ini. | 3 | 385 | -27530 | 33622 | SLU 43 | 1.22 | Si |
| fin. | 3 | -358 | 18177 | 33622 | SLU 43 | 1.85 | Si |

### Verifiche a taglio delle travi in muratura secondo §C8.7.1.3.1 in combinazioni non sismiche

| Sezione | γM | N | M | V | Vt | Vp | Vt fess. diag. | Vt,lim | Comb. | c.s. | Verifica |
|---|---|---|---|---|---|---|---|---|---|---|---|
| ini. | 3 | 0 | -25638 | 336 | | | 362 | 136 | SLU 47 | 0.41 | No |
| fin. | 3 | 0 | 17460 | 110 | | | 362 | 136 | SLU 47 | 1.23 | Si |
| ini. | 3 | 0 | -27530 | 352 | | | 362 | 136 | SLU 43 | 0.39 | No |
| fin. | 3 | 0 | 18177 | 123 | | | 362 | 136 | SLU 43 | 1.11 | Si |
| ini. | 3 | 0 | -26298 | 340 | | | 362 | 136 | SLU 46 | 0.4 | No |
| fin. | 3 | 0 | 17655 | 115 | | | 362 | 136 | SLU 46 | 1.18 | Si |
| ini. | 3 | 0 | -26127 | 334 | | | 362 | 136 | SLU 52 | 0.41 | No |
| fin. | 3 | 0 | 17993 | 126 | | | 362 | 136 | SLU 52 | 1.08 | Si |
| ini. | 3 | 0 | -26921 | 352 | | | 362 | 136 | SLU 44 | 0.39 | No |
| fin. | 3 | 0 | 18682 | 124 | | | 362 | 136 | SLU 44 | 1.1 | Si |
| ini. | 3 | 0 | -27572 | 346 | | | 362 | 136 | SLU 64 | 0.39 | No |
| fin. | 3 | 0 | 18246 | 130 | | | 362 | 136 | SLU 64 | 1.05 | Si |
| ini. | 3 | 0 | -26340 | 334 | | | 362 | 136 | SLU 67 | 0.41 | No |
| fin. | 3 | 0 | 17724 | 122 | | | 362 | 136 | SLU 67 | 1.12 | Si |
| ini. | 3 | 0 | -26663 | 340 | | | 362 | 136 | SLU 45 | 0.4 | No |
| fin. | 3 | 0 | 17352 | 114 | | | 362 | 136 | SLU 45 | 1.19 | Si |
| ini. | 3 | 0 | -26963 | 346 | | | 362 | 136 | SLU 65 | 0.39 | No |
| fin. | 3 | 0 | 18751 | 131 | | | 362 | 136 | SLU 65 | 1.04 | Si |
| ini. | 3 | 0 | -26705 | 334 | | | 362 | 136 | SLU 66 | 0.41 | No |
| fin. | 3 | 0 | 17421 | 121 | | | 362 | 136 | SLU 66 | 1.12 | Si |

### Verifiche a pressoflessione delle travi in muratura in combinazioni sismiche

| Sezione | γM | N | M | Mu | Comb. | c.s. | Verifica |
|---|---|---|---|---|---|---|---|
| ini. | 2 | -3511 | 179290 | 48831 | SLV 3 | 0.27 | No |
| fin. | 2 | 2172 | -180071 | 48831 | SLV 3 | 0.27 | No |

| Sezione | γM | N | M | Mu | Comb. | c.s. | Verifica |
|---|---|---|---|---|---|---|---|
| ini. | 2 | -2911 | 147816 | 48831 | SLV 1 | 0.33 | No |
| fin. | 2 | 1795 | -150406 | 48831 | SLV 1 | 0.32 | No |
| ini. | 2 | 3482 | -189762 | 48831 | SLV 15 | 0.26 | No |
| fin. | 2 | -2357 | 178052 | 48831 | SLV 15 | 0.27 | No |
| ini. | 2 | 3482 | -189762 | 48831 | SLV 16 | 0.26 | No |
| fin. | 2 | -2357 | 178052 | 48831 | SLV 16 | 0.27 | No |
| ini. | 2 | -2911 | 147816 | 48831 | SLV 2 | 0.33 | No |
| fin. | 2 | 1795 | -150406 | 48831 | SLV 2 | 0.32 | No |
| ini. | 2 | 2334 | -128789 | 48831 | SLV 10 | 0.38 | No |
| fin. | 2 | -1587 | 116984 | 48831 | SLV 10 | 0.42 | No |
| ini. | 2 | 2334 | -128789 | 48831 | SLV 9 | 0.38 | No |
| fin. | 2 | -1587 | 116984 | 48831 | SLV 9 | 0.42 | No |
| ini. | 2 | -3511 | 179290 | 48831 | SLV 4 | 0.27 | No |
| fin. | 2 | 2172 | -180071 | 48831 | SLV 4 | 0.27 | No |
| ini. | 2 | 4082 | -221237 | 48831 | SLV 14 | 0.22 | No |
| fin. | 2 | -2733 | 207718 | 48831 | SLV 14 | 0.24 | No |
| ini. | 2 | 4082 | -221237 | 48831 | SLV 13 | 0.22 | No |
| fin. | 2 | -2733 | 207718 | 48831 | SLV 13 | 0.24 | No |

### Verifiche a taglio delle travi in muratura secondo §C8.7.1.3.1 in combinazioni sismiche

| Sezione | γM | N | M | V | Vt | Vp | Vt fess. diag. | Vt,lim | Comb. | c.s. | Verifica |
|---|---|---|---|---|---|---|---|---|---|---|---|
| ini. | 2 | 0 | 179290 | -2024 | | | 543 | 204 | SLV 4 | 0.1 | No |
| fin. | 2 | 0 | -180071 | -1904 | | | 543 | 204 | SLV 4 | 0.11 | No |
| ini. | 2 | 0 | -128789 | 1468 | | | 543 | 204 | SLV 10 | 0.14 | No |
| fin. | 2 | 0 | 116984 | 1268 | | | 543 | 204 | SLV 10 | 0.16 | No |
| ini. | 2 | 0 | 147816 | -1682 | | | 543 | 204 | SLV 1 | 0.12 | No |
| fin. | 2 | 0 | -150406 | -1530 | | | 543 | 204 | SLV 1 | 0.13 | No |
| ini. | 2 | 0 | 179290 | -2024 | | | 543 | 204 | SLV 3 | 0.1 | No |
| fin. | 2 | 0 | -180071 | -1904 | | | 543 | 204 | SLV 3 | 0.11 | No |
| ini. | 2 | 0 | -221237 | 2549 | | | 543 | 204 | SLV 14 | 0.08 | No |
| fin. | 2 | 0 | 207718 | 2102 | | | 543 | 204 | SLV 14 | 0.1 | No |
| ini. | 2 | 0 | 147816 | -1682 | | | 543 | 204 | SLV 2 | 0.12 | No |
| fin. | 2 | 0 | -150406 | -1530 | | | 543 | 204 | SLV 2 | 0.13 | No |
| ini. | 2 | 0 | -221237 | 2549 | | | 543 | 204 | SLV 13 | 0.08 | No |
| fin. | 2 | 0 | 207718 | 2102 | | | 543 | 204 | SLV 13 | 0.1 | No |
| ini. | 2 | 0 | -189762 | 2206 | | | 543 | 204 | SLV 15 | 0.09 | No |
| fin. | 2 | 0 | 178052 | 1728 | | | 543 | 204 | SLV 15 | 0.12 | No |
| ini. | 2 | 0 | -189762 | 2206 | | | 543 | 204 | SLV 16 | 0.09 | No |
| fin. | 2 | 0 | 178052 | 1728 | | | 543 | 204 | SLV 16 | 0.12 | No |
| ini. | 2 | 0 | -128789 | 1468 | | | 543 | 204 | SLV 9 | 0.14 | No |
| fin. | 2 | 0 | 116984 | 1268 | | | 543 | 204 | SLV 9 | 0.16 | No |

### Tabella dei coefficienti di sicurezza minimi

| Stato limite | Coeff.s. | Comb. | Verifica |
|---|---|---|---|
| PF_SLV | 0.221 | SLV 13 | No |
| V_SLV | 0.08 | SLV 13 | No |
| PF_SLU | 1.219 | SLU 64 | Si |
| V_SLU | 0.387 | SLU 43 | No |

## Trave di accoppiamento 44

Verifiche condotte secondo D.M. 17-01-18 (N.T.C.)

### Dati geometrici

| X ini. | Y ini. | Z ini.inf. | Z ini.sup. | H ini. | X fin. | Y fin. | Z fin.inf. | Z fin.sup | H fin. | Luce | Spessore | R. Trazione |
|---|---|---|---|---|---|---|---|---|---|---|---|---|
| -1505.8 | 140.6 | 381 | 544 | 163 | -1505.8 | 220.6 | 381 | 544 | 163 | 80 | 14 | 3500 |

### Caratteristiche del materiale

(Circolare 7 21-01-19 C8.5.I) Muratura in mattoni pieni e malta di calce LC2_Corti

| fb_ | fhk | fvk0 | fhmedio | τ0 | fv0 | μ | ϕ | fvk,lim | E | G | FC |
|---|---|---|---|---|---|---|---|---|---|---|---|
| 12 | | | 17.25 | 0.9 | 2 | 0.577 | 0.767 | 0.65 | 32000 | 12800 | 1.2 |

### Verifiche a pressoflessione delle travi in muratura in combinazioni non sismiche

| Sezione | γM | N | M | Mu | Comb. | c.s. | Verifica |
|---|---|---|---|---|---|---|---|
| ini. | 3 | -578 | -15685 | 177833 | SLU 80 | 11.34 | Si |
| fin. | 3 | -578 | -346181 | 177833 | SLU 80 | 0.51 | No |
| ini. | 3 | -553 | -15080 | 177833 | SLU 74 | 11.79 | Si |
| fin. | 3 | -553 | -329758 | 177833 | SLU 74 | 0.54 | No |
| ini. | 3 | -583 | -15755 | 177833 | SLU 77 | 11.29 | Si |
| fin. | 3 | -583 | -347333 | 177833 | SLU 77 | 0.51 | No |
| ini. | 3 | -580 | -15722 | 177833 | SLU 78 | 11.31 | Si |
| fin. | 3 | -580 | -347653 | 177833 | SLU 78 | 0.51 | No |
| ini. | 3 | -550 | -15047 | 177833 | SLU 75 | 11.82 | Si |
| fin. | 3 | -550 | -330079 | 177833 | SLU 75 | 0.54 | No |
| ini. | 3 | -594 | -16239 | 177833 | SLU 83 | 10.95 | Si |
| fin. | 3 | -594 | -348837 | 177833 | SLU 83 | 0.51 | No |
| ini. | 3 | -590 | -16206 | 177833 | SLU 84 | 10.97 | Si |
| fin. | 3 | -590 | -349158 | 177833 | SLU 84 | 0.51 | No |
| ini. | 3 | -581 | -15718 | 177833 | SLU 79 | 11.31 | Si |
| fin. | 3 | -581 | -345860 | 177833 | SLU 79 | 0.51 | No |
| ini. | 3 | -560 | -15530 | 177833 | SLU 82 | 11.45 | Si |
| fin. | 3 | -560 | -331583 | 177833 | SLU 82 | 0.54 | No |
| ini. | 3 | -563 | -15563 | 177833 | SLU 81 | 11.43 | Si |
| fin. | 3 | -563 | -331263 | 177833 | SLU 81 | 0.54 | No |

Verifiche a taglio delle travi in muratura secondo §C8.7.1.3.1 in combinazioni non sismiche

| Sezione | γM | N | M | V | Vt | Vp | Vt fess. diag. | Vt,lim | Comb. | c.s. | Verifica |
|---|---|---|---|---|---|---|---|---|---|---|---|
| ini. | 3 | 0 | -15718 | -3809 | | | 879 | 331 | SLU 79 | 0.09 | No |
| fin. | 3 | 0 | -345860 | -4360 | | | 879 | 331 | SLU 79 | 0.08 | No |
| ini. | 3 | 0 | -16206 | -3844 | | | 879 | 331 | SLU 84 | 0.09 | No |
| fin. | 3 | 0 | -349158 | -4395 | | | 879 | 331 | SLU 84 | 0.08 | No |
| ini. | 3 | 0 | -15722 | -3831 | | | 879 | 331 | SLU 78 | 0.09 | No |
| fin. | 3 | 0 | -347653 | -4382 | | | 879 | 331 | SLU 78 | 0.08 | No |
| ini. | 3 | 0 | -15755 | -3827 | | | 879 | 331 | SLU 77 | 0.09 | No |
| fin. | 3 | 0 | -347333 | -4378 | | | 879 | 331 | SLU 77 | 0.08 | No |
| ini. | 3 | 0 | -15080 | -3616 | | | 879 | 331 | SLU 74 | 0.09 | No |
| fin. | 3 | 0 | -329758 | -4167 | | | 879 | 331 | SLU 74 | 0.08 | No |
| ini. | 3 | 0 | -15563 | -3629 | | | 879 | 331 | SLU 81 | 0.09 | No |
| fin. | 3 | 0 | -331263 | -4180 | | | 879 | 331 | SLU 81 | 0.08 | No |
| ini. | 3 | 0 | -16239 | -3840 | | | 879 | 331 | SLU 83 | 0.09 | No |
| fin. | 3 | 0 | -348837 | -4391 | | | 879 | 331 | SLU 83 | 0.08 | No |
| ini. | 3 | 0 | -15530 | -3633 | | | 879 | 331 | SLU 82 | 0.09 | No |
| fin. | 3 | 0 | -331583 | -4184 | | | 879 | 331 | SLU 82 | 0.08 | No |
| ini. | 3 | 0 | -15685 | -3814 | | | 879 | 331 | SLU 80 | 0.09 | No |
| fin. | 3 | 0 | -346181 | -4364 | | | 879 | 331 | SLU 80 | 0.08 | No |
| ini. | 3 | 0 | -15047 | -3620 | | | 879 | 331 | SLU 75 | 0.09 | No |
| fin. | 3 | 0 | -330079 | -4171 | | | 879 | 331 | SLU 75 | 0.08 | No |

Verifiche a pressoflessione delle travi in muratura in combinazioni sismiche

| Sezione | γM | N | M | Mu | Comb. | c.s. | Verifica |
|---|---|---|---|---|---|---|---|
| ini. | 2 | -4669 | -222418 | 213639 | SLV 7 | 0.96 | No |
| fin. | 2 | -2682 | -850370 | 213639 | SLV 7 | 0.25 | No |
| ini. | 2 | -2281 | -122620 | 213639 | SLV 16 | 1.74 | Si |
| fin. | 2 | -1324 | -512362 | 213639 | SLV 16 | 0.42 | No |
| ini. | 2 | 4358 | 231135 | 213639 | SLV 5 | 0.92 | No |
| fin. | 2 | 2172 | 500270 | 213639 | SLV 5 | 0.43 | No |
| ini. | 2 | -2281 | -122620 | 213639 | SLV 15 | 1.74 | Si |
| fin. | 2 | -1324 | -512362 | 213639 | SLV 15 | 0.42 | No |
| ini. | 2 | 4358 | 231135 | 213639 | SLV 6 | 0.92 | No |
| fin. | 2 | 2172 | 500270 | 213639 | SLV 6 | 0.43 | No |
| ini. | 2 | -4669 | -222418 | 213639 | SLV 8 | 0.96 | No |
| fin. | 2 | -2682 | -850370 | 213639 | SLV 8 | 0.25 | No |
| ini. | 2 | -2234 | -106609 | 213639 | SLD 11 | 2 | Si |
| fin. | 2 | -1348 | -495991 | 213639 | SLD 11 | 0.43 | No |
| ini. | 2 | -2234 | -106609 | 213639 | SLD 12 | 2 | Si |
| fin. | 2 | -1348 | -495991 | 213639 | SLD 12 | 0.43 | No |
| ini. | 2 | -5025 | -249624 | 213639 | SLV 11 | 0.86 | No |
| fin. | 2 | -2839 | -912547 | 213639 | SLV 11 | 0.23 | No |
| ini. | 2 | -5025 | -249624 | 213639 | SLV 12 | 0.86 | No |
| fin. | 2 | -2839 | -912547 | 213639 | SLV 12 | 0.23 | No |

Verifiche a taglio delle travi in muratura secondo §C8.7.1.3.1 in combinazioni sismiche

| Sezione | γM | N | M | V | Vt | Vp | Vt fess. diag. | Vt,lim | Comb. | c.s. | Verifica |
|---|---|---|---|---|---|---|---|---|---|---|---|
| ini. | 2 | 0 | -222418 | -12751 | | | 1318 | 496 | SLV 7 | 0.04 | No |
| fin. | 2 | 0 | -850370 | -9670 | | | 1318 | 496 | SLV 7 | 0.05 | No |
| ini. | 2 | 0 | 231135 | 9408 | | | 1318 | 496 | SLV 5 | 0.05 | No |
| fin. | 2 | 0 | 500270 | 5164 | | | 1318 | 496 | SLV 5 | 0.1 | No |
| ini. | 2 | 0 | -249624 | -13846 | | | 1318 | 496 | SLV 11 | 0.04 | No |
| fin. | 2 | 0 | -912547 | -10443 | | | 1318 | 496 | SLV 11 | 0.05 | No |
| ini. | 2 | 0 | -122620 | -7367 | | | 1318 | 496 | SLV 16 | 0.07 | No |
| fin. | 2 | 0 | -512362 | -6152 | | | 1318 | 496 | SLV 16 | 0.08 | No |
| ini. | 2 | 0 | 203929 | 8313 | | | 1318 | 496 | SLV 9 | 0.06 | No |
| fin. | 2 | 0 | 438093 | 4392 | | | 1318 | 496 | SLV 9 | 0.11 | No |
| ini. | 2 | 0 | 203929 | 8313 | | | 1318 | 496 | SLV 10 | 0.06 | No |
| fin. | 2 | 0 | 438093 | 4392 | | | 1318 | 496 | SLV 10 | 0.11 | No |
| ini. | 2 | 0 | 231135 | 9408 | | | 1318 | 496 | SLV 6 | 0.05 | No |
| fin. | 2 | 0 | 500270 | 5164 | | | 1318 | 496 | SLV 6 | 0.1 | No |
| ini. | 2 | 0 | -222418 | -12751 | | | 1318 | 496 | SLV 8 | 0.04 | No |
| fin. | 2 | 0 | -850370 | -9670 | | | 1318 | 496 | SLV 8 | 0.05 | No |
| ini. | 2 | 0 | -122620 | -7367 | | | 1318 | 496 | SLV 15 | 0.07 | No |
| fin. | 2 | 0 | -512362 | -6152 | | | 1318 | 496 | SLV 15 | 0.08 | No |
| ini. | 2 | 0 | -249624 | -13846 | | | 1318 | 496 | SLV 12 | 0.04 | No |
| fin. | 2 | 0 | -912547 | -10443 | | | 1318 | 496 | SLV 12 | 0.05 | No |

Tabella dei coefficienti di sicurezza minimi

| Stato limite | Coeff.s. | Comb. | Verifica |
|---|---|---|---|
| PF_SLV | 0.234 | SLV 11 | No |
| V_SLV | 0.036 | SLV 11 | No |
| PF_SLU | 0.509 | SLU 84 | No |
| V_SLU | 0.075 | SLU 84 | No |

## Trave di accoppiamento 45

Verifiche condotte secondo D.M. 17-01-18 (N.T.C.)

Dati geometrici

| X ini. | Y ini. | Z ini.inf. | Z ini.sup. | H ini. | X fin. | Y fin. | Z fin.inf. | Z fin.sup | H fin. | Luce | Spessore | R. Trazione |
|---|---|---|---|---|---|---|---|---|---|---|---|---|
| -1375.3 | -22.8 | 381 | 544 | 163 | -1375.3 | 67.2 | 381 | 544 | 163 | 90 | 28 | 3500 |

## Caratteristiche del materiale

(Circolare 7 21-01-19 C8.5.I) Muratura in mattoni pieni e malta di calce LC2_Corti

| fb_ | fhk | fvk0 | fhmedio | τ0 | fv0 | μ | ϕ | fvk,lim | E | G | FC |
|---|---|---|---|---|---|---|---|---|---|---|---|
| 12 | | | 17.25 | 0.9 | 2 | 0.577 | 0.767 | 0.65 | 32000 | 12800 | 1.2 |

## Verifiche a pressoflessione delle travi in muratura in combinazioni non sismiche

| Sezione | γM | N | M | Mu | Comb. | c.s. | Verifica |
|---|---|---|---|---|---|---|---|
| ini. | 3 | -208 | -298399 | 231542 | SLU 70 | 0.78 | No |
| fin. | 3 | -208 | 68180 | 231542 | SLU 70 | 3.4 | Si |
| ini. | 3 | -224 | -301149 | 231542 | SLU 80 | 0.77 | No |
| fin. | 3 | -224 | 72427 | 231542 | SLU 80 | 3.2 | Si |
| ini. | 3 | -206 | -299256 | 231542 | SLU 66 | 0.77 | No |
| fin. | 3 | -206 | 67080 | 231542 | SLU 66 | 3.45 | Si |
| ini. | 3 | -231 | -310624 | 231542 | SLU 79 | 0.75 | No |
| fin. | 3 | -231 | 73053 | 231542 | SLU 79 | 3.17 | Si |
| ini. | 3 | -230 | -305155 | 231542 | SLU 78 | 0.76 | No |
| fin. | 3 | -230 | 73367 | 231542 | SLU 78 | 3.16 | Si |
| ini. | 3 | -228 | -306013 | 231542 | SLU 74 | 0.76 | No |
| fin. | 3 | -228 | 72267 | 231542 | SLU 74 | 3.2 | Si |
| ini. | 3 | -214 | -307875 | 231542 | SLU 69 | 0.75 | No |
| fin. | 3 | -214 | 68806 | 231542 | SLU 69 | 3.37 | Si |
| ini. | 3 | -236 | -314631 | 231542 | SLU 77 | 0.74 | No |
| fin. | 3 | -236 | 73993 | 231542 | SLU 77 | 3.13 | Si |
| ini. | 3 | -209 | -303868 | 231542 | SLU 71 | 0.76 | No |
| fin. | 3 | -209 | 67866 | 231542 | SLU 71 | 3.41 | Si |
| ini. | 3 | -232 | -304901 | 231542 | SLU 83 | 0.76 | No |
| fin. | 3 | -232 | 73551 | 231542 | SLU 83 | 3.15 | Si |

## Verifiche a taglio delle travi in muratura secondo §C8.7.1.3.1 in combinazioni non sismiche

| Sezione | γM | N | M | V | Vt | Vp | Vt fess. diag. | Vt,lim | Comb. | c.s. | Verifica |
|---|---|---|---|---|---|---|---|---|---|---|---|
| ini. | 3 | 0 | -296537 | 4601 | | | 1758 | 661 | SLU 75 | 0.14 | No |
| fin. | 3 | 0 | 71641 | 3634 | | | 1758 | 661 | SLU 75 | 0.18 | No |
| ini. | 3 | 0 | -304901 | 4715 | | | 1758 | 661 | SLU 83 | 0.14 | No |
| fin. | 3 | 0 | 73551 | 3748 | | | 1758 | 661 | SLU 83 | 0.18 | No |
| ini. | 3 | 0 | -305155 | 4716 | | | 1758 | 661 | SLU 78 | 0.14 | No |
| fin. | 3 | 0 | 73367 | 3749 | | | 1758 | 661 | SLU 78 | 0.18 | No |
| ini. | 3 | 0 | -310624 | 4773 | | | 1758 | 661 | SLU 79 | 0.14 | No |
| fin. | 3 | 0 | 73053 | 3806 | | | 1758 | 661 | SLU 79 | 0.17 | No |
| ini. | 3 | 0 | -295426 | 4603 | | | 1758 | 661 | SLU 84 | 0.14 | No |
| fin. | 3 | 0 | 72924 | 3636 | | | 1758 | 661 | SLU 84 | 0.18 | No |
| ini. | 3 | 0 | -303868 | 4640 | | | 1758 | 661 | SLU 71 | 0.14 | No |
| fin. | 3 | 0 | 67866 | 3674 | | | 1758 | 661 | SLU 71 | 0.18 | No |
| ini. | 3 | 0 | -314631 | 4828 | | | 1758 | 661 | SLU 77 | 0.14 | No |
| fin. | 3 | 0 | 73993 | 3861 | | | 1758 | 661 | SLU 77 | 0.17 | No |
| ini. | 3 | 0 | -301149 | 4661 | | | 1758 | 661 | SLU 80 | 0.14 | No |
| fin. | 3 | 0 | 72427 | 3694 | | | 1758 | 661 | SLU 80 | 0.18 | No |
| ini. | 3 | 0 | -307875 | 4695 | | | 1758 | 661 | SLU 69 | 0.14 | No |
| fin. | 3 | 0 | 68806 | 3728 | | | 1758 | 661 | SLU 69 | 0.18 | No |
| ini. | 3 | 0 | -306013 | 4713 | | | 1758 | 661 | SLU 74 | 0.14 | No |
| fin. | 3 | 0 | 72267 | 3746 | | | 1758 | 661 | SLU 74 | 0.18 | No |

## Verifiche a pressoflessione delle travi in muratura in combinazioni sismiche

| Sezione | γM | N | M | Mu | Comb. | c.s. | Verifica |
|---|---|---|---|---|---|---|---|
| ini. | 2 | -962 | -414696 | 249444 | SLD 9 | 0.6 | No |
| fin. | 2 | -856 | 85561 | 249444 | SLD 9 | 2.92 | Si |
| ini. | 2 | -876 | -492729 | 249444 | SLV 13 | 0.51 | No |
| fin. | 2 | -851 | 96382 | 249444 | SLV 13 | 2.59 | Si |
| ini. | 2 | -922 | -375985 | 249444 | SLD 6 | 0.66 | No |
| fin. | 2 | -797 | 80021 | 249444 | SLD 6 | 3.12 | Si |
| ini. | 2 | -922 | -375985 | 249444 | SLD 5 | 0.66 | No |
| fin. | 2 | -797 | 80021 | 249444 | SLD 5 | 3.12 | Si |
| ini. | 2 | -1930 | -590575 | 249444 | SLV 5 | 0.42 | No |
| fin. | 2 | -1670 | 123893 | 249444 | SLV 5 | 2.01 | Si |
| ini. | 2 | -876 | -492729 | 249444 | SLV 14 | 0.51 | No |
| fin. | 2 | -851 | 96382 | 249444 | SLV 14 | 2.59 | Si |
| ini. | 2 | -2037 | -681973 | 249444 | SLV 10 | 0.37 | No |
| fin. | 2 | -1806 | 137419 | 249444 | SLV 10 | 1.82 | Si |
| ini. | 2 | -962 | -414696 | 249444 | SLD 10 | 0.6 | No |
| fin. | 2 | -856 | 85561 | 249444 | SLD 10 | 2.92 | Si |
| ini. | 2 | -2037 | -681973 | 249444 | SLV 9 | 0.37 | No |
| fin. | 2 | -1806 | 137419 | 249444 | SLV 9 | 1.82 | Si |
| ini. | 2 | -1930 | -590575 | 249444 | SLV 6 | 0.42 | No |
| fin. | 2 | -1670 | 123893 | 249444 | SLV 6 | 2.01 | Si |

## Verifiche a taglio delle travi in muratura secondo §C8.7.1.3.1 in combinazioni sismiche

| Sezione | γM | N | M | V | Vt | Vp | Vt fess. diag. | Vt,lim | Comb. | c.s. | Verifica |
|---|---|---|---|---|---|---|---|---|---|---|---|
| ini. | 2 | 0 | -492729 | 7053 | | | 2637 | 992 | SLV 14 | 0.14 | No |
| fin. | 2 | 0 | 96382 | 5621 | | | 2637 | 992 | SLV 14 | 0.18 | No |
| ini. | 2 | 0 | -375985 | 5321 | | | 2637 | 992 | SLD 6 | 0.19 | No |
| fin. | 2 | 0 | 80021 | 4730 | | | 2637 | 992 | SLD 6 | 0.21 | No |
| ini. | 2 | 0 | -590575 | 8000 | | | 2637 | 992 | SLV 5 | 0.12 | No |
| fin. | 2 | 0 | 123893 | 7615 | | | 2637 | 992 | SLV 5 | 0.13 | No |
| ini. | 2 | 0 | -414696 | 5868 | | | 2637 | 992 | SLD 10 | 0.17 | No |
| fin. | 2 | 0 | 85561 | 5089 | | | 2637 | 992 | SLD 10 | 0.19 | No |
| ini. | 2 | 0 | -414696 | 5868 | | | 2637 | 992 | SLD 9 | 0.17 | No |
| fin. | 2 | 0 | 85561 | 5089 | | | 2637 | 992 | SLD 9 | 0.19 | No |
| ini. | 2 | 0 | -590575 | 8000 | | | 2637 | 992 | SLV 6 | 0.12 | No |

| Sezione | γM | N | M | V | Vt | Vp | Vt fess. diag. | Vt,lim | Comb. | c.s. | Verifica |
|---|---|---|---|---|---|---|---|---|---|---|---|
| fin. | 2 | 0 | 123893 | 7615 | | | 2637 | 992 | SLV 6 | 0.13 | No |
| ini. | 2 | 0 | -375985 | 5321 | | | 2637 | 992 | SLD 5 | 0.19 | No |
| fin. | 2 | 0 | 80021 | 4730 | | | 2637 | 992 | SLD 5 | 0.21 | No |
| ini. | 2 | 0 | -681973 | 9284 | | | 2637 | 992 | SLV 10 | 0.11 | No |
| fin. | 2 | 0 | 137419 | 8460 | | | 2637 | 992 | SLV 10 | 0.12 | No |
| ini. | 2 | 0 | -492729 | 7053 | | | 2637 | 992 | SLV 13 | 0.14 | No |
| fin. | 2 | 0 | 96382 | 5621 | | | 2637 | 992 | SLV 13 | 0.18 | No |
| ini. | 2 | 0 | -681973 | 9284 | | | 2637 | 992 | SLV 9 | 0.11 | No |
| fin. | 2 | 0 | 137419 | 8460 | | | 2637 | 992 | SLV 9 | 0.12 | No |

### Tabella dei coefficienti di sicurezza minimi

| Stato limite | Coeff.s. | Comb. | Verifica |
|---|---|---|---|
| PF_SLV | 0.366 | SLV 9 | No |
| V_SLV | 0.107 | SLV 9 | No |
| PF_SLU | 0.736 | SLU 77 | No |
| V_SLU | 0.137 | SLU 77 | No |

## Trave di accoppiamento 46

Verifiche condotte secondo D.M. 17-01-18 (N.T.C.)

### Dati geometrici

| X ini. | Y ini. | Z ini.inf. | Z ini.sup. | H ini. | X fin. | Y fin. | Z fin.inf. | Z fin.sup | H fin. | Luce | Spessore | R. Trazione |
|---|---|---|---|---|---|---|---|---|---|---|---|---|
| -1986.8 | 104.6 | 381 | 544 | 163 | -2066.8 | 104.6 | 381 | 544 | 163 | 80 | 28 | 3500 |

### Caratteristiche del materiale

(Circolare 7 21-01-19 C8.5.I) Muratura in mattoni pieni e malta di calce LC2_Corti

| fb_ | fhk | fvk0 | fhmedio | τ0 | fv0 | μ | ϕ | fvk,lim | E | G | FC |
|---|---|---|---|---|---|---|---|---|---|---|---|
| 12 | | | 17.25 | 0.9 | 2 | 0.577 | 0.767 | 0.65 | 32000 | 12800 | 1.2 |

### Verifiche a pressoflessione delle travi in muratura in combinazioni non sismiche

| Sezione | γM | N | M | Mu | Comb. | c.s. | Verifica |
|---|---|---|---|---|---|---|---|
| ini. | 3 | -2243 | 106574 | 231542 | SLU 37 | 2.17 | Si |
| fin. | 3 | -2243 | -206430 | 231542 | SLU 37 | 1.12 | Si |
| ini. | 3 | -2256 | 107328 | 231542 | SLU 35 | 2.16 | Si |
| fin. | 3 | -2256 | -208972 | 231542 | SLU 35 | 1.11 | Si |
| ini. | 3 | -2774 | 115516 | 231542 | SLU 79 | 2 | Si |
| fin. | 3 | -2774 | -229905 | 231542 | SLU 79 | 1.01 | Si |
| ini. | 3 | -2527 | 107723 | 231542 | SLU 69 | 2.15 | Si |
| fin. | 3 | -2527 | -208364 | 231542 | SLU 69 | 1.11 | Si |
| ini. | 3 | -2850 | 99442 | 231542 | SLU 74 | 2.33 | Si |
| fin. | 3 | -2850 | -213094 | 231542 | SLU 74 | 1.09 | Si |
| ini. | 3 | -2788 | 116270 | 231542 | SLU 77 | 1.99 | Si |
| fin. | 3 | -2788 | -232447 | 231542 | SLU 77 | 1 | No |
| ini. | 3 | -2832 | 107066 | 231542 | SLU 80 | 2.16 | Si |
| fin. | 3 | -2832 | -219742 | 231542 | SLU 80 | 1.05 | Si |
| ini. | 3 | -2948 | 102351 | 231542 | SLU 83 | 2.26 | Si |
| fin. | 3 | -2948 | -220873 | 231542 | SLU 83 | 1.05 | Si |
| ini. | 3 | -2845 | 107821 | 231542 | SLU 78 | 2.15 | Si |
| fin. | 3 | -2845 | -222284 | 231542 | SLU 78 | 1.04 | Si |
| ini. | 3 | -3005 | 93901 | 231542 | SLU 84 | 2.47 | Si |
| fin. | 3 | -3005 | -210710 | 231542 | SLU 84 | 1.1 | Si |

### Verifiche a taglio delle travi in muratura secondo §C8.7.1.3.1 in combinazioni non sismiche

| Sezione | γM | N | M | V | Vt | Vp | Vt fess. diag. | Vt,lim | Comb. | c.s. | Verifica |
|---|---|---|---|---|---|---|---|---|---|---|---|
| ini. | 3 | 0 | 99442 | -2904 | | | 1758 | 661 | SLU 74 | 0.23 | No |
| fin. | 3 | 0 | -213094 | -4962 | | | 1758 | 661 | SLU 74 | 0.13 | No |
| ini. | 3 | 0 | 102351 | -2954 | | | 1758 | 661 | SLU 83 | 0.22 | No |
| fin. | 3 | 0 | -220873 | -5179 | | | 1758 | 661 | SLU 83 | 0.13 | No |
| ini. | 3 | 0 | 106574 | -3014 | | | 1758 | 661 | SLU 37 | 0.22 | No |
| fin. | 3 | 0 | -206430 | -4849 | | | 1758 | 661 | SLU 37 | 0.14 | No |
| ini. | 3 | 0 | 107328 | -3055 | | | 1758 | 661 | SLU 35 | 0.22 | No |
| fin. | 3 | 0 | -208972 | -4890 | | | 1758 | 661 | SLU 35 | 0.14 | No |
| ini. | 3 | 0 | 107066 | -3082 | | | 1758 | 661 | SLU 80 | 0.21 | No |
| fin. | 3 | 0 | -219742 | -5141 | | | 1758 | 661 | SLU 80 | 0.13 | No |
| ini. | 3 | 0 | 115516 | -3315 | | | 1758 | 661 | SLU 79 | 0.2 | No |
| fin. | 3 | 0 | -229905 | -5373 | | | 1758 | 661 | SLU 79 | 0.12 | No |
| ini. | 3 | 0 | 116270 | -3356 | | | 1758 | 661 | SLU 77 | 0.2 | No |
| fin. | 3 | 0 | -232447 | -5414 | | | 1758 | 661 | SLU 77 | 0.12 | No |
| ini. | 3 | 0 | 107723 | -3144 | | | 1758 | 661 | SLU 69 | 0.21 | No |
| fin. | 3 | 0 | -208364 | -4811 | | | 1758 | 661 | SLU 69 | 0.14 | No |
| ini. | 3 | 0 | 107821 | -3123 | | | 1758 | 661 | SLU 78 | 0.21 | No |
| fin. | 3 | 0 | -222284 | -5182 | | | 1758 | 661 | SLU 78 | 0.13 | No |
| ini. | 3 | 0 | 93901 | -2721 | | | 1758 | 661 | SLU 84 | 0.24 | No |
| fin. | 3 | 0 | -210710 | -4947 | | | 1758 | 661 | SLU 84 | 0.13 | No |

### Verifiche a pressoflessione delle travi in muratura in combinazioni sismiche

| Sezione | γM | N | M | Mu | Comb. | c.s. | Verifica |
|---|---|---|---|---|---|---|---|
| ini. | 2 | -3420 | 637639 | 249444 | SLV 1 | 0.39 | No |
| fin. | 2 | -3269 | -813777 | 249444 | SLV 1 | 0.31 | No |
| ini. | 2 | -2645 | 303683 | 249444 | SLD 2 | 0.82 | No |
| fin. | 2 | -2583 | -420875 | 249444 | SLD 2 | 0.59 | No |
| ini. | 2 | -3427 | 592750 | 249444 | SLV 4 | 0.42 | No |
| fin. | 2 | -3403 | -763169 | 249444 | SLV 4 | 0.33 | No |

| Sezione | γM | N | M | Mu | Comb. | c.s. | Verifica |
|---|---|---|---|---|---|---|---|
| ini. | 2 | -3420 | 637639 | 249444 | SLV 2 | 0.39 | No |
| fin. | 2 | -3269 | -813777 | 249444 | SLV 2 | 0.31 | No |
| ini. | 2 | -711 | -482167 | 249444 | SLV 14 | 0.52 | No |
| fin. | 2 | -735 | 505721 | 249444 | SLV 14 | 0.49 | No |
| ini. | 2 | -717 | -527057 | 249444 | SLV 15 | 0.47 | No |
| fin. | 2 | -868 | 556328 | 249444 | SLV 15 | 0.45 | No |
| ini. | 2 | -717 | -527057 | 249444 | SLV 16 | 0.47 | No |
| fin. | 2 | -868 | 556328 | 249444 | SLV 16 | 0.45 | No |
| ini. | 2 | -3427 | 592750 | 249444 | SLV 3 | 0.42 | No |
| fin. | 2 | -3403 | -763169 | 249444 | SLV 3 | 0.33 | No |
| ini. | 2 | -2645 | 303683 | 249444 | SLD 1 | 0.82 | No |
| fin. | 2 | -2583 | -420875 | 249444 | SLD 1 | 0.59 | No |
| ini. | 2 | -711 | -482167 | 249444 | SLV 13 | 0.52 | No |
| fin. | 2 | -735 | 505721 | 249444 | SLV 13 | 0.49 | No |

### Verifiche a taglio delle travi in muratura secondo §C8.7.1.3.1 in combinazioni sismiche

| Sezione | γM | N | M | V | Vt | Vp | Vt fess. diag. | Vt,lim | Comb. | c.s. | Verifica |
|---|---|---|---|---|---|---|---|---|---|---|---|
| ini. | 2 | 0 | -527057 | 14243 | | | 2637 | 992 | SLV 16 | 0.07 | No |
| fin. | 2 | 0 | 556328 | 12832 | | | 2637 | 992 | SLV 16 | 0.08 | No |
| ini. | 2 | 0 | -527057 | 14243 | | | 2637 | 992 | SLV 15 | 0.07 | No |
| fin. | 2 | 0 | 556328 | 12832 | | | 2637 | 992 | SLV 15 | 0.08 | No |
| ini. | 2 | 0 | 592750 | -16343 | | | 2637 | 992 | SLV 3 | 0.06 | No |
| fin. | 2 | 0 | -763169 | -17662 | | | 2637 | 992 | SLV 3 | 0.06 | No |
| ini. | 2 | 0 | 637639 | -17563 | | | 2637 | 992 | SLV 2 | 0.06 | No |
| fin. | 2 | 0 | -813777 | -18796 | | | 2637 | 992 | SLV 2 | 0.05 | No |
| ini. | 2 | 0 | -482167 | 13023 | | | 2637 | 992 | SLV 14 | 0.08 | No |
| fin. | 2 | 0 | 505721 | 11698 | | | 2637 | 992 | SLV 14 | 0.08 | No |
| ini. | 2 | 0 | 637639 | -17563 | | | 2637 | 992 | SLV 1 | 0.06 | No |
| fin. | 2 | 0 | -813777 | -18796 | | | 2637 | 992 | SLV 1 | 0.05 | No |
| ini. | 2 | 0 | 303683 | -8446 | | | 2637 | 992 | SLD 1 | 0.12 | No |
| fin. | 2 | 0 | -420875 | -9728 | | | 2637 | 992 | SLD 1 | 0.1 | No |
| ini. | 2 | 0 | 303683 | -8446 | | | 2637 | 992 | SLD 2 | 0.12 | No |
| fin. | 2 | 0 | -420875 | -9728 | | | 2637 | 992 | SLD 2 | 0.1 | No |
| ini. | 2 | 0 | -482167 | 13023 | | | 2637 | 992 | SLV 13 | 0.08 | No |
| fin. | 2 | 0 | 505721 | 11698 | | | 2637 | 992 | SLV 13 | 0.08 | No |
| ini. | 2 | 0 | 592750 | -16343 | | | 2637 | 992 | SLV 4 | 0.06 | No |
| fin. | 2 | 0 | -763169 | -17662 | | | 2637 | 992 | SLV 4 | 0.06 | No |

### Tabella dei coefficienti di sicurezza minimi

| Stato limite | Coeff.s. | Comb. | Verifica |
|---|---|---|---|
| PF_SLV | 0.307 | SLV 1 | No |
| V_SLV | 0.053 | SLV 1 | No |
| PF_SLU | 0.996 | SLU 77 | No |
| V_SLU | 0.122 | SLU 77 | No |

## Trave di accoppiamento 47

Verifiche condotte secondo D.M. 17-01-18 (N.T.C.)

### Dati geometrici

| X ini. | Y ini. | Z ini.inf. | Z ini.sup. | H ini. | X fin. | Y fin. | Z fin.inf. | Z fin.sup | H fin. | Luce | Spessore | R. Trazione |
|---|---|---|---|---|---|---|---|---|---|---|---|---|
| -1116.3 | 104.6 | 421 | 544 | 123 | -1228.3 | 104.6 | 421 | 544 | 123 | 112 | 28 | 3500 |

### Caratteristiche del materiale

(Circolare 7 21-01-19 C8.5.I) Muratura in mattoni pieni e malta di calce LC2_Corti

| fb_ | fhk | fvk0 | fhmedio | τ0 | fv0 | μ | ϕ | fvk,lim | E | G | FC |
|---|---|---|---|---|---|---|---|---|---|---|---|
| 12 | | | 17.25 | 0.9 | 2 | 0.577 | 0.767 | 0.65 | 32000 | 12800 | 1.2 |

### Verifiche a pressoflessione delle travi in muratura in combinazioni non sismiche

| Sezione | γM | N | M | Mu | Comb. | c.s. | Verifica |
|---|---|---|---|---|---|---|---|
| ini. | 3 | -4657 | -38410 | 161542 | SLU 71 | 4.21 | Si |
| fin. | 3 | -4657 | 18458 | 161542 | SLU 71 | 8.75 | Si |
| ini. | 3 | -4551 | -33012 | 161542 | SLU 37 | 4.89 | Si |
| fin. | 3 | -4551 | 11572 | 161542 | SLU 37 | 13.96 | Si |
| ini. | 3 | -3875 | -37784 | 161542 | SLU 29 | 4.28 | Si |
| fin. | 3 | -3875 | 18116 | 161542 | SLU 29 | 8.92 | Si |
| ini. | 3 | -3906 | -35367 | 161542 | SLU 27 | 4.57 | Si |
| fin. | 3 | -3906 | 17231 | 161542 | SLU 27 | 9.37 | Si |
| ini. | 3 | -5332 | -33639 | 161542 | SLU 79 | 4.8 | Si |
| fin. | 3 | -5332 | 11914 | 161542 | SLU 79 | 13.56 | Si |
| ini. | 3 | -4798 | -33441 | 161542 | SLU 70 | 4.83 | Si |
| fin. | 3 | -4798 | 17601 | 161542 | SLU 70 | 9.18 | Si |
| ini. | 3 | -3986 | -35232 | 161542 | SLU 30 | 4.59 | Si |
| fin. | 3 | -3986 | 18143 | 161542 | SLU 30 | 8.9 | Si |
| ini. | 3 | -4687 | -35993 | 161542 | SLU 69 | 4.49 | Si |
| fin. | 3 | -4687 | 17573 | 161542 | SLU 69 | 9.19 | Si |
| ini. | 3 | -4768 | -35859 | 161542 | SLU 72 | 4.5 | Si |
| fin. | 3 | -4768 | 18485 | 161542 | SLU 72 | 8.74 | Si |
| ini. | 3 | -4017 | -32815 | 161542 | SLU 28 | 4.92 | Si |
| fin. | 3 | -4017 | 17259 | 161542 | SLU 28 | 9.36 | Si |

### Verifiche a taglio delle travi in muratura secondo §C8.7.1.3.1 in combinazioni non sismiche

| Sezione | γM | N | M | V | Vt | Vp | Vt fess. diag. | Vt,lim | Comb. | c.s. | Verifica |
|---|---|---|---|---|---|---|---|---|---|---|---|
| ini. | 3 | 0 | -33012 | 1690 | | | 1326 | 499 | SLU 37 | 0.3 | No |

| Sezione | γM | N | M | V | Vt | Vp | Vt fess. diag. | Vt,lim | Comb. | c.s. | Verifica |
|---|---|---|---|---|---|---|---|---|---|---|---|
| fin. | 3 | 0 | 11572 | -930 | | | 1326 | 499 | SLU 37 | 0.54 | No |
| ini. | 3 | 0 | -28670 | 1780 | | | 1326 | 499 | SLU 78 | 0.28 | No |
| fin. | 3 | 0 | 11057 | -1116 | | | 1326 | 499 | SLU 78 | 0.45 | No |
| ini. | 3 | 0 | -30461 | 1667 | | | 1326 | 499 | SLU 38 | 0.3 | No |
| fin. | 3 | 0 | 11599 | -952 | | | 1326 | 499 | SLU 38 | 0.52 | No |
| ini. | 3 | 0 | -6425 | 1553 | | | 1326 | 499 | SLU 82 | 0.32 | No |
| fin. | 3 | 0 | -9347 | -1651 | | | 1326 | 499 | SLU 82 | 0.3 | No |
| ini. | 3 | 0 | -17733 | 1737 | | | 1326 | 499 | SLU 84 | 0.29 | No |
| fin. | 3 | 0 | -105 | -1467 | | | 1326 | 499 | SLU 84 | 0.34 | No |
| ini. | 3 | 0 | -30595 | 1660 | | | 1326 | 499 | SLU 35 | 0.3 | No |
| fin. | 3 | 0 | 10687 | -959 | | | 1326 | 499 | SLU 35 | 0.52 | No |
| ini. | 3 | 0 | -20285 | 1759 | | | 1326 | 499 | SLU 83 | 0.28 | No |
| fin. | 3 | 0 | -133 | -1445 | | | 1326 | 499 | SLU 83 | 0.35 | No |
| ini. | 3 | 0 | -33639 | 1832 | | | 1326 | 499 | SLU 79 | 0.27 | No |
| fin. | 3 | 0 | 11914 | -1064 | | | 1326 | 499 | SLU 79 | 0.47 | No |
| ini. | 3 | 0 | -31087 | 1810 | | | 1326 | 499 | SLU 80 | 0.28 | No |
| fin. | 3 | 0 | 11941 | -1087 | | | 1326 | 499 | SLU 80 | 0.46 | No |
| ini. | 3 | 0 | -31222 | 1803 | | | 1326 | 499 | SLU 77 | 0.28 | No |
| fin. | 3 | 0 | 11029 | -1094 | | | 1326 | 499 | SLU 77 | 0.46 | No |

### Verifiche a pressoflessione delle travi in muratura in combinazioni sismiche

| Sezione | γM | N | M | Mu | Comb. | c.s. | Verifica |
|---|---|---|---|---|---|---|---|
| ini. | 2 | -10088 | -438063 | 179444 | SLV 16 | 0.41 | No |
| fin. | 2 | -10206 | 679340 | 179444 | SLV 16 | 0.26 | No |
| ini. | 2 | -10088 | -438063 | 179444 | SLV 15 | 0.41 | No |
| fin. | 2 | -10206 | 679340 | 179444 | SLV 15 | 0.26 | No |
| ini. | 2 | -10097 | -583813 | 179444 | SLV 13 | 0.31 | No |
| fin. | 2 | -10307 | 801259 | 179444 | SLV 13 | 0.22 | No |
| ini. | 2 | 2860 | 419176 | 179444 | SLV 1 | 0.43 | No |
| fin. | 2 | 2977 | -682810 | 179444 | SLV 1 | 0.26 | No |
| ini. | 2 | 2860 | 419176 | 179444 | SLV 2 | 0.43 | No |
| fin. | 2 | 2977 | -682810 | 179444 | SLV 2 | 0.26 | No |
| ini. | 2 | -10097 | -583813 | 179444 | SLV 14 | 0.31 | No |
| fin. | 2 | -10307 | 801259 | 179444 | SLV 14 | 0.22 | No |
| ini. | 2 | -1656 | 383921 | 179444 | SLV 7 | 0.47 | No |
| fin. | 2 | -1453 | -427543 | 179444 | SLV 7 | 0.42 | No |
| ini. | 2 | 2868 | 564926 | 179444 | SLV 3 | 0.32 | No |
| fin. | 2 | 3078 | -804729 | 179444 | SLV 3 | 0.22 | No |
| ini. | 2 | -1656 | 383921 | 179444 | SLV 8 | 0.47 | No |
| fin. | 2 | -1453 | -427543 | 179444 | SLV 8 | 0.42 | No |
| ini. | 2 | 2868 | 564926 | 179444 | SLV 4 | 0.32 | No |
| fin. | 2 | 3078 | -804729 | 179444 | SLV 4 | 0.22 | No |

### Verifiche a taglio delle travi in muratura secondo §C8.7.1.3.1 in combinazioni sismiche

| Sezione | γM | N | M | V | Vt | Vp | Vt fess. diag. | Vt,lim | Comb. | c.s. | Verifica |
|---|---|---|---|---|---|---|---|---|---|---|---|
| ini. | 2 | 0 | 419176 | -8782 | | | 1990 | 749 | SLV 1 | 0.09 | No |
| fin. | 2 | 0 | -682810 | -10819 | | | 1990 | 749 | SLV 1 | 0.07 | No |
| ini. | 2 | 0 | -402808 | 8147 | | | 1990 | 749 | SLV 9 | 0.09 | No |
| fin. | 2 | 0 | 424073 | 6434 | | | 1990 | 749 | SLV 9 | 0.12 | No |
| ini. | 2 | 0 | 419176 | -8782 | | | 1990 | 749 | SLV 2 | 0.09 | No |
| fin. | 2 | 0 | -682810 | -10819 | | | 1990 | 749 | SLV 2 | 0.07 | No |
| ini. | 2 | 0 | -438063 | 10666 | | | 1990 | 749 | SLV 16 | 0.07 | No |
| fin. | 2 | 0 | 679340 | 9141 | | | 1990 | 749 | SLV 16 | 0.08 | No |
| ini. | 2 | 0 | -438063 | 10666 | | | 1990 | 749 | SLV 15 | 0.07 | No |
| fin. | 2 | 0 | 679340 | 9141 | | | 1990 | 749 | SLV 15 | 0.08 | No |
| ini. | 2 | 0 | 564926 | -11143 | | | 1990 | 749 | SLV 4 | 0.07 | No |
| fin. | 2 | 0 | -804729 | -13174 | | | 1990 | 749 | SLV 4 | 0.06 | No |
| ini. | 2 | 0 | 564926 | -11143 | | | 1990 | 749 | SLV 3 | 0.07 | No |
| fin. | 2 | 0 | -804729 | -13174 | | | 1990 | 749 | SLV 3 | 0.06 | No |
| ini. | 2 | 0 | -402808 | 8147 | | | 1990 | 749 | SLV 10 | 0.09 | No |
| fin. | 2 | 0 | 424073 | 6434 | | | 1990 | 749 | SLV 10 | 0.12 | No |
| ini. | 2 | 0 | -583813 | 13026 | | | 1990 | 749 | SLV 13 | 0.06 | No |
| fin. | 2 | 0 | 801259 | 11497 | | | 1990 | 749 | SLV 13 | 0.07 | No |
| ini. | 2 | 0 | -583813 | 13026 | | | 1990 | 749 | SLV 14 | 0.06 | No |
| fin. | 2 | 0 | 801259 | 11497 | | | 1990 | 749 | SLV 14 | 0.07 | No |

### Tabella dei coefficienti di sicurezza minimi

| Stato limite | Coeff.s. | Comb. | Verifica |
|---|---|---|---|
| PF_SLV | 0.223 | SLV 3 | No |
| V_SLV | 0.057 | SLV 3 | No |
| PF_SLU | 4.206 | SLU 71 | Si |
| V_SLU | 0.272 | SLU 79 | No |

## Trave di accoppiamento 48

Verifiche condotte secondo D.M. 17-01-18 (N.T.C.)

### Dati geometrici

| X ini. | Y ini. | Z ini.inf. | Z ini.sup. | H ini. | X fin. | Y fin. | Z fin.inf. | Z fin.sup | H fin. | Luce | Spessore | R. Trazione |
|---|---|---|---|---|---|---|---|---|---|---|---|---|
| -416.8 | 104.6 | 381 | 544 | 163 | -496.8 | 104.6 | 381 | 544 | 163 | 80 | 28 | 3500 |

### Caratteristiche del materiale

(Circolare 7 21-01-19 C8.5.I) Muratura in mattoni pieni e malta di calce LC2_Corti

| fb_ | fhk | fvk0 | fhmedio | τ0 | fv0 | μ | ϕ | fvk,lim | E | G | FC |
|---|---|---|---|---|---|---|---|---|---|---|---|
| 12 | | | 17.25 | 0.9 | 2 | 0.577 | 0.767 | 0.65 | 32000 | 12800 | 1.2 |

## Verifiche a pressoflessione delle travi in muratura in combinazioni non sismiche

| Sezione | γM | N | M | Mu | Comb. | c.s. | Verifica |
|---|---|---|---|---|---|---|---|
| ini. | 3 | -2851 | -139909 | 231542 | SLU 78 | 1.65 | Si |
| fin. | 3 | -2851 | 80560 | 231542 | SLU 78 | 2.87 | Si |
| ini. | 3 | -2937 | -135992 | 231542 | SLU 84 | 1.7 | Si |
| fin. | 3 | -2937 | 74027 | 231542 | SLU 84 | 3.13 | Si |
| ini. | 3 | -2920 | -144427 | 231542 | SLU 83 | 1.6 | Si |
| fin. | 3 | -2920 | 84203 | 231542 | SLU 83 | 2.75 | Si |
| ini. | 3 | -2795 | -140234 | 231542 | SLU 74 | 1.65 | Si |
| fin. | 3 | -2795 | 82046 | 231542 | SLU 74 | 2.82 | Si |
| ini. | 3 | -2855 | -144302 | 231542 | SLU 79 | 1.6 | Si |
| fin. | 3 | -2855 | 88460 | 231542 | SLU 79 | 2.62 | Si |
| ini. | 3 | -2881 | -136316 | 231542 | SLU 81 | 1.7 | Si |
| fin. | 3 | -2881 | 75513 | 231542 | SLU 81 | 3.07 | Si |
| ini. | 3 | -2834 | -148345 | 231542 | SLU 77 | 1.56 | Si |
| fin. | 3 | -2834 | 90736 | 231542 | SLU 77 | 2.55 | Si |
| ini. | 3 | -2378 | -132825 | 231542 | SLU 35 | 1.74 | Si |
| fin. | 3 | -2378 | 83595 | 231542 | SLU 35 | 2.77 | Si |
| ini. | 3 | -2813 | -131799 | 231542 | SLU 75 | 1.76 | Si |
| fin. | 3 | -2813 | 71870 | 231542 | SLU 75 | 3.22 | Si |
| ini. | 3 | -2873 | -135867 | 231542 | SLU 80 | 1.7 | Si |
| fin. | 3 | -2873 | 78283 | 231542 | SLU 80 | 2.96 | Si |

## Verifiche a taglio delle travi in muratura secondo §C8.7.1.3.1 in combinazioni non sismiche

| Sezione | γM | N | M | V | Vt | Vp | Vt fess. diag. | Vt,lim | Comb. | c.s. | Verifica |
|---|---|---|---|---|---|---|---|---|---|---|---|
| ini. | 3 | 0 | -136316 | 3793 | | | 1758 | 661 | SLU 81 | 0.17 | No |
| fin. | 3 | 0 | 75513 | 1584 | | | 1758 | 661 | SLU 81 | 0.42 | No |
| ini. | 3 | 0 | -132825 | 3647 | | | 1758 | 661 | SLU 35 | 0.18 | No |
| fin. | 3 | 0 | 83595 | 1824 | | | 1758 | 661 | SLU 35 | 0.36 | No |
| ini. | 3 | 0 | -135992 | 3771 | | | 1758 | 661 | SLU 84 | 0.18 | No |
| fin. | 3 | 0 | 74027 | 1561 | | | 1758 | 661 | SLU 84 | 0.42 | No |
| ini. | 3 | 0 | -135867 | 3739 | | | 1758 | 661 | SLU 80 | 0.18 | No |
| fin. | 3 | 0 | 78283 | 1696 | | | 1758 | 661 | SLU 80 | 0.39 | No |
| ini. | 3 | 0 | -131799 | 3608 | | | 1758 | 661 | SLU 75 | 0.18 | No |
| fin. | 3 | 0 | 71870 | 1565 | | | 1758 | 661 | SLU 75 | 0.42 | No |
| ini. | 3 | 0 | -144302 | 3971 | | | 1758 | 661 | SLU 79 | 0.17 | No |
| fin. | 3 | 0 | 88460 | 1929 | | | 1758 | 661 | SLU 79 | 0.34 | No |
| ini. | 3 | 0 | -139909 | 3818 | | | 1758 | 661 | SLU 78 | 0.17 | No |
| fin. | 3 | 0 | 80560 | 1775 | | | 1758 | 661 | SLU 78 | 0.37 | No |
| ini. | 3 | 0 | -140234 | 3840 | | | 1758 | 661 | SLU 74 | 0.17 | No |
| fin. | 3 | 0 | 82046 | 1798 | | | 1758 | 661 | SLU 74 | 0.37 | No |
| ini. | 3 | 0 | -148345 | 4050 | | | 1758 | 661 | SLU 77 | 0.16 | No |
| fin. | 3 | 0 | 90736 | 2008 | | | 1758 | 661 | SLU 77 | 0.33 | No |
| ini. | 3 | 0 | -144427 | 4003 | | | 1758 | 661 | SLU 83 | 0.17 | No |
| fin. | 3 | 0 | 84203 | 1794 | | | 1758 | 661 | SLU 83 | 0.37 | No |

## Verifiche a pressoflessione delle travi in muratura in combinazioni sismiche

| Sezione | γM | N | M | Mu | Comb. | c.s. | Verifica |
|---|---|---|---|---|---|---|---|
| ini. | 2 | -3774 | 550184 | 249444 | SLV 1 | 0.45 | No |
| fin. | 2 | -3959 | -335728 | 249444 | SLV 1 | 0.74 | No |
| ini. | 2 | -3829 | 589194 | 249444 | SLV 4 | 0.42 | No |
| fin. | 2 | -3651 | -382651 | 249444 | SLV 4 | 0.65 | No |
| ini. | 2 | -1175 | -372739 | 249444 | SLD 14 | 0.67 | No |
| fin. | 2 | -1245 | 229722 | 249444 | SLD 14 | 1.09 | Si |
| ini. | 2 | -1175 | -372739 | 249444 | SLD 13 | 0.67 | No |
| fin. | 2 | -1245 | 229722 | 249444 | SLD 13 | 1.09 | Si |
| ini. | 2 | -3829 | 589194 | 249444 | SLV 3 | 0.42 | No |
| fin. | 2 | -3651 | -382651 | 249444 | SLV 3 | 0.65 | No |
| ini. | 2 | -152 | -720112 | 249444 | SLV 15 | 0.35 | No |
| fin. | 2 | 33 | 428965 | 249444 | SLV 15 | 0.58 | No |
| ini. | 2 | -152 | -720112 | 249444 | SLV 16 | 0.35 | No |
| fin. | 2 | 33 | 428965 | 249444 | SLV 16 | 0.58 | No |
| ini. | 2 | -97 | -759122 | 249444 | SLV 14 | 0.33 | No |
| fin. | 2 | -275 | 475888 | 249444 | SLV 14 | 0.52 | No |
| ini. | 2 | -3774 | 550184 | 249444 | SLV 2 | 0.45 | No |
| fin. | 2 | -3959 | -335728 | 249444 | SLV 2 | 0.74 | No |
| ini. | 2 | -97 | -759122 | 249444 | SLV 13 | 0.33 | No |
| fin. | 2 | -275 | 475888 | 249444 | SLV 13 | 0.52 | No |

## Verifiche a taglio delle travi in muratura secondo §C8.7.1.3.1 in combinazioni sismiche

| Sezione | γM | N | M | V | Vt | Vp | Vt fess. diag. | Vt,lim | Comb. | c.s. | Verifica |
|---|---|---|---|---|---|---|---|---|---|---|---|
| ini. | 2 | 0 | -759122 | 16351 | | | 2637 | 992 | SLV 13 | 0.06 | No |
| fin. | 2 | 0 | 475888 | 14633 | | | 2637 | 992 | SLV 13 | 0.07 | No |
| ini. | 2 | 0 | -720112 | 15294 | | | 2637 | 992 | SLV 16 | 0.06 | No |
| fin. | 2 | 0 | 428965 | 13970 | | | 2637 | 992 | SLV 16 | 0.07 | No |
| ini. | 2 | 0 | 550184 | -10631 | | | 2637 | 992 | SLV 1 | 0.09 | No |
| fin. | 2 | 0 | -335728 | -11926 | | | 2637 | 992 | SLV 1 | 0.08 | No |
| ini. | 2 | 0 | 589194 | -11688 | | | 2637 | 992 | SLV 3 | 0.08 | No |
| fin. | 2 | 0 | -382651 | -12590 | | | 2637 | 992 | SLV 3 | 0.08 | No |
| ini. | 2 | 0 | -720112 | 15294 | | | 2637 | 992 | SLV 15 | 0.06 | No |
| fin. | 2 | 0 | 428965 | 13970 | | | 2637 | 992 | SLV 15 | 0.07 | No |
| ini. | 2 | 0 | 550184 | -10631 | | | 2637 | 992 | SLV 2 | 0.09 | No |
| fin. | 2 | 0 | -335728 | -11926 | | | 2637 | 992 | SLV 2 | 0.08 | No |
| ini. | 2 | 0 | -372739 | 8318 | | | 2637 | 992 | SLD 14 | 0.12 | No |
| fin. | 2 | 0 | 229722 | 6837 | | | 2637 | 992 | SLD 14 | 0.15 | No |

| Sezione | γM | N | M | V | Vt | Vp | Vt fess. diag. | Vt,lim | Comb. | c.s. | Verifica |
|---|---|---|---|---|---|---|---|---|---|---|---|
| ini. | 2 | 0 | 589194 | -11688 | | | 2637 | 992 | SLV 4 | 0.08 | No |
| fin. | 2 | 0 | -382651 | -12590 | | | 2637 | 992 | SLV 4 | 0.08 | No |
| ini. | 2 | 0 | -372739 | 8318 | | | 2637 | 992 | SLD 13 | 0.12 | No |
| fin. | 2 | 0 | 229722 | 6837 | | | 2637 | 992 | SLD 13 | 0.15 | No |
| ini. | 2 | 0 | -759122 | 16351 | | | 2637 | 992 | SLV 14 | 0.06 | No |
| fin. | 2 | 0 | 475888 | 14633 | | | 2637 | 992 | SLV 14 | 0.07 | No |

### Tabella dei coefficienti di sicurezza minimi

| Stato limite | Coeff.s. | Comb. | Verifica |
|---|---|---|---|
| PF_SLV | 0.329 | SLV 13 | No |
| V_SLV | 0.061 | SLV 13 | No |
| PF_SLU | 1.561 | SLU 77 | Si |
| V_SLU | 0.163 | SLU 77 | No |

## Trave di accoppiamento 49

Verifiche condotte secondo D.M. 17-01-18 (N.T.C.)

### Dati geometrici

| X ini. | Y ini. | Z ini.inf. | Z ini.sup. | H ini. | X fin. | Y fin. | Z fin.inf. | Z fin.sup | H fin. | Luce | Spessore | R. Trazione |
|---|---|---|---|---|---|---|---|---|---|---|---|---|
| -1776.8 | 666.1 | 171 | 261 | 90 | -1676.8 | 666.1 | 171 | 261 | 90 | 100 | 28 | 3500 |

### Caratteristiche del materiale

(Circolare 7 21-01-19 C8.5.I) Muratura in mattoni pieni e malta di calce LC2_Corti

| fb_ | fhk | fvk0 | fhmedio | τ0 | fv0 | μ | ϕ | fvk,lim | E | G | FC |
|---|---|---|---|---|---|---|---|---|---|---|---|
| 12 | | | 17.25 | 0.9 | 2 | 0.577 | 0.767 | 0.65 | 32000 | 12800 | 1.2 |

### Verifiche a pressoflessione delle travi in muratura in combinazioni non sismiche

| Sezione | γM | N | M | Mu | Comb. | c.s. | Verifica |
|---|---|---|---|---|---|---|---|
| ini. | 3 | 3383 | 74742 | 103792 | SLU 84 | 1.39 | Si |
| fin. | 3 | 2218 | 50895 | 103792 | SLU 84 | 2.04 | Si |
| ini. | 3 | 3061 | 76883 | 103792 | SLU 80 | 1.35 | Si |
| fin. | 3 | 2006 | 44244 | 103792 | SLU 80 | 2.35 | Si |
| ini. | 3 | 3373 | 75168 | 103792 | SLU 83 | 1.38 | Si |
| fin. | 3 | 2212 | 50525 | 103792 | SLU 83 | 2.05 | Si |
| ini. | 3 | 2624 | 73022 | 103792 | SLU 71 | 1.42 | Si |
| fin. | 3 | 1732 | 36026 | 103792 | SLU 71 | 2.88 | Si |
| ini. | 3 | 3051 | 77309 | 103792 | SLU 79 | 1.34 | Si |
| fin. | 3 | 2000 | 43875 | 103792 | SLU 79 | 2.37 | Si |
| ini. | 3 | 3268 | 72834 | 103792 | SLU 75 | 1.43 | Si |
| fin. | 3 | 2148 | 48931 | 103792 | SLU 75 | 2.12 | Si |
| ini. | 3 | 2692 | 72951 | 103792 | SLU 69 | 1.42 | Si |
| fin. | 3 | 1776 | 37426 | 103792 | SLU 69 | 2.77 | Si |
| ini. | 3 | 3129 | 76813 | 103792 | SLU 78 | 1.35 | Si |
| fin. | 3 | 2049 | 45645 | 103792 | SLU 78 | 2.27 | Si |
| ini. | 3 | 3119 | 77239 | 103792 | SLU 77 | 1.34 | Si |
| fin. | 3 | 2044 | 45275 | 103792 | SLU 77 | 2.29 | Si |
| ini. | 3 | 3258 | 73260 | 103792 | SLU 74 | 1.42 | Si |
| fin. | 3 | 2142 | 48562 | 103792 | SLU 74 | 2.14 | Si |

### Verifiche a taglio delle travi in muratura secondo §C8.7.1.3.1 in combinazioni non sismiche

| Sezione | γM | N | M | V | Vt | Vp | Vt fess. diag. | Vt,lim | Comb. | c.s. | Verifica |
|---|---|---|---|---|---|---|---|---|---|---|---|
| ini. | 3 | 0 | 58822 | -97 | | | 873 | 329 | SLU 40 | 3.39 | Si |
| fin. | 3 | 0 | 47013 | 723 | | | 873 | 329 | SLU 40 | 0.45 | No |
| ini. | 3 | 0 | 59248 | -107 | | | 873 | 329 | SLU 39 | 3.08 | Si |
| fin. | 3 | 0 | 46643 | 713 | | | 873 | 329 | SLU 39 | 0.46 | No |
| ini. | 3 | 0 | 68642 | -114 | | | 873 | 329 | SLU 73 | 2.87 | Si |
| fin. | 3 | 0 | 51064 | 712 | | | 873 | 329 | SLU 73 | 0.46 | No |
| ini. | 3 | 0 | 64548 | -79 | | | 873 | 329 | SLU 61 | 4.18 | Si |
| fin. | 3 | 0 | 48797 | 668 | | | 873 | 329 | SLU 61 | 0.49 | No |
| ini. | 3 | 0 | 71189 | -123 | | | 873 | 329 | SLU 81 | 2.67 | Si |
| fin. | 3 | 0 | 53812 | 774 | | | 873 | 329 | SLU 81 | 0.42 | No |
| ini. | 3 | 0 | 70763 | -114 | | | 873 | 329 | SLU 82 | 2.89 | Si |
| fin. | 3 | 0 | 54181 | 784 | | | 873 | 329 | SLU 82 | 0.42 | No |
| ini. | 3 | 0 | 74742 | -207 | | | 873 | 329 | SLU 84 | 1.59 | Si |
| fin. | 3 | 0 | 50895 | 699 | | | 873 | 329 | SLU 84 | 0.47 | No |
| ini. | 3 | 0 | 72834 | -199 | | | 873 | 329 | SLU 75 | 1.65 | Si |
| fin. | 3 | 0 | 48931 | 653 | | | 873 | 329 | SLU 75 | 0.5 | No |
| ini. | 3 | 0 | 64974 | -88 | | | 873 | 329 | SLU 60 | 3.72 | Si |
| fin. | 3 | 0 | 48428 | 658 | | | 873 | 329 | SLU 60 | 0.5 | No |
| ini. | 3 | 0 | 75168 | -217 | | | 873 | 329 | SLU 83 | 1.51 | Si |
| fin. | 3 | 0 | 50525 | 689 | | | 873 | 329 | SLU 83 | 0.48 | No |

### Verifiche a pressoflessione delle travi in muratura in combinazioni sismiche

| Sezione | γM | N | M | Mu | Comb. | c.s. | Verifica |
|---|---|---|---|---|---|---|---|
| ini. | 2 | 2689 | -171598 | 121694 | SLV 2 | 0.71 | No |
| fin. | 2 | 2584 | 248594 | 121694 | SLV 2 | 0.49 | No |
| ini. | 2 | 1879 | 271415 | 121694 | SLV 16 | 0.45 | No |
| fin. | 2 | 449 | -180938 | 121694 | SLV 16 | 0.67 | No |
| ini. | 2 | 4430 | 273567 | 121694 | SLV 11 | 0.44 | No |
| fin. | 2 | -1388 | -151048 | 121694 | SLV 11 | 0.81 | No |
| ini. | 2 | 2689 | -171598 | 121694 | SLV 1 | 0.71 | No |
| fin. | 2 | 2584 | 248594 | 121694 | SLV 1 | 0.49 | No |
| ini. | 2 | 139 | -173751 | 121694 | SLV 5 | 0.7 | No |

| Sezione | γM | N | M | Mu | Comb. | c.s. | Verifica |
|---|---|---|---|---|---|---|---|
| fin. | 2 | 4421 | 218704 | 121694 | SLV 5 | 0.56 | No |
| ini. | 2 | 1879 | 271415 | 121694 | SLV 15 | 0.45 | No |
| fin. | 2 | 449 | -180938 | 121694 | SLV 15 | 0.67 | No |
| ini. | 2 | 5121 | 171759 | 121694 | SLV 8 | 0.71 | No |
| fin. | 2 | -1259 | -46013 | 121694 | SLV 8 | 2.64 | Si |
| ini. | 2 | 139 | -173751 | 121694 | SLV 6 | 0.7 | No |
| fin. | 2 | 4421 | 218704 | 121694 | SLV 6 | 0.56 | No |
| ini. | 2 | 5121 | 171759 | 121694 | SLV 7 | 0.71 | No |
| fin. | 2 | -1259 | -46013 | 121694 | SLV 7 | 2.64 | Si |
| ini. | 2 | 4430 | 273567 | 121694 | SLV 12 | 0.44 | No |
| fin. | 2 | -1388 | -151048 | 121694 | SLV 12 | 0.81 | No |

### Verifiche a taglio delle travi in muratura secondo §C8.7.1.3.1 in combinazioni sismiche

| Sezione | γM | N | M | V | Vt | Vp | Vt fess. diag. | Vt,lim | Comb. | c.s. | Verifica |
|---|---|---|---|---|---|---|---|---|---|---|---|
| ini. | 2 | 0 | -1878 | 1618 | | | 1310 | 493 | SLD 4 | 0.3 | No |
| fin. | 2 | 0 | 92751 | 2394 | | | 1310 | 493 | SLD 4 | 0.21 | No |
| ini. | 2 | 0 | -67945 | 3836 | | | 1310 | 493 | SLV 4 | 0.13 | No |
| fin. | 2 | 0 | 169179 | 4962 | | | 1310 | 493 | SLV 4 | 0.1 | No |
| ini. | 2 | 0 | -67945 | 3836 | | | 1310 | 493 | SLV 3 | 0.13 | No |
| fin. | 2 | 0 | 169179 | 4962 | | | 1310 | 493 | SLV 3 | 0.1 | No |
| ini. | 2 | 0 | -171598 | 4332 | | | 1310 | 493 | SLV 1 | 0.11 | No |
| fin. | 2 | 0 | 248594 | 4661 | | | 1310 | 493 | SLV 1 | 0.11 | No |
| ini. | 2 | 0 | 167762 | -4038 | | | 1310 | 493 | SLV 14 | 0.12 | No |
| fin. | 2 | 0 | -101523 | -4120 | | | 1310 | 493 | SLV 14 | 0.12 | No |
| ini. | 2 | 0 | 167762 | -4038 | | | 1310 | 493 | SLV 13 | 0.12 | No |
| fin. | 2 | 0 | -101523 | -4120 | | | 1310 | 493 | SLV 13 | 0.12 | No |
| ini. | 2 | 0 | 271415 | -4534 | | | 1310 | 493 | SLV 16 | 0.11 | No |
| fin. | 2 | 0 | -180938 | -3819 | | | 1310 | 493 | SLV 16 | 0.13 | No |
| ini. | 2 | 0 | 271415 | -4534 | | | 1310 | 493 | SLV 15 | 0.11 | No |
| fin. | 2 | 0 | -180938 | -3819 | | | 1310 | 493 | SLV 15 | 0.13 | No |
| ini. | 2 | 0 | -1878 | 1618 | | | 1310 | 493 | SLD 3 | 0.3 | No |
| fin. | 2 | 0 | 92751 | 2394 | | | 1310 | 493 | SLD 3 | 0.21 | No |
| ini. | 2 | 0 | -171598 | 4332 | | | 1310 | 493 | SLV 2 | 0.11 | No |
| fin. | 2 | 0 | 248594 | 4661 | | | 1310 | 493 | SLV 2 | 0.11 | No |

### Tabella dei coefficienti di sicurezza minimi

| Stato limite | Coeff.s. | Comb. | Verifica |
|---|---|---|---|
| PF_SLV | 0.445 | SLV 11 | No |
| V_SLV | 0.099 | SLV 3 | No |
| PF_SLU | 1.343 | SLU 79 | Si |
| V_SLU | 0.419 | SLU 82 | No |

## Trave di accoppiamento 50

Verifiche condotte secondo D.M. 17-01-18 (N.T.C.)

### Dati geometrici

| X ini. | Y ini. | Z ini.inf. | Z ini.sup. | H ini. | X fin. | Y fin. | Z fin.inf. | Z fin.sup | H fin. | Luce | Spessore | R. Trazione |
|---|---|---|---|---|---|---|---|---|---|---|---|---|
| -1776.8 | 666.1 | 451 | 544 | 93 | -1676.8 | 666.1 | 451 | 544 | 93 | 100 | 28 | 3500 |

### Caratteristiche del materiale

(Circolare 7 21-01-19 C8.5.I) Muratura in mattoni pieni e malta di calce LC2_Corti

| fb_ | fhk | fvk0 | fhmedio | τ0 | fv0 | μ | ϕ | fvk,lim | E | G | FC |
|---|---|---|---|---|---|---|---|---|---|---|---|
| 12 | | | 17.25 | 0.9 | 2 | 0.577 | 0.767 | 0.65 | 32000 | 12800 | 1.2 |

### Verifiche a pressoflessione delle travi in muratura in combinazioni non sismiche

| Sezione | γM | N | M | Mu | Comb. | c.s. | Verifica |
|---|---|---|---|---|---|---|---|
| ini. | 3 | -2285 | -24775 | 109042 | SLU 77 | 4.4 | Si |
| fin. | 3 | -2526 | -53892 | 109042 | SLU 77 | 2.02 | Si |
| ini. | 3 | -2288 | -25119 | 109042 | SLU 78 | 4.34 | Si |
| fin. | 3 | -2518 | -53576 | 109042 | SLU 78 | 2.04 | Si |
| ini. | 3 | -2390 | -27389 | 109042 | SLU 83 | 3.98 | Si |
| fin. | 3 | -2590 | -53569 | 109042 | SLU 83 | 2.04 | Si |
| ini. | 3 | -2251 | -24356 | 109042 | SLU 80 | 4.48 | Si |
| fin. | 3 | -2493 | -53420 | 109042 | SLU 80 | 2.04 | Si |
| ini. | 3 | -2393 | -27733 | 109042 | SLU 84 | 3.93 | Si |
| fin. | 3 | -2581 | -53254 | 109042 | SLU 84 | 2.05 | Si |
| ini. | 3 | -2417 | -29007 | 109042 | SLU 81 | 3.76 | Si |
| fin. | 3 | -2564 | -51398 | 109042 | SLU 81 | 2.12 | Si |
| ini. | 3 | -2249 | -24012 | 109042 | SLU 79 | 4.54 | Si |
| fin. | 3 | -2502 | -53736 | 109042 | SLU 79 | 2.03 | Si |
| ini. | 3 | -2314 | -26737 | 109042 | SLU 75 | 4.08 | Si |
| fin. | 3 | -2492 | -51406 | 109042 | SLU 75 | 2.12 | Si |
| ini. | 3 | -2311 | -26393 | 109042 | SLU 74 | 4.13 | Si |
| fin. | 3 | -2501 | -51721 | 109042 | SLU 74 | 2.11 | Si |
| ini. | 3 | -2419 | -29352 | 109042 | SLU 82 | 3.72 | Si |
| fin. | 3 | -2555 | -51083 | 109042 | SLU 82 | 2.13 | Si |

### Verifiche a taglio delle travi in muratura secondo §C8.7.1.3.1 in combinazioni non sismiche

| Sezione | γM | N | M | V | Vt | Vp | Vt fess. diag. | Vt,lim | Comb. | c.s. | Verifica |
|---|---|---|---|---|---|---|---|---|---|---|---|
| ini. | 3 | 0 | -29007 | 2366 | | | 933 | 351 | SLU 81 | 0.15 | No |
| fin. | 3 | 0 | -51398 | -4039 | | | 933 | 351 | SLU 81 | 0.09 | No |
| ini. | 3 | 0 | -27389 | 2280 | | | 933 | 351 | SLU 83 | 0.15 | No |
| fin. | 3 | 0 | -53569 | -4075 | | | 933 | 351 | SLU 83 | 0.09 | No |

| Sezione | γM | N | M | V | Vt | Vp | Vt fess. diag. | Vt,lim | Comb. | c.s. | Verifica |
|---|---|---|---|---|---|---|---|---|---|---|---|
| ini. | 3 | 0 | -25119 | 2116 | | | 933 | 351 | SLU 78 | 0.17 | No |
| fin. | 3 | 0 | -53576 | -3933 | | | 933 | 351 | SLU 78 | 0.09 | No |
| ini. | 3 | 0 | -29352 | 2378 | | | 933 | 351 | SLU 82 | 0.15 | No |
| fin. | 3 | 0 | -51083 | -4028 | | | 933 | 351 | SLU 82 | 0.09 | No |
| ini. | 3 | 0 | -26393 | 2190 | | | 933 | 351 | SLU 74 | 0.16 | No |
| fin. | 3 | 0 | -51721 | -3908 | | | 933 | 351 | SLU 74 | 0.09 | No |
| ini. | 3 | 0 | -26737 | 2202 | | | 933 | 351 | SLU 75 | 0.16 | No |
| fin. | 3 | 0 | -51406 | -3897 | | | 933 | 351 | SLU 75 | 0.09 | No |
| ini. | 3 | 0 | -24012 | 2057 | | | 933 | 351 | SLU 79 | 0.17 | No |
| fin. | 3 | 0 | -53736 | -3904 | | | 933 | 351 | SLU 79 | 0.09 | No |
| ini. | 3 | 0 | -24775 | 2104 | | | 933 | 351 | SLU 77 | 0.17 | No |
| fin. | 3 | 0 | -53892 | -3944 | | | 933 | 351 | SLU 77 | 0.09 | No |
| ini. | 3 | 0 | -27733 | 2292 | | | 933 | 351 | SLU 84 | 0.15 | No |
| fin. | 3 | 0 | -53254 | -4064 | | | 933 | 351 | SLU 84 | 0.09 | No |
| ini. | 3 | 0 | -24356 | 2069 | | | 933 | 351 | SLU 80 | 0.17 | No |
| fin. | 3 | 0 | -53420 | -3893 | | | 933 | 351 | SLU 80 | 0.09 | No |

### Verifiche a pressoflessione delle travi in muratura in combinazioni sismiche

| Sezione | γM | N | M | Mu | Comb. | c.s. | Verifica |
|---|---|---|---|---|---|---|---|
| ini. | 2 | 981 | 133374 | 126944 | SLV 13 | 0.95 | No |
| fin. | 2 | -3589 | -132126 | 126944 | SLV 13 | 0.96 | No |
| ini. | 2 | 51 | 123035 | 126944 | SLV 15 | 1.03 | Si |
| fin. | 2 | -3793 | -151710 | 126944 | SLV 15 | 0.84 | No |
| ini. | 2 | 51 | 123035 | 126944 | SLV 16 | 1.03 | Si |
| fin. | 2 | -3793 | -151710 | 126944 | SLV 16 | 0.84 | No |
| ini. | 2 | -3230 | -159690 | 126944 | SLV 2 | 0.79 | No |
| fin. | 2 | 389 | 82593 | 126944 | SLV 2 | 1.54 | Si |
| ini. | 2 | -4161 | -170029 | 126944 | SLV 4 | 0.75 | No |
| fin. | 2 | 185 | 63010 | 126944 | SLV 4 | 2.01 | Si |
| ini. | 2 | -3230 | -159690 | 126944 | SLV 1 | 0.79 | No |
| fin. | 2 | 389 | 82593 | 126944 | SLV 1 | 1.54 | Si |
| ini. | 2 | 981 | 133374 | 126944 | SLV 14 | 0.95 | No |
| fin. | 2 | -3589 | -132126 | 126944 | SLV 14 | 0.96 | No |
| ini. | 2 | -2509 | 8401 | 126944 | SLV 12 | 15.11 | Si |
| fin. | 2 | -2639 | -99405 | 126944 | SLV 12 | 1.28 | Si |
| ini. | 2 | -2509 | 8401 | 126944 | SLV 11 | 15.11 | Si |
| fin. | 2 | -2639 | -99405 | 126944 | SLV 11 | 1.28 | Si |
| ini. | 2 | -4161 | -170029 | 126944 | SLV 3 | 0.75 | No |
| fin. | 2 | 185 | 63010 | 126944 | SLV 3 | 2.01 | Si |

### Verifiche a taglio delle travi in muratura secondo §C8.7.1.3.1 in combinazioni sismiche

| Sezione | γM | N | M | V | Vt | Vp | Vt fess. diag. | Vt,lim | Comb. | c.s. | Verifica |
|---|---|---|---|---|---|---|---|---|---|---|---|
| ini. | 2 | 0 | -159690 | 5851 | | | 1399 | 526 | SLV 2 | 0.09 | No |
| fin. | 2 | 0 | 82593 | 1976 | | | 1399 | 526 | SLV 2 | 0.27 | No |
| ini. | 2 | 0 | -159690 | 5851 | | | 1399 | 526 | SLV 1 | 0.09 | No |
| fin. | 2 | 0 | 82593 | 1976 | | | 1399 | 526 | SLV 1 | 0.27 | No |
| ini. | 2 | 0 | 133374 | -3336 | | | 1399 | 526 | SLV 13 | 0.16 | No |
| fin. | 2 | 0 | -132126 | -6901 | | | 1399 | 526 | SLV 13 | 0.08 | No |
| ini. | 2 | 0 | 123035 | -2838 | | | 1399 | 526 | SLV 15 | 0.19 | No |
| fin. | 2 | 0 | -151710 | -7214 | | | 1399 | 526 | SLV 15 | 0.07 | No |
| ini. | 2 | 0 | 43022 | -381 | | | 1399 | 526 | SLD 16 | 1.38 | Si |
| fin. | 2 | 0 | -85066 | -4609 | | | 1399 | 526 | SLD 16 | 0.11 | No |
| ini. | 2 | 0 | 43022 | -381 | | | 1399 | 526 | SLD 15 | 1.38 | Si |
| fin. | 2 | 0 | -85066 | -4609 | | | 1399 | 526 | SLD 15 | 0.11 | No |
| ini. | 2 | 0 | 123035 | -2838 | | | 1399 | 526 | SLV 16 | 0.19 | No |
| fin. | 2 | 0 | -151710 | -7214 | | | 1399 | 526 | SLV 16 | 0.07 | No |
| ini. | 2 | 0 | -170029 | 6349 | | | 1399 | 526 | SLV 3 | 0.08 | No |
| fin. | 2 | 0 | 63010 | 1662 | | | 1399 | 526 | SLV 3 | 0.32 | No |
| ini. | 2 | 0 | 133374 | -3336 | | | 1399 | 526 | SLV 14 | 0.16 | No |
| fin. | 2 | 0 | -132126 | -6901 | | | 1399 | 526 | SLV 14 | 0.08 | No |
| ini. | 2 | 0 | -170029 | 6349 | | | 1399 | 526 | SLV 4 | 0.08 | No |
| fin. | 2 | 0 | 63010 | 1662 | | | 1399 | 526 | SLV 4 | 0.32 | No |

### Tabella dei coefficienti di sicurezza minimi

| Stato limite | Coeff.s. | Comb. | Verifica |
|---|---|---|---|
| PF_SLV | 0.747 | SLV 3 | No |
| V_SLV | 0.073 | SLV 15 | No |
| PF_SLU | 2.023 | SLU 77 | Si |
| V_SLU | 0.086 | SLU 83 | No |

## Trave di accoppiamento 51

Verifiche condotte secondo D.M. 17-01-18 (N.T.C.)

### Dati geometrici

| X ini. | Y ini. | Z ini.inf. | Z ini.sup. | H ini. | X fin. | Y fin. | Z fin.inf. | Z fin.sup | H fin. | Luce | Spessore | R. Trazione |
|---|---|---|---|---|---|---|---|---|---|---|---|---|
| -1288.8 | 666.1 | 171 | 261 | 90 | -1188.8 | 666.1 | 171 | 261 | 90 | 100 | 28 | 3500 |

### Caratteristiche del materiale

(Circolare 7 21-01-19 C8.5.I) Muratura in mattoni pieni e malta di calce LC2_Corti

| fb_ | fhk | fvk0 | fhmedio | τ0 | fv0 | μ | ϕ | fvk,lim | E | G | FC |
|---|---|---|---|---|---|---|---|---|---|---|---|
| 12 | | | 17.25 | 0.9 | 2 | 0.577 | 0.767 | 0.65 | 32000 | 12800 | 1.2 |

## Verifiche a pressoflessione delle travi in muratura in combinazioni non sismiche

| Sezione | γM | N | M | Mu | Comb. | c.s. | Verifica |
|---|---|---|---|---|---|---|---|
| ini. | 3 | 3881 | 15358 | 103792 | SLU 77 | 6.76 | Si |
| fin. | 3 | 3749 | 95926 | 103792 | SLU 77 | 1.08 | Si |
| ini. | 3 | 4062 | 10071 | 103792 | SLU 82 | 10.31 | Si |
| fin. | 3 | 3876 | 103149 | 103792 | SLU 82 | 1.01 | Si |
| ini. | 3 | 3886 | 15255 | 103792 | SLU 78 | 6.8 | Si |
| fin. | 3 | 3754 | 95903 | 103792 | SLU 78 | 1.08 | Si |
| ini. | 3 | 4046 | 12996 | 103792 | SLU 83 | 7.99 | Si |
| fin. | 3 | 3886 | 101343 | 103792 | SLU 83 | 1.02 | Si |
| ini. | 3 | 3844 | 12906 | 103792 | SLU 76 | 8.04 | Si |
| fin. | 3 | 3694 | 95995 | 103792 | SLU 76 | 1.08 | Si |
| ini. | 3 | 4057 | 10174 | 103792 | SLU 81 | 10.2 | Si |
| fin. | 3 | 3872 | 103173 | 103792 | SLU 81 | 1.01 | Si |
| ini. | 3 | 3891 | 12536 | 103792 | SLU 74 | 8.28 | Si |
| fin. | 3 | 3735 | 97756 | 103792 | SLU 74 | 1.06 | Si |
| ini. | 3 | 3896 | 12433 | 103792 | SLU 75 | 8.35 | Si |
| fin. | 3 | 3740 | 97733 | 103792 | SLU 75 | 1.06 | Si |
| ini. | 3 | 3854 | 10085 | 103792 | SLU 73 | 10.29 | Si |
| fin. | 3 | 3680 | 97825 | 103792 | SLU 73 | 1.06 | Si |
| ini. | 3 | 4051 | 12893 | 103792 | SLU 84 | 8.05 | Si |
| fin. | 3 | 3890 | 101319 | 103792 | SLU 84 | 1.02 | Si |

## Verifiche a taglio delle travi in muratura secondo §C8.7.1.3.1 in combinazioni non sismiche

| Sezione | γM | N | M | V | Vt | Vp | Vt fess. diag. | Vt,lim | Comb. | c.s. | Verifica |
|---|---|---|---|---|---|---|---|---|---|---|---|
| ini. | 3 | 0 | 10071 | 642 | | | 873 | 329 | SLU 82 | 0.51 | No |
| fin. | 3 | 0 | 103149 | 1511 | | | 873 | 329 | SLU 82 | 0.22 | No |
| ini. | 3 | 0 | 12536 | 575 | | | 873 | 329 | SLU 74 | 0.57 | No |
| fin. | 3 | 0 | 97756 | 1392 | | | 873 | 329 | SLU 74 | 0.24 | No |
| ini. | 3 | 0 | 15358 | 520 | | | 873 | 329 | SLU 77 | 0.63 | No |
| fin. | 3 | 0 | 95926 | 1339 | | | 873 | 329 | SLU 77 | 0.25 | No |
| ini. | 3 | 0 | 12433 | 577 | | | 873 | 329 | SLU 75 | 0.57 | No |
| fin. | 3 | 0 | 97733 | 1392 | | | 873 | 329 | SLU 75 | 0.24 | No |
| ini. | 3 | 0 | 15255 | 521 | | | 873 | 329 | SLU 78 | 0.63 | No |
| fin. | 3 | 0 | 95903 | 1340 | | | 873 | 329 | SLU 78 | 0.25 | No |
| ini. | 3 | 0 | 12893 | 587 | | | 873 | 329 | SLU 84 | 0.56 | No |
| fin. | 3 | 0 | 101319 | 1458 | | | 873 | 329 | SLU 84 | 0.23 | No |
| ini. | 3 | 0 | 10174 | 641 | | | 873 | 329 | SLU 81 | 0.51 | No |
| fin. | 3 | 0 | 103173 | 1510 | | | 873 | 329 | SLU 81 | 0.22 | No |
| ini. | 3 | 0 | 10085 | 615 | | | 873 | 329 | SLU 73 | 0.53 | No |
| fin. | 3 | 0 | 97825 | 1409 | | | 873 | 329 | SLU 73 | 0.23 | No |
| ini. | 3 | 0 | 12996 | 586 | | | 873 | 329 | SLU 83 | 0.56 | No |
| fin. | 3 | 0 | 101343 | 1458 | | | 873 | 329 | SLU 83 | 0.23 | No |
| ini. | 3 | 0 | 12906 | 560 | | | 873 | 329 | SLU 76 | 0.59 | No |
| fin. | 3 | 0 | 95995 | 1356 | | | 873 | 329 | SLU 76 | 0.24 | No |

## Verifiche a pressoflessione delle travi in muratura in combinazioni sismiche

| Sezione | γM | N | M | Mu | Comb. | c.s. | Verifica |
|---|---|---|---|---|---|---|---|
| ini. | 2 | 4780 | -153823 | 121694 | SLV 4 | 0.79 | No |
| fin. | 2 | 2253 | 249054 | 121694 | SLV 4 | 0.49 | No |
| ini. | 2 | 1641 | -185774 | 121694 | SLV 2 | 0.66 | No |
| fin. | 2 | -749 | 227032 | 121694 | SLV 2 | 0.54 | No |
| ini. | 2 | 3613 | 201083 | 121694 | SLV 16 | 0.61 | No |
| fin. | 2 | 5769 | -92823 | 121694 | SLV 16 | 1.31 | Si |
| ini. | 2 | 8034 | 7670 | 121694 | SLV 7 | 15.87 | Si |
| fin. | 2 | 6986 | 155089 | 121694 | SLV 7 | 0.78 | No |
| ini. | 2 | 1641 | -185774 | 121694 | SLV 1 | 0.66 | No |
| fin. | 2 | -749 | 227032 | 121694 | SLV 1 | 0.54 | No |
| ini. | 2 | 3613 | 201083 | 121694 | SLV 15 | 0.61 | No |
| fin. | 2 | 5769 | -92823 | 121694 | SLV 15 | 1.31 | Si |
| ini. | 2 | 8034 | 7670 | 121694 | SLV 8 | 15.87 | Si |
| fin. | 2 | 6986 | 155089 | 121694 | SLV 8 | 0.78 | No |
| ini. | 2 | 474 | 169132 | 121694 | SLV 13 | 0.72 | No |
| fin. | 2 | 2767 | -114845 | 121694 | SLV 13 | 1.06 | Si |
| ini. | 2 | 4780 | -153823 | 121694 | SLV 3 | 0.79 | No |
| fin. | 2 | 2253 | 249054 | 121694 | SLV 3 | 0.49 | No |
| ini. | 2 | 474 | 169132 | 121694 | SLV 14 | 0.72 | No |
| fin. | 2 | 2767 | -114845 | 121694 | SLV 14 | 1.06 | Si |

## Verifiche a taglio delle travi in muratura secondo §C8.7.1.3.1 in combinazioni sismiche

| Sezione | γM | N | M | V | Vt | Vp | Vt fess. diag. | Vt,lim | Comb. | c.s. | Verifica |
|---|---|---|---|---|---|---|---|---|---|---|---|
| ini. | 2 | 0 | -185774 | 4788 | | | 1310 | 493 | SLV 2 | 0.1 | No |
| fin. | 2 | 0 | 227032 | 5533 | | | 1310 | 493 | SLV 2 | 0.09 | No |
| ini. | 2 | 0 | -153823 | 5175 | | | 1310 | 493 | SLV 4 | 0.1 | No |
| fin. | 2 | 0 | 249054 | 5225 | | | 1310 | 493 | SLV 4 | 0.09 | No |
| ini. | 2 | 0 | -153823 | 5175 | | | 1310 | 493 | SLV 3 | 0.1 | No |
| fin. | 2 | 0 | 249054 | 5225 | | | 1310 | 493 | SLV 3 | 0.09 | No |
| ini. | 2 | 0 | 169132 | -4307 | | | 1310 | 493 | SLV 14 | 0.11 | No |
| fin. | 2 | 0 | -114845 | -3368 | | | 1310 | 493 | SLV 14 | 0.15 | No |
| ini. | 2 | 0 | 201083 | -3920 | | | 1310 | 493 | SLV 16 | 0.13 | No |
| fin. | 2 | 0 | -92823 | -3676 | | | 1310 | 493 | SLV 16 | 0.13 | No |
| ini. | 2 | 0 | -76201 | 2336 | | | 1310 | 493 | SLD 2 | 0.21 | No |
| fin. | 2 | 0 | 136878 | 2935 | | | 1310 | 493 | SLD 2 | 0.17 | No |
| ini. | 2 | 0 | -76201 | 2336 | | | 1310 | 493 | SLD 1 | 0.21 | No |
| fin. | 2 | 0 | 136878 | 2935 | | | 1310 | 493 | SLD 1 | 0.17 | No |
| ini. | 2 | 0 | 169132 | -4307 | | | 1310 | 493 | SLV 13 | 0.11 | No |
| fin. | 2 | 0 | -114845 | -3368 | | | 1310 | 493 | SLV 13 | 0.15 | No |
| ini. | 2 | 0 | -185774 | 4788 | | | 1310 | 493 | SLV 1 | 0.1 | No |

| Sezione | γM | N | M | V | Vt | Vp | Vt fess. diag. | Vt,lim | Comb. | c.s. | Verifica |
|---|---|---|---|---|---|---|---|---|---|---|---|
| fin. | 2 | 0 | 227032 | 5533 | | | 1310 | 493 | SLV 1 | 0.09 | No |
| ini. | 2 | 0 | 201083 | -3920 | | | 1310 | 493 | SLV 15 | 0.13 | No |
| fin. | 2 | 0 | -92823 | -3676 | | | 1310 | 493 | SLV 15 | 0.13 | No |

### Tabella dei coefficienti di sicurezza minimi

| Stato limite | Coeff.s. | Comb. | Verifica |
|---|---|---|---|
| PF_SLV | 0.489 | SLV 3 | No |
| V_SLV | 0.089 | SLV 1 | No |
| PF_SLU | 1.006 | SLU 81 | Si |
| V_SLU | 0.218 | SLU 82 | No |

## Trave di accoppiamento 52

Verifiche condotte secondo D.M. 17-01-18 (N.T.C.)

### Dati geometrici

| X ini. | Y ini. | Z ini.inf. | Z ini.sup. | H ini. | X fin. | Y fin. | Z fin.inf. | Z fin.sup | H fin. | Luce | Spessore | R. Trazione |
|---|---|---|---|---|---|---|---|---|---|---|---|---|
| -1288.8 | 666.1 | 451 | 544 | 93 | -1188.8 | 666.1 | 451 | 544 | 93 | 100 | 28 | 3500 |

### Caratteristiche del materiale

(Circolare 7 21-01-19 C8.5.I) Muratura in mattoni pieni e malta di calce LC2_Corti

| fb_ | fhk | fvk0 | fhmedio | τ0 | fv0 | μ | ϕ | fvk,lim | E | G | FC |
|---|---|---|---|---|---|---|---|---|---|---|---|
| 12 | | | 17.25 | 0.9 | 2 | 0.577 | 0.767 | 0.65 | 32000 | 12800 | 1.2 |

### Verifiche a pressoflessione delle travi in muratura in combinazioni non sismiche

| Sezione | γM | N | M | Mu | Comb. | c.s. | Verifica |
|---|---|---|---|---|---|---|---|
| ini. | 3 | -3343 | -64388 | 109042 | SLU 84 | 1.69 | Si |
| fin. | 3 | -1610 | -8415 | 109042 | SLU 84 | 12.96 | Si |
| ini. | 3 | -3217 | -62031 | 109042 | SLU 74 | 1.76 | Si |
| fin. | 3 | -1546 | -8032 | 109042 | SLU 74 | 13.58 | Si |
| ini. | 3 | -3151 | -60812 | 109042 | SLU 76 | 1.79 | Si |
| fin. | 3 | -1527 | -8222 | 109042 | SLU 76 | 13.26 | Si |
| ini. | 3 | -3245 | -62144 | 109042 | SLU 73 | 1.75 | Si |
| fin. | 3 | -1498 | -6017 | 109042 | SLU 73 | 18.12 | Si |
| ini. | 3 | -3437 | -65719 | 109042 | SLU 82 | 1.66 | Si |
| fin. | 3 | -1581 | -6210 | 109042 | SLU 82 | 17.56 | Si |
| ini. | 3 | -3346 | -64397 | 109042 | SLU 83 | 1.69 | Si |
| fin. | 3 | -1617 | -8520 | 109042 | SLU 83 | 12.8 | Si |
| ini. | 3 | -3440 | -65728 | 109042 | SLU 81 | 1.66 | Si |
| fin. | 3 | -1588 | -6315 | 109042 | SLU 81 | 17.27 | Si |
| ini. | 3 | -3123 | -60700 | 109042 | SLU 77 | 1.8 | Si |
| fin. | 3 | -1575 | -10238 | 109042 | SLU 77 | 10.65 | Si |
| ini. | 3 | -3213 | -62022 | 109042 | SLU 75 | 1.76 | Si |
| fin. | 3 | -1540 | -7927 | 109042 | SLU 75 | 13.75 | Si |
| ini. | 3 | -3119 | -60690 | 109042 | SLU 78 | 1.8 | Si |
| fin. | 3 | -1569 | -10133 | 109042 | SLU 78 | 10.76 | Si |

### Verifiche a taglio delle travi in muratura secondo §C8.7.1.3.1 in combinazioni non sismiche

| Sezione | γM | N | M | V | Vt | Vp | Vt fess. diag. | Vt,lim | Comb. | c.s. | Verifica |
|---|---|---|---|---|---|---|---|---|---|---|---|
| ini. | 3 | 0 | -65719 | 5881 | | | 933 | 351 | SLU 82 | 0.06 | No |
| fin. | 3 | 0 | -6210 | -2756 | | | 933 | 351 | SLU 82 | 0.13 | No |
| ini. | 3 | 0 | -64397 | 5799 | | | 933 | 351 | SLU 83 | 0.06 | No |
| fin. | 3 | 0 | -8520 | -2865 | | | 933 | 351 | SLU 83 | 0.12 | No |
| ini. | 3 | 0 | -62022 | 5553 | | | 933 | 351 | SLU 75 | 0.06 | No |
| fin. | 3 | 0 | -7927 | -2714 | | | 933 | 351 | SLU 75 | 0.13 | No |
| ini. | 3 | 0 | -60812 | 5456 | | | 933 | 351 | SLU 76 | 0.06 | No |
| fin. | 3 | 0 | -8222 | -2696 | | | 933 | 351 | SLU 76 | 0.13 | No |
| ini. | 3 | 0 | -62144 | 5538 | | | 933 | 351 | SLU 73 | 0.06 | No |
| fin. | 3 | 0 | -6017 | -2591 | | | 933 | 351 | SLU 73 | 0.14 | No |
| ini. | 3 | 0 | -64388 | 5799 | | | 933 | 351 | SLU 84 | 0.06 | No |
| fin. | 3 | 0 | -8415 | -2861 | | | 933 | 351 | SLU 84 | 0.12 | No |
| ini. | 3 | 0 | -60700 | 5470 | | | 933 | 351 | SLU 77 | 0.06 | No |
| fin. | 3 | 0 | -10238 | -2824 | | | 933 | 351 | SLU 77 | 0.12 | No |
| ini. | 3 | 0 | -62031 | 5552 | | | 933 | 351 | SLU 74 | 0.06 | No |
| fin. | 3 | 0 | -8032 | -2719 | | | 933 | 351 | SLU 74 | 0.13 | No |
| ini. | 3 | 0 | -60690 | 5471 | | | 933 | 351 | SLU 78 | 0.06 | No |
| fin. | 3 | 0 | -10133 | -2819 | | | 933 | 351 | SLU 78 | 0.12 | No |
| ini. | 3 | 0 | -65728 | 5881 | | | 933 | 351 | SLU 81 | 0.06 | No |
| fin. | 3 | 0 | -6315 | -2760 | | | 933 | 351 | SLU 81 | 0.13 | No |

### Verifiche a pressoflessione delle travi in muratura in combinazioni sismiche

| Sezione | γM | N | M | Mu | Comb. | c.s. | Verifica |
|---|---|---|---|---|---|---|---|
| ini. | 2 | 1292 | 59743 | 126944 | SLV 14 | 2.12 | Si |
| fin. | 2 | -3596 | -97539 | 126944 | SLV 14 | 1.3 | Si |
| ini. | 2 | -3720 | -86534 | 126944 | SLD 4 | 1.47 | Si |
| fin. | 2 | 84 | 36231 | 126944 | SLD 4 | 3.5 | Si |
| ini. | 2 | -5711 | -144387 | 126944 | SLV 4 | 0.88 | No |
| fin. | 2 | 1534 | 88938 | 126944 | SLV 4 | 1.43 | Si |
| ini. | 2 | 1292 | 59743 | 126944 | SLV 13 | 2.12 | Si |
| fin. | 2 | -3596 | -97539 | 126944 | SLV 13 | 1.3 | Si |
| ini. | 2 | -5085 | -139105 | 126944 | SLV 2 | 0.91 | No |
| fin. | 2 | 2267 | 99357 | 126944 | SLV 2 | 1.28 | Si |
| ini. | 2 | 666 | 54460 | 126944 | SLV 16 | 2.33 | Si |
| fin. | 2 | -4329 | -107958 | 126944 | SLV 16 | 1.18 | Si |

| Sezione | γM | N | M | Mu | Comb. | c.s. | Verifica |
|---|---|---|---|---|---|---|---|
| ini. | 2 | -5085 | -139105 | 126944 | SLV 1 | 0.91 | No |
| fin. | 2 | 2267 | 99357 | 126944 | SLV 1 | 1.28 | Si |
| ini. | 2 | 666 | 54460 | 126944 | SLV 15 | 2.33 | Si |
| fin. | 2 | -4329 | -107958 | 126944 | SLV 15 | 1.18 | Si |
| ini. | 2 | -5711 | -144387 | 126944 | SLV 3 | 0.88 | No |
| fin. | 2 | 1534 | 88938 | 126944 | SLV 3 | 1.43 | Si |
| ini. | 2 | -3720 | -86534 | 126944 | SLD 3 | 1.47 | Si |
| fin. | 2 | 84 | 36231 | 126944 | SLD 3 | 3.5 | Si |

### Verifiche a taglio delle travi in muratura secondo §C8.7.1.3.1 in combinazioni sismiche

| Sezione | γM | N | M | V | Vt | Vp | Vt fess. diag. | Vt,lim | Comb. | c.s. | Verifica |
|---|---|---|---|---|---|---|---|---|---|---|---|
| ini. | 2 | 0 | -144387 | 8770 | | | 1399 | 526 | SLV 3 | 0.06 | No |
| fin. | 2 | 0 | 88938 | 2912 | | | 1399 | 526 | SLV 3 | 0.18 | No |
| ini. | 2 | 0 | 59743 | -1315 | | | 1399 | 526 | SLV 13 | 0.4 | No |
| fin. | 2 | 0 | -97539 | -6376 | | | 1399 | 526 | SLV 13 | 0.08 | No |
| ini. | 2 | 0 | -144387 | 8770 | | | 1399 | 526 | SLV 4 | 0.06 | No |
| fin. | 2 | 0 | 88938 | 2912 | | | 1399 | 526 | SLV 4 | 0.18 | No |
| ini. | 2 | 0 | -139105 | 8521 | | | 1399 | 526 | SLV 2 | 0.06 | No |
| fin. | 2 | 0 | 99357 | 3459 | | | 1399 | 526 | SLV 2 | 0.15 | No |
| ini. | 2 | 0 | -139105 | 8521 | | | 1399 | 526 | SLV 1 | 0.06 | No |
| fin. | 2 | 0 | 99357 | 3459 | | | 1399 | 526 | SLV 1 | 0.15 | No |
| ini. | 2 | 0 | -86534 | 5909 | | | 1399 | 526 | SLD 3 | 0.09 | No |
| fin. | 2 | 0 | 36231 | 286 | | | 1399 | 526 | SLD 3 | 1.84 | Si |
| ini. | 2 | 0 | -86534 | 5909 | | | 1399 | 526 | SLD 4 | 0.09 | No |
| fin. | 2 | 0 | 36231 | 286 | | | 1399 | 526 | SLD 4 | 1.84 | Si |
| ini. | 2 | 0 | 54460 | -1067 | | | 1399 | 526 | SLV 15 | 0.49 | No |
| fin. | 2 | 0 | -107958 | -6923 | | | 1399 | 526 | SLV 15 | 0.08 | No |
| ini. | 2 | 0 | 59743 | -1315 | | | 1399 | 526 | SLV 14 | 0.4 | No |
| fin. | 2 | 0 | -97539 | -6376 | | | 1399 | 526 | SLV 14 | 0.08 | No |
| ini. | 2 | 0 | 54460 | -1067 | | | 1399 | 526 | SLV 16 | 0.49 | No |
| fin. | 2 | 0 | -107958 | -6923 | | | 1399 | 526 | SLV 16 | 0.08 | No |

### Tabella dei coefficienti di sicurezza minimi

| Stato limite | Coeff.s. | Comb. | Verifica |
|---|---|---|---|
| PF_SLV | 0.879 | SLV 3 | No |
| V_SLV | 0.06 | SLV 3 | No |
| PF_SLU | 1.659 | SLU 81 | Si |
| V_SLU | 0.06 | SLU 82 | No |

## Trave di accoppiamento 53

Verifiche condotte secondo D.M. 17-01-18 (N.T.C.)

### Dati geometrici

| X ini. | Y ini. | Z ini.inf. | Z ini.sup. | H ini. | X fin. | Y fin. | Z fin.inf. | Z fin.sup | H fin. | Luce | Spessore | R. Trazione |
|---|---|---|---|---|---|---|---|---|---|---|---|---|
| -800.8 | 666.1 | 171 | 261 | 90 | -700.8 | 666.1 | 171 | 261 | 90 | 100 | 28 | 3500 |

### Caratteristiche del materiale

(Circolare 7 21-01-19 C8.5.I) Muratura in mattoni pieni e malta di calce LC2_Corti

| fb_ | fhk | fvk0 | fhmedio | τ0 | fv0 | μ | ϕ | fvk,lim | E | G | FC |
|---|---|---|---|---|---|---|---|---|---|---|---|
| 12 | | | 17.25 | 0.9 | 2 | 0.577 | 0.767 | 0.65 | 32000 | 12800 | 1.2 |

### Verifiche a pressoflessione delle travi in muratura in combinazioni non sismiche

| Sezione | γM | N | M | Mu | Comb. | c.s. | Verifica |
|---|---|---|---|---|---|---|---|
| ini. | 3 | 4458 | 92341 | 103792 | SLU 79 | 1.12 | Si |
| fin. | 3 | 5854 | 53107 | 103792 | SLU 79 | 1.95 | Si |
| ini. | 3 | 4479 | 92804 | 103792 | SLU 74 | 1.12 | Si |
| fin. | 3 | 5875 | 49060 | 103792 | SLU 74 | 2.12 | Si |
| ini. | 3 | 4478 | 92887 | 103792 | SLU 75 | 1.12 | Si |
| fin. | 3 | 5873 | 48626 | 103792 | SLU 75 | 2.13 | Si |
| ini. | 3 | 4653 | 97146 | 103792 | SLU 84 | 1.07 | Si |
| fin. | 3 | 6110 | 49351 | 103792 | SLU 84 | 2.1 | Si |
| ini. | 3 | 4516 | 93730 | 103792 | SLU 78 | 1.11 | Si |
| fin. | 3 | 5930 | 52335 | 103792 | SLU 78 | 1.98 | Si |
| ini. | 3 | 4456 | 92424 | 103792 | SLU 80 | 1.12 | Si |
| fin. | 3 | 5852 | 52673 | 103792 | SLU 80 | 1.97 | Si |
| ini. | 3 | 4518 | 93647 | 103792 | SLU 77 | 1.11 | Si |
| fin. | 3 | 5932 | 52768 | 103792 | SLU 77 | 1.97 | Si |
| ini. | 3 | 4616 | 96220 | 103792 | SLU 81 | 1.08 | Si |
| fin. | 3 | 6054 | 46076 | 103792 | SLU 81 | 2.25 | Si |
| ini. | 3 | 4654 | 97063 | 103792 | SLU 83 | 1.07 | Si |
| fin. | 3 | 6112 | 49784 | 103792 | SLU 83 | 2.08 | Si |
| ini. | 3 | 4614 | 96303 | 103792 | SLU 82 | 1.08 | Si |
| fin. | 3 | 6053 | 45642 | 103792 | SLU 82 | 2.27 | Si |

### Verifiche a taglio delle travi in muratura secondo §C8.7.1.3.1 in combinazioni non sismiche

| Sezione | γM | N | M | V | Vt | Vp | Vt fess. diag. | Vt,lim | Comb. | c.s. | Verifica |
|---|---|---|---|---|---|---|---|---|---|---|---|
| ini. | 3 | 0 | 90794 | -1544 | | | 873 | 329 | SLU 73 | 0.21 | No |
| fin. | 3 | 0 | 44966 | -591 | | | 873 | 329 | SLU 73 | 0.56 | No |
| ini. | 3 | 0 | 92804 | -1557 | | | 873 | 329 | SLU 74 | 0.21 | No |
| fin. | 3 | 0 | 49060 | -552 | | | 873 | 329 | SLU 74 | 0.6 | No |
| ini. | 3 | 0 | 93730 | -1549 | | | 873 | 329 | SLU 78 | 0.21 | No |
| fin. | 3 | 0 | 52335 | -515 | | | 873 | 329 | SLU 78 | 0.64 | No |
| ini. | 3 | 0 | 93647 | -1545 | | | 873 | 329 | SLU 77 | 0.21 | No |

| Sezione | γM | N | M | V | Vt | Vp | Vt fess. diag. | Vt,lim | Comb. | c.s. | Verifica |
|---|---|---|---|---|---|---|---|---|---|---|---|
| fin. | 3 | 0 | 52768 | -508 | | | 873 | 329 | SLU 77 | 0.65 | No |
| ini. | 3 | 0 | 91637 | -1531 | | | 873 | 329 | SLU 76 | 0.21 | No |
| fin. | 3 | 0 | 48675 | -547 | | | 873 | 329 | SLU 76 | 0.6 | No |
| ini. | 3 | 0 | 97146 | -1655 | | | 873 | 329 | SLU 84 | 0.2 | No |
| fin. | 3 | 0 | 49351 | -589 | | | 873 | 329 | SLU 84 | 0.56 | No |
| ini. | 3 | 0 | 97063 | -1651 | | | 873 | 329 | SLU 83 | 0.2 | No |
| fin. | 3 | 0 | 49784 | -581 | | | 873 | 329 | SLU 83 | 0.57 | No |
| ini. | 3 | 0 | 96303 | -1668 | | | 873 | 329 | SLU 82 | 0.2 | No |
| fin. | 3 | 0 | 45642 | -633 | | | 873 | 329 | SLU 82 | 0.52 | No |
| ini. | 3 | 0 | 92887 | -1562 | | | 873 | 329 | SLU 75 | 0.21 | No |
| fin. | 3 | 0 | 48626 | -559 | | | 873 | 329 | SLU 75 | 0.59 | No |
| ini. | 3 | 0 | 96220 | -1663 | | | 873 | 329 | SLU 81 | 0.2 | No |
| fin. | 3 | 0 | 46076 | -626 | | | 873 | 329 | SLU 81 | 0.53 | No |

### Verifiche a pressoflessione delle travi in muratura in combinazioni sismiche

| Sezione | γM | N | M | Mu | Comb. | c.s. | Verifica |
|---|---|---|---|---|---|---|---|
| ini. | 2 | 5281 | 237902 | 121694 | SLV 16 | 0.51 | No |
| fin. | 2 | 7787 | -108635 | 121694 | SLV 16 | 1.12 | Si |
| ini. | 2 | 711 | -116020 | 121694 | SLV 2 | 1.05 | Si |
| fin. | 2 | 39 | 176592 | 121694 | SLV 2 | 0.69 | No |
| ini. | 2 | 2616 | 218380 | 121694 | SLV 13 | 0.56 | No |
| fin. | 2 | 4360 | -148952 | 121694 | SLV 13 | 0.82 | No |
| ini. | 2 | 3376 | -96498 | 121694 | SLV 3 | 1.26 | Si |
| fin. | 2 | 3465 | 216909 | 121694 | SLV 3 | 0.56 | No |
| ini. | 2 | 7151 | 43318 | 121694 | SLV 7 | 2.81 | Si |
| fin. | 2 | 8975 | 150005 | 121694 | SLV 7 | 0.81 | No |
| ini. | 2 | 7151 | 43318 | 121694 | SLV 8 | 2.81 | Si |
| fin. | 2 | 8975 | 150005 | 121694 | SLV 8 | 0.81 | No |
| ini. | 2 | 711 | -116020 | 121694 | SLV 1 | 1.05 | Si |
| fin. | 2 | 39 | 176592 | 121694 | SLV 1 | 0.69 | No |
| ini. | 2 | 5281 | 237902 | 121694 | SLV 15 | 0.51 | No |
| fin. | 2 | 7787 | -108635 | 121694 | SLV 15 | 1.12 | Si |
| ini. | 2 | 2616 | 218380 | 121694 | SLV 14 | 0.56 | No |
| fin. | 2 | 4360 | -148952 | 121694 | SLV 14 | 0.82 | No |
| ini. | 2 | 3376 | -96498 | 121694 | SLV 4 | 1.26 | Si |
| fin. | 2 | 3465 | 216909 | 121694 | SLV 4 | 0.56 | No |

### Verifiche a taglio delle travi in muratura secondo §C8.7.1.3.1 in combinazioni sismiche

| Sezione | γM | N | M | V | Vt | Vp | Vt fess. diag. | Vt,lim | Comb. | c.s. | Verifica |
|---|---|---|---|---|---|---|---|---|---|---|---|
| ini. | 2 | 0 | -96498 | 3435 | | | 1310 | 493 | SLV 3 | 0.14 | No |
| fin. | 2 | 0 | 216909 | 3195 | | | 1310 | 493 | SLV 3 | 0.15 | No |
| ini. | 2 | 0 | 237902 | -5176 | | | 1310 | 493 | SLV 15 | 0.1 | No |
| fin. | 2 | 0 | -108635 | -4800 | | | 1310 | 493 | SLV 15 | 0.1 | No |
| ini. | 2 | 0 | 237902 | -5176 | | | 1310 | 493 | SLV 16 | 0.1 | No |
| fin. | 2 | 0 | -108635 | -4800 | | | 1310 | 493 | SLV 16 | 0.1 | No |
| ini. | 2 | 0 | 143638 | -1893 | | | 1310 | 493 | SLV 12 | 0.26 | No |
| fin. | 2 | 0 | 52341 | -2989 | | | 1310 | 493 | SLV 12 | 0.16 | No |
| ini. | 2 | 0 | -116020 | 3204 | | | 1310 | 493 | SLV 2 | 0.15 | No |
| fin. | 2 | 0 | 176592 | 4041 | | | 1310 | 493 | SLV 2 | 0.12 | No |
| ini. | 2 | 0 | -96498 | 3435 | | | 1310 | 493 | SLV 4 | 0.14 | No |
| fin. | 2 | 0 | 216909 | 3195 | | | 1310 | 493 | SLV 4 | 0.15 | No |
| ini. | 2 | 0 | 218380 | -5407 | | | 1310 | 493 | SLV 14 | 0.09 | No |
| fin. | 2 | 0 | -148952 | -3953 | | | 1310 | 493 | SLV 14 | 0.12 | No |
| ini. | 2 | 0 | -116020 | 3204 | | | 1310 | 493 | SLV 1 | 0.15 | No |
| fin. | 2 | 0 | 176592 | 4041 | | | 1310 | 493 | SLV 1 | 0.12 | No |
| ini. | 2 | 0 | 218380 | -5407 | | | 1310 | 493 | SLV 13 | 0.09 | No |
| fin. | 2 | 0 | -148952 | -3953 | | | 1310 | 493 | SLV 13 | 0.12 | No |
| ini. | 2 | 0 | 143638 | -1893 | | | 1310 | 493 | SLV 11 | 0.26 | No |
| fin. | 2 | 0 | 52341 | -2989 | | | 1310 | 493 | SLV 11 | 0.16 | No |

### Tabella dei coefficienti di sicurezza minimi

| Stato limite | Coeff.s. | Comb. | Verifica |
|---|---|---|---|
| PF_SLV | 0.512 | SLV 15 | No |
| V_SLV | 0.091 | SLV 13 | No |
| PF_SLU | 1.068 | SLU 84 | Si |
| V_SLU | 0.197 | SLU 82 | No |

## Trave di accoppiamento 54

Verifiche condotte secondo D.M. 17-01-18 (N.T.C.)

### Dati geometrici

| X ini. | Y ini. | Z ini.inf. | Z ini.sup. | H ini. | X fin. | Y fin. | Z fin.inf. | Z fin.sup | H fin. | Luce | Spessore | R. Trazione |
|---|---|---|---|---|---|---|---|---|---|---|---|---|
| -800.8 | 666.1 | 451 | 544 | 93 | -700.8 | 666.1 | 451 | 544 | 93 | 100 | 28 | 3500 |

### Caratteristiche del materiale

(Circolare 7 21-01-19 C8.5.I) Muratura in mattoni pieni e malta di calce LC2_Corti

| fb_ | fhk | fvk0 | fhmedio | τ0 | fv0 | μ | ϕ | fvk,lim | E | G | FC |
|---|---|---|---|---|---|---|---|---|---|---|---|
| 12 | | | 17.25 | 0.9 | 2 | 0.577 | 0.767 | 0.65 | 32000 | 12800 | 1.2 |

### Verifiche a pressoflessione delle travi in muratura in combinazioni non sismiche

| Sezione | γM | N | M | Mu | Comb. | c.s. | Verifica |
|---|---|---|---|---|---|---|---|
| ini. | 3 | -2137 | -16940 | 109042 | SLU 74 | 6.44 | Si |
| fin. | 3 | -4519 | -52654 | 109042 | SLU 74 | 2.07 | Si |

| Sezione | γM | N | M | Mu | Comb. | c.s. | Verifica |
|---|---|---|---|---|---|---|---|
| ini. | 3 | -2191 | -17937 | 109042 | SLU 78 | 6.08 | Si |
| fin. | 3 | -4629 | -54808 | 109042 | SLU 78 | 1.99 | Si |
| ini. | 3 | -2198 | -17012 | 109042 | SLU 84 | 6.41 | Si |
| fin. | 3 | -4694 | -54683 | 109042 | SLU 84 | 1.99 | Si |
| ini. | 3 | -2132 | -15787 | 109042 | SLU 82 | 6.91 | Si |
| fin. | 3 | -4578 | -52446 | 109042 | SLU 82 | 2.08 | Si |
| ini. | 3 | -2210 | -17241 | 109042 | SLU 83 | 6.32 | Si |
| fin. | 3 | -4701 | -54764 | 109042 | SLU 83 | 1.99 | Si |
| ini. | 3 | -2192 | -18319 | 109042 | SLU 79 | 5.95 | Si |
| fin. | 3 | -4589 | -54463 | 109042 | SLU 79 | 2 | Si |
| ini. | 3 | -2144 | -16015 | 109042 | SLU 81 | 6.81 | Si |
| fin. | 3 | -4585 | -52528 | 109042 | SLU 81 | 2.08 | Si |
| ini. | 3 | -2203 | -18166 | 109042 | SLU 77 | 6 | Si |
| fin. | 3 | -4635 | -54890 | 109042 | SLU 77 | 1.99 | Si |
| ini. | 3 | -2181 | -18091 | 109042 | SLU 80 | 6.03 | Si |
| fin. | 3 | -4583 | -54381 | 109042 | SLU 80 | 2.01 | Si |
| ini. | 3 | -2125 | -16711 | 109042 | SLU 75 | 6.52 | Si |
| fin. | 3 | -4513 | -52572 | 109042 | SLU 75 | 2.07 | Si |

## Verifiche a taglio delle travi in muratura secondo §C8.7.1.3.1 in combinazioni non sismiche

| Sezione | γM | N | M | V | Vt | Vp | Vt fess. diag. | Vt,lim | Comb. | c.s. | Verifica |
|---|---|---|---|---|---|---|---|---|---|---|---|
| ini. | 3 | 0 | -18319 | 2663 | | | 933 | 351 | SLU 79 | 0.13 | No |
| fin. | 3 | 0 | -54463 | -6688 | | | 933 | 351 | SLU 79 | 0.05 | No |
| ini. | 3 | 0 | -17012 | 2774 | | | 933 | 351 | SLU 84 | 0.13 | No |
| fin. | 3 | 0 | -54683 | -6972 | | | 933 | 351 | SLU 84 | 0.05 | No |
| ini. | 3 | 0 | -18166 | 2689 | | | 933 | 351 | SLU 77 | 0.13 | No |
| fin. | 3 | 0 | -54890 | -6774 | | | 933 | 351 | SLU 77 | 0.05 | No |
| ini. | 3 | 0 | -16940 | 2663 | | | 933 | 351 | SLU 74 | 0.13 | No |
| fin. | 3 | 0 | -52654 | -6666 | | | 933 | 351 | SLU 74 | 0.05 | No |
| ini. | 3 | 0 | -16015 | 2756 | | | 933 | 351 | SLU 81 | 0.13 | No |
| fin. | 3 | 0 | -52528 | -6867 | | | 933 | 351 | SLU 81 | 0.05 | No |
| ini. | 3 | 0 | -15787 | 2748 | | | 933 | 351 | SLU 82 | 0.13 | No |
| fin. | 3 | 0 | -52446 | -6864 | | | 933 | 351 | SLU 82 | 0.05 | No |
| ini. | 3 | 0 | -17241 | 2782 | | | 933 | 351 | SLU 83 | 0.13 | No |
| fin. | 3 | 0 | -54764 | -6975 | | | 933 | 351 | SLU 83 | 0.05 | No |
| ini. | 3 | 0 | -16711 | 2655 | | | 933 | 351 | SLU 75 | 0.13 | No |
| fin. | 3 | 0 | -52572 | -6663 | | | 933 | 351 | SLU 75 | 0.05 | No |
| ini. | 3 | 0 | -18091 | 2655 | | | 933 | 351 | SLU 80 | 0.13 | No |
| fin. | 3 | 0 | -54381 | -6685 | | | 933 | 351 | SLU 80 | 0.05 | No |
| ini. | 3 | 0 | -17937 | 2681 | | | 933 | 351 | SLU 78 | 0.13 | No |
| fin. | 3 | 0 | -54808 | -6771 | | | 933 | 351 | SLU 78 | 0.05 | No |

## Verifiche a pressoflessione delle travi in muratura in combinazioni sismiche

| Sezione | γM | N | M | Mu | Comb. | c.s. | Verifica |
|---|---|---|---|---|---|---|---|
| ini. | 2 | -4031 | -117311 | 126944 | SLV 3 | 1.08 | Si |
| fin. | 2 | 250 | 26052 | 126944 | SLV 3 | 4.87 | Si |
| ini. | 2 | 1146 | 93791 | 126944 | SLV 14 | 1.35 | Si |
| fin. | 2 | -6211 | -94471 | 126944 | SLV 14 | 1.34 | Si |
| ini. | 2 | -4031 | -117311 | 126944 | SLV 4 | 1.08 | Si |
| fin. | 2 | 250 | 26052 | 126944 | SLV 4 | 4.87 | Si |
| ini. | 2 | -3088 | -105841 | 126944 | SLV 1 | 1.2 | Si |
| fin. | 2 | 813 | 40816 | 126944 | SLV 1 | 3.11 | Si |
| ini. | 2 | -2379 | -933 | 126944 | SLV 11 | 136.13 | Si |
| fin. | 2 | -4972 | -79109 | 126944 | SLV 11 | 1.6 | Si |
| ini. | 2 | 203 | 82321 | 126944 | SLV 16 | 1.54 | Si |
| fin. | 2 | -6774 | -109235 | 126944 | SLV 16 | 1.16 | Si |
| ini. | 2 | 203 | 82321 | 126944 | SLV 15 | 1.54 | Si |
| fin. | 2 | -6774 | -109235 | 126944 | SLV 15 | 1.16 | Si |
| ini. | 2 | -3088 | -105841 | 126944 | SLV 2 | 1.2 | Si |
| fin. | 2 | 813 | 40816 | 126944 | SLV 2 | 3.11 | Si |
| ini. | 2 | -2379 | -933 | 126944 | SLV 12 | 136.13 | Si |
| fin. | 2 | -4972 | -79109 | 126944 | SLV 12 | 1.6 | Si |
| ini. | 2 | 1146 | 93791 | 126944 | SLV 13 | 1.35 | Si |
| fin. | 2 | -6211 | -94471 | 126944 | SLV 13 | 1.34 | Si |

## Verifiche a taglio delle travi in muratura secondo §C8.7.1.3.1 in combinazioni sismiche

| Sezione | γM | N | M | V | Vt | Vp | Vt fess. diag. | Vt,lim | Comb. | c.s. | Verifica |
|---|---|---|---|---|---|---|---|---|---|---|---|
| ini. | 2 | 0 | 33874 | -162 | | | 1399 | 526 | SLD 14 | 3.24 | Si |
| fin. | 2 | 0 | -60462 | -6414 | | | 1399 | 526 | SLD 14 | 0.08 | No |
| ini. | 2 | 0 | 93791 | -2706 | | | 1399 | 526 | SLV 13 | 0.19 | No |
| fin. | 2 | 0 | -94471 | -9118 | | | 1399 | 526 | SLV 13 | 0.06 | No |
| ini. | 2 | 0 | 82321 | -2045 | | | 1399 | 526 | SLV 15 | 0.26 | No |
| fin. | 2 | 0 | -109235 | -9633 | | | 1399 | 526 | SLV 15 | 0.05 | No |
| ini. | 2 | 0 | 82321 | -2045 | | | 1399 | 526 | SLV 16 | 0.26 | No |
| fin. | 2 | 0 | -109235 | -9633 | | | 1399 | 526 | SLV 16 | 0.05 | No |
| ini. | 2 | 0 | 29156 | 116 | | | 1399 | 526 | SLD 15 | 4.54 | Si |
| fin. | 2 | 0 | -66625 | -6626 | | | 1399 | 526 | SLD 15 | 0.08 | No |
| ini. | 2 | 0 | 33874 | -162 | | | 1399 | 526 | SLD 13 | 3.24 | Si |
| fin. | 2 | 0 | -60462 | -6414 | | | 1399 | 526 | SLD 13 | 0.08 | No |
| ini. | 2 | 0 | 93791 | -2706 | | | 1399 | 526 | SLV 14 | 0.19 | No |
| fin. | 2 | 0 | -94471 | -9118 | | | 1399 | 526 | SLV 14 | 0.06 | No |
| ini. | 2 | 0 | -933 | 1633 | | | 1399 | 526 | SLV 11 | 0.32 | No |
| fin. | 2 | 0 | -79109 | -6715 | | | 1399 | 526 | SLV 11 | 0.08 | No |
| ini. | 2 | 0 | 29156 | 116 | | | 1399 | 526 | SLD 16 | 4.54 | Si |
| fin. | 2 | 0 | -66625 | -6626 | | | 1399 | 526 | SLD 16 | 0.08 | No |
| ini. | 2 | 0 | -933 | 1633 | | | 1399 | 526 | SLV 12 | 0.32 | No |
| fin. | 2 | 0 | -79109 | -6715 | | | 1399 | 526 | SLV 12 | 0.08 | No |

### Tabella dei coefficienti di sicurezza minimi

| Stato limite | Coeff.s. | Comb. | Verifica |
|---|---|---|---|
| PF_SLV | 1.082 | SLV 3 | Si |
| V_SLV | 0.055 | SLV 15 | No |
| PF_SLU | 1.987 | SLU 77 | Si |
| V_SLU | 0.05 | SLU 83 | No |

## Trave di accoppiamento 55

Verifiche condotte secondo D.M. 17-01-18 (N.T.C.)

### Dati geometrici

| X ini. | Y ini. | Z ini.inf. | Z ini.sup. | H ini. | X fin. | Y fin. | Z fin.inf. | Z fin.sup | H fin. | Luce | Spessore | R. Trazione |
|---|---|---|---|---|---|---|---|---|---|---|---|---|
| -867.8 | -485.9 | 497 | 544 | 47 | -1051.8 | -485.9 | 497 | 544 | 47 | 184 | 30 | 3500 |

### Caratteristiche del materiale

(Circolare 7 21-01-19 C8.5.I) Muratura in mattoni pieni e malta di calce LC2_Corti

| fb_ | fhk | fvk0 | fhmedio | τ0 | fv0 | μ | ϕ | fvk,lim | E | G | FC |
|---|---|---|---|---|---|---|---|---|---|---|---|
| 12 | | | 17.25 | 0.9 | 2 | 0.577 | 0.767 | 0.65 | 32000 | 12800 | 1.2 |

### Verifiche a pressoflessione delle travi in muratura in combinazioni non sismiche

| Sezione | γM | N | M | Mu | Comb. | c.s. | Verifica |
|---|---|---|---|---|---|---|---|
| ini. | 3 | -22 | -13724 | 33622 | SLU 16 | 2.45 | Si |
| fin. | 3 | -321 | 9331 | 33622 | SLU 16 | 3.6 | Si |
| ini. | 3 | 15 | -16790 | 33622 | SLU 35 | 2 | Si |
| fin. | 3 | -403 | 11466 | 33622 | SLU 35 | 2.93 | Si |
| ini. | 3 | 27 | -17472 | 33622 | SLU 37 | 1.92 | Si |
| fin. | 3 | -418 | 11900 | 33622 | SLU 37 | 2.83 | Si |
| ini. | 3 | -4 | -14688 | 33622 | SLU 36 | 2.29 | Si |
| fin. | 3 | -353 | 10327 | 33622 | SLU 36 | 3.26 | Si |
| ini. | 3 | -21 | -13842 | 33622 | SLU 42 | 2.43 | Si |
| fin. | 3 | -336 | 9881 | 33622 | SLU 42 | 3.4 | Si |
| ini. | 3 | -2 | -15944 | 33622 | SLU 41 | 2.11 | Si |
| fin. | 3 | -386 | 11020 | 33622 | SLU 41 | 3.05 | Si |
| ini. | 3 | 8 | -15369 | 33622 | SLU 38 | 2.19 | Si |
| fin. | 3 | -368 | 10761 | 33622 | SLU 38 | 3.12 | Si |
| ini. | 3 | -93 | -14169 | 33622 | SLU 83 | 2.37 | Si |
| fin. | 3 | -336 | 9863 | 33622 | SLU 83 | 3.41 | Si |
| ini. | 3 | -65 | -15697 | 33622 | SLU 79 | 2.14 | Si |
| fin. | 3 | -368 | 10743 | 33622 | SLU 79 | 3.13 | Si |
| ini. | 3 | -76 | -15015 | 33622 | SLU 77 | 2.24 | Si |
| fin. | 3 | -353 | 10309 | 33622 | SLU 77 | 3.26 | Si |

### Verifiche a taglio delle travi in muratura secondo §C8.7.1.3.1 in combinazioni non sismiche

| Sezione | γM | N | M | V | Vt | Vp | Vt fess. diag. | Vt,lim | Comb. | c.s. | Verifica |
|---|---|---|---|---|---|---|---|---|---|---|---|
| ini. | 3 | 0 | -10649 | 178 | | | 362 | 136 | SLU 74 | 0.76 | No |
| fin. | 3 | 0 | 7469 | 1119 | | | 362 | 136 | SLU 74 | 0.12 | No |
| ini. | 3 | 0 | -15015 | 227 | | | 362 | 136 | SLU 77 | 0.6 | No |
| fin. | 3 | 0 | 10309 | 1197 | | | 362 | 136 | SLU 77 | 0.11 | No |
| ini. | 3 | 0 | -10422 | 178 | | | 362 | 136 | SLU 62 | 0.77 | No |
| fin. | 3 | 0 | 7294 | 1114 | | | 362 | 136 | SLU 62 | 0.12 | No |
| ini. | 3 | 0 | -9803 | 166 | | | 362 | 136 | SLU 81 | 0.82 | No |
| fin. | 3 | 0 | 7024 | 1124 | | | 362 | 136 | SLU 81 | 0.12 | No |
| ini. | 3 | 0 | -14169 | 215 | | | 362 | 136 | SLU 83 | 0.63 | No |
| fin. | 3 | 0 | 9863 | 1202 | | | 362 | 136 | SLU 83 | 0.11 | No |
| ini. | 3 | 0 | -12067 | 193 | | | 362 | 136 | SLU 84 | 0.71 | No |
| fin. | 3 | 0 | 8724 | 1177 | | | 362 | 136 | SLU 84 | 0.12 | No |
| ini. | 3 | 0 | -12913 | 205 | | | 362 | 136 | SLU 78 | 0.66 | No |
| fin. | 3 | 0 | 9170 | 1172 | | | 362 | 136 | SLU 78 | 0.12 | No |
| ini. | 3 | 0 | -13594 | 213 | | | 362 | 136 | SLU 80 | 0.64 | No |
| fin. | 3 | 0 | 9604 | 1184 | | | 362 | 136 | SLU 80 | 0.12 | No |
| ini. | 3 | 0 | -11949 | 198 | | | 362 | 136 | SLU 58 | 0.69 | No |
| fin. | 3 | 0 | 8174 | 1120 | | | 362 | 136 | SLU 58 | 0.12 | No |
| ini. | 3 | 0 | -15697 | 235 | | | 362 | 136 | SLU 79 | 0.58 | No |
| fin. | 3 | 0 | 10743 | 1208 | | | 362 | 136 | SLU 79 | 0.11 | No |

### Verifiche a pressoflessione delle travi in muratura in combinazioni sismiche

| Sezione | γM | N | M | Mu | Comb. | c.s. | Verifica |
|---|---|---|---|---|---|---|---|
| ini. | 2 | 1415 | -161276 | 48831 | SLV 16 | 0.3 | No |
| fin. | 2 | -4447 | 105716 | 48831 | SLV 16 | 0.46 | No |
| ini. | 2 | 1786 | -186251 | 48831 | SLV 13 | 0.26 | No |
| fin. | 2 | -5039 | 121078 | 48831 | SLV 13 | 0.4 | No |
| ini. | 2 | -1832 | 158615 | 48831 | SLV 1 | 0.31 | No |
| fin. | 2 | 4406 | -103476 | 48831 | SLV 1 | 0.47 | No |
| ini. | 2 | 952 | -94686 | 48831 | SLV 9 | 0.52 | No |
| fin. | 2 | -2425 | 60407 | 48831 | SLV 9 | 0.81 | No |
| ini. | 2 | -2203 | 183591 | 48831 | SLV 4 | 0.27 | No |
| fin. | 2 | 4999 | -118839 | 48831 | SLV 4 | 0.41 | No |
| ini. | 2 | 1786 | -186251 | 48831 | SLV 14 | 0.26 | No |
| fin. | 2 | -5039 | 121078 | 48831 | SLV 14 | 0.4 | No |
| ini. | 2 | -2203 | 183591 | 48831 | SLV 3 | 0.27 | No |
| fin. | 2 | 4999 | -118839 | 48831 | SLV 3 | 0.41 | No |
| ini. | 2 | -1832 | 158615 | 48831 | SLV 2 | 0.31 | No |
| fin. | 2 | 4406 | -103476 | 48831 | SLV 2 | 0.47 | No |
| ini. | 2 | 1415 | -161276 | 48831 | SLV 15 | 0.3 | No |

| Sezione | γM | N | M | Mu | Comb. | c.s. | Verifica |
|---|---|---|---|---|---|---|---|
| fin. | 2 | -4447 | 105716 | 48831 | SLV 15 | 0.46 | No |
| ini. | 2 | 952 | -94686 | 48831 | SLV 10 | 0.52 | No |
| fin. | 2 | -2425 | 60407 | 48831 | SLV 10 | 0.81 | No |

### Verifiche a taglio delle travi in muratura secondo §C8.7.1.3.1 in combinazioni sismiche

| Sezione | γM | N | M | V | Vt | Vp | Vt fess. diag. | Vt,lim | Comb. | c.s. | Verifica |
|---|---|---|---|---|---|---|---|---|---|---|---|
| ini. | 2 | 0 | 183591 | -1797 | | | 543 | 204 | SLV 4 | 0.11 | No |
| fin. | 2 | 0 | -118839 | -1679 | | | 543 | 204 | SLV 4 | 0.12 | No |
| ini. | 2 | 0 | -79855 | 855 | | | 543 | 204 | SLD 13 | 0.24 | No |
| fin. | 2 | 0 | 52129 | 1726 | | | 543 | 204 | SLD 13 | 0.12 | No |
| ini. | 2 | 0 | -79855 | 855 | | | 543 | 204 | SLD 14 | 0.24 | No |
| fin. | 2 | 0 | 52129 | 1726 | | | 543 | 204 | SLD 14 | 0.12 | No |
| ini. | 2 | 0 | -186251 | 1927 | | | 543 | 204 | SLV 14 | 0.11 | No |
| fin. | 2 | 0 | 121078 | 3100 | | | 543 | 204 | SLV 14 | 0.07 | No |
| ini. | 2 | 0 | -94686 | 1218 | | | 543 | 204 | SLV 10 | 0.17 | No |
| fin. | 2 | 0 | 60407 | 2100 | | | 543 | 204 | SLV 10 | 0.1 | No |
| ini. | 2 | 0 | -186251 | 1927 | | | 543 | 204 | SLV 13 | 0.11 | No |
| fin. | 2 | 0 | 121078 | 3100 | | | 543 | 204 | SLV 13 | 0.07 | No |
| ini. | 2 | 0 | 183591 | -1797 | | | 543 | 204 | SLV 3 | 0.11 | No |
| fin. | 2 | 0 | -118839 | -1679 | | | 543 | 204 | SLV 3 | 0.12 | No |
| ini. | 2 | 0 | -161276 | 1535 | | | 543 | 204 | SLV 15 | 0.13 | No |
| fin. | 2 | 0 | 105716 | 2657 | | | 543 | 204 | SLV 15 | 0.08 | No |
| ini. | 2 | 0 | -161276 | 1535 | | | 543 | 204 | SLV 16 | 0.13 | No |
| fin. | 2 | 0 | 105716 | 2657 | | | 543 | 204 | SLV 16 | 0.08 | No |
| ini. | 2 | 0 | -94686 | 1218 | | | 543 | 204 | SLV 9 | 0.17 | No |
| fin. | 2 | 0 | 60407 | 2100 | | | 543 | 204 | SLV 9 | 0.1 | No |

### Tabella dei coefficienti di sicurezza minimi

| Stato limite | Coeff.s. | Comb. | Verifica |
|---|---|---|---|
| PF_SLV | 0.262 | SLV 13 | No |
| V_SLV | 0.066 | SLV 13 | No |
| PF_SLU | 1.924 | SLU 37 | Si |
| V_SLU | 0.113 | SLU 79 | No |

## Trave di accoppiamento 56

Verifiche condotte secondo D.M. 17-01-18 (N.T.C.)

### Dati geometrici

| X ini. | Y ini. | Z ini.inf. | Z ini.sup. | H ini. | X fin. | Y fin. | Z fin.inf. | Z fin.sup | H fin. | Luce | Spessore | R. Trazione |
|---|---|---|---|---|---|---|---|---|---|---|---|---|
| -854.8 | -335.9 | 381 | 544 | 163 | -944.8 | -335.9 | 381 | 544 | 163 | 90 | 28 | 3500 |

### Caratteristiche del materiale

(Circolare 7 21-01-19 C8.5.I) Muratura in mattoni pieni e malta di calce LC2_Corti

| fb_ | fhk | fvk0 | fhmedio | τ0 | fv0 | μ | ϕ | fvk,lim | E | G | FC |
|---|---|---|---|---|---|---|---|---|---|---|---|
| 12 | | | 17.25 | 0.9 | 2 | 0.577 | 0.767 | 0.65 | 32000 | 12800 | 1.2 |

### Verifiche a pressoflessione delle travi in muratura in combinazioni non sismiche

| Sezione | γM | N | M | Mu | Comb. | c.s. | Verifica |
|---|---|---|---|---|---|---|---|
| ini. | 3 | -2546 | -199128 | 231542 | SLU 79 | 1.16 | Si |
| fin. | 3 | -2546 | -34721 | 231542 | SLU 79 | 6.67 | Si |
| ini. | 3 | -2507 | -195118 | 231542 | SLU 75 | 1.19 | Si |
| fin. | 3 | -2507 | -65738 | 231542 | SLU 75 | 3.52 | Si |
| ini. | 3 | -2602 | -196357 | 231542 | SLU 83 | 1.18 | Si |
| fin. | 3 | -2602 | -47195 | 231542 | SLU 83 | 4.91 | Si |
| ini. | 3 | -2540 | -198627 | 231542 | SLU 77 | 1.17 | Si |
| fin. | 3 | -2540 | -38604 | 231542 | SLU 77 | 6 | Si |
| ini. | 3 | -2455 | -193950 | 231542 | SLU 59 | 1.19 | Si |
| fin. | 3 | -2455 | -42116 | 231542 | SLU 59 | 5.5 | Si |
| ini. | 3 | -2577 | -205831 | 231542 | SLU 78 | 1.12 | Si |
| fin. | 3 | -2577 | -54843 | 231542 | SLU 78 | 4.22 | Si |
| ini. | 3 | -2583 | -206332 | 231542 | SLU 80 | 1.12 | Si |
| fin. | 3 | -2583 | -50961 | 231542 | SLU 80 | 4.54 | Si |
| ini. | 3 | -2639 | -203561 | 231542 | SLU 84 | 1.14 | Si |
| fin. | 3 | -2639 | -63434 | 231542 | SLU 84 | 3.65 | Si |
| ini. | 3 | -2450 | -193449 | 231542 | SLU 57 | 1.2 | Si |
| fin. | 3 | -2450 | -45999 | 231542 | SLU 57 | 5.03 | Si |
| ini. | 3 | -2537 | -200421 | 231542 | SLU 76 | 1.16 | Si |
| fin. | 3 | -2537 | -72681 | 231542 | SLU 76 | 3.19 | Si |

### Verifiche a taglio delle travi in muratura secondo §C8.7.1.3.1 in combinazioni non sismiche

| Sezione | γM | N | M | V | Vt | Vp | Vt fess. diag. | Vt,lim | Comb. | c.s. | Verifica |
|---|---|---|---|---|---|---|---|---|---|---|---|
| ini. | 3 | 0 | -199128 | 2689 | | | 1758 | 661 | SLU 79 | 0.25 | No |
| fin. | 3 | 0 | -34721 | 1032 | | | 1758 | 661 | SLU 79 | 0.64 | No |
| ini. | 3 | 0 | -203561 | 2466 | | | 1758 | 661 | SLU 84 | 0.27 | No |
| fin. | 3 | 0 | -63434 | 715 | | | 1758 | 661 | SLU 84 | 0.93 | No |
| ini. | 3 | 0 | -186246 | 2509 | | | 1758 | 661 | SLU 56 | 0.26 | No |
| fin. | 3 | 0 | -29759 | 1039 | | | 1758 | 661 | SLU 56 | 0.64 | No |
| ini. | 3 | 0 | -205831 | 2540 | | | 1758 | 661 | SLU 78 | 0.26 | No |
| fin. | 3 | 0 | -54843 | 883 | | | 1758 | 661 | SLU 78 | 0.75 | No |
| ini. | 3 | 0 | -206332 | 2588 | | | 1758 | 661 | SLU 80 | 0.26 | No |
| fin. | 3 | 0 | -50961 | 932 | | | 1758 | 661 | SLU 80 | 0.71 | No |
| ini. | 3 | 0 | -193950 | 2458 | | | 1758 | 661 | SLU 59 | 0.27 | No |
| fin. | 3 | 0 | -42116 | 988 | | | 1758 | 661 | SLU 59 | 0.67 | No |

| Sezione | γM | N | M | V | Vt | Vp | Vt fess. diag. | Vt,lim | Comb. | c.s. | Verifica |
|---|---|---|---|---|---|---|---|---|---|---|---|
| ini. | 3 | 0 | -198627 | 2640 | | | 1758 | 661 | SLU 77 | 0.25 | No |
| fin. | 3 | 0 | -38604 | 983 | | | 1758 | 661 | SLU 77 | 0.67 | No |
| ini. | 3 | 0 | -183975 | 2436 | | | 1758 | 661 | SLU 62 | 0.27 | No |
| fin. | 3 | 0 | -38350 | 871 | | | 1758 | 661 | SLU 62 | 0.76 | No |
| ini. | 3 | 0 | -196357 | 2567 | | | 1758 | 661 | SLU 83 | 0.26 | No |
| fin. | 3 | 0 | -47195 | 815 | | | 1758 | 661 | SLU 83 | 0.81 | No |
| ini. | 3 | 0 | -186746 | 2558 | | | 1758 | 661 | SLU 58 | 0.26 | No |
| fin. | 3 | 0 | -25877 | 1088 | | | 1758 | 661 | SLU 58 | 0.61 | No |

### Verifiche a pressoflessione delle travi in muratura in combinazioni sismiche

| Sezione | γM | N | M | Mu | Comb. | c.s. | Verifica |
|---|---|---|---|---|---|---|---|
| ini. | 2 | -2330 | -580515 | 249444 | SLV 10 | 0.43 | No |
| fin. | 2 | -3416 | 289438 | 249444 | SLV 10 | 0.86 | No |
| ini. | 2 | -3277 | -690214 | 249444 | SLV 14 | 0.36 | No |
| fin. | 2 | -3598 | 701266 | 249444 | SLV 14 | 0.36 | No |
| ini. | 2 | -3277 | -690214 | 249444 | SLV 13 | 0.36 | No |
| fin. | 2 | -3598 | 701266 | 249444 | SLV 13 | 0.36 | No |
| ini. | 2 | -2330 | -580515 | 249444 | SLV 9 | 0.43 | No |
| fin. | 2 | -3416 | 289438 | 249444 | SLV 9 | 0.86 | No |
| ini. | 2 | -81 | 440188 | 249444 | SLV 4 | 0.57 | No |
| fin. | 2 | 240 | -780753 | 249444 | SLV 4 | 0.32 | No |
| ini. | 2 | -3163 | -501681 | 249444 | SLV 15 | 0.5 | No |
| fin. | 2 | -2832 | 630797 | 249444 | SLV 15 | 0.4 | No |
| ini. | 2 | -194 | 251655 | 249444 | SLV 2 | 0.99 | No |
| fin. | 2 | -525 | -710284 | 249444 | SLV 2 | 0.35 | No |
| ini. | 2 | -194 | 251655 | 249444 | SLV 1 | 0.99 | No |
| fin. | 2 | -525 | -710284 | 249444 | SLV 1 | 0.35 | No |
| ini. | 2 | -81 | 440188 | 249444 | SLV 3 | 0.57 | No |
| fin. | 2 | 240 | -780753 | 249444 | SLV 3 | 0.32 | No |
| ini. | 2 | -3163 | -501681 | 249444 | SLV 16 | 0.5 | No |
| fin. | 2 | -2832 | 630797 | 249444 | SLV 16 | 0.4 | No |

### Verifiche a taglio delle travi in muratura secondo §C8.7.1.3.1 in combinazioni sismiche

| Sezione | γM | N | M | V | Vt | Vp | Vt fess. diag. | Vt,lim | Comb. | c.s. | Verifica |
|---|---|---|---|---|---|---|---|---|---|---|---|
| ini. | 2 | 0 | -364662 | 7141 | | | 2637 | 992 | SLD 13 | 0.14 | No |
| fin. | 2 | 0 | 276855 | 6270 | | | 2637 | 992 | SLD 13 | 0.16 | No |
| ini. | 2 | 0 | -690214 | 14678 | | | 2637 | 992 | SLV 13 | 0.07 | No |
| fin. | 2 | 0 | 701266 | 14150 | | | 2637 | 992 | SLV 13 | 0.07 | No |
| ini. | 2 | 0 | -364662 | 7141 | | | 2637 | 992 | SLD 14 | 0.14 | No |
| fin. | 2 | 0 | 276855 | 6270 | | | 2637 | 992 | SLD 14 | 0.16 | No |
| ini. | 2 | 0 | -501681 | 13743 | | | 2637 | 992 | SLV 15 | 0.07 | No |
| fin. | 2 | 0 | 630797 | 12805 | | | 2637 | 992 | SLV 15 | 0.08 | No |
| ini. | 2 | 0 | 251655 | -10669 | | | 2637 | 992 | SLV 2 | 0.09 | No |
| fin. | 2 | 0 | -710284 | -11984 | | | 2637 | 992 | SLV 2 | 0.08 | No |
| ini. | 2 | 0 | 251655 | -10669 | | | 2637 | 992 | SLV 1 | 0.09 | No |
| fin. | 2 | 0 | -710284 | -11984 | | | 2637 | 992 | SLV 1 | 0.08 | No |
| ini. | 2 | 0 | -501681 | 13743 | | | 2637 | 992 | SLV 16 | 0.07 | No |
| fin. | 2 | 0 | 630797 | 12805 | | | 2637 | 992 | SLV 16 | 0.08 | No |
| ini. | 2 | 0 | 440188 | -11604 | | | 2637 | 992 | SLV 4 | 0.09 | No |
| fin. | 2 | 0 | -780753 | -13329 | | | 2637 | 992 | SLV 4 | 0.07 | No |
| ini. | 2 | 0 | -690214 | 14678 | | | 2637 | 992 | SLV 14 | 0.07 | No |
| fin. | 2 | 0 | 701266 | 14150 | | | 2637 | 992 | SLV 14 | 0.07 | No |
| ini. | 2 | 0 | 440188 | -11604 | | | 2637 | 992 | SLV 3 | 0.09 | No |
| fin. | 2 | 0 | -780753 | -13329 | | | 2637 | 992 | SLV 3 | 0.07 | No |

### Tabella dei coefficienti di sicurezza minimi

| Stato limite | Coeff.s. | Comb. | Verifica |
|---|---|---|---|
| PF_SLV | 0.319 | SLV 3 | No |
| V_SLV | 0.068 | SLV 13 | No |
| PF_SLU | 1.122 | SLU 80 | Si |
| V_SLU | 0.246 | SLU 79 | No |

## Trave di accoppiamento 57

Verifiche condotte secondo D.M. 17-01-18 (N.T.C.)

### Dati geometrici

| X ini. | Y ini. | Z ini.inf. | Z ini.sup. | H ini. | X fin. | Y fin. | Z fin.inf. | Z fin.sup | H fin. | Luce | Spessore | R. Trazione |
|---|---|---|---|---|---|---|---|---|---|---|---|---|
| -772.3 | -486.1 | 497 | 544 | 47 | -772.3 | -377.1 | 497 | 544 | 47 | 109 | 30 | 3500 |

### Caratteristiche del materiale

(Circolare 7 21-01-19 C8.5.I) Muratura in mattoni pieni e malta di calce LC2_Corti

| fb_ | fhk | fvk0 | fhmedio | τ0 | fv0 | μ | ϕ | fvk,lim | E | G | FC |
|---|---|---|---|---|---|---|---|---|---|---|---|
| 12 | | | 17.25 | 0.9 | 2 | 0.577 | 0.767 | 0.65 | 32000 | 12800 | 1.2 |

### Verifiche a pressoflessione delle travi in muratura in combinazioni non sismiche

| Sezione | γM | N | M | Mu | Comb. | c.s. | Verifica |
|---|---|---|---|---|---|---|---|
| ini. | 3 | -504 | 1747 | 33622 | SLU 47 | 19.24 | Si |
| fin. | 3 | 729 | -15089 | 33622 | SLU 47 | 2.23 | Si |
| ini. | 3 | -415 | 1265 | 33622 | SLU 26 | 26.58 | Si |
| fin. | 3 | 640 | -13336 | 33622 | SLU 26 | 2.52 | Si |
| ini. | 3 | -412 | 3524 | 33622 | SLU 81 | 9.54 | Si |
| fin. | 3 | -174 | 12775 | 33622 | SLU 81 | 2.63 | Si |
| ini. | 3 | -507 | 1907 | 33622 | SLU 68 | 17.63 | Si |

| Sezione | γM | N | M | Mu | Comb. | c.s. | Verifica |
|---|---|---|---|---|---|---|---|
| fin. | 3 | 666 | -12756 | 33622 | SLU 68 | 2.64 | Si |
| ini. | 3 | -321 | 2882 | 33622 | SLU 39 | 11.67 | Si |
| fin. | 3 | -199 | 12194 | 33622 | SLU 39 | 2.76 | Si |
| ini. | 3 | -404 | 1188 | 33622 | SLU 2 | 28.31 | Si |
| fin. | 3 | 656 | -14168 | 33622 | SLU 2 | 2.37 | Si |
| ini. | 3 | -419 | 1386 | 33622 | SLU 13 | 24.26 | Si |
| fin. | 3 | 599 | -11987 | 33622 | SLU 13 | 2.8 | Si |
| ini. | 3 | -496 | 1830 | 33622 | SLU 44 | 18.38 | Si |
| fin. | 3 | 682 | -13588 | 33622 | SLU 44 | 2.47 | Si |
| ini. | 3 | -407 | 1347 | 33622 | SLU 23 | 24.96 | Si |
| fin. | 3 | 593 | -11835 | 33622 | SLU 23 | 2.84 | Si |
| ini. | 3 | -412 | 1105 | 33622 | SLU 5 | 30.42 | Si |
| fin. | 3 | 703 | -15669 | 33622 | SLU 5 | 2.15 | Si |

## Verifiche a taglio delle travi in muratura secondo §C8.7.1.3.1 in combinazioni non sismiche

| Sezione | γM | N | M | V | Vt | Vp | Vt fess. diag. | Vt,lim | Comb. | c.s. | Verifica |
|---|---|---|---|---|---|---|---|---|---|---|---|
| ini. | 3 | 0 | 2678 | -256 | | | 362 | 136 | SLU 75 | 0.53 | No |
| fin. | 3 | 0 | -897 | 1382 | | | 362 | 136 | SLU 75 | 0.1 | No |
| ini. | 3 | 0 | 3524 | -79 | | | 362 | 136 | SLU 81 | 1.72 | Si |
| fin. | 3 | 0 | 12775 | 1380 | | | 362 | 136 | SLU 81 | 0.1 | No |
| ini. | 3 | 0 | 2761 | -251 | | | 362 | 136 | SLU 84 | 0.54 | No |
| fin. | 3 | 0 | 12 | 1446 | | | 362 | 136 | SLU 84 | 0.09 | No |
| ini. | 3 | 0 | 2596 | -276 | | | 362 | 136 | SLU 78 | 0.49 | No |
| fin. | 3 | 0 | -2398 | 1386 | | | 362 | 136 | SLU 78 | 0.1 | No |
| ini. | 3 | 0 | 2843 | -232 | | | 362 | 136 | SLU 82 | 0.59 | No |
| fin. | 3 | 0 | 1513 | 1441 | | | 362 | 136 | SLU 82 | 0.09 | No |
| ini. | 3 | 0 | 3442 | -99 | | | 362 | 136 | SLU 83 | 1.38 | Si |
| fin. | 3 | 0 | 11274 | 1384 | | | 362 | 136 | SLU 83 | 0.1 | No |
| ini. | 3 | 0 | 3277 | -123 | | | 362 | 136 | SLU 77 | 1.11 | Si |
| fin. | 3 | 0 | 8864 | 1325 | | | 362 | 136 | SLU 77 | 0.1 | No |
| ini. | 3 | 0 | 2187 | -365 | | | 362 | 136 | SLU 76 | 0.37 | No |
| fin. | 3 | 0 | -9074 | 1407 | | | 362 | 136 | SLU 76 | 0.1 | No |
| ini. | 3 | 0 | 2269 | -346 | | | 362 | 136 | SLU 73 | 0.39 | No |
| fin. | 3 | 0 | -7572 | 1402 | | | 362 | 136 | SLU 73 | 0.1 | No |
| ini. | 3 | 0 | 2559 | -283 | | | 362 | 136 | SLU 80 | 0.48 | No |
| fin. | 3 | 0 | -3067 | 1370 | | | 362 | 136 | SLU 80 | 0.1 | No |

## Verifiche a pressoflessione delle travi in muratura in combinazioni sismiche

| Sezione | γM | N | M | Mu | Comb. | c.s. | Verifica |
|---|---|---|---|---|---|---|---|
| ini. | 2 | 219 | 12398 | 48831 | SLV 1 | 3.94 | Si |
| fin. | 2 | -3144 | 106276 | 48831 | SLV 1 | 0.46 | No |
| ini. | 2 | 219 | 12398 | 48831 | SLV 2 | 3.94 | Si |
| fin. | 2 | -3144 | 106276 | 48831 | SLV 2 | 0.46 | No |
| ini. | 2 | -1068 | -22304 | 48831 | SLV 12 | 2.19 | Si |
| fin. | 2 | 6359 | -199855 | 48831 | SLV 12 | 0.24 | No |
| ini. | 2 | -1068 | -22304 | 48831 | SLV 11 | 2.19 | Si |
| fin. | 2 | 6359 | -199855 | 48831 | SLV 11 | 0.24 | No |
| ini. | 2 | -867 | -20640 | 48831 | SLV 8 | 2.37 | Si |
| fin. | 2 | 5574 | -174732 | 48831 | SLV 8 | 0.28 | No |
| ini. | 2 | 245 | 25535 | 48831 | SLV 9 | 1.91 | Si |
| fin. | 2 | -5643 | 187372 | 48831 | SLV 9 | 0.26 | No |
| ini. | 2 | 445 | 27199 | 48831 | SLV 5 | 1.8 | Si |
| fin. | 2 | -6428 | 212495 | 48831 | SLV 5 | 0.23 | No |
| ini. | 2 | 445 | 27199 | 48831 | SLV 6 | 1.8 | Si |
| fin. | 2 | -6428 | 212495 | 48831 | SLV 6 | 0.23 | No |
| ini. | 2 | -867 | -20640 | 48831 | SLV 7 | 2.37 | Si |
| fin. | 2 | 5574 | -174732 | 48831 | SLV 7 | 0.28 | No |
| ini. | 2 | 245 | 25535 | 48831 | SLV 10 | 1.91 | Si |
| fin. | 2 | -5643 | 187372 | 48831 | SLV 10 | 0.26 | No |

## Verifiche a taglio delle travi in muratura secondo §C8.7.1.3.1 in combinazioni sismiche

| Sezione | γM | N | M | V | Vt | Vp | Vt fess. diag. | Vt,lim | Comb. | c.s. | Verifica |
|---|---|---|---|---|---|---|---|---|---|---|---|
| ini. | 2 | 0 | -7502 | -1354 | | | 543 | 204 | SLV 16 | 0.15 | No |
| fin. | 2 | 0 | -93636 | 743 | | | 543 | 204 | SLV 16 | 0.27 | No |
| ini. | 2 | 0 | -20640 | -2391 | | | 543 | 204 | SLV 7 | 0.09 | No |
| fin. | 2 | 0 | -174732 | 844 | | | 543 | 204 | SLV 7 | 0.24 | No |
| ini. | 2 | 0 | -7502 | -1354 | | | 543 | 204 | SLV 15 | 0.15 | No |
| fin. | 2 | 0 | -93636 | 743 | | | 543 | 204 | SLV 15 | 0.27 | No |
| ini. | 2 | 0 | -22304 | -2708 | | | 543 | 204 | SLV 12 | 0.08 | No |
| fin. | 2 | 0 | -199855 | 775 | | | 543 | 204 | SLV 12 | 0.26 | No |
| ini. | 2 | 0 | -20640 | -2391 | | | 543 | 204 | SLV 8 | 0.09 | No |
| fin. | 2 | 0 | -174732 | 844 | | | 543 | 204 | SLV 8 | 0.24 | No |
| ini. | 2 | 0 | 25535 | 2214 | | | 543 | 204 | SLV 10 | 0.09 | No |
| fin. | 2 | 0 | 187372 | 912 | | | 543 | 204 | SLV 10 | 0.22 | No |
| ini. | 2 | 0 | 27199 | 2531 | | | 543 | 204 | SLV 6 | 0.08 | No |
| fin. | 2 | 0 | 212495 | 981 | | | 543 | 204 | SLV 6 | 0.21 | No |
| ini. | 2 | 0 | -22304 | -2708 | | | 543 | 204 | SLV 11 | 0.08 | No |
| fin. | 2 | 0 | -199855 | 775 | | | 543 | 204 | SLV 11 | 0.26 | No |
| ini. | 2 | 0 | 27199 | 2531 | | | 543 | 204 | SLV 5 | 0.08 | No |
| fin. | 2 | 0 | 212495 | 981 | | | 543 | 204 | SLV 5 | 0.21 | No |
| ini. | 2 | 0 | 25535 | 2214 | | | 543 | 204 | SLV 9 | 0.09 | No |
| fin. | 2 | 0 | 187372 | 912 | | | 543 | 204 | SLV 9 | 0.22 | No |

## Tabella dei coefficienti di sicurezza minimi

| Stato limite | Coeff.s. | Comb. | Verifica |
|---|---|---|---|
| PF_SLV | 0.23 | SLV 5 | No |
| V_SLV | 0.075 | SLV 11 | No |

| Stato limite | Coeff.s. | Comb. | Verifica |
|---|---|---|---|
| PF_SLU | 2.146 | SLU 5 | Si |
| V_SLU | 0.094 | SLU 84 | No |

## Trave di accoppiamento 58

Verifiche condotte secondo D.M. 17-01-18 (N.T.C.)

### Dati geometrici

| X ini. | Y ini. | Z ini.inf. | Z ini.sup. | H ini. | X fin. | Y fin. | Z fin.inf. | Z fin.sup | H fin. | Luce | Spessore | R. Trazione |
|---|---|---|---|---|---|---|---|---|---|---|---|---|
| -515.8 | 600.6 | 171 | 371 | 200 | -515.8 | 650.6 | 171 | 371 | 200 | 50 | 28 | 3500 |

### Caratteristiche del materiale

(Circolare 7 21-01-19 C8.5.I) Muratura in mattoni pieni e malta di calce LC2_Corti

| fb_ | fhk | fvk0 | fhmedio | τ0 | fv0 | μ | ϕ | fvk,lim | E | G | FC |
|---|---|---|---|---|---|---|---|---|---|---|---|
| 12 | | | 17.25 | 0.9 | 2 | 0.577 | 0.767 | 0.65 | 32000 | 12800 | 1.2 |

### Verifiche a pressoflessione delle travi in muratura in combinazioni non sismiche

| Sezione | γM | N | M | Mu | Comb. | c.s. | Verifica |
|---|---|---|---|---|---|---|---|
| ini. | 3 | 1046 | -380235 | 296292 | SLU 78 | 0.78 | No |
| fin. | 3 | -578 | -223120 | 296292 | SLU 78 | 1.33 | Si |
| ini. | 3 | 1033 | -374439 | 296292 | SLU 80 | 0.79 | No |
| fin. | 3 | -566 | -221515 | 296292 | SLU 80 | 1.34 | Si |
| ini. | 3 | 1121 | -392282 | 296292 | SLU 82 | 0.76 | No |
| fin. | 3 | -596 | -216561 | 296292 | SLU 82 | 1.37 | Si |
| ini. | 3 | 1031 | -374097 | 296292 | SLU 79 | 0.79 | No |
| fin. | 3 | -566 | -222004 | 296292 | SLU 79 | 1.33 | Si |
| ini. | 3 | 1056 | -378389 | 296292 | SLU 74 | 0.78 | No |
| fin. | 3 | -577 | -216321 | 296292 | SLU 74 | 1.37 | Si |
| ini. | 3 | 1045 | -379893 | 296292 | SLU 77 | 0.78 | No |
| fin. | 3 | -577 | -223609 | 296292 | SLU 77 | 1.33 | Si |
| ini. | 3 | 1109 | -393444 | 296292 | SLU 83 | 0.75 | No |
| fin. | 3 | -596 | -224337 | 296292 | SLU 83 | 1.32 | Si |
| ini. | 3 | 1120 | -391940 | 296292 | SLU 81 | 0.76 | No |
| fin. | 3 | -596 | -217050 | 296292 | SLU 81 | 1.37 | Si |
| ini. | 3 | 1110 | -393786 | 296292 | SLU 84 | 0.75 | No |
| fin. | 3 | -596 | -223849 | 296292 | SLU 84 | 1.32 | Si |
| ini. | 3 | 1057 | -378731 | 296292 | SLU 75 | 0.78 | No |
| fin. | 3 | -578 | -215833 | 296292 | SLU 75 | 1.37 | Si |

### Verifiche a taglio delle travi in muratura secondo §C8.7.1.3.1 in combinazioni non sismiche

| Sezione | γM | N | M | V | Vt | Vp | Vt fess. diag. | Vt,lim | Comb. | c.s. | Verifica |
|---|---|---|---|---|---|---|---|---|---|---|---|
| ini. | 3 | 0 | -374439 | -2527 | | | 2157 | 812 | SLU 80 | 0.32 | No |
| fin. | 3 | 0 | -221515 | 22399 | | | 2157 | 812 | SLU 80 | 0.04 | No |
| ini. | 3 | 0 | -391940 | -1639 | | | 2157 | 812 | SLU 81 | 0.5 | No |
| fin. | 3 | 0 | -217050 | 22761 | | | 2157 | 812 | SLU 81 | 0.04 | No |
| ini. | 3 | 0 | -392282 | -1589 | | | 2157 | 812 | SLU 82 | 0.51 | No |
| fin. | 3 | 0 | -216561 | 22740 | | | 2157 | 812 | SLU 82 | 0.04 | No |
| ini. | 3 | 0 | -379893 | -2500 | | | 2157 | 812 | SLU 77 | 0.32 | No |
| fin. | 3 | 0 | -223609 | 22663 | | | 2157 | 812 | SLU 77 | 0.04 | No |
| ini. | 3 | 0 | -393786 | -2042 | | | 2157 | 812 | SLU 84 | 0.4 | No |
| fin. | 3 | 0 | -223849 | 23138 | | | 2157 | 812 | SLU 84 | 0.04 | No |
| ini. | 3 | 0 | -393444 | -2091 | | | 2157 | 812 | SLU 83 | 0.39 | No |
| fin. | 3 | 0 | -224337 | 23159 | | | 2157 | 812 | SLU 83 | 0.04 | No |
| ini. | 3 | 0 | -380235 | -2450 | | | 2157 | 812 | SLU 78 | 0.33 | No |
| fin. | 3 | 0 | -223120 | 22642 | | | 2157 | 812 | SLU 78 | 0.04 | No |
| ini. | 3 | 0 | -378731 | -1998 | | | 2157 | 812 | SLU 75 | 0.41 | No |
| fin. | 3 | 0 | -215833 | 22244 | | | 2157 | 812 | SLU 75 | 0.04 | No |
| ini. | 3 | 0 | -378389 | -2047 | | | 2157 | 812 | SLU 74 | 0.4 | No |
| fin. | 3 | 0 | -216321 | 22265 | | | 2157 | 812 | SLU 74 | 0.04 | No |
| ini. | 3 | 0 | -374097 | -2576 | | | 2157 | 812 | SLU 79 | 0.32 | No |
| fin. | 3 | 0 | -222004 | 22420 | | | 2157 | 812 | SLU 79 | 0.04 | No |

### Verifiche a pressoflessione delle travi in muratura in combinazioni sismiche

| Sezione | γM | N | M | Mu | Comb. | c.s. | Verifica |
|---|---|---|---|---|---|---|---|
| ini. | 2 | 1550 | -473751 | 314194 | SLV 9 | 0.66 | No |
| fin. | 2 | -173 | -100684 | 314194 | SLV 9 | 3.12 | Si |
| ini. | 2 | 996 | -358035 | 314194 | SLD 15 | 0.88 | No |
| fin. | 2 | -747 | -174762 | 314194 | SLD 15 | 1.8 | Si |
| ini. | 2 | 1550 | -473751 | 314194 | SLV 10 | 0.66 | No |
| fin. | 2 | -173 | -100684 | 314194 | SLV 10 | 3.12 | Si |
| ini. | 2 | 1725 | -577032 | 314194 | SLV 13 | 0.54 | No |
| fin. | 2 | -966 | -180393 | 314194 | SLV 13 | 1.74 | Si |
| ini. | 2 | 996 | -358035 | 314194 | SLD 16 | 0.88 | No |
| fin. | 2 | -747 | -174762 | 314194 | SLD 16 | 1.8 | Si |
| ini. | 2 | 1725 | -577032 | 314194 | SLV 14 | 0.54 | No |
| fin. | 2 | -966 | -180393 | 314194 | SLV 14 | 1.74 | Si |
| ini. | 2 | 1370 | -495344 | 314194 | SLV 15 | 0.63 | No |
| fin. | 2 | -1222 | -215926 | 314194 | SLV 15 | 1.46 | Si |
| ini. | 2 | 1144 | -392537 | 314194 | SLD 13 | 0.8 | No |
| fin. | 2 | -637 | -159755 | 314194 | SLD 13 | 1.97 | Si |
| ini. | 2 | 1144 | -392537 | 314194 | SLD 14 | 0.8 | No |
| fin. | 2 | -637 | -159755 | 314194 | SLD 14 | 1.97 | Si |
| ini. | 2 | 1370 | -495344 | 314194 | SLV 16 | 0.63 | No |
| fin. | 2 | -1222 | -215926 | 314194 | SLV 16 | 1.46 | Si |

### Verifiche a taglio delle travi in muratura secondo §C8.7.1.3.1 in combinazioni sismiche

| Sezione | γM | N | M | V | Vt | Vp | Vt fess. diag. | Vt,lim | Comb. | c.s. | Verifica |
|---|---|---|---|---|---|---|---|---|---|---|---|
| ini. | 2 | 0 | -201459 | -2019 | | | 3235 | 1217 | SLV 12 | 0.6 | No |
| fin. | 2 | 0 | -219130 | 19058 | | | 3235 | 1217 | SLV 12 | 0.06 | No |
| ini. | 2 | 0 | -201459 | -2019 | | | 3235 | 1217 | SLV 11 | 0.6 | No |
| fin. | 2 | 0 | -219130 | 19058 | | | 3235 | 1217 | SLV 11 | 0.06 | No |
| ini. | 2 | 0 | -358035 | 1461 | | | 3235 | 1217 | SLD 16 | 0.83 | No |
| fin. | 2 | 0 | -174762 | 18933 | | | 3235 | 1217 | SLD 16 | 0.06 | No |
| ini. | 2 | 0 | -495344 | 5088 | | | 3235 | 1217 | SLV 16 | 0.24 | No |
| fin. | 2 | 0 | -215926 | 24410 | | | 3235 | 1217 | SLV 16 | 0.05 | No |
| ini. | 2 | 0 | -392537 | 2211 | | | 3235 | 1217 | SLD 14 | 0.55 | No |
| fin. | 2 | 0 | -159755 | 18570 | | | 3235 | 1217 | SLD 14 | 0.07 | No |
| ini. | 2 | 0 | -577032 | 6835 | | | 3235 | 1217 | SLV 13 | 0.18 | No |
| fin. | 2 | 0 | -180393 | 23504 | | | 3235 | 1217 | SLV 13 | 0.05 | No |
| ini. | 2 | 0 | -392537 | 2211 | | | 3235 | 1217 | SLD 13 | 0.55 | No |
| fin. | 2 | 0 | -159755 | 18570 | | | 3235 | 1217 | SLD 13 | 0.07 | No |
| ini. | 2 | 0 | -358035 | 1461 | | | 3235 | 1217 | SLD 15 | 0.83 | No |
| fin. | 2 | 0 | -174762 | 18933 | | | 3235 | 1217 | SLD 15 | 0.06 | No |
| ini. | 2 | 0 | -577032 | 6835 | | | 3235 | 1217 | SLV 14 | 0.18 | No |
| fin. | 2 | 0 | -180393 | 23504 | | | 3235 | 1217 | SLV 14 | 0.05 | No |
| ini. | 2 | 0 | -495344 | 5088 | | | 3235 | 1217 | SLV 15 | 0.24 | No |
| fin. | 2 | 0 | -215926 | 24410 | | | 3235 | 1217 | SLV 15 | 0.05 | No |

### Tabella dei coefficienti di sicurezza minimi

| Stato limite | Coeff.s. | Comb. | Verifica |
|---|---|---|---|
| PF_SLV | 0.545 | SLV 13 | No |
| V_SLV | 0.05 | SLV 15 | No |
| PF_SLU | 0.752 | SLU 84 | No |
| V_SLU | 0.035 | SLU 83 | No |

## Trave di accoppiamento 59

Verifiche condotte secondo D.M. 17-01-18 (N.T.C.)

### Dati geometrici

| X ini. | Y ini. | Z ini.inf. | Z ini.sup. | H ini. | X fin. | Y fin. | Z fin.inf. | Z fin.sup | H fin. | Luce | Spessore | R. Trazione |
|---|---|---|---|---|---|---|---|---|---|---|---|---|
| -515.8 | 600.6 | 451 | 544 | 93 | -515.8 | 650.6 | 451 | 544 | 93 | 50 | 28 | 3500 |

### Caratteristiche del materiale

(Circolare 7 21-01-19 C8.5.I) Muratura in mattoni pieni e malta di calce LC2_Corti

| fb_ | fhk | fvk0 | fhmedio | τ0 | fv0 | μ | ϕ | fvk,lim | E | G | FC |
|---|---|---|---|---|---|---|---|---|---|---|---|
| 12 | | | 17.25 | 0.9 | 2 | 0.577 | 0.767 | 0.65 | 32000 | 12800 | 1.2 |

### Verifiche a pressoflessione delle travi in muratura in combinazioni non sismiche

| Sezione | γM | N | M | Mu | Comb. | c.s. | Verifica |
|---|---|---|---|---|---|---|---|
| ini. | 3 | -1108 | -70183 | 109042 | SLU 83 | 1.55 | Si |
| fin. | 3 | 75 | 31442 | 109042 | SLU 83 | 3.47 | Si |
| ini. | 3 | -1066 | -67676 | 109042 | SLU 75 | 1.61 | Si |
| fin. | 3 | 73 | 30245 | 109042 | SLU 75 | 3.61 | Si |
| ini. | 3 | -1228 | -74750 | 109042 | SLU 82 | 1.46 | Si |
| fin. | 3 | 22 | 30314 | 109042 | SLU 82 | 3.6 | Si |
| ini. | 3 | -1116 | -70599 | 109042 | SLU 84 | 1.54 | Si |
| fin. | 3 | 73 | 31383 | 109042 | SLU 84 | 3.47 | Si |
| ini. | 3 | -1220 | -74335 | 109042 | SLU 81 | 1.47 | Si |
| fin. | 3 | 25 | 30373 | 109042 | SLU 81 | 3.59 | Si |
| ini. | 3 | -1087 | -66205 | 109042 | SLU 60 | 1.65 | Si |
| fin. | 3 | 21 | 27044 | 109042 | SLU 60 | 4.03 | Si |
| ini. | 3 | -1136 | -69811 | 109042 | SLU 73 | 1.56 | Si |
| fin. | 3 | 33 | 28933 | 109042 | SLU 73 | 3.77 | Si |
| ini. | 3 | -1024 | -65660 | 109042 | SLU 76 | 1.66 | Si |
| fin. | 3 | 83 | 30002 | 109042 | SLU 76 | 3.63 | Si |
| ini. | 3 | -1095 | -66621 | 109042 | SLU 61 | 1.64 | Si |
| fin. | 3 | 19 | 26986 | 109042 | SLU 61 | 4.04 | Si |
| ini. | 3 | -1058 | -67261 | 109042 | SLU 74 | 1.62 | Si |
| fin. | 3 | 76 | 30304 | 109042 | SLU 74 | 3.6 | Si |

### Verifiche a taglio delle travi in muratura secondo §C8.7.1.3.1 in combinazioni non sismiche

| Sezione | γM | N | M | V | Vt | Vp | Vt fess. diag. | Vt,lim | Comb. | c.s. | Verifica |
|---|---|---|---|---|---|---|---|---|---|---|---|
| ini. | 3 | 0 | -63109 | 4801 | | | 1003 | 377 | SLU 77 | 0.08 | No |
| fin. | 3 | 0 | 31372 | 633 | | | 1003 | 377 | SLU 77 | 0.6 | No |
| ini. | 3 | 0 | -70599 | 4933 | | | 1003 | 377 | SLU 84 | 0.08 | No |
| fin. | 3 | 0 | 31383 | 1136 | | | 1003 | 377 | SLU 84 | 0.33 | No |
| ini. | 3 | 0 | -74335 | 4878 | | | 1003 | 377 | SLU 81 | 0.08 | No |
| fin. | 3 | 0 | 30373 | 1510 | | | 1003 | 377 | SLU 81 | 0.25 | No |
| ini. | 3 | 0 | -67676 | 4753 | | | 1003 | 377 | SLU 75 | 0.08 | No |
| fin. | 3 | 0 | 30245 | 1067 | | | 1003 | 377 | SLU 75 | 0.35 | No |
| ini. | 3 | 0 | -74750 | 4881 | | | 1003 | 377 | SLU 82 | 0.08 | No |
| fin. | 3 | 0 | 30314 | 1540 | | | 1003 | 377 | SLU 82 | 0.25 | No |
| ini. | 3 | 0 | -61231 | 4735 | | | 1003 | 377 | SLU 80 | 0.08 | No |
| fin. | 3 | 0 | 31110 | 543 | | | 1003 | 377 | SLU 80 | 0.7 | No |
| ini. | 3 | 0 | -63525 | 4804 | | | 1003 | 377 | SLU 78 | 0.08 | No |
| fin. | 3 | 0 | 31314 | 663 | | | 1003 | 377 | SLU 78 | 0.57 | No |
| ini. | 3 | 0 | -70183 | 4930 | | | 1003 | 377 | SLU 83 | 0.08 | No |
| fin. | 3 | 0 | 31442 | 1106 | | | 1003 | 377 | SLU 83 | 0.34 | No |
| ini. | 3 | 0 | -67261 | 4750 | | | 1003 | 377 | SLU 74 | 0.08 | No |

| Sezione | γM | N | M | V | Vt | Vp | Vt fess. diag. | Vt,lim | Comb. | c.s. | Verifica |
|---|---|---|---|---|---|---|---|---|---|---|---|
| fin. | 3 | 0 | 30304 | 1037 | | | 1003 | 377 | SLU 74 | 0.36 | No |
| ini. | 3 | 0 | -60816 | 4732 | | | 1003 | 377 | SLU 79 | 0.08 | No |
| fin. | 3 | 0 | 31169 | 513 | | | 1003 | 377 | SLU 79 | 0.74 | No |

### Verifiche a pressoflessione delle travi in muratura in combinazioni sismiche

| Sezione | γM | N | M | Mu | Comb. | c.s. | Verifica |
|---|---|---|---|---|---|---|---|
| ini. | 2 | -2391 | -122013 | 126944 | SLV 9 | 1.04 | Si |
| fin. | 2 | -812 | 19975 | 126944 | SLV 9 | 6.36 | Si |
| ini. | 2 | -2391 | -122013 | 126944 | SLV 10 | 1.04 | Si |
| fin. | 2 | -812 | 19975 | 126944 | SLV 10 | 6.36 | Si |
| ini. | 2 | -1696 | -97482 | 126944 | SLD 14 | 1.3 | Si |
| fin. | 2 | -170 | 22699 | 126944 | SLD 14 | 5.59 | Si |
| ini. | 2 | -2355 | -140429 | 126944 | SLV 16 | 0.9 | No |
| fin. | 2 | 1 | 27229 | 126944 | SLV 16 | 4.66 | Si |
| ini. | 2 | -1424 | -86346 | 126944 | SLD 16 | 1.47 | Si |
| fin. | 2 | 23 | 23202 | 126944 | SLD 16 | 5.47 | Si |
| ini. | 2 | -3004 | -166871 | 126944 | SLV 14 | 0.76 | No |
| fin. | 2 | -462 | 25988 | 126944 | SLV 14 | 4.88 | Si |
| ini. | 2 | -2355 | -140429 | 126944 | SLV 15 | 0.9 | No |
| fin. | 2 | 1 | 27229 | 126944 | SLV 15 | 4.66 | Si |
| ini. | 2 | -3004 | -166871 | 126944 | SLV 13 | 0.76 | No |
| fin. | 2 | -462 | 25988 | 126944 | SLV 13 | 4.88 | Si |
| ini. | 2 | -1696 | -97482 | 126944 | SLD 13 | 1.3 | Si |
| fin. | 2 | -170 | 22699 | 126944 | SLD 13 | 5.59 | Si |
| ini. | 2 | -1424 | -86346 | 126944 | SLD 15 | 1.47 | Si |
| fin. | 2 | 23 | 23202 | 126944 | SLD 15 | 5.47 | Si |

### Verifiche a taglio delle travi in muratura secondo §C8.7.1.3.1 in combinazioni sismiche

| Sezione | γM | N | M | V | Vt | Vp | Vt fess. diag. | Vt,lim | Comb. | c.s. | Verifica |
|---|---|---|---|---|---|---|---|---|---|---|---|
| ini. | 2 | 0 | -140429 | 6029 | | | 1504 | 566 | SLV 15 | 0.09 | No |
| fin. | 2 | 0 | 27229 | 5732 | | | 1504 | 566 | SLV 15 | 0.1 | No |
| ini. | 2 | 0 | -122013 | 5013 | | | 1504 | 566 | SLV 9 | 0.11 | No |
| fin. | 2 | 0 | 19975 | 5368 | | | 1504 | 566 | SLV 9 | 0.11 | No |
| ini. | 2 | 0 | 75878 | -254 | | | 1504 | 566 | SLV 4 | 2.23 | Si |
| fin. | 2 | 0 | 14187 | -5904 | | | 1504 | 566 | SLV 4 | 0.1 | No |
| ini. | 2 | 0 | -140429 | 6029 | | | 1504 | 566 | SLV 16 | 0.09 | No |
| fin. | 2 | 0 | 27229 | 5732 | | | 1504 | 566 | SLV 16 | 0.1 | No |
| ini. | 2 | 0 | -97482 | 4630 | | | 1504 | 566 | SLD 13 | 0.12 | No |
| fin. | 2 | 0 | 22699 | 3622 | | | 1504 | 566 | SLD 13 | 0.16 | No |
| ini. | 2 | 0 | -166871 | 6575 | | | 1504 | 566 | SLV 13 | 0.09 | No |
| fin. | 2 | 0 | 25988 | 7444 | | | 1504 | 566 | SLV 13 | 0.08 | No |
| ini. | 2 | 0 | -97482 | 4630 | | | 1504 | 566 | SLD 14 | 0.12 | No |
| fin. | 2 | 0 | 22699 | 3622 | | | 1504 | 566 | SLD 14 | 0.16 | No |
| ini. | 2 | 0 | -122013 | 5013 | | | 1504 | 566 | SLV 10 | 0.11 | No |
| fin. | 2 | 0 | 19975 | 5368 | | | 1504 | 566 | SLV 10 | 0.11 | No |
| ini. | 2 | 0 | 75878 | -254 | | | 1504 | 566 | SLV 3 | 2.23 | Si |
| fin. | 2 | 0 | 14187 | -5904 | | | 1504 | 566 | SLV 3 | 0.1 | No |
| ini. | 2 | 0 | -166871 | 6575 | | | 1504 | 566 | SLV 14 | 0.09 | No |
| fin. | 2 | 0 | 25988 | 7444 | | | 1504 | 566 | SLV 14 | 0.08 | No |

### Tabella dei coefficienti di sicurezza minimi

| Stato limite | Coeff.s. | Comb. | Verifica |
|---|---|---|---|
| PF_SLV | 0.761 | SLV 13 | No |
| V_SLV | 0.076 | SLV 13 | No |
| PF_SLU | 1.459 | SLU 82 | Si |
| V_SLU | 0.077 | SLU 84 | No |

## Trave di accoppiamento 60

Verifiche condotte secondo D.M. 17-01-18 (N.T.C.)

### Dati geometrici

| X ini. | Y ini. | Z ini.inf. | Z ini.sup. | H ini. | X fin. | Y fin. | Z fin.inf. | Z fin.sup | H fin. | Luce | Spessore | R. Trazione |
|---|---|---|---|---|---|---|---|---|---|---|---|---|
| -646.3 | -335.9 | 171 | 261 | 90 | -746.3 | -335.9 | 171 | 261 | 90 | 100 | 28 | 3500 |

### Caratteristiche del materiale

(Circolare 7 21-01-19 C8.5.I) Muratura in mattoni pieni e malta di calce LC2_Corti

| fb_ | fhk | fvk0 | fhmedio | τ0 | fv0 | μ | ϕ | fvk,lim | E | G | FC |
|---|---|---|---|---|---|---|---|---|---|---|---|
| 12 | | | 17.25 | 0.9 | 2 | 0.577 | 0.767 | 0.65 | 32000 | 12800 | 1.2 |

### Verifiche a pressoflessione delle travi in muratura in combinazioni non sismiche

| Sezione | γM | N | M | Mu | Comb. | c.s. | Verifica |
|---|---|---|---|---|---|---|---|
| ini. | 3 | -5370 | -179028 | 103792 | SLU 76 | 0.58 | No |
| fin. | 3 | -4207 | -80113 | 103792 | SLU 76 | 1.3 | Si |
| ini. | 3 | -4894 | -169183 | 103792 | SLU 84 | 0.61 | No |
| fin. | 3 | -4039 | -80807 | 103792 | SLU 84 | 1.28 | Si |
| ini. | 3 | -4766 | -163450 | 103792 | SLU 75 | 0.64 | No |
| fin. | 3 | -3892 | -78982 | 103792 | SLU 75 | 1.31 | Si |
| ini. | 3 | -5073 | -166073 | 103792 | SLU 55 | 0.62 | No |
| fin. | 3 | -3934 | -73016 | 103792 | SLU 55 | 1.42 | Si |
| ini. | 3 | -5292 | -174234 | 103792 | SLU 73 | 0.6 | No |
| fin. | 3 | -4093 | -83791 | 103792 | SLU 73 | 1.24 | Si |
| ini. | 3 | -4844 | -168244 | 103792 | SLU 78 | 0.62 | No |
| fin. | 3 | -4006 | -75304 | 103792 | SLU 78 | 1.38 | Si |

| Sezione | γM | N | M | Mu | Comb. | c.s. | Verifica |
|---|---|---|---|---|---|---|---|
| ini. | 3 | -4816 | -164388 | 103792 | SLU 82 | 0.63 | No |
| fin. | 3 | -3924 | -84484 | 103792 | SLU 82 | 1.23 | Si |
| ini. | 3 | -4995 | -161278 | 103792 | SLU 52 | 0.64 | No |
| fin. | 3 | -3820 | -76694 | 103792 | SLU 52 | 1.35 | Si |
| ini. | 3 | -4822 | -168068 | 103792 | SLU 80 | 0.62 | No |
| fin. | 3 | -4002 | -73622 | 103792 | SLU 80 | 1.41 | Si |
| ini. | 3 | -5020 | -165242 | 103792 | SLU 68 | 0.63 | No |
| fin. | 3 | -3855 | -71931 | 103792 | SLU 68 | 1.44 | Si |

## Verifiche a taglio delle travi in muratura secondo §C8.7.1.3.1 in combinazioni non sismiche

| Sezione | γM | N | M | V | Vt | Vp | Vt fess. diag. | Vt,lim | Comb. | c.s. | Verifica |
|---|---|---|---|---|---|---|---|---|---|---|---|
| ini. | 3 | 0 | -155113 | -299 | | | 873 | 329 | SLU 59 | 1.1 | Si |
| fin. | 3 | 0 | -66526 | 1172 | | | 873 | 329 | SLU 59 | 0.28 | No |
| ini. | 3 | 0 | -168068 | -326 | | | 873 | 329 | SLU 80 | 1.01 | Si |
| fin. | 3 | 0 | -73622 | 1280 | | | 873 | 329 | SLU 80 | 0.26 | No |
| ini. | 3 | 0 | -163450 | -439 | | | 873 | 329 | SLU 75 | 0.75 | No |
| fin. | 3 | 0 | -78982 | 1148 | | | 873 | 329 | SLU 75 | 0.29 | No |
| ini. | 3 | 0 | -169183 | -422 | | | 873 | 329 | SLU 84 | 0.78 | No |
| fin. | 3 | 0 | -80807 | 1222 | | | 873 | 329 | SLU 84 | 0.27 | No |
| ini. | 3 | 0 | -168244 | -356 | | | 873 | 329 | SLU 78 | 0.92 | No |
| fin. | 3 | 0 | -75304 | 1264 | | | 873 | 329 | SLU 78 | 0.26 | No |
| ini. | 3 | 0 | -144437 | -242 | | | 873 | 329 | SLU 79 | 1.36 | Si |
| fin. | 3 | 0 | -69403 | 1235 | | | 873 | 329 | SLU 79 | 0.27 | No |
| ini. | 3 | 0 | -144613 | -272 | | | 873 | 329 | SLU 77 | 1.21 | Si |
| fin. | 3 | 0 | -71085 | 1219 | | | 873 | 329 | SLU 77 | 0.27 | No |
| ini. | 3 | 0 | -145551 | -339 | | | 873 | 329 | SLU 83 | 0.97 | No |
| fin. | 3 | 0 | -76587 | 1176 | | | 873 | 329 | SLU 83 | 0.28 | No |
| ini. | 3 | 0 | -155288 | -329 | | | 873 | 329 | SLU 57 | 1 | No |
| fin. | 3 | 0 | -68208 | 1156 | | | 873 | 329 | SLU 57 | 0.28 | No |
| ini. | 3 | 0 | -179028 | -465 | | | 873 | 329 | SLU 76 | 0.71 | No |
| fin. | 3 | 0 | -80113 | 1194 | | | 873 | 329 | SLU 76 | 0.28 | No |

## Verifiche a pressoflessione delle travi in muratura in combinazioni sismiche

| Sezione | γM | N | M | Mu | Comb. | c.s. | Verifica |
|---|---|---|---|---|---|---|---|
| ini. | 2 | -5733 | -303985 | 121694 | SLV 13 | 0.4 | No |
| fin. | 2 | -6531 | 163151 | 121694 | SLV 13 | 0.75 | No |
| ini. | 2 | -5626 | 79854 | 121694 | SLV 2 | 1.52 | Si |
| fin. | 2 | -2239 | -387755 | 121694 | SLV 2 | 0.31 | No |
| ini. | 2 | -12773 | -96138 | 121694 | SLV 6 | 1.27 | Si |
| fin. | 2 | -8598 | -332073 | 121694 | SLV 6 | 0.37 | No |
| ini. | 2 | -5733 | -303985 | 121694 | SLV 14 | 0.4 | No |
| fin. | 2 | -6531 | 163151 | 121694 | SLV 14 | 0.75 | No |
| ini. | 2 | -5626 | 79854 | 121694 | SLV 1 | 1.52 | Si |
| fin. | 2 | -2239 | -387755 | 121694 | SLV 1 | 0.31 | No |
| ini. | 2 | 469 | 115553 | 121694 | SLV 3 | 1.05 | Si |
| fin. | 2 | 1923 | -270210 | 121694 | SLV 3 | 0.45 | No |
| ini. | 2 | 362 | -268286 | 121694 | SLV 15 | 0.45 | No |
| fin. | 2 | -2368 | 280696 | 121694 | SLV 15 | 0.43 | No |
| ini. | 2 | -12773 | -96138 | 121694 | SLV 5 | 1.27 | Si |
| fin. | 2 | -8598 | -332073 | 121694 | SLV 5 | 0.37 | No |
| ini. | 2 | 362 | -268286 | 121694 | SLV 16 | 0.45 | No |
| fin. | 2 | -2368 | 280696 | 121694 | SLV 16 | 0.43 | No |
| ini. | 2 | 469 | 115553 | 121694 | SLV 4 | 1.05 | Si |
| fin. | 2 | 1923 | -270210 | 121694 | SLV 4 | 0.45 | No |

## Verifiche a taglio delle travi in muratura secondo §C8.7.1.3.1 in combinazioni sismiche

| Sezione | γM | N | M | V | Vt | Vp | Vt fess. diag. | Vt,lim | Comb. | c.s. | Verifica |
|---|---|---|---|---|---|---|---|---|---|---|---|
| ini. | 2 | 0 | 115553 | -5782 | | | 1310 | 493 | SLV 4 | 0.09 | No |
| fin. | 2 | 0 | -270210 | -6027 | | | 1310 | 493 | SLV 4 | 0.08 | No |
| ini. | 2 | 0 | -268286 | 5890 | | | 1310 | 493 | SLV 16 | 0.08 | No |
| fin. | 2 | 0 | 280696 | 6455 | | | 1310 | 493 | SLV 16 | 0.08 | No |
| ini. | 2 | 0 | -211290 | 301 | | | 1310 | 493 | SLV 9 | 1.64 | Si |
| fin. | 2 | 0 | -166801 | 4120 | | | 1310 | 493 | SLV 9 | 0.12 | No |
| ini. | 2 | 0 | -268286 | 5890 | | | 1310 | 493 | SLV 15 | 0.08 | No |
| fin. | 2 | 0 | 280696 | 6455 | | | 1310 | 493 | SLV 15 | 0.08 | No |
| ini. | 2 | 0 | 79854 | -6477 | | | 1310 | 493 | SLV 1 | 0.08 | No |
| fin. | 2 | 0 | -387755 | -5089 | | | 1310 | 493 | SLV 1 | 0.1 | No |
| ini. | 2 | 0 | -211290 | 301 | | | 1310 | 493 | SLV 10 | 1.64 | Si |
| fin. | 2 | 0 | -166801 | 4120 | | | 1310 | 493 | SLV 10 | 0.12 | No |
| ini. | 2 | 0 | 115553 | -5782 | | | 1310 | 493 | SLV 3 | 0.09 | No |
| fin. | 2 | 0 | -270210 | -6027 | | | 1310 | 493 | SLV 3 | 0.08 | No |
| ini. | 2 | 0 | -303985 | 5196 | | | 1310 | 493 | SLV 13 | 0.09 | No |
| fin. | 2 | 0 | 163151 | 7394 | | | 1310 | 493 | SLV 13 | 0.07 | No |
| ini. | 2 | 0 | -303985 | 5196 | | | 1310 | 493 | SLV 14 | 0.09 | No |
| fin. | 2 | 0 | 163151 | 7394 | | | 1310 | 493 | SLV 14 | 0.07 | No |
| ini. | 2 | 0 | 79854 | -6477 | | | 1310 | 493 | SLV 2 | 0.08 | No |
| fin. | 2 | 0 | -387755 | -5089 | | | 1310 | 493 | SLV 2 | 0.1 | No |

## Tabella dei coefficienti di sicurezza minimi

| Stato limite | Coeff.s. | Comb. | Verifica |
|---|---|---|---|
| PF_SLV | 0.314 | SLV 1 | No |
| V_SLV | 0.067 | SLV 13 | No |
| PF_SLU | 0.58 | SLU 76 | No |
| V_SLU | 0.257 | SLU 80 | No |

## Trave di accoppiamento 61

Verifiche condotte secondo D.M. 17-01-18 (N.T.C.)

### Dati geometrici

| X ini. | Y ini. | Z ini.inf. | Z ini.sup. | H ini. | X fin. | Y fin. | Z fin.inf. | Z fin.sup | H fin. | Luce | Spessore | R. Trazione |
|---|---|---|---|---|---|---|---|---|---|---|---|---|
| -646.3 | -335.9 | 451 | 544 | 93 | -746.3 | -335.9 | 451 | 544 | 93 | 100 | 28 | 3500 |

### Caratteristiche del materiale

(Circolare 7 21-01-19 C8.5.I) Muratura in mattoni pieni e malta di calce LC2_Corti

| fb_ | fhk | fvk0 | fhmedio | τ0 | fv0 | μ | ϕ | fvk,lim | E | G | FC |
|---|---|---|---|---|---|---|---|---|---|---|---|
| 12 | | | 17.25 | 0.9 | 2 | 0.577 | 0.767 | 0.65 | 32000 | 12800 | 1.2 |

### Verifiche a pressoflessione delle travi in muratura in combinazioni non sismiche

| Sezione | γM | N | M | Mu | Comb. | c.s. | Verifica |
|---|---|---|---|---|---|---|---|
| ini. | 3 | 755 | -35466 | 109042 | SLU 74 | 3.07 | Si |
| fin. | 3 | 987 | 9296 | 109042 | SLU 74 | 11.73 | Si |
| ini. | 3 | 571 | -34827 | 109042 | SLU 56 | 3.13 | Si |
| fin. | 3 | 872 | 8356 | 109042 | SLU 56 | 13.05 | Si |
| ini. | 3 | 596 | -38877 | 109042 | SLU 79 | 2.8 | Si |
| fin. | 3 | 1003 | 10642 | 109042 | SLU 79 | 10.25 | Si |
| ini. | 3 | 842 | -37385 | 109042 | SLU 80 | 2.92 | Si |
| fin. | 3 | 1150 | 14196 | 109042 | SLU 80 | 7.68 | Si |
| ini. | 3 | 814 | -34849 | 109042 | SLU 81 | 3.13 | Si |
| fin. | 3 | 989 | 9009 | 109042 | SLU 81 | 12.1 | Si |
| ini. | 3 | 702 | -37845 | 109042 | SLU 83 | 2.88 | Si |
| fin. | 3 | 1013 | 10116 | 109042 | SLU 83 | 10.78 | Si |
| ini. | 3 | 642 | -38462 | 109042 | SLU 77 | 2.84 | Si |
| fin. | 3 | 1011 | 10404 | 109042 | SLU 77 | 10.48 | Si |
| ini. | 3 | 889 | -36969 | 109042 | SLU 78 | 2.95 | Si |
| fin. | 3 | 1158 | 13958 | 109042 | SLU 78 | 7.81 | Si |
| ini. | 3 | 948 | -36352 | 109042 | SLU 84 | 3 | Si |
| fin. | 3 | 1160 | 13671 | 109042 | SLU 84 | 7.98 | Si |
| ini. | 3 | 524 | -35242 | 109042 | SLU 58 | 3.09 | Si |
| fin. | 3 | 863 | 8594 | 109042 | SLU 58 | 12.69 | Si |

### Verifiche a taglio delle travi in muratura secondo §C8.7.1.3.1 in combinazioni non sismiche

| Sezione | γM | N | M | V | Vt | Vp | Vt fess. diag. | Vt,lim | Comb. | c.s. | Verifica |
|---|---|---|---|---|---|---|---|---|---|---|---|
| ini. | 3 | 0 | -36352 | 4501 | | | 933 | 351 | SLU 84 | 0.08 | No |
| fin. | 3 | 0 | 13671 | -2628 | | | 933 | 351 | SLU 84 | 0.13 | No |
| ini. | 3 | 0 | -38877 | 4453 | | | 933 | 351 | SLU 79 | 0.08 | No |
| fin. | 3 | 0 | 10642 | -2457 | | | 933 | 351 | SLU 79 | 0.14 | No |
| ini. | 3 | 0 | -36969 | 4429 | | | 933 | 351 | SLU 78 | 0.08 | No |
| fin. | 3 | 0 | 13958 | -2516 | | | 933 | 351 | SLU 78 | 0.14 | No |
| ini. | 3 | 0 | -37845 | 4522 | | | 933 | 351 | SLU 83 | 0.08 | No |
| fin. | 3 | 0 | 10116 | -2606 | | | 933 | 351 | SLU 83 | 0.13 | No |
| ini. | 3 | 0 | -37385 | 4432 | | | 933 | 351 | SLU 80 | 0.08 | No |
| fin. | 3 | 0 | 14196 | -2479 | | | 933 | 351 | SLU 80 | 0.14 | No |
| ini. | 3 | 0 | -34849 | 4351 | | | 933 | 351 | SLU 81 | 0.08 | No |
| fin. | 3 | 0 | 9009 | -2646 | | | 933 | 351 | SLU 81 | 0.13 | No |
| ini. | 3 | 0 | -35466 | 4280 | | | 933 | 351 | SLU 74 | 0.08 | No |
| fin. | 3 | 0 | 9296 | -2533 | | | 933 | 351 | SLU 74 | 0.14 | No |
| ini. | 3 | 0 | -38462 | 4450 | | | 933 | 351 | SLU 77 | 0.08 | No |
| fin. | 3 | 0 | 10404 | -2494 | | | 933 | 351 | SLU 77 | 0.14 | No |
| ini. | 3 | 0 | -33973 | 4258 | | | 933 | 351 | SLU 75 | 0.08 | No |
| fin. | 3 | 0 | 12850 | -2555 | | | 933 | 351 | SLU 75 | 0.14 | No |
| ini. | 3 | 0 | -33356 | 4330 | | | 933 | 351 | SLU 82 | 0.08 | No |
| fin. | 3 | 0 | 12563 | -2668 | | | 933 | 351 | SLU 82 | 0.13 | No |

### Verifiche a pressoflessione delle travi in muratura in combinazioni sismiche

| Sezione | γM | N | M | Mu | Comb. | c.s. | Verifica |
|---|---|---|---|---|---|---|---|
| ini. | 2 | -5419 | -148828 | 126944 | SLV 15 | 0.85 | No |
| fin. | 2 | 2265 | 112918 | 126944 | SLV 15 | 1.12 | Si |
| ini. | 2 | -5419 | -148828 | 126944 | SLV 16 | 0.85 | No |
| fin. | 2 | 2265 | 112918 | 126944 | SLV 16 | 1.12 | Si |
| ini. | 2 | 4723 | 41826 | 126944 | SLV 5 | 3.04 | Si |
| fin. | 2 | -138 | -142099 | 126944 | SLV 5 | 0.89 | No |
| ini. | 2 | -3910 | -131591 | 126944 | SLV 14 | 0.96 | No |
| fin. | 2 | 2053 | 36954 | 126944 | SLV 14 | 3.44 | Si |
| ini. | 2 | -306 | -15630 | 126944 | SLV 8 | 8.12 | Si |
| fin. | 2 | 567 | 111113 | 126944 | SLV 8 | 1.14 | Si |
| ini. | 2 | -3478 | -86388 | 126944 | SLV 11 | 1.47 | Si |
| fin. | 2 | 1465 | 152850 | 126944 | SLV 11 | 0.83 | No |
| ini. | 2 | -3910 | -131591 | 126944 | SLV 13 | 0.96 | No |
| fin. | 2 | 2053 | 36954 | 126944 | SLV 13 | 3.44 | Si |
| ini. | 2 | 4723 | 41826 | 126944 | SLV 6 | 3.04 | Si |
| fin. | 2 | -138 | -142099 | 126944 | SLV 6 | 0.89 | No |
| ini. | 2 | -3478 | -86388 | 126944 | SLV 12 | 1.47 | Si |
| fin. | 2 | 1465 | 152850 | 126944 | SLV 12 | 0.83 | No |
| ini. | 2 | -306 | -15630 | 126944 | SLV 7 | 8.12 | Si |
| fin. | 2 | 567 | 111113 | 126944 | SLV 7 | 1.14 | Si |

### Verifiche a taglio delle travi in muratura secondo §C8.7.1.3.1 in combinazioni sismiche

| Sezione | γM | N | M | V | Vt | Vp | Vt fess. diag. | Vt,lim | Comb. | c.s. | Verifica |
|---|---|---|---|---|---|---|---|---|---|---|---|
| ini. | 2 | 0 | -131591 | 7708 | | | 1399 | 526 | SLV 14 | 0.07 | No |
| fin. | 2 | 0 | 36954 | 1470 | | | 1399 | 526 | SLV 14 | 0.36 | No |
| ini. | 2 | 0 | 41826 | 197 | | | 1399 | 526 | SLV 5 | 2.67 | Si |

| Sezione | γM | N | M | V | Vt | Vp | Vt fess. diag. | Vt,lim | Comb. | c.s. | Verifica |
|---|---|---|---|---|---|---|---|---|---|---|---|
| fin. | 2 | 0 | -142099 | -5765 | | | 1399 | 526 | SLV 5 | 0.09 | No |
| ini. | 2 | 0 | -148828 | 8326 | | | 1399 | 526 | SLV 16 | 0.06 | No |
| fin. | 2 | 0 | 112918 | 3124 | | | 1399 | 526 | SLV 16 | 0.17 | No |
| ini. | 2 | 0 | -86388 | 5390 | | | 1399 | 526 | SLV 12 | 0.1 | No |
| fin. | 2 | 0 | 152850 | 2195 | | | 1399 | 526 | SLV 12 | 0.24 | No |
| ini. | 2 | 0 | -148828 | 8326 | | | 1399 | 526 | SLV 15 | 0.06 | No |
| fin. | 2 | 0 | 112918 | 3124 | | | 1399 | 526 | SLV 15 | 0.17 | No |
| ini. | 2 | 0 | 104266 | -2739 | | | 1399 | 526 | SLV 1 | 0.19 | No |
| fin. | 2 | 0 | -102168 | -6693 | | | 1399 | 526 | SLV 1 | 0.08 | No |
| ini. | 2 | 0 | -86388 | 5390 | | | 1399 | 526 | SLV 11 | 0.1 | No |
| fin. | 2 | 0 | 152850 | 2195 | | | 1399 | 526 | SLV 11 | 0.24 | No |
| ini. | 2 | 0 | 104266 | -2739 | | | 1399 | 526 | SLV 2 | 0.19 | No |
| fin. | 2 | 0 | -102168 | -6693 | | | 1399 | 526 | SLV 2 | 0.08 | No |
| ini. | 2 | 0 | 41826 | 197 | | | 1399 | 526 | SLV 6 | 2.67 | Si |
| fin. | 2 | 0 | -142099 | -5765 | | | 1399 | 526 | SLV 6 | 0.09 | No |
| ini. | 2 | 0 | -131591 | 7708 | | | 1399 | 526 | SLV 13 | 0.07 | No |
| fin. | 2 | 0 | 36954 | 1470 | | | 1399 | 526 | SLV 13 | 0.36 | No |

### Tabella dei coefficienti di sicurezza minimi

| Stato limite | Coeff.s. | Comb. | Verifica |
|---|---|---|---|
| PF_SLV | 0.831 | SLV 11 | No |
| V_SLV | 0.063 | SLV 15 | No |
| PF_SLU | 2.805 | SLU 79 | Si |
| V_SLU | 0.078 | SLU 83 | No |

## Trave di accoppiamento 62

Verifiche condotte secondo D.M. 17-01-18 (N.T.C.)

### Dati geometrici

| X ini. | Y ini. | Z ini.inf. | Z ini.sup. | H ini. | X fin. | Y fin. | Z fin.inf. | Z fin.sup | H fin. | Luce | Spessore | R. Trazione |
|---|---|---|---|---|---|---|---|---|---|---|---|---|
| -550.8 | -335.9 | 171 | 371 | 200 | -600.8 | -335.9 | 171 | 371 | 200 | 50 | 28 | 3500 |

### Caratteristiche del materiale

(Circolare 7 21-01-19 C8.5.I) Muratura in mattoni pieni e malta di calce LC2_Corti

| fb_ | fhk | fvk0 | fhmedio | τ0 | fv0 | μ | ϕ | fvk,lim | E | G | FC |
|---|---|---|---|---|---|---|---|---|---|---|---|
| 12 | | | 17.25 | 0.9 | 2 | 0.577 | 0.767 | 0.65 | 32000 | 12800 | 1.2 |

### Verifiche a pressoflessione delle travi in muratura in combinazioni non sismiche

| Sezione | γM | N | M | Mu | Comb. | c.s. | Verifica |
|---|---|---|---|---|---|---|---|
| ini. | 3 | -1231 | 390607 | 296292 | SLU 81 | 0.76 | No |
| fin. | 3 | -2697 | -151028 | 296292 | SLU 81 | 1.96 | Si |
| ini. | 3 | -1442 | 365277 | 296292 | SLU 80 | 0.81 | No |
| fin. | 3 | -3463 | -224570 | 296292 | SLU 80 | 1.32 | Si |
| ini. | 3 | -1446 | 380403 | 296292 | SLU 84 | 0.78 | No |
| fin. | 3 | -3497 | -225532 | 296292 | SLU 84 | 1.31 | Si |
| ini. | 3 | -1408 | 366195 | 296292 | SLU 75 | 0.81 | No |
| fin. | 3 | -3418 | -221980 | 296292 | SLU 75 | 1.33 | Si |
| ini. | 3 | -1272 | 380563 | 296292 | SLU 77 | 0.78 | No |
| fin. | 3 | -2740 | -154671 | 296292 | SLU 77 | 1.92 | Si |
| ini. | 3 | -1407 | 378321 | 296292 | SLU 82 | 0.78 | No |
| fin. | 3 | -3436 | -221935 | 296292 | SLU 82 | 1.34 | Si |
| ini. | 3 | -1233 | 378481 | 296292 | SLU 74 | 0.78 | No |
| fin. | 3 | -2679 | -151073 | 296292 | SLU 74 | 1.96 | Si |
| ini. | 3 | -1447 | 368277 | 296292 | SLU 78 | 0.8 | No |
| fin. | 3 | -3480 | -225577 | 296292 | SLU 78 | 1.31 | Si |
| ini. | 3 | -1270 | 392689 | 296292 | SLU 83 | 0.75 | No |
| fin. | 3 | -2758 | -154626 | 296292 | SLU 83 | 1.92 | Si |
| ini. | 3 | -1267 | 377563 | 296292 | SLU 79 | 0.78 | No |
| fin. | 3 | -2724 | -153663 | 296292 | SLU 79 | 1.93 | Si |

### Verifiche a taglio delle travi in muratura secondo §C8.7.1.3.1 in combinazioni non sismiche

| Sezione | γM | N | M | V | Vt | Vp | Vt fess. diag. | Vt,lim | Comb. | c.s. | Verifica |
|---|---|---|---|---|---|---|---|---|---|---|---|
| ini. | 3 | 0 | 378321 | -9758 | | | 2157 | 812 | SLU 82 | 0.08 | No |
| fin. | 3 | 0 | -221935 | -6765 | | | 2157 | 812 | SLU 82 | 0.12 | No |
| ini. | 3 | 0 | 366195 | -9510 | | | 2157 | 812 | SLU 75 | 0.09 | No |
| fin. | 3 | 0 | -221980 | -6595 | | | 2157 | 812 | SLU 75 | 0.12 | No |
| ini. | 3 | 0 | 392689 | -9682 | | | 2157 | 812 | SLU 83 | 0.08 | No |
| fin. | 3 | 0 | -154626 | -6728 | | | 2157 | 812 | SLU 83 | 0.12 | No |
| ini. | 3 | 0 | 380403 | -9847 | | | 2157 | 812 | SLU 84 | 0.08 | No |
| fin. | 3 | 0 | -225532 | -6823 | | | 2157 | 812 | SLU 84 | 0.12 | No |
| ini. | 3 | 0 | 368277 | -9599 | | | 2157 | 812 | SLU 78 | 0.08 | No |
| fin. | 3 | 0 | -225577 | -6652 | | | 2157 | 812 | SLU 78 | 0.12 | No |
| ini. | 3 | 0 | 390607 | -9593 | | | 2157 | 812 | SLU 81 | 0.08 | No |
| fin. | 3 | 0 | -151028 | -6671 | | | 2157 | 812 | SLU 81 | 0.12 | No |
| ini. | 3 | 0 | 352922 | -9457 | | | 2157 | 812 | SLU 73 | 0.09 | No |
| fin. | 3 | 0 | -264646 | -6553 | | | 2157 | 812 | SLU 73 | 0.12 | No |
| ini. | 3 | 0 | 365277 | -9525 | | | 2157 | 812 | SLU 80 | 0.09 | No |
| fin. | 3 | 0 | -224570 | -6604 | | | 2157 | 812 | SLU 80 | 0.12 | No |
| ini. | 3 | 0 | 380563 | -9433 | | | 2157 | 812 | SLU 77 | 0.09 | No |
| fin. | 3 | 0 | -154671 | -6557 | | | 2157 | 812 | SLU 77 | 0.12 | No |
| ini. | 3 | 0 | 355004 | -9546 | | | 2157 | 812 | SLU 76 | 0.09 | No |
| fin. | 3 | 0 | -268243 | -6610 | | | 2157 | 812 | SLU 76 | 0.12 | No |

### Verifiche a pressoflessione delle travi in muratura in combinazioni sismiche

| Sezione | γM | N | M | Mu | Comb. | c.s. | Verifica |
|---|---|---|---|---|---|---|---|
| ini. | 2 | -3794 | 554338 | 314194 | SLV 2 | 0.57 | No |
| fin. | 2 | -4790 | -275890 | 314194 | SLV 2 | 1.14 | Si |
| ini. | 2 | -4457 | 3598 | 314194 | SLV 10 | 87.33 | Si |
| fin. | 2 | -10762 | -653347 | 314194 | SLV 10 | 0.48 | No |
| ini. | 2 | -5481 | 207802 | 314194 | SLV 5 | 1.51 | Si |
| fin. | 2 | -10907 | -656902 | 314194 | SLV 5 | 0.48 | No |
| ini. | 2 | -3794 | 554338 | 314194 | SLV 1 | 0.57 | No |
| fin. | 2 | -4790 | -275890 | 314194 | SLV 1 | 1.14 | Si |
| ini. | 2 | -4457 | 3598 | 314194 | SLV 9 | 87.33 | Si |
| fin. | 2 | -10762 | -653347 | 314194 | SLV 9 | 0.48 | No |
| ini. | 2 | 2754 | 517224 | 314194 | SLV 8 | 0.61 | No |
| fin. | 2 | 7055 | 443553 | 314194 | SLV 8 | 0.71 | No |
| ini. | 2 | -1323 | 647164 | 314194 | SLV 4 | 0.49 | No |
| fin. | 2 | 598 | 54246 | 314194 | SLV 4 | 5.79 | Si |
| ini. | 2 | 2754 | 517224 | 314194 | SLV 7 | 0.61 | No |
| fin. | 2 | 7055 | 443553 | 314194 | SLV 7 | 0.71 | No |
| ini. | 2 | -5481 | 207802 | 314194 | SLV 6 | 1.51 | Si |
| fin. | 2 | -10907 | -656902 | 314194 | SLV 6 | 0.48 | No |
| ini. | 2 | -1323 | 647164 | 314194 | SLV 3 | 0.49 | No |
| fin. | 2 | 598 | 54246 | 314194 | SLV 3 | 5.79 | Si |

### Verifiche a taglio delle travi in muratura secondo §C8.7.1.3.1 in combinazioni sismiche

| Sezione | γM | N | M | V | Vt | Vp | Vt fess. diag. | Vt,lim | Comb. | c.s. | Verifica |
|---|---|---|---|---|---|---|---|---|---|---|---|
| ini. | 2 | 0 | 424311 | -10425 | | | 3235 | 1217 | SLD 4 | 0.12 | No |
| fin. | 2 | 0 | -42613 | -8776 | | | 3235 | 1217 | SLD 4 | 0.14 | No |
| ini. | 2 | 0 | 207802 | -11118 | | | 3235 | 1217 | SLV 5 | 0.11 | No |
| fin. | 2 | 0 | -656902 | -6758 | | | 3235 | 1217 | SLV 5 | 0.18 | No |
| ini. | 2 | 0 | 647164 | -15731 | | | 3235 | 1217 | SLV 4 | 0.08 | No |
| fin. | 2 | 0 | 54246 | -14531 | | | 3235 | 1217 | SLV 4 | 0.08 | No |
| ini. | 2 | 0 | 554338 | -16782 | | | 3235 | 1217 | SLV 1 | 0.07 | No |
| fin. | 2 | 0 | -275890 | -14123 | | | 3235 | 1217 | SLV 1 | 0.09 | No |
| ini. | 2 | 0 | 388862 | -10831 | | | 3235 | 1217 | SLD 2 | 0.11 | No |
| fin. | 2 | 0 | -171601 | -8604 | | | 3235 | 1217 | SLD 2 | 0.14 | No |
| ini. | 2 | 0 | 554338 | -16782 | | | 3235 | 1217 | SLV 2 | 0.07 | No |
| fin. | 2 | 0 | -275890 | -14123 | | | 3235 | 1217 | SLV 2 | 0.09 | No |
| ini. | 2 | 0 | 424311 | -10425 | | | 3235 | 1217 | SLD 3 | 0.12 | No |
| fin. | 2 | 0 | -42613 | -8776 | | | 3235 | 1217 | SLD 3 | 0.14 | No |
| ini. | 2 | 0 | 207802 | -11118 | | | 3235 | 1217 | SLV 6 | 0.11 | No |
| fin. | 2 | 0 | -656902 | -6758 | | | 3235 | 1217 | SLV 6 | 0.18 | No |
| ini. | 2 | 0 | 647164 | -15731 | | | 3235 | 1217 | SLV 3 | 0.08 | No |
| fin. | 2 | 0 | 54246 | -14531 | | | 3235 | 1217 | SLV 3 | 0.08 | No |
| ini. | 2 | 0 | 388862 | -10831 | | | 3235 | 1217 | SLD 1 | 0.11 | No |
| fin. | 2 | 0 | -171601 | -8604 | | | 3235 | 1217 | SLD 1 | 0.14 | No |

### Tabella dei coefficienti di sicurezza minimi

| Stato limite | Coeff.s. | Comb. | Verifica |
|---|---|---|---|
| PF_SLV | 0.478 | SLV 5 | No |
| V_SLV | 0.073 | SLV 1 | No |
| PF_SLU | 0.755 | SLU 83 | No |
| V_SLU | 0.082 | SLU 84 | No |

## Trave di accoppiamento 63

Verifiche condotte secondo D.M. 17-01-18 (N.T.C.)

### Dati geometrici

| X ini. | Y ini. | Z ini.inf. | Z ini.sup. | H ini. | X fin. | Y fin. | Z fin.inf. | Z fin.sup | H fin. | Luce | Spessore | R. Trazione |
|---|---|---|---|---|---|---|---|---|---|---|---|---|
| -550.8 | -335.9 | 451 | 544 | 93 | -600.8 | -335.9 | 451 | 544 | 93 | 50 | 28 | 3500 |

### Caratteristiche del materiale

(Circolare 7 21-01-19 C8.5.I) Muratura in mattoni pieni e malta di calce LC2_Corti

| fb_ | fhk | fvk0 | fhmedio | τ0 | fv0 | μ | ϕ | fvk,lim | E | G | FC |
|---|---|---|---|---|---|---|---|---|---|---|---|
| 12 | | | 17.25 | 0.9 | 2 | 0.577 | 0.767 | 0.65 | 32000 | 12800 | 1.2 |

### Verifiche a pressoflessione delle travi in muratura in combinazioni non sismiche

| Sezione | γM | N | M | Mu | Comb. | c.s. | Verifica |
|---|---|---|---|---|---|---|---|
| ini. | 3 | 1719 | 72583 | 109042 | SLU 75 | 1.5 | Si |
| fin. | 3 | 765 | -65055 | 109042 | SLU 75 | 1.68 | Si |
| ini. | 3 | 1706 | 71054 | 109042 | SLU 55 | 1.53 | Si |
| fin. | 3 | 810 | -60023 | 109042 | SLU 55 | 1.82 | Si |
| ini. | 3 | 1587 | 71257 | 109042 | SLU 80 | 1.53 | Si |
| fin. | 3 | 613 | -67369 | 109042 | SLU 80 | 1.62 | Si |
| ini. | 3 | 1840 | 76899 | 109042 | SLU 76 | 1.42 | Si |
| fin. | 3 | 857 | -66143 | 109042 | SLU 76 | 1.65 | Si |
| ini. | 3 | 1783 | 74889 | 109042 | SLU 82 | 1.46 | Si |
| fin. | 3 | 812 | -65761 | 109042 | SLU 82 | 1.66 | Si |
| ini. | 3 | 1790 | 71563 | 109042 | SLU 52 | 1.52 | Si |
| fin. | 3 | 917 | -57679 | 109042 | SLU 52 | 1.89 | Si |
| ini. | 3 | 1698 | 74380 | 109042 | SLU 84 | 1.47 | Si |
| fin. | 3 | 705 | -68106 | 109042 | SLU 84 | 1.6 | Si |
| ini. | 3 | 1635 | 72074 | 109042 | SLU 78 | 1.51 | Si |
| fin. | 3 | 658 | -67400 | 109042 | SLU 78 | 1.62 | Si |
| ini. | 3 | 1924 | 77407 | 109042 | SLU 73 | 1.41 | Si |

| Sezione | γM | N | M | Mu | Comb. | c.s. | Verifica |
|---|---|---|---|---|---|---|---|
| fin. | 3 | 964 | -63799 | 109042 | SLU 73 | 1.71 | Si |
| ini. | 3 | 1859 | 71307 | 109042 | SLU 65 | 1.53 | Si |
| fin. | 3 | 1000 | -56609 | 109042 | SLU 65 | 1.93 | Si |

### Verifiche a taglio delle travi in muratura secondo §C8.7.1.3.1 in combinazioni non sismiche

| Sezione | γM | N | M | V | Vt | Vp | Vt fess. diag. | Vt,lim | Comb. | c.s. | Verifica |
|---|---|---|---|---|---|---|---|---|---|---|---|
| ini. | 3 | 0 | 74889 | -2355 | | | 1003 | 377 | SLU 82 | 0.16 | No |
| fin. | 3 | 0 | -65761 | -6610 | | | 1003 | 377 | SLU 82 | 0.06 | No |
| ini. | 3 | 0 | 71257 | -2340 | | | 1003 | 377 | SLU 80 | 0.16 | No |
| fin. | 3 | 0 | -67369 | -6518 | | | 1003 | 377 | SLU 80 | 0.06 | No |
| ini. | 3 | 0 | 72074 | -2350 | | | 1003 | 377 | SLU 78 | 0.16 | No |
| fin. | 3 | 0 | -67400 | -6561 | | | 1003 | 377 | SLU 78 | 0.06 | No |
| ini. | 3 | 0 | 77407 | -2420 | | | 1003 | 377 | SLU 73 | 0.16 | No |
| fin. | 3 | 0 | -63799 | -6459 | | | 1003 | 377 | SLU 73 | 0.06 | No |
| ini. | 3 | 0 | 76899 | -2459 | | | 1003 | 377 | SLU 76 | 0.15 | No |
| fin. | 3 | 0 | -66143 | -6560 | | | 1003 | 377 | SLU 76 | 0.06 | No |
| ini. | 3 | 0 | 64375 | -2111 | | | 1003 | 377 | SLU 77 | 0.18 | No |
| fin. | 3 | 0 | -65721 | -6347 | | | 1003 | 377 | SLU 77 | 0.06 | No |
| ini. | 3 | 0 | 72583 | -2310 | | | 1003 | 377 | SLU 75 | 0.16 | No |
| fin. | 3 | 0 | -65055 | -6460 | | | 1003 | 377 | SLU 75 | 0.06 | No |
| ini. | 3 | 0 | 66681 | -2156 | | | 1003 | 377 | SLU 83 | 0.18 | No |
| fin. | 3 | 0 | -66428 | -6496 | | | 1003 | 377 | SLU 83 | 0.06 | No |
| ini. | 3 | 0 | 74380 | -2394 | | | 1003 | 377 | SLU 84 | 0.16 | No |
| fin. | 3 | 0 | -68106 | -6711 | | | 1003 | 377 | SLU 84 | 0.06 | No |
| ini. | 3 | 0 | 67190 | -2116 | | | 1003 | 377 | SLU 81 | 0.18 | No |
| fin. | 3 | 0 | -64083 | -6395 | | | 1003 | 377 | SLU 81 | 0.06 | No |

### Verifiche a pressoflessione delle travi in muratura in combinazioni sismiche

| Sezione | γM | N | M | Mu | Comb. | c.s. | Verifica |
|---|---|---|---|---|---|---|---|
| ini. | 2 | 5428 | 176986 | 126944 | SLV 4 | 0.72 | No |
| fin. | 2 | 4086 | -13672 | 126944 | SLV 4 | 9.29 | Si |
| ini. | 2 | 3855 | 114873 | 126944 | SLD 2 | 1.11 | Si |
| fin. | 2 | 2795 | -29552 | 126944 | SLD 2 | 4.3 | Si |
| ini. | 2 | 5428 | 176986 | 126944 | SLV 3 | 0.72 | No |
| fin. | 2 | 4086 | -13672 | 126944 | SLV 3 | 9.29 | Si |
| ini. | 2 | 7616 | 209437 | 126944 | SLV 2 | 0.61 | No |
| fin. | 2 | 5935 | -12894 | 126944 | SLV 2 | 9.85 | Si |
| ini. | 2 | 3855 | 114873 | 126944 | SLD 1 | 1.11 | Si |
| fin. | 2 | 2795 | -29552 | 126944 | SLD 1 | 4.3 | Si |
| ini. | 2 | -5427 | -118558 | 126944 | SLV 16 | 1.07 | Si |
| fin. | 2 | -4966 | -71312 | 126944 | SLV 16 | 1.78 | Si |
| ini. | 2 | -5427 | -118558 | 126944 | SLV 15 | 1.07 | Si |
| fin. | 2 | -4966 | -71312 | 126944 | SLV 15 | 1.78 | Si |
| ini. | 2 | 7616 | 209437 | 126944 | SLV 1 | 0.61 | No |
| fin. | 2 | 5935 | -12894 | 126944 | SLV 1 | 9.85 | Si |
| ini. | 2 | 6369 | 143857 | 126944 | SLV 6 | 0.88 | No |
| fin. | 2 | 4924 | -32161 | 126944 | SLV 6 | 3.95 | Si |
| ini. | 2 | 6369 | 143857 | 126944 | SLV 5 | 0.88 | No |
| fin. | 2 | 4924 | -32161 | 126944 | SLV 5 | 3.95 | Si |

### Verifiche a taglio delle travi in muratura secondo §C8.7.1.3.1 in combinazioni sismiche

| Sezione | γM | N | M | V | Vt | Vp | Vt fess. diag. | Vt,lim | Comb. | c.s. | Verifica |
|---|---|---|---|---|---|---|---|---|---|---|---|
| ini. | 2 | 0 | 209437 | -4306 | | | 1504 | 566 | SLV 2 | 0.13 | No |
| fin. | 2 | 0 | -12894 | -7742 | | | 1504 | 566 | SLV 2 | 0.07 | No |
| ini. | 2 | 0 | 143857 | -1274 | | | 1504 | 566 | SLV 6 | 0.44 | No |
| fin. | 2 | 0 | -32161 | -6446 | | | 1504 | 566 | SLV 6 | 0.09 | No |
| ini. | 2 | 0 | 114873 | -2649 | | | 1504 | 566 | SLD 2 | 0.21 | No |
| fin. | 2 | 0 | -29552 | -5706 | | | 1504 | 566 | SLD 2 | 0.1 | No |
| ini. | 2 | 0 | 102278 | -2927 | | | 1504 | 566 | SLD 3 | 0.19 | No |
| fin. | 2 | 0 | -30051 | -5419 | | | 1504 | 566 | SLD 3 | 0.1 | No |
| ini. | 2 | 0 | 102278 | -2927 | | | 1504 | 566 | SLD 4 | 0.19 | No |
| fin. | 2 | 0 | -30051 | -5419 | | | 1504 | 566 | SLD 4 | 0.1 | No |
| ini. | 2 | 0 | 209437 | -4306 | | | 1504 | 566 | SLV 1 | 0.13 | No |
| fin. | 2 | 0 | -12894 | -7742 | | | 1504 | 566 | SLV 1 | 0.07 | No |
| ini. | 2 | 0 | 176986 | -4967 | | | 1504 | 566 | SLV 3 | 0.11 | No |
| fin. | 2 | 0 | -13672 | -6975 | | | 1504 | 566 | SLV 3 | 0.08 | No |
| ini. | 2 | 0 | 143857 | -1274 | | | 1504 | 566 | SLV 5 | 0.44 | No |
| fin. | 2 | 0 | -32161 | -6446 | | | 1504 | 566 | SLV 5 | 0.09 | No |
| ini. | 2 | 0 | 114873 | -2649 | | | 1504 | 566 | SLD 1 | 0.21 | No |
| fin. | 2 | 0 | -29552 | -5706 | | | 1504 | 566 | SLD 1 | 0.1 | No |
| ini. | 2 | 0 | 176986 | -4967 | | | 1504 | 566 | SLV 4 | 0.11 | No |
| fin. | 2 | 0 | -13672 | -6975 | | | 1504 | 566 | SLV 4 | 0.08 | No |

### Tabella dei coefficienti di sicurezza minimi

| Stato limite | Coeff.s. | Comb. | Verifica |
|---|---|---|---|
| PF_SLV | 0.606 | SLV 1 | No |
| V_SLV | 0.073 | SLV 1 | No |
| PF_SLU | 1.409 | SLU 73 | Si |
| V_SLU | 0.056 | SLU 84 | No |

## Trave di accoppiamento 64

Verifiche condotte secondo D.M. 17-01-18 (N.T.C.)

## Dati geometrici

| X ini. | Y ini. | Z ini.inf. | Z ini.sup. | H ini. | X fin. | Y fin. | Z fin.inf. | Z fin.sup | H fin. | Luce | Spessore | R. Trazione |
|---|---|---|---|---|---|---|---|---|---|---|---|---|
| -223.3 | -335.9 | 171 | 261 | 90 | -323.3 | -335.9 | 171 | 261 | 90 | 100 | 28 | 3500 |

## Caratteristiche del materiale

(Circolare 7 21-01-19 C8.5.I) Muratura in mattoni pieni e malta di calce LC2_Corti

| fb_ | fhk | fvk0 | fhmedio | τ0 | fv0 | μ | ϕ | fvk,lim | E | G | FC |
|---|---|---|---|---|---|---|---|---|---|---|---|
| 12 | | | 17.25 | 0.9 | 2 | 0.577 | 0.767 | 0.65 | 32000 | 12800 | 1.2 |

## Verifiche a pressoflessione delle travi in muratura in combinazioni non sismiche

| Sezione | γM | N | M | Mu | Comb. | c.s. | Verifica |
|---|---|---|---|---|---|---|---|
| ini. | 3 | 11274 | -5307 | 103792 | SLU 68 | 19.56 | Si |
| fin. | 3 | 11041 | 98506 | 103792 | SLU 68 | 1.05 | Si |
| ini. | 3 | 10336 | -12226 | 103792 | SLU 75 | 8.49 | Si |
| fin. | 3 | 10049 | 98141 | 103792 | SLU 75 | 1.06 | Si |
| ini. | 3 | 11979 | -8135 | 103792 | SLU 76 | 12.76 | Si |
| fin. | 3 | 11719 | 106761 | 103792 | SLU 76 | 0.97 | No |
| ini. | 3 | 10485 | -12782 | 103792 | SLU 82 | 8.12 | Si |
| fin. | 3 | 10205 | 99420 | 103792 | SLU 82 | 1.04 | Si |
| ini. | 3 | 10575 | -13263 | 103792 | SLU 84 | 7.83 | Si |
| fin. | 3 | 10278 | 101080 | 103792 | SLU 84 | 1.03 | Si |
| ini. | 3 | 11184 | -4825 | 103792 | SLU 65 | 21.51 | Si |
| fin. | 3 | 10967 | 96846 | 103792 | SLU 65 | 1.07 | Si |
| ini. | 3 | 11889 | -7654 | 103792 | SLU 73 | 13.56 | Si |
| fin. | 3 | 11646 | 105100 | 103792 | SLU 73 | 0.99 | No |
| ini. | 3 | 10363 | -12533 | 103792 | SLU 80 | 8.28 | Si |
| fin. | 3 | 10061 | 99204 | 103792 | SLU 80 | 1.05 | Si |
| ini. | 3 | 11255 | -4823 | 103792 | SLU 55 | 21.52 | Si |
| fin. | 3 | 11040 | 98278 | 103792 | SLU 55 | 1.06 | Si |
| ini. | 3 | 10426 | -12707 | 103792 | SLU 78 | 8.17 | Si |
| fin. | 3 | 10123 | 99801 | 103792 | SLU 78 | 1.04 | Si |

## Verifiche a taglio delle travi in muratura secondo §C8.7.1.3.1 in combinazioni non sismiche

| Sezione | γM | N | M | V | Vt | Vp | Vt fess. diag. | Vt,lim | Comb. | c.s. | Verifica |
|---|---|---|---|---|---|---|---|---|---|---|---|
| ini. | 3 | 0 | -4341 | 1583 | | | 873 | 329 | SLU 52 | 0.21 | No |
| fin. | 3 | 0 | 96617 | 870 | | | 873 | 329 | SLU 52 | 0.38 | No |
| ini. | 3 | 0 | -6401 | 1553 | | | 873 | 329 | SLU 34 | 0.21 | No |
| fin. | 3 | 0 | 93925 | 902 | | | 873 | 329 | SLU 34 | 0.36 | No |
| ini. | 3 | 0 | -4825 | 1586 | | | 873 | 329 | SLU 65 | 0.21 | No |
| fin. | 3 | 0 | 96846 | 882 | | | 873 | 329 | SLU 65 | 0.37 | No |
| ini. | 3 | 0 | -8135 | 1731 | | | 873 | 329 | SLU 76 | 0.19 | No |
| fin. | 3 | 0 | 106761 | 1083 | | | 873 | 329 | SLU 76 | 0.3 | No |
| ini. | 3 | 0 | -12707 | 1542 | | | 873 | 329 | SLU 78 | 0.21 | No |
| fin. | 3 | 0 | 99801 | 1246 | | | 873 | 329 | SLU 78 | 0.26 | No |
| ini. | 3 | 0 | -12782 | 1547 | | | 873 | 329 | SLU 82 | 0.21 | No |
| fin. | 3 | 0 | 99420 | 1233 | | | 873 | 329 | SLU 82 | 0.27 | No |
| ini. | 3 | 0 | -4823 | 1604 | | | 873 | 329 | SLU 55 | 0.2 | No |
| fin. | 3 | 0 | 98278 | 905 | | | 873 | 329 | SLU 55 | 0.36 | No |
| ini. | 3 | 0 | -7654 | 1710 | | | 873 | 329 | SLU 73 | 0.19 | No |
| fin. | 3 | 0 | 105100 | 1048 | | | 873 | 329 | SLU 73 | 0.31 | No |
| ini. | 3 | 0 | -5307 | 1607 | | | 873 | 329 | SLU 68 | 0.2 | No |
| fin. | 3 | 0 | 98506 | 917 | | | 873 | 329 | SLU 68 | 0.36 | No |
| ini. | 3 | 0 | -13263 | 1568 | | | 873 | 329 | SLU 84 | 0.21 | No |
| fin. | 3 | 0 | 101080 | 1268 | | | 873 | 329 | SLU 84 | 0.26 | No |

## Verifiche a pressoflessione delle travi in muratura in combinazioni sismiche

| Sezione | γM | N | M | Mu | Comb. | c.s. | Verifica |
|---|---|---|---|---|---|---|---|
| ini. | 2 | -1265 | 183740 | 121694 | SLV 4 | 0.66 | No |
| fin. | 2 | -425 | -179482 | 121694 | SLV 4 | 0.68 | No |
| ini. | 2 | -1265 | 183740 | 121694 | SLV 3 | 0.66 | No |
| fin. | 2 | -425 | -179482 | 121694 | SLV 3 | 0.68 | No |
| ini. | 2 | 2013 | -245812 | 121694 | SLV 16 | 0.5 | No |
| fin. | 2 | 131 | 265378 | 121694 | SLV 16 | 0.46 | No |
| ini. | 2 | 22494 | -10040 | 121694 | SLV 10 | 12.12 | Si |
| fin. | 2 | 22891 | 171712 | 121694 | SLV 10 | 0.71 | No |
| ini. | 2 | 11995 | -206383 | 121694 | SLV 13 | 0.59 | No |
| fin. | 2 | 10726 | 294009 | 121694 | SLV 13 | 0.41 | No |
| ini. | 2 | 8717 | 223169 | 121694 | SLV 1 | 0.55 | No |
| fin. | 2 | 10169 | -150851 | 121694 | SLV 1 | 0.81 | No |
| ini. | 2 | 11995 | -206383 | 121694 | SLV 14 | 0.59 | No |
| fin. | 2 | 10726 | 294009 | 121694 | SLV 14 | 0.41 | No |
| ini. | 2 | 2013 | -245812 | 121694 | SLV 15 | 0.5 | No |
| fin. | 2 | 131 | 265378 | 121694 | SLV 15 | 0.46 | No |
| ini. | 2 | 22494 | -10040 | 121694 | SLV 9 | 12.12 | Si |
| fin. | 2 | 22891 | 171712 | 121694 | SLV 9 | 0.71 | No |
| ini. | 2 | 8717 | 223169 | 121694 | SLV 2 | 0.55 | No |
| fin. | 2 | 10169 | -150851 | 121694 | SLV 2 | 0.81 | No |

## Verifiche a taglio delle travi in muratura secondo §C8.7.1.3.1 in combinazioni sismiche

| Sezione | γM | N | M | V | Vt | Vp | Vt fess. diag. | Vt,lim | Comb. | c.s. | Verifica |
|---|---|---|---|---|---|---|---|---|---|---|---|
| ini. | 2 | 0 | -206383 | 6779 | | | 1310 | 493 | SLV 14 | 0.07 | No |
| fin. | 2 | 0 | 294009 | 6210 | | | 1310 | 493 | SLV 14 | 0.08 | No |
| ini. | 2 | 0 | 183740 | -5155 | | | 1310 | 493 | SLV 3 | 0.1 | No |
| fin. | 2 | 0 | -179482 | -4399 | | | 1310 | 493 | SLV 3 | 0.11 | No |
| ini. | 2 | 0 | 223169 | -3759 | | | 1310 | 493 | SLV 1 | 0.13 | No |
| fin. | 2 | 0 | -150851 | -4667 | | | 1310 | 493 | SLV 1 | 0.11 | No |
| ini. | 2 | 0 | -206383 | 6779 | | | 1310 | 493 | SLV 13 | 0.07 | No |

| Sezione | γM | N | M | V | Vt | Vp | Vt fess. diag. | Vt,lim | Comb. | c.s. | Verifica |
|---|---|---|---|---|---|---|---|---|---|---|---|
| fin. | 2 | 0 | 294009 | 6210 | | | 1310 | 493 | SLV 13 | 0.08 | No |
| ini. | 2 | 0 | 223169 | -3759 | | | 1310 | 493 | SLV 2 | 0.13 | No |
| fin. | 2 | 0 | -150851 | -4667 | | | 1310 | 493 | SLV 2 | 0.11 | No |
| ini. | 2 | 0 | -245812 | 5383 | | | 1310 | 493 | SLV 15 | 0.09 | No |
| fin. | 2 | 0 | 265378 | 6479 | | | 1310 | 493 | SLV 15 | 0.08 | No |
| ini. | 2 | 0 | -10040 | 4720 | | | 1310 | 493 | SLV 10 | 0.1 | No |
| fin. | 2 | 0 | 171712 | 2091 | | | 1310 | 493 | SLV 10 | 0.24 | No |
| ini. | 2 | 0 | -10040 | 4720 | | | 1310 | 493 | SLV 9 | 0.1 | No |
| fin. | 2 | 0 | 171712 | 2091 | | | 1310 | 493 | SLV 9 | 0.24 | No |
| ini. | 2 | 0 | -245812 | 5383 | | | 1310 | 493 | SLV 16 | 0.09 | No |
| fin. | 2 | 0 | 265378 | 6479 | | | 1310 | 493 | SLV 16 | 0.08 | No |
| ini. | 2 | 0 | 183740 | -5155 | | | 1310 | 493 | SLV 4 | 0.1 | No |
| fin. | 2 | 0 | -179482 | -4399 | | | 1310 | 493 | SLV 4 | 0.11 | No |

### Tabella dei coefficienti di sicurezza minimi

| Stato limite | Coeff.s. | Comb. | Verifica |
|---|---|---|---|
| PF_SLV | 0.414 | SLV 13 | No |
| V_SLV | 0.073 | SLV 13 | No |
| PF_SLU | 0.972 | SLU 76 | No |
| V_SLU | 0.19 | SLU 76 | No |

## Trave di accoppiamento 65

Verifiche condotte secondo D.M. 17-01-18 (N.T.C.)

### Dati geometrici

| X ini. | Y ini. | Z ini.inf. | Z ini.sup. | H ini. | X fin. | Y fin. | Z fin.inf. | Z fin.sup | H fin. | Luce | Spessore | R. Trazione |
|---|---|---|---|---|---|---|---|---|---|---|---|---|
| -223.3 | -335.9 | 451 | 544 | 93 | -323.3 | -335.9 | 451 | 544 | 93 | 100 | 28 | 3500 |

### Caratteristiche del materiale

(Circolare 7 21-01-19 C8.5.I) Muratura in mattoni pieni e malta di calce LC2_Corti

| fb_ | fhk | fvk0 | fhmedio | τ0 | fv0 | μ | ϕ | fvk,lim | E | G | FC |
|---|---|---|---|---|---|---|---|---|---|---|---|
| 12 | | | 17.25 | 0.9 | 2 | 0.577 | 0.767 | 0.65 | 32000 | 12800 | 1.2 |

### Verifiche a pressoflessione delle travi in muratura in combinazioni non sismiche

| Sezione | γM | N | M | Mu | Comb. | c.s. | Verifica |
|---|---|---|---|---|---|---|---|
| ini. | 3 | -2512 | -73202 | 109042 | SLU 80 | 1.49 | Si |
| fin. | 3 | -784 | 24322 | 109042 | SLU 80 | 4.48 | Si |
| ini. | 3 | -2530 | -74014 | 109042 | SLU 73 | 1.47 | Si |
| fin. | 3 | -687 | 29644 | 109042 | SLU 73 | 3.68 | Si |
| ini. | 3 | -2490 | -73565 | 109042 | SLU 82 | 1.48 | Si |
| fin. | 3 | -743 | 24605 | 109042 | SLU 82 | 4.43 | Si |
| ini. | 3 | -2525 | -73891 | 109042 | SLU 78 | 1.48 | Si |
| fin. | 3 | -776 | 24572 | 109042 | SLU 78 | 4.44 | Si |
| ini. | 3 | -2335 | -69152 | 109042 | SLU 77 | 1.58 | Si |
| fin. | 3 | -808 | 16332 | 109042 | SLU 77 | 6.68 | Si |
| ini. | 3 | -2584 | -75188 | 109042 | SLU 76 | 1.45 | Si |
| fin. | 3 | -725 | 29730 | 109042 | SLU 76 | 3.67 | Si |
| ini. | 3 | -2471 | -72717 | 109042 | SLU 75 | 1.5 | Si |
| fin. | 3 | -738 | 24487 | 109042 | SLU 75 | 4.45 | Si |
| ini. | 3 | -2544 | -74739 | 109042 | SLU 84 | 1.46 | Si |
| fin. | 3 | -781 | 24691 | 109042 | SLU 84 | 4.42 | Si |
| ini. | 3 | -2382 | -68863 | 109042 | SLU 68 | 1.58 | Si |
| fin. | 3 | -644 | 28668 | 109042 | SLU 68 | 3.8 | Si |
| ini. | 3 | -2354 | -70000 | 109042 | SLU 83 | 1.56 | Si |
| fin. | 3 | -813 | 16451 | 109042 | SLU 83 | 6.63 | Si |

### Verifiche a taglio delle travi in muratura secondo §C8.7.1.3.1 in combinazioni non sismiche

| Sezione | γM | N | M | V | Vt | Vp | Vt fess. diag. | Vt,lim | Comb. | c.s. | Verifica |
|---|---|---|---|---|---|---|---|---|---|---|---|
| ini. | 3 | 0 | -73565 | 3671 | | | 933 | 351 | SLU 82 | 0.1 | No |
| fin. | 3 | 0 | 24605 | -435 | | | 933 | 351 | SLU 82 | 0.81 | No |
| ini. | 3 | 0 | -68826 | 3530 | | | 933 | 351 | SLU 81 | 0.1 | No |
| fin. | 3 | 0 | 16365 | -793 | | | 933 | 351 | SLU 81 | 0.44 | No |
| ini. | 3 | 0 | -73202 | 3618 | | | 933 | 351 | SLU 80 | 0.1 | No |
| fin. | 3 | 0 | 24322 | -398 | | | 933 | 351 | SLU 80 | 0.88 | No |
| ini. | 3 | 0 | -73891 | 3652 | | | 933 | 351 | SLU 78 | 0.1 | No |
| fin. | 3 | 0 | 24572 | -397 | | | 933 | 351 | SLU 78 | 0.88 | No |
| ini. | 3 | 0 | -74739 | 3718 | | | 933 | 351 | SLU 84 | 0.09 | No |
| fin. | 3 | 0 | 24691 | -445 | | | 933 | 351 | SLU 84 | 0.79 | No |
| ini. | 3 | 0 | -72717 | 3604 | | | 933 | 351 | SLU 75 | 0.1 | No |
| fin. | 3 | 0 | 24487 | -387 | | | 933 | 351 | SLU 75 | 0.91 | No |
| ini. | 3 | 0 | -74014 | 3617 | | | 933 | 351 | SLU 73 | 0.1 | No |
| fin. | 3 | 0 | 29644 | -138 | | | 933 | 351 | SLU 73 | 2.54 | Si |
| ini. | 3 | 0 | -75188 | 3664 | | | 933 | 351 | SLU 76 | 0.1 | No |
| fin. | 3 | 0 | 29730 | -149 | | | 933 | 351 | SLU 76 | 2.36 | Si |
| ini. | 3 | 0 | -69152 | 3511 | | | 933 | 351 | SLU 77 | 0.1 | No |
| fin. | 3 | 0 | 16332 | -755 | | | 933 | 351 | SLU 77 | 0.46 | No |
| ini. | 3 | 0 | -70000 | 3577 | | | 933 | 351 | SLU 83 | 0.1 | No |
| fin. | 3 | 0 | 16451 | -803 | | | 933 | 351 | SLU 83 | 0.44 | No |

### Verifiche a pressoflessione delle travi in muratura in combinazioni sismiche

| Sezione | γM | N | M | Mu | Comb. | c.s. | Verifica |
|---|---|---|---|---|---|---|---|
| ini. | 2 | 1652 | 141852 | 126944 | SLV 2 | 0.89 | No |
| fin. | 2 | -2901 | -124916 | 126944 | SLV 2 | 1.02 | Si |

| Sezione | γM | N | M | Mu | Comb. | c.s. | Verifica |
|---|---|---|---|---|---|---|---|
| ini. | 2 | -5899 | -256594 | 126944 | SLV 14 | 0.49 | No |
| fin. | 2 | 1440 | 187210 | 126944 | SLV 14 | 0.68 | No |
| ini. | 2 | -5899 | -256594 | 126944 | SLV 13 | 0.49 | No |
| fin. | 2 | 1440 | 187210 | 126944 | SLV 13 | 0.68 | No |
| ini. | 2 | -4571 | -143388 | 126944 | SLV 9 | 0.89 | No |
| fin. | 2 | -553 | 124509 | 126944 | SLV 9 | 1.02 | Si |
| ini. | 2 | -4772 | -234094 | 126944 | SLV 16 | 0.54 | No |
| fin. | 2 | 1847 | 147317 | 126944 | SLV 16 | 0.86 | No |
| ini. | 2 | 1652 | 141852 | 126944 | SLV 1 | 0.89 | No |
| fin. | 2 | -2901 | -124916 | 126944 | SLV 1 | 1.02 | Si |
| ini. | 2 | -4571 | -143388 | 126944 | SLV 10 | 0.89 | No |
| fin. | 2 | -553 | 124509 | 126944 | SLV 10 | 1.02 | Si |
| ini. | 2 | 2778 | 164353 | 126944 | SLV 4 | 0.77 | No |
| fin. | 2 | -2494 | -164810 | 126944 | SLV 4 | 0.77 | No |
| ini. | 2 | 2778 | 164353 | 126944 | SLV 3 | 0.77 | No |
| fin. | 2 | -2494 | -164810 | 126944 | SLV 3 | 0.77 | No |
| ini. | 2 | -4772 | -234094 | 126944 | SLV 15 | 0.54 | No |
| fin. | 2 | 1847 | 147317 | 126944 | SLV 15 | 0.86 | No |

### Verifiche a taglio delle travi in muratura secondo §C8.7.1.3.1 in combinazioni sismiche

| Sezione | γM | N | M | V | Vt | Vp | Vt fess. diag. | Vt,lim | Comb. | c.s. | Verifica |
|---|---|---|---|---|---|---|---|---|---|---|---|
| ini. | 2 | 0 | -234094 | 8680 | | | 1399 | 526 | SLV 15 | 0.06 | No |
| fin. | 2 | 0 | 147317 | 4914 | | | 1399 | 526 | SLV 15 | 0.11 | No |
| ini. | 2 | 0 | -143388 | 5411 | | | 1399 | 526 | SLV 9 | 0.1 | No |
| fin. | 2 | 0 | 124509 | 3882 | | | 1399 | 526 | SLV 9 | 0.14 | No |
| ini. | 2 | 0 | -256594 | 9320 | | | 1399 | 526 | SLV 13 | 0.06 | No |
| fin. | 2 | 0 | 187210 | 6427 | | | 1399 | 526 | SLV 13 | 0.08 | No |
| ini. | 2 | 0 | 164353 | -4620 | | | 1399 | 526 | SLV 3 | 0.11 | No |
| fin. | 2 | 0 | -164810 | -7400 | | | 1399 | 526 | SLV 3 | 0.07 | No |
| ini. | 2 | 0 | 164353 | -4620 | | | 1399 | 526 | SLV 4 | 0.11 | No |
| fin. | 2 | 0 | -164810 | -7400 | | | 1399 | 526 | SLV 4 | 0.07 | No |
| ini. | 2 | 0 | -256594 | 9320 | | | 1399 | 526 | SLV 14 | 0.06 | No |
| fin. | 2 | 0 | 187210 | 6427 | | | 1399 | 526 | SLV 14 | 0.08 | No |
| ini. | 2 | 0 | 141852 | -3980 | | | 1399 | 526 | SLV 1 | 0.13 | No |
| fin. | 2 | 0 | -124916 | -5887 | | | 1399 | 526 | SLV 1 | 0.09 | No |
| ini. | 2 | 0 | 141852 | -3980 | | | 1399 | 526 | SLV 2 | 0.13 | No |
| fin. | 2 | 0 | -124916 | -5887 | | | 1399 | 526 | SLV 2 | 0.09 | No |
| ini. | 2 | 0 | -143388 | 5411 | | | 1399 | 526 | SLV 10 | 0.1 | No |
| fin. | 2 | 0 | 124509 | 3882 | | | 1399 | 526 | SLV 10 | 0.14 | No |
| ini. | 2 | 0 | -234094 | 8680 | | | 1399 | 526 | SLV 16 | 0.06 | No |
| fin. | 2 | 0 | 147317 | 4914 | | | 1399 | 526 | SLV 16 | 0.11 | No |

### Tabella dei coefficienti di sicurezza minimi

| Stato limite | Coeff.s. | Comb. | Verifica |
|---|---|---|---|
| PF_SLV | 0.495 | SLV 13 | No |
| V_SLV | 0.056 | SLV 13 | No |
| PF_SLU | 1.45 | SLU 76 | Si |
| V_SLU | 0.094 | SLU 84 | No |

## Trave di accoppiamento 66

Verifiche condotte secondo D.M. 17-01-18 (N.T.C.)

### Dati geometrici

| X ini. | Y ini. | Z ini.inf. | Z ini.sup. | H ini. | X fin. | Y fin. | Z fin.inf. | Z fin.sup | H fin. | Luce | Spessore | R. Trazione |
|---|---|---|---|---|---|---|---|---|---|---|---|---|
| -201.3 | 595.1 | 171 | 261 | 90 | -301.3 | 595.1 | 171 | 261 | 90 | 100 | 28 | 3500 |

### Caratteristiche del materiale

(Circolare 7 21-01-19 C8.5.I) Muratura in mattoni pieni e malta di calce LC2_Corti

| fb_ | fhk | fvk0 | fhmedio | τ0 | fv0 | μ | ϕ | fvk,lim | E | G | FC |
|---|---|---|---|---|---|---|---|---|---|---|---|
| 12 | | | 17.25 | 0.9 | 2 | 0.577 | 0.767 | 0.65 | 32000 | 12800 | 1.2 |

### Verifiche a pressoflessione delle travi in muratura in combinazioni non sismiche

| Sezione | γM | N | M | Mu | Comb. | c.s. | Verifica |
|---|---|---|---|---|---|---|---|
| ini. | 3 | 6905 | 2336 | 103792 | SLU 83 | 44.43 | Si |
| fin. | 3 | 6714 | 106269 | 103792 | SLU 83 | 0.98 | No |
| ini. | 3 | 6456 | -1425 | 103792 | SLU 76 | 72.83 | Si |
| fin. | 3 | 6280 | 102731 | 103792 | SLU 76 | 1.01 | Si |
| ini. | 3 | 6672 | 2987 | 103792 | SLU 74 | 34.75 | Si |
| fin. | 3 | 6487 | 102541 | 103792 | SLU 74 | 1.01 | Si |
| ini. | 3 | 6808 | 1620 | 103792 | SLU 77 | 64.08 | Si |
| fin. | 3 | 6630 | 106998 | 103792 | SLU 77 | 0.97 | No |
| ini. | 3 | 6661 | -1017 | 103792 | SLU 80 | 102.09 | Si |
| fin. | 3 | 6491 | 106844 | 103792 | SLU 80 | 0.97 | No |
| ini. | 3 | 6568 | 324 | 103792 | SLU 75 | 320.45 | Si |
| fin. | 3 | 6385 | 103058 | 103792 | SLU 75 | 1.01 | Si |
| ini. | 3 | 6704 | -1043 | 103792 | SLU 78 | 99.53 | Si |
| fin. | 3 | 6528 | 107515 | 103792 | SLU 78 | 0.97 | No |
| ini. | 3 | 6665 | 1040 | 103792 | SLU 82 | 99.76 | Si |
| fin. | 3 | 6469 | 102329 | 103792 | SLU 82 | 1.01 | Si |
| ini. | 3 | 6801 | -326 | 103792 | SLU 84 | 318.07 | Si |
| fin. | 3 | 6612 | 106786 | 103792 | SLU 84 | 0.97 | No |
| ini. | 3 | 6765 | 1646 | 103792 | SLU 79 | 63.06 | Si |
| fin. | 3 | 6593 | 106327 | 103792 | SLU 79 | 0.98 | No |

Verifiche a taglio delle travi in muratura secondo §C8.7.1.3.1 in combinazioni non sismiche

| Sezione | γM | N | M | V | Vt | Vp | Vt fess. diag. | Vt,lim | Comb. | c.s. | Verifica |
|---|---|---|---|---|---|---|---|---|---|---|---|
| ini. | 3 | 0 | -326 | 1194 | | | 873 | 329 | SLU 84 | 0.28 | No |
| fin. | 3 | 0 | 106786 | 1555 | | | 873 | 329 | SLU 84 | 0.21 | No |
| ini. | 3 | 0 | -1425 | 1170 | | | 873 | 329 | SLU 76 | 0.28 | No |
| fin. | 3 | 0 | 102731 | 1498 | | | 873 | 329 | SLU 76 | 0.22 | No |
| ini. | 3 | 0 | 1040 | 1144 | | | 873 | 329 | SLU 82 | 0.29 | No |
| fin. | 3 | 0 | 102329 | 1472 | | | 873 | 329 | SLU 82 | 0.22 | No |
| ini. | 3 | 0 | 2987 | 1105 | | | 873 | 329 | SLU 74 | 0.3 | No |
| fin. | 3 | 0 | 102541 | 1465 | | | 873 | 329 | SLU 74 | 0.22 | No |
| ini. | 3 | 0 | 2336 | 1151 | | | 873 | 329 | SLU 83 | 0.29 | No |
| fin. | 3 | 0 | 106269 | 1527 | | | 873 | 329 | SLU 83 | 0.22 | No |
| ini. | 3 | 0 | 1620 | 1155 | | | 873 | 329 | SLU 77 | 0.28 | No |
| fin. | 3 | 0 | 106998 | 1549 | | | 873 | 329 | SLU 77 | 0.21 | No |
| ini. | 3 | 0 | -1043 | 1197 | | | 873 | 329 | SLU 78 | 0.27 | No |
| fin. | 3 | 0 | 107515 | 1577 | | | 873 | 329 | SLU 78 | 0.21 | No |
| ini. | 3 | 0 | -1017 | 1192 | | | 873 | 329 | SLU 80 | 0.28 | No |
| fin. | 3 | 0 | 106844 | 1563 | | | 873 | 329 | SLU 80 | 0.21 | No |
| ini. | 3 | 0 | 324 | 1147 | | | 873 | 329 | SLU 75 | 0.29 | No |
| fin. | 3 | 0 | 103058 | 1493 | | | 873 | 329 | SLU 75 | 0.22 | No |
| ini. | 3 | 0 | 1646 | 1149 | | | 873 | 329 | SLU 79 | 0.29 | No |
| fin. | 3 | 0 | 106327 | 1535 | | | 873 | 329 | SLU 79 | 0.21 | No |

Verifiche a pressoflessione delle travi in muratura in combinazioni sismiche

| Sezione | γM | N | M | Mu | Comb. | c.s. | Verifica |
|---|---|---|---|---|---|---|---|
| ini. | 2 | -1683 | -223595 | 121694 | SLV 14 | 0.54 | No |
| fin. | 2 | -3437 | 224797 | 121694 | SLV 14 | 0.54 | No |
| ini. | 2 | 10295 | -147570 | 121694 | SLV 16 | 0.82 | No |
| fin. | 2 | 9017 | 288908 | 121694 | SLV 16 | 0.42 | No |
| ini. | 2 | 24577 | 188351 | 121694 | SLV 8 | 0.65 | No |
| fin. | 2 | 25663 | 117450 | 121694 | SLV 8 | 1.04 | Si |
| ini. | 2 | 24436 | 74247 | 121694 | SLV 11 | 1.64 | Si |
| fin. | 2 | 24687 | 231106 | 121694 | SLV 11 | 0.53 | No |
| ini. | 2 | 24577 | 188351 | 121694 | SLV 7 | 0.65 | No |
| fin. | 2 | 25663 | 117450 | 121694 | SLV 7 | 1.04 | Si |
| ini. | 2 | 24436 | 74247 | 121694 | SLV 12 | 1.64 | Si |
| fin. | 2 | 24687 | 231106 | 121694 | SLV 12 | 0.53 | No |
| ini. | 2 | -1683 | -223595 | 121694 | SLV 13 | 0.54 | No |
| fin. | 2 | -3437 | 224797 | 121694 | SLV 13 | 0.54 | No |
| ini. | 2 | 10295 | -147570 | 121694 | SLV 15 | 0.82 | No |
| fin. | 2 | 9017 | 288908 | 121694 | SLV 15 | 0.42 | No |
| ini. | 2 | 10767 | 232777 | 121694 | SLV 4 | 0.52 | No |
| fin. | 2 | 12271 | -89944 | 121694 | SLV 4 | 1.35 | Si |
| ini. | 2 | 10767 | 232777 | 121694 | SLV 3 | 0.52 | No |
| fin. | 2 | 12271 | -89944 | 121694 | SLV 3 | 1.35 | Si |

Verifiche a taglio delle travi in muratura secondo §C8.7.1.3.1 in combinazioni sismiche

| Sezione | γM | N | M | V | Vt | Vp | Vt fess. diag. | Vt,lim | Comb. | c.s. | Verifica |
|---|---|---|---|---|---|---|---|---|---|---|---|
| ini. | 2 | 0 | 74247 | 4968 | | | 1310 | 493 | SLV 12 | 0.1 | No |
| fin. | 2 | 0 | 231106 | 2522 | | | 1310 | 493 | SLV 12 | 0.2 | No |
| ini. | 2 | 0 | -223595 | 4361 | | | 1310 | 493 | SLV 13 | 0.11 | No |
| fin. | 2 | 0 | 224797 | 5232 | | | 1310 | 493 | SLV 13 | 0.09 | No |
| ini. | 2 | 0 | 156752 | -4659 | | | 1310 | 493 | SLV 1 | 0.11 | No |
| fin. | 2 | 0 | -154055 | -3560 | | | 1310 | 493 | SLV 1 | 0.14 | No |
| ini. | 2 | 0 | -65065 | -3529 | | | 1310 | 493 | SLV 5 | 0.14 | No |
| fin. | 2 | 0 | -96253 | -681 | | | 1310 | 493 | SLV 5 | 0.72 | No |
| ini. | 2 | 0 | -223595 | 4361 | | | 1310 | 493 | SLV 14 | 0.11 | No |
| fin. | 2 | 0 | 224797 | 5232 | | | 1310 | 493 | SLV 14 | 0.09 | No |
| ini. | 2 | 0 | -147570 | 6099 | | | 1310 | 493 | SLV 15 | 0.08 | No |
| fin. | 2 | 0 | 288908 | 5401 | | | 1310 | 493 | SLV 15 | 0.09 | No |
| ini. | 2 | 0 | 74247 | 4968 | | | 1310 | 493 | SLV 11 | 0.1 | No |
| fin. | 2 | 0 | 231106 | 2522 | | | 1310 | 493 | SLV 11 | 0.2 | No |
| ini. | 2 | 0 | 156752 | -4659 | | | 1310 | 493 | SLV 2 | 0.11 | No |
| fin. | 2 | 0 | -154055 | -3560 | | | 1310 | 493 | SLV 2 | 0.14 | No |
| ini. | 2 | 0 | -147570 | 6099 | | | 1310 | 493 | SLV 16 | 0.08 | No |
| fin. | 2 | 0 | 288908 | 5401 | | | 1310 | 493 | SLV 16 | 0.09 | No |
| ini. | 2 | 0 | -65065 | -3529 | | | 1310 | 493 | SLV 6 | 0.14 | No |
| fin. | 2 | 0 | -96253 | -681 | | | 1310 | 493 | SLV 6 | 0.72 | No |

Tabella dei coefficienti di sicurezza minimi

| Stato limite | Coeff.s. | Comb. | Verifica |
|---|---|---|---|
| PF_SLV | 0.421 | SLV 15 | No |
| V_SLV | 0.081 | SLV 15 | No |
| PF_SLU | 0.965 | SLU 78 | No |
| V_SLU | 0.208 | SLU 78 | No |

## Trave di accoppiamento 67

Verifiche condotte secondo D.M. 17-01-18 (N.T.C.)

Dati geometrici

| X ini. | Y ini. | Z ini.inf. | Z ini.sup. | H ini. | X fin. | Y fin. | Z fin.inf. | Z fin.sup | H fin. | Luce | Spessore | R. Trazione |
|---|---|---|---|---|---|---|---|---|---|---|---|---|
| -201.3 | 595.1 | 451 | 544 | 93 | -301.3 | 595.1 | 451 | 544 | 93 | 100 | 28 | 3500 |

## Caratteristiche del materiale

(Circolare 7 21-01-19 C8.5.I) Muratura in mattoni pieni e malta di calce LC2_Corti

| fb_ | fhk | fvk0 | fhmedio | τ0 | fv0 | μ | ϕ | fvk,lim | E | G | FC |
|---|---|---|---|---|---|---|---|---|---|---|---|
| 12 | | | 17.25 | 0.9 | 2 | 0.577 | 0.767 | 0.65 | 32000 | 12800 | 1.2 |

## Verifiche a pressoflessione delle travi in muratura in combinazioni non sismiche

| Sezione | γM | N | M | Mu | Comb. | c.s. | Verifica |
|---|---|---|---|---|---|---|---|
| ini. | 3 | -2961 | -61152 | 109042 | SLU 77 | 1.78 | Si |
| fin. | 3 | -2472 | -4836 | 109042 | SLU 77 | 22.55 | Si |
| ini. | 3 | -2737 | -60693 | 109042 | SLU 82 | 1.8 | Si |
| fin. | 3 | -2146 | -3013 | 109042 | SLU 82 | 36.19 | Si |
| ini. | 3 | -2902 | -60339 | 109042 | SLU 80 | 1.81 | Si |
| fin. | 3 | -2419 | -3935 | 109042 | SLU 80 | 27.71 | Si |
| ini. | 3 | -2828 | -59898 | 109042 | SLU 74 | 1.82 | Si |
| fin. | 3 | -2304 | -4549 | 109042 | SLU 74 | 23.97 | Si |
| ini. | 3 | -2870 | -61947 | 109042 | SLU 84 | 1.76 | Si |
| fin. | 3 | -2314 | -3301 | 109042 | SLU 84 | 33.04 | Si |
| ini. | 3 | -2780 | -59775 | 109042 | SLU 75 | 1.82 | Si |
| fin. | 3 | -2240 | -3640 | 109042 | SLU 75 | 29.96 | Si |
| ini. | 3 | -2918 | -62070 | 109042 | SLU 83 | 1.76 | Si |
| fin. | 3 | -2378 | -4210 | 109042 | SLU 83 | 25.9 | Si |
| ini. | 3 | -2785 | -60816 | 109042 | SLU 81 | 1.79 | Si |
| fin. | 3 | -2210 | -3922 | 109042 | SLU 81 | 27.8 | Si |
| ini. | 3 | -2950 | -60462 | 109042 | SLU 79 | 1.8 | Si |
| fin. | 3 | -2484 | -4844 | 109042 | SLU 79 | 22.51 | Si |
| ini. | 3 | -2913 | -61029 | 109042 | SLU 78 | 1.79 | Si |
| fin. | 3 | -2408 | -3927 | 109042 | SLU 78 | 27.77 | Si |

## Verifiche a taglio delle travi in muratura secondo §C8.7.1.3.1 in combinazioni non sismiche

| Sezione | γM | N | M | V | Vt | Vp | Vt fess. diag. | Vt,lim | Comb. | c.s. | Verifica |
|---|---|---|---|---|---|---|---|---|---|---|---|
| ini. | 3 | 0 | -61029 | 3331 | | | 933 | 351 | SLU 78 | 0.11 | No |
| fin. | 3 | 0 | -3927 | -3493 | | | 933 | 351 | SLU 78 | 0.1 | No |
| ini. | 3 | 0 | -61947 | 3417 | | | 933 | 351 | SLU 84 | 0.1 | No |
| fin. | 3 | 0 | -3301 | -3538 | | | 933 | 351 | SLU 84 | 0.1 | No |
| ini. | 3 | 0 | -60339 | 3299 | | | 933 | 351 | SLU 80 | 0.11 | No |
| fin. | 3 | 0 | -3935 | -3480 | | | 933 | 351 | SLU 80 | 0.1 | No |
| ini. | 3 | 0 | -59898 | 3293 | | | 933 | 351 | SLU 74 | 0.11 | No |
| fin. | 3 | 0 | -4549 | -3443 | | | 933 | 351 | SLU 74 | 0.1 | No |
| ini. | 3 | 0 | -61152 | 3345 | | | 933 | 351 | SLU 77 | 0.1 | No |
| fin. | 3 | 0 | -4836 | -3555 | | | 933 | 351 | SLU 77 | 0.1 | No |
| ini. | 3 | 0 | -60462 | 3313 | | | 933 | 351 | SLU 79 | 0.11 | No |
| fin. | 3 | 0 | -4844 | -3542 | | | 933 | 351 | SLU 79 | 0.1 | No |
| ini. | 3 | 0 | -60693 | 3365 | | | 933 | 351 | SLU 82 | 0.1 | No |
| fin. | 3 | 0 | -3013 | -3427 | | | 933 | 351 | SLU 82 | 0.1 | No |
| ini. | 3 | 0 | -62070 | 3430 | | | 933 | 351 | SLU 83 | 0.1 | No |
| fin. | 3 | 0 | -4210 | -3601 | | | 933 | 351 | SLU 83 | 0.1 | No |
| ini. | 3 | 0 | -60816 | 3379 | | | 933 | 351 | SLU 81 | 0.1 | No |
| fin. | 3 | 0 | -3922 | -3489 | | | 933 | 351 | SLU 81 | 0.1 | No |
| ini. | 3 | 0 | -59775 | 3279 | | | 933 | 351 | SLU 75 | 0.11 | No |
| fin. | 3 | 0 | -3640 | -3381 | | | 933 | 351 | SLU 75 | 0.1 | No |

## Verifiche a pressoflessione delle travi in muratura in combinazioni sismiche

| Sezione | γM | N | M | Mu | Comb. | c.s. | Verifica |
|---|---|---|---|---|---|---|---|
| ini. | 2 | 1811 | 113604 | 126944 | SLV 1 | 1.12 | Si |
| fin. | 2 | -4022 | -76695 | 126944 | SLV 1 | 1.66 | Si |
| ini. | 2 | -3466 | -105435 | 126944 | SLD 16 | 1.2 | Si |
| fin. | 2 | -463 | 27474 | 126944 | SLD 16 | 4.62 | Si |
| ini. | 2 | -4031 | -171430 | 126944 | SLV 13 | 0.74 | No |
| fin. | 2 | 2011 | 77690 | 126944 | SLV 13 | 1.63 | Si |
| ini. | 2 | -3466 | -105435 | 126944 | SLD 15 | 1.2 | Si |
| fin. | 2 | -463 | 27474 | 126944 | SLD 15 | 4.62 | Si |
| ini. | 2 | -5590 | -193390 | 126944 | SLV 16 | 0.66 | No |
| fin. | 2 | 953 | 69136 | 126944 | SLV 16 | 1.84 | Si |
| ini. | 2 | 1811 | 113604 | 126944 | SLV 2 | 1.12 | Si |
| fin. | 2 | -4022 | -76695 | 126944 | SLV 2 | 1.66 | Si |
| ini. | 2 | -5365 | -119248 | 126944 | SLV 11 | 1.06 | Si |
| fin. | 2 | -2392 | 5122 | 126944 | SLV 11 | 24.79 | Si |
| ini. | 2 | -4031 | -171430 | 126944 | SLV 14 | 0.74 | No |
| fin. | 2 | 2011 | 77690 | 126944 | SLV 14 | 1.63 | Si |
| ini. | 2 | -5590 | -193390 | 126944 | SLV 15 | 0.66 | No |
| fin. | 2 | 953 | 69136 | 126944 | SLV 15 | 1.84 | Si |
| ini. | 2 | -5365 | -119248 | 126944 | SLV 12 | 1.06 | Si |
| fin. | 2 | -2392 | 5122 | 126944 | SLV 12 | 24.79 | Si |

## Verifiche a taglio delle travi in muratura secondo §C8.7.1.3.1 in combinazioni sismiche

| Sezione | γM | N | M | V | Vt | Vp | Vt fess. diag. | Vt,lim | Comb. | c.s. | Verifica |
|---|---|---|---|---|---|---|---|---|---|---|---|
| ini. | 2 | 0 | -33737 | 2209 | | | 1399 | 526 | SLV 8 | 0.24 | No |
| fin. | 2 | 0 | -41194 | -5489 | | | 1399 | 526 | SLV 8 | 0.1 | No |
| ini. | 2 | 0 | -193390 | 7832 | | | 1399 | 526 | SLV 16 | 0.07 | No |
| fin. | 2 | 0 | 69136 | 2182 | | | 1399 | 526 | SLV 16 | 0.24 | No |
| ini. | 2 | 0 | -171430 | 6894 | | | 1399 | 526 | SLV 14 | 0.08 | No |
| fin. | 2 | 0 | 77690 | 3217 | | | 1399 | 526 | SLV 14 | 0.16 | No |
| ini. | 2 | 0 | -33737 | 2209 | | | 1399 | 526 | SLV 7 | 0.24 | No |
| fin. | 2 | 0 | -41194 | -5489 | | | 1399 | 526 | SLV 7 | 0.1 | No |
| ini. | 2 | 0 | 113604 | -3439 | | | 1399 | 526 | SLV 1 | 0.15 | No |
| fin. | 2 | 0 | -76695 | -6728 | | | 1399 | 526 | SLV 1 | 0.08 | No |
| ini. | 2 | 0 | 91644 | -2501 | | | 1399 | 526 | SLV 4 | 0.21 | No |

| Sezione | γM | N | M | V | Vt | Vp | Vt fess. diag. | Vt,lim | Comb. | c.s. | Verifica |
|---|---|---|---|---|---|---|---|---|---|---|---|
| fin. | 2 | 0 | -85249 | -7762 | | | 1399 | 526 | SLV 4 | 0.07 | No |
| ini. | 2 | 0 | -171430 | 6894 | | | 1399 | 526 | SLV 13 | 0.08 | No |
| fin. | 2 | 0 | 77690 | 3217 | | | 1399 | 526 | SLV 13 | 0.16 | No |
| ini. | 2 | 0 | 113604 | -3439 | | | 1399 | 526 | SLV 2 | 0.15 | No |
| fin. | 2 | 0 | -76695 | -6728 | | | 1399 | 526 | SLV 2 | 0.08 | No |
| ini. | 2 | 0 | 91644 | -2501 | | | 1399 | 526 | SLV 3 | 0.21 | No |
| fin. | 2 | 0 | -85249 | -7762 | | | 1399 | 526 | SLV 3 | 0.07 | No |
| ini. | 2 | 0 | -193390 | 7832 | | | 1399 | 526 | SLV 15 | 0.07 | No |
| fin. | 2 | 0 | 69136 | 2182 | | | 1399 | 526 | SLV 15 | 0.24 | No |

### Tabella dei coefficienti di sicurezza minimi

| Stato limite | Coeff.s. | Comb. | Verifica |
|---|---|---|---|
| PF_SLV | 0.656 | SLV 15 | No |
| V_SLV | 0.067 | SLV 15 | No |
| PF_SLU | 1.757 | SLU 83 | Si |
| V_SLU | 0.097 | SLU 83 | No |

## Trave di accoppiamento 68

Verifiche condotte secondo D.M. 17-01-18 (N.T.C.)

### Dati geometrici

| X ini. | Y ini. | Z ini.inf. | Z ini.sup. | H ini. | X fin. | Y fin. | Z fin.inf. | Z fin.sup | H fin. | Luce | Spessore | R. Trazione |
|---|---|---|---|---|---|---|---|---|---|---|---|---|
| -2467.8 | 126.6 | 754 | 896 | 142 | -2467.8 | 206.6 | 754 | 896 | 142 | 80 | 28 | 3500 |

### Caratteristiche del materiale

(Circolare 7 21-01-19 C8.5.I) Muratura in mattoni pieni e malta di calce LC2_Corti

| fb_ | fhk | fvk0 | fhmedio | τ0 | fv0 | μ | ϕ | fvk,lim | E | G | FC |
|---|---|---|---|---|---|---|---|---|---|---|---|
| 12 | | | 17.25 | 0.9 | 2 | 0.577 | 0.767 | 0.65 | 32000 | 12800 | 1.2 |

### Verifiche a pressoflessione delle travi in muratura in combinazioni non sismiche

| Sezione | γM | N | M | Mu | Comb. | c.s. | Verifica |
|---|---|---|---|---|---|---|---|
| ini. | 3 | 1048 | 50925 | 194792 | SLU 39 | 3.83 | Si |
| fin. | 3 | 1048 | -41978 | 194792 | SLU 39 | 4.64 | Si |
| ini. | 3 | 909 | -40269 | 194792 | SLU 51 | 4.84 | Si |
| fin. | 3 | 909 | 49216 | 194792 | SLU 51 | 3.96 | Si |
| ini. | 3 | 1118 | -49097 | 194792 | SLU 47 | 3.97 | Si |
| fin. | 3 | 1118 | 54060 | 194792 | SLU 47 | 3.6 | Si |
| ini. | 3 | 1236 | -45263 | 194792 | SLU 44 | 4.3 | Si |
| fin. | 3 | 1236 | 47344 | 194792 | SLU 44 | 4.11 | Si |
| ini. | 3 | 931 | 47091 | 194792 | SLU 41 | 4.14 | Si |
| fin. | 3 | 931 | -35262 | 194792 | SLU 41 | 5.52 | Si |
| ini. | 3 | 697 | -31942 | 194792 | SLU 9 | 6.1 | Si |
| fin. | 3 | 697 | 40453 | 194792 | SLU 9 | 4.82 | Si |
| ini. | 3 | 894 | 39561 | 194792 | SLU 32 | 4.92 | Si |
| fin. | 3 | 894 | -28282 | 194792 | SLU 32 | 6.89 | Si |
| ini. | 3 | 927 | -36836 | 194792 | SLU 49 | 5.29 | Si |
| fin. | 3 | 927 | 45824 | 194792 | SLU 49 | 4.25 | Si |
| ini. | 3 | 1260 | 42598 | 194792 | SLU 81 | 4.57 | Si |
| fin. | 3 | 1260 | -33214 | 194792 | SLU 81 | 5.86 | Si |
| ini. | 3 | 906 | -40770 | 194792 | SLU 5 | 4.78 | Si |
| fin. | 3 | 906 | 45297 | 194792 | SLU 5 | 4.3 | Si |

### Verifiche a taglio delle travi in muratura secondo §C8.7.1.3.1 in combinazioni non sismiche

| Sezione | γM | N | M | V | Vt | Vp | Vt fess. diag. | Vt,lim | Comb. | c.s. | Verifica |
|---|---|---|---|---|---|---|---|---|---|---|---|
| ini. | 3 | 0 | 38765 | -489 | | | 1531 | 576 | SLU 83 | 1.18 | Si |
| fin. | 3 | 0 | -26499 | -1199 | | | 1531 | 576 | SLU 83 | 0.48 | No |
| ini. | 3 | 0 | -40269 | 1441 | | | 1531 | 576 | SLU 51 | 0.4 | No |
| fin. | 3 | 0 | 49216 | 738 | | | 1531 | 576 | SLU 51 | 0.78 | No |
| ini. | 3 | 0 | -36836 | 1356 | | | 1531 | 576 | SLU 49 | 0.43 | No |
| fin. | 3 | 0 | 45824 | 652 | | | 1531 | 576 | SLU 49 | 0.88 | No |
| ini. | 3 | 0 | 47091 | -775 | | | 1531 | 576 | SLU 41 | 0.74 | No |
| fin. | 3 | 0 | -35262 | -1326 | | | 1531 | 576 | SLU 41 | 0.43 | No |
| ini. | 3 | 0 | 50925 | -907 | | | 1531 | 576 | SLU 39 | 0.64 | No |
| fin. | 3 | 0 | -41978 | -1458 | | | 1531 | 576 | SLU 39 | 0.4 | No |
| ini. | 3 | 0 | 42598 | -620 | | | 1531 | 576 | SLU 81 | 0.93 | No |
| fin. | 3 | 0 | -33214 | -1331 | | | 1531 | 576 | SLU 81 | 0.43 | No |
| ini. | 3 | 0 | -49097 | 1612 | | | 1531 | 576 | SLU 47 | 0.36 | No |
| fin. | 3 | 0 | 54060 | 909 | | | 1531 | 576 | SLU 47 | 0.63 | No |
| ini. | 3 | 0 | -40770 | 1325 | | | 1531 | 576 | SLU 5 | 0.43 | No |
| fin. | 3 | 0 | 45297 | 782 | | | 1531 | 576 | SLU 5 | 0.74 | No |
| ini. | 3 | 0 | -45263 | 1480 | | | 1531 | 576 | SLU 44 | 0.39 | No |
| fin. | 3 | 0 | 47344 | 777 | | | 1531 | 576 | SLU 44 | 0.74 | No |
| ini. | 3 | 0 | -33002 | 1224 | | | 1531 | 576 | SLU 46 | 0.47 | No |
| fin. | 3 | 0 | 39109 | 521 | | | 1531 | 576 | SLU 46 | 1.11 | Si |

### Verifiche a pressoflessione delle travi in muratura in combinazioni sismiche

| Sezione | γM | N | M | Mu | Comb. | c.s. | Verifica |
|---|---|---|---|---|---|---|---|
| ini. | 2 | 1034 | 245052 | 212694 | SLV 7 | 0.87 | No |
| fin. | 2 | 1019 | -239413 | 212694 | SLV 7 | 0.89 | No |
| ini. | 2 | 1613 | 186068 | 212694 | SLV 3 | 1.14 | Si |
| fin. | 2 | 1692 | -183455 | 212694 | SLV 3 | 1.16 | Si |
| ini. | 2 | 665 | -229766 | 212694 | SLV 9 | 0.93 | No |
| fin. | 2 | 680 | 235184 | 212694 | SLV 9 | 0.9 | No |

| Sezione | γM | N | M | Mu | Comb. | c.s. | Verifica |
|---|---|---|---|---|---|---|---|
| ini. | 2 | 665 | -229766 | 212694 | SLV 10 | 0.93 | No |
| fin. | 2 | 680 | 235184 | 212694 | SLV 10 | 0.9 | No |
| ini. | 2 | 85 | -170782 | 212694 | SLV 13 | 1.25 | Si |
| fin. | 2 | 7 | 179226 | 212694 | SLV 13 | 1.19 | Si |
| ini. | 2 | 1613 | 186068 | 212694 | SLV 4 | 1.14 | Si |
| fin. | 2 | 1692 | -183455 | 212694 | SLV 4 | 1.16 | Si |
| ini. | 2 | 566 | 174370 | 212694 | SLV 12 | 1.22 | Si |
| fin. | 2 | 497 | -166786 | 212694 | SLV 12 | 1.28 | Si |
| ini. | 2 | 566 | 174370 | 212694 | SLV 11 | 1.22 | Si |
| fin. | 2 | 497 | -166786 | 212694 | SLV 11 | 1.28 | Si |
| ini. | 2 | 85 | -170782 | 212694 | SLV 14 | 1.25 | Si |
| fin. | 2 | 7 | 179226 | 212694 | SLV 14 | 1.19 | Si |
| ini. | 2 | 1034 | 245052 | 212694 | SLV 8 | 0.87 | No |
| fin. | 2 | 1019 | -239413 | 212694 | SLV 8 | 0.89 | No |

### Verifiche a taglio delle travi in muratura secondo §C8.7.1.3.1 in combinazioni sismiche

| Sezione | γM | N | M | V | Vt | Vp | Vt fess. diag. | Vt,lim | Comb. | c.s. | Verifica |
|---|---|---|---|---|---|---|---|---|---|---|---|
| ini. | 2 | 0 | -229766 | 6087 | | | 2297 | 864 | SLV 10 | 0.14 | No |
| fin. | 2 | 0 | 235184 | 5505 | | | 2297 | 864 | SLV 10 | 0.16 | No |
| ini. | 2 | 0 | -170782 | 4660 | | | 2297 | 864 | SLV 13 | 0.19 | No |
| fin. | 2 | 0 | 179226 | 3940 | | | 2297 | 864 | SLV 13 | 0.22 | No |
| ini. | 2 | 0 | 186068 | -4402 | | | 2297 | 864 | SLV 4 | 0.2 | No |
| fin. | 2 | 0 | -183455 | -4773 | | | 2297 | 864 | SLV 4 | 0.18 | No |
| ini. | 2 | 0 | 186068 | -4402 | | | 2297 | 864 | SLV 3 | 0.2 | No |
| fin. | 2 | 0 | -183455 | -4773 | | | 2297 | 864 | SLV 3 | 0.18 | No |
| ini. | 2 | 0 | 174370 | -4021 | | | 2297 | 864 | SLV 11 | 0.21 | No |
| fin. | 2 | 0 | -166786 | -4636 | | | 2297 | 864 | SLV 11 | 0.19 | No |
| ini. | 2 | 0 | 174370 | -4021 | | | 2297 | 864 | SLV 12 | 0.21 | No |
| fin. | 2 | 0 | -166786 | -4636 | | | 2297 | 864 | SLV 12 | 0.19 | No |
| ini. | 2 | 0 | -229766 | 6087 | | | 2297 | 864 | SLV 9 | 0.14 | No |
| fin. | 2 | 0 | 235184 | 5505 | | | 2297 | 864 | SLV 9 | 0.16 | No |
| ini. | 2 | 0 | 245052 | -5830 | | | 2297 | 864 | SLV 7 | 0.15 | No |
| fin. | 2 | 0 | -239413 | -6337 | | | 2297 | 864 | SLV 7 | 0.14 | No |
| ini. | 2 | 0 | 245052 | -5830 | | | 2297 | 864 | SLV 8 | 0.15 | No |
| fin. | 2 | 0 | -239413 | -6337 | | | 2297 | 864 | SLV 8 | 0.14 | No |
| ini. | 2 | 0 | -170782 | 4660 | | | 2297 | 864 | SLV 14 | 0.19 | No |
| fin. | 2 | 0 | 179226 | 3940 | | | 2297 | 864 | SLV 14 | 0.22 | No |

### Tabella dei coefficienti di sicurezza minimi

| Stato limite | Coeff.s. | Comb. | Verifica |
|---|---|---|---|
| PF_SLV | 0.868 | SLV 7 | No |
| V_SLV | 0.136 | SLV 7 | No |
| PF_SLU | 3.603 | SLU 47 | Si |
| V_SLU | 0.357 | SLU 47 | No |

## Trave di accoppiamento 69

Verifiche condotte secondo D.M. 17-01-18 (N.T.C.)

### Dati geometrici

| X ini. | Y ini. | Z ini.inf. | Z ini.sup. | H ini. | X fin. | Y fin. | Z fin.inf. | Z fin.sup | H fin. | Luce | Spessore | R. Trazione |
|---|---|---|---|---|---|---|---|---|---|---|---|---|
| -2181.3 | 595.1 | 544 | 634 | 90 | -2271.3 | 595.1 | 544 | 634 | 90 | 90 | 28 | 3500 |

### Caratteristiche del materiale

(Circolare 7 21-01-19 C8.5.I) Muratura in mattoni pieni e malta di calce LC2_Corti

| fb_ | fhk | fvk0 | fhmedio | τ0 | fv0 | μ | ϕ | fvk,lim | E | G | FC |
|---|---|---|---|---|---|---|---|---|---|---|---|
| 12 | | | 17.25 | 0.9 | 2 | 0.577 | 0.767 | 0.65 | 32000 | 12800 | 1.2 |

### Verifiche a pressoflessione delle travi in muratura in combinazioni non sismiche

| Sezione | γM | N | M | Mu | Comb. | c.s. | Verifica |
|---|---|---|---|---|---|---|---|
| ini. | 3 | -1892 | 17550 | 103792 | SLU 79 | 5.91 | Si |
| fin. | 3 | -1407 | 13284 | 103792 | SLU 79 | 7.81 | Si |
| ini. | 3 | -1473 | 17140 | 103792 | SLU 82 | 6.06 | Si |
| fin. | 3 | -932 | 5571 | 103792 | SLU 82 | 18.63 | Si |
| ini. | 3 | -1839 | 17891 | 103792 | SLU 78 | 5.8 | Si |
| fin. | 3 | -1330 | 12048 | 103792 | SLU 78 | 8.61 | Si |
| ini. | 3 | -1707 | 17684 | 103792 | SLU 83 | 5.87 | Si |
| fin. | 3 | -1184 | 9448 | 103792 | SLU 83 | 10.99 | Si |
| ini. | 3 | -1656 | 16951 | 103792 | SLU 74 | 6.12 | Si |
| fin. | 3 | -1159 | 9333 | 103792 | SLU 74 | 11.12 | Si |
| ini. | 3 | -1866 | 17748 | 103792 | SLU 80 | 5.85 | Si |
| fin. | 3 | -1366 | 12703 | 103792 | SLU 80 | 8.17 | Si |
| ini. | 3 | -1682 | 17882 | 103792 | SLU 84 | 5.8 | Si |
| fin. | 3 | -1144 | 8867 | 103792 | SLU 84 | 11.71 | Si |
| ini. | 3 | -1641 | 17138 | 103792 | SLU 76 | 6.06 | Si |
| fin. | 3 | -1127 | 9021 | 103792 | SLU 76 | 11.51 | Si |
| ini. | 3 | -1631 | 17150 | 103792 | SLU 75 | 6.05 | Si |
| fin. | 3 | -1118 | 8753 | 103792 | SLU 75 | 11.86 | Si |
| ini. | 3 | -1865 | 17693 | 103792 | SLU 77 | 5.87 | Si |
| fin. | 3 | -1371 | 12629 | 103792 | SLU 77 | 8.22 | Si |

### Verifiche a taglio delle travi in muratura secondo §C8.7.1.3.1 in combinazioni non sismiche

| Sezione | γM | N | M | V | Vt | Vp | Vt fess. diag. | Vt,lim | Comb. | c.s. | Verifica |
|---|---|---|---|---|---|---|---|---|---|---|---|
| ini. | 3 | 0 | 17138 | -1084 | | | 970 | 365 | SLU 76 | 0.34 | No |

| Sezione | γM | N | M | V | Vt | Vp | Vt fess. diag. | Vt,lim | Comb. | c.s. | Verifica |
|---|---|---|---|---|---|---|---|---|---|---|---|
| fin. | 3 | 0 | 9021 | 755 | | | 970 | 365 | SLU 76 | 0.48 | No |
| ini. | 3 | 0 | 17684 | -1135 | | | 970 | 365 | SLU 83 | 0.32 | No |
| fin. | 3 | 0 | 9448 | 814 | | | 970 | 365 | SLU 83 | 0.45 | No |
| ini. | 3 | 0 | 17140 | -1141 | | | 970 | 365 | SLU 82 | 0.32 | No |
| fin. | 3 | 0 | 5571 | 704 | | | 970 | 365 | SLU 82 | 0.52 | No |
| ini. | 3 | 0 | 17150 | -1112 | | | 970 | 365 | SLU 75 | 0.33 | No |
| fin. | 3 | 0 | 8753 | 787 | | | 970 | 365 | SLU 75 | 0.46 | No |
| ini. | 3 | 0 | 17693 | -1106 | | | 970 | 365 | SLU 77 | 0.33 | No |
| fin. | 3 | 0 | 12629 | 896 | | | 970 | 365 | SLU 77 | 0.41 | No |
| ini. | 3 | 0 | 17882 | -1134 | | | 970 | 365 | SLU 84 | 0.32 | No |
| fin. | 3 | 0 | 8867 | 771 | | | 970 | 365 | SLU 84 | 0.47 | No |
| ini. | 3 | 0 | 16396 | -1091 | | | 970 | 365 | SLU 73 | 0.33 | No |
| fin. | 3 | 0 | 5725 | 688 | | | 970 | 365 | SLU 73 | 0.53 | No |
| ini. | 3 | 0 | 16951 | -1113 | | | 970 | 365 | SLU 74 | 0.33 | No |
| fin. | 3 | 0 | 9333 | 829 | | | 970 | 365 | SLU 74 | 0.44 | No |
| ini. | 3 | 0 | 16942 | -1142 | | | 970 | 365 | SLU 81 | 0.32 | No |
| fin. | 3 | 0 | 6152 | 747 | | | 970 | 365 | SLU 81 | 0.49 | No |
| ini. | 3 | 0 | 17891 | -1105 | | | 970 | 365 | SLU 78 | 0.33 | No |
| fin. | 3 | 0 | 12048 | 854 | | | 970 | 365 | SLU 78 | 0.43 | No |

### Verifiche a pressoflessione delle travi in muratura in combinazioni sismiche

| Sezione | γM | N | M | Mu | Comb. | c.s. | Verifica |
|---|---|---|---|---|---|---|---|
| ini. | 2 | -3449 | 110133 | 121694 | SLV 7 | 1.1 | Si |
| fin. | 2 | -661 | -39286 | 121694 | SLV 7 | 3.1 | Si |
| ini. | 2 | -2409 | 121195 | 121694 | SLV 2 | 1 | Si |
| fin. | 2 | 1544 | -87431 | 121694 | SLV 2 | 1.39 | Si |
| ini. | 2 | -3449 | 110133 | 121694 | SLV 8 | 1.1 | Si |
| fin. | 2 | -661 | -39286 | 121694 | SLV 8 | 3.1 | Si |
| ini. | 2 | -3497 | 157611 | 121694 | SLV 3 | 0.77 | No |
| fin. | 2 | 1213 | -96793 | 121694 | SLV 3 | 1.26 | Si |
| ini. | 2 | -2409 | 121195 | 121694 | SLV 1 | 1 | Si |
| fin. | 2 | 1544 | -87431 | 121694 | SLV 1 | 1.39 | Si |
| ini. | 2 | 266 | -99426 | 121694 | SLV 15 | 1.22 | Si |
| fin. | 2 | -3042 | 98721 | 121694 | SLV 15 | 1.23 | Si |
| ini. | 2 | -3497 | 157611 | 121694 | SLV 4 | 0.77 | No |
| fin. | 2 | 1213 | -96793 | 121694 | SLV 4 | 1.26 | Si |
| ini. | 2 | 266 | -99426 | 121694 | SLV 16 | 1.22 | Si |
| fin. | 2 | -3042 | 98721 | 121694 | SLV 16 | 1.23 | Si |
| ini. | 2 | 1354 | -135842 | 121694 | SLV 14 | 0.9 | No |
| fin. | 2 | -2712 | 108083 | 121694 | SLV 14 | 1.13 | Si |
| ini. | 2 | 1354 | -135842 | 121694 | SLV 13 | 0.9 | No |
| fin. | 2 | -2712 | 108083 | 121694 | SLV 13 | 1.13 | Si |

### Verifiche a taglio delle travi in muratura secondo §C8.7.1.3.1 in combinazioni sismiche

| Sezione | γM | N | M | V | Vt | Vp | Vt fess. diag. | Vt,lim | Comb. | c.s. | Verifica |
|---|---|---|---|---|---|---|---|---|---|---|---|
| ini. | 2 | 0 | 121195 | -5070 | | | 1456 | 548 | SLV 1 | 0.11 | No |
| fin. | 2 | 0 | -87431 | -3986 | | | 1456 | 548 | SLV 1 | 0.14 | No |
| ini. | 2 | 0 | 157611 | -5751 | | | 1456 | 548 | SLV 3 | 0.1 | No |
| fin. | 2 | 0 | -96793 | -3655 | | | 1456 | 548 | SLV 3 | 0.15 | No |
| ini. | 2 | 0 | 121195 | -5070 | | | 1456 | 548 | SLV 2 | 0.11 | No |
| fin. | 2 | 0 | -87431 | -3986 | | | 1456 | 548 | SLV 2 | 0.14 | No |
| ini. | 2 | 0 | -135842 | 4227 | | | 1456 | 548 | SLV 14 | 0.13 | No |
| fin. | 2 | 0 | 108083 | 4839 | | | 1456 | 548 | SLV 14 | 0.11 | No |
| ini. | 2 | 0 | 157611 | -5751 | | | 1456 | 548 | SLV 4 | 0.1 | No |
| fin. | 2 | 0 | -96793 | -3655 | | | 1456 | 548 | SLV 4 | 0.15 | No |
| ini. | 2 | 0 | 110133 | -3291 | | | 1456 | 548 | SLV 8 | 0.17 | No |
| fin. | 2 | 0 | -39286 | -181 | | | 1456 | 548 | SLV 8 | 3.03 | Si |
| ini. | 2 | 0 | 110133 | -3291 | | | 1456 | 548 | SLV 7 | 0.17 | No |
| fin. | 2 | 0 | -39286 | -181 | | | 1456 | 548 | SLV 7 | 3.03 | Si |
| ini. | 2 | 0 | -99426 | 3546 | | | 1456 | 548 | SLV 15 | 0.15 | No |
| fin. | 2 | 0 | 98721 | 5169 | | | 1456 | 548 | SLV 15 | 0.11 | No |
| ini. | 2 | 0 | -135842 | 4227 | | | 1456 | 548 | SLV 13 | 0.13 | No |
| fin. | 2 | 0 | 108083 | 4839 | | | 1456 | 548 | SLV 13 | 0.11 | No |
| ini. | 2 | 0 | -99426 | 3546 | | | 1456 | 548 | SLV 16 | 0.15 | No |
| fin. | 2 | 0 | 98721 | 5169 | | | 1456 | 548 | SLV 16 | 0.11 | No |

### Tabella dei coefficienti di sicurezza minimi

| Stato limite | Coeff.s. | Comb. | Verifica |
|---|---|---|---|
| PF_SLV | 0.772 | SLV 3 | No |
| V_SLV | 0.095 | SLV 3 | No |
| PF_SLU | 5.801 | SLU 78 | Si |
| V_SLU | 0.32 | SLU 81 | No |

## Trave di accoppiamento 70

Verifiche condotte secondo D.M. 17-01-18 (N.T.C.)

### Dati geometrici

| X ini. | Y ini. | Z ini.inf. | Z ini.sup. | H ini. | X fin. | Y fin. | Z fin.inf. | Z fin.sup | H fin. | Luce | Spessore | R. Trazione |
|---|---|---|---|---|---|---|---|---|---|---|---|---|
| -2181.3 | 595.1 | 814 | 896 | 82 | -2271.3 | 595.1 | 814 | 896 | 82 | 90 | 28 | 3500 |

### Caratteristiche del materiale

(Circolare 7 21-01-19 C8.5.I) Muratura in mattoni pieni e malta di calce LC2_Corti

| fb_ | fhk | fvk0 | fhmedio | τ0 | fv0 | μ | ϕ | fvk,lim | E | G | FC |
|---|---|---|---|---|---|---|---|---|---|---|---|
| 12 | | | 17.25 | 0.9 | 2 | 0.577 | 0.767 | 0.65 | 32000 | 12800 | 1.2 |

## Verifiche a pressoflessione delle travi in muratura in combinazioni non sismiche

| Sezione | γM | N | M | Mu | Comb. | c.s. | Verifica |
|---|---|---|---|---|---|---|---|
| ini. | 3 | -671 | -22193 | 89792 | SLU 72 | 4.05 | Si |
| fin. | 3 | -461 | -9752 | 89792 | SLU 72 | 9.21 | Si |
| ini. | 3 | -683 | -21573 | 89792 | SLU 80 | 4.16 | Si |
| fin. | 3 | -593 | -11797 | 89792 | SLU 80 | 7.61 | Si |
| ini. | 3 | -646 | -21683 | 89792 | SLU 69 | 4.14 | Si |
| fin. | 3 | -471 | -10259 | 89792 | SLU 69 | 8.75 | Si |
| ini. | 3 | -643 | -20569 | 89792 | SLU 78 | 4.37 | Si |
| fin. | 3 | -606 | -12302 | 89792 | SLU 78 | 7.3 | Si |
| ini. | 3 | -697 | -22066 | 89792 | SLU 79 | 4.07 | Si |
| fin. | 3 | -589 | -11798 | 89792 | SLU 79 | 7.61 | Si |
| ini. | 3 | -658 | -21062 | 89792 | SLU 77 | 4.26 | Si |
| fin. | 3 | -602 | -12303 | 89792 | SLU 77 | 7.3 | Si |
| ini. | 3 | -604 | -20627 | 89792 | SLU 50 | 4.35 | Si |
| fin. | 3 | -371 | -8413 | 89792 | SLU 50 | 10.67 | Si |
| ini. | 3 | -644 | -20994 | 89792 | SLU 29 | 4.28 | Si |
| fin. | 3 | -371 | -7647 | 89792 | SLU 29 | 11.74 | Si |
| ini. | 3 | -631 | -21189 | 89792 | SLU 70 | 4.24 | Si |
| fin. | 3 | -474 | -10258 | 89792 | SLU 70 | 8.75 | Si |
| ini. | 3 | -685 | -22687 | 89792 | SLU 71 | 3.96 | Si |
| fin. | 3 | -458 | -9753 | 89792 | SLU 71 | 9.21 | Si |

## Verifiche a taglio delle travi in muratura secondo §C8.7.1.3.1 in combinazioni non sismiche

| Sezione | γM | N | M | V | Vt | Vp | Vt fess. diag. | Vt,lim | Comb. | c.s. | Verifica |
|---|---|---|---|---|---|---|---|---|---|---|---|
| ini. | 3 | 0 | -10864 | 1831 | | | 806 | 303 | SLU 81 | 0.17 | No |
| fin. | 3 | 0 | -14920 | -2916 | | | 806 | 303 | SLU 81 | 0.1 | No |
| ini. | 3 | 0 | -15594 | 1893 | | | 806 | 303 | SLU 74 | 0.16 | No |
| fin. | 3 | 0 | -13426 | -2625 | | | 806 | 303 | SLU 74 | 0.12 | No |
| ini. | 3 | 0 | -8311 | 1586 | | | 806 | 303 | SLU 61 | 0.19 | No |
| fin. | 3 | 0 | -13578 | -2628 | | | 806 | 303 | SLU 61 | 0.12 | No |
| ini. | 3 | 0 | -8805 | 1614 | | | 806 | 303 | SLU 60 | 0.19 | No |
| fin. | 3 | 0 | -13579 | -2640 | | | 806 | 303 | SLU 60 | 0.11 | No |
| ini. | 3 | 0 | -15776 | 1849 | | | 806 | 303 | SLU 76 | 0.16 | No |
| fin. | 3 | 0 | -12919 | -2519 | | | 806 | 303 | SLU 76 | 0.12 | No |
| ini. | 3 | 0 | -15839 | 1941 | | | 806 | 303 | SLU 84 | 0.16 | No |
| fin. | 3 | 0 | -13796 | -2705 | | | 806 | 303 | SLU 84 | 0.11 | No |
| ini. | 3 | 0 | -10371 | 1802 | | | 806 | 303 | SLU 82 | 0.17 | No |
| fin. | 3 | 0 | -14919 | -2904 | | | 806 | 303 | SLU 82 | 0.1 | No |
| ini. | 3 | 0 | -15101 | 1865 | | | 806 | 303 | SLU 75 | 0.16 | No |
| fin. | 3 | 0 | -13425 | -2614 | | | 806 | 303 | SLU 75 | 0.12 | No |
| ini. | 3 | 0 | -10308 | 1710 | | | 806 | 303 | SLU 73 | 0.18 | No |
| fin. | 3 | 0 | -14042 | -2718 | | | 806 | 303 | SLU 73 | 0.11 | No |
| ini. | 3 | 0 | -16332 | 1969 | | | 806 | 303 | SLU 83 | 0.15 | No |
| fin. | 3 | 0 | -13797 | -2717 | | | 806 | 303 | SLU 83 | 0.11 | No |

## Verifiche a pressoflessione delle travi in muratura in combinazioni sismiche

| Sezione | γM | N | M | Mu | Comb. | c.s. | Verifica |
|---|---|---|---|---|---|---|---|
| ini. | 2 | -2877 | -81294 | 107694 | SLV 15 | 1.32 | Si |
| fin. | 2 | 1554 | 47635 | 107694 | SLV 15 | 2.26 | Si |
| ini. | 2 | -2877 | -81294 | 107694 | SLV 16 | 1.32 | Si |
| fin. | 2 | 1554 | 47635 | 107694 | SLV 16 | 2.26 | Si |
| ini. | 2 | 1409 | 36256 | 107694 | SLV 7 | 2.97 | Si |
| fin. | 2 | -2135 | -53571 | 107694 | SLV 7 | 2.01 | Si |
| ini. | 2 | -3361 | -93844 | 107694 | SLV 13 | 1.15 | Si |
| fin. | 2 | 2150 | 62445 | 107694 | SLV 13 | 1.72 | Si |
| ini. | 2 | -3361 | -93844 | 107694 | SLV 14 | 1.15 | Si |
| fin. | 2 | 2150 | 62445 | 107694 | SLV 14 | 1.72 | Si |
| ini. | 2 | 2364 | 64475 | 107694 | SLV 1 | 1.67 | Si |
| fin. | 2 | -2456 | -66673 | 107694 | SLV 1 | 1.62 | Si |
| ini. | 2 | 1409 | 36256 | 107694 | SLV 8 | 2.97 | Si |
| fin. | 2 | -2135 | -53571 | 107694 | SLV 8 | 2.01 | Si |
| ini. | 2 | 2848 | 77025 | 107694 | SLV 4 | 1.4 | Si |
| fin. | 2 | -3052 | -81484 | 107694 | SLV 4 | 1.32 | Si |
| ini. | 2 | 2364 | 64475 | 107694 | SLV 2 | 1.67 | Si |
| fin. | 2 | -2456 | -66673 | 107694 | SLV 2 | 1.62 | Si |
| ini. | 2 | 2848 | 77025 | 107694 | SLV 3 | 1.4 | Si |
| fin. | 2 | -3052 | -81484 | 107694 | SLV 3 | 1.32 | Si |

## Verifiche a taglio delle travi in muratura secondo §C8.7.1.3.1 in combinazioni sismiche

| Sezione | γM | N | M | V | Vt | Vp | Vt fess. diag. | Vt,lim | Comb. | c.s. | Verifica |
|---|---|---|---|---|---|---|---|---|---|---|---|
| ini. | 2 | 0 | 77025 | -3198 | | | 1208 | 455 | SLV 3 | 0.14 | No |
| fin. | 2 | 0 | -81484 | -6266 | | | 1208 | 455 | SLV 3 | 0.07 | No |
| ini. | 2 | 0 | -81294 | 5000 | | | 1208 | 455 | SLV 16 | 0.09 | No |
| fin. | 2 | 0 | 47635 | 1728 | | | 1208 | 455 | SLV 16 | 0.26 | No |
| ini. | 2 | 0 | 64475 | -2556 | | | 1208 | 455 | SLV 2 | 0.18 | No |
| fin. | 2 | 0 | -66673 | -5417 | | | 1208 | 455 | SLV 2 | 0.08 | No |
| ini. | 2 | 0 | 36256 | -1077 | | | 1208 | 455 | SLV 8 | 0.42 | No |
| fin. | 2 | 0 | -53571 | -4460 | | | 1208 | 455 | SLV 8 | 0.1 | No |
| ini. | 2 | 0 | 77025 | -3198 | | | 1208 | 455 | SLV 4 | 0.14 | No |
| fin. | 2 | 0 | -81484 | -6266 | | | 1208 | 455 | SLV 4 | 0.07 | No |
| ini. | 2 | 0 | 36256 | -1077 | | | 1208 | 455 | SLV 7 | 0.42 | No |
| fin. | 2 | 0 | -53571 | -4460 | | | 1208 | 455 | SLV 7 | 0.1 | No |
| ini. | 2 | 0 | -93844 | 5642 | | | 1208 | 455 | SLV 14 | 0.08 | No |
| fin. | 2 | 0 | 62445 | 2578 | | | 1208 | 455 | SLV 14 | 0.18 | No |

| Sezione | γM | N | M | V | Vt | Vp | Vt fess. diag. | Vt,lim | Comb. | c.s. | Verifica |
|---|---|---|---|---|---|---|---|---|---|---|---|
| ini. | 2 | 0 | -81294 | 5000 | | | 1208 | 455 | SLV 15 | 0.09 | No |
| fin. | 2 | 0 | 47635 | 1728 | | | 1208 | 455 | SLV 15 | 0.26 | No |
| ini. | 2 | 0 | -93844 | 5642 | | | 1208 | 455 | SLV 13 | 0.08 | No |
| fin. | 2 | 0 | 62445 | 2578 | | | 1208 | 455 | SLV 13 | 0.18 | No |
| ini. | 2 | 0 | 64475 | -2556 | | | 1208 | 455 | SLV 1 | 0.18 | No |
| fin. | 2 | 0 | -66673 | -5417 | | | 1208 | 455 | SLV 1 | 0.08 | No |

### Tabella dei coefficienti di sicurezza minimi

| Stato limite | Coeff.s. | Comb. | Verifica |
|---|---|---|---|
| PF_SLV | 1.148 | SLV 13 | Si |
| V_SLV | 0.073 | SLV 3 | No |
| PF_SLU | 3.958 | SLU 71 | Si |
| V_SLU | 0.104 | SLU 81 | No |

## Trave di accoppiamento 71

Verifiche condotte secondo D.M. 17-01-18 (N.T.C.)

### Dati geometrici

| X ini. | Y ini. | Z ini.inf. | Z ini.sup. | H ini. | X fin. | Y fin. | Z fin.inf. | Z fin.sup | H fin. | Luce | Spessore | R. Trazione |
|---|---|---|---|---|---|---|---|---|---|---|---|---|
| -2159.3 | -335.9 | 544 | 634 | 90 | -2249.3 | -335.9 | 544 | 634 | 90 | 90 | 28 | 3500 |

### Caratteristiche del materiale

(Circolare 7 21-01-19 C8.5.I) Muratura in mattoni pieni e malta di calce LC2_Corti

| fb_ | fhk | fvk0 | fhmedio | τ0 | fv0 | μ | ϕ | fvk,lim | E | G | FC |
|---|---|---|---|---|---|---|---|---|---|---|---|
| 12 | | | 17.25 | 0.9 | 2 | 0.577 | 0.767 | 0.65 | 32000 | 12800 | 1.2 |

### Verifiche a pressoflessione delle travi in muratura in combinazioni non sismiche

| Sezione | γM | N | M | Mu | Comb. | c.s. | Verifica |
|---|---|---|---|---|---|---|---|
| ini. | 3 | -3003 | 75388 | 103792 | SLU 70 | 1.38 | Si |
| fin. | 3 | -744 | -13195 | 103792 | SLU 70 | 7.87 | Si |
| ini. | 3 | -3291 | 81519 | 103792 | SLU 76 | 1.27 | Si |
| fin. | 3 | -829 | -14581 | 103792 | SLU 76 | 7.12 | Si |
| ini. | 3 | -3174 | 78911 | 103792 | SLU 84 | 1.32 | Si |
| fin. | 3 | -779 | -12847 | 103792 | SLU 84 | 8.08 | Si |
| ini. | 3 | -2988 | 75063 | 103792 | SLU 72 | 1.38 | Si |
| fin. | 3 | -739 | -13252 | 103792 | SLU 72 | 7.83 | Si |
| ini. | 3 | -3181 | 80631 | 103792 | SLU 78 | 1.29 | Si |
| fin. | 3 | -745 | -14181 | 103792 | SLU 78 | 7.32 | Si |
| ini. | 3 | -3112 | 76989 | 103792 | SLU 75 | 1.35 | Si |
| fin. | 3 | -783 | -12367 | 103792 | SLU 75 | 8.39 | Si |
| ini. | 3 | -3222 | 77876 | 103792 | SLU 73 | 1.33 | Si |
| fin. | 3 | -868 | -12767 | 103792 | SLU 73 | 8.13 | Si |
| ini. | 3 | -3166 | 80306 | 103792 | SLU 80 | 1.29 | Si |
| fin. | 3 | -740 | -14238 | 103792 | SLU 80 | 7.29 | Si |
| ini. | 3 | -3113 | 76275 | 103792 | SLU 68 | 1.36 | Si |
| fin. | 3 | -829 | -13595 | 103792 | SLU 68 | 7.63 | Si |
| ini. | 3 | -3105 | 75269 | 103792 | SLU 82 | 1.38 | Si |
| fin. | 3 | -817 | -11032 | 103792 | SLU 82 | 9.41 | Si |

### Verifiche a taglio delle travi in muratura secondo §C8.7.1.3.1 in combinazioni non sismiche

| Sezione | γM | N | M | V | Vt | Vp | Vt fess. diag. | Vt,lim | Comb. | c.s. | Verifica |
|---|---|---|---|---|---|---|---|---|---|---|---|
| ini. | 3 | 0 | 78911 | -2742 | | | 970 | 365 | SLU 84 | 0.13 | No |
| fin. | 3 | 0 | -12847 | -971 | | | 970 | 365 | SLU 84 | 0.38 | No |
| ini. | 3 | 0 | 81519 | -2755 | | | 970 | 365 | SLU 76 | 0.13 | No |
| fin. | 3 | 0 | -14581 | -1165 | | | 970 | 365 | SLU 76 | 0.31 | No |
| ini. | 3 | 0 | 73349 | -2680 | | | 970 | 365 | SLU 77 | 0.14 | No |
| fin. | 3 | 0 | -10946 | -635 | | | 970 | 365 | SLU 77 | 0.57 | No |
| ini. | 3 | 0 | 80306 | -2801 | | | 970 | 365 | SLU 80 | 0.13 | No |
| fin. | 3 | 0 | -14238 | -999 | | | 970 | 365 | SLU 80 | 0.37 | No |
| ini. | 3 | 0 | 75388 | -2632 | | | 970 | 365 | SLU 70 | 0.14 | No |
| fin. | 3 | 0 | -13195 | -892 | | | 970 | 365 | SLU 70 | 0.41 | No |
| ini. | 3 | 0 | 76989 | -2681 | | | 970 | 365 | SLU 75 | 0.14 | No |
| fin. | 3 | 0 | -12367 | -919 | | | 970 | 365 | SLU 75 | 0.4 | No |
| ini. | 3 | 0 | 75063 | -2613 | | | 970 | 365 | SLU 72 | 0.14 | No |
| fin. | 3 | 0 | -13252 | -903 | | | 970 | 365 | SLU 72 | 0.4 | No |
| ini. | 3 | 0 | 73024 | -2661 | | | 970 | 365 | SLU 79 | 0.14 | No |
| fin. | 3 | 0 | -11002 | -647 | | | 970 | 365 | SLU 79 | 0.56 | No |
| ini. | 3 | 0 | 77876 | -2616 | | | 970 | 365 | SLU 73 | 0.14 | No |
| fin. | 3 | 0 | -12767 | -1096 | | | 970 | 365 | SLU 73 | 0.33 | No |
| ini. | 3 | 0 | 80631 | -2820 | | | 970 | 365 | SLU 78 | 0.13 | No |
| fin. | 3 | 0 | -14181 | -988 | | | 970 | 365 | SLU 78 | 0.37 | No |

### Verifiche a pressoflessione delle travi in muratura in combinazioni sismiche

| Sezione | γM | N | M | Mu | Comb. | c.s. | Verifica |
|---|---|---|---|---|---|---|---|
| ini. | 2 | 37 | -145178 | 121694 | SLV 16 | 0.84 | No |
| fin. | 2 | -4524 | 120197 | 121694 | SLV 16 | 1.01 | Si |
| ini. | 2 | -2826 | 128027 | 121694 | SLD 2 | 0.95 | No |
| fin. | 2 | 1117 | -58214 | 121694 | SLD 2 | 2.09 | Si |
| ini. | 2 | -3328 | 142202 | 121694 | SLV 6 | 0.86 | No |
| fin. | 2 | 498 | -31381 | 121694 | SLV 6 | 3.88 | Si |
| ini. | 2 | 37 | -145178 | 121694 | SLV 15 | 0.84 | No |
| fin. | 2 | -4524 | 120197 | 121694 | SLV 15 | 1.01 | Si |
| ini. | 2 | -3478 | 212522 | 121694 | SLV 3 | 0.57 | No |

| Sezione | γM | N | M | Mu | Comb. | c.s. | Verifica |
|---|---|---|---|---|---|---|---|
| fin. | 2 | 3452 | -136653 | 121694 | SLV 3 | 0.89 | No |
| ini. | 2 | -3977 | 237849 | 121694 | SLV 2 | 0.51 | No |
| fin. | 2 | 3377 | -129557 | 121694 | SLV 2 | 0.94 | No |
| ini. | 2 | -3977 | 237849 | 121694 | SLV 1 | 0.51 | No |
| fin. | 2 | 3377 | -129557 | 121694 | SLV 1 | 0.94 | No |
| ini. | 2 | -3478 | 212522 | 121694 | SLV 4 | 0.57 | No |
| fin. | 2 | 3452 | -136653 | 121694 | SLV 4 | 0.89 | No |
| ini. | 2 | -3328 | 142202 | 121694 | SLV 5 | 0.86 | No |
| fin. | 2 | 498 | -31381 | 121694 | SLV 5 | 3.88 | Si |
| ini. | 2 | -2826 | 128027 | 121694 | SLD 1 | 0.95 | No |
| fin. | 2 | 1117 | -58214 | 121694 | SLD 1 | 2.09 | Si |

### Verifiche a taglio delle travi in muratura secondo §C8.7.1.3.1 in combinazioni sismiche

| Sezione | γM | N | M | V | Vt | Vp | Vt fess. diag. | Vt,lim | Comb. | c.s. | Verifica |
|---|---|---|---|---|---|---|---|---|---|---|---|
| ini. | 2 | 0 | 212522 | -7973 | | | 1456 | 548 | SLV 4 | 0.07 | No |
| fin. | 2 | 0 | -136653 | -6557 | | | 1456 | 548 | SLV 4 | 0.08 | No |
| ini. | 2 | 0 | -119851 | 4613 | | | 1456 | 548 | SLV 13 | 0.12 | No |
| fin. | 2 | 0 | 127293 | 5934 | | | 1456 | 548 | SLV 13 | 0.09 | No |
| ini. | 2 | 0 | 237849 | -8458 | | | 1456 | 548 | SLV 2 | 0.06 | No |
| fin. | 2 | 0 | -129557 | -6181 | | | 1456 | 548 | SLV 2 | 0.09 | No |
| ini. | 2 | 0 | 128027 | -4578 | | | 1456 | 548 | SLD 1 | 0.12 | No |
| fin. | 2 | 0 | -58214 | -2826 | | | 1456 | 548 | SLD 1 | 0.19 | No |
| ini. | 2 | 0 | -119851 | 4613 | | | 1456 | 548 | SLV 14 | 0.12 | No |
| fin. | 2 | 0 | 127293 | 5934 | | | 1456 | 548 | SLV 14 | 0.09 | No |
| ini. | 2 | 0 | 128027 | -4578 | | | 1456 | 548 | SLD 2 | 0.12 | No |
| fin. | 2 | 0 | -58214 | -2826 | | | 1456 | 548 | SLD 2 | 0.19 | No |
| ini. | 2 | 0 | -145178 | 5098 | | | 1456 | 548 | SLV 15 | 0.11 | No |
| fin. | 2 | 0 | 120197 | 5557 | | | 1456 | 548 | SLV 15 | 0.1 | No |
| ini. | 2 | 0 | 212522 | -7973 | | | 1456 | 548 | SLV 3 | 0.07 | No |
| fin. | 2 | 0 | -136653 | -6557 | | | 1456 | 548 | SLV 3 | 0.08 | No |
| ini. | 2 | 0 | -145178 | 5098 | | | 1456 | 548 | SLV 16 | 0.11 | No |
| fin. | 2 | 0 | 120197 | 5557 | | | 1456 | 548 | SLV 16 | 0.1 | No |
| ini. | 2 | 0 | 237849 | -8458 | | | 1456 | 548 | SLV 1 | 0.06 | No |
| fin. | 2 | 0 | -129557 | -6181 | | | 1456 | 548 | SLV 1 | 0.09 | No |

### Tabella dei coefficienti di sicurezza minimi

| Stato limite | Coeff.s. | Comb. | Verifica |
|---|---|---|---|
| PF_SLV | 0.512 | SLV 1 | No |
| V_SLV | 0.065 | SLV 1 | No |
| PF_SLU | 1.273 | SLU 76 | Si |
| V_SLU | 0.13 | SLU 78 | No |

## Trave di accoppiamento 72

Verifiche condotte secondo D.M. 17-01-18 (N.T.C.)

### Dati geometrici

| X ini. | Y ini. | Z ini.inf. | Z ini.sup. | H ini. | X fin. | Y fin. | Z fin.inf. | Z fin.sup | H fin. | Luce | Spessore | R. Trazione |
|---|---|---|---|---|---|---|---|---|---|---|---|---|
| -2159.3 | -335.9 | 814 | 896 | 82 | -2249.3 | -335.9 | 814 | 896 | 82 | 90 | 28 | 3500 |

### Caratteristiche del materiale

(Circolare 7 21-01-19 C8.5.I) Muratura in mattoni pieni e malta di calce LC2_Corti

| fb_ | fhk | fvk0 | fhmedio | τ0 | fv0 | μ | ϕ | fvk,lim | E | G | FC |
|---|---|---|---|---|---|---|---|---|---|---|---|
| 12 | | | 17.25 | 0.9 | 2 | 0.577 | 0.767 | 0.65 | 32000 | 12800 | 1.2 |

### Verifiche a pressoflessione delle travi in muratura in combinazioni non sismiche

| Sezione | γM | N | M | Mu | Comb. | c.s. | Verifica |
|---|---|---|---|---|---|---|---|
| ini. | 3 | -1072 | 16202 | 89792 | SLU 78 | 5.54 | Si |
| fin. | 3 | -2285 | -52652 | 89792 | SLU 78 | 1.71 | Si |
| ini. | 3 | -1120 | 15958 | 89792 | SLU 76 | 5.63 | Si |
| fin. | 3 | -2341 | -52829 | 89792 | SLU 76 | 1.7 | Si |
| ini. | 3 | -1059 | 15227 | 89792 | SLU 68 | 5.9 | Si |
| fin. | 3 | -2178 | -48797 | 89792 | SLU 68 | 1.84 | Si |
| ini. | 3 | -1021 | 15515 | 89792 | SLU 72 | 5.79 | Si |
| fin. | 3 | -2126 | -48323 | 89792 | SLU 72 | 1.86 | Si |
| ini. | 3 | -1058 | 13483 | 89792 | SLU 75 | 6.66 | Si |
| fin. | 3 | -2177 | -50154 | 89792 | SLU 75 | 1.79 | Si |
| ini. | 3 | -1082 | 11120 | 89792 | SLU 82 | 8.07 | Si |
| fin. | 3 | -2145 | -49085 | 89792 | SLU 82 | 1.83 | Si |
| ini. | 3 | -1095 | 13839 | 89792 | SLU 84 | 6.49 | Si |
| fin. | 3 | -2252 | -51584 | 89792 | SLU 84 | 1.74 | Si |
| ini. | 3 | -1011 | 15472 | 89792 | SLU 70 | 5.8 | Si |
| fin. | 3 | -2121 | -48621 | 89792 | SLU 70 | 1.85 | Si |
| ini. | 3 | -1107 | 13239 | 89792 | SLU 73 | 6.78 | Si |
| fin. | 3 | -2234 | -50330 | 89792 | SLU 73 | 1.78 | Si |
| ini. | 3 | -1082 | 16245 | 89792 | SLU 80 | 5.53 | Si |
| fin. | 3 | -2290 | -52354 | 89792 | SLU 80 | 1.72 | Si |

### Verifiche a taglio delle travi in muratura secondo §C8.7.1.3.1 in combinazioni non sismiche

| Sezione | γM | N | M | V | Vt | Vp | Vt fess. diag. | Vt,lim | Comb. | c.s. | Verifica |
|---|---|---|---|---|---|---|---|---|---|---|---|
| ini. | 3 | 0 | 13839 | 233 | | | 806 | 303 | SLU 84 | 1.3 | Si |
| fin. | 3 | 0 | -51584 | -3558 | | | 806 | 303 | SLU 84 | 0.09 | No |
| ini. | 3 | 0 | 15958 | 93 | | | 806 | 303 | SLU 76 | 3.26 | Si |
| fin. | 3 | 0 | -52829 | -3511 | | | 806 | 303 | SLU 76 | 0.09 | No |

| Sezione | γM | N | M | V | Vt | Vp | Vt fess. diag. | Vt,lim | Comb. | c.s. | Verifica |
|---|---|---|---|---|---|---|---|---|---|---|---|
| ini. | 3 | 0 | 13483 | 219 | | | 806 | 303 | SLU 75 | 1.38 | Si |
| fin. | 3 | 0 | -50154 | -3437 | | | 806 | 303 | SLU 75 | 0.09 | No |
| ini. | 3 | 0 | 10192 | 406 | | | 806 | 303 | SLU 83 | 0.75 | No |
| fin. | 3 | 0 | -47124 | -3402 | | | 806 | 303 | SLU 83 | 0.09 | No |
| ini. | 3 | 0 | 16202 | 141 | | | 806 | 303 | SLU 78 | 2.15 | Si |
| fin. | 3 | 0 | -52652 | -3583 | | | 806 | 303 | SLU 78 | 0.08 | No |
| ini. | 3 | 0 | 12598 | 303 | | | 806 | 303 | SLU 79 | 1 | No |
| fin. | 3 | 0 | -47894 | -3396 | | | 806 | 303 | SLU 79 | 0.09 | No |
| ini. | 3 | 0 | 11120 | 312 | | | 806 | 303 | SLU 82 | 0.97 | No |
| fin. | 3 | 0 | -49085 | -3413 | | | 806 | 303 | SLU 82 | 0.09 | No |
| ini. | 3 | 0 | 13239 | 172 | | | 806 | 303 | SLU 73 | 1.77 | Si |
| fin. | 3 | 0 | -50330 | -3366 | | | 806 | 303 | SLU 73 | 0.09 | No |
| ini. | 3 | 0 | 12555 | 314 | | | 806 | 303 | SLU 77 | 0.96 | No |
| fin. | 3 | 0 | -48192 | -3426 | | | 806 | 303 | SLU 77 | 0.09 | No |
| ini. | 3 | 0 | 16245 | 130 | | | 806 | 303 | SLU 80 | 2.33 | Si |
| fin. | 3 | 0 | -52354 | -3553 | | | 806 | 303 | SLU 80 | 0.09 | No |

### Verifiche a pressoflessione delle travi in muratura in combinazioni sismiche

| Sezione | γM | N | M | Mu | Comb. | c.s. | Verifica |
|---|---|---|---|---|---|---|---|
| ini. | 2 | 1166 | 174248 | 107694 | SLV 3 | 0.62 | No |
| fin. | 2 | -4844 | -138939 | 107694 | SLV 3 | 0.78 | No |
| ini. | 2 | -2582 | -187799 | 107694 | SLV 15 | 0.57 | No |
| fin. | 2 | 3083 | 98520 | 107694 | SLV 15 | 1.09 | Si |
| ini. | 2 | -159 | 96586 | 107694 | SLV 5 | 1.12 | Si |
| fin. | 2 | -3823 | -97598 | 107694 | SLV 5 | 1.1 | Si |
| ini. | 2 | 1160 | 196889 | 107694 | SLV 2 | 0.55 | No |
| fin. | 2 | -5653 | -158217 | 107694 | SLV 2 | 0.68 | No |
| ini. | 2 | 1166 | 174248 | 107694 | SLV 4 | 0.62 | No |
| fin. | 2 | -4844 | -138939 | 107694 | SLV 4 | 0.78 | No |
| ini. | 2 | -159 | 96586 | 107694 | SLV 6 | 1.12 | Si |
| fin. | 2 | -3823 | -97598 | 107694 | SLV 6 | 1.1 | Si |
| ini. | 2 | -2582 | -187799 | 107694 | SLV 16 | 0.57 | No |
| fin. | 2 | 3083 | 98520 | 107694 | SLV 16 | 1.09 | Si |
| ini. | 2 | -2588 | -165158 | 107694 | SLV 14 | 0.65 | No |
| fin. | 2 | 2274 | 79242 | 107694 | SLV 14 | 1.36 | Si |
| ini. | 2 | -2588 | -165158 | 107694 | SLV 13 | 0.65 | No |
| fin. | 2 | 2274 | 79242 | 107694 | SLV 13 | 1.36 | Si |
| ini. | 2 | 1160 | 196889 | 107694 | SLV 1 | 0.55 | No |
| fin. | 2 | -5653 | -158217 | 107694 | SLV 1 | 0.68 | No |

### Verifiche a taglio delle travi in muratura secondo §C8.7.1.3.1 in combinazioni sismiche

| Sezione | γM | N | M | V | Vt | Vp | Vt fess. diag. | Vt,lim | Comb. | c.s. | Verifica |
|---|---|---|---|---|---|---|---|---|---|---|---|
| ini. | 2 | 0 | 174248 | -5203 | | | 1208 | 455 | SLV 3 | 0.09 | No |
| fin. | 2 | 0 | -138939 | -7923 | | | 1208 | 455 | SLV 3 | 0.06 | No |
| ini. | 2 | 0 | 196889 | -5977 | | | 1208 | 455 | SLV 1 | 0.08 | No |
| fin. | 2 | 0 | -158217 | -8842 | | | 1208 | 455 | SLV 1 | 0.05 | No |
| ini. | 2 | 0 | -187799 | 6639 | | | 1208 | 455 | SLV 16 | 0.07 | No |
| fin. | 2 | 0 | 98520 | 4588 | | | 1208 | 455 | SLV 16 | 0.1 | No |
| ini. | 2 | 0 | 96586 | -2735 | | | 1208 | 455 | SLV 5 | 0.17 | No |
| fin. | 2 | 0 | -97598 | -5535 | | | 1208 | 455 | SLV 5 | 0.08 | No |
| ini. | 2 | 0 | -165158 | 5865 | | | 1208 | 455 | SLV 13 | 0.08 | No |
| fin. | 2 | 0 | 79242 | 3669 | | | 1208 | 455 | SLV 13 | 0.12 | No |
| ini. | 2 | 0 | 174248 | -5203 | | | 1208 | 455 | SLV 4 | 0.09 | No |
| fin. | 2 | 0 | -138939 | -7923 | | | 1208 | 455 | SLV 4 | 0.06 | No |
| ini. | 2 | 0 | 196889 | -5977 | | | 1208 | 455 | SLV 2 | 0.08 | No |
| fin. | 2 | 0 | -158217 | -8842 | | | 1208 | 455 | SLV 2 | 0.05 | No |
| ini. | 2 | 0 | -165158 | 5865 | | | 1208 | 455 | SLV 14 | 0.08 | No |
| fin. | 2 | 0 | 79242 | 3669 | | | 1208 | 455 | SLV 14 | 0.12 | No |
| ini. | 2 | 0 | -187799 | 6639 | | | 1208 | 455 | SLV 15 | 0.07 | No |
| fin. | 2 | 0 | 98520 | 4588 | | | 1208 | 455 | SLV 15 | 0.1 | No |
| ini. | 2 | 0 | 96586 | -2735 | | | 1208 | 455 | SLV 6 | 0.17 | No |
| fin. | 2 | 0 | -97598 | -5535 | | | 1208 | 455 | SLV 6 | 0.08 | No |

### Tabella dei coefficienti di sicurezza minimi

| Stato limite | Coeff.s. | Comb. | Verifica |
|---|---|---|---|
| PF_SLV | 0.547 | SLV 1 | No |
| V_SLV | 0.051 | SLV 1 | No |
| PF_SLU | 1.7 | SLU 76 | Si |
| V_SLU | 0.085 | SLU 78 | No |

## Trave di accoppiamento 73

Verifiche condotte secondo D.M. 17-01-18 (N.T.C.)

### Dati geometrici

| X ini. | Y ini. | Z ini.inf. | Z ini.sup. | H ini. | X fin. | Y fin. | Z fin.inf. | Z fin.sup | H fin. | Luce | Spessore | R. Trazione |
|---|---|---|---|---|---|---|---|---|---|---|---|---|
| -1886.8 | -335.9 | 544 | 744 | 200 | -1936.8 | -335.9 | 544 | 744 | 200 | 50 | 28 | 3500 |

### Caratteristiche del materiale

(Circolare 7 21-01-19 C8.5.I) Muratura in mattoni pieni e malta di calce LC2_Corti

| fb_ | fhk | fvk0 | fhmedio | τ0 | fv0 | μ | ϕ | fvk,lim | E | G | FC |
|---|---|---|---|---|---|---|---|---|---|---|---|
| 12 | | | 17.25 | 0.9 | 2 | 0.577 | 0.767 | 0.65 | 32000 | 12800 | 1.2 |

## Verifiche a pressoflessione delle travi in muratura in combinazioni non sismiche

| Sezione | γM | N | M | Mu | Comb. | c.s. | Verifica |
|---|---|---|---|---|---|---|---|
| ini. | 3 | -3129 | -32171 | 296292 | SLU 75 | 9.21 | Si |
| fin. | 3 | -3567 | 73204 | 296292 | SLU 75 | 4.05 | Si |
| ini. | 3 | -3140 | -33294 | 296292 | SLU 76 | 8.9 | Si |
| fin. | 3 | -3616 | 73337 | 296292 | SLU 76 | 4.04 | Si |
| ini. | 3 | -2893 | -14926 | 296292 | SLU 77 | 19.85 | Si |
| fin. | 3 | -3275 | 72297 | 296292 | SLU 77 | 4.1 | Si |
| ini. | 3 | -3194 | -37747 | 296292 | SLU 81 | 7.85 | Si |
| fin. | 3 | -3594 | 76370 | 296292 | SLU 81 | 3.88 | Si |
| ini. | 3 | -2939 | -17992 | 296292 | SLU 80 | 16.47 | Si |
| fin. | 3 | -3379 | 72741 | 296292 | SLU 80 | 4.07 | Si |
| ini. | 3 | -3174 | -32160 | 296292 | SLU 84 | 9.21 | Si |
| fin. | 3 | -3634 | 77329 | 296292 | SLU 84 | 3.83 | Si |
| ini. | 3 | -3001 | -20755 | 296292 | SLU 78 | 14.28 | Si |
| fin. | 3 | -3441 | 73230 | 296292 | SLU 78 | 4.05 | Si |
| ini. | 3 | -3268 | -44711 | 296292 | SLU 73 | 6.63 | Si |
| fin. | 3 | -3742 | 73311 | 296292 | SLU 73 | 4.04 | Si |
| ini. | 3 | -3066 | -26331 | 296292 | SLU 83 | 11.25 | Si |
| fin. | 3 | -3468 | 76396 | 296292 | SLU 83 | 3.88 | Si |
| ini. | 3 | -3302 | -43576 | 296292 | SLU 82 | 6.8 | Si |
| fin. | 3 | -3760 | 77303 | 296292 | SLU 82 | 3.83 | Si |

## Verifiche a taglio delle travi in muratura secondo §C8.7.1.3.1 in combinazioni non sismiche

| Sezione | γM | N | M | V | Vt | Vp | Vt fess. diag. | Vt,lim | Comb. | c.s. | Verifica |
|---|---|---|---|---|---|---|---|---|---|---|---|
| ini. | 3 | 0 | -33294 | 2590 | | | 2157 | 812 | SLU 76 | 0.31 | No |
| fin. | 3 | 0 | 73337 | 4963 | | | 2157 | 812 | SLU 76 | 0.16 | No |
| ini. | 3 | 0 | -26342 | 2184 | | | 2157 | 812 | SLU 74 | 0.37 | No |
| fin. | 3 | 0 | 72272 | 4739 | | | 2157 | 812 | SLU 74 | 0.17 | No |
| ini. | 3 | 0 | -32160 | 2571 | | | 2157 | 812 | SLU 84 | 0.32 | No |
| fin. | 3 | 0 | 77329 | 5103 | | | 2157 | 812 | SLU 84 | 0.16 | No |
| ini. | 3 | 0 | -37747 | 2524 | | | 2157 | 812 | SLU 81 | 0.32 | No |
| fin. | 3 | 0 | 76370 | 5119 | | | 2157 | 812 | SLU 81 | 0.16 | No |
| ini. | 3 | 0 | -32171 | 2460 | | | 2157 | 812 | SLU 75 | 0.33 | No |
| fin. | 3 | 0 | 73204 | 4932 | | | 2157 | 812 | SLU 75 | 0.16 | No |
| ini. | 3 | 0 | -42090 | 2623 | | | 2157 | 812 | SLU 52 | 0.31 | No |
| fin. | 3 | 0 | 66385 | 4752 | | | 2157 | 812 | SLU 52 | 0.17 | No |
| ini. | 3 | 0 | -40955 | 2603 | | | 2157 | 812 | SLU 61 | 0.31 | No |
| fin. | 3 | 0 | 70377 | 4892 | | | 2157 | 812 | SLU 61 | 0.17 | No |
| ini. | 3 | 0 | -43576 | 2799 | | | 2157 | 812 | SLU 82 | 0.29 | No |
| fin. | 3 | 0 | 77303 | 5312 | | | 2157 | 812 | SLU 82 | 0.15 | No |
| ini. | 3 | 0 | -26331 | 2295 | | | 2157 | 812 | SLU 83 | 0.35 | No |
| fin. | 3 | 0 | 76396 | 4910 | | | 2157 | 812 | SLU 83 | 0.17 | No |
| ini. | 3 | 0 | -44711 | 2819 | | | 2157 | 812 | SLU 73 | 0.29 | No |
| fin. | 3 | 0 | 73311 | 5172 | | | 2157 | 812 | SLU 73 | 0.16 | No |

## Verifiche a pressoflessione delle travi in muratura in combinazioni sismiche

| Sezione | γM | N | M | Mu | Comb. | c.s. | Verifica |
|---|---|---|---|---|---|---|---|
| ini. | 2 | 2579 | 340069 | 314194 | SLV 2 | 0.92 | No |
| fin. | 2 | 3050 | -59256 | 314194 | SLV 2 | 5.3 | Si |
| ini. | 2 | -4486 | -180344 | 314194 | SLD 14 | 1.74 | Si |
| fin. | 2 | -4965 | 91319 | 314194 | SLD 14 | 3.44 | Si |
| ini. | 2 | -7560 | -391723 | 314194 | SLV 14 | 0.8 | No |
| fin. | 2 | -8327 | 148730 | 314194 | SLV 14 | 2.11 | Si |
| ini. | 2 | -6990 | -386548 | 314194 | SLV 15 | 0.81 | No |
| fin. | 2 | -7972 | 156197 | 314194 | SLV 15 | 2.01 | Si |
| ini. | 2 | 3149 | 345243 | 314194 | SLV 4 | 0.91 | No |
| fin. | 2 | 3404 | -51789 | 314194 | SLV 4 | 6.07 | Si |
| ini. | 2 | -7560 | -391723 | 314194 | SLV 13 | 0.8 | No |
| fin. | 2 | -8327 | 148730 | 314194 | SLV 13 | 2.11 | Si |
| ini. | 2 | -4486 | -180344 | 314194 | SLD 13 | 1.74 | Si |
| fin. | 2 | -4965 | 91319 | 314194 | SLD 13 | 3.44 | Si |
| ini. | 2 | 3149 | 345243 | 314194 | SLV 3 | 0.91 | No |
| fin. | 2 | 3404 | -51789 | 314194 | SLV 3 | 6.07 | Si |
| ini. | 2 | 2579 | 340069 | 314194 | SLV 1 | 0.92 | No |
| fin. | 2 | 3050 | -59256 | 314194 | SLV 1 | 5.3 | Si |
| ini. | 2 | -6990 | -386548 | 314194 | SLV 16 | 0.81 | No |
| fin. | 2 | -7972 | 156197 | 314194 | SLV 16 | 2.01 | Si |

## Verifiche a taglio delle travi in muratura secondo §C8.7.1.3.1 in combinazioni sismiche

| Sezione | γM | N | M | V | Vt | Vp | Vt fess. diag. | Vt,lim | Comb. | c.s. | Verifica |
|---|---|---|---|---|---|---|---|---|---|---|---|
| ini. | 2 | 0 | -391723 | 12411 | | | 3235 | 1217 | SLV 13 | 0.1 | No |
| fin. | 2 | 0 | 148730 | 14412 | | | 3235 | 1217 | SLV 13 | 0.08 | No |
| ini. | 2 | 0 | 340069 | -10036 | | | 3235 | 1217 | SLV 2 | 0.12 | No |
| fin. | 2 | 0 | -59256 | -8100 | | | 3235 | 1217 | SLV 2 | 0.15 | No |
| ini. | 2 | 0 | -386548 | 13208 | | | 3235 | 1217 | SLV 15 | 0.09 | No |
| fin. | 2 | 0 | 156197 | 14774 | | | 3235 | 1217 | SLV 15 | 0.08 | No |
| ini. | 2 | 0 | -178794 | 6560 | | | 3235 | 1217 | SLD 16 | 0.19 | No |
| fin. | 2 | 0 | 94387 | 8226 | | | 3235 | 1217 | SLD 16 | 0.15 | No |
| ini. | 2 | 0 | -178794 | 6560 | | | 3235 | 1217 | SLD 15 | 0.19 | No |
| fin. | 2 | 0 | 94387 | 8226 | | | 3235 | 1217 | SLD 15 | 0.15 | No |
| ini. | 2 | 0 | 340069 | -10036 | | | 3235 | 1217 | SLV 1 | 0.12 | No |
| fin. | 2 | 0 | -59256 | -8100 | | | 3235 | 1217 | SLV 1 | 0.15 | No |
| ini. | 2 | 0 | -386548 | 13208 | | | 3235 | 1217 | SLV 16 | 0.09 | No |
| fin. | 2 | 0 | 156197 | 14774 | | | 3235 | 1217 | SLV 16 | 0.08 | No |
| ini. | 2 | 0 | 345243 | -9239 | | | 3235 | 1217 | SLV 4 | 0.13 | No |
| fin. | 2 | 0 | -51789 | -7738 | | | 3235 | 1217 | SLV 4 | 0.16 | No |
| ini. | 2 | 0 | 345243 | -9239 | | | 3235 | 1217 | SLV 3 | 0.13 | No |

| Sezione | γM | N | M | V | Vt | Vp | Vt fess. diag. | Vt,lim | Comb. | c.s. | Verifica |
|---|---|---|---|---|---|---|---|---|---|---|---|
| fin. | 2 | 0 | -51789 | -7738 | | | 3235 | 1217 | SLV 3 | 0.16 | No |
| ini. | 2 | 0 | -391723 | 12411 | | | 3235 | 1217 | SLV 14 | 0.1 | No |
| fin. | 2 | 0 | 148730 | 14412 | | | 3235 | 1217 | SLV 14 | 0.08 | No |

### Tabella dei coefficienti di sicurezza minimi

| Stato limite | Coeff.s. | Comb. | Verifica |
|---|---|---|---|
| PF_SLV | 0.802 | SLV 13 | No |
| V_SLV | 0.082 | SLV 15 | No |
| PF_SLU | 3.832 | SLU 84 | Si |
| V_SLU | 0.153 | SLU 82 | No |

## Trave di accoppiamento 74

Verifiche condotte secondo D.M. 17-01-18 (N.T.C.)

### Dati geometrici

| X ini. | Y ini. | Z ini.inf. | Z ini.sup. | H ini. | X fin. | Y fin. | Z fin.inf. | Z fin.sup | H fin. | Luce | Spessore | R. Trazione |
|---|---|---|---|---|---|---|---|---|---|---|---|---|
| -1886.8 | -335.9 | 824 | 896 | 72 | -1936.8 | -335.9 | 824 | 896 | 72 | 50 | 28 | 3500 |

### Caratteristiche del materiale

(Circolare 7 21-01-19 C8.5.I) Muratura in mattoni pieni e malta di calce LC2_Corti

| fb_ | fhk | fvk0 | fhmedio | τ0 | fv0 | μ | ϕ | fvk,lim | E | G | FC |
|---|---|---|---|---|---|---|---|---|---|---|---|
| 12 | | | 17.25 | 0.9 | 2 | 0.577 | 0.767 | 0.65 | 32000 | 12800 | 1.2 |

### Verifiche a pressoflessione delle travi in muratura in combinazioni non sismiche

| Sezione | γM | N | M | Mu | Comb. | c.s. | Verifica |
|---|---|---|---|---|---|---|---|
| ini. | 3 | 358 | -15787 | 72292 | SLU 82 | 4.58 | Si |
| fin. | 3 | 469 | 7213 | 72292 | SLU 82 | 10.02 | Si |
| ini. | 3 | 196 | -16146 | 72292 | SLU 84 | 4.48 | Si |
| fin. | 3 | 297 | 4389 | 72292 | SLU 84 | 16.47 | Si |
| ini. | 3 | 4 | -16383 | 72292 | SLU 77 | 4.41 | Si |
| fin. | 3 | 84 | -405 | 72292 | SLU 77 | 178.59 | Si |
| ini. | 3 | 149 | -17198 | 72292 | SLU 83 | 4.2 | Si |
| fin. | 3 | 253 | 2600 | 72292 | SLU 83 | 27.8 | Si |
| ini. | 3 | 109 | -15294 | 72292 | SLU 41 | 4.73 | Si |
| fin. | 3 | 209 | 2112 | 72292 | SLU 41 | 34.22 | Si |
| ini. | 3 | 52 | -15331 | 72292 | SLU 78 | 4.72 | Si |
| fin. | 3 | 129 | 1384 | 72292 | SLU 78 | 52.22 | Si |
| ini. | 3 | 166 | -16024 | 72292 | SLU 74 | 4.51 | Si |
| fin. | 3 | 256 | 2419 | 72292 | SLU 74 | 29.89 | Si |
| ini. | 3 | -1 | -15252 | 72292 | SLU 80 | 4.74 | Si |
| fin. | 3 | 74 | 775 | 72292 | SLU 80 | 93.23 | Si |
| ini. | 3 | -48 | -16304 | 72292 | SLU 79 | 4.43 | Si |
| fin. | 3 | 29 | -1014 | 72292 | SLU 79 | 71.32 | Si |
| ini. | 3 | 310 | -16839 | 72292 | SLU 81 | 4.29 | Si |
| fin. | 3 | 425 | 5424 | 72292 | SLU 81 | 13.33 | Si |

### Verifiche a taglio delle travi in muratura secondo §C8.7.1.3.1 in combinazioni non sismiche

| Sezione | γM | N | M | V | Vt | Vp | Vt fess. diag. | Vt,lim | Comb. | c.s. | Verifica |
|---|---|---|---|---|---|---|---|---|---|---|---|
| ini. | 3 | 0 | -17198 | 1282 | | | 776 | 292 | SLU 83 | 0.23 | No |
| fin. | 3 | 0 | 2600 | -1375 | | | 776 | 292 | SLU 83 | 0.21 | No |
| ini. | 3 | 0 | -16304 | 1147 | | | 776 | 292 | SLU 79 | 0.25 | No |
| fin. | 3 | 0 | -1014 | -1421 | | | 776 | 292 | SLU 79 | 0.21 | No |
| ini. | 3 | 0 | -13460 | 977 | | | 776 | 292 | SLU 69 | 0.3 | No |
| fin. | 3 | 0 | -2248 | -1371 | | | 776 | 292 | SLU 69 | 0.21 | No |
| ini. | 3 | 0 | -15331 | 1160 | | | 776 | 292 | SLU 78 | 0.25 | No |
| fin. | 3 | 0 | 1384 | -1356 | | | 776 | 292 | SLU 78 | 0.22 | No |
| ini. | 3 | 0 | -16839 | 1332 | | | 776 | 292 | SLU 81 | 0.22 | No |
| fin. | 3 | 0 | 5424 | -1301 | | | 776 | 292 | SLU 81 | 0.22 | No |
| ini. | 3 | 0 | -16383 | 1175 | | | 776 | 292 | SLU 77 | 0.25 | No |
| fin. | 3 | 0 | -405 | -1437 | | | 776 | 292 | SLU 77 | 0.2 | No |
| ini. | 3 | 0 | -14323 | 1044 | | | 776 | 292 | SLU 56 | 0.28 | No |
| fin. | 3 | 0 | -721 | -1324 | | | 776 | 292 | SLU 56 | 0.22 | No |
| ini. | 3 | 0 | -15252 | 1133 | | | 776 | 292 | SLU 80 | 0.26 | No |
| fin. | 3 | 0 | 775 | -1340 | | | 776 | 292 | SLU 80 | 0.22 | No |
| ini. | 3 | 0 | -16024 | 1225 | | | 776 | 292 | SLU 74 | 0.24 | No |
| fin. | 3 | 0 | 2419 | -1363 | | | 776 | 292 | SLU 74 | 0.21 | No |
| ini. | 3 | 0 | -13382 | 949 | | | 776 | 292 | SLU 71 | 0.31 | No |
| fin. | 3 | 0 | -2857 | -1355 | | | 776 | 292 | SLU 71 | 0.22 | No |

### Verifiche a pressoflessione delle travi in muratura in combinazioni sismiche

| Sezione | γM | N | M | Mu | Comb. | c.s. | Verifica |
|---|---|---|---|---|---|---|---|
| ini. | 2 | 3677 | -55196 | 90194 | SLV 16 | 1.63 | Si |
| fin. | 2 | 5000 | 95292 | 90194 | SLV 16 | 0.95 | No |
| ini. | 2 | 4279 | -33632 | 90194 | SLV 13 | 2.68 | Si |
| fin. | 2 | 4880 | 83409 | 90194 | SLV 13 | 1.08 | Si |
| ini. | 2 | 308 | -56351 | 90194 | SLV 12 | 1.6 | Si |
| fin. | 2 | 1837 | 48433 | 90194 | SLV 12 | 1.86 | Si |
| ini. | 2 | 3677 | -55196 | 90194 | SLV 15 | 1.63 | Si |
| fin. | 2 | 5000 | 95292 | 90194 | SLV 15 | 0.95 | No |
| ini. | 2 | 308 | -56351 | 90194 | SLV 11 | 1.6 | Si |
| fin. | 2 | 1837 | 48433 | 90194 | SLV 11 | 1.86 | Si |
| ini. | 2 | 4279 | -33632 | 90194 | SLV 14 | 2.68 | Si |
| fin. | 2 | 4880 | 83409 | 90194 | SLV 14 | 1.08 | Si |

| Sezione | γM | N | M | Mu | Comb. | c.s. | Verifica |
|---|---|---|---|---|---|---|---|
| ini. | 2 | -3939 | 13384 | 90194 | SLV 4 | 6.74 | Si |
| fin. | 2 | -4435 | -78202 | 90194 | SLV 4 | 1.15 | Si |
| ini. | 2 | -3337 | 34949 | 90194 | SLV 2 | 2.58 | Si |
| fin. | 2 | -4554 | -90085 | 90194 | SLV 2 | 1 | Si |
| ini. | 2 | -3337 | 34949 | 90194 | SLV 1 | 2.58 | Si |
| fin. | 2 | -4554 | -90085 | 90194 | SLV 1 | 1 | Si |
| ini. | 2 | -3939 | 13384 | 90194 | SLV 3 | 6.74 | Si |
| fin. | 2 | -4435 | -78202 | 90194 | SLV 3 | 1.15 | Si |

### Verifiche a taglio delle travi in muratura secondo §C8.7.1.3.1 in combinazioni sismiche

| Sezione | γM | N | M | V | Vt | Vp | Vt fess. diag. | Vt,lim | Comb. | c.s. | Verifica |
|---|---|---|---|---|---|---|---|---|---|---|---|
| ini. | 2 | 0 | -55196 | 4321 | | | 1165 | 438 | SLV 15 | 0.1 | No |
| fin. | 2 | 0 | 95292 | 2946 | | | 1165 | 438 | SLV 15 | 0.15 | No |
| ini. | 2 | 0 | 13384 | -1827 | | | 1165 | 438 | SLV 3 | 0.24 | No |
| fin. | 2 | 0 | -78202 | -3860 | | | 1165 | 438 | SLV 3 | 0.11 | No |
| ini. | 2 | 0 | 36104 | -1462 | | | 1165 | 438 | SLV 5 | 0.3 | No |
| fin. | 2 | 0 | -43226 | -3492 | | | 1165 | 438 | SLV 5 | 0.13 | No |
| ini. | 2 | 0 | -33632 | 3496 | | | 1165 | 438 | SLV 13 | 0.13 | No |
| fin. | 2 | 0 | 83409 | 2017 | | | 1165 | 438 | SLV 13 | 0.22 | No |
| ini. | 2 | 0 | 34949 | -2651 | | | 1165 | 438 | SLV 1 | 0.17 | No |
| fin. | 2 | 0 | -90085 | -4790 | | | 1165 | 438 | SLV 1 | 0.09 | No |
| ini. | 2 | 0 | -55196 | 4321 | | | 1165 | 438 | SLV 16 | 0.1 | No |
| fin. | 2 | 0 | 95292 | 2946 | | | 1165 | 438 | SLV 16 | 0.15 | No |
| ini. | 2 | 0 | 13384 | -1827 | | | 1165 | 438 | SLV 4 | 0.24 | No |
| fin. | 2 | 0 | -78202 | -3860 | | | 1165 | 438 | SLV 4 | 0.11 | No |
| ini. | 2 | 0 | 36104 | -1462 | | | 1165 | 438 | SLV 6 | 0.3 | No |
| fin. | 2 | 0 | -43226 | -3492 | | | 1165 | 438 | SLV 6 | 0.13 | No |
| ini. | 2 | 0 | -33632 | 3496 | | | 1165 | 438 | SLV 14 | 0.13 | No |
| fin. | 2 | 0 | 83409 | 2017 | | | 1165 | 438 | SLV 14 | 0.22 | No |
| ini. | 2 | 0 | 34949 | -2651 | | | 1165 | 438 | SLV 2 | 0.17 | No |
| fin. | 2 | 0 | -90085 | -4790 | | | 1165 | 438 | SLV 2 | 0.09 | No |

### Tabella dei coefficienti di sicurezza minimi

| Stato limite | Coeff.s. | Comb. | Verifica |
|---|---|---|---|
| PF_SLV | 0.947 | SLV 15 | No |
| V_SLV | 0.091 | SLV 1 | No |
| PF_SLU | 4.204 | SLU 83 | Si |
| V_SLU | 0.203 | SLU 77 | No |

## Trave di accoppiamento 75

Verifiche condotte secondo D.M. 17-01-18 (N.T.C.)

### Dati geometrici

| X ini. | Y ini. | Z ini.inf. | Z ini.sup. | H ini. | X fin. | Y fin. | Z fin.inf. | Z fin.sup | H fin. | Luce | Spessore | R. Trazione |
|---|---|---|---|---|---|---|---|---|---|---|---|---|
| -1736.3 | -335.9 | 544 | 634 | 90 | -1826.3 | -335.9 | 544 | 634 | 90 | 90 | 28 | 3500 |

### Caratteristiche del materiale

(Circolare 7 21-01-19 C8.5.I) Muratura in mattoni pieni e malta di calce LC2_Corti

| fb_ | fhk | fvk0 | fhmedio | τ0 | fv0 | μ | ϕ | fvk,lim | E | G | FC |
|---|---|---|---|---|---|---|---|---|---|---|---|
| 12 | | | 17.25 | 0.9 | 2 | 0.577 | 0.767 | 0.65 | 32000 | 12800 | 1.2 |

### Verifiche a pressoflessione delle travi in muratura in combinazioni non sismiche

| Sezione | γM | N | M | Mu | Comb. | c.s. | Verifica |
|---|---|---|---|---|---|---|---|
| ini. | 3 | -969 | -21258 | 103792 | SLU 60 | 4.88 | Si |
| fin. | 3 | -2358 | 56924 | 103792 | SLU 60 | 1.82 | Si |
| ini. | 3 | -1097 | -22432 | 103792 | SLU 81 | 4.63 | Si |
| fin. | 3 | -2549 | 61301 | 103792 | SLU 81 | 1.69 | Si |
| ini. | 3 | -1042 | -22531 | 103792 | SLU 76 | 4.61 | Si |
| fin. | 3 | -2430 | 60548 | 103792 | SLU 76 | 1.71 | Si |
| ini. | 3 | -1067 | -21087 | 103792 | SLU 75 | 4.92 | Si |
| fin. | 3 | -2432 | 59614 | 103792 | SLU 75 | 1.74 | Si |
| ini. | 3 | -967 | -25360 | 103792 | SLU 65 | 4.09 | Si |
| fin. | 3 | -2409 | 59500 | 103792 | SLU 65 | 1.74 | Si |
| ini. | 3 | -1072 | -27182 | 103792 | SLU 82 | 3.82 | Si |
| fin. | 3 | -2652 | 65494 | 103792 | SLU 82 | 1.58 | Si |
| ini. | 3 | -901 | -27678 | 103792 | SLU 52 | 3.75 | Si |
| fin. | 3 | -2436 | 61276 | 103792 | SLU 52 | 1.69 | Si |
| ini. | 3 | -944 | -26008 | 103792 | SLU 61 | 3.99 | Si |
| fin. | 3 | -2461 | 61118 | 103792 | SLU 61 | 1.7 | Si |
| ini. | 3 | -1085 | -20860 | 103792 | SLU 84 | 4.98 | Si |
| fin. | 3 | -2455 | 60390 | 103792 | SLU 84 | 1.72 | Si |
| ini. | 3 | -1029 | -28852 | 103792 | SLU 73 | 3.6 | Si |
| fin. | 3 | -2627 | 65653 | 103792 | SLU 73 | 1.58 | Si |

### Verifiche a taglio delle travi in muratura secondo §C8.7.1.3.1 in combinazioni non sismiche

| Sezione | γM | N | M | V | Vt | Vp | Vt fess. diag. | Vt,lim | Comb. | c.s. | Verifica |
|---|---|---|---|---|---|---|---|---|---|---|---|
| ini. | 3 | 0 | -20860 | -852 | | | 970 | 365 | SLU 84 | 0.43 | No |
| fin. | 3 | 0 | 60390 | 4145 | | | 970 | 365 | SLU 84 | 0.09 | No |
| ini. | 3 | 0 | -26008 | -533 | | | 970 | 365 | SLU 61 | 0.69 | No |
| fin. | 3 | 0 | 61118 | 4106 | | | 970 | 365 | SLU 61 | 0.09 | No |
| ini. | 3 | 0 | -21087 | -819 | | | 970 | 365 | SLU 75 | 0.45 | No |
| fin. | 3 | 0 | 59614 | 4095 | | | 970 | 365 | SLU 75 | 0.09 | No |
| ini. | 3 | 0 | -16110 | -1027 | | | 970 | 365 | SLU 83 | 0.36 | No |

| Sezione | γM | N | M | V | Vt | Vp | Vt fess. diag. | Vt,lim | Comb. | c.s. | Verifica |
|---|---|---|---|---|---|---|---|---|---|---|---|
| fin. | 3 | 0 | 56197 | 3997 | | | 970 | 365 | SLU 83 | 0.09 | No |
| ini. | 3 | 0 | -28852 | -480 | | | 970 | 365 | SLU 73 | 0.76 | No |
| fin. | 3 | 0 | 65653 | 4303 | | | 970 | 365 | SLU 73 | 0.08 | No |
| ini. | 3 | 0 | -21258 | -708 | | | 970 | 365 | SLU 60 | 0.52 | No |
| fin. | 3 | 0 | 56924 | 3958 | | | 970 | 365 | SLU 60 | 0.09 | No |
| ini. | 3 | 0 | -22432 | -759 | | | 970 | 365 | SLU 81 | 0.48 | No |
| fin. | 3 | 0 | 61301 | 4210 | | | 970 | 365 | SLU 81 | 0.09 | No |
| ini. | 3 | 0 | -27678 | -428 | | | 970 | 365 | SLU 52 | 0.85 | No |
| fin. | 3 | 0 | 61276 | 4051 | | | 970 | 365 | SLU 52 | 0.09 | No |
| ini. | 3 | 0 | -27182 | -585 | | | 970 | 365 | SLU 82 | 0.62 | No |
| fin. | 3 | 0 | 65494 | 4358 | | | 970 | 365 | SLU 82 | 0.08 | No |
| ini. | 3 | 0 | -22531 | -747 | | | 970 | 365 | SLU 76 | 0.49 | No |
| fin. | 3 | 0 | 60548 | 4091 | | | 970 | 365 | SLU 76 | 0.09 | No |

### Verifiche a pressoflessione delle travi in muratura in combinazioni sismiche

| Sezione | γM | N | M | Mu | Comb. | c.s. | Verifica |
|---|---|---|---|---|---|---|---|
| ini. | 2 | -577 | -194219 | 121694 | SLV 14 | 0.63 | No |
| fin. | 2 | -8627 | 204372 | 121694 | SLV 14 | 0.6 | No |
| ini. | 2 | -955 | 165904 | 121694 | SLV 4 | 0.73 | No |
| fin. | 2 | 5144 | -121994 | 121694 | SLV 4 | 1 | No |
| ini. | 2 | -155 | 133297 | 121694 | SLV 1 | 0.91 | No |
| fin. | 2 | 4281 | -83152 | 121694 | SLV 1 | 1.46 | Si |
| ini. | 2 | -577 | -194219 | 121694 | SLV 13 | 0.63 | No |
| fin. | 2 | -8627 | 204372 | 121694 | SLV 13 | 0.6 | No |
| ini. | 2 | 504 | -117631 | 121694 | SLV 9 | 1.03 | Si |
| fin. | 2 | -5116 | 149055 | 121694 | SLV 9 | 0.82 | No |
| ini. | 2 | -155 | 133297 | 121694 | SLV 2 | 0.91 | No |
| fin. | 2 | 4281 | -83152 | 121694 | SLV 2 | 1.46 | Si |
| ini. | 2 | 504 | -117631 | 121694 | SLV 10 | 1.03 | Si |
| fin. | 2 | -5116 | 149055 | 121694 | SLV 10 | 0.82 | No |
| ini. | 2 | -1376 | -161612 | 121694 | SLV 16 | 0.75 | No |
| fin. | 2 | -7763 | 165530 | 121694 | SLV 16 | 0.74 | No |
| ini. | 2 | -1376 | -161612 | 121694 | SLV 15 | 0.75 | No |
| fin. | 2 | -7763 | 165530 | 121694 | SLV 15 | 0.74 | No |
| ini. | 2 | -955 | 165904 | 121694 | SLV 3 | 0.73 | No |
| fin. | 2 | 5144 | -121994 | 121694 | SLV 3 | 1 | No |

### Verifiche a taglio delle travi in muratura secondo §C8.7.1.3.1 in combinazioni sismiche

| Sezione | γM | N | M | V | Vt | Vp | Vt fess. diag. | Vt,lim | Comb. | c.s. | Verifica |
|---|---|---|---|---|---|---|---|---|---|---|---|
| ini. | 2 | 0 | -161612 | 5406 | | | 1456 | 548 | SLV 16 | 0.1 | No |
| fin. | 2 | 0 | 165530 | 8473 | | | 1456 | 548 | SLV 16 | 0.06 | No |
| ini. | 2 | 0 | 133297 | -6597 | | | 1456 | 548 | SLV 1 | 0.08 | No |
| fin. | 2 | 0 | -83152 | -2688 | | | 1456 | 548 | SLV 1 | 0.2 | No |
| ini. | 2 | 0 | -194219 | 6782 | | | 1456 | 548 | SLV 13 | 0.08 | No |
| fin. | 2 | 0 | 204372 | 10550 | | | 1456 | 548 | SLV 13 | 0.05 | No |
| ini. | 2 | 0 | -194219 | 6782 | | | 1456 | 548 | SLV 14 | 0.08 | No |
| fin. | 2 | 0 | 204372 | 10550 | | | 1456 | 548 | SLV 14 | 0.05 | No |
| ini. | 2 | 0 | 165904 | -7973 | | | 1456 | 548 | SLV 3 | 0.07 | No |
| fin. | 2 | 0 | -121994 | -4765 | | | 1456 | 548 | SLV 3 | 0.11 | No |
| ini. | 2 | 0 | -161612 | 5406 | | | 1456 | 548 | SLV 15 | 0.1 | No |
| fin. | 2 | 0 | 165530 | 8473 | | | 1456 | 548 | SLV 15 | 0.06 | No |
| ini. | 2 | 0 | -117631 | 3705 | | | 1456 | 548 | SLV 10 | 0.15 | No |
| fin. | 2 | 0 | 149055 | 8340 | | | 1456 | 548 | SLV 10 | 0.07 | No |
| ini. | 2 | 0 | -117631 | 3705 | | | 1456 | 548 | SLV 9 | 0.15 | No |
| fin. | 2 | 0 | 149055 | 8340 | | | 1456 | 548 | SLV 9 | 0.07 | No |
| ini. | 2 | 0 | 165904 | -7973 | | | 1456 | 548 | SLV 4 | 0.07 | No |
| fin. | 2 | 0 | -121994 | -4765 | | | 1456 | 548 | SLV 4 | 0.11 | No |
| ini. | 2 | 0 | 133297 | -6597 | | | 1456 | 548 | SLV 2 | 0.08 | No |
| fin. | 2 | 0 | -83152 | -2688 | | | 1456 | 548 | SLV 2 | 0.2 | No |

### Tabella dei coefficienti di sicurezza minimi

| Stato limite | Coeff.s. | Comb. | Verifica |
|---|---|---|---|
| PF_SLV | 0.595 | SLV 13 | No |
| V_SLV | 0.052 | SLV 13 | No |
| PF_SLU | 1.581 | SLU 73 | Si |
| V_SLU | 0.084 | SLU 82 | No |

## Trave di accoppiamento 76

Verifiche condotte secondo D.M. 17-01-18 (N.T.C.)

### Dati geometrici

| X ini. | Y ini. | Z ini.inf. | Z ini.sup. | H ini. | X fin. | Y fin. | Z fin.inf. | Z fin.sup | H fin. | Luce | Spessore | R. Trazione |
|---|---|---|---|---|---|---|---|---|---|---|---|---|
| -1736.3 | -335.9 | 814 | 896 | 82 | -1826.3 | -335.9 | 814 | 896 | 82 | 90 | 28 | 3500 |

### Caratteristiche del materiale

(Circolare 7 21-01-19 C8.5.I) Muratura in mattoni pieni e malta di calce LC2_Corti

| fb_ | fhk | fvk0 | fhmedio | τ0 | fv0 | μ | ϕ | fvk,lim | E | G | FC |
|---|---|---|---|---|---|---|---|---|---|---|---|
| 12 | | | 17.25 | 0.9 | 2 | 0.577 | 0.767 | 0.65 | 32000 | 12800 | 1.2 |

### Verifiche a pressoflessione delle travi in muratura in combinazioni non sismiche

| Sezione | γM | N | M | Mu | Comb. | c.s. | Verifica |
|---|---|---|---|---|---|---|---|
| ini. | 3 | -162 | -33165 | 89792 | SLU 60 | 2.71 | Si |
| fin. | 3 | 58 | -3250 | 89792 | SLU 60 | 27.63 | Si |

| Sezione | γM | N | M | Mu | Comb. | c.s. | Verifica |
|---|---|---|---|---|---|---|---|
| ini. | 3 | -249 | -32778 | 89792 | SLU 40 | 2.74 | Si |
| fin. | 3 | 122 | 99 | 89792 | SLU 40 | 908.26 | Si |
| ini. | 3 | -309 | -33881 | 89792 | SLU 52 | 2.65 | Si |
| fin. | 3 | 181 | 3870 | 89792 | SLU 52 | 23.2 | Si |
| ini. | 3 | -207 | -33240 | 89792 | SLU 76 | 2.7 | Si |
| fin. | 3 | -13 | -2829 | 89792 | SLU 76 | 31.74 | Si |
| ini. | 3 | -187 | -36477 | 89792 | SLU 81 | 2.46 | Si |
| fin. | 3 | 32 | -4712 | 89792 | SLU 81 | 19.05 | Si |
| ini. | 3 | -252 | -34756 | 89792 | SLU 61 | 2.58 | Si |
| fin. | 3 | 147 | 1099 | 89792 | SLU 61 | 81.7 | Si |
| ini. | 3 | -176 | -33466 | 89792 | SLU 75 | 2.68 | Si |
| fin. | 3 | -30 | -4765 | 89792 | SLU 75 | 18.84 | Si |
| ini. | 3 | -334 | -37193 | 89792 | SLU 73 | 2.41 | Si |
| fin. | 3 | 155 | 2407 | 89792 | SLU 73 | 37.3 | Si |
| ini. | 3 | -277 | -38068 | 89792 | SLU 82 | 2.36 | Si |
| fin. | 3 | 122 | -364 | 89792 | SLU 82 | 246.79 | Si |
| ini. | 3 | -151 | -34115 | 89792 | SLU 84 | 2.63 | Si |
| fin. | 3 | -47 | -5600 | 89792 | SLU 84 | 16.03 | Si |

## Verifiche a taglio delle travi in muratura secondo §C8.7.1.3.1 in combinazioni non sismiche

| Sezione | γM | N | M | V | Vt | Vp | Vt fess. diag. | Vt,lim | Comb. | c.s. | Verifica |
|---|---|---|---|---|---|---|---|---|---|---|---|
| ini. | 3 | 0 | -32523 | 2768 | | | 806 | 303 | SLU 83 | 0.11 | No |
| fin. | 3 | 0 | -9949 | -2285 | | | 806 | 303 | SLU 83 | 0.13 | No |
| ini. | 3 | 0 | -36477 | 2954 | | | 806 | 303 | SLU 81 | 0.1 | No |
| fin. | 3 | 0 | -4712 | -2005 | | | 806 | 303 | SLU 81 | 0.15 | No |
| ini. | 3 | 0 | -37193 | 2931 | | | 806 | 303 | SLU 73 | 0.1 | No |
| fin. | 3 | 0 | 2407 | -1559 | | | 806 | 303 | SLU 73 | 0.19 | No |
| ini. | 3 | 0 | -31874 | 2711 | | | 806 | 303 | SLU 74 | 0.11 | No |
| fin. | 3 | 0 | -9114 | -2184 | | | 806 | 303 | SLU 74 | 0.14 | No |
| ini. | 3 | 0 | -34756 | 2789 | | | 806 | 303 | SLU 61 | 0.11 | No |
| fin. | 3 | 0 | 1099 | -1577 | | | 806 | 303 | SLU 61 | 0.19 | No |
| ini. | 3 | 0 | -33240 | 2744 | | | 806 | 303 | SLU 76 | 0.11 | No |
| fin. | 3 | 0 | -2829 | -1839 | | | 806 | 303 | SLU 76 | 0.16 | No |
| ini. | 3 | 0 | -33165 | 2723 | | | 806 | 303 | SLU 60 | 0.11 | No |
| fin. | 3 | 0 | -3250 | -1805 | | | 806 | 303 | SLU 60 | 0.17 | No |
| ini. | 3 | 0 | -34115 | 2834 | | | 806 | 303 | SLU 84 | 0.11 | No |
| fin. | 3 | 0 | -5600 | -2057 | | | 806 | 303 | SLU 84 | 0.15 | No |
| ini. | 3 | 0 | -38068 | 3021 | | | 806 | 303 | SLU 82 | 0.1 | No |
| fin. | 3 | 0 | -364 | -1777 | | | 806 | 303 | SLU 82 | 0.17 | No |
| ini. | 3 | 0 | -33466 | 2778 | | | 806 | 303 | SLU 75 | 0.11 | No |
| fin. | 3 | 0 | -4765 | -1956 | | | 806 | 303 | SLU 75 | 0.15 | No |

## Verifiche a pressoflessione delle travi in muratura in combinazioni sismiche

| Sezione | γM | N | M | Mu | Comb. | c.s. | Verifica |
|---|---|---|---|---|---|---|---|
| ini. | 2 | 1710 | 82204 | 107694 | SLV 3 | 1.31 | Si |
| fin. | 2 | -4404 | -140350 | 107694 | SLV 3 | 0.77 | No |
| ini. | 2 | 1710 | 82204 | 107694 | SLV 4 | 1.31 | Si |
| fin. | 2 | -4404 | -140350 | 107694 | SLV 4 | 0.77 | No |
| ini. | 2 | -1973 | -129519 | 107694 | SLV 14 | 0.83 | No |
| fin. | 2 | 4366 | 133257 | 107694 | SLV 14 | 0.81 | No |
| ini. | 2 | -951 | -96353 | 107694 | SLV 10 | 1.12 | Si |
| fin. | 2 | 2660 | 79203 | 107694 | SLV 10 | 1.36 | Si |
| ini. | 2 | 1534 | 55213 | 107694 | SLV 2 | 1.95 | Si |
| fin. | 2 | -3505 | -112850 | 107694 | SLV 2 | 0.95 | No |
| ini. | 2 | 1534 | 55213 | 107694 | SLV 1 | 1.95 | Si |
| fin. | 2 | -3505 | -112850 | 107694 | SLV 1 | 0.95 | No |
| ini. | 2 | -951 | -96353 | 107694 | SLV 9 | 1.12 | Si |
| fin. | 2 | 2660 | 79203 | 107694 | SLV 9 | 1.36 | Si |
| ini. | 2 | -1797 | -102527 | 107694 | SLV 16 | 1.05 | Si |
| fin. | 2 | 3467 | 105757 | 107694 | SLV 16 | 1.02 | Si |
| ini. | 2 | -1973 | -129519 | 107694 | SLV 13 | 0.83 | No |
| fin. | 2 | 4366 | 133257 | 107694 | SLV 13 | 0.81 | No |
| ini. | 2 | -1797 | -102527 | 107694 | SLV 15 | 1.05 | Si |
| fin. | 2 | 3467 | 105757 | 107694 | SLV 15 | 1.02 | Si |

## Verifiche a taglio delle travi in muratura secondo §C8.7.1.3.1 in combinazioni sismiche

| Sezione | γM | N | M | V | Vt | Vp | Vt fess. diag. | Vt,lim | Comb. | c.s. | Verifica |
|---|---|---|---|---|---|---|---|---|---|---|---|
| ini. | 2 | 0 | -96353 | 5697 | | | 1208 | 455 | SLV 10 | 0.08 | No |
| fin. | 2 | 0 | 79203 | 2103 | | | 1208 | 455 | SLV 10 | 0.22 | No |
| ini. | 2 | 0 | 82204 | -3313 | | | 1208 | 455 | SLV 3 | 0.14 | No |
| fin. | 2 | 0 | -140350 | -7564 | | | 1208 | 455 | SLV 3 | 0.06 | No |
| ini. | 2 | 0 | 55213 | -1898 | | | 1208 | 455 | SLV 1 | 0.24 | No |
| fin. | 2 | 0 | -112850 | -6496 | | | 1208 | 455 | SLV 1 | 0.07 | No |
| ini. | 2 | 0 | -129519 | 7249 | | | 1208 | 455 | SLV 14 | 0.06 | No |
| fin. | 2 | 0 | 133257 | 4816 | | | 1208 | 455 | SLV 14 | 0.09 | No |
| ini. | 2 | 0 | 82204 | -3313 | | | 1208 | 455 | SLV 4 | 0.14 | No |
| fin. | 2 | 0 | -140350 | -7564 | | | 1208 | 455 | SLV 4 | 0.06 | No |
| ini. | 2 | 0 | -102527 | 5834 | | | 1208 | 455 | SLV 16 | 0.08 | No |
| fin. | 2 | 0 | 105757 | 3748 | | | 1208 | 455 | SLV 16 | 0.12 | No |
| ini. | 2 | 0 | -129519 | 7249 | | | 1208 | 455 | SLV 13 | 0.06 | No |
| fin. | 2 | 0 | 133257 | 4816 | | | 1208 | 455 | SLV 13 | 0.09 | No |
| ini. | 2 | 0 | -102527 | 5834 | | | 1208 | 455 | SLV 15 | 0.08 | No |
| fin. | 2 | 0 | 105757 | 3748 | | | 1208 | 455 | SLV 15 | 0.12 | No |
| ini. | 2 | 0 | 55213 | -1898 | | | 1208 | 455 | SLV 2 | 0.24 | No |
| fin. | 2 | 0 | -112850 | -6496 | | | 1208 | 455 | SLV 2 | 0.07 | No |
| ini. | 2 | 0 | -96353 | 5697 | | | 1208 | 455 | SLV 9 | 0.08 | No |
| fin. | 2 | 0 | 79203 | 2103 | | | 1208 | 455 | SLV 9 | 0.22 | No |

### Tabella dei coefficienti di sicurezza minimi

| Stato limite | Coeff.s. | Comb. | Verifica |
|---|---|---|---|
| PF_SLV | 0.767 | SLV 3 | No |
| V_SLV | 0.06 | SLV 3 | No |
| PF_SLU | 2.359 | SLU 82 | Si |
| V_SLU | 0.1 | SLU 82 | No |

## Trave di accoppiamento 77

Verifiche condotte secondo D.M. 17-01-18 (N.T.C.)

### Dati geometrici

| X ini. | Y ini. | Z ini.inf. | Z ini.sup. | H ini. | X fin. | Y fin. | Z fin.inf. | Z fin.sup | H fin. | Luce | Spessore | R. Trazione |
|---|---|---|---|---|---|---|---|---|---|---|---|---|
| -1705.3 | -486.2 | 870 | 896 | 26 | -1705.3 | -377.2 | 870 | 896 | 26 | 109 | 30 | 3500 |

### Caratteristiche del materiale

(Circolare 7 21-01-19 C8.5.I) Muratura in mattoni pieni e malta di calce LC2_Corti

| fb_ | fhk | fvk0 | fhmedio | τ0 | fv0 | μ | ϕ | fvk,lim | E | G | FC |
|---|---|---|---|---|---|---|---|---|---|---|---|
| 12 | | | 17.25 | 0.9 | 2 | 0.577 | 0.767 | 0.65 | 32000 | 12800 | 1.2 |

### Verifiche a pressoflessione delle travi in muratura in combinazioni non sismiche

| Sezione | γM | N | M | Mu | Comb. | c.s. | Verifica |
|---|---|---|---|---|---|---|---|
| ini. | 3 | -1 | 89 | 10289 | SLU 74 | 115.36 | Si |
| fin. | 3 | -1 | 19028 | 10289 | SLU 74 | 0.54 | No |
| ini. | 3 | -1 | -44 | 10289 | SLU 83 | 232.54 | Si |
| fin. | 3 | -1 | 20329 | 10289 | SLU 83 | 0.51 | No |
| ini. | 3 | -1 | -425 | 10289 | SLU 39 | 24.21 | Si |
| fin. | 3 | -1 | 19959 | 10289 | SLU 39 | 0.52 | No |
| ini. | 3 | 4 | 108 | 10289 | SLU 40 | 95.66 | Si |
| fin. | 3 | 4 | 19945 | 10289 | SLU 40 | 0.52 | No |
| ini. | 3 | -1 | -336 | 10289 | SLU 41 | 30.63 | Si |
| fin. | 3 | -1 | 18676 | 10289 | SLU 41 | 0.55 | No |
| ini. | 3 | 4 | 622 | 10289 | SLU 75 | 16.55 | Si |
| fin. | 3 | 4 | 19013 | 10289 | SLU 75 | 0.54 | No |
| ini. | 3 | -2 | -133 | 10289 | SLU 81 | 77.19 | Si |
| fin. | 3 | -2 | 21612 | 10289 | SLU 81 | 0.48 | No |
| ini. | 3 | 4 | 488 | 10289 | SLU 84 | 21.07 | Si |
| fin. | 3 | 4 | 20314 | 10289 | SLU 84 | 0.51 | No |
| ini. | 3 | 7 | 957 | 10289 | SLU 73 | 10.75 | Si |
| fin. | 3 | 7 | 19491 | 10289 | SLU 73 | 0.53 | No |
| ini. | 3 | 3 | 399 | 10289 | SLU 82 | 25.77 | Si |
| fin. | 3 | 3 | 21597 | 10289 | SLU 82 | 0.48 | No |

### Verifiche a taglio delle travi in muratura secondo §C8.7.1.3.1 in combinazioni non sismiche

| Sezione | γM | N | M | V | Vt | Vp | Vt fess. diag. | Vt,lim | Comb. | c.s. | Verifica |
|---|---|---|---|---|---|---|---|---|---|---|---|
| ini. | 3 | 0 | 108 | 239 | | | 200 | 75 | SLU 40 | 0.32 | No |
| fin. | 3 | 0 | 19945 | 125 | | | 200 | 75 | SLU 40 | 0.6 | No |
| ini. | 3 | 0 | 488 | 256 | | | 200 | 75 | SLU 84 | 0.29 | No |
| fin. | 3 | 0 | 20314 | 108 | | | 200 | 75 | SLU 84 | 0.7 | No |
| ini. | 3 | 0 | -425 | 244 | | | 200 | 75 | SLU 39 | 0.31 | No |
| fin. | 3 | 0 | 19959 | 130 | | | 200 | 75 | SLU 39 | 0.58 | No |
| ini. | 3 | 0 | 89 | 247 | | | 200 | 75 | SLU 74 | 0.3 | No |
| fin. | 3 | 0 | 19028 | 100 | | | 200 | 75 | SLU 74 | 0.75 | No |
| ini. | 3 | 0 | 957 | 244 | | | 200 | 75 | SLU 73 | 0.31 | No |
| fin. | 3 | 0 | 19491 | 96 | | | 200 | 75 | SLU 73 | 0.78 | No |
| ini. | 3 | 0 | 622 | 242 | | | 200 | 75 | SLU 75 | 0.31 | No |
| fin. | 3 | 0 | 19013 | 95 | | | 200 | 75 | SLU 75 | 0.79 | No |
| ini. | 3 | 0 | 399 | 268 | | | 200 | 75 | SLU 82 | 0.28 | No |
| fin. | 3 | 0 | 21597 | 121 | | | 200 | 75 | SLU 82 | 0.62 | No |
| ini. | 3 | 0 | -133 | 273 | | | 200 | 75 | SLU 81 | 0.28 | No |
| fin. | 3 | 0 | 21612 | 126 | | | 200 | 75 | SLU 81 | 0.6 | No |
| ini. | 3 | 0 | -44 | 261 | | | 200 | 75 | SLU 83 | 0.29 | No |
| fin. | 3 | 0 | 20329 | 113 | | | 200 | 75 | SLU 83 | 0.67 | No |
| ini. | 3 | 0 | 203 | 238 | | | 200 | 75 | SLU 60 | 0.32 | No |
| fin. | 3 | 0 | 18130 | 91 | | | 200 | 75 | SLU 60 | 0.83 | No |

### Verifiche a pressoflessione delle travi in muratura in combinazioni sismiche

| Sezione | γM | N | M | Mu | Comb. | c.s. | Verifica |
|---|---|---|---|---|---|---|---|
| ini. | 2 | 55 | -7048 | 15434 | SLV 10 | 2.19 | Si |
| fin. | 2 | 119 | 81232 | 15434 | SLV 10 | 0.19 | No |
| ini. | 2 | 21 | -2542 | 15434 | SLD 9 | 6.07 | Si |
| fin. | 2 | 48 | 39658 | 15434 | SLD 9 | 0.39 | No |
| ini. | 2 | 55 | -7048 | 15434 | SLV 9 | 2.19 | Si |
| fin. | 2 | 119 | 81232 | 15434 | SLV 9 | 0.19 | No |
| ini. | 2 | -58 | 7760 | 15434 | SLV 7 | 1.99 | Si |
| fin. | 2 | -122 | -57470 | 15434 | SLV 7 | 0.27 | No |
| ini. | 2 | -58 | 7760 | 15434 | SLV 8 | 1.99 | Si |
| fin. | 2 | -122 | -57470 | 15434 | SLV 8 | 0.27 | No |
| ini. | 2 | 33 | -5452 | 15434 | SLV 5 | 2.83 | Si |
| fin. | 2 | 96 | 61110 | 15434 | SLV 5 | 0.25 | No |
| ini. | 2 | 21 | -2542 | 15434 | SLD 10 | 6.07 | Si |
| fin. | 2 | 48 | 39658 | 15434 | SLD 10 | 0.39 | No |
| ini. | 2 | 49 | -4285 | 15434 | SLV 14 | 3.6 | Si |
| fin. | 2 | 69 | 63205 | 15434 | SLV 14 | 0.24 | No |
| ini. | 2 | 33 | -5452 | 15434 | SLV 6 | 2.83 | Si |

| Sezione | γM | N | M | Mu | Comb. | c.s. | Verifica |
|---|---|---|---|---|---|---|---|
| fin. | 2 | 96 | 61110 | 15434 | SLV 6 | 0.25 | No |
| ini. | 2 | 49 | -4285 | 15434 | SLV 13 | 3.6 | Si |
| fin. | 2 | 69 | 63205 | 15434 | SLV 13 | 0.24 | No |

### Verifiche a taglio delle travi in muratura secondo §C8.7.1.3.1 in combinazioni sismiche

| Sezione | γM | N | M | V | Vt | Vp | Vt fess. diag. | Vt,lim | Comb. | c.s. | Verifica |
|---|---|---|---|---|---|---|---|---|---|---|---|
| ini. | 2 | 0 | -7048 | 796 | | | 300 | 113 | SLV 10 | 0.14 | No |
| fin. | 2 | 0 | 81232 | 778 | | | 300 | 113 | SLV 10 | 0.15 | No |
| ini. | 2 | 0 | -4285 | 641 | | | 300 | 113 | SLV 14 | 0.18 | No |
| fin. | 2 | 0 | 63205 | 1005 | | | 300 | 113 | SLV 14 | 0.11 | No |
| ini. | 2 | 0 | 7760 | -471 | | | 300 | 113 | SLV 7 | 0.24 | No |
| fin. | 2 | 0 | -57470 | -679 | | | 300 | 113 | SLV 7 | 0.17 | No |
| ini. | 2 | 0 | 4997 | -317 | | | 300 | 113 | SLV 4 | 0.36 | No |
| fin. | 2 | 0 | -39443 | -906 | | | 300 | 113 | SLV 4 | 0.12 | No |
| ini. | 2 | 0 | 4997 | -317 | | | 300 | 113 | SLV 3 | 0.36 | No |
| fin. | 2 | 0 | -39443 | -906 | | | 300 | 113 | SLV 3 | 0.12 | No |
| ini. | 2 | 0 | -321 | 318 | | | 300 | 113 | SLV 15 | 0.36 | No |
| fin. | 2 | 0 | 27631 | 713 | | | 300 | 113 | SLV 15 | 0.16 | No |
| ini. | 2 | 0 | -321 | 318 | | | 300 | 113 | SLV 16 | 0.36 | No |
| fin. | 2 | 0 | 27631 | 713 | | | 300 | 113 | SLV 16 | 0.16 | No |
| ini. | 2 | 0 | -7048 | 796 | | | 300 | 113 | SLV 9 | 0.14 | No |
| fin. | 2 | 0 | 81232 | 778 | | | 300 | 113 | SLV 9 | 0.15 | No |
| ini. | 2 | 0 | 7760 | -471 | | | 300 | 113 | SLV 8 | 0.24 | No |
| fin. | 2 | 0 | -57470 | -679 | | | 300 | 113 | SLV 8 | 0.17 | No |
| ini. | 2 | 0 | -4285 | 641 | | | 300 | 113 | SLV 13 | 0.18 | No |
| fin. | 2 | 0 | 63205 | 1005 | | | 300 | 113 | SLV 13 | 0.11 | No |

### Tabella dei coefficienti di sicurezza minimi

| Stato limite | Coeff.s. | Comb. | Verifica |
|---|---|---|---|
| PF_SLV | 0.19 | SLV 9 | No |
| V_SLV | 0.113 | SLV 13 | No |
| PF_SLU | 0.476 | SLU 81 | No |
| V_SLU | 0.276 | SLU 81 | No |

## Trave di accoppiamento 78

Verifiche condotte secondo D.M. 17-01-18 (N.T.C.)

### Dati geometrici

| X ini. | Y ini. | Z ini.inf. | Z ini.sup. | H ini. | X fin. | Y fin. | Z fin.inf. | Z fin.sup | H fin. | Luce | Spessore | R. Trazione |
|---|---|---|---|---|---|---|---|---|---|---|---|---|
| -1543.3 | -335.9 | 754 | 896 | 142 | -1633.3 | -335.9 | 754 | 896 | 142 | 90 | 28 | 3500 |

### Caratteristiche del materiale

(Circolare 7 21-01-19 C8.5.I) Muratura in mattoni pieni e malta di calce LC2_Corti

| fb_ | fhk | fvk0 | fhmedio | τ0 | fv0 | μ | ϕ | fvk,lim | E | G | FC |
|---|---|---|---|---|---|---|---|---|---|---|---|
| 12 | | | 17.25 | 0.9 | 2 | 0.577 | 0.767 | 0.65 | 32000 | 12800 | 1.2 |

### Verifiche a pressoflessione delle travi in muratura in combinazioni non sismiche

| Sezione | γM | N | M | Mu | Comb. | c.s. | Verifica |
|---|---|---|---|---|---|---|---|
| ini. | 3 | 179 | 36935 | 194792 | SLU 84 | 5.27 | Si |
| fin. | 3 | 179 | 29539 | 194792 | SLU 84 | 6.59 | Si |
| ini. | 3 | 90 | 25864 | 194792 | SLU 10 | 7.53 | Si |
| fin. | 3 | 90 | 39923 | 194792 | SLU 10 | 4.88 | Si |
| ini. | 3 | 163 | 33060 | 194792 | SLU 40 | 5.89 | Si |
| fin. | 3 | 163 | 36642 | 194792 | SLU 40 | 5.32 | Si |
| ini. | 3 | 144 | 35021 | 194792 | SLU 82 | 5.56 | Si |
| fin. | 3 | 144 | 41817 | 194792 | SLU 82 | 4.66 | Si |
| ini. | 3 | 93 | 31855 | 194792 | SLU 73 | 6.11 | Si |
| fin. | 3 | 93 | 45872 | 194792 | SLU 73 | 4.25 | Si |
| ini. | 3 | -30 | 20927 | 194792 | SLU 65 | 9.31 | Si |
| fin. | 3 | -30 | 40247 | 194792 | SLU 65 | 4.84 | Si |
| ini. | 3 | -53 | 16897 | 194792 | SLU 44 | 11.53 | Si |
| fin. | 3 | -53 | 39473 | 194792 | SLU 44 | 4.93 | Si |
| ini. | 3 | 113 | 29895 | 194792 | SLU 31 | 6.52 | Si |
| fin. | 3 | 113 | 40697 | 194792 | SLU 31 | 4.79 | Si |
| ini. | 3 | 121 | 30991 | 194792 | SLU 61 | 6.29 | Si |
| fin. | 3 | 121 | 41044 | 194792 | SLU 61 | 4.75 | Si |
| ini. | 3 | 70 | 27825 | 194792 | SLU 52 | 7 | Si |
| fin. | 3 | 70 | 45098 | 194792 | SLU 52 | 4.32 | Si |

### Verifiche a taglio delle travi in muratura secondo §C8.7.1.3.1 in combinazioni non sismiche

| Sezione | γM | N | M | V | Vt | Vp | Vt fess. diag. | Vt,lim | Comb. | c.s. | Verifica |
|---|---|---|---|---|---|---|---|---|---|---|---|
| ini. | 3 | 0 | 34659 | 633 | | | 1531 | 576 | SLU 83 | 0.91 | No |
| fin. | 3 | 0 | 19841 | -1004 | | | 1531 | 576 | SLU 83 | 0.57 | No |
| ini. | 3 | 0 | 32698 | 496 | | | 1531 | 576 | SLU 41 | 1.16 | Si |
| fin. | 3 | 0 | 14666 | -928 | | | 1531 | 576 | SLU 41 | 0.62 | No |
| ini. | 3 | 0 | 31820 | 497 | | | 1531 | 576 | SLU 77 | 1.16 | Si |
| fin. | 3 | 0 | 9004 | -1046 | | | 1531 | 576 | SLU 77 | 0.55 | No |
| ini. | 3 | 0 | 34097 | 580 | | | 1531 | 576 | SLU 78 | 0.99 | No |
| fin. | 3 | 0 | 18702 | -963 | | | 1531 | 576 | SLU 78 | 0.6 | No |
| ini. | 3 | 0 | 31890 | 454 | | | 1531 | 576 | SLU 79 | 1.27 | Si |
| fin. | 3 | 0 | 5151 | -1089 | | | 1531 | 576 | SLU 79 | 0.53 | No |
| ini. | 3 | 0 | 34166 | 536 | | | 1531 | 576 | SLU 80 | 1.07 | Si |
| fin. | 3 | 0 | 14849 | -1007 | | | 1531 | 576 | SLU 80 | 0.57 | No |

| Sezione | γM | N | M | V | Vt | Vp | Vt fess. diag. | Vt,lim | Comb. | c.s. | Verifica |
|---|---|---|---|---|---|---|---|---|---|---|---|
| ini. | 3 | 0 | 29929 | 316 | | | 1531 | 576 | SLU 37 | 1.82 | Si |
| fin. | 3 | 0 | -24 | -1013 | | | 1531 | 576 | SLU 37 | 0.57 | No |
| ini. | 3 | 0 | 32205 | 399 | | | 1531 | 576 | SLU 38 | 1.45 | Si |
| fin. | 3 | 0 | 9674 | -931 | | | 1531 | 576 | SLU 38 | 0.62 | No |
| ini. | 3 | 0 | 27859 | 397 | | | 1531 | 576 | SLU 58 | 1.45 | Si |
| fin. | 3 | 0 | 4377 | -962 | | | 1531 | 576 | SLU 58 | 0.6 | No |
| ini. | 3 | 0 | 29859 | 360 | | | 1531 | 576 | SLU 35 | 1.6 | Si |
| fin. | 3 | 0 | 3829 | -969 | | | 1531 | 576 | SLU 35 | 0.59 | No |

### Verifiche a pressoflessione delle travi in muratura in combinazioni sismiche

| Sezione | γM | N | M | Mu | Comb. | c.s. | Verifica |
|---|---|---|---|---|---|---|---|
| ini. | 2 | -528 | 42446 | 212694 | SLV 4 | 5.01 | Si |
| fin. | 2 | -1705 | -299231 | 212694 | SLV 4 | 0.71 | No |
| ini. | 2 | 681 | -29097 | 212694 | SLV 15 | 7.31 | Si |
| fin. | 2 | 1277 | 325651 | 212694 | SLV 15 | 0.65 | No |
| ini. | 2 | 681 | -29097 | 212694 | SLV 16 | 7.31 | Si |
| fin. | 2 | 1277 | 325651 | 212694 | SLV 16 | 0.65 | No |
| ini. | 2 | -528 | 42446 | 212694 | SLV 3 | 5.01 | Si |
| fin. | 2 | -1705 | -299231 | 212694 | SLV 3 | 0.71 | No |
| ini. | 2 | 534 | -11615 | 212694 | SLV 14 | 18.31 | Si |
| fin. | 2 | 1711 | 339158 | 212694 | SLV 14 | 0.63 | No |
| ini. | 2 | 232 | 4019 | 212694 | SLD 14 | 52.92 | Si |
| fin. | 2 | 724 | 156133 | 212694 | SLD 14 | 1.36 | Si |
| ini. | 2 | 232 | 4019 | 212694 | SLD 13 | 52.92 | Si |
| fin. | 2 | 724 | 156133 | 212694 | SLD 13 | 1.36 | Si |
| ini. | 2 | 534 | -11615 | 212694 | SLV 13 | 18.31 | Si |
| fin. | 2 | 1711 | 339158 | 212694 | SLV 13 | 0.63 | No |
| ini. | 2 | -675 | 59928 | 212694 | SLV 2 | 3.55 | Si |
| fin. | 2 | -1271 | -285724 | 212694 | SLV 2 | 0.74 | No |
| ini. | 2 | -675 | 59928 | 212694 | SLV 1 | 3.55 | Si |
| fin. | 2 | -1271 | -285724 | 212694 | SLV 1 | 0.74 | No |

### Verifiche a taglio delle travi in muratura secondo §C8.7.1.3.1 in combinazioni sismiche

| Sezione | γM | N | M | V | Vt | Vp | Vt fess. diag. | Vt,lim | Comb. | c.s. | Verifica |
|---|---|---|---|---|---|---|---|---|---|---|---|
| ini. | 2 | 0 | 55284 | -764 | | | 2297 | 864 | SLV 5 | 1.13 | Si |
| fin. | 2 | 0 | -51258 | -3939 | | | 2297 | 864 | SLV 5 | 0.22 | No |
| ini. | 2 | 0 | -29097 | 4344 | | | 2297 | 864 | SLV 15 | 0.2 | No |
| fin. | 2 | 0 | 325651 | 3844 | | | 2297 | 864 | SLV 15 | 0.22 | No |
| ini. | 2 | 0 | -11615 | 4225 | | | 2297 | 864 | SLV 13 | 0.2 | No |
| fin. | 2 | 0 | 339158 | 2423 | | | 2297 | 864 | SLV 13 | 0.36 | No |
| ini. | 2 | 0 | 55284 | -764 | | | 2297 | 864 | SLV 6 | 1.13 | Si |
| fin. | 2 | 0 | -51258 | -3939 | | | 2297 | 864 | SLV 6 | 0.22 | No |
| ini. | 2 | 0 | 42446 | -3117 | | | 2297 | 864 | SLV 3 | 0.28 | No |
| fin. | 2 | 0 | -299231 | -3394 | | | 2297 | 864 | SLV 3 | 0.25 | No |
| ini. | 2 | 0 | 59928 | -3236 | | | 2297 | 864 | SLV 2 | 0.27 | No |
| fin. | 2 | 0 | -285724 | -4815 | | | 2297 | 864 | SLV 2 | 0.18 | No |
| ini. | 2 | 0 | -29097 | 4344 | | | 2297 | 864 | SLV 16 | 0.2 | No |
| fin. | 2 | 0 | 325651 | 3844 | | | 2297 | 864 | SLV 16 | 0.22 | No |
| ini. | 2 | 0 | 59928 | -3236 | | | 2297 | 864 | SLV 1 | 0.27 | No |
| fin. | 2 | 0 | -285724 | -4815 | | | 2297 | 864 | SLV 1 | 0.18 | No |
| ini. | 2 | 0 | -11615 | 4225 | | | 2297 | 864 | SLV 14 | 0.2 | No |
| fin. | 2 | 0 | 339158 | 2423 | | | 2297 | 864 | SLV 14 | 0.36 | No |
| ini. | 2 | 0 | 42446 | -3117 | | | 2297 | 864 | SLV 4 | 0.28 | No |
| fin. | 2 | 0 | -299231 | -3394 | | | 2297 | 864 | SLV 4 | 0.25 | No |

### Tabella dei coefficienti di sicurezza minimi

| Stato limite | Coeff.s. | Comb. | Verifica |
|---|---|---|---|
| PF_SLV | 0.627 | SLV 13 | No |
| V_SLV | 0.18 | SLV 1 | No |
| PF_SLU | 4.246 | SLU 73 | Si |
| V_SLU | 0.529 | SLU 79 | No |

## Trave di accoppiamento 79

Verifiche condotte secondo D.M. 17-01-18 (N.T.C.)

### Dati geometrici

| X ini. | Y ini. | Z ini.inf. | Z ini.sup. | H ini. | X fin. | Y fin. | Z fin.inf. | Z fin.sup | H fin. | Luce | Spessore | R. Trazione |
|---|---|---|---|---|---|---|---|---|---|---|---|---|
| -1443.8 | -485.9 | 870 | 896 | 26 | -1627.8 | -485.9 | 870 | 896 | 26 | 184 | 30 | 3500 |

### Caratteristiche del materiale

(Circolare 7 21-01-19 C8.5.I) Muratura in mattoni pieni e malta di calce LC2_Corti

| fb_ | fhk | fvk0 | fhmedio | τ0 | fv0 | μ | ϕ | fvk,lim | E | G | FC |
|---|---|---|---|---|---|---|---|---|---|---|---|
| 12 | | | 17.25 | 0.9 | 2 | 0.577 | 0.767 | 0.65 | 32000 | 12800 | 1.2 |

### Verifiche a pressoflessione delle travi in muratura in combinazioni non sismiche

| Sezione | γM | N | M | Mu | Comb. | c.s. | Verifica |
|---|---|---|---|---|---|---|---|
| ini. | 3 | -7 | -11261 | 10289 | SLU 65 | 0.91 | No |
| fin. | 3 | -7 | 3591 | 10289 | SLU 65 | 2.86 | Si |
| ini. | 3 | -1 | -11489 | 10289 | SLU 82 | 0.9 | No |
| fin. | 3 | -1 | 3825 | 10289 | SLU 82 | 2.69 | Si |
| ini. | 3 | 12 | -11126 | 10289 | SLU 64 | 0.92 | No |
| fin. | 3 | 12 | 3506 | 10289 | SLU 64 | 2.93 | Si |
| ini. | 3 | 10 | -11092 | 10289 | SLU 43 | 0.93 | No |

| Sezione | γM | N | M | Mu | Comb. | c.s. | Verifica |
|---|---|---|---|---|---|---|---|
| fin. | 3 | 10 | 3473 | 10289 | SLU 43 | 2.96 | Si |
| ini. | 3 | -8 | -11459 | 10289 | SLU 73 | 0.9 | No |
| fin. | 3 | -8 | 3779 | 10289 | SLU 73 | 2.72 | Si |
| ini. | 3 | -4 | -11456 | 10289 | SLU 61 | 0.9 | No |
| fin. | 3 | -4 | 3793 | 10289 | SLU 61 | 2.71 | Si |
| ini. | 3 | -9 | -11227 | 10289 | SLU 44 | 0.92 | No |
| fin. | 3 | -9 | 3559 | 10289 | SLU 44 | 2.89 | Si |
| ini. | 3 | 10 | -11408 | 10289 | SLU 81 | 0.9 | No |
| fin. | 3 | 10 | 3774 | 10289 | SLU 81 | 2.73 | Si |
| ini. | 3 | -11 | -11425 | 10289 | SLU 52 | 0.9 | No |
| fin. | 3 | -11 | 3747 | 10289 | SLU 52 | 2.75 | Si |
| ini. | 3 | 7 | -11375 | 10289 | SLU 60 | 0.9 | No |
| fin. | 3 | 7 | 3742 | 10289 | SLU 60 | 2.75 | Si |

## Verifiche a taglio delle travi in muratura secondo §C8.7.1.3.1 in combinazioni non sismiche

| Sezione | γM | N | M | V | Vt | Vp | Vt fess. diag. | Vt,lim | Comb. | c.s. | Verifica |
|---|---|---|---|---|---|---|---|---|---|---|---|
| ini. | 3 | 0 | -11092 | 202 | | | 200 | 75 | SLU 43 | 0.37 | No |
| fin. | 3 | 0 | 3473 | -44 | | | 200 | 75 | SLU 43 | 1.72 | Si |
| ini. | 3 | 0 | -11408 | 206 | | | 200 | 75 | SLU 81 | 0.37 | No |
| fin. | 3 | 0 | 3774 | -41 | | | 200 | 75 | SLU 81 | 1.86 | Si |
| ini. | 3 | 0 | -11459 | 206 | | | 200 | 75 | SLU 73 | 0.37 | No |
| fin. | 3 | 0 | 3779 | -40 | | | 200 | 75 | SLU 73 | 1.87 | Si |
| ini. | 3 | 0 | -11425 | 206 | | | 200 | 75 | SLU 52 | 0.37 | No |
| fin. | 3 | 0 | 3747 | -41 | | | 200 | 75 | SLU 52 | 1.85 | Si |
| ini. | 3 | 0 | -11261 | 204 | | | 200 | 75 | SLU 65 | 0.37 | No |
| fin. | 3 | 0 | 3591 | -42 | | | 200 | 75 | SLU 65 | 1.78 | Si |
| ini. | 3 | 0 | -11227 | 203 | | | 200 | 75 | SLU 44 | 0.37 | No |
| fin. | 3 | 0 | 3559 | -43 | | | 200 | 75 | SLU 44 | 1.76 | Si |
| ini. | 3 | 0 | -11456 | 206 | | | 200 | 75 | SLU 61 | 0.37 | No |
| fin. | 3 | 0 | 3793 | -40 | | | 200 | 75 | SLU 61 | 1.87 | Si |
| ini. | 3 | 0 | -11126 | 203 | | | 200 | 75 | SLU 64 | 0.37 | No |
| fin. | 3 | 0 | 3506 | -44 | | | 200 | 75 | SLU 64 | 1.73 | Si |
| ini. | 3 | 0 | -11375 | 205 | | | 200 | 75 | SLU 60 | 0.37 | No |
| fin. | 3 | 0 | 3742 | -41 | | | 200 | 75 | SLU 60 | 1.84 | Si |
| ini. | 3 | 0 | -11489 | 206 | | | 200 | 75 | SLU 82 | 0.37 | No |
| fin. | 3 | 0 | 3825 | -40 | | | 200 | 75 | SLU 82 | 1.89 | Si |

## Verifiche a pressoflessione delle travi in muratura in combinazioni sismiche

| Sezione | γM | N | M | Mu | Comb. | c.s. | Verifica |
|---|---|---|---|---|---|---|---|
| ini. | 2 | -246 | -78167 | 15434 | SLV 13 | 0.2 | No |
| fin. | 2 | -218 | 70150 | 15434 | SLV 13 | 0.22 | No |
| ini. | 2 | 263 | 60953 | 15434 | SLV 4 | 0.25 | No |
| fin. | 2 | 235 | -64663 | 15434 | SLV 4 | 0.24 | No |
| ini. | 2 | 13 | -47467 | 15434 | SLV 9 | 0.33 | No |
| fin. | 2 | -24 | 41206 | 15434 | SLV 9 | 0.37 | No |
| ini. | 2 | -246 | -78167 | 15434 | SLV 14 | 0.2 | No |
| fin. | 2 | -218 | 70150 | 15434 | SLV 14 | 0.22 | No |
| ini. | 2 | -300 | -66305 | 15434 | SLV 16 | 0.23 | No |
| fin. | 2 | -242 | 58123 | 15434 | SLV 16 | 0.27 | No |
| ini. | 2 | 317 | 49090 | 15434 | SLV 2 | 0.31 | No |
| fin. | 2 | 259 | -52636 | 15434 | SLV 2 | 0.29 | No |
| ini. | 2 | -300 | -66305 | 15434 | SLV 15 | 0.23 | No |
| fin. | 2 | -242 | 58123 | 15434 | SLV 15 | 0.27 | No |
| ini. | 2 | 317 | 49090 | 15434 | SLV 1 | 0.31 | No |
| fin. | 2 | 259 | -52636 | 15434 | SLV 1 | 0.29 | No |
| ini. | 2 | 13 | -47467 | 15434 | SLV 10 | 0.33 | No |
| fin. | 2 | -24 | 41206 | 15434 | SLV 10 | 0.37 | No |
| ini. | 2 | 263 | 60953 | 15434 | SLV 3 | 0.25 | No |
| fin. | 2 | 235 | -64663 | 15434 | SLV 3 | 0.24 | No |

## Verifiche a taglio delle travi in muratura secondo §C8.7.1.3.1 in combinazioni sismiche

| Sezione | γM | N | M | V | Vt | Vp | Vt fess. diag. | Vt,lim | Comb. | c.s. | Verifica |
|---|---|---|---|---|---|---|---|---|---|---|---|
| ini. | 2 | 0 | 30252 | -321 | | | 300 | 113 | SLV 7 | 0.35 | No |
| fin. | 2 | 0 | -35720 | -632 | | | 300 | 113 | SLV 7 | 0.18 | No |
| ini. | 2 | 0 | -47467 | 634 | | | 300 | 113 | SLV 9 | 0.18 | No |
| fin. | 2 | 0 | 41206 | 566 | | | 300 | 113 | SLV 9 | 0.2 | No |
| ini. | 2 | 0 | 60953 | -611 | | | 300 | 113 | SLV 4 | 0.18 | No |
| fin. | 2 | 0 | -64663 | -841 | | | 300 | 113 | SLV 4 | 0.13 | No |
| ini. | 2 | 0 | -66305 | 761 | | | 300 | 113 | SLV 16 | 0.15 | No |
| fin. | 2 | 0 | 58123 | 540 | | | 300 | 113 | SLV 16 | 0.21 | No |
| ini. | 2 | 0 | -78167 | 924 | | | 300 | 113 | SLV 13 | 0.12 | No |
| fin. | 2 | 0 | 70150 | 775 | | | 300 | 113 | SLV 13 | 0.15 | No |
| ini. | 2 | 0 | -47467 | 634 | | | 300 | 113 | SLV 10 | 0.18 | No |
| fin. | 2 | 0 | 41206 | 566 | | | 300 | 113 | SLV 10 | 0.2 | No |
| ini. | 2 | 0 | 60953 | -611 | | | 300 | 113 | SLV 3 | 0.18 | No |
| fin. | 2 | 0 | -64663 | -841 | | | 300 | 113 | SLV 3 | 0.13 | No |
| ini. | 2 | 0 | -66305 | 761 | | | 300 | 113 | SLV 15 | 0.15 | No |
| fin. | 2 | 0 | 58123 | 540 | | | 300 | 113 | SLV 15 | 0.21 | No |
| ini. | 2 | 0 | -78167 | 924 | | | 300 | 113 | SLV 14 | 0.12 | No |
| fin. | 2 | 0 | 70150 | 775 | | | 300 | 113 | SLV 14 | 0.15 | No |
| ini. | 2 | 0 | 30252 | -321 | | | 300 | 113 | SLV 8 | 0.35 | No |
| fin. | 2 | 0 | -35720 | -632 | | | 300 | 113 | SLV 8 | 0.18 | No |

## Tabella dei coefficienti di sicurezza minimi

| Stato limite | Coeff.s. | Comb. | Verifica |
|---|---|---|---|
| PF_SLV | 0.197 | SLV 13 | No |
| V_SLV | 0.122 | SLV 13 | No |

| Stato limite | Coeff.s. | Comb. | Verifica |
|---|---|---|---|
| PF_SLU | 0.896 | SLU 82 | No |
| V_SLU | 0.365 | SLU 82 | No |

## Trave di accoppiamento 80

Verifiche condotte secondo D.M. 17-01-18 (N.T.C.)

### Dati geometrici

| X ini. | Y ini. | Z ini.inf. | Z ini.sup. | H ini. | X fin. | Y fin. | Z fin.inf. | Z fin.sup | H fin. | Luce | Spessore | R. Trazione |
|---|---|---|---|---|---|---|---|---|---|---|---|---|
| -1505.8 | 140.6 | 754 | 896 | 142 | -1505.8 | 220.6 | 754 | 896 | 142 | 80 | 14 | 3500 |

### Caratteristiche del materiale

(Circolare 7 21-01-19 C8.5.I) Muratura in mattoni pieni e malta di calce LC2_Corti

| fb_ | fhk | fvk0 | fhmedio | τ0 | fv0 | μ | ϕ | fvk,lim | E | G | FC |
|---|---|---|---|---|---|---|---|---|---|---|---|
| 12 | | | 17.25 | 0.9 | 2 | 0.577 | 0.767 | 0.65 | 32000 | 12800 | 1.2 |

### Verifiche a pressoflessione delle travi in muratura in combinazioni non sismiche

| Sezione | γM | N | M | Mu | Comb. | c.s. | Verifica |
|---|---|---|---|---|---|---|---|
| ini. | 3 | 98 | 38732 | 141083 | SLU 35 | 3.64 | Si |
| fin. | 3 | 98 | -175008 | 141083 | SLU 35 | 0.81 | No |
| ini. | 3 | 128 | 42918 | 141083 | SLU 79 | 3.29 | Si |
| fin. | 3 | 128 | -188086 | 141083 | SLU 79 | 0.75 | No |
| ini. | 3 | 101 | 38342 | 141083 | SLU 37 | 3.68 | Si |
| fin. | 3 | 101 | -174611 | 141083 | SLU 37 | 0.81 | No |
| ini. | 3 | 137 | 42954 | 141083 | SLU 83 | 3.28 | Si |
| fin. | 3 | 137 | -185997 | 141083 | SLU 83 | 0.76 | No |
| ini. | 3 | 133 | 42915 | 141083 | SLU 80 | 3.29 | Si |
| fin. | 3 | 133 | -188707 | 141083 | SLU 80 | 0.75 | No |
| ini. | 3 | 141 | 42951 | 141083 | SLU 84 | 3.28 | Si |
| fin. | 3 | 141 | -186618 | 141083 | SLU 84 | 0.76 | No |
| ini. | 3 | 126 | 43308 | 141083 | SLU 77 | 3.26 | Si |
| fin. | 3 | 126 | -188482 | 141083 | SLU 77 | 0.75 | No |
| ini. | 3 | 130 | 43305 | 141083 | SLU 78 | 3.26 | Si |
| fin. | 3 | 130 | -189103 | 141083 | SLU 78 | 0.75 | No |
| ini. | 3 | 103 | 38730 | 141083 | SLU 36 | 3.64 | Si |
| fin. | 3 | 103 | -175629 | 141083 | SLU 36 | 0.8 | No |
| ini. | 3 | 105 | 38340 | 141083 | SLU 38 | 3.68 | Si |
| fin. | 3 | 105 | -175232 | 141083 | SLU 38 | 0.81 | No |

### Verifiche a taglio delle travi in muratura secondo §C8.7.1.3.1 in combinazioni non sismiche

| Sezione | γM | N | M | V | Vt | Vp | Vt fess. diag. | Vt,lim | Comb. | c.s. | Verifica |
|---|---|---|---|---|---|---|---|---|---|---|---|
| ini. | 3 | 0 | 43308 | -2670 | | | 766 | 288 | SLU 77 | 0.11 | No |
| fin. | 3 | 0 | -188482 | -3116 | | | 766 | 288 | SLU 77 | 0.09 | No |
| ini. | 3 | 0 | 40795 | -2435 | | | 766 | 288 | SLU 74 | 0.12 | No |
| fin. | 3 | 0 | -172270 | -2882 | | | 766 | 288 | SLU 74 | 0.1 | No |
| ini. | 3 | 0 | 40793 | -2443 | | | 766 | 288 | SLU 75 | 0.12 | No |
| fin. | 3 | 0 | -172891 | -2890 | | | 766 | 288 | SLU 75 | 0.1 | No |
| ini. | 3 | 0 | 42951 | -2642 | | | 766 | 288 | SLU 84 | 0.11 | No |
| fin. | 3 | 0 | -186618 | -3089 | | | 766 | 288 | SLU 84 | 0.09 | No |
| ini. | 3 | 0 | 43305 | -2677 | | | 766 | 288 | SLU 78 | 0.11 | No |
| fin. | 3 | 0 | -189103 | -3124 | | | 766 | 288 | SLU 78 | 0.09 | No |
| ini. | 3 | 0 | 42915 | -2667 | | | 766 | 288 | SLU 80 | 0.11 | No |
| fin. | 3 | 0 | -188707 | -3114 | | | 766 | 288 | SLU 80 | 0.09 | No |
| ini. | 3 | 0 | 40438 | -2408 | | | 766 | 288 | SLU 82 | 0.12 | No |
| fin. | 3 | 0 | -170406 | -2855 | | | 766 | 288 | SLU 82 | 0.1 | No |
| ini. | 3 | 0 | 42954 | -2634 | | | 766 | 288 | SLU 83 | 0.11 | No |
| fin. | 3 | 0 | -185997 | -3081 | | | 766 | 288 | SLU 83 | 0.09 | No |
| ini. | 3 | 0 | 42918 | -2660 | | | 766 | 288 | SLU 79 | 0.11 | No |
| fin. | 3 | 0 | -188086 | -3107 | | | 766 | 288 | SLU 79 | 0.09 | No |
| ini. | 3 | 0 | 40401 | -2439 | | | 766 | 288 | SLU 76 | 0.12 | No |
| fin. | 3 | 0 | -172909 | -2885 | | | 766 | 288 | SLU 76 | 0.1 | No |

### Verifiche a pressoflessione delle travi in muratura in combinazioni sismiche

| Sezione | γM | N | M | Mu | Comb. | c.s. | Verifica |
|---|---|---|---|---|---|---|---|
| ini. | 2 | -1492 | 159467 | 176889 | SLV 8 | 1.11 | Si |
| fin. | 2 | -1611 | -532173 | 176889 | SLV 8 | 0.33 | No |
| ini. | 2 | -1492 | 159467 | 176889 | SLV 7 | 1.11 | Si |
| fin. | 2 | -1611 | -532173 | 176889 | SLV 7 | 0.33 | No |
| ini. | 2 | 1695 | -109407 | 176889 | SLV 9 | 1.62 | Si |
| fin. | 2 | 1814 | 337756 | 176889 | SLV 9 | 0.52 | No |
| ini. | 2 | 1791 | -120806 | 176889 | SLV 6 | 1.46 | Si |
| fin. | 2 | 1920 | 378015 | 176889 | SLV 6 | 0.47 | No |
| ini. | 2 | 1791 | -120806 | 176889 | SLV 5 | 1.46 | Si |
| fin. | 2 | 1920 | 378015 | 176889 | SLV 5 | 0.47 | No |
| ini. | 2 | -552 | 86070 | 176889 | SLV 16 | 2.06 | Si |
| fin. | 2 | -605 | -300836 | 176889 | SLV 16 | 0.59 | No |
| ini. | 2 | -1588 | 170867 | 176889 | SLV 11 | 1.04 | Si |
| fin. | 2 | -1717 | -572432 | 176889 | SLV 11 | 0.31 | No |
| ini. | 2 | -1588 | 170867 | 176889 | SLV 12 | 1.04 | Si |
| fin. | 2 | -1717 | -572432 | 176889 | SLV 12 | 0.31 | No |
| ini. | 2 | 1695 | -109407 | 176889 | SLV 10 | 1.62 | Si |
| fin. | 2 | 1814 | 337756 | 176889 | SLV 10 | 0.52 | No |
| ini. | 2 | -552 | 86070 | 176889 | SLV 15 | 2.06 | Si |
| fin. | 2 | -605 | -300836 | 176889 | SLV 15 | 0.59 | No |

### Verifiche a taglio delle travi in muratura secondo §C8.7.1.3.1 in combinazioni sismiche

| Sezione | γM | N | M | V | Vt | Vp | Vt fess. diag. | Vt,lim | Comb. | c.s. | Verifica |
|---|---|---|---|---|---|---|---|---|---|---|---|
| ini. | 2 | 0 | -109407 | 5522 | | | 1148 | 432 | SLV 9 | 0.08 | No |
| fin. | 2 | 0 | 337756 | 5160 | | | 1148 | 432 | SLV 9 | 0.08 | No |
| ini. | 2 | 0 | 170867 | -8850 | | | 1148 | 432 | SLV 12 | 0.05 | No |
| fin. | 2 | 0 | -572432 | -9219 | | | 1148 | 432 | SLV 12 | 0.05 | No |
| ini. | 2 | 0 | 86070 | -4543 | | | 1148 | 432 | SLV 16 | 0.1 | No |
| fin. | 2 | 0 | -300836 | -4968 | | | 1148 | 432 | SLV 16 | 0.09 | No |
| ini. | 2 | 0 | -109407 | 5522 | | | 1148 | 432 | SLV 10 | 0.08 | No |
| fin. | 2 | 0 | 337756 | 5160 | | | 1148 | 432 | SLV 10 | 0.08 | No |
| ini. | 2 | 0 | -120806 | 6142 | | | 1148 | 432 | SLV 6 | 0.07 | No |
| fin. | 2 | 0 | 378015 | 5830 | | | 1148 | 432 | SLV 6 | 0.07 | No |
| ini. | 2 | 0 | 159467 | -8230 | | | 1148 | 432 | SLV 7 | 0.05 | No |
| fin. | 2 | 0 | -532173 | -8549 | | | 1148 | 432 | SLV 7 | 0.05 | No |
| ini. | 2 | 0 | 159467 | -8230 | | | 1148 | 432 | SLV 8 | 0.05 | No |
| fin. | 2 | 0 | -532173 | -8549 | | | 1148 | 432 | SLV 8 | 0.05 | No |
| ini. | 2 | 0 | 170867 | -8850 | | | 1148 | 432 | SLV 11 | 0.05 | No |
| fin. | 2 | 0 | -572432 | -9219 | | | 1148 | 432 | SLV 11 | 0.05 | No |
| ini. | 2 | 0 | 86070 | -4543 | | | 1148 | 432 | SLV 15 | 0.1 | No |
| fin. | 2 | 0 | -300836 | -4968 | | | 1148 | 432 | SLV 15 | 0.09 | No |
| ini. | 2 | 0 | -120806 | 6142 | | | 1148 | 432 | SLV 5 | 0.07 | No |
| fin. | 2 | 0 | 378015 | 5830 | | | 1148 | 432 | SLV 5 | 0.07 | No |

### Tabella dei coefficienti di sicurezza minimi

| Stato limite | Coeff.s. | Comb. | Verifica |
|---|---|---|---|
| PF_SLV | 0.309 | SLV 11 | No |
| V_SLV | 0.047 | SLV 11 | No |
| PF_SLU | 0.746 | SLU 78 | No |
| V_SLU | 0.092 | SLU 78 | No |

## Trave di accoppiamento 81

Verifiche condotte secondo D.M. 17-01-18 (N.T.C.)

### Dati geometrici

| X ini. | Y ini. | Z ini.inf. | Z ini.sup. | H ini. | X fin. | Y fin. | Z fin.inf. | Z fin.sup | H fin. | Luce | Spessore | R. Trazione |
|---|---|---|---|---|---|---|---|---|---|---|---|---|
| -1375.3 | -22.8 | 754 | 896 | 142 | -1375.3 | 67.2 | 754 | 896 | 142 | 90 | 28 | 3500 |

### Caratteristiche del materiale

(Circolare 7 21-01-19 C8.5.I) Muratura in mattoni pieni e malta di calce LC2_Corti

| fb_ | fhk | fvk0 | fhmedio | τ0 | fv0 | μ | ϕ | fvk,lim | E | G | FC |
|---|---|---|---|---|---|---|---|---|---|---|---|
| 12 | | | 17.25 | 0.9 | 2 | 0.577 | 0.767 | 0.65 | 32000 | 12800 | 1.2 |

### Verifiche a pressoflessione delle travi in muratura in combinazioni non sismiche

| Sezione | γM | N | M | Mu | Comb. | c.s. | Verifica |
|---|---|---|---|---|---|---|---|
| ini. | 3 | 696 | -331307 | 194792 | SLU 72 | 0.59 | No |
| fin. | 3 | 696 | -62583 | 194792 | SLU 72 | 3.11 | Si |
| ini. | 3 | 741 | -334872 | 194792 | SLU 80 | 0.58 | No |
| fin. | 3 | 741 | -67089 | 194792 | SLU 80 | 2.9 | Si |
| ini. | 3 | 763 | -347160 | 194792 | SLU 77 | 0.56 | No |
| fin. | 3 | 763 | -68872 | 194792 | SLU 77 | 2.83 | Si |
| ini. | 3 | 707 | -337042 | 194792 | SLU 71 | 0.58 | No |
| fin. | 3 | 707 | -62514 | 194792 | SLU 71 | 3.12 | Si |
| ini. | 3 | 752 | -341424 | 194792 | SLU 78 | 0.57 | No |
| fin. | 3 | 752 | -68940 | 194792 | SLU 78 | 2.83 | Si |
| ini. | 3 | 718 | -343594 | 194792 | SLU 69 | 0.57 | No |
| fin. | 3 | 718 | -64365 | 194792 | SLU 69 | 3.03 | Si |
| ini. | 3 | 748 | -334914 | 194792 | SLU 74 | 0.58 | No |
| fin. | 3 | 748 | -65844 | 194792 | SLU 74 | 2.96 | Si |
| ini. | 3 | 703 | -331348 | 194792 | SLU 66 | 0.59 | No |
| fin. | 3 | 703 | -61337 | 194792 | SLU 66 | 3.18 | Si |
| ini. | 3 | 707 | -337859 | 194792 | SLU 70 | 0.58 | No |
| fin. | 3 | 707 | -64434 | 194792 | SLU 70 | 3.02 | Si |
| ini. | 3 | 752 | -340608 | 194792 | SLU 79 | 0.57 | No |
| fin. | 3 | 752 | -67021 | 194792 | SLU 79 | 2.91 | Si |

### Verifiche a taglio delle travi in muratura secondo §C8.7.1.3.1 in combinazioni non sismiche

| Sezione | γM | N | M | V | Vt | Vp | Vt fess. diag. | Vt,lim | Comb. | c.s. | Verifica |
|---|---|---|---|---|---|---|---|---|---|---|---|
| ini. | 3 | 0 | -343594 | 3540 | | | 1531 | 576 | SLU 69 | 0.16 | No |
| fin. | 3 | 0 | -64365 | 2709 | | | 1531 | 576 | SLU 69 | 0.21 | No |
| ini. | 3 | 0 | -331348 | 3438 | | | 1531 | 576 | SLU 66 | 0.17 | No |
| fin. | 3 | 0 | -61337 | 2606 | | | 1531 | 576 | SLU 66 | 0.22 | No |
| ini. | 3 | 0 | -334872 | 3413 | | | 1531 | 576 | SLU 80 | 0.17 | No |
| fin. | 3 | 0 | -67089 | 2581 | | | 1531 | 576 | SLU 80 | 0.22 | No |
| ini. | 3 | 0 | -334914 | 3427 | | | 1531 | 576 | SLU 74 | 0.17 | No |
| fin. | 3 | 0 | -65844 | 2596 | | | 1531 | 576 | SLU 74 | 0.22 | No |
| ini. | 3 | 0 | -347160 | 3530 | | | 1531 | 576 | SLU 77 | 0.16 | No |
| fin. | 3 | 0 | -68872 | 2698 | | | 1531 | 576 | SLU 77 | 0.21 | No |
| ini. | 3 | 0 | -331307 | 3423 | | | 1531 | 576 | SLU 72 | 0.17 | No |
| fin. | 3 | 0 | -62583 | 2592 | | | 1531 | 576 | SLU 72 | 0.22 | No |
| ini. | 3 | 0 | -340608 | 3477 | | | 1531 | 576 | SLU 79 | 0.17 | No |
| fin. | 3 | 0 | -67021 | 2646 | | | 1531 | 576 | SLU 79 | 0.22 | No |
| ini. | 3 | 0 | -337859 | 3475 | | | 1531 | 576 | SLU 70 | 0.17 | No |
| fin. | 3 | 0 | -64434 | 2644 | | | 1531 | 576 | SLU 70 | 0.22 | No |
| ini. | 3 | 0 | -341424 | 3465 | | | 1531 | 576 | SLU 78 | 0.17 | No |

| Sezione | γM | N | M | V | Vt | Vp | Vt fess. diag. | Vt,lim | Comb. | c.s. | Verifica |
|---|---|---|---|---|---|---|---|---|---|---|---|
| fin. | 3 | 0 | -68940 | 2634 | | | 1531 | 576 | SLU 78 | 0.22 | No |
| ini. | 3 | 0 | -337042 | 3488 | | | 1531 | 576 | SLU 71 | 0.17 | No |
| fin. | 3 | 0 | -62514 | 2656 | | | 1531 | 576 | SLU 71 | 0.22 | No |

### Verifiche a pressoflessione delle travi in muratura in combinazioni sismiche

| Sezione | γM | N | M | Mu | Comb. | c.s. | Verifica |
|---|---|---|---|---|---|---|---|
| ini. | 2 | -93 | -338867 | 212694 | SLD 10 | 0.63 | No |
| fin. | 2 | -223 | -10206 | 212694 | SLD 10 | 20.84 | Si |
| ini. | 2 | -881 | -441175 | 212694 | SLV 6 | 0.48 | No |
| fin. | 2 | -827 | 18556 | 212694 | SLV 6 | 11.46 | Si |
| ini. | 2 | -65 | -320810 | 212694 | SLD 5 | 0.66 | No |
| fin. | 2 | -52 | -17851 | 212694 | SLD 5 | 11.91 | Si |
| ini. | 2 | -952 | -484079 | 212694 | SLV 9 | 0.44 | No |
| fin. | 2 | -1253 | 37367 | 212694 | SLV 9 | 5.69 | Si |
| ini. | 2 | -952 | -484079 | 212694 | SLV 10 | 0.44 | No |
| fin. | 2 | -1253 | 37367 | 212694 | SLV 10 | 5.69 | Si |
| ini. | 2 | -93 | -338867 | 212694 | SLD 9 | 0.63 | No |
| fin. | 2 | -223 | -10206 | 212694 | SLD 9 | 20.84 | Si |
| ini. | 2 | -881 | -441175 | 212694 | SLV 5 | 0.48 | No |
| fin. | 2 | -827 | 18556 | 212694 | SLV 5 | 11.46 | Si |
| ini. | 2 | -65 | -320810 | 212694 | SLD 6 | 0.66 | No |
| fin. | 2 | -52 | -17851 | 212694 | SLD 6 | 11.91 | Si |
| ini. | 2 | -35 | -372776 | 212694 | SLV 13 | 0.57 | No |
| fin. | 2 | -663 | 9724 | 212694 | SLV 13 | 21.87 | Si |
| ini. | 2 | -35 | -372776 | 212694 | SLV 14 | 0.57 | No |
| fin. | 2 | -663 | 9724 | 212694 | SLV 14 | 21.87 | Si |

### Verifiche a taglio delle travi in muratura secondo §C8.7.1.3.1 in combinazioni sismiche

| Sezione | γM | N | M | V | Vt | Vp | Vt fess. diag. | Vt,lim | Comb. | c.s. | Verifica |
|---|---|---|---|---|---|---|---|---|---|---|---|
| ini. | 2 | 0 | -338867 | 3727 | | | 2297 | 864 | SLD 10 | 0.23 | No |
| fin. | 2 | 0 | -10206 | 3254 | | | 2297 | 864 | SLD 10 | 0.27 | No |
| ini. | 2 | 0 | -372776 | 4097 | | | 2297 | 864 | SLV 14 | 0.21 | No |
| fin. | 2 | 0 | 9724 | 3713 | | | 2297 | 864 | SLV 14 | 0.23 | No |
| ini. | 2 | 0 | -484079 | 5507 | | | 2297 | 864 | SLV 9 | 0.16 | No |
| fin. | 2 | 0 | 37367 | 5276 | | | 2297 | 864 | SLV 9 | 0.16 | No |
| ini. | 2 | 0 | -338867 | 3727 | | | 2297 | 864 | SLD 9 | 0.23 | No |
| fin. | 2 | 0 | -10206 | 3254 | | | 2297 | 864 | SLD 9 | 0.27 | No |
| ini. | 2 | 0 | -441175 | 5020 | | | 2297 | 864 | SLV 6 | 0.17 | No |
| fin. | 2 | 0 | 18556 | 4703 | | | 2297 | 864 | SLV 6 | 0.18 | No |
| ini. | 2 | 0 | -320810 | 3524 | | | 2297 | 864 | SLD 5 | 0.25 | No |
| fin. | 2 | 0 | -17851 | 3015 | | | 2297 | 864 | SLD 5 | 0.29 | No |
| ini. | 2 | 0 | -320810 | 3524 | | | 2297 | 864 | SLD 6 | 0.25 | No |
| fin. | 2 | 0 | -17851 | 3015 | | | 2297 | 864 | SLD 6 | 0.29 | No |
| ini. | 2 | 0 | -372776 | 4097 | | | 2297 | 864 | SLV 13 | 0.21 | No |
| fin. | 2 | 0 | 9724 | 3713 | | | 2297 | 864 | SLV 13 | 0.23 | No |
| ini. | 2 | 0 | -441175 | 5020 | | | 2297 | 864 | SLV 5 | 0.17 | No |
| fin. | 2 | 0 | 18556 | 4703 | | | 2297 | 864 | SLV 5 | 0.18 | No |
| ini. | 2 | 0 | -484079 | 5507 | | | 2297 | 864 | SLV 10 | 0.16 | No |
| fin. | 2 | 0 | 37367 | 5276 | | | 2297 | 864 | SLV 10 | 0.16 | No |

### Tabella dei coefficienti di sicurezza minimi

| Stato limite | Coeff.s. | Comb. | Verifica |
|---|---|---|---|
| PF_SLV | 0.439 | SLV 9 | No |
| V_SLV | 0.157 | SLV 9 | No |
| PF_SLU | 0.561 | SLU 77 | No |
| V_SLU | 0.163 | SLU 69 | No |

## Trave di accoppiamento 82

Verifiche condotte secondo D.M. 17-01-18 (N.T.C.)

### Dati geometrici

| X ini. | Y ini. | Z ini.inf. | Z ini.sup. | H ini. | X fin. | Y fin. | Z fin.inf. | Z fin.sup | H fin. | Luce | Spessore | R. Trazione |
|---|---|---|---|---|---|---|---|---|---|---|---|---|
| -1771.8 | 666.1 | 544 | 634 | 90 | -1681.8 | 666.1 | 544 | 634 | 90 | 90 | 28 | 3500 |

### Caratteristiche del materiale

(Circolare 7 21-01-19 C8.5.I) Muratura in mattoni pieni e malta di calce LC2_Corti

| fb_ | fhk | fvk0 | fhmedio | τ0 | fv0 | μ | ϕ | fvk,lim | E | G | FC |
|---|---|---|---|---|---|---|---|---|---|---|---|
| 12 | | | 17.25 | 0.9 | 2 | 0.577 | 0.767 | 0.65 | 32000 | 12800 | 1.2 |

### Verifiche a pressoflessione delle travi in muratura in combinazioni non sismiche

| Sezione | γM | N | M | Mu | Comb. | c.s. | Verifica |
|---|---|---|---|---|---|---|---|
| ini. | 3 | -1514 | -3262 | 103792 | SLU 81 | 31.81 | Si |
| fin. | 3 | -1367 | 30723 | 103792 | SLU 81 | 3.38 | Si |
| ini. | 3 | -1420 | -2194 | 103792 | SLU 75 | 47.31 | Si |
| fin. | 3 | -1242 | 28114 | 103792 | SLU 75 | 3.69 | Si |
| ini. | 3 | -1457 | -2379 | 103792 | SLU 84 | 43.62 | Si |
| fin. | 3 | -1269 | 28912 | 103792 | SLU 84 | 3.59 | Si |
| ini. | 3 | -1394 | -3176 | 103792 | SLU 61 | 32.68 | Si |
| fin. | 3 | -1278 | 28297 | 103792 | SLU 61 | 3.67 | Si |
| ini. | 3 | -1397 | -2791 | 103792 | SLU 60 | 37.19 | Si |
| fin. | 3 | -1270 | 27987 | 103792 | SLU 60 | 3.71 | Si |
| ini. | 3 | -1460 | -1994 | 103792 | SLU 83 | 52.06 | Si |
| fin. | 3 | -1260 | 28601 | 103792 | SLU 83 | 3.63 | Si |

| Sezione | γM | N | M | Mu | Comb. | c.s. | Verifica |
|---|---|---|---|---|---|---|---|
| ini. | 3 | -1423 | -1808 | 103792 | SLU 74 | 57.39 | Si |
| fin. | 3 | -1234 | 27804 | 103792 | SLU 74 | 3.73 | Si |
| ini. | 3 | -1388 | -2108 | 103792 | SLU 76 | 49.24 | Si |
| fin. | 3 | -1205 | 27336 | 103792 | SLU 76 | 3.8 | Si |
| ini. | 3 | -1512 | -3648 | 103792 | SLU 82 | 28.45 | Si |
| fin. | 3 | -1375 | 31034 | 103792 | SLU 82 | 3.34 | Si |
| ini. | 3 | -1442 | -3376 | 103792 | SLU 73 | 30.74 | Si |
| fin. | 3 | -1312 | 29458 | 103792 | SLU 73 | 3.52 | Si |

## Verifiche a taglio delle travi in muratura secondo §C8.7.1.3.1 in combinazioni non sismiche

| Sezione | γM | N | M | V | Vt | Vp | Vt fess. diag. | Vt,lim | Comb. | c.s. | Verifica |
|---|---|---|---|---|---|---|---|---|---|---|---|
| ini. | 3 | 0 | -925 | -1006 | | | 970 | 365 | SLU 78 | 0.36 | No |
| fin. | 3 | 0 | 25993 | 2325 | | | 970 | 365 | SLU 78 | 0.16 | No |
| ini. | 3 | 0 | -2379 | -977 | | | 970 | 365 | SLU 84 | 0.37 | No |
| fin. | 3 | 0 | 28912 | 2456 | | | 970 | 365 | SLU 84 | 0.15 | No |
| ini. | 3 | 0 | -2108 | -943 | | | 970 | 365 | SLU 76 | 0.39 | No |
| fin. | 3 | 0 | 27336 | 2352 | | | 970 | 365 | SLU 76 | 0.16 | No |
| ini. | 3 | 0 | -2194 | -966 | | | 970 | 365 | SLU 75 | 0.38 | No |
| fin. | 3 | 0 | 28114 | 2416 | | | 970 | 365 | SLU 75 | 0.15 | No |
| ini. | 3 | 0 | -1808 | -979 | | | 970 | 365 | SLU 74 | 0.37 | No |
| fin. | 3 | 0 | 27804 | 2402 | | | 970 | 365 | SLU 74 | 0.15 | No |
| ini. | 3 | 0 | -3376 | -903 | | | 970 | 365 | SLU 73 | 0.4 | No |
| fin. | 3 | 0 | 29458 | 2443 | | | 970 | 365 | SLU 73 | 0.15 | No |
| ini. | 3 | 0 | -3262 | -950 | | | 970 | 365 | SLU 81 | 0.38 | No |
| fin. | 3 | 0 | 30723 | 2532 | | | 970 | 365 | SLU 81 | 0.14 | No |
| ini. | 3 | 0 | -1994 | -990 | | | 970 | 365 | SLU 83 | 0.37 | No |
| fin. | 3 | 0 | 28601 | 2442 | | | 970 | 365 | SLU 83 | 0.15 | No |
| ini. | 3 | 0 | -3648 | -937 | | | 970 | 365 | SLU 82 | 0.39 | No |
| fin. | 3 | 0 | 31034 | 2546 | | | 970 | 365 | SLU 82 | 0.14 | No |
| ini. | 3 | 0 | -3176 | -854 | | | 970 | 365 | SLU 61 | 0.43 | No |
| fin. | 3 | 0 | 28297 | 2339 | | | 970 | 365 | SLU 61 | 0.16 | No |

## Verifiche a pressoflessione delle travi in muratura in combinazioni sismiche

| Sezione | γM | N | M | Mu | Comb. | c.s. | Verifica |
|---|---|---|---|---|---|---|---|
| ini. | 2 | -875 | -67484 | 121694 | SLV 5 | 1.8 | Si |
| fin. | 2 | -3078 | 52160 | 121694 | SLV 5 | 2.33 | Si |
| ini. | 2 | -568 | -113860 | 121694 | SLV 4 | 1.07 | Si |
| fin. | 2 | -4004 | 117806 | 121694 | SLV 4 | 1.03 | Si |
| ini. | 2 | -566 | -131664 | 121694 | SLV 2 | 0.92 | No |
| fin. | 2 | -4691 | 119493 | 121694 | SLV 2 | 1.02 | Si |
| ini. | 2 | -1457 | 128858 | 121694 | SLV 15 | 0.94 | No |
| fin. | 2 | 2893 | -80197 | 121694 | SLV 15 | 1.52 | Si |
| ini. | 2 | -568 | -113860 | 121694 | SLV 3 | 1.07 | Si |
| fin. | 2 | -4004 | 117806 | 121694 | SLV 3 | 1.03 | Si |
| ini. | 2 | -1455 | 111054 | 121694 | SLV 13 | 1.1 | Si |
| fin. | 2 | 2206 | -78510 | 121694 | SLV 13 | 1.55 | Si |
| ini. | 2 | -566 | -131664 | 121694 | SLV 1 | 0.92 | No |
| fin. | 2 | -4691 | 119493 | 121694 | SLV 1 | 1.02 | Si |
| ini. | 2 | -1457 | 128858 | 121694 | SLV 16 | 0.94 | No |
| fin. | 2 | 2893 | -80197 | 121694 | SLV 16 | 1.52 | Si |
| ini. | 2 | -1455 | 111054 | 121694 | SLV 14 | 1.1 | Si |
| fin. | 2 | 2206 | -78510 | 121694 | SLV 14 | 1.55 | Si |
| ini. | 2 | -875 | -67484 | 121694 | SLV 6 | 1.8 | Si |
| fin. | 2 | -3078 | 52160 | 121694 | SLV 6 | 2.33 | Si |

## Verifiche a taglio delle travi in muratura secondo §C8.7.1.3.1 in combinazioni sismiche

| Sezione | γM | N | M | V | Vt | Vp | Vt fess. diag. | Vt,lim | Comb. | c.s. | Verifica |
|---|---|---|---|---|---|---|---|---|---|---|---|
| ini. | 2 | 0 | -131664 | 3523 | | | 1456 | 548 | SLV 1 | 0.16 | No |
| fin. | 2 | 0 | 119493 | 6083 | | | 1456 | 548 | SLV 1 | 0.09 | No |
| ini. | 2 | 0 | -8137 | 476 | | | 1456 | 548 | SLV 8 | 1.15 | Si |
| fin. | 2 | 0 | 46537 | 4102 | | | 1456 | 548 | SLV 8 | 0.13 | No |
| ini. | 2 | 0 | -113860 | 3459 | | | 1456 | 548 | SLV 4 | 0.16 | No |
| fin. | 2 | 0 | 117806 | 6686 | | | 1456 | 548 | SLV 4 | 0.08 | No |
| ini. | 2 | 0 | -113860 | 3459 | | | 1456 | 548 | SLV 3 | 0.16 | No |
| fin. | 2 | 0 | 117806 | 6686 | | | 1456 | 548 | SLV 3 | 0.08 | No |
| ini. | 2 | 0 | -131664 | 3523 | | | 1456 | 548 | SLV 2 | 0.16 | No |
| fin. | 2 | 0 | 119493 | 6083 | | | 1456 | 548 | SLV 2 | 0.09 | No |
| ini. | 2 | 0 | 111054 | -4787 | | | 1456 | 548 | SLV 14 | 0.11 | No |
| fin. | 2 | 0 | -78510 | -3310 | | | 1456 | 548 | SLV 14 | 0.17 | No |
| ini. | 2 | 0 | 128858 | -4851 | | | 1456 | 548 | SLV 16 | 0.11 | No |
| fin. | 2 | 0 | -80197 | -2707 | | | 1456 | 548 | SLV 16 | 0.2 | No |
| ini. | 2 | 0 | 111054 | -4787 | | | 1456 | 548 | SLV 13 | 0.11 | No |
| fin. | 2 | 0 | -78510 | -3310 | | | 1456 | 548 | SLV 13 | 0.17 | No |
| ini. | 2 | 0 | 128858 | -4851 | | | 1456 | 548 | SLV 15 | 0.11 | No |
| fin. | 2 | 0 | -80197 | -2707 | | | 1456 | 548 | SLV 15 | 0.2 | No |
| ini. | 2 | 0 | -8137 | 476 | | | 1456 | 548 | SLV 7 | 1.15 | Si |
| fin. | 2 | 0 | 46537 | 4102 | | | 1456 | 548 | SLV 7 | 0.13 | No |

## Tabella dei coefficienti di sicurezza minimi

| Stato limite | Coeff.s. | Comb. | Verifica |
|---|---|---|---|
| PF_SLV | 0.924 | SLV 1 | No |
| V_SLV | 0.082 | SLV 3 | No |
| PF_SLU | 3.344 | SLU 82 | Si |
| V_SLU | 0.143 | SLU 82 | No |

## Trave di accoppiamento 83

Verifiche condotte secondo D.M. 17-01-18 (N.T.C.)

### Dati geometrici

| X ini. | Y ini. | Z ini.inf. | Z ini.sup. | H ini. | X fin. | Y fin. | Z fin.inf. | Z fin.sup | H fin. | Luce | Spessore | R. Trazione |
|---|---|---|---|---|---|---|---|---|---|---|---|---|
| -1771.8 | 666.1 | 814 | 896 | 82 | -1681.8 | 666.1 | 814 | 896 | 82 | 90 | 28 | 3500 |

### Caratteristiche del materiale

(Circolare 7 21-01-19 C8.5.I) Muratura in mattoni pieni e malta di calce LC2_Corti

| fb_ | fhk | fvk0 | fhmedio | τ0 | fv0 | μ | ϕ | fvk,lim | E | G | FC |
|---|---|---|---|---|---|---|---|---|---|---|---|
| 12 | | | 17.25 | 0.9 | 2 | 0.577 | 0.767 | 0.65 | 32000 | 12800 | 1.2 |

### Verifiche a pressoflessione delle travi in muratura in combinazioni non sismiche

| Sezione | γM | N | M | Mu | Comb. | c.s. | Verifica |
|---|---|---|---|---|---|---|---|
| ini. | 3 | -439 | -24570 | 89792 | SLU 82 | 3.65 | Si |
| fin. | 3 | -167 | -13841 | 89792 | SLU 82 | 6.49 | Si |
| ini. | 3 | -433 | -24248 | 89792 | SLU 81 | 3.7 | Si |
| fin. | 3 | -173 | -14078 | 89792 | SLU 81 | 6.38 | Si |
| ini. | 3 | -401 | -23247 | 89792 | SLU 73 | 3.86 | Si |
| fin. | 3 | -133 | -12875 | 89792 | SLU 73 | 6.97 | Si |
| ini. | 3 | -300 | -23537 | 89792 | SLU 78 | 3.81 | Si |
| fin. | 3 | 105 | -10992 | 89792 | SLU 78 | 8.17 | Si |
| ini. | 3 | -294 | -23215 | 89792 | SLU 77 | 3.87 | Si |
| fin. | 3 | 99 | -11228 | 89792 | SLU 77 | 8 | Si |
| ini. | 3 | -376 | -24280 | 89792 | SLU 83 | 3.7 | Si |
| fin. | 3 | -39 | -12779 | 89792 | SLU 83 | 7.03 | Si |
| ini. | 3 | -344 | -23280 | 89792 | SLU 76 | 3.86 | Si |
| fin. | 3 | 1 | -11577 | 89792 | SLU 76 | 7.76 | Si |
| ini. | 3 | -357 | -23505 | 89792 | SLU 75 | 3.82 | Si |
| fin. | 3 | -29 | -12290 | 89792 | SLU 75 | 7.31 | Si |
| ini. | 3 | -351 | -23183 | 89792 | SLU 74 | 3.87 | Si |
| fin. | 3 | -35 | -12527 | 89792 | SLU 74 | 7.17 | Si |
| ini. | 3 | -382 | -24602 | 89792 | SLU 84 | 3.65 | Si |
| fin. | 3 | -33 | -12543 | 89792 | SLU 84 | 7.16 | Si |

### Verifiche a taglio delle travi in muratura secondo §C8.7.1.3.1 in combinazioni non sismiche

| Sezione | γM | N | M | V | Vt | Vp | Vt fess. diag. | Vt,lim | Comb. | c.s. | Verifica |
|---|---|---|---|---|---|---|---|---|---|---|---|
| ini. | 3 | 0 | -24570 | 2146 | | | 806 | 303 | SLU 82 | 0.14 | No |
| fin. | 3 | 0 | -13841 | -2097 | | | 806 | 303 | SLU 82 | 0.14 | No |
| ini. | 3 | 0 | -23280 | 2005 | | | 806 | 303 | SLU 76 | 0.15 | No |
| fin. | 3 | 0 | -11577 | -1838 | | | 806 | 303 | SLU 76 | 0.16 | No |
| ini. | 3 | 0 | -24280 | 2106 | | | 806 | 303 | SLU 83 | 0.14 | No |
| fin. | 3 | 0 | -12779 | -1981 | | | 806 | 303 | SLU 83 | 0.15 | No |
| ini. | 3 | 0 | -24248 | 2133 | | | 806 | 303 | SLU 81 | 0.14 | No |
| fin. | 3 | 0 | -14078 | -2107 | | | 806 | 303 | SLU 81 | 0.14 | No |
| ini. | 3 | 0 | -23537 | 2012 | | | 806 | 303 | SLU 78 | 0.15 | No |
| fin. | 3 | 0 | -10992 | -1782 | | | 806 | 303 | SLU 78 | 0.17 | No |
| ini. | 3 | 0 | -23247 | 2032 | | | 806 | 303 | SLU 73 | 0.15 | No |
| fin. | 3 | 0 | -12875 | -1964 | | | 806 | 303 | SLU 73 | 0.15 | No |
| ini. | 3 | 0 | -24602 | 2119 | | | 806 | 303 | SLU 84 | 0.14 | No |
| fin. | 3 | 0 | -12543 | -1971 | | | 806 | 303 | SLU 84 | 0.15 | No |
| ini. | 3 | 0 | -23505 | 2039 | | | 806 | 303 | SLU 75 | 0.15 | No |
| fin. | 3 | 0 | -12290 | -1908 | | | 806 | 303 | SLU 75 | 0.16 | No |
| ini. | 3 | 0 | -23215 | 1999 | | | 806 | 303 | SLU 77 | 0.15 | No |
| fin. | 3 | 0 | -11228 | -1792 | | | 806 | 303 | SLU 77 | 0.17 | No |
| ini. | 3 | 0 | -23183 | 2026 | | | 806 | 303 | SLU 74 | 0.15 | No |
| fin. | 3 | 0 | -12527 | -1918 | | | 806 | 303 | SLU 74 | 0.16 | No |

### Verifiche a pressoflessione delle travi in muratura in combinazioni sismiche

| Sezione | γM | N | M | Mu | Comb. | c.s. | Verifica |
|---|---|---|---|---|---|---|---|
| ini. | 2 | -1734 | -109874 | 107694 | SLV 2 | 0.98 | No |
| fin. | 2 | 1673 | 63652 | 107694 | SLV 2 | 1.69 | Si |
| ini. | 2 | 1253 | 79780 | 107694 | SLV 15 | 1.35 | Si |
| fin. | 2 | -1826 | -81744 | 107694 | SLV 15 | 1.32 | Si |
| ini. | 2 | -1104 | -57425 | 107694 | SLD 4 | 1.88 | Si |
| fin. | 2 | 636 | 20050 | 107694 | SLD 4 | 5.37 | Si |
| ini. | 2 | 1798 | 84077 | 107694 | SLV 14 | 1.28 | Si |
| fin. | 2 | -1733 | -76784 | 107694 | SLV 14 | 1.4 | Si |
| ini. | 2 | -1734 | -109874 | 107694 | SLV 1 | 0.98 | No |
| fin. | 2 | 1673 | 63652 | 107694 | SLV 1 | 1.69 | Si |
| ini. | 2 | -2279 | -114171 | 107694 | SLV 4 | 0.94 | No |
| fin. | 2 | 1580 | 58693 | 107694 | SLV 4 | 1.83 | Si |
| ini. | 2 | -1104 | -57425 | 107694 | SLD 3 | 1.88 | Si |
| fin. | 2 | 636 | 20050 | 107694 | SLD 3 | 5.37 | Si |
| ini. | 2 | -2279 | -114171 | 107694 | SLV 3 | 0.94 | No |
| fin. | 2 | 1580 | 58693 | 107694 | SLV 3 | 1.83 | Si |
| ini. | 2 | 1798 | 84077 | 107694 | SLV 13 | 1.28 | Si |
| fin. | 2 | -1733 | -76784 | 107694 | SLV 13 | 1.4 | Si |
| ini. | 2 | 1253 | 79780 | 107694 | SLV 16 | 1.35 | Si |
| fin. | 2 | -1826 | -81744 | 107694 | SLV 16 | 1.32 | Si |

### Verifiche a taglio delle travi in muratura secondo §C8.7.1.3.1 in combinazioni sismiche

| Sezione | γM | N | M | V | Vt | Vp | Vt fess. diag. | Vt,lim | Comb. | c.s. | Verifica |
|---|---|---|---|---|---|---|---|---|---|---|---|
| ini. | 2 | 0 | 84077 | -2593 | | | 1208 | 455 | SLV 13 | 0.18 | No |
| fin. | 2 | 0 | -76784 | -4394 | | | 1208 | 455 | SLV 13 | 0.1 | No |
| ini. | 2 | 0 | 84077 | -2593 | | | 1208 | 455 | SLV 14 | 0.18 | No |

| Sezione | γM | N | M | V | Vt | Vp | Vt fess. diag. | Vt,lim | Comb. | c.s. | Verifica |
|---|---|---|---|---|---|---|---|---|---|---|---|
| fin. | 2 | 0 | -76784 | -4394 | | | 1208 | 455 | SLV 14 | 0.1 | No |
| ini. | 2 | 0 | -51302 | 3194 | | | 1208 | 455 | SLV 7 | 0.14 | No |
| fin. | 2 | 0 | 3753 | -703 | | | 1208 | 455 | SLV 7 | 0.65 | No |
| ini. | 2 | 0 | -114171 | 5305 | | | 1208 | 455 | SLV 3 | 0.09 | No |
| fin. | 2 | 0 | 58693 | 1724 | | | 1208 | 455 | SLV 3 | 0.26 | No |
| ini. | 2 | 0 | 79780 | -2162 | | | 1208 | 455 | SLV 16 | 0.21 | No |
| fin. | 2 | 0 | -81744 | -4583 | | | 1208 | 455 | SLV 16 | 0.1 | No |
| ini. | 2 | 0 | 79780 | -2162 | | | 1208 | 455 | SLV 15 | 0.21 | No |
| fin. | 2 | 0 | -81744 | -4583 | | | 1208 | 455 | SLV 15 | 0.1 | No |
| ini. | 2 | 0 | -109874 | 4873 | | | 1208 | 455 | SLV 1 | 0.09 | No |
| fin. | 2 | 0 | 63652 | 1912 | | | 1208 | 455 | SLV 1 | 0.24 | No |
| ini. | 2 | 0 | -109874 | 4873 | | | 1208 | 455 | SLV 2 | 0.09 | No |
| fin. | 2 | 0 | 63652 | 1912 | | | 1208 | 455 | SLV 2 | 0.24 | No |
| ini. | 2 | 0 | -51302 | 3194 | | | 1208 | 455 | SLV 8 | 0.14 | No |
| fin. | 2 | 0 | 3753 | -703 | | | 1208 | 455 | SLV 8 | 0.65 | No |
| ini. | 2 | 0 | -114171 | 5305 | | | 1208 | 455 | SLV 4 | 0.09 | No |
| fin. | 2 | 0 | 58693 | 1724 | | | 1208 | 455 | SLV 4 | 0.26 | No |

### Tabella dei coefficienti di sicurezza minimi

| Stato limite | Coeff.s. | Comb. | Verifica |
|---|---|---|---|
| PF_SLV | 0.943 | SLV 3 | No |
| V_SLV | 0.086 | SLV 3 | No |
| PF_SLU | 3.65 | SLU 84 | Si |
| V_SLU | 0.141 | SLU 82 | No |

## Trave di accoppiamento 84

Verifiche condotte secondo D.M. 17-01-18 (N.T.C.)

### Dati geometrici

| X ini. | Y ini. | Z ini.inf. | Z ini.sup. | H ini. | X fin. | Y fin. | Z fin.inf. | Z fin.sup | H fin. | Luce | Spessore | R. Trazione |
|---|---|---|---|---|---|---|---|---|---|---|---|---|
| -1283.8 | 666.1 | 544 | 634 | 90 | -1193.8 | 666.1 | 544 | 634 | 90 | 90 | 28 | 3500 |

### Caratteristiche del materiale

(Circolare 7 21-01-19 C8.5.I) Muratura in mattoni pieni e malta di calce LC2_Corti

| fb_ | fhk | fvk0 | fhmedio | τ0 | fv0 | μ | ϕ | fvk,lim | E | G | FC |
|---|---|---|---|---|---|---|---|---|---|---|---|
| 12 | | | 17.25 | 0.9 | 2 | 0.577 | 0.767 | 0.65 | 32000 | 12800 | 1.2 |

### Verifiche a pressoflessione delle travi in muratura in combinazioni non sismiche

| Sezione | γM | N | M | Mu | Comb. | c.s. | Verifica |
|---|---|---|---|---|---|---|---|
| ini. | 3 | -828 | 4380 | 103792 | SLU 73 | 23.7 | Si |
| fin. | 3 | -2575 | 44635 | 103792 | SLU 73 | 2.33 | Si |
| ini. | 3 | -813 | 3957 | 103792 | SLU 60 | 26.23 | Si |
| fin. | 3 | -2505 | 43126 | 103792 | SLU 60 | 2.41 | Si |
| ini. | 3 | -854 | 4446 | 103792 | SLU 82 | 23.34 | Si |
| fin. | 3 | -2710 | 47330 | 103792 | SLU 82 | 2.19 | Si |
| ini. | 3 | -821 | 5147 | 103792 | SLU 83 | 20.17 | Si |
| fin. | 3 | -2551 | 44478 | 103792 | SLU 83 | 2.33 | Si |
| ini. | 3 | -859 | 4502 | 103792 | SLU 81 | 23.06 | Si |
| fin. | 3 | -2712 | 47296 | 103792 | SLU 81 | 2.19 | Si |
| ini. | 3 | -816 | 5051 | 103792 | SLU 74 | 20.55 | Si |
| fin. | 3 | -2486 | 43035 | 103792 | SLU 74 | 2.41 | Si |
| ini. | 3 | -816 | 5092 | 103792 | SLU 84 | 20.39 | Si |
| fin. | 3 | -2549 | 44512 | 103792 | SLU 84 | 2.33 | Si |
| ini. | 3 | -811 | 4996 | 103792 | SLU 75 | 20.78 | Si |
| fin. | 3 | -2485 | 43069 | 103792 | SLU 75 | 2.41 | Si |
| ini. | 3 | -809 | 3902 | 103792 | SLU 61 | 26.6 | Si |
| fin. | 3 | -2503 | 43160 | 103792 | SLU 61 | 2.4 | Si |
| ini. | 3 | -790 | 5025 | 103792 | SLU 76 | 20.65 | Si |
| fin. | 3 | -2414 | 41817 | 103792 | SLU 76 | 2.48 | Si |

### Verifiche a taglio delle travi in muratura secondo §C8.7.1.3.1 in combinazioni non sismiche

| Sezione | γM | N | M | V | Vt | Vp | Vt fess. diag. | Vt,lim | Comb. | c.s. | Verifica |
|---|---|---|---|---|---|---|---|---|---|---|---|
| ini. | 3 | 0 | 4502 | -1262 | | | 970 | 365 | SLU 81 | 0.29 | No |
| fin. | 3 | 0 | 47296 | 3865 | | | 970 | 365 | SLU 81 | 0.09 | No |
| ini. | 3 | 0 | 5697 | -1480 | | | 970 | 365 | SLU 77 | 0.25 | No |
| fin. | 3 | 0 | 40217 | 3603 | | | 970 | 365 | SLU 77 | 0.1 | No |
| ini. | 3 | 0 | 5092 | -1368 | | | 970 | 365 | SLU 84 | 0.27 | No |
| fin. | 3 | 0 | 44512 | 3778 | | | 970 | 365 | SLU 84 | 0.1 | No |
| ini. | 3 | 0 | 4996 | -1365 | | | 970 | 365 | SLU 75 | 0.27 | No |
| fin. | 3 | 0 | 43069 | 3691 | | | 970 | 365 | SLU 75 | 0.1 | No |
| ini. | 3 | 0 | 5641 | -1476 | | | 970 | 365 | SLU 78 | 0.25 | No |
| fin. | 3 | 0 | 40251 | 3604 | | | 970 | 365 | SLU 78 | 0.1 | No |
| ini. | 3 | 0 | 5147 | -1373 | | | 970 | 365 | SLU 83 | 0.27 | No |
| fin. | 3 | 0 | 44478 | 3778 | | | 970 | 365 | SLU 83 | 0.1 | No |
| ini. | 3 | 0 | 5051 | -1370 | | | 970 | 365 | SLU 74 | 0.27 | No |
| fin. | 3 | 0 | 43035 | 3690 | | | 970 | 365 | SLU 74 | 0.1 | No |
| ini. | 3 | 0 | 4446 | -1258 | | | 970 | 365 | SLU 82 | 0.29 | No |
| fin. | 3 | 0 | 47330 | 3866 | | | 970 | 365 | SLU 82 | 0.09 | No |
| ini. | 3 | 0 | 4380 | -1235 | | | 970 | 365 | SLU 73 | 0.3 | No |
| fin. | 3 | 0 | 44635 | 3683 | | | 970 | 365 | SLU 73 | 0.1 | No |
| ini. | 3 | 0 | 5025 | -1346 | | | 970 | 365 | SLU 76 | 0.27 | No |
| fin. | 3 | 0 | 41817 | 3596 | | | 970 | 365 | SLU 76 | 0.1 | No |

### Verifiche a pressoflessione delle travi in muratura in combinazioni sismiche

| Sezione | γM | N | M | Mu | Comb. | c.s. | Verifica |
|---|---|---|---|---|---|---|---|
| ini. | 2 | 480 | -25657 | 121694 | SLD 3 | 4.74 | Si |
| fin. | 2 | -3168 | 62136 | 121694 | SLD 3 | 1.96 | Si |
| ini. | 2 | -3786 | 78371 | 121694 | SLV 16 | 1.55 | Si |
| fin. | 2 | 792 | -40412 | 121694 | SLV 16 | 3.01 | Si |
| ini. | 2 | -3786 | 78371 | 121694 | SLV 15 | 1.55 | Si |
| fin. | 2 | 792 | -40412 | 121694 | SLV 15 | 3.01 | Si |
| ini. | 2 | 1905 | -63995 | 121694 | SLV 4 | 1.9 | Si |
| fin. | 2 | -5004 | 104426 | 121694 | SLV 4 | 1.17 | Si |
| ini. | 2 | 480 | -25657 | 121694 | SLD 4 | 4.74 | Si |
| fin. | 2 | -3168 | 62136 | 121694 | SLD 4 | 1.96 | Si |
| ini. | 2 | 2573 | -71795 | 121694 | SLV 1 | 1.7 | Si |
| fin. | 2 | -4362 | 101028 | 121694 | SLV 1 | 1.2 | Si |
| ini. | 2 | -3117 | 70570 | 121694 | SLV 14 | 1.72 | Si |
| fin. | 2 | 1434 | -43810 | 121694 | SLV 14 | 2.78 | Si |
| ini. | 2 | 1905 | -63995 | 121694 | SLV 3 | 1.9 | Si |
| fin. | 2 | -5004 | 104426 | 121694 | SLV 3 | 1.17 | Si |
| ini. | 2 | -3117 | 70570 | 121694 | SLV 13 | 1.72 | Si |
| fin. | 2 | 1434 | -43810 | 121694 | SLV 13 | 2.78 | Si |
| ini. | 2 | 2573 | -71795 | 121694 | SLV 2 | 1.7 | Si |
| fin. | 2 | -4362 | 101028 | 121694 | SLV 2 | 1.2 | Si |

### Verifiche a taglio delle travi in muratura secondo §C8.7.1.3.1 in combinazioni sismiche

| Sezione | γM | N | M | V | Vt | Vp | Vt fess. diag. | Vt,lim | Comb. | c.s. | Verifica |
|---|---|---|---|---|---|---|---|---|---|---|---|
| ini. | 2 | 0 | -28927 | 1115 | | | 1456 | 548 | SLD 2 | 0.49 | No |
| fin. | 2 | 0 | 60715 | 4524 | | | 1456 | 548 | SLD 2 | 0.12 | No |
| ini. | 2 | 0 | 70570 | -5030 | | | 1456 | 548 | SLV 14 | 0.11 | No |
| fin. | 2 | 0 | -43810 | -1658 | | | 1456 | 548 | SLV 14 | 0.33 | No |
| ini. | 2 | 0 | 78371 | -5618 | | | 1456 | 548 | SLV 16 | 0.1 | No |
| fin. | 2 | 0 | -40412 | -2049 | | | 1456 | 548 | SLV 16 | 0.27 | No |
| ini. | 2 | 0 | 70570 | -5030 | | | 1456 | 548 | SLV 13 | 0.11 | No |
| fin. | 2 | 0 | -43810 | -1658 | | | 1456 | 548 | SLV 13 | 0.33 | No |
| ini. | 2 | 0 | -28927 | 1115 | | | 1456 | 548 | SLD 1 | 0.49 | No |
| fin. | 2 | 0 | 60715 | 4524 | | | 1456 | 548 | SLD 1 | 0.12 | No |
| ini. | 2 | 0 | -63995 | 3214 | | | 1456 | 548 | SLV 4 | 0.17 | No |
| fin. | 2 | 0 | 104426 | 6759 | | | 1456 | 548 | SLV 4 | 0.08 | No |
| ini. | 2 | 0 | -71795 | 3802 | | | 1456 | 548 | SLV 1 | 0.14 | No |
| fin. | 2 | 0 | 101028 | 7150 | | | 1456 | 548 | SLV 1 | 0.08 | No |
| ini. | 2 | 0 | -71795 | 3802 | | | 1456 | 548 | SLV 2 | 0.14 | No |
| fin. | 2 | 0 | 101028 | 7150 | | | 1456 | 548 | SLV 2 | 0.08 | No |
| ini. | 2 | 0 | 78371 | -5618 | | | 1456 | 548 | SLV 15 | 0.1 | No |
| fin. | 2 | 0 | -40412 | -2049 | | | 1456 | 548 | SLV 15 | 0.27 | No |
| ini. | 2 | 0 | -63995 | 3214 | | | 1456 | 548 | SLV 3 | 0.17 | No |
| fin. | 2 | 0 | 104426 | 6759 | | | 1456 | 548 | SLV 3 | 0.08 | No |

### Tabella dei coefficienti di sicurezza minimi

| Stato limite | Coeff.s. | Comb. | Verifica |
|---|---|---|---|
| PF_SLV | 1.165 | SLV 3 | Si |
| V_SLV | 0.077 | SLV 1 | No |
| PF_SLU | 2.193 | SLU 82 | Si |
| V_SLU | 0.094 | SLU 82 | No |

## Trave di accoppiamento 85

Verifiche condotte secondo D.M. 17-01-18 (N.T.C.)

### Dati geometrici

| X ini. | Y ini. | Z ini.inf. | Z ini.sup. | H ini. | X fin. | Y fin. | Z fin.inf. | Z fin.sup | H fin. | Luce | Spessore | R. Trazione |
|---|---|---|---|---|---|---|---|---|---|---|---|---|
| -1283.8 | 666.1 | 814 | 896 | 82 | -1193.8 | 666.1 | 814 | 896 | 82 | 90 | 28 | 3500 |

### Caratteristiche del materiale

(Circolare 7 21-01-19 C8.5.I) Muratura in mattoni pieni e malta di calce LC2_Corti

| fb_ | fhk | fvk0 | fhmedio | τ0 | fv0 | μ | ϕ | fvk,lim | E | G | FC |
|---|---|---|---|---|---|---|---|---|---|---|---|
| 12 | | | 17.25 | 0.9 | 2 | 0.577 | 0.767 | 0.65 | 32000 | 12800 | 1.2 |

### Verifiche a pressoflessione delle travi in muratura in combinazioni non sismiche

| Sezione | γM | N | M | Mu | Comb. | c.s. | Verifica |
|---|---|---|---|---|---|---|---|
| ini. | 3 | -1691 | -37392 | 89792 | SLU 73 | 2.4 | Si |
| fin. | 3 | -555 | -331 | 89792 | SLU 73 | 271.02 | Si |
| ini. | 3 | -1490 | -35987 | 89792 | SLU 74 | 2.5 | Si |
| fin. | 3 | -480 | -1193 | 89792 | SLU 74 | 75.29 | Si |
| ini. | 3 | -1549 | -37177 | 89792 | SLU 84 | 2.42 | Si |
| fin. | 3 | -503 | -974 | 89792 | SLU 84 | 92.18 | Si |
| ini. | 3 | -1682 | -36091 | 89792 | SLU 60 | 2.49 | Si |
| fin. | 3 | -552 | -75 | 89792 | SLU 60 | 1195.16 | Si |
| ini. | 3 | -1492 | -36025 | 89792 | SLU 75 | 2.49 | Si |
| fin. | 3 | -477 | -1137 | 89792 | SLU 75 | 78.96 | Si |
| ini. | 3 | -1418 | -34800 | 89792 | SLU 76 | 2.58 | Si |
| fin. | 3 | -456 | -1179 | 89792 | SLU 76 | 76.14 | Si |
| ini. | 3 | -1822 | -39769 | 89792 | SLU 82 | 2.26 | Si |
| fin. | 3 | -602 | -126 | 89792 | SLU 82 | 711.91 | Si |
| ini. | 3 | -1820 | -39731 | 89792 | SLU 81 | 2.26 | Si |
| fin. | 3 | -605 | -182 | 89792 | SLU 81 | 494.39 | Si |
| ini. | 3 | -1684 | -36129 | 89792 | SLU 61 | 2.49 | Si |

| Sezione | γM | N | M | Mu | Comb. | c.s. | Verifica |
|---|---|---|---|---|---|---|---|
| fin. | 3 | -550 | -20 | 89792 | SLU 61 | 4572.54 | Si |
| ini. | 3 | -1547 | -37139 | 89792 | SLU 83 | 2.42 | Si |
| fin. | 3 | -506 | -1030 | 89792 | SLU 83 | 87.21 | Si |

Verifiche a taglio delle travi in muratura secondo §C8.7.1.3.1 in combinazioni non sismiche

| Sezione | γM | N | M | V | Vt | Vp | Vt fess. diag. | Vt,lim | Comb. | c.s. | Verifica |
|---|---|---|---|---|---|---|---|---|---|---|---|
| ini. | 3 | 0 | -35987 | 3833 | | | 806 | 303 | SLU 74 | 0.08 | No |
| fin. | 3 | 0 | -1193 | -2611 | | | 806 | 303 | SLU 74 | 0.12 | No |
| ini. | 3 | 0 | -34800 | 3737 | | | 806 | 303 | SLU 76 | 0.08 | No |
| fin. | 3 | 0 | -1179 | -2572 | | | 806 | 303 | SLU 76 | 0.12 | No |
| ini. | 3 | 0 | -39731 | 4089 | | | 806 | 303 | SLU 81 | 0.07 | No |
| fin. | 3 | 0 | -182 | -2590 | | | 806 | 303 | SLU 81 | 0.12 | No |
| ini. | 3 | 0 | -37177 | 3984 | | | 806 | 303 | SLU 84 | 0.08 | No |
| fin. | 3 | 0 | -974 | -2716 | | | 806 | 303 | SLU 84 | 0.11 | No |
| ini. | 3 | 0 | -39769 | 4091 | | | 806 | 303 | SLU 82 | 0.07 | No |
| fin. | 3 | 0 | -126 | -2585 | | | 806 | 303 | SLU 82 | 0.12 | No |
| ini. | 3 | 0 | -33434 | 3728 | | | 806 | 303 | SLU 78 | 0.08 | No |
| fin. | 3 | 0 | -1985 | -2737 | | | 806 | 303 | SLU 78 | 0.11 | No |
| ini. | 3 | 0 | -37139 | 3982 | | | 806 | 303 | SLU 83 | 0.08 | No |
| fin. | 3 | 0 | -1030 | -2720 | | | 806 | 303 | SLU 83 | 0.11 | No |
| ini. | 3 | 0 | -37392 | 3845 | | | 806 | 303 | SLU 73 | 0.08 | No |
| fin. | 3 | 0 | -331 | -2442 | | | 806 | 303 | SLU 73 | 0.12 | No |
| ini. | 3 | 0 | -36025 | 3835 | | | 806 | 303 | SLU 75 | 0.08 | No |
| fin. | 3 | 0 | -1137 | -2606 | | | 806 | 303 | SLU 75 | 0.12 | No |
| ini. | 3 | 0 | -33396 | 3725 | | | 806 | 303 | SLU 77 | 0.08 | No |
| fin. | 3 | 0 | -2041 | -2742 | | | 806 | 303 | SLU 77 | 0.11 | No |

Verifiche a pressoflessione delle travi in muratura in combinazioni sismiche

| Sezione | γM | N | M | Mu | Comb. | c.s. | Verifica |
|---|---|---|---|---|---|---|---|
| ini. | 2 | 1868 | 45815 | 107694 | SLV 14 | 2.35 | Si |
| fin. | 2 | -3115 | -57754 | 107694 | SLV 14 | 1.86 | Si |
| ini. | 2 | -4106 | -96222 | 107694 | SLV 3 | 1.12 | Si |
| fin. | 2 | 2378 | 56603 | 107694 | SLV 3 | 1.9 | Si |
| ini. | 2 | -3605 | -93210 | 107694 | SLV 2 | 1.16 | Si |
| fin. | 2 | 2819 | 62364 | 107694 | SLV 2 | 1.73 | Si |
| ini. | 2 | -4106 | -96222 | 107694 | SLV 4 | 1.12 | Si |
| fin. | 2 | 2378 | 56603 | 107694 | SLV 4 | 1.9 | Si |
| ini. | 2 | -2395 | -55624 | 107694 | SLD 3 | 1.94 | Si |
| fin. | 2 | 809 | 23949 | 107694 | SLD 3 | 4.5 | Si |
| ini. | 2 | 1868 | 45815 | 107694 | SLV 13 | 2.35 | Si |
| fin. | 2 | -3115 | -57754 | 107694 | SLV 13 | 1.86 | Si |
| ini. | 2 | 1367 | 42802 | 107694 | SLV 16 | 2.52 | Si |
| fin. | 2 | -3556 | -63516 | 107694 | SLV 16 | 1.7 | Si |
| ini. | 2 | -3605 | -93210 | 107694 | SLV 1 | 1.16 | Si |
| fin. | 2 | 2819 | 62364 | 107694 | SLV 1 | 1.73 | Si |
| ini. | 2 | 1367 | 42802 | 107694 | SLV 15 | 2.52 | Si |
| fin. | 2 | -3556 | -63516 | 107694 | SLV 15 | 1.7 | Si |
| ini. | 2 | -2395 | -55624 | 107694 | SLD 4 | 1.94 | Si |
| fin. | 2 | 809 | 23949 | 107694 | SLD 4 | 4.5 | Si |

Verifiche a taglio delle travi in muratura secondo §C8.7.1.3.1 in combinazioni sismiche

| Sezione | γM | N | M | V | Vt | Vp | Vt fess. diag. | Vt,lim | Comb. | c.s. | Verifica |
|---|---|---|---|---|---|---|---|---|---|---|---|
| ini. | 2 | 0 | -41037 | 4414 | | | 1208 | 455 | SLV 5 | 0.1 | No |
| fin. | 2 | 0 | 27044 | 478 | | | 1208 | 455 | SLV 5 | 0.95 | No |
| ini. | 2 | 0 | -93210 | 6844 | | | 1208 | 455 | SLV 2 | 0.07 | No |
| fin. | 2 | 0 | 62364 | 2779 | | | 1208 | 455 | SLV 2 | 0.16 | No |
| ini. | 2 | 0 | -93210 | 6844 | | | 1208 | 455 | SLV 1 | 0.07 | No |
| fin. | 2 | 0 | 62364 | 2779 | | | 1208 | 455 | SLV 1 | 0.16 | No |
| ini. | 2 | 0 | 45815 | -1324 | | | 1208 | 455 | SLV 14 | 0.34 | No |
| fin. | 2 | 0 | -57754 | -5549 | | | 1208 | 455 | SLV 14 | 0.08 | No |
| ini. | 2 | 0 | 45815 | -1324 | | | 1208 | 455 | SLV 13 | 0.34 | No |
| fin. | 2 | 0 | -57754 | -5549 | | | 1208 | 455 | SLV 13 | 0.08 | No |
| ini. | 2 | 0 | -96222 | 6477 | | | 1208 | 455 | SLV 3 | 0.07 | No |
| fin. | 2 | 0 | 56603 | 2254 | | | 1208 | 455 | SLV 3 | 0.2 | No |
| ini. | 2 | 0 | 42802 | -1691 | | | 1208 | 455 | SLV 15 | 0.27 | No |
| fin. | 2 | 0 | -63516 | -6074 | | | 1208 | 455 | SLV 15 | 0.07 | No |
| ini. | 2 | 0 | -96222 | 6477 | | | 1208 | 455 | SLV 4 | 0.07 | No |
| fin. | 2 | 0 | 56603 | 2254 | | | 1208 | 455 | SLV 4 | 0.2 | No |
| ini. | 2 | 0 | -41037 | 4414 | | | 1208 | 455 | SLV 6 | 0.1 | No |
| fin. | 2 | 0 | 27044 | 478 | | | 1208 | 455 | SLV 6 | 0.95 | No |
| ini. | 2 | 0 | 42802 | -1691 | | | 1208 | 455 | SLV 16 | 0.27 | No |
| fin. | 2 | 0 | -63516 | -6074 | | | 1208 | 455 | SLV 16 | 0.07 | No |

Tabella dei coefficienti di sicurezza minimi

| Stato limite | Coeff.s. | Comb. | Verifica |
|---|---|---|---|
| PF_SLV | 1.119 | SLV 3 | Si |
| V_SLV | 0.066 | SLV 1 | No |
| PF_SLU | 2.258 | SLU 82 | Si |
| V_SLU | 0.074 | SLU 82 | No |

## Trave di accoppiamento 86

Verifiche condotte secondo D.M. 17-01-18 (N.T.C.)

## Dati geometrici

| X ini. | Y ini. | Z ini.inf. | Z ini.sup. | H ini. | X fin. | Y fin. | Z fin.inf. | Z fin.sup | H fin. | Luce | Spessore | R. Trazione |
|---|---|---|---|---|---|---|---|---|---|---|---|---|
| -795.8 | 666.1 | 544 | 634 | 90 | -705.8 | 666.1 | 544 | 634 | 90 | 90 | 28 | 3500 |

## Caratteristiche del materiale

(Circolare 7 21-01-19 C8.5.I) Muratura in mattoni pieni e malta di calce LC2_Corti

| fb_ | fhk | fvk0 | fhmedio | τ0 | fv0 | μ | ϕ | fvk,lim | E | G | FC |
|---|---|---|---|---|---|---|---|---|---|---|---|
| 12 | | | 17.25 | 0.9 | 2 | 0.577 | 0.767 | 0.65 | 32000 | 12800 | 1.2 |

## Verifiche a pressoflessione delle travi in muratura in combinazioni non sismiche

| Sezione | γM | N | M | Mu | Comb. | c.s. | Verifica |
|---|---|---|---|---|---|---|---|
| ini. | 3 | -3154 | 65425 | 103792 | SLU 81 | 1.59 | Si |
| fin. | 3 | -1632 | -60189 | 103792 | SLU 81 | 1.72 | Si |
| ini. | 3 | -3034 | 62851 | 103792 | SLU 79 | 1.65 | Si |
| fin. | 3 | -1519 | -59733 | 103792 | SLU 79 | 1.74 | Si |
| ini. | 3 | -3085 | 63946 | 103792 | SLU 77 | 1.62 | Si |
| fin. | 3 | -1547 | -60520 | 103792 | SLU 77 | 1.71 | Si |
| ini. | 3 | -3084 | 64027 | 103792 | SLU 78 | 1.62 | Si |
| fin. | 3 | -1544 | -60651 | 103792 | SLU 78 | 1.71 | Si |
| ini. | 3 | -3154 | 65505 | 103792 | SLU 82 | 1.58 | Si |
| fin. | 3 | -1629 | -60320 | 103792 | SLU 82 | 1.72 | Si |
| ini. | 3 | -3034 | 62932 | 103792 | SLU 80 | 1.65 | Si |
| fin. | 3 | -1516 | -59863 | 103792 | SLU 80 | 1.73 | Si |
| ini. | 3 | -3172 | 65995 | 103792 | SLU 83 | 1.57 | Si |
| fin. | 3 | -1610 | -61787 | 103792 | SLU 83 | 1.68 | Si |
| ini. | 3 | -3066 | 63456 | 103792 | SLU 75 | 1.64 | Si |
| fin. | 3 | -1565 | -59053 | 103792 | SLU 75 | 1.76 | Si |
| ini. | 3 | -3067 | 63376 | 103792 | SLU 74 | 1.64 | Si |
| fin. | 3 | -1569 | -58922 | 103792 | SLU 74 | 1.76 | Si |
| ini. | 3 | -3172 | 66076 | 103792 | SLU 84 | 1.57 | Si |
| fin. | 3 | -1607 | -61918 | 103792 | SLU 84 | 1.68 | Si |

## Verifiche a taglio delle travi in muratura secondo §C8.7.1.3.1 in combinazioni non sismiche

| Sezione | γM | N | M | V | Vt | Vp | Vt fess. diag. | Vt,lim | Comb. | c.s. | Verifica |
|---|---|---|---|---|---|---|---|---|---|---|---|
| ini. | 3 | 0 | 62851 | -4613 | | | 970 | 365 | SLU 79 | 0.08 | No |
| fin. | 3 | 0 | -59733 | -1046 | | | 970 | 365 | SLU 79 | 0.35 | No |
| ini. | 3 | 0 | 65995 | -4739 | | | 970 | 365 | SLU 83 | 0.08 | No |
| fin. | 3 | 0 | -61787 | -1108 | | | 970 | 365 | SLU 83 | 0.33 | No |
| ini. | 3 | 0 | 65425 | -4638 | | | 970 | 365 | SLU 81 | 0.08 | No |
| fin. | 3 | 0 | -60189 | -1094 | | | 970 | 365 | SLU 81 | 0.33 | No |
| ini. | 3 | 0 | 66076 | -4738 | | | 970 | 365 | SLU 84 | 0.08 | No |
| fin. | 3 | 0 | -61918 | -1114 | | | 970 | 365 | SLU 84 | 0.33 | No |
| ini. | 3 | 0 | 64027 | -4692 | | | 970 | 365 | SLU 78 | 0.08 | No |
| fin. | 3 | 0 | -60651 | -1060 | | | 970 | 365 | SLU 78 | 0.34 | No |
| ini. | 3 | 0 | 63376 | -4592 | | | 970 | 365 | SLU 74 | 0.08 | No |
| fin. | 3 | 0 | -58922 | -1040 | | | 970 | 365 | SLU 74 | 0.35 | No |
| ini. | 3 | 0 | 63946 | -4693 | | | 970 | 365 | SLU 77 | 0.08 | No |
| fin. | 3 | 0 | -60520 | -1054 | | | 970 | 365 | SLU 77 | 0.35 | No |
| ini. | 3 | 0 | 62932 | -4612 | | | 970 | 365 | SLU 80 | 0.08 | No |
| fin. | 3 | 0 | -59863 | -1052 | | | 970 | 365 | SLU 80 | 0.35 | No |
| ini. | 3 | 0 | 63456 | -4591 | | | 970 | 365 | SLU 75 | 0.08 | No |
| fin. | 3 | 0 | -59053 | -1047 | | | 970 | 365 | SLU 75 | 0.35 | No |
| ini. | 3 | 0 | 65505 | -4637 | | | 970 | 365 | SLU 82 | 0.08 | No |
| fin. | 3 | 0 | -60320 | -1101 | | | 970 | 365 | SLU 82 | 0.33 | No |

## Verifiche a pressoflessione delle travi in muratura in combinazioni sismiche

| Sezione | γM | N | M | Mu | Comb. | c.s. | Verifica |
|---|---|---|---|---|---|---|---|
| ini. | 2 | -3690 | 83497 | 121694 | SLD 14 | 1.46 | Si |
| fin. | 2 | -1063 | -95361 | 121694 | SLD 14 | 1.28 | Si |
| ini. | 2 | -3927 | 89588 | 121694 | SLV 10 | 1.36 | Si |
| fin. | 2 | -963 | -108180 | 121694 | SLV 10 | 1.12 | Si |
| ini. | 2 | -3927 | 89588 | 121694 | SLV 9 | 1.36 | Si |
| fin. | 2 | -963 | -108180 | 121694 | SLV 9 | 1.12 | Si |
| ini. | 2 | -5871 | 139392 | 121694 | SLV 13 | 0.87 | No |
| fin. | 2 | -1032 | -172264 | 121694 | SLV 13 | 0.71 | No |
| ini. | 2 | -5871 | 139392 | 121694 | SLV 14 | 0.87 | No |
| fin. | 2 | -1032 | -172264 | 121694 | SLV 14 | 0.71 | No |
| ini. | 2 | 1755 | -56164 | 121694 | SLV 3 | 2.17 | Si |
| fin. | 2 | -1155 | 96960 | 121694 | SLV 3 | 1.26 | Si |
| ini. | 2 | -5393 | 127101 | 121694 | SLV 16 | 0.96 | No |
| fin. | 2 | -1105 | -152389 | 121694 | SLV 16 | 0.8 | No |
| ini. | 2 | 1755 | -56164 | 121694 | SLV 4 | 2.17 | Si |
| fin. | 2 | -1155 | 96960 | 121694 | SLV 4 | 1.26 | Si |
| ini. | 2 | -3690 | 83497 | 121694 | SLD 13 | 1.46 | Si |
| fin. | 2 | -1063 | -95361 | 121694 | SLD 13 | 1.28 | Si |
| ini. | 2 | -5393 | 127101 | 121694 | SLV 15 | 0.96 | No |
| fin. | 2 | -1105 | -152389 | 121694 | SLV 15 | 0.8 | No |

## Verifiche a taglio delle travi in muratura secondo §C8.7.1.3.1 in combinazioni sismiche

| Sezione | γM | N | M | V | Vt | Vp | Vt fess. diag. | Vt,lim | Comb. | c.s. | Verifica |
|---|---|---|---|---|---|---|---|---|---|---|---|
| ini. | 2 | 0 | 127101 | -7686 | | | 1456 | 548 | SLV 16 | 0.07 | No |
| fin. | 2 | 0 | -152389 | -4491 | | | 1456 | 548 | SLV 16 | 0.12 | No |
| ini. | 2 | 0 | 139392 | -8059 | | | 1456 | 548 | SLV 14 | 0.07 | No |
| fin. | 2 | 0 | -172264 | -4910 | | | 1456 | 548 | SLV 14 | 0.11 | No |
| ini. | 2 | 0 | 89588 | -5101 | | | 1456 | 548 | SLV 9 | 0.11 | No |
| fin. | 2 | 0 | -108180 | -2576 | | | 1456 | 548 | SLV 9 | 0.21 | No |
| ini. | 2 | 0 | 89588 | -5101 | | | 1456 | 548 | SLV 10 | 0.11 | No |

| Sezione | γM | N | M | V | Vt | Vp | Vt fess. diag. | Vt,lim | Comb. | c.s. | Verifica |
|---|---|---|---|---|---|---|---|---|---|---|---|
| fin. | 2 | 0 | -108180 | -2576 | | | 1456 | 548 | SLV 10 | 0.21 | No |
| ini. | 2 | 0 | 78350 | -5027 | | | 1456 | 548 | SLD 15 | 0.11 | No |
| fin. | 2 | 0 | -87096 | -2314 | | | 1456 | 548 | SLD 15 | 0.24 | No |
| ini. | 2 | 0 | 78350 | -5027 | | | 1456 | 548 | SLD 16 | 0.11 | No |
| fin. | 2 | 0 | -87096 | -2314 | | | 1456 | 548 | SLD 16 | 0.24 | No |
| ini. | 2 | 0 | 83497 | -5183 | | | 1456 | 548 | SLD 14 | 0.11 | No |
| fin. | 2 | 0 | -95361 | -2492 | | | 1456 | 548 | SLD 14 | 0.22 | No |
| ini. | 2 | 0 | 139392 | -8059 | | | 1456 | 548 | SLV 13 | 0.07 | No |
| fin. | 2 | 0 | -172264 | -4910 | | | 1456 | 548 | SLV 13 | 0.11 | No |
| ini. | 2 | 0 | 127101 | -7686 | | | 1456 | 548 | SLV 15 | 0.07 | No |
| fin. | 2 | 0 | -152389 | -4491 | | | 1456 | 548 | SLV 15 | 0.12 | No |
| ini. | 2 | 0 | 83497 | -5183 | | | 1456 | 548 | SLD 13 | 0.11 | No |
| fin. | 2 | 0 | -95361 | -2492 | | | 1456 | 548 | SLD 13 | 0.22 | No |

### Tabella dei coefficienti di sicurezza minimi

| Stato limite | Coeff.s. | Comb. | Verifica |
|---|---|---|---|
| PF_SLV | 0.706 | SLV 13 | No |
| V_SLV | 0.068 | SLV 13 | No |
| PF_SLU | 1.571 | SLU 84 | Si |
| V_SLU | 0.077 | SLU 83 | No |

## Trave di accoppiamento 87

Verifiche condotte secondo D.M. 17-01-18 (N.T.C.)

### Dati geometrici

| X ini. | Y ini. | Z ini.inf. | Z ini.sup. | H ini. | X fin. | Y fin. | Z fin.inf. | Z fin.sup | H fin. | Luce | Spessore | R. Trazione |
|---|---|---|---|---|---|---|---|---|---|---|---|---|
| -795.8 | 666.1 | 814 | 896 | 82 | -705.8 | 666.1 | 814 | 896 | 82 | 90 | 28 | 3500 |

### Caratteristiche del materiale

(Circolare 7 21-01-19 C8.5.I) Muratura in mattoni pieni e malta di calce LC2_Corti

| fb_ | fhk | fvk0 | fhmedio | τ0 | fv0 | μ | ϕ | fvk,lim | E | G | FC |
|---|---|---|---|---|---|---|---|---|---|---|---|
| 12 | | | 17.25 | 0.9 | 2 | 0.577 | 0.767 | 0.65 | 32000 | 12800 | 1.2 |

### Verifiche a pressoflessione delle travi in muratura in combinazioni non sismiche

| Sezione | γM | N | M | Mu | Comb. | c.s. | Verifica |
|---|---|---|---|---|---|---|---|
| ini. | 3 | 325 | 18143 | 89792 | SLU 74 | 4.95 | Si |
| fin. | 3 | -941 | -57526 | 89792 | SLU 74 | 1.56 | Si |
| ini. | 3 | 447 | 20304 | 89792 | SLU 77 | 4.42 | Si |
| fin. | 3 | -926 | -59741 | 89792 | SLU 77 | 1.5 | Si |
| ini. | 3 | 215 | 17120 | 89792 | SLU 81 | 5.24 | Si |
| fin. | 3 | -1011 | -58101 | 89792 | SLU 81 | 1.55 | Si |
| ini. | 3 | 218 | 17246 | 89792 | SLU 82 | 5.21 | Si |
| fin. | 3 | -1013 | -58180 | 89792 | SLU 82 | 1.54 | Si |
| ini. | 3 | 450 | 20430 | 89792 | SLU 78 | 4.4 | Si |
| fin. | 3 | -928 | -59820 | 89792 | SLU 78 | 1.5 | Si |
| ini. | 3 | 459 | 20388 | 89792 | SLU 79 | 4.4 | Si |
| fin. | 3 | -908 | -58968 | 89792 | SLU 79 | 1.52 | Si |
| ini. | 3 | 462 | 20514 | 89792 | SLU 80 | 4.38 | Si |
| fin. | 3 | -910 | -59047 | 89792 | SLU 80 | 1.52 | Si |
| ini. | 3 | 327 | 18269 | 89792 | SLU 75 | 4.92 | Si |
| fin. | 3 | -943 | -57606 | 89792 | SLU 75 | 1.56 | Si |
| ini. | 3 | 338 | 19280 | 89792 | SLU 83 | 4.66 | Si |
| fin. | 3 | -997 | -60315 | 89792 | SLU 83 | 1.49 | Si |
| ini. | 3 | 340 | 19406 | 89792 | SLU 84 | 4.63 | Si |
| fin. | 3 | -999 | -60394 | 89792 | SLU 84 | 1.49 | Si |

### Verifiche a taglio delle travi in muratura secondo §C8.7.1.3.1 in combinazioni non sismiche

| Sezione | γM | N | M | V | Vt | Vp | Vt fess. diag. | Vt,lim | Comb. | c.s. | Verifica |
|---|---|---|---|---|---|---|---|---|---|---|---|
| ini. | 3 | 0 | 20388 | 707 | | | 806 | 303 | SLU 79 | 0.43 | No |
| fin. | 3 | 0 | -58968 | -3608 | | | 806 | 303 | SLU 79 | 0.08 | No |
| ini. | 3 | 0 | 19406 | 850 | | | 806 | 303 | SLU 84 | 0.36 | No |
| fin. | 3 | 0 | -60394 | -3723 | | | 806 | 303 | SLU 84 | 0.08 | No |
| ini. | 3 | 0 | 20430 | 738 | | | 806 | 303 | SLU 78 | 0.41 | No |
| fin. | 3 | 0 | -59820 | -3663 | | | 806 | 303 | SLU 78 | 0.08 | No |
| ini. | 3 | 0 | 18269 | 837 | | | 806 | 303 | SLU 75 | 0.36 | No |
| fin. | 3 | 0 | -57606 | -3568 | | | 806 | 303 | SLU 75 | 0.08 | No |
| ini. | 3 | 0 | 18143 | 844 | | | 806 | 303 | SLU 74 | 0.36 | No |
| fin. | 3 | 0 | -57526 | -3565 | | | 806 | 303 | SLU 74 | 0.09 | No |
| ini. | 3 | 0 | 20514 | 701 | | | 806 | 303 | SLU 80 | 0.43 | No |
| fin. | 3 | 0 | -59047 | -3610 | | | 806 | 303 | SLU 80 | 0.08 | No |
| ini. | 3 | 0 | 17120 | 956 | | | 806 | 303 | SLU 81 | 0.32 | No |
| fin. | 3 | 0 | -58101 | -3625 | | | 806 | 303 | SLU 81 | 0.08 | No |
| ini. | 3 | 0 | 20304 | 744 | | | 806 | 303 | SLU 77 | 0.41 | No |
| fin. | 3 | 0 | -59741 | -3661 | | | 806 | 303 | SLU 77 | 0.08 | No |
| ini. | 3 | 0 | 17246 | 949 | | | 806 | 303 | SLU 82 | 0.32 | No |
| fin. | 3 | 0 | -58180 | -3628 | | | 806 | 303 | SLU 82 | 0.08 | No |
| ini. | 3 | 0 | 19280 | 856 | | | 806 | 303 | SLU 83 | 0.35 | No |
| fin. | 3 | 0 | -60315 | -3720 | | | 806 | 303 | SLU 83 | 0.08 | No |

### Verifiche a pressoflessione delle travi in muratura in combinazioni sismiche

| Sezione | γM | N | M | Mu | Comb. | c.s. | Verifica |
|---|---|---|---|---|---|---|---|
| ini. | 2 | 866 | 46031 | 107694 | SLD 13 | 2.34 | Si |
| fin. | 2 | -1422 | -77517 | 107694 | SLD 13 | 1.39 | Si |

| Sezione | γM | N | M | Mu | Comb. | c.s. | Verifica |
|---|---|---|---|---|---|---|---|
| ini. | 2 | 866 | 46031 | 107694 | SLD 14 | 2.34 | Si |
| fin. | 2 | -1422 | -77517 | 107694 | SLD 14 | 1.39 | Si |
| ini. | 2 | -1512 | -72464 | 107694 | SLV 4 | 1.49 | Si |
| fin. | 2 | 1303 | 60531 | 107694 | SLV 4 | 1.78 | Si |
| ini. | 2 | 1817 | 93567 | 107694 | SLV 14 | 1.15 | Si |
| fin. | 2 | -2516 | -132921 | 107694 | SLV 14 | 0.81 | No |
| ini. | 2 | 1677 | 82356 | 107694 | SLV 16 | 1.31 | Si |
| fin. | 2 | -2257 | -120261 | 107694 | SLV 16 | 0.9 | No |
| ini. | 2 | 863 | 52459 | 107694 | SLV 10 | 2.05 | Si |
| fin. | 2 | -1572 | -84415 | 107694 | SLV 10 | 1.28 | Si |
| ini. | 2 | 863 | 52459 | 107694 | SLV 9 | 2.05 | Si |
| fin. | 2 | -1572 | -84415 | 107694 | SLV 9 | 1.28 | Si |
| ini. | 2 | 1817 | 93567 | 107694 | SLV 13 | 1.15 | Si |
| fin. | 2 | -2516 | -132921 | 107694 | SLV 13 | 0.81 | No |
| ini. | 2 | -1512 | -72464 | 107694 | SLV 3 | 1.49 | Si |
| fin. | 2 | 1303 | 60531 | 107694 | SLV 3 | 1.78 | Si |
| ini. | 2 | 1677 | 82356 | 107694 | SLV 15 | 1.31 | Si |
| fin. | 2 | -2257 | -120261 | 107694 | SLV 15 | 0.9 | No |

### Verifiche a taglio delle travi in muratura secondo §C8.7.1.3.1 in combinazioni sismiche

| Sezione | γM | N | M | V | Vt | Vp | Vt fess. diag. | Vt,lim | Comb. | c.s. | Verifica |
|---|---|---|---|---|---|---|---|---|---|---|---|
| ini. | 2 | 0 | -72464 | 4076 | | | 1208 | 455 | SLV 4 | 0.11 | No |
| fin. | 2 | 0 | 60531 | 1565 | | | 1208 | 455 | SLV 4 | 0.29 | No |
| ini. | 2 | 0 | 93567 | -2824 | | | 1208 | 455 | SLV 14 | 0.16 | No |
| fin. | 2 | 0 | -132921 | -6156 | | | 1208 | 455 | SLV 14 | 0.07 | No |
| ini. | 2 | 0 | 46031 | -850 | | | 1208 | 455 | SLD 13 | 0.54 | No |
| fin. | 2 | 0 | -77517 | -3945 | | | 1208 | 455 | SLD 13 | 0.12 | No |
| ini. | 2 | 0 | 93567 | -2824 | | | 1208 | 455 | SLV 13 | 0.16 | No |
| fin. | 2 | 0 | -132921 | -6156 | | | 1208 | 455 | SLV 13 | 0.07 | No |
| ini. | 2 | 0 | 52459 | -1204 | | | 1208 | 455 | SLV 9 | 0.38 | No |
| fin. | 2 | 0 | -84415 | -4130 | | | 1208 | 455 | SLV 9 | 0.11 | No |
| ini. | 2 | 0 | 46031 | -850 | | | 1208 | 455 | SLD 14 | 0.54 | No |
| fin. | 2 | 0 | -77517 | -3945 | | | 1208 | 455 | SLD 14 | 0.12 | No |
| ini. | 2 | 0 | 82356 | -2300 | | | 1208 | 455 | SLV 16 | 0.2 | No |
| fin. | 2 | 0 | -120261 | -5710 | | | 1208 | 455 | SLV 16 | 0.08 | No |
| ini. | 2 | 0 | -72464 | 4076 | | | 1208 | 455 | SLV 3 | 0.11 | No |
| fin. | 2 | 0 | 60531 | 1565 | | | 1208 | 455 | SLV 3 | 0.29 | No |
| ini. | 2 | 0 | 82356 | -2300 | | | 1208 | 455 | SLV 15 | 0.2 | No |
| fin. | 2 | 0 | -120261 | -5710 | | | 1208 | 455 | SLV 15 | 0.08 | No |
| ini. | 2 | 0 | 52459 | -1204 | | | 1208 | 455 | SLV 10 | 0.38 | No |
| fin. | 2 | 0 | -84415 | -4130 | | | 1208 | 455 | SLV 10 | 0.11 | No |

### Tabella dei coefficienti di sicurezza minimi

| Stato limite | Coeff.s. | Comb. | Verifica |
|---|---|---|---|
| PF_SLV | 0.81 | SLV 13 | No |
| V_SLV | 0.074 | SLV 13 | No |
| PF_SLU | 1.487 | SLU 84 | Si |
| V_SLU | 0.081 | SLU 84 | No |

## Trave di accoppiamento 88

Verifiche condotte secondo D.M. 17-01-18 (N.T.C.)

### Dati geometrici

| X ini. | Y ini. | Z ini.inf. | Z ini.sup. | H ini. | X fin. | Y fin. | Z fin.inf. | Z fin.sup | H fin. | Luce | Spessore | R. Trazione |
|---|---|---|---|---|---|---|---|---|---|---|---|---|
| -1986.8 | 104.6 | 754 | 896 | 142 | -2066.8 | 104.6 | 754 | 896 | 142 | 80 | 28 | 3500 |

### Caratteristiche del materiale

(Circolare 7 21-01-19 C8.5.I) Muratura in mattoni pieni e malta di calce LC2_Corti

| fb_ | fhk | fvk0 | fhmedio | τ0 | fv0 | μ | ϕ | fvk,lim | E | G | FC |
|---|---|---|---|---|---|---|---|---|---|---|---|
| 12 | | | 17.25 | 0.9 | 2 | 0.577 | 0.767 | 0.65 | 32000 | 12800 | 1.2 |

### Verifiche a pressoflessione delle travi in muratura in combinazioni non sismiche

| Sezione | γM | N | M | Mu | Comb. | c.s. | Verifica |
|---|---|---|---|---|---|---|---|
| ini. | 3 | -153 | 93309 | 194792 | SLU 69 | 2.09 | Si |
| fin. | 3 | -153 | -86830 | 194792 | SLU 69 | 2.24 | Si |
| ini. | 3 | -69 | 86909 | 194792 | SLU 27 | 2.24 | Si |
| fin. | 3 | -69 | -78480 | 194792 | SLU 27 | 2.48 | Si |
| ini. | 3 | -166 | 96110 | 194792 | SLU 77 | 2.03 | Si |
| fin. | 3 | -166 | -83773 | 194792 | SLU 77 | 2.33 | Si |
| ini. | 3 | -84 | 87119 | 194792 | SLU 29 | 2.24 | Si |
| fin. | 3 | -84 | -79025 | 194792 | SLU 29 | 2.46 | Si |
| ini. | 3 | -168 | 93518 | 194792 | SLU 71 | 2.08 | Si |
| fin. | 3 | -168 | -87375 | 194792 | SLU 71 | 2.23 | Si |
| ini. | 3 | -82 | 89711 | 194792 | SLU 35 | 2.17 | Si |
| fin. | 3 | -82 | -75423 | 194792 | SLU 35 | 2.58 | Si |
| ini. | 3 | -250 | 88875 | 194792 | SLU 80 | 2.19 | Si |
| fin. | 3 | -250 | -77746 | 194792 | SLU 80 | 2.51 | Si |
| ini. | 3 | -182 | 96319 | 194792 | SLU 79 | 2.02 | Si |
| fin. | 3 | -182 | -84318 | 194792 | SLU 79 | 2.31 | Si |
| ini. | 3 | -234 | 88666 | 194792 | SLU 78 | 2.2 | Si |
| fin. | 3 | -234 | -77200 | 194792 | SLU 78 | 2.52 | Si |
| ini. | 3 | -98 | 89920 | 194792 | SLU 37 | 2.17 | Si |
| fin. | 3 | -98 | -75968 | 194792 | SLU 37 | 2.56 | Si |

### Verifiche a taglio delle travi in muratura secondo §C8.7.1.3.1 in combinazioni non sismiche

| Sezione | γM | N | M | V | Vt | Vp | Vt fess. diag. | Vt,lim | Comb. | c.s. | Verifica |
|---|---|---|---|---|---|---|---|---|---|---|---|
| ini. | 3 | 0 | 96110 | -1297 | | | 1531 | 576 | SLU 77 | 0.44 | No |
| fin. | 3 | 0 | -83773 | -3247 | | | 1531 | 576 | SLU 77 | 0.18 | No |
| ini. | 3 | 0 | 89920 | -1215 | | | 1531 | 576 | SLU 37 | 0.47 | No |
| fin. | 3 | 0 | -75968 | -2966 | | | 1531 | 576 | SLU 37 | 0.19 | No |
| ini. | 3 | 0 | 96319 | -1306 | | | 1531 | 576 | SLU 79 | 0.44 | No |
| fin. | 3 | 0 | -84318 | -3256 | | | 1531 | 576 | SLU 79 | 0.18 | No |
| ini. | 3 | 0 | 88666 | -1122 | | | 1531 | 576 | SLU 78 | 0.51 | No |
| fin. | 3 | 0 | -77200 | -3072 | | | 1531 | 576 | SLU 78 | 0.19 | No |
| ini. | 3 | 0 | 89711 | -1206 | | | 1531 | 576 | SLU 35 | 0.48 | No |
| fin. | 3 | 0 | -75423 | -2957 | | | 1531 | 576 | SLU 35 | 0.19 | No |
| ini. | 3 | 0 | 93309 | -1496 | | | 1531 | 576 | SLU 69 | 0.39 | No |
| fin. | 3 | 0 | -86830 | -3054 | | | 1531 | 576 | SLU 69 | 0.19 | No |
| ini. | 3 | 0 | 93518 | -1505 | | | 1531 | 576 | SLU 71 | 0.38 | No |
| fin. | 3 | 0 | -87375 | -3064 | | | 1531 | 576 | SLU 71 | 0.19 | No |
| ini. | 3 | 0 | 85864 | -1320 | | | 1531 | 576 | SLU 70 | 0.44 | No |
| fin. | 3 | 0 | -80257 | -2879 | | | 1531 | 576 | SLU 70 | 0.2 | No |
| ini. | 3 | 0 | 88875 | -1131 | | | 1531 | 576 | SLU 80 | 0.51 | No |
| fin. | 3 | 0 | -77746 | -3081 | | | 1531 | 576 | SLU 80 | 0.19 | No |
| ini. | 3 | 0 | 86073 | -1330 | | | 1531 | 576 | SLU 72 | 0.43 | No |
| fin. | 3 | 0 | -80803 | -2889 | | | 1531 | 576 | SLU 72 | 0.2 | No |

### Verifiche a pressoflessione delle travi in muratura in combinazioni sismiche

| Sezione | γM | N | M | Mu | Comb. | c.s. | Verifica |
|---|---|---|---|---|---|---|---|
| ini. | 2 | 47 | 589007 | 212694 | SLV 1 | 0.36 | No |
| fin. | 2 | -170 | -581896 | 212694 | SLV 1 | 0.37 | No |
| ini. | 2 | 47 | 589007 | 212694 | SLV 2 | 0.36 | No |
| fin. | 2 | -170 | -581896 | 212694 | SLV 2 | 0.37 | No |
| ini. | 2 | 60 | 551933 | 212694 | SLV 4 | 0.39 | No |
| fin. | 2 | -156 | -546741 | 212694 | SLV 4 | 0.39 | No |
| ini. | 2 | -116 | 274370 | 212694 | SLD 1 | 0.78 | No |
| fin. | 2 | -209 | -269368 | 212694 | SLD 1 | 0.79 | No |
| ini. | 2 | -529 | -470602 | 212694 | SLV 13 | 0.45 | No |
| fin. | 2 | -313 | 472399 | 212694 | SLV 13 | 0.45 | No |
| ini. | 2 | 60 | 551933 | 212694 | SLV 3 | 0.39 | No |
| fin. | 2 | -156 | -546741 | 212694 | SLV 3 | 0.39 | No |
| ini. | 2 | -516 | -507676 | 212694 | SLV 15 | 0.42 | No |
| fin. | 2 | -299 | 507554 | 212694 | SLV 15 | 0.42 | No |
| ini. | 2 | -516 | -507676 | 212694 | SLV 16 | 0.42 | No |
| fin. | 2 | -299 | 507554 | 212694 | SLV 16 | 0.42 | No |
| ini. | 2 | -529 | -470602 | 212694 | SLV 14 | 0.45 | No |
| fin. | 2 | -313 | 472399 | 212694 | SLV 14 | 0.45 | No |
| ini. | 2 | -116 | 274370 | 212694 | SLD 2 | 0.78 | No |
| fin. | 2 | -209 | -269368 | 212694 | SLD 2 | 0.79 | No |

### Verifiche a taglio delle travi in muratura secondo §C8.7.1.3.1 in combinazioni sismiche

| Sezione | γM | N | M | V | Vt | Vp | Vt fess. diag. | Vt,lim | Comb. | c.s. | Verifica |
|---|---|---|---|---|---|---|---|---|---|---|---|
| ini. | 2 | 0 | 274370 | -6276 | | | 2297 | 864 | SLD 2 | 0.14 | No |
| fin. | 2 | 0 | -269368 | -7463 | | | 2297 | 864 | SLD 2 | 0.12 | No |
| ini. | 2 | 0 | -470602 | 12462 | | | 2297 | 864 | SLV 13 | 0.07 | No |
| fin. | 2 | 0 | 472399 | 11201 | | | 2297 | 864 | SLV 13 | 0.08 | No |
| ini. | 2 | 0 | 551933 | -13206 | | | 2297 | 864 | SLV 4 | 0.07 | No |
| fin. | 2 | 0 | -546741 | -14423 | | | 2297 | 864 | SLV 4 | 0.06 | No |
| ini. | 2 | 0 | 589007 | -14227 | | | 2297 | 864 | SLV 2 | 0.06 | No |
| fin. | 2 | 0 | -581896 | -15341 | | | 2297 | 864 | SLV 2 | 0.06 | No |
| ini. | 2 | 0 | -507676 | 13483 | | | 2297 | 864 | SLV 16 | 0.06 | No |
| fin. | 2 | 0 | 507554 | 12119 | | | 2297 | 864 | SLV 16 | 0.07 | No |
| ini. | 2 | 0 | 274370 | -6276 | | | 2297 | 864 | SLD 1 | 0.14 | No |
| fin. | 2 | 0 | -269368 | -7463 | | | 2297 | 864 | SLD 1 | 0.12 | No |
| ini. | 2 | 0 | -470602 | 12462 | | | 2297 | 864 | SLV 14 | 0.07 | No |
| fin. | 2 | 0 | 472399 | 11201 | | | 2297 | 864 | SLV 14 | 0.08 | No |
| ini. | 2 | 0 | -507676 | 13483 | | | 2297 | 864 | SLV 15 | 0.06 | No |
| fin. | 2 | 0 | 507554 | 12119 | | | 2297 | 864 | SLV 15 | 0.07 | No |
| ini. | 2 | 0 | 551933 | -13206 | | | 2297 | 864 | SLV 3 | 0.07 | No |
| fin. | 2 | 0 | -546741 | -14423 | | | 2297 | 864 | SLV 3 | 0.06 | No |
| ini. | 2 | 0 | 589007 | -14227 | | | 2297 | 864 | SLV 1 | 0.06 | No |
| fin. | 2 | 0 | -581896 | -15341 | | | 2297 | 864 | SLV 1 | 0.06 | No |

### Tabella dei coefficienti di sicurezza minimi

| Stato limite | Coeff.s. | Comb. | Verifica |
|---|---|---|---|
| PF_SLV | 0.361 | SLV 1 | No |
| V_SLV | 0.056 | SLV 1 | No |
| PF_SLU | 2.022 | SLU 79 | Si |
| V_SLU | 0.177 | SLU 79 | No |

## Trave di accoppiamento 89

Verifiche condotte secondo D.M. 17-01-18 (N.T.C.)

### Dati geometrici

| X ini. | Y ini. | Z ini.inf. | Z ini.sup. | H ini. | X fin. | Y fin. | Z fin.inf. | Z fin.sup | H fin. | Luce | Spessore | R. Trazione |
|---|---|---|---|---|---|---|---|---|---|---|---|---|
| -1116.3 | 104.6 | 794 | 896 | 102 | -1228.3 | 104.6 | 794 | 896 | 102 | 112 | 28 | 3500 |

## Caratteristiche del materiale

(Circolare 7 21-01-19 C8.5.I) Muratura in mattoni pieni e malta di calce LC2_Corti

| fb_ | fhk | fvk0 | fhmedio | τ0 | fv0 | μ | ϕ | fvk,lim | E | G | FC |
|---|---|---|---|---|---|---|---|---|---|---|---|
| 12 | | | 17.25 | 0.9 | 2 | 0.577 | 0.767 | 0.65 | 32000 | 12800 | 1.2 |

## Verifiche a pressoflessione delle travi in muratura in combinazioni non sismiche

| Sezione | γM | N | M | Mu | Comb. | c.s. | Verifica |
|---|---|---|---|---|---|---|---|
| ini. | 3 | -1382 | -64540 | 124792 | SLU 38 | 1.93 | Si |
| fin. | 3 | -1382 | -3168 | 124792 | SLU 38 | 39.39 | Si |
| ini. | 3 | -1547 | -65844 | 124792 | SLU 80 | 1.9 | Si |
| fin. | 3 | -1547 | -5744 | 124792 | SLU 80 | 21.73 | Si |
| ini. | 3 | -1067 | -63241 | 124792 | SLU 29 | 1.97 | Si |
| fin. | 3 | -1067 | 8626 | 124792 | SLU 29 | 14.47 | Si |
| ini. | 3 | -1533 | -63907 | 124792 | SLU 78 | 1.95 | Si |
| fin. | 3 | -1533 | -6855 | 124792 | SLU 78 | 18.2 | Si |
| ini. | 3 | -1232 | -64545 | 124792 | SLU 71 | 1.93 | Si |
| fin. | 3 | -1232 | 6050 | 124792 | SLU 71 | 20.63 | Si |
| ini. | 3 | -1302 | -65314 | 124792 | SLU 35 | 1.91 | Si |
| fin. | 3 | -1302 | -3735 | 124792 | SLU 35 | 33.41 | Si |
| ini. | 3 | -1217 | -62608 | 124792 | SLU 69 | 1.99 | Si |
| fin. | 3 | -1217 | 4940 | 124792 | SLU 69 | 25.26 | Si |
| ini. | 3 | -1467 | -66618 | 124792 | SLU 77 | 1.87 | Si |
| fin. | 3 | -1467 | -6311 | 124792 | SLU 77 | 19.77 | Si |
| ini. | 3 | -1317 | -67252 | 124792 | SLU 37 | 1.86 | Si |
| fin. | 3 | -1317 | -2624 | 124792 | SLU 37 | 47.55 | Si |
| ini. | 3 | -1482 | -68556 | 124792 | SLU 79 | 1.82 | Si |
| fin. | 3 | -1482 | -5200 | 124792 | SLU 79 | 24 | Si |

## Verifiche a taglio delle travi in muratura secondo §C8.7.1.3.1 in combinazioni non sismiche

| Sezione | γM | N | M | V | Vt | Vp | Vt fess. diag. | Vt,lim | Comb. | c.s. | Verifica |
|---|---|---|---|---|---|---|---|---|---|---|---|
| ini. | 3 | 0 | -65314 | 1795 | | | 1002 | 377 | SLU 35 | 0.21 | No |
| fin. | 3 | 0 | -3735 | -639 | | | 1002 | 377 | SLU 35 | 0.59 | No |
| ini. | 3 | 0 | -67252 | 1822 | | | 1002 | 377 | SLU 37 | 0.21 | No |
| fin. | 3 | 0 | -2624 | -612 | | | 1002 | 377 | SLU 37 | 0.62 | No |
| ini. | 3 | 0 | -65844 | 1899 | | | 1002 | 377 | SLU 80 | 0.2 | No |
| fin. | 3 | 0 | -5744 | -767 | | | 1002 | 377 | SLU 80 | 0.49 | No |
| ini. | 3 | 0 | -66618 | 1901 | | | 1002 | 377 | SLU 77 | 0.2 | No |
| fin. | 3 | 0 | -6311 | -765 | | | 1002 | 377 | SLU 77 | 0.49 | No |
| ini. | 3 | 0 | -57609 | 1850 | | | 1002 | 377 | SLU 83 | 0.2 | No |
| fin. | 3 | 0 | -20450 | -1118 | | | 1002 | 377 | SLU 83 | 0.34 | No |
| ini. | 3 | 0 | -63907 | 1872 | | | 1002 | 377 | SLU 78 | 0.2 | No |
| fin. | 3 | 0 | -6855 | -794 | | | 1002 | 377 | SLU 78 | 0.47 | No |
| ini. | 3 | 0 | -64540 | 1793 | | | 1002 | 377 | SLU 38 | 0.21 | No |
| fin. | 3 | 0 | -3168 | -641 | | | 1002 | 377 | SLU 38 | 0.59 | No |
| ini. | 3 | 0 | -62602 | 1766 | | | 1002 | 377 | SLU 36 | 0.21 | No |
| fin. | 3 | 0 | -4279 | -668 | | | 1002 | 377 | SLU 36 | 0.56 | No |
| ini. | 3 | 0 | -68556 | 1928 | | | 1002 | 377 | SLU 79 | 0.2 | No |
| fin. | 3 | 0 | -5200 | -738 | | | 1002 | 377 | SLU 79 | 0.51 | No |
| ini. | 3 | 0 | -54897 | 1821 | | | 1002 | 377 | SLU 84 | 0.21 | No |
| fin. | 3 | 0 | -20994 | -1147 | | | 1002 | 377 | SLU 84 | 0.33 | No |

## Verifiche a pressoflessione delle travi in muratura in combinazioni sismiche

| Sezione | γM | N | M | Mu | Comb. | c.s. | Verifica |
|---|---|---|---|---|---|---|---|
| ini. | 2 | -2126 | 194002 | 142694 | SLV 1 | 0.74 | No |
| fin. | 2 | -2400 | -588986 | 142694 | SLV 1 | 0.24 | No |
| ini. | 2 | 214 | -249738 | 142694 | SLV 16 | 0.57 | No |
| fin. | 2 | 488 | 560525 | 142694 | SLV 16 | 0.25 | No |
| ini. | 2 | -2126 | 194002 | 142694 | SLV 2 | 0.74 | No |
| fin. | 2 | -2400 | -588986 | 142694 | SLV 2 | 0.24 | No |
| ini. | 2 | -2195 | 314571 | 142694 | SLV 3 | 0.45 | No |
| fin. | 2 | -2457 | -707436 | 142694 | SLV 3 | 0.2 | No |
| ini. | 2 | -2195 | 314571 | 142694 | SLV 4 | 0.45 | No |
| fin. | 2 | -2457 | -707436 | 142694 | SLV 4 | 0.2 | No |
| ini. | 2 | -1432 | 257727 | 142694 | SLV 7 | 0.55 | No |
| fin. | 2 | -1494 | -401841 | 142694 | SLV 7 | 0.36 | No |
| ini. | 2 | -1432 | 257727 | 142694 | SLV 8 | 0.55 | No |
| fin. | 2 | -1494 | -401841 | 142694 | SLV 8 | 0.36 | No |
| ini. | 2 | 283 | -370307 | 142694 | SLV 14 | 0.39 | No |
| fin. | 2 | 545 | 678976 | 142694 | SLV 14 | 0.21 | No |
| ini. | 2 | 283 | -370307 | 142694 | SLV 13 | 0.39 | No |
| fin. | 2 | 545 | 678976 | 142694 | SLV 13 | 0.21 | No |
| ini. | 2 | 214 | -249738 | 142694 | SLV 15 | 0.57 | No |
| fin. | 2 | 488 | 560525 | 142694 | SLV 15 | 0.25 | No |

## Verifiche a taglio delle travi in muratura secondo §C8.7.1.3.1 in combinazioni sismiche

| Sezione | γM | N | M | V | Vt | Vp | Vt fess. diag. | Vt,lim | Comb. | c.s. | Verifica |
|---|---|---|---|---|---|---|---|---|---|---|---|
| ini. | 2 | 0 | -370307 | 10391 | | | 1503 | 565 | SLV 13 | 0.05 | No |
| fin. | 2 | 0 | 678976 | 8749 | | | 1503 | 565 | SLV 13 | 0.06 | No |
| ini. | 2 | 0 | 314571 | -8505 | | | 1503 | 565 | SLV 3 | 0.07 | No |
| fin. | 2 | 0 | -707436 | -10085 | | | 1503 | 565 | SLV 3 | 0.06 | No |
| ini. | 2 | 0 | -249738 | 8233 | | | 1503 | 565 | SLV 15 | 0.07 | No |
| fin. | 2 | 0 | 560525 | 6607 | | | 1503 | 565 | SLV 15 | 0.09 | No |
| ini. | 2 | 0 | -313463 | 7050 | | | 1503 | 565 | SLV 9 | 0.08 | No |
| fin. | 2 | 0 | 373381 | 5405 | | | 1503 | 565 | SLV 9 | 0.1 | No |
| ini. | 2 | 0 | 194002 | -6347 | | | 1503 | 565 | SLV 1 | 0.09 | No |
| fin. | 2 | 0 | -588986 | -7943 | | | 1503 | 565 | SLV 1 | 0.07 | No |
| ini. | 2 | 0 | 194002 | -6347 | | | 1503 | 565 | SLV 2 | 0.09 | No |

| Sezione | γM | N | M | V | Vt | Vp | Vt fess. diag. | Vt,lim | Comb. | c.s. | Verifica |
|---|---|---|---|---|---|---|---|---|---|---|---|
| fin. | 2 | 0 | -588986 | -7943 | | | 1503 | 565 | SLV 2 | 0.07 | No |
| ini. | 2 | 0 | -370307 | 10391 | | | 1503 | 565 | SLV 14 | 0.05 | No |
| fin. | 2 | 0 | 678976 | 8749 | | | 1503 | 565 | SLV 14 | 0.06 | No |
| ini. | 2 | 0 | 314571 | -8505 | | | 1503 | 565 | SLV 4 | 0.07 | No |
| fin. | 2 | 0 | -707436 | -10085 | | | 1503 | 565 | SLV 4 | 0.06 | No |
| ini. | 2 | 0 | -313463 | 7050 | | | 1503 | 565 | SLV 10 | 0.08 | No |
| fin. | 2 | 0 | 373381 | 5405 | | | 1503 | 565 | SLV 10 | 0.1 | No |
| ini. | 2 | 0 | -249738 | 8233 | | | 1503 | 565 | SLV 16 | 0.07 | No |
| fin. | 2 | 0 | 560525 | 6607 | | | 1503 | 565 | SLV 16 | 0.09 | No |

### Tabella dei coefficienti di sicurezza minimi

| Stato limite | Coeff.s. | Comb. | Verifica |
|---|---|---|---|
| PF_SLV | 0.202 | SLV 3 | No |
| V_SLV | 0.054 | SLV 13 | No |
| PF_SLU | 1.82 | SLU 79 | Si |
| V_SLU | 0.196 | SLU 79 | No |

## Trave di accoppiamento 90

Verifiche condotte secondo D.M. 17-01-18 (N.T.C.)

### Dati geometrici

| X ini. | Y ini. | Z ini.inf. | Z ini.sup. | H ini. | X fin. | Y fin. | Z fin.inf. | Z fin.sup | H fin. | Luce | Spessore | R. Trazione |
|---|---|---|---|---|---|---|---|---|---|---|---|---|
| -938.6 | 104.6 | 794 | 896 | 102 | -1046.6 | 104.6 | 794 | 896 | 102 | 108 | 28 | 3500 |

### Caratteristiche del materiale

(Circolare 7 21-01-19 C8.5.I) Muratura in mattoni pieni e malta di calce LC2_Corti

| fb_ | fhk | fvk0 | fhmedio | τ0 | fv0 | μ | ϕ | fvk,lim | E | G | FC |
|---|---|---|---|---|---|---|---|---|---|---|---|
| 12 | | | 17.25 | 0.9 | 2 | 0.577 | 0.767 | 0.65 | 32000 | 12800 | 1.2 |

### Verifiche a pressoflessione delle travi in muratura in combinazioni non sismiche

| Sezione | γM | N | M | Mu | Comb. | c.s. | Verifica |
|---|---|---|---|---|---|---|---|
| ini. | 3 | -952 | 26221 | 124792 | SLU 35 | 4.76 | Si |
| fin. | 3 | -952 | -39544 | 124792 | SLU 35 | 3.16 | Si |
| ini. | 3 | -874 | 22745 | 124792 | SLU 69 | 5.49 | Si |
| fin. | 3 | -874 | -37648 | 124792 | SLU 69 | 3.31 | Si |
| ini. | 3 | -972 | 28396 | 124792 | SLU 37 | 4.39 | Si |
| fin. | 3 | -972 | -42174 | 124792 | SLU 37 | 2.96 | Si |
| ini. | 3 | -750 | 28195 | 124792 | SLU 27 | 4.43 | Si |
| fin. | 3 | -750 | -40787 | 124792 | SLU 27 | 3.06 | Si |
| ini. | 3 | -1033 | 23525 | 124792 | SLU 38 | 5.3 | Si |
| fin. | 3 | -1033 | -37958 | 124792 | SLU 38 | 3.29 | Si |
| ini. | 3 | -770 | 30370 | 124792 | SLU 29 | 4.11 | Si |
| fin. | 3 | -770 | -43417 | 124792 | SLU 29 | 2.87 | Si |
| ini. | 3 | -831 | 25499 | 124792 | SLU 30 | 4.89 | Si |
| fin. | 3 | -831 | -39201 | 124792 | SLU 30 | 3.18 | Si |
| ini. | 3 | -811 | 23325 | 124792 | SLU 28 | 5.35 | Si |
| fin. | 3 | -811 | -36570 | 124792 | SLU 28 | 3.41 | Si |
| ini. | 3 | -1096 | 22945 | 124792 | SLU 79 | 5.44 | Si |
| fin. | 3 | -1096 | -39036 | 124792 | SLU 79 | 3.2 | Si |
| ini. | 3 | -895 | 24919 | 124792 | SLU 71 | 5.01 | Si |
| fin. | 3 | -895 | -40278 | 124792 | SLU 71 | 3.1 | Si |

### Verifiche a taglio delle travi in muratura secondo §C8.7.1.3.1 in combinazioni non sismiche

| Sezione | γM | N | M | V | Vt | Vp | Vt fess. diag. | Vt,lim | Comb. | c.s. | Verifica |
|---|---|---|---|---|---|---|---|---|---|---|---|
| ini. | 3 | 0 | 26221 | 830 | | | 1039 | 391 | SLU 35 | 0.47 | No |
| fin. | 3 | 0 | -39544 | -2035 | | | 1039 | 391 | SLU 35 | 0.19 | No |
| ini. | 3 | 0 | 18074 | 1070 | | | 1039 | 391 | SLU 80 | 0.37 | No |
| fin. | 3 | 0 | -34819 | -2033 | | | 1039 | 391 | SLU 80 | 0.19 | No |
| ini. | 3 | 0 | 20770 | 1030 | | | 1039 | 391 | SLU 77 | 0.38 | No |
| fin. | 3 | 0 | -36405 | -2073 | | | 1039 | 391 | SLU 77 | 0.19 | No |
| ini. | 3 | 0 | 28396 | 785 | | | 1039 | 391 | SLU 37 | 0.5 | No |
| fin. | 3 | 0 | -42174 | -2080 | | | 1039 | 391 | SLU 37 | 0.19 | No |
| ini. | 3 | 0 | 22945 | 986 | | | 1039 | 391 | SLU 79 | 0.4 | No |
| fin. | 3 | 0 | -39036 | -2118 | | | 1039 | 391 | SLU 79 | 0.18 | No |
| ini. | 3 | 0 | 15900 | 1114 | | | 1039 | 391 | SLU 78 | 0.35 | No |
| fin. | 3 | 0 | -32189 | -1989 | | | 1039 | 391 | SLU 78 | 0.2 | No |
| ini. | 3 | 0 | 17649 | 1167 | | | 1039 | 391 | SLU 41 | 0.34 | No |
| fin. | 3 | 0 | -29256 | -2023 | | | 1039 | 391 | SLU 41 | 0.19 | No |
| ini. | 3 | 0 | 23525 | 870 | | | 1039 | 391 | SLU 38 | 0.45 | No |
| fin. | 3 | 0 | -37958 | -1996 | | | 1039 | 391 | SLU 38 | 0.2 | No |
| ini. | 3 | 0 | 12198 | 1367 | | | 1039 | 391 | SLU 83 | 0.29 | No |
| fin. | 3 | 0 | -26117 | -2061 | | | 1039 | 391 | SLU 83 | 0.19 | No |
| ini. | 3 | 0 | 7328 | 1451 | | | 1039 | 391 | SLU 84 | 0.27 | No |
| fin. | 3 | 0 | -21900 | -1977 | | | 1039 | 391 | SLU 84 | 0.2 | No |

### Verifiche a pressoflessione delle travi in muratura in combinazioni sismiche

| Sezione | γM | N | M | Mu | Comb. | c.s. | Verifica |
|---|---|---|---|---|---|---|---|
| ini. | 2 | -807 | -528885 | 142694 | SLV 14 | 0.27 | No |
| fin. | 2 | -482 | 105188 | 142694 | SLV 14 | 1.36 | Si |
| ini. | 2 | -702 | 587928 | 142694 | SLV 2 | 0.24 | No |
| fin. | 2 | -1017 | -222377 | 142694 | SLV 2 | 0.64 | No |
| ini. | 2 | -741 | -587077 | 142694 | SLV 16 | 0.24 | No |
| fin. | 2 | -426 | 205202 | 142694 | SLV 16 | 0.7 | No |

| Sezione | γM | N | M | Mu | Comb. | c.s. | Verifica |
|---|---|---|---|---|---|---|---|
| ini. | 2 | -702 | 587928 | 142694 | SLV 1 | 0.24 | No |
| fin. | 2 | -1017 | -222377 | 142694 | SLV 1 | 0.64 | No |
| ini. | 2 | -741 | -587077 | 142694 | SLV 15 | 0.24 | No |
| fin. | 2 | -426 | 205202 | 142694 | SLV 15 | 0.7 | No |
| ini. | 2 | -807 | -528885 | 142694 | SLV 13 | 0.27 | No |
| fin. | 2 | -482 | 105188 | 142694 | SLV 13 | 1.36 | Si |
| ini. | 2 | -816 | 264934 | 142694 | SLV 5 | 0.54 | No |
| fin. | 2 | -896 | -224412 | 142694 | SLV 5 | 0.64 | No |
| ini. | 2 | -816 | 264934 | 142694 | SLV 6 | 0.54 | No |
| fin. | 2 | -896 | -224412 | 142694 | SLV 6 | 0.64 | No |
| ini. | 2 | -636 | 529736 | 142694 | SLV 4 | 0.27 | No |
| fin. | 2 | -961 | -122363 | 142694 | SLV 4 | 1.17 | Si |
| ini. | 2 | -636 | 529736 | 142694 | SLV 3 | 0.27 | No |
| fin. | 2 | -961 | -122363 | 142694 | SLV 3 | 1.17 | Si |

### Verifiche a taglio delle travi in muratura secondo §C8.7.1.3.1 in combinazioni sismiche

| Sezione | γM | N | M | V | Vt | Vp | Vt fess. diag. | Vt,lim | Comb. | c.s. | Verifica |
|---|---|---|---|---|---|---|---|---|---|---|---|
| ini. | 2 | 0 | 587928 | -6767 | | | 1558 | 586 | SLV 1 | 0.09 | No |
| fin. | 2 | 0 | -222377 | -8520 | | | 1558 | 586 | SLV 1 | 0.07 | No |
| ini. | 2 | 0 | 264934 | -3639 | | | 1558 | 586 | SLV 5 | 0.16 | No |
| fin. | 2 | 0 | -224412 | -5521 | | | 1558 | 586 | SLV 5 | 0.11 | No |
| ini. | 2 | 0 | 529736 | -5306 | | | 1558 | 586 | SLV 4 | 0.11 | No |
| fin. | 2 | 0 | -122363 | -7036 | | | 1558 | 586 | SLV 4 | 0.08 | No |
| ini. | 2 | 0 | -528885 | 7038 | | | 1558 | 586 | SLV 14 | 0.08 | No |
| fin. | 2 | 0 | 105188 | 4995 | | | 1558 | 586 | SLV 14 | 0.12 | No |
| ini. | 2 | 0 | 264934 | -3639 | | | 1558 | 586 | SLV 6 | 0.16 | No |
| fin. | 2 | 0 | -224412 | -5521 | | | 1558 | 586 | SLV 6 | 0.11 | No |
| ini. | 2 | 0 | -528885 | 7038 | | | 1558 | 586 | SLV 13 | 0.08 | No |
| fin. | 2 | 0 | 105188 | 4995 | | | 1558 | 586 | SLV 13 | 0.12 | No |
| ini. | 2 | 0 | 529736 | -5306 | | | 1558 | 586 | SLV 3 | 0.11 | No |
| fin. | 2 | 0 | -122363 | -7036 | | | 1558 | 586 | SLV 3 | 0.08 | No |
| ini. | 2 | 0 | 587928 | -6767 | | | 1558 | 586 | SLV 2 | 0.09 | No |
| fin. | 2 | 0 | -222377 | -8520 | | | 1558 | 586 | SLV 2 | 0.07 | No |
| ini. | 2 | 0 | -587077 | 8498 | | | 1558 | 586 | SLV 15 | 0.07 | No |
| fin. | 2 | 0 | 205202 | 6479 | | | 1558 | 586 | SLV 15 | 0.09 | No |
| ini. | 2 | 0 | -587077 | 8498 | | | 1558 | 586 | SLV 16 | 0.07 | No |
| fin. | 2 | 0 | 205202 | 6479 | | | 1558 | 586 | SLV 16 | 0.09 | No |

### Tabella dei coefficienti di sicurezza minimi

| Stato limite | Coeff.s. | Comb. | Verifica |
|---|---|---|---|
| PF_SLV | 0.243 | SLV 1 | No |
| V_SLV | 0.069 | SLV 1 | No |
| PF_SLU | 2.874 | SLU 29 | Si |
| V_SLU | 0.185 | SLU 79 | No |

## Trave di accoppiamento 91

Verifiche condotte secondo D.M. 17-01-18 (N.T.C.)

### Dati geometrici

| X ini. | Y ini. | Z ini.inf. | Z ini.sup. | H ini. | X fin. | Y fin. | Z fin.inf. | Z fin.sup | H fin. | Luce | Spessore | R. Trazione |
|---|---|---|---|---|---|---|---|---|---|---|---|---|
| -647.8 | 104.6 | 754 | 896 | 142 | -727.8 | 104.6 | 754 | 896 | 142 | 80 | 28 | 3500 |

### Caratteristiche del materiale

(Circolare 7 21-01-19 C8.5.I) Muratura in mattoni pieni e malta di calce LC2_Corti

| fb_ | fhk | fvk0 | fhmedio | τ0 | fv0 | μ | ϕ | fvk,lim | E | G | FC |
|---|---|---|---|---|---|---|---|---|---|---|---|
| 12 | | | 17.25 | 0.9 | 2 | 0.577 | 0.767 | 0.65 | 32000 | 12800 | 1.2 |

### Verifiche a pressoflessione delle travi in muratura in combinazioni non sismiche

| Sezione | γM | N | M | Mu | Comb. | c.s. | Verifica |
|---|---|---|---|---|---|---|---|
| ini. | 3 | -1169 | -100859 | 194792 | SLU 83 | 1.93 | Si |
| fin. | 3 | -1169 | 101010 | 194792 | SLU 83 | 1.93 | Si |
| ini. | 3 | -1022 | -99183 | 194792 | SLU 42 | 1.96 | Si |
| fin. | 3 | -1022 | 99591 | 194792 | SLU 42 | 1.96 | Si |
| ini. | 3 | -1192 | -103719 | 194792 | SLU 81 | 1.88 | Si |
| fin. | 3 | -1192 | 102541 | 194792 | SLU 81 | 1.9 | Si |
| ini. | 3 | -1183 | -111875 | 194792 | SLU 82 | 1.74 | Si |
| fin. | 3 | -1183 | 109076 | 194792 | SLU 82 | 1.79 | Si |
| ini. | 3 | -1097 | -106975 | 194792 | SLU 73 | 1.82 | Si |
| fin. | 3 | -1097 | 102334 | 194792 | SLU 73 | 1.9 | Si |
| ini. | 3 | -1045 | -102044 | 194792 | SLU 40 | 1.91 | Si |
| fin. | 3 | -1045 | 101123 | 194792 | SLU 40 | 1.93 | Si |
| ini. | 3 | -1160 | -109014 | 194792 | SLU 84 | 1.79 | Si |
| fin. | 3 | -1160 | 107544 | 194792 | SLU 84 | 1.81 | Si |
| ini. | 3 | -1032 | -99432 | 194792 | SLU 61 | 1.96 | Si |
| fin. | 3 | -1032 | 94570 | 194792 | SLU 61 | 2.06 | Si |
| ini. | 3 | -1057 | -102023 | 194792 | SLU 75 | 1.91 | Si |
| fin. | 3 | -1057 | 100833 | 194792 | SLU 75 | 1.93 | Si |
| ini. | 3 | -1074 | -104114 | 194792 | SLU 76 | 1.87 | Si |
| fin. | 3 | -1074 | 100802 | 194792 | SLU 76 | 1.93 | Si |

### Verifiche a taglio delle travi in muratura secondo §C8.7.1.3.1 in combinazioni non sismiche

| Sezione | γM | N | M | V | Vt | Vp | Vt fess. diag. | Vt,lim | Comb. | c.s. | Verifica |
|---|---|---|---|---|---|---|---|---|---|---|---|
| ini. | 3 | 0 | -109014 | 3780 | | | 1531 | 576 | SLU 84 | 0.15 | No |

| Sezione | γM | N | M | V | Vt | Vp | Vt fess. diag. | Vt,lim | Comb. | c.s. | Verifica |
|---|---|---|---|---|---|---|---|---|---|---|---|
| fin. | 3 | 0 | 107544 | 1561 | | | 1531 | 576 | SLU 84 | 0.37 | No |
| ini. | 3 | 0 | -102044 | 3522 | | | 1531 | 576 | SLU 40 | 0.16 | No |
| fin. | 3 | 0 | 101123 | 1504 | | | 1531 | 576 | SLU 40 | 0.38 | No |
| ini. | 3 | 0 | -99183 | 3467 | | | 1531 | 576 | SLU 42 | 0.17 | No |
| fin. | 3 | 0 | 99591 | 1449 | | | 1531 | 576 | SLU 42 | 0.4 | No |
| ini. | 3 | 0 | -111875 | 3835 | | | 1531 | 576 | SLU 82 | 0.15 | No |
| fin. | 3 | 0 | 109076 | 1616 | | | 1531 | 576 | SLU 82 | 0.36 | No |
| ini. | 3 | 0 | -104114 | 3545 | | | 1531 | 576 | SLU 76 | 0.16 | No |
| fin. | 3 | 0 | 100802 | 1506 | | | 1531 | 576 | SLU 76 | 0.38 | No |
| ini. | 3 | 0 | -100859 | 3597 | | | 1531 | 576 | SLU 83 | 0.16 | No |
| fin. | 3 | 0 | 101010 | 1378 | | | 1531 | 576 | SLU 83 | 0.42 | No |
| ini. | 3 | 0 | -106975 | 3599 | | | 1531 | 576 | SLU 73 | 0.16 | No |
| fin. | 3 | 0 | 102334 | 1561 | | | 1531 | 576 | SLU 73 | 0.37 | No |
| ini. | 3 | 0 | -103719 | 3652 | | | 1531 | 576 | SLU 81 | 0.16 | No |
| fin. | 3 | 0 | 102541 | 1433 | | | 1531 | 576 | SLU 81 | 0.4 | No |
| ini. | 3 | 0 | -102023 | 3519 | | | 1531 | 576 | SLU 75 | 0.16 | No |
| fin. | 3 | 0 | 100833 | 1480 | | | 1531 | 576 | SLU 75 | 0.39 | No |
| ini. | 3 | 0 | -99162 | 3464 | | | 1531 | 576 | SLU 78 | 0.17 | No |
| fin. | 3 | 0 | 99301 | 1425 | | | 1531 | 576 | SLU 78 | 0.4 | No |

### Verifiche a pressoflessione delle travi in muratura in combinazioni sismiche

| Sezione | γM | N | M | Mu | Comb. | c.s. | Verifica |
|---|---|---|---|---|---|---|---|
| ini. | 2 | -636 | 333539 | 212694 | SLV 3 | 0.64 | No |
| fin. | 2 | -875 | -523491 | 212694 | SLV 3 | 0.41 | No |
| ini. | 2 | -655 | 368212 | 212694 | SLV 2 | 0.58 | No |
| fin. | 2 | -893 | -554521 | 212694 | SLV 2 | 0.38 | No |
| ini. | 2 | -655 | 368212 | 212694 | SLV 1 | 0.58 | No |
| fin. | 2 | -893 | -554521 | 212694 | SLV 1 | 0.38 | No |
| ini. | 2 | -805 | -483084 | 212694 | SLV 15 | 0.44 | No |
| fin. | 2 | -567 | 663784 | 212694 | SLV 15 | 0.32 | No |
| ini. | 2 | -762 | -238886 | 212694 | SLD 15 | 0.89 | No |
| fin. | 2 | -661 | 314550 | 212694 | SLD 15 | 0.68 | No |
| ini. | 2 | -762 | -238886 | 212694 | SLD 16 | 0.89 | No |
| fin. | 2 | -661 | 314550 | 212694 | SLD 16 | 0.68 | No |
| ini. | 2 | -825 | -448412 | 212694 | SLV 14 | 0.47 | No |
| fin. | 2 | -585 | 632754 | 212694 | SLV 14 | 0.34 | No |
| ini. | 2 | -825 | -448412 | 212694 | SLV 13 | 0.47 | No |
| fin. | 2 | -585 | 632754 | 212694 | SLV 13 | 0.34 | No |
| ini. | 2 | -805 | -483084 | 212694 | SLV 16 | 0.44 | No |
| fin. | 2 | -567 | 663784 | 212694 | SLV 16 | 0.32 | No |
| ini. | 2 | -636 | 333539 | 212694 | SLV 4 | 0.64 | No |
| fin. | 2 | -875 | -523491 | 212694 | SLV 4 | 0.41 | No |

### Verifiche a taglio delle travi in muratura secondo §C8.7.1.3.1 in combinazioni sismiche

| Sezione | γM | N | M | V | Vt | Vp | Vt fess. diag. | Vt,lim | Comb. | c.s. | Verifica |
|---|---|---|---|---|---|---|---|---|---|---|---|
| ini. | 2 | 0 | 368212 | -11109 | | | 2297 | 864 | SLV 2 | 0.08 | No |
| fin. | 2 | 0 | -554521 | -12364 | | | 2297 | 864 | SLV 2 | 0.07 | No |
| ini. | 2 | 0 | -238886 | 7614 | | | 2297 | 864 | SLD 15 | 0.11 | No |
| fin. | 2 | 0 | 314550 | 6313 | | | 2297 | 864 | SLD 15 | 0.14 | No |
| ini. | 2 | 0 | -238886 | 7614 | | | 2297 | 864 | SLD 16 | 0.11 | No |
| fin. | 2 | 0 | 314550 | 6313 | | | 2297 | 864 | SLD 16 | 0.14 | No |
| ini. | 2 | 0 | 333539 | -10239 | | | 2297 | 864 | SLV 3 | 0.08 | No |
| fin. | 2 | 0 | -523491 | -11532 | | | 2297 | 864 | SLV 3 | 0.07 | No |
| ini. | 2 | 0 | -483084 | 15142 | | | 2297 | 864 | SLV 15 | 0.06 | No |
| fin. | 2 | 0 | 663784 | 13821 | | | 2297 | 864 | SLV 15 | 0.06 | No |
| ini. | 2 | 0 | 368212 | -11109 | | | 2297 | 864 | SLV 1 | 0.08 | No |
| fin. | 2 | 0 | -554521 | -12364 | | | 2297 | 864 | SLV 1 | 0.07 | No |
| ini. | 2 | 0 | -448412 | 14272 | | | 2297 | 864 | SLV 14 | 0.06 | No |
| fin. | 2 | 0 | 632754 | 12989 | | | 2297 | 864 | SLV 14 | 0.07 | No |
| ini. | 2 | 0 | -448412 | 14272 | | | 2297 | 864 | SLV 13 | 0.06 | No |
| fin. | 2 | 0 | 632754 | 12989 | | | 2297 | 864 | SLV 13 | 0.07 | No |
| ini. | 2 | 0 | -483084 | 15142 | | | 2297 | 864 | SLV 16 | 0.06 | No |
| fin. | 2 | 0 | 663784 | 13821 | | | 2297 | 864 | SLV 16 | 0.06 | No |
| ini. | 2 | 0 | 333539 | -10239 | | | 2297 | 864 | SLV 4 | 0.08 | No |
| fin. | 2 | 0 | -523491 | -11532 | | | 2297 | 864 | SLV 4 | 0.07 | No |

### Tabella dei coefficienti di sicurezza minimi

| Stato limite | Coeff.s. | Comb. | Verifica |
|---|---|---|---|
| PF_SLV | 0.32 | SLV 15 | No |
| V_SLV | 0.057 | SLV 15 | No |
| PF_SLU | 1.741 | SLU 82 | Si |
| V_SLU | 0.15 | SLU 82 | No |

## Trave di accoppiamento 92

Verifiche condotte secondo D.M. 17-01-18 (N.T.C.)

### Dati geometrici

| X ini. | Y ini. | Z ini.inf. | Z ini.sup. | H ini. | X fin. | Y fin. | Z fin.inf. | Z fin.sup | H fin. | Luce | Spessore | R. Trazione |
|---|---|---|---|---|---|---|---|---|---|---|---|---|
| -416.8 | 104.6 | 754 | 896 | 142 | -496.8 | 104.6 | 754 | 896 | 142 | 80 | 28 | 3500 |

### Caratteristiche del materiale

(Circolare 7 21-01-19 C8.5.I) Muratura in mattoni pieni e malta di calce LC2_Corti

| fb_ | fhk | fvk0 | fhmedio | τ0 | fv0 | μ | ϕ | fvk,lim | E | G | FC |
|---|---|---|---|---|---|---|---|---|---|---|---|
| 12 | | | 17.25 | 0.9 | 2 | 0.577 | 0.767 | 0.65 | 32000 | 12800 | 1.2 |

## Verifiche a pressoflessione delle travi in muratura in combinazioni non sismiche

| Sezione | γM | N | M | Mu | Comb. | c.s. | Verifica |
|---|---|---|---|---|---|---|---|
| ini. | 3 | -1020 | -75767 | 194792 | SLU 74 | 2.57 | Si |
| fin. | 3 | -1020 | 26017 | 194792 | SLU 74 | 7.49 | Si |
| ini. | 3 | -1118 | -79814 | 194792 | SLU 78 | 2.44 | Si |
| fin. | 3 | -1118 | 29122 | 194792 | SLU 78 | 6.69 | Si |
| ini. | 3 | -1117 | -76082 | 194792 | SLU 83 | 2.56 | Si |
| fin. | 3 | -1117 | 24388 | 194792 | SLU 83 | 7.99 | Si |
| ini. | 3 | -916 | -77264 | 194792 | SLU 69 | 2.52 | Si |
| fin. | 3 | -916 | 37307 | 194792 | SLU 69 | 5.22 | Si |
| ini. | 3 | -1090 | -81815 | 194792 | SLU 79 | 2.38 | Si |
| fin. | 3 | -1090 | 34846 | 194792 | SLU 79 | 5.59 | Si |
| ini. | 3 | -954 | -74402 | 194792 | SLU 71 | 2.62 | Si |
| fin. | 3 | -954 | 36303 | 194792 | SLU 71 | 5.37 | Si |
| ini. | 3 | -927 | -75475 | 194792 | SLU 56 | 2.58 | Si |
| fin. | 3 | -927 | 32179 | 194792 | SLU 56 | 6.05 | Si |
| ini. | 3 | -1157 | -76951 | 194792 | SLU 80 | 2.53 | Si |
| fin. | 3 | -1157 | 28118 | 194792 | SLU 80 | 6.93 | Si |
| ini. | 3 | -1051 | -84677 | 194792 | SLU 77 | 2.3 | Si |
| fin. | 3 | -1051 | 35850 | 194792 | SLU 77 | 5.43 | Si |
| ini. | 3 | -907 | -76170 | 194792 | SLU 35 | 2.56 | Si |
| fin. | 3 | -907 | 33827 | 194792 | SLU 35 | 5.76 | Si |

## Verifiche a taglio delle travi in muratura secondo §C8.7.1.3.1 in combinazioni non sismiche

| Sezione | γM | N | M | V | Vt | Vp | Vt fess. diag. | Vt,lim | Comb. | c.s. | Verifica |
|---|---|---|---|---|---|---|---|---|---|---|---|
| ini. | 3 | 0 | -75767 | 2280 | | | 1531 | 576 | SLU 74 | 0.25 | No |
| fin. | 3 | 0 | 26017 | 336 | | | 1531 | 576 | SLU 74 | 1.72 | Si |
| ini. | 3 | 0 | -76082 | 2347 | | | 1531 | 576 | SLU 83 | 0.25 | No |
| fin. | 3 | 0 | 24388 | 235 | | | 1531 | 576 | SLU 83 | 2.45 | Si |
| ini. | 3 | 0 | -84677 | 2514 | | | 1531 | 576 | SLU 77 | 0.23 | No |
| fin. | 3 | 0 | 35850 | 570 | | | 1531 | 576 | SLU 77 | 1.01 | Si |
| ini. | 3 | 0 | -79814 | 2369 | | | 1531 | 576 | SLU 78 | 0.24 | No |
| fin. | 3 | 0 | 29122 | 425 | | | 1531 | 576 | SLU 78 | 1.36 | Si |
| ini. | 3 | 0 | -73308 | 2227 | | | 1531 | 576 | SLU 37 | 0.26 | No |
| fin. | 3 | 0 | 32822 | 480 | | | 1531 | 576 | SLU 37 | 1.2 | Si |
| ini. | 3 | 0 | -77264 | 2244 | | | 1531 | 576 | SLU 69 | 0.26 | No |
| fin. | 3 | 0 | 37307 | 691 | | | 1531 | 576 | SLU 69 | 0.83 | No |
| ini. | 3 | 0 | -81815 | 2466 | | | 1531 | 576 | SLU 79 | 0.23 | No |
| fin. | 3 | 0 | 34846 | 522 | | | 1531 | 576 | SLU 79 | 1.1 | Si |
| ini. | 3 | 0 | -71218 | 2202 | | | 1531 | 576 | SLU 84 | 0.26 | No |
| fin. | 3 | 0 | 17660 | 90 | | | 1531 | 576 | SLU 84 | 6.37 | Si |
| ini. | 3 | 0 | -76951 | 2321 | | | 1531 | 576 | SLU 80 | 0.25 | No |
| fin. | 3 | 0 | 28118 | 377 | | | 1531 | 576 | SLU 80 | 1.53 | Si |
| ini. | 3 | 0 | -76170 | 2276 | | | 1531 | 576 | SLU 35 | 0.25 | No |
| fin. | 3 | 0 | 33827 | 528 | | | 1531 | 576 | SLU 35 | 1.09 | Si |

## Verifiche a pressoflessione delle travi in muratura in combinazioni sismiche

| Sezione | γM | N | M | Mu | Comb. | c.s. | Verifica |
|---|---|---|---|---|---|---|---|
| ini. | 2 | 325 | 550670 | 212694 | SLV 4 | 0.39 | No |
| fin. | 2 | 5 | -430153 | 212694 | SLV 4 | 0.49 | No |
| ini. | 2 | -665 | 552156 | 212694 | SLV 1 | 0.39 | No |
| fin. | 2 | -864 | -431758 | 212694 | SLV 1 | 0.49 | No |
| ini. | 2 | -722 | -298183 | 212694 | SLD 15 | 0.71 | No |
| fin. | 2 | -636 | 200817 | 212694 | SLD 15 | 1.06 | Si |
| ini. | 2 | -729 | -639396 | 212694 | SLV 16 | 0.33 | No |
| fin. | 2 | -531 | 454905 | 212694 | SLV 16 | 0.47 | No |
| ini. | 2 | -729 | -639396 | 212694 | SLV 15 | 0.33 | No |
| fin. | 2 | -531 | 454905 | 212694 | SLV 15 | 0.47 | No |
| ini. | 2 | 325 | 550670 | 212694 | SLV 3 | 0.39 | No |
| fin. | 2 | 5 | -430153 | 212694 | SLV 3 | 0.49 | No |
| ini. | 2 | -1720 | -637911 | 212694 | SLV 13 | 0.33 | No |
| fin. | 2 | -1399 | 453301 | 212694 | SLV 13 | 0.47 | No |
| ini. | 2 | -1720 | -637911 | 212694 | SLV 14 | 0.33 | No |
| fin. | 2 | -1399 | 453301 | 212694 | SLV 14 | 0.47 | No |
| ini. | 2 | -665 | 552156 | 212694 | SLV 2 | 0.39 | No |
| fin. | 2 | -864 | -431758 | 212694 | SLV 2 | 0.49 | No |
| ini. | 2 | -722 | -298183 | 212694 | SLD 16 | 0.71 | No |
| fin. | 2 | -636 | 200817 | 212694 | SLD 16 | 1.06 | Si |

## Verifiche a taglio delle travi in muratura secondo §C8.7.1.3.1 in combinazioni sismiche

| Sezione | γM | N | M | V | Vt | Vp | Vt fess. diag. | Vt,lim | Comb. | c.s. | Verifica |
|---|---|---|---|---|---|---|---|---|---|---|---|
| ini. | 2 | 0 | -639396 | 14637 | | | 2297 | 864 | SLV 16 | 0.06 | No |
| fin. | 2 | 0 | 454905 | 13247 | | | 2297 | 864 | SLV 16 | 0.07 | No |
| ini. | 2 | 0 | -637911 | 14395 | | | 2297 | 864 | SLV 13 | 0.06 | No |
| fin. | 2 | 0 | 453301 | 13252 | | | 2297 | 864 | SLV 13 | 0.07 | No |
| ini. | 2 | 0 | -639396 | 14637 | | | 2297 | 864 | SLV 15 | 0.06 | No |
| fin. | 2 | 0 | 454905 | 13247 | | | 2297 | 864 | SLV 15 | 0.07 | No |
| ini. | 2 | 0 | -298183 | 7015 | | | 2297 | 864 | SLD 16 | 0.12 | No |
| fin. | 2 | 0 | 200817 | 5714 | | | 2297 | 864 | SLD 16 | 0.15 | No |
| ini. | 2 | 0 | -298183 | 7015 | | | 2297 | 864 | SLD 15 | 0.12 | No |
| fin. | 2 | 0 | 200817 | 5714 | | | 2297 | 864 | SLD 15 | 0.15 | No |
| ini. | 2 | 0 | 552156 | -11968 | | | 2297 | 864 | SLV 2 | 0.07 | No |
| fin. | 2 | 0 | -431758 | -13047 | | | 2297 | 864 | SLV 2 | 0.07 | No |
| ini. | 2 | 0 | 550670 | -11725 | | | 2297 | 864 | SLV 4 | 0.07 | No |
| fin. | 2 | 0 | -430153 | -13052 | | | 2297 | 864 | SLV 4 | 0.07 | No |

| Sezione | γM | N | M | V | Vt | Vp | Vt fess. diag. | Vt,lim | Comb. | c.s. | Verifica |
|---|---|---|---|---|---|---|---|---|---|---|---|
| ini. | 2 | 0 | -637911 | 14395 | | | 2297 | 864 | SLV 14 | 0.06 | No |
| fin. | 2 | 0 | 453301 | 13252 | | | 2297 | 864 | SLV 14 | 0.07 | No |
| ini. | 2 | 0 | 550670 | -11725 | | | 2297 | 864 | SLV 3 | 0.07 | No |
| fin. | 2 | 0 | -430153 | -13052 | | | 2297 | 864 | SLV 3 | 0.07 | No |
| ini. | 2 | 0 | 552156 | -11968 | | | 2297 | 864 | SLV 1 | 0.07 | No |
| fin. | 2 | 0 | -431758 | -13047 | | | 2297 | 864 | SLV 1 | 0.07 | No |

### Tabella dei coefficienti di sicurezza minimi

| Stato limite | Coeff.s. | Comb. | Verifica |
|---|---|---|---|
| PF_SLV | 0.333 | SLV 15 | No |
| V_SLV | 0.059 | SLV 15 | No |
| PF_SLU | 2.3 | SLU 77 | Si |
| V_SLU | 0.229 | SLU 77 | No |

## Trave di accoppiamento 93

Verifiche condotte secondo D.M. 17-01-18 (N.T.C.)

### Dati geometrici

| X ini. | Y ini. | Z ini.inf. | Z ini.sup. | H ini. | X fin. | Y fin. | Z fin.inf. | Z fin.sup | H fin. | Luce | Spessore | R. Trazione |
|---|---|---|---|---|---|---|---|---|---|---|---|---|
| -867.8 | -485.9 | 870 | 896 | 26 | -1051.8 | -485.9 | 870 | 896 | 26 | 184 | 30 | 3500 |

### Caratteristiche del materiale

(Circolare 7 21-01-19 C8.5.I) Muratura in mattoni pieni e malta di calce LC2_Corti

| fb_ | fhk | fvk0 | fhmedio | τ0 | fv0 | μ | ϕ | fvk,lim | E | G | FC |
|---|---|---|---|---|---|---|---|---|---|---|---|
| 12 | | | 17.25 | 0.9 | 2 | 0.577 | 0.767 | 0.65 | 32000 | 12800 | 1.2 |

### Verifiche a pressoflessione delle travi in muratura in combinazioni non sismiche

| Sezione | γM | N | M | Mu | Comb. | c.s. | Verifica |
|---|---|---|---|---|---|---|---|
| ini. | 3 | -44 | -9649 | 10289 | SLU 38 | 1.07 | Si |
| fin. | 3 | -44 | 3431 | 10289 | SLU 38 | 3 | Si |
| ini. | 3 | -50 | -9131 | 10289 | SLU 78 | 1.13 | Si |
| fin. | 3 | -50 | 1134 | 10289 | SLU 78 | 9.07 | Si |
| ini. | 3 | -37 | -10088 | 10289 | SLU 35 | 1.02 | Si |
| fin. | 3 | -37 | 3899 | 10289 | SLU 35 | 2.64 | Si |
| ini. | 3 | -50 | -9526 | 10289 | SLU 80 | 1.08 | Si |
| fin. | 3 | -50 | 1525 | 10289 | SLU 80 | 6.75 | Si |
| ini. | 3 | -44 | -9539 | 10289 | SLU 83 | 1.08 | Si |
| fin. | 3 | -44 | 1577 | 10289 | SLU 83 | 6.52 | Si |
| ini. | 3 | -45 | -9254 | 10289 | SLU 36 | 1.11 | Si |
| fin. | 3 | -45 | 3040 | 10289 | SLU 36 | 3.38 | Si |
| ini. | 3 | -38 | -9662 | 10289 | SLU 41 | 1.06 | Si |
| fin. | 3 | -38 | 3483 | 10289 | SLU 41 | 2.95 | Si |
| ini. | 3 | -42 | -10360 | 10289 | SLU 79 | 0.99 | No |
| fin. | 3 | -42 | 2384 | 10289 | SLU 79 | 4.32 | Si |
| ini. | 3 | -37 | -10483 | 10289 | SLU 37 | 0.98 | No |
| fin. | 3 | -37 | 4290 | 10289 | SLU 37 | 2.4 | Si |
| ini. | 3 | -43 | -9965 | 10289 | SLU 77 | 1.03 | Si |
| fin. | 3 | -43 | 1993 | 10289 | SLU 77 | 5.16 | Si |

### Verifiche a taglio delle travi in muratura secondo §C8.7.1.3.1 in combinazioni non sismiche

| Sezione | γM | N | M | V | Vt | Vp | Vt fess. diag. | Vt,lim | Comb. | c.s. | Verifica |
|---|---|---|---|---|---|---|---|---|---|---|---|
| ini. | 3 | 0 | -8741 | 175 | | | 200 | 75 | SLU 58 | 0.43 | No |
| fin. | 3 | 0 | 810 | -71 | | | 200 | 75 | SLU 58 | 1.06 | Si |
| ini. | 3 | 0 | -10483 | 175 | | | 200 | 75 | SLU 37 | 0.43 | No |
| fin. | 3 | 0 | 4290 | -14 | | | 200 | 75 | SLU 37 | 5.23 | Si |
| ini. | 3 | 0 | -9131 | 179 | | | 200 | 75 | SLU 78 | 0.42 | No |
| fin. | 3 | 0 | 1134 | -67 | | | 200 | 75 | SLU 78 | 1.12 | Si |
| ini. | 3 | 0 | -8346 | 171 | | | 200 | 75 | SLU 56 | 0.44 | No |
| fin. | 3 | 0 | 419 | -75 | | | 200 | 75 | SLU 56 | 1 | No |
| ini. | 3 | 0 | -9965 | 188 | | | 200 | 75 | SLU 77 | 0.4 | No |
| fin. | 3 | 0 | 1993 | -58 | | | 200 | 75 | SLU 77 | 1.3 | Si |
| ini. | 3 | 0 | -9526 | 183 | | | 200 | 75 | SLU 80 | 0.41 | No |
| fin. | 3 | 0 | 1525 | -63 | | | 200 | 75 | SLU 80 | 1.2 | Si |
| ini. | 3 | 0 | -10088 | 171 | | | 200 | 75 | SLU 35 | 0.44 | No |
| fin. | 3 | 0 | 3899 | -19 | | | 200 | 75 | SLU 35 | 4.04 | Si |
| ini. | 3 | 0 | -9539 | 184 | | | 200 | 75 | SLU 83 | 0.41 | No |
| fin. | 3 | 0 | 1577 | -63 | | | 200 | 75 | SLU 83 | 1.2 | Si |
| ini. | 3 | 0 | -10360 | 192 | | | 200 | 75 | SLU 79 | 0.39 | No |
| fin. | 3 | 0 | 2384 | -54 | | | 200 | 75 | SLU 79 | 1.4 | Si |
| ini. | 3 | 0 | -8704 | 174 | | | 200 | 75 | SLU 84 | 0.43 | No |
| fin. | 3 | 0 | 718 | -72 | | | 200 | 75 | SLU 84 | 1.05 | Si |

### Verifiche a pressoflessione delle travi in muratura in combinazioni sismiche

| Sezione | γM | N | M | Mu | Comb. | c.s. | Verifica |
|---|---|---|---|---|---|---|---|
| ini. | 2 | 258 | -47143 | 15434 | SLV 15 | 0.33 | No |
| fin. | 2 | 317 | 43516 | 15434 | SLV 15 | 0.35 | No |
| ini. | 2 | -309 | 41559 | 15434 | SLV 1 | 0.37 | No |
| fin. | 2 | -368 | -49985 | 15434 | SLV 1 | 0.31 | No |
| ini. | 2 | -240 | 32240 | 15434 | SLV 8 | 0.48 | No |
| fin. | 2 | -180 | -39285 | 15434 | SLV 8 | 0.39 | No |
| ini. | 2 | 329 | -59103 | 15434 | SLV 13 | 0.26 | No |
| fin. | 2 | 346 | 55641 | 15434 | SLV 13 | 0.28 | No |
| ini. | 2 | 258 | -47143 | 15434 | SLV 16 | 0.33 | No |

| Sezione | γM | N | M | Mu | Comb. | c.s. | Verifica |
|---|---|---|---|---|---|---|---|
| fin. | 2 | 317 | 43516 | 15434 | SLV 16 | 0.35 | No |
| ini. | 2 | -380 | 53519 | 15434 | SLV 4 | 0.29 | No |
| fin. | 2 | -397 | -62109 | 15434 | SLV 4 | 0.25 | No |
| ini. | 2 | -309 | 41559 | 15434 | SLV 2 | 0.37 | No |
| fin. | 2 | -368 | -49985 | 15434 | SLV 2 | 0.31 | No |
| ini. | 2 | -240 | 32240 | 15434 | SLV 7 | 0.48 | No |
| fin. | 2 | -180 | -39285 | 15434 | SLV 7 | 0.39 | No |
| ini. | 2 | -380 | 53519 | 15434 | SLV 3 | 0.29 | No |
| fin. | 2 | -397 | -62109 | 15434 | SLV 3 | 0.25 | No |
| ini. | 2 | 329 | -59103 | 15434 | SLV 14 | 0.26 | No |
| fin. | 2 | 346 | 55641 | 15434 | SLV 14 | 0.28 | No |

### Verifiche a taglio delle travi in muratura secondo §C8.7.1.3.1 in combinazioni sismiche

| Sezione | γM | N | M | V | Vt | Vp | Vt fess. diag. | Vt,lim | Comb. | c.s. | Verifica |
|---|---|---|---|---|---|---|---|---|---|---|---|
| ini. | 2 | 0 | 32240 | -102 | | | 300 | 113 | SLV 8 | 1.11 | Si |
| fin. | 2 | 0 | -39285 | -493 | | | 300 | 113 | SLV 8 | 0.23 | No |
| ini. | 2 | 0 | 41559 | -466 | | | 300 | 113 | SLV 1 | 0.24 | No |
| fin. | 2 | 0 | -49985 | -599 | | | 300 | 113 | SLV 1 | 0.19 | No |
| ini. | 2 | 0 | -47143 | 651 | | | 300 | 113 | SLV 16 | 0.17 | No |
| fin. | 2 | 0 | 43516 | 405 | | | 300 | 113 | SLV 16 | 0.28 | No |
| ini. | 2 | 0 | 32240 | -102 | | | 300 | 113 | SLV 7 | 1.11 | Si |
| fin. | 2 | 0 | -39285 | -493 | | | 300 | 113 | SLV 7 | 0.23 | No |
| ini. | 2 | 0 | -47143 | 651 | | | 300 | 113 | SLV 15 | 0.17 | No |
| fin. | 2 | 0 | 43516 | 405 | | | 300 | 113 | SLV 15 | 0.28 | No |
| ini. | 2 | 0 | 53519 | -481 | | | 300 | 113 | SLV 3 | 0.24 | No |
| fin. | 2 | 0 | -62109 | -734 | | | 300 | 113 | SLV 3 | 0.15 | No |
| ini. | 2 | 0 | 41559 | -466 | | | 300 | 113 | SLV 2 | 0.24 | No |
| fin. | 2 | 0 | -49985 | -599 | | | 300 | 113 | SLV 2 | 0.19 | No |
| ini. | 2 | 0 | 53519 | -481 | | | 300 | 113 | SLV 4 | 0.24 | No |
| fin. | 2 | 0 | -62109 | -734 | | | 300 | 113 | SLV 4 | 0.15 | No |
| ini. | 2 | 0 | -59103 | 666 | | | 300 | 113 | SLV 13 | 0.17 | No |
| fin. | 2 | 0 | 55641 | 540 | | | 300 | 113 | SLV 13 | 0.21 | No |
| ini. | 2 | 0 | -59103 | 666 | | | 300 | 113 | SLV 14 | 0.17 | No |
| fin. | 2 | 0 | 55641 | 540 | | | 300 | 113 | SLV 14 | 0.21 | No |

### Tabella dei coefficienti di sicurezza minimi

| Stato limite | Coeff.s. | Comb. | Verifica |
|---|---|---|---|
| PF_SLV | 0.248 | SLV 3 | No |
| V_SLV | 0.154 | SLV 3 | No |
| PF_SLU | 0.981 | SLU 37 | No |
| V_SLU | 0.392 | SLU 79 | No |

## Trave di accoppiamento 94

Verifiche condotte secondo D.M. 17-01-18 (N.T.C.)

### Dati geometrici

| X ini. | Y ini. | Z ini.inf. | Z ini.sup. | H ini. | X fin. | Y fin. | Z fin.inf. | Z fin.sup | H fin. | Luce | Spessore | R. Trazione |
|---|---|---|---|---|---|---|---|---|---|---|---|---|
| -854.8 | -335.9 | 754 | 896 | 142 | -944.8 | -335.9 | 754 | 896 | 142 | 90 | 28 | 3500 |

### Caratteristiche del materiale

(Circolare 7 21-01-19 C8.5.I) Muratura in mattoni pieni e malta di calce LC2_Corti

| fb_ | fhk | fvk0 | fhmedio | τ0 | fv0 | μ | ϕ | fvk,lim | E | G | FC |
|---|---|---|---|---|---|---|---|---|---|---|---|
| 12 | | | 17.25 | 0.9 | 2 | 0.577 | 0.767 | 0.65 | 32000 | 12800 | 1.2 |

### Verifiche a pressoflessione delle travi in muratura in combinazioni non sismiche

| Sezione | γM | N | M | Mu | Comb. | c.s. | Verifica |
|---|---|---|---|---|---|---|---|
| ini. | 3 | -1651 | 89835 | 194792 | SLU 61 | 2.17 | Si |
| fin. | 3 | -1651 | -46759 | 194792 | SLU 61 | 4.17 | Si |
| ini. | 3 | -1355 | 84824 | 194792 | SLU 75 | 2.3 | Si |
| fin. | 3 | -1355 | -57845 | 194792 | SLU 75 | 3.37 | Si |
| ini. | 3 | -1301 | 88567 | 194792 | SLU 31 | 2.2 | Si |
| fin. | 3 | -1301 | -53249 | 194792 | SLU 31 | 3.66 | Si |
| ini. | 3 | -1729 | 101044 | 194792 | SLU 82 | 1.93 | Si |
| fin. | 3 | -1729 | -55375 | 194792 | SLU 82 | 3.52 | Si |
| ini. | 3 | -1322 | 85420 | 194792 | SLU 52 | 2.28 | Si |
| fin. | 3 | -1322 | -57657 | 194792 | SLU 52 | 3.38 | Si |
| ini. | 3 | -1383 | 87582 | 194792 | SLU 76 | 2.22 | Si |
| fin. | 3 | -1383 | -56585 | 194792 | SLU 76 | 3.44 | Si |
| ini. | 3 | -1630 | 92983 | 194792 | SLU 40 | 2.09 | Si |
| fin. | 3 | -1630 | -42351 | 194792 | SLU 40 | 4.6 | Si |
| ini. | 3 | -1718 | 92549 | 194792 | SLU 81 | 2.1 | Si |
| fin. | 3 | -1718 | -50159 | 194792 | SLU 81 | 3.88 | Si |
| ini. | 3 | -1712 | 91998 | 194792 | SLU 84 | 2.12 | Si |
| fin. | 3 | -1712 | -45687 | 194792 | SLU 84 | 4.26 | Si |
| ini. | 3 | -1401 | 96629 | 194792 | SLU 73 | 2.02 | Si |
| fin. | 3 | -1401 | -66272 | 194792 | SLU 73 | 2.94 | Si |

### Verifiche a taglio delle travi in muratura secondo §C8.7.1.3.1 in combinazioni non sismiche

| Sezione | γM | N | M | V | Vt | Vp | Vt fess. diag. | Vt,lim | Comb. | c.s. | Verifica |
|---|---|---|---|---|---|---|---|---|---|---|---|
| ini. | 3 | 0 | 84824 | -789 | | | 1531 | 576 | SLU 75 | 0.73 | No |
| fin. | 3 | 0 | -57845 | -2321 | | | 1531 | 576 | SLU 75 | 0.25 | No |
| ini. | 3 | 0 | 96629 | -1014 | | | 1531 | 576 | SLU 73 | 0.57 | No |
| fin. | 3 | 0 | -66272 | -2546 | | | 1531 | 576 | SLU 73 | 0.23 | No |

| Sezione | γM | N | M | V | Vt | Vp | Vt fess. diag. | Vt,lim | Comb. | c.s. | Verifica |
|---|---|---|---|---|---|---|---|---|---|---|---|
| ini. | 3 | 0 | 73110 | -1056 | | | 1531 | 576 | SLU 65 | 0.55 | No |
| fin. | 3 | 0 | -83587 | -2366 | | | 1531 | 576 | SLU 65 | 0.24 | No |
| ini. | 3 | 0 | 85420 | -885 | | | 1531 | 576 | SLU 52 | 0.65 | No |
| fin. | 3 | 0 | -57657 | -2232 | | | 1531 | 576 | SLU 52 | 0.26 | No |
| ini. | 3 | 0 | 88567 | -893 | | | 1531 | 576 | SLU 31 | 0.65 | No |
| fin. | 3 | 0 | -53249 | -2214 | | | 1531 | 576 | SLU 31 | 0.26 | No |
| ini. | 3 | 0 | 101044 | -895 | | | 1531 | 576 | SLU 82 | 0.64 | No |
| fin. | 3 | 0 | -55375 | -2521 | | | 1531 | 576 | SLU 82 | 0.23 | No |
| ini. | 3 | 0 | 91998 | -686 | | | 1531 | 576 | SLU 84 | 0.84 | No |
| fin. | 3 | 0 | -45687 | -2313 | | | 1531 | 576 | SLU 84 | 0.25 | No |
| ini. | 3 | 0 | 87582 | -806 | | | 1531 | 576 | SLU 76 | 0.72 | No |
| fin. | 3 | 0 | -56585 | -2338 | | | 1531 | 576 | SLU 76 | 0.25 | No |
| ini. | 3 | 0 | 89835 | -765 | | | 1531 | 576 | SLU 61 | 0.75 | No |
| fin. | 3 | 0 | -46759 | -2207 | | | 1531 | 576 | SLU 61 | 0.26 | No |
| ini. | 3 | 0 | 92549 | -742 | | | 1531 | 576 | SLU 81 | 0.78 | No |
| fin. | 3 | 0 | -50159 | -2369 | | | 1531 | 576 | SLU 81 | 0.24 | No |

### Verifiche a pressoflessione delle travi in muratura in combinazioni sismiche

| Sezione | γM | N | M | Mu | Comb. | c.s. | Verifica |
|---|---|---|---|---|---|---|---|
| ini. | 2 | 2052 | 428044 | 212694 | SLV 2 | 0.5 | No |
| fin. | 2 | 1768 | -513769 | 212694 | SLV 2 | 0.41 | No |
| ini. | 2 | -148 | 261884 | 212694 | SLV 8 | 0.81 | No |
| fin. | 2 | -17 | -310389 | 212694 | SLV 8 | 0.69 | No |
| ini. | 2 | 2052 | 428044 | 212694 | SLV 1 | 0.5 | No |
| fin. | 2 | 1768 | -513769 | 212694 | SLV 1 | 0.41 | No |
| ini. | 2 | -3386 | -328838 | 212694 | SLV 16 | 0.65 | No |
| fin. | 2 | -3101 | 412227 | 212694 | SLV 16 | 0.52 | No |
| ini. | 2 | -3222 | -383195 | 212694 | SLV 14 | 0.56 | No |
| fin. | 2 | -3057 | 478678 | 212694 | SLV 14 | 0.44 | No |
| ini. | 2 | -3386 | -328838 | 212694 | SLV 15 | 0.65 | No |
| fin. | 2 | -3101 | 412227 | 212694 | SLV 15 | 0.52 | No |
| ini. | 2 | -148 | 261884 | 212694 | SLV 7 | 0.81 | No |
| fin. | 2 | -17 | -310389 | 212694 | SLV 7 | 0.69 | No |
| ini. | 2 | 1889 | 482401 | 212694 | SLV 4 | 0.44 | No |
| fin. | 2 | 1723 | -580219 | 212694 | SLV 4 | 0.37 | No |
| ini. | 2 | 1889 | 482401 | 212694 | SLV 3 | 0.44 | No |
| fin. | 2 | 1723 | -580219 | 212694 | SLV 3 | 0.37 | No |
| ini. | 2 | -3222 | -383195 | 212694 | SLV 13 | 0.56 | No |
| fin. | 2 | -3057 | 478678 | 212694 | SLV 13 | 0.44 | No |

### Verifiche a taglio delle travi in muratura secondo §C8.7.1.3.1 in combinazioni sismiche

| Sezione | γM | N | M | V | Vt | Vp | Vt fess. diag. | Vt,lim | Comb. | c.s. | Verifica |
|---|---|---|---|---|---|---|---|---|---|---|---|
| ini. | 2 | 0 | -328838 | 8740 | | | 2297 | 864 | SLV 15 | 0.1 | No |
| fin. | 2 | 0 | 412227 | 8153 | | | 2297 | 864 | SLV 15 | 0.11 | No |
| ini. | 2 | 0 | 428044 | -9893 | | | 2297 | 864 | SLV 1 | 0.09 | No |
| fin. | 2 | 0 | -513769 | -11367 | | | 2297 | 864 | SLV 1 | 0.08 | No |
| ini. | 2 | 0 | -383195 | 10560 | | | 2297 | 864 | SLV 13 | 0.08 | No |
| fin. | 2 | 0 | 478678 | 8757 | | | 2297 | 864 | SLV 13 | 0.1 | No |
| ini. | 2 | 0 | 428044 | -9893 | | | 2297 | 864 | SLV 2 | 0.09 | No |
| fin. | 2 | 0 | -513769 | -11367 | | | 2297 | 864 | SLV 2 | 0.08 | No |
| ini. | 2 | 0 | -383195 | 10560 | | | 2297 | 864 | SLV 14 | 0.08 | No |
| fin. | 2 | 0 | 478678 | 8757 | | | 2297 | 864 | SLV 14 | 0.1 | No |
| ini. | 2 | 0 | 261884 | -6678 | | | 2297 | 864 | SLV 8 | 0.13 | No |
| fin. | 2 | 0 | -310389 | -5632 | | | 2297 | 864 | SLV 8 | 0.15 | No |
| ini. | 2 | 0 | -328838 | 8740 | | | 2297 | 864 | SLV 16 | 0.1 | No |
| fin. | 2 | 0 | 412227 | 8153 | | | 2297 | 864 | SLV 16 | 0.11 | No |
| ini. | 2 | 0 | 261884 | -6678 | | | 2297 | 864 | SLV 7 | 0.13 | No |
| fin. | 2 | 0 | -310389 | -5632 | | | 2297 | 864 | SLV 7 | 0.15 | No |
| ini. | 2 | 0 | 482401 | -11713 | | | 2297 | 864 | SLV 4 | 0.07 | No |
| fin. | 2 | 0 | -580219 | -11971 | | | 2297 | 864 | SLV 4 | 0.07 | No |
| ini. | 2 | 0 | 482401 | -11713 | | | 2297 | 864 | SLV 3 | 0.07 | No |
| fin. | 2 | 0 | -580219 | -11971 | | | 2297 | 864 | SLV 3 | 0.07 | No |

### Tabella dei coefficienti di sicurezza minimi

| Stato limite | Coeff.s. | Comb. | Verifica |
|---|---|---|---|
| PF_SLV | 0.367 | SLV 3 | No |
| V_SLV | 0.072 | SLV 3 | No |
| PF_SLU | 1.928 | SLU 82 | Si |
| V_SLU | 0.226 | SLU 73 | No |

## Trave di accoppiamento 95

Verifiche condotte secondo D.M. 17-01-18 (N.T.C.)

### Dati geometrici

| X ini. | Y ini. | Z ini.inf. | Z ini.sup. | H ini. | X fin. | Y fin. | Z fin.inf. | Z fin.sup | H fin. | Luce | Spessore | R. Trazione |
|---|---|---|---|---|---|---|---|---|---|---|---|---|
| -772.3 | -486.1 | 870 | 896 | 26 | -772.3 | -377.1 | 870 | 896 | 26 | 109 | 30 | 3500 |

### Caratteristiche del materiale

(Circolare 7 21-01-19 C8.5.I) Muratura in mattoni pieni e malta di calce LC2_Corti

| fb_ | fhk | fvk0 | fhmedio | τ0 | fv0 | μ | ϕ | fvk,lim | E | G | FC |
|---|---|---|---|---|---|---|---|---|---|---|---|
| 12 | | | 17.25 | 0.9 | 2 | 0.577 | 0.767 | 0.65 | 32000 | 12800 | 1.2 |

## Verifiche a pressoflessione delle travi in muratura in combinazioni non sismiche

| Sezione | γM | N | M | Mu | Comb. | c.s. | Verifica |
|---|---|---|---|---|---|---|---|
| ini. | 3 | 2 | 649 | 10289 | SLU 39 | 15.85 | Si |
| fin. | 3 | 2 | 10756 | 10289 | SLU 39 | 0.96 | No |
| ini. | 3 | 8 | 1494 | 10289 | SLU 82 | 6.89 | Si |
| fin. | 3 | 8 | 11281 | 10289 | SLU 82 | 0.91 | No |
| ini. | 3 | 11 | 1485 | 10289 | SLU 31 | 6.93 | Si |
| fin. | 3 | 11 | 9303 | 10289 | SLU 31 | 1.11 | Si |
| ini. | 3 | 8 | 1685 | 10289 | SLU 84 | 6.11 | Si |
| fin. | 3 | 8 | 9881 | 10289 | SLU 84 | 1.04 | Si |
| ini. | 3 | 3 | 1239 | 10289 | SLU 83 | 8.31 | Si |
| fin. | 3 | 3 | 9944 | 10289 | SLU 83 | 1.03 | Si |
| ini. | 3 | 3 | 1221 | 10289 | SLU 60 | 8.43 | Si |
| fin. | 3 | 3 | 9337 | 10289 | SLU 60 | 1.1 | Si |
| ini. | 3 | 11 | 1884 | 10289 | SLU 73 | 5.46 | Si |
| fin. | 3 | 11 | 9890 | 10289 | SLU 73 | 1.04 | Si |
| ini. | 3 | 3 | 1048 | 10289 | SLU 81 | 9.82 | Si |
| fin. | 3 | 3 | 11344 | 10289 | SLU 81 | 0.91 | No |
| ini. | 3 | 3 | 840 | 10289 | SLU 41 | 12.25 | Si |
| fin. | 3 | 3 | 9356 | 10289 | SLU 41 | 1.1 | Si |
| ini. | 3 | 7 | 1095 | 10289 | SLU 40 | 9.4 | Si |
| fin. | 3 | 7 | 10693 | 10289 | SLU 40 | 0.96 | No |

## Verifiche a taglio delle travi in muratura secondo §C8.7.1.3.1 in combinazioni non sismiche

| Sezione | γM | N | M | V | Vt | Vp | Vt fess. diag. | Vt,lim | Comb. | c.s. | Verifica |
|---|---|---|---|---|---|---|---|---|---|---|---|
| ini. | 3 | 0 | 1667 | 143 | | | 200 | 75 | SLU 61 | 0.53 | No |
| fin. | 3 | 0 | 9274 | -4 | | | 200 | 75 | SLU 61 | 19.61 | Si |
| ini. | 3 | 0 | 1095 | 145 | | | 200 | 75 | SLU 40 | 0.52 | No |
| fin. | 3 | 0 | 10693 | 31 | | | 200 | 75 | SLU 40 | 2.4 | Si |
| ini. | 3 | 0 | 1884 | 147 | | | 200 | 75 | SLU 73 | 0.51 | No |
| fin. | 3 | 0 | 9890 | 0 | | | 200 | 75 | SLU 73 | 426.7 | Si |
| ini. | 3 | 0 | 1494 | 163 | | | 200 | 75 | SLU 82 | 0.46 | No |
| fin. | 3 | 0 | 11281 | 16 | | | 200 | 75 | SLU 82 | 4.66 | Si |
| ini. | 3 | 0 | 1239 | 153 | | | 200 | 75 | SLU 83 | 0.49 | No |
| fin. | 3 | 0 | 9944 | 6 | | | 200 | 75 | SLU 83 | 12.09 | Si |
| ini. | 3 | 0 | 1048 | 168 | | | 200 | 75 | SLU 81 | 0.45 | No |
| fin. | 3 | 0 | 11344 | 21 | | | 200 | 75 | SLU 81 | 3.62 | Si |
| ini. | 3 | 0 | 1685 | 149 | | | 200 | 75 | SLU 84 | 0.51 | No |
| fin. | 3 | 0 | 9881 | 2 | | | 200 | 75 | SLU 84 | 48.16 | Si |
| ini. | 3 | 0 | 1253 | 147 | | | 200 | 75 | SLU 74 | 0.51 | No |
| fin. | 3 | 0 | 9249 | 0 | | | 200 | 75 | SLU 74 | 271.51 | Si |
| ini. | 3 | 0 | 1221 | 148 | | | 200 | 75 | SLU 60 | 0.51 | No |
| fin. | 3 | 0 | 9337 | 1 | | | 200 | 75 | SLU 60 | 91.4 | Si |
| ini. | 3 | 0 | 649 | 149 | | | 200 | 75 | SLU 39 | 0.5 | No |
| fin. | 3 | 0 | 10756 | 36 | | | 200 | 75 | SLU 39 | 2.09 | Si |

## Verifiche a pressoflessione delle travi in muratura in combinazioni sismiche

| Sezione | γM | N | M | Mu | Comb. | c.s. | Verifica |
|---|---|---|---|---|---|---|---|
| ini. | 2 | 38 | -4930 | 15434 | SLV 6 | 3.13 | Si |
| fin. | 2 | 159 | 64605 | 15434 | SLV 6 | 0.24 | No |
| ini. | 2 | -34 | 6970 | 15434 | SLV 12 | 2.21 | Si |
| fin. | 2 | -154 | -53153 | 15434 | SLV 12 | 0.29 | No |
| ini. | 2 | 33 | -2321 | 15434 | SLV 1 | 6.65 | Si |
| fin. | 2 | 80 | 42257 | 15434 | SLV 1 | 0.37 | No |
| ini. | 2 | 38 | -4930 | 15434 | SLV 5 | 3.13 | Si |
| fin. | 2 | 159 | 64605 | 15434 | SLV 5 | 0.24 | No |
| ini. | 2 | -21 | 5944 | 15434 | SLV 8 | 2.6 | Si |
| fin. | 2 | -134 | -40713 | 15434 | SLV 8 | 0.38 | No |
| ini. | 2 | -21 | 5944 | 15434 | SLV 7 | 2.6 | Si |
| fin. | 2 | -134 | -40713 | 15434 | SLV 7 | 0.38 | No |
| ini. | 2 | 25 | -3903 | 15434 | SLV 10 | 3.95 | Si |
| fin. | 2 | 138 | 52165 | 15434 | SLV 10 | 0.3 | No |
| ini. | 2 | 25 | -3903 | 15434 | SLV 9 | 3.95 | Si |
| fin. | 2 | 138 | 52165 | 15434 | SLV 9 | 0.3 | No |
| ini. | 2 | 33 | -2321 | 15434 | SLV 2 | 6.65 | Si |
| fin. | 2 | 80 | 42257 | 15434 | SLV 2 | 0.37 | No |
| ini. | 2 | -34 | 6970 | 15434 | SLV 11 | 2.21 | Si |
| fin. | 2 | -154 | -53153 | 15434 | SLV 11 | 0.29 | No |

## Verifiche a taglio delle travi in muratura secondo §C8.7.1.3.1 in combinazioni sismiche

| Sezione | γM | N | M | V | Vt | Vp | Vt fess. diag. | Vt,lim | Comb. | c.s. | Verifica |
|---|---|---|---|---|---|---|---|---|---|---|---|
| ini. | 2 | 0 | 5944 | -316 | | | 300 | 113 | SLV 8 | 0.36 | No |
| fin. | 2 | 0 | -40713 | -342 | | | 300 | 113 | SLV 8 | 0.33 | No |
| ini. | 2 | 0 | -4930 | 620 | | | 300 | 113 | SLV 5 | 0.18 | No |
| fin. | 2 | 0 | 64605 | 376 | | | 300 | 113 | SLV 5 | 0.3 | No |
| ini. | 2 | 0 | 6970 | -420 | | | 300 | 113 | SLV 12 | 0.27 | No |
| fin. | 2 | 0 | -53153 | -403 | | | 300 | 113 | SLV 12 | 0.28 | No |
| ini. | 2 | 0 | -3903 | 515 | | | 300 | 113 | SLV 10 | 0.22 | No |
| fin. | 2 | 0 | 52165 | 315 | | | 300 | 113 | SLV 10 | 0.36 | No |
| ini. | 2 | 0 | -3903 | 515 | | | 300 | 113 | SLV 9 | 0.22 | No |
| fin. | 2 | 0 | 52165 | 315 | | | 300 | 113 | SLV 9 | 0.36 | No |
| ini. | 2 | 0 | -2321 | 415 | | | 300 | 113 | SLV 1 | 0.27 | No |
| fin. | 2 | 0 | 42257 | 195 | | | 300 | 113 | SLV 1 | 0.58 | No |
| ini. | 2 | 0 | 5944 | -316 | | | 300 | 113 | SLV 7 | 0.36 | No |
| fin. | 2 | 0 | -40713 | -342 | | | 300 | 113 | SLV 7 | 0.33 | No |
| ini. | 2 | 0 | -4930 | 620 | | | 300 | 113 | SLV 6 | 0.18 | No |
| fin. | 2 | 0 | 64605 | 376 | | | 300 | 113 | SLV 6 | 0.3 | No |
| ini. | 2 | 0 | -2321 | 415 | | | 300 | 113 | SLV 2 | 0.27 | No |

| Sezione | γM | N | M | V | Vt | Vp | Vt fess. diag. | Vt,lim | Comb. | c.s. | Verifica |
|---|---|---|---|---|---|---|---|---|---|---|---|
| fin. | 2 | 0 | 42257 | 195 | | | 300 | 113 | SLV 2 | 0.58 | No |
| ini. | 2 | 0 | 6970 | -420 | | | 300 | 113 | SLV 11 | 0.27 | No |
| fin. | 2 | 0 | -53153 | -403 | | | 300 | 113 | SLV 11 | 0.28 | No |

### Tabella dei coefficienti di sicurezza minimi

| Stato limite | Coeff.s. | Comb. | Verifica |
|---|---|---|---|
| PF_SLV | 0.239 | SLV 5 | No |
| V_SLV | 0.182 | SLV 5 | No |
| PF_SLU | 0.907 | SLU 81 | No |
| V_SLU | 0.448 | SLU 81 | No |

## Trave di accoppiamento 96

Verifiche condotte secondo D.M. 17-01-18 (N.T.C.)

### Dati geometrici

| X ini. | Y ini. | Z ini.inf. | Z ini.sup. | H ini. | X fin. | Y fin. | Z fin.inf. | Z fin.sup | H fin. | Luce | Spessore | R. Trazione |
|---|---|---|---|---|---|---|---|---|---|---|---|---|
| -515.8 | 600.6 | 544 | 744 | 200 | -515.8 | 650.6 | 544 | 744 | 200 | 50 | 28 | 3500 |

### Caratteristiche del materiale

(Circolare 7 21-01-19 C8.5.I) Muratura in mattoni pieni e malta di calce LC2_Corti

| fb_ | fhk | fvk0 | fhmedio | τ0 | fv0 | μ | ϕ | fvk,lim | E | G | FC |
|---|---|---|---|---|---|---|---|---|---|---|---|
| 12 | | | 17.25 | 0.9 | 2 | 0.577 | 0.767 | 0.65 | 32000 | 12800 | 1.2 |

### Verifiche a pressoflessione delle travi in muratura in combinazioni non sismiche

| Sezione | γM | N | M | Mu | Comb. | c.s. | Verifica |
|---|---|---|---|---|---|---|---|
| ini. | 3 | 1853 | 24340 | 296292 | SLU 82 | 12.17 | Si |
| fin. | 3 | 602 | 33320 | 296292 | SLU 82 | 8.89 | Si |
| ini. | 3 | 1843 | 24242 | 296292 | SLU 81 | 12.22 | Si |
| fin. | 3 | 599 | 33044 | 296292 | SLU 81 | 8.97 | Si |
| ini. | 3 | 1645 | 21818 | 296292 | SLU 60 | 13.58 | Si |
| fin. | 3 | 537 | 29892 | 296292 | SLU 60 | 9.91 | Si |
| ini. | 3 | 1629 | 21217 | 296292 | SLU 40 | 13.96 | Si |
| fin. | 3 | 533 | 29518 | 296292 | SLU 40 | 10.04 | Si |
| ini. | 3 | 1713 | 22097 | 296292 | SLU 83 | 13.41 | Si |
| fin. | 3 | 530 | 27901 | 296292 | SLU 83 | 10.62 | Si |
| ini. | 3 | 1620 | 21120 | 296292 | SLU 39 | 14.03 | Si |
| fin. | 3 | 529 | 29243 | 296292 | SLU 39 | 10.13 | Si |
| ini. | 3 | 1526 | 20325 | 296292 | SLU 52 | 14.58 | Si |
| fin. | 3 | 494 | 27407 | 296292 | SLU 52 | 10.81 | Si |
| ini. | 3 | 1723 | 22194 | 296292 | SLU 84 | 13.35 | Si |
| fin. | 3 | 533 | 28177 | 296292 | SLU 84 | 10.52 | Si |
| ini. | 3 | 1655 | 21916 | 296292 | SLU 61 | 13.52 | Si |
| fin. | 3 | 540 | 30167 | 296292 | SLU 61 | 9.82 | Si |
| ini. | 3 | 1724 | 22749 | 296292 | SLU 73 | 13.02 | Si |
| fin. | 3 | 556 | 30559 | 296292 | SLU 73 | 9.7 | Si |

### Verifiche a taglio delle travi in muratura secondo §C8.7.1.3.1 in combinazioni non sismiche

| Sezione | γM | N | M | V | Vt | Vp | Vt fess. diag. | Vt,lim | Comb. | c.s. | Verifica |
|---|---|---|---|---|---|---|---|---|---|---|---|
| ini. | 3 | 0 | 22097 | 1289 | | | 2157 | 812 | SLU 83 | 0.63 | No |
| fin. | 3 | 0 | 27901 | 4120 | | | 2157 | 812 | SLU 83 | 0.2 | No |
| ini. | 3 | 0 | 18393 | 803 | | | 2157 | 812 | SLU 80 | 1.01 | Si |
| fin. | 3 | 0 | 20089 | 4002 | | | 2157 | 812 | SLU 80 | 0.2 | No |
| ini. | 3 | 0 | 21258 | 1260 | | | 2157 | 812 | SLU 75 | 0.64 | No |
| fin. | 3 | 0 | 26896 | 3953 | | | 2157 | 812 | SLU 75 | 0.21 | No |
| ini. | 3 | 0 | 19016 | 882 | | | 2157 | 812 | SLU 77 | 0.92 | No |
| fin. | 3 | 0 | 21477 | 4057 | | | 2157 | 812 | SLU 77 | 0.2 | No |
| ini. | 3 | 0 | 19113 | 907 | | | 2157 | 812 | SLU 78 | 0.89 | No |
| fin. | 3 | 0 | 21753 | 4056 | | | 2157 | 812 | SLU 78 | 0.2 | No |
| ini. | 3 | 0 | 24242 | 1642 | | | 2157 | 812 | SLU 81 | 0.49 | No |
| fin. | 3 | 0 | 33044 | 4017 | | | 2157 | 812 | SLU 81 | 0.2 | No |
| ini. | 3 | 0 | 18296 | 778 | | | 2157 | 812 | SLU 79 | 1.04 | Si |
| fin. | 3 | 0 | 19814 | 4003 | | | 2157 | 812 | SLU 79 | 0.2 | No |
| ini. | 3 | 0 | 22194 | 1314 | | | 2157 | 812 | SLU 84 | 0.62 | No |
| fin. | 3 | 0 | 28177 | 4118 | | | 2157 | 812 | SLU 84 | 0.2 | No |
| ini. | 3 | 0 | 21161 | 1235 | | | 2157 | 812 | SLU 74 | 0.66 | No |
| fin. | 3 | 0 | 26621 | 3955 | | | 2157 | 812 | SLU 74 | 0.21 | No |
| ini. | 3 | 0 | 24340 | 1667 | | | 2157 | 812 | SLU 82 | 0.49 | No |
| fin. | 3 | 0 | 33320 | 4015 | | | 2157 | 812 | SLU 82 | 0.2 | No |

### Verifiche a pressoflessione delle travi in muratura in combinazioni sismiche

| Sezione | γM | N | M | Mu | Comb. | c.s. | Verifica |
|---|---|---|---|---|---|---|---|
| ini. | 2 | 3430 | -31561 | 314194 | SLV 15 | 9.95 | Si |
| fin. | 2 | 1138 | 72202 | 314194 | SLV 15 | 4.35 | Si |
| ini. | 2 | 3430 | -31561 | 314194 | SLV 16 | 9.95 | Si |
| fin. | 2 | 1138 | 72202 | 314194 | SLV 16 | 4.35 | Si |
| ini. | 2 | -1193 | 61508 | 314194 | SLV 1 | 5.11 | Si |
| fin. | 2 | -430 | -33922 | 314194 | SLV 1 | 9.26 | Si |
| ini. | 2 | 4086 | -44099 | 314194 | SLV 14 | 7.12 | Si |
| fin. | 2 | 1294 | 79038 | 314194 | SLV 14 | 3.98 | Si |
| ini. | 2 | -1193 | 61508 | 314194 | SLV 2 | 5.11 | Si |
| fin. | 2 | -430 | -33922 | 314194 | SLV 2 | 9.26 | Si |
| ini. | 2 | -767 | 51710 | 314194 | SLV 8 | 6.08 | Si |
| fin. | 2 | -166 | -9199 | 314194 | SLV 8 | 34.15 | Si |

| Sezione | γM | N | M | Mu | Comb. | c.s. | Verifica |
|---|---|---|---|---|---|---|---|
| ini. | 2 | -767 | 51710 | 314194 | SLV 7 | 6.08 | Si |
| fin. | 2 | -166 | -9199 | 314194 | SLV 7 | 34.15 | Si |
| ini. | 2 | -1849 | 74045 | 314194 | SLV 3 | 4.24 | Si |
| fin. | 2 | -587 | -40759 | 314194 | SLV 3 | 7.71 | Si |
| ini. | 2 | 4086 | -44099 | 314194 | SLV 13 | 7.12 | Si |
| fin. | 2 | 1294 | 79038 | 314194 | SLV 13 | 3.98 | Si |
| ini. | 2 | -1849 | 74045 | 314194 | SLV 4 | 4.24 | Si |
| fin. | 2 | -587 | -40759 | 314194 | SLV 4 | 7.71 | Si |

### Verifiche a taglio delle travi in muratura secondo §C8.7.1.3.1 in combinazioni sismiche

| Sezione | γM | N | M | V | Vt | Vp | Vt fess. diag. | Vt,lim | Comb. | c.s. | Verifica |
|---|---|---|---|---|---|---|---|---|---|---|---|
| ini. | 2 | 0 | 61508 | -5045 | | | 3235 | 1217 | SLV 2 | 0.24 | No |
| fin. | 2 | 0 | -33922 | -577 | | | 3235 | 1217 | SLV 2 | 2.11 | Si |
| ini. | 2 | 0 | -21763 | 5608 | | | 3235 | 1217 | SLV 10 | 0.22 | No |
| fin. | 2 | 0 | 47478 | 4382 | | | 3235 | 1217 | SLV 10 | 0.28 | No |
| ini. | 2 | 0 | -31561 | 6918 | | | 3235 | 1217 | SLV 15 | 0.18 | No |
| fin. | 2 | 0 | 72202 | 5714 | | | 3235 | 1217 | SLV 15 | 0.21 | No |
| ini. | 2 | 0 | -44099 | 8502 | | | 3235 | 1217 | SLV 14 | 0.14 | No |
| fin. | 2 | 0 | 79038 | 6193 | | | 3235 | 1217 | SLV 14 | 0.2 | No |
| ini. | 2 | 0 | -44099 | 8502 | | | 3235 | 1217 | SLV 13 | 0.14 | No |
| fin. | 2 | 0 | 79038 | 6193 | | | 3235 | 1217 | SLV 13 | 0.2 | No |
| ini. | 2 | 0 | -31561 | 6918 | | | 3235 | 1217 | SLV 16 | 0.18 | No |
| fin. | 2 | 0 | 72202 | 5714 | | | 3235 | 1217 | SLV 16 | 0.21 | No |
| ini. | 2 | 0 | 74045 | -6629 | | | 3235 | 1217 | SLV 4 | 0.18 | No |
| fin. | 2 | 0 | -40759 | -1056 | | | 3235 | 1217 | SLV 4 | 1.15 | Si |
| ini. | 2 | 0 | -21763 | 5608 | | | 3235 | 1217 | SLV 9 | 0.22 | No |
| fin. | 2 | 0 | 47478 | 4382 | | | 3235 | 1217 | SLV 9 | 0.28 | No |
| ini. | 2 | 0 | 61508 | -5045 | | | 3235 | 1217 | SLV 1 | 0.24 | No |
| fin. | 2 | 0 | -33922 | -577 | | | 3235 | 1217 | SLV 1 | 2.11 | Si |
| ini. | 2 | 0 | 74045 | -6629 | | | 3235 | 1217 | SLV 3 | 0.18 | No |
| fin. | 2 | 0 | -40759 | -1056 | | | 3235 | 1217 | SLV 3 | 1.15 | Si |

### Tabella dei coefficienti di sicurezza minimi

| Stato limite | Coeff.s. | Comb. | Verifica |
|---|---|---|---|
| PF_SLV | 3.975 | SLV 13 | Si |
| V_SLV | 0.143 | SLV 13 | No |
| PF_SLU | 8.892 | SLU 82 | Si |
| V_SLU | 0.197 | SLU 83 | No |

## Trave di accoppiamento 97

Verifiche condotte secondo D.M. 17-01-18 (N.T.C.)

### Dati geometrici

| X ini. | Y ini. | Z ini.inf. | Z ini.sup. | H ini. | X fin. | Y fin. | Z fin.inf. | Z fin.sup | H fin. | Luce | Spessore | R. Trazione |
|---|---|---|---|---|---|---|---|---|---|---|---|---|
| -515.8 | 600.6 | 824 | 896 | 72 | -515.8 | 650.6 | 824 | 896 | 72 | 50 | 28 | 3500 |

### Caratteristiche del materiale

(Circolare 7 21-01-19 C8.5.I) Muratura in mattoni pieni e malta di calce LC2_Corti

| fb_ | fhk | fvk0 | fhmedio | τ0 | fv0 | μ | ϕ | fvk,lim | E | G | FC |
|---|---|---|---|---|---|---|---|---|---|---|---|
| 12 | | | 17.25 | 0.9 | 2 | 0.577 | 0.767 | 0.65 | 32000 | 12800 | 1.2 |

### Verifiche a pressoflessione delle travi in muratura in combinazioni non sismiche

| Sezione | γM | N | M | Mu | Comb. | c.s. | Verifica |
|---|---|---|---|---|---|---|---|
| ini. | 3 | -109 | -55783 | 72292 | SLU 72 | 1.3 | Si |
| fin. | 3 | 34 | 137 | 72292 | SLU 72 | 529.22 | Si |
| ini. | 3 | -328 | -59215 | 72292 | SLU 78 | 1.22 | Si |
| fin. | 3 | -210 | 1170 | 72292 | SLU 78 | 61.79 | Si |
| ini. | 3 | -99 | -55959 | 72292 | SLU 71 | 1.29 | Si |
| fin. | 3 | 45 | 163 | 72292 | SLU 71 | 442.82 | Si |
| ini. | 3 | -193 | -55273 | 72292 | SLU 38 | 1.31 | Si |
| fin. | 3 | -65 | -113 | 72292 | SLU 38 | 639.84 | Si |
| ini. | 3 | -162 | -54871 | 72292 | SLU 70 | 1.32 | Si |
| fin. | 3 | -31 | 525 | 72292 | SLU 70 | 137.69 | Si |
| ini. | 3 | -152 | -55047 | 72292 | SLU 69 | 1.31 | Si |
| fin. | 3 | -20 | 552 | 72292 | SLU 69 | 131.04 | Si |
| ini. | 3 | -318 | -59391 | 72292 | SLU 77 | 1.22 | Si |
| fin. | 3 | -199 | 1197 | 72292 | SLU 77 | 60.42 | Si |
| ini. | 3 | -183 | -55449 | 72292 | SLU 37 | 1.3 | Si |
| fin. | 3 | -54 | -86 | 72292 | SLU 37 | 837.37 | Si |
| ini. | 3 | -275 | -60127 | 72292 | SLU 80 | 1.2 | Si |
| fin. | 3 | -145 | 781 | 72292 | SLU 80 | 92.51 | Si |
| ini. | 3 | -265 | -60303 | 72292 | SLU 79 | 1.2 | Si |
| fin. | 3 | -134 | 808 | 72292 | SLU 79 | 89.46 | Si |

### Verifiche a taglio delle travi in muratura secondo §C8.7.1.3.1 in combinazioni non sismiche

| Sezione | γM | N | M | V | Vt | Vp | Vt fess. diag. | Vt,lim | Comb. | c.s. | Verifica |
|---|---|---|---|---|---|---|---|---|---|---|---|
| ini. | 3 | 0 | -55449 | 3195 | | | 776 | 292 | SLU 37 | 0.09 | No |
| fin. | 3 | 0 | -86 | -330 | | | 776 | 292 | SLU 37 | 0.89 | No |
| ini. | 3 | 0 | -60127 | 3420 | | | 776 | 292 | SLU 80 | 0.09 | No |
| fin. | 3 | 0 | 781 | -298 | | | 776 | 292 | SLU 80 | 0.98 | No |
| ini. | 3 | 0 | -55783 | 3393 | | | 776 | 292 | SLU 72 | 0.09 | No |
| fin. | 3 | 0 | 137 | -460 | | | 776 | 292 | SLU 72 | 0.63 | No |
| ini. | 3 | 0 | -51105 | 3168 | | | 776 | 292 | SLU 29 | 0.09 | No |

| Sezione | γM | N | M | V | Vt | Vp | Vt fess. diag. | Vt,lim | Comb. | c.s. | Verifica |
|---|---|---|---|---|---|---|---|---|---|---|---|
| fin. | 3 | 0 | -731 | -492 | | | 776 | 292 | SLU 29 | 0.59 | No |
| ini. | 3 | 0 | -59215 | 3300 | | | 776 | 292 | SLU 78 | 0.09 | No |
| fin. | 3 | 0 | 1170 | -233 | | | 776 | 292 | SLU 78 | 1.25 | Si |
| ini. | 3 | 0 | -55047 | 3303 | | | 776 | 292 | SLU 69 | 0.09 | No |
| fin. | 3 | 0 | 552 | -411 | | | 776 | 292 | SLU 69 | 0.71 | No |
| ini. | 3 | 0 | -54871 | 3273 | | | 776 | 292 | SLU 70 | 0.09 | No |
| fin. | 3 | 0 | 525 | -395 | | | 776 | 292 | SLU 70 | 0.74 | No |
| ini. | 3 | 0 | -55959 | 3423 | | | 776 | 292 | SLU 71 | 0.09 | No |
| fin. | 3 | 0 | 163 | -476 | | | 776 | 292 | SLU 71 | 0.61 | No |
| ini. | 3 | 0 | -59391 | 3330 | | | 776 | 292 | SLU 77 | 0.09 | No |
| fin. | 3 | 0 | 1197 | -249 | | | 776 | 292 | SLU 77 | 1.17 | Si |
| ini. | 3 | 0 | -60303 | 3450 | | | 776 | 292 | SLU 79 | 0.08 | No |
| fin. | 3 | 0 | 808 | -314 | | | 776 | 292 | SLU 79 | 0.93 | No |

### Verifiche a pressoflessione delle travi in muratura in combinazioni sismiche

| Sezione | γM | N | M | Mu | Comb. | c.s. | Verifica |
|---|---|---|---|---|---|---|---|
| ini. | 2 | -2109 | -123283 | 90194 | SLV 14 | 0.73 | No |
| fin. | 2 | -1596 | 16315 | 90194 | SLV 14 | 5.53 | Si |
| ini. | 2 | -868 | -72417 | 90194 | SLD 15 | 1.25 | Si |
| fin. | 2 | -722 | 2991 | 90194 | SLD 15 | 30.16 | Si |
| ini. | 2 | -1488 | -131519 | 90194 | SLV 15 | 0.69 | No |
| fin. | 2 | -1172 | 2345 | 90194 | SLV 15 | 38.47 | Si |
| ini. | 2 | -2109 | -123283 | 90194 | SLV 13 | 0.73 | No |
| fin. | 2 | -1596 | 16315 | 90194 | SLV 13 | 5.53 | Si |
| ini. | 2 | 220 | -71879 | 90194 | SLV 11 | 1.25 | Si |
| fin. | 2 | 32 | -18404 | 90194 | SLV 11 | 4.9 | Si |
| ini. | 2 | -1488 | -131519 | 90194 | SLV 16 | 0.69 | No |
| fin. | 2 | -1172 | 2345 | 90194 | SLV 16 | 38.47 | Si |
| ini. | 2 | -868 | -72417 | 90194 | SLD 16 | 1.25 | Si |
| fin. | 2 | -722 | 2991 | 90194 | SLD 16 | 30.16 | Si |
| ini. | 2 | 702 | 74570 | 90194 | SLV 1 | 1.21 | Si |
| fin. | 2 | 431 | 3601 | 90194 | SLV 1 | 25.05 | Si |
| ini. | 2 | 702 | 74570 | 90194 | SLV 2 | 1.21 | Si |
| fin. | 2 | 431 | 3601 | 90194 | SLV 2 | 25.05 | Si |
| ini. | 2 | 220 | -71879 | 90194 | SLV 12 | 1.25 | Si |
| fin. | 2 | 32 | -18404 | 90194 | SLV 12 | 4.9 | Si |

### Verifiche a taglio delle travi in muratura secondo §C8.7.1.3.1 in combinazioni sismiche

| Sezione | γM | N | M | V | Vt | Vp | Vt fess. diag. | Vt,lim | Comb. | c.s. | Verifica |
|---|---|---|---|---|---|---|---|---|---|---|---|
| ini. | 2 | 0 | -44426 | 2749 | | | 1165 | 438 | SLV 10 | 0.16 | No |
| fin. | 2 | 0 | 28163 | 1844 | | | 1165 | 438 | SLV 10 | 0.24 | No |
| ini. | 2 | 0 | -123283 | 4464 | | | 1165 | 438 | SLV 14 | 0.1 | No |
| fin. | 2 | 0 | 16315 | 2647 | | | 1165 | 438 | SLV 14 | 0.17 | No |
| ini. | 2 | 0 | -131519 | 4181 | | | 1165 | 438 | SLV 15 | 0.1 | No |
| fin. | 2 | 0 | 2345 | 1998 | | | 1165 | 438 | SLV 15 | 0.22 | No |
| ini. | 2 | 0 | -44426 | 2749 | | | 1165 | 438 | SLV 9 | 0.16 | No |
| fin. | 2 | 0 | 28163 | 1844 | | | 1165 | 438 | SLV 9 | 0.24 | No |
| ini. | 2 | 0 | -68941 | 2705 | | | 1165 | 438 | SLD 14 | 0.16 | No |
| fin. | 2 | 0 | 8501 | 1179 | | | 1165 | 438 | SLD 14 | 0.37 | No |
| ini. | 2 | 0 | -72417 | 2590 | | | 1165 | 438 | SLD 16 | 0.17 | No |
| fin. | 2 | 0 | 2991 | 910 | | | 1165 | 438 | SLD 16 | 0.48 | No |
| ini. | 2 | 0 | -68941 | 2705 | | | 1165 | 438 | SLD 13 | 0.16 | No |
| fin. | 2 | 0 | 8501 | 1179 | | | 1165 | 438 | SLD 13 | 0.37 | No |
| ini. | 2 | 0 | -131519 | 4181 | | | 1165 | 438 | SLV 16 | 0.1 | No |
| fin. | 2 | 0 | 2345 | 1998 | | | 1165 | 438 | SLV 16 | 0.22 | No |
| ini. | 2 | 0 | -72417 | 2590 | | | 1165 | 438 | SLD 15 | 0.17 | No |
| fin. | 2 | 0 | 2991 | 910 | | | 1165 | 438 | SLD 15 | 0.48 | No |
| ini. | 2 | 0 | -123283 | 4464 | | | 1165 | 438 | SLV 13 | 0.1 | No |
| fin. | 2 | 0 | 16315 | 2647 | | | 1165 | 438 | SLV 13 | 0.17 | No |

### Tabella dei coefficienti di sicurezza minimi

| Stato limite | Coeff.s. | Comb. | Verifica |
|---|---|---|---|
| PF_SLV | 0.686 | SLV 15 | No |
| V_SLV | 0.098 | SLV 13 | No |
| PF_SLU | 1.199 | SLU 79 | Si |
| V_SLU | 0.085 | SLU 79 | No |

## Trave di accoppiamento 98

Verifiche condotte secondo D.M. 17-01-18 (N.T.C.)

### Dati geometrici

| X ini. | Y ini. | Z ini.inf. | Z ini.sup. | H ini. | X fin. | Y fin. | Z fin.inf. | Z fin.sup | H fin. | Luce | Spessore | R. Trazione |
|---|---|---|---|---|---|---|---|---|---|---|---|---|
| -651.3 | -335.9 | 544 | 634 | 90 | -741.3 | -335.9 | 544 | 634 | 90 | 90 | 28 | 3500 |

### Caratteristiche del materiale

(Circolare 7 21-01-19 C8.5.I) Muratura in mattoni pieni e malta di calce LC2_Corti

| fb_ | fhk | fvk0 | fhmedio | τ0 | fv0 | μ | ϕ | fvk,lim | E | G | FC |
|---|---|---|---|---|---|---|---|---|---|---|---|
| 12 | | | 17.25 | 0.9 | 2 | 0.577 | 0.767 | 0.65 | 32000 | 12800 | 1.2 |

### Verifiche a pressoflessione delle travi in muratura in combinazioni non sismiche

| Sezione | γM | N | M | Mu | Comb. | c.s. | Verifica |
|---|---|---|---|---|---|---|---|
| ini. | 3 | 238 | 27664 | 103792 | SLU 84 | 3.75 | Si |
| fin. | 3 | 26 | 4541 | 103792 | SLU 84 | 22.86 | Si |

| Sezione | γM | N | M | Mu | Comb. | c.s. | Verifica |
|---|---|---|---|---|---|---|---|
| ini. | 3 | 178 | 27998 | 103792 | SLU 65 | 3.71 | Si |
| fin. | 3 | 307 | -6381 | 103792 | SLU 65 | 16.27 | Si |
| ini. | 3 | 135 | 27050 | 103792 | SLU 55 | 3.84 | Si |
| fin. | 3 | 99 | 344 | 103792 | SLU 55 | 301.89 | Si |
| ini. | 3 | 79 | 28383 | 103792 | SLU 61 | 3.66 | Si |
| fin. | 3 | 73 | 433 | 103792 | SLU 61 | 239.75 | Si |
| ini. | 3 | 188 | 26748 | 103792 | SLU 81 | 3.88 | Si |
| fin. | 3 | 14 | 4549 | 103792 | SLU 81 | 22.82 | Si |
| ini. | 3 | 177 | 29897 | 103792 | SLU 82 | 3.47 | Si |
| fin. | 3 | 102 | 711 | 103792 | SLU 82 | 145.92 | Si |
| ini. | 3 | 75 | 29283 | 103792 | SLU 52 | 3.54 | Si |
| fin. | 3 | 175 | -3486 | 103792 | SLU 52 | 29.78 | Si |
| ini. | 3 | 233 | 27292 | 103792 | SLU 75 | 3.8 | Si |
| fin. | 3 | 101 | 2046 | 103792 | SLU 75 | 50.73 | Si |
| ini. | 3 | 233 | 28564 | 103792 | SLU 76 | 3.63 | Si |
| fin. | 3 | 129 | 622 | 103792 | SLU 76 | 166.82 | Si |
| ini. | 3 | 173 | 30797 | 103792 | SLU 73 | 3.37 | Si |
| fin. | 3 | 205 | -3207 | 103792 | SLU 73 | 32.36 | Si |

## Verifiche a taglio delle travi in muratura secondo §C8.7.1.3.1 in combinazioni non sismiche

| Sezione | γM | N | M | V | Vt | Vp | Vt fess. diag. | Vt,lim | Comb. | c.s. | Verifica |
|---|---|---|---|---|---|---|---|---|---|---|---|
| ini. | 3 | 0 | 26748 | -2623 | | | 970 | 365 | SLU 81 | 0.14 | No |
| fin. | 3 | 0 | 4549 | 1562 | | | 970 | 365 | SLU 81 | 0.23 | No |
| ini. | 3 | 0 | 28383 | -2624 | | | 970 | 365 | SLU 61 | 0.14 | No |
| fin. | 3 | 0 | 433 | 1316 | | | 970 | 365 | SLU 61 | 0.28 | No |
| ini. | 3 | 0 | 29283 | -2651 | | | 970 | 365 | SLU 52 | 0.14 | No |
| fin. | 3 | 0 | -3486 | 1147 | | | 970 | 365 | SLU 52 | 0.32 | No |
| ini. | 3 | 0 | 30797 | -2781 | | | 970 | 365 | SLU 73 | 0.13 | No |
| fin. | 3 | 0 | -3207 | 1262 | | | 970 | 365 | SLU 73 | 0.29 | No |
| ini. | 3 | 0 | 27292 | -2687 | | | 970 | 365 | SLU 75 | 0.14 | No |
| fin. | 3 | 0 | 2046 | 1521 | | | 970 | 365 | SLU 75 | 0.24 | No |
| ini. | 3 | 0 | 29897 | -2755 | | | 970 | 365 | SLU 82 | 0.13 | No |
| fin. | 3 | 0 | 711 | 1431 | | | 970 | 365 | SLU 82 | 0.26 | No |
| ini. | 3 | 0 | 28564 | -2712 | | | 970 | 365 | SLU 76 | 0.13 | No |
| fin. | 3 | 0 | 622 | 1463 | | | 970 | 365 | SLU 76 | 0.25 | No |
| ini. | 3 | 0 | 27664 | -2685 | | | 970 | 365 | SLU 84 | 0.14 | No |
| fin. | 3 | 0 | 4541 | 1632 | | | 970 | 365 | SLU 84 | 0.22 | No |
| ini. | 3 | 0 | 25058 | -2617 | | | 970 | 365 | SLU 78 | 0.14 | No |
| fin. | 3 | 0 | 5875 | 1723 | | | 970 | 365 | SLU 78 | 0.21 | No |
| ini. | 3 | 0 | 27998 | -2638 | | | 970 | 365 | SLU 65 | 0.14 | No |
| fin. | 3 | 0 | -6381 | 1072 | | | 970 | 365 | SLU 65 | 0.34 | No |

## Verifiche a pressoflessione delle travi in muratura in combinazioni sismiche

| Sezione | γM | N | M | Mu | Comb. | c.s. | Verifica |
|---|---|---|---|---|---|---|---|
| ini. | 2 | 3230 | -107148 | 121694 | SLV 16 | 1.14 | Si |
| fin. | 2 | -3805 | 200979 | 121694 | SLV 16 | 0.61 | No |
| ini. | 2 | 3230 | -107148 | 121694 | SLV 15 | 1.14 | Si |
| fin. | 2 | -3805 | 200979 | 121694 | SLV 15 | 0.61 | No |
| ini. | 2 | 2875 | -83668 | 121694 | SLV 14 | 1.45 | Si |
| fin. | 2 | -3003 | 175632 | 121694 | SLV 14 | 0.69 | No |
| ini. | 2 | -2620 | 119601 | 121694 | SLV 3 | 1.02 | Si |
| fin. | 2 | 3176 | -173917 | 121694 | SLV 3 | 0.7 | No |
| ini. | 2 | -2620 | 119601 | 121694 | SLV 4 | 1.02 | Si |
| fin. | 2 | 3176 | -173917 | 121694 | SLV 4 | 0.7 | No |
| ini. | 2 | -2976 | 143081 | 121694 | SLV 2 | 0.85 | No |
| fin. | 2 | 3977 | -199263 | 121694 | SLV 2 | 0.61 | No |
| ini. | 2 | 2875 | -83668 | 121694 | SLV 13 | 1.45 | Si |
| fin. | 2 | -3003 | 175632 | 121694 | SLV 13 | 0.69 | No |
| ini. | 2 | 1597 | -55179 | 121694 | SLV 12 | 2.21 | Si |
| fin. | 2 | -2297 | 99336 | 121694 | SLV 12 | 1.23 | Si |
| ini. | 2 | -2976 | 143081 | 121694 | SLV 1 | 0.85 | No |
| fin. | 2 | 3977 | -199263 | 121694 | SLV 1 | 0.61 | No |
| ini. | 2 | 1597 | -55179 | 121694 | SLV 11 | 2.21 | Si |
| fin. | 2 | -2297 | 99336 | 121694 | SLV 11 | 1.23 | Si |

## Verifiche a taglio delle travi in muratura secondo §C8.7.1.3.1 in combinazioni sismiche

| Sezione | γM | N | M | V | Vt | Vp | Vt fess. diag. | Vt,lim | Comb. | c.s. | Verifica |
|---|---|---|---|---|---|---|---|---|---|---|---|
| ini. | 2 | 0 | -83668 | 3434 | | | 1456 | 548 | SLV 13 | 0.16 | No |
| fin. | 2 | 0 | 175632 | 7642 | | | 1456 | 548 | SLV 13 | 0.07 | No |
| ini. | 2 | 0 | 119601 | -7178 | | | 1456 | 548 | SLV 4 | 0.08 | No |
| fin. | 2 | 0 | -173917 | -5598 | | | 1456 | 548 | SLV 4 | 0.1 | No |
| ini. | 2 | 0 | 91112 | -6394 | | | 1456 | 548 | SLV 6 | 0.09 | No |
| fin. | 2 | 0 | -97620 | -3702 | | | 1456 | 548 | SLV 6 | 0.15 | No |
| ini. | 2 | 0 | -83668 | 3434 | | | 1456 | 548 | SLV 14 | 0.16 | No |
| fin. | 2 | 0 | 175632 | 7642 | | | 1456 | 548 | SLV 14 | 0.07 | No |
| ini. | 2 | 0 | 91112 | -6394 | | | 1456 | 548 | SLV 5 | 0.09 | No |
| fin. | 2 | 0 | -97620 | -3702 | | | 1456 | 548 | SLV 5 | 0.15 | No |
| ini. | 2 | 0 | 119601 | -7178 | | | 1456 | 548 | SLV 3 | 0.08 | No |
| fin. | 2 | 0 | -173917 | -5598 | | | 1456 | 548 | SLV 3 | 0.1 | No |
| ini. | 2 | 0 | 143081 | -8791 | | | 1456 | 548 | SLV 2 | 0.06 | No |
| fin. | 2 | 0 | -199263 | -7105 | | | 1456 | 548 | SLV 2 | 0.08 | No |
| ini. | 2 | 0 | 143081 | -8791 | | | 1456 | 548 | SLV 1 | 0.06 | No |
| fin. | 2 | 0 | -199263 | -7105 | | | 1456 | 548 | SLV 1 | 0.08 | No |
| ini. | 2 | 0 | -107148 | 5047 | | | 1456 | 548 | SLV 16 | 0.11 | No |
| fin. | 2 | 0 | 200979 | 9149 | | | 1456 | 548 | SLV 16 | 0.06 | No |
| ini. | 2 | 0 | -107148 | 5047 | | | 1456 | 548 | SLV 15 | 0.11 | No |
| fin. | 2 | 0 | 200979 | 9149 | | | 1456 | 548 | SLV 15 | 0.06 | No |

### Tabella dei coefficienti di sicurezza minimi

| Stato limite | Coeff.s. | Comb. | Verifica |
|---|---|---|---|
| PF_SLV | 0.606 | SLV 15 | No |
| V_SLV | 0.06 | SLV 15 | No |
| PF_SLU | 3.37 | SLU 73 | Si |
| V_SLU | 0.131 | SLU 73 | No |

## Trave di accoppiamento 99

Verifiche condotte secondo D.M. 17-01-18 (N.T.C.)

### Dati geometrici

| X ini. | Y ini. | Z ini.inf. | Z ini.sup. | H ini. | X fin. | Y fin. | Z fin.inf. | Z fin.sup | H fin. | Luce | Spessore | R. Trazione |
|---|---|---|---|---|---|---|---|---|---|---|---|---|
| -651.3 | -335.9 | 814 | 896 | 82 | -741.3 | -335.9 | 814 | 896 | 82 | 90 | 28 | 3500 |

### Caratteristiche del materiale

(Circolare 7 21-01-19 C8.5.I) Muratura in mattoni pieni e malta di calce LC2_Corti

| fb_ | fhk | fvk0 | fhmedio | τ0 | fv0 | μ | ϕ | fvk,lim | E | G | FC |
|---|---|---|---|---|---|---|---|---|---|---|---|
| 12 | | | 17.25 | 0.9 | 2 | 0.577 | 0.767 | 0.65 | 32000 | 12800 | 1.2 |

### Verifiche a pressoflessione delle travi in muratura in combinazioni non sismiche

| Sezione | γM | N | M | Mu | Comb. | c.s. | Verifica |
|---|---|---|---|---|---|---|---|
| ini. | 3 | -244 | -14520 | 89792 | SLU 81 | 6.18 | Si |
| fin. | 3 | -788 | -23206 | 89792 | SLU 81 | 3.87 | Si |
| ini. | 3 | -140 | -9103 | 89792 | SLU 61 | 9.86 | Si |
| fin. | 3 | -846 | -23232 | 89792 | SLU 61 | 3.87 | Si |
| ini. | 3 | -127 | -10476 | 89792 | SLU 76 | 8.57 | Si |
| fin. | 3 | -682 | -21276 | 89792 | SLU 76 | 4.22 | Si |
| ini. | 3 | -270 | -14096 | 89792 | SLU 84 | 6.37 | Si |
| fin. | 3 | -803 | -22673 | 89792 | SLU 84 | 3.96 | Si |
| ini. | 3 | -337 | -17410 | 89792 | SLU 83 | 5.16 | Si |
| fin. | 3 | -718 | -21624 | 89792 | SLU 83 | 4.15 | Si |
| ini. | 3 | 3 | -5482 | 89792 | SLU 52 | 16.38 | Si |
| fin. | 3 | -725 | -21835 | 89792 | SLU 52 | 4.11 | Si |
| ini. | 3 | -233 | -11992 | 89792 | SLU 63 | 7.49 | Si |
| fin. | 3 | -776 | -21650 | 89792 | SLU 63 | 4.15 | Si |
| ini. | 3 | -33 | -7586 | 89792 | SLU 73 | 11.84 | Si |
| fin. | 3 | -752 | -22858 | 89792 | SLU 73 | 3.93 | Si |
| ini. | 3 | -207 | -12416 | 89792 | SLU 60 | 7.23 | Si |
| fin. | 3 | -761 | -22183 | 89792 | SLU 60 | 4.05 | Si |
| ini. | 3 | -176 | -11207 | 89792 | SLU 82 | 8.01 | Si |
| fin. | 3 | -873 | -24255 | 89792 | SLU 82 | 3.7 | Si |

### Verifiche a taglio delle travi in muratura secondo §C8.7.1.3.1 in combinazioni non sismiche

| Sezione | γM | N | M | V | Vt | Vp | Vt fess. diag. | Vt,lim | Comb. | c.s. | Verifica |
|---|---|---|---|---|---|---|---|---|---|---|---|
| ini. | 3 | 0 | -17410 | 2045 | | | 806 | 303 | SLU 83 | 0.15 | No |
| fin. | 3 | 0 | -21624 | -2180 | | | 806 | 303 | SLU 83 | 0.14 | No |
| ini. | 3 | 0 | -9103 | 1430 | | | 806 | 303 | SLU 61 | 0.21 | No |
| fin. | 3 | 0 | -23232 | -2139 | | | 806 | 303 | SLU 61 | 0.14 | No |
| ini. | 3 | 0 | -7586 | 1480 | | | 806 | 303 | SLU 73 | 0.2 | No |
| fin. | 3 | 0 | -22858 | -2212 | | | 806 | 303 | SLU 73 | 0.14 | No |
| ini. | 3 | 0 | -11207 | 1670 | | | 806 | 303 | SLU 82 | 0.18 | No |
| fin. | 3 | 0 | -24255 | -2301 | | | 806 | 303 | SLU 82 | 0.13 | No |
| ini. | 3 | 0 | -14096 | 1849 | | | 806 | 303 | SLU 84 | 0.16 | No |
| fin. | 3 | 0 | -22673 | -2228 | | | 806 | 303 | SLU 84 | 0.14 | No |
| ini. | 3 | 0 | -18431 | 2154 | | | 806 | 303 | SLU 77 | 0.14 | No |
| fin. | 3 | 0 | -18493 | -2029 | | | 806 | 303 | SLU 77 | 0.15 | No |
| ini. | 3 | 0 | -14520 | 1866 | | | 806 | 303 | SLU 81 | 0.16 | No |
| fin. | 3 | 0 | -23206 | -2252 | | | 806 | 303 | SLU 81 | 0.13 | No |
| ini. | 3 | 0 | -10476 | 1659 | | | 806 | 303 | SLU 76 | 0.18 | No |
| fin. | 3 | 0 | -21276 | -2139 | | | 806 | 303 | SLU 76 | 0.14 | No |
| ini. | 3 | 0 | -12229 | 1779 | | | 806 | 303 | SLU 75 | 0.17 | No |
| fin. | 3 | 0 | -21124 | -2150 | | | 806 | 303 | SLU 75 | 0.14 | No |
| ini. | 3 | 0 | -18887 | 2165 | | | 806 | 303 | SLU 79 | 0.14 | No |
| fin. | 3 | 0 | -17946 | -1985 | | | 806 | 303 | SLU 79 | 0.15 | No |

### Verifiche a pressoflessione delle travi in muratura in combinazioni sismiche

| Sezione | γM | N | M | Mu | Comb. | c.s. | Verifica |
|---|---|---|---|---|---|---|---|
| ini. | 2 | 4705 | 108788 | 107694 | SLV 2 | 0.99 | No |
| fin. | 2 | -1258 | -101170 | 107694 | SLV 2 | 1.06 | Si |
| ini. | 2 | -3962 | -110574 | 107694 | SLV 13 | 0.97 | No |
| fin. | 2 | 616 | 38468 | 107694 | SLV 13 | 2.8 | Si |
| ini. | 2 | 3977 | 94519 | 107694 | SLV 4 | 1.14 | Si |
| fin. | 2 | -1140 | -65765 | 107694 | SLV 4 | 1.64 | Si |
| ini. | 2 | 3977 | 94519 | 107694 | SLV 3 | 1.14 | Si |
| fin. | 2 | -1140 | -65765 | 107694 | SLV 3 | 1.64 | Si |
| ini. | 2 | -4691 | -124843 | 107694 | SLV 16 | 0.86 | No |
| fin. | 2 | 734 | 73873 | 107694 | SLV 16 | 1.46 | Si |
| ini. | 2 | -3962 | -110574 | 107694 | SLV 14 | 0.97 | No |
| fin. | 2 | 616 | 38468 | 107694 | SLV 14 | 2.8 | Si |
| ini. | 2 | 2522 | 48659 | 107694 | SLV 6 | 2.21 | Si |
| fin. | 2 | -739 | -93602 | 107694 | SLV 6 | 1.15 | Si |
| ini. | 2 | 2522 | 48659 | 107694 | SLV 5 | 2.21 | Si |
| fin. | 2 | -739 | -93602 | 107694 | SLV 5 | 1.15 | Si |
| ini. | 2 | 4705 | 108788 | 107694 | SLV 1 | 0.99 | No |

| Sezione | γM | N | M | Mu | Comb. | c.s. | Verifica |
|---|---|---|---|---|---|---|---|
| fin. | 2 | -1258 | -101170 | 107694 | SLV 1 | 1.06 | Si |
| ini. | 2 | -4691 | -124843 | 107694 | SLV 15 | 0.86 | No |
| fin. | 2 | 734 | 73873 | 107694 | SLV 15 | 1.46 | Si |

### Verifiche a taglio delle travi in muratura secondo §C8.7.1.3.1 in combinazioni sismiche

| Sezione | γM | N | M | V | Vt | Vp | Vt fess. diag. | Vt,lim | Comb. | c.s. | Verifica |
|---|---|---|---|---|---|---|---|---|---|---|---|
| ini. | 2 | 0 | 48659 | -2333 | | | 1208 | 455 | SLV 5 | 0.19 | No |
| fin. | 2 | 0 | -93602 | -4944 | | | 1208 | 455 | SLV 5 | 0.09 | No |
| ini. | 2 | 0 | -110574 | 5629 | | | 1208 | 455 | SLV 14 | 0.08 | No |
| fin. | 2 | 0 | 38468 | 1722 | | | 1208 | 455 | SLV 14 | 0.26 | No |
| ini. | 2 | 0 | -110574 | 5629 | | | 1208 | 455 | SLV 13 | 0.08 | No |
| fin. | 2 | 0 | 38468 | 1722 | | | 1208 | 455 | SLV 13 | 0.26 | No |
| ini. | 2 | 0 | -124843 | 6893 | | | 1208 | 455 | SLV 16 | 0.07 | No |
| fin. | 2 | 0 | 73873 | 3110 | | | 1208 | 455 | SLV 16 | 0.15 | No |
| ini. | 2 | 0 | 108788 | -4352 | | | 1208 | 455 | SLV 1 | 0.1 | No |
| fin. | 2 | 0 | -101170 | -6042 | | | 1208 | 455 | SLV 1 | 0.08 | No |
| ini. | 2 | 0 | -64714 | 4874 | | | 1208 | 455 | SLV 12 | 0.09 | No |
| fin. | 2 | 0 | 66304 | 2012 | | | 1208 | 455 | SLV 12 | 0.23 | No |
| ini. | 2 | 0 | 108788 | -4352 | | | 1208 | 455 | SLV 2 | 0.1 | No |
| fin. | 2 | 0 | -101170 | -6042 | | | 1208 | 455 | SLV 2 | 0.08 | No |
| ini. | 2 | 0 | 48659 | -2333 | | | 1208 | 455 | SLV 6 | 0.19 | No |
| fin. | 2 | 0 | -93602 | -4944 | | | 1208 | 455 | SLV 6 | 0.09 | No |
| ini. | 2 | 0 | -124843 | 6893 | | | 1208 | 455 | SLV 15 | 0.07 | No |
| fin. | 2 | 0 | 73873 | 3110 | | | 1208 | 455 | SLV 15 | 0.15 | No |
| ini. | 2 | 0 | -64714 | 4874 | | | 1208 | 455 | SLV 11 | 0.09 | No |
| fin. | 2 | 0 | 66304 | 2012 | | | 1208 | 455 | SLV 11 | 0.23 | No |

### Tabella dei coefficienti di sicurezza minimi

| Stato limite | Coeff.s. | Comb. | Verifica |
|---|---|---|---|
| PF_SLV | 0.863 | SLV 15 | No |
| V_SLV | 0.066 | SLV 15 | No |
| PF_SLU | 3.702 | SLU 82 | Si |
| V_SLU | 0.132 | SLU 82 | No |

## Trave di accoppiamento 100

Verifiche condotte secondo D.M. 17-01-18 (N.T.C.)

### Dati geometrici

| X ini. | Y ini. | Z ini.inf. | Z ini.sup. | H ini. | X fin. | Y fin. | Z fin.inf. | Z fin.sup | H fin. | Luce | Spessore | R. Trazione |
|---|---|---|---|---|---|---|---|---|---|---|---|---|
| -550.8 | -335.9 | 544 | 744 | 200 | -600.8 | -335.9 | 544 | 744 | 200 | 50 | 28 | 3500 |

### Caratteristiche del materiale

(Circolare 7 21-01-19 C8.5.I) Muratura in mattoni pieni e malta di calce LC2_Corti

| fb_ | fhk | fvk0 | fhmedio | τ0 | fv0 | μ | ϕ | fvk,lim | E | G | FC |
|---|---|---|---|---|---|---|---|---|---|---|---|
| 12 | | | 17.25 | 0.9 | 2 | 0.577 | 0.767 | 0.65 | 32000 | 12800 | 1.2 |

### Verifiche a pressoflessione delle travi in muratura in combinazioni non sismiche

| Sezione | γM | N | M | Mu | Comb. | c.s. | Verifica |
|---|---|---|---|---|---|---|---|
| ini. | 3 | -1034 | 158175 | 296292 | SLU 78 | 1.87 | Si |
| fin. | 3 | -57 | 96784 | 296292 | SLU 78 | 3.06 | Si |
| ini. | 3 | -1024 | 157480 | 296292 | SLU 80 | 1.88 | Si |
| fin. | 3 | -51 | 96666 | 296292 | SLU 80 | 3.07 | Si |
| ini. | 3 | -1043 | 155070 | 296292 | SLU 75 | 1.91 | Si |
| fin. | 3 | -89 | 92462 | 296292 | SLU 75 | 3.2 | Si |
| ini. | 3 | -990 | 154224 | 296292 | SLU 77 | 1.92 | Si |
| fin. | 3 | -60 | 95833 | 296292 | SLU 77 | 3.09 | Si |
| ini. | 3 | -1083 | 162687 | 296292 | SLU 84 | 1.82 | Si |
| fin. | 3 | -89 | 95791 | 296292 | SLU 84 | 3.09 | Si |
| ini. | 3 | -1039 | 158736 | 296292 | SLU 83 | 1.87 | Si |
| fin. | 3 | -92 | 94840 | 296292 | SLU 83 | 3.12 | Si |
| ini. | 3 | -1093 | 159582 | 296292 | SLU 82 | 1.86 | Si |
| fin. | 3 | -122 | 91470 | 296292 | SLU 82 | 3.24 | Si |
| ini. | 3 | -1073 | 153904 | 296292 | SLU 73 | 1.93 | Si |
| fin. | 3 | -114 | 88657 | 296292 | SLU 73 | 3.34 | Si |
| ini. | 3 | -1064 | 157009 | 296292 | SLU 76 | 1.89 | Si |
| fin. | 3 | -81 | 92979 | 296292 | SLU 76 | 3.19 | Si |
| ini. | 3 | -1049 | 155631 | 296292 | SLU 81 | 1.9 | Si |
| fin. | 3 | -125 | 90518 | 296292 | SLU 81 | 3.27 | Si |

### Verifiche a taglio delle travi in muratura secondo §C8.7.1.3.1 in combinazioni non sismiche

| Sezione | γM | N | M | V | Vt | Vp | Vt fess. diag. | Vt,lim | Comb. | c.s. | Verifica |
|---|---|---|---|---|---|---|---|---|---|---|---|
| ini. | 3 | 0 | 155070 | -3784 | | | 2157 | 812 | SLU 75 | 0.21 | No |
| fin. | 3 | 0 | 92462 | -1080 | | | 2157 | 812 | SLU 75 | 0.75 | No |
| ini. | 3 | 0 | 158175 | -3823 | | | 2157 | 812 | SLU 78 | 0.21 | No |
| fin. | 3 | 0 | 96784 | -1059 | | | 2157 | 812 | SLU 78 | 0.77 | No |
| ini. | 3 | 0 | 157009 | -3853 | | | 2157 | 812 | SLU 76 | 0.21 | No |
| fin. | 3 | 0 | 92979 | -1200 | | | 2157 | 812 | SLU 76 | 0.68 | No |
| ini. | 3 | 0 | 157480 | -3795 | | | 2157 | 812 | SLU 80 | 0.21 | No |
| fin. | 3 | 0 | 96666 | -1064 | | | 2157 | 812 | SLU 80 | 0.76 | No |
| ini. | 3 | 0 | 159582 | -3933 | | | 2157 | 812 | SLU 82 | 0.21 | No |
| fin. | 3 | 0 | 91470 | -1210 | | | 2157 | 812 | SLU 82 | 0.67 | No |
| ini. | 3 | 0 | 154224 | -3676 | | | 2157 | 812 | SLU 77 | 0.22 | No |
| fin. | 3 | 0 | 95833 | -887 | | | 2157 | 812 | SLU 77 | 0.91 | No |

| Sezione | γM | N | M | V | Vt | Vp | Vt fess. diag. | Vt,lim | Comb. | c.s. | Verifica |
|---|---|---|---|---|---|---|---|---|---|---|---|
| ini. | 3 | 0 | 158736 | -3826 | | | 2157 | 812 | SLU 83 | 0.21 | No |
| fin. | 3 | 0 | 94840 | -1018 | | | 2157 | 812 | SLU 83 | 0.8 | No |
| ini. | 3 | 0 | 153904 | -3814 | | | 2157 | 812 | SLU 73 | 0.21 | No |
| fin. | 3 | 0 | 88657 | -1221 | | | 2157 | 812 | SLU 73 | 0.66 | No |
| ini. | 3 | 0 | 162687 | -3973 | | | 2157 | 812 | SLU 84 | 0.2 | No |
| fin. | 3 | 0 | 95791 | -1189 | | | 2157 | 812 | SLU 84 | 0.68 | No |
| ini. | 3 | 0 | 155631 | -3786 | | | 2157 | 812 | SLU 81 | 0.21 | No |
| fin. | 3 | 0 | 90518 | -1039 | | | 2157 | 812 | SLU 81 | 0.78 | No |

### Verifiche a pressoflessione delle travi in muratura in combinazioni sismiche

| Sezione | γM | N | M | Mu | Comb. | c.s. | Verifica |
|---|---|---|---|---|---|---|---|
| ini. | 2 | 21 | 220907 | 314194 | SLV 7 | 1.42 | Si |
| fin. | 2 | 762 | 107910 | 314194 | SLV 7 | 2.91 | Si |
| ini. | 2 | 2150 | -58747 | 314194 | SLV 15 | 5.35 | Si |
| fin. | 2 | 1489 | 243799 | 314194 | SLV 15 | 1.29 | Si |
| ini. | 2 | -2698 | 299564 | 314194 | SLV 3 | 1.05 | Si |
| fin. | 2 | -955 | -66144 | 314194 | SLV 3 | 4.75 | Si |
| ini. | 2 | -2698 | 299564 | 314194 | SLV 4 | 1.05 | Si |
| fin. | 2 | -955 | -66144 | 314194 | SLV 4 | 4.75 | Si |
| ini. | 2 | 21 | 220907 | 314194 | SLV 8 | 1.42 | Si |
| fin. | 2 | 762 | 107910 | 314194 | SLV 8 | 2.91 | Si |
| ini. | 2 | 1475 | 113414 | 314194 | SLV 11 | 2.77 | Si |
| fin. | 2 | 1495 | 200893 | 314194 | SLV 11 | 1.56 | Si |
| ini. | 2 | 1475 | 113414 | 314194 | SLV 12 | 2.77 | Si |
| fin. | 2 | 1495 | 200893 | 314194 | SLV 12 | 1.56 | Si |
| ini. | 2 | -3574 | 259492 | 314194 | SLV 1 | 1.21 | Si |
| fin. | 2 | -1693 | -122351 | 314194 | SLV 1 | 2.57 | Si |
| ini. | 2 | 2150 | -58747 | 314194 | SLV 16 | 5.35 | Si |
| fin. | 2 | 1489 | 243799 | 314194 | SLV 16 | 1.29 | Si |
| ini. | 2 | -3574 | 259492 | 314194 | SLV 2 | 1.21 | Si |
| fin. | 2 | -1693 | -122351 | 314194 | SLV 2 | 2.57 | Si |

### Verifiche a taglio delle travi in muratura secondo §C8.7.1.3.1 in combinazioni sismiche

| Sezione | γM | N | M | V | Vt | Vp | Vt fess. diag. | Vt,lim | Comb. | c.s. | Verifica |
|---|---|---|---|---|---|---|---|---|---|---|---|
| ini. | 2 | 0 | 259492 | -11085 | | | 3235 | 1217 | SLV 1 | 0.11 | No |
| fin. | 2 | 0 | -122351 | -9184 | | | 3235 | 1217 | SLV 1 | 0.13 | No |
| ini. | 2 | 0 | -98820 | 6774 | | | 3235 | 1217 | SLV 14 | 0.18 | No |
| fin. | 2 | 0 | 187593 | 9141 | | | 3235 | 1217 | SLV 14 | 0.13 | No |
| ini. | 2 | 0 | 184893 | -6357 | | | 3235 | 1217 | SLD 3 | 0.19 | No |
| fin. | 2 | 0 | 5220 | -4739 | | | 3235 | 1217 | SLD 3 | 0.26 | No |
| ini. | 2 | 0 | 184893 | -6357 | | | 3235 | 1217 | SLD 4 | 0.19 | No |
| fin. | 2 | 0 | 5220 | -4739 | | | 3235 | 1217 | SLD 4 | 0.26 | No |
| ini. | 2 | 0 | -98820 | 6774 | | | 3235 | 1217 | SLV 13 | 0.18 | No |
| fin. | 2 | 0 | 187593 | 9141 | | | 3235 | 1217 | SLV 13 | 0.13 | No |
| ini. | 2 | 0 | -58747 | 6240 | | | 3235 | 1217 | SLV 15 | 0.2 | No |
| fin. | 2 | 0 | 243799 | 8030 | | | 3235 | 1217 | SLV 15 | 0.15 | No |
| ini. | 2 | 0 | 299564 | -11619 | | | 3235 | 1217 | SLV 3 | 0.1 | No |
| fin. | 2 | 0 | -66144 | -10295 | | | 3235 | 1217 | SLV 3 | 0.12 | No |
| ini. | 2 | 0 | -58747 | 6240 | | | 3235 | 1217 | SLV 16 | 0.2 | No |
| fin. | 2 | 0 | 243799 | 8030 | | | 3235 | 1217 | SLV 16 | 0.15 | No |
| ini. | 2 | 0 | 299564 | -11619 | | | 3235 | 1217 | SLV 4 | 0.1 | No |
| fin. | 2 | 0 | -66144 | -10295 | | | 3235 | 1217 | SLV 4 | 0.12 | No |
| ini. | 2 | 0 | 259492 | -11085 | | | 3235 | 1217 | SLV 2 | 0.11 | No |
| fin. | 2 | 0 | -122351 | -9184 | | | 3235 | 1217 | SLV 2 | 0.13 | No |

### Tabella dei coefficienti di sicurezza minimi

| Stato limite | Coeff.s. | Comb. | Verifica |
|---|---|---|---|
| PF_SLV | 1.049 | SLV 3 | Si |
| V_SLV | 0.105 | SLV 3 | No |
| PF_SLU | 1.821 | SLU 84 | Si |
| V_SLU | 0.204 | SLU 84 | No |

## Trave di accoppiamento 101

Verifiche condotte secondo D.M. 17-01-18 (N.T.C.)

### Dati geometrici

| X ini. | Y ini. | Z ini.inf. | Z ini.sup. | H ini. | X fin. | Y fin. | Z fin.inf. | Z fin.sup | H fin. | Luce | Spessore | R. Trazione |
|---|---|---|---|---|---|---|---|---|---|---|---|---|
| -550.8 | -335.9 | 824 | 896 | 72 | -600.8 | -335.9 | 824 | 896 | 72 | 50 | 28 | 3500 |

### Caratteristiche del materiale

(Circolare 7 21-01-19 C8.5.I) Muratura in mattoni pieni e malta di calce LC2_Corti

| fb_ | fhk | fvk0 | fhmedio | τ0 | fv0 | μ | ϕ | fvk,lim | E | G | FC |
|---|---|---|---|---|---|---|---|---|---|---|---|
| 12 | | | 17.25 | 0.9 | 2 | 0.577 | 0.767 | 0.65 | 32000 | 12800 | 1.2 |

### Verifiche a pressoflessione delle travi in muratura in combinazioni non sismiche

| Sezione | γM | N | M | Mu | Comb. | c.s. | Verifica |
|---|---|---|---|---|---|---|---|
| ini. | 3 | 393 | 18710 | 72292 | SLU 82 | 3.86 | Si |
| fin. | 3 | 34 | -16630 | 72292 | SLU 82 | 4.35 | Si |
| ini. | 3 | 375 | 16587 | 72292 | SLU 74 | 4.36 | Si |
| fin. | 3 | 19 | -18318 | 72292 | SLU 74 | 3.95 | Si |
| ini. | 3 | 312 | 16022 | 72292 | SLU 77 | 4.51 | Si |
| fin. | 3 | -63 | -19905 | 72292 | SLU 77 | 3.63 | Si |
| ini. | 3 | 337 | 16712 | 72292 | SLU 78 | 4.33 | Si |

| Sezione | γM | N | M | Mu | Comb. | c.s. | Verifica |
|---|---|---|---|---|---|---|---|
| fin. | 3 | -19 | -18270 | 72292 | SLU 78 | 3.96 | Si |
| ini. | 3 | 296 | 16355 | 72292 | SLU 80 | 4.42 | Si |
| fin. | 3 | -61 | -18450 | 72292 | SLU 80 | 3.92 | Si |
| ini. | 3 | 368 | 18019 | 72292 | SLU 81 | 4.01 | Si |
| fin. | 3 | -11 | -18265 | 72292 | SLU 81 | 3.96 | Si |
| ini. | 3 | 271 | 15664 | 72292 | SLU 79 | 4.62 | Si |
| fin. | 3 | -105 | -20085 | 72292 | SLU 79 | 3.6 | Si |
| ini. | 3 | 330 | 18145 | 72292 | SLU 84 | 3.98 | Si |
| fin. | 3 | -48 | -18216 | 72292 | SLU 84 | 3.97 | Si |
| ini. | 3 | 305 | 17454 | 72292 | SLU 83 | 4.14 | Si |
| fin. | 3 | -92 | -19851 | 72292 | SLU 83 | 3.64 | Si |
| ini. | 3 | 172 | 13273 | 72292 | SLU 37 | 5.45 | Si |
| fin. | 3 | -168 | -17983 | 72292 | SLU 37 | 4.02 | Si |

## Verifiche a taglio delle travi in muratura secondo §C8.7.1.3.1 in combinazioni non sismiche

| Sezione | γM | N | M | V | Vt | Vp | Vt fess. diag. | Vt,lim | Comb. | c.s. | Verifica |
|---|---|---|---|---|---|---|---|---|---|---|---|
| ini. | 3 | 0 | 16022 | -98 | | | 776 | 292 | SLU 77 | 2.97 | Si |
| fin. | 3 | 0 | -19905 | -2832 | | | 776 | 292 | SLU 77 | 0.1 | No |
| ini. | 3 | 0 | 18710 | -109 | | | 776 | 292 | SLU 82 | 2.69 | Si |
| fin. | 3 | 0 | -16630 | -2729 | | | 776 | 292 | SLU 82 | 0.11 | No |
| ini. | 3 | 0 | 16587 | -82 | | | 776 | 292 | SLU 74 | 3.58 | Si |
| fin. | 3 | 0 | -18318 | -2757 | | | 776 | 292 | SLU 74 | 0.11 | No |
| ini. | 3 | 0 | 18145 | -125 | | | 776 | 292 | SLU 84 | 2.33 | Si |
| fin. | 3 | 0 | -18216 | -2803 | | | 776 | 292 | SLU 84 | 0.1 | No |
| ini. | 3 | 0 | 18019 | -114 | | | 776 | 292 | SLU 81 | 2.57 | Si |
| fin. | 3 | 0 | -18265 | -2827 | | | 776 | 292 | SLU 81 | 0.1 | No |
| ini. | 3 | 0 | 16355 | -101 | | | 776 | 292 | SLU 80 | 2.9 | Si |
| fin. | 3 | 0 | -18450 | -2706 | | | 776 | 292 | SLU 80 | 0.11 | No |
| ini. | 3 | 0 | 17454 | -130 | | | 776 | 292 | SLU 83 | 2.24 | Si |
| fin. | 3 | 0 | -19851 | -2901 | | | 776 | 292 | SLU 83 | 0.1 | No |
| ini. | 3 | 0 | 15664 | -106 | | | 776 | 292 | SLU 79 | 2.76 | Si |
| fin. | 3 | 0 | -20085 | -2804 | | | 776 | 292 | SLU 79 | 0.1 | No |
| ini. | 3 | 0 | 16712 | -93 | | | 776 | 292 | SLU 78 | 3.13 | Si |
| fin. | 3 | 0 | -18270 | -2733 | | | 776 | 292 | SLU 78 | 0.11 | No |
| ini. | 3 | 0 | 17277 | -77 | | | 776 | 292 | SLU 75 | 3.81 | Si |
| fin. | 3 | 0 | -16683 | -2659 | | | 776 | 292 | SLU 75 | 0.11 | No |

## Verifiche a pressoflessione delle travi in muratura in combinazioni sismiche

| Sezione | γM | N | M | Mu | Comb. | c.s. | Verifica |
|---|---|---|---|---|---|---|---|
| ini. | 2 | 2769 | 59416 | 90194 | SLV 6 | 1.52 | Si |
| fin. | 2 | 1869 | 14780 | 90194 | SLV 6 | 6.1 | Si |
| ini. | 2 | 5066 | 110853 | 90194 | SLV 2 | 0.81 | No |
| fin. | 2 | 3892 | 5024 | 90194 | SLV 2 | 17.95 | Si |
| ini. | 2 | 4397 | 98759 | 90194 | SLV 3 | 0.91 | No |
| fin. | 2 | 3488 | -8807 | 90194 | SLV 3 | 10.24 | Si |
| ini. | 2 | 2769 | 59416 | 90194 | SLV 5 | 1.52 | Si |
| fin. | 2 | 1869 | 14780 | 90194 | SLV 5 | 6.1 | Si |
| ini. | 2 | -4398 | -88514 | 90194 | SLV 16 | 1.02 | Si |
| fin. | 2 | -3636 | -27034 | 90194 | SLV 16 | 3.34 | Si |
| ini. | 2 | 5066 | 110853 | 90194 | SLV 1 | 0.81 | No |
| fin. | 2 | 3892 | 5024 | 90194 | SLV 1 | 17.95 | Si |
| ini. | 2 | 4397 | 98759 | 90194 | SLV 4 | 0.91 | No |
| fin. | 2 | 3488 | -8807 | 90194 | SLV 4 | 10.24 | Si |
| ini. | 2 | -3729 | -76421 | 90194 | SLV 13 | 1.18 | Si |
| fin. | 2 | -3233 | -13203 | 90194 | SLV 13 | 6.83 | Si |
| ini. | 2 | -3729 | -76421 | 90194 | SLV 14 | 1.18 | Si |
| fin. | 2 | -3233 | -13203 | 90194 | SLV 14 | 6.83 | Si |
| ini. | 2 | -4398 | -88514 | 90194 | SLV 15 | 1.02 | Si |
| fin. | 2 | -3636 | -27034 | 90194 | SLV 15 | 3.34 | Si |

## Verifiche a taglio delle travi in muratura secondo §C8.7.1.3.1 in combinazioni sismiche

| Sezione | γM | N | M | V | Vt | Vp | Vt fess. diag. | Vt,lim | Comb. | c.s. | Verifica |
|---|---|---|---|---|---|---|---|---|---|---|---|
| ini. | 2 | 0 | 98759 | -2781 | | | 1165 | 438 | SLV 3 | 0.16 | No |
| fin. | 2 | 0 | -8807 | -4203 | | | 1165 | 438 | SLV 3 | 0.1 | No |
| ini. | 2 | 0 | 98759 | -2781 | | | 1165 | 438 | SLV 4 | 0.16 | No |
| fin. | 2 | 0 | -8807 | -4203 | | | 1165 | 438 | SLV 4 | 0.1 | No |
| ini. | 2 | 0 | 110853 | -1816 | | | 1165 | 438 | SLV 2 | 0.24 | No |
| fin. | 2 | 0 | 5024 | -3407 | | | 1165 | 438 | SLV 2 | 0.13 | No |
| ini. | 2 | 0 | 110853 | -1816 | | | 1165 | 438 | SLV 1 | 0.24 | No |
| fin. | 2 | 0 | 5024 | -3407 | | | 1165 | 438 | SLV 1 | 0.13 | No |
| ini. | 2 | 0 | -76421 | 2773 | | | 1165 | 438 | SLV 13 | 0.16 | No |
| fin. | 2 | 0 | -13203 | 633 | | | 1165 | 438 | SLV 13 | 0.69 | No |
| ini. | 2 | 0 | 48751 | -1185 | | | 1165 | 438 | SLD 3 | 0.37 | No |
| fin. | 2 | 0 | -9834 | -2805 | | | 1165 | 438 | SLD 3 | 0.16 | No |
| ini. | 2 | 0 | -76421 | 2773 | | | 1165 | 438 | SLV 14 | 0.16 | No |
| fin. | 2 | 0 | -13203 | 633 | | | 1165 | 438 | SLV 14 | 0.69 | No |
| ini. | 2 | 0 | 19105 | -2300 | | | 1165 | 438 | SLV 7 | 0.19 | No |
| fin. | 2 | 0 | -31322 | -3718 | | | 1165 | 438 | SLV 7 | 0.12 | No |
| ini. | 2 | 0 | 48751 | -1185 | | | 1165 | 438 | SLD 4 | 0.37 | No |
| fin. | 2 | 0 | -9834 | -2805 | | | 1165 | 438 | SLD 4 | 0.16 | No |
| ini. | 2 | 0 | 19105 | -2300 | | | 1165 | 438 | SLV 8 | 0.19 | No |
| fin. | 2 | 0 | -31322 | -3718 | | | 1165 | 438 | SLV 8 | 0.12 | No |

## Tabella dei coefficienti di sicurezza minimi

| Stato limite | Coeff.s. | Comb. | Verifica |
|---|---|---|---|
| PF_SLV | 0.814 | SLV 1 | No |
| V_SLV | 0.104 | SLV 3 | No |

| Stato limite | Coeff.s. | Comb. | Verifica |
|---|---|---|---|
| PF_SLU | 3.599 | SLU 79 | Si |
| V_SLU | 0.101 | SLU 83 | No |

## Trave di accoppiamento 102

Verifiche condotte secondo D.M. 17-01-18 (N.T.C.)

### Dati geometrici

| X ini. | Y ini. | Z ini.inf. | Z ini.sup. | H ini. | X fin. | Y fin. | Z fin.inf. | Z fin.sup | H fin. | Luce | Spessore | R. Trazione |
|---|---|---|---|---|---|---|---|---|---|---|---|---|
| -228.3 | -335.9 | 544 | 634 | 90 | -318.3 | -335.9 | 544 | 634 | 90 | 90 | 28 | 3500 |

### Caratteristiche del materiale

(Circolare 7 21-01-19 C8.5.I) Muratura in mattoni pieni e malta di calce LC2_Corti

| fb_ | fhk | fvk0 | fhmedio | τ0 | fv0 | μ | ϕ | fvk,lim | E | G | FC |
|---|---|---|---|---|---|---|---|---|---|---|---|
| 12 | | | 17.25 | 0.9 | 2 | 0.577 | 0.767 | 0.65 | 32000 | 12800 | 1.2 |

### Verifiche a pressoflessione delle travi in muratura in combinazioni non sismiche

| Sezione | γM | N | M | Mu | Comb. | c.s. | Verifica |
|---|---|---|---|---|---|---|---|
| ini. | 3 | -937 | -32500 | 103792 | SLU 82 | 3.19 | Si |
| fin. | 3 | -2684 | 61311 | 103792 | SLU 82 | 1.69 | Si |
| ini. | 3 | -929 | -33094 | 103792 | SLU 65 | 3.14 | Si |
| fin. | 3 | -2650 | 58919 | 103792 | SLU 65 | 1.76 | Si |
| ini. | 3 | -1012 | -35180 | 103792 | SLU 76 | 2.95 | Si |
| fin. | 3 | -2872 | 63796 | 103792 | SLU 76 | 1.63 | Si |
| ini. | 3 | -969 | -32466 | 103792 | SLU 84 | 3.2 | Si |
| fin. | 3 | -2733 | 61950 | 103792 | SLU 84 | 1.68 | Si |
| ini. | 3 | -980 | -35214 | 103792 | SLU 73 | 2.95 | Si |
| fin. | 3 | -2823 | 63157 | 103792 | SLU 73 | 1.64 | Si |
| ini. | 3 | -971 | -32099 | 103792 | SLU 78 | 3.23 | Si |
| fin. | 3 | -2721 | 61497 | 103792 | SLU 78 | 1.69 | Si |
| ini. | 3 | -960 | -33060 | 103792 | SLU 68 | 3.14 | Si |
| fin. | 3 | -2699 | 59558 | 103792 | SLU 68 | 1.74 | Si |
| ini. | 3 | -979 | -31524 | 103792 | SLU 80 | 3.29 | Si |
| fin. | 3 | -2707 | 60773 | 103792 | SLU 80 | 1.71 | Si |
| ini. | 3 | -1013 | -30838 | 103792 | SLU 55 | 3.37 | Si |
| fin. | 3 | -2686 | 57863 | 103792 | SLU 55 | 1.79 | Si |
| ini. | 3 | -940 | -32133 | 103792 | SLU 75 | 3.23 | Si |
| fin. | 3 | -2673 | 60858 | 103792 | SLU 75 | 1.71 | Si |

### Verifiche a taglio delle travi in muratura secondo §C8.7.1.3.1 in combinazioni non sismiche

| Sezione | γM | N | M | V | Vt | Vp | Vt fess. diag. | Vt,lim | Comb. | c.s. | Verifica |
|---|---|---|---|---|---|---|---|---|---|---|---|
| ini. | 3 | 0 | -27032 | 969 | | | 970 | 365 | SLU 83 | 0.38 | No |
| fin. | 3 | 0 | 56456 | 2784 | | | 970 | 365 | SLU 83 | 0.13 | No |
| ini. | 3 | 0 | -35180 | 1466 | | | 970 | 365 | SLU 76 | 0.25 | No |
| fin. | 3 | 0 | 63796 | 2887 | | | 970 | 365 | SLU 76 | 0.13 | No |
| ini. | 3 | 0 | -31524 | 1240 | | | 970 | 365 | SLU 80 | 0.29 | No |
| fin. | 3 | 0 | 60773 | 2862 | | | 970 | 365 | SLU 80 | 0.13 | No |
| ini. | 3 | 0 | -32466 | 1293 | | | 970 | 365 | SLU 84 | 0.28 | No |
| fin. | 3 | 0 | 61950 | 2890 | | | 970 | 365 | SLU 84 | 0.13 | No |
| ini. | 3 | 0 | -32133 | 1262 | | | 970 | 365 | SLU 75 | 0.29 | No |
| fin. | 3 | 0 | 60858 | 2860 | | | 970 | 365 | SLU 75 | 0.13 | No |
| ini. | 3 | 0 | -32500 | 1304 | | | 970 | 365 | SLU 82 | 0.28 | No |
| fin. | 3 | 0 | 61311 | 2844 | | | 970 | 365 | SLU 82 | 0.13 | No |
| ini. | 3 | 0 | -26090 | 916 | | | 970 | 365 | SLU 79 | 0.4 | No |
| fin. | 3 | 0 | 55279 | 2756 | | | 970 | 365 | SLU 79 | 0.13 | No |
| ini. | 3 | 0 | -26665 | 927 | | | 970 | 365 | SLU 77 | 0.39 | No |
| fin. | 3 | 0 | 56003 | 2801 | | | 970 | 365 | SLU 77 | 0.13 | No |
| ini. | 3 | 0 | -32099 | 1250 | | | 970 | 365 | SLU 78 | 0.29 | No |
| fin. | 3 | 0 | 61497 | 2907 | | | 970 | 365 | SLU 78 | 0.13 | No |
| ini. | 3 | 0 | -35214 | 1478 | | | 970 | 365 | SLU 73 | 0.25 | No |
| fin. | 3 | 0 | 63157 | 2840 | | | 970 | 365 | SLU 73 | 0.13 | No |

### Verifiche a pressoflessione delle travi in muratura in combinazioni sismiche

| Sezione | γM | N | M | Mu | Comb. | c.s. | Verifica |
|---|---|---|---|---|---|---|---|
| ini. | 2 | 1493 | -156326 | 121694 | SLV 16 | 0.78 | No |
| fin. | 2 | -5163 | 149209 | 121694 | SLV 16 | 0.82 | No |
| ini. | 2 | -2187 | 137568 | 121694 | SLV 3 | 0.88 | No |
| fin. | 2 | 3045 | -98271 | 121694 | SLV 3 | 1.24 | Si |
| ini. | 2 | 979 | -173851 | 121694 | SLV 14 | 0.7 | No |
| fin. | 2 | -6318 | 174643 | 121694 | SLV 14 | 0.7 | No |
| ini. | 2 | -2700 | 120043 | 121694 | SLV 2 | 1.01 | Si |
| fin. | 2 | 1890 | -72837 | 121694 | SLV 2 | 1.67 | Si |
| ini. | 2 | -908 | -91435 | 121694 | SLV 9 | 1.33 | Si |
| fin. | 2 | -4793 | 117698 | 121694 | SLV 9 | 1.03 | Si |
| ini. | 2 | -2700 | 120043 | 121694 | SLV 1 | 1.01 | Si |
| fin. | 2 | 1890 | -72837 | 121694 | SLV 1 | 1.67 | Si |
| ini. | 2 | 1493 | -156326 | 121694 | SLV 15 | 0.78 | No |
| fin. | 2 | -5163 | 149209 | 121694 | SLV 15 | 0.82 | No |
| ini. | 2 | 979 | -173851 | 121694 | SLV 13 | 0.7 | No |
| fin. | 2 | -6318 | 174643 | 121694 | SLV 13 | 0.7 | No |
| ini. | 2 | -2187 | 137568 | 121694 | SLV 4 | 0.88 | No |
| fin. | 2 | 3045 | -98271 | 121694 | SLV 4 | 1.24 | Si |
| ini. | 2 | -908 | -91435 | 121694 | SLV 10 | 1.33 | Si |
| fin. | 2 | -4793 | 117698 | 121694 | SLV 10 | 1.03 | Si |

### Verifiche a taglio delle travi in muratura secondo §C8.7.1.3.1 in combinazioni sismiche

| Sezione | γM | N | M | V | Vt | Vp | Vt fess. diag. | Vt,lim | Comb. | c.s. | Verifica |
|---|---|---|---|---|---|---|---|---|---|---|---|
| ini. | 2 | 0 | -91435 | 1544 | | | 1456 | 548 | SLV 9 | 0.35 | No |
| fin. | 2 | 0 | 117698 | 5230 | | | 1456 | 548 | SLV 9 | 0.1 | No |
| ini. | 2 | 0 | -173851 | 6111 | | | 1456 | 548 | SLV 13 | 0.09 | No |
| fin. | 2 | 0 | 174643 | 8553 | | | 1456 | 548 | SLV 13 | 0.06 | No |
| ini. | 2 | 0 | 120043 | -5315 | | | 1456 | 548 | SLV 1 | 0.1 | No |
| fin. | 2 | 0 | -72837 | -3866 | | | 1456 | 548 | SLV 1 | 0.14 | No |
| ini. | 2 | 0 | 137568 | -4828 | | | 1456 | 548 | SLV 3 | 0.11 | No |
| fin. | 2 | 0 | -98271 | -4744 | | | 1456 | 548 | SLV 3 | 0.12 | No |
| ini. | 2 | 0 | -173851 | 6111 | | | 1456 | 548 | SLV 14 | 0.09 | No |
| fin. | 2 | 0 | 174643 | 8553 | | | 1456 | 548 | SLV 14 | 0.06 | No |
| ini. | 2 | 0 | -156326 | 6598 | | | 1456 | 548 | SLV 16 | 0.08 | No |
| fin. | 2 | 0 | 149209 | 7675 | | | 1456 | 548 | SLV 16 | 0.07 | No |
| ini. | 2 | 0 | 137568 | -4828 | | | 1456 | 548 | SLV 4 | 0.11 | No |
| fin. | 2 | 0 | -98271 | -4744 | | | 1456 | 548 | SLV 4 | 0.12 | No |
| ini. | 2 | 0 | 120043 | -5315 | | | 1456 | 548 | SLV 2 | 0.1 | No |
| fin. | 2 | 0 | -72837 | -3866 | | | 1456 | 548 | SLV 2 | 0.14 | No |
| ini. | 2 | 0 | -91435 | 1544 | | | 1456 | 548 | SLV 10 | 0.35 | No |
| fin. | 2 | 0 | 117698 | 5230 | | | 1456 | 548 | SLV 10 | 0.1 | No |
| ini. | 2 | 0 | -156326 | 6598 | | | 1456 | 548 | SLV 15 | 0.08 | No |
| fin. | 2 | 0 | 149209 | 7675 | | | 1456 | 548 | SLV 15 | 0.07 | No |

### Tabella dei coefficienti di sicurezza minimi

| Stato limite | Coeff.s. | Comb. | Verifica |
|---|---|---|---|
| PF_SLV | 0.697 | SLV 13 | No |
| V_SLV | 0.064 | SLV 13 | No |
| PF_SLU | 1.627 | SLU 76 | Si |
| V_SLU | 0.126 | SLU 78 | No |

## Trave di accoppiamento 103

Verifiche condotte secondo D.M. 17-01-18 (N.T.C.)

### Dati geometrici

| X ini. | Y ini. | Z ini.inf. | Z ini.sup. | H ini. | X fin. | Y fin. | Z fin.inf. | Z fin.sup | H fin. | Luce | Spessore | R. Trazione |
|---|---|---|---|---|---|---|---|---|---|---|---|---|
| -228.3 | -335.9 | 814 | 896 | 82 | -318.3 | -335.9 | 814 | 896 | 82 | 90 | 28 | 3500 |

### Caratteristiche del materiale

(Circolare 7 21-01-19 C8.5.I) Muratura in mattoni pieni e malta di calce LC2_Corti

| fb_ | fhk | fvk0 | fhmedio | τ0 | fv0 | μ | ϕ | fvk,lim | E | G | FC |
|---|---|---|---|---|---|---|---|---|---|---|---|
| 12 | | | 17.25 | 0.9 | 2 | 0.577 | 0.767 | 0.65 | 32000 | 12800 | 1.2 |

### Verifiche a pressoflessione delle travi in muratura in combinazioni non sismiche

| Sezione | γM | N | M | Mu | Comb. | c.s. | Verifica |
|---|---|---|---|---|---|---|---|
| ini. | 3 | -1759 | -54906 | 89792 | SLU 78 | 1.64 | Si |
| fin. | 3 | -493 | 2127 | 89792 | SLU 78 | 42.22 | Si |
| ini. | 3 | -1743 | -54484 | 89792 | SLU 75 | 1.65 | Si |
| fin. | 3 | -470 | 2706 | 89792 | SLU 75 | 33.19 | Si |
| ini. | 3 | -1712 | -53438 | 89792 | SLU 68 | 1.68 | Si |
| fin. | 3 | -389 | 5578 | 89792 | SLU 68 | 16.1 | Si |
| ini. | 3 | -1804 | -55272 | 89792 | SLU 84 | 1.62 | Si |
| fin. | 3 | -546 | 1881 | 89792 | SLU 84 | 47.73 | Si |
| ini. | 3 | -1873 | -57275 | 89792 | SLU 76 | 1.57 | Si |
| fin. | 3 | -509 | 4369 | 89792 | SLU 76 | 20.55 | Si |
| ini. | 3 | -1696 | -53017 | 89792 | SLU 65 | 1.69 | Si |
| fin. | 3 | -366 | 6157 | 89792 | SLU 65 | 14.58 | Si |
| ini. | 3 | -1752 | -54049 | 89792 | SLU 80 | 1.66 | Si |
| fin. | 3 | -518 | 1820 | 89792 | SLU 80 | 49.33 | Si |
| ini. | 3 | -1787 | -54851 | 89792 | SLU 82 | 1.64 | Si |
| fin. | 3 | -523 | 2460 | 89792 | SLU 82 | 36.5 | Si |
| ini. | 3 | -1599 | -51069 | 89792 | SLU 70 | 1.76 | Si |
| fin. | 3 | -373 | 3336 | 89792 | SLU 70 | 26.92 | Si |
| ini. | 3 | -1856 | -56853 | 89792 | SLU 73 | 1.58 | Si |
| fin. | 3 | -486 | 4948 | 89792 | SLU 73 | 18.15 | Si |

### Verifiche a taglio delle travi in muratura secondo §C8.7.1.3.1 in combinazioni non sismiche

| Sezione | γM | N | M | V | Vt | Vp | Vt fess. diag. | Vt,lim | Comb. | c.s. | Verifica |
|---|---|---|---|---|---|---|---|---|---|---|---|
| ini. | 3 | 0 | -56853 | 2979 | | | 806 | 303 | SLU 73 | 0.1 | No |
| fin. | 3 | 0 | 4948 | -556 | | | 806 | 303 | SLU 73 | 0.55 | No |
| ini. | 3 | 0 | -54049 | 2918 | | | 806 | 303 | SLU 80 | 0.1 | No |
| fin. | 3 | 0 | 1820 | -777 | | | 806 | 303 | SLU 80 | 0.39 | No |
| ini. | 3 | 0 | -55272 | 2991 | | | 806 | 303 | SLU 84 | 0.1 | No |
| fin. | 3 | 0 | 1881 | -812 | | | 806 | 303 | SLU 84 | 0.37 | No |
| ini. | 3 | 0 | -54484 | 2938 | | | 806 | 303 | SLU 75 | 0.1 | No |
| fin. | 3 | 0 | 2706 | -731 | | | 806 | 303 | SLU 75 | 0.41 | No |
| ini. | 3 | 0 | -54906 | 2965 | | | 806 | 303 | SLU 78 | 0.1 | No |
| fin. | 3 | 0 | 2127 | -774 | | | 806 | 303 | SLU 78 | 0.39 | No |
| ini. | 3 | 0 | -54851 | 2965 | | | 806 | 303 | SLU 82 | 0.1 | No |
| fin. | 3 | 0 | 2460 | -769 | | | 806 | 303 | SLU 82 | 0.39 | No |
| ini. | 3 | 0 | -49380 | 2794 | | | 806 | 303 | SLU 81 | 0.11 | No |
| fin. | 3 | 0 | -494 | -972 | | | 806 | 303 | SLU 81 | 0.31 | No |
| ini. | 3 | 0 | -49801 | 2820 | | | 806 | 303 | SLU 83 | 0.11 | No |
| fin. | 3 | 0 | -1073 | -1015 | | | 806 | 303 | SLU 83 | 0.3 | No |
| ini. | 3 | 0 | -57275 | 3005 | | | 806 | 303 | SLU 76 | 0.1 | No |

| Sezione | γM | N | M | V | Vt | Vp | Vt fess. diag. | Vt,lim | Comb. | c.s. | Verifica |
|---|---|---|---|---|---|---|---|---|---|---|---|
| fin. | 3 | 0 | 4369 | -599 | | | 806 | 303 | SLU 76 | 0.51 | No |
| ini. | 3 | 0 | -49435 | 2794 | | | 806 | 303 | SLU 77 | 0.11 | No |
| fin. | 3 | 0 | -827 | -977 | | | 806 | 303 | SLU 77 | 0.31 | No |

### Verifiche a pressoflessione delle travi in muratura in combinazioni sismiche

| Sezione | γM | N | M | Mu | Comb. | c.s. | Verifica |
|---|---|---|---|---|---|---|---|
| ini. | 2 | -2855 | -105882 | 107694 | SLV 9 | 1.02 | Si |
| fin. | 2 | 669 | 34758 | 107694 | SLV 9 | 3.1 | Si |
| ini. | 2 | -4027 | -166472 | 107694 | SLV 13 | 0.65 | No |
| fin. | 2 | 1917 | 98372 | 107694 | SLV 13 | 1.09 | Si |
| ini. | 2 | 1329 | 78063 | 107694 | SLV 1 | 1.38 | Si |
| fin. | 2 | -2297 | -94330 | 107694 | SLV 1 | 1.14 | Si |
| ini. | 2 | -4027 | -166472 | 107694 | SLV 14 | 0.65 | No |
| fin. | 2 | 1917 | 98372 | 107694 | SLV 14 | 1.09 | Si |
| ini. | 2 | -2855 | -105882 | 107694 | SLV 10 | 1.02 | Si |
| fin. | 2 | 669 | 34758 | 107694 | SLV 10 | 3.1 | Si |
| ini. | 2 | 1931 | 99489 | 107694 | SLV 4 | 1.08 | Si |
| fin. | 2 | -2491 | -97614 | 107694 | SLV 4 | 1.1 | Si |
| ini. | 2 | 1329 | 78063 | 107694 | SLV 2 | 1.38 | Si |
| fin. | 2 | -2297 | -94330 | 107694 | SLV 2 | 1.14 | Si |
| ini. | 2 | 1931 | 99489 | 107694 | SLV 3 | 1.08 | Si |
| fin. | 2 | -2491 | -97614 | 107694 | SLV 3 | 1.1 | Si |
| ini. | 2 | -3425 | -145046 | 107694 | SLV 15 | 0.74 | No |
| fin. | 2 | 1723 | 95088 | 107694 | SLV 15 | 1.13 | Si |
| ini. | 2 | -3425 | -145046 | 107694 | SLV 16 | 0.74 | No |
| fin. | 2 | 1723 | 95088 | 107694 | SLV 16 | 1.13 | Si |

### Verifiche a taglio delle travi in muratura secondo §C8.7.1.3.1 in combinazioni sismiche

| Sezione | γM | N | M | V | Vt | Vp | Vt fess. diag. | Vt,lim | Comb. | c.s. | Verifica |
|---|---|---|---|---|---|---|---|---|---|---|---|
| ini. | 2 | 0 | 99489 | -3270 | | | 1208 | 455 | SLV 3 | 0.14 | No |
| fin. | 2 | 0 | -97614 | -5091 | | | 1208 | 455 | SLV 3 | 0.09 | No |
| ini. | 2 | 0 | -166472 | 7044 | | | 1208 | 455 | SLV 14 | 0.06 | No |
| fin. | 2 | 0 | 98372 | 3918 | | | 1208 | 455 | SLV 14 | 0.12 | No |
| ini. | 2 | 0 | 99489 | -3270 | | | 1208 | 455 | SLV 4 | 0.14 | No |
| fin. | 2 | 0 | -97614 | -5091 | | | 1208 | 455 | SLV 4 | 0.09 | No |
| ini. | 2 | 0 | -105882 | 4590 | | | 1208 | 455 | SLV 9 | 0.1 | No |
| fin. | 2 | 0 | 34758 | 285 | | | 1208 | 455 | SLV 9 | 1.59 | Si |
| ini. | 2 | 0 | -145046 | 6282 | | | 1208 | 455 | SLV 16 | 0.07 | No |
| fin. | 2 | 0 | 95088 | 4234 | | | 1208 | 455 | SLV 16 | 0.11 | No |
| ini. | 2 | 0 | 78063 | -2508 | | | 1208 | 455 | SLV 1 | 0.18 | No |
| fin. | 2 | 0 | -94330 | -5407 | | | 1208 | 455 | SLV 1 | 0.08 | No |
| ini. | 2 | 0 | 78063 | -2508 | | | 1208 | 455 | SLV 2 | 0.18 | No |
| fin. | 2 | 0 | -94330 | -5407 | | | 1208 | 455 | SLV 2 | 0.08 | No |
| ini. | 2 | 0 | -145046 | 6282 | | | 1208 | 455 | SLV 15 | 0.07 | No |
| fin. | 2 | 0 | 95088 | 4234 | | | 1208 | 455 | SLV 15 | 0.11 | No |
| ini. | 2 | 0 | -166472 | 7044 | | | 1208 | 455 | SLV 13 | 0.06 | No |
| fin. | 2 | 0 | 98372 | 3918 | | | 1208 | 455 | SLV 13 | 0.12 | No |
| ini. | 2 | 0 | -105882 | 4590 | | | 1208 | 455 | SLV 10 | 0.1 | No |
| fin. | 2 | 0 | 34758 | 285 | | | 1208 | 455 | SLV 10 | 1.59 | Si |

### Tabella dei coefficienti di sicurezza minimi

| Stato limite | Coeff.s. | Comb. | Verifica |
|---|---|---|---|
| PF_SLV | 0.647 | SLV 13 | No |
| V_SLV | 0.065 | SLV 13 | No |
| PF_SLU | 1.568 | SLU 76 | Si |
| V_SLU | 0.101 | SLU 76 | No |

## Trave di accoppiamento 104

Verifiche condotte secondo D.M. 17-01-18 (N.T.C.)

### Dati geometrici

| X ini. | Y ini. | Z ini.inf. | Z ini.sup. | H ini. | X fin. | Y fin. | Z fin.inf. | Z fin.sup | H fin. | Luce | Spessore | R. Trazione |
|---|---|---|---|---|---|---|---|---|---|---|---|---|
| -206.3 | 595.1 | 544 | 634 | 90 | -296.3 | 595.1 | 544 | 634 | 90 | 90 | 28 | 3500 |

### Caratteristiche del materiale

(Circolare 7 21-01-19 C8.5.I) Muratura in mattoni pieni e malta di calce LC2_Corti

| fb_ | fhk | fvk0 | fhmedio | τ0 | fv0 | μ | ϕ | fvk,lim | E | G | FC |
|---|---|---|---|---|---|---|---|---|---|---|---|
| 12 | | | 17.25 | 0.9 | 2 | 0.577 | 0.767 | 0.65 | 32000 | 12800 | 1.2 |

### Verifiche a pressoflessione delle travi in muratura in combinazioni non sismiche

| Sezione | γM | N | M | Mu | Comb. | c.s. | Verifica |
|---|---|---|---|---|---|---|---|
| ini. | 3 | -1260 | 3393 | 103792 | SLU 83 | 30.59 | Si |
| fin. | 3 | -1871 | 20752 | 103792 | SLU 83 | 5 | Si |
| ini. | 3 | -1054 | -188 | 103792 | SLU 81 | 552.53 | Si |
| fin. | 3 | -1689 | 20817 | 103792 | SLU 81 | 4.99 | Si |
| ini. | 3 | -1185 | 2818 | 103792 | SLU 75 | 36.83 | Si |
| fin. | 3 | -1784 | 20158 | 103792 | SLU 75 | 5.15 | Si |
| ini. | 3 | -1008 | -738 | 103792 | SLU 82 | 140.64 | Si |
| fin. | 3 | -1655 | 20883 | 103792 | SLU 82 | 4.97 | Si |
| ini. | 3 | -1230 | 3368 | 103792 | SLU 74 | 30.81 | Si |
| fin. | 3 | -1818 | 20092 | 103792 | SLU 74 | 5.17 | Si |
| ini. | 3 | -1188 | 3289 | 103792 | SLU 76 | 31.55 | Si |
| fin. | 3 | -1779 | 19796 | 103792 | SLU 76 | 5.24 | Si |

| Sezione | γM | N | M | Mu | Comb. | c.s. | Verifica |
|---|---|---|---|---|---|---|---|
| ini. | 3 | -1391 | 6399 | 103792 | SLU 78 | 16.22 | Si |
| fin. | 3 | -1966 | 20094 | 103792 | SLU 78 | 5.17 | Si |
| ini. | 3 | -982 | -292 | 103792 | SLU 73 | 355.71 | Si |
| fin. | 3 | -1597 | 19861 | 103792 | SLU 73 | 5.23 | Si |
| ini. | 3 | -1214 | 2843 | 103792 | SLU 84 | 36.51 | Si |
| fin. | 3 | -1837 | 20818 | 103792 | SLU 84 | 4.99 | Si |
| ini. | 3 | -1437 | 6949 | 103792 | SLU 77 | 14.94 | Si |
| fin. | 3 | -1999 | 20028 | 103792 | SLU 77 | 5.18 | Si |

## Verifiche a taglio delle travi in muratura secondo §C8.7.1.3.1 in combinazioni non sismiche

| Sezione | γM | N | M | V | Vt | Vp | Vt fess. diag. | Vt,lim | Comb. | c.s. | Verifica |
|---|---|---|---|---|---|---|---|---|---|---|---|
| ini. | 3 | 0 | -292 | -524 | | | 970 | 365 | SLU 73 | 0.7 | No |
| fin. | 3 | 0 | 19861 | 1291 | | | 970 | 365 | SLU 73 | 0.28 | No |
| ini. | 3 | 0 | 2818 | -656 | | | 970 | 365 | SLU 75 | 0.56 | No |
| fin. | 3 | 0 | 20158 | 1322 | | | 970 | 365 | SLU 75 | 0.28 | No |
| ini. | 3 | 0 | 3368 | -698 | | | 970 | 365 | SLU 74 | 0.52 | No |
| fin. | 3 | 0 | 20092 | 1331 | | | 970 | 365 | SLU 74 | 0.27 | No |
| ini. | 3 | 0 | -188 | -579 | | | 970 | 365 | SLU 81 | 0.63 | No |
| fin. | 3 | 0 | 20817 | 1366 | | | 970 | 365 | SLU 81 | 0.27 | No |
| ini. | 3 | 0 | 6949 | -809 | | | 970 | 365 | SLU 77 | 0.45 | No |
| fin. | 3 | 0 | 20028 | 1323 | | | 970 | 365 | SLU 77 | 0.28 | No |
| ini. | 3 | 0 | 2843 | -647 | | | 970 | 365 | SLU 84 | 0.56 | No |
| fin. | 3 | 0 | 20818 | 1349 | | | 970 | 365 | SLU 84 | 0.27 | No |
| ini. | 3 | 0 | 7787 | -816 | | | 970 | 365 | SLU 79 | 0.45 | No |
| fin. | 3 | 0 | 19622 | 1289 | | | 970 | 365 | SLU 79 | 0.28 | No |
| ini. | 3 | 0 | 6399 | -766 | | | 970 | 365 | SLU 78 | 0.48 | No |
| fin. | 3 | 0 | 20094 | 1314 | | | 970 | 365 | SLU 78 | 0.28 | No |
| ini. | 3 | 0 | 3393 | -690 | | | 970 | 365 | SLU 83 | 0.53 | No |
| fin. | 3 | 0 | 20752 | 1358 | | | 970 | 365 | SLU 83 | 0.27 | No |
| ini. | 3 | 0 | -738 | -537 | | | 970 | 365 | SLU 82 | 0.68 | No |
| fin. | 3 | 0 | 20883 | 1358 | | | 970 | 365 | SLU 82 | 0.27 | No |

## Verifiche a pressoflessione delle travi in muratura in combinazioni sismiche

| Sezione | γM | N | M | Mu | Comb. | c.s. | Verifica |
|---|---|---|---|---|---|---|---|
| ini. | 2 | 741 | -106376 | 121694 | SLV 15 | 1.14 | Si |
| fin. | 2 | -3961 | 154473 | 121694 | SLV 15 | 0.79 | No |
| ini. | 2 | 1905 | -113060 | 121694 | SLV 13 | 1.08 | Si |
| fin. | 2 | -2724 | 141816 | 121694 | SLV 13 | 0.86 | No |
| ini. | 2 | -2102 | -20813 | 121694 | SLV 12 | 5.85 | Si |
| fin. | 2 | -3901 | 74993 | 121694 | SLV 12 | 1.62 | Si |
| ini. | 2 | 1905 | -113060 | 121694 | SLV 14 | 1.08 | Si |
| fin. | 2 | -2724 | 141816 | 121694 | SLV 14 | 0.86 | No |
| ini. | 2 | -2102 | -20813 | 121694 | SLV 11 | 5.85 | Si |
| fin. | 2 | -3901 | 74993 | 121694 | SLV 11 | 1.62 | Si |
| ini. | 2 | -3501 | 115808 | 121694 | SLV 4 | 1.05 | Si |
| fin. | 2 | 337 | -114803 | 121694 | SLV 4 | 1.06 | Si |
| ini. | 2 | -2336 | 109123 | 121694 | SLV 2 | 1.12 | Si |
| fin. | 2 | 1574 | -127460 | 121694 | SLV 2 | 0.95 | No |
| ini. | 2 | 741 | -106376 | 121694 | SLV 16 | 1.14 | Si |
| fin. | 2 | -3961 | 154473 | 121694 | SLV 16 | 0.79 | No |
| ini. | 2 | -2336 | 109123 | 121694 | SLV 1 | 1.12 | Si |
| fin. | 2 | 1574 | -127460 | 121694 | SLV 1 | 0.95 | No |
| ini. | 2 | -3501 | 115808 | 121694 | SLV 3 | 1.05 | Si |
| fin. | 2 | 337 | -114803 | 121694 | SLV 3 | 1.06 | Si |

## Verifiche a taglio delle travi in muratura secondo §C8.7.1.3.1 in combinazioni sismiche

| Sezione | γM | N | M | V | Vt | Vp | Vt fess. diag. | Vt,lim | Comb. | c.s. | Verifica |
|---|---|---|---|---|---|---|---|---|---|---|---|
| ini. | 2 | 0 | -106376 | 4070 | | | 1456 | 548 | SLV 16 | 0.13 | No |
| fin. | 2 | 0 | 154473 | 6212 | | | 1456 | 548 | SLV 16 | 0.09 | No |
| ini. | 2 | 0 | -20813 | 195 | | | 1456 | 548 | SLV 12 | 2.81 | Si |
| fin. | 2 | 0 | 74993 | 3511 | | | 1456 | 548 | SLV 12 | 0.16 | No |
| ini. | 2 | 0 | 115808 | -5468 | | | 1456 | 548 | SLV 4 | 0.1 | No |
| fin. | 2 | 0 | -114803 | -3730 | | | 1456 | 548 | SLV 4 | 0.15 | No |
| ini. | 2 | 0 | -20813 | 195 | | | 1456 | 548 | SLV 11 | 2.81 | Si |
| fin. | 2 | 0 | 74993 | 3511 | | | 1456 | 548 | SLV 11 | 0.16 | No |
| ini. | 2 | 0 | -113060 | 4530 | | | 1456 | 548 | SLV 14 | 0.12 | No |
| fin. | 2 | 0 | 141816 | 5544 | | | 1456 | 548 | SLV 14 | 0.1 | No |
| ini. | 2 | 0 | 115808 | -5468 | | | 1456 | 548 | SLV 3 | 0.1 | No |
| fin. | 2 | 0 | -114803 | -3730 | | | 1456 | 548 | SLV 3 | 0.15 | No |
| ini. | 2 | 0 | -113060 | 4530 | | | 1456 | 548 | SLV 13 | 0.12 | No |
| fin. | 2 | 0 | 141816 | 5544 | | | 1456 | 548 | SLV 13 | 0.1 | No |
| ini. | 2 | 0 | 109123 | -5008 | | | 1456 | 548 | SLV 2 | 0.11 | No |
| fin. | 2 | 0 | -127460 | -4398 | | | 1456 | 548 | SLV 2 | 0.12 | No |
| ini. | 2 | 0 | 109123 | -5008 | | | 1456 | 548 | SLV 1 | 0.11 | No |
| fin. | 2 | 0 | -127460 | -4398 | | | 1456 | 548 | SLV 1 | 0.12 | No |
| ini. | 2 | 0 | -106376 | 4070 | | | 1456 | 548 | SLV 15 | 0.13 | No |
| fin. | 2 | 0 | 154473 | 6212 | | | 1456 | 548 | SLV 15 | 0.09 | No |

## Tabella dei coefficienti di sicurezza minimi

| Stato limite | Coeff.s. | Comb. | Verifica |
|---|---|---|---|
| PF_SLV | 0.788 | SLV 15 | No |
| V_SLV | 0.088 | SLV 15 | No |
| PF_SLU | 4.97 | SLU 82 | Si |
| V_SLU | 0.267 | SLU 81 | No |

# Trave di accoppiamento 105

Verifiche condotte secondo D.M. 17-01-18 (N.T.C.)

## Dati geometrici

| X ini. | Y ini. | Z ini.inf. | Z ini.sup. | H ini. | X fin. | Y fin. | Z fin.inf. | Z fin.sup | H fin. | Luce | Spessore | R. Trazione |
|---|---|---|---|---|---|---|---|---|---|---|---|---|
| -206.3 | 595.1 | 814 | 896 | 82 | -296.3 | 595.1 | 814 | 896 | 82 | 90 | 28 | 3500 |

## Caratteristiche del materiale

(Circolare 7 21-01-19 C8.5.I) Muratura in mattoni pieni e malta di calce LC2_Corti

| fb_ | fhk | fvk0 | fhmedio | τ0 | fv0 | μ | ϕ | fvk,lim | E | G | FC |
|---|---|---|---|---|---|---|---|---|---|---|---|
| 12 | | | 17.25 | 0.9 | 2 | 0.577 | 0.767 | 0.65 | 32000 | 12800 | 1.2 |

## Verifiche a pressoflessione delle travi in muratura in combinazioni non sismiche

| Sezione | γM | N | M | Mu | Comb. | c.s. | Verifica |
|---|---|---|---|---|---|---|---|
| ini. | 3 | -772 | -27779 | 89792 | SLU 84 | 3.23 | Si |
| fin. | 3 | -475 | -9177 | 89792 | SLU 84 | 9.78 | Si |
| ini. | 3 | -702 | -25937 | 89792 | SLU 39 | 3.46 | Si |
| fin. | 3 | -310 | -2764 | 89792 | SLU 39 | 32.48 | Si |
| ini. | 3 | -735 | -26951 | 89792 | SLU 74 | 3.33 | Si |
| fin. | 3 | -451 | -9041 | 89792 | SLU 74 | 9.93 | Si |
| ini. | 3 | -732 | -26893 | 89792 | SLU 75 | 3.34 | Si |
| fin. | 3 | -437 | -8503 | 89792 | SLU 75 | 10.56 | Si |
| ini. | 3 | -775 | -27837 | 89792 | SLU 83 | 3.23 | Si |
| fin. | 3 | -489 | -9715 | 89792 | SLU 83 | 9.24 | Si |
| ini. | 3 | -806 | -30018 | 89792 | SLU 81 | 2.99 | Si |
| fin. | 3 | -354 | -3345 | 89792 | SLU 81 | 26.84 | Si |
| ini. | 3 | -803 | -29960 | 89792 | SLU 82 | 3 | Si |
| fin. | 3 | -340 | -2807 | 89792 | SLU 82 | 31.99 | Si |
| ini. | 3 | -719 | -27182 | 89792 | SLU 60 | 3.3 | Si |
| fin. | 3 | -284 | -1807 | 89792 | SLU 60 | 49.7 | Si |
| ini. | 3 | -716 | -27124 | 89792 | SLU 61 | 3.31 | Si |
| fin. | 3 | -270 | -1269 | 89792 | SLU 61 | 70.75 | Si |
| ini. | 3 | -750 | -28044 | 89792 | SLU 73 | 3.2 | Si |
| fin. | 3 | -327 | -3189 | 89792 | SLU 73 | 28.16 | Si |

## Verifiche a taglio delle travi in muratura secondo §C8.7.1.3.1 in combinazioni non sismiche

| Sezione | γM | N | M | V | Vt | Vp | Vt fess. diag. | Vt,lim | Comb. | c.s. | Verifica |
|---|---|---|---|---|---|---|---|---|---|---|---|
| ini. | 3 | 0 | -27124 | 2173 | | | 806 | 303 | SLU 61 | 0.14 | No |
| fin. | 3 | 0 | -1269 | -881 | | | 806 | 303 | SLU 61 | 0.34 | No |
| ini. | 3 | 0 | -29960 | 2395 | | | 806 | 303 | SLU 82 | 0.13 | No |
| fin. | 3 | 0 | -2807 | -1017 | | | 806 | 303 | SLU 82 | 0.3 | No |
| ini. | 3 | 0 | -28044 | 2242 | | | 806 | 303 | SLU 73 | 0.14 | No |
| fin. | 3 | 0 | -3189 | -975 | | | 806 | 303 | SLU 73 | 0.31 | No |
| ini. | 3 | 0 | -27837 | 2230 | | | 806 | 303 | SLU 83 | 0.14 | No |
| fin. | 3 | 0 | -9715 | -1212 | | | 806 | 303 | SLU 83 | 0.25 | No |
| ini. | 3 | 0 | -26893 | 2148 | | | 806 | 303 | SLU 75 | 0.14 | No |
| fin. | 3 | 0 | -8503 | -1136 | | | 806 | 303 | SLU 75 | 0.27 | No |
| ini. | 3 | 0 | -26951 | 2156 | | | 806 | 303 | SLU 74 | 0.14 | No |
| fin. | 3 | 0 | -9041 | -1160 | | | 806 | 303 | SLU 74 | 0.26 | No |
| ini. | 3 | 0 | -27182 | 2181 | | | 806 | 303 | SLU 60 | 0.14 | No |
| fin. | 3 | 0 | -1807 | -905 | | | 806 | 303 | SLU 60 | 0.34 | No |
| ini. | 3 | 0 | -30018 | 2403 | | | 806 | 303 | SLU 81 | 0.13 | No |
| fin. | 3 | 0 | -3345 | -1040 | | | 806 | 303 | SLU 81 | 0.29 | No |
| ini. | 3 | 0 | -25937 | 2073 | | | 806 | 303 | SLU 39 | 0.15 | No |
| fin. | 3 | 0 | -2764 | -887 | | | 806 | 303 | SLU 39 | 0.34 | No |
| ini. | 3 | 0 | -27779 | 2222 | | | 806 | 303 | SLU 84 | 0.14 | No |
| fin. | 3 | 0 | -9177 | -1188 | | | 806 | 303 | SLU 84 | 0.26 | No |

## Verifiche a pressoflessione delle travi in muratura in combinazioni sismiche

| Sezione | γM | N | M | Mu | Comb. | c.s. | Verifica |
|---|---|---|---|---|---|---|---|
| ini. | 2 | -2110 | -104469 | 107694 | SLV 14 | 1.03 | Si |
| fin. | 2 | 1779 | 96921 | 107694 | SLV 14 | 1.11 | Si |
| ini. | 2 | -1685 | -76652 | 107694 | SLV 11 | 1.4 | Si |
| fin. | 2 | 1391 | 63936 | 107694 | SLV 11 | 1.68 | Si |
| ini. | 2 | 1486 | 84312 | 107694 | SLV 2 | 1.28 | Si |
| fin. | 2 | -2844 | -124791 | 107694 | SLV 2 | 0.86 | No |
| ini. | 2 | 1101 | 66655 | 107694 | SLV 4 | 1.62 | Si |
| fin. | 2 | -2277 | -104200 | 107694 | SLV 4 | 1.03 | Si |
| ini. | 2 | -1685 | -76652 | 107694 | SLV 12 | 1.4 | Si |
| fin. | 2 | 1391 | 63936 | 107694 | SLV 12 | 1.68 | Si |
| ini. | 2 | 1101 | 66655 | 107694 | SLV 3 | 1.62 | Si |
| fin. | 2 | -2277 | -104200 | 107694 | SLV 3 | 1.03 | Si |
| ini. | 2 | 1486 | 84312 | 107694 | SLV 1 | 1.28 | Si |
| fin. | 2 | -2844 | -124791 | 107694 | SLV 1 | 0.86 | No |
| ini. | 2 | -2495 | -122126 | 107694 | SLV 16 | 0.88 | No |
| fin. | 2 | 2347 | 117512 | 107694 | SLV 16 | 0.92 | No |
| ini. | 2 | -2495 | -122126 | 107694 | SLV 15 | 0.88 | No |
| fin. | 2 | 2347 | 117512 | 107694 | SLV 15 | 0.92 | No |
| ini. | 2 | -2110 | -104469 | 107694 | SLV 13 | 1.03 | Si |
| fin. | 2 | 1779 | 96921 | 107694 | SLV 13 | 1.11 | Si |

## Verifiche a taglio delle travi in muratura secondo §C8.7.1.3.1 in combinazioni sismiche

| Sezione | γM | N | M | V | Vt | Vp | Vt fess. diag. | Vt,lim | Comb. | c.s. | Verifica |
|---|---|---|---|---|---|---|---|---|---|---|---|
| ini. | 2 | 0 | 84312 | -3028 | | | 1208 | 455 | SLV 2 | 0.15 | No |
| fin. | 2 | 0 | -124791 | -4660 | | | 1208 | 455 | SLV 2 | 0.1 | No |
| ini. | 2 | 0 | -76652 | 3951 | | | 1208 | 455 | SLV 12 | 0.12 | No |

| Sezione | γM | N | M | V | Vt | Vp | Vt fess. diag. | Vt,lim | Comb. | c.s. | Verifica |
|---|---|---|---|---|---|---|---|---|---|---|---|
| fin. | 2 | 0 | 63936 | 2 | | | 1208 | 455 | SLV 12 | 208.91 | Si |
| ini. | 2 | 0 | 84312 | -3028 | | | 1208 | 455 | SLV 1 | 0.15 | No |
| fin. | 2 | 0 | -124791 | -4660 | | | 1208 | 455 | SLV 1 | 0.1 | No |
| ini. | 2 | 0 | -122126 | 6065 | | | 1208 | 455 | SLV 15 | 0.07 | No |
| fin. | 2 | 0 | 117512 | 3218 | | | 1208 | 455 | SLV 15 | 0.14 | No |
| ini. | 2 | 0 | -104469 | 5361 | | | 1208 | 455 | SLV 14 | 0.08 | No |
| fin. | 2 | 0 | 96921 | 3520 | | | 1208 | 455 | SLV 14 | 0.13 | No |
| ini. | 2 | 0 | 66655 | -2324 | | | 1208 | 455 | SLV 4 | 0.2 | No |
| fin. | 2 | 0 | -104200 | -4963 | | | 1208 | 455 | SLV 4 | 0.09 | No |
| ini. | 2 | 0 | -104469 | 5361 | | | 1208 | 455 | SLV 13 | 0.08 | No |
| fin. | 2 | 0 | 96921 | 3520 | | | 1208 | 455 | SLV 13 | 0.13 | No |
| ini. | 2 | 0 | -122126 | 6065 | | | 1208 | 455 | SLV 16 | 0.07 | No |
| fin. | 2 | 0 | 117512 | 3218 | | | 1208 | 455 | SLV 16 | 0.14 | No |
| ini. | 2 | 0 | 66655 | -2324 | | | 1208 | 455 | SLV 3 | 0.2 | No |
| fin. | 2 | 0 | -104200 | -4963 | | | 1208 | 455 | SLV 3 | 0.09 | No |
| ini. | 2 | 0 | -76652 | 3951 | | | 1208 | 455 | SLV 11 | 0.12 | No |
| fin. | 2 | 0 | 63936 | 2 | | | 1208 | 455 | SLV 11 | 208.91 | Si |

### Tabella dei coefficienti di sicurezza minimi

| Stato limite | Coeff.s. | Comb. | Verifica |
|---|---|---|---|
| PF_SLV | 0.863 | SLV 1 | No |
| V_SLV | 0.075 | SLV 15 | No |
| PF_SLU | 2.991 | SLU 81 | Si |
| V_SLU | 0.126 | SLU 81 | No |

## Trave di accoppiamento 106

Verifiche condotte secondo D.M. 17-01-18 (N.T.C.)

### Dati geometrici

| X ini. | Y ini. | Z ini.inf. | Z ini.sup. | H ini. | X fin. | Y fin. | Z fin.inf. | Z fin.sup | H fin. | Luce | Spessore | R. Trazione |
|---|---|---|---|---|---|---|---|---|---|---|---|---|
| -2467.8 | 126.6 | 1106 | 1248 | 142 | -2467.8 | 206.6 | 1106 | 1248 | 142 | 80 | 28 | 3500 |

### Caratteristiche del materiale

(Circolare 7 21-01-19 C8.5.I) Muratura in mattoni pieni e malta di calce LC2_Corti

| fb_ | fhk | fvk0 | fhmedio | τ0 | fv0 | μ | ϕ | fvk,lim | E | G | FC |
|---|---|---|---|---|---|---|---|---|---|---|---|
| 12 | | | 17.25 | 0.9 | 2 | 0.577 | 0.767 | 0.65 | 32000 | 12800 | 1.2 |

### Verifiche a pressoflessione delle travi in muratura in combinazioni non sismiche

| Sezione | γM | N | M | Mu | Comb. | c.s. | Verifica |
|---|---|---|---|---|---|---|---|
| ini. | 3 | 1089 | 18922 | 194792 | SLU 37 | 10.29 | Si |
| fin. | 3 | 1089 | -55844 | 194792 | SLU 37 | 3.49 | Si |
| ini. | 3 | 1057 | 24706 | 194792 | SLU 35 | 7.88 | Si |
| fin. | 3 | 1057 | -60075 | 194792 | SLU 35 | 3.24 | Si |
| ini. | 3 | 1012 | 35010 | 194792 | SLU 32 | 5.56 | Si |
| fin. | 3 | 1012 | -59383 | 194792 | SLU 32 | 3.28 | Si |
| ini. | 3 | 1307 | 33235 | 194792 | SLU 83 | 5.86 | Si |
| fin. | 3 | 1307 | -60641 | 194792 | SLU 83 | 3.21 | Si |
| ini. | 3 | 1278 | 26221 | 194792 | SLU 42 | 7.43 | Si |
| fin. | 3 | 1278 | -53104 | 194792 | SLU 42 | 3.67 | Si |
| ini. | 3 | 1020 | 50307 | 194792 | SLU 39 | 3.87 | Si |
| fin. | 3 | 1020 | -65308 | 194792 | SLU 39 | 2.98 | Si |
| ini. | 3 | 1299 | 17938 | 194792 | SLU 77 | 10.86 | Si |
| fin. | 3 | 1299 | -54717 | 194792 | SLU 77 | 3.56 | Si |
| ini. | 3 | 1254 | 28241 | 194792 | SLU 74 | 6.9 | Si |
| fin. | 3 | 1254 | -54025 | 194792 | SLU 74 | 3.61 | Si |
| ini. | 3 | 1262 | 43539 | 194792 | SLU 81 | 4.47 | Si |
| fin. | 3 | 1262 | -59950 | 194792 | SLU 81 | 3.25 | Si |
| ini. | 3 | 1065 | 40003 | 194792 | SLU 41 | 4.87 | Si |
| fin. | 3 | 1065 | -65999 | 194792 | SLU 41 | 2.95 | Si |

### Verifiche a taglio delle travi in muratura secondo §C8.7.1.3.1 in combinazioni non sismiche

| Sezione | γM | N | M | V | Vt | Vp | Vt fess. diag. | Vt,lim | Comb. | c.s. | Verifica |
|---|---|---|---|---|---|---|---|---|---|---|---|
| ini. | 3 | 0 | 29756 | -633 | | | 1531 | 576 | SLU 82 | 0.91 | No |
| fin. | 3 | 0 | -47054 | -1344 | | | 1531 | 576 | SLU 82 | 0.43 | No |
| ini. | 3 | 0 | 50307 | -1191 | | | 1531 | 576 | SLU 39 | 0.48 | No |
| fin. | 3 | 0 | -65308 | -1742 | | | 1531 | 576 | SLU 39 | 0.33 | No |
| ini. | 3 | 0 | 33235 | -846 | | | 1531 | 576 | SLU 83 | 0.68 | No |
| fin. | 3 | 0 | -60641 | -1557 | | | 1531 | 576 | SLU 83 | 0.37 | No |
| ini. | 3 | 0 | 24706 | -806 | | | 1531 | 576 | SLU 35 | 0.72 | No |
| fin. | 3 | 0 | -60075 | -1356 | | | 1531 | 576 | SLU 35 | 0.42 | No |
| ini. | 3 | 0 | 35010 | -926 | | | 1531 | 576 | SLU 32 | 0.62 | No |
| fin. | 3 | 0 | -59383 | -1476 | | | 1531 | 576 | SLU 32 | 0.39 | No |
| ini. | 3 | 0 | 17938 | -581 | | | 1531 | 576 | SLU 77 | 0.99 | No |
| fin. | 3 | 0 | -54717 | -1292 | | | 1531 | 576 | SLU 77 | 0.45 | No |
| ini. | 3 | 0 | 43539 | -966 | | | 1531 | 576 | SLU 81 | 0.6 | No |
| fin. | 3 | 0 | -59950 | -1677 | | | 1531 | 576 | SLU 81 | 0.34 | No |
| ini. | 3 | 0 | 28241 | -701 | | | 1531 | 576 | SLU 74 | 0.82 | No |
| fin. | 3 | 0 | -54025 | -1412 | | | 1531 | 576 | SLU 74 | 0.41 | No |
| ini. | 3 | 0 | 40003 | -1071 | | | 1531 | 576 | SLU 41 | 0.54 | No |
| fin. | 3 | 0 | -65999 | -1621 | | | 1531 | 576 | SLU 41 | 0.36 | No |
| ini. | 3 | 0 | 36524 | -858 | | | 1531 | 576 | SLU 40 | 0.67 | No |
| fin. | 3 | 0 | -52412 | -1408 | | | 1531 | 576 | SLU 40 | 0.41 | No |

### Verifiche a pressoflessione delle travi in muratura in combinazioni sismiche

| Sezione | γM | N | M | Mu | Comb. | c.s. | Verifica |
|---|---|---|---|---|---|---|---|
| ini. | 2 | 477 | -187787 | 212694 | SLV 9 | 1.13 | Si |
| fin. | 2 | 672 | 174479 | 212694 | SLV 9 | 1.22 | Si |
| ini. | 2 | 476 | 153810 | 212694 | SLV 12 | 1.38 | Si |
| fin. | 2 | 528 | -160729 | 212694 | SLV 12 | 1.32 | Si |
| ini. | 2 | 1354 | 206291 | 212694 | SLV 7 | 1.03 | Si |
| fin. | 2 | 1159 | -215907 | 212694 | SLV 7 | 0.99 | No |
| ini. | 2 | 1354 | 206291 | 212694 | SLV 8 | 1.03 | Si |
| fin. | 2 | 1159 | -215907 | 212694 | SLV 8 | 0.99 | No |
| ini. | 2 | 1355 | -135305 | 212694 | SLV 6 | 1.57 | Si |
| fin. | 2 | 1303 | 119301 | 212694 | SLV 6 | 1.78 | Si |
| ini. | 2 | 2379 | 147961 | 212694 | SLV 4 | 1.44 | Si |
| fin. | 2 | 1945 | -162957 | 212694 | SLV 4 | 1.31 | Si |
| ini. | 2 | 476 | 153810 | 212694 | SLV 11 | 1.38 | Si |
| fin. | 2 | 528 | -160729 | 212694 | SLV 11 | 1.32 | Si |
| ini. | 2 | 1355 | -135305 | 212694 | SLV 5 | 1.57 | Si |
| fin. | 2 | 1303 | 119301 | 212694 | SLV 5 | 1.78 | Si |
| ini. | 2 | 2379 | 147961 | 212694 | SLV 3 | 1.44 | Si |
| fin. | 2 | 1945 | -162957 | 212694 | SLV 3 | 1.31 | Si |
| ini. | 2 | 477 | -187787 | 212694 | SLV 10 | 1.13 | Si |
| fin. | 2 | 672 | 174479 | 212694 | SLV 10 | 1.22 | Si |

### Verifiche a taglio delle travi in muratura secondo §C8.7.1.3.1 in combinazioni sismiche

| Sezione | γM | N | M | V | Vt | Vp | Vt fess. diag. | Vt,lim | Comb. | c.s. | Verifica |
|---|---|---|---|---|---|---|---|---|---|---|---|
| ini. | 2 | 0 | 147961 | -3516 | | | 2297 | 864 | SLV 4 | 0.25 | No |
| fin. | 2 | 0 | -162957 | -4021 | | | 2297 | 864 | SLV 4 | 0.21 | No |
| ini. | 2 | 0 | -135305 | 3467 | | | 2297 | 864 | SLV 5 | 0.25 | No |
| fin. | 2 | 0 | 119301 | 2873 | | | 2297 | 864 | SLV 5 | 0.3 | No |
| ini. | 2 | 0 | -135305 | 3467 | | | 2297 | 864 | SLV 6 | 0.25 | No |
| fin. | 2 | 0 | 119301 | 2873 | | | 2297 | 864 | SLV 6 | 0.3 | No |
| ini. | 2 | 0 | -187787 | 4741 | | | 2297 | 864 | SLV 9 | 0.18 | No |
| fin. | 2 | 0 | 174479 | 4133 | | | 2297 | 864 | SLV 9 | 0.21 | No |
| ini. | 2 | 0 | 153810 | -3714 | | | 2297 | 864 | SLV 12 | 0.23 | No |
| fin. | 2 | 0 | -160729 | -4211 | | | 2297 | 864 | SLV 12 | 0.21 | No |
| ini. | 2 | 0 | 206291 | -4989 | | | 2297 | 864 | SLV 8 | 0.17 | No |
| fin. | 2 | 0 | -215907 | -5471 | | | 2297 | 864 | SLV 8 | 0.16 | No |
| ini. | 2 | 0 | -187787 | 4741 | | | 2297 | 864 | SLV 10 | 0.18 | No |
| fin. | 2 | 0 | 174479 | 4133 | | | 2297 | 864 | SLV 10 | 0.21 | No |
| ini. | 2 | 0 | 206291 | -4989 | | | 2297 | 864 | SLV 7 | 0.17 | No |
| fin. | 2 | 0 | -215907 | -5471 | | | 2297 | 864 | SLV 7 | 0.16 | No |
| ini. | 2 | 0 | 147961 | -3516 | | | 2297 | 864 | SLV 3 | 0.25 | No |
| fin. | 2 | 0 | -162957 | -4021 | | | 2297 | 864 | SLV 3 | 0.21 | No |
| ini. | 2 | 0 | 153810 | -3714 | | | 2297 | 864 | SLV 11 | 0.23 | No |
| fin. | 2 | 0 | -160729 | -4211 | | | 2297 | 864 | SLV 11 | 0.21 | No |

### Tabella dei coefficienti di sicurezza minimi

| Stato limite | Coeff.s. | Comb. | Verifica |
|---|---|---|---|
| PF_SLV | 0.985 | SLV 7 | No |
| V_SLV | 0.158 | SLV 7 | No |
| PF_SLU | 2.951 | SLU 41 | Si |
| V_SLU | 0.331 | SLU 39 | No |

## Trave di accoppiamento 107

Verifiche condotte secondo D.M. 17-01-18 (N.T.C.)

### Dati geometrici

| X ini. | Y ini. | Z ini.inf. | Z ini.sup. | H ini. | X fin. | Y fin. | Z fin.inf. | Z fin.sup | H fin. | Luce | Spessore | R. Trazione |
|---|---|---|---|---|---|---|---|---|---|---|---|---|
| -2181.3 | 595.1 | 896 | 986 | 90 | -2271.3 | 595.1 | 896 | 986 | 90 | 90 | 28 | 3500 |

### Caratteristiche del materiale

(Circolare 7 21-01-19 C8.5.I) Muratura in mattoni pieni e malta di calce LC2_Corti

| fb_ | fhk | fvk0 | fhmedio | τ0 | fv0 | μ | ϕ | fvk,lim | E | G | FC |
|---|---|---|---|---|---|---|---|---|---|---|---|
| 12 | | | 17.25 | 0.9 | 2 | 0.577 | 0.767 | 0.65 | 32000 | 12800 | 1.2 |

### Verifiche a pressoflessione delle travi in muratura in combinazioni non sismiche

| Sezione | γM | N | M | Mu | Comb. | c.s. | Verifica |
|---|---|---|---|---|---|---|---|
| ini. | 3 | -379 | 12925 | 103792 | SLU 61 | 8.03 | Si |
| fin. | 3 | 14 | 4140 | 103792 | SLU 61 | 25.07 | Si |
| ini. | 3 | -280 | 10725 | 103792 | SLU 39 | 9.68 | Si |
| fin. | 3 | 55 | 3573 | 103792 | SLU 39 | 29.05 | Si |
| ini. | 3 | -370 | 12687 | 103792 | SLU 60 | 8.18 | Si |
| fin. | 3 | 5 | 4360 | 103792 | SLU 60 | 23.8 | Si |
| ini. | 3 | -349 | 13061 | 103792 | SLU 82 | 7.95 | Si |
| fin. | 3 | 49 | 4167 | 103792 | SLU 82 | 24.91 | Si |
| ini. | 3 | -310 | 10588 | 103792 | SLU 18 | 9.8 | Si |
| fin. | 3 | 20 | 3546 | 103792 | SLU 18 | 29.27 | Si |
| ini. | 3 | -318 | 10827 | 103792 | SLU 19 | 9.59 | Si |
| fin. | 3 | 29 | 3325 | 103792 | SLU 19 | 31.21 | Si |
| ini. | 3 | -289 | 10963 | 103792 | SLU 40 | 9.47 | Si |
| fin. | 3 | 64 | 3353 | 103792 | SLU 40 | 30.96 | Si |
| ini. | 3 | -340 | 12823 | 103792 | SLU 81 | 8.09 | Si |
| fin. | 3 | 40 | 4387 | 103792 | SLU 81 | 23.66 | Si |
| ini. | 3 | -313 | 12189 | 103792 | SLU 73 | 8.52 | Si |

| Sezione | γM | N | M | Mu | Comb. | c.s. | Verifica |
|---|---|---|---|---|---|---|---|
| fin. | 3 | 46 | 3780 | 103792 | SLU 73 | 27.46 | Si |
| ini. | 3 | -342 | 12053 | 103792 | SLU 52 | 8.61 | Si |
| fin. | 3 | 11 | 3753 | 103792 | SLU 52 | 27.66 | Si |

### Verifiche a taglio delle travi in muratura secondo §C8.7.1.3.1 in combinazioni non sismiche

| Sezione | γM | N | M | V | Vt | Vp | Vt fess. diag. | Vt,lim | Comb. | c.s. | Verifica |
|---|---|---|---|---|---|---|---|---|---|---|---|
| ini. | 3 | 0 | 451 | -551 | | | 970 | 365 | SLU 51 | 0.66 | No |
| fin. | 3 | 0 | 1777 | 1132 | | | 970 | 365 | SLU 51 | 0.32 | No |
| ini. | 3 | 0 | 1596 | -626 | | | 970 | 365 | SLU 49 | 0.58 | No |
| fin. | 3 | 0 | 1898 | 1140 | | | 970 | 365 | SLU 49 | 0.32 | No |
| ini. | 3 | 0 | 2755 | -661 | | | 970 | 365 | SLU 79 | 0.55 | No |
| fin. | 3 | 0 | 2584 | 1139 | | | 970 | 365 | SLU 79 | 0.32 | No |
| ini. | 3 | 0 | 1358 | -628 | | | 970 | 365 | SLU 48 | 0.58 | No |
| fin. | 3 | 0 | 2119 | 1178 | | | 970 | 365 | SLU 48 | 0.31 | No |
| ini. | 3 | 0 | 3900 | -736 | | | 970 | 365 | SLU 77 | 0.5 | No |
| fin. | 3 | 0 | 2706 | 1146 | | | 970 | 365 | SLU 77 | 0.32 | No |
| ini. | 3 | 0 | 213 | -552 | | | 970 | 365 | SLU 50 | 0.66 | No |
| fin. | 3 | 0 | 1997 | 1171 | | | 970 | 365 | SLU 50 | 0.31 | No |
| ini. | 3 | 0 | 1494 | -643 | | | 970 | 365 | SLU 69 | 0.57 | No |
| fin. | 3 | 0 | 2146 | 1204 | | | 970 | 365 | SLU 69 | 0.3 | No |
| ini. | 3 | 0 | 1733 | -642 | | | 970 | 365 | SLU 70 | 0.57 | No |
| fin. | 3 | 0 | 1926 | 1165 | | | 970 | 365 | SLU 70 | 0.31 | No |
| ini. | 3 | 0 | 587 | -567 | | | 970 | 365 | SLU 72 | 0.64 | No |
| fin. | 3 | 0 | 1804 | 1157 | | | 970 | 365 | SLU 72 | 0.32 | No |
| ini. | 3 | 0 | 349 | -568 | | | 970 | 365 | SLU 71 | 0.64 | No |
| fin. | 3 | 0 | 2024 | 1196 | | | 970 | 365 | SLU 71 | 0.31 | No |

### Verifiche a pressoflessione delle travi in muratura in combinazioni sismiche

| Sezione | γM | N | M | Mu | Comb. | c.s. | Verifica |
|---|---|---|---|---|---|---|---|
| ini. | 2 | 1169 | -75470 | 121694 | SLV 14 | 1.61 | Si |
| fin. | 2 | -3958 | 84952 | 121694 | SLV 14 | 1.43 | Si |
| ini. | 2 | -1545 | 91226 | 121694 | SLV 4 | 1.33 | Si |
| fin. | 2 | 3971 | -79125 | 121694 | SLV 4 | 1.54 | Si |
| ini. | 2 | -1421 | 79353 | 121694 | SLV 1 | 1.53 | Si |
| fin. | 2 | 3137 | -64340 | 121694 | SLV 1 | 1.89 | Si |
| ini. | 2 | -1421 | 79353 | 121694 | SLV 2 | 1.53 | Si |
| fin. | 2 | 3137 | -64340 | 121694 | SLV 2 | 1.89 | Si |
| ini. | 2 | 1046 | -63598 | 121694 | SLV 15 | 1.91 | Si |
| fin. | 2 | -3124 | 70167 | 121694 | SLV 15 | 1.73 | Si |
| ini. | 2 | -782 | 50888 | 121694 | SLV 7 | 2.39 | Si |
| fin. | 2 | 2460 | -44122 | 121694 | SLV 7 | 2.76 | Si |
| ini. | 2 | -1545 | 91226 | 121694 | SLV 3 | 1.33 | Si |
| fin. | 2 | 3971 | -79125 | 121694 | SLV 3 | 1.54 | Si |
| ini. | 2 | 1046 | -63598 | 121694 | SLV 16 | 1.91 | Si |
| fin. | 2 | -3124 | 70167 | 121694 | SLV 16 | 1.73 | Si |
| ini. | 2 | -782 | 50888 | 121694 | SLV 8 | 2.39 | Si |
| fin. | 2 | 2460 | -44122 | 121694 | SLV 8 | 2.76 | Si |
| ini. | 2 | 1169 | -75470 | 121694 | SLV 13 | 1.61 | Si |
| fin. | 2 | -3958 | 84952 | 121694 | SLV 13 | 1.43 | Si |

### Verifiche a taglio delle travi in muratura secondo §C8.7.1.3.1 in combinazioni sismiche

| Sezione | γM | N | M | V | Vt | Vp | Vt fess. diag. | Vt,lim | Comb. | c.s. | Verifica |
|---|---|---|---|---|---|---|---|---|---|---|---|
| ini. | 2 | 0 | 79353 | -4409 | | | 1456 | 548 | SLV 2 | 0.12 | No |
| fin. | 2 | 0 | -64340 | -3329 | | | 1456 | 548 | SLV 2 | 0.16 | No |
| ini. | 2 | 0 | 91226 | -5177 | | | 1456 | 548 | SLV 4 | 0.11 | No |
| fin. | 2 | 0 | -79125 | -3582 | | | 1456 | 548 | SLV 4 | 0.15 | No |
| ini. | 2 | 0 | -75470 | 3688 | | | 1456 | 548 | SLV 14 | 0.15 | No |
| fin. | 2 | 0 | 84952 | 4994 | | | 1456 | 548 | SLV 14 | 0.11 | No |
| ini. | 2 | 0 | 91226 | -5177 | | | 1456 | 548 | SLV 3 | 0.11 | No |
| fin. | 2 | 0 | -79125 | -3582 | | | 1456 | 548 | SLV 3 | 0.15 | No |
| ini. | 2 | 0 | 50888 | -3239 | | | 1456 | 548 | SLV 8 | 0.17 | No |
| fin. | 2 | 0 | -44122 | -964 | | | 1456 | 548 | SLV 8 | 0.57 | No |
| ini. | 2 | 0 | -63598 | 2920 | | | 1456 | 548 | SLV 15 | 0.19 | No |
| fin. | 2 | 0 | 70167 | 4741 | | | 1456 | 548 | SLV 15 | 0.12 | No |
| ini. | 2 | 0 | 79353 | -4409 | | | 1456 | 548 | SLV 1 | 0.12 | No |
| fin. | 2 | 0 | -64340 | -3329 | | | 1456 | 548 | SLV 1 | 0.16 | No |
| ini. | 2 | 0 | 50888 | -3239 | | | 1456 | 548 | SLV 7 | 0.17 | No |
| fin. | 2 | 0 | -44122 | -964 | | | 1456 | 548 | SLV 7 | 0.57 | No |
| ini. | 2 | 0 | -75470 | 3688 | | | 1456 | 548 | SLV 13 | 0.15 | No |
| fin. | 2 | 0 | 84952 | 4994 | | | 1456 | 548 | SLV 13 | 0.11 | No |
| ini. | 2 | 0 | -63598 | 2920 | | | 1456 | 548 | SLV 16 | 0.19 | No |
| fin. | 2 | 0 | 70167 | 4741 | | | 1456 | 548 | SLV 16 | 0.12 | No |

### Tabella dei coefficienti di sicurezza minimi

| Stato limite | Coeff.s. | Comb. | Verifica |
|---|---|---|---|
| PF_SLV | 1.334 | SLV 3 | Si |
| V_SLV | 0.106 | SLV 3 | No |
| PF_SLU | 7.946 | SLU 82 | Si |
| V_SLU | 0.303 | SLU 69 | No |

## Trave di accoppiamento 108

Verifiche condotte secondo D.M. 17-01-18 (N.T.C.)

## Dati geometrici

| X ini. | Y ini. | Z ini.inf. | Z ini.sup. | H ini. | X fin. | Y fin. | Z fin.inf. | Z fin.sup | H fin. | Luce | Spessore | R. Trazione |
|---|---|---|---|---|---|---|---|---|---|---|---|---|
| -2181.3 | 595.1 | 1166 | 1248 | 82 | -2271.3 | 595.1 | 1166 | 1248 | 82 | 90 | 28 | 3500 |

## Caratteristiche del materiale

(Circolare 7 21-01-19 C8.5.I) Muratura in mattoni pieni e malta di calce LC2_Corti

| fb_ | fhk | fvk0 | fhmedio | τ0 | fv0 | μ | ϕ | fvk,lim | E | G | FC |
|---|---|---|---|---|---|---|---|---|---|---|---|
| 12 | | | 17.25 | 0.9 | 2 | 0.577 | 0.767 | 0.65 | 32000 | 12800 | 1.2 |

## Verifiche a pressoflessione delle travi in muratura in combinazioni non sismiche

| Sezione | γM | N | M | Mu | Comb. | c.s. | Verifica |
|---|---|---|---|---|---|---|---|
| ini. | 3 | 463 | 2797 | 89792 | SLU 84 | 32.1 | Si |
| fin. | 3 | -116 | -11083 | 89792 | SLU 84 | 8.1 | Si |
| ini. | 3 | 108 | 1332 | 89792 | SLU 60 | 67.39 | Si |
| fin. | 3 | -301 | -10822 | 89792 | SLU 60 | 8.3 | Si |
| ini. | 3 | 161 | 1839 | 89792 | SLU 40 | 48.83 | Si |
| fin. | 3 | -298 | -10784 | 89792 | SLU 40 | 8.33 | Si |
| ini. | 3 | 114 | 1563 | 89792 | SLU 61 | 57.46 | Si |
| fin. | 3 | -318 | -11093 | 89792 | SLU 61 | 8.09 | Si |
| ini. | 3 | 456 | 2415 | 89792 | SLU 74 | 37.19 | Si |
| fin. | 3 | -70 | -10550 | 89792 | SLU 74 | 8.51 | Si |
| ini. | 3 | 223 | 2186 | 89792 | SLU 73 | 41.07 | Si |
| fin. | 3 | -285 | -11667 | 89792 | SLU 73 | 7.7 | Si |
| ini. | 3 | 182 | 1797 | 89792 | SLU 81 | 49.96 | Si |
| fin. | 3 | -309 | -12048 | 89792 | SLU 81 | 7.45 | Si |
| ini. | 3 | 189 | 2028 | 89792 | SLU 82 | 44.28 | Si |
| fin. | 3 | -326 | -12318 | 89792 | SLU 82 | 7.29 | Si |
| ini. | 3 | 462 | 2645 | 89792 | SLU 75 | 33.95 | Si |
| fin. | 3 | -87 | -10820 | 89792 | SLU 75 | 8.3 | Si |
| ini. | 3 | 457 | 2567 | 89792 | SLU 83 | 34.98 | Si |
| fin. | 3 | -99 | -10813 | 89792 | SLU 83 | 8.3 | Si |

## Verifiche a taglio delle travi in muratura secondo §C8.7.1.3.1 in combinazioni non sismiche

| Sezione | γM | N | M | V | Vt | Vp | Vt fess. diag. | Vt,lim | Comb. | c.s. | Verifica |
|---|---|---|---|---|---|---|---|---|---|---|---|
| ini. | 3 | 0 | 2028 | 1221 | | | 806 | 303 | SLU 82 | 0.25 | No |
| fin. | 3 | 0 | -12318 | -1670 | | | 806 | 303 | SLU 82 | 0.18 | No |
| ini. | 3 | 0 | 2956 | 955 | | | 806 | 303 | SLU 76 | 0.32 | No |
| fin. | 3 | 0 | -10432 | -1508 | | | 806 | 303 | SLU 76 | 0.2 | No |
| ini. | 3 | 0 | 2415 | 1059 | | | 806 | 303 | SLU 74 | 0.29 | No |
| fin. | 3 | 0 | -10550 | -1544 | | | 806 | 303 | SLU 74 | 0.2 | No |
| ini. | 3 | 0 | 3414 | 871 | | | 806 | 303 | SLU 78 | 0.35 | No |
| fin. | 3 | 0 | -9585 | -1485 | | | 806 | 303 | SLU 78 | 0.2 | No |
| ini. | 3 | 0 | 2567 | 1060 | | | 806 | 303 | SLU 83 | 0.29 | No |
| fin. | 3 | 0 | -10813 | -1580 | | | 806 | 303 | SLU 83 | 0.19 | No |
| ini. | 3 | 0 | 1797 | 1235 | | | 806 | 303 | SLU 81 | 0.25 | No |
| fin. | 3 | 0 | -12048 | -1655 | | | 806 | 303 | SLU 81 | 0.18 | No |
| ini. | 3 | 0 | 2797 | 1046 | | | 806 | 303 | SLU 84 | 0.29 | No |
| fin. | 3 | 0 | -11083 | -1595 | | | 806 | 303 | SLU 84 | 0.19 | No |
| ini. | 3 | 0 | 1563 | 1131 | | | 806 | 303 | SLU 61 | 0.27 | No |
| fin. | 3 | 0 | -11093 | -1496 | | | 806 | 303 | SLU 61 | 0.2 | No |
| ini. | 3 | 0 | 2645 | 1045 | | | 806 | 303 | SLU 75 | 0.29 | No |
| fin. | 3 | 0 | -10820 | -1559 | | | 806 | 303 | SLU 75 | 0.19 | No |
| ini. | 3 | 0 | 2186 | 1129 | | | 806 | 303 | SLU 73 | 0.27 | No |
| fin. | 3 | 0 | -11667 | -1583 | | | 806 | 303 | SLU 73 | 0.19 | No |

## Verifiche a pressoflessione delle travi in muratura in combinazioni sismiche

| Sezione | γM | N | M | Mu | Comb. | c.s. | Verifica |
|---|---|---|---|---|---|---|---|
| ini. | 2 | -2069 | -55264 | 107694 | SLV 15 | 1.95 | Si |
| fin. | 2 | 1457 | 50239 | 107694 | SLV 15 | 2.14 | Si |
| ini. | 2 | -2728 | -70286 | 107694 | SLV 13 | 1.53 | Si |
| fin. | 2 | 1857 | 63971 | 107694 | SLV 13 | 1.68 | Si |
| ini. | 2 | -2728 | -70286 | 107694 | SLV 14 | 1.53 | Si |
| fin. | 2 | 1857 | 63971 | 107694 | SLV 14 | 1.68 | Si |
| ini. | 2 | 2053 | 45547 | 107694 | SLV 7 | 2.36 | Si |
| fin. | 2 | -1341 | -49664 | 107694 | SLV 7 | 2.17 | Si |
| ini. | 2 | 2430 | 57845 | 107694 | SLV 2 | 1.86 | Si |
| fin. | 2 | -1730 | -65080 | 107694 | SLV 2 | 1.65 | Si |
| ini. | 2 | -2069 | -55264 | 107694 | SLV 16 | 1.95 | Si |
| fin. | 2 | 1457 | 50239 | 107694 | SLV 16 | 2.14 | Si |
| ini. | 2 | 3089 | 72867 | 107694 | SLV 3 | 1.48 | Si |
| fin. | 2 | -2130 | -78812 | 107694 | SLV 3 | 1.37 | Si |
| ini. | 2 | 2430 | 57845 | 107694 | SLV 1 | 1.86 | Si |
| fin. | 2 | -1730 | -65080 | 107694 | SLV 1 | 1.65 | Si |
| ini. | 2 | 3089 | 72867 | 107694 | SLV 4 | 1.48 | Si |
| fin. | 2 | -2130 | -78812 | 107694 | SLV 4 | 1.37 | Si |
| ini. | 2 | 2053 | 45547 | 107694 | SLV 8 | 2.36 | Si |
| fin. | 2 | -1341 | -49664 | 107694 | SLV 8 | 2.17 | Si |

## Verifiche a taglio delle travi in muratura secondo §C8.7.1.3.1 in combinazioni sismiche

| Sezione | γM | N | M | V | Vt | Vp | Vt fess. diag. | Vt,lim | Comb. | c.s. | Verifica |
|---|---|---|---|---|---|---|---|---|---|---|---|
| ini. | 2 | 0 | -55264 | 4130 | | | 1208 | 455 | SLV 16 | 0.11 | No |
| fin. | 2 | 0 | 50239 | 1942 | | | 1208 | 455 | SLV 16 | 0.23 | No |
| ini. | 2 | 0 | -70286 | 4930 | | | 1208 | 455 | SLV 14 | 0.09 | No |
| fin. | 2 | 0 | 63971 | 2785 | | | 1208 | 455 | SLV 14 | 0.16 | No |
| ini. | 2 | 0 | 57845 | -2583 | | | 1208 | 455 | SLV 2 | 0.18 | No |
| fin. | 2 | 0 | -65080 | -4042 | | | 1208 | 455 | SLV 2 | 0.11 | No |
| ini. | 2 | 0 | 57845 | -2583 | | | 1208 | 455 | SLV 1 | 0.18 | No |

| Sezione | γM | N | M | V | Vt | Vp | Vt fess. diag. | Vt,lim | Comb. | c.s. | Verifica |
|---|---|---|---|---|---|---|---|---|---|---|---|
| fin. | 2 | 0 | -65080 | -4042 | | | 1208 | 455 | SLV 1 | 0.11 | No |
| ini. | 2 | 0 | -70286 | 4930 | | | 1208 | 455 | SLV 13 | 0.09 | No |
| fin. | 2 | 0 | 63971 | 2785 | | | 1208 | 455 | SLV 13 | 0.16 | No |
| ini. | 2 | 0 | 72867 | -3383 | | | 1208 | 455 | SLV 3 | 0.13 | No |
| fin. | 2 | 0 | -78812 | -4886 | | | 1208 | 455 | SLV 3 | 0.09 | No |
| ini. | 2 | 0 | 45547 | -1686 | | | 1208 | 455 | SLV 7 | 0.27 | No |
| fin. | 2 | 0 | -49664 | -3480 | | | 1208 | 455 | SLV 7 | 0.13 | No |
| ini. | 2 | 0 | 45547 | -1686 | | | 1208 | 455 | SLV 8 | 0.27 | No |
| fin. | 2 | 0 | -49664 | -3480 | | | 1208 | 455 | SLV 8 | 0.13 | No |
| ini. | 2 | 0 | 72867 | -3383 | | | 1208 | 455 | SLV 4 | 0.13 | No |
| fin. | 2 | 0 | -78812 | -4886 | | | 1208 | 455 | SLV 4 | 0.09 | No |
| ini. | 2 | 0 | -55264 | 4130 | | | 1208 | 455 | SLV 15 | 0.11 | No |
| fin. | 2 | 0 | 50239 | 1942 | | | 1208 | 455 | SLV 15 | 0.23 | No |

### Tabella dei coefficienti di sicurezza minimi

| Stato limite | Coeff.s. | Comb. | Verifica |
|---|---|---|---|
| PF_SLV | 1.366 | SLV 3 | Si |
| V_SLV | 0.092 | SLV 13 | No |
| PF_SLU | 7.289 | SLU 82 | Si |
| V_SLU | 0.182 | SLU 82 | No |

## Trave di accoppiamento 109

Verifiche condotte secondo D.M. 17-01-18 (N.T.C.)

### Dati geometrici

| X ini. | Y ini. | Z ini.inf. | Z ini.sup. | H ini. | X fin. | Y fin. | Z fin.inf. | Z fin.sup | H fin. | Luce | Spessore | R. Trazione |
|---|---|---|---|---|---|---|---|---|---|---|---|---|
| -2159.3 | -335.9 | 896 | 986 | 90 | -2249.3 | -335.9 | 896 | 986 | 90 | 90 | 28 | 3500 |

### Caratteristiche del materiale

(Circolare 7 21-01-19 C8.5.I) Muratura in mattoni pieni e malta di calce LC2_Corti

| fb_ | fhk | fvk0 | fhmedio | τ0 | fv0 | μ | ϕ | fvk,lim | E | G | FC |
|---|---|---|---|---|---|---|---|---|---|---|---|
| 12 | | | 17.25 | 0.9 | 2 | 0.577 | 0.767 | 0.65 | 32000 | 12800 | 1.2 |

### Verifiche a pressoflessione delle travi in muratura in combinazioni non sismiche

| Sezione | γM | N | M | Mu | Comb. | c.s. | Verifica |
|---|---|---|---|---|---|---|---|
| ini. | 3 | -1383 | 34286 | 103792 | SLU 75 | 3.03 | Si |
| fin. | 3 | -264 | -3625 | 103792 | SLU 75 | 28.64 | Si |
| ini. | 3 | -1298 | 34230 | 103792 | SLU 38 | 3.03 | Si |
| fin. | 3 | -183 | -5661 | 103792 | SLU 38 | 18.34 | Si |
| ini. | 3 | -1447 | 34356 | 103792 | SLU 72 | 3.02 | Si |
| fin. | 3 | -342 | -3142 | 103792 | SLU 72 | 33.03 | Si |
| ini. | 3 | -1279 | 34360 | 103792 | SLU 36 | 3.02 | Si |
| fin. | 3 | -160 | -5827 | 103792 | SLU 36 | 17.81 | Si |
| ini. | 3 | -1493 | 37224 | 103792 | SLU 76 | 2.79 | Si |
| fin. | 3 | -272 | -5366 | 103792 | SLU 76 | 19.34 | Si |
| ini. | 3 | -1429 | 34486 | 103792 | SLU 70 | 3.01 | Si |
| fin. | 3 | -318 | -3309 | 103792 | SLU 70 | 31.37 | Si |
| ini. | 3 | -1424 | 35397 | 103792 | SLU 84 | 2.93 | Si |
| fin. | 3 | -267 | -3973 | 103792 | SLU 84 | 26.12 | Si |
| ini. | 3 | -1440 | 34327 | 103792 | SLU 68 | 3.02 | Si |
| fin. | 3 | -321 | -4163 | 103792 | SLU 68 | 24.93 | Si |
| ini. | 3 | -1482 | 37384 | 103792 | SLU 78 | 2.78 | Si |
| fin. | 3 | -269 | -4511 | 103792 | SLU 78 | 23.01 | Si |
| ini. | 3 | -1500 | 37253 | 103792 | SLU 80 | 2.79 | Si |
| fin. | 3 | -293 | -4345 | 103792 | SLU 80 | 23.89 | Si |

### Verifiche a taglio delle travi in muratura secondo §C8.7.1.3.1 in combinazioni non sismiche

| Sezione | γM | N | M | V | Vt | Vp | Vt fess. diag. | Vt,lim | Comb. | c.s. | Verifica |
|---|---|---|---|---|---|---|---|---|---|---|---|
| ini. | 3 | 0 | 35397 | -1487 | | | 970 | 365 | SLU 84 | 0.25 | No |
| fin. | 3 | 0 | -3973 | 32 | | | 970 | 365 | SLU 84 | 11.52 | Si |
| ini. | 3 | 0 | 34286 | -1463 | | | 970 | 365 | SLU 75 | 0.25 | No |
| fin. | 3 | 0 | -3625 | 85 | | | 970 | 365 | SLU 75 | 4.31 | Si |
| ini. | 3 | 0 | 37384 | -1577 | | | 970 | 365 | SLU 78 | 0.23 | No |
| fin. | 3 | 0 | -4511 | 38 | | | 970 | 365 | SLU 78 | 9.58 | Si |
| ini. | 3 | 0 | 37253 | -1555 | | | 970 | 365 | SLU 80 | 0.23 | No |
| fin. | 3 | 0 | -4345 | 19 | | | 970 | 365 | SLU 80 | 19.37 | Si |
| ini. | 3 | 0 | 34126 | -1430 | | | 970 | 365 | SLU 73 | 0.26 | No |
| fin. | 3 | 0 | -4479 | -2 | | | 970 | 365 | SLU 73 | 196.75 | Si |
| ini. | 3 | 0 | 34327 | -1438 | | | 970 | 365 | SLU 68 | 0.25 | No |
| fin. | 3 | 0 | -4163 | 30 | | | 970 | 365 | SLU 68 | 12.03 | Si |
| ini. | 3 | 0 | 34356 | -1449 | | | 970 | 365 | SLU 72 | 0.25 | No |
| fin. | 3 | 0 | -3142 | 98 | | | 970 | 365 | SLU 72 | 3.74 | Si |
| ini. | 3 | 0 | 32780 | -1423 | | | 970 | 365 | SLU 77 | 0.26 | No |
| fin. | 3 | 0 | -1649 | 209 | | | 970 | 365 | SLU 77 | 1.75 | Si |
| ini. | 3 | 0 | 37224 | -1544 | | | 970 | 365 | SLU 76 | 0.24 | No |
| fin. | 3 | 0 | -5366 | -48 | | | 970 | 365 | SLU 76 | 7.53 | Si |
| ini. | 3 | 0 | 34486 | -1471 | | | 970 | 365 | SLU 70 | 0.25 | No |
| fin. | 3 | 0 | -3309 | 117 | | | 970 | 365 | SLU 70 | 3.12 | Si |

### Verifiche a pressoflessione delle travi in muratura in combinazioni sismiche

| Sezione | γM | N | M | Mu | Comb. | c.s. | Verifica |
|---|---|---|---|---|---|---|---|
| ini. | 2 | -2367 | 104970 | 121694 | SLV 6 | 1.16 | Si |
| fin. | 2 | 1137 | -40540 | 121694 | SLV 6 | 3 | Si |

| Sezione | γM | N | M | Mu | Comb. | c.s. | Verifica |
|---|---|---|---|---|---|---|---|
| ini. | 2 | 1750 | -132847 | 121694 | SLV 14 | 0.92 | No |
| fin. | 2 | -2796 | 87241 | 121694 | SLV 14 | 1.39 | Si |
| ini. | 2 | -3443 | 168599 | 121694 | SLV 4 | 0.72 | No |
| fin. | 2 | 2252 | -84768 | 121694 | SLV 4 | 1.44 | Si |
| ini. | 2 | 2158 | -155898 | 121694 | SLV 16 | 0.78 | No |
| fin. | 2 | -3155 | 96035 | 121694 | SLV 16 | 1.27 | Si |
| ini. | 2 | -2367 | 104970 | 121694 | SLV 5 | 1.16 | Si |
| fin. | 2 | 1137 | -40540 | 121694 | SLV 5 | 3 | Si |
| ini. | 2 | -3851 | 191650 | 121694 | SLV 1 | 0.63 | No |
| fin. | 2 | 2610 | -93561 | 121694 | SLV 1 | 1.3 | Si |
| ini. | 2 | -3443 | 168599 | 121694 | SLV 3 | 0.72 | No |
| fin. | 2 | 2252 | -84768 | 121694 | SLV 3 | 1.44 | Si |
| ini. | 2 | 2158 | -155898 | 121694 | SLV 15 | 0.78 | No |
| fin. | 2 | -3155 | 96035 | 121694 | SLV 15 | 1.27 | Si |
| ini. | 2 | -3851 | 191650 | 121694 | SLV 2 | 0.63 | No |
| fin. | 2 | 2610 | -93561 | 121694 | SLV 2 | 1.3 | Si |
| ini. | 2 | 1750 | -132847 | 121694 | SLV 13 | 0.92 | No |
| fin. | 2 | -2796 | 87241 | 121694 | SLV 13 | 1.39 | Si |

### Verifiche a taglio delle travi in muratura secondo §C8.7.1.3.1 in combinazioni sismiche

| Sezione | γM | N | M | V | Vt | Vp | Vt fess. diag. | Vt,lim | Comb. | c.s. | Verifica |
|---|---|---|---|---|---|---|---|---|---|---|---|
| ini. | 2 | 0 | 168599 | -6094 | | | 1456 | 548 | SLV 4 | 0.09 | No |
| fin. | 2 | 0 | -84768 | -5061 | | | 1456 | 548 | SLV 4 | 0.11 | No |
| ini. | 2 | 0 | 191650 | -6903 | | | 1456 | 548 | SLV 1 | 0.08 | No |
| fin. | 2 | 0 | -93561 | -5110 | | | 1456 | 548 | SLV 1 | 0.11 | No |
| ini. | 2 | 0 | -132847 | 4471 | | | 1456 | 548 | SLV 14 | 0.12 | No |
| fin. | 2 | 0 | 87241 | 5619 | | | 1456 | 548 | SLV 14 | 0.1 | No |
| ini. | 2 | 0 | 168599 | -6094 | | | 1456 | 548 | SLV 3 | 0.09 | No |
| fin. | 2 | 0 | -84768 | -5061 | | | 1456 | 548 | SLV 3 | 0.11 | No |
| ini. | 2 | 0 | 104970 | -3865 | | | 1456 | 548 | SLV 6 | 0.14 | No |
| fin. | 2 | 0 | -40540 | -1413 | | | 1456 | 548 | SLV 6 | 0.39 | No |
| ini. | 2 | 0 | -132847 | 4471 | | | 1456 | 548 | SLV 13 | 0.12 | No |
| fin. | 2 | 0 | 87241 | 5619 | | | 1456 | 548 | SLV 13 | 0.1 | No |
| ini. | 2 | 0 | 191650 | -6903 | | | 1456 | 548 | SLV 2 | 0.08 | No |
| fin. | 2 | 0 | -93561 | -5110 | | | 1456 | 548 | SLV 2 | 0.11 | No |
| ini. | 2 | 0 | 104970 | -3865 | | | 1456 | 548 | SLV 5 | 0.14 | No |
| fin. | 2 | 0 | -40540 | -1413 | | | 1456 | 548 | SLV 5 | 0.39 | No |
| ini. | 2 | 0 | -155898 | 5280 | | | 1456 | 548 | SLV 15 | 0.1 | No |
| fin. | 2 | 0 | 96035 | 5668 | | | 1456 | 548 | SLV 15 | 0.1 | No |
| ini. | 2 | 0 | -155898 | 5280 | | | 1456 | 548 | SLV 16 | 0.1 | No |
| fin. | 2 | 0 | 96035 | 5668 | | | 1456 | 548 | SLV 16 | 0.1 | No |

### Tabella dei coefficienti di sicurezza minimi

| Stato limite | Coeff.s. | Comb. | Verifica |
|---|---|---|---|
| PF_SLV | 0.635 | SLV 1 | No |
| V_SLV | 0.079 | SLV 1 | No |
| PF_SLU | 2.776 | SLU 78 | Si |
| V_SLU | 0.232 | SLU 78 | No |

## Trave di accoppiamento 110

Verifiche condotte secondo D.M. 17-01-18 (N.T.C.)

### Dati geometrici

| X ini. | Y ini. | Z ini.inf. | Z ini.sup. | H ini. | X fin. | Y fin. | Z fin.inf. | Z fin.sup | H fin. | Luce | Spessore | R. Trazione |
|---|---|---|---|---|---|---|---|---|---|---|---|---|
| -2159.3 | -335.9 | 1166 | 1248 | 82 | -2249.3 | -335.9 | 1166 | 1248 | 82 | 90 | 28 | 3500 |

### Caratteristiche del materiale

(Circolare 7 21-01-19 C8.5.I) Muratura in mattoni pieni e malta di calce LC2_Corti

| fb_ | fhk | fvk0 | fhmedio | τ0 | fv0 | μ | ϕ | fvk,lim | E | G | FC |
|---|---|---|---|---|---|---|---|---|---|---|---|
| 12 | | | 17.25 | 0.9 | 2 | 0.577 | 0.767 | 0.65 | 32000 | 12800 | 1.2 |

### Verifiche a pressoflessione delle travi in muratura in combinazioni non sismiche

| Sezione | γM | N | M | Mu | Comb. | c.s. | Verifica |
|---|---|---|---|---|---|---|---|
| ini. | 3 | -351 | 9200 | 89792 | SLU 80 | 9.76 | Si |
| fin. | 3 | -1082 | -23397 | 89792 | SLU 80 | 3.84 | Si |
| ini. | 3 | -362 | 6951 | 89792 | SLU 75 | 12.92 | Si |
| fin. | 3 | -987 | -21876 | 89792 | SLU 75 | 4.1 | Si |
| ini. | 3 | -358 | 5794 | 89792 | SLU 77 | 15.5 | Si |
| fin. | 3 | -965 | -21307 | 89792 | SLU 77 | 4.21 | Si |
| ini. | 3 | -271 | 11133 | 89792 | SLU 34 | 8.07 | Si |
| fin. | 3 | -1008 | -21612 | 89792 | SLU 34 | 4.15 | Si |
| ini. | 3 | -332 | 9337 | 89792 | SLU 78 | 9.62 | Si |
| fin. | 3 | -1067 | -23681 | 89792 | SLU 78 | 3.79 | Si |
| ini. | 3 | -395 | 7607 | 89792 | SLU 84 | 11.8 | Si |
| fin. | 3 | -1069 | -22753 | 89792 | SLU 84 | 3.95 | Si |
| ini. | 3 | -392 | 6790 | 89792 | SLU 73 | 13.22 | Si |
| fin. | 3 | -990 | -21369 | 89792 | SLU 73 | 4.2 | Si |
| ini. | 3 | -363 | 9176 | 89792 | SLU 76 | 9.79 | Si |
| fin. | 3 | -1070 | -23174 | 89792 | SLU 76 | 3.87 | Si |
| ini. | 3 | -259 | 11157 | 89792 | SLU 38 | 8.05 | Si |
| fin. | 3 | -1020 | -21835 | 89792 | SLU 38 | 4.11 | Si |
| ini. | 3 | -241 | 11294 | 89792 | SLU 36 | 7.95 | Si |
| fin. | 3 | -1005 | -22119 | 89792 | SLU 36 | 4.06 | Si |

Verifiche a taglio delle travi in muratura secondo §C8.7.1.3.1 in combinazioni non sismiche

| Sezione | γM | N | M | V | Vt | Vp | Vt fess. diag. | Vt,lim | Comb. | c.s. | Verifica |
|---|---|---|---|---|---|---|---|---|---|---|---|
| ini. | 3 | 0 | 9200 | 140 | | | 806 | 303 | SLU 80 | 2.17 | Si |
| fin. | 3 | 0 | -23397 | -1872 | | | 806 | 303 | SLU 80 | 0.16 | No |
| ini. | 3 | 0 | 7607 | 251 | | | 806 | 303 | SLU 84 | 1.21 | Si |
| fin. | 3 | 0 | -22753 | -1919 | | | 806 | 303 | SLU 84 | 0.16 | No |
| ini. | 3 | 0 | 9337 | 162 | | | 806 | 303 | SLU 78 | 1.87 | Si |
| fin. | 3 | 0 | -23681 | -1925 | | | 806 | 303 | SLU 78 | 0.16 | No |
| ini. | 3 | 0 | 11294 | 13 | | | 806 | 303 | SLU 36 | 23.7 | Si |
| fin. | 3 | 0 | -22119 | -1764 | | | 806 | 303 | SLU 36 | 0.17 | No |
| ini. | 3 | 0 | 6951 | 273 | | | 806 | 303 | SLU 75 | 1.11 | Si |
| fin. | 3 | 0 | -21876 | -1856 | | | 806 | 303 | SLU 75 | 0.16 | No |
| ini. | 3 | 0 | 4064 | 383 | | | 806 | 303 | SLU 83 | 0.79 | No |
| fin. | 3 | 0 | -20380 | -1807 | | | 806 | 303 | SLU 83 | 0.17 | No |
| ini. | 3 | 0 | 5794 | 294 | | | 806 | 303 | SLU 77 | 1.03 | Si |
| fin. | 3 | 0 | -21307 | -1813 | | | 806 | 303 | SLU 77 | 0.17 | No |
| ini. | 3 | 0 | 9176 | 163 | | | 806 | 303 | SLU 76 | 1.86 | Si |
| fin. | 3 | 0 | -23174 | -1878 | | | 806 | 303 | SLU 76 | 0.16 | No |
| ini. | 3 | 0 | 6790 | 274 | | | 806 | 303 | SLU 73 | 1.11 | Si |
| fin. | 3 | 0 | -21369 | -1809 | | | 806 | 303 | SLU 73 | 0.17 | No |
| ini. | 3 | 0 | 5221 | 363 | | | 806 | 303 | SLU 82 | 0.84 | No |
| fin. | 3 | 0 | -20948 | -1850 | | | 806 | 303 | SLU 82 | 0.16 | No |

Verifiche a pressoflessione delle travi in muratura in combinazioni sismiche

| Sezione | γM | N | M | Mu | Comb. | c.s. | Verifica |
|---|---|---|---|---|---|---|---|
| ini. | 2 | -691 | -113123 | 107694 | SLV 15 | 0.95 | No |
| fin. | 2 | 2635 | 75232 | 107694 | SLV 15 | 1.43 | Si |
| ini. | 2 | -535 | -94668 | 107694 | SLV 13 | 1.14 | Si |
| fin. | 2 | 2138 | 62029 | 107694 | SLV 13 | 1.74 | Si |
| ini. | 2 | -535 | -94668 | 107694 | SLV 14 | 1.14 | Si |
| fin. | 2 | 2138 | 62029 | 107694 | SLV 14 | 1.74 | Si |
| ini. | 2 | 56 | 111154 | 107694 | SLV 1 | 0.97 | No |
| fin. | 2 | -3665 | -97771 | 107694 | SLV 1 | 1.1 | Si |
| ini. | 2 | -691 | -113123 | 107694 | SLV 16 | 0.95 | No |
| fin. | 2 | 2635 | 75232 | 107694 | SLV 16 | 1.43 | Si |
| ini. | 2 | -666 | -62617 | 107694 | SLV 12 | 1.72 | Si |
| fin. | 2 | 1183 | 34705 | 107694 | SLV 12 | 3.1 | Si |
| ini. | 2 | -100 | 92699 | 107694 | SLV 3 | 1.16 | Si |
| fin. | 2 | -3168 | -84569 | 107694 | SLV 3 | 1.27 | Si |
| ini. | 2 | 56 | 111154 | 107694 | SLV 2 | 0.97 | No |
| fin. | 2 | -3665 | -97771 | 107694 | SLV 2 | 1.1 | Si |
| ini. | 2 | -100 | 92699 | 107694 | SLV 4 | 1.16 | Si |
| fin. | 2 | -3168 | -84569 | 107694 | SLV 4 | 1.27 | Si |
| ini. | 2 | -666 | -62617 | 107694 | SLV 11 | 1.72 | Si |
| fin. | 2 | 1183 | 34705 | 107694 | SLV 11 | 3.1 | Si |

Verifiche a taglio delle travi in muratura secondo §C8.7.1.3.1 in combinazioni sismiche

| Sezione | γM | N | M | V | Vt | Vp | Vt fess. diag. | Vt,lim | Comb. | c.s. | Verifica |
|---|---|---|---|---|---|---|---|---|---|---|---|
| ini. | 2 | 0 | -113123 | 4214 | | | 1208 | 455 | SLV 16 | 0.11 | No |
| fin. | 2 | 0 | 75232 | 2811 | | | 1208 | 455 | SLV 16 | 0.16 | No |
| ini. | 2 | 0 | -113123 | 4214 | | | 1208 | 455 | SLV 15 | 0.11 | No |
| fin. | 2 | 0 | 75232 | 2811 | | | 1208 | 455 | SLV 15 | 0.16 | No |
| ini. | 2 | 0 | -94668 | 3579 | | | 1208 | 455 | SLV 13 | 0.13 | No |
| fin. | 2 | 0 | 62029 | 2163 | | | 1208 | 455 | SLV 13 | 0.21 | No |
| ini. | 2 | 0 | 111154 | -3423 | | | 1208 | 455 | SLV 1 | 0.13 | No |
| fin. | 2 | 0 | -97771 | -4911 | | | 1208 | 455 | SLV 1 | 0.09 | No |
| ini. | 2 | 0 | 92699 | -2788 | | | 1208 | 455 | SLV 4 | 0.16 | No |
| fin. | 2 | 0 | -84569 | -4263 | | | 1208 | 455 | SLV 4 | 0.11 | No |
| ini. | 2 | 0 | 60647 | -1712 | | | 1208 | 455 | SLV 6 | 0.27 | No |
| fin. | 2 | 0 | -57245 | -3191 | | | 1208 | 455 | SLV 6 | 0.14 | No |
| ini. | 2 | 0 | 92699 | -2788 | | | 1208 | 455 | SLV 3 | 0.16 | No |
| fin. | 2 | 0 | -84569 | -4263 | | | 1208 | 455 | SLV 3 | 0.11 | No |
| ini. | 2 | 0 | 111154 | -3423 | | | 1208 | 455 | SLV 2 | 0.13 | No |
| fin. | 2 | 0 | -97771 | -4911 | | | 1208 | 455 | SLV 2 | 0.09 | No |
| ini. | 2 | 0 | 60647 | -1712 | | | 1208 | 455 | SLV 5 | 0.27 | No |
| fin. | 2 | 0 | -57245 | -3191 | | | 1208 | 455 | SLV 5 | 0.14 | No |
| ini. | 2 | 0 | -94668 | 3579 | | | 1208 | 455 | SLV 14 | 0.13 | No |
| fin. | 2 | 0 | 62029 | 2163 | | | 1208 | 455 | SLV 14 | 0.21 | No |

Tabella dei coefficienti di sicurezza minimi

| Stato limite | Coeff.s. | Comb. | Verifica |
|---|---|---|---|
| PF_SLV | 0.952 | SLV 15 | No |
| V_SLV | 0.093 | SLV 1 | No |
| PF_SLU | 3.792 | SLU 78 | Si |
| V_SLU | 0.157 | SLU 78 | No |

## Trave di accoppiamento 111

Verifiche condotte secondo D.M. 17-01-18 (N.T.C.)

Dati geometrici

| X ini. | Y ini. | Z ini.inf. | Z ini.sup. | H ini. | X fin. | Y fin. | Z fin.inf. | Z fin.sup | H fin. | Luce | Spessore | R. Trazione |
|---|---|---|---|---|---|---|---|---|---|---|---|---|
| -1886.8 | -335.9 | 896 | 1096 | 200 | -1936.8 | -335.9 | 896 | 1096 | 200 | 50 | 28 | 3500 |

## Caratteristiche del materiale

(Circolare 7 21-01-19 C8.5.I) Muratura in mattoni pieni e malta di calce LC2_Corti

| fb_ | fhk | fvk0 | fhmedio | τ0 | fv0 | μ | ϕ | fvk,lim | E | G | FC |
|---|---|---|---|---|---|---|---|---|---|---|---|
| 12 | | | 17.25 | 0.9 | 2 | 0.577 | 0.767 | 0.65 | 32000 | 12800 | 1.2 |

## Verifiche a pressoflessione delle travi in muratura in combinazioni non sismiche

| Sezione | γM | N | M | Mu | Comb. | c.s. | Verifica |
|---|---|---|---|---|---|---|---|
| ini. | 3 | -1523 | 10254 | 296292 | SLU 81 | 28.89 | Si |
| fin. | 3 | -1637 | 64712 | 296292 | SLU 81 | 4.58 | Si |
| ini. | 3 | -1594 | 13868 | 296292 | SLU 84 | 21.37 | Si |
| fin. | 3 | -1695 | 57849 | 296292 | SLU 84 | 5.12 | Si |
| ini. | 3 | -1489 | 18010 | 296292 | SLU 74 | 16.45 | Si |
| fin. | 3 | -1579 | 58952 | 296292 | SLU 74 | 5.03 | Si |
| ini. | 3 | -1204 | 9404 | 296292 | SLU 39 | 31.51 | Si |
| fin. | 3 | -1314 | 56337 | 296292 | SLU 39 | 5.26 | Si |
| ini. | 3 | -1476 | 7486 | 296292 | SLU 60 | 39.58 | Si |
| fin. | 3 | -1571 | 58444 | 296292 | SLU 60 | 5.07 | Si |
| ini. | 3 | -1610 | 11852 | 296292 | SLU 75 | 25 | Si |
| fin. | 3 | -1697 | 55309 | 296292 | SLU 75 | 5.36 | Si |
| ini. | 3 | -1426 | 17258 | 296292 | SLU 62 | 17.17 | Si |
| fin. | 3 | -1511 | 55224 | 296292 | SLU 62 | 5.37 | Si |
| ini. | 3 | -1644 | 4097 | 296292 | SLU 82 | 72.33 | Si |
| fin. | 3 | -1756 | 61069 | 296292 | SLU 82 | 4.85 | Si |
| ini. | 3 | -1473 | 20026 | 296292 | SLU 83 | 14.8 | Si |
| fin. | 3 | -1577 | 61492 | 296292 | SLU 83 | 4.82 | Si |
| ini. | 3 | -1439 | 27781 | 296292 | SLU 77 | 10.67 | Si |
| fin. | 3 | -1519 | 55733 | 296292 | SLU 77 | 5.32 | Si |

## Verifiche a taglio delle travi in muratura secondo §C8.7.1.3.1 in combinazioni non sismiche

| Sezione | γM | N | M | V | Vt | Vp | Vt fess. diag. | Vt,lim | Comb. | c.s. | Verifica |
|---|---|---|---|---|---|---|---|---|---|---|---|
| ini. | 3 | 0 | 9404 | 1043 | | | 2157 | 812 | SLU 39 | 0.78 | No |
| fin. | 3 | 0 | 56337 | 1938 | | | 2157 | 812 | SLU 39 | 0.42 | No |
| ini. | 3 | 0 | 7486 | 1102 | | | 2157 | 812 | SLU 60 | 0.74 | No |
| fin. | 3 | 0 | 58444 | 2102 | | | 2157 | 812 | SLU 60 | 0.39 | No |
| ini. | 3 | 0 | 10254 | 1190 | | | 2157 | 812 | SLU 81 | 0.68 | No |
| fin. | 3 | 0 | 64712 | 2270 | | | 2157 | 812 | SLU 81 | 0.36 | No |
| ini. | 3 | 0 | 20026 | 903 | | | 2157 | 812 | SLU 83 | 0.9 | No |
| fin. | 3 | 0 | 61492 | 2008 | | | 2157 | 812 | SLU 83 | 0.4 | No |
| ini. | 3 | 0 | 11852 | 932 | | | 2157 | 812 | SLU 75 | 0.87 | No |
| fin. | 3 | 0 | 55309 | 1954 | | | 2157 | 812 | SLU 75 | 0.42 | No |
| ini. | 3 | 0 | 4097 | 1261 | | | 2157 | 812 | SLU 82 | 0.64 | No |
| fin. | 3 | 0 | 61069 | 2246 | | | 2157 | 812 | SLU 82 | 0.36 | No |
| ini. | 3 | 0 | 13868 | 974 | | | 2157 | 812 | SLU 84 | 0.83 | No |
| fin. | 3 | 0 | 57849 | 1983 | | | 2157 | 812 | SLU 84 | 0.41 | No |
| ini. | 3 | 0 | 1329 | 1173 | | | 2157 | 812 | SLU 61 | 0.69 | No |
| fin. | 3 | 0 | 54801 | 2077 | | | 2157 | 812 | SLU 61 | 0.39 | No |
| ini. | 3 | 0 | 18010 | 860 | | | 2157 | 812 | SLU 74 | 0.94 | No |
| fin. | 3 | 0 | 58952 | 1978 | | | 2157 | 812 | SLU 74 | 0.41 | No |
| ini. | 3 | 0 | -201 | 1199 | | | 2157 | 812 | SLU 73 | 0.68 | No |
| fin. | 3 | 0 | 54144 | 2089 | | | 2157 | 812 | SLU 73 | 0.39 | No |

## Verifiche a pressoflessione delle travi in muratura in combinazioni sismiche

| Sezione | γM | N | M | Mu | Comb. | c.s. | Verifica |
|---|---|---|---|---|---|---|---|
| ini. | 2 | -1187 | 221708 | 314194 | SLV 1 | 1.42 | Si |
| fin. | 2 | -85 | -111829 | 314194 | SLV 1 | 2.81 | Si |
| ini. | 2 | -365 | 197476 | 314194 | SLV 3 | 1.59 | Si |
| fin. | 2 | -191 | -86992 | 314194 | SLV 3 | 3.61 | Si |
| ini. | 2 | -1187 | 221708 | 314194 | SLV 2 | 1.42 | Si |
| fin. | 2 | -85 | -111829 | 314194 | SLV 2 | 2.81 | Si |
| ini. | 2 | -1910 | -183646 | 314194 | SLV 13 | 1.71 | Si |
| fin. | 2 | -2190 | 166730 | 314194 | SLV 13 | 1.88 | Si |
| ini. | 2 | 123 | -94275 | 314194 | SLV 12 | 3.33 | Si |
| fin. | 2 | -1684 | 123048 | 314194 | SLV 12 | 2.55 | Si |
| ini. | 2 | -1910 | -183646 | 314194 | SLV 14 | 1.71 | Si |
| fin. | 2 | -2190 | 166730 | 314194 | SLV 14 | 1.88 | Si |
| ini. | 2 | -1089 | -207878 | 314194 | SLV 15 | 1.51 | Si |
| fin. | 2 | -2296 | 191567 | 314194 | SLV 15 | 1.64 | Si |
| ini. | 2 | 123 | -94275 | 314194 | SLV 11 | 3.33 | Si |
| fin. | 2 | -1684 | 123048 | 314194 | SLV 11 | 2.55 | Si |
| ini. | 2 | -1089 | -207878 | 314194 | SLV 16 | 1.51 | Si |
| fin. | 2 | -2296 | 191567 | 314194 | SLV 16 | 1.64 | Si |
| ini. | 2 | -365 | 197476 | 314194 | SLV 4 | 1.59 | Si |
| fin. | 2 | -191 | -86992 | 314194 | SLV 4 | 3.61 | Si |

## Verifiche a taglio delle travi in muratura secondo §C8.7.1.3.1 in combinazioni sismiche

| Sezione | γM | N | M | V | Vt | Vp | Vt fess. diag. | Vt,lim | Comb. | c.s. | Verifica |
|---|---|---|---|---|---|---|---|---|---|---|---|
| ini. | 2 | 0 | -183646 | 8512 | | | 3235 | 1217 | SLV 14 | 0.14 | No |
| fin. | 2 | 0 | 166730 | 8920 | | | 3235 | 1217 | SLV 14 | 0.14 | No |
| ini. | 2 | 0 | -94275 | 6381 | | | 3235 | 1217 | SLV 11 | 0.19 | No |
| fin. | 2 | 0 | 123048 | 7167 | | | 3235 | 1217 | SLV 11 | 0.17 | No |
| ini. | 2 | 0 | -183646 | 8512 | | | 3235 | 1217 | SLV 13 | 0.14 | No |
| fin. | 2 | 0 | 166730 | 8920 | | | 3235 | 1217 | SLV 13 | 0.14 | No |
| ini. | 2 | 0 | -207878 | 10354 | | | 3235 | 1217 | SLV 16 | 0.12 | No |
| fin. | 2 | 0 | 191567 | 10836 | | | 3235 | 1217 | SLV 16 | 0.11 | No |
| ini. | 2 | 0 | -207878 | 10354 | | | 3235 | 1217 | SLV 15 | 0.12 | No |
| fin. | 2 | 0 | 191567 | 10836 | | | 3235 | 1217 | SLV 15 | 0.11 | No |
| ini. | 2 | 0 | 221708 | -8980 | | | 3235 | 1217 | SLV 2 | 0.14 | No |

| Sezione | γM | N | M | V | Vt | Vp | Vt fess. diag. | Vt,lim | Comb. | c.s. | Verifica |
|---|---|---|---|---|---|---|---|---|---|---|---|
| fin. | 2 | 0 | -111829 | -7952 | | | 3235 | 1217 | SLV 2 | 0.15 | No |
| ini. | 2 | 0 | 221708 | -8980 | | | 3235 | 1217 | SLV 1 | 0.14 | No |
| fin. | 2 | 0 | -111829 | -7952 | | | 3235 | 1217 | SLV 1 | 0.15 | No |
| ini. | 2 | 0 | -94275 | 6381 | | | 3235 | 1217 | SLV 12 | 0.19 | No |
| fin. | 2 | 0 | 123048 | 7167 | | | 3235 | 1217 | SLV 12 | 0.17 | No |
| ini. | 2 | 0 | 197476 | -7138 | | | 3235 | 1217 | SLV 3 | 0.17 | No |
| fin. | 2 | 0 | -86992 | -6036 | | | 3235 | 1217 | SLV 3 | 0.2 | No |
| ini. | 2 | 0 | 197476 | -7138 | | | 3235 | 1217 | SLV 4 | 0.17 | No |
| fin. | 2 | 0 | -86992 | -6036 | | | 3235 | 1217 | SLV 4 | 0.2 | No |

### Tabella dei coefficienti di sicurezza minimi

| Stato limite | Coeff.s. | Comb. | Verifica |
|---|---|---|---|
| PF_SLV | 1.417 | SLV 1 | Si |
| V_SLV | 0.112 | SLV 15 | No |
| PF_SLU | 4.579 | SLU 81 | Si |
| V_SLU | 0.357 | SLU 81 | No |

## Trave di accoppiamento 112

Verifiche condotte secondo D.M. 17-01-18 (N.T.C.)

### Dati geometrici

| X ini. | Y ini. | Z ini.inf. | Z ini.sup. | H ini. | X fin. | Y fin. | Z fin.inf. | Z fin.sup | H fin. | Luce | Spessore | R. Trazione |
|---|---|---|---|---|---|---|---|---|---|---|---|---|
| -1886.8 | -335.9 | 1176 | 1248 | 72 | -1936.8 | -335.9 | 1176 | 1248 | 72 | 50 | 28 | 3500 |

### Caratteristiche del materiale

(Circolare 7 21-01-19 C8.5.I) Muratura in mattoni pieni e malta di calce LC2_Corti

| fb_ | fhk | fvk0 | fhmedio | τ0 | fv0 | μ | ϕ | fvk,lim | E | G | FC |
|---|---|---|---|---|---|---|---|---|---|---|---|
| 12 | | | 17.25 | 0.9 | 2 | 0.577 | 0.767 | 0.65 | 32000 | 12800 | 1.2 |

### Verifiche a pressoflessione delle travi in muratura in combinazioni non sismiche

| Sezione | γM | N | M | Mu | Comb. | c.s. | Verifica |
|---|---|---|---|---|---|---|---|
| ini. | 3 | -891 | -19264 | 72292 | SLU 77 | 3.75 | Si |
| fin. | 3 | -643 | -8875 | 72292 | SLU 77 | 8.15 | Si |
| ini. | 3 | -952 | -19170 | 72292 | SLU 79 | 3.77 | Si |
| fin. | 3 | -707 | -9585 | 72292 | SLU 79 | 7.54 | Si |
| ini. | 3 | -691 | -17565 | 72292 | SLU 74 | 4.12 | Si |
| fin. | 3 | -460 | -5536 | 72292 | SLU 74 | 13.06 | Si |
| ini. | 3 | -839 | -17649 | 72292 | SLU 78 | 4.1 | Si |
| fin. | 3 | -604 | -7918 | 72292 | SLU 78 | 9.13 | Si |
| ini. | 3 | -747 | -18258 | 72292 | SLU 83 | 3.96 | Si |
| fin. | 3 | -507 | -5811 | 72292 | SLU 83 | 12.44 | Si |
| ini. | 3 | -900 | -17555 | 72292 | SLU 80 | 4.12 | Si |
| fin. | 3 | -668 | -8627 | 72292 | SLU 80 | 8.38 | Si |
| ini. | 3 | -964 | -17333 | 72292 | SLU 71 | 4.17 | Si |
| fin. | 3 | -746 | -10597 | 72292 | SLU 71 | 6.82 | Si |
| ini. | 3 | -903 | -17427 | 72292 | SLU 69 | 4.15 | Si |
| fin. | 3 | -682 | -9888 | 72292 | SLU 69 | 7.31 | Si |
| ini. | 3 | -926 | -17648 | 72292 | SLU 58 | 4.1 | Si |
| fin. | 3 | -697 | -9274 | 72292 | SLU 58 | 7.8 | Si |
| ini. | 3 | -865 | -17742 | 72292 | SLU 56 | 4.07 | Si |
| fin. | 3 | -633 | -8564 | 72292 | SLU 56 | 8.44 | Si |

### Verifiche a taglio delle travi in muratura secondo §C8.7.1.3.1 in combinazioni non sismiche

| Sezione | γM | N | M | V | Vt | Vp | Vt fess. diag. | Vt,lim | Comb. | c.s. | Verifica |
|---|---|---|---|---|---|---|---|---|---|---|---|
| ini. | 3 | 0 | -16643 | 857 | | | 776 | 292 | SLU 84 | 0.34 | No |
| fin. | 3 | 0 | -4854 | -551 | | | 776 | 292 | SLU 84 | 0.53 | No |
| ini. | 3 | 0 | -15036 | 841 | | | 776 | 292 | SLU 60 | 0.35 | No |
| fin. | 3 | 0 | -2161 | -485 | | | 776 | 292 | SLU 60 | 0.6 | No |
| ini. | 3 | 0 | -17565 | 882 | | | 776 | 292 | SLU 74 | 0.33 | No |
| fin. | 3 | 0 | -5536 | -584 | | | 776 | 292 | SLU 74 | 0.5 | No |
| ini. | 3 | 0 | -16736 | 824 | | | 776 | 292 | SLU 62 | 0.35 | No |
| fin. | 3 | 0 | -5500 | -514 | | | 776 | 292 | SLU 62 | 0.57 | No |
| ini. | 3 | 0 | -16558 | 915 | | | 776 | 292 | SLU 81 | 0.32 | No |
| fin. | 3 | 0 | -2472 | -545 | | | 776 | 292 | SLU 81 | 0.54 | No |
| ini. | 3 | 0 | -19264 | 865 | | | 776 | 292 | SLU 77 | 0.34 | No |
| fin. | 3 | 0 | -8875 | -613 | | | 776 | 292 | SLU 77 | 0.48 | No |
| ini. | 3 | 0 | -19170 | 831 | | | 776 | 292 | SLU 79 | 0.35 | No |
| fin. | 3 | 0 | -9585 | -593 | | | 776 | 292 | SLU 79 | 0.49 | No |
| ini. | 3 | 0 | -15950 | 841 | | | 776 | 292 | SLU 75 | 0.35 | No |
| fin. | 3 | 0 | -4579 | -561 | | | 776 | 292 | SLU 75 | 0.52 | No |
| ini. | 3 | 0 | -14943 | 874 | | | 776 | 292 | SLU 82 | 0.33 | No |
| fin. | 3 | 0 | -1515 | -522 | | | 776 | 292 | SLU 82 | 0.56 | No |
| ini. | 3 | 0 | -18258 | 898 | | | 776 | 292 | SLU 83 | 0.33 | No |
| fin. | 3 | 0 | -5811 | -574 | | | 776 | 292 | SLU 83 | 0.51 | No |

### Verifiche a pressoflessione delle travi in muratura in combinazioni sismiche

| Sezione | γM | N | M | Mu | Comb. | c.s. | Verifica |
|---|---|---|---|---|---|---|---|
| ini. | 2 | 4119 | -26025 | 90194 | SLV 15 | 3.47 | Si |
| fin. | 2 | 4824 | 74243 | 90194 | SLV 15 | 1.21 | Si |
| ini. | 2 | -4969 | 4208 | 90194 | SLV 1 | 21.43 | Si |
| fin. | 2 | -5383 | -79557 | 90194 | SLV 1 | 1.13 | Si |
| ini. | 2 | 640 | -41124 | 90194 | SLV 12 | 2.19 | Si |
| fin. | 2 | 1422 | 30236 | 90194 | SLV 12 | 2.98 | Si |

| Sezione | γM | N | M | Mu | Comb. | c.s. | Verifica |
|---|---|---|---|---|---|---|---|
| ini. | 2 | 4315 | -9093 | 90194 | SLV 14 | 9.92 | Si |
| fin. | 2 | 4712 | 67767 | 90194 | SLV 14 | 1.33 | Si |
| ini. | 2 | 4315 | -9093 | 90194 | SLV 13 | 9.92 | Si |
| fin. | 2 | 4712 | 67767 | 90194 | SLV 13 | 1.33 | Si |
| ini. | 2 | 4119 | -26025 | 90194 | SLV 16 | 3.47 | Si |
| fin. | 2 | 4824 | 74243 | 90194 | SLV 16 | 1.21 | Si |
| ini. | 2 | 640 | -41124 | 90194 | SLV 11 | 2.19 | Si |
| fin. | 2 | 1422 | 30236 | 90194 | SLV 11 | 2.98 | Si |
| ini. | 2 | -5165 | -12724 | 90194 | SLV 4 | 7.09 | Si |
| fin. | 2 | -5270 | -73080 | 90194 | SLV 4 | 1.23 | Si |
| ini. | 2 | -4969 | 4208 | 90194 | SLV 2 | 21.43 | Si |
| fin. | 2 | -5383 | -79557 | 90194 | SLV 2 | 1.13 | Si |
| ini. | 2 | -5165 | -12724 | 90194 | SLV 3 | 7.09 | Si |
| fin. | 2 | -5270 | -73080 | 90194 | SLV 3 | 1.23 | Si |

### Verifiche a taglio delle travi in muratura secondo §C8.7.1.3.1 in combinazioni sismiche

| Sezione | γM | N | M | V | Vt | Vp | Vt fess. diag. | Vt,lim | Comb. | c.s. | Verifica |
|---|---|---|---|---|---|---|---|---|---|---|---|
| ini. | 2 | 0 | -26025 | 2704 | | | 1165 | 438 | SLV 15 | 0.16 | No |
| fin. | 2 | 0 | 74243 | 2231 | | | 1165 | 438 | SLV 15 | 0.2 | No |
| ini. | 2 | 0 | 19307 | -1157 | | | 1165 | 438 | SLV 6 | 0.38 | No |
| fin. | 2 | 0 | -35549 | -2383 | | | 1165 | 438 | SLV 6 | 0.18 | No |
| ini. | 2 | 0 | -41124 | 2344 | | | 1165 | 438 | SLV 11 | 0.19 | No |
| fin. | 2 | 0 | 30236 | 1609 | | | 1165 | 438 | SLV 11 | 0.27 | No |
| ini. | 2 | 0 | -41124 | 2344 | | | 1165 | 438 | SLV 12 | 0.19 | No |
| fin. | 2 | 0 | 30236 | 1609 | | | 1165 | 438 | SLV 12 | 0.27 | No |
| ini. | 2 | 0 | 4208 | -1518 | | | 1165 | 438 | SLV 2 | 0.29 | No |
| fin. | 2 | 0 | -79557 | -3005 | | | 1165 | 438 | SLV 2 | 0.15 | No |
| ini. | 2 | 0 | -12724 | -781 | | | 1165 | 438 | SLV 4 | 0.56 | No |
| fin. | 2 | 0 | -73080 | -2207 | | | 1165 | 438 | SLV 4 | 0.2 | No |
| ini. | 2 | 0 | 19307 | -1157 | | | 1165 | 438 | SLV 5 | 0.38 | No |
| fin. | 2 | 0 | -35549 | -2383 | | | 1165 | 438 | SLV 5 | 0.18 | No |
| ini. | 2 | 0 | -12724 | -781 | | | 1165 | 438 | SLV 3 | 0.56 | No |
| fin. | 2 | 0 | -73080 | -2207 | | | 1165 | 438 | SLV 3 | 0.2 | No |
| ini. | 2 | 0 | 4208 | -1518 | | | 1165 | 438 | SLV 1 | 0.29 | No |
| fin. | 2 | 0 | -79557 | -3005 | | | 1165 | 438 | SLV 1 | 0.15 | No |
| ini. | 2 | 0 | -26025 | 2704 | | | 1165 | 438 | SLV 16 | 0.16 | No |
| fin. | 2 | 0 | 74243 | 2231 | | | 1165 | 438 | SLV 16 | 0.2 | No |

### Tabella dei coefficienti di sicurezza minimi

| Stato limite | Coeff.s. | Comb. | Verifica |
|---|---|---|---|
| PF_SLV | 1.134 | SLV 1 | Si |
| V_SLV | 0.146 | SLV 1 | No |
| PF_SLU | 3.753 | SLU 77 | Si |
| V_SLU | 0.319 | SLU 81 | No |

## Trave di accoppiamento 113

Verifiche condotte secondo D.M. 17-01-18 (N.T.C.)

### Dati geometrici

| X ini. | Y ini. | Z ini.inf. | Z ini.sup. | H ini. | X fin. | Y fin. | Z fin.inf. | Z fin.sup | H fin. | Luce | Spessore | R. Trazione |
|---|---|---|---|---|---|---|---|---|---|---|---|---|
| -1736.3 | -335.9 | 896 | 986 | 90 | -1826.3 | -335.9 | 896 | 986 | 90 | 90 | 28 | 3500 |

### Caratteristiche del materiale

(Circolare 7 21-01-19 C8.5.I) Muratura in mattoni pieni e malta di calce LC2_Corti

| fb_ | fhk | fvk0 | fhmedio | τ0 | fv0 | μ | ϕ | fvk,lim | E | G | FC |
|---|---|---|---|---|---|---|---|---|---|---|---|
| 12 | | | 17.25 | 0.9 | 2 | 0.577 | 0.767 | 0.65 | 32000 | 12800 | 1.2 |

### Verifiche a pressoflessione delle travi in muratura in combinazioni non sismiche

| Sezione | γM | N | M | Mu | Comb. | c.s. | Verifica |
|---|---|---|---|---|---|---|---|
| ini. | 3 | -1248 | 39372 | 103792 | SLU 72 | 2.64 | Si |
| fin. | 3 | -958 | 21210 | 103792 | SLU 72 | 4.89 | Si |
| ini. | 3 | -1251 | 41041 | 103792 | SLU 48 | 2.53 | Si |
| fin. | 3 | -853 | 18214 | 103792 | SLU 48 | 5.7 | Si |
| ini. | 3 | -1147 | 40283 | 103792 | SLU 77 | 2.58 | Si |
| fin. | 3 | -818 | 22014 | 103792 | SLU 77 | 4.71 | Si |
| ini. | 3 | -1285 | 44458 | 103792 | SLU 71 | 2.33 | Si |
| fin. | 3 | -815 | 17268 | 103792 | SLU 71 | 6.01 | Si |
| ini. | 3 | -1238 | 41823 | 103792 | SLU 69 | 2.48 | Si |
| fin. | 3 | -839 | 19225 | 103792 | SLU 69 | 5.4 | Si |
| ini. | 3 | -1194 | 42918 | 103792 | SLU 79 | 2.42 | Si |
| fin. | 3 | -794 | 20058 | 103792 | SLU 79 | 5.17 | Si |
| ini. | 3 | -1299 | 43677 | 103792 | SLU 50 | 2.38 | Si |
| fin. | 3 | -829 | 16258 | 103792 | SLU 50 | 6.38 | Si |
| ini. | 3 | -1078 | 39678 | 103792 | SLU 29 | 2.62 | Si |
| fin. | 3 | -581 | 10885 | 103792 | SLU 29 | 9.54 | Si |
| ini. | 3 | -1160 | 39501 | 103792 | SLU 56 | 2.63 | Si |
| fin. | 3 | -832 | 21004 | 103792 | SLU 56 | 4.94 | Si |
| ini. | 3 | -1208 | 42136 | 103792 | SLU 58 | 2.46 | Si |
| fin. | 3 | -808 | 19047 | 103792 | SLU 58 | 5.45 | Si |

### Verifiche a taglio delle travi in muratura secondo §C8.7.1.3.1 in combinazioni non sismiche

| Sezione | γM | N | M | V | Vt | Vp | Vt fess. diag. | Vt,lim | Comb. | c.s. | Verifica |
|---|---|---|---|---|---|---|---|---|---|---|---|
| ini. | 3 | 0 | 44458 | -1793 | | | 970 | 365 | SLU 71 | 0.2 | No |

| Sezione | γM | N | M | V | Vt | Vp | Vt fess. diag. | Vt,lim | Comb. | c.s. | Verifica |
|---|---|---|---|---|---|---|---|---|---|---|---|
| fin. | 3 | 0 | 17268 | 572 | | | 970 | 365 | SLU 71 | 0.64 | No |
| ini. | 3 | 0 | 38896 | -1536 | | | 970 | 365 | SLU 8 | 0.24 | No |
| fin. | 3 | 0 | 9875 | 278 | | | 970 | 365 | SLU 8 | 1.31 | Si |
| ini. | 3 | 0 | 41823 | -1726 | | | 970 | 365 | SLU 69 | 0.21 | No |
| fin. | 3 | 0 | 19225 | 681 | | | 970 | 365 | SLU 69 | 0.54 | No |
| ini. | 3 | 0 | 42918 | -1738 | | | 970 | 365 | SLU 79 | 0.21 | No |
| fin. | 3 | 0 | 20058 | 683 | | | 970 | 365 | SLU 79 | 0.53 | No |
| ini. | 3 | 0 | 43677 | -1747 | | | 970 | 365 | SLU 50 | 0.21 | No |
| fin. | 3 | 0 | 16258 | 522 | | | 970 | 365 | SLU 50 | 0.7 | No |
| ini. | 3 | 0 | 42136 | -1693 | | | 970 | 365 | SLU 58 | 0.22 | No |
| fin. | 3 | 0 | 19047 | 633 | | | 970 | 365 | SLU 58 | 0.58 | No |
| ini. | 3 | 0 | 41041 | -1680 | | | 970 | 365 | SLU 48 | 0.22 | No |
| fin. | 3 | 0 | 18214 | 631 | | | 970 | 365 | SLU 48 | 0.58 | No |
| ini. | 3 | 0 | 40283 | -1672 | | | 970 | 365 | SLU 77 | 0.22 | No |
| fin. | 3 | 0 | 22014 | 792 | | | 970 | 365 | SLU 77 | 0.46 | No |
| ini. | 3 | 0 | 39678 | -1581 | | | 970 | 365 | SLU 29 | 0.23 | No |
| fin. | 3 | 0 | 10885 | 328 | | | 970 | 365 | SLU 29 | 1.12 | Si |
| ini. | 3 | 0 | 39501 | -1626 | | | 970 | 365 | SLU 56 | 0.22 | No |
| fin. | 3 | 0 | 21004 | 742 | | | 970 | 365 | SLU 56 | 0.49 | No |

### Verifiche a pressoflessione delle travi in muratura in combinazioni sismiche

| Sezione | γM | N | M | Mu | Comb. | c.s. | Verifica |
|---|---|---|---|---|---|---|---|
| ini. | 2 | -5148 | 211332 | 121694 | SLV 2 | 0.58 | No |
| fin. | 2 | -298 | -72634 | 121694 | SLV 2 | 1.68 | Si |
| ini. | 2 | 3861 | -178109 | 121694 | SLV 15 | 0.68 | No |
| fin. | 2 | -1213 | 119670 | 121694 | SLV 15 | 1.02 | Si |
| ini. | 2 | -5148 | 211332 | 121694 | SLV 1 | 0.58 | No |
| fin. | 2 | -298 | -72634 | 121694 | SLV 1 | 1.68 | Si |
| ini. | 2 | -5622 | 232480 | 121694 | SLV 3 | 0.52 | No |
| fin. | 2 | 423 | -99161 | 121694 | SLV 3 | 1.23 | Si |
| ini. | 2 | 3861 | -178109 | 121694 | SLV 16 | 0.68 | No |
| fin. | 2 | -1213 | 119670 | 121694 | SLV 16 | 1.02 | Si |
| ini. | 2 | -5622 | 232480 | 121694 | SLV 4 | 0.52 | No |
| fin. | 2 | 423 | -99161 | 121694 | SLV 4 | 1.23 | Si |
| ini. | 2 | -2856 | 113446 | 121694 | SLV 8 | 1.07 | Si |
| fin. | 2 | 692 | -53517 | 121694 | SLV 8 | 2.27 | Si |
| ini. | 2 | -2856 | 113446 | 121694 | SLV 7 | 1.07 | Si |
| fin. | 2 | 692 | -53517 | 121694 | SLV 7 | 2.27 | Si |
| ini. | 2 | 4336 | -199257 | 121694 | SLV 14 | 0.61 | No |
| fin. | 2 | -1935 | 146197 | 121694 | SLV 14 | 0.83 | No |
| ini. | 2 | 4336 | -199257 | 121694 | SLV 13 | 0.61 | No |
| fin. | 2 | -1935 | 146197 | 121694 | SLV 13 | 0.83 | No |

### Verifiche a taglio delle travi in muratura secondo §C8.7.1.3.1 in combinazioni sismiche

| Sezione | γM | N | M | V | Vt | Vp | Vt fess. diag. | Vt,lim | Comb. | c.s. | Verifica |
|---|---|---|---|---|---|---|---|---|---|---|---|
| ini. | 2 | 0 | 211332 | -7142 | | | 1456 | 548 | SLV 1 | 0.08 | No |
| fin. | 2 | 0 | -72634 | -4158 | | | 1456 | 548 | SLV 1 | 0.13 | No |
| ini. | 2 | 0 | 113446 | -5343 | | | 1456 | 548 | SLV 8 | 0.1 | No |
| fin. | 2 | 0 | -53517 | -3005 | | | 1456 | 548 | SLV 8 | 0.18 | No |
| ini. | 2 | 0 | -178109 | 5634 | | | 1456 | 548 | SLV 16 | 0.1 | No |
| fin. | 2 | 0 | 119670 | 5991 | | | 1456 | 548 | SLV 16 | 0.09 | No |
| ini. | 2 | 0 | -178109 | 5634 | | | 1456 | 548 | SLV 15 | 0.1 | No |
| fin. | 2 | 0 | 119670 | 5991 | | | 1456 | 548 | SLV 15 | 0.09 | No |
| ini. | 2 | 0 | -199257 | 7105 | | | 1456 | 548 | SLV 13 | 0.08 | No |
| fin. | 2 | 0 | 146197 | 7312 | | | 1456 | 548 | SLV 13 | 0.07 | No |
| ini. | 2 | 0 | -199257 | 7105 | | | 1456 | 548 | SLV 14 | 0.08 | No |
| fin. | 2 | 0 | 146197 | 7312 | | | 1456 | 548 | SLV 14 | 0.07 | No |
| ini. | 2 | 0 | 232480 | -8613 | | | 1456 | 548 | SLV 4 | 0.06 | No |
| fin. | 2 | 0 | -99161 | -5479 | | | 1456 | 548 | SLV 4 | 0.1 | No |
| ini. | 2 | 0 | 113446 | -5343 | | | 1456 | 548 | SLV 7 | 0.1 | No |
| fin. | 2 | 0 | -53517 | -3005 | | | 1456 | 548 | SLV 7 | 0.18 | No |
| ini. | 2 | 0 | 211332 | -7142 | | | 1456 | 548 | SLV 2 | 0.08 | No |
| fin. | 2 | 0 | -72634 | -4158 | | | 1456 | 548 | SLV 2 | 0.13 | No |
| ini. | 2 | 0 | 232480 | -8613 | | | 1456 | 548 | SLV 3 | 0.06 | No |
| fin. | 2 | 0 | -99161 | -5479 | | | 1456 | 548 | SLV 3 | 0.1 | No |

### Tabella dei coefficienti di sicurezza minimi

| Stato limite | Coeff.s. | Comb. | Verifica |
|---|---|---|---|
| PF_SLV | 0.523 | SLV 3 | No |
| V_SLV | 0.064 | SLV 3 | No |
| PF_SLU | 2.335 | SLU 71 | Si |
| V_SLU | 0.204 | SLU 71 | No |

## Trave di accoppiamento 114

Verifiche condotte secondo D.M. 17-01-18 (N.T.C.)

### Dati geometrici

| X ini. | Y ini. | Z ini.inf. | Z ini.sup. | H ini. | X fin. | Y fin. | Z fin.inf. | Z fin.sup | H fin. | Luce | Spessore | R. Trazione |
|---|---|---|---|---|---|---|---|---|---|---|---|---|
| -1736.3 | -335.9 | 1166 | 1248 | 82 | -1826.3 | -335.9 | 1166 | 1248 | 82 | 90 | 28 | 3500 |

### Caratteristiche del materiale

(Circolare 7 21-01-19 C8.5.I) Muratura in mattoni pieni e malta di calce LC2_Corti

| fb_ | fhk | fvk0 | fhmedio | τ0 | fv0 | μ | ϕ | fvk,lim | E | G | FC |
|---|---|---|---|---|---|---|---|---|---|---|---|
| 12 | | | 17.25 | 0.9 | 2 | 0.577 | 0.767 | 0.65 | 32000 | 12800 | 1.2 |

## Verifiche a pressoflessione delle travi in muratura in combinazioni non sismiche

| Sezione | γM | N | M | Mu | Comb. | c.s. | Verifica |
|---|---|---|---|---|---|---|---|
| ini. | 3 | -899 | -7774 | 89792 | SLU 29 | 11.55 | Si |
| fin. | 3 | -1461 | -31177 | 89792 | SLU 29 | 2.88 | Si |
| ini. | 3 | -1303 | -12303 | 89792 | SLU 48 | 7.3 | Si |
| fin. | 3 | -1622 | -31194 | 89792 | SLU 48 | 2.88 | Si |
| ini. | 3 | -857 | -9838 | 89792 | SLU 37 | 9.13 | Si |
| fin. | 3 | -1429 | -31226 | 89792 | SLU 37 | 2.88 | Si |
| ini. | 3 | -1241 | -11904 | 89792 | SLU 71 | 7.54 | Si |
| fin. | 3 | -1714 | -34528 | 89792 | SLU 71 | 2.6 | Si |
| ini. | 3 | -1208 | -12588 | 89792 | SLU 69 | 7.13 | Si |
| fin. | 3 | -1645 | -33329 | 89792 | SLU 69 | 2.69 | Si |
| ini. | 3 | -1262 | -14368 | 89792 | SLU 56 | 6.25 | Si |
| fin. | 3 | -1590 | -31243 | 89792 | SLU 56 | 2.87 | Si |
| ini. | 3 | -1337 | -11619 | 89792 | SLU 50 | 7.73 | Si |
| fin. | 3 | -1691 | -32393 | 89792 | SLU 50 | 2.77 | Si |
| ini. | 3 | -1296 | -13684 | 89792 | SLU 58 | 6.56 | Si |
| fin. | 3 | -1659 | -32442 | 89792 | SLU 58 | 2.77 | Si |
| ini. | 3 | -1200 | -13969 | 89792 | SLU 79 | 6.43 | Si |
| fin. | 3 | -1682 | -34578 | 89792 | SLU 79 | 2.6 | Si |
| ini. | 3 | -1166 | -14653 | 89792 | SLU 77 | 6.13 | Si |
| fin. | 3 | -1613 | -33379 | 89792 | SLU 77 | 2.69 | Si |

## Verifiche a taglio delle travi in muratura secondo §C8.7.1.3.1 in combinazioni non sismiche

| Sezione | γM | N | M | V | Vt | Vp | Vt fess. diag. | Vt,lim | Comb. | c.s. | Verifica |
|---|---|---|---|---|---|---|---|---|---|---|---|
| ini. | 3 | 0 | -11904 | 817 | | | 806 | 303 | SLU 71 | 0.37 | No |
| fin. | 3 | 0 | -34528 | -1684 | | | 806 | 303 | SLU 71 | 0.18 | No |
| ini. | 3 | 0 | -17875 | 1159 | | | 806 | 303 | SLU 78 | 0.26 | No |
| fin. | 3 | 0 | -29671 | -1629 | | | 806 | 303 | SLU 78 | 0.19 | No |
| ini. | 3 | 0 | -13969 | 981 | | | 806 | 303 | SLU 79 | 0.31 | No |
| fin. | 3 | 0 | -34578 | -1819 | | | 806 | 303 | SLU 79 | 0.17 | No |
| ini. | 3 | 0 | -12588 | 886 | | | 806 | 303 | SLU 69 | 0.34 | No |
| fin. | 3 | 0 | -33329 | -1681 | | | 806 | 303 | SLU 69 | 0.18 | No |
| ini. | 3 | 0 | -14653 | 1049 | | | 806 | 303 | SLU 77 | 0.29 | No |
| fin. | 3 | 0 | -33379 | -1816 | | | 806 | 303 | SLU 77 | 0.17 | No |
| ini. | 3 | 0 | -9838 | 725 | | | 806 | 303 | SLU 37 | 0.42 | No |
| fin. | 3 | 0 | -31226 | -1673 | | | 806 | 303 | SLU 37 | 0.18 | No |
| ini. | 3 | 0 | -17191 | 1090 | | | 806 | 303 | SLU 80 | 0.28 | No |
| fin. | 3 | 0 | -30870 | -1632 | | | 806 | 303 | SLU 80 | 0.19 | No |
| ini. | 3 | 0 | -10523 | 794 | | | 806 | 303 | SLU 35 | 0.38 | No |
| fin. | 3 | 0 | -30027 | -1669 | | | 806 | 303 | SLU 35 | 0.18 | No |
| ini. | 3 | 0 | -25944 | 1604 | | | 806 | 303 | SLU 73 | 0.19 | No |
| fin. | 3 | 0 | -12970 | -930 | | | 806 | 303 | SLU 73 | 0.33 | No |
| ini. | 3 | 0 | -24680 | 1601 | | | 806 | 303 | SLU 82 | 0.19 | No |
| fin. | 3 | 0 | -15463 | -1112 | | | 806 | 303 | SLU 82 | 0.27 | No |

## Verifiche a pressoflessione delle travi in muratura in combinazioni sismiche

| Sezione | γM | N | M | Mu | Comb. | c.s. | Verifica |
|---|---|---|---|---|---|---|---|
| ini. | 2 | 3062 | -27174 | 107694 | SLV 15 | 3.96 | Si |
| fin. | 2 | 5247 | 99466 | 107694 | SLV 15 | 1.08 | Si |
| ini. | 2 | -5052 | -2355 | 107694 | SLV 2 | 45.74 | Si |
| fin. | 2 | -6978 | -127939 | 107694 | SLV 2 | 0.84 | No |
| ini. | 2 | -1833 | 31812 | 107694 | SLV 7 | 3.39 | Si |
| fin. | 2 | -3947 | -87853 | 107694 | SLV 7 | 1.23 | Si |
| ini. | 2 | -1833 | 31812 | 107694 | SLV 8 | 3.39 | Si |
| fin. | 2 | -3947 | -87853 | 107694 | SLV 8 | 1.23 | Si |
| ini. | 2 | -4843 | 21234 | 107694 | SLV 4 | 5.07 | Si |
| fin. | 2 | -7665 | -149685 | 107694 | SLV 4 | 0.72 | No |
| ini. | 2 | 2853 | -50763 | 107694 | SLV 13 | 2.12 | Si |
| fin. | 2 | 5934 | 121212 | 107694 | SLV 13 | 0.89 | No |
| ini. | 2 | -5052 | -2355 | 107694 | SLV 1 | 45.74 | Si |
| fin. | 2 | -6978 | -127939 | 107694 | SLV 1 | 0.84 | No |
| ini. | 2 | 3062 | -27174 | 107694 | SLV 16 | 3.96 | Si |
| fin. | 2 | 5247 | 99466 | 107694 | SLV 16 | 1.08 | Si |
| ini. | 2 | -4843 | 21234 | 107694 | SLV 3 | 5.07 | Si |
| fin. | 2 | -7665 | -149685 | 107694 | SLV 3 | 0.72 | No |
| ini. | 2 | 2853 | -50763 | 107694 | SLV 14 | 2.12 | Si |
| fin. | 2 | 5934 | 121212 | 107694 | SLV 14 | 0.89 | No |

## Verifiche a taglio delle travi in muratura secondo §C8.7.1.3.1 in combinazioni sismiche

| Sezione | γM | N | M | V | Vt | Vp | Vt fess. diag. | Vt,lim | Comb. | c.s. | Verifica |
|---|---|---|---|---|---|---|---|---|---|---|---|
| ini. | 2 | 0 | 31812 | -393 | | | 1208 | 455 | SLV 8 | 1.16 | Si |
| fin. | 2 | 0 | -87853 | -3258 | | | 1208 | 455 | SLV 8 | 0.14 | No |
| ini. | 2 | 0 | 21234 | -1690 | | | 1208 | 455 | SLV 3 | 0.27 | No |
| fin. | 2 | 0 | -149685 | -4516 | | | 1208 | 455 | SLV 3 | 0.1 | No |
| ini. | 2 | 0 | -27174 | 3303 | | | 1208 | 455 | SLV 15 | 0.14 | No |
| fin. | 2 | 0 | 99466 | 1967 | | | 1208 | 455 | SLV 15 | 0.23 | No |
| ini. | 2 | 0 | 31812 | -393 | | | 1208 | 455 | SLV 7 | 1.16 | Si |
| fin. | 2 | 0 | -87853 | -3258 | | | 1208 | 455 | SLV 7 | 0.14 | No |
| ini. | 2 | 0 | 21234 | -1690 | | | 1208 | 455 | SLV 4 | 0.27 | No |
| fin. | 2 | 0 | -149685 | -4516 | | | 1208 | 455 | SLV 4 | 0.1 | No |
| ini. | 2 | 0 | -27174 | 3303 | | | 1208 | 455 | SLV 16 | 0.14 | No |
| fin. | 2 | 0 | 99466 | 1967 | | | 1208 | 455 | SLV 16 | 0.23 | No |
| ini. | 2 | 0 | -2355 | -1305 | | | 1208 | 455 | SLV 2 | 0.35 | No |
| fin. | 2 | 0 | -127939 | -3649 | | | 1208 | 455 | SLV 2 | 0.12 | No |

| Sezione | γM | N | M | V | Vt | Vp | Vt fess. diag. | Vt,lim | Comb. | c.s. | Verifica |
|---|---|---|---|---|---|---|---|---|---|---|---|
| ini. | 2 | 0 | -50763 | 3688 | | | 1208 | 455 | SLV 14 | 0.12 | No |
| fin. | 2 | 0 | 121212 | 2834 | | | 1208 | 455 | SLV 14 | 0.16 | No |
| ini. | 2 | 0 | -2355 | -1305 | | | 1208 | 455 | SLV 1 | 0.35 | No |
| fin. | 2 | 0 | -127939 | -3649 | | | 1208 | 455 | SLV 1 | 0.12 | No |
| ini. | 2 | 0 | -50763 | 3688 | | | 1208 | 455 | SLV 13 | 0.12 | No |
| fin. | 2 | 0 | 121212 | 2834 | | | 1208 | 455 | SLV 13 | 0.16 | No |

### Tabella dei coefficienti di sicurezza minimi

| Stato limite | Coeff.s. | Comb. | Verifica |
|---|---|---|---|
| PF_SLV | 0.719 | SLV 3 | No |
| V_SLV | 0.101 | SLV 3 | No |
| PF_SLU | 2.597 | SLU 79 | Si |
| V_SLU | 0.167 | SLU 79 | No |

## Trave di accoppiamento 115

Verifiche condotte secondo D.M. 17-01-18 (N.T.C.)

### Dati geometrici

| X ini. | Y ini. | Z ini.inf. | Z ini.sup. | H ini. | X fin. | Y fin. | Z fin.inf. | Z fin.sup | H fin. | Luce | Spessore | R. Trazione |
|---|---|---|---|---|---|---|---|---|---|---|---|---|
| -1705.3 | -486.2 | 1222 | 1248 | 26 | -1705.3 | -377.2 | 1222 | 1248 | 26 | 109 | 30 | 3500 |

### Caratteristiche del materiale

(Circolare 7 21-01-19 C8.5.I) Muratura in mattoni pieni e malta di calce LC2_Corti

| fb_ | fhk | fvk0 | fhmedio | τ0 | fv0 | μ | ϕ | fvk,lim | E | G | FC |
|---|---|---|---|---|---|---|---|---|---|---|---|
| 12 | | | 17.25 | 0.9 | 2 | 0.577 | 0.767 | 0.65 | 32000 | 12800 | 1.2 |

### Verifiche a pressoflessione delle travi in muratura in combinazioni non sismiche

| Sezione | γM | N | M | Mu | Comb. | c.s. | Verifica |
|---|---|---|---|---|---|---|---|
| ini. | 3 | 53 | -7075 | 10289 | SLU 84 | 1.45 | Si |
| fin. | 3 | 53 | 23164 | 10289 | SLU 84 | 0.44 | No |
| ini. | 3 | 49 | -7245 | 10289 | SLU 40 | 1.42 | Si |
| fin. | 3 | 49 | 23279 | 10289 | SLU 40 | 0.44 | No |
| ini. | 3 | 58 | -7606 | 10289 | SLU 52 | 1.35 | Si |
| fin. | 3 | 58 | 24334 | 10289 | SLU 52 | 0.42 | No |
| ini. | 3 | 61 | -7994 | 10289 | SLU 76 | 1.29 | Si |
| fin. | 3 | 61 | 26132 | 10289 | SLU 76 | 0.39 | No |
| ini. | 3 | 57 | -8164 | 10289 | SLU 31 | 1.26 | Si |
| fin. | 3 | 57 | 26247 | 10289 | SLU 31 | 0.39 | No |
| ini. | 3 | 56 | -7655 | 10289 | SLU 34 | 1.34 | Si |
| fin. | 3 | 56 | 25051 | 10289 | SLU 34 | 0.41 | No |
| ini. | 3 | 53 | -7267 | 10289 | SLU 10 | 1.42 | Si |
| fin. | 3 | 53 | 23252 | 10289 | SLU 10 | 0.44 | No |
| ini. | 3 | 62 | -8503 | 10289 | SLU 73 | 1.21 | Si |
| fin. | 3 | 62 | 27329 | 10289 | SLU 73 | 0.38 | No |
| ini. | 3 | 54 | -7584 | 10289 | SLU 82 | 1.36 | Si |
| fin. | 3 | 54 | 24360 | 10289 | SLU 82 | 0.42 | No |
| ini. | 3 | 57 | -7097 | 10289 | SLU 55 | 1.45 | Si |
| fin. | 3 | 57 | 23138 | 10289 | SLU 55 | 0.44 | No |

### Verifiche a taglio delle travi in muratura secondo §C8.7.1.3.1 in combinazioni non sismiche

| Sezione | γM | N | M | V | Vt | Vp | Vt fess. diag. | Vt,lim | Comb. | c.s. | Verifica |
|---|---|---|---|---|---|---|---|---|---|---|---|
| ini. | 3 | 0 | -8164 | 372 | | | 200 | 75 | SLU 31 | 0.2 | No |
| fin. | 3 | 0 | 26247 | 259 | | | 200 | 75 | SLU 31 | 0.29 | No |
| ini. | 3 | 0 | -7584 | 367 | | | 200 | 75 | SLU 82 | 0.21 | No |
| fin. | 3 | 0 | 24360 | 219 | | | 200 | 75 | SLU 82 | 0.34 | No |
| ini. | 3 | 0 | -7994 | 387 | | | 200 | 75 | SLU 76 | 0.19 | No |
| fin. | 3 | 0 | 26132 | 239 | | | 200 | 75 | SLU 76 | 0.31 | No |
| ini. | 3 | 0 | -7145 | 351 | | | 200 | 75 | SLU 65 | 0.21 | No |
| fin. | 3 | 0 | 23079 | 204 | | | 200 | 75 | SLU 65 | 0.37 | No |
| ini. | 3 | 0 | -6748 | 338 | | | 200 | 75 | SLU 75 | 0.22 | No |
| fin. | 3 | 0 | 22082 | 191 | | | 200 | 75 | SLU 75 | 0.39 | No |
| ini. | 3 | 0 | -8503 | 402 | | | 200 | 75 | SLU 73 | 0.19 | No |
| fin. | 3 | 0 | 27329 | 255 | | | 200 | 75 | SLU 73 | 0.3 | No |
| ini. | 3 | 0 | -7075 | 351 | | | 200 | 75 | SLU 84 | 0.21 | No |
| fin. | 3 | 0 | 23164 | 204 | | | 200 | 75 | SLU 84 | 0.37 | No |
| ini. | 3 | 0 | -7606 | 367 | | | 200 | 75 | SLU 52 | 0.21 | No |
| fin. | 3 | 0 | 24334 | 219 | | | 200 | 75 | SLU 52 | 0.34 | No |
| ini. | 3 | 0 | -7655 | 357 | | | 200 | 75 | SLU 34 | 0.21 | No |
| fin. | 3 | 0 | 25051 | 243 | | | 200 | 75 | SLU 34 | 0.31 | No |
| ini. | 3 | 0 | -7097 | 351 | | | 200 | 75 | SLU 55 | 0.21 | No |
| fin. | 3 | 0 | 23138 | 204 | | | 200 | 75 | SLU 55 | 0.37 | No |

### Verifiche a pressoflessione delle travi in muratura in combinazioni sismiche

| Sezione | γM | N | M | Mu | Comb. | c.s. | Verifica |
|---|---|---|---|---|---|---|---|
| ini. | 2 | -45 | -28510 | 15434 | SLV 9 | 0.54 | No |
| fin. | 2 | -1 | 66060 | 15434 | SLV 9 | 0.23 | No |
| ini. | 2 | 53 | -19150 | 15434 | SLV 13 | 0.81 | No |
| fin. | 2 | 78 | 55161 | 15434 | SLV 13 | 0.28 | No |
| ini. | 2 | -77 | -22815 | 15434 | SLV 6 | 0.68 | No |
| fin. | 2 | -42 | 46956 | 15434 | SLV 6 | 0.33 | No |
| ini. | 2 | -3 | 13552 | 15434 | SLV 3 | 1.14 | Si |
| fin. | 2 | -29 | -36964 | 15434 | SLV 3 | 0.42 | No |
| ini. | 2 | 53 | -19150 | 15434 | SLV 14 | 0.81 | No |

| Sezione | γM | N | M | Mu | Comb. | c.s. | Verifica |
|---|---|---|---|---|---|---|---|
| fin. | 2 | 78 | 55161 | 15434 | SLV 14 | 0.28 | No |
| ini. | 2 | -3 | 13552 | 15434 | SLV 4 | 1.14 | Si |
| fin. | 2 | -29 | -36964 | 15434 | SLV 4 | 0.42 | No |
| ini. | 2 | 94 | 22912 | 15434 | SLV 8 | 0.67 | No |
| fin. | 2 | 51 | -47863 | 15434 | SLV 8 | 0.32 | No |
| ini. | 2 | 94 | 22912 | 15434 | SLV 7 | 0.67 | No |
| fin. | 2 | 51 | -47863 | 15434 | SLV 7 | 0.32 | No |
| ini. | 2 | -77 | -22815 | 15434 | SLV 5 | 0.68 | No |
| fin. | 2 | -42 | 46956 | 15434 | SLV 5 | 0.33 | No |
| ini. | 2 | -45 | -28510 | 15434 | SLV 10 | 0.54 | No |
| fin. | 2 | -1 | 66060 | 15434 | SLV 10 | 0.23 | No |

### Verifiche a taglio delle travi in muratura secondo §C8.7.1.3.1 in combinazioni sismiche

| Sezione | γM | N | M | V | Vt | Vp | Vt fess. diag. | Vt,lim | Comb. | c.s. | Verifica |
|---|---|---|---|---|---|---|---|---|---|---|---|
| ini. | 2 | 0 | -19150 | 792 | | | 300 | 113 | SLV 13 | 0.14 | No |
| fin. | 2 | 0 | 55161 | 292 | | | 300 | 113 | SLV 13 | 0.39 | No |
| ini. | 2 | 0 | -12953 | 520 | | | 300 | 113 | SLD 9 | 0.22 | No |
| fin. | 2 | 0 | 31620 | 61 | | | 300 | 113 | SLD 9 | 1.86 | Si |
| ini. | 2 | 0 | -28510 | 1060 | | | 300 | 113 | SLV 10 | 0.11 | No |
| fin. | 2 | 0 | 66060 | 56 | | | 300 | 113 | SLV 10 | 2.02 | Si |
| ini. | 2 | 0 | -22815 | 824 | | | 300 | 113 | SLV 6 | 0.14 | No |
| fin. | 2 | 0 | 46956 | -101 | | | 300 | 113 | SLV 6 | 1.12 | Si |
| ini. | 2 | 0 | 22912 | -729 | | | 300 | 113 | SLV 7 | 0.16 | No |
| fin. | 2 | 0 | -47863 | 49 | | | 300 | 113 | SLV 7 | 2.3 | Si |
| ini. | 2 | 0 | -22815 | 824 | | | 300 | 113 | SLV 5 | 0.14 | No |
| fin. | 2 | 0 | 46956 | -101 | | | 300 | 113 | SLV 5 | 1.12 | Si |
| ini. | 2 | 0 | 22912 | -729 | | | 300 | 113 | SLV 8 | 0.16 | No |
| fin. | 2 | 0 | -47863 | 49 | | | 300 | 113 | SLV 8 | 2.3 | Si |
| ini. | 2 | 0 | -19150 | 792 | | | 300 | 113 | SLV 14 | 0.14 | No |
| fin. | 2 | 0 | 55161 | 292 | | | 300 | 113 | SLV 14 | 0.39 | No |
| ini. | 2 | 0 | -12953 | 520 | | | 300 | 113 | SLD 10 | 0.22 | No |
| fin. | 2 | 0 | 31620 | 61 | | | 300 | 113 | SLD 10 | 1.86 | Si |
| ini. | 2 | 0 | -28510 | 1060 | | | 300 | 113 | SLV 9 | 0.11 | No |
| fin. | 2 | 0 | 66060 | 56 | | | 300 | 113 | SLV 9 | 2.02 | Si |

### Tabella dei coefficienti di sicurezza minimi

| Stato limite | Coeff.s. | Comb. | Verifica |
|---|---|---|---|
| PF_SLV | 0.234 | SLV 9 | No |
| V_SLV | 0.107 | SLV 9 | No |
| PF_SLU | 0.376 | SLU 73 | No |
| V_SLU | 0.187 | SLU 73 | No |

## Trave di accoppiamento 116

Verifiche condotte secondo D.M. 17-01-18 (N.T.C.)

### Dati geometrici

| X ini. | Y ini. | Z ini.inf. | Z ini.sup. | H ini. | X fin. | Y fin. | Z fin.inf. | Z fin.sup | H fin. | Luce | Spessore | R. Trazione |
|---|---|---|---|---|---|---|---|---|---|---|---|---|
| -1543.3 | -335.9 | 1106 | 1248 | 142 | -1633.3 | -335.9 | 1106 | 1248 | 142 | 90 | 28 | 3500 |

### Caratteristiche del materiale

(Circolare 7 21-01-19 C8.5.I) Muratura in mattoni pieni e malta di calce LC2_Corti

| fb_ | fhk | fvk0 | fhmedio | τ0 | fv0 | μ | ϕ | fvk,lim | E | G | FC |
|---|---|---|---|---|---|---|---|---|---|---|---|
| 12 | | | 17.25 | 0.9 | 2 | 0.577 | 0.767 | 0.65 | 32000 | 12800 | 1.2 |

### Verifiche a pressoflessione delle travi in muratura in combinazioni non sismiche

| Sezione | γM | N | M | Mu | Comb. | c.s. | Verifica |
|---|---|---|---|---|---|---|---|
| ini. | 3 | -2845 | 196315 | 194792 | SLU 51 | 0.99 | No |
| fin. | 3 | -2845 | 37929 | 194792 | SLU 51 | 5.14 | Si |
| ini. | 3 | -2655 | 185241 | 194792 | SLU 56 | 1.05 | Si |
| fin. | 3 | -2655 | 38390 | 194792 | SLU 56 | 5.07 | Si |
| ini. | 3 | -2728 | 189370 | 194792 | SLU 71 | 1.03 | Si |
| fin. | 3 | -2728 | 31318 | 194792 | SLU 71 | 6.22 | Si |
| ini. | 3 | -2654 | 185065 | 194792 | SLU 47 | 1.05 | Si |
| fin. | 3 | -2654 | 55441 | 194792 | SLU 47 | 3.51 | Si |
| ini. | 3 | -2883 | 198556 | 194792 | SLU 50 | 0.98 | No |
| fin. | 3 | -2883 | 36463 | 194792 | SLU 50 | 5.34 | Si |
| ini. | 3 | -2690 | 187129 | 194792 | SLU 72 | 1.04 | Si |
| fin. | 3 | -2690 | 32783 | 194792 | SLU 72 | 5.94 | Si |
| ini. | 3 | -2790 | 192572 | 194792 | SLU 48 | 1.01 | Si |
| fin. | 3 | -2790 | 39091 | 194792 | SLU 48 | 4.98 | Si |
| ini. | 3 | -2710 | 188984 | 194792 | SLU 59 | 1.03 | Si |
| fin. | 3 | -2710 | 37228 | 194792 | SLU 59 | 5.23 | Si |
| ini. | 3 | -2749 | 191225 | 194792 | SLU 58 | 1.02 | Si |
| fin. | 3 | -2749 | 35762 | 194792 | SLU 58 | 5.45 | Si |
| ini. | 3 | -2751 | 190331 | 194792 | SLU 49 | 1.02 | Si |
| fin. | 3 | -2751 | 40556 | 194792 | SLU 49 | 4.8 | Si |

### Verifiche a taglio delle travi in muratura secondo §C8.7.1.3.1 in combinazioni non sismiche

| Sezione | γM | N | M | V | Vt | Vp | Vt fess. diag. | Vt,lim | Comb. | c.s. | Verifica |
|---|---|---|---|---|---|---|---|---|---|---|---|
| ini. | 3 | 0 | 187129 | -930 | | | 1531 | 576 | SLU 72 | 0.62 | No |
| fin. | 3 | 0 | 32783 | -2481 | | | 1531 | 576 | SLU 72 | 0.23 | No |
| ini. | 3 | 0 | 182038 | -750 | | | 1531 | 576 | SLU 79 | 0.77 | No |
| fin. | 3 | 0 | 30617 | -2597 | | | 1531 | 576 | SLU 79 | 0.22 | No |

| Sezione | γM | N | M | V | Vt | Vp | Vt fess. diag. | Vt,lim | Comb. | c.s. | Verifica |
|---|---|---|---|---|---|---|---|---|---|---|---|
| ini. | 3 | 0 | 179798 | -708 | | | 1531 | 576 | SLU 80 | 0.81 | No |
| fin. | 3 | 0 | 32083 | -2555 | | | 1531 | 576 | SLU 80 | 0.23 | No |
| ini. | 3 | 0 | 173814 | -613 | | | 1531 | 576 | SLU 78 | 0.94 | No |
| fin. | 3 | 0 | 34710 | -2460 | | | 1531 | 576 | SLU 78 | 0.23 | No |
| ini. | 3 | 0 | 188984 | -875 | | | 1531 | 576 | SLU 59 | 0.66 | No |
| fin. | 3 | 0 | 37228 | -2480 | | | 1531 | 576 | SLU 59 | 0.23 | No |
| ini. | 3 | 0 | 198556 | -1138 | | | 1531 | 576 | SLU 50 | 0.51 | No |
| fin. | 3 | 0 | 36463 | -2447 | | | 1531 | 576 | SLU 50 | 0.24 | No |
| ini. | 3 | 0 | 183386 | -875 | | | 1531 | 576 | SLU 69 | 0.66 | No |
| fin. | 3 | 0 | 33946 | -2427 | | | 1531 | 576 | SLU 69 | 0.24 | No |
| ini. | 3 | 0 | 191225 | -916 | | | 1531 | 576 | SLU 58 | 0.63 | No |
| fin. | 3 | 0 | 35762 | -2521 | | | 1531 | 576 | SLU 58 | 0.23 | No |
| ini. | 3 | 0 | 189370 | -971 | | | 1531 | 576 | SLU 71 | 0.59 | No |
| fin. | 3 | 0 | 31318 | -2523 | | | 1531 | 576 | SLU 71 | 0.23 | No |
| ini. | 3 | 0 | 176055 | -654 | | | 1531 | 576 | SLU 77 | 0.88 | No |
| fin. | 3 | 0 | 33245 | -2501 | | | 1531 | 576 | SLU 77 | 0.23 | No |

### Verifiche a pressoflessione delle travi in muratura in combinazioni sismiche

| Sezione | γM | N | M | Mu | Comb. | c.s. | Verifica |
|---|---|---|---|---|---|---|---|
| ini. | 2 | 8021 | -347995 | 212694 | SLV 15 | 0.61 | No |
| fin. | 2 | 7396 | 128031 | 212694 | SLV 15 | 1.66 | Si |
| ini. | 2 | -5770 | 339821 | 212694 | SLV 5 | 0.63 | No |
| fin. | 2 | -5138 | 119009 | 212694 | SLV 5 | 1.79 | Si |
| ini. | 2 | 8021 | -347995 | 212694 | SLV 16 | 0.61 | No |
| fin. | 2 | 7396 | 128031 | 212694 | SLV 16 | 1.66 | Si |
| ini. | 2 | -6038 | 335238 | 212694 | SLD 1 | 0.63 | No |
| fin. | 2 | -5785 | 16141 | 212694 | SLD 1 | 13.18 | Si |
| ini. | 2 | -11061 | 565868 | 212694 | SLV 4 | 0.38 | No |
| fin. | 2 | -10729 | -87650 | 212694 | SLV 4 | 2.43 | Si |
| ini. | 2 | -5770 | 339821 | 212694 | SLV 6 | 0.63 | No |
| fin. | 2 | -5138 | 119009 | 212694 | SLV 6 | 1.79 | Si |
| ini. | 2 | -11701 | 609163 | 212694 | SLV 2 | 0.35 | No |
| fin. | 2 | -11077 | -27110 | 212694 | SLV 2 | 7.85 | Si |
| ini. | 2 | -6038 | 335238 | 212694 | SLD 2 | 0.63 | No |
| fin. | 2 | -5785 | 16141 | 212694 | SLD 2 | 13.18 | Si |
| ini. | 2 | -11061 | 565868 | 212694 | SLV 3 | 0.38 | No |
| fin. | 2 | -10729 | -87650 | 212694 | SLV 3 | 2.43 | Si |
| ini. | 2 | -11701 | 609163 | 212694 | SLV 1 | 0.35 | No |
| fin. | 2 | -11077 | -27110 | 212694 | SLV 1 | 7.85 | Si |

### Verifiche a taglio delle travi in muratura secondo §C8.7.1.3.1 in combinazioni sismiche

| Sezione | γM | N | M | V | Vt | Vp | Vt fess. diag. | Vt,lim | Comb. | c.s. | Verifica |
|---|---|---|---|---|---|---|---|---|---|---|---|
| ini. | 2 | 0 | -347995 | 6628 | | | 2297 | 864 | SLV 16 | 0.13 | No |
| fin. | 2 | 0 | 128031 | 5509 | | | 2297 | 864 | SLV 16 | 0.16 | No |
| ini. | 2 | 0 | 565868 | -6935 | | | 2297 | 864 | SLV 4 | 0.12 | No |
| fin. | 2 | 0 | -87650 | -8515 | | | 2297 | 864 | SLV 4 | 0.1 | No |
| ini. | 2 | 0 | -304700 | 6393 | | | 2297 | 864 | SLV 13 | 0.14 | No |
| fin. | 2 | 0 | 188572 | 5524 | | | 2297 | 864 | SLV 13 | 0.16 | No |
| ini. | 2 | 0 | 318057 | -3128 | | | 2297 | 864 | SLD 4 | 0.28 | No |
| fin. | 2 | 0 | -7803 | -4494 | | | 2297 | 864 | SLD 4 | 0.19 | No |
| ini. | 2 | 0 | 565868 | -6935 | | | 2297 | 864 | SLV 3 | 0.12 | No |
| fin. | 2 | 0 | -87650 | -8515 | | | 2297 | 864 | SLV 3 | 0.1 | No |
| ini. | 2 | 0 | 609163 | -7170 | | | 2297 | 864 | SLV 1 | 0.12 | No |
| fin. | 2 | 0 | -27110 | -8500 | | | 2297 | 864 | SLV 1 | 0.1 | No |
| ini. | 2 | 0 | 609163 | -7170 | | | 2297 | 864 | SLV 2 | 0.12 | No |
| fin. | 2 | 0 | -27110 | -8500 | | | 2297 | 864 | SLV 2 | 0.1 | No |
| ini. | 2 | 0 | -304700 | 6393 | | | 2297 | 864 | SLV 14 | 0.14 | No |
| fin. | 2 | 0 | 188572 | 5524 | | | 2297 | 864 | SLV 14 | 0.16 | No |
| ini. | 2 | 0 | -347995 | 6628 | | | 2297 | 864 | SLV 15 | 0.13 | No |
| fin. | 2 | 0 | 128031 | 5509 | | | 2297 | 864 | SLV 15 | 0.16 | No |
| ini. | 2 | 0 | 318057 | -3128 | | | 2297 | 864 | SLD 3 | 0.28 | No |
| fin. | 2 | 0 | -7803 | -4494 | | | 2297 | 864 | SLD 3 | 0.19 | No |

### Tabella dei coefficienti di sicurezza minimi

| Stato limite | Coeff.s. | Comb. | Verifica |
|---|---|---|---|
| PF_SLV | 0.349 | SLV 1 | No |
| V_SLV | 0.102 | SLV 3 | No |
| PF_SLU | 0.981 | SLU 50 | No |
| V_SLU | 0.222 | SLU 79 | No |

## Trave di accoppiamento 117

Verifiche condotte secondo D.M. 17-01-18 (N.T.C.)

### Dati geometrici

| X ini. | Y ini. | Z ini.inf. | Z ini.sup. | H ini. | X fin. | Y fin. | Z fin.inf. | Z fin.sup | H fin. | Luce | Spessore | R. Trazione |
|---|---|---|---|---|---|---|---|---|---|---|---|---|
| -1443.8 | -485.9 | 1222 | 1248 | 26 | -1627.8 | -485.9 | 1222 | 1248 | 26 | 184 | 30 | 3500 |

### Caratteristiche del materiale

(Circolare 7 21-01-19 C8.5.I) Muratura in mattoni pieni e malta di calce LC2_Corti

| fb_ | fhk | fvk0 | fhmedio | τ0 | fv0 | μ | ϕ | fvk,lim | E | G | FC |
|---|---|---|---|---|---|---|---|---|---|---|---|
| 12 | | | 17.25 | 0.9 | 2 | 0.577 | 0.767 | 0.65 | 32000 | 12800 | 1.2 |

## Verifiche a pressoflessione delle travi in muratura in combinazioni non sismiche

| Sezione | γM | N | M | Mu | Comb. | c.s. | Verifica |
|---|---|---|---|---|---|---|---|
| ini. | 3 | -3 | -9570 | 10289 | SLU 65 | 1.08 | Si |
| fin. | 3 | -3 | 1641 | 10289 | SLU 65 | 6.27 | Si |
| ini. | 3 | -4 | -9673 | 10289 | SLU 82 | 1.06 | Si |
| fin. | 3 | -4 | 1743 | 10289 | SLU 82 | 5.9 | Si |
| ini. | 3 | -10 | -9844 | 10289 | SLU 73 | 1.05 | Si |
| fin. | 3 | -10 | 1844 | 10289 | SLU 73 | 5.58 | Si |
| ini. | 3 | -6 | -9933 | 10289 | SLU 61 | 1.04 | Si |
| fin. | 3 | -6 | 2018 | 10289 | SLU 61 | 5.1 | Si |
| ini. | 3 | 18 | -9108 | 10289 | SLU 43 | 1.13 | Si |
| fin. | 3 | 18 | 1445 | 10289 | SLU 43 | 7.12 | Si |
| ini. | 3 | -12 | -10104 | 10289 | SLU 52 | 1.02 | Si |
| fin. | 3 | -12 | 2120 | 10289 | SLU 52 | 4.85 | Si |
| ini. | 3 | 10 | -9239 | 10289 | SLU 81 | 1.11 | Si |
| fin. | 3 | 10 | 1459 | 10289 | SLU 81 | 7.05 | Si |
| ini. | 3 | -5 | -9830 | 10289 | SLU 44 | 1.05 | Si |
| fin. | 3 | -5 | 1917 | 10289 | SLU 44 | 5.37 | Si |
| ini. | 3 | 7 | -9499 | 10289 | SLU 60 | 1.08 | Si |
| fin. | 3 | 7 | 1735 | 10289 | SLU 60 | 5.93 | Si |
| ini. | 3 | 4 | -9238 | 10289 | SLU 55 | 1.11 | Si |
| fin. | 3 | 4 | 1361 | 10289 | SLU 55 | 7.56 | Si |

## Verifiche a taglio delle travi in muratura secondo §C8.7.1.3.1 in combinazioni non sismiche

| Sezione | γM | N | M | V | Vt | Vp | Vt fess. diag. | Vt,lim | Comb. | c.s. | Verifica |
|---|---|---|---|---|---|---|---|---|---|---|---|
| ini. | 3 | 0 | -9570 | 184 | | | 200 | 75 | SLU 65 | 0.41 | No |
| fin. | 3 | 0 | 1641 | -62 | | | 200 | 75 | SLU 65 | 1.21 | Si |
| ini. | 3 | 0 | -10104 | 190 | | | 200 | 75 | SLU 52 | 0.4 | No |
| fin. | 3 | 0 | 2120 | -57 | | | 200 | 75 | SLU 52 | 1.33 | Si |
| ini. | 3 | 0 | -9499 | 184 | | | 200 | 75 | SLU 60 | 0.41 | No |
| fin. | 3 | 0 | 1735 | -62 | | | 200 | 75 | SLU 60 | 1.21 | Si |
| ini. | 3 | 0 | -9933 | 188 | | | 200 | 75 | SLU 61 | 0.4 | No |
| fin. | 3 | 0 | 2018 | -58 | | | 200 | 75 | SLU 61 | 1.3 | Si |
| ini. | 3 | 0 | -9239 | 181 | | | 200 | 75 | SLU 81 | 0.42 | No |
| fin. | 3 | 0 | 1459 | -65 | | | 200 | 75 | SLU 81 | 1.16 | Si |
| ini. | 3 | 0 | -9108 | 180 | | | 200 | 75 | SLU 43 | 0.42 | No |
| fin. | 3 | 0 | 1445 | -66 | | | 200 | 75 | SLU 43 | 1.15 | Si |
| ini. | 3 | 0 | -9238 | 181 | | | 200 | 75 | SLU 55 | 0.42 | No |
| fin. | 3 | 0 | 1361 | -65 | | | 200 | 75 | SLU 55 | 1.15 | Si |
| ini. | 3 | 0 | -9844 | 187 | | | 200 | 75 | SLU 73 | 0.4 | No |
| fin. | 3 | 0 | 1844 | -60 | | | 200 | 75 | SLU 73 | 1.27 | Si |
| ini. | 3 | 0 | -9673 | 185 | | | 200 | 75 | SLU 82 | 0.41 | No |
| fin. | 3 | 0 | 1743 | -61 | | | 200 | 75 | SLU 82 | 1.23 | Si |
| ini. | 3 | 0 | -9830 | 187 | | | 200 | 75 | SLU 44 | 0.4 | No |
| fin. | 3 | 0 | 1917 | -59 | | | 200 | 75 | SLU 44 | 1.27 | Si |

## Verifiche a pressoflessione delle travi in muratura in combinazioni sismiche

| Sezione | γM | N | M | Mu | Comb. | c.s. | Verifica |
|---|---|---|---|---|---|---|---|
| ini. | 2 | -224 | -38946 | 15434 | SLV 10 | 0.4 | No |
| fin. | 2 | -250 | 31321 | 15434 | SLV 10 | 0.49 | No |
| ini. | 2 | -224 | -38946 | 15434 | SLV 9 | 0.4 | No |
| fin. | 2 | -250 | 31321 | 15434 | SLV 9 | 0.49 | No |
| ini. | 2 | -663 | -50457 | 15434 | SLV 16 | 0.31 | No |
| fin. | 2 | -584 | 40623 | 15434 | SLV 16 | 0.38 | No |
| ini. | 2 | 689 | 36575 | 15434 | SLV 1 | 0.42 | No |
| fin. | 2 | 609 | -38587 | 15434 | SLV 1 | 0.4 | No |
| ini. | 2 | 689 | 36575 | 15434 | SLV 2 | 0.42 | No |
| fin. | 2 | 609 | -38587 | 15434 | SLV 2 | 0.4 | No |
| ini. | 2 | -682 | -60888 | 15434 | SLV 13 | 0.25 | No |
| fin. | 2 | -630 | 50764 | 15434 | SLV 13 | 0.3 | No |
| ini. | 2 | -663 | -50457 | 15434 | SLV 15 | 0.31 | No |
| fin. | 2 | -584 | 40623 | 15434 | SLV 15 | 0.38 | No |
| ini. | 2 | -682 | -60888 | 15434 | SLV 14 | 0.25 | No |
| fin. | 2 | -630 | 50764 | 15434 | SLV 14 | 0.3 | No |
| ini. | 2 | 707 | 47005 | 15434 | SLV 3 | 0.33 | No |
| fin. | 2 | 655 | -48728 | 15434 | SLV 3 | 0.32 | No |
| ini. | 2 | 707 | 47005 | 15434 | SLV 4 | 0.33 | No |
| fin. | 2 | 655 | -48728 | 15434 | SLV 4 | 0.32 | No |

## Verifiche a taglio delle travi in muratura secondo §C8.7.1.3.1 in combinazioni sismiche

| Sezione | γM | N | M | V | Vt | Vp | Vt fess. diag. | Vt,lim | Comb. | c.s. | Verifica |
|---|---|---|---|---|---|---|---|---|---|---|---|
| ini. | 2 | 0 | -50457 | 550 | | | 300 | 113 | SLV 16 | 0.21 | No |
| fin. | 2 | 0 | 40623 | 359 | | | 300 | 113 | SLV 16 | 0.32 | No |
| ini. | 2 | 0 | -60888 | 704 | | | 300 | 113 | SLV 13 | 0.16 | No |
| fin. | 2 | 0 | 50764 | 592 | | | 300 | 113 | SLV 13 | 0.19 | No |
| ini. | 2 | 0 | -60888 | 704 | | | 300 | 113 | SLV 14 | 0.16 | No |
| fin. | 2 | 0 | 50764 | 592 | | | 300 | 113 | SLV 14 | 0.19 | No |
| ini. | 2 | 0 | -38946 | 541 | | | 300 | 113 | SLV 10 | 0.21 | No |
| fin. | 2 | 0 | 31321 | 496 | | | 300 | 113 | SLV 10 | 0.23 | No |
| ini. | 2 | 0 | 47005 | -428 | | | 300 | 113 | SLV 3 | 0.26 | No |
| fin. | 2 | 0 | -48728 | -695 | | | 300 | 113 | SLV 3 | 0.16 | No |
| ini. | 2 | 0 | 25063 | -265 | | | 300 | 113 | SLV 7 | 0.43 | No |
| fin. | 2 | 0 | -29286 | -598 | | | 300 | 113 | SLV 7 | 0.19 | No |
| ini. | 2 | 0 | -38946 | 541 | | | 300 | 113 | SLV 9 | 0.21 | No |
| fin. | 2 | 0 | 31321 | 496 | | | 300 | 113 | SLV 9 | 0.23 | No |
| ini. | 2 | 0 | 47005 | -428 | | | 300 | 113 | SLV 4 | 0.26 | No |
| fin. | 2 | 0 | -48728 | -695 | | | 300 | 113 | SLV 4 | 0.16 | No |
| ini. | 2 | 0 | 25063 | -265 | | | 300 | 113 | SLV 8 | 0.43 | No |

| Sezione | γM | N | M | V | Vt | Vp | Vt fess. diag. | Vt,lim | Comb. | c.s. | Verifica |
|---|---|---|---|---|---|---|---|---|---|---|---|
| fin. | 2 | 0 | -29286 | -598 | | | 300 | 113 | SLV 8 | 0.19 | No |
| ini. | 2 | 0 | -50457 | 550 | | | 300 | 113 | SLV 15 | 0.21 | No |
| fin. | 2 | 0 | 40623 | 359 | | | 300 | 113 | SLV 15 | 0.32 | No |

### Tabella dei coefficienti di sicurezza minimi

| Stato limite | Coeff.s. | Comb. | Verifica |
|---|---|---|---|
| PF_SLV | 0.253 | SLV 13 | No |
| V_SLV | 0.161 | SLV 13 | No |
| PF_SLU | 1.018 | SLU 52 | Si |
| V_SLU | 0.398 | SLU 52 | No |

## Trave di accoppiamento 118

Verifiche condotte secondo D.M. 17-01-18 (N.T.C.)

### Dati geometrici

| X ini. | Y ini. | Z ini.inf. | Z ini.sup. | H ini. | X fin. | Y fin. | Z fin.inf. | Z fin.sup | H fin. | Luce | Spessore | R. Trazione |
|---|---|---|---|---|---|---|---|---|---|---|---|---|
| -1505.8 | 140.6 | 1106 | 1248 | 142 | -1505.8 | 220.6 | 1106 | 1248 | 142 | 80 | 14 | 3500 |

### Caratteristiche del materiale

(Circolare 7 21-01-19 C8.5.I) Muratura in mattoni pieni e malta di calce LC2_Corti

| fb_ | fhk | fvk0 | fhmedio | τ0 | fv0 | μ | ϕ | fvk,lim | E | G | FC |
|---|---|---|---|---|---|---|---|---|---|---|---|
| 12 | | | 17.25 | 0.9 | 2 | 0.577 | 0.767 | 0.65 | 32000 | 12800 | 1.2 |

### Verifiche a pressoflessione delle travi in muratura in combinazioni non sismiche

| Sezione | γM | N | M | Mu | Comb. | c.s. | Verifica |
|---|---|---|---|---|---|---|---|
| ini. | 3 | -126 | 31059 | 141083 | SLU 36 | 4.54 | Si |
| fin. | 3 | -126 | -197357 | 141083 | SLU 36 | 0.71 | No |
| ini. | 3 | -176 | 33673 | 141083 | SLU 74 | 4.19 | Si |
| fin. | 3 | -176 | -193402 | 141083 | SLU 74 | 0.73 | No |
| ini. | 3 | -128 | 30882 | 141083 | SLU 35 | 4.57 | Si |
| fin. | 3 | -128 | -196738 | 141083 | SLU 35 | 0.72 | No |
| ini. | 3 | -149 | 34197 | 141083 | SLU 79 | 4.13 | Si |
| fin. | 3 | -149 | -207224 | 141083 | SLU 79 | 0.68 | No |
| ini. | 3 | -164 | 34833 | 141083 | SLU 84 | 4.05 | Si |
| fin. | 3 | -164 | -205318 | 141083 | SLU 84 | 0.69 | No |
| ini. | 3 | -162 | 35299 | 141083 | SLU 78 | 4 | Si |
| fin. | 3 | -162 | -212066 | 141083 | SLU 78 | 0.67 | No |
| ini. | 3 | -165 | 34656 | 141083 | SLU 83 | 4.07 | Si |
| fin. | 3 | -165 | -204699 | 141083 | SLU 83 | 0.69 | No |
| ini. | 3 | -147 | 34374 | 141083 | SLU 80 | 4.1 | Si |
| fin. | 3 | -147 | -207843 | 141083 | SLU 80 | 0.68 | No |
| ini. | 3 | -164 | 35122 | 141083 | SLU 77 | 4.02 | Si |
| fin. | 3 | -164 | -211447 | 141083 | SLU 77 | 0.67 | No |
| ini. | 3 | -174 | 33851 | 141083 | SLU 75 | 4.17 | Si |
| fin. | 3 | -174 | -194021 | 141083 | SLU 75 | 0.73 | No |

### Verifiche a taglio delle travi in muratura secondo §C8.7.1.3.1 in combinazioni non sismiche

| Sezione | γM | N | M | V | Vt | Vp | Vt fess. diag. | Vt,lim | Comb. | c.s. | Verifica |
|---|---|---|---|---|---|---|---|---|---|---|---|
| ini. | 3 | 0 | 34833 | -2798 | | | 766 | 288 | SLU 84 | 0.1 | No |
| fin. | 3 | 0 | -205318 | -3198 | | | 766 | 288 | SLU 84 | 0.09 | No |
| ini. | 3 | 0 | 34197 | -2814 | | | 766 | 288 | SLU 79 | 0.1 | No |
| fin. | 3 | 0 | -207224 | -3214 | | | 766 | 288 | SLU 79 | 0.09 | No |
| ini. | 3 | 0 | 31059 | -2693 | | | 766 | 288 | SLU 36 | 0.11 | No |
| fin. | 3 | 0 | -197357 | -3009 | | | 766 | 288 | SLU 36 | 0.1 | No |
| ini. | 3 | 0 | 33851 | -2644 | | | 766 | 288 | SLU 75 | 0.11 | No |
| fin. | 3 | 0 | -194021 | -3045 | | | 766 | 288 | SLU 75 | 0.09 | No |
| ini. | 3 | 0 | 34374 | -2824 | | | 766 | 288 | SLU 80 | 0.1 | No |
| fin. | 3 | 0 | -207843 | -3224 | | | 766 | 288 | SLU 80 | 0.09 | No |
| ini. | 3 | 0 | 34656 | -2788 | | | 766 | 288 | SLU 83 | 0.1 | No |
| fin. | 3 | 0 | -204699 | -3188 | | | 766 | 288 | SLU 83 | 0.09 | No |
| ini. | 3 | 0 | 35299 | -2888 | | | 766 | 288 | SLU 78 | 0.1 | No |
| fin. | 3 | 0 | -212066 | -3288 | | | 766 | 288 | SLU 78 | 0.09 | No |
| ini. | 3 | 0 | 30882 | -2683 | | | 766 | 288 | SLU 35 | 0.11 | No |
| fin. | 3 | 0 | -196738 | -2999 | | | 766 | 288 | SLU 35 | 0.1 | No |
| ini. | 3 | 0 | 35122 | -2878 | | | 766 | 288 | SLU 77 | 0.1 | No |
| fin. | 3 | 0 | -211447 | -3278 | | | 766 | 288 | SLU 77 | 0.09 | No |
| ini. | 3 | 0 | 33673 | -2634 | | | 766 | 288 | SLU 74 | 0.11 | No |
| fin. | 3 | 0 | -193402 | -3035 | | | 766 | 288 | SLU 74 | 0.09 | No |

### Verifiche a pressoflessione delle travi in muratura in combinazioni sismiche

| Sezione | γM | N | M | Mu | Comb. | c.s. | Verifica |
|---|---|---|---|---|---|---|---|
| ini. | 2 | -1003 | 63442 | 176889 | SLV 16 | 2.79 | Si |
| fin. | 2 | -949 | -257348 | 176889 | SLV 16 | 0.69 | No |
| ini. | 2 | -2144 | 112226 | 176889 | SLV 7 | 1.58 | Si |
| fin. | 2 | -2438 | -411676 | 176889 | SLV 7 | 0.43 | No |
| ini. | 2 | -1007 | 61312 | 176889 | SLD 12 | 2.89 | Si |
| fin. | 2 | -1093 | -246078 | 176889 | SLD 12 | 0.72 | No |
| ini. | 2 | -945 | 57841 | 176889 | SLD 8 | 3.06 | Si |
| fin. | 2 | -1064 | -232335 | 176889 | SLD 8 | 0.76 | No |
| ini. | 2 | -2292 | 120502 | 176889 | SLV 12 | 1.47 | Si |
| fin. | 2 | -2509 | -444188 | 176889 | SLV 12 | 0.4 | No |
| ini. | 2 | -1007 | 61312 | 176889 | SLD 11 | 2.89 | Si |
| fin. | 2 | -1093 | -246078 | 176889 | SLD 11 | 0.72 | No |

| Sezione | γM | N | M | Mu | Comb. | c.s. | Verifica |
|---|---|---|---|---|---|---|---|
| ini. | 2 | -2292 | 120502 | 176889 | SLV 11 | 1.47 | Si |
| fin. | 2 | -2509 | -444188 | 176889 | SLV 11 | 0.4 | No |
| ini. | 2 | -2144 | 112226 | 176889 | SLV 8 | 1.58 | Si |
| fin. | 2 | -2438 | -411676 | 176889 | SLV 8 | 0.43 | No |
| ini. | 2 | -945 | 57841 | 176889 | SLD 7 | 3.06 | Si |
| fin. | 2 | -1064 | -232335 | 176889 | SLD 7 | 0.76 | No |
| ini. | 2 | -1003 | 63442 | 176889 | SLV 15 | 2.79 | Si |
| fin. | 2 | -949 | -257348 | 176889 | SLV 15 | 0.69 | No |

### Verifiche a taglio delle travi in muratura secondo §C8.7.1.3.1 in combinazioni sismiche

| Sezione | γM | N | M | V | Vt | Vp | Vt fess. diag. | Vt,lim | Comb. | c.s. | Verifica |
|---|---|---|---|---|---|---|---|---|---|---|---|
| ini. | 2 | 0 | 112226 | -6090 | | | 1148 | 432 | SLV 8 | 0.07 | No |
| fin. | 2 | 0 | -411676 | -6554 | | | 1148 | 432 | SLV 8 | 0.07 | No |
| ini. | 2 | 0 | 57841 | -3353 | | | 1148 | 432 | SLD 7 | 0.13 | No |
| fin. | 2 | 0 | -232335 | -3724 | | | 1148 | 432 | SLD 7 | 0.12 | No |
| ini. | 2 | 0 | 120502 | -6583 | | | 1148 | 432 | SLV 11 | 0.07 | No |
| fin. | 2 | 0 | -444188 | -7013 | | | 1148 | 432 | SLV 11 | 0.06 | No |
| ini. | 2 | 0 | 63442 | -3733 | | | 1148 | 432 | SLV 16 | 0.12 | No |
| fin. | 2 | 0 | -257348 | -4024 | | | 1148 | 432 | SLV 16 | 0.11 | No |
| ini. | 2 | 0 | 63442 | -3733 | | | 1148 | 432 | SLV 15 | 0.12 | No |
| fin. | 2 | 0 | -257348 | -4024 | | | 1148 | 432 | SLV 15 | 0.11 | No |
| ini. | 2 | 0 | 57841 | -3353 | | | 1148 | 432 | SLD 8 | 0.13 | No |
| fin. | 2 | 0 | -232335 | -3724 | | | 1148 | 432 | SLD 8 | 0.12 | No |
| ini. | 2 | 0 | 61312 | -3561 | | | 1148 | 432 | SLD 12 | 0.12 | No |
| fin. | 2 | 0 | -246078 | -3919 | | | 1148 | 432 | SLD 12 | 0.11 | No |
| ini. | 2 | 0 | 61312 | -3561 | | | 1148 | 432 | SLD 11 | 0.12 | No |
| fin. | 2 | 0 | -246078 | -3919 | | | 1148 | 432 | SLD 11 | 0.11 | No |
| ini. | 2 | 0 | 120502 | -6583 | | | 1148 | 432 | SLV 12 | 0.07 | No |
| fin. | 2 | 0 | -444188 | -7013 | | | 1148 | 432 | SLV 12 | 0.06 | No |
| ini. | 2 | 0 | 112226 | -6090 | | | 1148 | 432 | SLV 7 | 0.07 | No |
| fin. | 2 | 0 | -411676 | -6554 | | | 1148 | 432 | SLV 7 | 0.07 | No |

### Tabella dei coefficienti di sicurezza minimi

| Stato limite | Coeff.s. | Comb. | Verifica |
|---|---|---|---|
| PF_SLV | 0.398 | SLV 11 | No |
| V_SLV | 0.062 | SLV 11 | No |
| PF_SLU | 0.665 | SLU 78 | No |
| V_SLU | 0.088 | SLU 78 | No |

## Trave di accoppiamento 119

Verifiche condotte secondo D.M. 17-01-18 (N.T.C.)

### Dati geometrici

| X ini. | Y ini. | Z ini.inf. | Z ini.sup. | H ini. | X fin. | Y fin. | Z fin.inf. | Z fin.sup | H fin. | Luce | Spessore | R. Trazione |
|---|---|---|---|---|---|---|---|---|---|---|---|---|
| -1771.8 | 666.1 | 896 | 986 | 90 | -1681.8 | 666.1 | 896 | 986 | 90 | 90 | 28 | 3500 |

### Caratteristiche del materiale

(Circolare 7 21-01-19 C8.5.I) Muratura in mattoni pieni e malta di calce LC2_Corti

| fb_ | fhk | fvk0 | fhmedio | τ0 | fv0 | μ | ϕ | fvk,lim | E | G | FC |
|---|---|---|---|---|---|---|---|---|---|---|---|
| 12 | | | 17.25 | 0.9 | 2 | 0.577 | 0.767 | 0.65 | 32000 | 12800 | 1.2 |

### Verifiche a pressoflessione delle travi in muratura in combinazioni non sismiche

| Sezione | γM | N | M | Mu | Comb. | c.s. | Verifica |
|---|---|---|---|---|---|---|---|
| ini. | 3 | 205 | -5620 | 103792 | SLU 74 | 18.47 | Si |
| fin. | 3 | -111 | 16747 | 103792 | SLU 74 | 6.2 | Si |
| ini. | 3 | 461 | -10938 | 103792 | SLU 77 | 9.49 | Si |
| fin. | 3 | 68 | 16524 | 103792 | SLU 77 | 6.28 | Si |
| ini. | 3 | -14 | -1367 | 103792 | SLU 81 | 75.92 | Si |
| fin. | 3 | -274 | 17302 | 103792 | SLU 81 | 6 | Si |
| ini. | 3 | 259 | -7204 | 103792 | SLU 76 | 14.41 | Si |
| fin. | 3 | -85 | 16768 | 103792 | SLU 76 | 6.19 | Si |
| ini. | 3 | 463 | -11223 | 103792 | SLU 78 | 9.25 | Si |
| fin. | 3 | 58 | 16837 | 103792 | SLU 78 | 6.16 | Si |
| ini. | 3 | 4 | -1886 | 103792 | SLU 73 | 55.03 | Si |
| fin. | 3 | -264 | 16991 | 103792 | SLU 73 | 6.11 | Si |
| ini. | 3 | 207 | -5905 | 103792 | SLU 75 | 17.58 | Si |
| fin. | 3 | -120 | 17060 | 103792 | SLU 75 | 6.08 | Si |
| ini. | 3 | -12 | -1653 | 103792 | SLU 82 | 62.8 | Si |
| fin. | 3 | -284 | 17615 | 103792 | SLU 82 | 5.89 | Si |
| ini. | 3 | 244 | -6971 | 103792 | SLU 84 | 14.89 | Si |
| fin. | 3 | -105 | 17392 | 103792 | SLU 84 | 5.97 | Si |
| ini. | 3 | 242 | -6685 | 103792 | SLU 83 | 15.53 | Si |
| fin. | 3 | -95 | 17079 | 103792 | SLU 83 | 6.08 | Si |

### Verifiche a taglio delle travi in muratura secondo §C8.7.1.3.1 in combinazioni non sismiche

| Sezione | γM | N | M | V | Vt | Vp | Vt fess. diag. | Vt,lim | Comb. | c.s. | Verifica |
|---|---|---|---|---|---|---|---|---|---|---|---|
| ini. | 3 | 0 | -5905 | -160 | | | 970 | 365 | SLU 75 | 2.28 | Si |
| fin. | 3 | 0 | 17060 | 1225 | | | 970 | 365 | SLU 75 | 0.3 | No |
| ini. | 3 | 0 | -5620 | -172 | | | 970 | 365 | SLU 74 | 2.13 | Si |
| fin. | 3 | 0 | 16747 | 1211 | | | 970 | 365 | SLU 74 | 0.3 | No |
| ini. | 3 | 0 | -11223 | 12 | | | 970 | 365 | SLU 78 | 31.34 | Si |
| fin. | 3 | 0 | 16837 | 1244 | | | 970 | 365 | SLU 78 | 0.29 | No |
| ini. | 3 | 0 | -12332 | 71 | | | 970 | 365 | SLU 80 | 5.15 | Si |

| Sezione | γM | N | M | V | Vt | Vp | Vt fess. diag. | Vt,lim | Comb. | c.s. | Verifica |
|---|---|---|---|---|---|---|---|---|---|---|---|
| fin. | 3 | 0 | 16337 | 1197 | | | 970 | 365 | SLU 80 | 0.31 | No |
| ini. | 3 | 0 | -1653 | -277 | | | 970 | 365 | SLU 82 | 1.32 | Si |
| fin. | 3 | 0 | 17615 | 1198 | | | 970 | 365 | SLU 82 | 0.3 | No |
| ini. | 3 | 0 | -1367 | -288 | | | 970 | 365 | SLU 81 | 1.27 | Si |
| fin. | 3 | 0 | 17302 | 1183 | | | 970 | 365 | SLU 81 | 0.31 | No |
| ini. | 3 | 0 | -6971 | -104 | | | 970 | 365 | SLU 84 | 3.5 | Si |
| fin. | 3 | 0 | 17392 | 1217 | | | 970 | 365 | SLU 84 | 0.3 | No |
| ini. | 3 | 0 | -6685 | -116 | | | 970 | 365 | SLU 83 | 3.16 | Si |
| fin. | 3 | 0 | 17079 | 1202 | | | 970 | 365 | SLU 83 | 0.3 | No |
| ini. | 3 | 0 | -7204 | -94 | | | 970 | 365 | SLU 76 | 3.89 | Si |
| fin. | 3 | 0 | 16768 | 1188 | | | 970 | 365 | SLU 76 | 0.31 | No |
| ini. | 3 | 0 | -10938 | 1 | | | 970 | 365 | SLU 77 | 662.95 | Si |
| fin. | 3 | 0 | 16524 | 1230 | | | 970 | 365 | SLU 77 | 0.3 | No |

### Verifiche a pressoflessione delle travi in muratura in combinazioni sismiche

| Sezione | γM | N | M | Mu | Comb. | c.s. | Verifica |
|---|---|---|---|---|---|---|---|
| ini. | 2 | -1157 | 75224 | 121694 | SLV 16 | 1.62 | Si |
| fin. | 2 | 1716 | -55136 | 121694 | SLV 16 | 2.21 | Si |
| ini. | 2 | 841 | -77794 | 121694 | SLV 3 | 1.56 | Si |
| fin. | 2 | -2488 | 83422 | 121694 | SLV 3 | 1.46 | Si |
| ini. | 2 | -845 | 76497 | 121694 | SLV 14 | 1.59 | Si |
| fin. | 2 | 2155 | -60709 | 121694 | SLV 14 | 2 | Si |
| ini. | 2 | 1153 | -76521 | 121694 | SLV 2 | 1.59 | Si |
| fin. | 2 | -2048 | 77849 | 121694 | SLV 2 | 1.56 | Si |
| ini. | 2 | 1153 | -76521 | 121694 | SLV 1 | 1.59 | Si |
| fin. | 2 | -2048 | 77849 | 121694 | SLV 1 | 1.56 | Si |
| ini. | 2 | 364 | -33598 | 121694 | SLD 3 | 3.62 | Si |
| fin. | 2 | -1151 | 42047 | 121694 | SLD 3 | 2.89 | Si |
| ini. | 2 | -845 | 76497 | 121694 | SLV 13 | 1.59 | Si |
| fin. | 2 | 2155 | -60709 | 121694 | SLV 13 | 2 | Si |
| ini. | 2 | 364 | -33598 | 121694 | SLD 4 | 3.62 | Si |
| fin. | 2 | -1151 | 42047 | 121694 | SLD 4 | 2.89 | Si |
| ini. | 2 | 841 | -77794 | 121694 | SLV 4 | 1.56 | Si |
| fin. | 2 | -2488 | 83422 | 121694 | SLV 4 | 1.46 | Si |
| ini. | 2 | -1157 | 75224 | 121694 | SLV 15 | 1.62 | Si |
| fin. | 2 | 1716 | -55136 | 121694 | SLV 15 | 2.21 | Si |

### Verifiche a taglio delle travi in muratura secondo §C8.7.1.3.1 in combinazioni sismiche

| Sezione | γM | N | M | V | Vt | Vp | Vt fess. diag. | Vt,lim | Comb. | c.s. | Verifica |
|---|---|---|---|---|---|---|---|---|---|---|---|
| ini. | 2 | 0 | -77794 | 2722 | | | 1456 | 548 | SLV 4 | 0.2 | No |
| fin. | 2 | 0 | 83422 | 4653 | | | 1456 | 548 | SLV 4 | 0.12 | No |
| ini. | 2 | 0 | 75224 | -3150 | | | 1456 | 548 | SLV 15 | 0.17 | No |
| fin. | 2 | 0 | -55136 | -2618 | | | 1456 | 548 | SLV 15 | 0.21 | No |
| ini. | 2 | 0 | -25722 | 700 | | | 1456 | 548 | SLV 8 | 0.78 | No |
| fin. | 2 | 0 | 41428 | 2581 | | | 1456 | 548 | SLV 8 | 0.21 | No |
| ini. | 2 | 0 | -76521 | 2695 | | | 1456 | 548 | SLV 2 | 0.2 | No |
| fin. | 2 | 0 | 77849 | 4247 | | | 1456 | 548 | SLV 2 | 0.13 | No |
| ini. | 2 | 0 | -76521 | 2695 | | | 1456 | 548 | SLV 1 | 0.2 | No |
| fin. | 2 | 0 | 77849 | 4247 | | | 1456 | 548 | SLV 1 | 0.13 | No |
| ini. | 2 | 0 | -77794 | 2722 | | | 1456 | 548 | SLV 3 | 0.2 | No |
| fin. | 2 | 0 | 83422 | 4653 | | | 1456 | 548 | SLV 3 | 0.12 | No |
| ini. | 2 | 0 | 76497 | -3178 | | | 1456 | 548 | SLV 13 | 0.17 | No |
| fin. | 2 | 0 | -60709 | -3024 | | | 1456 | 548 | SLV 13 | 0.18 | No |
| ini. | 2 | 0 | 76497 | -3178 | | | 1456 | 548 | SLV 14 | 0.17 | No |
| fin. | 2 | 0 | -60709 | -3024 | | | 1456 | 548 | SLV 14 | 0.18 | No |
| ini. | 2 | 0 | -25722 | 700 | | | 1456 | 548 | SLV 7 | 0.78 | No |
| fin. | 2 | 0 | 41428 | 2581 | | | 1456 | 548 | SLV 7 | 0.21 | No |
| ini. | 2 | 0 | 75224 | -3150 | | | 1456 | 548 | SLV 16 | 0.17 | No |
| fin. | 2 | 0 | -55136 | -2618 | | | 1456 | 548 | SLV 16 | 0.21 | No |

### Tabella dei coefficienti di sicurezza minimi

| Stato limite | Coeff.s. | Comb. | Verifica |
|---|---|---|---|
| PF_SLV | 1.459 | SLV 3 | Si |
| V_SLV | 0.118 | SLV 3 | No |
| PF_SLU | 5.892 | SLU 82 | Si |
| V_SLU | 0.294 | SLU 78 | No |

## Trave di accoppiamento 120

Verifiche condotte secondo D.M. 17-01-18 (N.T.C.)

### Dati geometrici

| X ini. | Y ini. | Z ini.inf. | Z ini.sup. | H ini. | X fin. | Y fin. | Z fin.inf. | Z fin.sup | H fin. | Luce | Spessore | R. Trazione |
|---|---|---|---|---|---|---|---|---|---|---|---|---|
| -1771.8 | 666.1 | 1166 | 1248 | 82 | -1681.8 | 666.1 | 1166 | 1248 | 82 | 90 | 28 | 3500 |

### Caratteristiche del materiale

(Circolare 7 21-01-19 C8.5.I) Muratura in mattoni pieni e malta di calce LC2_Corti

| fb_ | fhk | fvk0 | fhmedio | τ0 | fv0 | μ | ϕ | fvk,lim | E | G | FC |
|---|---|---|---|---|---|---|---|---|---|---|---|
| 12 | | | 17.25 | 0.9 | 2 | 0.577 | 0.767 | 0.65 | 32000 | 12800 | 1.2 |

### Verifiche a pressoflessione delle travi in muratura in combinazioni non sismiche

| Sezione | γM | N | M | Mu | Comb. | c.s. | Verifica |
|---|---|---|---|---|---|---|---|
| ini. | 3 | 577 | -11743 | 89792 | SLU 38 | 7.65 | Si |
| fin. | 3 | 1044 | 9714 | 89792 | SLU 38 | 9.24 | Si |

| Sezione | γM | N | M | Mu | Comb. | c.s. | Verifica |
|---|---|---|---|---|---|---|---|
| ini. | 3 | 302 | -11577 | 89792 | SLU 83 | 7.76 | Si |
| fin. | 3 | 548 | 4264 | 89792 | SLU 83 | 21.06 | Si |
| ini. | 3 | 595 | -12482 | 89792 | SLU 79 | 7.19 | Si |
| fin. | 3 | 1030 | 9004 | 89792 | SLU 79 | 9.97 | Si |
| ini. | 3 | 549 | -12898 | 89792 | SLU 78 | 6.96 | Si |
| fin. | 3 | 970 | 8111 | 89792 | SLU 78 | 11.07 | Si |
| ini. | 3 | 622 | -11625 | 89792 | SLU 70 | 7.72 | Si |
| fin. | 3 | 1062 | 8732 | 89792 | SLU 70 | 10.28 | Si |
| ini. | 3 | 561 | -12626 | 89792 | SLU 77 | 7.11 | Si |
| fin. | 3 | 961 | 7948 | 89792 | SLU 77 | 11.3 | Si |
| ini. | 3 | 291 | -11849 | 89792 | SLU 84 | 7.58 | Si |
| fin. | 3 | 557 | 4427 | 89792 | SLU 84 | 20.28 | Si |
| ini. | 3 | 584 | -12753 | 89792 | SLU 80 | 7.04 | Si |
| fin. | 3 | 1039 | 9168 | 89792 | SLU 80 | 9.79 | Si |
| ini. | 3 | 554 | -11616 | 89792 | SLU 35 | 7.73 | Si |
| fin. | 3 | 966 | 8494 | 89792 | SLU 35 | 10.57 | Si |
| ini. | 3 | 543 | -11887 | 89792 | SLU 36 | 7.55 | Si |
| fin. | 3 | 975 | 8657 | 89792 | SLU 36 | 10.37 | Si |

## Verifiche a taglio delle travi in muratura secondo §C8.7.1.3.1 in combinazioni non sismiche

| Sezione | γM | N | M | V | Vt | Vp | Vt fess. diag. | Vt,lim | Comb. | c.s. | Verifica |
|---|---|---|---|---|---|---|---|---|---|---|---|
| ini. | 3 | 0 | -10128 | 1621 | | | 806 | 303 | SLU 81 | 0.19 | No |
| fin. | 3 | 0 | -210 | -1582 | | | 806 | 303 | SLU 81 | 0.19 | No |
| ini. | 3 | 0 | -12482 | 1650 | | | 806 | 303 | SLU 79 | 0.18 | No |
| fin. | 3 | 0 | 9004 | -1009 | | | 806 | 303 | SLU 79 | 0.3 | No |
| ini. | 3 | 0 | -11577 | 1681 | | | 806 | 303 | SLU 83 | 0.18 | No |
| fin. | 3 | 0 | 4264 | -1348 | | | 806 | 303 | SLU 83 | 0.22 | No |
| ini. | 3 | 0 | -12898 | 1708 | | | 806 | 303 | SLU 78 | 0.18 | No |
| fin. | 3 | 0 | 8111 | -1100 | | | 806 | 303 | SLU 78 | 0.28 | No |
| ini. | 3 | 0 | -11448 | 1648 | | | 806 | 303 | SLU 75 | 0.18 | No |
| fin. | 3 | 0 | 3637 | -1334 | | | 806 | 303 | SLU 75 | 0.23 | No |
| ini. | 3 | 0 | -10399 | 1634 | | | 806 | 303 | SLU 82 | 0.19 | No |
| fin. | 3 | 0 | -47 | -1568 | | | 806 | 303 | SLU 82 | 0.19 | No |
| ini. | 3 | 0 | -12753 | 1664 | | | 806 | 303 | SLU 80 | 0.18 | No |
| fin. | 3 | 0 | 9168 | -995 | | | 806 | 303 | SLU 80 | 0.3 | No |
| ini. | 3 | 0 | -11176 | 1634 | | | 806 | 303 | SLU 74 | 0.19 | No |
| fin. | 3 | 0 | 3474 | -1348 | | | 806 | 303 | SLU 74 | 0.22 | No |
| ini. | 3 | 0 | -12626 | 1695 | | | 806 | 303 | SLU 77 | 0.18 | No |
| fin. | 3 | 0 | 7948 | -1114 | | | 806 | 303 | SLU 77 | 0.27 | No |
| ini. | 3 | 0 | -11849 | 1694 | | | 806 | 303 | SLU 84 | 0.18 | No |
| fin. | 3 | 0 | 4427 | -1334 | | | 806 | 303 | SLU 84 | 0.23 | No |

## Verifiche a pressoflessione delle travi in muratura in combinazioni sismiche

| Sezione | γM | N | M | Mu | Comb. | c.s. | Verifica |
|---|---|---|---|---|---|---|---|
| ini. | 2 | 1240 | 38015 | 107694 | SLV 15 | 2.83 | Si |
| fin. | 2 | -1606 | -34797 | 107694 | SLV 15 | 3.09 | Si |
| ini. | 2 | 1577 | 46024 | 107694 | SLV 13 | 2.34 | Si |
| fin. | 2 | -1825 | -37802 | 107694 | SLV 13 | 2.85 | Si |
| ini. | 2 | -1421 | -58729 | 107694 | SLV 4 | 1.83 | Si |
| fin. | 2 | 2084 | 37864 | 107694 | SLV 4 | 2.84 | Si |
| ini. | 2 | -1084 | -50720 | 107694 | SLV 2 | 2.12 | Si |
| fin. | 2 | 1865 | 34859 | 107694 | SLV 2 | 3.09 | Si |
| ini. | 2 | -1421 | -58729 | 107694 | SLV 3 | 1.83 | Si |
| fin. | 2 | 2084 | 37864 | 107694 | SLV 3 | 2.84 | Si |
| ini. | 2 | -883 | -34213 | 107694 | SLV 7 | 3.15 | Si |
| fin. | 2 | 1048 | 15939 | 107694 | SLV 7 | 6.76 | Si |
| ini. | 2 | -883 | -34213 | 107694 | SLV 8 | 3.15 | Si |
| fin. | 2 | 1048 | 15939 | 107694 | SLV 8 | 6.76 | Si |
| ini. | 2 | 1577 | 46024 | 107694 | SLV 14 | 2.34 | Si |
| fin. | 2 | -1825 | -37802 | 107694 | SLV 14 | 2.85 | Si |
| ini. | 2 | 1240 | 38015 | 107694 | SLV 16 | 2.83 | Si |
| fin. | 2 | -1606 | -34797 | 107694 | SLV 16 | 3.09 | Si |
| ini. | 2 | -1084 | -50720 | 107694 | SLV 1 | 2.12 | Si |
| fin. | 2 | 1865 | 34859 | 107694 | SLV 1 | 3.09 | Si |

## Verifiche a taglio delle travi in muratura secondo §C8.7.1.3.1 in combinazioni sismiche

| Sezione | γM | N | M | V | Vt | Vp | Vt fess. diag. | Vt,lim | Comb. | c.s. | Verifica |
|---|---|---|---|---|---|---|---|---|---|---|---|
| ini. | 2 | 0 | 46024 | -1679 | | | 1208 | 455 | SLV 13 | 0.27 | No |
| fin. | 2 | 0 | -37802 | -3615 | | | 1208 | 455 | SLV 13 | 0.13 | No |
| ini. | 2 | 0 | -50720 | 3334 | | | 1208 | 455 | SLV 2 | 0.14 | No |
| fin. | 2 | 0 | 34859 | 1285 | | | 1208 | 455 | SLV 2 | 0.35 | No |
| ini. | 2 | 0 | -50720 | 3334 | | | 1208 | 455 | SLV 1 | 0.14 | No |
| fin. | 2 | 0 | 34859 | 1285 | | | 1208 | 455 | SLV 1 | 0.35 | No |
| ini. | 2 | 0 | -58729 | 3730 | | | 1208 | 455 | SLV 4 | 0.12 | No |
| fin. | 2 | 0 | 37864 | 1632 | | | 1208 | 455 | SLV 4 | 0.28 | No |
| ini. | 2 | 0 | 38015 | -1283 | | | 1208 | 455 | SLV 15 | 0.35 | No |
| fin. | 2 | 0 | -34797 | -3268 | | | 1208 | 455 | SLV 15 | 0.14 | No |
| ini. | 2 | 0 | -58729 | 3730 | | | 1208 | 455 | SLV 3 | 0.12 | No |
| fin. | 2 | 0 | 37864 | 1632 | | | 1208 | 455 | SLV 3 | 0.28 | No |
| ini. | 2 | 0 | -34213 | 2439 | | | 1208 | 455 | SLV 8 | 0.19 | No |
| fin. | 2 | 0 | 15939 | 322 | | | 1208 | 455 | SLV 8 | 1.41 | Si |
| ini. | 2 | 0 | -34213 | 2439 | | | 1208 | 455 | SLV 7 | 0.19 | No |
| fin. | 2 | 0 | 15939 | 322 | | | 1208 | 455 | SLV 7 | 1.41 | Si |
| ini. | 2 | 0 | 38015 | -1283 | | | 1208 | 455 | SLV 16 | 0.35 | No |
| fin. | 2 | 0 | -34797 | -3268 | | | 1208 | 455 | SLV 16 | 0.14 | No |
| ini. | 2 | 0 | 46024 | -1679 | | | 1208 | 455 | SLV 14 | 0.27 | No |
| fin. | 2 | 0 | -37802 | -3615 | | | 1208 | 455 | SLV 14 | 0.13 | No |

### Tabella dei coefficienti di sicurezza minimi

| Stato limite | Coeff.s. | Comb. | Verifica |
|---|---|---|---|
| PF_SLV | 1.834 | SLV 3 | Si |
| V_SLV | 0.122 | SLV 3 | No |
| PF_SLU | 6.962 | SLU 78 | Si |
| V_SLU | 0.178 | SLU 78 | No |

## Trave di accoppiamento 121

Verifiche condotte secondo D.M. 17-01-18 (N.T.C.)

### Dati geometrici

| X ini. | Y ini. | Z ini.inf. | Z ini.sup. | H ini. | X fin. | Y fin. | Z fin.inf. | Z fin.sup | H fin. | Luce | Spessore | R. Trazione |
|---|---|---|---|---|---|---|---|---|---|---|---|---|
| -1283.8 | 666.1 | 896 | 986 | 90 | -1193.8 | 666.1 | 896 | 986 | 90 | 90 | 28 | 3500 |

### Caratteristiche del materiale

(Circolare 7 21-01-19 C8.5.I) Muratura in mattoni pieni e malta di calce LC2_Corti

| fb_ | fhk | fvk0 | fhmedio | τ0 | fv0 | μ | ϕ | fvk,lim | E | G | FC |
|---|---|---|---|---|---|---|---|---|---|---|---|
| 12 | | | 17.25 | 0.9 | 2 | 0.577 | 0.767 | 0.65 | 32000 | 12800 | 1.2 |

### Verifiche a pressoflessione delle travi in muratura in combinazioni non sismiche

| Sezione | γM | N | M | Mu | Comb. | c.s. | Verifica |
|---|---|---|---|---|---|---|---|
| ini. | 3 | -78 | -369 | 103792 | SLU 52 | 281.58 | Si |
| fin. | 3 | -1128 | 19813 | 103792 | SLU 52 | 5.24 | Si |
| ini. | 3 | -4 | -517 | 103792 | SLU 73 | 200.82 | Si |
| fin. | 3 | -1140 | 21282 | 103792 | SLU 73 | 4.88 | Si |
| ini. | 3 | -1 | -836 | 103792 | SLU 82 | 124.23 | Si |
| fin. | 3 | -1221 | 22907 | 103792 | SLU 82 | 4.53 | Si |
| ini. | 3 | -76 | -623 | 103792 | SLU 60 | 166.68 | Si |
| fin. | 3 | -1206 | 21384 | 103792 | SLU 60 | 4.85 | Si |
| ini. | 3 | -3 | -771 | 103792 | SLU 81 | 134.63 | Si |
| fin. | 3 | -1218 | 22853 | 103792 | SLU 81 | 4.54 | Si |
| ini. | 3 | 164 | -16 | 103792 | SLU 83 | 6424.73 | Si |
| fin. | 3 | -877 | 18961 | 103792 | SLU 83 | 5.47 | Si |
| ini. | 3 | 166 | -81 | 103792 | SLU 84 | 1285.79 | Si |
| fin. | 3 | -879 | 19015 | 103792 | SLU 84 | 5.46 | Si |
| ini. | 3 | -74 | -687 | 103792 | SLU 61 | 151.02 | Si |
| fin. | 3 | -1209 | 21438 | 103792 | SLU 61 | 4.84 | Si |
| ini. | 3 | 38 | -945 | 103792 | SLU 39 | 109.88 | Si |
| fin. | 3 | -1006 | 19583 | 103792 | SLU 39 | 5.3 | Si |
| ini. | 3 | 40 | -1009 | 103792 | SLU 40 | 102.85 | Si |
| fin. | 3 | -1008 | 19638 | 103792 | SLU 40 | 5.29 | Si |

### Verifiche a taglio delle travi in muratura secondo §C8.7.1.3.1 in combinazioni non sismiche

| Sezione | γM | N | M | V | Vt | Vp | Vt fess. diag. | Vt,lim | Comb. | c.s. | Verifica |
|---|---|---|---|---|---|---|---|---|---|---|---|
| ini. | 3 | 0 | -687 | -565 | | | 970 | 365 | SLU 61 | 0.65 | No |
| fin. | 3 | 0 | 21438 | 2448 | | | 970 | 365 | SLU 61 | 0.15 | No |
| ini. | 3 | 0 | -771 | -609 | | | 970 | 365 | SLU 81 | 0.6 | No |
| fin. | 3 | 0 | 22853 | 2627 | | | 970 | 365 | SLU 81 | 0.14 | No |
| ini. | 3 | 0 | 145 | -800 | | | 970 | 365 | SLU 75 | 0.46 | No |
| fin. | 3 | 0 | 18509 | 2506 | | | 970 | 365 | SLU 75 | 0.15 | No |
| ini. | 3 | 0 | -836 | -605 | | | 970 | 365 | SLU 82 | 0.6 | No |
| fin. | 3 | 0 | 22907 | 2629 | | | 970 | 365 | SLU 82 | 0.14 | No |
| ini. | 3 | 0 | 238 | -781 | | | 970 | 365 | SLU 76 | 0.47 | No |
| fin. | 3 | 0 | 17390 | 2394 | | | 970 | 365 | SLU 76 | 0.15 | No |
| ini. | 3 | 0 | -517 | -631 | | | 970 | 365 | SLU 73 | 0.58 | No |
| fin. | 3 | 0 | 21282 | 2520 | | | 970 | 365 | SLU 73 | 0.14 | No |
| ini. | 3 | 0 | -16 | -759 | | | 970 | 365 | SLU 83 | 0.48 | No |
| fin. | 3 | 0 | 18961 | 2500 | | | 970 | 365 | SLU 83 | 0.15 | No |
| ini. | 3 | 0 | -81 | -754 | | | 970 | 365 | SLU 84 | 0.48 | No |
| fin. | 3 | 0 | 19015 | 2503 | | | 970 | 365 | SLU 84 | 0.15 | No |
| ini. | 3 | 0 | -623 | -570 | | | 970 | 365 | SLU 60 | 0.64 | No |
| fin. | 3 | 0 | 21384 | 2445 | | | 970 | 365 | SLU 60 | 0.15 | No |
| ini. | 3 | 0 | 209 | -805 | | | 970 | 365 | SLU 74 | 0.45 | No |
| fin. | 3 | 0 | 18455 | 2504 | | | 970 | 365 | SLU 74 | 0.15 | No |

### Verifiche a pressoflessione delle travi in muratura in combinazioni sismiche

| Sezione | γM | N | M | Mu | Comb. | c.s. | Verifica |
|---|---|---|---|---|---|---|---|
| ini. | 2 | 2421 | -60780 | 121694 | SLV 3 | 2 | Si |
| fin. | 2 | -3325 | 65319 | 121694 | SLV 3 | 1.86 | Si |
| ini. | 2 | 965 | -29558 | 121694 | SLV 6 | 4.12 | Si |
| fin. | 2 | -2251 | 40311 | 121694 | SLV 6 | 3.02 | Si |
| ini. | 2 | 2563 | -67061 | 121694 | SLV 1 | 1.81 | Si |
| fin. | 2 | -3715 | 71287 | 121694 | SLV 1 | 1.71 | Si |
| ini. | 2 | 2563 | -67061 | 121694 | SLV 2 | 1.81 | Si |
| fin. | 2 | -3715 | 71287 | 121694 | SLV 2 | 1.71 | Si |
| ini. | 2 | -2620 | 67313 | 121694 | SLV 15 | 1.81 | Si |
| fin. | 2 | 2157 | -43077 | 121694 | SLV 15 | 2.83 | Si |
| ini. | 2 | -2477 | 61031 | 121694 | SLV 13 | 1.99 | Si |
| fin. | 2 | 1767 | -37109 | 121694 | SLV 13 | 3.28 | Si |
| ini. | 2 | 2421 | -60780 | 121694 | SLV 4 | 2 | Si |
| fin. | 2 | -3325 | 65319 | 121694 | SLV 4 | 1.86 | Si |
| ini. | 2 | -2620 | 67313 | 121694 | SLV 16 | 1.81 | Si |
| fin. | 2 | 2157 | -43077 | 121694 | SLV 16 | 2.83 | Si |
| ini. | 2 | 965 | -29558 | 121694 | SLV 5 | 4.12 | Si |

| Sezione | γM | N | M | Mu | Comb. | c.s. | Verifica |
|---|---|---|---|---|---|---|---|
| fin. | 2 | -2251 | 40311 | 121694 | SLV 5 | 3.02 | Si |
| ini. | 2 | -2477 | 61031 | 121694 | SLV 14 | 1.99 | Si |
| fin. | 2 | 1767 | -37109 | 121694 | SLV 14 | 3.28 | Si |

### Verifiche a taglio delle travi in muratura secondo §C8.7.1.3.1 in combinazioni sismiche

| Sezione | γM | N | M | V | Vt | Vp | Vt fess. diag. | Vt,lim | Comb. | c.s. | Verifica |
|---|---|---|---|---|---|---|---|---|---|---|---|
| ini. | 2 | 0 | 67313 | -4794 | | | 1456 | 548 | SLV 16 | 0.11 | No |
| fin. | 2 | 0 | -43077 | -2222 | | | 1456 | 548 | SLV 16 | 0.25 | No |
| ini. | 2 | 0 | -67061 | 3761 | | | 1456 | 548 | SLV 1 | 0.15 | No |
| fin. | 2 | 0 | 71287 | 5764 | | | 1456 | 548 | SLV 1 | 0.1 | No |
| ini. | 2 | 0 | -60780 | 3194 | | | 1456 | 548 | SLV 4 | 0.17 | No |
| fin. | 2 | 0 | 65319 | 5600 | | | 1456 | 548 | SLV 4 | 0.1 | No |
| ini. | 2 | 0 | -67061 | 3761 | | | 1456 | 548 | SLV 2 | 0.15 | No |
| fin. | 2 | 0 | 71287 | 5764 | | | 1456 | 548 | SLV 2 | 0.1 | No |
| ini. | 2 | 0 | 67313 | -4794 | | | 1456 | 548 | SLV 15 | 0.11 | No |
| fin. | 2 | 0 | -43077 | -2222 | | | 1456 | 548 | SLV 15 | 0.25 | No |
| ini. | 2 | 0 | -28538 | 1309 | | | 1456 | 548 | SLD 2 | 0.42 | No |
| fin. | 2 | 0 | 38506 | 3476 | | | 1456 | 548 | SLD 2 | 0.16 | No |
| ini. | 2 | 0 | 61031 | -4226 | | | 1456 | 548 | SLV 13 | 0.13 | No |
| fin. | 2 | 0 | -37109 | -2058 | | | 1456 | 548 | SLV 13 | 0.27 | No |
| ini. | 2 | 0 | -28538 | 1309 | | | 1456 | 548 | SLD 1 | 0.42 | No |
| fin. | 2 | 0 | 38506 | 3476 | | | 1456 | 548 | SLD 1 | 0.16 | No |
| ini. | 2 | 0 | 61031 | -4226 | | | 1456 | 548 | SLV 14 | 0.13 | No |
| fin. | 2 | 0 | -37109 | -2058 | | | 1456 | 548 | SLV 14 | 0.27 | No |
| ini. | 2 | 0 | -60780 | 3194 | | | 1456 | 548 | SLV 3 | 0.17 | No |
| fin. | 2 | 0 | 65319 | 5600 | | | 1456 | 548 | SLV 3 | 0.1 | No |

### Tabella dei coefficienti di sicurezza minimi

| Stato limite | Coeff.s. | Comb. | Verifica |
|---|---|---|---|
| PF_SLV | 1.707 | SLV 1 | Si |
| V_SLV | 0.095 | SLV 1 | No |
| PF_SLU | 4.531 | SLU 82 | Si |
| V_SLU | 0.139 | SLU 82 | No |

## Trave di accoppiamento 122

Verifiche condotte secondo D.M. 17-01-18 (N.T.C.)

### Dati geometrici

| X ini. | Y ini. | Z ini.inf. | Z ini.sup. | H ini. | X fin. | Y fin. | Z fin.inf. | Z fin.sup | H fin. | Luce | Spessore | R. Trazione |
|---|---|---|---|---|---|---|---|---|---|---|---|---|
| -1283.8 | 666.1 | 1166 | 1248 | 82 | -1193.8 | 666.1 | 1166 | 1248 | 82 | 90 | 28 | 3500 |

### Caratteristiche del materiale

(Circolare 7 21-01-19 C8.5.I) Muratura in mattoni pieni e malta di calce LC2_Corti

| fb_ | fhk | fvk0 | fhmedio | τ0 | fv0 | μ | ϕ | fvk,lim | E | G | FC |
|---|---|---|---|---|---|---|---|---|---|---|---|
| 12 | | | 17.25 | 0.9 | 2 | 0.577 | 0.767 | 0.65 | 32000 | 12800 | 1.2 |

### Verifiche a pressoflessione delle travi in muratura in combinazioni non sismiche

| Sezione | γM | N | M | Mu | Comb. | c.s. | Verifica |
|---|---|---|---|---|---|---|---|
| ini. | 3 | -852 | -17093 | 89792 | SLU 39 | 5.25 | Si |
| fin. | 3 | -71 | 6101 | 89792 | SLU 39 | 14.72 | Si |
| ini. | 3 | -855 | -17152 | 89792 | SLU 40 | 5.24 | Si |
| fin. | 3 | -69 | 6152 | 89792 | SLU 40 | 14.6 | Si |
| ini. | 3 | -810 | -16042 | 89792 | SLU 19 | 5.6 | Si |
| fin. | 3 | -61 | 5365 | 89792 | SLU 19 | 16.74 | Si |
| ini. | 3 | -807 | -15984 | 89792 | SLU 18 | 5.62 | Si |
| fin. | 3 | -64 | 5314 | 89792 | SLU 18 | 16.9 | Si |
| ini. | 3 | -978 | -19981 | 89792 | SLU 81 | 4.49 | Si |
| fin. | 3 | -66 | 6802 | 89792 | SLU 81 | 13.2 | Si |
| ini. | 3 | -936 | -18930 | 89792 | SLU 61 | 4.74 | Si |
| fin. | 3 | -56 | 6066 | 89792 | SLU 61 | 14.8 | Si |
| ini. | 3 | -882 | -18551 | 89792 | SLU 73 | 4.84 | Si |
| fin. | 3 | -39 | 6263 | 89792 | SLU 73 | 14.34 | Si |
| ini. | 3 | -837 | -17442 | 89792 | SLU 52 | 5.15 | Si |
| fin. | 3 | -32 | 5477 | 89792 | SLU 52 | 16.4 | Si |
| ini. | 3 | -933 | -18871 | 89792 | SLU 60 | 4.76 | Si |
| fin. | 3 | -59 | 6015 | 89792 | SLU 60 | 14.93 | Si |
| ini. | 3 | -981 | -20039 | 89792 | SLU 82 | 4.48 | Si |
| fin. | 3 | -63 | 6853 | 89792 | SLU 82 | 13.1 | Si |

### Verifiche a taglio delle travi in muratura secondo §C8.7.1.3.1 in combinazioni non sismiche

| Sezione | γM | N | M | V | Vt | Vp | Vt fess. diag. | Vt,lim | Comb. | c.s. | Verifica |
|---|---|---|---|---|---|---|---|---|---|---|---|
| ini. | 3 | 0 | -15690 | 2426 | | | 806 | 303 | SLU 74 | 0.12 | No |
| fin. | 3 | 0 | 5796 | -1656 | | | 806 | 303 | SLU 74 | 0.18 | No |
| ini. | 3 | 0 | -14366 | 2327 | | | 806 | 303 | SLU 76 | 0.13 | No |
| fin. | 3 | 0 | 5764 | -1628 | | | 806 | 303 | SLU 76 | 0.19 | No |
| ini. | 3 | 0 | -19981 | 2597 | | | 806 | 303 | SLU 81 | 0.12 | No |
| fin. | 3 | 0 | 6802 | -1483 | | | 806 | 303 | SLU 81 | 0.2 | No |
| ini. | 3 | 0 | -15748 | 2429 | | | 806 | 303 | SLU 75 | 0.12 | No |
| fin. | 3 | 0 | 5847 | -1652 | | | 806 | 303 | SLU 75 | 0.18 | No |
| ini. | 3 | 0 | -11563 | 2319 | | | 806 | 303 | SLU 78 | 0.13 | No |
| fin. | 3 | 0 | 5348 | -1870 | | | 806 | 303 | SLU 78 | 0.16 | No |
| ini. | 3 | 0 | -15795 | 2487 | | | 806 | 303 | SLU 83 | 0.12 | No |
| fin. | 3 | 0 | 6303 | -1701 | | | 806 | 303 | SLU 83 | 0.18 | No |

| Sezione | γM | N | M | V | Vt | Vp | Vt fess. diag. | Vt,lim | Comb. | c.s. | Verifica |
|---|---|---|---|---|---|---|---|---|---|---|---|
| ini. | 3 | 0 | -15854 | 2491 | | | 806 | 303 | SLU 84 | 0.12 | No |
| fin. | 3 | 0 | 6354 | -1697 | | | 806 | 303 | SLU 84 | 0.18 | No |
| ini. | 3 | 0 | -18930 | 2321 | | | 806 | 303 | SLU 61 | 0.13 | No |
| fin. | 3 | 0 | 6066 | -1231 | | | 806 | 303 | SLU 61 | 0.25 | No |
| ini. | 3 | 0 | -18551 | 2437 | | | 806 | 303 | SLU 73 | 0.12 | No |
| fin. | 3 | 0 | 6263 | -1410 | | | 806 | 303 | SLU 73 | 0.22 | No |
| ini. | 3 | 0 | -20039 | 2601 | | | 806 | 303 | SLU 82 | 0.12 | No |
| fin. | 3 | 0 | 6853 | -1479 | | | 806 | 303 | SLU 82 | 0.21 | No |

### Verifiche a pressoflessione delle travi in muratura in combinazioni sismiche

| Sezione | γM | N | M | Mu | Comb. | c.s. | Verifica |
|---|---|---|---|---|---|---|---|
| ini. | 2 | 1831 | 45799 | 107694 | SLV 16 | 2.35 | Si |
| fin. | 2 | -2139 | -44402 | 107694 | SLV 16 | 2.43 | Si |
| ini. | 2 | -2408 | -64294 | 107694 | SLV 4 | 1.68 | Si |
| fin. | 2 | 2519 | 54982 | 107694 | SLV 4 | 1.96 | Si |
| ini. | 2 | 1831 | 45799 | 107694 | SLV 15 | 2.35 | Si |
| fin. | 2 | -2139 | -44402 | 107694 | SLV 15 | 2.43 | Si |
| ini. | 2 | -2067 | -38679 | 107694 | SLV 6 | 2.78 | Si |
| fin. | 2 | 34 | 14069 | 107694 | SLV 6 | 7.65 | Si |
| ini. | 2 | -2935 | -70256 | 107694 | SLV 1 | 1.53 | Si |
| fin. | 2 | 2125 | 52154 | 107694 | SLV 1 | 2.06 | Si |
| ini. | 2 | -2067 | -38679 | 107694 | SLV 5 | 2.78 | Si |
| fin. | 2 | 34 | 14069 | 107694 | SLV 5 | 7.65 | Si |
| ini. | 2 | -2408 | -64294 | 107694 | SLV 3 | 1.68 | Si |
| fin. | 2 | 2519 | 54982 | 107694 | SLV 3 | 1.96 | Si |
| ini. | 2 | 1303 | 39837 | 107694 | SLV 14 | 2.7 | Si |
| fin. | 2 | -2533 | -47231 | 107694 | SLV 14 | 2.28 | Si |
| ini. | 2 | -2935 | -70256 | 107694 | SLV 2 | 1.53 | Si |
| fin. | 2 | 2125 | 52154 | 107694 | SLV 2 | 2.06 | Si |
| ini. | 2 | 1303 | 39837 | 107694 | SLV 13 | 2.7 | Si |
| fin. | 2 | -2533 | -47231 | 107694 | SLV 13 | 2.28 | Si |

### Verifiche a taglio delle travi in muratura secondo §C8.7.1.3.1 in combinazioni sismiche

| Sezione | γM | N | M | V | Vt | Vp | Vt fess. diag. | Vt,lim | Comb. | c.s. | Verifica |
|---|---|---|---|---|---|---|---|---|---|---|---|
| ini. | 2 | 0 | -38679 | 3203 | | | 1208 | 455 | SLV 6 | 0.14 | No |
| fin. | 2 | 0 | 14069 | -466 | | | 1208 | 455 | SLV 6 | 0.98 | No |
| ini. | 2 | 0 | 45799 | -1768 | | | 1208 | 455 | SLV 15 | 0.26 | No |
| fin. | 2 | 0 | -44402 | -4140 | | | 1208 | 455 | SLV 15 | 0.11 | No |
| ini. | 2 | 0 | -70256 | 5011 | | | 1208 | 455 | SLV 1 | 0.09 | No |
| fin. | 2 | 0 | 52154 | 2220 | | | 1208 | 455 | SLV 1 | 0.2 | No |
| ini. | 2 | 0 | 39837 | -1395 | | | 1208 | 455 | SLV 14 | 0.33 | No |
| fin. | 2 | 0 | -47231 | -4443 | | | 1208 | 455 | SLV 14 | 0.1 | No |
| ini. | 2 | 0 | -70256 | 5011 | | | 1208 | 455 | SLV 2 | 0.09 | No |
| fin. | 2 | 0 | 52154 | 2220 | | | 1208 | 455 | SLV 2 | 0.2 | No |
| ini. | 2 | 0 | -38679 | 3203 | | | 1208 | 455 | SLV 5 | 0.14 | No |
| fin. | 2 | 0 | 14069 | -466 | | | 1208 | 455 | SLV 5 | 0.98 | No |
| ini. | 2 | 0 | -64294 | 4639 | | | 1208 | 455 | SLV 4 | 0.1 | No |
| fin. | 2 | 0 | 54982 | 2523 | | | 1208 | 455 | SLV 4 | 0.18 | No |
| ini. | 2 | 0 | 45799 | -1768 | | | 1208 | 455 | SLV 16 | 0.26 | No |
| fin. | 2 | 0 | -44402 | -4140 | | | 1208 | 455 | SLV 16 | 0.11 | No |
| ini. | 2 | 0 | -64294 | 4639 | | | 1208 | 455 | SLV 3 | 0.1 | No |
| fin. | 2 | 0 | 54982 | 2523 | | | 1208 | 455 | SLV 3 | 0.18 | No |
| ini. | 2 | 0 | 39837 | -1395 | | | 1208 | 455 | SLV 13 | 0.33 | No |
| fin. | 2 | 0 | -47231 | -4443 | | | 1208 | 455 | SLV 13 | 0.1 | No |

### Tabella dei coefficienti di sicurezza minimi

| Stato limite | Coeff.s. | Comb. | Verifica |
|---|---|---|---|
| PF_SLV | 1.533 | SLV 1 | Si |
| V_SLV | 0.091 | SLV 1 | No |
| PF_SLU | 4.481 | SLU 82 | Si |
| V_SLU | 0.117 | SLU 82 | No |

## Trave di accoppiamento 123

Verifiche condotte secondo D.M. 17-01-18 (N.T.C.)

### Dati geometrici

| X ini. | Y ini. | Z ini.inf. | Z ini.sup. | H ini. | X fin. | Y fin. | Z fin.inf. | Z fin.sup | H fin. | Luce | Spessore | R. Trazione |
|---|---|---|---|---|---|---|---|---|---|---|---|---|
| -795.8 | 666.1 | 896 | 986 | 90 | -705.8 | 666.1 | 896 | 986 | 90 | 90 | 28 | 3500 |

### Caratteristiche del materiale

(Circolare 7 21-01-19 C8.5.I) Muratura in mattoni pieni e malta di calce LC2_Corti

| fb_ | fhk | fvk0 | fhmedio | τ0 | fv0 | μ | ϕ | fvk,lim | E | G | FC |
|---|---|---|---|---|---|---|---|---|---|---|---|
| 12 | | | 17.25 | 0.9 | 2 | 0.577 | 0.767 | 0.65 | 32000 | 12800 | 1.2 |

### Verifiche a pressoflessione delle travi in muratura in combinazioni non sismiche

| Sezione | γM | N | M | Mu | Comb. | c.s. | Verifica |
|---|---|---|---|---|---|---|---|
| ini. | 3 | -776 | 44168 | 103792 | SLU 79 | 2.35 | Si |
| fin. | 3 | 592 | -31505 | 103792 | SLU 79 | 3.29 | Si |
| ini. | 3 | -780 | 44283 | 103792 | SLU 80 | 2.34 | Si |
| fin. | 3 | 593 | -31599 | 103792 | SLU 80 | 3.28 | Si |
| ini. | 3 | -991 | 42452 | 103792 | SLU 81 | 2.44 | Si |
| fin. | 3 | 235 | -22269 | 103792 | SLU 81 | 4.66 | Si |
| ini. | 3 | -916 | 44526 | 103792 | SLU 83 | 2.33 | Si |

| Sezione | γM | N | M | Mu | Comb. | c.s. | Verifica |
|---|---|---|---|---|---|---|---|
| fin. | 3 | 419 | -27586 | 103792 | SLU 83 | 3.76 | Si |
| ini. | 3 | -890 | 42912 | 103792 | SLU 75 | 2.42 | Si |
| fin. | 3 | 381 | -25674 | 103792 | SLU 75 | 4.04 | Si |
| ini. | 3 | -919 | 44642 | 103792 | SLU 84 | 2.32 | Si |
| fin. | 3 | 420 | -27679 | 103792 | SLU 84 | 3.75 | Si |
| ini. | 3 | -886 | 42797 | 103792 | SLU 74 | 2.43 | Si |
| fin. | 3 | 379 | -25580 | 103792 | SLU 74 | 4.06 | Si |
| ini. | 3 | -810 | 44871 | 103792 | SLU 77 | 2.31 | Si |
| fin. | 3 | 563 | -30897 | 103792 | SLU 77 | 3.36 | Si |
| ini. | 3 | -814 | 44986 | 103792 | SLU 78 | 2.31 | Si |
| fin. | 3 | 564 | -30991 | 103792 | SLU 78 | 3.35 | Si |
| ini. | 3 | -995 | 42568 | 103792 | SLU 82 | 2.44 | Si |
| fin. | 3 | 236 | -22362 | 103792 | SLU 82 | 4.64 | Si |

## Verifiche a taglio delle travi in muratura secondo §C8.7.1.3.1 in combinazioni non sismiche

| Sezione | γM | N | M | V | Vt | Vp | Vt fess. diag. | Vt,lim | Comb. | c.s. | Verifica |
|---|---|---|---|---|---|---|---|---|---|---|---|
| ini. | 3 | 0 | 42286 | -2225 | | | 970 | 365 | SLU 76 | 0.16 | No |
| fin. | 3 | 0 | -26344 | -643 | | | 970 | 365 | SLU 76 | 0.57 | No |
| ini. | 3 | 0 | 42797 | -2272 | | | 970 | 365 | SLU 74 | 0.16 | No |
| fin. | 3 | 0 | -25580 | -594 | | | 970 | 365 | SLU 74 | 0.62 | No |
| ini. | 3 | 0 | 44642 | -2332 | | | 970 | 365 | SLU 84 | 0.16 | No |
| fin. | 3 | 0 | -27679 | -695 | | | 970 | 365 | SLU 84 | 0.53 | No |
| ini. | 3 | 0 | 44168 | -2356 | | | 970 | 365 | SLU 79 | 0.16 | No |
| fin. | 3 | 0 | -31505 | -771 | | | 970 | 365 | SLU 79 | 0.47 | No |
| ini. | 3 | 0 | 44986 | -2410 | | | 970 | 365 | SLU 78 | 0.15 | No |
| fin. | 3 | 0 | -30991 | -740 | | | 970 | 365 | SLU 78 | 0.49 | No |
| ini. | 3 | 0 | 44526 | -2329 | | | 970 | 365 | SLU 83 | 0.16 | No |
| fin. | 3 | 0 | -27586 | -688 | | | 970 | 365 | SLU 83 | 0.53 | No |
| ini. | 3 | 0 | 42568 | -2197 | | | 970 | 365 | SLU 82 | 0.17 | No |
| fin. | 3 | 0 | -22362 | -556 | | | 970 | 365 | SLU 82 | 0.66 | No |
| ini. | 3 | 0 | 44283 | -2358 | | | 970 | 365 | SLU 80 | 0.15 | No |
| fin. | 3 | 0 | -31599 | -778 | | | 970 | 365 | SLU 80 | 0.47 | No |
| ini. | 3 | 0 | 44871 | -2407 | | | 970 | 365 | SLU 77 | 0.15 | No |
| fin. | 3 | 0 | -30897 | -733 | | | 970 | 365 | SLU 77 | 0.5 | No |
| ini. | 3 | 0 | 42912 | -2275 | | | 970 | 365 | SLU 75 | 0.16 | No |
| fin. | 3 | 0 | -25674 | -600 | | | 970 | 365 | SLU 75 | 0.61 | No |

## Verifiche a pressoflessione delle travi in muratura in combinazioni sismiche

| Sezione | γM | N | M | Mu | Comb. | c.s. | Verifica |
|---|---|---|---|---|---|---|---|
| ini. | 2 | -2665 | 106203 | 121694 | SLV 14 | 1.15 | Si |
| fin. | 2 | 1395 | -87156 | 121694 | SLV 14 | 1.4 | Si |
| ini. | 2 | 1422 | -52591 | 121694 | SLV 3 | 2.31 | Si |
| fin. | 2 | -1120 | 60320 | 121694 | SLV 3 | 2.02 | Si |
| ini. | 2 | -2267 | 93793 | 121694 | SLV 16 | 1.3 | Si |
| fin. | 2 | 1306 | -75439 | 121694 | SLV 16 | 1.61 | Si |
| ini. | 2 | -1838 | 69446 | 121694 | SLV 10 | 1.75 | Si |
| fin. | 2 | 649 | -53310 | 121694 | SLV 10 | 2.28 | Si |
| ini. | 2 | -1491 | 60612 | 121694 | SLD 14 | 2.01 | Si |
| fin. | 2 | 676 | -44849 | 121694 | SLD 14 | 2.71 | Si |
| ini. | 2 | -1838 | 69446 | 121694 | SLV 9 | 1.75 | Si |
| fin. | 2 | 649 | -53310 | 121694 | SLV 9 | 2.28 | Si |
| ini. | 2 | -2267 | 93793 | 121694 | SLV 15 | 1.3 | Si |
| fin. | 2 | 1306 | -75439 | 121694 | SLV 15 | 1.61 | Si |
| ini. | 2 | -2665 | 106203 | 121694 | SLV 13 | 1.15 | Si |
| fin. | 2 | 1395 | -87156 | 121694 | SLV 13 | 1.4 | Si |
| ini. | 2 | 1422 | -52591 | 121694 | SLV 4 | 2.31 | Si |
| fin. | 2 | -1120 | 60320 | 121694 | SLV 4 | 2.02 | Si |
| ini. | 2 | -1491 | 60612 | 121694 | SLD 13 | 2.01 | Si |
| fin. | 2 | 676 | -44849 | 121694 | SLD 13 | 2.71 | Si |

## Verifiche a taglio delle travi in muratura secondo §C8.7.1.3.1 in combinazioni sismiche

| Sezione | γM | N | M | V | Vt | Vp | Vt fess. diag. | Vt,lim | Comb. | c.s. | Verifica |
|---|---|---|---|---|---|---|---|---|---|---|---|
| ini. | 2 | 0 | 69446 | -3074 | | | 1456 | 548 | SLV 10 | 0.18 | No |
| fin. | 2 | 0 | -53310 | -1787 | | | 1456 | 548 | SLV 10 | 0.31 | No |
| ini. | 2 | 0 | 93793 | -4715 | | | 1456 | 548 | SLV 15 | 0.12 | No |
| fin. | 2 | 0 | -75439 | -2986 | | | 1456 | 548 | SLV 15 | 0.18 | No |
| ini. | 2 | 0 | 60612 | -2982 | | | 1456 | 548 | SLD 14 | 0.18 | No |
| fin. | 2 | 0 | -44849 | -1599 | | | 1456 | 548 | SLD 14 | 0.34 | No |
| ini. | 2 | 0 | 55463 | -2831 | | | 1456 | 548 | SLD 16 | 0.19 | No |
| fin. | 2 | 0 | -39973 | -1440 | | | 1456 | 548 | SLD 16 | 0.38 | No |
| ini. | 2 | 0 | 93793 | -4715 | | | 1456 | 548 | SLV 16 | 0.12 | No |
| fin. | 2 | 0 | -75439 | -2986 | | | 1456 | 548 | SLV 16 | 0.18 | No |
| ini. | 2 | 0 | 106203 | -5082 | | | 1456 | 548 | SLV 14 | 0.11 | No |
| fin. | 2 | 0 | -87156 | -3368 | | | 1456 | 548 | SLV 14 | 0.16 | No |
| ini. | 2 | 0 | 106203 | -5082 | | | 1456 | 548 | SLV 13 | 0.11 | No |
| fin. | 2 | 0 | -87156 | -3368 | | | 1456 | 548 | SLV 13 | 0.16 | No |
| ini. | 2 | 0 | 55463 | -2831 | | | 1456 | 548 | SLD 15 | 0.19 | No |
| fin. | 2 | 0 | -39973 | -1440 | | | 1456 | 548 | SLD 15 | 0.38 | No |
| ini. | 2 | 0 | 69446 | -3074 | | | 1456 | 548 | SLV 9 | 0.18 | No |
| fin. | 2 | 0 | -53310 | -1787 | | | 1456 | 548 | SLV 9 | 0.31 | No |
| ini. | 2 | 0 | 60612 | -2982 | | | 1456 | 548 | SLD 13 | 0.18 | No |
| fin. | 2 | 0 | -44849 | -1599 | | | 1456 | 548 | SLD 13 | 0.34 | No |

## Tabella dei coefficienti di sicurezza minimi

| Stato limite | Coeff.s. | Comb. | Verifica |
|---|---|---|---|
| PF_SLV | 1.146 | SLV 13 | Si |
| V_SLV | 0.108 | SLV 13 | No |

| Stato limite | Coeff.s. | Comb. | Verifica |
|---|---|---|---|
| PF_SLU | 2.307 | SLU 78 | Si |
| V_SLU | 0.152 | SLU 78 | No |

## Trave di accoppiamento 124

Verifiche condotte secondo D.M. 17-01-18 (N.T.C.)

### Dati geometrici

| X ini. | Y ini. | Z ini.inf. | Z ini.sup. | H ini. | X fin. | Y fin. | Z fin.inf. | Z fin.sup | H fin. | Luce | Spessore | R. Trazione |
|---|---|---|---|---|---|---|---|---|---|---|---|---|
| -795.8 | 666.1 | 1166 | 1248 | 82 | -705.8 | 666.1 | 1166 | 1248 | 82 | 90 | 28 | 3500 |

### Caratteristiche del materiale

(Circolare 7 21-01-19 C8.5.I) Muratura in mattoni pieni e malta di calce LC2_Corti

| fb_ | fhk | fvk0 | fhmedio | τ0 | fv0 | μ | ϕ | fvk,lim | E | G | FC |
|---|---|---|---|---|---|---|---|---|---|---|---|
| 12 | | | 17.25 | 0.9 | 2 | 0.577 | 0.767 | 0.65 | 32000 | 12800 | 1.2 |

### Verifiche a pressoflessione delle travi in muratura in combinazioni non sismiche

| Sezione | γM | N | M | Mu | Comb. | c.s. | Verifica |
|---|---|---|---|---|---|---|---|
| ini. | 3 | 961 | 17467 | 89792 | SLU 37 | 5.14 | Si |
| fin. | 3 | -236 | -43406 | 89792 | SLU 37 | 2.07 | Si |
| ini. | 3 | 926 | 16950 | 89792 | SLU 36 | 5.3 | Si |
| fin. | 3 | -269 | -43436 | 89792 | SLU 36 | 2.07 | Si |
| ini. | 3 | 646 | 14744 | 89792 | SLU 84 | 6.09 | Si |
| fin. | 3 | -499 | -42986 | 89792 | SLU 84 | 2.09 | Si |
| ini. | 3 | 951 | 17627 | 89792 | SLU 78 | 5.09 | Si |
| fin. | 3 | -326 | -46822 | 89792 | SLU 78 | 1.92 | Si |
| ini. | 3 | 989 | 18274 | 89792 | SLU 80 | 4.91 | Si |
| fin. | 3 | -296 | -46922 | 89792 | SLU 80 | 1.91 | Si |
| ini. | 3 | 964 | 17596 | 89792 | SLU 38 | 5.1 | Si |
| fin. | 3 | -239 | -43537 | 89792 | SLU 38 | 2.06 | Si |
| ini. | 3 | 948 | 17498 | 89792 | SLU 77 | 5.13 | Si |
| fin. | 3 | -323 | -46691 | 89792 | SLU 77 | 1.92 | Si |
| ini. | 3 | 923 | 16820 | 89792 | SLU 35 | 5.34 | Si |
| fin. | 3 | -266 | -43305 | 89792 | SLU 35 | 2.07 | Si |
| ini. | 3 | 986 | 18144 | 89792 | SLU 79 | 4.95 | Si |
| fin. | 3 | -293 | -46791 | 89792 | SLU 79 | 1.92 | Si |
| ini. | 3 | 643 | 14614 | 89792 | SLU 83 | 6.14 | Si |
| fin. | 3 | -496 | -42856 | 89792 | SLU 83 | 2.1 | Si |

### Verifiche a taglio delle travi in muratura secondo §C8.7.1.3.1 in combinazioni non sismiche

| Sezione | γM | N | M | V | Vt | Vp | Vt fess. diag. | Vt,lim | Comb. | c.s. | Verifica |
|---|---|---|---|---|---|---|---|---|---|---|---|
| ini. | 3 | 0 | 13532 | 234 | | | 806 | 303 | SLU 75 | 1.3 | Si |
| fin. | 3 | 0 | -40675 | -2451 | | | 806 | 303 | SLU 75 | 0.12 | No |
| ini. | 3 | 0 | 14744 | 197 | | | 806 | 303 | SLU 84 | 1.54 | Si |
| fin. | 3 | 0 | -42986 | -2552 | | | 806 | 303 | SLU 84 | 0.12 | No |
| ini. | 3 | 0 | 13402 | 240 | | | 806 | 303 | SLU 74 | 1.26 | Si |
| fin. | 3 | 0 | -40544 | -2447 | | | 806 | 303 | SLU 74 | 0.12 | No |
| ini. | 3 | 0 | 14614 | 203 | | | 806 | 303 | SLU 83 | 1.49 | Si |
| fin. | 3 | 0 | -42856 | -2547 | | | 806 | 303 | SLU 83 | 0.12 | No |
| ini. | 3 | 0 | 16950 | -87 | | | 806 | 303 | SLU 36 | 3.47 | Si |
| fin. | 3 | 0 | -43436 | -2371 | | | 806 | 303 | SLU 36 | 0.13 | No |
| ini. | 3 | 0 | 14265 | 164 | | | 806 | 303 | SLU 76 | 1.85 | Si |
| fin. | 3 | 0 | -40863 | -2418 | | | 806 | 303 | SLU 76 | 0.13 | No |
| ini. | 3 | 0 | 17498 | 11 | | | 806 | 303 | SLU 77 | 26.93 | Si |
| fin. | 3 | 0 | -46691 | -2635 | | | 806 | 303 | SLU 77 | 0.12 | No |
| ini. | 3 | 0 | 18144 | -54 | | | 806 | 303 | SLU 79 | 5.6 | Si |
| fin. | 3 | 0 | -46791 | -2599 | | | 806 | 303 | SLU 79 | 0.12 | No |
| ini. | 3 | 0 | 17627 | 5 | | | 806 | 303 | SLU 78 | 63.75 | Si |
| fin. | 3 | 0 | -46822 | -2639 | | | 806 | 303 | SLU 78 | 0.11 | No |
| ini. | 3 | 0 | 18274 | -61 | | | 806 | 303 | SLU 80 | 5 | Si |
| fin. | 3 | 0 | -46922 | -2603 | | | 806 | 303 | SLU 80 | 0.12 | No |

### Verifiche a pressoflessione delle travi in muratura in combinazioni sismiche

| Sezione | γM | N | M | Mu | Comb. | c.s. | Verifica |
|---|---|---|---|---|---|---|---|
| ini. | 2 | 1643 | 62108 | 107694 | SLV 13 | 1.73 | Si |
| fin. | 2 | -1401 | -86781 | 107694 | SLV 13 | 1.24 | Si |
| ini. | 2 | 609 | 34356 | 107694 | SLV 9 | 3.13 | Si |
| fin. | 2 | -1105 | -49680 | 107694 | SLV 9 | 2.17 | Si |
| ini. | 2 | -1159 | -49240 | 107694 | SLV 3 | 2.19 | Si |
| fin. | 2 | 727 | 41705 | 107694 | SLV 3 | 2.58 | Si |
| ini. | 2 | 1643 | 62108 | 107694 | SLV 14 | 1.73 | Si |
| fin. | 2 | -1401 | -86781 | 107694 | SLV 14 | 1.24 | Si |
| ini. | 2 | 609 | 34356 | 107694 | SLV 10 | 3.13 | Si |
| fin. | 2 | -1105 | -49680 | 107694 | SLV 10 | 2.17 | Si |
| ini. | 2 | -1159 | -49240 | 107694 | SLV 4 | 2.19 | Si |
| fin. | 2 | 727 | 41705 | 107694 | SLV 4 | 2.58 | Si |
| ini. | 2 | 840 | 30140 | 107694 | SLD 13 | 3.57 | Si |
| fin. | 2 | -788 | -49911 | 107694 | SLD 13 | 2.16 | Si |
| ini. | 2 | 1678 | 54710 | 107694 | SLV 16 | 1.97 | Si |
| fin. | 2 | -1105 | -81593 | 107694 | SLV 16 | 1.32 | Si |
| ini. | 2 | 840 | 30140 | 107694 | SLD 14 | 3.57 | Si |
| fin. | 2 | -788 | -49911 | 107694 | SLD 14 | 2.16 | Si |
| ini. | 2 | 1678 | 54710 | 107694 | SLV 15 | 1.97 | Si |
| fin. | 2 | -1105 | -81593 | 107694 | SLV 15 | 1.32 | Si |

### Verifiche a taglio delle travi in muratura secondo §C8.7.1.3.1 in combinazioni sismiche

| Sezione | γM | N | M | V | Vt | Vp | Vt fess. diag. | Vt,lim | Comb. | c.s. | Verifica |
|---|---|---|---|---|---|---|---|---|---|---|---|
| ini. | 2 | 0 | 30140 | -675 | | | 1208 | 455 | SLD 13 | 0.67 | No |
| fin. | 2 | 0 | -49911 | -2551 | | | 1208 | 455 | SLD 13 | 0.18 | No |
| ini. | 2 | 0 | -49240 | 2536 | | | 1208 | 455 | SLV 3 | 0.18 | No |
| fin. | 2 | 0 | 41705 | 1037 | | | 1208 | 455 | SLV 3 | 0.44 | No |
| ini. | 2 | 0 | -49240 | 2536 | | | 1208 | 455 | SLV 4 | 0.18 | No |
| fin. | 2 | 0 | 41705 | 1037 | | | 1208 | 455 | SLV 4 | 0.44 | No |
| ini. | 2 | 0 | 34356 | -499 | | | 1208 | 455 | SLV 10 | 0.91 | No |
| fin. | 2 | 0 | -49680 | -2654 | | | 1208 | 455 | SLV 10 | 0.17 | No |
| ini. | 2 | 0 | 54710 | -1895 | | | 1208 | 455 | SLV 16 | 0.24 | No |
| fin. | 2 | 0 | -81593 | -3719 | | | 1208 | 455 | SLV 16 | 0.12 | No |
| ini. | 2 | 0 | 54710 | -1895 | | | 1208 | 455 | SLV 15 | 0.24 | No |
| fin. | 2 | 0 | -81593 | -3719 | | | 1208 | 455 | SLV 15 | 0.12 | No |
| ini. | 2 | 0 | 62108 | -1966 | | | 1208 | 455 | SLV 14 | 0.23 | No |
| fin. | 2 | 0 | -86781 | -3996 | | | 1208 | 455 | SLV 14 | 0.11 | No |
| ini. | 2 | 0 | 34356 | -499 | | | 1208 | 455 | SLV 9 | 0.91 | No |
| fin. | 2 | 0 | -49680 | -2654 | | | 1208 | 455 | SLV 9 | 0.17 | No |
| ini. | 2 | 0 | 30140 | -675 | | | 1208 | 455 | SLD 14 | 0.67 | No |
| fin. | 2 | 0 | -49911 | -2551 | | | 1208 | 455 | SLD 14 | 0.18 | No |
| ini. | 2 | 0 | 62108 | -1966 | | | 1208 | 455 | SLV 13 | 0.23 | No |
| fin. | 2 | 0 | -86781 | -3996 | | | 1208 | 455 | SLV 13 | 0.11 | No |

### Tabella dei coefficienti di sicurezza minimi

| Stato limite | Coeff.s. | Comb. | Verifica |
|---|---|---|---|
| PF_SLV | 1.241 | SLV 13 | Si |
| V_SLV | 0.114 | SLV 13 | No |
| PF_SLU | 1.914 | SLU 80 | Si |
| V_SLU | 0.115 | SLU 78 | No |

## Trave di accoppiamento 125

Verifiche condotte secondo D.M. 17-01-18 (N.T.C.)

### Dati geometrici

| X ini. | Y ini. | Z ini.inf. | Z ini.sup. | H ini. | X fin. | Y fin. | Z fin.inf. | Z fin.sup | H fin. | Luce | Spessore | R. Trazione |
|---|---|---|---|---|---|---|---|---|---|---|---|---|
| -1986.8 | 104.6 | 1106 | 1248 | 142 | -2066.8 | 104.6 | 1106 | 1248 | 142 | 80 | 28 | 3500 |

### Caratteristiche del materiale

(Circolare 7 21-01-19 C8.5.I) Muratura in mattoni pieni e malta di calce LC2_Corti

| fb_ | fhk | fvk0 | fhmedio | τ0 | fv0 | μ | ϕ | fvk,lim | E | G | FC |
|---|---|---|---|---|---|---|---|---|---|---|---|
| 12 | | | 17.25 | 0.9 | 2 | 0.577 | 0.767 | 0.65 | 32000 | 12800 | 1.2 |

### Verifiche a pressoflessione delle travi in muratura in combinazioni non sismiche

| Sezione | γM | N | M | Mu | Comb. | c.s. | Verifica |
|---|---|---|---|---|---|---|---|
| ini. | 3 | -1268 | 62581 | 194792 | SLU 37 | 3.11 | Si |
| fin. | 3 | -1268 | -27698 | 194792 | SLU 37 | 7.03 | Si |
| ini. | 3 | -1335 | 61028 | 194792 | SLU 35 | 3.19 | Si |
| fin. | 3 | -1335 | -23539 | 194792 | SLU 35 | 8.28 | Si |
| ini. | 3 | -1221 | 60502 | 194792 | SLU 80 | 3.22 | Si |
| fin. | 3 | -1221 | -28296 | 194792 | SLU 80 | 6.88 | Si |
| ini. | 3 | -1255 | 65362 | 194792 | SLU 79 | 2.98 | Si |
| fin. | 3 | -1255 | -30707 | 194792 | SLU 79 | 6.34 | Si |
| ini. | 3 | -902 | 59456 | 194792 | SLU 27 | 3.28 | Si |
| fin. | 3 | -902 | -32928 | 194792 | SLU 27 | 5.92 | Si |
| ini. | 3 | -1288 | 58949 | 194792 | SLU 78 | 3.3 | Si |
| fin. | 3 | -1288 | -24137 | 194792 | SLU 78 | 8.07 | Si |
| ini. | 3 | -821 | 63789 | 194792 | SLU 71 | 3.05 | Si |
| fin. | 3 | -821 | -40096 | 194792 | SLU 71 | 4.86 | Si |
| ini. | 3 | -1322 | 63809 | 194792 | SLU 77 | 3.05 | Si |
| fin. | 3 | -1322 | -26548 | 194792 | SLU 77 | 7.34 | Si |
| ini. | 3 | -889 | 62237 | 194792 | SLU 69 | 3.13 | Si |
| fin. | 3 | -889 | -35937 | 194792 | SLU 69 | 5.42 | Si |
| ini. | 3 | -835 | 61008 | 194792 | SLU 29 | 3.19 | Si |
| fin. | 3 | -835 | -37087 | 194792 | SLU 29 | 5.25 | Si |

### Verifiche a taglio delle travi in muratura secondo §C8.7.1.3.1 in combinazioni non sismiche

| Sezione | γM | N | M | V | Vt | Vp | Vt fess. diag. | Vt,lim | Comb. | c.s. | Verifica |
|---|---|---|---|---|---|---|---|---|---|---|---|
| ini. | 3 | 0 | 57377 | -397 | | | 1531 | 576 | SLU 70 | 1.45 | Si |
| fin. | 3 | 0 | -33526 | -1937 | | | 1531 | 576 | SLU 70 | 0.3 | No |
| ini. | 3 | 0 | 65362 | -266 | | | 1531 | 576 | SLU 79 | 2.16 | Si |
| fin. | 3 | 0 | -30707 | -2197 | | | 1531 | 576 | SLU 79 | 0.26 | No |
| ini. | 3 | 0 | 62237 | -488 | | | 1531 | 576 | SLU 69 | 1.18 | Si |
| fin. | 3 | 0 | -35937 | -2028 | | | 1531 | 576 | SLU 69 | 0.28 | No |
| ini. | 3 | 0 | 62581 | -283 | | | 1531 | 576 | SLU 37 | 2.03 | Si |
| fin. | 3 | 0 | -27698 | -2020 | | | 1531 | 576 | SLU 37 | 0.29 | No |
| ini. | 3 | 0 | 60502 | -175 | | | 1531 | 576 | SLU 80 | 3.28 | Si |
| fin. | 3 | 0 | -28296 | -2106 | | | 1531 | 576 | SLU 80 | 0.27 | No |
| ini. | 3 | 0 | 63809 | -195 | | | 1531 | 576 | SLU 77 | 2.96 | Si |
| fin. | 3 | 0 | -26548 | -2125 | | | 1531 | 576 | SLU 77 | 0.27 | No |
| ini. | 3 | 0 | 58949 | -104 | | | 1531 | 576 | SLU 78 | 5.54 | Si |
| fin. | 3 | 0 | -24137 | -2035 | | | 1531 | 576 | SLU 78 | 0.28 | No |
| ini. | 3 | 0 | 58930 | -469 | | | 1531 | 576 | SLU 72 | 1.23 | Si |
| fin. | 3 | 0 | -37685 | -2008 | | | 1531 | 576 | SLU 72 | 0.29 | No |
| ini. | 3 | 0 | 61028 | -212 | | | 1531 | 576 | SLU 35 | 2.72 | Si |

| Sezione | γM | N | M | V | Vt | Vp | Vt fess. diag. | Vt,lim | Comb. | c.s. | Verifica |
|---|---|---|---|---|---|---|---|---|---|---|---|
| fin. | 3 | 0 | -23539 | -1949 | | | 1531 | 576 | SLU 35 | 0.3 | No |
| ini. | 3 | 0 | 63789 | -560 | | | 1531 | 576 | SLU 71 | 1.03 | Si |
| fin. | 3 | 0 | -40096 | -2099 | | | 1531 | 576 | SLU 71 | 0.27 | No |

### Verifiche a pressoflessione delle travi in muratura in combinazioni sismiche

| Sezione | γM | N | M | Mu | Comb. | c.s. | Verifica |
|---|---|---|---|---|---|---|---|
| ini. | 2 | -496 | -334990 | 212694 | SLV 13 | 0.63 | No |
| fin. | 2 | -23 | 350651 | 212694 | SLV 13 | 0.61 | No |
| ini. | 2 | -998 | 201794 | 212694 | SLV 6 | 1.05 | Si |
| fin. | 2 | -1217 | -172891 | 212694 | SLV 6 | 1.23 | Si |
| ini. | 2 | -318 | -373962 | 212694 | SLV 16 | 0.57 | No |
| fin. | 2 | 198 | 383369 | 212694 | SLV 16 | 0.55 | No |
| ini. | 2 | -770 | 381913 | 212694 | SLV 4 | 0.56 | No |
| fin. | 2 | -1242 | -363358 | 212694 | SLV 4 | 0.59 | No |
| ini. | 2 | -496 | -334990 | 212694 | SLV 14 | 0.63 | No |
| fin. | 2 | -23 | 350651 | 212694 | SLV 14 | 0.61 | No |
| ini. | 2 | -998 | 201794 | 212694 | SLV 5 | 1.05 | Si |
| fin. | 2 | -1217 | -172891 | 212694 | SLV 5 | 1.23 | Si |
| ini. | 2 | -948 | 420884 | 212694 | SLV 2 | 0.51 | No |
| fin. | 2 | -1463 | -396075 | 212694 | SLV 2 | 0.54 | No |
| ini. | 2 | -318 | -373962 | 212694 | SLV 15 | 0.57 | No |
| fin. | 2 | 198 | 383369 | 212694 | SLV 15 | 0.55 | No |
| ini. | 2 | -770 | 381913 | 212694 | SLV 3 | 0.56 | No |
| fin. | 2 | -1242 | -363358 | 212694 | SLV 3 | 0.59 | No |
| ini. | 2 | -948 | 420884 | 212694 | SLV 1 | 0.51 | No |
| fin. | 2 | -1463 | -396075 | 212694 | SLV 1 | 0.54 | No |

### Verifiche a taglio delle travi in muratura secondo §C8.7.1.3.1 in combinazioni sismiche

| Sezione | γM | N | M | V | Vt | Vp | Vt fess. diag. | Vt,lim | Comb. | c.s. | Verifica |
|---|---|---|---|---|---|---|---|---|---|---|---|
| ini. | 2 | 0 | 420884 | -9936 | | | 2297 | 864 | SLV 1 | 0.09 | No |
| fin. | 2 | 0 | -396075 | -11122 | | | 2297 | 864 | SLV 1 | 0.08 | No |
| ini. | 2 | 0 | -373962 | 10367 | | | 2297 | 864 | SLV 16 | 0.08 | No |
| fin. | 2 | 0 | 383369 | 9105 | | | 2297 | 864 | SLV 16 | 0.09 | No |
| ini. | 2 | 0 | -334990 | 9421 | | | 2297 | 864 | SLV 14 | 0.09 | No |
| fin. | 2 | 0 | 350651 | 8232 | | | 2297 | 864 | SLV 14 | 0.11 | No |
| ini. | 2 | 0 | 381913 | -8990 | | | 2297 | 864 | SLV 4 | 0.1 | No |
| fin. | 2 | 0 | -363358 | -10249 | | | 2297 | 864 | SLV 4 | 0.08 | No |
| ini. | 2 | 0 | 201794 | -4265 | | | 2297 | 864 | SLV 5 | 0.2 | No |
| fin. | 2 | 0 | -172891 | -5367 | | | 2297 | 864 | SLV 5 | 0.16 | No |
| ini. | 2 | 0 | -334990 | 9421 | | | 2297 | 864 | SLV 13 | 0.09 | No |
| fin. | 2 | 0 | 350651 | 8232 | | | 2297 | 864 | SLV 13 | 0.11 | No |
| ini. | 2 | 0 | 420884 | -9936 | | | 2297 | 864 | SLV 2 | 0.09 | No |
| fin. | 2 | 0 | -396075 | -11122 | | | 2297 | 864 | SLV 2 | 0.08 | No |
| ini. | 2 | 0 | 201794 | -4265 | | | 2297 | 864 | SLV 6 | 0.2 | No |
| fin. | 2 | 0 | -172891 | -5367 | | | 2297 | 864 | SLV 6 | 0.16 | No |
| ini. | 2 | 0 | -373962 | 10367 | | | 2297 | 864 | SLV 15 | 0.08 | No |
| fin. | 2 | 0 | 383369 | 9105 | | | 2297 | 864 | SLV 15 | 0.09 | No |
| ini. | 2 | 0 | 381913 | -8990 | | | 2297 | 864 | SLV 3 | 0.1 | No |
| fin. | 2 | 0 | -363358 | -10249 | | | 2297 | 864 | SLV 3 | 0.08 | No |

### Tabella dei coefficienti di sicurezza minimi

| Stato limite | Coeff.s. | Comb. | Verifica |
|---|---|---|---|
| PF_SLV | 0.505 | SLV 1 | No |
| V_SLV | 0.078 | SLV 1 | No |
| PF_SLU | 2.98 | SLU 79 | Si |
| V_SLU | 0.262 | SLU 79 | No |

## Trave di accoppiamento 126

Verifiche condotte secondo D.M. 17-01-18 (N.T.C.)

### Dati geometrici

| X ini. | Y ini. | Z ini.inf. | Z ini.sup. | H ini. | X fin. | Y fin. | Z fin.inf. | Z fin.sup | H fin. | Luce | Spessore | R. Trazione |
|---|---|---|---|---|---|---|---|---|---|---|---|---|
| -1116.3 | 104.6 | 1146 | 1248 | 102 | -1228.3 | 104.6 | 1146 | 1248 | 102 | 112 | 28 | 3500 |

### Caratteristiche del materiale

(Circolare 7 21-01-19 C8.5.I) Muratura in mattoni pieni e malta di calce LC2_Corti

| fb_ | fhk | fvk0 | fhmedio | τ0 | fv0 | μ | ϕ | fvk,lim | E | G | FC |
|---|---|---|---|---|---|---|---|---|---|---|---|
| 12 | | | 17.25 | 0.9 | 2 | 0.577 | 0.767 | 0.65 | 32000 | 12800 | 1.2 |

### Verifiche a pressoflessione delle travi in muratura in combinazioni non sismiche

| Sezione | γM | N | M | Mu | Comb. | c.s. | Verifica |
|---|---|---|---|---|---|---|---|
| ini. | 3 | -1369 | -82316 | 124792 | SLU 37 | 1.52 | Si |
| fin. | 3 | -1369 | 27972 | 124792 | SLU 37 | 4.46 | Si |
| ini. | 3 | -1412 | -83209 | 124792 | SLU 78 | 1.5 | Si |
| fin. | 3 | -1412 | 29759 | 124792 | SLU 78 | 4.19 | Si |
| ini. | 3 | -1056 | -81493 | 124792 | SLU 72 | 1.53 | Si |
| fin. | 3 | -1056 | 39961 | 124792 | SLU 72 | 3.12 | Si |
| ini. | 3 | -1386 | -85233 | 124792 | SLU 77 | 1.46 | Si |
| fin. | 3 | -1386 | 31001 | 124792 | SLU 77 | 4.03 | Si |
| ini. | 3 | -1407 | -84440 | 124792 | SLU 80 | 1.48 | Si |
| fin. | 3 | -1407 | 29744 | 124792 | SLU 80 | 4.2 | Si |
| ini. | 3 | -1034 | -82287 | 124792 | SLU 69 | 1.52 | Si |
| fin. | 3 | -1034 | 41219 | 124792 | SLU 69 | 3.03 | Si |

| Sezione | γM | N | M | Mu | Comb. | c.s. | Verifica |
|---|---|---|---|---|---|---|---|
| ini. | 3 | -1395 | -80292 | 124792 | SLU 38 | 1.55 | Si |
| fin. | 3 | -1395 | 26730 | 124792 | SLU 38 | 4.67 | Si |
| ini. | 3 | -1374 | -81085 | 124792 | SLU 35 | 1.54 | Si |
| fin. | 3 | -1374 | 27987 | 124792 | SLU 35 | 4.46 | Si |
| ini. | 3 | -1030 | -83518 | 124792 | SLU 71 | 1.49 | Si |
| fin. | 3 | -1030 | 41203 | 124792 | SLU 71 | 3.03 | Si |
| ini. | 3 | -1382 | -86464 | 124792 | SLU 79 | 1.44 | Si |
| fin. | 3 | -1382 | 30986 | 124792 | SLU 79 | 4.03 | Si |

## Verifiche a taglio delle travi in muratura secondo §C8.7.1.3.1 in combinazioni non sismiche

| Sezione | γM | N | M | V | Vt | Vp | Vt fess. diag. | Vt,lim | Comb. | c.s. | Verifica |
|---|---|---|---|---|---|---|---|---|---|---|---|
| ini. | 3 | 0 | -80292 | 2201 | | | 1002 | 377 | SLU 38 | 0.17 | No |
| fin. | 3 | 0 | 26730 | -229 | | | 1002 | 377 | SLU 38 | 1.65 | Si |
| ini. | 3 | 0 | -83209 | 2371 | | | 1002 | 377 | SLU 78 | 0.16 | No |
| fin. | 3 | 0 | 29759 | -290 | | | 1002 | 377 | SLU 78 | 1.3 | Si |
| ini. | 3 | 0 | -72649 | 2290 | | | 1002 | 377 | SLU 83 | 0.16 | No |
| fin. | 3 | 0 | 13766 | -673 | | | 1002 | 377 | SLU 83 | 0.56 | No |
| ini. | 3 | 0 | -85233 | 2400 | | | 1002 | 377 | SLU 77 | 0.16 | No |
| fin. | 3 | 0 | 31001 | -261 | | | 1002 | 377 | SLU 77 | 1.45 | Si |
| ini. | 3 | 0 | -86464 | 2411 | | | 1002 | 377 | SLU 79 | 0.16 | No |
| fin. | 3 | 0 | 30986 | -250 | | | 1002 | 377 | SLU 79 | 1.51 | Si |
| ini. | 3 | 0 | -84440 | 2382 | | | 1002 | 377 | SLU 80 | 0.16 | No |
| fin. | 3 | 0 | 29744 | -279 | | | 1002 | 377 | SLU 80 | 1.35 | Si |
| ini. | 3 | 0 | -81085 | 2220 | | | 1002 | 377 | SLU 35 | 0.17 | No |
| fin. | 3 | 0 | 27987 | -210 | | | 1002 | 377 | SLU 35 | 1.79 | Si |
| ini. | 3 | 0 | -79061 | 2190 | | | 1002 | 377 | SLU 36 | 0.17 | No |
| fin. | 3 | 0 | 26745 | -239 | | | 1002 | 377 | SLU 36 | 1.57 | Si |
| ini. | 3 | 0 | -82316 | 2230 | | | 1002 | 377 | SLU 37 | 0.17 | No |
| fin. | 3 | 0 | 27972 | -199 | | | 1002 | 377 | SLU 37 | 1.89 | Si |
| ini. | 3 | 0 | -70624 | 2261 | | | 1002 | 377 | SLU 84 | 0.17 | No |
| fin. | 3 | 0 | 12524 | -703 | | | 1002 | 377 | SLU 84 | 0.54 | No |

## Verifiche a pressoflessione delle travi in muratura in combinazioni sismiche

| Sezione | γM | N | M | Mu | Comb. | c.s. | Verifica |
|---|---|---|---|---|---|---|---|
| ini. | 2 | -4014 | 173217 | 142694 | SLV 2 | 0.82 | No |
| fin. | 2 | -4656 | -489028 | 142694 | SLV 2 | 0.29 | No |
| ini. | 2 | 3169 | -357843 | 142694 | SLV 13 | 0.4 | No |
| fin. | 2 | 3811 | 612829 | 142694 | SLV 13 | 0.23 | No |
| ini. | 2 | 1086 | -298097 | 142694 | SLV 9 | 0.48 | No |
| fin. | 2 | 1280 | 351157 | 142694 | SLV 9 | 0.41 | No |
| ini. | 2 | -4384 | 281324 | 142694 | SLV 3 | 0.51 | No |
| fin. | 2 | -5026 | -595294 | 142694 | SLV 3 | 0.24 | No |
| ini. | 2 | -4384 | 281324 | 142694 | SLV 4 | 0.51 | No |
| fin. | 2 | -5026 | -595294 | 142694 | SLV 4 | 0.24 | No |
| ini. | 2 | 2800 | -249736 | 142694 | SLV 15 | 0.57 | No |
| fin. | 2 | 3441 | 506563 | 142694 | SLV 15 | 0.28 | No |
| ini. | 2 | 2800 | -249736 | 142694 | SLV 16 | 0.57 | No |
| fin. | 2 | 3441 | 506563 | 142694 | SLV 16 | 0.28 | No |
| ini. | 2 | -4014 | 173217 | 142694 | SLV 1 | 0.82 | No |
| fin. | 2 | -4656 | -489028 | 142694 | SLV 1 | 0.29 | No |
| ini. | 2 | 3169 | -357843 | 142694 | SLV 14 | 0.4 | No |
| fin. | 2 | 3811 | 612829 | 142694 | SLV 14 | 0.23 | No |
| ini. | 2 | 1086 | -298097 | 142694 | SLV 10 | 0.48 | No |
| fin. | 2 | 1280 | 351157 | 142694 | SLV 10 | 0.41 | No |

## Verifiche a taglio delle travi in muratura secondo §C8.7.1.3.1 in combinazioni sismiche

| Sezione | γM | N | M | V | Vt | Vp | Vt fess. diag. | Vt,lim | Comb. | c.s. | Verifica |
|---|---|---|---|---|---|---|---|---|---|---|---|
| ini. | 2 | 0 | -357843 | 9639 | | | 1503 | 565 | SLV 14 | 0.06 | No |
| fin. | 2 | 0 | 612829 | 8074 | | | 1503 | 565 | SLV 14 | 0.07 | No |
| ini. | 2 | 0 | -357843 | 9639 | | | 1503 | 565 | SLV 13 | 0.06 | No |
| fin. | 2 | 0 | 612829 | 8074 | | | 1503 | 565 | SLV 13 | 0.07 | No |
| ini. | 2 | 0 | -249736 | 7715 | | | 1503 | 565 | SLV 16 | 0.07 | No |
| fin. | 2 | 0 | 506563 | 6143 | | | 1503 | 565 | SLV 16 | 0.09 | No |
| ini. | 2 | 0 | 173217 | -5233 | | | 1503 | 565 | SLV 2 | 0.11 | No |
| fin. | 2 | 0 | -489028 | -6876 | | | 1503 | 565 | SLV 2 | 0.08 | No |
| ini. | 2 | 0 | 281324 | -7156 | | | 1503 | 565 | SLV 3 | 0.08 | No |
| fin. | 2 | 0 | -595294 | -8807 | | | 1503 | 565 | SLV 3 | 0.06 | No |
| ini. | 2 | 0 | 173217 | -5233 | | | 1503 | 565 | SLV 1 | 0.11 | No |
| fin. | 2 | 0 | -489028 | -6876 | | | 1503 | 565 | SLV 1 | 0.08 | No |
| ini. | 2 | 0 | -249736 | 7715 | | | 1503 | 565 | SLV 15 | 0.07 | No |
| fin. | 2 | 0 | 506563 | 6143 | | | 1503 | 565 | SLV 15 | 0.09 | No |
| ini. | 2 | 0 | -298097 | 6678 | | | 1503 | 565 | SLV 9 | 0.08 | No |
| fin. | 2 | 0 | 351157 | 5094 | | | 1503 | 565 | SLV 9 | 0.11 | No |
| ini. | 2 | 0 | -298097 | 6678 | | | 1503 | 565 | SLV 10 | 0.08 | No |
| fin. | 2 | 0 | 351157 | 5094 | | | 1503 | 565 | SLV 10 | 0.11 | No |
| ini. | 2 | 0 | 281324 | -7156 | | | 1503 | 565 | SLV 4 | 0.08 | No |
| fin. | 2 | 0 | -595294 | -8807 | | | 1503 | 565 | SLV 4 | 0.06 | No |

## Tabella dei coefficienti di sicurezza minimi

| Stato limite | Coeff.s. | Comb. | Verifica |
|---|---|---|---|
| PF_SLV | 0.233 | SLV 13 | No |
| V_SLV | 0.059 | SLV 13 | No |
| PF_SLU | 1.443 | SLU 79 | Si |
| V_SLU | 0.156 | SLU 79 | No |

## Trave di accoppiamento 127

Verifiche condotte secondo D.M. 17-01-18 (N.T.C.)

### Dati geometrici

| X ini. | Y ini. | Z ini.inf. | Z ini.sup. | H ini. | X fin. | Y fin. | Z fin.inf. | Z fin.sup | H fin. | Luce | Spessore | R. Trazione |
|---|---|---|---|---|---|---|---|---|---|---|---|---|
| -938.6 | 104.6 | 1146 | 1248 | 102 | -1046.6 | 104.6 | 1146 | 1248 | 102 | 108 | 28 | 3500 |

### Caratteristiche del materiale

(Circolare 7 21-01-19 C8.5.I) Muratura in mattoni pieni e malta di calce LC2_Corti

| fb_ | fhk | fvk0 | fhmedio | τ0 | fv0 | μ | ϕ | fvk,lim | E | G | FC |
|---|---|---|---|---|---|---|---|---|---|---|---|
| 12 | | | 17.25 | 0.9 | 2 | 0.577 | 0.767 | 0.65 | 32000 | 12800 | 1.2 |

### Verifiche a pressoflessione delle travi in muratura in combinazioni non sismiche

| Sezione | γM | N | M | Mu | Comb. | c.s. | Verifica |
|---|---|---|---|---|---|---|---|
| ini. | 3 | -925 | 57771 | 124792 | SLU 71 | 2.16 | Si |
| fin. | 3 | -925 | -77704 | 124792 | SLU 71 | 1.61 | Si |
| ini. | 3 | -1305 | 53733 | 124792 | SLU 80 | 2.32 | Si |
| fin. | 3 | -1305 | -76725 | 124792 | SLU 80 | 1.63 | Si |
| ini. | 3 | -926 | 55973 | 124792 | SLU 69 | 2.23 | Si |
| fin. | 3 | -926 | -75628 | 124792 | SLU 69 | 1.65 | Si |
| ini. | 3 | -1282 | 57125 | 124792 | SLU 79 | 2.18 | Si |
| fin. | 3 | -1282 | -79866 | 124792 | SLU 79 | 1.56 | Si |
| ini. | 3 | -1305 | 51935 | 124792 | SLU 78 | 2.4 | Si |
| fin. | 3 | -1305 | -74649 | 124792 | SLU 78 | 1.67 | Si |
| ini. | 3 | -922 | 60027 | 124792 | SLU 29 | 2.08 | Si |
| fin. | 3 | -922 | -76211 | 124792 | SLU 29 | 1.64 | Si |
| ini. | 3 | -1280 | 57582 | 124792 | SLU 35 | 2.17 | Si |
| fin. | 3 | -1280 | -76297 | 124792 | SLU 35 | 1.64 | Si |
| ini. | 3 | -1302 | 55989 | 124792 | SLU 38 | 2.23 | Si |
| fin. | 3 | -1302 | -75232 | 124792 | SLU 38 | 1.66 | Si |
| ini. | 3 | -1283 | 55327 | 124792 | SLU 77 | 2.26 | Si |
| fin. | 3 | -1283 | -77790 | 124792 | SLU 77 | 1.6 | Si |
| ini. | 3 | -1279 | 59381 | 124792 | SLU 37 | 2.1 | Si |
| fin. | 3 | -1279 | -78373 | 124792 | SLU 37 | 1.59 | Si |

### Verifiche a taglio delle travi in muratura secondo §C8.7.1.3.1 in combinazioni non sismiche

| Sezione | γM | N | M | V | Vt | Vp | Vt fess. diag. | Vt,lim | Comb. | c.s. | Verifica |
|---|---|---|---|---|---|---|---|---|---|---|---|
| ini. | 3 | 0 | 53733 | 352 | | | 1039 | 391 | SLU 80 | 1.11 | Si |
| fin. | 3 | 0 | -76725 | -2752 | | | 1039 | 391 | SLU 80 | 0.14 | No |
| ini. | 3 | 0 | 55327 | 327 | | | 1039 | 391 | SLU 77 | 1.2 | Si |
| fin. | 3 | 0 | -77790 | -2776 | | | 1039 | 391 | SLU 77 | 0.14 | No |
| ini. | 3 | 0 | 55989 | 224 | | | 1039 | 391 | SLU 38 | 1.75 | Si |
| fin. | 3 | 0 | -75232 | -2642 | | | 1039 | 391 | SLU 38 | 0.15 | No |
| ini. | 3 | 0 | 57582 | 199 | | | 1039 | 391 | SLU 35 | 1.96 | Si |
| fin. | 3 | 0 | -76297 | -2666 | | | 1039 | 391 | SLU 35 | 0.15 | No |
| ini. | 3 | 0 | 54191 | 260 | | | 1039 | 391 | SLU 36 | 1.51 | Si |
| fin. | 3 | 0 | -73156 | -2606 | | | 1039 | 391 | SLU 36 | 0.15 | No |
| ini. | 3 | 0 | 57125 | 291 | | | 1039 | 391 | SLU 79 | 1.34 | Si |
| fin. | 3 | 0 | -79866 | -2812 | | | 1039 | 391 | SLU 79 | 0.14 | No |
| ini. | 3 | 0 | 37929 | 798 | | | 1039 | 391 | SLU 84 | 0.49 | No |
| fin. | 3 | 0 | -61880 | -2630 | | | 1039 | 391 | SLU 84 | 0.15 | No |
| ini. | 3 | 0 | 41321 | 737 | | | 1039 | 391 | SLU 83 | 0.53 | No |
| fin. | 3 | 0 | -65021 | -2691 | | | 1039 | 391 | SLU 83 | 0.15 | No |
| ini. | 3 | 0 | 59381 | 163 | | | 1039 | 391 | SLU 37 | 2.39 | Si |
| fin. | 3 | 0 | -78373 | -2702 | | | 1039 | 391 | SLU 37 | 0.14 | No |
| ini. | 3 | 0 | 51935 | 388 | | | 1039 | 391 | SLU 78 | 1.01 | Si |
| fin. | 3 | 0 | -74649 | -2716 | | | 1039 | 391 | SLU 78 | 0.14 | No |

### Verifiche a pressoflessione delle travi in muratura in combinazioni sismiche

| Sezione | γM | N | M | Mu | Comb. | c.s. | Verifica |
|---|---|---|---|---|---|---|---|
| ini. | 2 | -588 | 239323 | 142694 | SLV 5 | 0.6 | No |
| fin. | 2 | -753 | -228961 | 142694 | SLV 5 | 0.62 | No |
| ini. | 2 | -1829 | 465462 | 142694 | SLV 3 | 0.31 | No |
| fin. | 2 | -2625 | -172426 | 142694 | SLV 3 | 0.83 | No |
| ini. | 2 | -588 | 239323 | 142694 | SLV 6 | 0.6 | No |
| fin. | 2 | -753 | -228961 | 142694 | SLV 6 | 0.62 | No |
| ini. | 2 | 676 | -432214 | 142694 | SLV 14 | 0.33 | No |
| fin. | 2 | 1473 | 108316 | 142694 | SLV 14 | 1.32 | Si |
| ini. | 2 | 676 | -432214 | 142694 | SLV 13 | 0.33 | No |
| fin. | 2 | 1473 | 108316 | 142694 | SLV 13 | 1.32 | Si |
| ini. | 2 | -1628 | 513929 | 142694 | SLV 1 | 0.28 | No |
| fin. | 2 | -2384 | -257635 | 142694 | SLV 1 | 0.55 | No |
| ini. | 2 | 476 | -480680 | 142694 | SLV 16 | 0.3 | No |
| fin. | 2 | 1231 | 193525 | 142694 | SLV 16 | 0.74 | No |
| ini. | 2 | 476 | -480680 | 142694 | SLV 15 | 0.3 | No |
| fin. | 2 | 1231 | 193525 | 142694 | SLV 15 | 0.74 | No |
| ini. | 2 | -1628 | 513929 | 142694 | SLV 2 | 0.28 | No |
| fin. | 2 | -2384 | -257635 | 142694 | SLV 2 | 0.55 | No |
| ini. | 2 | -1829 | 465462 | 142694 | SLV 4 | 0.31 | No |
| fin. | 2 | -2625 | -172426 | 142694 | SLV 4 | 0.83 | No |

### Verifiche a taglio delle travi in muratura secondo §C8.7.1.3.1 in combinazioni sismiche

| Sezione | γM | N | M | V | Vt | Vp | Vt fess. diag. | Vt,lim | Comb. | c.s. | Verifica |
|---|---|---|---|---|---|---|---|---|---|---|---|
| ini. | 2 | 0 | 465462 | -5232 | | | 1558 | 586 | SLV 4 | 0.11 | No |
| fin. | 2 | 0 | -172426 | -7088 | | | 1558 | 586 | SLV 4 | 0.08 | No |
| ini. | 2 | 0 | -480680 | 7456 | | | 1558 | 586 | SLV 16 | 0.08 | No |

| Sezione | γM | N | M | V | Vt | Vp | Vt fess. diag. | Vt,lim | Comb. | c.s. | Verifica |
|---|---|---|---|---|---|---|---|---|---|---|---|
| fin. | 2 | 0 | 193525 | 5566 | | | 1558 | 586 | SLV 16 | 0.11 | No |
| ini. | 2 | 0 | -480680 | 7456 | | | 1558 | 586 | SLV 15 | 0.08 | No |
| fin. | 2 | 0 | 193525 | 5566 | | | 1558 | 586 | SLV 15 | 0.11 | No |
| ini. | 2 | 0 | -432214 | 6229 | | | 1558 | 586 | SLV 14 | 0.09 | No |
| fin. | 2 | 0 | 108316 | 4313 | | | 1558 | 586 | SLV 14 | 0.14 | No |
| ini. | 2 | 0 | -432214 | 6229 | | | 1558 | 586 | SLV 13 | 0.09 | No |
| fin. | 2 | 0 | 108316 | 4313 | | | 1558 | 586 | SLV 13 | 0.14 | No |
| ini. | 2 | 0 | 239323 | -3449 | | | 1558 | 586 | SLV 6 | 0.17 | No |
| fin. | 2 | 0 | -228961 | -5373 | | | 1558 | 586 | SLV 6 | 0.11 | No |
| ini. | 2 | 0 | 513929 | -6459 | | | 1558 | 586 | SLV 2 | 0.09 | No |
| fin. | 2 | 0 | -257635 | -8341 | | | 1558 | 586 | SLV 2 | 0.07 | No |
| ini. | 2 | 0 | 465462 | -5232 | | | 1558 | 586 | SLV 3 | 0.11 | No |
| fin. | 2 | 0 | -172426 | -7088 | | | 1558 | 586 | SLV 3 | 0.08 | No |
| ini. | 2 | 0 | 239323 | -3449 | | | 1558 | 586 | SLV 5 | 0.17 | No |
| fin. | 2 | 0 | -228961 | -5373 | | | 1558 | 586 | SLV 5 | 0.11 | No |
| ini. | 2 | 0 | 513929 | -6459 | | | 1558 | 586 | SLV 1 | 0.09 | No |
| fin. | 2 | 0 | -257635 | -8341 | | | 1558 | 586 | SLV 1 | 0.07 | No |

### Tabella dei coefficienti di sicurezza minimi

| Stato limite | Coeff.s. | Comb. | Verifica |
|---|---|---|---|
| PF_SLV | 0.278 | SLV 1 | No |
| V_SLV | 0.07 | SLV 1 | No |
| PF_SLU | 1.563 | SLU 79 | Si |
| V_SLU | 0.139 | SLU 79 | No |

## Trave di accoppiamento 128

Verifiche condotte secondo D.M. 17-01-18 (N.T.C.)

### Dati geometrici

| X ini. | Y ini. | Z ini.inf. | Z ini.sup. | H ini. | X fin. | Y fin. | Z fin.inf. | Z fin.sup | H fin. | Luce | Spessore | R. Trazione |
|---|---|---|---|---|---|---|---|---|---|---|---|---|
| -647.8 | 104.6 | 1106 | 1248 | 142 | -727.8 | 104.6 | 1106 | 1248 | 142 | 80 | 28 | 3500 |

### Caratteristiche del materiale

(Circolare 7 21-01-19 C8.5.I) Muratura in mattoni pieni e malta di calce LC2_Corti

| fb_ | fhk | fvk0 | fhmedio | τ0 | fv0 | μ | ϕ | fvk,lim | E | G | FC |
|---|---|---|---|---|---|---|---|---|---|---|---|
| 12 | | | 17.25 | 0.9 | 2 | 0.577 | 0.767 | 0.65 | 32000 | 12800 | 1.2 |

### Verifiche a pressoflessione delle travi in muratura in combinazioni non sismiche

| Sezione | γM | N | M | Mu | Comb. | c.s. | Verifica |
|---|---|---|---|---|---|---|---|
| ini. | 3 | -810 | -77467 | 194792 | SLU 73 | 2.51 | Si |
| fin. | 3 | -810 | 106069 | 194792 | SLU 73 | 1.84 | Si |
| ini. | 3 | -811 | -62254 | 194792 | SLU 77 | 3.13 | Si |
| fin. | 3 | -811 | 107585 | 194792 | SLU 77 | 1.81 | Si |
| ini. | 3 | -978 | -84571 | 194792 | SLU 82 | 2.3 | Si |
| fin. | 3 | -978 | 116053 | 194792 | SLU 82 | 1.68 | Si |
| ini. | 3 | -964 | -75677 | 194792 | SLU 40 | 2.57 | Si |
| fin. | 3 | -964 | 105001 | 194792 | SLU 40 | 1.86 | Si |
| ini. | 3 | -962 | -74410 | 194792 | SLU 83 | 2.62 | Si |
| fin. | 3 | -962 | 113348 | 194792 | SLU 83 | 1.72 | Si |
| ini. | 3 | -922 | -76898 | 194792 | SLU 84 | 2.53 | Si |
| fin. | 3 | -922 | 114753 | 194792 | SLU 84 | 1.7 | Si |
| ini. | 3 | -867 | -69927 | 194792 | SLU 74 | 2.79 | Si |
| fin. | 3 | -867 | 108885 | 194792 | SLU 74 | 1.79 | Si |
| ini. | 3 | -827 | -72416 | 194792 | SLU 75 | 2.69 | Si |
| fin. | 3 | -827 | 110290 | 194792 | SLU 75 | 1.77 | Si |
| ini. | 3 | -771 | -64743 | 194792 | SLU 78 | 3.01 | Si |
| fin. | 3 | -771 | 108990 | 194792 | SLU 78 | 1.79 | Si |
| ini. | 3 | -1018 | -82083 | 194792 | SLU 81 | 2.37 | Si |
| fin. | 3 | -1018 | 114648 | 194792 | SLU 81 | 1.7 | Si |

### Verifiche a taglio delle travi in muratura secondo §C8.7.1.3.1 in combinazioni non sismiche

| Sezione | γM | N | M | V | Vt | Vp | Vt fess. diag. | Vt,lim | Comb. | c.s. | Verifica |
|---|---|---|---|---|---|---|---|---|---|---|---|
| ini. | 3 | 0 | -73188 | 3192 | | | 1531 | 576 | SLU 39 | 0.18 | No |
| fin. | 3 | 0 | 103595 | 1174 | | | 1531 | 576 | SLU 39 | 0.49 | No |
| ini. | 3 | 0 | -75677 | 3241 | | | 1531 | 576 | SLU 40 | 0.18 | No |
| fin. | 3 | 0 | 105001 | 1223 | | | 1531 | 576 | SLU 40 | 0.47 | No |
| ini. | 3 | 0 | -82083 | 3532 | | | 1531 | 576 | SLU 81 | 0.16 | No |
| fin. | 3 | 0 | 114648 | 1314 | | | 1531 | 576 | SLU 81 | 0.44 | No |
| ini. | 3 | 0 | -74410 | 3420 | | | 1531 | 576 | SLU 83 | 0.17 | No |
| fin. | 3 | 0 | 113348 | 1201 | | | 1531 | 576 | SLU 83 | 0.48 | No |
| ini. | 3 | 0 | -72416 | 3267 | | | 1531 | 576 | SLU 75 | 0.18 | No |
| fin. | 3 | 0 | 110290 | 1228 | | | 1531 | 576 | SLU 75 | 0.47 | No |
| ini. | 3 | 0 | -77467 | 3277 | | | 1531 | 576 | SLU 73 | 0.18 | No |
| fin. | 3 | 0 | 106069 | 1239 | | | 1531 | 576 | SLU 73 | 0.47 | No |
| ini. | 3 | 0 | -76898 | 3469 | | | 1531 | 576 | SLU 84 | 0.17 | No |
| fin. | 3 | 0 | 114753 | 1250 | | | 1531 | 576 | SLU 84 | 0.46 | No |
| ini. | 3 | 0 | -84571 | 3581 | | | 1531 | 576 | SLU 82 | 0.16 | No |
| fin. | 3 | 0 | 116053 | 1362 | | | 1531 | 576 | SLU 82 | 0.42 | No |
| ini. | 3 | 0 | -69927 | 3218 | | | 1531 | 576 | SLU 74 | 0.18 | No |
| fin. | 3 | 0 | 108885 | 1180 | | | 1531 | 576 | SLU 74 | 0.49 | No |
| ini. | 3 | 0 | -69794 | 3165 | | | 1531 | 576 | SLU 76 | 0.18 | No |
| fin. | 3 | 0 | 104769 | 1127 | | | 1531 | 576 | SLU 76 | 0.51 | No |

### Verifiche a pressoflessione delle travi in muratura in combinazioni sismiche

| Sezione | γM | N | M | Mu | Comb. | c.s. | Verifica |
|---|---|---|---|---|---|---|---|
| ini. | 2 | -1951 | -366843 | 212694 | SLV 14 | 0.58 | No |
| fin. | 2 | -1365 | 489479 | 212694 | SLV 14 | 0.43 | No |
| ini. | 2 | 1018 | 276756 | 212694 | SLV 3 | 0.77 | No |
| fin. | 2 | 432 | -360768 | 212694 | SLV 3 | 0.59 | No |
| ini. | 2 | 1018 | 276756 | 212694 | SLV 4 | 0.77 | No |
| fin. | 2 | 432 | -360768 | 212694 | SLV 4 | 0.59 | No |
| ini. | 2 | -1130 | -198001 | 212694 | SLD 16 | 1.07 | Si |
| fin. | 2 | -884 | 261057 | 212694 | SLD 16 | 0.81 | No |
| ini. | 2 | -2019 | -403584 | 212694 | SLV 16 | 0.53 | No |
| fin. | 2 | -1443 | 524995 | 212694 | SLV 16 | 0.41 | No |
| ini. | 2 | 1086 | 313497 | 212694 | SLV 1 | 0.68 | No |
| fin. | 2 | 510 | -396284 | 212694 | SLV 1 | 0.54 | No |
| ini. | 2 | -1130 | -198001 | 212694 | SLD 15 | 1.07 | Si |
| fin. | 2 | -884 | 261057 | 212694 | SLD 15 | 0.81 | No |
| ini. | 2 | 1086 | 313497 | 212694 | SLV 2 | 0.68 | No |
| fin. | 2 | 510 | -396284 | 212694 | SLV 2 | 0.54 | No |
| ini. | 2 | -2019 | -403584 | 212694 | SLV 15 | 0.53 | No |
| fin. | 2 | -1443 | 524995 | 212694 | SLV 15 | 0.41 | No |
| ini. | 2 | -1951 | -366843 | 212694 | SLV 13 | 0.58 | No |
| fin. | 2 | -1365 | 489479 | 212694 | SLV 13 | 0.43 | No |

### Verifiche a taglio delle travi in muratura secondo §C8.7.1.3.1 in combinazioni sismiche

| Sezione | γM | N | M | V | Vt | Vp | Vt fess. diag. | Vt,lim | Comb. | c.s. | Verifica |
|---|---|---|---|---|---|---|---|---|---|---|---|
| ini. | 2 | 0 | -366843 | 11633 | | | 2297 | 864 | SLV 14 | 0.07 | No |
| fin. | 2 | 0 | 489479 | 10360 | | | 2297 | 864 | SLV 14 | 0.08 | No |
| ini. | 2 | 0 | 313497 | -8599 | | | 2297 | 864 | SLV 2 | 0.1 | No |
| fin. | 2 | 0 | -396284 | -9852 | | | 2297 | 864 | SLV 2 | 0.09 | No |
| ini. | 2 | 0 | -403584 | 12565 | | | 2297 | 864 | SLV 15 | 0.07 | No |
| fin. | 2 | 0 | 524995 | 11243 | | | 2297 | 864 | SLV 15 | 0.08 | No |
| ini. | 2 | 0 | -208330 | 6572 | | | 2297 | 864 | SLV 11 | 0.13 | No |
| fin. | 2 | 0 | 256413 | 5198 | | | 2297 | 864 | SLV 11 | 0.17 | No |
| ini. | 2 | 0 | -208330 | 6572 | | | 2297 | 864 | SLV 12 | 0.13 | No |
| fin. | 2 | 0 | 256413 | 5198 | | | 2297 | 864 | SLV 12 | 0.17 | No |
| ini. | 2 | 0 | 276756 | -7667 | | | 2297 | 864 | SLV 4 | 0.11 | No |
| fin. | 2 | 0 | -360768 | -8970 | | | 2297 | 864 | SLV 4 | 0.1 | No |
| ini. | 2 | 0 | -403584 | 12565 | | | 2297 | 864 | SLV 16 | 0.07 | No |
| fin. | 2 | 0 | 524995 | 11243 | | | 2297 | 864 | SLV 16 | 0.08 | No |
| ini. | 2 | 0 | 313497 | -8599 | | | 2297 | 864 | SLV 1 | 0.1 | No |
| fin. | 2 | 0 | -396284 | -9852 | | | 2297 | 864 | SLV 1 | 0.09 | No |
| ini. | 2 | 0 | -366843 | 11633 | | | 2297 | 864 | SLV 13 | 0.07 | No |
| fin. | 2 | 0 | 489479 | 10360 | | | 2297 | 864 | SLV 13 | 0.08 | No |
| ini. | 2 | 0 | 276756 | -7667 | | | 2297 | 864 | SLV 3 | 0.11 | No |
| fin. | 2 | 0 | -360768 | -8970 | | | 2297 | 864 | SLV 3 | 0.1 | No |

### Tabella dei coefficienti di sicurezza minimi

| Stato limite | Coeff.s. | Comb. | Verifica |
|---|---|---|---|
| PF_SLV | 0.405 | SLV 15 | No |
| V_SLV | 0.069 | SLV 15 | No |
| PF_SLU | 1.678 | SLU 82 | Si |
| V_SLU | 0.161 | SLU 82 | No |

## Trave di accoppiamento 129

Verifiche condotte secondo D.M. 17-01-18 (N.T.C.)

### Dati geometrici

| X ini. | Y ini. | Z ini.inf. | Z ini.sup. | H ini. | X fin. | Y fin. | Z fin.inf. | Z fin.sup | H fin. | Luce | Spessore | R. Trazione |
|---|---|---|---|---|---|---|---|---|---|---|---|---|
| -416.8 | 104.6 | 1106 | 1248 | 142 | -496.8 | 104.6 | 1106 | 1248 | 142 | 80 | 28 | 3500 |

### Caratteristiche del materiale

(Circolare 7 21-01-19 C8.5.I) Muratura in mattoni pieni e malta di calce LC2_Corti

| fb_ | fhk | fvk0 | fhmedio | τ0 | fv0 | μ | ϕ | fvk,lim | E | G | FC |
|---|---|---|---|---|---|---|---|---|---|---|---|
| 12 | | | 17.25 | 0.9 | 2 | 0.577 | 0.767 | 0.65 | 32000 | 12800 | 1.2 |

### Verifiche a pressoflessione delle travi in muratura in combinazioni non sismiche

| Sezione | γM | N | M | Mu | Comb. | c.s. | Verifica |
|---|---|---|---|---|---|---|---|
| ini. | 3 | -779 | -59142 | 194792 | SLU 78 | 3.29 | Si |
| fin. | 3 | -779 | 34332 | 194792 | SLU 78 | 5.67 | Si |
| ini. | 3 | -469 | -59176 | 194792 | SLU 72 | 3.29 | Si |
| fin. | 3 | -469 | 32100 | 194792 | SLU 72 | 6.07 | Si |
| ini. | 3 | -483 | -59479 | 194792 | SLU 69 | 3.27 | Si |
| fin. | 3 | -483 | 36626 | 194792 | SLU 69 | 5.32 | Si |
| ini. | 3 | -760 | -60132 | 194792 | SLU 80 | 3.24 | Si |
| fin. | 3 | -760 | 33450 | 194792 | SLU 80 | 5.82 | Si |
| ini. | 3 | -562 | -57583 | 194792 | SLU 58 | 3.38 | Si |
| fin. | 3 | -562 | 33721 | 194792 | SLU 58 | 5.78 | Si |
| ini. | 3 | -464 | -60470 | 194792 | SLU 71 | 3.22 | Si |
| fin. | 3 | -464 | 35743 | 194792 | SLU 71 | 5.45 | Si |
| ini. | 3 | -272 | -56627 | 194792 | SLU 50 | 3.44 | Si |
| fin. | 3 | -272 | 32371 | 194792 | SLU 50 | 6.02 | Si |
| ini. | 3 | -774 | -60435 | 194792 | SLU 77 | 3.22 | Si |
| fin. | 3 | -774 | 37976 | 194792 | SLU 77 | 5.13 | Si |
| ini. | 3 | -489 | -58186 | 194792 | SLU 70 | 3.35 | Si |

| Sezione | γM | N | M | Mu | Comb. | c.s. | Verifica |
|---|---|---|---|---|---|---|---|
| fin. | 3 | -489 | 32983 | 194792 | SLU 70 | 5.91 | Si |
| ini. | 3 | -754 | -61426 | 194792 | SLU 79 | 3.17 | Si |
| fin. | 3 | -754 | 37093 | 194792 | SLU 79 | 5.25 | Si |

### Verifiche a taglio delle travi in muratura secondo §C8.7.1.3.1 in combinazioni non sismiche

| Sezione | γM | N | M | V | Vt | Vp | Vt fess. diag. | Vt,lim | Comb. | c.s. | Verifica |
|---|---|---|---|---|---|---|---|---|---|---|---|
| ini. | 3 | 0 | -59142 | 2171 | | | 1531 | 576 | SLU 78 | 0.27 | No |
| fin. | 3 | 0 | 34332 | 236 | | | 1531 | 576 | SLU 78 | 2.44 | Si |
| ini. | 3 | 0 | -59479 | 2009 | | | 1531 | 576 | SLU 69 | 0.29 | No |
| fin. | 3 | 0 | 36626 | 465 | | | 1531 | 576 | SLU 69 | 1.24 | Si |
| ini. | 3 | 0 | -52157 | 2158 | | | 1531 | 576 | SLU 83 | 0.27 | No |
| fin. | 3 | 0 | 33543 | 56 | | | 1531 | 576 | SLU 83 | 10.38 | Si |
| ini. | 3 | 0 | -60470 | 2010 | | | 1531 | 576 | SLU 71 | 0.29 | No |
| fin. | 3 | 0 | 35743 | 466 | | | 1531 | 576 | SLU 71 | 1.24 | Si |
| ini. | 3 | 0 | -50864 | 2096 | | | 1531 | 576 | SLU 84 | 0.27 | No |
| fin. | 3 | 0 | 29899 | -6 | | | 1531 | 576 | SLU 84 | 93.09 | Si |
| ini. | 3 | 0 | -60435 | 2233 | | | 1531 | 576 | SLU 77 | 0.26 | No |
| fin. | 3 | 0 | 37976 | 298 | | | 1531 | 576 | SLU 77 | 1.93 | Si |
| ini. | 3 | 0 | -50757 | 2060 | | | 1531 | 576 | SLU 74 | 0.28 | No |
| fin. | 3 | 0 | 33847 | 126 | | | 1531 | 576 | SLU 74 | 4.59 | Si |
| ini. | 3 | 0 | -61426 | 2234 | | | 1531 | 576 | SLU 79 | 0.26 | No |
| fin. | 3 | 0 | 37093 | 300 | | | 1531 | 576 | SLU 79 | 1.92 | Si |
| ini. | 3 | 0 | -60132 | 2173 | | | 1531 | 576 | SLU 80 | 0.27 | No |
| fin. | 3 | 0 | 33450 | 238 | | | 1531 | 576 | SLU 80 | 2.42 | Si |
| ini. | 3 | 0 | -49464 | 1999 | | | 1531 | 576 | SLU 75 | 0.29 | No |
| fin. | 3 | 0 | 30203 | 64 | | | 1531 | 576 | SLU 75 | 9.02 | Si |

### Verifiche a pressoflessione delle travi in muratura in combinazioni sismiche

| Sezione | γM | N | M | Mu | Comb. | c.s. | Verifica |
|---|---|---|---|---|---|---|---|
| ini. | 2 | -1263 | -227271 | 212694 | SLD 15 | 0.94 | No |
| fin. | 2 | -940 | 147532 | 212694 | SLD 15 | 1.44 | Si |
| ini. | 2 | -2307 | -490707 | 212694 | SLV 15 | 0.43 | No |
| fin. | 2 | -1545 | 317555 | 212694 | SLV 15 | 0.67 | No |
| ini. | 2 | -1263 | -227271 | 212694 | SLD 16 | 0.94 | No |
| fin. | 2 | -940 | 147532 | 212694 | SLD 16 | 1.44 | Si |
| ini. | 2 | -2557 | -460061 | 212694 | SLV 14 | 0.46 | No |
| fin. | 2 | -2265 | 314199 | 212694 | SLV 14 | 0.68 | No |
| ini. | 2 | 1609 | 397953 | 212694 | SLV 3 | 0.53 | No |
| fin. | 2 | 1318 | -272625 | 212694 | SLV 3 | 0.78 | No |
| ini. | 2 | -2307 | -490707 | 212694 | SLV 16 | 0.43 | No |
| fin. | 2 | -1545 | 317555 | 212694 | SLV 16 | 0.67 | No |
| ini. | 2 | 1609 | 397953 | 212694 | SLV 4 | 0.53 | No |
| fin. | 2 | 1318 | -272625 | 212694 | SLV 4 | 0.78 | No |
| ini. | 2 | 1360 | 428599 | 212694 | SLV 2 | 0.5 | No |
| fin. | 2 | 598 | -275980 | 212694 | SLV 2 | 0.77 | No |
| ini. | 2 | -2557 | -460061 | 212694 | SLV 13 | 0.46 | No |
| fin. | 2 | -2265 | 314199 | 212694 | SLV 13 | 0.68 | No |
| ini. | 2 | 1360 | 428599 | 212694 | SLV 1 | 0.5 | No |
| fin. | 2 | 598 | -275980 | 212694 | SLV 1 | 0.77 | No |

### Verifiche a taglio delle travi in muratura secondo §C8.7.1.3.1 in combinazioni sismiche

| Sezione | γM | N | M | V | Vt | Vp | Vt fess. diag. | Vt,lim | Comb. | c.s. | Verifica |
|---|---|---|---|---|---|---|---|---|---|---|---|
| ini. | 2 | 0 | -490707 | 11170 | | | 2297 | 864 | SLV 16 | 0.08 | No |
| fin. | 2 | 0 | 317555 | 9915 | | | 2297 | 864 | SLV 16 | 0.09 | No |
| ini. | 2 | 0 | 428599 | -8591 | | | 2297 | 864 | SLV 2 | 0.1 | No |
| fin. | 2 | 0 | -275980 | -9791 | | | 2297 | 864 | SLV 2 | 0.09 | No |
| ini. | 2 | 0 | 397953 | -7932 | | | 2297 | 864 | SLV 3 | 0.11 | No |
| fin. | 2 | 0 | -272625 | -9185 | | | 2297 | 864 | SLV 3 | 0.09 | No |
| ini. | 2 | 0 | -227271 | 5505 | | | 2297 | 864 | SLD 15 | 0.16 | No |
| fin. | 2 | 0 | 147532 | 4266 | | | 2297 | 864 | SLD 15 | 0.2 | No |
| ini. | 2 | 0 | -227271 | 5505 | | | 2297 | 864 | SLD 16 | 0.16 | No |
| fin. | 2 | 0 | 147532 | 4266 | | | 2297 | 864 | SLD 16 | 0.2 | No |
| ini. | 2 | 0 | -490707 | 11170 | | | 2297 | 864 | SLV 15 | 0.08 | No |
| fin. | 2 | 0 | 317555 | 9915 | | | 2297 | 864 | SLV 15 | 0.09 | No |
| ini. | 2 | 0 | -460061 | 10512 | | | 2297 | 864 | SLV 13 | 0.08 | No |
| fin. | 2 | 0 | 314199 | 9308 | | | 2297 | 864 | SLV 13 | 0.09 | No |
| ini. | 2 | 0 | 397953 | -7932 | | | 2297 | 864 | SLV 4 | 0.11 | No |
| fin. | 2 | 0 | -272625 | -9185 | | | 2297 | 864 | SLV 4 | 0.09 | No |
| ini. | 2 | 0 | 428599 | -8591 | | | 2297 | 864 | SLV 1 | 0.1 | No |
| fin. | 2 | 0 | -275980 | -9791 | | | 2297 | 864 | SLV 1 | 0.09 | No |
| ini. | 2 | 0 | -460061 | 10512 | | | 2297 | 864 | SLV 14 | 0.08 | No |
| fin. | 2 | 0 | 314199 | 9308 | | | 2297 | 864 | SLV 14 | 0.09 | No |

### Tabella dei coefficienti di sicurezza minimi

| Stato limite | Coeff.s. | Comb. | Verifica |
|---|---|---|---|
| PF_SLV | 0.433 | SLV 15 | No |
| V_SLV | 0.077 | SLV 15 | No |
| PF_SLU | 3.171 | SLU 79 | Si |
| V_SLU | 0.258 | SLU 79 | No |

## Trave di accoppiamento 130

Verifiche condotte secondo D.M. 17-01-18 (N.T.C.)

## Dati geometrici

| X ini. | Y ini. | Z ini.inf. | Z ini.sup. | H ini. | X fin. | Y fin. | Z fin.inf. | Z fin.sup | H fin. | Luce | Spessore | R. Trazione |
|---|---|---|---|---|---|---|---|---|---|---|---|---|
| -867.8 | -485.9 | 1222 | 1248 | 26 | -1051.8 | -485.9 | 1222 | 1248 | 26 | 184 | 30 | 3500 |

## Caratteristiche del materiale

(Circolare 7 21-01-19 C8.5.I) Muratura in mattoni pieni e malta di calce LC2_Corti

| fb_ | fhk | fvk0 | fhmedio | τ0 | fv0 | μ | ϕ | fvk,lim | E | G | FC |
|---|---|---|---|---|---|---|---|---|---|---|---|
| 12 | | | 17.25 | 0.9 | 2 | 0.577 | 0.767 | 0.65 | 32000 | 12800 | 1.2 |

## Verifiche a pressoflessione delle travi in muratura in combinazioni non sismiche

| Sezione | γM | N | M | Mu | Comb. | c.s. | Verifica |
|---|---|---|---|---|---|---|---|
| ini. | 3 | 364 | -4566 | 10289 | SLU 38 | 2.25 | Si |
| fin. | 3 | -68 | 2291 | 10289 | SLU 38 | 4.49 | Si |
| ini. | 3 | -133 | 5010 | 10289 | SLU 44 | 2.05 | Si |
| fin. | 3 | 323 | -3004 | 10289 | SLU 44 | 3.43 | Si |
| ini. | 3 | 338 | -4107 | 10289 | SLU 36 | 2.51 | Si |
| fin. | 3 | -54 | 2054 | 10289 | SLU 36 | 5.01 | Si |
| ini. | 3 | 408 | -4862 | 10289 | SLU 79 | 2.12 | Si |
| fin. | 3 | 10 | 1850 | 10289 | SLU 79 | 5.56 | Si |
| ini. | 3 | 339 | -4201 | 10289 | SLU 14 | 2.45 | Si |
| fin. | 3 | -8 | 1644 | 10289 | SLU 14 | 6.26 | Si |
| ini. | 3 | 364 | -4660 | 10289 | SLU 16 | 2.21 | Si |
| fin. | 3 | -22 | 1882 | 10289 | SLU 16 | 5.47 | Si |
| ini. | 3 | 405 | -5380 | 10289 | SLU 35 | 1.91 | Si |
| fin. | 3 | -62 | 2375 | 10289 | SLU 35 | 4.33 | Si |
| ini. | 3 | 361 | -4710 | 10289 | SLU 41 | 2.18 | Si |
| fin. | 3 | -59 | 2083 | 10289 | SLU 41 | 4.94 | Si |
| ini. | 3 | 382 | -4403 | 10289 | SLU 77 | 2.34 | Si |
| fin. | 3 | 23 | 1613 | 10289 | SLU 77 | 6.38 | Si |
| ini. | 3 | 430 | -5839 | 10289 | SLU 37 | 1.76 | Si |
| fin. | 3 | -76 | 2613 | 10289 | SLU 37 | 3.94 | Si |

## Verifiche a taglio delle travi in muratura secondo §C8.7.1.3.1 in combinazioni non sismiche

| Sezione | γM | N | M | V | Vt | Vp | Vt fess. diag. | Vt,lim | Comb. | c.s. | Verifica |
|---|---|---|---|---|---|---|---|---|---|---|---|
| ini. | 3 | 0 | 2885 | -277 | | | 200 | 75 | SLU 47 | 0.27 | No |
| fin. | 3 | 0 | -1891 | 79 | | | 200 | 75 | SLU 47 | 0.95 | No |
| ini. | 3 | 0 | 3831 | -298 | | | 200 | 75 | SLU 65 | 0.25 | No |
| fin. | 3 | 0 | -2273 | 78 | | | 200 | 75 | SLU 65 | 0.97 | No |
| ini. | 3 | 0 | 5010 | -296 | | | 200 | 75 | SLU 44 | 0.25 | No |
| fin. | 3 | 0 | -3004 | 73 | | | 200 | 75 | SLU 44 | 1.03 | Si |
| ini. | 3 | 0 | 2687 | -295 | | | 200 | 75 | SLU 52 | 0.26 | No |
| fin. | 3 | 0 | -1643 | 72 | | | 200 | 75 | SLU 52 | 1.04 | Si |
| ini. | 3 | 0 | 1508 | -297 | | | 200 | 75 | SLU 73 | 0.25 | No |
| fin. | 3 | 0 | -912 | 77 | | | 200 | 75 | SLU 73 | 0.98 | No |
| ini. | 3 | 0 | 563 | -275 | | | 200 | 75 | SLU 55 | 0.27 | No |
| fin. | 3 | 0 | -530 | 78 | | | 200 | 75 | SLU 55 | 0.96 | No |
| ini. | 3 | 0 | -616 | -277 | | | 200 | 75 | SLU 76 | 0.27 | No |
| fin. | 3 | 0 | 201 | 83 | | | 200 | 75 | SLU 76 | 0.91 | No |
| ini. | 3 | 0 | 1706 | -279 | | | 200 | 75 | SLU 68 | 0.27 | No |
| fin. | 3 | 0 | -1160 | 84 | | | 200 | 75 | SLU 68 | 0.9 | No |
| ini. | 3 | 0 | 843 | -263 | | | 200 | 75 | SLU 61 | 0.29 | No |
| fin. | 3 | 0 | -845 | 65 | | | 200 | 75 | SLU 61 | 1.16 | Si |
| ini. | 3 | 0 | -336 | -265 | | | 200 | 75 | SLU 82 | 0.28 | No |
| fin. | 3 | 0 | -114 | 70 | | | 200 | 75 | SLU 82 | 1.08 | Si |

## Verifiche a pressoflessione delle travi in muratura in combinazioni sismiche

| Sezione | γM | N | M | Mu | Comb. | c.s. | Verifica |
|---|---|---|---|---|---|---|---|
| ini. | 2 | -1462 | 23579 | 15434 | SLV 2 | 0.65 | No |
| fin. | 2 | -853 | 8950 | 15434 | SLV 2 | 1.72 | Si |
| ini. | 2 | 2181 | -33079 | 15434 | SLV 14 | 0.47 | No |
| fin. | 2 | 994 | -4724 | 15434 | SLV 14 | 3.27 | Si |
| ini. | 2 | 1620 | -26457 | 15434 | SLV 9 | 0.58 | No |
| fin. | 2 | 103 | 7577 | 15434 | SLV 9 | 2.04 | Si |
| ini. | 2 | 1620 | -26457 | 15434 | SLV 10 | 0.58 | No |
| fin. | 2 | 103 | 7577 | 15434 | SLV 10 | 2.04 | Si |
| ini. | 2 | -2074 | 34900 | 15434 | SLV 4 | 0.44 | No |
| fin. | 2 | -643 | 2508 | 15434 | SLV 4 | 6.15 | Si |
| ini. | 2 | -1462 | 23579 | 15434 | SLV 1 | 0.65 | No |
| fin. | 2 | -853 | 8950 | 15434 | SLV 1 | 1.72 | Si |
| ini. | 2 | -1513 | 28277 | 15434 | SLV 7 | 0.55 | No |
| fin. | 2 | 249 | -9794 | 15434 | SLV 7 | 1.58 | Si |
| ini. | 2 | 2181 | -33079 | 15434 | SLV 13 | 0.47 | No |
| fin. | 2 | 994 | -4724 | 15434 | SLV 13 | 3.27 | Si |
| ini. | 2 | -2074 | 34900 | 15434 | SLV 3 | 0.44 | No |
| fin. | 2 | -643 | 2508 | 15434 | SLV 3 | 6.15 | Si |
| ini. | 2 | -1513 | 28277 | 15434 | SLV 8 | 0.55 | No |
| fin. | 2 | 249 | -9794 | 15434 | SLV 8 | 1.58 | Si |

## Verifiche a taglio delle travi in muratura secondo §C8.7.1.3.1 in combinazioni sismiche

| Sezione | γM | N | M | V | Vt | Vp | Vt fess. diag. | Vt,lim | Comb. | c.s. | Verifica |
|---|---|---|---|---|---|---|---|---|---|---|---|
| ini. | 2 | 0 | 34900 | -290 | | | 300 | 113 | SLV 3 | 0.39 | No |
| fin. | 2 | 0 | 2508 | 233 | | | 300 | 113 | SLV 3 | 0.49 | No |
| ini. | 2 | 0 | 12070 | -233 | | | 300 | 113 | SLD 8 | 0.49 | No |
| fin. | 2 | 0 | -4654 | 59 | | | 300 | 113 | SLD 8 | 1.93 | Si |
| ini. | 2 | 0 | 12070 | -233 | | | 300 | 113 | SLD 7 | 0.49 | No |
| fin. | 2 | 0 | -4654 | 59 | | | 300 | 113 | SLD 7 | 1.93 | Si |
| ini. | 2 | 0 | 23579 | -205 | | | 300 | 113 | SLV 2 | 0.55 | No |

| Sezione | γM | N | M | V | Vt | Vp | Vt fess. diag. | Vt,lim | Comb. | c.s. | Verifica |
|---|---|---|---|---|---|---|---|---|---|---|---|
| fin. | 2 | 0 | 8950 | 252 | | | 300 | 113 | SLV 2 | 0.45 | No |
| ini. | 2 | 0 | 28277 | -333 | | | 300 | 113 | SLV 8 | 0.34 | No |
| fin. | 2 | 0 | -9794 | 73 | | | 300 | 113 | SLV 8 | 1.55 | Si |
| ini. | 2 | 0 | 23579 | -205 | | | 300 | 113 | SLV 1 | 0.55 | No |
| fin. | 2 | 0 | 8950 | 252 | | | 300 | 113 | SLV 1 | 0.45 | No |
| ini. | 2 | 0 | 11279 | -286 | | | 300 | 113 | SLV 11 | 0.39 | No |
| fin. | 2 | 0 | -13896 | -45 | | | 300 | 113 | SLV 11 | 2.49 | Si |
| ini. | 2 | 0 | 34900 | -290 | | | 300 | 113 | SLV 4 | 0.39 | No |
| fin. | 2 | 0 | 2508 | 233 | | | 300 | 113 | SLV 4 | 0.49 | No |
| ini. | 2 | 0 | 28277 | -333 | | | 300 | 113 | SLV 7 | 0.34 | No |
| fin. | 2 | 0 | -9794 | 73 | | | 300 | 113 | SLV 7 | 1.55 | Si |
| ini. | 2 | 0 | 11279 | -286 | | | 300 | 113 | SLV 12 | 0.39 | No |
| fin. | 2 | 0 | -13896 | -45 | | | 300 | 113 | SLV 12 | 2.49 | Si |

### Tabella dei coefficienti di sicurezza minimi

| Stato limite | Coeff.s. | Comb. | Verifica |
|---|---|---|---|
| PF_SLV | 0.442 | SLV 3 | No |
| V_SLV | 0.339 | SLV 7 | No |
| PF_SLU | 1.762 | SLU 37 | Si |
| V_SLU | 0.253 | SLU 65 | No |

## Trave di accoppiamento 131

Verifiche condotte secondo D.M. 17-01-18 (N.T.C.)

### Dati geometrici

| X ini. | Y ini. | Z ini.inf. | Z ini.sup. | H ini. | X fin. | Y fin. | Z fin.inf. | Z fin.sup | H fin. | Luce | Spessore | R. Trazione |
|---|---|---|---|---|---|---|---|---|---|---|---|---|
| -854.8 | -335.9 | 1106 | 1248 | 142 | -944.8 | -335.9 | 1106 | 1248 | 142 | 90 | 28 | 3500 |

### Caratteristiche del materiale

(Circolare 7 21-01-19 C8.5.I) Muratura in mattoni pieni e malta di calce LC2_Corti

| fb_ | fhk | fvk0 | fhmedio | τ0 | fv0 | μ | ϕ | fvk,lim | E | G | FC |
|---|---|---|---|---|---|---|---|---|---|---|---|
| 12 | | | 17.25 | 0.9 | 2 | 0.577 | 0.767 | 0.65 | 32000 | 12800 | 1.2 |

### Verifiche a pressoflessione delle travi in muratura in combinazioni non sismiche

| Sezione | γM | N | M | Mu | Comb. | c.s. | Verifica |
|---|---|---|---|---|---|---|---|
| ini. | 3 | 1249 | 76355 | 194792 | SLU 83 | 2.55 | Si |
| fin. | 3 | 1249 | -140940 | 194792 | SLU 83 | 1.38 | Si |
| ini. | 3 | 970 | 75367 | 194792 | SLU 61 | 2.58 | Si |
| fin. | 3 | 970 | -135236 | 194792 | SLU 61 | 1.44 | Si |
| ini. | 3 | 871 | 78489 | 194792 | SLU 75 | 2.48 | Si |
| fin. | 3 | 871 | -128990 | 194792 | SLU 75 | 1.51 | Si |
| ini. | 3 | 1007 | 77359 | 194792 | SLU 40 | 2.52 | Si |
| fin. | 3 | 1007 | -135638 | 194792 | SLU 40 | 1.44 | Si |
| ini. | 3 | 654 | 85028 | 194792 | SLU 73 | 2.29 | Si |
| fin. | 3 | 654 | -131791 | 194792 | SLU 73 | 1.48 | Si |
| ini. | 3 | 1059 | 73110 | 194792 | SLU 60 | 2.66 | Si |
| fin. | 3 | 1059 | -133865 | 194792 | SLU 60 | 1.46 | Si |
| ini. | 3 | 1011 | 87732 | 194792 | SLU 82 | 2.22 | Si |
| fin. | 3 | 1011 | -148980 | 194792 | SLU 82 | 1.31 | Si |
| ini. | 3 | 1096 | 75102 | 194792 | SLU 39 | 2.59 | Si |
| fin. | 3 | 1096 | -134267 | 194792 | SLU 39 | 1.45 | Si |
| ini. | 3 | 1160 | 78612 | 194792 | SLU 84 | 2.48 | Si |
| fin. | 3 | 1160 | -142311 | 194792 | SLU 84 | 1.37 | Si |
| ini. | 3 | 1100 | 85475 | 194792 | SLU 81 | 2.28 | Si |
| fin. | 3 | 1100 | -147609 | 194792 | SLU 81 | 1.32 | Si |

### Verifiche a taglio delle travi in muratura secondo §C8.7.1.3.1 in combinazioni non sismiche

| Sezione | γM | N | M | V | Vt | Vp | Vt fess. diag. | Vt,lim | Comb. | c.s. | Verifica |
|---|---|---|---|---|---|---|---|---|---|---|---|
| ini. | 3 | 0 | 78489 | -1509 | | | 1531 | 576 | SLU 75 | 0.38 | No |
| fin. | 3 | 0 | -128990 | -3041 | | | 1531 | 576 | SLU 75 | 0.19 | No |
| ini. | 3 | 0 | 76355 | -1571 | | | 1531 | 576 | SLU 83 | 0.37 | No |
| fin. | 3 | 0 | -140940 | -3198 | | | 1531 | 576 | SLU 83 | 0.18 | No |
| ini. | 3 | 0 | 78612 | -1611 | | | 1531 | 576 | SLU 84 | 0.36 | No |
| fin. | 3 | 0 | -142311 | -3238 | | | 1531 | 576 | SLU 84 | 0.18 | No |
| ini. | 3 | 0 | 75102 | -1596 | | | 1531 | 576 | SLU 39 | 0.36 | No |
| fin. | 3 | 0 | -134267 | -3012 | | | 1531 | 576 | SLU 39 | 0.19 | No |
| ini. | 3 | 0 | 77359 | -1636 | | | 1531 | 576 | SLU 40 | 0.35 | No |
| fin. | 3 | 0 | -135638 | -3052 | | | 1531 | 576 | SLU 40 | 0.19 | No |
| ini. | 3 | 0 | 75367 | -1588 | | | 1531 | 576 | SLU 61 | 0.36 | No |
| fin. | 3 | 0 | -135236 | -3029 | | | 1531 | 576 | SLU 61 | 0.19 | No |
| ini. | 3 | 0 | 87732 | -1787 | | | 1531 | 576 | SLU 82 | 0.32 | No |
| fin. | 3 | 0 | -148980 | -3414 | | | 1531 | 576 | SLU 82 | 0.17 | No |
| ini. | 3 | 0 | 76232 | -1469 | | | 1531 | 576 | SLU 74 | 0.39 | No |
| fin. | 3 | 0 | -127619 | -3001 | | | 1531 | 576 | SLU 74 | 0.19 | No |
| ini. | 3 | 0 | 85475 | -1746 | | | 1531 | 576 | SLU 81 | 0.33 | No |
| fin. | 3 | 0 | -147609 | -3373 | | | 1531 | 576 | SLU 81 | 0.17 | No |
| ini. | 3 | 0 | 85028 | -1613 | | | 1531 | 576 | SLU 73 | 0.36 | No |
| fin. | 3 | 0 | -131791 | -3145 | | | 1531 | 576 | SLU 73 | 0.18 | No |

### Verifiche a pressoflessione delle travi in muratura in combinazioni sismiche

| Sezione | γM | N | M | Mu | Comb. | c.s. | Verifica |
|---|---|---|---|---|---|---|---|
| ini. | 2 | -1980 | -230752 | 212694 | SLV 15 | 0.92 | No |
| fin. | 2 | -1303 | 200564 | 212694 | SLV 15 | 1.06 | Si |

| Sezione | γM | N | M | Mu | Comb. | c.s. | Verifica |
|---|---|---|---|---|---|---|---|
| ini. | 2 | 1622 | 374317 | 212694 | SLV 4 | 0.57 | No |
| fin. | 2 | 1458 | -414506 | 212694 | SLV 4 | 0.51 | No |
| ini. | 2 | -1079 | -264223 | 212694 | SLV 13 | 0.8 | No |
| fin. | 2 | -914 | 262155 | 212694 | SLV 13 | 0.81 | No |
| ini. | 2 | -689 | 201593 | 212694 | SLV 7 | 1.06 | Si |
| fin. | 2 | 39 | -271088 | 212694 | SLV 7 | 0.78 | No |
| ini. | 2 | 1622 | 374317 | 212694 | SLV 3 | 0.57 | No |
| fin. | 2 | 1458 | -414506 | 212694 | SLV 3 | 0.51 | No |
| ini. | 2 | -689 | 201593 | 212694 | SLV 8 | 1.06 | Si |
| fin. | 2 | 39 | -271088 | 212694 | SLV 8 | 0.78 | No |
| ini. | 2 | -1980 | -230752 | 212694 | SLV 16 | 0.92 | No |
| fin. | 2 | -1303 | 200564 | 212694 | SLV 16 | 1.06 | Si |
| ini. | 2 | 2523 | 340845 | 212694 | SLV 2 | 0.62 | No |
| fin. | 2 | 1846 | -352915 | 212694 | SLV 2 | 0.6 | No |
| ini. | 2 | -1079 | -264223 | 212694 | SLV 14 | 0.8 | No |
| fin. | 2 | -914 | 262155 | 212694 | SLV 14 | 0.81 | No |
| ini. | 2 | 2523 | 340845 | 212694 | SLV 1 | 0.62 | No |
| fin. | 2 | 1846 | -352915 | 212694 | SLV 1 | 0.6 | No |

### Verifiche a taglio delle travi in muratura secondo §C8.7.1.3.1 in combinazioni sismiche

| Sezione | γM | N | M | V | Vt | Vp | Vt fess. diag. | Vt,lim | Comb. | c.s. | Verifica |
|---|---|---|---|---|---|---|---|---|---|---|---|
| ini. | 2 | 0 | 177565 | -3985 | | | 2297 | 864 | SLD 2 | 0.22 | No |
| fin. | 2 | 0 | -195103 | -5014 | | | 2297 | 864 | SLD 2 | 0.17 | No |
| ini. | 2 | 0 | -264223 | 5812 | | | 2297 | 864 | SLV 13 | 0.15 | No |
| fin. | 2 | 0 | 262155 | 4884 | | | 2297 | 864 | SLV 13 | 0.18 | No |
| ini. | 2 | 0 | -230752 | 6302 | | | 2297 | 864 | SLV 16 | 0.14 | No |
| fin. | 2 | 0 | 200564 | 5236 | | | 2297 | 864 | SLV 16 | 0.17 | No |
| ini. | 2 | 0 | 340845 | -8141 | | | 2297 | 864 | SLV 2 | 0.11 | No |
| fin. | 2 | 0 | -352915 | -9136 | | | 2297 | 864 | SLV 2 | 0.09 | No |
| ini. | 2 | 0 | 374317 | -7650 | | | 2297 | 864 | SLV 4 | 0.11 | No |
| fin. | 2 | 0 | -414506 | -8784 | | | 2297 | 864 | SLV 4 | 0.1 | No |
| ini. | 2 | 0 | 340845 | -8141 | | | 2297 | 864 | SLV 1 | 0.11 | No |
| fin. | 2 | 0 | -352915 | -9136 | | | 2297 | 864 | SLV 1 | 0.09 | No |
| ini. | 2 | 0 | -230752 | 6302 | | | 2297 | 864 | SLV 15 | 0.14 | No |
| fin. | 2 | 0 | 200564 | 5236 | | | 2297 | 864 | SLV 15 | 0.17 | No |
| ini. | 2 | 0 | -264223 | 5812 | | | 2297 | 864 | SLV 14 | 0.15 | No |
| fin. | 2 | 0 | 262155 | 4884 | | | 2297 | 864 | SLV 14 | 0.18 | No |
| ini. | 2 | 0 | 374317 | -7650 | | | 2297 | 864 | SLV 3 | 0.11 | No |
| fin. | 2 | 0 | -414506 | -8784 | | | 2297 | 864 | SLV 3 | 0.1 | No |
| ini. | 2 | 0 | 177565 | -3985 | | | 2297 | 864 | SLD 1 | 0.22 | No |
| fin. | 2 | 0 | -195103 | -5014 | | | 2297 | 864 | SLD 1 | 0.17 | No |

### Tabella dei coefficienti di sicurezza minimi

| Stato limite | Coeff.s. | Comb. | Verifica |
|---|---|---|---|
| PF_SLV | 0.513 | SLV 3 | No |
| V_SLV | 0.095 | SLV 1 | No |
| PF_SLU | 1.308 | SLU 82 | Si |
| V_SLU | 0.169 | SLU 82 | No |

## Trave di accoppiamento 132

Verifiche condotte secondo D.M. 17-01-18 (N.T.C.)

### Dati geometrici

| X ini. | Y ini. | Z ini.inf. | Z ini.sup. | H ini. | X fin. | Y fin. | Z fin.inf. | Z fin.sup | H fin. | Luce | Spessore | R. Trazione |
|---|---|---|---|---|---|---|---|---|---|---|---|---|
| -772.3 | -486.1 | 1222 | 1248 | 26 | -772.3 | -377.1 | 1222 | 1248 | 26 | 109 | 30 | 3500 |

### Caratteristiche del materiale

(Circolare 7 21-01-19 C8.5.I) Muratura in mattoni pieni e malta di calce LC2_Corti

| fb_ | fhk | fvk0 | fhmedio | τ0 | fv0 | μ | ϕ | fvk,lim | E | G | FC |
|---|---|---|---|---|---|---|---|---|---|---|---|
| 12 | | | 17.25 | 0.9 | 2 | 0.577 | 0.767 | 0.65 | 32000 | 12800 | 1.2 |

### Verifiche a pressoflessione delle travi in muratura in combinazioni non sismiche

| Sezione | γM | N | M | Mu | Comb. | c.s. | Verifica |
|---|---|---|---|---|---|---|---|
| ini. | 3 | 3 | -756 | 10289 | SLU 31 | 13.61 | Si |
| fin. | 3 | 3 | 19125 | 10289 | SLU 31 | 0.54 | No |
| ini. | 3 | 4 | -569 | 10289 | SLU 10 | 18.08 | Si |
| fin. | 3 | 4 | 17527 | 10289 | SLU 10 | 0.59 | No |
| ini. | 3 | 3 | -428 | 10289 | SLU 76 | 24.06 | Si |
| fin. | 3 | 3 | 18272 | 10289 | SLU 76 | 0.56 | No |
| ini. | 3 | 3 | -602 | 10289 | SLU 34 | 17.1 | Si |
| fin. | 3 | 3 | 17764 | 10289 | SLU 34 | 0.58 | No |
| ini. | 3 | 4 | -395 | 10289 | SLU 52 | 26.03 | Si |
| fin. | 3 | 4 | 18035 | 10289 | SLU 52 | 0.57 | No |
| ini. | 3 | 3 | -482 | 10289 | SLU 23 | 21.34 | Si |
| fin. | 3 | 3 | 16525 | 10289 | SLU 23 | 0.62 | No |
| ini. | 3 | 4 | -241 | 10289 | SLU 55 | 42.71 | Si |
| fin. | 3 | 4 | 16674 | 10289 | SLU 55 | 0.62 | No |
| ini. | 3 | 1 | -435 | 10289 | SLU 82 | 23.65 | Si |
| fin. | 3 | 1 | 16182 | 10289 | SLU 82 | 0.64 | No |
| ini. | 3 | 4 | -308 | 10289 | SLU 65 | 33.39 | Si |
| fin. | 3 | 4 | 17033 | 10289 | SLU 65 | 0.6 | No |
| ini. | 3 | 3 | -582 | 10289 | SLU 73 | 17.67 | Si |
| fin. | 3 | 3 | 19632 | 10289 | SLU 73 | 0.52 | No |

Verifiche a taglio delle travi in muratura secondo §C8.7.1.3.1 in combinazioni non sismiche

| Sezione | γM | N | M | V | Vt | Vp | Vt fess. diag. | Vt,lim | Comb. | c.s. | Verifica |
|---|---|---|---|---|---|---|---|---|---|---|---|
| ini. | 3 | 0 | -756 | 239 | | | 200 | 75 | SLU 31 | 0.32 | No |
| fin. | 3 | 0 | 19125 | 126 | | | 200 | 75 | SLU 31 | 0.6 | No |
| ini. | 3 | 0 | -428 | 245 | | | 200 | 75 | SLU 76 | 0.31 | No |
| fin. | 3 | 0 | 18272 | 98 | | | 200 | 75 | SLU 76 | 0.77 | No |
| ini. | 3 | 0 | -154 | 219 | | | 200 | 75 | SLU 68 | 0.34 | No |
| fin. | 3 | 0 | 15672 | 72 | | | 200 | 75 | SLU 68 | 1.05 | Si |
| ini. | 3 | 0 | -241 | 229 | | | 200 | 75 | SLU 55 | 0.33 | No |
| fin. | 3 | 0 | 16674 | 82 | | | 200 | 75 | SLU 55 | 0.92 | No |
| ini. | 3 | 0 | -395 | 243 | | | 200 | 75 | SLU 52 | 0.31 | No |
| fin. | 3 | 0 | 18035 | 95 | | | 200 | 75 | SLU 52 | 0.79 | No |
| ini. | 3 | 0 | -569 | 223 | | | 200 | 75 | SLU 10 | 0.34 | No |
| fin. | 3 | 0 | 17527 | 109 | | | 200 | 75 | SLU 10 | 0.69 | No |
| ini. | 3 | 0 | -308 | 233 | | | 200 | 75 | SLU 65 | 0.32 | No |
| fin. | 3 | 0 | 17033 | 85 | | | 200 | 75 | SLU 65 | 0.88 | No |
| ini. | 3 | 0 | -602 | 225 | | | 200 | 75 | SLU 34 | 0.33 | No |
| fin. | 3 | 0 | 17764 | 112 | | | 200 | 75 | SLU 34 | 0.67 | No |
| ini. | 3 | 0 | -435 | 226 | | | 200 | 75 | SLU 82 | 0.33 | No |
| fin. | 3 | 0 | 16182 | 79 | | | 200 | 75 | SLU 82 | 0.96 | No |
| ini. | 3 | 0 | -582 | 259 | | | 200 | 75 | SLU 73 | 0.29 | No |
| fin. | 3 | 0 | 19632 | 112 | | | 200 | 75 | SLU 73 | 0.67 | No |

Verifiche a pressoflessione delle travi in muratura in combinazioni sismiche

| Sezione | γM | N | M | Mu | Comb. | c.s. | Verifica |
|---|---|---|---|---|---|---|---|
| ini. | 2 | -994 | -20857 | 15434 | SLV 7 | 0.74 | No |
| fin. | 2 | 137 | -67990 | 15434 | SLV 7 | 0.23 | No |
| ini. | 2 | -1019 | -22979 | 15434 | SLV 11 | 0.67 | No |
| fin. | 2 | 142 | -56304 | 15434 | SLV 11 | 0.27 | No |
| ini. | 2 | 994 | 21326 | 15434 | SLV 9 | 0.72 | No |
| fin. | 2 | -138 | 77423 | 15434 | SLV 9 | 0.2 | No |
| ini. | 2 | -1019 | -22979 | 15434 | SLV 12 | 0.67 | No |
| fin. | 2 | 142 | -56304 | 15434 | SLV 12 | 0.27 | No |
| ini. | 2 | 260 | 3344 | 15434 | SLV 14 | 4.62 | Si |
| fin. | 2 | -35 | 44253 | 15434 | SLV 14 | 0.35 | No |
| ini. | 2 | 1019 | 23447 | 15434 | SLV 5 | 0.66 | No |
| fin. | 2 | -143 | 65737 | 15434 | SLV 5 | 0.23 | No |
| ini. | 2 | 260 | 3344 | 15434 | SLV 13 | 4.62 | Si |
| fin. | 2 | -35 | 44253 | 15434 | SLV 13 | 0.35 | No |
| ini. | 2 | 994 | 21326 | 15434 | SLV 10 | 0.72 | No |
| fin. | 2 | -138 | 77423 | 15434 | SLV 10 | 0.2 | No |
| ini. | 2 | -994 | -20857 | 15434 | SLV 8 | 0.74 | No |
| fin. | 2 | 137 | -67990 | 15434 | SLV 8 | 0.23 | No |
| ini. | 2 | 1019 | 23447 | 15434 | SLV 6 | 0.66 | No |
| fin. | 2 | -143 | 65737 | 15434 | SLV 6 | 0.23 | No |

Verifiche a taglio delle travi in muratura secondo §C8.7.1.3.1 in combinazioni sismiche

| Sezione | γM | N | M | V | Vt | Vp | Vt fess. diag. | Vt,lim | Comb. | c.s. | Verifica |
|---|---|---|---|---|---|---|---|---|---|---|---|
| ini. | 2 | 0 | -22979 | -941 | | | 300 | 113 | SLV 12 | 0.12 | No |
| fin. | 2 | 0 | -56304 | 130 | | | 300 | 113 | SLV 12 | 0.87 | No |
| ini. | 2 | 0 | 21326 | 1241 | | | 300 | 113 | SLV 9 | 0.09 | No |
| fin. | 2 | 0 | 77423 | -208 | | | 300 | 113 | SLV 9 | 0.54 | No |
| ini. | 2 | 0 | 3344 | 598 | | | 300 | 113 | SLV 14 | 0.19 | No |
| fin. | 2 | 0 | 44253 | -144 | | | 300 | 113 | SLV 14 | 0.79 | No |
| ini. | 2 | 0 | -20857 | -1045 | | | 300 | 113 | SLV 7 | 0.11 | No |
| fin. | 2 | 0 | -67990 | 176 | | | 300 | 113 | SLV 7 | 0.64 | No |
| ini. | 2 | 0 | 21326 | 1241 | | | 300 | 113 | SLV 10 | 0.09 | No |
| fin. | 2 | 0 | 77423 | -208 | | | 300 | 113 | SLV 10 | 0.54 | No |
| ini. | 2 | 0 | 23447 | 1137 | | | 300 | 113 | SLV 6 | 0.1 | No |
| fin. | 2 | 0 | 65737 | -161 | | | 300 | 113 | SLV 6 | 0.7 | No |
| ini. | 2 | 0 | 23447 | 1137 | | | 300 | 113 | SLV 5 | 0.1 | No |
| fin. | 2 | 0 | 65737 | -161 | | | 300 | 113 | SLV 5 | 0.7 | No |
| ini. | 2 | 0 | -22979 | -941 | | | 300 | 113 | SLV 11 | 0.12 | No |
| fin. | 2 | 0 | -56304 | 130 | | | 300 | 113 | SLV 11 | 0.87 | No |
| ini. | 2 | 0 | -20857 | -1045 | | | 300 | 113 | SLV 8 | 0.11 | No |
| fin. | 2 | 0 | -67990 | 176 | | | 300 | 113 | SLV 8 | 0.64 | No |
| ini. | 2 | 0 | 3344 | 598 | | | 300 | 113 | SLV 13 | 0.19 | No |
| fin. | 2 | 0 | 44253 | -144 | | | 300 | 113 | SLV 13 | 0.79 | No |

Tabella dei coefficienti di sicurezza minimi

| Stato limite | Coeff.s. | Comb. | Verifica |
|---|---|---|---|
| PF_SLV | 0.199 | SLV 9 | No |
| V_SLV | 0.091 | SLV 9 | No |
| PF_SLU | 0.524 | SLU 73 | No |
| V_SLU | 0.291 | SLU 73 | No |

## Trave di accoppiamento 133

Verifiche condotte secondo D.M. 17-01-18 (N.T.C.)

### Dati geometrici

| X ini. | Y ini. | Z ini.inf. | Z ini.sup. | H ini. | X fin. | Y fin. | Z fin.inf. | Z fin.sup | H fin. | Luce | Spessore | R. Trazione |
|---|---|---|---|---|---|---|---|---|---|---|---|---|
| -515.8 | 600.6 | 896 | 1096 | 200 | -515.8 | 650.6 | 896 | 1096 | 200 | 50 | 28 | 3500 |

## Caratteristiche del materiale

(Circolare 7 21-01-19 C8.5.I) Muratura in mattoni pieni e malta di calce LC2_Corti

| fb_ | fhk | fvk0 | fhmedio | τ0 | fv0 | μ | ϕ | fvk,lim | E | G | FC |
|---|---|---|---|---|---|---|---|---|---|---|---|
| 12 | | | 17.25 | 0.9 | 2 | 0.577 | 0.767 | 0.65 | 32000 | 12800 | 1.2 |

## Verifiche a pressoflessione delle travi in muratura in combinazioni non sismiche

| Sezione | γM | N | M | Mu | Comb. | c.s. | Verifica |
|---|---|---|---|---|---|---|---|
| ini. | 3 | 321 | 112567 | 296292 | SLU 70 | 2.63 | Si |
| fin. | 3 | 190 | 21150 | 296292 | SLU 70 | 14.01 | Si |
| ini. | 3 | 437 | 120821 | 296292 | SLU 79 | 2.45 | Si |
| fin. | 3 | 306 | 32387 | 296292 | SLU 79 | 9.15 | Si |
| ini. | 3 | 494 | 115742 | 296292 | SLU 78 | 2.56 | Si |
| fin. | 3 | 376 | 38950 | 296292 | SLU 78 | 7.61 | Si |
| ini. | 3 | 274 | 116576 | 296292 | SLU 72 | 2.54 | Si |
| fin. | 3 | 132 | 15694 | 296292 | SLU 72 | 18.88 | Si |
| ini. | 3 | 311 | 113638 | 296292 | SLU 69 | 2.61 | Si |
| fin. | 3 | 179 | 20043 | 296292 | SLU 69 | 14.78 | Si |
| ini. | 3 | 447 | 119751 | 296292 | SLU 80 | 2.47 | Si |
| fin. | 3 | 317 | 33494 | 296292 | SLU 80 | 8.85 | Si |
| ini. | 3 | 348 | 113682 | 296292 | SLU 37 | 2.61 | Si |
| fin. | 3 | 219 | 24013 | 296292 | SLU 37 | 12.34 | Si |
| ini. | 3 | 484 | 116813 | 296292 | SLU 77 | 2.54 | Si |
| fin. | 3 | 364 | 37843 | 296292 | SLU 77 | 7.83 | Si |
| ini. | 3 | 358 | 112612 | 296292 | SLU 38 | 2.63 | Si |
| fin. | 3 | 231 | 25119 | 296292 | SLU 38 | 11.8 | Si |
| ini. | 3 | 264 | 117646 | 296292 | SLU 71 | 2.52 | Si |
| fin. | 3 | 120 | 14587 | 296292 | SLU 71 | 20.31 | Si |

## Verifiche a taglio delle travi in muratura secondo §C8.7.1.3.1 in combinazioni non sismiche

| Sezione | γM | N | M | V | Vt | Vp | Vt fess. diag. | Vt,lim | Comb. | c.s. | Verifica |
|---|---|---|---|---|---|---|---|---|---|---|---|
| ini. | 3 | 0 | 106499 | -3175 | | | 2157 | 812 | SLU 27 | 0.26 | No |
| fin. | 3 | 0 | 11668 | -467 | | | 2157 | 812 | SLU 27 | 1.74 | Si |
| ini. | 3 | 0 | 113638 | -3163 | | | 2157 | 812 | SLU 69 | 0.26 | No |
| fin. | 3 | 0 | 20043 | -436 | | | 2157 | 812 | SLU 69 | 1.86 | Si |
| ini. | 3 | 0 | 117646 | -3430 | | | 2157 | 812 | SLU 71 | 0.24 | No |
| fin. | 3 | 0 | 14587 | -518 | | | 2157 | 812 | SLU 71 | 1.57 | Si |
| ini. | 3 | 0 | 112567 | -3098 | | | 2157 | 812 | SLU 70 | 0.26 | No |
| fin. | 3 | 0 | 21150 | -417 | | | 2157 | 812 | SLU 70 | 1.95 | Si |
| ini. | 3 | 0 | 109437 | -3376 | | | 2157 | 812 | SLU 30 | 0.24 | No |
| fin. | 3 | 0 | 7319 | -529 | | | 2157 | 812 | SLU 30 | 1.53 | Si |
| ini. | 3 | 0 | 110508 | -3441 | | | 2157 | 812 | SLU 29 | 0.24 | No |
| fin. | 3 | 0 | 6213 | -549 | | | 2157 | 812 | SLU 29 | 1.48 | Si |
| ini. | 3 | 0 | 116576 | -3365 | | | 2157 | 812 | SLU 72 | 0.24 | No |
| fin. | 3 | 0 | 15694 | -498 | | | 2157 | 812 | SLU 72 | 1.63 | Si |
| ini. | 3 | 0 | 105429 | -3110 | | | 2157 | 812 | SLU 28 | 0.26 | No |
| fin. | 3 | 0 | 12775 | -447 | | | 2157 | 812 | SLU 28 | 1.81 | Si |
| ini. | 3 | 0 | 120821 | -3099 | | | 2157 | 812 | SLU 79 | 0.26 | No |
| fin. | 3 | 0 | 32387 | -322 | | | 2157 | 812 | SLU 79 | 2.52 | Si |
| ini. | 3 | 0 | 113682 | -3110 | | | 2157 | 812 | SLU 37 | 0.26 | No |
| fin. | 3 | 0 | 24013 | -353 | | | 2157 | 812 | SLU 37 | 2.3 | Si |

## Verifiche a pressoflessione delle travi in muratura in combinazioni sismiche

| Sezione | γM | N | M | Mu | Comb. | c.s. | Verifica |
|---|---|---|---|---|---|---|---|
| ini. | 2 | 2045 | 156259 | 314194 | SLV 15 | 2.01 | Si |
| fin. | 2 | 1820 | 177301 | 314194 | SLV 15 | 1.77 | Si |
| ini. | 2 | 1132 | 93255 | 314194 | SLD 15 | 3.37 | Si |
| fin. | 2 | 1020 | 99394 | 314194 | SLD 15 | 3.16 | Si |
| ini. | 2 | -1146 | -63531 | 314194 | SLV 2 | 4.95 | Si |
| fin. | 2 | -966 | -93639 | 314194 | SLV 2 | 3.36 | Si |
| ini. | 2 | 2192 | 133707 | 314194 | SLV 14 | 2.35 | Si |
| fin. | 2 | 1454 | 137966 | 314194 | SLV 14 | 2.28 | Si |
| ini. | 2 | -1146 | -63531 | 314194 | SLV 1 | 4.95 | Si |
| fin. | 2 | -966 | -93639 | 314194 | SLV 1 | 3.36 | Si |
| ini. | 2 | 2045 | 156259 | 314194 | SLV 16 | 2.01 | Si |
| fin. | 2 | 1820 | 177301 | 314194 | SLV 16 | 1.77 | Si |
| ini. | 2 | 706 | 113537 | 314194 | SLV 12 | 2.77 | Si |
| fin. | 2 | 1400 | 142130 | 314194 | SLV 12 | 2.21 | Si |
| ini. | 2 | 706 | 113537 | 314194 | SLV 11 | 2.77 | Si |
| fin. | 2 | 1400 | 142130 | 314194 | SLV 11 | 2.21 | Si |
| ini. | 2 | 2192 | 133707 | 314194 | SLV 13 | 2.35 | Si |
| fin. | 2 | 1454 | 137966 | 314194 | SLV 13 | 2.28 | Si |
| ini. | 2 | 1132 | 93255 | 314194 | SLD 16 | 3.37 | Si |
| fin. | 2 | 1020 | 99394 | 314194 | SLD 16 | 3.16 | Si |

## Verifiche a taglio delle travi in muratura secondo §C8.7.1.3.1 in combinazioni sismiche

| Sezione | γM | N | M | V | Vt | Vp | Vt fess. diag. | Vt,lim | Comb. | c.s. | Verifica |
|---|---|---|---|---|---|---|---|---|---|---|---|
| ini. | 2 | 0 | -40979 | -1768 | | | 3235 | 1217 | SLV 3 | 0.69 | No |
| fin. | 2 | 0 | -54304 | -1354 | | | 3235 | 1217 | SLV 3 | 0.9 | No |
| ini. | 2 | 0 | 38363 | 2449 | | | 3235 | 1217 | SLV 10 | 0.5 | No |
| fin. | 2 | 0 | 11013 | 1411 | | | 3235 | 1217 | SLV 10 | 0.86 | No |
| ini. | 2 | 0 | 113537 | -2872 | | | 3235 | 1217 | SLV 11 | 0.42 | No |
| fin. | 2 | 0 | 142130 | -332 | | | 3235 | 1217 | SLV 11 | 3.67 | Si |
| ini. | 2 | 0 | 54365 | -3222 | | | 3235 | 1217 | SLV 7 | 0.38 | No |
| fin. | 2 | 0 | 72649 | -1085 | | | 3235 | 1217 | SLV 7 | 1.12 | Si |
| ini. | 2 | 0 | 38363 | 2449 | | | 3235 | 1217 | SLV 9 | 0.5 | No |
| fin. | 2 | 0 | 11013 | 1411 | | | 3235 | 1217 | SLV 9 | 0.86 | No |
| ini. | 2 | 0 | -40979 | -1768 | | | 3235 | 1217 | SLV 4 | 0.69 | No |

| Sezione | γM | N | M | V | Vt | Vp | Vt fess. diag. | Vt,lim | Comb. | c.s. | Verifica |
|---|---|---|---|---|---|---|---|---|---|---|---|
| fin. | 2 | 0 | -54304 | -1354 | | | 3235 | 1217 | SLV 4 | 0.9 | No |
| ini. | 2 | 0 | -20808 | 2099 | | | 3235 | 1217 | SLV 6 | 0.58 | No |
| fin. | 2 | 0 | -58468 | 657 | | | 3235 | 1217 | SLV 6 | 1.85 | Si |
| ini. | 2 | 0 | 54365 | -3222 | | | 3235 | 1217 | SLV 8 | 0.38 | No |
| fin. | 2 | 0 | 72649 | -1085 | | | 3235 | 1217 | SLV 8 | 1.12 | Si |
| ini. | 2 | 0 | 113537 | -2872 | | | 3235 | 1217 | SLV 12 | 0.42 | No |
| fin. | 2 | 0 | 142130 | -332 | | | 3235 | 1217 | SLV 12 | 3.67 | Si |
| ini. | 2 | 0 | -20808 | 2099 | | | 3235 | 1217 | SLV 5 | 0.58 | No |
| fin. | 2 | 0 | -58468 | 657 | | | 3235 | 1217 | SLV 5 | 1.85 | Si |

### Tabella dei coefficienti di sicurezza minimi

| Stato limite | Coeff.s. | Comb. | Verifica |
|---|---|---|---|
| PF_SLV | 1.772 | SLV 15 | Si |
| V_SLV | 0.378 | SLV 7 | No |
| PF_SLU | 2.452 | SLU 79 | Si |
| V_SLU | 0.236 | SLU 29 | No |

## Trave di accoppiamento 134

Verifiche condotte secondo D.M. 17-01-18 (N.T.C.)

### Dati geometrici

| X ini. | Y ini. | Z ini.inf. | Z ini.sup. | H ini. | X fin. | Y fin. | Z fin.inf. | Z fin.sup | H fin. | Luce | Spessore | R. Trazione |
|---|---|---|---|---|---|---|---|---|---|---|---|---|
| -515.8 | 600.6 | 1176 | 1248 | 72 | -515.8 | 650.6 | 1176 | 1248 | 72 | 50 | 28 | 3500 |

### Caratteristiche del materiale

(Circolare 7 21-01-19 C8.5.I) Muratura in mattoni pieni e malta di calce LC2_Corti

| fb_ | fhk | fvk0 | fhmedio | τ0 | fv0 | μ | ϕ | fvk,lim | E | G | FC |
|---|---|---|---|---|---|---|---|---|---|---|---|
| 12 | | | 17.25 | 0.9 | 2 | 0.577 | 0.767 | 0.65 | 32000 | 12800 | 1.2 |

### Verifiche a pressoflessione delle travi in muratura in combinazioni non sismiche

| Sezione | γM | N | M | Mu | Comb. | c.s. | Verifica |
|---|---|---|---|---|---|---|---|
| ini. | 3 | -881 | -33884 | 72292 | SLU 71 | 2.13 | Si |
| fin. | 3 | -186 | 7486 | 72292 | SLU 71 | 9.66 | Si |
| ini. | 3 | -865 | -32480 | 72292 | SLU 78 | 2.23 | Si |
| fin. | 3 | -178 | 7108 | 72292 | SLU 78 | 10.17 | Si |
| ini. | 3 | -868 | -32731 | 72292 | SLU 77 | 2.21 | Si |
| fin. | 3 | -179 | 7131 | 72292 | SLU 77 | 10.14 | Si |
| ini. | 3 | -877 | -33634 | 72292 | SLU 72 | 2.15 | Si |
| fin. | 3 | -185 | 7463 | 72292 | SLU 72 | 9.69 | Si |
| ini. | 3 | -900 | -34210 | 72292 | SLU 79 | 2.11 | Si |
| fin. | 3 | -187 | 7488 | 72292 | SLU 79 | 9.65 | Si |
| ini. | 3 | -837 | -32438 | 72292 | SLU 29 | 2.23 | Si |
| fin. | 3 | -179 | 7220 | 72292 | SLU 29 | 10.01 | Si |
| ini. | 3 | -854 | -32513 | 72292 | SLU 38 | 2.22 | Si |
| fin. | 3 | -179 | 7200 | 72292 | SLU 38 | 10.04 | Si |
| ini. | 3 | -849 | -32405 | 72292 | SLU 69 | 2.23 | Si |
| fin. | 3 | -178 | 7129 | 72292 | SLU 69 | 10.14 | Si |
| ini. | 3 | -857 | -32764 | 72292 | SLU 37 | 2.21 | Si |
| fin. | 3 | -180 | 7222 | 72292 | SLU 37 | 10.01 | Si |
| ini. | 3 | -897 | -33959 | 72292 | SLU 80 | 2.13 | Si |
| fin. | 3 | -186 | 7465 | 72292 | SLU 80 | 9.68 | Si |

### Verifiche a taglio delle travi in muratura secondo §C8.7.1.3.1 in combinazioni non sismiche

| Sezione | γM | N | M | V | Vt | Vp | Vt fess. diag. | Vt,lim | Comb. | c.s. | Verifica |
|---|---|---|---|---|---|---|---|---|---|---|---|
| ini. | 3 | 0 | -32764 | 4351 | | | 776 | 292 | SLU 37 | 0.07 | No |
| fin. | 3 | 0 | 7222 | -52 | | | 776 | 292 | SLU 37 | 5.62 | Si |
| ini. | 3 | 0 | -32480 | 4326 | | | 776 | 292 | SLU 78 | 0.07 | No |
| fin. | 3 | 0 | 7108 | -56 | | | 776 | 292 | SLU 78 | 5.2 | Si |
| ini. | 3 | 0 | -32405 | 4321 | | | 776 | 292 | SLU 69 | 0.07 | No |
| fin. | 3 | 0 | 7129 | -72 | | | 776 | 292 | SLU 69 | 4.04 | Si |
| ini. | 3 | 0 | -33959 | 4518 | | | 776 | 292 | SLU 80 | 0.06 | No |
| fin. | 3 | 0 | 7465 | -61 | | | 776 | 292 | SLU 80 | 4.77 | Si |
| ini. | 3 | 0 | -32438 | 4317 | | | 776 | 292 | SLU 29 | 0.07 | No |
| fin. | 3 | 0 | 7220 | -66 | | | 776 | 292 | SLU 29 | 4.44 | Si |
| ini. | 3 | 0 | -32513 | 4322 | | | 776 | 292 | SLU 38 | 0.07 | No |
| fin. | 3 | 0 | 7200 | -50 | | | 776 | 292 | SLU 38 | 5.89 | Si |
| ini. | 3 | 0 | -34210 | 4548 | | | 776 | 292 | SLU 79 | 0.06 | No |
| fin. | 3 | 0 | 7488 | -64 | | | 776 | 292 | SLU 79 | 4.59 | Si |
| ini. | 3 | 0 | -33884 | 4514 | | | 776 | 292 | SLU 71 | 0.06 | No |
| fin. | 3 | 0 | 7486 | -78 | | | 776 | 292 | SLU 71 | 3.77 | Si |
| ini. | 3 | 0 | -33634 | 4484 | | | 776 | 292 | SLU 72 | 0.07 | No |
| fin. | 3 | 0 | 7463 | -75 | | | 776 | 292 | SLU 72 | 3.89 | Si |
| ini. | 3 | 0 | -32731 | 4355 | | | 776 | 292 | SLU 77 | 0.07 | No |
| fin. | 3 | 0 | 7131 | -59 | | | 776 | 292 | SLU 77 | 4.99 | Si |

### Verifiche a pressoflessione delle travi in muratura in combinazioni sismiche

| Sezione | γM | N | M | Mu | Comb. | c.s. | Verifica |
|---|---|---|---|---|---|---|---|
| ini. | 2 | -351 | -14375 | 90194 | SLV 15 | 6.27 | Si |
| fin. | 2 | -57 | 2613 | 90194 | SLV 15 | 34.51 | Si |
| ini. | 2 | -325 | -12861 | 90194 | SLD 8 | 7.01 | Si |
| fin. | 2 | -64 | 2451 | 90194 | SLD 8 | 36.8 | Si |
| ini. | 2 | -351 | -14375 | 90194 | SLV 16 | 6.27 | Si |
| fin. | 2 | -57 | 2613 | 90194 | SLV 16 | 34.51 | Si |

| Sezione | γM | N | M | Mu | Comb. | c.s. | Verifica |
|---|---|---|---|---|---|---|---|
| ini. | 2 | -346 | -15416 | 90194 | SLV 7 | 5.85 | Si |
| fin. | 2 | -71 | 2825 | 90194 | SLV 7 | 31.92 | Si |
| ini. | 2 | -325 | -12861 | 90194 | SLD 7 | 7.01 | Si |
| fin. | 2 | -64 | 2451 | 90194 | SLD 7 | 36.8 | Si |
| ini. | 2 | -346 | -15416 | 90194 | SLV 8 | 5.85 | Si |
| fin. | 2 | -71 | 2825 | 90194 | SLV 8 | 31.92 | Si |
| ini. | 2 | -331 | -13304 | 90194 | SLD 11 | 6.78 | Si |
| fin. | 2 | -62 | 2498 | 90194 | SLD 11 | 36.1 | Si |
| ini. | 2 | -361 | -16511 | 90194 | SLV 11 | 5.46 | Si |
| fin. | 2 | -68 | 2935 | 90194 | SLV 11 | 30.73 | Si |
| ini. | 2 | -361 | -16511 | 90194 | SLV 12 | 5.46 | Si |
| fin. | 2 | -68 | 2935 | 90194 | SLV 12 | 30.73 | Si |
| ini. | 2 | -331 | -13304 | 90194 | SLD 12 | 6.78 | Si |
| fin. | 2 | -62 | 2498 | 90194 | SLD 12 | 36.1 | Si |

### Verifiche a taglio delle travi in muratura secondo §C8.7.1.3.1 in combinazioni sismiche

| Sezione | γM | N | M | V | Vt | Vp | Vt fess. diag. | Vt,lim | Comb. | c.s. | Verifica |
|---|---|---|---|---|---|---|---|---|---|---|---|
| ini. | 2 | 0 | -13304 | 1668 | | | 1165 | 438 | SLD 11 | 0.26 | No |
| fin. | 2 | 0 | 2498 | -79 | | | 1165 | 438 | SLD 11 | 5.57 | Si |
| ini. | 2 | 0 | -16511 | 1946 | | | 1165 | 438 | SLV 12 | 0.23 | No |
| fin. | 2 | 0 | 2935 | -140 | | | 1165 | 438 | SLV 12 | 3.13 | Si |
| ini. | 2 | 0 | -12861 | 1616 | | | 1165 | 438 | SLD 8 | 0.27 | No |
| fin. | 2 | 0 | 2451 | -72 | | | 1165 | 438 | SLD 8 | 6.09 | Si |
| ini. | 2 | 0 | -14375 | 1811 | | | 1165 | 438 | SLV 15 | 0.24 | No |
| fin. | 2 | 0 | 2613 | -87 | | | 1165 | 438 | SLV 15 | 5.03 | Si |
| ini. | 2 | 0 | -12861 | 1616 | | | 1165 | 438 | SLD 7 | 0.27 | No |
| fin. | 2 | 0 | 2451 | -72 | | | 1165 | 438 | SLD 7 | 6.09 | Si |
| ini. | 2 | 0 | -16511 | 1946 | | | 1165 | 438 | SLV 11 | 0.23 | No |
| fin. | 2 | 0 | 2935 | -140 | | | 1165 | 438 | SLV 11 | 3.13 | Si |
| ini. | 2 | 0 | -15416 | 1820 | | | 1165 | 438 | SLV 7 | 0.24 | No |
| fin. | 2 | 0 | 2825 | -125 | | | 1165 | 438 | SLV 7 | 3.5 | Si |
| ini. | 2 | 0 | -13304 | 1668 | | | 1165 | 438 | SLD 12 | 0.26 | No |
| fin. | 2 | 0 | 2498 | -79 | | | 1165 | 438 | SLD 12 | 5.57 | Si |
| ini. | 2 | 0 | -14375 | 1811 | | | 1165 | 438 | SLV 16 | 0.24 | No |
| fin. | 2 | 0 | 2613 | -87 | | | 1165 | 438 | SLV 16 | 5.03 | Si |
| ini. | 2 | 0 | -15416 | 1820 | | | 1165 | 438 | SLV 8 | 0.24 | No |
| fin. | 2 | 0 | 2825 | -125 | | | 1165 | 438 | SLV 8 | 3.5 | Si |

### Tabella dei coefficienti di sicurezza minimi

| Stato limite | Coeff.s. | Comb. | Verifica |
|---|---|---|---|
| PF_SLV | 5.463 | SLV 11 | Si |
| V_SLV | 0.225 | SLV 11 | No |
| PF_SLU | 2.113 | SLU 79 | Si |
| V_SLU | 0.064 | SLU 79 | No |

## Trave di accoppiamento 135

Verifiche condotte secondo D.M. 17-01-18 (N.T.C.)

### Dati geometrici

| X ini. | Y ini. | Z ini.inf. | Z ini.sup. | H ini. | X fin. | Y fin. | Z fin.inf. | Z fin.sup | H fin. | Luce | Spessore | R. Trazione |
|---|---|---|---|---|---|---|---|---|---|---|---|---|
| -651.3 | -335.9 | 896 | 986 | 90 | -741.3 | -335.9 | 896 | 986 | 90 | 90 | 28 | 3500 |

### Caratteristiche del materiale

(Circolare 7 21-01-19 C8.5.I) Muratura in mattoni pieni e malta di calce LC2_Corti

| fb_ | fhk | fvk0 | fhmedio | τ0 | fv0 | μ | ϕ | fvk,lim | E | G | FC |
|---|---|---|---|---|---|---|---|---|---|---|---|
| 12 | | | 17.25 | 0.9 | 2 | 0.577 | 0.767 | 0.65 | 32000 | 12800 | 1.2 |

### Verifiche a pressoflessione delle travi in muratura in combinazioni non sismiche

| Sezione | γM | N | M | Mu | Comb. | c.s. | Verifica |
|---|---|---|---|---|---|---|---|
| ini. | 3 | -649 | 30945 | 103792 | SLU 81 | 3.35 | Si |
| fin. | 3 | -105 | -24145 | 103792 | SLU 81 | 4.3 | Si |
| ini. | 3 | -867 | 33600 | 103792 | SLU 52 | 3.09 | Si |
| fin. | 3 | -139 | -24880 | 103792 | SLU 52 | 4.17 | Si |
| ini. | 3 | -724 | 31062 | 103792 | SLU 65 | 3.34 | Si |
| fin. | 3 | -192 | -15040 | 103792 | SLU 65 | 6.9 | Si |
| ini. | 3 | -817 | 32981 | 103792 | SLU 61 | 3.15 | Si |
| fin. | 3 | -111 | -26950 | 103792 | SLU 61 | 3.85 | Si |
| ini. | 3 | -762 | 30152 | 103792 | SLU 55 | 3.44 | Si |
| fin. | 3 | -197 | -19767 | 103792 | SLU 55 | 5.25 | Si |
| ini. | 3 | -816 | 34449 | 103792 | SLU 82 | 3.01 | Si |
| fin. | 3 | -119 | -28110 | 103792 | SLU 82 | 3.69 | Si |
| ini. | 3 | -866 | 35068 | 103792 | SLU 73 | 2.96 | Si |
| fin. | 3 | -147 | -26040 | 103792 | SLU 73 | 3.99 | Si |
| ini. | 3 | -710 | 31002 | 103792 | SLU 84 | 3.35 | Si |
| fin. | 3 | -177 | -22997 | 103792 | SLU 84 | 4.51 | Si |
| ini. | 3 | -761 | 31621 | 103792 | SLU 76 | 3.28 | Si |
| fin. | 3 | -206 | -20927 | 103792 | SLU 76 | 4.96 | Si |
| ini. | 3 | -663 | 30448 | 103792 | SLU 75 | 3.41 | Si |
| fin. | 3 | -169 | -19664 | 103792 | SLU 75 | 5.28 | Si |

### Verifiche a taglio delle travi in muratura secondo §C8.7.1.3.1 in combinazioni non sismiche

| Sezione | γM | N | M | V | Vt | Vp | Vt fess. diag. | Vt,lim | Comb. | c.s. | Verifica |
|---|---|---|---|---|---|---|---|---|---|---|---|
| ini. | 3 | 0 | 35068 | -1844 | | | 970 | 365 | SLU 73 | 0.2 | No |

| Sezione | γM | N | M | V | Vt | Vp | Vt fess. diag. | Vt,lim | Comb. | c.s. | Verifica |
|---|---|---|---|---|---|---|---|---|---|---|---|
| fin. | 3 | 0 | -26040 | -525 | | | 970 | 365 | SLU 73 | 0.7 | No |
| ini. | 3 | 0 | 29477 | -1766 | | | 970 | 365 | SLU 60 | 0.21 | No |
| fin. | 3 | 0 | -22985 | -257 | | | 970 | 365 | SLU 60 | 1.42 | Si |
| ini. | 3 | 0 | 30945 | -1822 | | | 970 | 365 | SLU 81 | 0.2 | No |
| fin. | 3 | 0 | -24145 | -261 | | | 970 | 365 | SLU 81 | 1.4 | Si |
| ini. | 3 | 0 | 34449 | -1904 | | | 970 | 365 | SLU 82 | 0.19 | No |
| fin. | 3 | 0 | -28110 | -490 | | | 970 | 365 | SLU 82 | 0.75 | No |
| ini. | 3 | 0 | 33600 | -1787 | | | 970 | 365 | SLU 52 | 0.2 | No |
| fin. | 3 | 0 | -24880 | -521 | | | 970 | 365 | SLU 52 | 0.7 | No |
| ini. | 3 | 0 | 31002 | -1782 | | | 970 | 365 | SLU 84 | 0.2 | No |
| fin. | 3 | 0 | -22997 | -262 | | | 970 | 365 | SLU 84 | 1.4 | Si |
| ini. | 3 | 0 | 31621 | -1722 | | | 970 | 365 | SLU 76 | 0.21 | No |
| fin. | 3 | 0 | -20927 | -297 | | | 970 | 365 | SLU 76 | 1.23 | Si |
| ini. | 3 | 0 | 32981 | -1847 | | | 970 | 365 | SLU 61 | 0.2 | No |
| fin. | 3 | 0 | -26950 | -485 | | | 970 | 365 | SLU 61 | 0.75 | No |
| ini. | 3 | 0 | 30448 | -1735 | | | 970 | 365 | SLU 75 | 0.21 | No |
| fin. | 3 | 0 | -19664 | -179 | | | 970 | 365 | SLU 75 | 2.03 | Si |
| ini. | 3 | 0 | 29533 | -1725 | | | 970 | 365 | SLU 63 | 0.21 | No |
| fin. | 3 | 0 | -21837 | -257 | | | 970 | 365 | SLU 63 | 1.42 | Si |

### Verifiche a pressoflessione delle travi in muratura in combinazioni sismiche

| Sezione | γM | N | M | Mu | Comb. | c.s. | Verifica |
|---|---|---|---|---|---|---|---|
| ini. | 2 | -1386 | 83065 | 121694 | SLV 6 | 1.47 | Si |
| fin. | 2 | 1825 | -79651 | 121694 | SLV 6 | 1.53 | Si |
| ini. | 2 | 1381 | -78242 | 121694 | SLV 13 | 1.56 | Si |
| fin. | 2 | -2859 | 149890 | 121694 | SLV 13 | 0.81 | No |
| ini. | 2 | -1386 | 83065 | 121694 | SLV 5 | 1.47 | Si |
| fin. | 2 | 1825 | -79651 | 121694 | SLV 5 | 1.53 | Si |
| ini. | 2 | 1641 | -96573 | 121694 | SLV 16 | 1.26 | Si |
| fin. | 2 | -3474 | 162275 | 121694 | SLV 16 | 0.75 | No |
| ini. | 2 | 1641 | -96573 | 121694 | SLV 15 | 1.26 | Si |
| fin. | 2 | -3474 | 162275 | 121694 | SLV 15 | 0.75 | No |
| ini. | 2 | 1381 | -78242 | 121694 | SLV 14 | 1.56 | Si |
| fin. | 2 | -2859 | 149890 | 121694 | SLV 14 | 0.81 | No |
| ini. | 2 | -2409 | 137020 | 121694 | SLV 1 | 0.89 | No |
| fin. | 2 | 3244 | -181021 | 121694 | SLV 1 | 0.67 | No |
| ini. | 2 | -2409 | 137020 | 121694 | SLV 2 | 0.89 | No |
| fin. | 2 | 3244 | -181021 | 121694 | SLV 2 | 0.67 | No |
| ini. | 2 | -2149 | 118689 | 121694 | SLV 4 | 1.03 | Si |
| fin. | 2 | 2629 | -168636 | 121694 | SLV 4 | 0.72 | No |
| ini. | 2 | -2149 | 118689 | 121694 | SLV 3 | 1.03 | Si |
| fin. | 2 | 2629 | -168636 | 121694 | SLV 3 | 0.72 | No |

### Verifiche a taglio delle travi in muratura secondo §C8.7.1.3.1 in combinazioni sismiche

| Sezione | γM | N | M | V | Vt | Vp | Vt fess. diag. | Vt,lim | Comb. | c.s. | Verifica |
|---|---|---|---|---|---|---|---|---|---|---|---|
| ini. | 2 | 0 | -78242 | 3230 | | | 1456 | 548 | SLV 13 | 0.17 | No |
| fin. | 2 | 0 | 149890 | 5480 | | | 1456 | 548 | SLV 13 | 0.1 | No |
| ini. | 2 | 0 | 83065 | -4584 | | | 1456 | 548 | SLV 5 | 0.12 | No |
| fin. | 2 | 0 | -79651 | -4244 | | | 1456 | 548 | SLV 5 | 0.13 | No |
| ini. | 2 | 0 | 137020 | -6726 | | | 1456 | 548 | SLV 2 | 0.08 | No |
| fin. | 2 | 0 | -181021 | -6883 | | | 1456 | 548 | SLV 2 | 0.08 | No |
| ini. | 2 | 0 | 83065 | -4584 | | | 1456 | 548 | SLV 6 | 0.12 | No |
| fin. | 2 | 0 | -79651 | -4244 | | | 1456 | 548 | SLV 6 | 0.13 | No |
| ini. | 2 | 0 | 137020 | -6726 | | | 1456 | 548 | SLV 1 | 0.08 | No |
| fin. | 2 | 0 | -181021 | -6883 | | | 1456 | 548 | SLV 1 | 0.08 | No |
| ini. | 2 | 0 | -78242 | 3230 | | | 1456 | 548 | SLV 14 | 0.17 | No |
| fin. | 2 | 0 | 149890 | 5480 | | | 1456 | 548 | SLV 14 | 0.1 | No |
| ini. | 2 | 0 | 118689 | -5576 | | | 1456 | 548 | SLV 3 | 0.1 | No |
| fin. | 2 | 0 | -168636 | -5437 | | | 1456 | 548 | SLV 3 | 0.1 | No |
| ini. | 2 | 0 | -96573 | 4381 | | | 1456 | 548 | SLV 15 | 0.13 | No |
| fin. | 2 | 0 | 162275 | 6927 | | | 1456 | 548 | SLV 15 | 0.08 | No |
| ini. | 2 | 0 | 118689 | -5576 | | | 1456 | 548 | SLV 4 | 0.1 | No |
| fin. | 2 | 0 | -168636 | -5437 | | | 1456 | 548 | SLV 4 | 0.1 | No |
| ini. | 2 | 0 | -96573 | 4381 | | | 1456 | 548 | SLV 16 | 0.13 | No |
| fin. | 2 | 0 | 162275 | 6927 | | | 1456 | 548 | SLV 16 | 0.08 | No |

### Tabella dei coefficienti di sicurezza minimi

| Stato limite | Coeff.s. | Comb. | Verifica |
|---|---|---|---|
| PF_SLV | 0.672 | SLV 1 | No |
| V_SLV | 0.079 | SLV 15 | No |
| PF_SLU | 2.96 | SLU 73 | Si |
| V_SLU | 0.192 | SLU 82 | No |

## Trave di accoppiamento 136

Verifiche condotte secondo D.M. 17-01-18 (N.T.C.)

### Dati geometrici

| X ini. | Y ini. | Z ini.inf. | Z ini.sup. | H ini. | X fin. | Y fin. | Z fin.inf. | Z fin.sup | H fin. | Luce | Spessore | R. Trazione |
|---|---|---|---|---|---|---|---|---|---|---|---|---|
| -651.3 | -335.9 | 1166 | 1248 | 82 | -741.3 | -335.9 | 1166 | 1248 | 82 | 90 | 28 | 3500 |

### Caratteristiche del materiale

(Circolare 7 21-01-19 C8.5.I) Muratura in mattoni pieni e malta di calce LC2_Corti

| fb_ | fhk | fvk0 | fhmedio | τ0 | fv0 | μ | ϕ | fvk,lim | E | G | FC |
|---|---|---|---|---|---|---|---|---|---|---|---|
| 12 | | | 17.25 | 0.9 | 2 | 0.577 | 0.767 | 0.65 | 32000 | 12800 | 1.2 |

## Verifiche a pressoflessione delle travi in muratura in combinazioni non sismiche

| Sezione | γM | N | M | Mu | Comb. | c.s. | Verifica |
|---|---|---|---|---|---|---|---|
| ini. | 3 | -48 | 375 | 89792 | SLU 65 | 239.38 | Si |
| fin. | 3 | -133 | -9245 | 89792 | SLU 65 | 9.71 | Si |
| ini. | 3 | -175 | -9489 | 89792 | SLU 48 | 9.46 | Si |
| fin. | 3 | 404 | 2353 | 89792 | SLU 48 | 38.15 | Si |
| ini. | 3 | -202 | -9556 | 89792 | SLU 8 | 9.4 | Si |
| fin. | 3 | 397 | 3810 | 89792 | SLU 8 | 23.57 | Si |
| ini. | 3 | -195 | -9844 | 89792 | SLU 50 | 9.12 | Si |
| fin. | 3 | 409 | 2793 | 89792 | SLU 50 | 32.14 | Si |
| ini. | 3 | 271 | 4449 | 89792 | SLU 52 | 20.18 | Si |
| fin. | 3 | 122 | -9420 | 89792 | SLU 52 | 9.53 | Si |
| ini. | 3 | -244 | -11124 | 89792 | SLU 71 | 8.07 | Si |
| fin. | 3 | 438 | 3283 | 89792 | SLU 71 | 27.35 | Si |
| ini. | 3 | -232 | -10481 | 89792 | SLU 27 | 8.57 | Si |
| fin. | 3 | 422 | 3859 | 89792 | SLU 27 | 23.27 | Si |
| ini. | 3 | -225 | -10769 | 89792 | SLU 69 | 8.34 | Si |
| fin. | 3 | 433 | 2843 | 89792 | SLU 69 | 31.59 | Si |
| ini. | 3 | -252 | -10836 | 89792 | SLU 29 | 8.29 | Si |
| fin. | 3 | 426 | 4299 | 89792 | SLU 29 | 20.89 | Si |
| ini. | 3 | 1 | 1655 | 89792 | SLU 44 | 54.25 | Si |
| fin. | 3 | -162 | -9734 | 89792 | SLU 44 | 9.22 | Si |

## Verifiche a taglio delle travi in muratura secondo §C8.7.1.3.1 in combinazioni non sismiche

| Sezione | γM | N | M | V | Vt | Vp | Vt fess. diag. | Vt,lim | Comb. | c.s. | Verifica |
|---|---|---|---|---|---|---|---|---|---|---|---|
| ini. | 3 | 0 | -8042 | 1669 | | | 806 | 303 | SLU 37 | 0.18 | No |
| fin. | 3 | 0 | 4613 | -690 | | | 806 | 303 | SLU 37 | 0.44 | No |
| ini. | 3 | 0 | -5356 | 1687 | | | 806 | 303 | SLU 78 | 0.18 | No |
| fin. | 3 | 0 | -377 | -1046 | | | 806 | 303 | SLU 78 | 0.29 | No |
| ini. | 3 | 0 | -8330 | 1858 | | | 806 | 303 | SLU 79 | 0.16 | No |
| fin. | 3 | 0 | 3597 | -890 | | | 806 | 303 | SLU 79 | 0.34 | No |
| ini. | 3 | 0 | -5711 | 1673 | | | 806 | 303 | SLU 80 | 0.18 | No |
| fin. | 3 | 0 | 63 | -999 | | | 806 | 303 | SLU 80 | 0.3 | No |
| ini. | 3 | 0 | -3565 | 1688 | | | 806 | 303 | SLU 83 | 0.18 | No |
| fin. | 3 | 0 | 412 | -1098 | | | 806 | 303 | SLU 83 | 0.28 | No |
| ini. | 3 | 0 | -7975 | 1872 | | | 806 | 303 | SLU 77 | 0.16 | No |
| fin. | 3 | 0 | 3157 | -937 | | | 806 | 303 | SLU 77 | 0.32 | No |
| ini. | 3 | 0 | -10769 | 1746 | | | 806 | 303 | SLU 69 | 0.17 | No |
| fin. | 3 | 0 | 2843 | -792 | | | 806 | 303 | SLU 69 | 0.38 | No |
| ini. | 3 | 0 | -7687 | 1684 | | | 806 | 303 | SLU 35 | 0.18 | No |
| fin. | 3 | 0 | 4173 | -737 | | | 806 | 303 | SLU 35 | 0.41 | No |
| ini. | 3 | 0 | -6695 | 1656 | | | 806 | 303 | SLU 56 | 0.18 | No |
| fin. | 3 | 0 | 2667 | -857 | | | 806 | 303 | SLU 56 | 0.35 | No |
| ini. | 3 | 0 | -11124 | 1732 | | | 806 | 303 | SLU 71 | 0.18 | No |
| fin. | 3 | 0 | 3283 | -745 | | | 806 | 303 | SLU 71 | 0.41 | No |

## Verifiche a pressoflessione delle travi in muratura in combinazioni sismiche

| Sezione | γM | N | M | Mu | Comb. | c.s. | Verifica |
|---|---|---|---|---|---|---|---|
| ini. | 2 | 1661 | 35246 | 107694 | SLV 6 | 3.06 | Si |
| fin. | 2 | -501 | -73881 | 107694 | SLV 6 | 1.46 | Si |
| ini. | 2 | 3518 | 84510 | 107694 | SLV 1 | 1.27 | Si |
| fin. | 2 | -453 | -73646 | 107694 | SLV 1 | 1.46 | Si |
| ini. | 2 | -3456 | -88487 | 107694 | SLV 15 | 1.22 | Si |
| fin. | 2 | 778 | 68448 | 107694 | SLV 15 | 1.57 | Si |
| ini. | 2 | -3071 | -81046 | 107694 | SLV 14 | 1.33 | Si |
| fin. | 2 | 462 | 35503 | 107694 | SLV 14 | 3.03 | Si |
| ini. | 2 | -3071 | -81046 | 107694 | SLV 13 | 1.33 | Si |
| fin. | 2 | 462 | 35503 | 107694 | SLV 13 | 3.03 | Si |
| ini. | 2 | 3518 | 84510 | 107694 | SLV 2 | 1.27 | Si |
| fin. | 2 | -453 | -73646 | 107694 | SLV 2 | 1.46 | Si |
| ini. | 2 | -3456 | -88487 | 107694 | SLV 16 | 1.22 | Si |
| fin. | 2 | 778 | 68448 | 107694 | SLV 16 | 1.57 | Si |
| ini. | 2 | 1661 | 35246 | 107694 | SLV 5 | 3.06 | Si |
| fin. | 2 | -501 | -73881 | 107694 | SLV 5 | 1.46 | Si |
| ini. | 2 | 3132 | 77069 | 107694 | SLV 4 | 1.4 | Si |
| fin. | 2 | -137 | -40701 | 107694 | SLV 4 | 2.65 | Si |
| ini. | 2 | 3132 | 77069 | 107694 | SLV 3 | 1.4 | Si |
| fin. | 2 | -137 | -40701 | 107694 | SLV 3 | 2.65 | Si |

## Verifiche a taglio delle travi in muratura secondo §C8.7.1.3.1 in combinazioni sismiche

| Sezione | γM | N | M | V | Vt | Vp | Vt fess. diag. | Vt,lim | Comb. | c.s. | Verifica |
|---|---|---|---|---|---|---|---|---|---|---|---|
| ini. | 2 | 0 | -81046 | 3918 | | | 1208 | 455 | SLV 14 | 0.12 | No |
| fin. | 2 | 0 | 35503 | 1966 | | | 1208 | 455 | SLV 14 | 0.23 | No |
| ini. | 2 | 0 | -88487 | 4557 | | | 1208 | 455 | SLV 16 | 0.1 | No |
| fin. | 2 | 0 | 68448 | 2364 | | | 1208 | 455 | SLV 16 | 0.19 | No |
| ini. | 2 | 0 | 77069 | -1968 | | | 1208 | 455 | SLV 3 | 0.23 | No |
| fin. | 2 | 0 | -40701 | -3610 | | | 1208 | 455 | SLV 3 | 0.13 | No |
| ini. | 2 | 0 | 84510 | -2607 | | | 1208 | 455 | SLV 1 | 0.17 | No |
| fin. | 2 | 0 | -73646 | -4008 | | | 1208 | 455 | SLV 1 | 0.11 | No |
| ini. | 2 | 0 | 84510 | -2607 | | | 1208 | 455 | SLV 2 | 0.17 | No |
| fin. | 2 | 0 | -73646 | -4008 | | | 1208 | 455 | SLV 2 | 0.11 | No |
| ini. | 2 | 0 | 77069 | -1968 | | | 1208 | 455 | SLV 4 | 0.23 | No |
| fin. | 2 | 0 | -40701 | -3610 | | | 1208 | 455 | SLV 4 | 0.13 | No |
| ini. | 2 | 0 | -39224 | 3019 | | | 1208 | 455 | SLV 12 | 0.15 | No |
| fin. | 2 | 0 | 68683 | 737 | | | 1208 | 455 | SLV 12 | 0.62 | No |

| Sezione | γM | N | M | V | Vt | Vp | Vt fess. diag. | Vt,lim | Comb. | c.s. | Verifica |
|---|---|---|---|---|---|---|---|---|---|---|---|
| ini. | 2 | 0 | -39224 | 3019 | | | 1208 | 455 | SLV 11 | 0.15 | No |
| fin. | 2 | 0 | 68683 | 737 | | | 1208 | 455 | SLV 11 | 0.62 | No |
| ini. | 2 | 0 | -81046 | 3918 | | | 1208 | 455 | SLV 13 | 0.12 | No |
| fin. | 2 | 0 | 35503 | 1966 | | | 1208 | 455 | SLV 13 | 0.23 | No |
| ini. | 2 | 0 | -88487 | 4557 | | | 1208 | 455 | SLV 15 | 0.1 | No |
| fin. | 2 | 0 | 68448 | 2364 | | | 1208 | 455 | SLV 15 | 0.19 | No |

### Tabella dei coefficienti di sicurezza minimi

| Stato limite | Coeff.s. | Comb. | Verifica |
|---|---|---|---|
| PF_SLV | 1.217 | SLV 15 | Si |
| V_SLV | 0.1 | SLV 15 | No |
| PF_SLU | 8.072 | SLU 71 | Si |
| V_SLU | 0.162 | SLU 77 | No |

## Trave di accoppiamento 137

Verifiche condotte secondo D.M. 17-01-18 (N.T.C.)

### Dati geometrici

| X ini. | Y ini. | Z ini.inf. | Z ini.sup. | H ini. | X fin. | Y fin. | Z fin.inf. | Z fin.sup | H fin. | Luce | Spessore | R. Trazione |
|---|---|---|---|---|---|---|---|---|---|---|---|---|
| -550.8 | -335.9 | 896 | 1096 | 200 | -600.8 | -335.9 | 896 | 1096 | 200 | 50 | 28 | 3500 |

### Caratteristiche del materiale

(Circolare 7 21-01-19 C8.5.I) Muratura in mattoni pieni e malta di calce LC2_Corti

| fb_ | fhk | fvk0 | fhmedio | τ0 | fv0 | μ | ϕ | fvk,lim | E | G | FC |
|---|---|---|---|---|---|---|---|---|---|---|---|
| 12 | | | 17.25 | 0.9 | 2 | 0.577 | 0.767 | 0.65 | 32000 | 12800 | 1.2 |

### Verifiche a pressoflessione delle travi in muratura in combinazioni non sismiche

| Sezione | γM | N | M | Mu | Comb. | c.s. | Verifica |
|---|---|---|---|---|---|---|---|
| ini. | 3 | -1338 | 66786 | 296292 | SLU 84 | 4.44 | Si |
| fin. | 3 | -960 | 21414 | 296292 | SLU 84 | 13.84 | Si |
| ini. | 3 | -1403 | 64257 | 296292 | SLU 82 | 4.61 | Si |
| fin. | 3 | -1044 | 15575 | 296292 | SLU 82 | 19.02 | Si |
| ini. | 3 | -1059 | 70884 | 296292 | SLU 77 | 4.18 | Si |
| fin. | 3 | -684 | 37356 | 296292 | SLU 77 | 7.93 | Si |
| ini. | 3 | -1124 | 68355 | 296292 | SLU 74 | 4.33 | Si |
| fin. | 3 | -767 | 31516 | 296292 | SLU 74 | 9.4 | Si |
| ini. | 3 | -1041 | 69835 | 296292 | SLU 79 | 4.24 | Si |
| fin. | 3 | -665 | 37135 | 296292 | SLU 79 | 7.98 | Si |
| ini. | 3 | -1204 | 71988 | 296292 | SLU 83 | 4.12 | Si |
| fin. | 3 | -807 | 28763 | 296292 | SLU 83 | 10.3 | Si |
| ini. | 3 | -1018 | 63849 | 296292 | SLU 41 | 4.64 | Si |
| fin. | 3 | -657 | 24063 | 296292 | SLU 41 | 12.31 | Si |
| ini. | 3 | -1192 | 65681 | 296292 | SLU 78 | 4.51 | Si |
| fin. | 3 | -837 | 30006 | 296292 | SLU 78 | 9.87 | Si |
| ini. | 3 | -1174 | 64632 | 296292 | SLU 80 | 4.58 | Si |
| fin. | 3 | -818 | 29785 | 296292 | SLU 80 | 9.95 | Si |
| ini. | 3 | -1269 | 69459 | 296292 | SLU 81 | 4.27 | Si |
| fin. | 3 | -891 | 22924 | 296292 | SLU 81 | 12.92 | Si |

### Verifiche a taglio delle travi in muratura secondo §C8.7.1.3.1 in combinazioni non sismiche

| Sezione | γM | N | M | V | Vt | Vp | Vt fess. diag. | Vt,lim | Comb. | c.s. | Verifica |
|---|---|---|---|---|---|---|---|---|---|---|---|
| ini. | 3 | 0 | 58647 | -1683 | | | 2157 | 812 | SLU 42 | 0.48 | No |
| fin. | 3 | 0 | 16713 | -686 | | | 2157 | 812 | SLU 42 | 1.18 | Si |
| ini. | 3 | 0 | 66786 | -1842 | | | 2157 | 812 | SLU 84 | 0.44 | No |
| fin. | 3 | 0 | 21414 | -642 | | | 2157 | 812 | SLU 84 | 1.26 | Si |
| ini. | 3 | 0 | 63849 | -1707 | | | 2157 | 812 | SLU 41 | 0.48 | No |
| fin. | 3 | 0 | 24063 | -616 | | | 2157 | 812 | SLU 41 | 1.32 | Si |
| ini. | 3 | 0 | 64257 | -1854 | | | 2157 | 812 | SLU 82 | 0.44 | No |
| fin. | 3 | 0 | 15575 | -711 | | | 2157 | 812 | SLU 82 | 1.14 | Si |
| ini. | 3 | 0 | 60788 | -1692 | | | 2157 | 812 | SLU 60 | 0.48 | No |
| fin. | 3 | 0 | 17793 | -555 | | | 2157 | 812 | SLU 60 | 1.46 | Si |
| ini. | 3 | 0 | 63317 | -1680 | | | 2157 | 812 | SLU 62 | 0.48 | No |
| fin. | 3 | 0 | 23632 | -486 | | | 2157 | 812 | SLU 62 | 1.67 | Si |
| ini. | 3 | 0 | 56118 | -1695 | | | 2157 | 812 | SLU 40 | 0.48 | No |
| fin. | 3 | 0 | 10874 | -755 | | | 2157 | 812 | SLU 40 | 1.08 | Si |
| ini. | 3 | 0 | 71988 | -1866 | | | 2157 | 812 | SLU 83 | 0.43 | No |
| fin. | 3 | 0 | 28763 | -573 | | | 2157 | 812 | SLU 83 | 1.42 | Si |
| ini. | 3 | 0 | 61320 | -1719 | | | 2157 | 812 | SLU 39 | 0.47 | No |
| fin. | 3 | 0 | 18223 | -685 | | | 2157 | 812 | SLU 39 | 1.18 | Si |
| ini. | 3 | 0 | 69459 | -1877 | | | 2157 | 812 | SLU 81 | 0.43 | No |
| fin. | 3 | 0 | 22924 | -642 | | | 2157 | 812 | SLU 81 | 1.26 | Si |

### Verifiche a pressoflessione delle travi in muratura in combinazioni sismiche

| Sezione | γM | N | M | Mu | Comb. | c.s. | Verifica |
|---|---|---|---|---|---|---|---|
| ini. | 2 | -2514 | 225255 | 314194 | SLV 4 | 1.39 | Si |
| fin. | 2 | -1051 | -75039 | 314194 | SLV 4 | 4.19 | Si |
| ini. | 2 | 962 | -139976 | 314194 | SLV 13 | 2.24 | Si |
| fin. | 2 | -88 | 117660 | 314194 | SLV 13 | 2.67 | Si |
| ini. | 2 | -2514 | 225255 | 314194 | SLV 3 | 1.39 | Si |
| fin. | 2 | -1051 | -75039 | 314194 | SLV 3 | 4.19 | Si |
| ini. | 2 | -1560 | 175065 | 314194 | SLV 7 | 1.79 | Si |
| fin. | 2 | 798 | -10939 | 314194 | SLV 7 | 28.72 | Si |
| ini. | 2 | -1524 | 120311 | 314194 | SLD 4 | 2.61 | Si |

| Sezione | γM | N | M | Mu | Comb. | c.s. | Verifica |
|---|---|---|---|---|---|---|---|
| fin. | 2 | -788 | -20201 | 314194 | SLD 4 | 15.55 | Si |
| ini. | 2 | -2340 | 174063 | 314194 | SLV 2 | 1.81 | Si |
| fin. | 2 | -2048 | -72833 | 314194 | SLV 2 | 4.31 | Si |
| ini. | 2 | -1560 | 175065 | 314194 | SLV 8 | 1.79 | Si |
| fin. | 2 | 798 | -10939 | 314194 | SLV 8 | 28.72 | Si |
| ini. | 2 | -2340 | 174063 | 314194 | SLV 1 | 1.81 | Si |
| fin. | 2 | -2048 | -72833 | 314194 | SLV 1 | 4.31 | Si |
| ini. | 2 | -1524 | 120311 | 314194 | SLD 3 | 2.61 | Si |
| fin. | 2 | -788 | -20201 | 314194 | SLD 3 | 15.55 | Si |
| ini. | 2 | 962 | -139976 | 314194 | SLV 14 | 2.24 | Si |
| fin. | 2 | -88 | 117660 | 314194 | SLV 14 | 2.67 | Si |

### Verifiche a taglio delle travi in muratura secondo §C8.7.1.3.1 in combinazioni sismiche

| Sezione | γM | N | M | V | Vt | Vp | Vt fess. diag. | Vt,lim | Comb. | c.s. | Verifica |
|---|---|---|---|---|---|---|---|---|---|---|---|
| ini. | 2 | 0 | -139976 | 6319 | | | 3235 | 1217 | SLV 13 | 0.19 | No |
| fin. | 2 | 0 | 117660 | 7631 | | | 3235 | 1217 | SLV 13 | 0.16 | No |
| ini. | 2 | 0 | 174063 | -6155 | | | 3235 | 1217 | SLV 1 | 0.2 | No |
| fin. | 2 | 0 | -72833 | -6219 | | | 3235 | 1217 | SLV 1 | 0.2 | No |
| ini. | 2 | 0 | 174063 | -6155 | | | 3235 | 1217 | SLV 2 | 0.2 | No |
| fin. | 2 | 0 | -72833 | -6219 | | | 3235 | 1217 | SLV 2 | 0.2 | No |
| ini. | 2 | 0 | 225255 | -8224 | | | 3235 | 1217 | SLV 3 | 0.15 | No |
| fin. | 2 | 0 | -75039 | -7847 | | | 3235 | 1217 | SLV 3 | 0.16 | No |
| ini. | 2 | 0 | -139976 | 6319 | | | 3235 | 1217 | SLV 14 | 0.19 | No |
| fin. | 2 | 0 | 117660 | 7631 | | | 3235 | 1217 | SLV 14 | 0.16 | No |
| ini. | 2 | 0 | 175065 | -6272 | | | 3235 | 1217 | SLV 7 | 0.19 | No |
| fin. | 2 | 0 | -10939 | -4899 | | | 3235 | 1217 | SLV 7 | 0.25 | No |
| ini. | 2 | 0 | -88784 | 4250 | | | 3235 | 1217 | SLV 16 | 0.29 | No |
| fin. | 2 | 0 | 115455 | 6003 | | | 3235 | 1217 | SLV 16 | 0.2 | No |
| ini. | 2 | 0 | 225255 | -8224 | | | 3235 | 1217 | SLV 4 | 0.15 | No |
| fin. | 2 | 0 | -75039 | -7847 | | | 3235 | 1217 | SLV 4 | 0.16 | No |
| ini. | 2 | 0 | 175065 | -6272 | | | 3235 | 1217 | SLV 8 | 0.19 | No |
| fin. | 2 | 0 | -10939 | -4899 | | | 3235 | 1217 | SLV 8 | 0.25 | No |
| ini. | 2 | 0 | -88784 | 4250 | | | 3235 | 1217 | SLV 15 | 0.29 | No |
| fin. | 2 | 0 | 115455 | 6003 | | | 3235 | 1217 | SLV 15 | 0.2 | No |

### Tabella dei coefficienti di sicurezza minimi

| Stato limite | Coeff.s. | Comb. | Verifica |
|---|---|---|---|
| PF_SLV | 1.395 | SLV 3 | Si |
| V_SLV | 0.148 | SLV 3 | No |
| PF_SLU | 4.116 | SLU 83 | Si |
| V_SLU | 0.432 | SLU 81 | No |

## Trave di accoppiamento 138

Verifiche condotte secondo D.M. 17-01-18 (N.T.C.)

### Dati geometrici

| X ini. | Y ini. | Z ini.inf. | Z ini.sup. | H ini. | X fin. | Y fin. | Z fin.inf. | Z fin.sup | H fin. | Luce | Spessore | R. Trazione |
|---|---|---|---|---|---|---|---|---|---|---|---|---|
| -550.8 | -335.9 | 1176 | 1248 | 72 | -600.8 | -335.9 | 1176 | 1248 | 72 | 50 | 28 | 3500 |

### Caratteristiche del materiale

(Circolare 7 21-01-19 C8.5.I) Muratura in mattoni pieni e malta di calce LC2_Corti

| fb_ | fhk | fvk0 | fhmedio | τ0 | fv0 | μ | ϕ | fvk,lim | E | G | FC |
|---|---|---|---|---|---|---|---|---|---|---|---|
| 12 | | | 17.25 | 0.9 | 2 | 0.577 | 0.767 | 0.65 | 32000 | 12800 | 1.2 |

### Verifiche a pressoflessione delle travi in muratura in combinazioni non sismiche

| Sezione | γM | N | M | Mu | Comb. | c.s. | Verifica |
|---|---|---|---|---|---|---|---|
| ini. | 3 | 306 | 10368 | 72292 | SLU 40 | 6.97 | Si |
| fin. | 3 | 182 | -5665 | 72292 | SLU 40 | 12.76 | Si |
| ini. | 3 | 329 | 11152 | 72292 | SLU 82 | 6.48 | Si |
| fin. | 3 | 195 | -6377 | 72292 | SLU 82 | 11.34 | Si |
| ini. | 3 | 273 | 10359 | 72292 | SLU 83 | 6.98 | Si |
| fin. | 3 | 99 | -9926 | 72292 | SLU 83 | 7.28 | Si |
| ini. | 3 | 322 | 10986 | 72292 | SLU 81 | 6.58 | Si |
| fin. | 3 | 176 | -8053 | 72292 | SLU 81 | 8.98 | Si |
| ini. | 3 | 135 | 7525 | 72292 | SLU 35 | 9.61 | Si |
| fin. | 3 | -44 | -10445 | 72292 | SLU 35 | 6.92 | Si |
| ini. | 3 | 366 | 10399 | 72292 | SLU 61 | 6.95 | Si |
| fin. | 3 | 256 | -4949 | 72292 | SLU 61 | 14.61 | Si |
| ini. | 3 | 159 | 8309 | 72292 | SLU 77 | 8.7 | Si |
| fin. | 3 | -31 | -11157 | 72292 | SLU 77 | 6.48 | Si |
| ini. | 3 | 281 | 10525 | 72292 | SLU 84 | 6.87 | Si |
| fin. | 3 | 118 | -8249 | 72292 | SLU 84 | 8.76 | Si |
| ini. | 3 | 111 | 7156 | 72292 | SLU 37 | 10.1 | Si |
| fin. | 3 | -66 | -10513 | 72292 | SLU 37 | 6.88 | Si |
| ini. | 3 | 135 | 7940 | 72292 | SLU 79 | 9.1 | Si |
| fin. | 3 | -52 | -11225 | 72292 | SLU 79 | 6.44 | Si |

### Verifiche a taglio delle travi in muratura secondo §C8.7.1.3.1 in combinazioni non sismiche

| Sezione | γM | N | M | V | Vt | Vp | Vt fess. diag. | Vt,lim | Comb. | c.s. | Verifica |
|---|---|---|---|---|---|---|---|---|---|---|---|
| ini. | 3 | 0 | 7940 | -6 | | | 776 | 292 | SLU 79 | 48.13 | Si |
| fin. | 3 | 0 | -11225 | -1489 | | | 776 | 292 | SLU 79 | 0.2 | No |
| ini. | 3 | 0 | 9101 | 52 | | | 776 | 292 | SLU 75 | 5.63 | Si |
| fin. | 3 | 0 | -7609 | -1372 | | | 776 | 292 | SLU 75 | 0.21 | No |

| Sezione | γM | N | M | V | Vt | Vp | Vt fess. diag. | Vt,lim | Comb. | c.s. | Verifica |
|---|---|---|---|---|---|---|---|---|---|---|---|
| ini. | 3 | 0 | 8475 | 18 | | | 776 | 292 | SLU 78 | 16.37 | Si |
| fin. | 3 | 0 | -9481 | -1444 | | | 776 | 292 | SLU 78 | 0.2 | No |
| ini. | 3 | 0 | 11152 | 40 | | | 776 | 292 | SLU 82 | 7.23 | Si |
| fin. | 3 | 0 | -6377 | -1360 | | | 776 | 292 | SLU 82 | 0.21 | No |
| ini. | 3 | 0 | 10525 | 6 | | | 776 | 292 | SLU 84 | 45.75 | Si |
| fin. | 3 | 0 | -8249 | -1432 | | | 776 | 292 | SLU 84 | 0.2 | No |
| ini. | 3 | 0 | 8309 | 0 | | | 776 | 292 | SLU 77 | 4611.33 | Si |
| fin. | 3 | 0 | -11157 | -1530 | | | 776 | 292 | SLU 77 | 0.19 | No |
| ini. | 3 | 0 | 8106 | 12 | | | 776 | 292 | SLU 80 | 24.67 | Si |
| fin. | 3 | 0 | -9549 | -1403 | | | 776 | 292 | SLU 80 | 0.21 | No |
| ini. | 3 | 0 | 10986 | 22 | | | 776 | 292 | SLU 81 | 12.99 | Si |
| fin. | 3 | 0 | -8053 | -1446 | | | 776 | 292 | SLU 81 | 0.2 | No |
| ini. | 3 | 0 | 10359 | -12 | | | 776 | 292 | SLU 83 | 25.34 | Si |
| fin. | 3 | 0 | -9926 | -1518 | | | 776 | 292 | SLU 83 | 0.19 | No |
| ini. | 3 | 0 | 8935 | 34 | | | 776 | 292 | SLU 74 | 8.61 | Si |
| fin. | 3 | 0 | -9285 | -1458 | | | 776 | 292 | SLU 74 | 0.2 | No |

### Verifiche a pressoflessione delle travi in muratura in combinazioni sismiche

| Sezione | γM | N | M | Mu | Comb. | c.s. | Verifica |
|---|---|---|---|---|---|---|---|
| ini. | 2 | 1174 | 47857 | 90194 | SLV 7 | 1.88 | Si |
| fin. | 2 | 343 | -16244 | 90194 | SLV 7 | 5.55 | Si |
| ini. | 2 | -2903 | -51632 | 90194 | SLV 16 | 1.75 | Si |
| fin. | 2 | -2740 | -22373 | 90194 | SLV 16 | 4.03 | Si |
| ini. | 2 | -3009 | -65954 | 90194 | SLV 14 | 1.37 | Si |
| fin. | 2 | -2472 | -13168 | 90194 | SLV 14 | 6.85 | Si |
| ini. | 2 | -3009 | -65954 | 90194 | SLV 13 | 1.37 | Si |
| fin. | 2 | -2472 | -13168 | 90194 | SLV 13 | 6.85 | Si |
| ini. | 2 | 3071 | 61399 | 90194 | SLV 2 | 1.47 | Si |
| fin. | 2 | 2753 | 12782 | 90194 | SLV 2 | 7.06 | Si |
| ini. | 2 | 1174 | 47857 | 90194 | SLV 8 | 1.88 | Si |
| fin. | 2 | 343 | -16244 | 90194 | SLV 8 | 5.55 | Si |
| ini. | 2 | -2903 | -51632 | 90194 | SLV 15 | 1.75 | Si |
| fin. | 2 | -2740 | -22373 | 90194 | SLV 15 | 4.03 | Si |
| ini. | 2 | 3178 | 75721 | 90194 | SLV 4 | 1.19 | Si |
| fin. | 2 | 2485 | 3577 | 90194 | SLV 4 | 25.22 | Si |
| ini. | 2 | 3178 | 75721 | 90194 | SLV 3 | 1.19 | Si |
| fin. | 2 | 2485 | 3577 | 90194 | SLV 3 | 25.22 | Si |
| ini. | 2 | 3071 | 61399 | 90194 | SLV 1 | 1.47 | Si |
| fin. | 2 | 2753 | 12782 | 90194 | SLV 1 | 7.06 | Si |

### Verifiche a taglio delle travi in muratura secondo §C8.7.1.3.1 in combinazioni sismiche

| Sezione | γM | N | M | V | Vt | Vp | Vt fess. diag. | Vt,lim | Comb. | c.s. | Verifica |
|---|---|---|---|---|---|---|---|---|---|---|---|
| ini. | 2 | 0 | -38089 | 1746 | | | 1165 | 438 | SLV 10 | 0.25 | No |
| fin. | 2 | 0 | 6653 | 545 | | | 1165 | 438 | SLV 10 | 0.8 | No |
| ini. | 2 | 0 | 9651 | -761 | | | 1165 | 438 | SLV 12 | 0.58 | No |
| fin. | 2 | 0 | -24029 | -1758 | | | 1165 | 438 | SLV 12 | 0.25 | No |
| ini. | 2 | 0 | -65954 | 1795 | | | 1165 | 438 | SLV 14 | 0.24 | No |
| fin. | 2 | 0 | -13168 | 388 | | | 1165 | 438 | SLV 14 | 1.13 | Si |
| ini. | 2 | 0 | 9651 | -761 | | | 1165 | 438 | SLV 11 | 0.58 | No |
| fin. | 2 | 0 | -24029 | -1758 | | | 1165 | 438 | SLV 11 | 0.25 | No |
| ini. | 2 | 0 | 47857 | -1555 | | | 1165 | 438 | SLV 7 | 0.28 | No |
| fin. | 2 | 0 | -16244 | -2314 | | | 1165 | 438 | SLV 7 | 0.19 | No |
| ini. | 2 | 0 | -38089 | 1746 | | | 1165 | 438 | SLV 9 | 0.25 | No |
| fin. | 2 | 0 | 6653 | 545 | | | 1165 | 438 | SLV 9 | 0.8 | No |
| ini. | 2 | 0 | 75721 | -1605 | | | 1165 | 438 | SLV 4 | 0.27 | No |
| fin. | 2 | 0 | 3577 | -2157 | | | 1165 | 438 | SLV 4 | 0.2 | No |
| ini. | 2 | 0 | 75721 | -1605 | | | 1165 | 438 | SLV 3 | 0.27 | No |
| fin. | 2 | 0 | 3577 | -2157 | | | 1165 | 438 | SLV 3 | 0.2 | No |
| ini. | 2 | 0 | -65954 | 1795 | | | 1165 | 438 | SLV 13 | 0.24 | No |
| fin. | 2 | 0 | -13168 | 388 | | | 1165 | 438 | SLV 13 | 1.13 | Si |
| ini. | 2 | 0 | 47857 | -1555 | | | 1165 | 438 | SLV 8 | 0.28 | No |
| fin. | 2 | 0 | -16244 | -2314 | | | 1165 | 438 | SLV 8 | 0.19 | No |

### Tabella dei coefficienti di sicurezza minimi

| Stato limite | Coeff.s. | Comb. | Verifica |
|---|---|---|---|
| PF_SLV | 1.191 | SLV 3 | Si |
| V_SLV | 0.189 | SLV 7 | No |
| PF_SLU | 6.44 | SLU 79 | Si |
| V_SLU | 0.191 | SLU 77 | No |

## Trave di accoppiamento 139

Verifiche condotte secondo D.M. 17-01-18 (N.T.C.)

### Dati geometrici

| X ini. | Y ini. | Z ini.inf. | Z ini.sup. | H ini. | X fin. | Y fin. | Z fin.inf. | Z fin.sup | H fin. | Luce | Spessore | R. Trazione |
|---|---|---|---|---|---|---|---|---|---|---|---|---|
| -228.3 | -335.9 | 896 | 986 | 90 | -318.3 | -335.9 | 896 | 986 | 90 | 90 | 28 | 3500 |

### Caratteristiche del materiale

(Circolare 7 21-01-19 C8.5.I) Muratura in mattoni pieni e malta di calce LC2_Corti

| fb_ | fhk | fvk0 | fhmedio | τ0 | fv0 | μ | ϕ | fvk,lim | E | G | FC |
|---|---|---|---|---|---|---|---|---|---|---|---|
| 12 | | | 17.25 | 0.9 | 2 | 0.577 | 0.767 | 0.65 | 32000 | 12800 | 1.2 |

## Verifiche a pressoflessione delle travi in muratura in combinazioni non sismiche

| Sezione | γM | N | M | Mu | Comb. | c.s. | Verifica |
|---|---|---|---|---|---|---|---|
| ini. | 3 | -128 | -26318 | 103792 | SLU 82 | 3.94 | Si |
| fin. | 3 | -1393 | 39303 | 103792 | SLU 82 | 2.64 | Si |
| ini. | 3 | -76 | -28363 | 103792 | SLU 68 | 3.66 | Si |
| fin. | 3 | -1399 | 39559 | 103792 | SLU 68 | 2.62 | Si |
| ini. | 3 | -116 | -28839 | 103792 | SLU 76 | 3.6 | Si |
| fin. | 3 | -1479 | 40970 | 103792 | SLU 76 | 2.53 | Si |
| ini. | 3 | -109 | -29116 | 103792 | SLU 73 | 3.56 | Si |
| fin. | 3 | -1479 | 40939 | 103792 | SLU 73 | 2.54 | Si |
| ini. | 3 | -125 | -25560 | 103792 | SLU 80 | 4.06 | Si |
| fin. | 3 | -1359 | 38759 | 103792 | SLU 80 | 2.68 | Si |
| ini. | 3 | -69 | -28640 | 103792 | SLU 65 | 3.62 | Si |
| fin. | 3 | -1398 | 39528 | 103792 | SLU 65 | 2.63 | Si |
| ini. | 3 | -58 | -26040 | 103792 | SLU 70 | 3.99 | Si |
| fin. | 3 | -1283 | 38252 | 103792 | SLU 70 | 2.71 | Si |
| ini. | 3 | -90 | -26792 | 103792 | SLU 75 | 3.87 | Si |
| fin. | 3 | -1363 | 39633 | 103792 | SLU 75 | 2.62 | Si |
| ini. | 3 | -97 | -26515 | 103792 | SLU 78 | 3.91 | Si |
| fin. | 3 | -1363 | 39663 | 103792 | SLU 78 | 2.62 | Si |
| ini. | 3 | -135 | -26041 | 103792 | SLU 84 | 3.99 | Si |
| fin. | 3 | -1393 | 39333 | 103792 | SLU 84 | 2.64 | Si |

## Verifiche a taglio delle travi in muratura secondo §C8.7.1.3.1 in combinazioni non sismiche

| Sezione | γM | N | M | V | Vt | Vp | Vt fess. diag. | Vt,lim | Comb. | c.s. | Verifica |
|---|---|---|---|---|---|---|---|---|---|---|---|
| ini. | 3 | 0 | -28839 | 886 | | | 970 | 365 | SLU 76 | 0.41 | No |
| fin. | 3 | 0 | 40970 | 2266 | | | 970 | 365 | SLU 76 | 0.16 | No |
| ini. | 3 | 0 | -26515 | 742 | | | 970 | 365 | SLU 78 | 0.49 | No |
| fin. | 3 | 0 | 39663 | 2256 | | | 970 | 365 | SLU 78 | 0.16 | No |
| ini. | 3 | 0 | -28363 | 851 | | | 970 | 365 | SLU 68 | 0.43 | No |
| fin. | 3 | 0 | 39559 | 2221 | | | 970 | 365 | SLU 68 | 0.16 | No |
| ini. | 3 | 0 | -25560 | 725 | | | 970 | 365 | SLU 80 | 0.5 | No |
| fin. | 3 | 0 | 38759 | 2195 | | | 970 | 365 | SLU 80 | 0.17 | No |
| ini. | 3 | 0 | -26792 | 779 | | | 970 | 365 | SLU 75 | 0.47 | No |
| fin. | 3 | 0 | 39633 | 2224 | | | 970 | 365 | SLU 75 | 0.16 | No |
| ini. | 3 | 0 | -26040 | 707 | | | 970 | 365 | SLU 70 | 0.52 | No |
| fin. | 3 | 0 | 38252 | 2211 | | | 970 | 365 | SLU 70 | 0.17 | No |
| ini. | 3 | 0 | -26317 | 744 | | | 970 | 365 | SLU 67 | 0.49 | No |
| fin. | 3 | 0 | 38221 | 2179 | | | 970 | 365 | SLU 67 | 0.17 | No |
| ini. | 3 | 0 | -26041 | 777 | | | 970 | 365 | SLU 84 | 0.47 | No |
| fin. | 3 | 0 | 39333 | 2182 | | | 970 | 365 | SLU 84 | 0.17 | No |
| ini. | 3 | 0 | -28640 | 888 | | | 970 | 365 | SLU 65 | 0.41 | No |
| fin. | 3 | 0 | 39528 | 2189 | | | 970 | 365 | SLU 65 | 0.17 | No |
| ini. | 3 | 0 | -29116 | 923 | | | 970 | 365 | SLU 73 | 0.4 | No |
| fin. | 3 | 0 | 40939 | 2234 | | | 970 | 365 | SLU 73 | 0.16 | No |

## Verifiche a pressoflessione delle travi in muratura in combinazioni sismiche

| Sezione | γM | N | M | Mu | Comb. | c.s. | Verifica |
|---|---|---|---|---|---|---|---|
| ini. | 2 | -1489 | 85032 | 121694 | SLV 1 | 1.43 | Si |
| fin. | 2 | 1780 | -50321 | 121694 | SLV 1 | 2.42 | Si |
| ini. | 2 | 1593 | -134199 | 121694 | SLV 14 | 0.91 | No |
| fin. | 2 | -4059 | 115827 | 121694 | SLV 14 | 1.05 | Si |
| ini. | 2 | 1593 | -134199 | 121694 | SLV 13 | 0.91 | No |
| fin. | 2 | -4059 | 115827 | 121694 | SLV 13 | 1.05 | Si |
| ini. | 2 | -1489 | 85032 | 121694 | SLV 2 | 1.43 | Si |
| fin. | 2 | 1780 | -50321 | 121694 | SLV 2 | 2.42 | Si |
| ini. | 2 | 820 | -78785 | 121694 | SLV 10 | 1.54 | Si |
| fin. | 2 | -2715 | 74676 | 121694 | SLV 10 | 1.63 | Si |
| ini. | 2 | 1331 | -115928 | 121694 | SLV 15 | 1.05 | Si |
| fin. | 2 | -3460 | 101255 | 121694 | SLV 15 | 1.2 | Si |
| ini. | 2 | -1750 | 103303 | 121694 | SLV 3 | 1.18 | Si |
| fin. | 2 | 2380 | -64893 | 121694 | SLV 3 | 1.88 | Si |
| ini. | 2 | -1750 | 103303 | 121694 | SLV 4 | 1.18 | Si |
| fin. | 2 | 2380 | -64893 | 121694 | SLV 4 | 1.88 | Si |
| ini. | 2 | 820 | -78785 | 121694 | SLV 9 | 1.54 | Si |
| fin. | 2 | -2715 | 74676 | 121694 | SLV 9 | 1.63 | Si |
| ini. | 2 | 1331 | -115928 | 121694 | SLV 16 | 1.05 | Si |
| fin. | 2 | -3460 | 101255 | 121694 | SLV 16 | 1.2 | Si |

## Verifiche a taglio delle travi in muratura secondo §C8.7.1.3.1 in combinazioni sismiche

| Sezione | γM | N | M | V | Vt | Vp | Vt fess. diag. | Vt,lim | Comb. | c.s. | Verifica |
|---|---|---|---|---|---|---|---|---|---|---|---|
| ini. | 2 | 0 | 103303 | -3799 | | | 1456 | 548 | SLV 3 | 0.14 | No |
| fin. | 2 | 0 | -64893 | -3278 | | | 1456 | 548 | SLV 3 | 0.17 | No |
| ini. | 2 | 0 | -115928 | 4635 | | | 1456 | 548 | SLV 16 | 0.12 | No |
| fin. | 2 | 0 | 101255 | 5419 | | | 1456 | 548 | SLV 16 | 0.1 | No |
| ini. | 2 | 0 | 85032 | -3793 | | | 1456 | 548 | SLV 1 | 0.14 | No |
| fin. | 2 | 0 | -50321 | -2517 | | | 1456 | 548 | SLV 1 | 0.22 | No |
| ini. | 2 | 0 | -115928 | 4635 | | | 1456 | 548 | SLV 15 | 0.12 | No |
| fin. | 2 | 0 | 101255 | 5419 | | | 1456 | 548 | SLV 15 | 0.1 | No |
| ini. | 2 | 0 | -134199 | 4641 | | | 1456 | 548 | SLV 14 | 0.12 | No |
| fin. | 2 | 0 | 115827 | 6180 | | | 1456 | 548 | SLV 14 | 0.09 | No |
| ini. | 2 | 0 | -78785 | 1696 | | | 1456 | 548 | SLV 9 | 0.32 | No |
| fin. | 2 | 0 | 74676 | 4024 | | | 1456 | 548 | SLV 9 | 0.14 | No |
| ini. | 2 | 0 | -134199 | 4641 | | | 1456 | 548 | SLV 13 | 0.12 | No |
| fin. | 2 | 0 | 115827 | 6180 | | | 1456 | 548 | SLV 13 | 0.09 | No |
| ini. | 2 | 0 | 103303 | -3799 | | | 1456 | 548 | SLV 4 | 0.14 | No |
| fin. | 2 | 0 | -64893 | -3278 | | | 1456 | 548 | SLV 4 | 0.17 | No |
| ini. | 2 | 0 | -78785 | 1696 | | | 1456 | 548 | SLV 10 | 0.32 | No |

| Sezione | γM | N | M | V | Vt | Vp | Vt fess. diag. | Vt,lim | Comb. | c.s. | Verifica |
|---|---|---|---|---|---|---|---|---|---|---|---|
| fin. | 2 | 0 | 74676 | 4024 | | | 1456 | 548 | SLV 10 | 0.14 | No |
| ini. | 2 | 0 | 85032 | -3793 | | | 1456 | 548 | SLV 2 | 0.14 | No |
| fin. | 2 | 0 | -50321 | -2517 | | | 1456 | 548 | SLV 2 | 0.22 | No |

### Tabella dei coefficienti di sicurezza minimi

| Stato limite | Coeff.s. | Comb. | Verifica |
|---|---|---|---|
| PF_SLV | 0.907 | SLV 13 | No |
| V_SLV | 0.089 | SLV 13 | No |
| PF_SLU | 2.533 | SLU 76 | Si |
| V_SLU | 0.161 | SLU 76 | No |

## Trave di accoppiamento 140

Verifiche condotte secondo D.M. 17-01-18 (N.T.C.)

### Dati geometrici

| X ini. | Y ini. | Z ini.inf. | Z ini.sup. | H ini. | X fin. | Y fin. | Z fin.inf. | Z fin.sup | H fin. | Luce | Spessore | R. Trazione |
|---|---|---|---|---|---|---|---|---|---|---|---|---|
| -228.3 | -335.9 | 1166 | 1248 | 82 | -318.3 | -335.9 | 1166 | 1248 | 82 | 90 | 28 | 3500 |

### Caratteristiche del materiale

(Circolare 7 21-01-19 C8.5.I) Muratura in mattoni pieni e malta di calce LC2_Corti

| fb_ | fhk | fvk0 | fhmedio | τ0 | fv0 | μ | ϕ | fvk,lim | E | G | FC |
|---|---|---|---|---|---|---|---|---|---|---|---|
| 12 | | | 17.25 | 0.9 | 2 | 0.577 | 0.767 | 0.65 | 32000 | 12800 | 1.2 |

### Verifiche a pressoflessione delle travi in muratura in combinazioni non sismiche

| Sezione | γM | N | M | Mu | Comb. | c.s. | Verifica |
|---|---|---|---|---|---|---|---|
| ini. | 3 | -962 | -33683 | 89792 | SLU 65 | 2.67 | Si |
| fin. | 3 | 79 | 10352 | 89792 | SLU 65 | 8.67 | Si |
| ini. | 3 | -835 | -32656 | 89792 | SLU 70 | 2.75 | Si |
| fin. | 3 | 189 | 8044 | 89792 | SLU 70 | 11.16 | Si |
| ini. | 3 | -970 | -34053 | 89792 | SLU 84 | 2.64 | Si |
| fin. | 3 | 46 | 6129 | 89792 | SLU 84 | 14.65 | Si |
| ini. | 3 | -1036 | -35384 | 89792 | SLU 73 | 2.54 | Si |
| fin. | 3 | 35 | 8967 | 89792 | SLU 73 | 10.01 | Si |
| ini. | 3 | -946 | -34256 | 89792 | SLU 75 | 2.62 | Si |
| fin. | 3 | 87 | 7164 | 89792 | SLU 75 | 12.53 | Si |
| ini. | 3 | -1000 | -35484 | 89792 | SLU 76 | 2.53 | Si |
| fin. | 3 | 93 | 8463 | 89792 | SLU 76 | 10.61 | Si |
| ini. | 3 | -1006 | -33952 | 89792 | SLU 82 | 2.64 | Si |
| fin. | 3 | -12 | 6633 | 89792 | SLU 82 | 13.54 | Si |
| ini. | 3 | -909 | -34357 | 89792 | SLU 78 | 2.61 | Si |
| fin. | 3 | 145 | 6659 | 89792 | SLU 78 | 13.48 | Si |
| ini. | 3 | -902 | -33424 | 89792 | SLU 80 | 2.69 | Si |
| fin. | 3 | 123 | 6218 | 89792 | SLU 80 | 14.44 | Si |
| ini. | 3 | -925 | -33784 | 89792 | SLU 68 | 2.66 | Si |
| fin. | 3 | 137 | 9848 | 89792 | SLU 68 | 9.12 | Si |

### Verifiche a taglio delle travi in muratura secondo §C8.7.1.3.1 in combinazioni non sismiche

| Sezione | γM | N | M | V | Vt | Vp | Vt fess. diag. | Vt,lim | Comb. | c.s. | Verifica |
|---|---|---|---|---|---|---|---|---|---|---|---|
| ini. | 3 | 0 | -31015 | 2000 | | | 806 | 303 | SLU 74 | 0.15 | No |
| fin. | 3 | 0 | 4552 | -557 | | | 806 | 303 | SLU 74 | 0.54 | No |
| ini. | 3 | 0 | -34053 | 2124 | | | 806 | 303 | SLU 84 | 0.14 | No |
| fin. | 3 | 0 | 6129 | -473 | | | 806 | 303 | SLU 84 | 0.64 | No |
| ini. | 3 | 0 | -33952 | 2101 | | | 806 | 303 | SLU 82 | 0.14 | No |
| fin. | 3 | 0 | 6633 | -451 | | | 806 | 303 | SLU 82 | 0.67 | No |
| ini. | 3 | 0 | -30811 | 2004 | | | 806 | 303 | SLU 83 | 0.15 | No |
| fin. | 3 | 0 | 3517 | -613 | | | 806 | 303 | SLU 83 | 0.49 | No |
| ini. | 3 | 0 | -31116 | 2022 | | | 806 | 303 | SLU 77 | 0.15 | No |
| fin. | 3 | 0 | 4048 | -578 | | | 806 | 303 | SLU 77 | 0.52 | No |
| ini. | 3 | 0 | -34256 | 2119 | | | 806 | 303 | SLU 75 | 0.14 | No |
| fin. | 3 | 0 | 7164 | -416 | | | 806 | 303 | SLU 75 | 0.73 | No |
| ini. | 3 | 0 | -33424 | 2085 | | | 806 | 303 | SLU 80 | 0.15 | No |
| fin. | 3 | 0 | 6218 | -430 | | | 806 | 303 | SLU 80 | 0.71 | No |
| ini. | 3 | 0 | -34357 | 2142 | | | 806 | 303 | SLU 78 | 0.14 | No |
| fin. | 3 | 0 | 6659 | -438 | | | 806 | 303 | SLU 78 | 0.69 | No |
| ini. | 3 | 0 | -35384 | 2119 | | | 806 | 303 | SLU 73 | 0.14 | No |
| fin. | 3 | 0 | 8967 | -293 | | | 806 | 303 | SLU 73 | 1.04 | Si |
| ini. | 3 | 0 | -35484 | 2142 | | | 806 | 303 | SLU 76 | 0.14 | No |
| fin. | 3 | 0 | 8463 | -314 | | | 806 | 303 | SLU 76 | 0.96 | No |

### Verifiche a pressoflessione delle travi in muratura in combinazioni sismiche

| Sezione | γM | N | M | Mu | Comb. | c.s. | Verifica |
|---|---|---|---|---|---|---|---|
| ini. | 2 | -1780 | -85164 | 107694 | SLV 16 | 1.26 | Si |
| fin. | 2 | 1229 | 58198 | 107694 | SLV 16 | 1.85 | Si |
| ini. | 2 | -1780 | -85164 | 107694 | SLV 15 | 1.26 | Si |
| fin. | 2 | 1229 | 58198 | 107694 | SLV 15 | 1.85 | Si |
| ini. | 2 | -2064 | -99600 | 107694 | SLV 13 | 1.08 | Si |
| fin. | 2 | 1589 | 69921 | 107694 | SLV 13 | 1.54 | Si |
| ini. | 2 | -1477 | -66598 | 107694 | SLV 9 | 1.62 | Si |
| fin. | 2 | 1017 | 41476 | 107694 | SLV 9 | 2.6 | Si |
| ini. | 2 | 845 | 57247 | 107694 | SLV 3 | 1.88 | Si |
| fin. | 2 | -1603 | -62148 | 107694 | SLV 3 | 1.73 | Si |
| ini. | 2 | -1227 | -54608 | 107694 | SLD 13 | 1.97 | Si |
| fin. | 2 | 676 | 32073 | 107694 | SLD 13 | 3.36 | Si |

| Sezione | γM | N | M | Mu | Comb. | c.s. | Verifica |
|---|---|---|---|---|---|---|---|
| ini. | 2 | -1227 | -54608 | 107694 | SLD 14 | 1.97 | Si |
| fin. | 2 | 676 | 32073 | 107694 | SLD 14 | 3.36 | Si |
| ini. | 2 | -1477 | -66598 | 107694 | SLV 10 | 1.62 | Si |
| fin. | 2 | 1017 | 41476 | 107694 | SLV 10 | 2.6 | Si |
| ini. | 2 | -2064 | -99600 | 107694 | SLV 14 | 1.08 | Si |
| fin. | 2 | 1589 | 69921 | 107694 | SLV 14 | 1.54 | Si |
| ini. | 2 | 845 | 57247 | 107694 | SLV 4 | 1.88 | Si |
| fin. | 2 | -1603 | -62148 | 107694 | SLV 4 | 1.73 | Si |

### Verifiche a taglio delle travi in muratura secondo §C8.7.1.3.1 in combinazioni sismiche

| Sezione | γM | N | M | V | Vt | Vp | Vt fess. diag. | Vt,lim | Comb. | c.s. | Verifica |
|---|---|---|---|---|---|---|---|---|---|---|---|
| ini. | 2 | 0 | 57247 | -1611 | | | 1208 | 455 | SLV 4 | 0.28 | No |
| fin. | 2 | 0 | -62148 | -3412 | | | 1208 | 455 | SLV 4 | 0.13 | No |
| ini. | 2 | 0 | -85164 | 3763 | | | 1208 | 455 | SLV 15 | 0.12 | No |
| fin. | 2 | 0 | 58198 | 2168 | | | 1208 | 455 | SLV 15 | 0.21 | No |
| ini. | 2 | 0 | -85164 | 3763 | | | 1208 | 455 | SLV 16 | 0.12 | No |
| fin. | 2 | 0 | 58198 | 2168 | | | 1208 | 455 | SLV 16 | 0.21 | No |
| ini. | 2 | 0 | -99600 | 4306 | | | 1208 | 455 | SLV 13 | 0.11 | No |
| fin. | 2 | 0 | 69921 | 2757 | | | 1208 | 455 | SLV 13 | 0.16 | No |
| ini. | 2 | 0 | 57247 | -1611 | | | 1208 | 455 | SLV 3 | 0.28 | No |
| fin. | 2 | 0 | -62148 | -3412 | | | 1208 | 455 | SLV 3 | 0.13 | No |
| ini. | 2 | 0 | -66598 | 3058 | | | 1208 | 455 | SLV 9 | 0.15 | No |
| fin. | 2 | 0 | 41476 | 1492 | | | 1208 | 455 | SLV 9 | 0.3 | No |
| ini. | 2 | 0 | -99600 | 4306 | | | 1208 | 455 | SLV 14 | 0.11 | No |
| fin. | 2 | 0 | 69921 | 2757 | | | 1208 | 455 | SLV 14 | 0.16 | No |
| ini. | 2 | 0 | 42812 | -1068 | | | 1208 | 455 | SLV 2 | 0.43 | No |
| fin. | 2 | 0 | -50426 | -2822 | | | 1208 | 455 | SLV 2 | 0.16 | No |
| ini. | 2 | 0 | 42812 | -1068 | | | 1208 | 455 | SLV 1 | 0.43 | No |
| fin. | 2 | 0 | -50426 | -2822 | | | 1208 | 455 | SLV 1 | 0.16 | No |
| ini. | 2 | 0 | -66598 | 3058 | | | 1208 | 455 | SLV 10 | 0.15 | No |
| fin. | 2 | 0 | 41476 | 1492 | | | 1208 | 455 | SLV 10 | 0.3 | No |

### Tabella dei coefficienti di sicurezza minimi

| Stato limite | Coeff.s. | Comb. | Verifica |
|---|---|---|---|
| PF_SLV | 1.081 | SLV 13 | Si |
| V_SLV | 0.106 | SLV 13 | No |
| PF_SLU | 2.53 | SLU 76 | Si |
| V_SLU | 0.142 | SLU 78 | No |

## Trave di accoppiamento 141

Verifiche condotte secondo D.M. 17-01-18 (N.T.C.)

### Dati geometrici

| X ini. | Y ini. | Z ini.inf. | Z ini.sup. | H ini. | X fin. | Y fin. | Z fin.inf. | Z fin.sup | H fin. | Luce | Spessore | R. Trazione |
|---|---|---|---|---|---|---|---|---|---|---|---|---|
| -206.3 | 595.1 | 896 | 986 | 90 | -296.3 | 595.1 | 896 | 986 | 90 | 90 | 28 | 3500 |

### Caratteristiche del materiale

(Circolare 7 21-01-19 C8.5.I) Muratura in mattoni pieni e malta di calce LC2_Corti

| fb_ | fhk | fvk0 | fhmedio | τ0 | fv0 | μ | ϕ | fvk,lim | E | G | FC |
|---|---|---|---|---|---|---|---|---|---|---|---|
| 12 | | | 17.25 | 0.9 | 2 | 0.577 | 0.767 | 0.65 | 32000 | 12800 | 1.2 |

### Verifiche a pressoflessione delle travi in muratura in combinazioni non sismiche

| Sezione | γM | N | M | Mu | Comb. | c.s. | Verifica |
|---|---|---|---|---|---|---|---|
| ini. | 3 | 135 | -4737 | 103792 | SLU 40 | 21.91 | Si |
| fin. | 3 | -269 | 12762 | 103792 | SLU 40 | 8.13 | Si |
| ini. | 3 | 131 | -4449 | 103792 | SLU 39 | 23.33 | Si |
| fin. | 3 | -261 | 12473 | 103792 | SLU 39 | 8.32 | Si |
| ini. | 3 | 131 | -4654 | 103792 | SLU 81 | 22.3 | Si |
| fin. | 3 | -322 | 14585 | 103792 | SLU 81 | 7.12 | Si |
| ini. | 3 | 126 | -4498 | 103792 | SLU 73 | 23.07 | Si |
| fin. | 3 | -298 | 13638 | 103792 | SLU 73 | 7.61 | Si |
| ini. | 3 | 85 | -3679 | 103792 | SLU 18 | 28.21 | Si |
| fin. | 3 | -291 | 12160 | 103792 | SLU 18 | 8.54 | Si |
| ini. | 3 | 84 | -3884 | 103792 | SLU 60 | 26.72 | Si |
| fin. | 3 | -352 | 14273 | 103792 | SLU 60 | 7.27 | Si |
| ini. | 3 | 79 | -3728 | 103792 | SLU 52 | 27.84 | Si |
| fin. | 3 | -328 | 13326 | 103792 | SLU 52 | 7.79 | Si |
| ini. | 3 | 134 | -4942 | 103792 | SLU 82 | 21 | Si |
| fin. | 3 | -329 | 14874 | 103792 | SLU 82 | 6.98 | Si |
| ini. | 3 | 88 | -3967 | 103792 | SLU 19 | 26.17 | Si |
| fin. | 3 | -298 | 12449 | 103792 | SLU 19 | 8.34 | Si |
| ini. | 3 | 87 | -4172 | 103792 | SLU 61 | 24.88 | Si |
| fin. | 3 | -359 | 14562 | 103792 | SLU 61 | 7.13 | Si |

### Verifiche a taglio delle travi in muratura secondo §C8.7.1.3.1 in combinazioni non sismiche

| Sezione | γM | N | M | V | Vt | Vp | Vt fess. diag. | Vt,lim | Comb. | c.s. | Verifica |
|---|---|---|---|---|---|---|---|---|---|---|---|
| ini. | 3 | 0 | -3728 | -176 | | | 970 | 365 | SLU 52 | 2.07 | Si |
| fin. | 3 | 0 | 13326 | 769 | | | 970 | 365 | SLU 52 | 0.47 | No |
| ini. | 3 | 0 | -3662 | -336 | | | 970 | 365 | SLU 75 | 1.09 | Si |
| fin. | 3 | 0 | 9313 | 714 | | | 970 | 365 | SLU 75 | 0.51 | No |
| ini. | 3 | 0 | -4654 | -185 | | | 970 | 365 | SLU 81 | 1.97 | Si |
| fin. | 3 | 0 | 14585 | 857 | | | 970 | 365 | SLU 81 | 0.43 | No |
| ini. | 3 | 0 | -4737 | -80 | | | 970 | 365 | SLU 40 | 4.54 | Si |

| Sezione | γM | N | M | V | Vt | Vp | Vt fess. diag. | Vt,lim | Comb. | c.s. | Verifica |
|---|---|---|---|---|---|---|---|---|---|---|---|
| fin. | 3 | 0 | 12762 | 713 | | | 970 | 365 | SLU 40 | 0.51 | No |
| ini. | 3 | 0 | -4942 | -155 | | | 970 | 365 | SLU 82 | 2.36 | Si |
| fin. | 3 | 0 | 14874 | 855 | | | 970 | 365 | SLU 82 | 0.43 | No |
| ini. | 3 | 0 | -4172 | -154 | | | 970 | 365 | SLU 61 | 2.37 | Si |
| fin. | 3 | 0 | 14562 | 819 | | | 970 | 365 | SLU 61 | 0.45 | No |
| ini. | 3 | 0 | -4498 | -177 | | | 970 | 365 | SLU 73 | 2.06 | Si |
| fin. | 3 | 0 | 13638 | 806 | | | 970 | 365 | SLU 73 | 0.45 | No |
| ini. | 3 | 0 | -3375 | -366 | | | 970 | 365 | SLU 74 | 1 | No |
| fin. | 3 | 0 | 9024 | 716 | | | 970 | 365 | SLU 74 | 0.51 | No |
| ini. | 3 | 0 | -4449 | -110 | | | 970 | 365 | SLU 39 | 3.31 | Si |
| fin. | 3 | 0 | 12473 | 715 | | | 970 | 365 | SLU 39 | 0.51 | No |
| ini. | 3 | 0 | -3884 | -184 | | | 970 | 365 | SLU 60 | 1.98 | Si |
| fin. | 3 | 0 | 14273 | 820 | | | 970 | 365 | SLU 60 | 0.45 | No |

### Verifiche a pressoflessione delle travi in muratura in combinazioni sismiche

| Sezione | γM | N | M | Mu | Comb. | c.s. | Verifica |
|---|---|---|---|---|---|---|---|
| ini. | 2 | -3378 | 116153 | 121694 | SLV 1 | 1.05 | Si |
| fin. | 2 | 577 | -120287 | 121694 | SLV 1 | 1.01 | Si |
| ini. | 2 | -3378 | 116153 | 121694 | SLV 2 | 1.05 | Si |
| fin. | 2 | 577 | -120287 | 121694 | SLV 2 | 1.01 | Si |
| ini. | 2 | 2100 | -63760 | 121694 | SLV 11 | 1.91 | Si |
| fin. | 2 | -477 | 77113 | 121694 | SLV 11 | 1.58 | Si |
| ini. | 2 | 2865 | -103392 | 121694 | SLV 14 | 1.18 | Si |
| fin. | 2 | -903 | 117352 | 121694 | SLV 14 | 1.04 | Si |
| ini. | 2 | -2723 | 98980 | 121694 | SLV 3 | 1.23 | Si |
| fin. | 2 | 534 | -100471 | 121694 | SLV 3 | 1.21 | Si |
| ini. | 2 | 3521 | -120565 | 121694 | SLV 15 | 1.01 | Si |
| fin. | 2 | -946 | 137168 | 121694 | SLV 15 | 0.89 | No |
| ini. | 2 | 2865 | -103392 | 121694 | SLV 13 | 1.18 | Si |
| fin. | 2 | -903 | 117352 | 121694 | SLV 13 | 1.04 | Si |
| ini. | 2 | 2100 | -63760 | 121694 | SLV 12 | 1.91 | Si |
| fin. | 2 | -477 | 77113 | 121694 | SLV 12 | 1.58 | Si |
| ini. | 2 | -2723 | 98980 | 121694 | SLV 4 | 1.23 | Si |
| fin. | 2 | 534 | -100471 | 121694 | SLV 4 | 1.21 | Si |
| ini. | 2 | 3521 | -120565 | 121694 | SLV 16 | 1.01 | Si |
| fin. | 2 | -946 | 137168 | 121694 | SLV 16 | 0.89 | No |

### Verifiche a taglio delle travi in muratura secondo §C8.7.1.3.1 in combinazioni sismiche

| Sezione | γM | N | M | V | Vt | Vp | Vt fess. diag. | Vt,lim | Comb. | c.s. | Verifica |
|---|---|---|---|---|---|---|---|---|---|---|---|
| ini. | 2 | 0 | 116153 | -4710 | | | 1456 | 548 | SLV 1 | 0.12 | No |
| fin. | 2 | 0 | -120287 | -4159 | | | 1456 | 548 | SLV 1 | 0.13 | No |
| ini. | 2 | 0 | -103392 | 4218 | | | 1456 | 548 | SLV 14 | 0.13 | No |
| fin. | 2 | 0 | 117352 | 4742 | | | 1456 | 548 | SLV 14 | 0.12 | No |
| ini. | 2 | 0 | -120565 | 4265 | | | 1456 | 548 | SLV 16 | 0.13 | No |
| fin. | 2 | 0 | 137168 | 5277 | | | 1456 | 548 | SLV 16 | 0.1 | No |
| ini. | 2 | 0 | 116153 | -4710 | | | 1456 | 548 | SLV 2 | 0.12 | No |
| fin. | 2 | 0 | -120287 | -4159 | | | 1456 | 548 | SLV 2 | 0.13 | No |
| ini. | 2 | 0 | 98980 | -4662 | | | 1456 | 548 | SLV 3 | 0.12 | No |
| fin. | 2 | 0 | -100471 | -3624 | | | 1456 | 548 | SLV 3 | 0.15 | No |
| ini. | 2 | 0 | -103392 | 4218 | | | 1456 | 548 | SLV 13 | 0.13 | No |
| fin. | 2 | 0 | 117352 | 4742 | | | 1456 | 548 | SLV 13 | 0.12 | No |
| ini. | 2 | 0 | 98980 | -4662 | | | 1456 | 548 | SLV 4 | 0.12 | No |
| fin. | 2 | 0 | -100471 | -3624 | | | 1456 | 548 | SLV 4 | 0.15 | No |
| ini. | 2 | 0 | -63760 | 1196 | | | 1456 | 548 | SLV 11 | 0.46 | No |
| fin. | 2 | 0 | 77113 | 2787 | | | 1456 | 548 | SLV 11 | 0.2 | No |
| ini. | 2 | 0 | -63760 | 1196 | | | 1456 | 548 | SLV 12 | 0.46 | No |
| fin. | 2 | 0 | 77113 | 2787 | | | 1456 | 548 | SLV 12 | 0.2 | No |
| ini. | 2 | 0 | -120565 | 4265 | | | 1456 | 548 | SLV 15 | 0.13 | No |
| fin. | 2 | 0 | 137168 | 5277 | | | 1456 | 548 | SLV 15 | 0.1 | No |

### Tabella dei coefficienti di sicurezza minimi

| Stato limite | Coeff.s. | Comb. | Verifica |
|---|---|---|---|
| PF_SLV | 0.887 | SLV 15 | No |
| V_SLV | 0.104 | SLV 15 | No |
| PF_SLU | 6.978 | SLU 82 | Si |
| V_SLU | 0.426 | SLU 81 | No |

## Trave di accoppiamento 142

Verifiche condotte secondo D.M. 17-01-18 (N.T.C.)

### Dati geometrici

| X ini. | Y ini. | Z ini.inf. | Z ini.sup. | H ini. | X fin. | Y fin. | Z fin.inf. | Z fin.sup | H fin. | Luce | Spessore | R. Trazione |
|---|---|---|---|---|---|---|---|---|---|---|---|---|
| -206.3 | 595.1 | 1166 | 1248 | 82 | -296.3 | 595.1 | 1166 | 1248 | 82 | 90 | 28 | 3500 |

### Caratteristiche del materiale

(Circolare 7 21-01-19 C8.5.I) Muratura in mattoni pieni e malta di calce LC2_Corti

| fb_ | fhk | fvk0 | fhmedio | τ0 | fv0 | μ | ϕ | fvk,lim | E | G | FC |
|---|---|---|---|---|---|---|---|---|---|---|---|
| 12 | | | 17.25 | 0.9 | 2 | 0.577 | 0.767 | 0.65 | 32000 | 12800 | 1.2 |

### Verifiche a pressoflessione delle travi in muratura in combinazioni non sismiche

| Sezione | γM | N | M | Mu | Comb. | c.s. | Verifica |
|---|---|---|---|---|---|---|---|
| ini. | 3 | -177 | -19650 | 89792 | SLU 84 | 4.57 | Si |
| fin. | 3 | 523 | 10449 | 89792 | SLU 84 | 8.59 | Si |

| Sezione | γM | N | M | Mu | Comb. | c.s. | Verifica |
|---|---|---|---|---|---|---|---|
| ini. | 3 | -136 | -18883 | 89792 | SLU 74 | 4.76 | Si |
| fin. | 3 | 527 | 10005 | 89792 | SLU 74 | 8.97 | Si |
| ini. | 3 | -354 | -19957 | 89792 | SLU 73 | 4.5 | Si |
| fin. | 3 | 330 | 10077 | 89792 | SLU 73 | 8.91 | Si |
| ini. | 3 | -403 | -21204 | 89792 | SLU 82 | 4.23 | Si |
| fin. | 3 | 314 | 10384 | 89792 | SLU 82 | 8.65 | Si |
| ini. | 3 | -391 | -20994 | 89792 | SLU 81 | 4.28 | Si |
| fin. | 3 | 315 | 10171 | 89792 | SLU 81 | 8.83 | Si |
| ini. | 3 | -165 | -19440 | 89792 | SLU 83 | 4.62 | Si |
| fin. | 3 | 523 | 10237 | 89792 | SLU 83 | 8.77 | Si |
| ini. | 3 | -395 | -19040 | 89792 | SLU 61 | 4.72 | Si |
| fin. | 3 | 246 | 9313 | 89792 | SLU 61 | 9.64 | Si |
| ini. | 3 | -361 | -18496 | 89792 | SLU 40 | 4.85 | Si |
| fin. | 3 | 263 | 8911 | 89792 | SLU 40 | 10.08 | Si |
| ini. | 3 | -383 | -18829 | 89792 | SLU 60 | 4.77 | Si |
| fin. | 3 | 246 | 9101 | 89792 | SLU 60 | 9.87 | Si |
| ini. | 3 | -148 | -19093 | 89792 | SLU 75 | 4.7 | Si |
| fin. | 3 | 527 | 10218 | 89792 | SLU 75 | 8.79 | Si |

## Verifiche a taglio delle travi in muratura secondo §C8.7.1.3.1 in combinazioni non sismiche

| Sezione | γM | N | M | V | Vt | Vp | Vt fess. diag. | Vt,lim | Comb. | c.s. | Verifica |
|---|---|---|---|---|---|---|---|---|---|---|---|
| ini. | 3 | 0 | -19440 | 1755 | | | 806 | 303 | SLU 83 | 0.17 | No |
| fin. | 3 | 0 | 10237 | -281 | | | 806 | 303 | SLU 83 | 1.08 | Si |
| ini. | 3 | 0 | -18883 | 1713 | | | 806 | 303 | SLU 74 | 0.18 | No |
| fin. | 3 | 0 | 10005 | -284 | | | 806 | 303 | SLU 74 | 1.07 | Si |
| ini. | 3 | 0 | -19957 | 1741 | | | 806 | 303 | SLU 73 | 0.17 | No |
| fin. | 3 | 0 | 10077 | -269 | | | 806 | 303 | SLU 73 | 1.13 | Si |
| ini. | 3 | 0 | -21204 | 1840 | | | 806 | 303 | SLU 82 | 0.16 | No |
| fin. | 3 | 0 | 10384 | -290 | | | 806 | 303 | SLU 82 | 1.04 | Si |
| ini. | 3 | 0 | -18403 | 1663 | | | 806 | 303 | SLU 76 | 0.18 | No |
| fin. | 3 | 0 | 10142 | -249 | | | 806 | 303 | SLU 76 | 1.22 | Si |
| ini. | 3 | 0 | -19040 | 1655 | | | 806 | 303 | SLU 61 | 0.18 | No |
| fin. | 3 | 0 | 9313 | -272 | | | 806 | 303 | SLU 61 | 1.12 | Si |
| ini. | 3 | 0 | -19093 | 1720 | | | 806 | 303 | SLU 75 | 0.18 | No |
| fin. | 3 | 0 | 10218 | -272 | | | 806 | 303 | SLU 75 | 1.11 | Si |
| ini. | 3 | 0 | -18829 | 1648 | | | 806 | 303 | SLU 60 | 0.18 | No |
| fin. | 3 | 0 | 9101 | -283 | | | 806 | 303 | SLU 60 | 1.07 | Si |
| ini. | 3 | 0 | -20994 | 1833 | | | 806 | 303 | SLU 81 | 0.17 | No |
| fin. | 3 | 0 | 10171 | -302 | | | 806 | 303 | SLU 81 | 1.01 | Si |
| ini. | 3 | 0 | -19650 | 1763 | | | 806 | 303 | SLU 84 | 0.17 | No |
| fin. | 3 | 0 | 10449 | -270 | | | 806 | 303 | SLU 84 | 1.12 | Si |

## Verifiche a pressoflessione delle travi in muratura in combinazioni sismiche

| Sezione | γM | N | M | Mu | Comb. | c.s. | Verifica |
|---|---|---|---|---|---|---|---|
| ini. | 2 | -1661 | -86363 | 107694 | SLV 13 | 1.25 | Si |
| fin. | 2 | 1793 | 98084 | 107694 | SLV 13 | 1.1 | Si |
| ini. | 2 | -1120 | -61201 | 107694 | SLV 11 | 1.76 | Si |
| fin. | 2 | 1505 | 72713 | 107694 | SLV 11 | 1.48 | Si |
| ini. | 2 | 1279 | 60279 | 107694 | SLV 4 | 1.79 | Si |
| fin. | 2 | -1278 | -84609 | 107694 | SLV 4 | 1.27 | Si |
| ini. | 2 | 1547 | 74680 | 107694 | SLV 1 | 1.44 | Si |
| fin. | 2 | -1711 | -105841 | 107694 | SLV 1 | 1.02 | Si |
| ini. | 2 | -1929 | -100764 | 107694 | SLV 16 | 1.07 | Si |
| fin. | 2 | 2226 | 119316 | 107694 | SLV 16 | 0.9 | No |
| ini. | 2 | -1120 | -61201 | 107694 | SLV 12 | 1.76 | Si |
| fin. | 2 | 1505 | 72713 | 107694 | SLV 12 | 1.48 | Si |
| ini. | 2 | -1929 | -100764 | 107694 | SLV 15 | 1.07 | Si |
| fin. | 2 | 2226 | 119316 | 107694 | SLV 15 | 0.9 | No |
| ini. | 2 | -1661 | -86363 | 107694 | SLV 14 | 1.25 | Si |
| fin. | 2 | 1793 | 98084 | 107694 | SLV 14 | 1.1 | Si |
| ini. | 2 | 1547 | 74680 | 107694 | SLV 2 | 1.44 | Si |
| fin. | 2 | -1711 | -105841 | 107694 | SLV 2 | 1.02 | Si |
| ini. | 2 | 1279 | 60279 | 107694 | SLV 3 | 1.79 | Si |
| fin. | 2 | -1278 | -84609 | 107694 | SLV 3 | 1.27 | Si |

## Verifiche a taglio delle travi in muratura secondo §C8.7.1.3.1 in combinazioni sismiche

| Sezione | γM | N | M | V | Vt | Vp | Vt fess. diag. | Vt,lim | Comb. | c.s. | Verifica |
|---|---|---|---|---|---|---|---|---|---|---|---|
| ini. | 2 | 0 | 60279 | -2055 | | | 1208 | 455 | SLV 4 | 0.22 | No |
| fin. | 2 | 0 | -84609 | -3498 | | | 1208 | 455 | SLV 4 | 0.13 | No |
| ini. | 2 | 0 | -61201 | 3438 | | | 1208 | 455 | SLV 11 | 0.13 | No |
| fin. | 2 | 0 | 72713 | 2032 | | | 1208 | 455 | SLV 11 | 0.22 | No |
| ini. | 2 | 0 | -100764 | 5112 | | | 1208 | 455 | SLV 15 | 0.09 | No |
| fin. | 2 | 0 | 119316 | 3779 | | | 1208 | 455 | SLV 15 | 0.12 | No |
| ini. | 2 | 0 | -100764 | 5112 | | | 1208 | 455 | SLV 16 | 0.09 | No |
| fin. | 2 | 0 | 119316 | 3779 | | | 1208 | 455 | SLV 16 | 0.12 | No |
| ini. | 2 | 0 | 74680 | -2770 | | | 1208 | 455 | SLV 2 | 0.16 | No |
| fin. | 2 | 0 | -105841 | -4183 | | | 1208 | 455 | SLV 2 | 0.11 | No |
| ini. | 2 | 0 | -86363 | 4397 | | | 1208 | 455 | SLV 14 | 0.1 | No |
| fin. | 2 | 0 | 98084 | 3094 | | | 1208 | 455 | SLV 14 | 0.15 | No |
| ini. | 2 | 0 | -86363 | 4397 | | | 1208 | 455 | SLV 13 | 0.1 | No |
| fin. | 2 | 0 | 98084 | 3094 | | | 1208 | 455 | SLV 13 | 0.15 | No |
| ini. | 2 | 0 | 74680 | -2770 | | | 1208 | 455 | SLV 1 | 0.16 | No |
| fin. | 2 | 0 | -105841 | -4183 | | | 1208 | 455 | SLV 1 | 0.11 | No |
| ini. | 2 | 0 | -61201 | 3438 | | | 1208 | 455 | SLV 12 | 0.13 | No |
| fin. | 2 | 0 | 72713 | 2032 | | | 1208 | 455 | SLV 12 | 0.22 | No |
| ini. | 2 | 0 | 60279 | -2055 | | | 1208 | 455 | SLV 3 | 0.22 | No |
| fin. | 2 | 0 | -84609 | -3498 | | | 1208 | 455 | SLV 3 | 0.13 | No |

### Tabella dei coefficienti di sicurezza minimi

| Stato limite | Coeff.s. | Comb. | Verifica |
|---|---|---|---|
| PF_SLV | 0.903 | SLV 15 | No |
| V_SLV | 0.089 | SLV 15 | No |
| PF_SLU | 4.235 | SLU 82 | Si |
| V_SLU | 0.165 | SLU 82 | No |

## Trave di accoppiamento 143

Verifiche condotte secondo D.M. 17-01-18 (N.T.C.)

### Dati geometrici

| X ini. | Y ini. | Z ini.inf. | Z ini.sup. | H ini. | X fin. | Y fin. | Z fin.inf. | Z fin.sup | H fin. | Luce | Spessore | R. Trazione |
|---|---|---|---|---|---|---|---|---|---|---|---|---|
| -2467.8 | 126.6 | 1458 | 1564 | 106 | -2467.8 | 206.6 | 1458 | 1564 | 106 | 80 | 28 | 3500 |

### Caratteristiche del materiale

(Circolare 7 21-01-19 C8.5.I) Muratura in mattoni pieni e malta di calce LC2_Corti

| fb_ | fhk | fvk0 | fhmedio | τ0 | fv0 | μ | ϕ | fvk,lim | E | G | FC |
|---|---|---|---|---|---|---|---|---|---|---|---|
| 12 | | | 17.25 | 0.9 | 2 | 0.577 | 0.767 | 0.65 | 32000 | 12800 | 1.2 |

### Verifiche a pressoflessione delle travi in muratura in combinazioni non sismiche

| Sezione | γM | N | M | Mu | Comb. | c.s. | Verifica |
|---|---|---|---|---|---|---|---|
| ini. | 3 | 2952 | 24464 | 131792 | SLU 41 | 5.39 | Si |
| fin. | 3 | 2961 | 4922 | 131792 | SLU 41 | 26.77 | Si |
| ini. | 3 | 3952 | 15871 | 131792 | SLU 72 | 8.3 | Si |
| fin. | 3 | 3966 | 23977 | 131792 | SLU 72 | 5.5 | Si |
| ini. | 3 | 2208 | 24099 | 131792 | SLU 39 | 5.47 | Si |
| fin. | 3 | 2212 | 287 | 131792 | SLU 39 | 458.59 | Si |
| ini. | 3 | 3488 | 10710 | 131792 | SLU 51 | 12.31 | Si |
| fin. | 3 | 3500 | 25839 | 131792 | SLU 51 | 5.1 | Si |
| ini. | 3 | 3849 | 24620 | 131792 | SLU 77 | 5.35 | Si |
| fin. | 3 | 3862 | 12942 | 131792 | SLU 77 | 10.18 | Si |
| ini. | 3 | 2871 | 8843 | 131792 | SLU 47 | 14.9 | Si |
| fin. | 3 | 2879 | 24477 | 131792 | SLU 47 | 5.38 | Si |
| ini. | 3 | 3247 | 25926 | 131792 | SLU 83 | 5.08 | Si |
| fin. | 3 | 3256 | 8104 | 131792 | SLU 83 | 16.26 | Si |
| ini. | 3 | 3104 | 24254 | 131792 | SLU 74 | 5.43 | Si |
| fin. | 3 | 3112 | 8307 | 131792 | SLU 74 | 15.87 | Si |
| ini. | 3 | 3415 | 11489 | 131792 | SLU 49 | 11.47 | Si |
| fin. | 3 | 3426 | 24143 | 131792 | SLU 49 | 5.46 | Si |
| ini. | 3 | 2502 | 25561 | 131792 | SLU 81 | 5.16 | Si |
| fin. | 3 | 2507 | 3469 | 131792 | SLU 81 | 37.99 | Si |

### Verifiche a taglio delle travi in muratura secondo §C8.7.1.3.1 in combinazioni non sismiche

| Sezione | γM | N | M | V | Vt | Vp | Vt fess. diag. | Vt,lim | Comb. | c.s. | Verifica |
|---|---|---|---|---|---|---|---|---|---|---|---|
| ini. | 3 | 0 | 18938 | -46 | | | 1143 | 430 | SLU 18 | 9.45 | Si |
| fin. | 3 | 0 | 2149 | -415 | | | 1143 | 430 | SLU 18 | 1.04 | Si |
| ini. | 3 | 0 | 21845 | -41 | | | 1143 | 430 | SLU 40 | 10.54 | Si |
| fin. | 3 | 0 | 5197 | -412 | | | 1143 | 430 | SLU 40 | 1.04 | Si |
| ini. | 3 | 0 | 25926 | -5 | | | 1143 | 430 | SLU 83 | 87.7 | Si |
| fin. | 3 | 0 | 8104 | -479 | | | 1143 | 430 | SLU 83 | 0.9 | No |
| ini. | 3 | 0 | 24254 | 18 | | | 1143 | 430 | SLU 74 | 23.48 | Si |
| fin. | 3 | 0 | 8307 | -457 | | | 1143 | 430 | SLU 74 | 0.94 | No |
| ini. | 3 | 0 | 24099 | -129 | | | 1143 | 430 | SLU 39 | 3.33 | Si |
| fin. | 3 | 0 | 287 | -502 | | | 1143 | 430 | SLU 39 | 0.86 | No |
| ini. | 3 | 0 | 23307 | 29 | | | 1143 | 430 | SLU 82 | 15.04 | Si |
| fin. | 3 | 0 | 8379 | -452 | | | 1143 | 430 | SLU 82 | 0.95 | No |
| ini. | 3 | 0 | 22792 | -51 | | | 1143 | 430 | SLU 32 | 8.42 | Si |
| fin. | 3 | 0 | 5125 | -416 | | | 1143 | 430 | SLU 32 | 1.03 | Si |
| ini. | 3 | 0 | 24464 | -74 | | | 1143 | 430 | SLU 41 | 5.79 | Si |
| fin. | 3 | 0 | 4922 | -438 | | | 1143 | 430 | SLU 41 | 0.98 | No |
| ini. | 3 | 0 | 20401 | 24 | | | 1143 | 430 | SLU 60 | 18 | Si |
| fin. | 3 | 0 | 5331 | -456 | | | 1143 | 430 | SLU 60 | 0.94 | No |
| ini. | 3 | 0 | 25561 | -60 | | | 1143 | 430 | SLU 81 | 7.2 | Si |
| fin. | 3 | 0 | 3469 | -542 | | | 1143 | 430 | SLU 81 | 0.79 | No |

### Verifiche a pressoflessione delle travi in muratura in combinazioni sismiche

| Sezione | γM | N | M | Mu | Comb. | c.s. | Verifica |
|---|---|---|---|---|---|---|---|
| ini. | 2 | 1005 | -47539 | 149694 | SLV 10 | 3.15 | Si |
| fin. | 2 | 1090 | 65169 | 149694 | SLV 10 | 2.3 | Si |
| ini. | 2 | 1814 | -33729 | 149694 | SLV 5 | 4.44 | Si |
| fin. | 2 | 1921 | 61282 | 149694 | SLV 5 | 2.44 | Si |
| ini. | 2 | 1814 | -33729 | 149694 | SLV 6 | 4.44 | Si |
| fin. | 2 | 1921 | 61282 | 149694 | SLV 6 | 2.44 | Si |
| ini. | 2 | 3123 | 53251 | 149694 | SLV 4 | 2.81 | Si |
| fin. | 2 | 3136 | -16762 | 149694 | SLV 4 | 8.93 | Si |
| ini. | 2 | 2377 | 75298 | 149694 | SLV 7 | 1.99 | Si |
| fin. | 2 | 2298 | -51810 | 149694 | SLV 7 | 2.89 | Si |
| ini. | 2 | 1568 | 61487 | 149694 | SLV 11 | 2.43 | Si |
| fin. | 2 | 1467 | -47923 | 149694 | SLV 11 | 3.12 | Si |
| ini. | 2 | 3123 | 53251 | 149694 | SLV 3 | 2.81 | Si |
| fin. | 2 | 3136 | -16762 | 149694 | SLV 3 | 8.93 | Si |
| ini. | 2 | 1005 | -47539 | 149694 | SLV 9 | 3.15 | Si |
| fin. | 2 | 1090 | 65169 | 149694 | SLV 9 | 2.3 | Si |
| ini. | 2 | 1568 | 61487 | 149694 | SLV 12 | 2.43 | Si |

| Sezione | γM | N | M | Mu | Comb. | c.s. | Verifica |
|---|---|---|---|---|---|---|---|
| fin. | 2 | 1467 | -47923 | 149694 | SLV 12 | 3.12 | Si |
| ini. | 2 | 2377 | 75298 | 149694 | SLV 8 | 1.99 | Si |
| fin. | 2 | 2298 | -51810 | 149694 | SLV 8 | 2.89 | Si |

### Verifiche a taglio delle travi in muratura secondo §C8.7.1.3.1 in combinazioni sismiche

| Sezione | γM | N | M | V | Vt | Vp | Vt fess. diag. | Vt,lim | Comb. | c.s. | Verifica |
|---|---|---|---|---|---|---|---|---|---|---|---|
| ini. | 2 | 0 | -47539 | 1613 | | | 1715 | 645 | SLV 9 | 0.4 | No |
| fin. | 2 | 0 | 65169 | 1215 | | | 1715 | 645 | SLV 9 | 0.53 | No |
| ini. | 2 | 0 | -47539 | 1613 | | | 1715 | 645 | SLV 10 | 0.4 | No |
| fin. | 2 | 0 | 65169 | 1215 | | | 1715 | 645 | SLV 10 | 0.53 | No |
| ini. | 2 | 0 | -33729 | 1352 | | | 1715 | 645 | SLV 5 | 0.48 | No |
| fin. | 2 | 0 | 61282 | 969 | | | 1715 | 645 | SLV 5 | 0.67 | No |
| ini. | 2 | 0 | 53251 | -781 | | | 1715 | 645 | SLV 3 | 0.83 | No |
| fin. | 2 | 0 | -16762 | -1121 | | | 1715 | 645 | SLV 3 | 0.58 | No |
| ini. | 2 | 0 | 61487 | -1201 | | | 1715 | 645 | SLV 12 | 0.54 | No |
| fin. | 2 | 0 | -47923 | -1558 | | | 1715 | 645 | SLV 12 | 0.41 | No |
| ini. | 2 | 0 | -33729 | 1352 | | | 1715 | 645 | SLV 6 | 0.48 | No |
| fin. | 2 | 0 | 61282 | 969 | | | 1715 | 645 | SLV 6 | 0.67 | No |
| ini. | 2 | 0 | 61487 | -1201 | | | 1715 | 645 | SLV 11 | 0.54 | No |
| fin. | 2 | 0 | -47923 | -1558 | | | 1715 | 645 | SLV 11 | 0.41 | No |
| ini. | 2 | 0 | 75298 | -1462 | | | 1715 | 645 | SLV 7 | 0.44 | No |
| fin. | 2 | 0 | -51810 | -1805 | | | 1715 | 645 | SLV 7 | 0.36 | No |
| ini. | 2 | 0 | 75298 | -1462 | | | 1715 | 645 | SLV 8 | 0.44 | No |
| fin. | 2 | 0 | -51810 | -1805 | | | 1715 | 645 | SLV 8 | 0.36 | No |
| ini. | 2 | 0 | 53251 | -781 | | | 1715 | 645 | SLV 4 | 0.83 | No |
| fin. | 2 | 0 | -16762 | -1121 | | | 1715 | 645 | SLV 4 | 0.58 | No |

### Tabella dei coefficienti di sicurezza minimi

| Stato limite | Coeff.s. | Comb. | Verifica |
|---|---|---|---|
| PF_SLV | 1.988 | SLV 7 | Si |
| V_SLV | 0.358 | SLV 7 | No |
| PF_SLU | 5.083 | SLU 83 | Si |
| V_SLU | 0.793 | SLU 81 | No |

## Trave di accoppiamento 144

Verifiche condotte secondo D.M. 17-01-18 (N.T.C.)

### Dati geometrici

| X ini. | Y ini. | Z ini.inf. | Z ini.sup. | H ini. | X fin. | Y fin. | Z fin.inf. | Z fin.sup | H fin. | Luce | Spessore | R. Trazione |
|---|---|---|---|---|---|---|---|---|---|---|---|---|
| -2181.3 | 595.1 | 1248 | 1338 | 90 | -2271.3 | 595.1 | 1248 | 1338 | 90 | 90 | 28 | 3500 |

### Caratteristiche del materiale

(Circolare 7 21-01-19 C8.5.I) Muratura in mattoni pieni e malta di calce LC2_Corti

| fb_ | fhk | fvk0 | fhmedio | τ0 | fv0 | μ | ϕ | fvk,lim | E | G | FC |
|---|---|---|---|---|---|---|---|---|---|---|---|
| 12 | | | 17.25 | 0.9 | 2 | 0.577 | 0.767 | 0.65 | 32000 | 12800 | 1.2 |

### Verifiche a pressoflessione delle travi in muratura in combinazioni non sismiche

| Sezione | γM | N | M | Mu | Comb. | c.s. | Verifica |
|---|---|---|---|---|---|---|---|
| ini. | 3 | 862 | 6933 | 103792 | SLU 30 | 14.97 | Si |
| fin. | 3 | 1376 | -29029 | 103792 | SLU 30 | 3.58 | Si |
| ini. | 3 | 765 | 10288 | 103792 | SLU 77 | 10.09 | Si |
| fin. | 3 | 1356 | -29006 | 103792 | SLU 77 | 3.58 | Si |
| ini. | 3 | 736 | 11000 | 103792 | SLU 78 | 9.44 | Si |
| fin. | 3 | 1350 | -29203 | 103792 | SLU 78 | 3.55 | Si |
| ini. | 3 | 834 | 8371 | 103792 | SLU 37 | 12.4 | Si |
| fin. | 3 | 1377 | -29789 | 103792 | SLU 37 | 3.48 | Si |
| ini. | 3 | 892 | 6221 | 103792 | SLU 29 | 16.68 | Si |
| fin. | 3 | 1382 | -28831 | 103792 | SLU 29 | 3.6 | Si |
| ini. | 3 | 806 | 10062 | 103792 | SLU 79 | 10.32 | Si |
| fin. | 3 | 1405 | -30492 | 103792 | SLU 79 | 3.4 | Si |
| ini. | 3 | 777 | 10774 | 103792 | SLU 80 | 9.63 | Si |
| fin. | 3 | 1398 | -30690 | 103792 | SLU 80 | 3.38 | Si |
| ini. | 3 | 805 | 9083 | 103792 | SLU 38 | 11.43 | Si |
| fin. | 3 | 1371 | -29986 | 103792 | SLU 38 | 3.46 | Si |
| ini. | 3 | 834 | 8624 | 103792 | SLU 72 | 12.04 | Si |
| fin. | 3 | 1403 | -29732 | 103792 | SLU 72 | 3.49 | Si |
| ini. | 3 | 864 | 7912 | 103792 | SLU 71 | 13.12 | Si |
| fin. | 3 | 1410 | -29535 | 103792 | SLU 71 | 3.51 | Si |

### Verifiche a taglio delle travi in muratura secondo §C8.7.1.3.1 in combinazioni non sismiche

| Sezione | γM | N | M | V | Vt | Vp | Vt fess. diag. | Vt,lim | Comb. | c.s. | Verifica |
|---|---|---|---|---|---|---|---|---|---|---|---|
| ini. | 3 | 0 | 9309 | -456 | | | 970 | 365 | SLU 36 | 0.8 | No |
| fin. | 3 | 0 | -28499 | -924 | | | 970 | 365 | SLU 36 | 0.4 | No |
| ini. | 3 | 0 | 8597 | -432 | | | 970 | 365 | SLU 35 | 0.85 | No |
| fin. | 3 | 0 | -28302 | -902 | | | 970 | 365 | SLU 35 | 0.4 | No |
| ini. | 3 | 0 | 10288 | -573 | | | 970 | 365 | SLU 77 | 0.64 | No |
| fin. | 3 | 0 | -29006 | -899 | | | 970 | 365 | SLU 77 | 0.41 | No |
| ini. | 3 | 0 | 8371 | -367 | | | 970 | 365 | SLU 37 | 1 | No |
| fin. | 3 | 0 | -29789 | -979 | | | 970 | 365 | SLU 37 | 0.37 | No |
| ini. | 3 | 0 | 10062 | -508 | | | 970 | 365 | SLU 79 | 0.72 | No |
| fin. | 3 | 0 | -30492 | -976 | | | 970 | 365 | SLU 79 | 0.37 | No |
| ini. | 3 | 0 | 8624 | -549 | | | 970 | 365 | SLU 72 | 0.67 | No |
| fin. | 3 | 0 | -29732 | -861 | | | 970 | 365 | SLU 72 | 0.42 | No |

| Sezione | γM | N | M | V | Vt | Vp | Vt fess. diag. | Vt,lim | Comb. | c.s. | Verifica |
|---|---|---|---|---|---|---|---|---|---|---|---|
| ini. | 3 | 0 | 10774 | -532 | | | 970 | 365 | SLU 80 | 0.69 | No |
| fin. | 3 | 0 | -30690 | -999 | | | 970 | 365 | SLU 80 | 0.37 | No |
| ini. | 3 | 0 | 11000 | -597 | | | 970 | 365 | SLU 78 | 0.61 | No |
| fin. | 3 | 0 | -29203 | -921 | | | 970 | 365 | SLU 78 | 0.4 | No |
| ini. | 3 | 0 | 6933 | -408 | | | 970 | 365 | SLU 30 | 0.9 | No |
| fin. | 3 | 0 | -29029 | -864 | | | 970 | 365 | SLU 30 | 0.42 | No |
| ini. | 3 | 0 | 9083 | -391 | | | 970 | 365 | SLU 38 | 0.93 | No |
| fin. | 3 | 0 | -29986 | -1002 | | | 970 | 365 | SLU 38 | 0.36 | No |

### Verifiche a pressoflessione delle travi in muratura in combinazioni sismiche

| Sezione | γM | N | M | Mu | Comb. | c.s. | Verifica |
|---|---|---|---|---|---|---|---|
| ini. | 2 | -2331 | 58362 | 121694 | SLV 4 | 2.09 | Si |
| fin. | 2 | 2005 | -57482 | 121694 | SLV 4 | 2.12 | Si |
| ini. | 2 | 1739 | -30002 | 121694 | SLV 10 | 4.06 | Si |
| fin. | 2 | -622 | 23772 | 121694 | SLV 10 | 5.12 | Si |
| ini. | 2 | 2426 | -41789 | 121694 | SLV 14 | 2.91 | Si |
| fin. | 2 | -1276 | 39372 | 121694 | SLV 14 | 3.09 | Si |
| ini. | 2 | 1739 | -30002 | 121694 | SLV 9 | 4.06 | Si |
| fin. | 2 | -622 | 23772 | 121694 | SLV 9 | 5.12 | Si |
| ini. | 2 | -1644 | 46575 | 121694 | SLV 7 | 2.61 | Si |
| fin. | 2 | 1350 | -41881 | 121694 | SLV 7 | 2.91 | Si |
| ini. | 2 | -1687 | 43021 | 121694 | SLV 2 | 2.83 | Si |
| fin. | 2 | 1679 | -45417 | 121694 | SLV 2 | 2.68 | Si |
| ini. | 2 | -1644 | 46575 | 121694 | SLV 8 | 2.61 | Si |
| fin. | 2 | 1350 | -41881 | 121694 | SLV 8 | 2.91 | Si |
| ini. | 2 | 2426 | -41789 | 121694 | SLV 13 | 2.91 | Si |
| fin. | 2 | -1276 | 39372 | 121694 | SLV 13 | 3.09 | Si |
| ini. | 2 | -2331 | 58362 | 121694 | SLV 3 | 2.09 | Si |
| fin. | 2 | 2005 | -57482 | 121694 | SLV 3 | 2.12 | Si |
| ini. | 2 | -1687 | 43021 | 121694 | SLV 1 | 2.83 | Si |
| fin. | 2 | 1679 | -45417 | 121694 | SLV 1 | 2.68 | Si |

### Verifiche a taglio delle travi in muratura secondo §C8.7.1.3.1 in combinazioni sismiche

| Sezione | γM | N | M | V | Vt | Vp | Vt fess. diag. | Vt,lim | Comb. | c.s. | Verifica |
|---|---|---|---|---|---|---|---|---|---|---|---|
| ini. | 2 | 0 | -26449 | 1597 | | | 1456 | 548 | SLV 16 | 0.34 | No |
| fin. | 2 | 0 | 27307 | 2132 | | | 1456 | 548 | SLV 16 | 0.26 | No |
| ini. | 2 | 0 | 43021 | -2513 | | | 1456 | 548 | SLV 1 | 0.22 | No |
| fin. | 2 | 0 | -45417 | -2763 | | | 1456 | 548 | SLV 1 | 0.2 | No |
| ini. | 2 | 0 | 46575 | -2586 | | | 1456 | 548 | SLV 8 | 0.21 | No |
| fin. | 2 | 0 | -41881 | -2365 | | | 1456 | 548 | SLV 8 | 0.23 | No |
| ini. | 2 | 0 | 46575 | -2586 | | | 1456 | 548 | SLV 7 | 0.21 | No |
| fin. | 2 | 0 | -41881 | -2365 | | | 1456 | 548 | SLV 7 | 0.23 | No |
| ini. | 2 | 0 | 58362 | -3345 | | | 1456 | 548 | SLV 3 | 0.16 | No |
| fin. | 2 | 0 | -57482 | -3488 | | | 1456 | 548 | SLV 3 | 0.16 | No |
| ini. | 2 | 0 | -26449 | 1597 | | | 1456 | 548 | SLV 15 | 0.34 | No |
| fin. | 2 | 0 | 27307 | 2132 | | | 1456 | 548 | SLV 15 | 0.26 | No |
| ini. | 2 | 0 | 43021 | -2513 | | | 1456 | 548 | SLV 2 | 0.22 | No |
| fin. | 2 | 0 | -45417 | -2763 | | | 1456 | 548 | SLV 2 | 0.2 | No |
| ini. | 2 | 0 | -41789 | 2429 | | | 1456 | 548 | SLV 14 | 0.23 | No |
| fin. | 2 | 0 | 39372 | 2857 | | | 1456 | 548 | SLV 14 | 0.19 | No |
| ini. | 2 | 0 | 58362 | -3345 | | | 1456 | 548 | SLV 4 | 0.16 | No |
| fin. | 2 | 0 | -57482 | -3488 | | | 1456 | 548 | SLV 4 | 0.16 | No |
| ini. | 2 | 0 | -41789 | 2429 | | | 1456 | 548 | SLV 13 | 0.23 | No |
| fin. | 2 | 0 | 39372 | 2857 | | | 1456 | 548 | SLV 13 | 0.19 | No |

### Tabella dei coefficienti di sicurezza minimi

| Stato limite | Coeff.s. | Comb. | Verifica |
|---|---|---|---|
| PF_SLV | 2.085 | SLV 3 | Si |
| V_SLV | 0.157 | SLV 3 | No |
| PF_SLU | 3.382 | SLU 80 | Si |
| V_SLU | 0.365 | SLU 38 | No |

## Trave di accoppiamento 145

Verifiche condotte secondo D.M. 17-01-18 (N.T.C.)

### Dati geometrici

| X ini. | Y ini. | Z ini.inf. | Z ini.sup. | H ini. | X fin. | Y fin. | Z fin.inf. | Z fin.sup | H fin. | Luce | Spessore | R. Trazione |
|---|---|---|---|---|---|---|---|---|---|---|---|---|
| -2181.3 | 595.1 | 1518 | 1564 | 46 | -2271.3 | 595.1 | 1518 | 1564 | 46 | 90 | 28 | 3500 |

### Caratteristiche del materiale

(Circolare 7 21-01-19 C8.5.I) Muratura in mattoni pieni e malta di calce LC2_Corti

| fb_ | fhk | fvk0 | fhmedio | τ0 | fv0 | μ | ϕ | fvk,lim | E | G | FC |
|---|---|---|---|---|---|---|---|---|---|---|---|
| 12 | | | 17.25 | 0.9 | 2 | 0.577 | 0.767 | 0.65 | 32000 | 12800 | 1.2 |

### Verifiche a pressoflessione delle travi in muratura in combinazioni non sismiche

| Sezione | γM | N | M | Mu | Comb. | c.s. | Verifica |
|---|---|---|---|---|---|---|---|
| ini. | 3 | 96 | 27021 | 30060 | SLU 79 | 1.11 | Si |
| fin. | 3 | 82 | -26979 | 30060 | SLU 79 | 1.11 | Si |
| ini. | 3 | 26 | 27190 | 30060 | SLU 80 | 1.11 | Si |
| fin. | 3 | 13 | -27432 | 30060 | SLU 80 | 1.1 | Si |
| ini. | 3 | -48 | 25571 | 30060 | SLU 78 | 1.18 | Si |
| fin. | 3 | -61 | -26996 | 30060 | SLU 78 | 1.11 | Si |
| ini. | 3 | 76 | 26120 | 30060 | SLU 72 | 1.15 | Si |

| Sezione | γM | N | M | Mu | Comb. | c.s. | Verifica |
|---|---|---|---|---|---|---|---|
| fin. | 3 | 62 | -26070 | 30060 | SLU 72 | 1.15 | Si |
| ini. | 3 | 105 | 26086 | 30060 | SLU 37 | 1.15 | Si |
| fin. | 3 | 92 | -25554 | 30060 | SLU 37 | 1.18 | Si |
| ini. | 3 | 146 | 25952 | 30060 | SLU 71 | 1.16 | Si |
| fin. | 3 | 131 | -25617 | 30060 | SLU 71 | 1.17 | Si |
| ini. | 3 | 35 | 26255 | 30060 | SLU 38 | 1.14 | Si |
| fin. | 3 | 23 | -26007 | 30060 | SLU 38 | 1.16 | Si |
| ini. | 3 | 1 | 24502 | 30060 | SLU 70 | 1.23 | Si |
| fin. | 3 | -12 | -25633 | 30060 | SLU 70 | 1.17 | Si |
| ini. | 3 | -40 | 24636 | 30060 | SLU 36 | 1.22 | Si |
| fin. | 3 | -51 | -25570 | 30060 | SLU 36 | 1.18 | Si |
| ini. | 3 | 22 | 25403 | 30060 | SLU 77 | 1.18 | Si |
| fin. | 3 | 8 | -26543 | 30060 | SLU 77 | 1.13 | Si |

## Verifiche a taglio delle travi in muratura secondo §C8.7.1.3.1 in combinazioni non sismiche

| Sezione | γM | N | M | V | Vt | Vp | Vt fess. diag. | Vt,lim | Comb. | c.s. | Verifica |
|---|---|---|---|---|---|---|---|---|---|---|---|
| ini. | 3 | 0 | 25952 | -106 | | | 331 | 124 | SLU 71 | 1.17 | Si |
| fin. | 3 | 0 | -25617 | -896 | | | 331 | 124 | SLU 71 | 0.14 | No |
| ini. | 3 | 0 | 27021 | -133 | | | 331 | 124 | SLU 79 | 0.94 | No |
| fin. | 3 | 0 | -26979 | -923 | | | 331 | 124 | SLU 79 | 0.13 | No |
| ini. | 3 | 0 | 24502 | 20 | | | 331 | 124 | SLU 70 | 6.15 | Si |
| fin. | 3 | 0 | -25633 | -943 | | | 331 | 124 | SLU 70 | 0.13 | No |
| ini. | 3 | 0 | 24636 | -45 | | | 331 | 124 | SLU 36 | 2.78 | Si |
| fin. | 3 | 0 | -25570 | -892 | | | 331 | 124 | SLU 36 | 0.14 | No |
| ini. | 3 | 0 | 24333 | 26 | | | 331 | 124 | SLU 69 | 4.78 | Si |
| fin. | 3 | 0 | -25180 | -936 | | | 331 | 124 | SLU 69 | 0.13 | No |
| ini. | 3 | 0 | 27190 | -139 | | | 331 | 124 | SLU 80 | 0.9 | No |
| fin. | 3 | 0 | -27432 | -930 | | | 331 | 124 | SLU 80 | 0.13 | No |
| ini. | 3 | 0 | 26120 | -112 | | | 331 | 124 | SLU 72 | 1.11 | Si |
| fin. | 3 | 0 | -26070 | -903 | | | 331 | 124 | SLU 72 | 0.14 | No |
| ini. | 3 | 0 | 24467 | -39 | | | 331 | 124 | SLU 35 | 3.2 | Si |
| fin. | 3 | 0 | -25118 | -885 | | | 331 | 124 | SLU 35 | 0.14 | No |
| ini. | 3 | 0 | 25571 | -6 | | | 331 | 124 | SLU 78 | 19.2 | Si |
| fin. | 3 | 0 | -26996 | -970 | | | 331 | 124 | SLU 78 | 0.13 | No |
| ini. | 3 | 0 | 25403 | -1 | | | 331 | 124 | SLU 77 | 181.2 | Si |
| fin. | 3 | 0 | -26543 | -963 | | | 331 | 124 | SLU 77 | 0.13 | No |

## Verifiche a pressoflessione delle travi in muratura in combinazioni sismiche

| Sezione | γM | N | M | Mu | Comb. | c.s. | Verifica |
|---|---|---|---|---|---|---|---|
| ini. | 2 | 386 | 40318 | 44694 | SLV 12 | 1.11 | Si |
| fin. | 2 | 209 | -38999 | 44694 | SLV 12 | 1.15 | Si |
| ini. | 2 | -158 | 40677 | 44694 | SLV 7 | 1.1 | Si |
| fin. | 2 | -416 | -42908 | 44694 | SLV 7 | 1.04 | Si |
| ini. | 2 | -158 | 40677 | 44694 | SLV 8 | 1.1 | Si |
| fin. | 2 | -416 | -42908 | 44694 | SLV 8 | 1.04 | Si |
| ini. | 2 | 62 | -22906 | 44694 | SLV 9 | 1.95 | Si |
| fin. | 2 | 311 | 21922 | 44694 | SLV 9 | 2.04 | Si |
| ini. | 2 | -906 | 18967 | 44694 | SLV 4 | 2.36 | Si |
| fin. | 2 | -1109 | -26146 | 44694 | SLV 4 | 1.71 | Si |
| ini. | 2 | -906 | 18967 | 44694 | SLV 3 | 2.36 | Si |
| fin. | 2 | -1109 | -26146 | 44694 | SLV 3 | 1.71 | Si |
| ini. | 2 | -83 | 21995 | 44694 | SLD 7 | 2.03 | Si |
| fin. | 2 | -191 | -23846 | 44694 | SLD 7 | 1.87 | Si |
| ini. | 2 | 62 | -22906 | 44694 | SLV 10 | 1.95 | Si |
| fin. | 2 | 311 | 21922 | 44694 | SLV 10 | 2.04 | Si |
| ini. | 2 | 386 | 40318 | 44694 | SLV 11 | 1.11 | Si |
| fin. | 2 | 209 | -38999 | 44694 | SLV 11 | 1.15 | Si |
| ini. | 2 | -83 | 21995 | 44694 | SLD 8 | 2.03 | Si |
| fin. | 2 | -191 | -23846 | 44694 | SLD 8 | 1.87 | Si |

## Verifiche a taglio delle travi in muratura secondo §C8.7.1.3.1 in combinazioni sismiche

| Sezione | γM | N | M | V | Vt | Vp | Vt fess. diag. | Vt,lim | Comb. | c.s. | Verifica |
|---|---|---|---|---|---|---|---|---|---|---|---|
| ini. | 2 | 0 | 40677 | -462 | | | 496 | 187 | SLV 8 | 0.4 | No |
| fin. | 2 | 0 | -42908 | -692 | | | 496 | 187 | SLV 8 | 0.27 | No |
| ini. | 2 | 0 | 18967 | -641 | | | 496 | 187 | SLV 3 | 0.29 | No |
| fin. | 2 | 0 | -26146 | -793 | | | 496 | 187 | SLV 3 | 0.24 | No |
| ini. | 2 | 0 | 0 | -435 | | | 496 | 187 | SLV 1 | 0.43 | No |
| fin. | 2 | 0 | -7870 | -687 | | | 496 | 187 | SLV 1 | 0.27 | No |
| ini. | 2 | 0 | 0 | -435 | | | 496 | 187 | SLV 2 | 0.43 | No |
| fin. | 2 | 0 | -7870 | -687 | | | 496 | 187 | SLV 2 | 0.27 | No |
| ini. | 2 | 0 | 18967 | -641 | | | 496 | 187 | SLV 4 | 0.29 | No |
| fin. | 2 | 0 | -26146 | -793 | | | 496 | 187 | SLV 4 | 0.24 | No |
| ini. | 2 | 0 | 40677 | -462 | | | 496 | 187 | SLV 7 | 0.4 | No |
| fin. | 2 | 0 | -42908 | -692 | | | 496 | 187 | SLV 7 | 0.27 | No |
| ini. | 2 | 0 | -22906 | 583 | | | 496 | 187 | SLV 10 | 0.32 | No |
| fin. | 2 | 0 | 21922 | -149 | | | 496 | 187 | SLV 10 | 1.25 | Si |
| ini. | 2 | 0 | -1196 | 761 | | | 496 | 187 | SLV 13 | 0.25 | No |
| fin. | 2 | 0 | 5161 | -48 | | | 496 | 187 | SLV 13 | 3.85 | Si |
| ini. | 2 | 0 | -1196 | 761 | | | 496 | 187 | SLV 14 | 0.25 | No |
| fin. | 2 | 0 | 5161 | -48 | | | 496 | 187 | SLV 14 | 3.85 | Si |
| ini. | 2 | 0 | -22906 | 583 | | | 496 | 187 | SLV 9 | 0.32 | No |
| fin. | 2 | 0 | 21922 | -149 | | | 496 | 187 | SLV 9 | 1.25 | Si |

## Tabella dei coefficienti di sicurezza minimi

| Stato limite | Coeff.s. | Comb. | Verifica |
|---|---|---|---|
| PF_SLV | 1.042 | SLV 7 | Si |
| V_SLV | 0.235 | SLV 3 | No |

| Stato limite | Coeff.s. | Comb. | Verifica |
|---|---|---|---|
| PF_SLU | 1.096 | SLU 80 | Si |
| V_SLU | 0.128 | SLU 78 | No |

## Trave di accoppiamento 146

Verifiche condotte secondo D.M. 17-01-18 (N.T.C.)

### Dati geometrici

| X ini. | Y ini. | Z ini.inf. | Z ini.sup. | H ini. | X fin. | Y fin. | Z fin.inf. | Z fin.sup | H fin. | Luce | Spessore | R. Trazione |
|---|---|---|---|---|---|---|---|---|---|---|---|---|
| -2159.3 | -335.9 | 1248 | 1338 | 90 | -2249.3 | -335.9 | 1248 | 1338 | 90 | 90 | 28 | 3500 |

### Caratteristiche del materiale

(Circolare 7 21-01-19 C8.5.I) Muratura in mattoni pieni e malta di calce LC2_Corti

| fb_ | fhk | fvk0 | fhmedio | τ0 | fv0 | μ | ϕ | fvk,lim | E | G | FC |
|---|---|---|---|---|---|---|---|---|---|---|---|
| 12 | | | 17.25 | 0.9 | 2 | 0.577 | 0.767 | 0.65 | 32000 | 12800 | 1.2 |

### Verifiche a pressoflessione delle travi in muratura in combinazioni non sismiche

| Sezione | γM | N | M | Mu | Comb. | c.s. | Verifica |
|---|---|---|---|---|---|---|---|
| ini. | 3 | 38 | 10144 | 103792 | SLU 37 | 10.23 | Si |
| fin. | 3 | 670 | -19741 | 103792 | SLU 37 | 5.26 | Si |
| ini. | 3 | -37 | 14262 | 103792 | SLU 38 | 7.28 | Si |
| fin. | 3 | 723 | -22242 | 103792 | SLU 38 | 4.67 | Si |
| ini. | 3 | 12 | 10878 | 103792 | SLU 35 | 9.54 | Si |
| fin. | 3 | 648 | -18697 | 103792 | SLU 35 | 5.55 | Si |
| ini. | 3 | -76 | 13023 | 103792 | SLU 78 | 7.97 | Si |
| fin. | 3 | 659 | -19858 | 103792 | SLU 78 | 5.23 | Si |
| ini. | 3 | 44 | 10845 | 103792 | SLU 28 | 9.57 | Si |
| fin. | 3 | 688 | -19374 | 103792 | SLU 28 | 5.36 | Si |
| ini. | 3 | -50 | 12289 | 103792 | SLU 80 | 8.45 | Si |
| fin. | 3 | 681 | -20902 | 103792 | SLU 80 | 4.97 | Si |
| ini. | 3 | 25 | 8172 | 103792 | SLU 79 | 12.7 | Si |
| fin. | 3 | 628 | -18401 | 103792 | SLU 79 | 5.64 | Si |
| ini. | 3 | -63 | 14996 | 103792 | SLU 36 | 6.92 | Si |
| fin. | 3 | 701 | -21198 | 103792 | SLU 36 | 4.9 | Si |
| ini. | 3 | 70 | 10111 | 103792 | SLU 30 | 10.26 | Si |
| fin. | 3 | 711 | -20418 | 103792 | SLU 30 | 5.08 | Si |
| ini. | 3 | 57 | 8138 | 103792 | SLU 72 | 12.75 | Si |
| fin. | 3 | 669 | -19078 | 103792 | SLU 72 | 5.44 | Si |

### Verifiche a taglio delle travi in muratura secondo §C8.7.1.3.1 in combinazioni non sismiche

| Sezione | γM | N | M | V | Vt | Vp | Vt fess. diag. | Vt,lim | Comb. | c.s. | Verifica |
|---|---|---|---|---|---|---|---|---|---|---|---|
| ini. | 3 | 0 | 16244 | -628 | | | 970 | 365 | SLU 34 | 0.58 | No |
| fin. | 3 | 0 | -17598 | -779 | | | 970 | 365 | SLU 34 | 0.47 | No |
| ini. | 3 | 0 | 14271 | -583 | | | 970 | 365 | SLU 76 | 0.63 | No |
| fin. | 3 | 0 | -16259 | -669 | | | 970 | 365 | SLU 76 | 0.55 | No |
| ini. | 3 | 0 | 14996 | -687 | | | 970 | 365 | SLU 36 | 0.53 | No |
| fin. | 3 | 0 | -21198 | -791 | | | 970 | 365 | SLU 36 | 0.46 | No |
| ini. | 3 | 0 | 12289 | -615 | | | 970 | 365 | SLU 80 | 0.59 | No |
| fin. | 3 | 0 | -20902 | -730 | | | 970 | 365 | SLU 80 | 0.5 | No |
| ini. | 3 | 0 | 13023 | -642 | | | 970 | 365 | SLU 78 | 0.57 | No |
| fin. | 3 | 0 | -19858 | -681 | | | 970 | 365 | SLU 78 | 0.54 | No |
| ini. | 3 | 0 | 14262 | -660 | | | 970 | 365 | SLU 38 | 0.55 | No |
| fin. | 3 | 0 | -22242 | -840 | | | 970 | 365 | SLU 38 | 0.43 | No |
| ini. | 3 | 0 | 10144 | -531 | | | 970 | 365 | SLU 37 | 0.69 | No |
| fin. | 3 | 0 | -19741 | -690 | | | 970 | 365 | SLU 37 | 0.53 | No |
| ini. | 3 | 0 | 15277 | -578 | | | 970 | 365 | SLU 42 | 0.63 | No |
| fin. | 3 | 0 | -16713 | -764 | | | 970 | 365 | SLU 42 | 0.48 | No |
| ini. | 3 | 0 | 10111 | -575 | | | 970 | 365 | SLU 30 | 0.63 | No |
| fin. | 3 | 0 | -20418 | -643 | | | 970 | 365 | SLU 30 | 0.57 | No |
| ini. | 3 | 0 | 13305 | -533 | | | 970 | 365 | SLU 84 | 0.69 | No |
| fin. | 3 | 0 | -15373 | -653 | | | 970 | 365 | SLU 84 | 0.56 | No |

### Verifiche a pressoflessione delle travi in muratura in combinazioni sismiche

| Sezione | γM | N | M | Mu | Comb. | c.s. | Verifica |
|---|---|---|---|---|---|---|---|
| ini. | 2 | -1603 | 52647 | 121694 | SLV 3 | 2.31 | Si |
| fin. | 2 | 806 | -29169 | 121694 | SLV 3 | 4.17 | Si |
| ini. | 2 | 1462 | -65619 | 121694 | SLV 15 | 1.85 | Si |
| fin. | 2 | -1188 | 39650 | 121694 | SLV 15 | 3.07 | Si |
| ini. | 2 | 1304 | -48704 | 121694 | SLV 14 | 2.5 | Si |
| fin. | 2 | -710 | 24043 | 121694 | SLV 14 | 5.06 | Si |
| ini. | 2 | -873 | 47902 | 121694 | SLV 6 | 2.54 | Si |
| fin. | 2 | 1144 | -38897 | 121694 | SLV 6 | 3.13 | Si |
| ini. | 2 | 1462 | -65619 | 121694 | SLV 16 | 1.85 | Si |
| fin. | 2 | -1188 | 39650 | 121694 | SLV 16 | 3.07 | Si |
| ini. | 2 | -1761 | 69562 | 121694 | SLV 1 | 1.75 | Si |
| fin. | 2 | 1284 | -44776 | 121694 | SLV 1 | 2.72 | Si |
| ini. | 2 | -873 | 47902 | 121694 | SLV 5 | 2.54 | Si |
| fin. | 2 | 1144 | -38897 | 121694 | SLV 5 | 3.13 | Si |
| ini. | 2 | 1304 | -48704 | 121694 | SLV 13 | 2.5 | Si |
| fin. | 2 | -710 | 24043 | 121694 | SLV 13 | 5.06 | Si |
| ini. | 2 | -1761 | 69562 | 121694 | SLV 2 | 1.75 | Si |
| fin. | 2 | 1284 | -44776 | 121694 | SLV 2 | 2.72 | Si |
| ini. | 2 | -1603 | 52647 | 121694 | SLV 4 | 2.31 | Si |
| fin. | 2 | 806 | -29169 | 121694 | SLV 4 | 4.17 | Si |

### Verifiche a taglio delle travi in muratura secondo §C8.7.1.3.1 in combinazioni sismiche

| Sezione | γM | N | M | V | Vt | Vp | Vt fess. diag. | Vt,lim | Comb. | c.s. | Verifica |
|---|---|---|---|---|---|---|---|---|---|---|---|
| ini. | 2 | 0 | -48704 | 1778 | | | 1456 | 548 | SLV 14 | 0.31 | No |
| fin. | 2 | 0 | 24043 | 2062 | | | 1456 | 548 | SLV 14 | 0.27 | No |
| ini. | 2 | 0 | 69562 | -2674 | | | 1456 | 548 | SLV 1 | 0.2 | No |
| fin. | 2 | 0 | -44776 | -2756 | | | 1456 | 548 | SLV 1 | 0.2 | No |
| ini. | 2 | 0 | 47902 | -1899 | | | 1456 | 548 | SLV 5 | 0.29 | No |
| fin. | 2 | 0 | -38897 | -1767 | | | 1456 | 548 | SLV 5 | 0.31 | No |
| ini. | 2 | 0 | -65619 | 2449 | | | 1456 | 548 | SLV 15 | 0.22 | No |
| fin. | 2 | 0 | 39650 | 2660 | | | 1456 | 548 | SLV 15 | 0.21 | No |
| ini. | 2 | 0 | 47902 | -1899 | | | 1456 | 548 | SLV 6 | 0.29 | No |
| fin. | 2 | 0 | -38897 | -1767 | | | 1456 | 548 | SLV 6 | 0.31 | No |
| ini. | 2 | 0 | 69562 | -2674 | | | 1456 | 548 | SLV 2 | 0.2 | No |
| fin. | 2 | 0 | -44776 | -2756 | | | 1456 | 548 | SLV 2 | 0.2 | No |
| ini. | 2 | 0 | -65619 | 2449 | | | 1456 | 548 | SLV 16 | 0.22 | No |
| fin. | 2 | 0 | 39650 | 2660 | | | 1456 | 548 | SLV 16 | 0.21 | No |
| ini. | 2 | 0 | 52647 | -2003 | | | 1456 | 548 | SLV 3 | 0.27 | No |
| fin. | 2 | 0 | -29169 | -2158 | | | 1456 | 548 | SLV 3 | 0.25 | No |
| ini. | 2 | 0 | 52647 | -2003 | | | 1456 | 548 | SLV 4 | 0.27 | No |
| fin. | 2 | 0 | -29169 | -2158 | | | 1456 | 548 | SLV 4 | 0.25 | No |
| ini. | 2 | 0 | -48704 | 1778 | | | 1456 | 548 | SLV 13 | 0.31 | No |
| fin. | 2 | 0 | 24043 | 2062 | | | 1456 | 548 | SLV 13 | 0.27 | No |

### Tabella dei coefficienti di sicurezza minimi

| Stato limite | Coeff.s. | Comb. | Verifica |
|---|---|---|---|
| PF_SLV | 1.749 | SLV 1 | Si |
| V_SLV | 0.199 | SLV 1 | No |
| PF_SLU | 4.667 | SLU 38 | Si |
| V_SLU | 0.435 | SLU 38 | No |

## Trave di accoppiamento 147

Verifiche condotte secondo D.M. 17-01-18 (N.T.C.)

### Dati geometrici

| X ini. | Y ini. | Z ini.inf. | Z ini.sup. | H ini. | X fin. | Y fin. | Z fin.inf. | Z fin.sup | H fin. | Luce | Spessore | R. Trazione |
|---|---|---|---|---|---|---|---|---|---|---|---|---|
| -2159.3 | -335.9 | 1518 | 1564 | 46 | -2249.3 | -335.9 | 1518 | 1564 | 46 | 90 | 28 | 3500 |

### Caratteristiche del materiale

(Circolare 7 21-01-19 C8.5.I) Muratura in mattoni pieni e malta di calce LC2_Corti

| fb_ | fhk | fvk0 | fhmedio | τ0 | fv0 | μ | ϕ | fvk,lim | E | G | FC |
|---|---|---|---|---|---|---|---|---|---|---|---|
| 12 | | | 17.25 | 0.9 | 2 | 0.577 | 0.767 | 0.65 | 32000 | 12800 | 1.2 |

### Verifiche a pressoflessione delle travi in muratura in combinazioni non sismiche

| Sezione | γM | N | M | Mu | Comb. | c.s. | Verifica |
|---|---|---|---|---|---|---|---|
| ini. | 3 | 1534 | 12215 | 30060 | SLU 28 | 2.46 | Si |
| fin. | 3 | 1540 | -8225 | 30060 | SLU 28 | 3.65 | Si |
| ini. | 3 | 1781 | 12737 | 30060 | SLU 72 | 2.36 | Si |
| fin. | 3 | 1788 | -7238 | 30060 | SLU 72 | 4.15 | Si |
| ini. | 3 | 1574 | 13001 | 30060 | SLU 37 | 2.31 | Si |
| fin. | 3 | 1580 | -8201 | 30060 | SLU 37 | 3.67 | Si |
| ini. | 3 | 1537 | 13114 | 30060 | SLU 78 | 2.29 | Si |
| fin. | 3 | 1543 | -9584 | 30060 | SLU 78 | 3.14 | Si |
| ini. | 3 | 1692 | 13311 | 30060 | SLU 30 | 2.26 | Si |
| fin. | 3 | 1699 | -7810 | 30060 | SLU 30 | 3.85 | Si |
| ini. | 3 | 1076 | 12372 | 30060 | SLU 34 | 2.43 | Si |
| fin. | 3 | 1080 | -9527 | 30060 | SLU 34 | 3.16 | Si |
| ini. | 3 | 1663 | 12427 | 30060 | SLU 79 | 2.42 | Si |
| fin. | 3 | 1668 | -7629 | 30060 | SLU 79 | 3.94 | Si |
| ini. | 3 | 1696 | 14210 | 30060 | SLU 80 | 2.12 | Si |
| fin. | 3 | 1701 | -9169 | 30060 | SLU 80 | 3.28 | Si |
| ini. | 3 | 1607 | 14784 | 30060 | SLU 38 | 2.03 | Si |
| fin. | 3 | 1613 | -9742 | 30060 | SLU 38 | 3.09 | Si |
| ini. | 3 | 1448 | 13688 | 30060 | SLU 36 | 2.2 | Si |
| fin. | 3 | 1454 | -10156 | 30060 | SLU 36 | 2.96 | Si |

### Verifiche a taglio delle travi in muratura secondo §C8.7.1.3.1 in combinazioni non sismiche

| Sezione | γM | N | M | V | Vt | Vp | Vt fess. diag. | Vt,lim | Comb. | c.s. | Verifica |
|---|---|---|---|---|---|---|---|---|---|---|---|
| ini. | 3 | 0 | 9858 | 262 | | | 331 | 124 | SLU 69 | 0.47 | No |
| fin. | 3 | 0 | -6112 | -460 | | | 331 | 124 | SLU 69 | 0.27 | No |
| ini. | 3 | 0 | 11905 | 147 | | | 331 | 124 | SLU 35 | 0.85 | No |
| fin. | 3 | 0 | -8615 | -466 | | | 331 | 124 | SLU 35 | 0.27 | No |
| ini. | 3 | 0 | 11331 | 224 | | | 331 | 124 | SLU 77 | 0.56 | No |
| fin. | 3 | 0 | -8043 | -498 | | | 331 | 124 | SLU 77 | 0.25 | No |
| ini. | 3 | 0 | 13688 | 83 | | | 331 | 124 | SLU 36 | 1.51 | Si |
| fin. | 3 | 0 | -10156 | -493 | | | 331 | 124 | SLU 36 | 0.25 | No |
| ini. | 3 | 0 | 13114 | 159 | | | 331 | 124 | SLU 78 | 0.78 | No |
| fin. | 3 | 0 | -9584 | -524 | | | 331 | 124 | SLU 78 | 0.24 | No |
| ini. | 3 | 0 | 12427 | 155 | | | 331 | 124 | SLU 79 | 0.8 | No |
| fin. | 3 | 0 | -7629 | -453 | | | 331 | 124 | SLU 79 | 0.27 | No |
| ini. | 3 | 0 | 14210 | 90 | | | 331 | 124 | SLU 80 | 1.38 | Si |
| fin. | 3 | 0 | -9169 | -480 | | | 331 | 124 | SLU 80 | 0.26 | No |
| ini. | 3 | 0 | 12215 | 121 | | | 331 | 124 | SLU 28 | 1.03 | Si |
| fin. | 3 | 0 | -8225 | -455 | | | 331 | 124 | SLU 28 | 0.27 | No |
| ini. | 3 | 0 | 9514 | 188 | | | 331 | 124 | SLU 75 | 0.66 | No |

| Sezione | γM | N | M | V | Vt | Vp | Vt fess. diag. | Vt,lim | Comb. | c.s. | Verifica |
|---|---|---|---|---|---|---|---|---|---|---|---|
| fin. | 3 | 0 | -8342 | -466 | | | 331 | 124 | SLU 75 | 0.27 | No |
| ini. | 3 | 0 | 11641 | 198 | | | 331 | 124 | SLU 70 | 0.63 | No |
| fin. | 3 | 0 | -7652 | -486 | | | 331 | 124 | SLU 70 | 0.26 | No |

### Verifiche a pressoflessione delle travi in muratura in combinazioni sismiche

| Sezione | γM | N | M | Mu | Comb. | c.s. | Verifica |
|---|---|---|---|---|---|---|---|
| ini. | 2 | 918 | 16248 | 44694 | SLV 4 | 2.75 | Si |
| fin. | 2 | 739 | -14356 | 44694 | SLV 4 | 3.11 | Si |
| ini. | 2 | -1145 | -15419 | 44694 | SLV 12 | 2.9 | Si |
| fin. | 2 | -1093 | 8184 | 44694 | SLV 12 | 5.46 | Si |
| ini. | 2 | 1715 | 23962 | 44694 | SLV 1 | 1.87 | Si |
| fin. | 2 | 1537 | -18235 | 44694 | SLV 1 | 2.45 | Si |
| ini. | 2 | 2033 | 20757 | 44694 | SLV 5 | 2.15 | Si |
| fin. | 2 | 1982 | -13062 | 44694 | SLV 5 | 3.42 | Si |
| ini. | 2 | 2033 | 20757 | 44694 | SLV 6 | 2.15 | Si |
| fin. | 2 | 1982 | -13062 | 44694 | SLV 6 | 3.42 | Si |
| ini. | 2 | 1715 | 23962 | 44694 | SLV 2 | 1.87 | Si |
| fin. | 2 | 1537 | -18235 | 44694 | SLV 2 | 2.45 | Si |
| ini. | 2 | -826 | -18625 | 44694 | SLV 16 | 2.4 | Si |
| fin. | 2 | -648 | 13357 | 44694 | SLV 16 | 3.35 | Si |
| ini. | 2 | -1145 | -15419 | 44694 | SLV 11 | 2.9 | Si |
| fin. | 2 | -1093 | 8184 | 44694 | SLV 11 | 5.46 | Si |
| ini. | 2 | 918 | 16248 | 44694 | SLV 3 | 2.75 | Si |
| fin. | 2 | 739 | -14356 | 44694 | SLV 3 | 3.11 | Si |
| ini. | 2 | -826 | -18625 | 44694 | SLV 15 | 2.4 | Si |
| fin. | 2 | -648 | 13357 | 44694 | SLV 15 | 3.35 | Si |

### Verifiche a taglio delle travi in muratura secondo §C8.7.1.3.1 in combinazioni sismiche

| Sezione | γM | N | M | V | Vt | Vp | Vt fess. diag. | Vt,lim | Comb. | c.s. | Verifica |
|---|---|---|---|---|---|---|---|---|---|---|---|
| ini. | 2 | 0 | -6416 | 430 | | | 496 | 187 | SLD 16 | 0.43 | No |
| fin. | 2 | 0 | 4288 | -200 | | | 496 | 187 | SLD 16 | 0.93 | No |
| ini. | 2 | 0 | -15419 | 663 | | | 496 | 187 | SLV 12 | 0.28 | No |
| fin. | 2 | 0 | 8184 | -117 | | | 496 | 187 | SLV 12 | 1.59 | Si |
| ini. | 2 | 0 | -10911 | 551 | | | 496 | 187 | SLV 14 | 0.34 | No |
| fin. | 2 | 0 | 9477 | -229 | | | 496 | 187 | SLV 14 | 0.82 | No |
| ini. | 2 | 0 | -5088 | 390 | | | 496 | 187 | SLD 11 | 0.48 | No |
| fin. | 2 | 0 | 2164 | -178 | | | 496 | 187 | SLD 11 | 1.05 | Si |
| ini. | 2 | 0 | -18625 | 752 | | | 496 | 187 | SLV 16 | 0.25 | No |
| fin. | 2 | 0 | 13357 | -169 | | | 496 | 187 | SLV 16 | 1.1 | Si |
| ini. | 2 | 0 | -15419 | 663 | | | 496 | 187 | SLV 11 | 0.28 | No |
| fin. | 2 | 0 | 8184 | -117 | | | 496 | 187 | SLV 11 | 1.59 | Si |
| ini. | 2 | 0 | -18625 | 752 | | | 496 | 187 | SLV 15 | 0.25 | No |
| fin. | 2 | 0 | 13357 | -169 | | | 496 | 187 | SLV 15 | 1.1 | Si |
| ini. | 2 | 0 | -5088 | 390 | | | 496 | 187 | SLD 12 | 0.48 | No |
| fin. | 2 | 0 | 2164 | -178 | | | 496 | 187 | SLD 12 | 1.05 | Si |
| ini. | 2 | 0 | -6416 | 430 | | | 496 | 187 | SLD 15 | 0.43 | No |
| fin. | 2 | 0 | 4288 | -200 | | | 496 | 187 | SLD 15 | 0.93 | No |
| ini. | 2 | 0 | -10911 | 551 | | | 496 | 187 | SLV 13 | 0.34 | No |
| fin. | 2 | 0 | 9477 | -229 | | | 496 | 187 | SLV 13 | 0.82 | No |

### Tabella dei coefficienti di sicurezza minimi

| Stato limite | Coeff.s. | Comb. | Verifica |
|---|---|---|---|
| PF_SLV | 1.865 | SLV 1 | Si |
| V_SLV | 0.248 | SLV 15 | No |
| PF_SLU | 2.033 | SLU 38 | Si |
| V_SLU | 0.237 | SLU 78 | No |

## Trave di accoppiamento 148

Verifiche condotte secondo D.M. 17-01-18 (N.T.C.)

### Dati geometrici

| X ini. | Y ini. | Z ini.inf. | Z ini.sup. | H ini. | X fin. | Y fin. | Z fin.inf. | Z fin.sup | H fin. | Luce | Spessore | R. Trazione |
|---|---|---|---|---|---|---|---|---|---|---|---|---|
| -1886.8 | -335.9 | 1248 | 1448 | 200 | -1936.8 | -335.9 | 1248 | 1448 | 200 | 50 | 28 | 3500 |

### Caratteristiche del materiale

(Circolare 7 21-01-19 C8.5.I) Muratura in mattoni pieni e malta di calce LC2_Corti

| fb_ | fhk | fvk0 | fhmedio | τ0 | fv0 | μ | ϕ | fvk,lim | E | G | FC |
|---|---|---|---|---|---|---|---|---|---|---|---|
| 12 | | | 17.25 | 0.9 | 2 | 0.577 | 0.767 | 0.65 | 32000 | 12800 | 1.2 |

### Verifiche a pressoflessione delle travi in muratura in combinazioni non sismiche

| Sezione | γM | N | M | Mu | Comb. | c.s. | Verifica |
|---|---|---|---|---|---|---|---|
| ini. | 3 | -75 | -72704 | 296292 | SLU 47 | 4.08 | Si |
| fin. | 3 | -237 | -15974 | 296292 | SLU 47 | 18.55 | Si |
| ini. | 3 | 334 | -79288 | 296292 | SLU 51 | 3.74 | Si |
| fin. | 3 | 146 | -27303 | 296292 | SLU 51 | 10.85 | Si |
| ini. | 3 | 251 | -75445 | 296292 | SLU 49 | 3.93 | Si |
| fin. | 3 | 59 | -22114 | 296292 | SLU 49 | 13.4 | Si |
| ini. | 3 | 354 | -69754 | 296292 | SLU 70 | 4.25 | Si |
| fin. | 3 | 146 | -18635 | 296292 | SLU 70 | 15.9 | Si |
| ini. | 3 | 447 | -78634 | 296292 | SLU 50 | 3.77 | Si |
| fin. | 3 | 246 | -28397 | 296292 | SLU 50 | 10.43 | Si |
| ini. | 3 | 345 | -73233 | 296292 | SLU 59 | 4.05 | Si |
| fin. | 3 | 129 | -19869 | 296292 | SLU 59 | 14.91 | Si |

| Sezione | γM | N | M | Mu | Comb. | c.s. | Verifica |
|---|---|---|---|---|---|---|---|
| ini. | 3 | 551 | -72943 | 296292 | SLU 71 | 4.06 | Si |
| fin. | 3 | 333 | -24918 | 296292 | SLU 71 | 11.89 | Si |
| ini. | 3 | 458 | -72578 | 296292 | SLU 58 | 4.08 | Si |
| fin. | 3 | 229 | -20962 | 296292 | SLU 58 | 14.13 | Si |
| ini. | 3 | 364 | -74790 | 296292 | SLU 48 | 3.96 | Si |
| fin. | 3 | 159 | -23208 | 296292 | SLU 48 | 12.77 | Si |
| ini. | 3 | 438 | -73598 | 296292 | SLU 72 | 4.03 | Si |
| fin. | 3 | 233 | -23824 | 296292 | SLU 72 | 12.44 | Si |

## Verifiche a taglio delle travi in muratura secondo §C8.7.1.3.1 in combinazioni non sismiche

| Sezione | γM | N | M | V | Vt | Vp | Vt fess. diag. | Vt,lim | Comb. | c.s. | Verifica |
|---|---|---|---|---|---|---|---|---|---|---|---|
| ini. | 3 | 0 | -63617 | 1775 | | | 2157 | 812 | SLU 63 | 0.46 | No |
| fin. | 3 | 0 | -6082 | 1666 | | | 2157 | 812 | SLU 63 | 0.49 | No |
| ini. | 3 | 0 | -55942 | 1790 | | | 2157 | 812 | SLU 60 | 0.45 | No |
| fin. | 3 | 0 | 3425 | 1732 | | | 2157 | 812 | SLU 60 | 0.47 | No |
| ini. | 3 | 0 | -53938 | 1791 | | | 2157 | 812 | SLU 73 | 0.45 | No |
| fin. | 3 | 0 | 5541 | 1622 | | | 2157 | 812 | SLU 73 | 0.5 | No |
| ini. | 3 | 0 | -57926 | 1774 | | | 2157 | 812 | SLU 84 | 0.46 | No |
| fin. | 3 | 0 | -2602 | 1637 | | | 2157 | 812 | SLU 84 | 0.5 | No |
| ini. | 3 | 0 | -50906 | 1815 | | | 2157 | 812 | SLU 82 | 0.45 | No |
| fin. | 3 | 0 | 7998 | 1666 | | | 2157 | 812 | SLU 82 | 0.49 | No |
| ini. | 3 | 0 | -59628 | 1792 | | | 2157 | 812 | SLU 52 | 0.45 | No |
| fin. | 3 | 0 | 2062 | 1652 | | | 2157 | 812 | SLU 52 | 0.49 | No |
| ini. | 3 | 0 | -56597 | 1816 | | | 2157 | 812 | SLU 61 | 0.45 | No |
| fin. | 3 | 0 | 4519 | 1695 | | | 2157 | 812 | SLU 61 | 0.48 | No |
| ini. | 3 | 0 | -50251 | 1789 | | | 2157 | 812 | SLU 81 | 0.45 | No |
| fin. | 3 | 0 | 6904 | 1703 | | | 2157 | 812 | SLU 81 | 0.48 | No |
| ini. | 3 | 0 | -61714 | 1726 | | | 2157 | 812 | SLU 53 | 0.47 | No |
| fin. | 3 | 0 | -5172 | 1756 | | | 2157 | 812 | SLU 53 | 0.46 | No |
| ini. | 3 | 0 | -62368 | 1752 | | | 2157 | 812 | SLU 54 | 0.46 | No |
| fin. | 3 | 0 | -4078 | 1719 | | | 2157 | 812 | SLU 54 | 0.47 | No |

## Verifiche a pressoflessione delle travi in muratura in combinazioni sismiche

| Sezione | γM | N | M | Mu | Comb. | c.s. | Verifica |
|---|---|---|---|---|---|---|---|
| ini. | 2 | 1207 | 63291 | 314194 | SLV 13 | 4.96 | Si |
| fin. | 2 | 1277 | 125341 | 314194 | SLV 13 | 2.51 | Si |
| ini. | 2 | -102 | -121934 | 314194 | SLV 8 | 2.58 | Si |
| fin. | 2 | -702 | -13241 | 314194 | SLV 8 | 23.73 | Si |
| ini. | 2 | 1207 | 63291 | 314194 | SLV 14 | 4.96 | Si |
| fin. | 2 | 1277 | 125341 | 314194 | SLV 14 | 2.51 | Si |
| ini. | 2 | -1425 | -152951 | 314194 | SLV 4 | 2.05 | Si |
| fin. | 2 | -1787 | -128340 | 314194 | SLV 4 | 2.45 | Si |
| ini. | 2 | 1472 | 33840 | 314194 | SLV 15 | 9.28 | Si |
| fin. | 2 | 1285 | 142688 | 314194 | SLV 15 | 2.2 | Si |
| ini. | 2 | -102 | -121934 | 314194 | SLV 7 | 2.58 | Si |
| fin. | 2 | -702 | -13241 | 314194 | SLV 7 | 23.73 | Si |
| ini. | 2 | -1690 | -123500 | 314194 | SLV 1 | 2.54 | Si |
| fin. | 2 | -1795 | -145688 | 314194 | SLV 1 | 2.16 | Si |
| ini. | 2 | 1472 | 33840 | 314194 | SLV 16 | 9.28 | Si |
| fin. | 2 | 1285 | 142688 | 314194 | SLV 16 | 2.2 | Si |
| ini. | 2 | -1690 | -123500 | 314194 | SLV 2 | 2.54 | Si |
| fin. | 2 | -1795 | -145688 | 314194 | SLV 2 | 2.16 | Si |
| ini. | 2 | -1425 | -152951 | 314194 | SLV 3 | 2.05 | Si |
| fin. | 2 | -1787 | -128340 | 314194 | SLV 3 | 2.45 | Si |

## Verifiche a taglio delle travi in muratura secondo §C8.7.1.3.1 in combinazioni sismiche

| Sezione | γM | N | M | V | Vt | Vp | Vt fess. diag. | Vt,lim | Comb. | c.s. | Verifica |
|---|---|---|---|---|---|---|---|---|---|---|---|
| ini. | 2 | 0 | -52683 | 2587 | | | 3235 | 1217 | SLD 12 | 0.47 | No |
| fin. | 2 | 0 | 28101 | 2440 | | | 3235 | 1217 | SLD 12 | 0.5 | No |
| ini. | 2 | 0 | -65897 | 4424 | | | 3235 | 1217 | SLV 12 | 0.28 | No |
| fin. | 2 | 0 | 68067 | 4094 | | | 3235 | 1217 | SLV 12 | 0.3 | No |
| ini. | 2 | 0 | -65897 | 4424 | | | 3235 | 1217 | SLV 11 | 0.28 | No |
| fin. | 2 | 0 | 68067 | 4094 | | | 3235 | 1217 | SLV 11 | 0.3 | No |
| ini. | 2 | 0 | -121934 | 3795 | | | 3235 | 1217 | SLV 7 | 0.32 | No |
| fin. | 2 | 0 | -13241 | 3738 | | | 3235 | 1217 | SLV 7 | 0.33 | No |
| ini. | 2 | 0 | 33840 | 3189 | | | 3235 | 1217 | SLV 16 | 0.38 | No |
| fin. | 2 | 0 | 142688 | 2665 | | | 3235 | 1217 | SLV 16 | 0.46 | No |
| ini. | 2 | 0 | -52683 | 2587 | | | 3235 | 1217 | SLD 11 | 0.47 | No |
| fin. | 2 | 0 | 28101 | 2440 | | | 3235 | 1217 | SLD 11 | 0.5 | No |
| ini. | 2 | 0 | -121934 | 3795 | | | 3235 | 1217 | SLV 8 | 0.32 | No |
| fin. | 2 | 0 | -13241 | 3738 | | | 3235 | 1217 | SLV 8 | 0.33 | No |
| ini. | 2 | 0 | 33840 | 3189 | | | 3235 | 1217 | SLV 15 | 0.38 | No |
| fin. | 2 | 0 | 142688 | 2665 | | | 3235 | 1217 | SLV 15 | 0.46 | No |
| ini. | 2 | 0 | -76733 | 2320 | | | 3235 | 1217 | SLD 7 | 0.52 | No |
| fin. | 2 | 0 | -6717 | 2288 | | | 3235 | 1217 | SLD 7 | 0.53 | No |
| ini. | 2 | 0 | -76733 | 2320 | | | 3235 | 1217 | SLD 8 | 0.52 | No |
| fin. | 2 | 0 | -6717 | 2288 | | | 3235 | 1217 | SLD 8 | 0.53 | No |

## Tabella dei coefficienti di sicurezza minimi

| Stato limite | Coeff.s. | Comb. | Verifica |
|---|---|---|---|
| PF_SLV | 2.054 | SLV 3 | Si |
| V_SLV | 0.275 | SLV 11 | No |
| PF_SLU | 3.737 | SLU 51 | Si |
| V_SLU | 0.447 | SLU 61 | No |

## Trave di accoppiamento 149

Verifiche condotte secondo D.M. 17-01-18 (N.T.C.)

### Dati geometrici

| X ini. | Y ini. | Z ini.inf. | Z ini.sup. | H ini. | X fin. | Y fin. | Z fin.inf. | Z fin.sup | H fin. | Luce | Spessore | R. Trazione |
|---|---|---|---|---|---|---|---|---|---|---|---|---|
| -1886.8 | -335.9 | 1528 | 1564 | 36 | -1936.8 | -335.9 | 1528 | 1564 | 36 | 50 | 28 | 3500 |

### Caratteristiche del materiale

(Circolare 7 21-01-19 C8.5.I) Muratura in mattoni pieni e malta di calce LC2_Corti

| fb_ | fhk | fvk0 | fhmedio | τ0 | fv0 | μ | ϕ | fvk,lim | E | G | FC |
|---|---|---|---|---|---|---|---|---|---|---|---|
| 12 | | | 17.25 | 0.9 | 2 | 0.577 | 0.767 | 0.65 | 32000 | 12800 | 1.2 |

### Verifiche a pressoflessione delle travi in muratura in combinazioni non sismiche

| Sezione | γM | N | M | Mu | Comb. | c.s. | Verifica |
|---|---|---|---|---|---|---|---|
| ini. | 3 | 2103 | -6338 | 18411 | SLU 50 | 2.91 | Si |
| fin. | 3 | 2100 | 12793 | 18411 | SLU 50 | 1.44 | Si |
| ini. | 3 | 2042 | -6185 | 18411 | SLU 51 | 2.98 | Si |
| fin. | 3 | 2040 | 12907 | 18411 | SLU 51 | 1.43 | Si |
| ini. | 3 | 1927 | -6474 | 18411 | SLU 59 | 2.84 | Si |
| fin. | 3 | 1925 | 12729 | 18411 | SLU 59 | 1.45 | Si |
| ini. | 3 | 1921 | -6687 | 18411 | SLU 70 | 2.75 | Si |
| fin. | 3 | 1919 | 12717 | 18411 | SLU 70 | 1.45 | Si |
| ini. | 3 | 2070 | -6601 | 18411 | SLU 71 | 2.79 | Si |
| fin. | 3 | 2068 | 12945 | 18411 | SLU 71 | 1.42 | Si |
| ini. | 3 | 1981 | -6839 | 18411 | SLU 69 | 2.69 | Si |
| fin. | 3 | 1979 | 12603 | 18411 | SLU 69 | 1.46 | Si |
| ini. | 3 | 2010 | -6449 | 18411 | SLU 72 | 2.85 | Si |
| fin. | 3 | 2008 | 13059 | 18411 | SLU 72 | 1.41 | Si |
| ini. | 3 | 1955 | -6889 | 18411 | SLU 79 | 2.67 | Si |
| fin. | 3 | 1953 | 12767 | 18411 | SLU 79 | 1.44 | Si |
| ini. | 3 | 1987 | -6626 | 18411 | SLU 58 | 2.78 | Si |
| fin. | 3 | 1985 | 12615 | 18411 | SLU 58 | 1.46 | Si |
| ini. | 3 | 1895 | -6737 | 18411 | SLU 80 | 2.73 | Si |
| fin. | 3 | 1893 | 12881 | 18411 | SLU 80 | 1.43 | Si |

### Verifiche a taglio delle travi in muratura secondo §C8.7.1.3.1 in combinazioni non sismiche

| Sezione | γM | N | M | V | Vt | Vp | Vt fess. diag. | Vt,lim | Comb. | c.s. | Verifica |
|---|---|---|---|---|---|---|---|---|---|---|---|
| ini. | 3 | 0 | -6839 | 640 | | | 280 | 105 | SLU 69 | 0.16 | No |
| fin. | 3 | 0 | 12603 | 125 | | | 280 | 105 | SLU 69 | 0.84 | No |
| ini. | 3 | 0 | -6576 | 606 | | | 280 | 105 | SLU 48 | 0.17 | No |
| fin. | 3 | 0 | 12451 | 142 | | | 280 | 105 | SLU 48 | 0.74 | No |
| ini. | 3 | 0 | -6864 | 609 | | | 280 | 105 | SLU 56 | 0.17 | No |
| fin. | 3 | 0 | 12273 | 144 | | | 280 | 105 | SLU 56 | 0.73 | No |
| ini. | 3 | 0 | -6449 | 624 | | | 280 | 105 | SLU 72 | 0.17 | No |
| fin. | 3 | 0 | 13059 | 145 | | | 280 | 105 | SLU 72 | 0.72 | No |
| ini. | 3 | 0 | -6687 | 635 | | | 280 | 105 | SLU 70 | 0.17 | No |
| fin. | 3 | 0 | 12717 | 129 | | | 280 | 105 | SLU 70 | 0.82 | No |
| ini. | 3 | 0 | -7128 | 643 | | | 280 | 105 | SLU 77 | 0.16 | No |
| fin. | 3 | 0 | 12425 | 127 | | | 280 | 105 | SLU 77 | 0.83 | No |
| ini. | 3 | 0 | -6737 | 626 | | | 280 | 105 | SLU 80 | 0.17 | No |
| fin. | 3 | 0 | 12881 | 147 | | | 280 | 105 | SLU 80 | 0.71 | No |
| ini. | 3 | 0 | -6976 | 637 | | | 280 | 105 | SLU 78 | 0.17 | No |
| fin. | 3 | 0 | 12539 | 131 | | | 280 | 105 | SLU 78 | 0.8 | No |
| ini. | 3 | 0 | -6889 | 631 | | | 280 | 105 | SLU 79 | 0.17 | No |
| fin. | 3 | 0 | 12767 | 143 | | | 280 | 105 | SLU 79 | 0.73 | No |
| ini. | 3 | 0 | -6601 | 629 | | | 280 | 105 | SLU 71 | 0.17 | No |
| fin. | 3 | 0 | 12945 | 141 | | | 280 | 105 | SLU 71 | 0.74 | No |

### Verifiche a pressoflessione delle travi in muratura in combinazioni sismiche

| Sezione | γM | N | M | Mu | Comb. | c.s. | Verifica |
|---|---|---|---|---|---|---|---|
| ini. | 2 | 211 | -2663 | 27616 | SLV 12 | 10.37 | Si |
| fin. | 2 | 563 | 18845 | 27616 | SLV 12 | 1.47 | Si |
| ini. | 2 | 1165 | -2763 | 27616 | SLV 7 | 9.99 | Si |
| fin. | 2 | 1487 | 20297 | 27616 | SLV 7 | 1.36 | Si |
| ini. | 2 | 688 | -3644 | 27616 | SLD 11 | 7.58 | Si |
| fin. | 2 | 830 | 11818 | 27616 | SLD 11 | 2.34 | Si |
| ini. | 2 | 1095 | -3684 | 27616 | SLD 7 | 7.5 | Si |
| fin. | 2 | 1224 | 12425 | 27616 | SLD 7 | 2.22 | Si |
| ini. | 2 | 1165 | -2763 | 27616 | SLV 8 | 9.99 | Si |
| fin. | 2 | 1487 | 20297 | 27616 | SLV 8 | 1.36 | Si |
| ini. | 2 | 211 | -2663 | 27616 | SLV 11 | 10.37 | Si |
| fin. | 2 | 563 | 18845 | 27616 | SLV 11 | 1.47 | Si |
| ini. | 2 | 688 | -3644 | 27616 | SLD 12 | 7.58 | Si |
| fin. | 2 | 830 | 11818 | 27616 | SLD 12 | 2.34 | Si |
| ini. | 2 | 1095 | -3684 | 27616 | SLD 8 | 7.5 | Si |
| fin. | 2 | 1224 | 12425 | 27616 | SLD 8 | 2.22 | Si |
| ini. | 2 | 2517 | -3913 | 27616 | SLV 3 | 7.06 | Si |
| fin. | 2 | 2567 | 13235 | 27616 | SLV 3 | 2.09 | Si |
| ini. | 2 | 2517 | -3913 | 27616 | SLV 4 | 7.06 | Si |
| fin. | 2 | 2567 | 13235 | 27616 | SLV 4 | 2.09 | Si |

### Verifiche a taglio delle travi in muratura secondo §C8.7.1.3.1 in combinazioni sismiche

| Sezione | γM | N | M | V | Vt | Vp | Vt fess. diag. | Vt,lim | Comb. | c.s. | Verifica |
|---|---|---|---|---|---|---|---|---|---|---|---|
| ini. | 2 | 0 | -2763 | 677 | | | 419 | 158 | SLV 8 | 0.23 | No |
| fin. | 2 | 0 | 20297 | 462 | | | 419 | 158 | SLV 8 | 0.34 | No |
| ini. | 2 | 0 | -2763 | 677 | | | 419 | 158 | SLV 7 | 0.23 | No |

| Sezione | γM | N | M | V | Vt | Vp | Vt fess. diag. | Vt,lim | Comb. | c.s. | Verifica |
|---|---|---|---|---|---|---|---|---|---|---|---|
| fin. | 2 | 0 | 20297 | 462 | | | 419 | 158 | SLV 7 | 0.34 | No |
| ini. | 2 | 0 | -3684 | 470 | | | 419 | 158 | SLD 8 | 0.34 | No |
| fin. | 2 | 0 | 12425 | 256 | | | 419 | 158 | SLD 8 | 0.62 | No |
| ini. | 2 | 0 | -3644 | 468 | | | 419 | 158 | SLD 12 | 0.34 | No |
| fin. | 2 | 0 | 11818 | 260 | | | 419 | 158 | SLD 12 | 0.61 | No |
| ini. | 2 | 0 | -2663 | 673 | | | 419 | 158 | SLV 12 | 0.23 | No |
| fin. | 2 | 0 | 18845 | 471 | | | 419 | 158 | SLV 12 | 0.34 | No |
| ini. | 2 | 0 | -2663 | 673 | | | 419 | 158 | SLV 11 | 0.23 | No |
| fin. | 2 | 0 | 18845 | 471 | | | 419 | 158 | SLV 11 | 0.34 | No |
| ini. | 2 | 0 | -3684 | 470 | | | 419 | 158 | SLD 7 | 0.34 | No |
| fin. | 2 | 0 | 12425 | 256 | | | 419 | 158 | SLD 7 | 0.62 | No |
| ini. | 2 | 0 | -3913 | 437 | | | 419 | 158 | SLV 3 | 0.36 | No |
| fin. | 2 | 0 | 13235 | 206 | | | 419 | 158 | SLV 3 | 0.76 | No |
| ini. | 2 | 0 | -3913 | 437 | | | 419 | 158 | SLV 4 | 0.36 | No |
| fin. | 2 | 0 | 13235 | 206 | | | 419 | 158 | SLV 4 | 0.76 | No |
| ini. | 2 | 0 | -3644 | 468 | | | 419 | 158 | SLD 11 | 0.34 | No |
| fin. | 2 | 0 | 11818 | 260 | | | 419 | 158 | SLD 11 | 0.61 | No |

### Tabella dei coefficienti di sicurezza minimi

| Stato limite | Coeff.s. | Comb. | Verifica |
|---|---|---|---|
| PF_SLV | 1.361 | SLV 7 | Si |
| V_SLV | 0.233 | SLV 7 | No |
| PF_SLU | 1.41 | SLU 72 | Si |
| V_SLU | 0.164 | SLU 77 | No |

## Trave di accoppiamento 150

Verifiche condotte secondo D.M. 17-01-18 (N.T.C.)

### Dati geometrici

| X ini. | Y ini. | Z ini.inf. | Z ini.sup. | H ini. | X fin. | Y fin. | Z fin.inf. | Z fin.sup | H fin. | Luce | Spessore | R. Trazione |
|---|---|---|---|---|---|---|---|---|---|---|---|---|
| -1736.3 | -335.9 | 1248 | 1338 | 90 | -1826.3 | -335.9 | 1248 | 1338 | 90 | 90 | 28 | 3500 |

### Caratteristiche del materiale

(Circolare 7 21-01-19 C8.5.I) Muratura in mattoni pieni e malta di calce LC2_Corti

| fb_ | fhk | fvk0 | fhmedio | τ0 | fv0 | μ | ϕ | fvk,lim | E | G | FC |
|---|---|---|---|---|---|---|---|---|---|---|---|
| 12 | | | 17.25 | 0.9 | 2 | 0.577 | 0.767 | 0.65 | 32000 | 12800 | 1.2 |

### Verifiche a pressoflessione delle travi in muratura in combinazioni non sismiche

| Sezione | γM | N | M | Mu | Comb. | c.s. | Verifica |
|---|---|---|---|---|---|---|---|
| ini. | 3 | 13 | -23686 | 103792 | SLU 65 | 4.38 | Si |
| fin. | 3 | -378 | 6546 | 103792 | SLU 65 | 15.86 | Si |
| ini. | 3 | 26 | -21036 | 103792 | SLU 2 | 4.93 | Si |
| fin. | 3 | -392 | 7604 | 103792 | SLU 2 | 13.65 | Si |
| ini. | 3 | 46 | -24980 | 103792 | SLU 61 | 4.15 | Si |
| fin. | 3 | -349 | 7600 | 103792 | SLU 61 | 13.66 | Si |
| ini. | 3 | -60 | -21983 | 103792 | SLU 47 | 4.72 | Si |
| fin. | 3 | -264 | -55 | 103792 | SLU 47 | 1883.35 | Si |
| ini. | 3 | 67 | -22238 | 103792 | SLU 73 | 4.67 | Si |
| fin. | 3 | -315 | 6259 | 103792 | SLU 73 | 16.58 | Si |
| ini. | 3 | -77 | -21107 | 103792 | SLU 64 | 4.92 | Si |
| fin. | 3 | -214 | 2323 | 103792 | SLU 64 | 44.69 | Si |
| ini. | 3 | -85 | -25501 | 103792 | SLU 43 | 4.07 | Si |
| fin. | 3 | -341 | 5476 | 103792 | SLU 43 | 18.95 | Si |
| ini. | 3 | 59 | -26632 | 103792 | SLU 52 | 3.9 | Si |
| fin. | 3 | -441 | 9412 | 103792 | SLU 52 | 11.03 | Si |
| ini. | 3 | -8 | -23433 | 103792 | SLU 60 | 4.43 | Si |
| fin. | 3 | -251 | 5066 | 103792 | SLU 60 | 20.49 | Si |
| ini. | 3 | 5 | -28080 | 103792 | SLU 44 | 3.7 | Si |
| fin. | 3 | -504 | 9699 | 103792 | SLU 44 | 10.7 | Si |

### Verifiche a taglio delle travi in muratura secondo §C8.7.1.3.1 in combinazioni non sismiche

| Sezione | γM | N | M | V | Vt | Vp | Vt fess. diag. | Vt,lim | Comb. | c.s. | Verifica |
|---|---|---|---|---|---|---|---|---|---|---|---|
| ini. | 3 | 0 | -25501 | 273 | | | 970 | 365 | SLU 43 | 1.34 | Si |
| fin. | 3 | 0 | 5476 | 565 | | | 970 | 365 | SLU 43 | 0.65 | No |
| ini. | 3 | 0 | -8914 | -591 | | | 970 | 365 | SLU 71 | 0.62 | No |
| fin. | 3 | 0 | -17185 | -206 | | | 970 | 365 | SLU 71 | 1.77 | Si |
| ini. | 3 | 0 | -1870 | -687 | | | 970 | 365 | SLU 29 | 0.53 | No |
| fin. | 3 | 0 | -19280 | -381 | | | 970 | 365 | SLU 29 | 0.96 | No |
| ini. | 3 | 0 | -6264 | -562 | | | 970 | 365 | SLU 8 | 0.65 | No |
| fin. | 3 | 0 | -16127 | -212 | | | 970 | 365 | SLU 8 | 1.72 | Si |
| ini. | 3 | 0 | -26632 | 567 | | | 970 | 365 | SLU 52 | 0.64 | No |
| fin. | 3 | 0 | 9412 | 619 | | | 970 | 365 | SLU 52 | 0.59 | No |
| ini. | 3 | 0 | -28080 | 537 | | | 970 | 365 | SLU 44 | 0.68 | No |
| fin. | 3 | 0 | 9699 | 700 | | | 970 | 365 | SLU 44 | 0.52 | No |
| ini. | 3 | 0 | -324 | -651 | | | 970 | 365 | SLU 35 | 0.56 | No |
| fin. | 3 | 0 | -17651 | -390 | | | 970 | 365 | SLU 35 | 0.94 | No |
| ini. | 3 | 0 | -8816 | -585 | | | 970 | 365 | SLU 69 | 0.62 | No |
| fin. | 3 | 0 | -15269 | -135 | | | 970 | 365 | SLU 69 | 2.71 | Si |
| ini. | 3 | 0 | -1772 | -681 | | | 970 | 365 | SLU 27 | 0.54 | No |
| fin. | 3 | 0 | -17365 | -310 | | | 970 | 365 | SLU 27 | 1.18 | Si |
| ini. | 3 | 0 | -422 | -657 | | | 970 | 365 | SLU 37 | 0.56 | No |
| fin. | 3 | 0 | -19567 | -461 | | | 970 | 365 | SLU 37 | 0.79 | No |

### Verifiche a pressoflessione delle travi in muratura in combinazioni sismiche

| Sezione | γM | N | M | Mu | Comb. | c.s. | Verifica |
|---|---|---|---|---|---|---|---|
| ini. | 2 | -286 | -44427 | 121694 | SLV 5 | 2.74 | Si |
| fin. | 2 | -1495 | 36226 | 121694 | SLV 5 | 3.36 | Si |
| ini. | 2 | -1681 | 25468 | 121694 | SLV 7 | 4.78 | Si |
| fin. | 2 | 438 | -61834 | 121694 | SLV 7 | 1.97 | Si |
| ini. | 2 | 3290 | -51635 | 121694 | SLV 14 | 2.36 | Si |
| fin. | 2 | 715 | 67780 | 121694 | SLV 14 | 1.8 | Si |
| ini. | 2 | 3290 | -51635 | 121694 | SLV 13 | 2.36 | Si |
| fin. | 2 | 715 | 67780 | 121694 | SLV 13 | 1.8 | Si |
| ini. | 2 | -3380 | 18059 | 121694 | SLV 4 | 6.74 | Si |
| fin. | 2 | -1064 | -62984 | 121694 | SLV 4 | 1.93 | Si |
| ini. | 2 | -3380 | 18059 | 121694 | SLV 3 | 6.74 | Si |
| fin. | 2 | -1064 | -62984 | 121694 | SLV 3 | 1.93 | Si |
| ini. | 2 | -286 | -44427 | 121694 | SLV 6 | 2.74 | Si |
| fin. | 2 | -1495 | 36226 | 121694 | SLV 6 | 3.36 | Si |
| ini. | 2 | 1590 | -59044 | 121694 | SLV 9 | 2.06 | Si |
| fin. | 2 | -787 | 66629 | 121694 | SLV 9 | 1.83 | Si |
| ini. | 2 | -1681 | 25468 | 121694 | SLV 8 | 4.78 | Si |
| fin. | 2 | 438 | -61834 | 121694 | SLV 8 | 1.97 | Si |
| ini. | 2 | 1590 | -59044 | 121694 | SLV 10 | 2.06 | Si |
| fin. | 2 | -787 | 66629 | 121694 | SLV 10 | 1.83 | Si |

### Verifiche a taglio delle travi in muratura secondo §C8.7.1.3.1 in combinazioni sismiche

| Sezione | γM | N | M | V | Vt | Vp | Vt fess. diag. | Vt,lim | Comb. | c.s. | Verifica |
|---|---|---|---|---|---|---|---|---|---|---|---|
| ini. | 2 | 0 | -2910 | -1772 | | | 1456 | 548 | SLV 2 | 0.31 | No |
| fin. | 2 | 0 | -33566 | -767 | | | 1456 | 548 | SLV 2 | 0.71 | No |
| ini. | 2 | 0 | -2910 | -1772 | | | 1456 | 548 | SLV 1 | 0.31 | No |
| fin. | 2 | 0 | -33566 | -767 | | | 1456 | 548 | SLV 1 | 0.71 | No |
| ini. | 2 | 0 | -59044 | 1959 | | | 1456 | 548 | SLV 10 | 0.28 | No |
| fin. | 2 | 0 | 66629 | 1784 | | | 1456 | 548 | SLV 10 | 0.31 | No |
| ini. | 2 | 0 | 18059 | -2450 | | | 1456 | 548 | SLV 3 | 0.22 | No |
| fin. | 2 | 0 | -62984 | -1394 | | | 1456 | 548 | SLV 3 | 0.39 | No |
| ini. | 2 | 0 | -59044 | 1959 | | | 1456 | 548 | SLV 9 | 0.28 | No |
| fin. | 2 | 0 | 66629 | 1784 | | | 1456 | 548 | SLV 9 | 0.31 | No |
| ini. | 2 | 0 | -30667 | 2072 | | | 1456 | 548 | SLV 16 | 0.26 | No |
| fin. | 2 | 0 | 38362 | 1405 | | | 1456 | 548 | SLV 16 | 0.39 | No |
| ini. | 2 | 0 | -30667 | 2072 | | | 1456 | 548 | SLV 15 | 0.26 | No |
| fin. | 2 | 0 | 38362 | 1405 | | | 1456 | 548 | SLV 15 | 0.39 | No |
| ini. | 2 | 0 | -51635 | 2750 | | | 1456 | 548 | SLV 13 | 0.2 | No |
| fin. | 2 | 0 | 67780 | 2032 | | | 1456 | 548 | SLV 13 | 0.27 | No |
| ini. | 2 | 0 | 18059 | -2450 | | | 1456 | 548 | SLV 4 | 0.22 | No |
| fin. | 2 | 0 | -62984 | -1394 | | | 1456 | 548 | SLV 4 | 0.39 | No |
| ini. | 2 | 0 | -51635 | 2750 | | | 1456 | 548 | SLV 14 | 0.2 | No |
| fin. | 2 | 0 | 67780 | 2032 | | | 1456 | 548 | SLV 14 | 0.27 | No |

### Tabella dei coefficienti di sicurezza minimi

| Stato limite | Coeff.s. | Comb. | Verifica |
|---|---|---|---|
| PF_SLV | 1.795 | SLV 13 | Si |
| V_SLV | 0.199 | SLV 13 | No |
| PF_SLU | 3.696 | SLU 44 | Si |
| V_SLU | 0.522 | SLU 44 | No |

## Trave di accoppiamento 151

Verifiche condotte secondo D.M. 17-01-18 (N.T.C.)

### Dati geometrici

| X ini. | Y ini. | Z ini.inf. | Z ini.sup. | H ini. | X fin. | Y fin. | Z fin.inf. | Z fin.sup | H fin. | Luce | Spessore | R. Trazione |
|---|---|---|---|---|---|---|---|---|---|---|---|---|
| -1736.3 | -335.9 | 1518 | 1564 | 46 | -1826.3 | -335.9 | 1518 | 1564 | 46 | 90 | 28 | 3500 |

### Caratteristiche del materiale

(Circolare 7 21-01-19 C8.5.I) Muratura in mattoni pieni e malta di calce LC2_Corti

| fb_ | fhk | fvk0 | fhmedio | τ0 | fv0 | μ | ϕ | fvk,lim | E | G | FC |
|---|---|---|---|---|---|---|---|---|---|---|---|
| 12 | | | 17.25 | 0.9 | 2 | 0.577 | 0.767 | 0.65 | 32000 | 12800 | 1.2 |

### Verifiche a pressoflessione delle travi in muratura in combinazioni non sismiche

| Sezione | γM | N | M | Mu | Comb. | c.s. | Verifica |
|---|---|---|---|---|---|---|---|
| ini. | 3 | 2060 | 7887 | 30060 | SLU 37 | 3.81 | Si |
| fin. | 3 | 2061 | -13863 | 30060 | SLU 37 | 2.17 | Si |
| ini. | 3 | 2194 | 6757 | 30060 | SLU 29 | 4.45 | Si |
| fin. | 3 | 2195 | -12798 | 30060 | SLU 29 | 2.35 | Si |
| ini. | 3 | 2016 | 6435 | 30060 | SLU 28 | 4.67 | Si |
| fin. | 3 | 2019 | -13742 | 30060 | SLU 28 | 2.19 | Si |
| ini. | 3 | 2352 | 6462 | 30060 | SLU 78 | 4.65 | Si |
| fin. | 3 | 2356 | -13082 | 30060 | SLU 78 | 2.3 | Si |
| ini. | 3 | 1882 | 7565 | 30060 | SLU 36 | 3.97 | Si |
| fin. | 3 | 1885 | -14808 | 30060 | SLU 36 | 2.03 | Si |
| ini. | 3 | 1995 | 8377 | 30060 | SLU 38 | 3.59 | Si |
| fin. | 3 | 1999 | -14507 | 30060 | SLU 38 | 2.07 | Si |
| ini. | 3 | 2080 | 5945 | 30060 | SLU 27 | 5.06 | Si |
| fin. | 3 | 2082 | -13099 | 30060 | SLU 27 | 2.29 | Si |
| ini. | 3 | 1946 | 7076 | 30060 | SLU 35 | 4.25 | Si |
| fin. | 3 | 1948 | -14165 | 30060 | SLU 35 | 2.12 | Si |
| ini. | 3 | 2129 | 7246 | 30060 | SLU 30 | 4.15 | Si |

| Sezione | γM | N | M | Mu | Comb. | c.s. | Verifica |
|---|---|---|---|---|---|---|---|
| fin. | 3 | 2133 | -13441 | 30060 | SLU 30 | 2.24 | Si |
| ini. | 3 | 2466 | 7273 | 30060 | SLU 80 | 4.13 | Si |
| fin. | 3 | 2469 | -12780 | 30060 | SLU 80 | 2.35 | Si |

### Verifiche a taglio delle travi in muratura secondo §C8.7.1.3.1 in combinazioni non sismiche

| Sezione | γM | N | M | V | Vt | Vp | Vt fess. diag. | Vt,lim | Comb. | c.s. | Verifica |
|---|---|---|---|---|---|---|---|---|---|---|---|
| ini. | 3 | 0 | 5972 | 382 | | | 331 | 124 | SLU 77 | 0.33 | No |
| fin. | 3 | 0 | -12438 | -722 | | | 331 | 124 | SLU 77 | 0.17 | No |
| ini. | 3 | 0 | 4842 | 405 | | | 331 | 124 | SLU 69 | 0.31 | No |
| fin. | 3 | 0 | -11372 | -697 | | | 331 | 124 | SLU 69 | 0.18 | No |
| ini. | 3 | 0 | 6784 | 302 | | | 331 | 124 | SLU 79 | 0.41 | No |
| fin. | 3 | 0 | -12137 | -657 | | | 331 | 124 | SLU 79 | 0.19 | No |
| ini. | 3 | 0 | 5945 | 321 | | | 331 | 124 | SLU 27 | 0.39 | No |
| fin. | 3 | 0 | -13099 | -680 | | | 331 | 124 | SLU 27 | 0.18 | No |
| ini. | 3 | 0 | 7076 | 297 | | | 331 | 124 | SLU 35 | 0.42 | No |
| fin. | 3 | 0 | -14165 | -705 | | | 331 | 124 | SLU 35 | 0.18 | No |
| ini. | 3 | 0 | 6435 | 315 | | | 331 | 124 | SLU 28 | 0.39 | No |
| fin. | 3 | 0 | -13742 | -696 | | | 331 | 124 | SLU 28 | 0.18 | No |
| ini. | 3 | 0 | 5331 | 400 | | | 331 | 124 | SLU 70 | 0.31 | No |
| fin. | 3 | 0 | -12016 | -713 | | | 331 | 124 | SLU 70 | 0.17 | No |
| ini. | 3 | 0 | 7565 | 291 | | | 331 | 124 | SLU 36 | 0.43 | No |
| fin. | 3 | 0 | -14808 | -721 | | | 331 | 124 | SLU 36 | 0.17 | No |
| ini. | 3 | 0 | 6462 | 376 | | | 331 | 124 | SLU 78 | 0.33 | No |
| fin. | 3 | 0 | -13082 | -738 | | | 331 | 124 | SLU 78 | 0.17 | No |
| ini. | 3 | 0 | 7273 | 296 | | | 331 | 124 | SLU 80 | 0.42 | No |
| fin. | 3 | 0 | -12780 | -673 | | | 331 | 124 | SLU 80 | 0.18 | No |

### Verifiche a pressoflessione delle travi in muratura in combinazioni sismiche

| Sezione | γM | N | M | Mu | Comb. | c.s. | Verifica |
|---|---|---|---|---|---|---|---|
| ini. | 2 | 505 | 21457 | 44694 | SLV 12 | 2.08 | Si |
| fin. | 2 | 1588 | -11826 | 44694 | SLV 12 | 3.78 | Si |
| ini. | 2 | 3701 | -9189 | 44694 | SLV 1 | 4.86 | Si |
| fin. | 2 | 3209 | 1959 | 44694 | SLV 1 | 22.81 | Si |
| ini. | 2 | 1053 | -20783 | 44694 | SLV 9 | 2.15 | Si |
| fin. | 2 | 83 | 13819 | 44694 | SLV 9 | 3.23 | Si |
| ini. | 2 | 3701 | -9189 | 44694 | SLV 2 | 4.86 | Si |
| fin. | 2 | 3209 | 1959 | 44694 | SLV 2 | 22.81 | Si |
| ini. | 2 | 505 | 21457 | 44694 | SLV 11 | 2.08 | Si |
| fin. | 2 | 1588 | -11826 | 44694 | SLV 11 | 3.78 | Si |
| ini. | 2 | 1816 | 19985 | 44694 | SLV 8 | 2.24 | Si |
| fin. | 2 | 2788 | -13157 | 44694 | SLV 8 | 3.4 | Si |
| ini. | 2 | 1816 | 19985 | 44694 | SLV 7 | 2.24 | Si |
| fin. | 2 | 2788 | -13157 | 44694 | SLV 7 | 3.4 | Si |
| ini. | 2 | 1053 | -20783 | 44694 | SLV 10 | 2.15 | Si |
| fin. | 2 | 83 | 13819 | 44694 | SLV 10 | 3.23 | Si |
| ini. | 2 | 2364 | -22255 | 44694 | SLV 6 | 2.01 | Si |
| fin. | 2 | 1283 | 12488 | 44694 | SLV 6 | 3.58 | Si |
| ini. | 2 | 2364 | -22255 | 44694 | SLV 5 | 2.01 | Si |
| fin. | 2 | 1283 | 12488 | 44694 | SLV 5 | 3.58 | Si |

### Verifiche a taglio delle travi in muratura secondo §C8.7.1.3.1 in combinazioni sismiche

| Sezione | γM | N | M | V | Vt | Vp | Vt fess. diag. | Vt,lim | Comb. | c.s. | Verifica |
|---|---|---|---|---|---|---|---|---|---|---|---|
| ini. | 2 | 0 | -22255 | 367 | | | 496 | 187 | SLV 5 | 0.51 | No |
| fin. | 2 | 0 | 12488 | -126 | | | 496 | 187 | SLV 5 | 1.48 | Si |
| ini. | 2 | 0 | -4282 | 377 | | | 496 | 187 | SLV 13 | 0.5 | No |
| fin. | 2 | 0 | 6396 | -91 | | | 496 | 187 | SLV 13 | 2.04 | Si |
| ini. | 2 | 0 | -20783 | 413 | | | 496 | 187 | SLV 10 | 0.45 | No |
| fin. | 2 | 0 | 13819 | -72 | | | 496 | 187 | SLV 10 | 2.6 | Si |
| ini. | 2 | 0 | 3483 | 146 | | | 496 | 187 | SLV 3 | 1.28 | Si |
| fin. | 2 | 0 | -5735 | -345 | | | 496 | 187 | SLV 3 | 0.54 | No |
| ini. | 2 | 0 | 3483 | 146 | | | 496 | 187 | SLV 4 | 1.28 | Si |
| fin. | 2 | 0 | -5735 | -345 | | | 496 | 187 | SLV 4 | 0.54 | No |
| ini. | 2 | 0 | -20783 | 413 | | | 496 | 187 | SLV 9 | 0.45 | No |
| fin. | 2 | 0 | 13819 | -72 | | | 496 | 187 | SLV 9 | 2.6 | Si |
| ini. | 2 | 0 | 19985 | 110 | | | 496 | 187 | SLV 7 | 1.69 | Si |
| fin. | 2 | 0 | -13157 | -364 | | | 496 | 187 | SLV 7 | 0.51 | No |
| ini. | 2 | 0 | -4282 | 377 | | | 496 | 187 | SLV 14 | 0.5 | No |
| fin. | 2 | 0 | 6396 | -91 | | | 496 | 187 | SLV 14 | 2.04 | Si |
| ini. | 2 | 0 | -22255 | 367 | | | 496 | 187 | SLV 6 | 0.51 | No |
| fin. | 2 | 0 | 12488 | -126 | | | 496 | 187 | SLV 6 | 1.48 | Si |
| ini. | 2 | 0 | 19985 | 110 | | | 496 | 187 | SLV 8 | 1.69 | Si |
| fin. | 2 | 0 | -13157 | -364 | | | 496 | 187 | SLV 8 | 0.51 | No |

### Tabella dei coefficienti di sicurezza minimi

| Stato limite | Coeff.s. | Comb. | Verifica |
|---|---|---|---|
| PF_SLV | 2.008 | SLV 5 | Si |
| V_SLV | 0.452 | SLV 9 | No |
| PF_SLU | 2.03 | SLU 36 | Si |
| V_SLU | 0.169 | SLU 78 | No |

## Trave di accoppiamento 152

Verifiche condotte secondo D.M. 17-01-18 (N.T.C.)

## Dati geometrici

| X ini. | Y ini. | Z ini.inf. | Z ini.sup. | H ini. | X fin. | Y fin. | Z fin.inf. | Z fin.sup | H fin. | Luce | Spessore | R. Trazione |
|---|---|---|---|---|---|---|---|---|---|---|---|---|
| -1505.8 | 140.6 | 1458 | 1564 | 106 | -1505.8 | 220.6 | 1458 | 1564 | 106 | 80 | 14 | 3500 |

## Caratteristiche del materiale

(Circolare 7 21-01-19 C8.5.I) Muratura in mattoni pieni e malta di calce LC2_Corti

| fb_ | fhk | fvk0 | fhmedio | τ0 | fv0 | μ | ϕ | fvk,lim | E | G | FC |
|---|---|---|---|---|---|---|---|---|---|---|---|
| 12 | | | 17.25 | 0.9 | 2 | 0.577 | 0.767 | 0.65 | 32000 | 12800 | 1.2 |

## Verifiche a pressoflessione delle travi in muratura in combinazioni non sismiche

| Sezione | γM | N | M | Mu | Comb. | c.s. | Verifica |
|---|---|---|---|---|---|---|---|
| ini. | 3 | 484 | 19957 | 79809 | SLU 79 | 4 | Si |
| fin. | 3 | 484 | -103708 | 79809 | SLU 79 | 0.77 | No |
| ini. | 3 | 503 | 19014 | 79809 | SLU 77 | 4.2 | Si |
| fin. | 3 | 503 | -108190 | 79809 | SLU 77 | 0.74 | No |
| ini. | 3 | 485 | 19812 | 79809 | SLU 78 | 4.03 | Si |
| fin. | 3 | 485 | -108208 | 79809 | SLU 78 | 0.74 | No |
| ini. | 3 | 444 | 18878 | 79809 | SLU 35 | 4.23 | Si |
| fin. | 3 | 444 | -98303 | 79809 | SLU 35 | 0.81 | No |
| ini. | 3 | 492 | 15318 | 79809 | SLU 74 | 5.21 | Si |
| fin. | 3 | 492 | -100073 | 79809 | SLU 74 | 0.8 | No |
| ini. | 3 | 474 | 16116 | 79809 | SLU 75 | 4.95 | Si |
| fin. | 3 | 474 | -100091 | 79809 | SLU 75 | 0.8 | No |
| ini. | 3 | 466 | 20755 | 79809 | SLU 80 | 3.85 | Si |
| fin. | 3 | 466 | -103726 | 79809 | SLU 80 | 0.77 | No |
| ini. | 3 | 509 | 17714 | 79809 | SLU 83 | 4.51 | Si |
| fin. | 3 | 509 | -101815 | 79809 | SLU 83 | 0.78 | No |
| ini. | 3 | 426 | 19676 | 79809 | SLU 36 | 4.06 | Si |
| fin. | 3 | 426 | -98321 | 79809 | SLU 36 | 0.81 | No |
| ini. | 3 | 491 | 18512 | 79809 | SLU 84 | 4.31 | Si |
| fin. | 3 | 491 | -101833 | 79809 | SLU 84 | 0.78 | No |

## Verifiche a taglio delle travi in muratura secondo §C8.7.1.3.1 in combinazioni non sismiche

| Sezione | γM | N | M | V | Vt | Vp | Vt fess. diag. | Vt,lim | Comb. | c.s. | Verifica |
|---|---|---|---|---|---|---|---|---|---|---|---|
| ini. | 3 | 0 | 19014 | -1436 | | | 572 | 215 | SLU 77 | 0.15 | No |
| fin. | 3 | 0 | -108190 | -1741 | | | 572 | 215 | SLU 77 | 0.12 | No |
| ini. | 3 | 0 | 17714 | -1340 | | | 572 | 215 | SLU 83 | 0.16 | No |
| fin. | 3 | 0 | -101815 | -1645 | | | 572 | 215 | SLU 83 | 0.13 | No |
| ini. | 3 | 0 | 18878 | -1342 | | | 572 | 215 | SLU 35 | 0.16 | No |
| fin. | 3 | 0 | -98303 | -1585 | | | 572 | 215 | SLU 35 | 0.14 | No |
| ini. | 3 | 0 | 19957 | -1392 | | | 572 | 215 | SLU 79 | 0.15 | No |
| fin. | 3 | 0 | -103708 | -1696 | | | 572 | 215 | SLU 79 | 0.13 | No |
| ini. | 3 | 0 | 20755 | -1402 | | | 572 | 215 | SLU 80 | 0.15 | No |
| fin. | 3 | 0 | -103726 | -1707 | | | 572 | 215 | SLU 80 | 0.13 | No |
| ini. | 3 | 0 | 15318 | -1288 | | | 572 | 215 | SLU 74 | 0.17 | No |
| fin. | 3 | 0 | -100073 | -1593 | | | 572 | 215 | SLU 74 | 0.14 | No |
| ini. | 3 | 0 | 19676 | -1352 | | | 572 | 215 | SLU 36 | 0.16 | No |
| fin. | 3 | 0 | -98321 | -1595 | | | 572 | 215 | SLU 36 | 0.13 | No |
| ini. | 3 | 0 | 19812 | -1446 | | | 572 | 215 | SLU 78 | 0.15 | No |
| fin. | 3 | 0 | -108208 | -1751 | | | 572 | 215 | SLU 78 | 0.12 | No |
| ini. | 3 | 0 | 18512 | -1350 | | | 572 | 215 | SLU 84 | 0.16 | No |
| fin. | 3 | 0 | -101833 | -1655 | | | 572 | 215 | SLU 84 | 0.13 | No |
| ini. | 3 | 0 | 16116 | -1298 | | | 572 | 215 | SLU 75 | 0.17 | No |
| fin. | 3 | 0 | -100091 | -1603 | | | 572 | 215 | SLU 75 | 0.13 | No |

## Verifiche a pressoflessione delle travi in muratura in combinazioni sismiche

| Sezione | γM | N | M | Mu | Comb. | c.s. | Verifica |
|---|---|---|---|---|---|---|---|
| ini. | 2 | -606 | 15564 | 113889 | SLD 8 | 7.32 | Si |
| fin. | 2 | -298 | -100447 | 113889 | SLD 8 | 1.13 | Si |
| ini. | 2 | -1765 | 29441 | 113889 | SLV 11 | 3.87 | Si |
| fin. | 2 | -1147 | -173111 | 113889 | SLV 11 | 0.66 | No |
| ini. | 2 | -1976 | 28429 | 113889 | SLV 8 | 4.01 | Si |
| fin. | 2 | -1219 | -162503 | 113889 | SLV 8 | 0.7 | No |
| ini. | 2 | -1765 | 29441 | 113889 | SLV 12 | 3.87 | Si |
| fin. | 2 | -1147 | -173111 | 113889 | SLV 12 | 0.66 | No |
| ini. | 2 | 3 | 15368 | 113889 | SLV 16 | 7.41 | Si |
| fin. | 2 | -21 | -108046 | 113889 | SLV 16 | 1.05 | Si |
| ini. | 2 | -522 | 15994 | 113889 | SLD 11 | 7.12 | Si |
| fin. | 2 | -268 | -104881 | 113889 | SLD 11 | 1.09 | Si |
| ini. | 2 | 3 | 15368 | 113889 | SLV 15 | 7.41 | Si |
| fin. | 2 | -21 | -108046 | 113889 | SLV 15 | 1.05 | Si |
| ini. | 2 | -1976 | 28429 | 113889 | SLV 7 | 4.01 | Si |
| fin. | 2 | -1219 | -162503 | 113889 | SLV 7 | 0.7 | No |
| ini. | 2 | -606 | 15564 | 113889 | SLD 7 | 7.32 | Si |
| fin. | 2 | -298 | -100447 | 113889 | SLD 7 | 1.13 | Si |
| ini. | 2 | -522 | 15994 | 113889 | SLD 12 | 7.12 | Si |
| fin. | 2 | -268 | -104881 | 113889 | SLD 12 | 1.09 | Si |

## Verifiche a taglio delle travi in muratura secondo §C8.7.1.3.1 in combinazioni sismiche

| Sezione | γM | N | M | V | Vt | Vp | Vt fess. diag. | Vt,lim | Comb. | c.s. | Verifica |
|---|---|---|---|---|---|---|---|---|---|---|---|
| ini. | 2 | 0 | 15564 | -1260 | | | 857 | 323 | SLD 7 | 0.26 | No |
| fin. | 2 | 0 | -100447 | -1496 | | | 857 | 323 | SLD 7 | 0.22 | No |
| ini. | 2 | 0 | 15564 | -1260 | | | 857 | 323 | SLD 8 | 0.26 | No |
| fin. | 2 | 0 | -100447 | -1496 | | | 857 | 323 | SLD 8 | 0.22 | No |
| ini. | 2 | 0 | 28429 | -2110 | | | 857 | 323 | SLV 8 | 0.15 | No |
| fin. | 2 | 0 | -162503 | -2344 | | | 857 | 323 | SLV 8 | 0.14 | No |
| ini. | 2 | 0 | 15994 | -1337 | | | 857 | 323 | SLD 12 | 0.24 | No |

| Sezione | γM | N | M | V | Vt | Vp | Vt fess. diag. | Vt,lim | Comb. | c.s. | Verifica |
|---|---|---|---|---|---|---|---|---|---|---|---|
| fin. | 2 | 0 | -104881 | -1550 | | | 857 | 323 | SLD 12 | 0.21 | No |
| ini. | 2 | 0 | 15368 | -1453 | | | 857 | 323 | SLV 15 | 0.22 | No |
| fin. | 2 | 0 | -108046 | -1580 | | | 857 | 323 | SLV 15 | 0.2 | No |
| ini. | 2 | 0 | 28429 | -2110 | | | 857 | 323 | SLV 7 | 0.15 | No |
| fin. | 2 | 0 | -162503 | -2344 | | | 857 | 323 | SLV 7 | 0.14 | No |
| ini. | 2 | 0 | 29441 | -2296 | | | 857 | 323 | SLV 12 | 0.14 | No |
| fin. | 2 | 0 | -173111 | -2473 | | | 857 | 323 | SLV 12 | 0.13 | No |
| ini. | 2 | 0 | 29441 | -2296 | | | 857 | 323 | SLV 11 | 0.14 | No |
| fin. | 2 | 0 | -173111 | -2473 | | | 857 | 323 | SLV 11 | 0.13 | No |
| ini. | 2 | 0 | 15368 | -1453 | | | 857 | 323 | SLV 16 | 0.22 | No |
| fin. | 2 | 0 | -108046 | -1580 | | | 857 | 323 | SLV 16 | 0.2 | No |
| ini. | 2 | 0 | 15994 | -1337 | | | 857 | 323 | SLD 11 | 0.24 | No |
| fin. | 2 | 0 | -104881 | -1550 | | | 857 | 323 | SLD 11 | 0.21 | No |

### Tabella dei coefficienti di sicurezza minimi

| Stato limite | Coeff.s. | Comb. | Verifica |
|---|---|---|---|
| PF_SLV | 0.658 | SLV 11 | No |
| V_SLV | 0.13 | SLV 11 | No |
| PF_SLU | 0.738 | SLU 78 | No |
| V_SLU | 0.123 | SLU 78 | No |

## Trave di accoppiamento 153

Verifiche condotte secondo D.M. 17-01-18 (N.T.C.)

### Dati geometrici

| X ini. | Y ini. | Z ini.inf. | Z ini.sup. | H ini. | X fin. | Y fin. | Z fin.inf. | Z fin.sup | H fin. | Luce | Spessore | R. Trazione |
|---|---|---|---|---|---|---|---|---|---|---|---|---|
| -1375.3 | -22.8 | 1458 | 1564 | 106 | -1375.3 | 67.2 | 1458 | 1564 | 106 | 90 | 28 | 3500 |

### Caratteristiche del materiale

(Circolare 7 21-01-19 C8.5.I) Muratura in mattoni pieni e malta di calce LC2_Corti

| fb_ | fhk | fvk0 | fhmedio | τ0 | fv0 | μ | ϕ | fvk,lim | E | G | FC |
|---|---|---|---|---|---|---|---|---|---|---|---|
| 12 | | | 17.25 | 0.9 | 2 | 0.577 | 0.767 | 0.65 | 32000 | 12800 | 1.2 |

### Verifiche a pressoflessione delle travi in muratura in combinazioni non sismiche

| Sezione | γM | N | M | Mu | Comb. | c.s. | Verifica |
|---|---|---|---|---|---|---|---|
| ini. | 3 | 60 | 367744 | 131792 | SLU 74 | 0.36 | No |
| fin. | 3 | 61 | 109734 | 131792 | SLU 74 | 1.2 | Si |
| ini. | 3 | 62 | 376411 | 131792 | SLU 84 | 0.35 | No |
| fin. | 3 | 63 | 111837 | 131792 | SLU 84 | 1.18 | Si |
| ini. | 3 | 107 | 365105 | 131792 | SLU 79 | 0.36 | No |
| fin. | 3 | 107 | 109689 | 131792 | SLU 79 | 1.2 | Si |
| ini. | 3 | 22 | 377708 | 131792 | SLU 82 | 0.35 | No |
| fin. | 3 | 23 | 111697 | 131792 | SLU 82 | 1.18 | Si |
| ini. | 3 | 94 | 364908 | 131792 | SLU 78 | 0.36 | No |
| fin. | 3 | 94 | 109115 | 131792 | SLU 78 | 1.21 | Si |
| ini. | 3 | 16 | 365131 | 131792 | SLU 73 | 0.36 | No |
| fin. | 3 | 17 | 108143 | 131792 | SLU 73 | 1.22 | Si |
| ini. | 3 | 100 | 366448 | 131792 | SLU 77 | 0.36 | No |
| fin. | 3 | 101 | 109874 | 131792 | SLU 77 | 1.2 | Si |
| ini. | 3 | 68 | 377951 | 131792 | SLU 83 | 0.35 | No |
| fin. | 3 | 69 | 112596 | 131792 | SLU 83 | 1.17 | Si |
| ini. | 3 | 54 | 366204 | 131792 | SLU 75 | 0.36 | No |
| fin. | 3 | 54 | 108975 | 131792 | SLU 75 | 1.21 | Si |
| ini. | 3 | 28 | 379248 | 131792 | SLU 81 | 0.35 | No |
| fin. | 3 | 29 | 112455 | 131792 | SLU 81 | 1.17 | Si |

### Verifiche a taglio delle travi in muratura secondo §C8.7.1.3.1 in combinazioni non sismiche

| Sezione | γM | N | M | V | Vt | Vp | Vt fess. diag. | Vt,lim | Comb. | c.s. | Verifica |
|---|---|---|---|---|---|---|---|---|---|---|---|
| ini. | 3 | 0 | 376411 | -2590 | | | 1143 | 430 | SLU 84 | 0.17 | No |
| fin. | 3 | 0 | 111837 | -3191 | | | 1143 | 430 | SLU 84 | 0.13 | No |
| ini. | 3 | 0 | 367744 | -2517 | | | 1143 | 430 | SLU 74 | 0.17 | No |
| fin. | 3 | 0 | 109734 | -3118 | | | 1143 | 430 | SLU 74 | 0.14 | No |
| ini. | 3 | 0 | 366204 | -2508 | | | 1143 | 430 | SLU 75 | 0.17 | No |
| fin. | 3 | 0 | 108975 | -3109 | | | 1143 | 430 | SLU 75 | 0.14 | No |
| ini. | 3 | 0 | 379248 | -2614 | | | 1143 | 430 | SLU 81 | 0.16 | No |
| fin. | 3 | 0 | 112455 | -3216 | | | 1143 | 430 | SLU 81 | 0.13 | No |
| ini. | 3 | 0 | 365131 | -2505 | | | 1143 | 430 | SLU 73 | 0.17 | No |
| fin. | 3 | 0 | 108143 | -3107 | | | 1143 | 430 | SLU 73 | 0.14 | No |
| ini. | 3 | 0 | 377708 | -2606 | | | 1143 | 430 | SLU 82 | 0.17 | No |
| fin. | 3 | 0 | 111697 | -3207 | | | 1143 | 430 | SLU 82 | 0.13 | No |
| ini. | 3 | 0 | 377951 | -2598 | | | 1143 | 430 | SLU 83 | 0.17 | No |
| fin. | 3 | 0 | 112596 | -3200 | | | 1143 | 430 | SLU 83 | 0.13 | No |
| ini. | 3 | 0 | 363835 | -2489 | | | 1143 | 430 | SLU 76 | 0.17 | No |
| fin. | 3 | 0 | 108284 | -3091 | | | 1143 | 430 | SLU 76 | 0.14 | No |
| ini. | 3 | 0 | 364908 | -2492 | | | 1143 | 430 | SLU 78 | 0.17 | No |
| fin. | 3 | 0 | 109115 | -3093 | | | 1143 | 430 | SLU 78 | 0.14 | No |
| ini. | 3 | 0 | 366448 | -2501 | | | 1143 | 430 | SLU 77 | 0.17 | No |
| fin. | 3 | 0 | 109874 | -3102 | | | 1143 | 430 | SLU 77 | 0.14 | No |

### Verifiche a pressoflessione delle travi in muratura in combinazioni sismiche

| Sezione | γM | N | M | Mu | Comb. | c.s. | Verifica |
|---|---|---|---|---|---|---|---|
| ini. | 2 | 69 | 376123 | 149694 | SLV 16 | 0.4 | No |
| fin. | 2 | -885 | 59560 | 149694 | SLV 16 | 2.51 | Si |

| Sezione | γM | N | M | Mu | Comb. | c.s. | Verifica |
|---|---|---|---|---|---|---|---|
| ini. | 2 | -95 | 419256 | 149694 | SLV 13 | 0.36 | No |
| fin. | 2 | -572 | 91767 | 149694 | SLV 13 | 1.63 | Si |
| ini. | 2 | 33 | 313668 | 149694 | SLD 16 | 0.48 | No |
| fin. | 2 | -340 | 72836 | 149694 | SLD 16 | 2.06 | Si |
| ini. | 2 | -267 | 377609 | 149694 | SLV 10 | 0.4 | No |
| fin. | 2 | 313 | 132160 | 149694 | SLV 10 | 1.13 | Si |
| ini. | 2 | -30 | 330818 | 149694 | SLD 14 | 0.45 | No |
| fin. | 2 | -216 | 85507 | 149694 | SLD 14 | 1.75 | Si |
| ini. | 2 | -267 | 377609 | 149694 | SLV 9 | 0.4 | No |
| fin. | 2 | 313 | 132160 | 149694 | SLV 9 | 1.13 | Si |
| ini. | 2 | 33 | 313668 | 149694 | SLD 15 | 0.48 | No |
| fin. | 2 | -340 | 72836 | 149694 | SLD 15 | 2.06 | Si |
| ini. | 2 | 69 | 376123 | 149694 | SLV 15 | 0.4 | No |
| fin. | 2 | -885 | 59560 | 149694 | SLV 15 | 2.51 | Si |
| ini. | 2 | -95 | 419256 | 149694 | SLV 14 | 0.36 | No |
| fin. | 2 | -572 | 91767 | 149694 | SLV 14 | 1.63 | Si |
| ini. | 2 | -30 | 330818 | 149694 | SLD 13 | 0.45 | No |
| fin. | 2 | -216 | 85507 | 149694 | SLD 13 | 1.75 | Si |

### Verifiche a taglio delle travi in muratura secondo §C8.7.1.3.1 in combinazioni sismiche

| Sezione | γM | N | M | V | Vt | Vp | Vt fess. diag. | Vt,lim | Comb. | c.s. | Verifica |
|---|---|---|---|---|---|---|---|---|---|---|---|
| ini. | 2 | 0 | 376123 | -2726 | | | 1715 | 645 | SLV 16 | 0.24 | No |
| fin. | 2 | 0 | 59560 | -3185 | | | 1715 | 645 | SLV 16 | 0.2 | No |
| ini. | 2 | 0 | 330818 | -2352 | | | 1715 | 645 | SLD 13 | 0.27 | No |
| fin. | 2 | 0 | 85507 | -2813 | | | 1715 | 645 | SLD 13 | 0.23 | No |
| ini. | 2 | 0 | 377609 | -2756 | | | 1715 | 645 | SLV 10 | 0.23 | No |
| fin. | 2 | 0 | 132160 | -3227 | | | 1715 | 645 | SLV 10 | 0.2 | No |
| ini. | 2 | 0 | 419256 | -3097 | | | 1715 | 645 | SLV 14 | 0.21 | No |
| fin. | 2 | 0 | 91767 | -3562 | | | 1715 | 645 | SLV 14 | 0.18 | No |
| ini. | 2 | 0 | 313668 | -2205 | | | 1715 | 645 | SLD 16 | 0.29 | No |
| fin. | 2 | 0 | 72836 | -2664 | | | 1715 | 645 | SLD 16 | 0.24 | No |
| ini. | 2 | 0 | 313668 | -2205 | | | 1715 | 645 | SLD 15 | 0.29 | No |
| fin. | 2 | 0 | 72836 | -2664 | | | 1715 | 645 | SLD 15 | 0.24 | No |
| ini. | 2 | 0 | 330818 | -2352 | | | 1715 | 645 | SLD 14 | 0.27 | No |
| fin. | 2 | 0 | 85507 | -2813 | | | 1715 | 645 | SLD 14 | 0.23 | No |
| ini. | 2 | 0 | 376123 | -2726 | | | 1715 | 645 | SLV 15 | 0.24 | No |
| fin. | 2 | 0 | 59560 | -3185 | | | 1715 | 645 | SLV 15 | 0.2 | No |
| ini. | 2 | 0 | 419256 | -3097 | | | 1715 | 645 | SLV 13 | 0.21 | No |
| fin. | 2 | 0 | 91767 | -3562 | | | 1715 | 645 | SLV 13 | 0.18 | No |
| ini. | 2 | 0 | 377609 | -2756 | | | 1715 | 645 | SLV 9 | 0.23 | No |
| fin. | 2 | 0 | 132160 | -3227 | | | 1715 | 645 | SLV 9 | 0.2 | No |

### Tabella dei coefficienti di sicurezza minimi

| Stato limite | Coeff.s. | Comb. | Verifica |
|---|---|---|---|
| PF_SLV | 0.357 | SLV 13 | No |
| V_SLV | 0.181 | SLV 13 | No |
| PF_SLU | 0.348 | SLU 81 | No |
| V_SLU | 0.134 | SLU 81 | No |

## Trave di accoppiamento 154

Verifiche condotte secondo D.M. 17-01-18 (N.T.C.)

### Dati geometrici

| X ini. | Y ini. | Z ini.inf. | Z ini.sup. | H ini. | X fin. | Y fin. | Z fin.inf. | Z fin.sup | H fin. | Luce | Spessore | R. Trazione |
|---|---|---|---|---|---|---|---|---|---|---|---|---|
| -1375.3 | -22.8 | 1458 | 1564 | 106 | -1375.3 | 67.2 | 1458 | 1564 | 106 | 90 | 28 | 3500 |

### Caratteristiche del materiale

(Circolare 7 21-01-19 C8.5.I) Muratura in mattoni pieni e malta di calce LC2_Corti

| fb_ | fhk | fvk0 | fhmedio | τ0 | fv0 | μ | ϕ | fvk,lim | E | G | FC |
|---|---|---|---|---|---|---|---|---|---|---|---|
| 12 | | | 17.25 | 0.9 | 2 | 0.577 | 0.767 | 0.65 | 32000 | 12800 | 1.2 |

### Verifiche a pressoflessione delle travi in muratura in combinazioni non sismiche

| Sezione | γM | N | M | Mu | Comb. | c.s. | Verifica |
|---|---|---|---|---|---|---|---|
| ini. | 3 | 29 | 379269 | 131792 | SLU 81 | 0.35 | No |
| fin. | 3 | 28 | 112408 | 131792 | SLU 81 | 1.17 | Si |
| ini. | 3 | 107 | 365126 | 131792 | SLU 79 | 0.36 | No |
| fin. | 3 | 107 | 109643 | 131792 | SLU 79 | 1.2 | Si |
| ini. | 3 | 54 | 366225 | 131792 | SLU 75 | 0.36 | No |
| fin. | 3 | 54 | 108929 | 131792 | SLU 75 | 1.21 | Si |
| ini. | 3 | 94 | 364928 | 131792 | SLU 78 | 0.36 | No |
| fin. | 3 | 94 | 109070 | 131792 | SLU 78 | 1.21 | Si |
| ini. | 3 | 61 | 367765 | 131792 | SLU 74 | 0.36 | No |
| fin. | 3 | 60 | 109688 | 131792 | SLU 74 | 1.2 | Si |
| ini. | 3 | 17 | 365152 | 131792 | SLU 73 | 0.36 | No |
| fin. | 3 | 16 | 108098 | 131792 | SLU 73 | 1.22 | Si |
| ini. | 3 | 101 | 366468 | 131792 | SLU 77 | 0.36 | No |
| fin. | 3 | 100 | 109828 | 131792 | SLU 77 | 1.2 | Si |
| ini. | 3 | 63 | 376432 | 131792 | SLU 84 | 0.35 | No |
| fin. | 3 | 62 | 111790 | 131792 | SLU 84 | 1.18 | Si |
| ini. | 3 | 69 | 377972 | 131792 | SLU 83 | 0.35 | No |
| fin. | 3 | 68 | 112549 | 131792 | SLU 83 | 1.17 | Si |
| ini. | 3 | 23 | 377729 | 131792 | SLU 82 | 0.35 | No |
| fin. | 3 | 22 | 111649 | 131792 | SLU 82 | 1.18 | Si |

### Verifiche a taglio delle travi in muratura secondo §C8.7.1.3.1 in combinazioni non sismiche

| Sezione | γM | N | M | V | Vt | Vp | Vt fess. diag. | Vt,lim | Comb. | c.s. | Verifica |
|---|---|---|---|---|---|---|---|---|---|---|---|
| ini. | 3 | 0 | 367765 | -2517 | | | 1143 | 430 | SLU 74 | 0.17 | No |
| fin. | 3 | 0 | 109688 | -3120 | | | 1143 | 430 | SLU 74 | 0.14 | No |
| ini. | 3 | 0 | 377972 | -2599 | | | 1143 | 430 | SLU 83 | 0.17 | No |
| fin. | 3 | 0 | 112549 | -3202 | | | 1143 | 430 | SLU 83 | 0.13 | No |
| ini. | 3 | 0 | 366468 | -2501 | | | 1143 | 430 | SLU 77 | 0.17 | No |
| fin. | 3 | 0 | 109828 | -3104 | | | 1143 | 430 | SLU 77 | 0.14 | No |
| ini. | 3 | 0 | 363855 | -2490 | | | 1143 | 430 | SLU 76 | 0.17 | No |
| fin. | 3 | 0 | 108238 | -3093 | | | 1143 | 430 | SLU 76 | 0.14 | No |
| ini. | 3 | 0 | 365152 | -2506 | | | 1143 | 430 | SLU 73 | 0.17 | No |
| fin. | 3 | 0 | 108098 | -3109 | | | 1143 | 430 | SLU 73 | 0.14 | No |
| ini. | 3 | 0 | 377729 | -2606 | | | 1143 | 430 | SLU 82 | 0.17 | No |
| fin. | 3 | 0 | 111649 | -3209 | | | 1143 | 430 | SLU 82 | 0.13 | No |
| ini. | 3 | 0 | 379269 | -2614 | | | 1143 | 430 | SLU 81 | 0.16 | No |
| fin. | 3 | 0 | 112408 | -3218 | | | 1143 | 430 | SLU 81 | 0.13 | No |
| ini. | 3 | 0 | 366225 | -2508 | | | 1143 | 430 | SLU 75 | 0.17 | No |
| fin. | 3 | 0 | 108929 | -3112 | | | 1143 | 430 | SLU 75 | 0.14 | No |
| ini. | 3 | 0 | 376432 | -2590 | | | 1143 | 430 | SLU 84 | 0.17 | No |
| fin. | 3 | 0 | 111790 | -3193 | | | 1143 | 430 | SLU 84 | 0.13 | No |
| ini. | 3 | 0 | 364928 | -2492 | | | 1143 | 430 | SLU 78 | 0.17 | No |
| fin. | 3 | 0 | 109070 | -3096 | | | 1143 | 430 | SLU 78 | 0.14 | No |

### Verifiche a pressoflessione delle travi in muratura in combinazioni sismiche

| Sezione | γM | N | M | Mu | Comb. | c.s. | Verifica |
|---|---|---|---|---|---|---|---|
| ini. | 2 | -27 | 330851 | 149694 | SLD 14 | 0.45 | No |
| fin. | 2 | -219 | 85433 | 149694 | SLD 14 | 1.75 | Si |
| ini. | 2 | -255 | 377711 | 149694 | SLV 9 | 0.4 | No |
| fin. | 2 | 307 | 132067 | 149694 | SLV 9 | 1.13 | Si |
| ini. | 2 | 33 | 313678 | 149694 | SLD 15 | 0.48 | No |
| fin. | 2 | -342 | 72767 | 149694 | SLD 15 | 2.06 | Si |
| ini. | 2 | -27 | 330851 | 149694 | SLD 13 | 0.45 | No |
| fin. | 2 | -219 | 85433 | 149694 | SLD 13 | 1.75 | Si |
| ini. | 2 | 68 | 376126 | 149694 | SLV 16 | 0.4 | No |
| fin. | 2 | -889 | 59434 | 149694 | SLV 16 | 2.52 | Si |
| ini. | 2 | 33 | 313678 | 149694 | SLD 16 | 0.48 | No |
| fin. | 2 | -342 | 72767 | 149694 | SLD 16 | 2.06 | Si |
| ini. | 2 | -255 | 377711 | 149694 | SLV 10 | 0.4 | No |
| fin. | 2 | 307 | 132067 | 149694 | SLV 10 | 1.13 | Si |
| ini. | 2 | -89 | 419309 | 149694 | SLV 14 | 0.36 | No |
| fin. | 2 | -579 | 91623 | 149694 | SLV 14 | 1.63 | Si |
| ini. | 2 | 68 | 376126 | 149694 | SLV 15 | 0.4 | No |
| fin. | 2 | -889 | 59434 | 149694 | SLV 15 | 2.52 | Si |
| ini. | 2 | -89 | 419309 | 149694 | SLV 13 | 0.36 | No |
| fin. | 2 | -579 | 91623 | 149694 | SLV 13 | 1.63 | Si |

### Verifiche a taglio delle travi in muratura secondo §C8.7.1.3.1 in combinazioni sismiche

| Sezione | γM | N | M | V | Vt | Vp | Vt fess. diag. | Vt,lim | Comb. | c.s. | Verifica |
|---|---|---|---|---|---|---|---|---|---|---|---|
| ini. | 2 | 0 | 330851 | -2352 | | | 1715 | 645 | SLD 13 | 0.27 | No |
| fin. | 2 | 0 | 85433 | -2815 | | | 1715 | 645 | SLD 13 | 0.23 | No |
| ini. | 2 | 0 | 419309 | -3097 | | | 1715 | 645 | SLV 14 | 0.21 | No |
| fin. | 2 | 0 | 91623 | -3565 | | | 1715 | 645 | SLV 14 | 0.18 | No |
| ini. | 2 | 0 | 313678 | -2205 | | | 1715 | 645 | SLD 15 | 0.29 | No |
| fin. | 2 | 0 | 72767 | -2666 | | | 1715 | 645 | SLD 15 | 0.24 | No |
| ini. | 2 | 0 | 377711 | -2757 | | | 1715 | 645 | SLV 9 | 0.23 | No |
| fin. | 2 | 0 | 132067 | -3229 | | | 1715 | 645 | SLV 9 | 0.2 | No |
| ini. | 2 | 0 | 377711 | -2757 | | | 1715 | 645 | SLV 10 | 0.23 | No |
| fin. | 2 | 0 | 132067 | -3229 | | | 1715 | 645 | SLV 10 | 0.2 | No |
| ini. | 2 | 0 | 376126 | -2726 | | | 1715 | 645 | SLV 15 | 0.24 | No |
| fin. | 2 | 0 | 59434 | -3187 | | | 1715 | 645 | SLV 15 | 0.2 | No |
| ini. | 2 | 0 | 313678 | -2205 | | | 1715 | 645 | SLD 16 | 0.29 | No |
| fin. | 2 | 0 | 72767 | -2666 | | | 1715 | 645 | SLD 16 | 0.24 | No |
| ini. | 2 | 0 | 330851 | -2352 | | | 1715 | 645 | SLD 14 | 0.27 | No |
| fin. | 2 | 0 | 85433 | -2815 | | | 1715 | 645 | SLD 14 | 0.23 | No |
| ini. | 2 | 0 | 419309 | -3097 | | | 1715 | 645 | SLV 13 | 0.21 | No |
| fin. | 2 | 0 | 91623 | -3565 | | | 1715 | 645 | SLV 13 | 0.18 | No |
| ini. | 2 | 0 | 376126 | -2726 | | | 1715 | 645 | SLV 16 | 0.24 | No |
| fin. | 2 | 0 | 59434 | -3187 | | | 1715 | 645 | SLV 16 | 0.2 | No |

### Tabella dei coefficienti di sicurezza minimi

| Stato limite | Coeff.s. | Comb. | Verifica |
|---|---|---|---|
| PF_SLV | 0.357 | SLV 13 | No |
| V_SLV | 0.181 | SLV 13 | No |
| PF_SLU | 0.347 | SLU 81 | No |
| V_SLU | 0.134 | SLU 81 | No |

## Trave di accoppiamento 155

Verifiche condotte secondo D.M. 17-01-18 (N.T.C.)

### Dati geometrici

| X ini. | Y ini. | Z ini.inf. | Z ini.sup. | H ini. | X fin. | Y fin. | Z fin.inf. | Z fin.sup | H fin. | Luce | Spessore | R. Trazione |
|---|---|---|---|---|---|---|---|---|---|---|---|---|
| -1771.8 | 666.1 | 1248 | 1338 | 90 | -1681.8 | 666.1 | 1248 | 1338 | 90 | 90 | 28 | 3500 |

## Caratteristiche del materiale

(Circolare 7 21-01-19 C8.5.I) Muratura in mattoni pieni e malta di calce LC2_Corti

| fb_ | fhk | fvk0 | fhmedio | τ0 | fv0 | μ | ϕ | fvk,lim | E | G | FC |
|---|---|---|---|---|---|---|---|---|---|---|---|
| 12 | | | 17.25 | 0.9 | 2 | 0.577 | 0.767 | 0.65 | 32000 | 12800 | 1.2 |

## Verifiche a pressoflessione delle travi in muratura in combinazioni non sismiche

| Sezione | γM | N | M | Mu | Comb. | c.s. | Verifica |
|---|---|---|---|---|---|---|---|
| ini. | 3 | 1433 | -8892 | 103792 | SLU 29 | 11.67 | Si |
| fin. | 3 | 950 | -5466 | 103792 | SLU 29 | 18.99 | Si |
| ini. | 3 | 1486 | -8397 | 103792 | SLU 80 | 12.36 | Si |
| fin. | 3 | 1017 | -5054 | 103792 | SLU 80 | 20.54 | Si |
| ini. | 3 | 1464 | -8600 | 103792 | SLU 72 | 12.07 | Si |
| fin. | 3 | 973 | -5128 | 103792 | SLU 72 | 20.24 | Si |
| ini. | 3 | 1469 | -9157 | 103792 | SLU 38 | 11.33 | Si |
| fin. | 3 | 988 | -5195 | 103792 | SLU 38 | 19.98 | Si |
| ini. | 3 | 1396 | -8518 | 103792 | SLU 28 | 12.19 | Si |
| fin. | 3 | 929 | -5148 | 103792 | SLU 28 | 20.16 | Si |
| ini. | 3 | 1447 | -9360 | 103792 | SLU 30 | 11.09 | Si |
| fin. | 3 | 943 | -5270 | 103792 | SLU 30 | 19.7 | Si |
| ini. | 3 | 1418 | -8314 | 103792 | SLU 36 | 12.48 | Si |
| fin. | 3 | 974 | -5074 | 103792 | SLU 36 | 20.46 | Si |
| ini. | 3 | 1449 | -8131 | 103792 | SLU 71 | 12.76 | Si |
| fin. | 3 | 979 | -5324 | 103792 | SLU 71 | 19.49 | Si |
| ini. | 3 | 1455 | -8688 | 103792 | SLU 37 | 11.95 | Si |
| fin. | 3 | 994 | -5391 | 103792 | SLU 37 | 19.25 | Si |
| ini. | 3 | 1382 | -8049 | 103792 | SLU 27 | 12.89 | Si |
| fin. | 3 | 935 | -5344 | 103792 | SLU 27 | 19.42 | Si |

## Verifiche a taglio delle travi in muratura secondo §C8.7.1.3.1 in combinazioni non sismiche

| Sezione | γM | N | M | V | Vt | Vp | Vt fess. diag. | Vt,lim | Comb. | c.s. | Verifica |
|---|---|---|---|---|---|---|---|---|---|---|---|
| ini. | 3 | 0 | -8314 | 431 | | | 970 | 365 | SLU 36 | 0.85 | No |
| fin. | 3 | 0 | -5074 | 118 | | | 970 | 365 | SLU 36 | 3.1 | Si |
| ini. | 3 | 0 | -7928 | 426 | | | 970 | 365 | SLU 79 | 0.86 | No |
| fin. | 3 | 0 | -5250 | 123 | | | 970 | 365 | SLU 79 | 2.96 | Si |
| ini. | 3 | 0 | -7543 | 389 | | | 970 | 365 | SLU 17 | 0.94 | No |
| fin. | 3 | 0 | -4449 | 128 | | | 970 | 365 | SLU 17 | 2.85 | Si |
| ini. | 3 | 0 | -7846 | 412 | | | 970 | 365 | SLU 35 | 0.89 | No |
| fin. | 3 | 0 | -5270 | 100 | | | 970 | 365 | SLU 35 | 3.65 | Si |
| ini. | 3 | 0 | -8892 | 433 | | | 970 | 365 | SLU 29 | 0.84 | No |
| fin. | 3 | 0 | -5466 | 175 | | | 970 | 365 | SLU 29 | 2.09 | Si |
| ini. | 3 | 0 | -8397 | 445 | | | 970 | 365 | SLU 80 | 0.82 | No |
| fin. | 3 | 0 | -5054 | 141 | | | 970 | 365 | SLU 80 | 2.59 | Si |
| ini. | 3 | 0 | -6144 | 131 | | | 970 | 365 | SLU 49 | 2.79 | Si |
| fin. | 3 | 0 | -4261 | 391 | | | 970 | 365 | SLU 49 | 0.93 | No |
| ini. | 3 | 0 | -9157 | 528 | | | 970 | 365 | SLU 38 | 0.69 | No |
| fin. | 3 | 0 | -5195 | 63 | | | 970 | 365 | SLU 38 | 5.81 | Si |
| ini. | 3 | 0 | -9360 | 451 | | | 970 | 365 | SLU 30 | 0.81 | No |
| fin. | 3 | 0 | -5270 | 192 | | | 970 | 365 | SLU 30 | 1.9 | Si |
| ini. | 3 | 0 | -8688 | 510 | | | 970 | 365 | SLU 37 | 0.72 | No |
| fin. | 3 | 0 | -5391 | 45 | | | 970 | 365 | SLU 37 | 8.11 | Si |

## Verifiche a pressoflessione delle travi in muratura in combinazioni sismiche

| Sezione | γM | N | M | Mu | Comb. | c.s. | Verifica |
|---|---|---|---|---|---|---|---|
| ini. | 2 | 1699 | -40634 | 121694 | SLV 8 | 2.99 | Si |
| fin. | 2 | 334 | 9795 | 121694 | SLV 8 | 12.42 | Si |
| ini. | 2 | -1699 | 50966 | 121694 | SLV 14 | 2.39 | Si |
| fin. | 2 | 899 | -18243 | 121694 | SLV 14 | 6.67 | Si |
| ini. | 2 | -950 | 41208 | 121694 | SLV 10 | 2.95 | Si |
| fin. | 2 | 314 | -10942 | 121694 | SLV 10 | 11.12 | Si |
| ini. | 2 | -950 | 41208 | 121694 | SLV 9 | 2.95 | Si |
| fin. | 2 | 314 | -10942 | 121694 | SLV 9 | 11.12 | Si |
| ini. | 2 | 1699 | -40634 | 121694 | SLV 7 | 2.99 | Si |
| fin. | 2 | 334 | 9795 | 121694 | SLV 7 | 12.42 | Si |
| ini. | 2 | -1235 | 34009 | 121694 | SLV 16 | 3.58 | Si |
| fin. | 2 | 1020 | -14901 | 121694 | SLV 16 | 8.17 | Si |
| ini. | 2 | -1235 | 34009 | 121694 | SLV 15 | 3.58 | Si |
| fin. | 2 | 1020 | -14901 | 121694 | SLV 15 | 8.17 | Si |
| ini. | 2 | -1699 | 50966 | 121694 | SLV 13 | 2.39 | Si |
| fin. | 2 | 899 | -18243 | 121694 | SLV 13 | 6.67 | Si |
| ini. | 2 | 2447 | -50392 | 121694 | SLV 3 | 2.41 | Si |
| fin. | 2 | -252 | 17095 | 121694 | SLV 3 | 7.12 | Si |
| ini. | 2 | 2447 | -50392 | 121694 | SLV 4 | 2.41 | Si |
| fin. | 2 | -252 | 17095 | 121694 | SLV 4 | 7.12 | Si |

## Verifiche a taglio delle travi in muratura secondo §C8.7.1.3.1 in combinazioni sismiche

| Sezione | γM | N | M | V | Vt | Vp | Vt fess. diag. | Vt,lim | Comb. | c.s. | Verifica |
|---|---|---|---|---|---|---|---|---|---|---|---|
| ini. | 2 | 0 | 50966 | -2091 | | | 1456 | 548 | SLV 13 | 0.26 | No |
| fin. | 2 | 0 | -18243 | -2053 | | | 1456 | 548 | SLV 13 | 0.27 | No |
| ini. | 2 | 0 | -33436 | 1529 | | | 1456 | 548 | SLV 2 | 0.36 | No |
| fin. | 2 | 0 | 13754 | 1736 | | | 1456 | 548 | SLV 2 | 0.32 | No |
| ini. | 2 | 0 | -40634 | 1234 | | | 1456 | 548 | SLV 7 | 0.44 | No |
| fin. | 2 | 0 | 9795 | 1662 | | | 1456 | 548 | SLV 7 | 0.33 | No |
| ini. | 2 | 0 | -40634 | 1234 | | | 1456 | 548 | SLV 8 | 0.44 | No |
| fin. | 2 | 0 | 9795 | 1662 | | | 1456 | 548 | SLV 8 | 0.33 | No |
| ini. | 2 | 0 | -50392 | 1978 | | | 1456 | 548 | SLV 4 | 0.28 | No |
| fin. | 2 | 0 | 17095 | 2314 | | | 1456 | 548 | SLV 4 | 0.24 | No |
| ini. | 2 | 0 | 50966 | -2091 | | | 1456 | 548 | SLV 14 | 0.26 | No |

| Sezione | γM | N | M | V | Vt | Vp | Vt fess. diag. | Vt,lim | Comb. | c.s. | Verifica |
|---|---|---|---|---|---|---|---|---|---|---|---|
| fin. | 2 | 0 | -18243 | -2053 | | | 1456 | 548 | SLV 14 | 0.27 | No |
| ini. | 2 | 0 | -50392 | 1978 | | | 1456 | 548 | SLV 3 | 0.28 | No |
| fin. | 2 | 0 | 17095 | 2314 | | | 1456 | 548 | SLV 3 | 0.24 | No |
| ini. | 2 | 0 | -33436 | 1529 | | | 1456 | 548 | SLV 1 | 0.36 | No |
| fin. | 2 | 0 | 13754 | 1736 | | | 1456 | 548 | SLV 1 | 0.32 | No |
| ini. | 2 | 0 | 34009 | -1643 | | | 1456 | 548 | SLV 16 | 0.33 | No |
| fin. | 2 | 0 | -14901 | -1475 | | | 1456 | 548 | SLV 16 | 0.37 | No |
| ini. | 2 | 0 | 34009 | -1643 | | | 1456 | 548 | SLV 15 | 0.33 | No |
| fin. | 2 | 0 | -14901 | -1475 | | | 1456 | 548 | SLV 15 | 0.37 | No |

### Tabella dei coefficienti di sicurezza minimi

| Stato limite | Coeff.s. | Comb. | Verifica |
|---|---|---|---|
| PF_SLV | 2.388 | SLV 13 | Si |
| V_SLV | 0.237 | SLV 3 | No |
| PF_SLU | 11.088 | SLU 30 | Si |
| V_SLU | 0.692 | SLU 38 | No |

## Trave di accoppiamento 156

Verifiche condotte secondo D.M. 17-01-18 (N.T.C.)

### Dati geometrici

| X ini. | Y ini. | Z ini.inf. | Z ini.sup. | H ini. | X fin. | Y fin. | Z fin.inf. | Z fin.sup | H fin. | Luce | Spessore | R. Trazione |
|---|---|---|---|---|---|---|---|---|---|---|---|---|
| -1771.8 | 666.1 | 1518 | 1564 | 46 | -1681.8 | 666.1 | 1518 | 1564 | 46 | 90 | 28 | 3500 |

### Caratteristiche del materiale

(Circolare 7 21-01-19 C8.5.I) Muratura in mattoni pieni e malta di calce LC2_Corti

| fb_ | fhk | fvk0 | fhmedio | τ0 | fv0 | μ | ϕ | fvk,lim | E | G | FC |
|---|---|---|---|---|---|---|---|---|---|---|---|
| 12 | | | 17.25 | 0.9 | 2 | 0.577 | 0.767 | 0.65 | 32000 | 12800 | 1.2 |

### Verifiche a pressoflessione delle travi in muratura in combinazioni non sismiche

| Sezione | γM | N | M | Mu | Comb. | c.s. | Verifica |
|---|---|---|---|---|---|---|---|
| ini. | 3 | -1744 | 8186 | 30060 | SLU 77 | 3.67 | Si |
| fin. | 3 | -1734 | -12337 | 30060 | SLU 77 | 2.44 | Si |
| ini. | 3 | -1722 | 7996 | 30060 | SLU 78 | 3.76 | Si |
| fin. | 3 | -1712 | -12054 | 30060 | SLU 78 | 2.49 | Si |
| ini. | 3 | -1778 | 8737 | 30060 | SLU 72 | 3.44 | Si |
| fin. | 3 | -1767 | -11765 | 30060 | SLU 72 | 2.56 | Si |
| ini. | 3 | -1723 | 8127 | 30060 | SLU 35 | 3.7 | Si |
| fin. | 3 | -1713 | -11787 | 30060 | SLU 35 | 2.55 | Si |
| ini. | 3 | -1811 | 9128 | 30060 | SLU 79 | 3.29 | Si |
| fin. | 3 | -1799 | -12192 | 30060 | SLU 79 | 2.47 | Si |
| ini. | 3 | -1712 | 7926 | 30060 | SLU 27 | 3.79 | Si |
| fin. | 3 | -1702 | -11643 | 30060 | SLU 27 | 2.58 | Si |
| ini. | 3 | -1734 | 7985 | 30060 | SLU 69 | 3.76 | Si |
| fin. | 3 | -1723 | -12194 | 30060 | SLU 69 | 2.47 | Si |
| ini. | 3 | -1711 | 7795 | 30060 | SLU 70 | 3.86 | Si |
| fin. | 3 | -1701 | -11910 | 30060 | SLU 70 | 2.52 | Si |
| ini. | 3 | -1788 | 8938 | 30060 | SLU 80 | 3.36 | Si |
| fin. | 3 | -1777 | -11908 | 30060 | SLU 80 | 2.52 | Si |
| ini. | 3 | -1800 | 8927 | 30060 | SLU 71 | 3.37 | Si |
| fin. | 3 | -1789 | -12048 | 30060 | SLU 71 | 2.49 | Si |

### Verifiche a taglio delle travi in muratura secondo §C8.7.1.3.1 in combinazioni non sismiche

| Sezione | γM | N | M | V | Vt | Vp | Vt fess. diag. | Vt,lim | Comb. | c.s. | Verifica |
|---|---|---|---|---|---|---|---|---|---|---|---|
| ini. | 3 | 0 | 7996 | 172 | | | 331 | 124 | SLU 78 | 0.72 | No |
| fin. | 3 | 0 | -12054 | -663 | | | 331 | 124 | SLU 78 | 0.19 | No |
| ini. | 3 | 0 | 8127 | 119 | | | 331 | 124 | SLU 35 | 1.04 | Si |
| fin. | 3 | 0 | -11787 | -609 | | | 331 | 124 | SLU 35 | 0.2 | No |
| ini. | 3 | 0 | 9128 | 89 | | | 331 | 124 | SLU 79 | 1.4 | Si |
| fin. | 3 | 0 | -12192 | -614 | | | 331 | 124 | SLU 79 | 0.2 | No |
| ini. | 3 | 0 | 8927 | 93 | | | 331 | 124 | SLU 71 | 1.34 | Si |
| fin. | 3 | 0 | -12048 | -610 | | | 331 | 124 | SLU 71 | 0.2 | No |
| ini. | 3 | 0 | 7985 | 170 | | | 331 | 124 | SLU 69 | 0.73 | No |
| fin. | 3 | 0 | -12194 | -665 | | | 331 | 124 | SLU 69 | 0.19 | No |
| ini. | 3 | 0 | 8186 | 166 | | | 331 | 124 | SLU 77 | 0.75 | No |
| fin. | 3 | 0 | -12337 | -668 | | | 331 | 124 | SLU 77 | 0.19 | No |
| ini. | 3 | 0 | 6938 | 174 | | | 331 | 124 | SLU 56 | 0.71 | No |
| fin. | 3 | 0 | -10841 | -607 | | | 331 | 124 | SLU 56 | 0.21 | No |
| ini. | 3 | 0 | 8938 | 94 | | | 331 | 124 | SLU 80 | 1.32 | Si |
| fin. | 3 | 0 | -11908 | -608 | | | 331 | 124 | SLU 80 | 0.2 | No |
| ini. | 3 | 0 | 7795 | 176 | | | 331 | 124 | SLU 70 | 0.71 | No |
| fin. | 3 | 0 | -11910 | -659 | | | 331 | 124 | SLU 70 | 0.19 | No |
| ini. | 3 | 0 | 7926 | 123 | | | 331 | 124 | SLU 27 | 1.01 | Si |
| fin. | 3 | 0 | -11643 | -606 | | | 331 | 124 | SLU 27 | 0.21 | No |

### Verifiche a pressoflessione delle travi in muratura in combinazioni sismiche

| Sezione | γM | N | M | Mu | Comb. | c.s. | Verifica |
|---|---|---|---|---|---|---|---|
| ini. | 2 | -3282 | 18254 | 44694 | SLV 10 | 2.45 | Si |
| fin. | 2 | -3325 | -32772 | 44694 | SLV 10 | 1.36 | Si |
| ini. | 2 | 1765 | -15295 | 44694 | SLV 3 | 2.92 | Si |
| fin. | 2 | 1914 | 24562 | 44694 | SLV 3 | 1.82 | Si |
| ini. | 2 | -2646 | 19369 | 44694 | SLV 13 | 2.31 | Si |
| fin. | 2 | -2789 | -32587 | 44694 | SLV 13 | 1.37 | Si |

| Sezione | γM | N | M | Mu | Comb. | c.s. | Verifica |
|---|---|---|---|---|---|---|---|
| ini. | 2 | 2401 | -14180 | 44694 | SLV 8 | 3.15 | Si |
| fin. | 2 | 2449 | 24746 | 44694 | SLV 8 | 1.81 | Si |
| ini. | 2 | 2401 | -14180 | 44694 | SLV 7 | 3.15 | Si |
| fin. | 2 | 2449 | 24746 | 44694 | SLV 7 | 1.81 | Si |
| ini. | 2 | -2646 | 19369 | 44694 | SLV 14 | 2.31 | Si |
| fin. | 2 | -2789 | -32587 | 44694 | SLV 14 | 1.37 | Si |
| ini. | 2 | -2390 | 10034 | 44694 | SLV 5 | 4.45 | Si |
| fin. | 2 | -2345 | -19620 | 44694 | SLV 5 | 2.28 | Si |
| ini. | 2 | -3282 | 18254 | 44694 | SLV 9 | 2.45 | Si |
| fin. | 2 | -3325 | -32772 | 44694 | SLV 9 | 1.36 | Si |
| ini. | 2 | -2390 | 10034 | 44694 | SLV 6 | 4.45 | Si |
| fin. | 2 | -2345 | -19620 | 44694 | SLV 6 | 2.28 | Si |
| ini. | 2 | 1765 | -15295 | 44694 | SLV 4 | 2.92 | Si |
| fin. | 2 | 1914 | 24562 | 44694 | SLV 4 | 1.82 | Si |

### Verifiche a taglio delle travi in muratura secondo §C8.7.1.3.1 in combinazioni sismiche

| Sezione | γM | N | M | V | Vt | Vp | Vt fess. diag. | Vt,lim | Comb. | c.s. | Verifica |
|---|---|---|---|---|---|---|---|---|---|---|---|
| ini. | 2 | 0 | 12105 | -196 | | | 496 | 187 | SLV 15 | 0.95 | No |
| fin. | 2 | 0 | -19277 | -661 | | | 496 | 187 | SLV 15 | 0.28 | No |
| ini. | 2 | 0 | 18254 | -373 | | | 496 | 187 | SLV 10 | 0.5 | No |
| fin. | 2 | 0 | -32772 | -880 | | | 496 | 187 | SLV 10 | 0.21 | No |
| ini. | 2 | 0 | -15295 | 714 | | | 496 | 187 | SLV 3 | 0.26 | No |
| fin. | 2 | 0 | 24562 | 356 | | | 496 | 187 | SLV 3 | 0.52 | No |
| ini. | 2 | 0 | -15295 | 714 | | | 496 | 187 | SLV 4 | 0.26 | No |
| fin. | 2 | 0 | 24562 | 356 | | | 496 | 187 | SLV 4 | 0.52 | No |
| ini. | 2 | 0 | 12105 | -196 | | | 496 | 187 | SLV 16 | 0.95 | No |
| fin. | 2 | 0 | -19277 | -661 | | | 496 | 187 | SLV 16 | 0.28 | No |
| ini. | 2 | 0 | -14180 | 662 | | | 496 | 187 | SLV 7 | 0.28 | No |
| fin. | 2 | 0 | 24746 | 309 | | | 496 | 187 | SLV 7 | 0.6 | No |
| ini. | 2 | 0 | -14180 | 662 | | | 496 | 187 | SLV 8 | 0.28 | No |
| fin. | 2 | 0 | 24746 | 309 | | | 496 | 187 | SLV 8 | 0.6 | No |
| ini. | 2 | 0 | 19369 | -424 | | | 496 | 187 | SLV 13 | 0.44 | No |
| fin. | 2 | 0 | -32587 | -927 | | | 496 | 187 | SLV 13 | 0.2 | No |
| ini. | 2 | 0 | 18254 | -373 | | | 496 | 187 | SLV 9 | 0.5 | No |
| fin. | 2 | 0 | -32772 | -880 | | | 496 | 187 | SLV 9 | 0.21 | No |
| ini. | 2 | 0 | 19369 | -424 | | | 496 | 187 | SLV 14 | 0.44 | No |
| fin. | 2 | 0 | -32587 | -927 | | | 496 | 187 | SLV 14 | 0.2 | No |

### Tabella dei coefficienti di sicurezza minimi

| Stato limite | Coeff.s. | Comb. | Verifica |
|---|---|---|---|
| PF_SLV | 1.364 | SLV 9 | Si |
| V_SLV | 0.201 | SLV 13 | No |
| PF_SLU | 2.437 | SLU 77 | Si |
| V_SLU | 0.186 | SLU 77 | No |

## Trave di accoppiamento 157

Verifiche condotte secondo D.M. 17-01-18 (N.T.C.)

### Dati geometrici

| X ini. | Y ini. | Z ini.inf. | Z ini.sup. | H ini. | X fin. | Y fin. | Z fin.inf. | Z fin.sup | H fin. | Luce | Spessore | R. Trazione |
|---|---|---|---|---|---|---|---|---|---|---|---|---|
| -1283.8 | 666.1 | 1248 | 1338 | 90 | -1193.8 | 666.1 | 1248 | 1338 | 90 | 90 | 28 | 3500 |

### Caratteristiche del materiale

(Circolare 7 21-01-19 C8.5.I) Muratura in mattoni pieni e malta di calce LC2_Corti

| fb_ | fhk | fvk0 | fhmedio | τ0 | fv0 | μ | ϕ | fvk,lim | E | G | FC |
|---|---|---|---|---|---|---|---|---|---|---|---|
| 12 | | | 17.25 | 0.9 | 2 | 0.577 | 0.767 | 0.65 | 32000 | 12800 | 1.2 |

### Verifiche a pressoflessione delle travi in muratura in combinazioni non sismiche

| Sezione | γM | N | M | Mu | Comb. | c.s. | Verifica |
|---|---|---|---|---|---|---|---|
| ini. | 3 | 98 | 4562 | 103792 | SLU 83 | 22.75 | Si |
| fin. | 3 | -577 | 17582 | 103792 | SLU 83 | 5.9 | Si |
| ini. | 3 | 115 | 467 | 103792 | SLU 40 | 222.4 | Si |
| fin. | 3 | -670 | 16867 | 103792 | SLU 40 | 6.15 | Si |
| ini. | 3 | 118 | 457 | 103792 | SLU 81 | 227.06 | Si |
| fin. | 3 | -794 | 19271 | 103792 | SLU 81 | 5.39 | Si |
| ini. | 3 | 101 | 4495 | 103792 | SLU 84 | 23.09 | Si |
| fin. | 3 | -580 | 17635 | 103792 | SLU 84 | 5.89 | Si |
| ini. | 3 | 110 | 4182 | 103792 | SLU 75 | 24.82 | Si |
| fin. | 3 | -562 | 16898 | 103792 | SLU 75 | 6.14 | Si |
| ini. | 3 | 108 | 781 | 103792 | SLU 73 | 132.84 | Si |
| fin. | 3 | -735 | 17942 | 103792 | SLU 73 | 5.78 | Si |
| ini. | 3 | 121 | 390 | 103792 | SLU 82 | 266.07 | Si |
| fin. | 3 | -797 | 19324 | 103792 | SLU 82 | 5.37 | Si |
| ini. | 3 | 97 | -589 | 103792 | SLU 60 | 176.15 | Si |
| fin. | 3 | -777 | 17452 | 103792 | SLU 60 | 5.95 | Si |
| ini. | 3 | 100 | -656 | 103792 | SLU 61 | 158.16 | Si |
| fin. | 3 | -780 | 17505 | 103792 | SLU 61 | 5.93 | Si |
| ini. | 3 | 107 | 4249 | 103792 | SLU 74 | 24.43 | Si |
| fin. | 3 | -559 | 16845 | 103792 | SLU 74 | 6.16 | Si |

### Verifiche a taglio delle travi in muratura secondo §C8.7.1.3.1 in combinazioni non sismiche

| Sezione | γM | N | M | V | Vt | Vp | Vt fess. diag. | Vt,lim | Comb. | c.s. | Verifica |
|---|---|---|---|---|---|---|---|---|---|---|---|
| ini. | 3 | 0 | 457 | 414 | | | 970 | 365 | SLU 81 | 0.88 | No |

| Sezione | γM | N | M | V | Vt | Vp | Vt fess. diag. | Vt,lim | Comb. | c.s. | Verifica |
|---|---|---|---|---|---|---|---|---|---|---|---|
| fin. | 3 | 0 | 19271 | 1033 | | | 970 | 365 | SLU 81 | 0.35 | No |
| ini. | 3 | 0 | -265 | 269 | | | 970 | 365 | SLU 52 | 1.36 | Si |
| fin. | 3 | 0 | 16123 | 1018 | | | 970 | 365 | SLU 52 | 0.36 | No |
| ini. | 3 | 0 | 4249 | 80 | | | 970 | 365 | SLU 74 | 4.58 | Si |
| fin. | 3 | 0 | 16845 | 1009 | | | 970 | 365 | SLU 74 | 0.36 | No |
| ini. | 3 | 0 | 3202 | 24 | | | 970 | 365 | SLU 53 | 15.24 | Si |
| fin. | 3 | 0 | 15026 | 1008 | | | 970 | 365 | SLU 53 | 0.36 | No |
| ini. | 3 | 0 | -656 | 362 | | | 970 | 365 | SLU 61 | 1.01 | Si |
| fin. | 3 | 0 | 17505 | 1036 | | | 970 | 365 | SLU 61 | 0.35 | No |
| ini. | 3 | 0 | 781 | 325 | | | 970 | 365 | SLU 73 | 1.12 | Si |
| fin. | 3 | 0 | 17942 | 1018 | | | 970 | 365 | SLU 73 | 0.36 | No |
| ini. | 3 | 0 | 390 | 418 | | | 970 | 365 | SLU 82 | 0.87 | No |
| fin. | 3 | 0 | 19324 | 1037 | | | 970 | 365 | SLU 82 | 0.35 | No |
| ini. | 3 | 0 | 4182 | 84 | | | 970 | 365 | SLU 75 | 4.36 | Si |
| fin. | 3 | 0 | 16898 | 1012 | | | 970 | 365 | SLU 75 | 0.36 | No |
| ini. | 3 | 0 | 3135 | 28 | | | 970 | 365 | SLU 54 | 13.01 | Si |
| fin. | 3 | 0 | 15079 | 1011 | | | 970 | 365 | SLU 54 | 0.36 | No |
| ini. | 3 | 0 | -589 | 358 | | | 970 | 365 | SLU 60 | 1.02 | Si |
| fin. | 3 | 0 | 17452 | 1033 | | | 970 | 365 | SLU 60 | 0.35 | No |

### Verifiche a pressoflessione delle travi in muratura in combinazioni sismiche

| Sezione | γM | N | M | Mu | Comb. | c.s. | Verifica |
|---|---|---|---|---|---|---|---|
| ini. | 2 | -2066 | 43779 | 121694 | SLV 14 | 2.78 | Si |
| fin. | 2 | 982 | -17538 | 121694 | SLV 14 | 6.94 | Si |
| ini. | 2 | -651 | 239 | 121694 | SLV 6 | 509.94 | Si |
| fin. | 2 | -2504 | 38137 | 121694 | SLV 6 | 3.19 | Si |
| ini. | 2 | -1325 | 37097 | 121694 | SLV 15 | 3.28 | Si |
| fin. | 2 | 1850 | -27238 | 121694 | SLV 15 | 4.47 | Si |
| ini. | 2 | 1441 | -35200 | 121694 | SLV 1 | 3.46 | Si |
| fin. | 2 | -2824 | 50706 | 121694 | SLV 1 | 2.4 | Si |
| ini. | 2 | -2066 | 43779 | 121694 | SLV 13 | 2.78 | Si |
| fin. | 2 | 982 | -17538 | 121694 | SLV 13 | 6.94 | Si |
| ini. | 2 | 2183 | -41882 | 121694 | SLV 3 | 2.91 | Si |
| fin. | 2 | -1956 | 41007 | 121694 | SLV 3 | 2.97 | Si |
| ini. | 2 | -651 | 239 | 121694 | SLV 5 | 509.94 | Si |
| fin. | 2 | -2504 | 38137 | 121694 | SLV 5 | 3.19 | Si |
| ini. | 2 | -1325 | 37097 | 121694 | SLV 16 | 3.28 | Si |
| fin. | 2 | 1850 | -27238 | 121694 | SLV 16 | 4.47 | Si |
| ini. | 2 | 2183 | -41882 | 121694 | SLV 4 | 2.91 | Si |
| fin. | 2 | -1956 | 41007 | 121694 | SLV 4 | 2.97 | Si |
| ini. | 2 | 1441 | -35200 | 121694 | SLV 2 | 3.46 | Si |
| fin. | 2 | -2824 | 50706 | 121694 | SLV 2 | 2.4 | Si |

### Verifiche a taglio delle travi in muratura secondo §C8.7.1.3.1 in combinazioni sismiche

| Sezione | γM | N | M | V | Vt | Vp | Vt fess. diag. | Vt,lim | Comb. | c.s. | Verifica |
|---|---|---|---|---|---|---|---|---|---|---|---|
| ini. | 2 | 0 | -41882 | 2924 | | | 1456 | 548 | SLV 3 | 0.19 | No |
| fin. | 2 | 0 | 41007 | 3170 | | | 1456 | 548 | SLV 3 | 0.17 | No |
| ini. | 2 | 0 | -35200 | 2667 | | | 1456 | 548 | SLV 1 | 0.21 | No |
| fin. | 2 | 0 | 50706 | 3491 | | | 1456 | 548 | SLV 1 | 0.16 | No |
| ini. | 2 | 0 | -35200 | 2667 | | | 1456 | 548 | SLV 2 | 0.21 | No |
| fin. | 2 | 0 | 50706 | 3491 | | | 1456 | 548 | SLV 2 | 0.16 | No |
| ini. | 2 | 0 | 43779 | -2675 | | | 1456 | 548 | SLV 13 | 0.2 | No |
| fin. | 2 | 0 | -17538 | -1660 | | | 1456 | 548 | SLV 13 | 0.33 | No |
| ini. | 2 | 0 | 43779 | -2675 | | | 1456 | 548 | SLV 14 | 0.2 | No |
| fin. | 2 | 0 | -17538 | -1660 | | | 1456 | 548 | SLV 14 | 0.33 | No |
| ini. | 2 | 0 | 239 | 499 | | | 1456 | 548 | SLV 5 | 1.1 | Si |
| fin. | 2 | 0 | 38137 | 2062 | | | 1456 | 548 | SLV 5 | 0.27 | No |
| ini. | 2 | 0 | 239 | 499 | | | 1456 | 548 | SLV 6 | 1.1 | Si |
| fin. | 2 | 0 | 38137 | 2062 | | | 1456 | 548 | SLV 6 | 0.27 | No |
| ini. | 2 | 0 | 37097 | -2419 | | | 1456 | 548 | SLV 15 | 0.23 | No |
| fin. | 2 | 0 | -27238 | -1980 | | | 1456 | 548 | SLV 15 | 0.28 | No |
| ini. | 2 | 0 | -41882 | 2924 | | | 1456 | 548 | SLV 4 | 0.19 | No |
| fin. | 2 | 0 | 41007 | 3170 | | | 1456 | 548 | SLV 4 | 0.17 | No |
| ini. | 2 | 0 | 37097 | -2419 | | | 1456 | 548 | SLV 16 | 0.23 | No |
| fin. | 2 | 0 | -27238 | -1980 | | | 1456 | 548 | SLV 16 | 0.28 | No |

### Tabella dei coefficienti di sicurezza minimi

| Stato limite | Coeff.s. | Comb. | Verifica |
|---|---|---|---|
| PF_SLV | 2.4 | SLV 1 | Si |
| V_SLV | 0.157 | SLV 1 | No |
| PF_SLU | 5.371 | SLU 82 | Si |
| V_SLU | 0.352 | SLU 82 | No |

## Trave di accoppiamento 158

Verifiche condotte secondo D.M. 17-01-18 (N.T.C.)

### Dati geometrici

| X ini. | Y ini. | Z ini.inf. | Z ini.sup. | H ini. | X fin. | Y fin. | Z fin.inf. | Z fin.sup | H fin. | Luce | Spessore | R. Trazione |
|---|---|---|---|---|---|---|---|---|---|---|---|---|
| -1283.8 | 666.1 | 1518 | 1564 | 46 | -1193.8 | 666.1 | 1518 | 1564 | 46 | 90 | 28 | 3500 |

### Caratteristiche del materiale

(Circolare 7 21-01-19 C8.5.I) Muratura in mattoni pieni e malta di calce LC2_Corti

| fb_ | fhk | fvk0 | fhmedio | τ0 | fv0 | μ | ϕ | fvk,lim | E | G | FC |
|---|---|---|---|---|---|---|---|---|---|---|---|
| 12 | | | 17.25 | 0.9 | 2 | 0.577 | 0.767 | 0.65 | 32000 | 12800 | 1.2 |

## Verifiche a pressoflessione delle travi in muratura in combinazioni non sismiche

| Sezione | γM | N | M | Mu | Comb. | c.s. | Verifica |
|---|---|---|---|---|---|---|---|
| ini. | 3 | -960 | -9330 | 30060 | SLU 82 | 3.22 | Si |
| fin. | 3 | -958 | 1608 | 30060 | SLU 82 | 18.69 | Si |
| ini. | 3 | -900 | -8699 | 30060 | SLU 73 | 3.46 | Si |
| fin. | 3 | -897 | 1263 | 30060 | SLU 73 | 23.79 | Si |
| ini. | 3 | -961 | -9290 | 30060 | SLU 81 | 3.24 | Si |
| fin. | 3 | -958 | 1572 | 30060 | SLU 81 | 19.12 | Si |
| ini. | 3 | -1128 | -8304 | 30060 | SLU 84 | 3.62 | Si |
| fin. | 3 | -1123 | -1207 | 30060 | SLU 84 | 24.9 | Si |
| ini. | 3 | -779 | -8497 | 30060 | SLU 60 | 3.54 | Si |
| fin. | 3 | -777 | 2198 | 30060 | SLU 60 | 13.68 | Si |
| ini. | 3 | -1129 | -8264 | 30060 | SLU 83 | 3.64 | Si |
| fin. | 3 | -1123 | -1243 | 30060 | SLU 83 | 24.18 | Si |
| ini. | 3 | -1083 | -8442 | 30060 | SLU 75 | 3.56 | Si |
| fin. | 3 | -1078 | -1365 | 30060 | SLU 75 | 22.03 | Si |
| ini. | 3 | -1084 | -8402 | 30060 | SLU 74 | 3.58 | Si |
| fin. | 3 | -1079 | -1400 | 30060 | SLU 74 | 21.47 | Si |
| ini. | 3 | -875 | -8083 | 30060 | SLU 40 | 3.72 | Si |
| fin. | 3 | -872 | 1220 | 30060 | SLU 40 | 24.64 | Si |
| ini. | 3 | -778 | -8537 | 30060 | SLU 61 | 3.52 | Si |
| fin. | 3 | -777 | 2234 | 30060 | SLU 61 | 13.46 | Si |

## Verifiche a taglio delle travi in muratura secondo §C8.7.1.3.1 in combinazioni non sismiche

| Sezione | γM | N | M | V | Vt | Vp | Vt fess. diag. | Vt,lim | Comb. | c.s. | Verifica |
|---|---|---|---|---|---|---|---|---|---|---|---|
| ini. | 3 | 0 | -7416 | 442 | | | 331 | 124 | SLU 78 | 0.28 | No |
| fin. | 3 | 0 | -4180 | -380 | | | 331 | 124 | SLU 78 | 0.33 | No |
| ini. | 3 | 0 | -5884 | 415 | | | 331 | 124 | SLU 70 | 0.3 | No |
| fin. | 3 | 0 | -5041 | -407 | | | 331 | 124 | SLU 70 | 0.31 | No |
| ini. | 3 | 0 | -6583 | 409 | | | 331 | 124 | SLU 56 | 0.3 | No |
| fin. | 3 | 0 | -3590 | -351 | | | 331 | 124 | SLU 56 | 0.35 | No |
| ini. | 3 | 0 | -6909 | 407 | | | 331 | 124 | SLU 67 | 0.31 | No |
| fin. | 3 | 0 | -2225 | -313 | | | 331 | 124 | SLU 67 | 0.4 | No |
| ini. | 3 | 0 | -6623 | 409 | | | 331 | 124 | SLU 57 | 0.3 | No |
| fin. | 3 | 0 | -3555 | -351 | | | 331 | 124 | SLU 57 | 0.35 | No |
| ini. | 3 | 0 | -7377 | 441 | | | 331 | 124 | SLU 77 | 0.28 | No |
| fin. | 3 | 0 | -4216 | -381 | | | 331 | 124 | SLU 77 | 0.33 | No |
| ini. | 3 | 0 | -8442 | 434 | | | 331 | 124 | SLU 75 | 0.29 | No |
| fin. | 3 | 0 | -1365 | -287 | | | 331 | 124 | SLU 75 | 0.43 | No |
| ini. | 3 | 0 | -5844 | 414 | | | 331 | 124 | SLU 69 | 0.3 | No |
| fin. | 3 | 0 | -5076 | -407 | | | 331 | 124 | SLU 69 | 0.31 | No |
| ini. | 3 | 0 | -8402 | 433 | | | 331 | 124 | SLU 74 | 0.29 | No |
| fin. | 3 | 0 | -1400 | -287 | | | 331 | 124 | SLU 74 | 0.43 | No |
| ini. | 3 | 0 | -6870 | 406 | | | 331 | 124 | SLU 66 | 0.31 | No |
| fin. | 3 | 0 | -2261 | -314 | | | 331 | 124 | SLU 66 | 0.4 | No |

## Verifiche a pressoflessione delle travi in muratura in combinazioni sismiche

| Sezione | γM | N | M | Mu | Comb. | c.s. | Verifica |
|---|---|---|---|---|---|---|---|
| ini. | 2 | -287 | -28775 | 44694 | SLV 4 | 1.55 | Si |
| fin. | 2 | -148 | 26482 | 44694 | SLV 4 | 1.69 | Si |
| ini. | 2 | -884 | 17324 | 44694 | SLV 14 | 2.58 | Si |
| fin. | 2 | -1019 | -25188 | 44694 | SLV 14 | 1.77 | Si |
| ini. | 2 | -61 | 21440 | 44694 | SLV 16 | 2.08 | Si |
| fin. | 2 | -196 | -23606 | 44694 | SLV 16 | 1.89 | Si |
| ini. | 2 | -287 | -28775 | 44694 | SLV 3 | 1.55 | Si |
| fin. | 2 | -148 | 26482 | 44694 | SLV 3 | 1.69 | Si |
| ini. | 2 | -1991 | -20118 | 44694 | SLV 6 | 2.22 | Si |
| fin. | 2 | -1947 | 5523 | 44694 | SLV 6 | 8.09 | Si |
| ini. | 2 | -884 | 17324 | 44694 | SLV 13 | 2.58 | Si |
| fin. | 2 | -1019 | -25188 | 44694 | SLV 13 | 1.77 | Si |
| ini. | 2 | -1110 | -32891 | 44694 | SLV 1 | 1.36 | Si |
| fin. | 2 | -970 | 24900 | 44694 | SLV 1 | 1.79 | Si |
| ini. | 2 | -1110 | -32891 | 44694 | SLV 2 | 1.36 | Si |
| fin. | 2 | -970 | 24900 | 44694 | SLV 2 | 1.79 | Si |
| ini. | 2 | -1991 | -20118 | 44694 | SLV 5 | 2.22 | Si |
| fin. | 2 | -1947 | 5523 | 44694 | SLV 5 | 8.09 | Si |
| ini. | 2 | -61 | 21440 | 44694 | SLV 15 | 2.08 | Si |
| fin. | 2 | -196 | -23606 | 44694 | SLV 15 | 1.89 | Si |

## Verifiche a taglio delle travi in muratura secondo §C8.7.1.3.1 in combinazioni sismiche

| Sezione | γM | N | M | V | Vt | Vp | Vt fess. diag. | Vt,lim | Comb. | c.s. | Verifica |
|---|---|---|---|---|---|---|---|---|---|---|---|
| ini. | 2 | 0 | -28775 | 779 | | | 496 | 187 | SLV 3 | 0.24 | No |
| fin. | 2 | 0 | 26482 | 451 | | | 496 | 187 | SLV 3 | 0.41 | No |
| ini. | 2 | 0 | -32891 | 853 | | | 496 | 187 | SLV 1 | 0.22 | No |
| fin. | 2 | 0 | 24900 | 378 | | | 496 | 187 | SLV 1 | 0.49 | No |
| ini. | 2 | 0 | -20118 | 555 | | | 496 | 187 | SLV 6 | 0.34 | No |
| fin. | 2 | 0 | 5523 | -90 | | | 496 | 187 | SLV 6 | 2.08 | Si |
| ini. | 2 | 0 | 17324 | -243 | | | 496 | 187 | SLV 14 | 0.77 | No |
| fin. | 2 | 0 | -25188 | -713 | | | 496 | 187 | SLV 14 | 0.26 | No |
| ini. | 2 | 0 | -20118 | 555 | | | 496 | 187 | SLV 5 | 0.34 | No |
| fin. | 2 | 0 | 5523 | -90 | | | 496 | 187 | SLV 5 | 2.08 | Si |
| ini. | 2 | 0 | 17324 | -243 | | | 496 | 187 | SLV 13 | 0.77 | No |
| fin. | 2 | 0 | -25188 | -713 | | | 496 | 187 | SLV 13 | 0.26 | No |
| ini. | 2 | 0 | -32891 | 853 | | | 496 | 187 | SLV 2 | 0.22 | No |
| fin. | 2 | 0 | 24900 | 378 | | | 496 | 187 | SLV 2 | 0.49 | No |

| Sezione | γM | N | M | V | Vt | Vp | Vt fess. diag. | Vt,lim | Comb. | c.s. | Verifica |
|---|---|---|---|---|---|---|---|---|---|---|---|
| ini. | 2 | 0 | 21440 | -317 | | | 496 | 187 | SLV 16 | 0.59 | No |
| fin. | 2 | 0 | -23606 | -639 | | | 496 | 187 | SLV 16 | 0.29 | No |
| ini. | 2 | 0 | -28775 | 779 | | | 496 | 187 | SLV 4 | 0.24 | No |
| fin. | 2 | 0 | 26482 | 451 | | | 496 | 187 | SLV 4 | 0.41 | No |
| ini. | 2 | 0 | 21440 | -317 | | | 496 | 187 | SLV 15 | 0.59 | No |
| fin. | 2 | 0 | -23606 | -639 | | | 496 | 187 | SLV 15 | 0.29 | No |

### Tabella dei coefficienti di sicurezza minimi

| Stato limite | Coeff.s. | Comb. | Verifica |
|---|---|---|---|
| PF_SLV | 1.359 | SLV 1 | Si |
| V_SLV | 0.219 | SLV 1 | No |
| PF_SLU | 3.222 | SLU 82 | Si |
| V_SLU | 0.282 | SLU 78 | No |

## Trave di accoppiamento 159

Verifiche condotte secondo D.M. 17-01-18 (N.T.C.)

### Dati geometrici

| X ini. | Y ini. | Z ini.inf. | Z ini.sup. | H ini. | X fin. | Y fin. | Z fin.inf. | Z fin.sup | H fin. | Luce | Spessore | R. Trazione |
|---|---|---|---|---|---|---|---|---|---|---|---|---|
| -795.8 | 666.1 | 1248 | 1338 | 90 | -705.8 | 666.1 | 1248 | 1338 | 90 | 90 | 28 | 3500 |

### Caratteristiche del materiale

(Circolare 7 21-01-19 C8.5.I) Muratura in mattoni pieni e malta di calce LC2_Corti

| fb_ | fhk | fvk0 | fhmedio | τ0 | fv0 | μ | ϕ | fvk,lim | E | G | FC |
|---|---|---|---|---|---|---|---|---|---|---|---|
| 12 | | | 17.25 | 0.9 | 2 | 0.577 | 0.767 | 0.65 | 32000 | 12800 | 1.2 |

### Verifiche a pressoflessione delle travi in muratura in combinazioni non sismiche

| Sezione | γM | N | M | Mu | Comb. | c.s. | Verifica |
|---|---|---|---|---|---|---|---|
| ini. | 3 | -24 | 25593 | 103792 | SLU 78 | 4.06 | Si |
| fin. | 3 | 1252 | -35193 | 103792 | SLU 78 | 2.95 | Si |
| ini. | 3 | 106 | 22970 | 103792 | SLU 38 | 4.52 | Si |
| fin. | 3 | 1309 | -36196 | 103792 | SLU 38 | 2.87 | Si |
| ini. | 3 | 19 | 25361 | 103792 | SLU 80 | 4.09 | Si |
| fin. | 3 | 1304 | -36576 | 103792 | SLU 80 | 2.84 | Si |
| ini. | 3 | 149 | 22118 | 103792 | SLU 71 | 4.69 | Si |
| fin. | 3 | 1298 | -34040 | 103792 | SLU 71 | 3.05 | Si |
| ini. | 3 | 63 | 23202 | 103792 | SLU 36 | 4.47 | Si |
| fin. | 3 | 1258 | -34813 | 103792 | SLU 36 | 2.98 | Si |
| ini. | 3 | 20 | 25277 | 103792 | SLU 79 | 4.11 | Si |
| fin. | 3 | 1299 | -36397 | 103792 | SLU 79 | 2.85 | Si |
| ini. | 3 | 107 | 22886 | 103792 | SLU 37 | 4.54 | Si |
| fin. | 3 | 1304 | -36017 | 103792 | SLU 37 | 2.88 | Si |
| ini. | 3 | 64 | 23117 | 103792 | SLU 35 | 4.49 | Si |
| fin. | 3 | 1253 | -34635 | 103792 | SLU 35 | 3 | Si |
| ini. | 3 | -23 | 25508 | 103792 | SLU 77 | 4.07 | Si |
| fin. | 3 | 1247 | -35015 | 103792 | SLU 77 | 2.96 | Si |
| ini. | 3 | 149 | 22203 | 103792 | SLU 72 | 4.67 | Si |
| fin. | 3 | 1303 | -34219 | 103792 | SLU 72 | 3.03 | Si |

### Verifiche a taglio delle travi in muratura secondo §C8.7.1.3.1 in combinazioni non sismiche

| Sezione | γM | N | M | V | Vt | Vp | Vt fess. diag. | Vt,lim | Comb. | c.s. | Verifica |
|---|---|---|---|---|---|---|---|---|---|---|---|
| ini. | 3 | 0 | 25508 | -1325 | | | 970 | 365 | SLU 77 | 0.28 | No |
| fin. | 3 | 0 | -35015 | -1235 | | | 970 | 365 | SLU 77 | 0.3 | No |
| ini. | 3 | 0 | 22886 | -1181 | | | 970 | 365 | SLU 37 | 0.31 | No |
| fin. | 3 | 0 | -36017 | -1265 | | | 970 | 365 | SLU 37 | 0.29 | No |
| ini. | 3 | 0 | 25593 | -1330 | | | 970 | 365 | SLU 78 | 0.27 | No |
| fin. | 3 | 0 | -35193 | -1242 | | | 970 | 365 | SLU 78 | 0.29 | No |
| ini. | 3 | 0 | 22435 | -1255 | | | 970 | 365 | SLU 70 | 0.29 | No |
| fin. | 3 | 0 | -32836 | -1074 | | | 970 | 365 | SLU 70 | 0.34 | No |
| ini. | 3 | 0 | 23202 | -1222 | | | 970 | 365 | SLU 36 | 0.3 | No |
| fin. | 3 | 0 | -34813 | -1207 | | | 970 | 365 | SLU 36 | 0.3 | No |
| ini. | 3 | 0 | 25277 | -1289 | | | 970 | 365 | SLU 79 | 0.28 | No |
| fin. | 3 | 0 | -36397 | -1300 | | | 970 | 365 | SLU 79 | 0.28 | No |
| ini. | 3 | 0 | 22203 | -1219 | | | 970 | 365 | SLU 72 | 0.3 | No |
| fin. | 3 | 0 | -34219 | -1139 | | | 970 | 365 | SLU 72 | 0.32 | No |
| ini. | 3 | 0 | 22350 | -1250 | | | 970 | 365 | SLU 69 | 0.29 | No |
| fin. | 3 | 0 | -32658 | -1068 | | | 970 | 365 | SLU 69 | 0.34 | No |
| ini. | 3 | 0 | 25361 | -1294 | | | 970 | 365 | SLU 80 | 0.28 | No |
| fin. | 3 | 0 | -36576 | -1307 | | | 970 | 365 | SLU 80 | 0.28 | No |
| ini. | 3 | 0 | 22970 | -1186 | | | 970 | 365 | SLU 38 | 0.31 | No |
| fin. | 3 | 0 | -36196 | -1272 | | | 970 | 365 | SLU 38 | 0.29 | No |

### Verifiche a pressoflessione delle travi in muratura in combinazioni sismiche

| Sezione | γM | N | M | Mu | Comb. | c.s. | Verifica |
|---|---|---|---|---|---|---|---|
| ini. | 2 | -290 | -13060 | 121694 | SLV 1 | 9.32 | Si |
| fin. | 2 | -1385 | 43494 | 121694 | SLV 1 | 2.8 | Si |
| ini. | 2 | -337 | 40690 | 121694 | SLV 16 | 2.99 | Si |
| fin. | 2 | 1915 | -64676 | 121694 | SLV 16 | 1.88 | Si |
| ini. | 2 | -882 | 46697 | 121694 | SLV 14 | 2.61 | Si |
| fin. | 2 | 1553 | -59328 | 121694 | SLV 14 | 2.05 | Si |
| ini. | 2 | -337 | 40690 | 121694 | SLV 15 | 2.99 | Si |
| fin. | 2 | 1915 | -64676 | 121694 | SLV 15 | 1.88 | Si |
| ini. | 2 | 254 | -19067 | 121694 | SLV 4 | 6.38 | Si |

| Sezione | γM | N | M | Mu | Comb. | c.s. | Verifica |
|---|---|---|---|---|---|---|---|
| fin. | 2 | -1022 | 38147 | 121694 | SLV 4 | 3.19 | Si |
| ini. | 2 | 505 | 12766 | 121694 | SLV 12 | 9.53 | Si |
| fin. | 2 | 1310 | -34928 | 121694 | SLV 12 | 3.48 | Si |
| ini. | 2 | -290 | -13060 | 121694 | SLV 2 | 9.32 | Si |
| fin. | 2 | -1385 | 43494 | 121694 | SLV 2 | 2.8 | Si |
| ini. | 2 | 505 | 12766 | 121694 | SLV 11 | 9.53 | Si |
| fin. | 2 | 1310 | -34928 | 121694 | SLV 11 | 3.48 | Si |
| ini. | 2 | -882 | 46697 | 121694 | SLV 13 | 2.61 | Si |
| fin. | 2 | 1553 | -59328 | 121694 | SLV 13 | 2.05 | Si |
| ini. | 2 | 254 | -19067 | 121694 | SLV 3 | 6.38 | Si |
| fin. | 2 | -1022 | 38147 | 121694 | SLV 3 | 3.19 | Si |

### Verifiche a taglio delle travi in muratura secondo §C8.7.1.3.1 in combinazioni sismiche

| Sezione | γM | N | M | V | Vt | Vp | Vt fess. diag. | Vt,lim | Comb. | c.s. | Verifica |
|---|---|---|---|---|---|---|---|---|---|---|---|
| ini. | 2 | 0 | 25295 | -1399 | | | 1456 | 548 | SLD 15 | 0.39 | No |
| fin. | 2 | 0 | -33658 | -1257 | | | 1456 | 548 | SLD 15 | 0.44 | No |
| ini. | 2 | 0 | 40690 | -2459 | | | 1456 | 548 | SLV 16 | 0.22 | No |
| fin. | 2 | 0 | -64676 | -2286 | | | 1456 | 548 | SLV 16 | 0.24 | No |
| ini. | 2 | 0 | 46697 | -2599 | | | 1456 | 548 | SLV 13 | 0.21 | No |
| fin. | 2 | 0 | -59328 | -2234 | | | 1456 | 548 | SLV 13 | 0.25 | No |
| ini. | 2 | 0 | 27793 | -1456 | | | 1456 | 548 | SLD 13 | 0.38 | No |
| fin. | 2 | 0 | -31375 | -1235 | | | 1456 | 548 | SLD 13 | 0.44 | No |
| ini. | 2 | 0 | 46697 | -2599 | | | 1456 | 548 | SLV 14 | 0.21 | No |
| fin. | 2 | 0 | -59328 | -2234 | | | 1456 | 548 | SLV 14 | 0.25 | No |
| ini. | 2 | 0 | 32791 | -1416 | | | 1456 | 548 | SLV 10 | 0.39 | No |
| fin. | 2 | 0 | -17101 | -936 | | | 1456 | 548 | SLV 10 | 0.59 | No |
| ini. | 2 | 0 | 32791 | -1416 | | | 1456 | 548 | SLV 9 | 0.39 | No |
| fin. | 2 | 0 | -17101 | -936 | | | 1456 | 548 | SLV 9 | 0.59 | No |
| ini. | 2 | 0 | 40690 | -2459 | | | 1456 | 548 | SLV 15 | 0.22 | No |
| fin. | 2 | 0 | -64676 | -2286 | | | 1456 | 548 | SLV 15 | 0.24 | No |
| ini. | 2 | 0 | 27793 | -1456 | | | 1456 | 548 | SLD 14 | 0.38 | No |
| fin. | 2 | 0 | -31375 | -1235 | | | 1456 | 548 | SLD 14 | 0.44 | No |
| ini. | 2 | 0 | 25295 | -1399 | | | 1456 | 548 | SLD 16 | 0.39 | No |
| fin. | 2 | 0 | -33658 | -1257 | | | 1456 | 548 | SLD 16 | 0.44 | No |

### Tabella dei coefficienti di sicurezza minimi

| Stato limite | Coeff.s. | Comb. | Verifica |
|---|---|---|---|
| PF_SLV | 1.882 | SLV 15 | Si |
| V_SLV | 0.211 | SLV 13 | No |
| PF_SLU | 2.838 | SLU 80 | Si |
| V_SLU | 0.275 | SLU 78 | No |

## Trave di accoppiamento 160

Verifiche condotte secondo D.M. 17-01-18 (N.T.C.)

### Dati geometrici

| X ini. | Y ini. | Z ini.inf. | Z ini.sup. | H ini. | X fin. | Y fin. | Z fin.inf. | Z fin.sup | H fin. | Luce | Spessore | R. Trazione |
|---|---|---|---|---|---|---|---|---|---|---|---|---|
| -795.8 | 666.1 | 1518 | 1564 | 46 | -705.8 | 666.1 | 1518 | 1564 | 46 | 90 | 28 | 3500 |

### Caratteristiche del materiale

(Circolare 7 21-01-19 C8.5.I) Muratura in mattoni pieni e malta di calce LC2_Corti

| fb_ | fhk | fvk0 | fhmedio | τ0 | fv0 | μ | ϕ | fvk,lim | E | G | FC |
|---|---|---|---|---|---|---|---|---|---|---|---|
| 12 | | | 17.25 | 0.9 | 2 | 0.577 | 0.767 | 0.65 | 32000 | 12800 | 1.2 |

### Verifiche a pressoflessione delle travi in muratura in combinazioni non sismiche

| Sezione | γM | N | M | Mu | Comb. | c.s. | Verifica |
|---|---|---|---|---|---|---|---|
| ini. | 3 | -469 | 9474 | 30060 | SLU 38 | 3.17 | Si |
| fin. | 3 | -469 | 3343 | 30060 | SLU 38 | 8.99 | Si |
| ini. | 3 | -326 | 8922 | 30060 | SLU 30 | 3.37 | Si |
| fin. | 3 | -326 | 4724 | 30060 | SLU 30 | 6.36 | Si |
| ini. | 3 | -598 | 9196 | 30060 | SLU 79 | 3.27 | Si |
| fin. | 3 | -599 | 2769 | 30060 | SLU 79 | 10.86 | Si |
| ini. | 3 | -599 | 9224 | 30060 | SLU 80 | 3.26 | Si |
| fin. | 3 | -599 | 2725 | 30060 | SLU 80 | 11.03 | Si |
| ini. | 3 | -455 | 8643 | 30060 | SLU 71 | 3.48 | Si |
| fin. | 3 | -455 | 4150 | 30060 | SLU 71 | 7.24 | Si |
| ini. | 3 | -456 | 8671 | 30060 | SLU 72 | 3.47 | Si |
| fin. | 3 | -456 | 4106 | 30060 | SLU 72 | 7.32 | Si |
| ini. | 3 | -531 | 8723 | 30060 | SLU 36 | 3.45 | Si |
| fin. | 3 | -531 | 2098 | 30060 | SLU 36 | 14.33 | Si |
| ini. | 3 | -325 | 8894 | 30060 | SLU 29 | 3.38 | Si |
| fin. | 3 | -325 | 4768 | 30060 | SLU 29 | 6.3 | Si |
| ini. | 3 | -468 | 9446 | 30060 | SLU 37 | 3.18 | Si |
| fin. | 3 | -469 | 3387 | 30060 | SLU 37 | 8.87 | Si |
| ini. | 3 | -530 | 8695 | 30060 | SLU 35 | 3.46 | Si |
| fin. | 3 | -530 | 2141 | 30060 | SLU 35 | 14.04 | Si |

### Verifiche a taglio delle travi in muratura secondo §C8.7.1.3.1 in combinazioni non sismiche

| Sezione | γM | N | M | V | Vt | Vp | Vt fess. diag. | Vt,lim | Comb. | c.s. | Verifica |
|---|---|---|---|---|---|---|---|---|---|---|---|
| ini. | 3 | 0 | 7891 | 349 | | | 331 | 124 | SLU 69 | 0.36 | No |
| fin. | 3 | 0 | 2904 | -460 | | | 331 | 124 | SLU 69 | 0.27 | No |
| ini. | 3 | 0 | 4887 | 313 | | | 331 | 124 | SLU 66 | 0.4 | No |
| fin. | 3 | 0 | -331 | -447 | | | 331 | 124 | SLU 66 | 0.28 | No |

| Sezione | γM | N | M | V | Vt | Vp | Vt fess. diag. | Vt,lim | Comb. | c.s. | Verifica |
|---|---|---|---|---|---|---|---|---|---|---|---|
| ini. | 3 | 0 | 6736 | 318 | | | 331 | 124 | SLU 57 | 0.39 | No |
| fin. | 3 | 0 | 1313 | -443 | | | 331 | 124 | SLU 57 | 0.28 | No |
| ini. | 3 | 0 | 8472 | 326 | | | 331 | 124 | SLU 78 | 0.38 | No |
| fin. | 3 | 0 | 1480 | -482 | | | 331 | 124 | SLU 78 | 0.26 | No |
| ini. | 3 | 0 | 8444 | 327 | | | 331 | 124 | SLU 77 | 0.38 | No |
| fin. | 3 | 0 | 1523 | -481 | | | 331 | 124 | SLU 77 | 0.26 | No |
| ini. | 3 | 0 | 5468 | 290 | | | 331 | 124 | SLU 75 | 0.43 | No |
| fin. | 3 | 0 | -1756 | -469 | | | 331 | 124 | SLU 75 | 0.27 | No |
| ini. | 3 | 0 | 5440 | 291 | | | 331 | 124 | SLU 74 | 0.43 | No |
| fin. | 3 | 0 | -1712 | -468 | | | 331 | 124 | SLU 74 | 0.27 | No |
| ini. | 3 | 0 | 4915 | 312 | | | 331 | 124 | SLU 67 | 0.4 | No |
| fin. | 3 | 0 | -375 | -447 | | | 331 | 124 | SLU 67 | 0.28 | No |
| ini. | 3 | 0 | 6708 | 318 | | | 331 | 124 | SLU 56 | 0.39 | No |
| fin. | 3 | 0 | 1357 | -443 | | | 331 | 124 | SLU 56 | 0.28 | No |
| ini. | 3 | 0 | 7919 | 348 | | | 331 | 124 | SLU 70 | 0.36 | No |
| fin. | 3 | 0 | 2860 | -461 | | | 331 | 124 | SLU 70 | 0.27 | No |

### Verifiche a pressoflessione delle travi in muratura in combinazioni sismiche

| Sezione | γM | N | M | Mu | Comb. | c.s. | Verifica |
|---|---|---|---|---|---|---|---|
| ini. | 2 | -187 | 39970 | 44694 | SLV 14 | 1.12 | Si |
| fin. | 2 | 275 | -17061 | 44694 | SLV 14 | 2.62 | Si |
| ini. | 2 | 998 | 47274 | 44694 | SLV 16 | 0.95 | No |
| fin. | 2 | 1466 | -17547 | 44694 | SLV 16 | 2.55 | Si |
| ini. | 2 | -187 | 39970 | 44694 | SLV 13 | 1.12 | Si |
| fin. | 2 | 275 | -17061 | 44694 | SLV 13 | 2.62 | Si |
| ini. | 2 | -2112 | -43669 | 44694 | SLV 2 | 1.02 | Si |
| fin. | 2 | -2581 | 13114 | 44694 | SLV 2 | 3.41 | Si |
| ini. | 2 | 1707 | 26523 | 44694 | SLV 12 | 1.69 | Si |
| fin. | 2 | 1856 | -7552 | 44694 | SLV 12 | 5.92 | Si |
| ini. | 2 | 1707 | 26523 | 44694 | SLV 11 | 1.69 | Si |
| fin. | 2 | 1856 | -7552 | 44694 | SLV 11 | 5.92 | Si |
| ini. | 2 | -2112 | -43669 | 44694 | SLV 1 | 1.02 | Si |
| fin. | 2 | -2581 | 13114 | 44694 | SLV 1 | 3.41 | Si |
| ini. | 2 | -926 | -36364 | 44694 | SLV 4 | 1.23 | Si |
| fin. | 2 | -1390 | 12629 | 44694 | SLV 4 | 3.54 | Si |
| ini. | 2 | -926 | -36364 | 44694 | SLV 3 | 1.23 | Si |
| fin. | 2 | -1390 | 12629 | 44694 | SLV 3 | 3.54 | Si |
| ini. | 2 | 998 | 47274 | 44694 | SLV 15 | 0.95 | No |
| fin. | 2 | 1466 | -17547 | 44694 | SLV 15 | 2.55 | Si |

### Verifiche a taglio delle travi in muratura secondo §C8.7.1.3.1 in combinazioni sismiche

| Sezione | γM | N | M | V | Vt | Vp | Vt fess. diag. | Vt,lim | Comb. | c.s. | Verifica |
|---|---|---|---|---|---|---|---|---|---|---|---|
| ini. | 2 | 0 | -36364 | 622 | | | 496 | 187 | SLV 4 | 0.3 | No |
| fin. | 2 | 0 | 12629 | 239 | | | 496 | 187 | SLV 4 | 0.78 | No |
| ini. | 2 | 0 | 39970 | -298 | | | 496 | 187 | SLV 13 | 0.63 | No |
| fin. | 2 | 0 | -17061 | -773 | | | 496 | 187 | SLV 13 | 0.24 | No |
| ini. | 2 | 0 | -43669 | 724 | | | 496 | 187 | SLV 1 | 0.26 | No |
| fin. | 2 | 0 | 13114 | 261 | | | 496 | 187 | SLV 1 | 0.71 | No |
| ini. | 2 | 0 | 21222 | -78 | | | 496 | 187 | SLD 15 | 2.39 | Si |
| fin. | 2 | 0 | -8795 | -491 | | | 496 | 187 | SLD 15 | 0.38 | No |
| ini. | 2 | 0 | -36364 | 622 | | | 496 | 187 | SLV 3 | 0.3 | No |
| fin. | 2 | 0 | 12629 | 239 | | | 496 | 187 | SLV 3 | 0.78 | No |
| ini. | 2 | 0 | 47274 | -400 | | | 496 | 187 | SLV 16 | 0.47 | No |
| fin. | 2 | 0 | -17547 | -795 | | | 496 | 187 | SLV 16 | 0.23 | No |
| ini. | 2 | 0 | 39970 | -298 | | | 496 | 187 | SLV 14 | 0.63 | No |
| fin. | 2 | 0 | -17061 | -773 | | | 496 | 187 | SLV 14 | 0.24 | No |
| ini. | 2 | 0 | -43669 | 724 | | | 496 | 187 | SLV 2 | 0.26 | No |
| fin. | 2 | 0 | 13114 | 261 | | | 496 | 187 | SLV 2 | 0.71 | No |
| ini. | 2 | 0 | 47274 | -400 | | | 496 | 187 | SLV 15 | 0.47 | No |
| fin. | 2 | 0 | -17547 | -795 | | | 496 | 187 | SLV 15 | 0.23 | No |
| ini. | 2 | 0 | 21222 | -78 | | | 496 | 187 | SLD 16 | 2.39 | Si |
| fin. | 2 | 0 | -8795 | -491 | | | 496 | 187 | SLD 16 | 0.38 | No |

### Tabella dei coefficienti di sicurezza minimi

| Stato limite | Coeff.s. | Comb. | Verifica |
|---|---|---|---|
| PF_SLV | 0.945 | SLV 15 | No |
| V_SLV | 0.235 | SLV 15 | No |
| PF_SLU | 3.173 | SLU 38 | Si |
| V_SLU | 0.258 | SLU 78 | No |

## Trave di accoppiamento 161

Verifiche condotte secondo D.M. 17-01-18 (N.T.C.)

### Dati geometrici

| X ini. | Y ini. | Z ini.inf. | Z ini.sup. | H ini. | X fin. | Y fin. | Z fin.inf. | Z fin.sup | H fin. | Luce | Spessore | R. Trazione |
|---|---|---|---|---|---|---|---|---|---|---|---|---|
| -1986.8 | 104.6 | 1458 | 1564 | 106 | -2066.8 | 104.6 | 1458 | 1564 | 106 | 80 | 28 | 3500 |

### Caratteristiche del materiale

(Circolare 7 21-01-19 C8.5.I) Muratura in mattoni pieni e malta di calce LC2_Corti

| fb_ | fhk | fvk0 | fhmedio | τ0 | fv0 | μ | ϕ | fvk,lim | E | G | FC |
|---|---|---|---|---|---|---|---|---|---|---|---|
| 12 | | | 17.25 | 0.9 | 2 | 0.577 | 0.767 | 0.65 | 32000 | 12800 | 1.2 |

## Verifiche a pressoflessione delle travi in muratura in combinazioni non sismiche

| Sezione | γM | N | M | Mu | Comb. | c.s. | Verifica |
|---|---|---|---|---|---|---|---|
| ini. | 3 | -1181 | 43673 | 131792 | SLU 71 | 3.02 | Si |
| fin. | 3 | -2129 | -36750 | 131792 | SLU 71 | 3.59 | Si |
| ini. | 3 | -1204 | 40114 | 131792 | SLU 70 | 3.29 | Si |
| fin. | 3 | -2066 | -33778 | 131792 | SLU 70 | 3.9 | Si |
| ini. | 3 | -1287 | 39380 | 131792 | SLU 69 | 3.35 | Si |
| fin. | 3 | -2173 | -34747 | 131792 | SLU 69 | 3.79 | Si |
| ini. | 3 | -1241 | 41208 | 131792 | SLU 29 | 3.2 | Si |
| fin. | 3 | -2193 | -35756 | 131792 | SLU 29 | 3.69 | Si |
| ini. | 3 | -1098 | 44407 | 131792 | SLU 72 | 2.97 | Si |
| fin. | 3 | -2022 | -35782 | 131792 | SLU 72 | 3.68 | Si |
| ini. | 3 | -1158 | 41942 | 131792 | SLU 30 | 3.14 | Si |
| fin. | 3 | -2086 | -34787 | 131792 | SLU 30 | 3.79 | Si |
| ini. | 3 | -1678 | 39584 | 131792 | SLU 79 | 3.33 | Si |
| fin. | 3 | -2779 | -38236 | 131792 | SLU 79 | 3.45 | Si |
| ini. | 3 | -579 | 41793 | 131792 | SLU 51 | 3.15 | Si |
| fin. | 3 | -1269 | -29938 | 131792 | SLU 51 | 4.4 | Si |
| ini. | 3 | -662 | 41059 | 131792 | SLU 50 | 3.21 | Si |
| fin. | 3 | -1376 | -30907 | 131792 | SLU 50 | 4.26 | Si |
| ini. | 3 | -1595 | 40318 | 131792 | SLU 80 | 3.27 | Si |
| fin. | 3 | -2673 | -37267 | 131792 | SLU 80 | 3.54 | Si |

## Verifiche a taglio delle travi in muratura secondo §C8.7.1.3.1 in combinazioni non sismiche

| Sezione | γM | N | M | V | Vt | Vp | Vt fess. diag. | Vt,lim | Comb. | c.s. | Verifica |
|---|---|---|---|---|---|---|---|---|---|---|---|
| ini. | 3 | 0 | 35291 | 1999 | | | 1143 | 430 | SLU 77 | 0.22 | No |
| fin. | 3 | 0 | -36232 | -2934 | | | 1143 | 430 | SLU 77 | 0.15 | No |
| ini. | 3 | 0 | 32826 | 1839 | | | 1143 | 430 | SLU 35 | 0.23 | No |
| fin. | 3 | 0 | -35238 | -2767 | | | 1143 | 430 | SLU 35 | 0.16 | No |
| ini. | 3 | 0 | 39380 | 2034 | | | 1143 | 430 | SLU 69 | 0.21 | No |
| fin. | 3 | 0 | -34747 | -2841 | | | 1143 | 430 | SLU 69 | 0.15 | No |
| ini. | 3 | 0 | 44407 | 1978 | | | 1143 | 430 | SLU 72 | 0.22 | No |
| fin. | 3 | 0 | -35782 | -2831 | | | 1143 | 430 | SLU 72 | 0.15 | No |
| ini. | 3 | 0 | 37119 | 1714 | | | 1143 | 430 | SLU 37 | 0.25 | No |
| fin. | 3 | 0 | -37241 | -2769 | | | 1143 | 430 | SLU 37 | 0.16 | No |
| ini. | 3 | 0 | 36024 | 2068 | | | 1143 | 430 | SLU 78 | 0.21 | No |
| fin. | 3 | 0 | -35263 | -2921 | | | 1143 | 430 | SLU 78 | 0.15 | No |
| ini. | 3 | 0 | 40114 | 2103 | | | 1143 | 430 | SLU 70 | 0.2 | No |
| fin. | 3 | 0 | -33778 | -2829 | | | 1143 | 430 | SLU 70 | 0.15 | No |
| ini. | 3 | 0 | 39584 | 1874 | | | 1143 | 430 | SLU 79 | 0.23 | No |
| fin. | 3 | 0 | -38236 | -2935 | | | 1143 | 430 | SLU 79 | 0.15 | No |
| ini. | 3 | 0 | 43673 | 1909 | | | 1143 | 430 | SLU 71 | 0.23 | No |
| fin. | 3 | 0 | -36750 | -2843 | | | 1143 | 430 | SLU 71 | 0.15 | No |
| ini. | 3 | 0 | 40318 | 1943 | | | 1143 | 430 | SLU 80 | 0.22 | No |
| fin. | 3 | 0 | -37267 | -2923 | | | 1143 | 430 | SLU 80 | 0.15 | No |

## Verifiche a pressoflessione delle travi in muratura in combinazioni sismiche

| Sezione | γM | N | M | Mu | Comb. | c.s. | Verifica |
|---|---|---|---|---|---|---|---|
| ini. | 2 | -1134 | -83369 | 149694 | SLV 13 | 1.8 | Si |
| fin. | 2 | -124 | 85835 | 149694 | SLV 13 | 1.74 | Si |
| ini. | 2 | -800 | 113297 | 149694 | SLV 2 | 1.32 | Si |
| fin. | 2 | -2787 | -122572 | 149694 | SLV 2 | 1.22 | Si |
| ini. | 2 | -1579 | 54218 | 149694 | SLV 5 | 2.76 | Si |
| fin. | 2 | -2805 | -64284 | 149694 | SLV 5 | 2.33 | Si |
| ini. | 2 | -567 | -91730 | 149694 | SLV 16 | 1.63 | Si |
| fin. | 2 | 690 | 98397 | 149694 | SLV 16 | 1.52 | Si |
| ini. | 2 | -232 | 104936 | 149694 | SLV 4 | 1.43 | Si |
| fin. | 2 | -1973 | -110011 | 149694 | SLV 4 | 1.36 | Si |
| ini. | 2 | -567 | -91730 | 149694 | SLV 15 | 1.63 | Si |
| fin. | 2 | 690 | 98397 | 149694 | SLV 15 | 1.52 | Si |
| ini. | 2 | -800 | 113297 | 149694 | SLV 1 | 1.32 | Si |
| fin. | 2 | -2787 | -122572 | 149694 | SLV 1 | 1.22 | Si |
| ini. | 2 | -1134 | -83369 | 149694 | SLV 14 | 1.8 | Si |
| fin. | 2 | -124 | 85835 | 149694 | SLV 14 | 1.74 | Si |
| ini. | 2 | -232 | 104936 | 149694 | SLV 3 | 1.43 | Si |
| fin. | 2 | -1973 | -110011 | 149694 | SLV 3 | 1.36 | Si |
| ini. | 2 | -1579 | 54218 | 149694 | SLV 6 | 2.76 | Si |
| fin. | 2 | -2805 | -64284 | 149694 | SLV 6 | 2.33 | Si |

## Verifiche a taglio delle travi in muratura secondo §C8.7.1.3.1 in combinazioni sismiche

| Sezione | γM | N | M | V | Vt | Vp | Vt fess. diag. | Vt,lim | Comb. | c.s. | Verifica |
|---|---|---|---|---|---|---|---|---|---|---|---|
| ini. | 2 | 0 | 104936 | -1133 | | | 1715 | 645 | SLV 4 | 0.57 | No |
| fin. | 2 | 0 | -110011 | -4900 | | | 1715 | 645 | SLV 4 | 0.13 | No |
| ini. | 2 | 0 | -91730 | 3052 | | | 1715 | 645 | SLV 16 | 0.21 | No |
| fin. | 2 | 0 | 98397 | 3177 | | | 1715 | 645 | SLV 16 | 0.2 | No |
| ini. | 2 | 0 | 54421 | -172 | | | 1715 | 645 | SLD 2 | 3.75 | Si |
| fin. | 2 | 0 | -59042 | -2987 | | | 1715 | 645 | SLD 2 | 0.22 | No |
| ini. | 2 | 0 | 113297 | -1474 | | | 1715 | 645 | SLV 2 | 0.44 | No |
| fin. | 2 | 0 | -122572 | -5471 | | | 1715 | 645 | SLV 2 | 0.12 | No |
| ini. | 2 | 0 | 113297 | -1474 | | | 1715 | 645 | SLV 1 | 0.44 | No |
| fin. | 2 | 0 | -122572 | -5471 | | | 1715 | 645 | SLV 1 | 0.12 | No |
| ini. | 2 | 0 | 54421 | -172 | | | 1715 | 645 | SLD 1 | 3.75 | Si |
| fin. | 2 | 0 | -59042 | -2987 | | | 1715 | 645 | SLD 1 | 0.22 | No |
| ini. | 2 | 0 | -91730 | 3052 | | | 1715 | 645 | SLV 15 | 0.21 | No |
| fin. | 2 | 0 | 98397 | 3177 | | | 1715 | 645 | SLV 15 | 0.2 | No |
| ini. | 2 | 0 | 104936 | -1133 | | | 1715 | 645 | SLV 3 | 0.57 | No |
| fin. | 2 | 0 | -110011 | -4900 | | | 1715 | 645 | SLV 3 | 0.13 | No |
| ini. | 2 | 0 | 54218 | -407 | | | 1715 | 645 | SLV 6 | 1.59 | Si |

| Sezione | γM | N | M | V | Vt | Vp | Vt fess. diag. | Vt,lim | Comb. | c.s. | Verifica |
|---|---|---|---|---|---|---|---|---|---|---|---|
| fin. | 2 | 0 | -64284 | -3309 | | | 1715 | 645 | SLV 6 | 0.19 | No |
| ini. | 2 | 0 | 54218 | -407 | | | 1715 | 645 | SLV 5 | 1.59 | Si |
| fin. | 2 | 0 | -64284 | -3309 | | | 1715 | 645 | SLV 5 | 0.19 | No |

### Tabella dei coefficienti di sicurezza minimi

| Stato limite | Coeff.s. | Comb. | Verifica |
|---|---|---|---|
| PF_SLV | 1.221 | SLV 1 | Si |
| V_SLV | 0.118 | SLV 1 | No |
| PF_SLU | 2.968 | SLU 72 | Si |
| V_SLU | 0.147 | SLU 79 | No |

## Trave di accoppiamento 162

Verifiche condotte secondo D.M. 17-01-18 (N.T.C.)

### Dati geometrici

| X ini. | Y ini. | Z ini.inf. | Z ini.sup. | H ini. | X fin. | Y fin. | Z fin.inf. | Z fin.sup | H fin. | Luce | Spessore | R. Trazione |
|---|---|---|---|---|---|---|---|---|---|---|---|---|
| -1116.3 | 104.6 | 1498 | 1564 | 66 | -1228.3 | 104.6 | 1498 | 1564 | 66 | 112 | 28 | 3500 |

### Caratteristiche del materiale

(Circolare 7 21-01-19 C8.5.I) Muratura in mattoni pieni e malta di calce LC2_Corti

| fb_ | fhk | fvk0 | fhmedio | τ0 | fv0 | μ | ϕ | fvk,lim | E | G | FC |
|---|---|---|---|---|---|---|---|---|---|---|---|
| 12 | | | 17.25 | 0.9 | 2 | 0.577 | 0.767 | 0.65 | 32000 | 12800 | 1.2 |

### Verifiche a pressoflessione delle travi in muratura in combinazioni non sismiche

| Sezione | γM | N | M | Mu | Comb. | c.s. | Verifica |
|---|---|---|---|---|---|---|---|
| ini. | 3 | -2159 | -53266 | 61792 | SLU 78 | 1.16 | Si |
| fin. | 3 | -1411 | -10123 | 61792 | SLU 78 | 6.1 | Si |
| ini. | 3 | -1929 | -54141 | 61792 | SLU 71 | 1.14 | Si |
| fin. | 3 | -1085 | -5164 | 61792 | SLU 71 | 11.97 | Si |
| ini. | 3 | -1621 | -52141 | 61792 | SLU 48 | 1.19 | Si |
| fin. | 3 | -793 | -3269 | 61792 | SLU 48 | 18.9 | Si |
| ini. | 3 | -2144 | -51357 | 61792 | SLU 79 | 1.2 | Si |
| fin. | 3 | -1408 | -9218 | 61792 | SLU 79 | 6.7 | Si |
| ini. | 3 | -1943 | -56050 | 61792 | SLU 70 | 1.1 | Si |
| fin. | 3 | -1088 | -6069 | 61792 | SLU 70 | 10.18 | Si |
| ini. | 3 | -1893 | -53582 | 61792 | SLU 72 | 1.15 | Si |
| fin. | 3 | -1063 | -5323 | 61792 | SLU 72 | 11.61 | Si |
| ini. | 3 | -2195 | -53825 | 61792 | SLU 77 | 1.15 | Si |
| fin. | 3 | -1433 | -9964 | 61792 | SLU 77 | 6.2 | Si |
| ini. | 3 | -1979 | -56609 | 61792 | SLU 69 | 1.09 | Si |
| fin. | 3 | -1110 | -5910 | 61792 | SLU 69 | 10.46 | Si |
| ini. | 3 | -1585 | -51582 | 61792 | SLU 49 | 1.2 | Si |
| fin. | 3 | -772 | -3428 | 61792 | SLU 49 | 18.03 | Si |
| ini. | 3 | -2108 | -50798 | 61792 | SLU 80 | 1.22 | Si |
| fin. | 3 | -1386 | -9377 | 61792 | SLU 80 | 6.59 | Si |

### Verifiche a taglio delle travi in muratura secondo §C8.7.1.3.1 in combinazioni non sismiche

| Sezione | γM | N | M | V | Vt | Vp | Vt fess. diag. | Vt,lim | Comb. | c.s. | Verifica |
|---|---|---|---|---|---|---|---|---|---|---|---|
| ini. | 3 | 0 | -56050 | 3008 | | | 474 | 179 | SLU 70 | 0.06 | No |
| fin. | 3 | 0 | -6069 | -833 | | | 474 | 179 | SLU 70 | 0.21 | No |
| ini. | 3 | 0 | -51582 | 2792 | | | 474 | 179 | SLU 49 | 0.06 | No |
| fin. | 3 | 0 | -3428 | -738 | | | 474 | 179 | SLU 49 | 0.24 | No |
| ini. | 3 | 0 | -56609 | 3032 | | | 474 | 179 | SLU 69 | 0.06 | No |
| fin. | 3 | 0 | -5910 | -829 | | | 474 | 179 | SLU 69 | 0.22 | No |
| ini. | 3 | 0 | -52141 | 2815 | | | 474 | 179 | SLU 48 | 0.06 | No |
| fin. | 3 | 0 | -3269 | -734 | | | 474 | 179 | SLU 48 | 0.24 | No |
| ini. | 3 | 0 | -50798 | 2724 | | | 474 | 179 | SLU 80 | 0.07 | No |
| fin. | 3 | 0 | -9377 | -849 | | | 474 | 179 | SLU 80 | 0.21 | No |
| ini. | 3 | 0 | -53825 | 2920 | | | 474 | 179 | SLU 77 | 0.06 | No |
| fin. | 3 | 0 | -9964 | -923 | | | 474 | 179 | SLU 77 | 0.19 | No |
| ini. | 3 | 0 | -53582 | 2836 | | | 474 | 179 | SLU 72 | 0.06 | No |
| fin. | 3 | 0 | -5323 | -755 | | | 474 | 179 | SLU 72 | 0.24 | No |
| ini. | 3 | 0 | -54141 | 2859 | | | 474 | 179 | SLU 71 | 0.06 | No |
| fin. | 3 | 0 | -5164 | -750 | | | 474 | 179 | SLU 71 | 0.24 | No |
| ini. | 3 | 0 | -51357 | 2747 | | | 474 | 179 | SLU 79 | 0.06 | No |
| fin. | 3 | 0 | -9218 | -845 | | | 474 | 179 | SLU 79 | 0.21 | No |
| ini. | 3 | 0 | -53266 | 2897 | | | 474 | 179 | SLU 78 | 0.06 | No |
| fin. | 3 | 0 | -10123 | -927 | | | 474 | 179 | SLU 78 | 0.19 | No |

### Verifiche a pressoflessione delle travi in muratura in combinazioni sismiche

| Sezione | γM | N | M | Mu | Comb. | c.s. | Verifica |
|---|---|---|---|---|---|---|---|
| ini. | 2 | -196 | -128080 | 79694 | SLV 14 | 0.62 | No |
| fin. | 2 | 5291 | 193860 | 79694 | SLV 14 | 0.41 | No |
| ini. | 2 | -2108 | 45296 | 79694 | SLV 1 | 1.76 | Si |
| fin. | 2 | -5648 | -171384 | 79694 | SLV 1 | 0.47 | No |
| ini. | 2 | -1726 | 75021 | 79694 | SLV 4 | 1.06 | Si |
| fin. | 2 | -6425 | -202017 | 79694 | SLV 4 | 0.39 | No |
| ini. | 2 | -1726 | 75021 | 79694 | SLV 3 | 1.06 | Si |
| fin. | 2 | -6425 | -202017 | 79694 | SLV 3 | 0.39 | No |
| ini. | 2 | 186 | -98354 | 79694 | SLV 16 | 0.81 | No |
| fin. | 2 | 4514 | 163227 | 79694 | SLV 16 | 0.49 | No |
| ini. | 2 | -611 | 49019 | 79694 | SLV 8 | 1.63 | Si |
| fin. | 2 | -3503 | -109921 | 79694 | SLV 8 | 0.73 | No |

| Sezione | γM | N | M | Mu | Comb. | c.s. | Verifica |
|---|---|---|---|---|---|---|---|
| ini. | 2 | -196 | -128080 | 79694 | SLV 13 | 0.62 | No |
| fin. | 2 | 5291 | 193860 | 79694 | SLV 13 | 0.41 | No |
| ini. | 2 | -2108 | 45296 | 79694 | SLV 2 | 1.76 | Si |
| fin. | 2 | -5648 | -171384 | 79694 | SLV 2 | 0.47 | No |
| ini. | 2 | -611 | 49019 | 79694 | SLV 7 | 1.63 | Si |
| fin. | 2 | -3503 | -109921 | 79694 | SLV 7 | 0.73 | No |
| ini. | 2 | 186 | -98354 | 79694 | SLV 15 | 0.81 | No |
| fin. | 2 | 4514 | 163227 | 79694 | SLV 15 | 0.49 | No |

### Verifiche a taglio delle travi in muratura secondo §C8.7.1.3.1 in combinazioni sismiche

| Sezione | γM | N | M | V | Vt | Vp | Vt fess. diag. | Vt,lim | Comb. | c.s. | Verifica |
|---|---|---|---|---|---|---|---|---|---|---|---|
| ini. | 2 | 0 | 75021 | -2611 | | | 712 | 268 | SLV 3 | 0.1 | No |
| fin. | 2 | 0 | -202017 | -5171 | | | 712 | 268 | SLV 3 | 0.05 | No |
| ini. | 2 | 0 | -128080 | 5664 | | | 712 | 268 | SLV 14 | 0.05 | No |
| fin. | 2 | 0 | 193860 | 4168 | | | 712 | 268 | SLV 14 | 0.06 | No |
| ini. | 2 | 0 | -98354 | 4516 | | | 712 | 268 | SLV 16 | 0.06 | No |
| fin. | 2 | 0 | 163227 | 3352 | | | 712 | 268 | SLV 16 | 0.08 | No |
| ini. | 2 | 0 | 45296 | -1463 | | | 712 | 268 | SLV 1 | 0.18 | No |
| fin. | 2 | 0 | -171384 | -4355 | | | 712 | 268 | SLV 1 | 0.06 | No |
| ini. | 2 | 0 | -102077 | 4509 | | | 712 | 268 | SLV 10 | 0.06 | No |
| fin. | 2 | 0 | 101763 | 2137 | | | 712 | 268 | SLV 10 | 0.13 | No |
| ini. | 2 | 0 | 45296 | -1463 | | | 712 | 268 | SLV 2 | 0.18 | No |
| fin. | 2 | 0 | -171384 | -4355 | | | 712 | 268 | SLV 2 | 0.06 | No |
| ini. | 2 | 0 | -102077 | 4509 | | | 712 | 268 | SLV 9 | 0.06 | No |
| fin. | 2 | 0 | 101763 | 2137 | | | 712 | 268 | SLV 9 | 0.13 | No |
| ini. | 2 | 0 | 75021 | -2611 | | | 712 | 268 | SLV 4 | 0.1 | No |
| fin. | 2 | 0 | -202017 | -5171 | | | 712 | 268 | SLV 4 | 0.05 | No |
| ini. | 2 | 0 | -128080 | 5664 | | | 712 | 268 | SLV 13 | 0.05 | No |
| fin. | 2 | 0 | 193860 | 4168 | | | 712 | 268 | SLV 13 | 0.06 | No |
| ini. | 2 | 0 | -98354 | 4516 | | | 712 | 268 | SLV 15 | 0.06 | No |
| fin. | 2 | 0 | 163227 | 3352 | | | 712 | 268 | SLV 15 | 0.08 | No |

### Tabella dei coefficienti di sicurezza minimi

| Stato limite | Coeff.s. | Comb. | Verifica |
|---|---|---|---|
| PF_SLV | 0.394 | SLV 3 | No |
| V_SLV | 0.047 | SLV 13 | No |
| PF_SLU | 1.092 | SLU 69 | Si |
| V_SLU | 0.059 | SLU 69 | No |

## Trave di accoppiamento 163

Verifiche condotte secondo D.M. 17-01-18 (N.T.C.)

### Dati geometrici

| X ini. | Y ini. | Z ini.inf. | Z ini.sup. | H ini. | X fin. | Y fin. | Z fin.inf. | Z fin.sup | H fin. | Luce | Spessore | R. Trazione |
|---|---|---|---|---|---|---|---|---|---|---|---|---|
| -938.6 | 104.6 | 1498 | 1564 | 66 | -1046.6 | 104.6 | 1498 | 1564 | 66 | 108 | 28 | 3500 |

### Caratteristiche del materiale

(Circolare 7 21-01-19 C8.5.I) Muratura in mattoni pieni e malta di calce LC2_Corti

| fb_ | fhk | fvk0 | fhmedio | τ0 | fv0 | μ | ϕ | fvk,lim | E | G | FC |
|---|---|---|---|---|---|---|---|---|---|---|---|
| 12 | | | 17.25 | 0.9 | 2 | 0.577 | 0.767 | 0.65 | 32000 | 12800 | 1.2 |

### Verifiche a pressoflessione delle travi in muratura in combinazioni non sismiche

| Sezione | γM | N | M | Mu | Comb. | c.s. | Verifica |
|---|---|---|---|---|---|---|---|
| ini. | 3 | -1670 | -9850 | 61792 | SLU 80 | 6.27 | Si |
| fin. | 3 | -2124 | -43530 | 61792 | SLU 80 | 1.42 | Si |
| ini. | 3 | -1650 | -8249 | 61792 | SLU 35 | 7.49 | Si |
| fin. | 3 | -2111 | -42151 | 61792 | SLU 35 | 1.47 | Si |
| ini. | 3 | -1735 | -11832 | 61792 | SLU 78 | 5.22 | Si |
| fin. | 3 | -2171 | -44377 | 61792 | SLU 78 | 1.39 | Si |
| ini. | 3 | -1739 | -11088 | 61792 | SLU 77 | 5.57 | Si |
| fin. | 3 | -2202 | -45219 | 61792 | SLU 77 | 1.37 | Si |
| ini. | 3 | -1384 | -7480 | 61792 | SLU 27 | 8.26 | Si |
| fin. | 3 | -1856 | -42077 | 61792 | SLU 27 | 1.47 | Si |
| ini. | 3 | -1473 | -10320 | 61792 | SLU 69 | 5.99 | Si |
| fin. | 3 | -1947 | -45145 | 61792 | SLU 69 | 1.37 | Si |
| ini. | 3 | -1674 | -9107 | 61792 | SLU 79 | 6.79 | Si |
| fin. | 3 | -2155 | -44372 | 61792 | SLU 79 | 1.39 | Si |
| ini. | 3 | -1409 | -8338 | 61792 | SLU 71 | 7.41 | Si |
| fin. | 3 | -1900 | -44298 | 61792 | SLU 71 | 1.39 | Si |
| ini. | 3 | -1469 | -11063 | 61792 | SLU 70 | 5.59 | Si |
| fin. | 3 | -1916 | -44303 | 61792 | SLU 70 | 1.39 | Si |
| ini. | 3 | -1404 | -9081 | 61792 | SLU 72 | 6.8 | Si |
| fin. | 3 | -1869 | -43456 | 61792 | SLU 72 | 1.42 | Si |

### Verifiche a taglio delle travi in muratura secondo §C8.7.1.3.1 in combinazioni non sismiche

| Sezione | γM | N | M | V | Vt | Vp | Vt fess. diag. | Vt,lim | Comb. | c.s. | Verifica |
|---|---|---|---|---|---|---|---|---|---|---|---|
| ini. | 3 | 0 | -9081 | 706 | | | 474 | 179 | SLU 72 | 0.25 | No |
| fin. | 3 | 0 | -43456 | -1709 | | | 474 | 179 | SLU 72 | 0.1 | No |
| ini. | 3 | 0 | -11832 | 798 | | | 474 | 179 | SLU 78 | 0.22 | No |
| fin. | 3 | 0 | -44377 | -1749 | | | 474 | 179 | SLU 78 | 0.1 | No |
| ini. | 3 | 0 | -9850 | 704 | | | 474 | 179 | SLU 80 | 0.25 | No |
| fin. | 3 | 0 | -43530 | -1689 | | | 474 | 179 | SLU 80 | 0.11 | No |
| ini. | 3 | 0 | -9107 | 684 | | | 474 | 179 | SLU 79 | 0.26 | No |

| Sezione | γM | N | M | V | Vt | Vp | Vt fess. diag. | Vt,lim | Comb. | c.s. | Verifica |
|---|---|---|---|---|---|---|---|---|---|---|---|
| fin. | 3 | 0 | -44372 | -1717 | | | 474 | 179 | SLU 79 | 0.1 | No |
| ini. | 3 | 0 | -11063 | 799 | | | 474 | 179 | SLU 70 | 0.22 | No |
| fin. | 3 | 0 | -44303 | -1769 | | | 474 | 179 | SLU 70 | 0.1 | No |
| ini. | 3 | 0 | -10320 | 778 | | | 474 | 179 | SLU 69 | 0.23 | No |
| fin. | 3 | 0 | -45145 | -1797 | | | 474 | 179 | SLU 69 | 0.1 | No |
| ini. | 3 | 0 | -7480 | 604 | | | 474 | 179 | SLU 27 | 0.3 | No |
| fin. | 3 | 0 | -42077 | -1615 | | | 474 | 179 | SLU 27 | 0.11 | No |
| ini. | 3 | 0 | -11088 | 777 | | | 474 | 179 | SLU 77 | 0.23 | No |
| fin. | 3 | 0 | -45219 | -1777 | | | 474 | 179 | SLU 77 | 0.1 | No |
| ini. | 3 | 0 | -8338 | 685 | | | 474 | 179 | SLU 71 | 0.26 | No |
| fin. | 3 | 0 | -44298 | -1737 | | | 474 | 179 | SLU 71 | 0.1 | No |
| ini. | 3 | 0 | -8249 | 603 | | | 474 | 179 | SLU 35 | 0.3 | No |
| fin. | 3 | 0 | -42151 | -1595 | | | 474 | 179 | SLU 35 | 0.11 | No |

### Verifiche a pressoflessione delle travi in muratura in combinazioni sismiche

| Sezione | γM | N | M | Mu | Comb. | c.s. | Verifica |
|---|---|---|---|---|---|---|---|
| ini. | 2 | 535 | 51698 | 79694 | SLV 5 | 1.54 | Si |
| fin. | 2 | -1513 | -79171 | 79694 | SLV 5 | 1.01 | Si |
| ini. | 2 | -3590 | -135372 | 79694 | SLV 13 | 0.59 | No |
| fin. | 2 | -753 | 48964 | 79694 | SLV 13 | 1.63 | Si |
| ini. | 2 | 535 | 51698 | 79694 | SLV 6 | 1.54 | Si |
| fin. | 2 | -1513 | -79171 | 79694 | SLV 6 | 1.01 | Si |
| ini. | 2 | -3833 | -146598 | 79694 | SLV 16 | 0.54 | No |
| fin. | 2 | -474 | 69503 | 79694 | SLV 16 | 1.15 | Si |
| ini. | 2 | 2318 | 132279 | 79694 | SLV 1 | 0.6 | No |
| fin. | 2 | -1421 | -111303 | 79694 | SLV 1 | 0.72 | No |
| ini. | 2 | 2318 | 132279 | 79694 | SLV 2 | 0.6 | No |
| fin. | 2 | -1421 | -111303 | 79694 | SLV 2 | 0.72 | No |
| ini. | 2 | 2075 | 121054 | 79694 | SLV 4 | 0.66 | No |
| fin. | 2 | -1142 | -90764 | 79694 | SLV 4 | 0.88 | No |
| ini. | 2 | -3833 | -146598 | 79694 | SLV 15 | 0.54 | No |
| fin. | 2 | -474 | 69503 | 79694 | SLV 15 | 1.15 | Si |
| ini. | 2 | 2075 | 121054 | 79694 | SLV 3 | 0.66 | No |
| fin. | 2 | -1142 | -90764 | 79694 | SLV 3 | 0.88 | No |
| ini. | 2 | -3590 | -135372 | 79694 | SLV 14 | 0.59 | No |
| fin. | 2 | -753 | 48964 | 79694 | SLV 14 | 1.63 | Si |

### Verifiche a taglio delle travi in muratura secondo §C8.7.1.3.1 in combinazioni sismiche

| Sezione | γM | N | M | V | Vt | Vp | Vt fess. diag. | Vt,lim | Comb. | c.s. | Verifica |
|---|---|---|---|---|---|---|---|---|---|---|---|
| ini. | 2 | 0 | 121054 | -2918 | | | 712 | 268 | SLV 3 | 0.09 | No |
| fin. | 2 | 0 | -90764 | -3186 | | | 712 | 268 | SLV 3 | 0.08 | No |
| ini. | 2 | 0 | 51698 | -1241 | | | 712 | 268 | SLV 5 | 0.22 | No |
| fin. | 2 | 0 | -79171 | -2613 | | | 712 | 268 | SLV 5 | 0.1 | No |
| ini. | 2 | 0 | 51698 | -1241 | | | 712 | 268 | SLV 6 | 0.22 | No |
| fin. | 2 | 0 | -79171 | -2613 | | | 712 | 268 | SLV 6 | 0.1 | No |
| ini. | 2 | 0 | -135372 | 3933 | | | 712 | 268 | SLV 13 | 0.07 | No |
| fin. | 2 | 0 | 48964 | 1361 | | | 712 | 268 | SLV 13 | 0.2 | No |
| ini. | 2 | 0 | 132279 | -3315 | | | 712 | 268 | SLV 1 | 0.08 | No |
| fin. | 2 | 0 | -111303 | -3747 | | | 712 | 268 | SLV 1 | 0.07 | No |
| ini. | 2 | 0 | 121054 | -2918 | | | 712 | 268 | SLV 4 | 0.09 | No |
| fin. | 2 | 0 | -90764 | -3186 | | | 712 | 268 | SLV 4 | 0.08 | No |
| ini. | 2 | 0 | 132279 | -3315 | | | 712 | 268 | SLV 2 | 0.08 | No |
| fin. | 2 | 0 | -111303 | -3747 | | | 712 | 268 | SLV 2 | 0.07 | No |
| ini. | 2 | 0 | -146598 | 4329 | | | 712 | 268 | SLV 16 | 0.06 | No |
| fin. | 2 | 0 | 69503 | 1922 | | | 712 | 268 | SLV 16 | 0.14 | No |
| ini. | 2 | 0 | -135372 | 3933 | | | 712 | 268 | SLV 14 | 0.07 | No |
| fin. | 2 | 0 | 48964 | 1361 | | | 712 | 268 | SLV 14 | 0.2 | No |
| ini. | 2 | 0 | -146598 | 4329 | | | 712 | 268 | SLV 15 | 0.06 | No |
| fin. | 2 | 0 | 69503 | 1922 | | | 712 | 268 | SLV 15 | 0.14 | No |

### Tabella dei coefficienti di sicurezza minimi

| Stato limite | Coeff.s. | Comb. | Verifica |
|---|---|---|---|
| PF_SLV | 0.544 | SLV 15 | No |
| V_SLV | 0.062 | SLV 15 | No |
| PF_SLU | 1.367 | SLU 77 | Si |
| V_SLU | 0.099 | SLU 69 | No |

## Trave di accoppiamento 164

Verifiche condotte secondo D.M. 17-01-18 (N.T.C.)

### Dati geometrici

| X ini. | Y ini. | Z ini.inf. | Z ini.sup. | H ini. | X fin. | Y fin. | Z fin.inf. | Z fin.sup | H fin. | Luce | Spessore | R. Trazione |
|---|---|---|---|---|---|---|---|---|---|---|---|---|
| -647.8 | 104.6 | 1458 | 1564 | 106 | -727.8 | 104.6 | 1458 | 1564 | 106 | 80 | 28 | 3500 |

### Caratteristiche del materiale

(Circolare 7 21-01-19 C8.5.I) Muratura in mattoni pieni e malta di calce LC2_Corti

| fb_ | fhk | fvk0 | fhmedio | τ0 | fv0 | μ | ϕ | fvk,lim | E | G | FC |
|---|---|---|---|---|---|---|---|---|---|---|---|
| 12 | | | 17.25 | 0.9 | 2 | 0.577 | 0.767 | 0.65 | 32000 | 12800 | 1.2 |

### Verifiche a pressoflessione delle travi in muratura in combinazioni non sismiche

| Sezione | γM | N | M | Mu | Comb. | c.s. | Verifica |
|---|---|---|---|---|---|---|---|
| ini. | 3 | -2256 | -28292 | 131792 | SLU 83 | 4.66 | Si |
| fin. | 3 | -1642 | 21816 | 131792 | SLU 83 | 6.04 | Si |

| Sezione | γM | N | M | Mu | Comb. | c.s. | Verifica |
|---|---|---|---|---|---|---|---|
| ini. | 3 | -2190 | -29236 | 131792 | SLU 74 | 4.51 | Si |
| fin. | 3 | -1591 | 20045 | 131792 | SLU 74 | 6.57 | Si |
| ini. | 3 | -1932 | -28602 | 131792 | SLU 40 | 4.61 | Si |
| fin. | 3 | -1234 | 23128 | 131792 | SLU 40 | 5.7 | Si |
| ini. | 3 | -2020 | -32318 | 131792 | SLU 82 | 4.08 | Si |
| fin. | 3 | -1251 | 26342 | 131792 | SLU 82 | 5 | Si |
| ini. | 3 | -1765 | -28255 | 131792 | SLU 73 | 4.66 | Si |
| fin. | 3 | -1119 | 23221 | 131792 | SLU 73 | 5.68 | Si |
| ini. | 3 | -1989 | -29430 | 131792 | SLU 39 | 4.48 | Si |
| fin. | 3 | -1262 | 23232 | 131792 | SLU 39 | 5.67 | Si |
| ini. | 3 | -1568 | -29826 | 131792 | SLU 61 | 4.42 | Si |
| fin. | 3 | -866 | 25249 | 131792 | SLU 61 | 5.22 | Si |
| ini. | 3 | -2132 | -28407 | 131792 | SLU 75 | 4.64 | Si |
| fin. | 3 | -1564 | 19942 | 131792 | SLU 75 | 6.61 | Si |
| ini. | 3 | -2078 | -33146 | 131792 | SLU 81 | 3.98 | Si |
| fin. | 3 | -1278 | 26446 | 131792 | SLU 81 | 4.98 | Si |
| ini. | 3 | -1625 | -30654 | 131792 | SLU 60 | 4.3 | Si |
| fin. | 3 | -893 | 25352 | 131792 | SLU 60 | 5.2 | Si |

## Verifiche a taglio delle travi in muratura secondo §C8.7.1.3.1 in combinazioni non sismiche

| Sezione | γM | N | M | V | Vt | Vp | Vt fess. diag. | Vt,lim | Comb. | c.s. | Verifica |
|---|---|---|---|---|---|---|---|---|---|---|---|
| ini. | 3 | 0 | -26743 | 2567 | | | 1143 | 430 | SLU 53 | 0.17 | No |
| fin. | 3 | 0 | 18952 | -340 | | | 1143 | 430 | SLU 53 | 1.27 | Si |
| ini. | 3 | 0 | -29236 | 2785 | | | 1143 | 430 | SLU 74 | 0.15 | No |
| fin. | 3 | 0 | 20045 | -344 | | | 1143 | 430 | SLU 74 | 1.25 | Si |
| ini. | 3 | 0 | -24381 | 2764 | | | 1143 | 430 | SLU 77 | 0.16 | No |
| fin. | 3 | 0 | 15416 | -762 | | | 1143 | 430 | SLU 77 | 0.56 | No |
| ini. | 3 | 0 | -28407 | 2762 | | | 1143 | 430 | SLU 75 | 0.16 | No |
| fin. | 3 | 0 | 19942 | -382 | | | 1143 | 430 | SLU 75 | 1.13 | Si |
| ini. | 3 | 0 | -27463 | 2671 | | | 1143 | 430 | SLU 84 | 0.16 | No |
| fin. | 3 | 0 | 21713 | -258 | | | 1143 | 430 | SLU 84 | 1.66 | Si |
| ini. | 3 | 0 | -23552 | 2740 | | | 1143 | 430 | SLU 78 | 0.16 | No |
| fin. | 3 | 0 | 15312 | -799 | | | 1143 | 430 | SLU 78 | 0.54 | No |
| ini. | 3 | 0 | -33146 | 2716 | | | 1143 | 430 | SLU 81 | 0.16 | No |
| fin. | 3 | 0 | 26446 | 196 | | | 1143 | 430 | SLU 81 | 2.19 | Si |
| ini. | 3 | 0 | -28292 | 2694 | | | 1143 | 430 | SLU 83 | 0.16 | No |
| fin. | 3 | 0 | 21816 | -221 | | | 1143 | 430 | SLU 83 | 1.94 | Si |
| ini. | 3 | 0 | -32318 | 2692 | | | 1143 | 430 | SLU 82 | 0.16 | No |
| fin. | 3 | 0 | 26342 | 159 | | | 1143 | 430 | SLU 82 | 2.71 | Si |
| ini. | 3 | 0 | -21888 | 2546 | | | 1143 | 430 | SLU 56 | 0.17 | No |
| fin. | 3 | 0 | 14322 | -757 | | | 1143 | 430 | SLU 56 | 0.57 | No |

## Verifiche a pressoflessione delle travi in muratura in combinazioni sismiche

| Sezione | γM | N | M | Mu | Comb. | c.s. | Verifica |
|---|---|---|---|---|---|---|---|
| ini. | 2 | 966 | 89748 | 149694 | SLV 1 | 1.67 | Si |
| fin. | 2 | -169 | -79429 | 149694 | SLV 1 | 1.88 | Si |
| ini. | 2 | -2505 | -110008 | 149694 | SLV 13 | 1.36 | Si |
| fin. | 2 | -920 | 86801 | 149694 | SLV 13 | 1.72 | Si |
| ini. | 2 | -2505 | -110008 | 149694 | SLV 14 | 1.36 | Si |
| fin. | 2 | -920 | 86801 | 149694 | SLV 14 | 1.72 | Si |
| ini. | 2 | -2663 | -75443 | 149694 | SLV 11 | 1.98 | Si |
| fin. | 2 | -1254 | 74662 | 149694 | SLV 11 | 2 | Si |
| ini. | 2 | -3139 | -126323 | 149694 | SLV 16 | 1.19 | Si |
| fin. | 2 | -1195 | 108051 | 149694 | SLV 16 | 1.39 | Si |
| ini. | 2 | 332 | 73433 | 149694 | SLV 4 | 2.04 | Si |
| fin. | 2 | -445 | -58179 | 149694 | SLV 4 | 2.57 | Si |
| ini. | 2 | 332 | 73433 | 149694 | SLV 3 | 2.04 | Si |
| fin. | 2 | -445 | -58179 | 149694 | SLV 3 | 2.57 | Si |
| ini. | 2 | 966 | 89748 | 149694 | SLV 2 | 1.67 | Si |
| fin. | 2 | -169 | -79429 | 149694 | SLV 2 | 1.88 | Si |
| ini. | 2 | -3139 | -126323 | 149694 | SLV 15 | 1.19 | Si |
| fin. | 2 | -1195 | 108051 | 149694 | SLV 15 | 1.39 | Si |
| ini. | 2 | -2663 | -75443 | 149694 | SLV 12 | 1.98 | Si |
| fin. | 2 | -1254 | 74662 | 149694 | SLV 12 | 2 | Si |

## Verifiche a taglio delle travi in muratura secondo §C8.7.1.3.1 in combinazioni sismiche

| Sezione | γM | N | M | V | Vt | Vp | Vt fess. diag. | Vt,lim | Comb. | c.s. | Verifica |
|---|---|---|---|---|---|---|---|---|---|---|---|
| ini. | 2 | 0 | -110008 | 4682 | | | 1715 | 645 | SLV 14 | 0.14 | No |
| fin. | 2 | 0 | 86801 | 2674 | | | 1715 | 645 | SLV 14 | 0.24 | No |
| ini. | 2 | 0 | -75443 | 3891 | | | 1715 | 645 | SLV 11 | 0.17 | No |
| fin. | 2 | 0 | 74662 | 1948 | | | 1715 | 645 | SLV 11 | 0.33 | No |
| ini. | 2 | 0 | -110008 | 4682 | | | 1715 | 645 | SLV 13 | 0.14 | No |
| fin. | 2 | 0 | 86801 | 2674 | | | 1715 | 645 | SLV 13 | 0.24 | No |
| ini. | 2 | 0 | -126323 | 5375 | | | 1715 | 645 | SLV 15 | 0.12 | No |
| fin. | 2 | 0 | 108051 | 3362 | | | 1715 | 645 | SLV 15 | 0.19 | No |
| ini. | 2 | 0 | -64402 | 3299 | | | 1715 | 645 | SLD 15 | 0.2 | No |
| fin. | 2 | 0 | 54212 | 1350 | | | 1715 | 645 | SLD 15 | 0.48 | No |
| ini. | 2 | 0 | 89748 | -1867 | | | 1715 | 645 | SLV 1 | 0.35 | No |
| fin. | 2 | 0 | -79429 | -3661 | | | 1715 | 645 | SLV 1 | 0.18 | No |
| ini. | 2 | 0 | -75443 | 3891 | | | 1715 | 645 | SLV 12 | 0.17 | No |
| fin. | 2 | 0 | 74662 | 1948 | | | 1715 | 645 | SLV 12 | 0.33 | No |
| ini. | 2 | 0 | -64402 | 3299 | | | 1715 | 645 | SLD 16 | 0.2 | No |
| fin. | 2 | 0 | 54212 | 1350 | | | 1715 | 645 | SLD 16 | 0.48 | No |
| ini. | 2 | 0 | 89748 | -1867 | | | 1715 | 645 | SLV 2 | 0.35 | No |
| fin. | 2 | 0 | -79429 | -3661 | | | 1715 | 645 | SLV 2 | 0.18 | No |
| ini. | 2 | 0 | -126323 | 5375 | | | 1715 | 645 | SLV 16 | 0.12 | No |
| fin. | 2 | 0 | 108051 | 3362 | | | 1715 | 645 | SLV 16 | 0.19 | No |

### Tabella dei coefficienti di sicurezza minimi

| Stato limite | Coeff.s. | Comb. | Verifica |
|---|---|---|---|
| PF_SLV | 1.185 | SLV 15 | Si |
| V_SLV | 0.12 | SLV 15 | No |
| PF_SLU | 3.976 | SLU 81 | Si |
| V_SLU | 0.154 | SLU 74 | No |

## Trave di accoppiamento 165

Verifiche condotte secondo D.M. 17-01-18 (N.T.C.)

### Dati geometrici

| X ini. | Y ini. | Z ini.inf. | Z ini.sup. | H ini. | X fin. | Y fin. | Z fin.inf. | Z fin.sup | H fin. | Luce | Spessore | R. Trazione |
|---|---|---|---|---|---|---|---|---|---|---|---|---|
| -416.8 | 104.6 | 1458 | 1564 | 106 | -496.8 | 104.6 | 1458 | 1564 | 106 | 80 | 28 | 3500 |

### Caratteristiche del materiale

(Circolare 7 21-01-19 C8.5.I) Muratura in mattoni pieni e malta di calce LC2_Corti

| fb_ | fhk | fvk0 | fhmedio | τ0 | fv0 | μ | ϕ | fvk,lim | E | G | FC |
|---|---|---|---|---|---|---|---|---|---|---|---|
| 12 | | | 17.25 | 0.9 | 2 | 0.577 | 0.767 | 0.65 | 32000 | 12800 | 1.2 |

### Verifiche a pressoflessione delle travi in muratura in combinazioni non sismiche

| Sezione | γM | N | M | Mu | Comb. | c.s. | Verifica |
|---|---|---|---|---|---|---|---|
| ini. | 3 | -1581 | -41022 | 131792 | SLU 71 | 3.21 | Si |
| fin. | 3 | -730 | 50066 | 131792 | SLU 71 | 2.63 | Si |
| ini. | 3 | -2335 | -38115 | 131792 | SLU 38 | 3.46 | Si |
| fin. | 3 | -1328 | 49840 | 131792 | SLU 38 | 2.64 | Si |
| ini. | 3 | -1454 | -41079 | 131792 | SLU 72 | 3.21 | Si |
| fin. | 3 | -622 | 50243 | 131792 | SLU 72 | 2.62 | Si |
| ini. | 3 | -2463 | -38058 | 131792 | SLU 37 | 3.46 | Si |
| fin. | 3 | -1435 | 49663 | 131792 | SLU 37 | 2.65 | Si |
| ini. | 3 | -2423 | -42960 | 131792 | SLU 80 | 3.07 | Si |
| fin. | 3 | -1374 | 52944 | 131792 | SLU 80 | 2.49 | Si |
| ini. | 3 | -2787 | -41517 | 131792 | SLU 77 | 3.17 | Si |
| fin. | 3 | -1725 | 48908 | 131792 | SLU 77 | 2.69 | Si |
| ini. | 3 | -1366 | -36234 | 131792 | SLU 30 | 3.64 | Si |
| fin. | 3 | -576 | 47139 | 131792 | SLU 30 | 2.8 | Si |
| ini. | 3 | -2550 | -42903 | 131792 | SLU 79 | 3.07 | Si |
| fin. | 3 | -1482 | 52767 | 131792 | SLU 79 | 2.5 | Si |
| ini. | 3 | -2659 | -41574 | 131792 | SLU 78 | 3.17 | Si |
| fin. | 3 | -1618 | 49085 | 131792 | SLU 78 | 2.68 | Si |
| ini. | 3 | -1494 | -36177 | 131792 | SLU 29 | 3.64 | Si |
| fin. | 3 | -683 | 46963 | 131792 | SLU 29 | 2.81 | Si |

### Verifiche a taglio delle travi in muratura secondo §C8.7.1.3.1 in combinazioni non sismiche

| Sezione | γM | N | M | V | Vt | Vp | Vt fess. diag. | Vt,lim | Comb. | c.s. | Verifica |
|---|---|---|---|---|---|---|---|---|---|---|---|
| ini. | 3 | 0 | -42960 | 3139 | | | 1143 | 430 | SLU 80 | 0.14 | No |
| fin. | 3 | 0 | 52944 | -670 | | | 1143 | 430 | SLU 80 | 0.64 | No |
| ini. | 3 | 0 | -41517 | 3183 | | | 1143 | 430 | SLU 77 | 0.14 | No |
| fin. | 3 | 0 | 48908 | -768 | | | 1143 | 430 | SLU 77 | 0.56 | No |
| ini. | 3 | 0 | -41574 | 3180 | | | 1143 | 430 | SLU 78 | 0.14 | No |
| fin. | 3 | 0 | 49085 | -797 | | | 1143 | 430 | SLU 78 | 0.54 | No |
| ini. | 3 | 0 | -36672 | 2930 | | | 1143 | 430 | SLU 35 | 0.15 | No |
| fin. | 3 | 0 | 45805 | -682 | | | 1143 | 430 | SLU 35 | 0.63 | No |
| ini. | 3 | 0 | -41079 | 2891 | | | 1143 | 430 | SLU 72 | 0.15 | No |
| fin. | 3 | 0 | 50243 | -766 | | | 1143 | 430 | SLU 72 | 0.56 | No |
| ini. | 3 | 0 | -36729 | 2927 | | | 1143 | 430 | SLU 36 | 0.15 | No |
| fin. | 3 | 0 | 45981 | -712 | | | 1143 | 430 | SLU 36 | 0.6 | No |
| ini. | 3 | 0 | -39636 | 2936 | | | 1143 | 430 | SLU 69 | 0.15 | No |
| fin. | 3 | 0 | 46207 | -863 | | | 1143 | 430 | SLU 69 | 0.5 | No |
| ini. | 3 | 0 | -39693 | 2932 | | | 1143 | 430 | SLU 70 | 0.15 | No |
| fin. | 3 | 0 | 46384 | -893 | | | 1143 | 430 | SLU 70 | 0.48 | No |
| ini. | 3 | 0 | -42903 | 3142 | | | 1143 | 430 | SLU 79 | 0.14 | No |
| fin. | 3 | 0 | 52767 | -640 | | | 1143 | 430 | SLU 79 | 0.67 | No |
| ini. | 3 | 0 | -41022 | 2895 | | | 1143 | 430 | SLU 71 | 0.15 | No |
| fin. | 3 | 0 | 50066 | -736 | | | 1143 | 430 | SLU 71 | 0.58 | No |

### Verifiche a pressoflessione delle travi in muratura in combinazioni sismiche

| Sezione | γM | N | M | Mu | Comb. | c.s. | Verifica |
|---|---|---|---|---|---|---|---|
| ini. | 2 | -1227 | -155338 | 149694 | SLV 15 | 0.96 | No |
| fin. | 2 | -388 | 101986 | 149694 | SLV 15 | 1.47 | Si |
| ini. | 2 | -539 | -147826 | 149694 | SLV 14 | 1.01 | Si |
| fin. | 2 | 15 | 84888 | 149694 | SLV 14 | 1.76 | Si |
| ini. | 2 | -1945 | 112386 | 149694 | SLV 1 | 1.33 | Si |
| fin. | 2 | -1751 | -59265 | 149694 | SLV 1 | 2.53 | Si |
| ini. | 2 | -2634 | 104874 | 149694 | SLV 3 | 1.43 | Si |
| fin. | 2 | -2154 | -42167 | 149694 | SLV 3 | 3.55 | Si |
| ini. | 2 | -539 | -147826 | 149694 | SLV 13 | 1.01 | Si |
| fin. | 2 | 15 | 84888 | 149694 | SLV 13 | 1.76 | Si |
| ini. | 2 | -1945 | 112386 | 149694 | SLV 2 | 1.33 | Si |
| fin. | 2 | -1751 | -59265 | 149694 | SLV 2 | 2.53 | Si |
| ini. | 2 | -1424 | -78634 | 149694 | SLD 16 | 1.9 | Si |
| fin. | 2 | -774 | 55620 | 149694 | SLD 16 | 2.69 | Si |
| ini. | 2 | -1227 | -155338 | 149694 | SLV 16 | 0.96 | No |
| fin. | 2 | -388 | 101986 | 149694 | SLV 16 | 1.47 | Si |
| ini. | 2 | -2634 | 104874 | 149694 | SLV 4 | 1.43 | Si |

| Sezione | γM | N | M | Mu | Comb. | c.s. | Verifica |
|---|---|---|---|---|---|---|---|
| fin. | 2 | -2154 | -42167 | 149694 | SLV 4 | 3.55 | Si |
| ini. | 2 | -1424 | -78634 | 149694 | SLD 15 | 1.9 | Si |
| fin. | 2 | -774 | 55620 | 149694 | SLD 15 | 2.69 | Si |

### Verifiche a taglio delle travi in muratura secondo §C8.7.1.3.1 in combinazioni sismiche

| Sezione | γM | N | M | V | Vt | Vp | Vt fess. diag. | Vt,lim | Comb. | c.s. | Verifica |
|---|---|---|---|---|---|---|---|---|---|---|---|
| ini. | 2 | 0 | 112386 | -1451 | | | 1715 | 645 | SLV 1 | 0.44 | No |
| fin. | 2 | 0 | -59265 | -2869 | | | 1715 | 645 | SLV 1 | 0.22 | No |
| ini. | 2 | 0 | -73028 | 3364 | | | 1715 | 645 | SLV 11 | 0.19 | No |
| fin. | 2 | 0 | 71480 | 618 | | | 1715 | 645 | SLV 11 | 1.04 | Si |
| ini. | 2 | 0 | -78634 | 2784 | | | 1715 | 645 | SLD 16 | 0.23 | No |
| fin. | 2 | 0 | 55620 | 786 | | | 1715 | 645 | SLD 16 | 0.82 | No |
| ini. | 2 | 0 | 112386 | -1451 | | | 1715 | 645 | SLV 2 | 0.44 | No |
| fin. | 2 | 0 | -59265 | -2869 | | | 1715 | 645 | SLV 2 | 0.22 | No |
| ini. | 2 | 0 | -147826 | 3867 | | | 1715 | 645 | SLV 14 | 0.17 | No |
| fin. | 2 | 0 | 84888 | 2152 | | | 1715 | 645 | SLV 14 | 0.3 | No |
| ini. | 2 | 0 | -147826 | 3867 | | | 1715 | 645 | SLV 13 | 0.17 | No |
| fin. | 2 | 0 | 84888 | 2152 | | | 1715 | 645 | SLV 13 | 0.3 | No |
| ini. | 2 | 0 | -155338 | 4494 | | | 1715 | 645 | SLV 15 | 0.14 | No |
| fin. | 2 | 0 | 101986 | 2255 | | | 1715 | 645 | SLV 15 | 0.29 | No |
| ini. | 2 | 0 | -155338 | 4494 | | | 1715 | 645 | SLV 16 | 0.14 | No |
| fin. | 2 | 0 | 101986 | 2255 | | | 1715 | 645 | SLV 16 | 0.29 | No |
| ini. | 2 | 0 | -73028 | 3364 | | | 1715 | 645 | SLV 12 | 0.19 | No |
| fin. | 2 | 0 | 71480 | 618 | | | 1715 | 645 | SLV 12 | 1.04 | Si |
| ini. | 2 | 0 | -78634 | 2784 | | | 1715 | 645 | SLD 15 | 0.23 | No |
| fin. | 2 | 0 | 55620 | 786 | | | 1715 | 645 | SLD 15 | 0.82 | No |

### Tabella dei coefficienti di sicurezza minimi

| Stato limite | Coeff.s. | Comb. | Verifica |
|---|---|---|---|
| PF_SLV | 0.964 | SLV 15 | No |
| V_SLV | 0.144 | SLV 15 | No |
| PF_SLU | 2.489 | SLU 80 | Si |
| V_SLU | 0.135 | SLU 77 | No |

## Trave di accoppiamento 166

Verifiche condotte secondo D.M. 17-01-18 (N.T.C.)

### Dati geometrici

| X ini. | Y ini. | Z ini.inf. | Z ini.sup. | H ini. | X fin. | Y fin. | Z fin.inf. | Z fin.sup | H fin. | Luce | Spessore | R. Trazione |
|---|---|---|---|---|---|---|---|---|---|---|---|---|
| -515.8 | 600.6 | 1248 | 1448 | 200 | -515.8 | 650.6 | 1248 | 1448 | 200 | 50 | 28 | 3500 |

### Caratteristiche del materiale

(Circolare 7 21-01-19 C8.5.I) Muratura in mattoni pieni e malta di calce LC2_Corti

| fb_ | fhk | fvk0 | fhmedio | τ0 | fv0 | μ | ϕ | fvk,lim | E | G | FC |
|---|---|---|---|---|---|---|---|---|---|---|---|
| 12 | | | 17.25 | 0.9 | 2 | 0.577 | 0.767 | 0.65 | 32000 | 12800 | 1.2 |

### Verifiche a pressoflessione delle travi in muratura in combinazioni non sismiche

| Sezione | γM | N | M | Mu | Comb. | c.s. | Verifica |
|---|---|---|---|---|---|---|---|
| ini. | 3 | 804 | 73253 | 296292 | SLU 27 | 4.04 | Si |
| fin. | 3 | 169 | 15835 | 296292 | SLU 27 | 18.71 | Si |
| ini. | 3 | 875 | 78007 | 296292 | SLU 72 | 3.8 | Si |
| fin. | 3 | 183 | 17239 | 296292 | SLU 72 | 17.19 | Si |
| ini. | 3 | 879 | 79171 | 296292 | SLU 71 | 3.74 | Si |
| fin. | 3 | 184 | 17338 | 296292 | SLU 71 | 17.09 | Si |
| ini. | 3 | 847 | 74316 | 296292 | SLU 69 | 3.99 | Si |
| fin. | 3 | 176 | 16565 | 296292 | SLU 69 | 17.89 | Si |
| ini. | 3 | 852 | 75488 | 296292 | SLU 38 | 3.92 | Si |
| fin. | 3 | 177 | 16591 | 296292 | SLU 38 | 17.86 | Si |
| ini. | 3 | 836 | 78107 | 296292 | SLU 29 | 3.79 | Si |
| fin. | 3 | 177 | 16608 | 296292 | SLU 29 | 17.84 | Si |
| ini. | 3 | 855 | 76652 | 296292 | SLU 37 | 3.87 | Si |
| fin. | 3 | 178 | 16691 | 296292 | SLU 37 | 17.75 | Si |
| ini. | 3 | 895 | 76552 | 296292 | SLU 80 | 3.87 | Si |
| fin. | 3 | 184 | 17321 | 296292 | SLU 80 | 17.11 | Si |
| ini. | 3 | 832 | 76944 | 296292 | SLU 30 | 3.85 | Si |
| fin. | 3 | 176 | 16509 | 296292 | SLU 30 | 17.95 | Si |
| ini. | 3 | 898 | 77715 | 296292 | SLU 79 | 3.81 | Si |
| fin. | 3 | 185 | 17420 | 296292 | SLU 79 | 17.01 | Si |

### Verifiche a taglio delle travi in muratura secondo §C8.7.1.3.1 in combinazioni non sismiche

| Sezione | γM | N | M | V | Vt | Vp | Vt fess. diag. | Vt,lim | Comb. | c.s. | Verifica |
|---|---|---|---|---|---|---|---|---|---|---|---|
| ini. | 3 | 0 | 74316 | -2456 | | | 2157 | 812 | SLU 69 | 0.33 | No |
| fin. | 3 | 0 | 16565 | 1049 | | | 2157 | 812 | SLU 69 | 0.77 | No |
| ini. | 3 | 0 | 78007 | -2590 | | | 2157 | 812 | SLU 72 | 0.31 | No |
| fin. | 3 | 0 | 17239 | 1080 | | | 2157 | 812 | SLU 72 | 0.75 | No |
| ini. | 3 | 0 | 77715 | -2575 | | | 2157 | 812 | SLU 79 | 0.32 | No |
| fin. | 3 | 0 | 17420 | 1148 | | | 2157 | 812 | SLU 79 | 0.71 | No |
| ini. | 3 | 0 | 76652 | -2591 | | | 2157 | 812 | SLU 37 | 0.31 | No |
| fin. | 3 | 0 | 16691 | 1119 | | | 2157 | 812 | SLU 37 | 0.73 | No |
| ini. | 3 | 0 | 79171 | -2629 | | | 2157 | 812 | SLU 71 | 0.31 | No |
| fin. | 3 | 0 | 17338 | 1074 | | | 2157 | 812 | SLU 71 | 0.76 | No |
| ini. | 3 | 0 | 78107 | -2644 | | | 2157 | 812 | SLU 29 | 0.31 | No |
| fin. | 3 | 0 | 16608 | 1046 | | | 2157 | 812 | SLU 29 | 0.78 | No |

| Sezione | γM | N | M | V | Vt | Vp | Vt fess. diag. | Vt,lim | Comb. | c.s. | Verifica |
|---|---|---|---|---|---|---|---|---|---|---|---|
| ini. | 3 | 0 | 75488 | -2552 | | | 2157 | 812 | SLU 38 | 0.32 | No |
| fin. | 3 | 0 | 16591 | 1126 | | | 2157 | 812 | SLU 38 | 0.72 | No |
| ini. | 3 | 0 | 73253 | -2471 | | | 2157 | 812 | SLU 27 | 0.33 | No |
| fin. | 3 | 0 | 15835 | 1021 | | | 2157 | 812 | SLU 27 | 0.8 | No |
| ini. | 3 | 0 | 76552 | -2537 | | | 2157 | 812 | SLU 80 | 0.32 | No |
| fin. | 3 | 0 | 17321 | 1154 | | | 2157 | 812 | SLU 80 | 0.7 | No |
| ini. | 3 | 0 | 76944 | -2606 | | | 2157 | 812 | SLU 30 | 0.31 | No |
| fin. | 3 | 0 | 16509 | 1052 | | | 2157 | 812 | SLU 30 | 0.77 | No |

### Verifiche a pressoflessione delle travi in muratura in combinazioni sismiche

| Sezione | γM | N | M | Mu | Comb. | c.s. | Verifica |
|---|---|---|---|---|---|---|---|
| ini. | 2 | 298 | 23378 | 314194 | SLD 4 | 13.44 | Si |
| fin. | 2 | 42 | 6002 | 314194 | SLD 4 | 52.35 | Si |
| ini. | 2 | 364 | 29863 | 314194 | SLV 11 | 10.52 | Si |
| fin. | 2 | 76 | 6057 | 314194 | SLV 11 | 51.88 | Si |
| ini. | 2 | 324 | 24727 | 314194 | SLD 8 | 12.71 | Si |
| fin. | 2 | 55 | 5960 | 314194 | SLD 8 | 52.72 | Si |
| ini. | 2 | 324 | 24727 | 314194 | SLD 7 | 12.71 | Si |
| fin. | 2 | 55 | 5960 | 314194 | SLD 7 | 52.72 | Si |
| ini. | 2 | 279 | 30877 | 314194 | SLV 4 | 10.18 | Si |
| fin. | 2 | 20 | 6683 | 314194 | SLV 4 | 47.01 | Si |
| ini. | 2 | 279 | 30877 | 314194 | SLV 3 | 10.18 | Si |
| fin. | 2 | 20 | 6683 | 314194 | SLV 3 | 47.01 | Si |
| ini. | 2 | 298 | 23378 | 314194 | SLD 3 | 13.44 | Si |
| fin. | 2 | 42 | 6002 | 314194 | SLD 3 | 52.35 | Si |
| ini. | 2 | 337 | 35090 | 314194 | SLV 7 | 8.95 | Si |
| fin. | 2 | 52 | 6596 | 314194 | SLV 7 | 47.64 | Si |
| ini. | 2 | 337 | 35090 | 314194 | SLV 8 | 8.95 | Si |
| fin. | 2 | 52 | 6596 | 314194 | SLV 8 | 47.64 | Si |
| ini. | 2 | 364 | 29863 | 314194 | SLV 12 | 10.52 | Si |
| fin. | 2 | 76 | 6057 | 314194 | SLV 12 | 51.88 | Si |

### Verifiche a taglio delle travi in muratura secondo §C8.7.1.3.1 in combinazioni sismiche

| Sezione | γM | N | M | V | Vt | Vp | Vt fess. diag. | Vt,lim | Comb. | c.s. | Verifica |
|---|---|---|---|---|---|---|---|---|---|---|---|
| ini. | 2 | 0 | 4611 | -484 | | | 3235 | 1217 | SLV 13 | 2.51 | Si |
| fin. | 2 | 0 | 4424 | 744 | | | 3235 | 1217 | SLV 13 | 1.64 | Si |
| ini. | 2 | 0 | 22394 | -628 | | | 3235 | 1217 | SLD 12 | 1.94 | Si |
| fin. | 2 | 0 | 5745 | 469 | | | 3235 | 1217 | SLD 12 | 2.59 | Si |
| ini. | 2 | 0 | 29863 | -885 | | | 3235 | 1217 | SLV 11 | 1.38 | Si |
| fin. | 2 | 0 | 6057 | 600 | | | 3235 | 1217 | SLV 11 | 2.03 | Si |
| ini. | 2 | 0 | 4611 | -484 | | | 3235 | 1217 | SLV 14 | 2.51 | Si |
| fin. | 2 | 0 | 4424 | 744 | | | 3235 | 1217 | SLV 14 | 1.64 | Si |
| ini. | 2 | 0 | 35090 | -801 | | | 3235 | 1217 | SLV 7 | 1.52 | Si |
| fin. | 2 | 0 | 6596 | 359 | | | 3235 | 1217 | SLV 7 | 3.39 | Si |
| ini. | 2 | 0 | 13451 | -714 | | | 3235 | 1217 | SLV 15 | 1.7 | Si |
| fin. | 2 | 0 | 4887 | 807 | | | 3235 | 1217 | SLV 15 | 1.51 | Si |
| ini. | 2 | 0 | 29863 | -885 | | | 3235 | 1217 | SLV 12 | 1.38 | Si |
| fin. | 2 | 0 | 6057 | 600 | | | 3235 | 1217 | SLV 12 | 2.03 | Si |
| ini. | 2 | 0 | 35090 | -801 | | | 3235 | 1217 | SLV 8 | 1.52 | Si |
| fin. | 2 | 0 | 6596 | 359 | | | 3235 | 1217 | SLV 8 | 3.39 | Si |
| ini. | 2 | 0 | 22394 | -628 | | | 3235 | 1217 | SLD 11 | 1.94 | Si |
| fin. | 2 | 0 | 5745 | 469 | | | 3235 | 1217 | SLD 11 | 2.59 | Si |
| ini. | 2 | 0 | 13451 | -714 | | | 3235 | 1217 | SLV 16 | 1.7 | Si |
| fin. | 2 | 0 | 4887 | 807 | | | 3235 | 1217 | SLV 16 | 1.51 | Si |

### Tabella dei coefficienti di sicurezza minimi

| Stato limite | Coeff.s. | Comb. | Verifica |
|---|---|---|---|
| PF_SLV | 8.954 | SLV 7 | Si |
| V_SLV | 1.376 | SLV 11 | Si |
| PF_SLU | 3.742 | SLU 71 | Si |
| V_SLU | 0.307 | SLU 29 | No |

## Trave di accoppiamento 167

Verifiche condotte secondo D.M. 17-01-18 (N.T.C.)

### Dati geometrici

| X ini. | Y ini. | Z ini.inf. | Z ini.sup. | H ini. | X fin. | Y fin. | Z fin.inf. | Z fin.sup | H fin. | Luce | Spessore | R. Trazione |
|---|---|---|---|---|---|---|---|---|---|---|---|---|
| -515.8 | 600.6 | 1528 | 1564 | 36 | -515.8 | 650.6 | 1528 | 1564 | 36 | 50 | 28 | 3500 |

### Caratteristiche del materiale

(Circolare 7 21-01-19 C8.5.I) Muratura in mattoni pieni e malta di calce LC2_Corti

| fb_ | fhk | fvk0 | fhmedio | τ0 | fv0 | μ | ϕ | fvk,lim | E | G | FC |
|---|---|---|---|---|---|---|---|---|---|---|---|
| 12 | | | 17.25 | 0.9 | 2 | 0.577 | 0.767 | 0.65 | 32000 | 12800 | 1.2 |

### Verifiche a pressoflessione delle travi in muratura in combinazioni non sismiche

| Sezione | γM | N | M | Mu | Comb. | c.s. | Verifica |
|---|---|---|---|---|---|---|---|
| ini. | 3 | 2325 | -174698 | 18411 | SLU 77 | 0.11 | No |
| fin. | 3 | 2325 | 101555 | 18411 | SLU 77 | 0.18 | No |
| ini. | 3 | 2506 | -172067 | 18411 | SLU 30 | 0.11 | No |
| fin. | 3 | 2506 | 108090 | 18411 | SLU 30 | 0.17 | No |
| ini. | 3 | 2494 | -174937 | 18411 | SLU 37 | 0.11 | No |
| fin. | 3 | 2494 | 107219 | 18411 | SLU 37 | 0.17 | No |
| ini. | 3 | 2476 | -178556 | 18411 | SLU 72 | 0.1 | No |

| Sezione | γM | N | M | Mu | Comb. | c.s. | Verifica |
|---|---|---|---|---|---|---|---|
| fin. | 3 | 2476 | 109145 | 18411 | SLU 72 | 0.17 | No |
| ini. | 3 | 2505 | -177045 | 18411 | SLU 38 | 0.1 | No |
| fin. | 3 | 2505 | 106609 | 18411 | SLU 38 | 0.17 | No |
| ini. | 3 | 2465 | -181426 | 18411 | SLU 79 | 0.1 | No |
| fin. | 3 | 2465 | 108274 | 18411 | SLU 79 | 0.17 | No |
| ini. | 3 | 2475 | -183534 | 18411 | SLU 80 | 0.1 | No |
| fin. | 3 | 2475 | 107664 | 18411 | SLU 80 | 0.17 | No |
| ini. | 3 | 2336 | -176806 | 18411 | SLU 78 | 0.1 | No |
| fin. | 3 | 2336 | 100946 | 18411 | SLU 78 | 0.18 | No |
| ini. | 3 | 2336 | -171828 | 18411 | SLU 70 | 0.11 | No |
| fin. | 3 | 2336 | 102427 | 18411 | SLU 70 | 0.18 | No |
| ini. | 3 | 2466 | -176448 | 18411 | SLU 71 | 0.1 | No |
| fin. | 3 | 2466 | 109755 | 18411 | SLU 71 | 0.17 | No |

## Verifiche a taglio delle travi in muratura secondo §C8.7.1.3.1 in combinazioni non sismiche

| Sezione | γM | N | M | V | Vt | Vp | Vt fess. diag. | Vt,lim | Comb. | c.s. | Verifica |
|---|---|---|---|---|---|---|---|---|---|---|---|
| ini. | 3 | 0 | -177045 | 5717 | | | 280 | 105 | SLU 38 | 0.02 | No |
| fin. | 3 | 0 | 106609 | 5624 | | | 280 | 105 | SLU 38 | 0.02 | No |
| ini. | 3 | 0 | -176806 | 5611 | | | 280 | 105 | SLU 78 | 0.02 | No |
| fin. | 3 | 0 | 100946 | 5492 | | | 280 | 105 | SLU 78 | 0.02 | No |
| ini. | 3 | 0 | -174937 | 5687 | | | 280 | 105 | SLU 37 | 0.02 | No |
| fin. | 3 | 0 | 107219 | 5594 | | | 280 | 105 | SLU 37 | 0.02 | No |
| ini. | 3 | 0 | -181426 | 5850 | | | 280 | 105 | SLU 79 | 0.02 | No |
| fin. | 3 | 0 | 108274 | 5731 | | | 280 | 105 | SLU 79 | 0.02 | No |
| ini. | 3 | 0 | -178556 | 5810 | | | 280 | 105 | SLU 72 | 0.02 | No |
| fin. | 3 | 0 | 109145 | 5691 | | | 280 | 105 | SLU 72 | 0.02 | No |
| ini. | 3 | 0 | -172067 | 5647 | | | 280 | 105 | SLU 30 | 0.02 | No |
| fin. | 3 | 0 | 108090 | 5554 | | | 280 | 105 | SLU 30 | 0.02 | No |
| ini. | 3 | 0 | -174698 | 5581 | | | 280 | 105 | SLU 77 | 0.02 | No |
| fin. | 3 | 0 | 101555 | 5462 | | | 280 | 105 | SLU 77 | 0.02 | No |
| ini. | 3 | 0 | -183534 | 5880 | | | 280 | 105 | SLU 80 | 0.02 | No |
| fin. | 3 | 0 | 107664 | 5761 | | | 280 | 105 | SLU 80 | 0.02 | No |
| ini. | 3 | 0 | -176448 | 5780 | | | 280 | 105 | SLU 71 | 0.02 | No |
| fin. | 3 | 0 | 109755 | 5661 | | | 280 | 105 | SLU 71 | 0.02 | No |
| ini. | 3 | 0 | -169959 | 5617 | | | 280 | 105 | SLU 29 | 0.02 | No |
| fin. | 3 | 0 | 108700 | 5524 | | | 280 | 105 | SLU 29 | 0.02 | No |

## Verifiche a pressoflessione delle travi in muratura in combinazioni sismiche

| Sezione | γM | N | M | Mu | Comb. | c.s. | Verifica |
|---|---|---|---|---|---|---|---|
| ini. | 2 | 1766 | -98610 | 27616 | SLV 13 | 0.28 | No |
| fin. | 2 | 1952 | -999 | 27616 | SLV 13 | 27.63 | Si |
| ini. | 2 | -153 | -83064 | 27616 | SLV 8 | 0.33 | No |
| fin. | 2 | 1954 | 8811 | 27616 | SLV 8 | 3.13 | Si |
| ini. | 2 | 1766 | -98610 | 27616 | SLV 14 | 0.28 | No |
| fin. | 2 | 1952 | -999 | 27616 | SLV 14 | 27.63 | Si |
| ini. | 2 | 955 | -85695 | 27616 | SLD 15 | 0.32 | No |
| fin. | 2 | 1614 | 6280 | 27616 | SLD 15 | 4.4 | Si |
| ini. | 2 | 1623 | -122850 | 27616 | SLV 16 | 0.22 | No |
| fin. | 2 | 3235 | -15689 | 27616 | SLV 16 | 1.76 | Si |
| ini. | 2 | 1623 | -122850 | 27616 | SLV 15 | 0.22 | No |
| fin. | 2 | 3235 | -15689 | 27616 | SLV 15 | 1.76 | Si |
| ini. | 2 | -153 | -83064 | 27616 | SLV 7 | 0.33 | No |
| fin. | 2 | 1954 | 8811 | 27616 | SLV 7 | 3.13 | Si |
| ini. | 2 | 589 | -114478 | 27616 | SLV 11 | 0.24 | No |
| fin. | 2 | 3235 | -10407 | 27616 | SLV 11 | 2.65 | Si |
| ini. | 2 | 955 | -85695 | 27616 | SLD 16 | 0.32 | No |
| fin. | 2 | 1614 | 6280 | 27616 | SLD 16 | 4.4 | Si |
| ini. | 2 | 589 | -114478 | 27616 | SLV 12 | 0.24 | No |
| fin. | 2 | 3235 | -10407 | 27616 | SLV 12 | 2.65 | Si |

## Verifiche a taglio delle travi in muratura secondo §C8.7.1.3.1 in combinazioni sismiche

| Sezione | γM | N | M | V | Vt | Vp | Vt fess. diag. | Vt,lim | Comb. | c.s. | Verifica |
|---|---|---|---|---|---|---|---|---|---|---|---|
| ini. | 2 | 0 | -83064 | 2854 | | | 419 | 158 | SLV 7 | 0.06 | No |
| fin. | 2 | 0 | 8811 | 2497 | | | 419 | 158 | SLV 7 | 0.06 | No |
| ini. | 2 | 0 | -83064 | 2854 | | | 419 | 158 | SLV 8 | 0.06 | No |
| fin. | 2 | 0 | 8811 | 2497 | | | 419 | 158 | SLV 8 | 0.06 | No |
| ini. | 2 | 0 | -82035 | 2151 | | | 419 | 158 | SLD 12 | 0.07 | No |
| fin. | 2 | 0 | 8668 | 2001 | | | 419 | 158 | SLD 12 | 0.08 | No |
| ini. | 2 | 0 | -82035 | 2151 | | | 419 | 158 | SLD 11 | 0.07 | No |
| fin. | 2 | 0 | 8668 | 2001 | | | 419 | 158 | SLD 11 | 0.08 | No |
| ini. | 2 | 0 | -68701 | 2173 | | | 419 | 158 | SLD 8 | 0.07 | No |
| fin. | 2 | 0 | 17174 | 1971 | | | 419 | 158 | SLD 8 | 0.08 | No |
| ini. | 2 | 0 | -18134 | 2113 | | | 419 | 158 | SLV 4 | 0.07 | No |
| fin. | 2 | 0 | 48370 | 1753 | | | 419 | 158 | SLV 4 | 0.09 | No |
| ini. | 2 | 0 | -114478 | 2802 | | | 419 | 158 | SLV 11 | 0.06 | No |
| fin. | 2 | 0 | -10407 | 2570 | | | 419 | 158 | SLV 11 | 0.06 | No |
| ini. | 2 | 0 | -114478 | 2802 | | | 419 | 158 | SLV 12 | 0.06 | No |
| fin. | 2 | 0 | -10407 | 2570 | | | 419 | 158 | SLV 12 | 0.06 | No |
| ini. | 2 | 0 | -68701 | 2173 | | | 419 | 158 | SLD 7 | 0.07 | No |
| fin. | 2 | 0 | 17174 | 1971 | | | 419 | 158 | SLD 7 | 0.08 | No |
| ini. | 2 | 0 | -18134 | 2113 | | | 419 | 158 | SLV 3 | 0.07 | No |
| fin. | 2 | 0 | 48370 | 1753 | | | 419 | 158 | SLV 3 | 0.09 | No |

## Tabella dei coefficienti di sicurezza minimi

| Stato limite | Coeff.s. | Comb. | Verifica |
|---|---|---|---|
| PF_SLV | 0.225 | SLV 15 | No |
| V_SLV | 0.055 | SLV 7 | No |

| Stato limite | Coeff.s. | Comb. | Verifica |
|---|---|---|---|
| PF_SLU | 0.1 | SLU 80 | No |
| V_SLU | 0.018 | SLU 80 | No |

## Trave di accoppiamento 168

Verifiche condotte secondo D.M. 17-01-18 (N.T.C.)

### Dati geometrici

| X ini. | Y ini. | Z ini.inf. | Z ini.sup. | H ini. | X fin. | Y fin. | Z fin.inf. | Z fin.sup | H fin. | Luce | Spessore | R. Trazione |
|---|---|---|---|---|---|---|---|---|---|---|---|---|
| -206.3 | 595.1 | 1248 | 1338 | 90 | -296.3 | 595.1 | 1248 | 1338 | 90 | 90 | 28 | 3500 |

### Caratteristiche del materiale

(Circolare 7 21-01-19 C8.5.I) Muratura in mattoni pieni e malta di calce LC2_Corti

| fb_ | fhk | fvk0 | fhmedio | τ0 | fv0 | μ | ϕ | fvk,lim | E | G | FC |
|---|---|---|---|---|---|---|---|---|---|---|---|
| 12 | | | 17.25 | 0.9 | 2 | 0.577 | 0.767 | 0.65 | 32000 | 12800 | 1.2 |

### Verifiche a pressoflessione delle travi in muratura in combinazioni non sismiche

| Sezione | γM | N | M | Mu | Comb. | c.s. | Verifica |
|---|---|---|---|---|---|---|---|
| ini. | 3 | 1078 | -28728 | 103792 | SLU 38 | 3.61 | Si |
| fin. | 3 | 530 | 20092 | 103792 | SLU 38 | 5.17 | Si |
| ini. | 3 | 1114 | -28043 | 103792 | SLU 71 | 3.7 | Si |
| fin. | 3 | 579 | 19392 | 103792 | SLU 71 | 5.35 | Si |
| ini. | 3 | 1110 | -28332 | 103792 | SLU 72 | 3.66 | Si |
| fin. | 3 | 563 | 20005 | 103792 | SLU 72 | 5.19 | Si |
| ini. | 3 | 1065 | -27874 | 103792 | SLU 35 | 3.72 | Si |
| fin. | 3 | 513 | 19841 | 103792 | SLU 35 | 5.23 | Si |
| ini. | 3 | 1111 | -30174 | 103792 | SLU 77 | 3.44 | Si |
| fin. | 3 | 466 | 23202 | 103792 | SLU 77 | 4.47 | Si |
| ini. | 3 | 1060 | -28163 | 103792 | SLU 36 | 3.69 | Si |
| fin. | 3 | 496 | 20454 | 103792 | SLU 36 | 5.07 | Si |
| ini. | 3 | 1124 | -31029 | 103792 | SLU 80 | 3.35 | Si |
| fin. | 3 | 482 | 23454 | 103792 | SLU 80 | 4.43 | Si |
| ini. | 3 | 1083 | -28439 | 103792 | SLU 37 | 3.65 | Si |
| fin. | 3 | 546 | 19479 | 103792 | SLU 37 | 5.33 | Si |
| ini. | 3 | 1106 | -30463 | 103792 | SLU 78 | 3.41 | Si |
| fin. | 3 | 449 | 23815 | 103792 | SLU 78 | 4.36 | Si |
| ini. | 3 | 1129 | -30740 | 103792 | SLU 79 | 3.38 | Si |
| fin. | 3 | 499 | 22841 | 103792 | SLU 79 | 4.54 | Si |

### Verifiche a taglio delle travi in muratura secondo §C8.7.1.3.1 in combinazioni non sismiche

| Sezione | γM | N | M | V | Vt | Vp | Vt fess. diag. | Vt,lim | Comb. | c.s. | Verifica |
|---|---|---|---|---|---|---|---|---|---|---|---|
| ini. | 3 | 0 | -30740 | 1120 | | | 970 | 365 | SLU 79 | 0.33 | No |
| fin. | 3 | 0 | 22841 | 687 | | | 970 | 365 | SLU 79 | 0.53 | No |
| ini. | 3 | 0 | -30174 | 1082 | | | 970 | 365 | SLU 77 | 0.34 | No |
| fin. | 3 | 0 | 23202 | 727 | | | 970 | 365 | SLU 77 | 0.5 | No |
| ini. | 3 | 0 | -28728 | 1053 | | | 970 | 365 | SLU 38 | 0.35 | No |
| fin. | 3 | 0 | 20092 | 585 | | | 970 | 365 | SLU 38 | 0.62 | No |
| ini. | 3 | 0 | -27661 | 1129 | | | 970 | 365 | SLU 84 | 0.32 | No |
| fin. | 3 | 0 | 25568 | 740 | | | 970 | 365 | SLU 84 | 0.49 | No |
| ini. | 3 | 0 | -26698 | 1063 | | | 970 | 365 | SLU 76 | 0.34 | No |
| fin. | 3 | 0 | 24498 | 721 | | | 970 | 365 | SLU 76 | 0.51 | No |
| ini. | 3 | 0 | -30463 | 1100 | | | 970 | 365 | SLU 78 | 0.33 | No |
| fin. | 3 | 0 | 23815 | 741 | | | 970 | 365 | SLU 78 | 0.49 | No |
| ini. | 3 | 0 | -25360 | 1043 | | | 970 | 365 | SLU 42 | 0.35 | No |
| fin. | 3 | 0 | 22206 | 624 | | | 970 | 365 | SLU 42 | 0.59 | No |
| ini. | 3 | 0 | -31029 | 1138 | | | 970 | 365 | SLU 80 | 0.32 | No |
| fin. | 3 | 0 | 23454 | 701 | | | 970 | 365 | SLU 80 | 0.52 | No |
| ini. | 3 | 0 | -27372 | 1110 | | | 970 | 365 | SLU 83 | 0.33 | No |
| fin. | 3 | 0 | 24955 | 725 | | | 970 | 365 | SLU 83 | 0.5 | No |
| ini. | 3 | 0 | -23137 | 1041 | | | 970 | 365 | SLU 82 | 0.35 | No |
| fin. | 3 | 0 | 26203 | 750 | | | 970 | 365 | SLU 82 | 0.49 | No |

### Verifiche a pressoflessione delle travi in muratura in combinazioni sismiche

| Sezione | γM | N | M | Mu | Comb. | c.s. | Verifica |
|---|---|---|---|---|---|---|---|
| ini. | 2 | 1828 | -78733 | 121694 | SLV 15 | 1.55 | Si |
| fin. | 2 | -1657 | 109254 | 121694 | SLV 15 | 1.11 | Si |
| ini. | 2 | 1828 | -78733 | 121694 | SLV 16 | 1.55 | Si |
| fin. | 2 | -1657 | 109254 | 121694 | SLV 16 | 1.11 | Si |
| ini. | 2 | 1245 | -53308 | 121694 | SLV 12 | 2.28 | Si |
| fin. | 2 | -994 | 72369 | 121694 | SLV 12 | 1.68 | Si |
| ini. | 2 | -1098 | 49820 | 121694 | SLV 1 | 2.44 | Si |
| fin. | 2 | 1490 | -76745 | 121694 | SLV 1 | 1.59 | Si |
| ini. | 2 | 1537 | -65830 | 121694 | SLV 13 | 1.85 | Si |
| fin. | 2 | -1368 | 90651 | 121694 | SLV 13 | 1.34 | Si |
| ini. | 2 | -807 | 36917 | 121694 | SLV 4 | 3.3 | Si |
| fin. | 2 | 1201 | -58142 | 121694 | SLV 4 | 2.09 | Si |
| ini. | 2 | 1245 | -53308 | 121694 | SLV 11 | 2.28 | Si |
| fin. | 2 | -994 | 72369 | 121694 | SLV 11 | 1.68 | Si |
| ini. | 2 | 1537 | -65830 | 121694 | SLV 14 | 1.85 | Si |
| fin. | 2 | -1368 | 90651 | 121694 | SLV 14 | 1.34 | Si |
| ini. | 2 | -807 | 36917 | 121694 | SLV 3 | 3.3 | Si |
| fin. | 2 | 1201 | -58142 | 121694 | SLV 3 | 2.09 | Si |
| ini. | 2 | -1098 | 49820 | 121694 | SLV 2 | 2.44 | Si |
| fin. | 2 | 1490 | -76745 | 121694 | SLV 2 | 1.59 | Si |

### Verifiche a taglio delle travi in muratura secondo §C8.7.1.3.1 in combinazioni sismiche

| Sezione | γM | N | M | V | Vt | Vp | Vt fess. diag. | Vt,lim | Comb. | c.s. | Verifica |
|---|---|---|---|---|---|---|---|---|---|---|---|
| ini. | 2 | 0 | -53308 | 2507 | | | 1456 | 548 | SLV 11 | 0.22 | No |
| fin. | 2 | 0 | 72369 | 2495 | | | 1456 | 548 | SLV 11 | 0.22 | No |
| ini. | 2 | 0 | 49820 | -2725 | | | 1456 | 548 | SLV 2 | 0.2 | No |
| fin. | 2 | 0 | -76745 | -2792 | | | 1456 | 548 | SLV 2 | 0.2 | No |
| ini. | 2 | 0 | -65830 | 3322 | | | 1456 | 548 | SLV 14 | 0.16 | No |
| fin. | 2 | 0 | 90651 | 3123 | | | 1456 | 548 | SLV 14 | 0.18 | No |
| ini. | 2 | 0 | 36917 | -2124 | | | 1456 | 548 | SLV 3 | 0.26 | No |
| fin. | 2 | 0 | -58142 | -2127 | | | 1456 | 548 | SLV 3 | 0.26 | No |
| ini. | 2 | 0 | -65830 | 3322 | | | 1456 | 548 | SLV 13 | 0.16 | No |
| fin. | 2 | 0 | 90651 | 3123 | | | 1456 | 548 | SLV 13 | 0.18 | No |
| ini. | 2 | 0 | -78733 | 3922 | | | 1456 | 548 | SLV 16 | 0.14 | No |
| fin. | 2 | 0 | 109254 | 3788 | | | 1456 | 548 | SLV 16 | 0.14 | No |
| ini. | 2 | 0 | 36917 | -2124 | | | 1456 | 548 | SLV 4 | 0.26 | No |
| fin. | 2 | 0 | -58142 | -2127 | | | 1456 | 548 | SLV 4 | 0.26 | No |
| ini. | 2 | 0 | 49820 | -2725 | | | 1456 | 548 | SLV 1 | 0.2 | No |
| fin. | 2 | 0 | -76745 | -2792 | | | 1456 | 548 | SLV 1 | 0.2 | No |
| ini. | 2 | 0 | -78733 | 3922 | | | 1456 | 548 | SLV 15 | 0.14 | No |
| fin. | 2 | 0 | 109254 | 3788 | | | 1456 | 548 | SLV 15 | 0.14 | No |
| ini. | 2 | 0 | -53308 | 2507 | | | 1456 | 548 | SLV 12 | 0.22 | No |
| fin. | 2 | 0 | 72369 | 2495 | | | 1456 | 548 | SLV 12 | 0.22 | No |

### Tabella dei coefficienti di sicurezza minimi

| Stato limite | Coeff.s. | Comb. | Verifica |
|---|---|---|---|
| PF_SLV | 1.114 | SLV 15 | Si |
| V_SLV | 0.14 | SLV 15 | No |
| PF_SLU | 3.345 | SLU 80 | Si |
| V_SLU | 0.321 | SLU 80 | No |

## Trave di accoppiamento 169

Verifiche condotte secondo D.M. 17-01-18 (N.T.C.)

### Dati geometrici

| X ini. | Y ini. | Z ini.inf. | Z ini.sup. | H ini. | X fin. | Y fin. | Z fin.inf. | Z fin.sup | H fin. | Luce | Spessore | R. Trazione |
|---|---|---|---|---|---|---|---|---|---|---|---|---|
| -206.3 | 595.1 | 1518 | 1564 | 46 | -296.3 | 595.1 | 1518 | 1564 | 46 | 90 | 28 | 3500 |

### Caratteristiche del materiale

(Circolare 7 21-01-19 C8.5.I) Muratura in mattoni pieni e malta di calce LC2_Corti

| fb_ | fhk | fvk0 | fhmedio | τ0 | fv0 | μ | ϕ | fvk,lim | E | G | FC |
|---|---|---|---|---|---|---|---|---|---|---|---|
| 12 | | | 17.25 | 0.9 | 2 | 0.577 | 0.767 | 0.65 | 32000 | 12800 | 1.2 |

### Verifiche a pressoflessione delle travi in muratura in combinazioni non sismiche

| Sezione | γM | N | M | Mu | Comb. | c.s. | Verifica |
|---|---|---|---|---|---|---|---|
| ini. | 3 | -220 | -31103 | 30060 | SLU 70 | 0.97 | No |
| fin. | 3 | -193 | 23297 | 30060 | SLU 70 | 1.29 | Si |
| ini. | 3 | -158 | -31225 | 30060 | SLU 72 | 0.96 | No |
| fin. | 3 | -129 | 24487 | 30060 | SLU 72 | 1.23 | Si |
| ini. | 3 | -196 | -31213 | 30060 | SLU 38 | 0.96 | No |
| fin. | 3 | -168 | 24532 | 30060 | SLU 38 | 1.23 | Si |
| ini. | 3 | -261 | -33314 | 30060 | SLU 78 | 0.9 | No |
| fin. | 3 | -234 | 25124 | 30060 | SLU 78 | 1.2 | Si |
| ini. | 3 | -199 | -33436 | 30060 | SLU 80 | 0.9 | No |
| fin. | 3 | -170 | 26314 | 30060 | SLU 80 | 1.14 | Si |
| ini. | 3 | -205 | -32855 | 30060 | SLU 77 | 0.91 | No |
| fin. | 3 | -177 | 24944 | 30060 | SLU 77 | 1.21 | Si |
| ini. | 3 | -258 | -31091 | 30060 | SLU 36 | 0.97 | No |
| fin. | 3 | -232 | 23342 | 30060 | SLU 36 | 1.29 | Si |
| ini. | 3 | -140 | -30754 | 30060 | SLU 37 | 0.98 | No |
| fin. | 3 | -111 | 24352 | 30060 | SLU 37 | 1.23 | Si |
| ini. | 3 | -143 | -32977 | 30060 | SLU 79 | 0.91 | No |
| fin. | 3 | -114 | 26134 | 30060 | SLU 79 | 1.15 | Si |
| ini. | 3 | -102 | -30766 | 30060 | SLU 71 | 0.98 | No |
| fin. | 3 | -72 | 24306 | 30060 | SLU 71 | 1.24 | Si |

### Verifiche a taglio delle travi in muratura secondo §C8.7.1.3.1 in combinazioni non sismiche

| Sezione | γM | N | M | V | Vt | Vp | Vt fess. diag. | Vt,lim | Comb. | c.s. | Verifica |
|---|---|---|---|---|---|---|---|---|---|---|---|
| ini. | 3 | 0 | -32977 | 1102 | | | 331 | 124 | SLU 79 | 0.11 | No |
| fin. | 3 | 0 | 26134 | 226 | | | 331 | 124 | SLU 79 | 0.55 | No |
| ini. | 3 | 0 | -30644 | 1122 | | | 331 | 124 | SLU 69 | 0.11 | No |
| fin. | 3 | 0 | 23117 | 63 | | | 331 | 124 | SLU 69 | 1.99 | Si |
| ini. | 3 | 0 | -31091 | 1057 | | | 331 | 124 | SLU 36 | 0.12 | No |
| fin. | 3 | 0 | 23342 | 128 | | | 331 | 124 | SLU 36 | 0.97 | No |
| ini. | 3 | 0 | -28819 | 1057 | | | 331 | 124 | SLU 57 | 0.12 | No |
| fin. | 3 | 0 | 21696 | 64 | | | 331 | 124 | SLU 57 | 1.94 | Si |
| ini. | 3 | 0 | -31225 | 1064 | | | 331 | 124 | SLU 72 | 0.12 | No |
| fin. | 3 | 0 | 24487 | 187 | | | 331 | 124 | SLU 72 | 0.66 | No |
| ini. | 3 | 0 | -31103 | 1130 | | | 331 | 124 | SLU 70 | 0.11 | No |
| fin. | 3 | 0 | 23297 | 68 | | | 331 | 124 | SLU 70 | 1.82 | Si |
| ini. | 3 | 0 | -33314 | 1175 | | | 331 | 124 | SLU 78 | 0.11 | No |
| fin. | 3 | 0 | 25124 | 113 | | | 331 | 124 | SLU 78 | 1.1 | Si |
| ini. | 3 | 0 | -32855 | 1168 | | | 331 | 124 | SLU 77 | 0.11 | No |
| fin. | 3 | 0 | 24944 | 107 | | | 331 | 124 | SLU 77 | 1.16 | Si |
| ini. | 3 | 0 | -33436 | 1110 | | | 331 | 124 | SLU 80 | 0.11 | No |

| Sezione | γM | N | M | V | Vt | Vp | Vt fess. diag. | Vt,lim | Comb. | c.s. | Verifica |
|---|---|---|---|---|---|---|---|---|---|---|---|
| fin. | 3 | 0 | 26314 | 232 | | | 331 | 124 | SLU 80 | 0.54 | No |
| ini. | 3 | 0 | -30766 | 1057 | | | 331 | 124 | SLU 71 | 0.12 | No |
| fin. | 3 | 0 | 24306 | 182 | | | 331 | 124 | SLU 71 | 0.69 | No |

### Verifiche a pressoflessione delle travi in muratura in combinazioni sismiche

| Sezione | γM | N | M | Mu | Comb. | c.s. | Verifica |
|---|---|---|---|---|---|---|---|
| ini. | 2 | 83 | -40147 | 44694 | SLV 16 | 1.11 | Si |
| fin. | 2 | -724 | 15080 | 44694 | SLV 16 | 2.96 | Si |
| ini. | 2 | 83 | -40147 | 44694 | SLV 15 | 1.11 | Si |
| fin. | 2 | -724 | 15080 | 44694 | SLV 15 | 2.96 | Si |
| ini. | 2 | -240 | -23700 | 44694 | SLD 14 | 1.89 | Si |
| fin. | 2 | -587 | 10790 | 44694 | SLD 14 | 4.14 | Si |
| ini. | 2 | -452 | -36218 | 44694 | SLV 14 | 1.23 | Si |
| fin. | 2 | -1279 | 10073 | 44694 | SLV 14 | 4.44 | Si |
| ini. | 2 | -452 | -36218 | 44694 | SLV 13 | 1.23 | Si |
| fin. | 2 | -1279 | 10073 | 44694 | SLV 13 | 4.44 | Si |
| ini. | 2 | -17 | -25438 | 44694 | SLD 16 | 1.76 | Si |
| fin. | 2 | -356 | 12943 | 44694 | SLD 16 | 3.45 | Si |
| ini. | 2 | 774 | -28129 | 44694 | SLV 11 | 1.59 | Si |
| fin. | 2 | 567 | 20068 | 44694 | SLV 11 | 2.23 | Si |
| ini. | 2 | 774 | -28129 | 44694 | SLV 12 | 1.59 | Si |
| fin. | 2 | 567 | 20068 | 44694 | SLV 12 | 2.23 | Si |
| ini. | 2 | -17 | -25438 | 44694 | SLD 15 | 1.76 | Si |
| fin. | 2 | -356 | 12943 | 44694 | SLD 15 | 3.45 | Si |
| ini. | 2 | -240 | -23700 | 44694 | SLD 13 | 1.89 | Si |
| fin. | 2 | -587 | 10790 | 44694 | SLD 13 | 4.14 | Si |

### Verifiche a taglio delle travi in muratura secondo §C8.7.1.3.1 in combinazioni sismiche

| Sezione | γM | N | M | V | Vt | Vp | Vt fess. diag. | Vt,lim | Comb. | c.s. | Verifica |
|---|---|---|---|---|---|---|---|---|---|---|---|
| ini. | 2 | 0 | -28129 | 861 | | | 496 | 187 | SLV 12 | 0.22 | No |
| fin. | 2 | 0 | 20068 | 515 | | | 496 | 187 | SLV 12 | 0.36 | No |
| ini. | 2 | 0 | -36218 | 1093 | | | 496 | 187 | SLV 14 | 0.17 | No |
| fin. | 2 | 0 | 10073 | 596 | | | 496 | 187 | SLV 14 | 0.31 | No |
| ini. | 2 | 0 | -25438 | 827 | | | 496 | 187 | SLD 15 | 0.23 | No |
| fin. | 2 | 0 | 12943 | 346 | | | 496 | 187 | SLD 15 | 0.54 | No |
| ini. | 2 | 0 | -25438 | 827 | | | 496 | 187 | SLD 16 | 0.23 | No |
| fin. | 2 | 0 | 12943 | 346 | | | 496 | 187 | SLD 16 | 0.54 | No |
| ini. | 2 | 0 | -23700 | 795 | | | 496 | 187 | SLD 14 | 0.23 | No |
| fin. | 2 | 0 | 10790 | 273 | | | 496 | 187 | SLD 14 | 0.68 | No |
| ini. | 2 | 0 | -23700 | 795 | | | 496 | 187 | SLD 13 | 0.23 | No |
| fin. | 2 | 0 | 10790 | 273 | | | 496 | 187 | SLD 13 | 0.68 | No |
| ini. | 2 | 0 | -40147 | 1166 | | | 496 | 187 | SLV 15 | 0.16 | No |
| fin. | 2 | 0 | 15080 | 769 | | | 496 | 187 | SLV 15 | 0.24 | No |
| ini. | 2 | 0 | -40147 | 1166 | | | 496 | 187 | SLV 16 | 0.16 | No |
| fin. | 2 | 0 | 15080 | 769 | | | 496 | 187 | SLV 16 | 0.24 | No |
| ini. | 2 | 0 | -28129 | 861 | | | 496 | 187 | SLV 11 | 0.22 | No |
| fin. | 2 | 0 | 20068 | 515 | | | 496 | 187 | SLV 11 | 0.36 | No |
| ini. | 2 | 0 | -36218 | 1093 | | | 496 | 187 | SLV 13 | 0.17 | No |
| fin. | 2 | 0 | 10073 | 596 | | | 496 | 187 | SLV 13 | 0.31 | No |

### Tabella dei coefficienti di sicurezza minimi

| Stato limite | Coeff.s. | Comb. | Verifica |
|---|---|---|---|
| PF_SLV | 1.113 | SLV 15 | Si |
| V_SLV | 0.16 | SLV 15 | No |
| PF_SLU | 0.899 | SLU 80 | No |
| V_SLU | 0.106 | SLU 78 | No |

## Trave di accoppiamento 170

Verifiche condotte secondo D.M. 17-01-18 (N.T.C.)

### Dati geometrici

| X ini. | Y ini. | Z ini.inf. | Z ini.sup. | H ini. | X fin. | Y fin. | Z fin.inf. | Z fin.sup | H fin. | Luce | Spessore | R. Trazione |
|---|---|---|---|---|---|---|---|---|---|---|---|---|
| -1705.3 | -486.2 | 1460 | 1497.9 | 37.9 | -1705.3 | -377.2 | 1460 | 1548.3 | 88.3 | 109 | 30 | 3500 |

### Caratteristiche del materiale

(Circolare 7 21-01-19 C8.5.I) Muratura in mattoni pieni e malta di calce LC2_Corti

| fb_ | fhk | fvk0 | fhmedio | τ0 | fv0 | μ | ϕ | fvk,lim | E | G | FC |
|---|---|---|---|---|---|---|---|---|---|---|---|
| 12 | | | 17.25 | 0.9 | 2 | 0.577 | 0.767 | 0.65 | 32000 | 12800 | 1.2 |

### Verifiche a pressoflessione delle travi in muratura in combinazioni non sismiche

| Sezione | γM | N | M | Mu | Comb. | c.s. | Verifica |
|---|---|---|---|---|---|---|---|
| ini. | 3 | 194 | 285 | 21841 | SLU 31 | 76.64 | Si |
| fin. | 3 | -276 | 33512 | 104315 | SLU 31 | 3.11 | Si |
| ini. | 3 | 155 | 642 | 21841 | SLU 82 | 34.01 | Si |
| fin. | 3 | -242 | 27614 | 104315 | SLU 82 | 3.78 | Si |
| ini. | 3 | 150 | 487 | 21841 | SLU 23 | 44.89 | Si |
| fin. | 3 | -229 | 27413 | 104315 | SLU 23 | 3.81 | Si |
| ini. | 3 | 135 | 963 | 21841 | SLU 61 | 22.68 | Si |
| fin. | 3 | -210 | 27436 | 104315 | SLU 61 | 3.8 | Si |
| ini. | 3 | 124 | 1199 | 21841 | SLU 44 | 18.22 | Si |
| fin. | 3 | -201 | 28222 | 104315 | SLU 44 | 3.7 | Si |
| ini. | 3 | 144 | 878 | 21841 | SLU 65 | 24.88 | Si |
| fin. | 3 | -233 | 28399 | 104315 | SLU 65 | 3.67 | Si |

| Sezione | γM | N | M | Mu | Comb. | c.s. | Verifica |
|---|---|---|---|---|---|---|---|
| ini. | 3 | 174 | 606 | 21841 | SLU 10 | 36.06 | Si |
| fin. | 3 | -244 | 33335 | 104315 | SLU 10 | 3.13 | Si |
| ini. | 3 | 130 | 807 | 21841 | SLU 2 | 27.05 | Si |
| fin. | 3 | -197 | 27236 | 104315 | SLU 2 | 3.83 | Si |
| ini. | 3 | 168 | 997 | 21841 | SLU 52 | 21.9 | Si |
| fin. | 3 | -248 | 34321 | 104315 | SLU 52 | 3.04 | Si |
| ini. | 3 | 188 | 676 | 21841 | SLU 73 | 32.29 | Si |
| fin. | 3 | -280 | 34498 | 104315 | SLU 73 | 3.02 | Si |

## Verifiche a taglio delle travi in muratura secondo §C8.7.1.3.1 in combinazioni non sismiche

| Sezione | γM | N | M | V | Vt | Vp | Vt fess. diag. | Vt,lim | Comb. | c.s. | Verifica |
|---|---|---|---|---|---|---|---|---|---|---|---|
| ini. | 3 | 0 | 285 | 551 | | | 292 | 110 | SLU 31 | 0.2 | No |
| fin. | 3 | 0 | 33512 | 113 | | | 826 | 311 | SLU 31 | 2.76 | Si |
| ini. | 3 | 0 | 676 | 610 | | | 292 | 110 | SLU 73 | 0.18 | No |
| fin. | 3 | 0 | 34498 | 71 | | | 826 | 311 | SLU 73 | 4.39 | Si |
| ini. | 3 | 0 | 997 | 594 | | | 292 | 110 | SLU 52 | 0.18 | No |
| fin. | 3 | 0 | 34321 | 72 | | | 826 | 311 | SLU 52 | 4.31 | Si |
| ini. | 3 | 0 | 574 | 518 | | | 292 | 110 | SLU 55 | 0.21 | No |
| fin. | 3 | 0 | 23364 | -32 | | | 826 | 311 | SLU 55 | 9.82 | Si |
| ini. | 3 | 0 | 1199 | 536 | | | 292 | 110 | SLU 44 | 0.2 | No |
| fin. | 3 | 0 | 28222 | 19 | | | 826 | 311 | SLU 44 | 16.78 | Si |
| ini. | 3 | 0 | 254 | 534 | | | 292 | 110 | SLU 76 | 0.21 | No |
| fin. | 3 | 0 | 23541 | -33 | | | 826 | 311 | SLU 76 | 9.41 | Si |
| ini. | 3 | 0 | 878 | 552 | | | 292 | 110 | SLU 65 | 0.2 | No |
| fin. | 3 | 0 | 28399 | 17 | | | 826 | 311 | SLU 65 | 18.13 | Si |
| ini. | 3 | 0 | 642 | 530 | | | 292 | 110 | SLU 82 | 0.21 | No |
| fin. | 3 | 0 | 27614 | 13 | | | 826 | 311 | SLU 82 | 23.96 | Si |
| ini. | 3 | 0 | 606 | 535 | | | 292 | 110 | SLU 10 | 0.21 | No |
| fin. | 3 | 0 | 33335 | 114 | | | 826 | 311 | SLU 10 | 2.72 | Si |
| ini. | 3 | 0 | 963 | 514 | | | 292 | 110 | SLU 61 | 0.21 | No |
| fin. | 3 | 0 | 27436 | 14 | | | 826 | 311 | SLU 61 | 21.66 | Si |

## Verifiche a pressoflessione delle travi in muratura in combinazioni sismiche

| Sezione | γM | N | M | Mu | Comb. | c.s. | Verifica |
|---|---|---|---|---|---|---|---|
| ini. | 2 | -516 | 9639 | 32761 | SLV 11 | 3.4 | Si |
| fin. | 2 | 1052 | -89641 | 121024 | SLV 11 | 1.35 | Si |
| ini. | 2 | 557 | -8062 | 32761 | SLV 6 | 4.06 | Si |
| fin. | 2 | -1198 | 100207 | 121024 | SLV 6 | 1.21 | Si |
| ini. | 2 | 557 | -8062 | 32761 | SLV 5 | 4.06 | Si |
| fin. | 2 | -1198 | 100207 | 121024 | SLV 5 | 1.21 | Si |
| ini. | 2 | 407 | -1126 | 32761 | SLV 14 | 29.11 | Si |
| fin. | 2 | -875 | 81730 | 121024 | SLV 14 | 1.48 | Si |
| ini. | 2 | -641 | 9231 | 32761 | SLV 7 | 3.55 | Si |
| fin. | 2 | 1307 | -116047 | 121024 | SLV 7 | 1.04 | Si |
| ini. | 2 | -516 | 9639 | 32761 | SLV 12 | 3.4 | Si |
| fin. | 2 | 1052 | -89641 | 121024 | SLV 12 | 1.35 | Si |
| ini. | 2 | 681 | -7654 | 32761 | SLV 9 | 4.28 | Si |
| fin. | 2 | -1454 | 126613 | 121024 | SLV 9 | 0.96 | No |
| ini. | 2 | 681 | -7654 | 32761 | SLV 10 | 4.28 | Si |
| fin. | 2 | -1454 | 126613 | 121024 | SLV 10 | 0.96 | No |
| ini. | 2 | 407 | -1126 | 32761 | SLV 13 | 29.11 | Si |
| fin. | 2 | -875 | 81730 | 121024 | SLV 13 | 1.48 | Si |
| ini. | 2 | -641 | 9231 | 32761 | SLV 8 | 3.55 | Si |
| fin. | 2 | 1307 | -116047 | 121024 | SLV 8 | 1.04 | Si |

## Verifiche a taglio delle travi in muratura secondo §C8.7.1.3.1 in combinazioni sismiche

| Sezione | γM | N | M | V | Vt | Vp | Vt fess. diag. | Vt,lim | Comb. | c.s. | Verifica |
|---|---|---|---|---|---|---|---|---|---|---|---|
| ini. | 2 | 0 | 4062 | 1241 | | | 438 | 165 | SLV 15 | 0.13 | No |
| fin. | 2 | 0 | 16854 | -492 | | | 1238 | 466 | SLV 15 | 0.95 | No |
| ini. | 2 | 0 | 9231 | 1683 | | | 438 | 165 | SLV 7 | 0.1 | No |
| fin. | 2 | 0 | -116047 | -1968 | | | 1238 | 466 | SLV 7 | 0.24 | No |
| ini. | 2 | 0 | -7654 | -1210 | | | 438 | 165 | SLV 10 | 0.14 | No |
| fin. | 2 | 0 | 126613 | 1715 | | | 1238 | 466 | SLV 10 | 0.27 | No |
| ini. | 2 | 0 | -7654 | -1210 | | | 438 | 165 | SLV 9 | 0.14 | No |
| fin. | 2 | 0 | 126613 | 1715 | | | 1238 | 466 | SLV 9 | 0.27 | No |
| ini. | 2 | 0 | 4062 | 1241 | | | 438 | 165 | SLV 16 | 0.13 | No |
| fin. | 2 | 0 | 16854 | -492 | | | 1238 | 466 | SLV 16 | 0.95 | No |
| ini. | 2 | 0 | 9639 | 1997 | | | 438 | 165 | SLV 12 | 0.08 | No |
| fin. | 2 | 0 | -89641 | -1865 | | | 1238 | 466 | SLV 12 | 0.25 | No |
| ini. | 2 | 0 | 9639 | 1997 | | | 438 | 165 | SLV 11 | 0.08 | No |
| fin. | 2 | 0 | -89641 | -1865 | | | 1238 | 466 | SLV 11 | 0.25 | No |
| ini. | 2 | 0 | -8062 | -1524 | | | 438 | 165 | SLV 5 | 0.11 | No |
| fin. | 2 | 0 | 100207 | 1612 | | | 1238 | 466 | SLV 5 | 0.29 | No |
| ini. | 2 | 0 | 9231 | 1683 | | | 438 | 165 | SLV 8 | 0.1 | No |
| fin. | 2 | 0 | -116047 | -1968 | | | 1238 | 466 | SLV 8 | 0.24 | No |
| ini. | 2 | 0 | -8062 | -1524 | | | 438 | 165 | SLV 6 | 0.11 | No |
| fin. | 2 | 0 | 100207 | 1612 | | | 1238 | 466 | SLV 6 | 0.29 | No |

## Tabella dei coefficienti di sicurezza minimi

| Stato limite | Coeff.s. | Comb. | Verifica |
|---|---|---|---|
| PF_SLV | 0.956 | SLV 9 | No |
| V_SLV | 0.082 | SLV 11 | No |
| PF_SLU | 3.024 | SLU 73 | Si |
| V_SLU | 0.18 | SLU 73 | No |

## Trave di accoppiamento 171

Verifiche condotte secondo D.M. 17-01-18 (N.T.C.)

### Dati geometrici

| X ini. | Y ini. | Z ini.inf. | Z ini.sup. | H ini. | X fin. | Y fin. | Z fin.inf. | Z fin.sup | H fin. | Luce | Spessore | R. Trazione |
|---|---|---|---|---|---|---|---|---|---|---|---|---|
| -1543.3 | -335.9 | 1458 | 1567.2 | 109.2 | -1633.3 | -335.9 | 1458 | 1567.3 | 109.3 | 90 | 28 | 3500 |

### Caratteristiche del materiale

(Circolare 7 21-01-19 C8.5.I) Muratura in mattoni pieni e malta di calce LC2_Corti

| fb_ | fhk | fvk0 | fhmedio | τ0 | fv0 | μ | ϕ | fvk,lim | E | G | FC |
|---|---|---|---|---|---|---|---|---|---|---|---|
| 12 | | | 17.25 | 0.9 | 2 | 0.577 | 0.767 | 0.65 | 32000 | 12800 | 1.2 |

### Verifiche a pressoflessione delle travi in muratura in combinazioni non sismiche

| Sezione | γM | N | M | Mu | Comb. | c.s. | Verifica |
|---|---|---|---|---|---|---|---|
| ini. | 3 | 2178 | -65639 | 137383 | SLU 81 | 2.09 | Si |
| fin. | 3 | 2174 | -14641 | 137500 | SLU 81 | 9.39 | Si |
| ini. | 3 | 2369 | -62448 | 137383 | SLU 64 | 2.2 | Si |
| fin. | 3 | 2364 | -18984 | 137500 | SLU 64 | 7.24 | Si |
| ini. | 3 | 2511 | -63747 | 137383 | SLU 43 | 2.16 | Si |
| fin. | 3 | 2505 | -21032 | 137500 | SLU 43 | 6.54 | Si |
| ini. | 3 | 2320 | -66937 | 137383 | SLU 60 | 2.05 | Si |
| fin. | 3 | 2314 | -16689 | 137500 | SLU 60 | 8.24 | Si |
| ini. | 3 | 2280 | -66952 | 137383 | SLU 52 | 2.05 | Si |
| fin. | 3 | 2275 | -17907 | 137500 | SLU 52 | 7.68 | Si |
| ini. | 3 | 2414 | -64719 | 137383 | SLU 44 | 2.12 | Si |
| fin. | 3 | 2408 | -20948 | 137500 | SLU 44 | 6.56 | Si |
| ini. | 3 | 2272 | -63420 | 137383 | SLU 65 | 2.17 | Si |
| fin. | 3 | 2268 | -18899 | 137500 | SLU 65 | 7.28 | Si |
| ini. | 3 | 2138 | -65653 | 137383 | SLU 73 | 2.09 | Si |
| fin. | 3 | 2134 | -15859 | 137500 | SLU 73 | 8.67 | Si |
| ini. | 3 | 2120 | -66222 | 137383 | SLU 82 | 2.07 | Si |
| fin. | 3 | 2116 | -14590 | 137500 | SLU 82 | 9.42 | Si |
| ini. | 3 | 2262 | -67521 | 137383 | SLU 61 | 2.03 | Si |
| fin. | 3 | 2256 | -16638 | 137500 | SLU 61 | 8.26 | Si |

### Verifiche a taglio delle travi in muratura secondo §C8.7.1.3.1 in combinazioni non sismiche

| Sezione | γM | N | M | V | Vt | Vp | Vt fess. diag. | Vt,lim | Comb. | c.s. | Verifica |
|---|---|---|---|---|---|---|---|---|---|---|---|
| ini. | 3 | 0 | -58658 | 1150 | | | 1177 | 443 | SLU 84 | 0.39 | No |
| fin. | 3 | 0 | -22084 | -312 | | | 1178 | 443 | SLU 84 | 1.42 | Si |
| ini. | 3 | 0 | -49372 | 1148 | | | 1177 | 443 | SLU 77 | 0.39 | No |
| fin. | 3 | 0 | -28576 | -647 | | | 1178 | 443 | SLU 77 | 0.68 | No |
| ini. | 3 | 0 | -56936 | 1173 | | | 1177 | 443 | SLU 74 | 0.38 | No |
| fin. | 3 | 0 | -21082 | -364 | | | 1178 | 443 | SLU 74 | 1.22 | Si |
| ini. | 3 | 0 | -65639 | 1168 | | | 1177 | 443 | SLU 81 | 0.38 | No |
| fin. | 3 | 0 | -14641 | -35 | | | 1178 | 443 | SLU 81 | 12.51 | Si |
| ini. | 3 | 0 | -65653 | 1155 | | | 1177 | 443 | SLU 73 | 0.38 | No |
| fin. | 3 | 0 | -15859 | -49 | | | 1178 | 443 | SLU 73 | 9.1 | Si |
| ini. | 3 | 0 | -49955 | 1156 | | | 1177 | 443 | SLU 78 | 0.38 | No |
| fin. | 3 | 0 | -28525 | -640 | | | 1178 | 443 | SLU 78 | 0.69 | No |
| ini. | 3 | 0 | -57519 | 1181 | | | 1177 | 443 | SLU 75 | 0.38 | No |
| fin. | 3 | 0 | -21031 | -357 | | | 1178 | 443 | SLU 75 | 1.24 | Si |
| ini. | 3 | 0 | -58089 | 1130 | | | 1177 | 443 | SLU 76 | 0.39 | No |
| fin. | 3 | 0 | -23353 | -332 | | | 1178 | 443 | SLU 76 | 1.34 | Si |
| ini. | 3 | 0 | -66222 | 1175 | | | 1177 | 443 | SLU 82 | 0.38 | No |
| fin. | 3 | 0 | -14590 | -28 | | | 1178 | 443 | SLU 82 | 15.62 | Si |
| ini. | 3 | 0 | -58075 | 1143 | | | 1177 | 443 | SLU 83 | 0.39 | No |
| fin. | 3 | 0 | -22135 | -319 | | | 1178 | 443 | SLU 83 | 1.39 | Si |

### Verifiche a pressoflessione delle travi in muratura in combinazioni sismiche

| Sezione | γM | N | M | Mu | Comb. | c.s. | Verifica |
|---|---|---|---|---|---|---|---|
| ini. | 2 | 3714 | -64367 | 155285 | SLV 1 | 2.41 | Si |
| fin. | 2 | 3455 | -172622 | 155403 | SLV 1 | 0.9 | No |
| ini. | 2 | 3677 | -35775 | 155285 | SLV 4 | 4.34 | Si |
| fin. | 2 | 3091 | -175853 | 155403 | SLV 4 | 0.88 | No |
| ini. | 2 | -46 | -62146 | 155285 | SLV 13 | 2.5 | Si |
| fin. | 2 | 532 | 147484 | 155403 | SLV 13 | 1.05 | Si |
| ini. | 2 | -83 | -33553 | 155285 | SLV 16 | 4.63 | Si |
| fin. | 2 | 168 | 144252 | 155403 | SLV 16 | 1.08 | Si |
| ini. | 2 | 2442 | -96948 | 155285 | SLV 6 | 1.6 | Si |
| fin. | 2 | 2857 | -56815 | 155403 | SLV 6 | 2.74 | Si |
| ini. | 2 | 3677 | -35775 | 155285 | SLV 3 | 4.34 | Si |
| fin. | 2 | 3091 | -175853 | 155403 | SLV 3 | 0.88 | No |
| ini. | 2 | -46 | -62146 | 155285 | SLV 14 | 2.5 | Si |
| fin. | 2 | 532 | 147484 | 155403 | SLV 14 | 1.05 | Si |
| ini. | 2 | 3714 | -64367 | 155285 | SLV 2 | 2.41 | Si |
| fin. | 2 | 3455 | -172622 | 155403 | SLV 2 | 0.9 | No |
| ini. | 2 | -83 | -33553 | 155285 | SLV 15 | 4.63 | Si |
| fin. | 2 | 168 | 144252 | 155403 | SLV 15 | 1.08 | Si |
| ini. | 2 | 2442 | -96948 | 155285 | SLV 5 | 1.6 | Si |
| fin. | 2 | 2857 | -56815 | 155403 | SLV 5 | 2.74 | Si |

### Verifiche a taglio delle travi in muratura secondo §C8.7.1.3.1 in combinazioni sismiche

| Sezione | γM | N | M | V | Vt | Vp | Vt fess. diag. | Vt,lim | Comb. | c.s. | Verifica |
|---|---|---|---|---|---|---|---|---|---|---|---|
| ini. | 2 | 0 | -53919 | 1655 | | | 1766 | 665 | SLD 14 | 0.4 | No |
| fin. | 2 | 0 | 54857 | 772 | | | 1767 | 665 | SLD 14 | 0.86 | No |
| ini. | 2 | 0 | -33553 | 2334 | | | 1766 | 665 | SLV 16 | 0.28 | No |

| Sezione | γM | N | M | V | Vt | Vp | Vt fess. diag. | Vt,lim | Comb. | c.s. | Verifica |
|---|---|---|---|---|---|---|---|---|---|---|---|
| fin. | 2 | 0 | 144252 | 1419 | | | 1767 | 665 | SLV 16 | 0.47 | No |
| ini. | 2 | 0 | -53919 | 1655 | | | 1766 | 665 | SLD 13 | 0.4 | No |
| fin. | 2 | 0 | 54857 | 772 | | | 1767 | 665 | SLD 13 | 0.86 | No |
| ini. | 2 | 0 | -35775 | -1113 | | | 1766 | 665 | SLV 4 | 0.6 | No |
| fin. | 2 | 0 | -175853 | -2035 | | | 1767 | 665 | SLV 4 | 0.33 | No |
| ini. | 2 | 0 | -62146 | 2778 | | | 1766 | 665 | SLV 14 | 0.24 | No |
| fin. | 2 | 0 | 147484 | 1910 | | | 1767 | 665 | SLV 14 | 0.35 | No |
| ini. | 2 | 0 | -35775 | -1113 | | | 1766 | 665 | SLV 3 | 0.6 | No |
| fin. | 2 | 0 | -175853 | -2035 | | | 1767 | 665 | SLV 3 | 0.33 | No |
| ini. | 2 | 0 | -33553 | 2334 | | | 1766 | 665 | SLV 15 | 0.28 | No |
| fin. | 2 | 0 | 144252 | 1419 | | | 1767 | 665 | SLV 15 | 0.47 | No |
| ini. | 2 | 0 | -96281 | 2090 | | | 1766 | 665 | SLV 9 | 0.32 | No |
| fin. | 2 | 0 | 39216 | 1275 | | | 1767 | 665 | SLV 9 | 0.52 | No |
| ini. | 2 | 0 | -62146 | 2778 | | | 1766 | 665 | SLV 13 | 0.24 | No |
| fin. | 2 | 0 | 147484 | 1910 | | | 1767 | 665 | SLV 13 | 0.35 | No |
| ini. | 2 | 0 | -96281 | 2090 | | | 1766 | 665 | SLV 10 | 0.32 | No |
| fin. | 2 | 0 | 39216 | 1275 | | | 1767 | 665 | SLV 10 | 0.52 | No |

### Tabella dei coefficienti di sicurezza minimi

| Stato limite | Coeff.s. | Comb. | Verifica |
|---|---|---|---|
| PF_SLV | 0.884 | SLV 3 | No |
| V_SLV | 0.239 | SLV 13 | No |
| PF_SLU | 2.035 | SLU 61 | Si |
| V_SLU | 0.375 | SLU 75 | No |

## Trave di accoppiamento 172

Verifiche condotte secondo D.M. 17-01-18 (N.T.C.)

### Dati geometrici

| X ini. | Y ini. | Z ini.inf. | Z ini.sup. | H ini. | X fin. | Y fin. | Z fin.inf. | Z fin.sup | H fin. | Luce | Spessore | R. Trazione |
|---|---|---|---|---|---|---|---|---|---|---|---|---|
| -1443.8 | -485.9 | 1460 | 1497.8 | 37.8 | -1627.8 | -485.9 | 1460 | 1498 | 38 | 184 | 30 | 3500 |

### Caratteristiche del materiale

(Circolare 7 21-01-19 C8.5.I) Muratura in mattoni pieni e malta di calce LC2_Corti

| fb_ | fhk | fvk0 | fhmedio | τ0 | fv0 | μ | ϕ | fvk,lim | E | G | FC |
|---|---|---|---|---|---|---|---|---|---|---|---|
| 12 | | | 17.25 | 0.9 | 2 | 0.577 | 0.767 | 0.65 | 32000 | 12800 | 1.2 |

### Verifiche a pressoflessione delle travi in muratura in combinazioni non sismiche

| Sezione | γM | N | M | Mu | Comb. | c.s. | Verifica |
|---|---|---|---|---|---|---|---|
| ini. | 3 | 66 | -14282 | 21786 | SLU 63 | 1.53 | Si |
| fin. | 3 | 61 | 1894 | 21944 | SLU 63 | 11.59 | Si |
| ini. | 3 | 74 | -14163 | 21786 | SLU 84 | 1.54 | Si |
| fin. | 3 | 65 | 1329 | 21944 | SLU 84 | 16.52 | Si |
| ini. | 3 | 81 | -14314 | 21786 | SLU 55 | 1.52 | Si |
| fin. | 3 | 76 | 1847 | 21944 | SLU 55 | 11.88 | Si |
| ini. | 3 | 41 | -14173 | 21786 | SLU 60 | 1.54 | Si |
| fin. | 3 | 44 | 2834 | 21944 | SLU 60 | 7.74 | Si |
| ini. | 3 | 89 | -14196 | 21786 | SLU 76 | 1.53 | Si |
| fin. | 3 | 81 | 1282 | 21944 | SLU 76 | 17.12 | Si |
| ini. | 3 | 76 | -14488 | 21786 | SLU 61 | 1.5 | Si |
| fin. | 3 | 79 | 2934 | 21944 | SLU 61 | 7.48 | Si |
| ini. | 3 | 92 | -14521 | 21786 | SLU 52 | 1.5 | Si |
| fin. | 3 | 95 | 2887 | 21944 | SLU 52 | 7.6 | Si |
| ini. | 3 | 72 | -14107 | 21786 | SLU 44 | 1.54 | Si |
| fin. | 3 | 76 | 2623 | 21944 | SLU 44 | 8.36 | Si |
| ini. | 3 | 85 | -14370 | 21786 | SLU 82 | 1.52 | Si |
| fin. | 3 | 84 | 2369 | 21944 | SLU 82 | 9.26 | Si |
| ini. | 3 | 100 | -14402 | 21786 | SLU 73 | 1.51 | Si |
| fin. | 3 | 99 | 2322 | 21944 | SLU 73 | 9.45 | Si |

### Verifiche a taglio delle travi in muratura secondo §C8.7.1.3.1 in combinazioni non sismiche

| Sezione | γM | N | M | V | Vt | Vp | Vt fess. diag. | Vt,lim | Comb. | c.s. | Verifica |
|---|---|---|---|---|---|---|---|---|---|---|---|
| ini. | 3 | 0 | -13868 | 317 | | | 291 | 110 | SLU 57 | 0.35 | No |
| fin. | 3 | 0 | 844 | -185 | | | 292 | 110 | SLU 57 | 0.6 | No |
| ini. | 3 | 0 | -13366 | 318 | | | 291 | 110 | SLU 72 | 0.34 | No |
| fin. | 3 | 0 | -88 | -207 | | | 292 | 110 | SLU 72 | 0.53 | No |
| ini. | 3 | 0 | -13465 | 320 | | | 291 | 110 | SLU 79 | 0.34 | No |
| fin. | 3 | 0 | 76 | -206 | | | 292 | 110 | SLU 79 | 0.53 | No |
| ini. | 3 | 0 | -13051 | 317 | | | 291 | 110 | SLU 71 | 0.35 | No |
| fin. | 3 | 0 | -187 | -209 | | | 292 | 110 | SLU 71 | 0.53 | No |
| ini. | 3 | 0 | -13435 | 318 | | | 291 | 110 | SLU 77 | 0.34 | No |
| fin. | 3 | 0 | 180 | -202 | | | 292 | 110 | SLU 77 | 0.55 | No |
| ini. | 3 | 0 | -13750 | 320 | | | 291 | 110 | SLU 78 | 0.34 | No |
| fin. | 3 | 0 | 279 | -199 | | | 292 | 110 | SLU 78 | 0.55 | No |
| ini. | 3 | 0 | -13898 | 319 | | | 291 | 110 | SLU 59 | 0.34 | No |
| fin. | 3 | 0 | 741 | -189 | | | 292 | 110 | SLU 59 | 0.58 | No |
| ini. | 3 | 0 | -13336 | 316 | | | 291 | 110 | SLU 70 | 0.35 | No |
| fin. | 3 | 0 | 16 | -202 | | | 292 | 110 | SLU 70 | 0.54 | No |
| ini. | 3 | 0 | -13780 | 322 | | | 291 | 110 | SLU 80 | 0.34 | No |
| fin. | 3 | 0 | 176 | -203 | | | 292 | 110 | SLU 80 | 0.54 | No |
| ini. | 3 | 0 | -13583 | 317 | | | 291 | 110 | SLU 58 | 0.35 | No |
| fin. | 3 | 0 | 641 | -192 | | | 292 | 110 | SLU 58 | 0.57 | No |

### Verifiche a pressoflessione delle travi in muratura in combinazioni sismiche

| Sezione | γM | N | M | Mu | Comb. | c.s. | Verifica |
|---|---|---|---|---|---|---|---|
| ini. | 2 | 169 | -80833 | 32678 | SLV 14 | 0.4 | No |
| fin. | 2 | 282 | 69410 | 32916 | SLV 14 | 0.47 | No |
| ini. | 2 | 224 | -54565 | 32678 | SLV 10 | 0.6 | No |
| fin. | 2 | 209 | 49117 | 32916 | SLV 10 | 0.67 | No |
| ini. | 2 | -129 | 59831 | 32678 | SLV 4 | 0.55 | No |
| fin. | 2 | -240 | -66099 | 32916 | SLV 4 | 0.5 | No |
| ini. | 2 | 64 | -65692 | 32678 | SLV 16 | 0.5 | No |
| fin. | 2 | 210 | 51518 | 32916 | SLV 16 | 0.64 | No |
| ini. | 2 | -24 | 44690 | 32678 | SLV 2 | 0.73 | No |
| fin. | 2 | -168 | -48207 | 32916 | SLV 2 | 0.68 | No |
| ini. | 2 | -129 | 59831 | 32678 | SLV 3 | 0.55 | No |
| fin. | 2 | -240 | -66099 | 32916 | SLV 3 | 0.5 | No |
| ini. | 2 | -24 | 44690 | 32678 | SLV 1 | 0.73 | No |
| fin. | 2 | -168 | -48207 | 32916 | SLV 1 | 0.68 | No |
| ini. | 2 | 224 | -54565 | 32678 | SLV 9 | 0.6 | No |
| fin. | 2 | 209 | 49117 | 32916 | SLV 9 | 0.67 | No |
| ini. | 2 | 64 | -65692 | 32678 | SLV 15 | 0.5 | No |
| fin. | 2 | 210 | 51518 | 32916 | SLV 15 | 0.64 | No |
| ini. | 2 | 169 | -80833 | 32678 | SLV 13 | 0.4 | No |
| fin. | 2 | 282 | 69410 | 32916 | SLV 13 | 0.47 | No |

### Verifiche a taglio delle travi in muratura secondo §C8.7.1.3.1 in combinazioni sismiche

| Sezione | γM | N | M | V | Vt | Vp | Vt fess. diag. | Vt,lim | Comb. | c.s. | Verifica |
|---|---|---|---|---|---|---|---|---|---|---|---|
| ini. | 2 | 0 | -54565 | 725 | | | 437 | 164 | SLV 10 | 0.23 | No |
| fin. | 2 | 0 | 49117 | 366 | | | 439 | 165 | SLV 10 | 0.45 | No |
| ini. | 2 | 0 | -65692 | 784 | | | 437 | 164 | SLV 16 | 0.21 | No |
| fin. | 2 | 0 | 51518 | 460 | | | 439 | 165 | SLV 16 | 0.36 | No |
| ini. | 2 | 0 | 59831 | -507 | | | 437 | 164 | SLV 4 | 0.32 | No |
| fin. | 2 | 0 | -66099 | -846 | | | 439 | 165 | SLV 4 | 0.2 | No |
| ini. | 2 | 0 | 44690 | -325 | | | 437 | 164 | SLV 1 | 0.51 | No |
| fin. | 2 | 0 | -48207 | -678 | | | 439 | 165 | SLV 1 | 0.24 | No |
| ini. | 2 | 0 | -80833 | 965 | | | 437 | 164 | SLV 14 | 0.17 | No |
| fin. | 2 | 0 | 69410 | 628 | | | 439 | 165 | SLV 14 | 0.26 | No |
| ini. | 2 | 0 | 44690 | -325 | | | 437 | 164 | SLV 2 | 0.51 | No |
| fin. | 2 | 0 | -48207 | -678 | | | 439 | 165 | SLV 2 | 0.24 | No |
| ini. | 2 | 0 | -80833 | 965 | | | 437 | 164 | SLV 13 | 0.17 | No |
| fin. | 2 | 0 | 69410 | 628 | | | 439 | 165 | SLV 13 | 0.26 | No |
| ini. | 2 | 0 | 59831 | -507 | | | 437 | 164 | SLV 3 | 0.32 | No |
| fin. | 2 | 0 | -66099 | -846 | | | 439 | 165 | SLV 3 | 0.2 | No |
| ini. | 2 | 0 | -65692 | 784 | | | 437 | 164 | SLV 15 | 0.21 | No |
| fin. | 2 | 0 | 51518 | 460 | | | 439 | 165 | SLV 15 | 0.36 | No |
| ini. | 2 | 0 | -54565 | 725 | | | 437 | 164 | SLV 9 | 0.23 | No |
| fin. | 2 | 0 | 49117 | 366 | | | 439 | 165 | SLV 9 | 0.45 | No |

### Tabella dei coefficienti di sicurezza minimi

| Stato limite | Coeff.s. | Comb. | Verifica |
|---|---|---|---|
| PF_SLV | 0.404 | SLV 13 | No |
| V_SLV | 0.17 | SLV 13 | No |
| PF_SLU | 1.5 | SLU 52 | Si |
| V_SLU | 0.34 | SLU 80 | No |

## Trave di accoppiamento 173

Verifiche condotte secondo D.M. 17-01-18 (N.T.C.)

### Dati geometrici

| X ini. | Y ini. | Z ini.inf. | Z ini.sup. | H ini. | X fin. | Y fin. | Z fin.inf. | Z fin.sup | H fin. | Luce | Spessore | R. Trazione |
|---|---|---|---|---|---|---|---|---|---|---|---|---|
| -867.8 | -485.9 | 1460 | 1497.4 | 37.4 | -1051.8 | -485.9 | 1460 | 1497.5 | 37.5 | 184 | 30 | 3500 |

### Caratteristiche del materiale

(Circolare 7 21-01-19 C8.5.I) Muratura in mattoni pieni e malta di calce LC2_Corti

| fb_ | fhk | fvk0 | fhmedio | τ0 | fv0 | μ | ϕ | fvk,lim | E | G | FC |
|---|---|---|---|---|---|---|---|---|---|---|---|
| 12 | | | 17.25 | 0.9 | 2 | 0.577 | 0.767 | 0.65 | 32000 | 12800 | 1.2 |

### Verifiche a pressoflessione delle travi in muratura in combinazioni non sismiche

| Sezione | γM | N | M | Mu | Comb. | c.s. | Verifica |
|---|---|---|---|---|---|---|---|
| ini. | 3 | 210 | -9641 | 21293 | SLU 79 | 2.21 | Si |
| fin. | 3 | -120 | 1078 | 21449 | SLU 79 | 19.9 | Si |
| ini. | 3 | 208 | -9991 | 21293 | SLU 35 | 2.13 | Si |
| fin. | 3 | -225 | 2209 | 21449 | SLU 35 | 9.71 | Si |
| ini. | 3 | 213 | -10609 | 21293 | SLU 37 | 2.01 | Si |
| fin. | 3 | -263 | 2563 | 21449 | SLU 37 | 8.37 | Si |
| ini. | 3 | 172 | -8656 | 21293 | SLU 16 | 2.46 | Si |
| fin. | 3 | -170 | 1572 | 21449 | SLU 16 | 13.64 | Si |
| ini. | 3 | 205 | -9024 | 21293 | SLU 77 | 2.36 | Si |
| fin. | 3 | -82 | 724 | 21449 | SLU 77 | 29.64 | Si |
| ini. | 3 | 258 | -9005 | 21293 | SLU 80 | 2.36 | Si |
| fin. | 3 | -14 | 296 | 21449 | SLU 80 | 72.44 | Si |
| ini. | 3 | 261 | -9972 | 21293 | SLU 38 | 2.14 | Si |
| fin. | 3 | -156 | 1781 | 21449 | SLU 38 | 12.04 | Si |
| ini. | 3 | 216 | -9352 | 21293 | SLU 41 | 2.28 | Si |
| fin. | 3 | -190 | 2036 | 21449 | SLU 41 | 10.54 | Si |
| ini. | 3 | 256 | -9355 | 21293 | SLU 36 | 2.28 | Si |

| Sezione | γM | N | M | Mu | Comb. | c.s. | Verifica |
|---|---|---|---|---|---|---|---|
| fin. | 3 | -118 | 1427 | 21449 | SLU 36 | 15.03 | Si |
| ini. | 3 | 264 | -8716 | 21293 | SLU 42 | 2.44 | Si |
| fin. | 3 | -84 | 1254 | 21449 | SLU 42 | 17.1 | Si |

### Verifiche a taglio delle travi in muratura secondo §C8.7.1.3.1 in combinazioni non sismiche

| Sezione | γM | N | M | V | Vt | Vp | Vt fess. diag. | Vt,lim | Comb. | c.s. | Verifica |
|---|---|---|---|---|---|---|---|---|---|---|---|
| ini. | 3 | 0 | -7689 | 150 | | | 288 | 108 | SLU 58 | 0.72 | No |
| fin. | 3 | 0 | 87 | -67 | | | 289 | 109 | SLU 58 | 1.63 | Si |
| ini. | 3 | 0 | -9641 | 157 | | | 288 | 108 | SLU 79 | 0.69 | No |
| fin. | 3 | 0 | 1078 | -82 | | | 289 | 109 | SLU 79 | 1.33 | Si |
| ini. | 3 | 0 | -7053 | 153 | | | 288 | 108 | SLU 59 | 0.71 | No |
| fin. | 3 | 0 | -695 | -55 | | | 289 | 109 | SLU 59 | 1.99 | Si |
| ini. | 3 | 0 | -8387 | 158 | | | 288 | 108 | SLU 78 | 0.68 | No |
| fin. | 3 | 0 | -58 | -65 | | | 289 | 109 | SLU 78 | 1.67 | Si |
| ini. | 3 | 0 | -9024 | 155 | | | 288 | 108 | SLU 77 | 0.7 | No |
| fin. | 3 | 0 | 724 | -77 | | | 289 | 109 | SLU 77 | 1.41 | Si |
| ini. | 3 | 0 | -8385 | 152 | | | 288 | 108 | SLU 83 | 0.71 | No |
| fin. | 3 | 0 | 551 | -68 | | | 289 | 109 | SLU 83 | 1.6 | Si |
| ini. | 3 | 0 | -5678 | 152 | | | 288 | 108 | SLU 76 | 0.71 | No |
| fin. | 3 | 0 | -1753 | -37 | | | 289 | 109 | SLU 76 | 2.94 | Si |
| ini. | 3 | 0 | -9005 | 160 | | | 288 | 108 | SLU 80 | 0.68 | No |
| fin. | 3 | 0 | 296 | -70 | | | 289 | 109 | SLU 80 | 1.56 | Si |
| ini. | 3 | 0 | -6435 | 151 | | | 288 | 108 | SLU 57 | 0.72 | No |
| fin. | 3 | 0 | -1049 | -50 | | | 289 | 109 | SLU 57 | 2.18 | Si |
| ini. | 3 | 0 | -7749 | 155 | | | 288 | 108 | SLU 84 | 0.7 | No |
| fin. | 3 | 0 | -231 | -56 | | | 289 | 109 | SLU 84 | 1.94 | Si |

### Verifiche a pressoflessione delle travi in muratura in combinazioni sismiche

| Sezione | γM | N | M | Mu | Comb. | c.s. | Verifica |
|---|---|---|---|---|---|---|---|
| ini. | 2 | 802 | -30623 | 31939 | SLV 10 | 1.04 | Si |
| fin. | 2 | -858 | 8011 | 32174 | SLV 10 | 4.02 | Si |
| ini. | 2 | 1144 | -40552 | 31939 | SLV 13 | 0.79 | No |
| fin. | 2 | 1567 | -14372 | 32174 | SLV 13 | 2.24 | Si |
| ini. | 2 | 874 | -28688 | 31939 | SLV 16 | 1.11 | Si |
| fin. | 2 | 2573 | -23820 | 32174 | SLV 16 | 1.35 | Si |
| ini. | 2 | -1006 | 39226 | 31939 | SLV 3 | 0.81 | No |
| fin. | 2 | -1002 | 8636 | 32174 | SLV 3 | 3.73 | Si |
| ini. | 2 | -663 | 29297 | 31939 | SLV 7 | 1.09 | Si |
| fin. | 2 | 1423 | -13746 | 32174 | SLV 7 | 2.34 | Si |
| ini. | 2 | -663 | 29297 | 31939 | SLV 8 | 1.09 | Si |
| fin. | 2 | 1423 | -13746 | 32174 | SLV 8 | 2.34 | Si |
| ini. | 2 | 802 | -30623 | 31939 | SLV 9 | 1.04 | Si |
| fin. | 2 | -858 | 8011 | 32174 | SLV 9 | 4.02 | Si |
| ini. | 2 | 874 | -28688 | 31939 | SLV 15 | 1.11 | Si |
| fin. | 2 | 2573 | -23820 | 32174 | SLV 15 | 1.35 | Si |
| ini. | 2 | 1144 | -40552 | 31939 | SLV 14 | 0.79 | No |
| fin. | 2 | 1567 | -14372 | 32174 | SLV 14 | 2.24 | Si |
| ini. | 2 | -1006 | 39226 | 31939 | SLV 4 | 0.81 | No |
| fin. | 2 | -1002 | 8636 | 32174 | SLV 4 | 3.73 | Si |

### Verifiche a taglio delle travi in muratura secondo §C8.7.1.3.1 in combinazioni sismiche

| Sezione | γM | N | M | V | Vt | Vp | Vt fess. diag. | Vt,lim | Comb. | c.s. | Verifica |
|---|---|---|---|---|---|---|---|---|---|---|---|
| ini. | 2 | 0 | 39226 | 62 | | | 432 | 163 | SLV 4 | 2.61 | Si |
| fin. | 2 | 0 | 8636 | 322 | | | 434 | 163 | SLV 4 | 0.51 | No |
| ini. | 2 | 0 | -40552 | 135 | | | 432 | 163 | SLV 14 | 1.2 | Si |
| fin. | 2 | 0 | -14372 | -341 | | | 434 | 163 | SLV 14 | 0.48 | No |
| ini. | 2 | 0 | 39226 | 62 | | | 432 | 163 | SLV 3 | 2.61 | Si |
| fin. | 2 | 0 | 8636 | 322 | | | 434 | 163 | SLV 3 | 0.51 | No |
| ini. | 2 | 0 | -28688 | 178 | | | 432 | 163 | SLV 15 | 0.91 | No |
| fin. | 2 | 0 | -23820 | -210 | | | 434 | 163 | SLV 15 | 0.78 | No |
| ini. | 2 | 0 | 29297 | 152 | | | 432 | 163 | SLV 8 | 1.07 | Si |
| fin. | 2 | 0 | -13746 | 288 | | | 434 | 163 | SLV 8 | 0.57 | No |
| ini. | 2 | 0 | -40552 | 135 | | | 432 | 163 | SLV 13 | 1.2 | Si |
| fin. | 2 | 0 | -14372 | -341 | | | 434 | 163 | SLV 13 | 0.48 | No |
| ini. | 2 | 0 | -30623 | 45 | | | 432 | 163 | SLV 10 | 3.58 | Si |
| fin. | 2 | 0 | 8011 | -307 | | | 434 | 163 | SLV 10 | 0.53 | No |
| ini. | 2 | 0 | -30623 | 45 | | | 432 | 163 | SLV 9 | 3.58 | Si |
| fin. | 2 | 0 | 8011 | -307 | | | 434 | 163 | SLV 9 | 0.53 | No |
| ini. | 2 | 0 | 29297 | 152 | | | 432 | 163 | SLV 7 | 1.07 | Si |
| fin. | 2 | 0 | -13746 | 288 | | | 434 | 163 | SLV 7 | 0.57 | No |
| ini. | 2 | 0 | -28688 | 178 | | | 432 | 163 | SLV 16 | 0.91 | No |
| fin. | 2 | 0 | -23820 | -210 | | | 434 | 163 | SLV 16 | 0.78 | No |

### Tabella dei coefficienti di sicurezza minimi

| Stato limite | Coeff.s. | Comb. | Verifica |
|---|---|---|---|
| PF_SLV | 0.788 | SLV 13 | No |
| V_SLV | 0.479 | SLV 13 | No |
| PF_SLU | 2.007 | SLU 37 | Si |
| V_SLU | 0.677 | SLU 80 | No |

## Trave di accoppiamento 174

Verifiche condotte secondo D.M. 17-01-18 (N.T.C.)

## Dati geometrici

| X ini. | Y ini. | Z ini.inf. | Z ini.sup. | H ini. | X fin. | Y fin. | Z fin.inf. | Z fin.sup | H fin. | Luce | Spessore | R. Trazione |
|---|---|---|---|---|---|---|---|---|---|---|---|---|
| -854.8 | -335.9 | 1458 | 1566.7 | 108.7 | -944.8 | -335.9 | 1458 | 1566.8 | 108.8 | 90 | 28 | 3500 |

## Caratteristiche del materiale

(Circolare 7 21-01-19 C8.5.I) Muratura in mattoni pieni e malta di calce LC2_Corti

| fb_ | fhk | fvk0 | fhmedio | τ0 | fv0 | μ | ϕ | fvk,lim | E | G | FC |
|---|---|---|---|---|---|---|---|---|---|---|---|
| 12 | | | 17.25 | 0.9 | 2 | 0.577 | 0.767 | 0.65 | 32000 | 12800 | 1.2 |

## Verifiche a pressoflessione delle travi in muratura in combinazioni non sismiche

| Sezione | γM | N | M | Mu | Comb. | c.s. | Verifica |
|---|---|---|---|---|---|---|---|
| ini. | 3 | -1016 | 31751 | 136538 | SLU 82 | 4.3 | Si |
| fin. | 3 | -1019 | -9364 | 136656 | SLU 82 | 14.59 | Si |
| ini. | 3 | -1007 | 29182 | 136538 | SLU 83 | 4.68 | Si |
| fin. | 3 | -1009 | -3852 | 136656 | SLU 83 | 35.48 | Si |
| ini. | 3 | -1022 | 28179 | 136538 | SLU 84 | 4.85 | Si |
| fin. | 3 | -1026 | -4984 | 136656 | SLU 84 | 27.42 | Si |
| ini. | 3 | -800 | 28975 | 136538 | SLU 60 | 4.71 | Si |
| fin. | 3 | -801 | -5766 | 136656 | SLU 60 | 23.7 | Si |
| ini. | 3 | -1022 | 29198 | 136538 | SLU 73 | 4.68 | Si |
| fin. | 3 | -1026 | -11741 | 136656 | SLU 73 | 11.64 | Si |
| ini. | 3 | -1097 | 28163 | 136538 | SLU 75 | 4.85 | Si |
| fin. | 3 | -1101 | -6888 | 136656 | SLU 75 | 19.84 | Si |
| ini. | 3 | -1082 | 29166 | 136538 | SLU 74 | 4.68 | Si |
| fin. | 3 | -1085 | -5756 | 136656 | SLU 74 | 23.74 | Si |
| ini. | 3 | -816 | 27972 | 136538 | SLU 61 | 4.88 | Si |
| fin. | 3 | -817 | -6898 | 136656 | SLU 61 | 19.81 | Si |
| ini. | 3 | -873 | 28514 | 136538 | SLU 39 | 4.79 | Si |
| fin. | 3 | -874 | -6305 | 136656 | SLU 39 | 21.68 | Si |
| ini. | 3 | -1001 | 32754 | 136538 | SLU 81 | 4.17 | Si |
| fin. | 3 | -1003 | -8232 | 136656 | SLU 81 | 16.6 | Si |

## Verifiche a taglio delle travi in muratura secondo §C8.7.1.3.1 in combinazioni non sismiche

| Sezione | γM | N | M | V | Vt | Vp | Vt fess. diag. | Vt,lim | Comb. | c.s. | Verifica |
|---|---|---|---|---|---|---|---|---|---|---|---|
| ini. | 3 | 0 | 29166 | 406 | | | 1172 | 441 | SLU 74 | 1.09 | Si |
| fin. | 3 | 0 | -5756 | -1149 | | | 1173 | 441 | SLU 74 | 0.38 | No |
| ini. | 3 | 0 | 24590 | 648 | | | 1172 | 441 | SLU 78 | 0.68 | No |
| fin. | 3 | 0 | -2507 | -1213 | | | 1173 | 441 | SLU 78 | 0.36 | No |
| ini. | 3 | 0 | 25593 | 650 | | | 1172 | 441 | SLU 77 | 0.68 | No |
| fin. | 3 | 0 | -1375 | -1211 | | | 1173 | 441 | SLU 77 | 0.36 | No |
| ini. | 3 | 0 | 22721 | 608 | | | 1172 | 441 | SLU 80 | 0.73 | No |
| fin. | 3 | 0 | -2225 | -1126 | | | 1173 | 441 | SLU 80 | 0.39 | No |
| ini. | 3 | 0 | 21195 | 656 | | | 1172 | 441 | SLU 69 | 0.67 | No |
| fin. | 3 | 0 | -5160 | -1205 | | | 1173 | 441 | SLU 69 | 0.37 | No |
| ini. | 3 | 0 | 20192 | 655 | | | 1172 | 441 | SLU 70 | 0.67 | No |
| fin. | 3 | 0 | -6292 | -1206 | | | 1173 | 441 | SLU 70 | 0.37 | No |
| ini. | 3 | 0 | 23724 | 609 | | | 1172 | 441 | SLU 79 | 0.72 | No |
| fin. | 3 | 0 | -1093 | -1124 | | | 1173 | 441 | SLU 79 | 0.39 | No |
| ini. | 3 | 0 | 28163 | 405 | | | 1172 | 441 | SLU 75 | 1.09 | Si |
| fin. | 3 | 0 | -6888 | -1151 | | | 1173 | 441 | SLU 75 | 0.38 | No |
| ini. | 3 | 0 | 24767 | 413 | | | 1172 | 441 | SLU 66 | 1.07 | Si |
| fin. | 3 | 0 | -9541 | -1143 | | | 1173 | 441 | SLU 66 | 0.39 | No |
| ini. | 3 | 0 | 23765 | 411 | | | 1172 | 441 | SLU 67 | 1.07 | Si |
| fin. | 3 | 0 | -10673 | -1145 | | | 1173 | 441 | SLU 67 | 0.39 | No |

## Verifiche a pressoflessione delle travi in muratura in combinazioni sismiche

| Sezione | γM | N | M | Mu | Comb. | c.s. | Verifica |
|---|---|---|---|---|---|---|---|
| ini. | 2 | 260 | 121662 | 154441 | SLV 1 | 1.27 | Si |
| fin. | 2 | -678 | -85697 | 154559 | SLV 1 | 1.8 | Si |
| ini. | 2 | -1695 | -80086 | 154441 | SLV 15 | 1.93 | Si |
| fin. | 2 | -760 | 67960 | 154559 | SLV 15 | 2.27 | Si |
| ini. | 2 | -830 | -81374 | 154441 | SLV 14 | 1.9 | Si |
| fin. | 2 | -552 | 47244 | 154559 | SLV 14 | 3.27 | Si |
| ini. | 2 | -830 | -81374 | 154441 | SLV 13 | 1.9 | Si |
| fin. | 2 | -552 | 47244 | 154559 | SLV 13 | 3.27 | Si |
| ini. | 2 | -1695 | -80086 | 154441 | SLV 16 | 1.93 | Si |
| fin. | 2 | -760 | 67960 | 154559 | SLV 16 | 2.27 | Si |
| ini. | 2 | -604 | 122951 | 154441 | SLV 3 | 1.26 | Si |
| fin. | 2 | -886 | -64981 | 154559 | SLV 3 | 2.38 | Si |
| ini. | 2 | 260 | 121662 | 154441 | SLV 2 | 1.27 | Si |
| fin. | 2 | -678 | -85697 | 154559 | SLV 2 | 1.8 | Si |
| ini. | 2 | -657 | 64379 | 154441 | SLD 4 | 2.4 | Si |
| fin. | 2 | -785 | -33089 | 154559 | SLD 4 | 4.67 | Si |
| ini. | 2 | -604 | 122951 | 154441 | SLV 4 | 1.26 | Si |
| fin. | 2 | -886 | -64981 | 154559 | SLV 4 | 2.38 | Si |
| ini. | 2 | -657 | 64379 | 154441 | SLD 3 | 2.4 | Si |
| fin. | 2 | -785 | -33089 | 154559 | SLD 3 | 4.67 | Si |

## Verifiche a taglio delle travi in muratura secondo §C8.7.1.3.1 in combinazioni sismiche

| Sezione | γM | N | M | V | Vt | Vp | Vt fess. diag. | Vt,lim | Comb. | c.s. | Verifica |
|---|---|---|---|---|---|---|---|---|---|---|---|
| ini. | 2 | 0 | 49096 | -1598 | | | 1758 | 662 | SLV 6 | 0.41 | No |
| fin. | 2 | 0 | -63336 | -2206 | | | 1760 | 662 | SLV 6 | 0.3 | No |
| ini. | 2 | 0 | 122951 | -1575 | | | 1758 | 662 | SLV 3 | 0.42 | No |
| fin. | 2 | 0 | -64981 | -2454 | | | 1760 | 662 | SLV 3 | 0.27 | No |
| ini. | 2 | 0 | -7520 | 1784 | | | 1758 | 662 | SLV 11 | 0.37 | No |
| fin. | 2 | 0 | 45600 | 739 | | | 1760 | 662 | SLV 11 | 0.9 | No |
| ini. | 2 | 0 | 122951 | -1575 | | | 1758 | 662 | SLV 4 | 0.42 | No |

| Sezione | γM | N | M | V | Vt | Vp | Vt fess. diag. | Vt,lim | Comb. | c.s. | Verifica |
|---|---|---|---|---|---|---|---|---|---|---|---|
| fin. | 2 | 0 | -64981 | -2454 | | | 1760 | 662 | SLV 4 | 0.27 | No |
| ini. | 2 | 0 | 49096 | -1598 | | | 1758 | 662 | SLV 5 | 0.41 | No |
| fin. | 2 | 0 | -63336 | -2206 | | | 1760 | 662 | SLV 5 | 0.3 | No |
| ini. | 2 | 0 | -7520 | 1784 | | | 1758 | 662 | SLV 12 | 0.37 | No |
| fin. | 2 | 0 | 45600 | 739 | | | 1760 | 662 | SLV 12 | 0.9 | No |
| ini. | 2 | 0 | -80086 | 2417 | | | 1758 | 662 | SLV 16 | 0.27 | No |
| fin. | 2 | 0 | 67960 | 1514 | | | 1760 | 662 | SLV 16 | 0.44 | No |
| ini. | 2 | 0 | 121662 | -2230 | | | 1758 | 662 | SLV 1 | 0.3 | No |
| fin. | 2 | 0 | -85697 | -2980 | | | 1760 | 662 | SLV 1 | 0.22 | No |
| ini. | 2 | 0 | -80086 | 2417 | | | 1758 | 662 | SLV 15 | 0.27 | No |
| fin. | 2 | 0 | 67960 | 1514 | | | 1760 | 662 | SLV 15 | 0.44 | No |
| ini. | 2 | 0 | 121662 | -2230 | | | 1758 | 662 | SLV 2 | 0.3 | No |
| fin. | 2 | 0 | -85697 | -2980 | | | 1760 | 662 | SLV 2 | 0.22 | No |

### Tabella dei coefficienti di sicurezza minimi

| Stato limite | Coeff.s. | Comb. | Verifica |
|---|---|---|---|
| PF_SLV | 1.256 | SLV 3 | Si |
| V_SLV | 0.222 | SLV 1 | No |
| PF_SLU | 4.169 | SLU 81 | Si |
| V_SLU | 0.364 | SLU 78 | No |

## Trave di accoppiamento 175

Verifiche condotte secondo D.M. 17-01-18 (N.T.C.)

### Dati geometrici

| X ini. | Y ini. | Z ini.inf. | Z ini.sup. | H ini. | X fin. | Y fin. | Z fin.inf. | Z fin.sup | H fin. | Luce | Spessore | R. Trazione |
|---|---|---|---|---|---|---|---|---|---|---|---|---|
| -772.3 | -486.1 | 1460 | 1497.2 | 37.2 | -772.3 | -377.1 | 1460 | 1547.6 | 87.6 | 109 | 30 | 3500 |

### Caratteristiche del materiale

(Circolare 7 21-01-19 C8.5.I) Muratura in mattoni pieni e malta di calce LC2_Corti

| fb_ | fhk | fvk0 | fhmedio | τ0 | fv0 | μ | ϕ | fvk,lim | E | G | FC |
|---|---|---|---|---|---|---|---|---|---|---|---|
| 12 | | | 17.25 | 0.9 | 2 | 0.577 | 0.767 | 0.65 | 32000 | 12800 | 1.2 |

### Verifiche a pressoflessione delle travi in muratura in combinazioni non sismiche

| Sezione | γM | N | M | Mu | Comb. | c.s. | Verifica |
|---|---|---|---|---|---|---|---|
| ini. | 3 | 180 | 1390 | 21080 | SLU 2 | 15.17 | Si |
| fin. | 3 | -235 | 28297 | 103151 | SLU 2 | 3.65 | Si |
| ini. | 3 | 179 | 1456 | 21080 | SLU 23 | 14.48 | Si |
| fin. | 3 | -253 | 28323 | 103151 | SLU 23 | 3.64 | Si |
| ini. | 3 | 193 | 1667 | 21080 | SLU 31 | 12.65 | Si |
| fin. | 3 | -265 | 31862 | 103151 | SLU 31 | 3.24 | Si |
| ini. | 3 | 204 | 1895 | 21080 | SLU 73 | 11.12 | Si |
| fin. | 3 | -286 | 33060 | 103151 | SLU 73 | 3.12 | Si |
| ini. | 3 | 194 | 1600 | 21080 | SLU 10 | 13.17 | Si |
| fin. | 3 | -247 | 31836 | 103151 | SLU 10 | 3.24 | Si |
| ini. | 3 | 190 | 1618 | 21080 | SLU 44 | 13.02 | Si |
| fin. | 3 | -256 | 29494 | 103151 | SLU 44 | 3.5 | Si |
| ini. | 3 | 145 | 1962 | 21080 | SLU 76 | 10.74 | Si |
| fin. | 3 | -273 | 25013 | 103151 | SLU 76 | 4.12 | Si |
| ini. | 3 | 190 | 1685 | 21080 | SLU 65 | 12.51 | Si |
| fin. | 3 | -274 | 29520 | 103151 | SLU 65 | 3.49 | Si |
| ini. | 3 | 146 | 1896 | 21080 | SLU 55 | 11.12 | Si |
| fin. | 3 | -255 | 24986 | 103151 | SLU 55 | 4.13 | Si |
| ini. | 3 | 204 | 1829 | 21080 | SLU 52 | 11.53 | Si |
| fin. | 3 | -268 | 33034 | 103151 | SLU 52 | 3.12 | Si |

### Verifiche a taglio delle travi in muratura secondo §C8.7.1.3.1 in combinazioni non sismiche

| Sezione | γM | N | M | V | Vt | Vp | Vt fess. diag. | Vt,lim | Comb. | c.s. | Verifica |
|---|---|---|---|---|---|---|---|---|---|---|---|
| ini. | 3 | 0 | 1600 | 497 | | | 287 | 108 | SLU 10 | 0.22 | No |
| fin. | 3 | 0 | 31836 | 67 | | | 813 | 306 | SLU 10 | 4.58 | Si |
| ini. | 3 | 0 | 1456 | 455 | | | 287 | 108 | SLU 23 | 0.24 | No |
| fin. | 3 | 0 | 28323 | 43 | | | 813 | 306 | SLU 23 | 7.09 | Si |
| ini. | 3 | 0 | 1896 | 482 | | | 287 | 108 | SLU 55 | 0.22 | No |
| fin. | 3 | 0 | 24986 | -31 | | | 813 | 306 | SLU 55 | 9.98 | Si |
| ini. | 3 | 0 | 1829 | 540 | | | 287 | 108 | SLU 52 | 0.2 | No |
| fin. | 3 | 0 | 33034 | 23 | | | 813 | 306 | SLU 52 | 13.26 | Si |
| ini. | 3 | 0 | 1618 | 484 | | | 287 | 108 | SLU 44 | 0.22 | No |
| fin. | 3 | 0 | 29494 | -4 | | | 813 | 306 | SLU 44 | 80.23 | Si |
| ini. | 3 | 0 | 1765 | 465 | | | 287 | 108 | SLU 82 | 0.23 | No |
| fin. | 3 | 0 | 24867 | -35 | | | 813 | 306 | SLU 82 | 8.72 | Si |
| ini. | 3 | 0 | 1895 | 554 | | | 287 | 108 | SLU 73 | 0.19 | No |
| fin. | 3 | 0 | 33060 | 26 | | | 813 | 306 | SLU 73 | 11.65 | Si |
| ini. | 3 | 0 | 1667 | 511 | | | 287 | 108 | SLU 31 | 0.21 | No |
| fin. | 3 | 0 | 31862 | 70 | | | 813 | 306 | SLU 31 | 4.37 | Si |
| ini. | 3 | 0 | 1685 | 498 | | | 287 | 108 | SLU 65 | 0.22 | No |
| fin. | 3 | 0 | 29520 | -1 | | | 813 | 306 | SLU 65 | 481.32 | Si |
| ini. | 3 | 0 | 1962 | 496 | | | 287 | 108 | SLU 76 | 0.22 | No |
| fin. | 3 | 0 | 25013 | -27 | | | 813 | 306 | SLU 76 | 11.13 | Si |

### Verifiche a pressoflessione delle travi in muratura in combinazioni sismiche

| Sezione | γM | N | M | Mu | Comb. | c.s. | Verifica |
|---|---|---|---|---|---|---|---|
| ini. | 2 | -577 | 5885 | 31621 | SLV 14 | 5.37 | Si |
| fin. | 2 | -987 | 76910 | 119860 | SLV 14 | 1.56 | Si |

| Sezione | γM | N | M | Mu | Comb. | c.s. | Verifica |
|---|---|---|---|---|---|---|---|
| ini. | 2 | -933 | -3287 | 31621 | SLV 5 | 9.62 | Si |
| fin. | 2 | -1745 | 87080 | 119860 | SLV 5 | 1.38 | Si |
| ini. | 2 | -933 | -3287 | 31621 | SLV 6 | 9.62 | Si |
| fin. | 2 | -1745 | 87080 | 119860 | SLV 6 | 1.38 | Si |
| ini. | 2 | 1009 | 5122 | 31621 | SLV 12 | 6.17 | Si |
| fin. | 2 | 1547 | -76999 | 119860 | SLV 12 | 1.56 | Si |
| ini. | 2 | 1187 | 1693 | 31621 | SLV 8 | 18.68 | Si |
| fin. | 2 | 1763 | -103013 | 119860 | SLV 8 | 1.16 | Si |
| ini. | 2 | 1009 | 5122 | 31621 | SLV 11 | 6.17 | Si |
| fin. | 2 | 1547 | -76999 | 119860 | SLV 11 | 1.56 | Si |
| ini. | 2 | -577 | 5885 | 31621 | SLV 13 | 5.37 | Si |
| fin. | 2 | -987 | 76910 | 119860 | SLV 13 | 1.56 | Si |
| ini. | 2 | -1111 | 142 | 31621 | SLV 10 | 222.68 | Si |
| fin. | 2 | -1962 | 113094 | 119860 | SLV 10 | 1.06 | Si |
| ini. | 2 | 1187 | 1693 | 31621 | SLV 7 | 18.68 | Si |
| fin. | 2 | 1763 | -103013 | 119860 | SLV 7 | 1.16 | Si |
| ini. | 2 | -1111 | 142 | 31621 | SLV 9 | 222.68 | Si |
| fin. | 2 | -1962 | 113094 | 119860 | SLV 9 | 1.06 | Si |

### Verifiche a taglio delle travi in muratura secondo §C8.7.1.3.1 in combinazioni sismiche

| Sezione | γM | N | M | V | Vt | Vp | Vt fess. diag. | Vt,lim | Comb. | c.s. | Verifica |
|---|---|---|---|---|---|---|---|---|---|---|---|
| ini. | 2 | 0 | -3287 | -1981 | | | 430 | 162 | SLV 5 | 0.08 | No |
| fin. | 2 | 0 | 87080 | 1248 | | | 1220 | 459 | SLV 5 | 0.37 | No |
| ini. | 2 | 0 | 7379 | 1424 | | | 430 | 162 | SLV 15 | 0.11 | No |
| fin. | 2 | 0 | 19883 | -474 | | | 1220 | 459 | SLV 15 | 0.97 | No |
| ini. | 2 | 0 | 142 | -1587 | | | 430 | 162 | SLV 9 | 0.1 | No |
| fin. | 2 | 0 | 113094 | 1297 | | | 1220 | 459 | SLV 9 | 0.35 | No |
| ini. | 2 | 0 | 1693 | 1944 | | | 430 | 162 | SLV 8 | 0.08 | No |
| fin. | 2 | 0 | -103013 | -1565 | | | 1220 | 459 | SLV 8 | 0.29 | No |
| ini. | 2 | 0 | 7379 | 1424 | | | 430 | 162 | SLV 16 | 0.11 | No |
| fin. | 2 | 0 | 19883 | -474 | | | 1220 | 459 | SLV 16 | 0.97 | No |
| ini. | 2 | 0 | 5122 | 2338 | | | 430 | 162 | SLV 12 | 0.07 | No |
| fin. | 2 | 0 | -76999 | -1515 | | | 1220 | 459 | SLV 12 | 0.3 | No |
| ini. | 2 | 0 | 5122 | 2338 | | | 430 | 162 | SLV 11 | 0.07 | No |
| fin. | 2 | 0 | -76999 | -1515 | | | 1220 | 459 | SLV 11 | 0.3 | No |
| ini. | 2 | 0 | -3287 | -1981 | | | 430 | 162 | SLV 6 | 0.08 | No |
| fin. | 2 | 0 | 87080 | 1248 | | | 1220 | 459 | SLV 6 | 0.37 | No |
| ini. | 2 | 0 | 1693 | 1944 | | | 430 | 162 | SLV 7 | 0.08 | No |
| fin. | 2 | 0 | -103013 | -1565 | | | 1220 | 459 | SLV 7 | 0.29 | No |
| ini. | 2 | 0 | 142 | -1587 | | | 430 | 162 | SLV 10 | 0.1 | No |
| fin. | 2 | 0 | 113094 | 1297 | | | 1220 | 459 | SLV 10 | 0.35 | No |

### Tabella dei coefficienti di sicurezza minimi

| Stato limite | Coeff.s. | Comb. | Verifica |
|---|---|---|---|
| PF_SLV | 1.06 | SLV 9 | Si |
| V_SLV | 0.069 | SLV 11 | No |
| PF_SLU | 3.12 | SLU 73 | Si |
| V_SLU | 0.195 | SLU 73 | No |

## Trave di accoppiamento 176

Verifiche condotte secondo D.M. 17-01-18 (N.T.C.)

### Dati geometrici

| X ini. | Y ini. | Z ini.inf. | Z ini.sup. | H ini. | X fin. | Y fin. | Z fin.inf. | Z fin.sup | H fin. | Luce | Spessore | R. Trazione |
|---|---|---|---|---|---|---|---|---|---|---|---|---|
| -651.3 | -335.9 | 1248 | 1338 | 90 | -741.3 | -335.9 | 1248 | 1338 | 90 | 90 | 28 | 3500 |

### Caratteristiche del materiale

(Circolare 7 21-01-19 C8.5.I) Muratura in mattoni pieni e malta di calce LC2_Corti

| fb_ | fhk | fvk0 | fhmedio | τ0 | fv0 | μ | ϕ | fvk,lim | E | G | FC |
|---|---|---|---|---|---|---|---|---|---|---|---|
| 12 | | | 17.25 | 0.9 | 2 | 0.577 | 0.767 | 0.65 | 32000 | 12800 | 1.2 |

### Verifiche a pressoflessione delle travi in muratura in combinazioni non sismiche

| Sezione | γM | N | M | Mu | Comb. | c.s. | Verifica |
|---|---|---|---|---|---|---|---|
| ini. | 3 | 8 | 1461 | 103792 | SLU 80 | 71.03 | Si |
| fin. | 3 | -524 | 24411 | 103792 | SLU 80 | 4.25 | Si |
| ini. | 3 | 140 | -877 | 103792 | SLU 79 | 118.36 | Si |
| fin. | 3 | -557 | 27161 | 103792 | SLU 79 | 3.82 | Si |
| ini. | 3 | 185 | -1901 | 103792 | SLU 35 | 54.59 | Si |
| fin. | 3 | -483 | 25472 | 103792 | SLU 35 | 4.07 | Si |
| ini. | 3 | 87 | 583 | 103792 | SLU 77 | 177.96 | Si |
| fin. | 3 | -586 | 27224 | 103792 | SLU 77 | 3.81 | Si |
| ini. | 3 | -15 | -1972 | 103792 | SLU 71 | 52.64 | Si |
| fin. | 3 | -697 | 26073 | 103792 | SLU 71 | 3.98 | Si |
| ini. | 3 | 154 | -670 | 103792 | SLU 58 | 155 | Si |
| fin. | 3 | -464 | 24408 | 103792 | SLU 58 | 4.25 | Si |
| ini. | 3 | 101 | 790 | 103792 | SLU 56 | 131.3 | Si |
| fin. | 3 | -493 | 24472 | 103792 | SLU 56 | 4.24 | Si |
| ini. | 3 | -68 | -512 | 103792 | SLU 69 | 202.87 | Si |
| fin. | 3 | -726 | 26136 | 103792 | SLU 69 | 3.97 | Si |
| ini. | 3 | -44 | 2921 | 103792 | SLU 78 | 35.53 | Si |
| fin. | 3 | -553 | 24474 | 103792 | SLU 78 | 4.24 | Si |
| ini. | 3 | 238 | -3362 | 103792 | SLU 37 | 30.88 | Si |
| fin. | 3 | -454 | 25409 | 103792 | SLU 37 | 4.08 | Si |

Verifiche a taglio delle travi in muratura secondo §C8.7.1.3.1 in combinazioni non sismiche

| Sezione | γM | N | M | V | Vt | Vp | Vt fess. diag. | Vt,lim | Comb. | c.s. | Verifica |
|---|---|---|---|---|---|---|---|---|---|---|---|
| ini. | 3 | 0 | -2996 | 347 | | | 970 | 365 | SLU 27 | 1.05 | Si |
| fin. | 3 | 0 | 24384 | 826 | | | 970 | 365 | SLU 27 | 0.44 | No |
| ini. | 3 | 0 | -1972 | 329 | | | 970 | 365 | SLU 71 | 1.11 | Si |
| fin. | 3 | 0 | 26073 | 860 | | | 970 | 365 | SLU 71 | 0.42 | No |
| ini. | 3 | 0 | -4456 | 408 | | | 970 | 365 | SLU 29 | 0.89 | No |
| fin. | 3 | 0 | 24321 | 826 | | | 970 | 365 | SLU 29 | 0.44 | No |
| ini. | 3 | 0 | -512 | 268 | | | 970 | 365 | SLU 69 | 1.36 | Si |
| fin. | 3 | 0 | 26136 | 860 | | | 970 | 365 | SLU 69 | 0.42 | No |
| ini. | 3 | 0 | 583 | 362 | | | 970 | 365 | SLU 77 | 1.01 | Si |
| fin. | 3 | 0 | 27224 | 797 | | | 970 | 365 | SLU 77 | 0.46 | No |
| ini. | 3 | 0 | -2789 | 244 | | | 970 | 365 | SLU 6 | 1.5 | Si |
| fin. | 3 | 0 | 21632 | 778 | | | 970 | 365 | SLU 6 | 0.47 | No |
| ini. | 3 | 0 | -4249 | 305 | | | 970 | 365 | SLU 8 | 1.2 | Si |
| fin. | 3 | 0 | 21568 | 778 | | | 970 | 365 | SLU 8 | 0.47 | No |
| ini. | 3 | 0 | -1764 | 226 | | | 970 | 365 | SLU 50 | 1.62 | Si |
| fin. | 3 | 0 | 23320 | 812 | | | 970 | 365 | SLU 50 | 0.45 | No |
| ini. | 3 | 0 | -304 | 165 | | | 970 | 365 | SLU 48 | 2.22 | Si |
| fin. | 3 | 0 | 23384 | 812 | | | 970 | 365 | SLU 48 | 0.45 | No |
| ini. | 3 | 0 | -877 | 423 | | | 970 | 365 | SLU 79 | 0.86 | No |
| fin. | 3 | 0 | 27161 | 797 | | | 970 | 365 | SLU 79 | 0.46 | No |

Verifiche a pressoflessione delle travi in muratura in combinazioni sismiche

| Sezione | γM | N | M | Mu | Comb. | c.s. | Verifica |
|---|---|---|---|---|---|---|---|
| ini. | 2 | 1484 | -69228 | 121694 | SLV 15 | 1.76 | Si |
| fin. | 2 | -2169 | 90362 | 121694 | SLV 15 | 1.35 | Si |
| ini. | 2 | -2087 | 85826 | 121694 | SLV 2 | 1.42 | Si |
| fin. | 2 | 1302 | -70197 | 121694 | SLV 2 | 1.73 | Si |
| ini. | 2 | -1287 | 47061 | 121694 | SLV 5 | 2.59 | Si |
| fin. | 2 | 1081 | -21250 | 121694 | SLV 5 | 5.73 | Si |
| ini. | 2 | 1187 | -59006 | 121694 | SLV 14 | 2.06 | Si |
| fin. | 2 | -1514 | 85582 | 121694 | SLV 14 | 1.42 | Si |
| ini. | 2 | 1484 | -69228 | 121694 | SLV 16 | 1.76 | Si |
| fin. | 2 | -2169 | 90362 | 121694 | SLV 16 | 1.35 | Si |
| ini. | 2 | -2087 | 85826 | 121694 | SLV 1 | 1.42 | Si |
| fin. | 2 | 1302 | -70197 | 121694 | SLV 1 | 1.73 | Si |
| ini. | 2 | -1287 | 47061 | 121694 | SLV 6 | 2.59 | Si |
| fin. | 2 | 1081 | -21250 | 121694 | SLV 6 | 5.73 | Si |
| ini. | 2 | -1791 | 75603 | 121694 | SLV 3 | 1.61 | Si |
| fin. | 2 | 647 | -65417 | 121694 | SLV 3 | 1.86 | Si |
| ini. | 2 | -1791 | 75603 | 121694 | SLV 4 | 1.61 | Si |
| fin. | 2 | 647 | -65417 | 121694 | SLV 4 | 1.86 | Si |
| ini. | 2 | 1187 | -59006 | 121694 | SLV 13 | 2.06 | Si |
| fin. | 2 | -1514 | 85582 | 121694 | SLV 13 | 1.42 | Si |

Verifiche a taglio delle travi in muratura secondo §C8.7.1.3.1 in combinazioni sismiche

| Sezione | γM | N | M | V | Vt | Vp | Vt fess. diag. | Vt,lim | Comb. | c.s. | Verifica |
|---|---|---|---|---|---|---|---|---|---|---|---|
| ini. | 2 | 0 | -30464 | 1669 | | | 1456 | 548 | SLV 11 | 0.33 | No |
| fin. | 2 | 0 | 41415 | 2192 | | | 1456 | 548 | SLV 11 | 0.25 | No |
| ini. | 2 | 0 | -30464 | 1669 | | | 1456 | 548 | SLV 12 | 0.33 | No |
| fin. | 2 | 0 | 41415 | 2192 | | | 1456 | 548 | SLV 12 | 0.25 | No |
| ini. | 2 | 0 | -69228 | 3142 | | | 1456 | 548 | SLV 15 | 0.17 | No |
| fin. | 2 | 0 | 90362 | 3925 | | | 1456 | 548 | SLV 15 | 0.14 | No |
| ini. | 2 | 0 | -59006 | 2622 | | | 1456 | 548 | SLV 13 | 0.21 | No |
| fin. | 2 | 0 | 85582 | 3332 | | | 1456 | 548 | SLV 13 | 0.16 | No |
| ini. | 2 | 0 | -69228 | 3142 | | | 1456 | 548 | SLV 16 | 0.17 | No |
| fin. | 2 | 0 | 90362 | 3925 | | | 1456 | 548 | SLV 16 | 0.14 | No |
| ini. | 2 | 0 | 75603 | -2802 | | | 1456 | 548 | SLV 3 | 0.2 | No |
| fin. | 2 | 0 | -65417 | -3002 | | | 1456 | 548 | SLV 3 | 0.18 | No |
| ini. | 2 | 0 | 85826 | -3322 | | | 1456 | 548 | SLV 2 | 0.16 | No |
| fin. | 2 | 0 | -70197 | -3595 | | | 1456 | 548 | SLV 2 | 0.15 | No |
| ini. | 2 | 0 | -59006 | 2622 | | | 1456 | 548 | SLV 14 | 0.21 | No |
| fin. | 2 | 0 | 85582 | 3332 | | | 1456 | 548 | SLV 14 | 0.16 | No |
| ini. | 2 | 0 | 75603 | -2802 | | | 1456 | 548 | SLV 4 | 0.2 | No |
| fin. | 2 | 0 | -65417 | -3002 | | | 1456 | 548 | SLV 4 | 0.18 | No |
| ini. | 2 | 0 | 85826 | -3322 | | | 1456 | 548 | SLV 1 | 0.16 | No |
| fin. | 2 | 0 | -70197 | -3595 | | | 1456 | 548 | SLV 1 | 0.15 | No |

Tabella dei coefficienti di sicurezza minimi

| Stato limite | Coeff.s. | Comb. | Verifica |
|---|---|---|---|
| PF_SLV | 1.347 | SLV 15 | Si |
| V_SLV | 0.14 | SLV 15 | No |
| PF_SLU | 3.812 | SLU 77 | Si |
| V_SLU | 0.425 | SLU 69 | No |

## Trave di accoppiamento 177

Verifiche condotte secondo D.M. 17-01-18 (N.T.C.)

### Dati geometrici

| X ini. | Y ini. | Z ini.inf. | Z ini.sup. | H ini. | X fin. | Y fin. | Z fin.inf. | Z fin.sup | H fin. | Luce | Spessore | R. Trazione |
|---|---|---|---|---|---|---|---|---|---|---|---|---|
| -651.3 | -335.9 | 1518 | 1566.6 | 48.6 | -741.3 | -335.9 | 1518 | 1566.6 | 48.6 | 90 | 28 | 3500 |

## Caratteristiche del materiale

(Circolare 7 21-01-19 C8.5.I) Muratura in mattoni pieni e malta di calce LC2_Corti

| fb_ | fhk | fvk0 | fhmedio | τ0 | fv0 | μ | ϕ | fvk,lim | E | G | FC |
|---|---|---|---|---|---|---|---|---|---|---|---|
| 12 | | | 17.25 | 0.9 | 2 | 0.577 | 0.767 | 0.65 | 32000 | 12800 | 1.2 |

## Verifiche a pressoflessione delle travi in muratura in combinazioni non sismiche

| Sezione | γM | N | M | Mu | Comb. | c.s. | Verifica |
|---|---|---|---|---|---|---|---|
| ini. | 3 | -619 | -21312 | 33499 | SLU 28 | 1.57 | Si |
| fin. | 3 | -624 | 8117 | 33592 | SLU 28 | 4.14 | Si |
| ini. | 3 | -751 | -22509 | 33499 | SLU 70 | 1.49 | Si |
| fin. | 3 | -757 | 8382 | 33592 | SLU 70 | 4.01 | Si |
| ini. | 3 | -816 | -22580 | 33499 | SLU 78 | 1.48 | Si |
| fin. | 3 | -821 | 8551 | 33592 | SLU 78 | 3.93 | Si |
| ini. | 3 | -638 | -22062 | 33499 | SLU 71 | 1.52 | Si |
| fin. | 3 | -642 | 8854 | 33592 | SLU 71 | 3.79 | Si |
| ini. | 3 | -702 | -22133 | 33499 | SLU 79 | 1.51 | Si |
| fin. | 3 | -707 | 9022 | 33592 | SLU 79 | 3.72 | Si |
| ini. | 3 | -683 | -21382 | 33499 | SLU 36 | 1.57 | Si |
| fin. | 3 | -689 | 8286 | 33592 | SLU 36 | 4.05 | Si |
| ini. | 3 | -790 | -22296 | 33499 | SLU 77 | 1.5 | Si |
| fin. | 3 | -794 | 8197 | 33592 | SLU 77 | 4.1 | Si |
| ini. | 3 | -664 | -22346 | 33499 | SLU 72 | 1.5 | Si |
| fin. | 3 | -669 | 9208 | 33592 | SLU 72 | 3.65 | Si |
| ini. | 3 | -726 | -22226 | 33499 | SLU 69 | 1.51 | Si |
| fin. | 3 | -730 | 8028 | 33592 | SLU 69 | 4.18 | Si |
| ini. | 3 | -728 | -22416 | 33499 | SLU 80 | 1.49 | Si |
| fin. | 3 | -734 | 9377 | 33592 | SLU 80 | 3.58 | Si |

## Verifiche a taglio delle travi in muratura secondo §C8.7.1.3.1 in combinazioni non sismiche

| Sezione | γM | N | M | V | Vt | Vp | Vt fess. diag. | Vt,lim | Comb. | c.s. | Verifica |
|---|---|---|---|---|---|---|---|---|---|---|---|
| ini. | 3 | 0 | -22226 | 1033 | | | 349 | 131 | SLU 69 | 0.13 | No |
| fin. | 3 | 0 | 8028 | -369 | | | 350 | 132 | SLU 69 | 0.36 | No |
| ini. | 3 | 0 | -21312 | 973 | | | 349 | 131 | SLU 28 | 0.14 | No |
| fin. | 3 | 0 | 8117 | -324 | | | 350 | 132 | SLU 28 | 0.41 | No |
| ini. | 3 | 0 | -22346 | 978 | | | 349 | 131 | SLU 72 | 0.13 | No |
| fin. | 3 | 0 | 9208 | -295 | | | 350 | 132 | SLU 72 | 0.45 | No |
| ini. | 3 | 0 | -22509 | 1043 | | | 349 | 131 | SLU 70 | 0.13 | No |
| fin. | 3 | 0 | 8382 | -368 | | | 350 | 132 | SLU 70 | 0.36 | No |
| ini. | 3 | 0 | -22296 | 1036 | | | 349 | 131 | SLU 77 | 0.13 | No |
| fin. | 3 | 0 | 8197 | -367 | | | 350 | 132 | SLU 77 | 0.36 | No |
| ini. | 3 | 0 | -22062 | 967 | | | 349 | 131 | SLU 71 | 0.14 | No |
| fin. | 3 | 0 | 8854 | -295 | | | 350 | 132 | SLU 71 | 0.45 | No |
| ini. | 3 | 0 | -22580 | 1047 | | | 349 | 131 | SLU 78 | 0.13 | No |
| fin. | 3 | 0 | 8551 | -367 | | | 350 | 132 | SLU 78 | 0.36 | No |
| ini. | 3 | 0 | -22416 | 982 | | | 349 | 131 | SLU 80 | 0.13 | No |
| fin. | 3 | 0 | 9377 | -293 | | | 350 | 132 | SLU 80 | 0.45 | No |
| ini. | 3 | 0 | -21382 | 976 | | | 349 | 131 | SLU 36 | 0.13 | No |
| fin. | 3 | 0 | 8286 | -323 | | | 350 | 132 | SLU 36 | 0.41 | No |
| ini. | 3 | 0 | -22133 | 971 | | | 349 | 131 | SLU 79 | 0.14 | No |
| fin. | 3 | 0 | 9022 | -294 | | | 350 | 132 | SLU 79 | 0.45 | No |

## Verifiche a pressoflessione delle travi in muratura in combinazioni sismiche

| Sezione | γM | N | M | Mu | Comb. | c.s. | Verifica |
|---|---|---|---|---|---|---|---|
| ini. | 2 | 344 | -31302 | 49175 | SLV 12 | 1.57 | Si |
| fin. | 2 | -29 | 41417 | 49293 | SLV 12 | 1.19 | Si |
| ini. | 2 | -1742 | 15179 | 49175 | SLV 5 | 3.24 | Si |
| fin. | 2 | -1373 | -36552 | 49293 | SLV 5 | 1.35 | Si |
| ini. | 2 | -1506 | 23082 | 49175 | SLV 1 | 2.13 | Si |
| fin. | 2 | -1514 | -33100 | 49293 | SLV 1 | 1.49 | Si |
| ini. | 2 | -1506 | 23082 | 49175 | SLV 2 | 2.13 | Si |
| fin. | 2 | -1514 | -33100 | 49293 | SLV 2 | 1.49 | Si |
| ini. | 2 | 107 | -39205 | 49175 | SLV 15 | 1.25 | Si |
| fin. | 2 | 112 | 37964 | 49293 | SLV 15 | 1.3 | Si |
| ini. | 2 | -421 | -30042 | 49175 | SLV 14 | 1.64 | Si |
| fin. | 2 | -170 | 19288 | 49293 | SLV 14 | 2.56 | Si |
| ini. | 2 | 344 | -31302 | 49175 | SLV 11 | 1.57 | Si |
| fin. | 2 | -29 | 41417 | 49293 | SLV 11 | 1.19 | Si |
| ini. | 2 | -1742 | 15179 | 49175 | SLV 6 | 3.24 | Si |
| fin. | 2 | -1373 | -36552 | 49293 | SLV 6 | 1.35 | Si |
| ini. | 2 | -421 | -30042 | 49175 | SLV 13 | 1.64 | Si |
| fin. | 2 | -170 | 19288 | 49293 | SLV 13 | 2.56 | Si |
| ini. | 2 | 107 | -39205 | 49175 | SLV 16 | 1.25 | Si |
| fin. | 2 | 112 | 37964 | 49293 | SLV 16 | 1.3 | Si |

## Verifiche a taglio delle travi in muratura secondo §C8.7.1.3.1 in combinazioni sismiche

| Sezione | γM | N | M | V | Vt | Vp | Vt fess. diag. | Vt,lim | Comb. | c.s. | Verifica |
|---|---|---|---|---|---|---|---|---|---|---|---|
| ini. | 2 | 0 | -30042 | 888 | | | 524 | 197 | SLV 13 | 0.22 | No |
| fin. | 2 | 0 | 19288 | 360 | | | 524 | 197 | SLV 13 | 0.55 | No |
| ini. | 2 | 0 | -30042 | 888 | | | 524 | 197 | SLV 14 | 0.22 | No |
| fin. | 2 | 0 | 19288 | 360 | | | 524 | 197 | SLV 14 | 0.55 | No |
| ini. | 2 | 0 | -31302 | 782 | | | 524 | 197 | SLV 12 | 0.25 | No |
| fin. | 2 | 0 | 41417 | 126 | | | 524 | 197 | SLV 12 | 1.57 | Si |
| ini. | 2 | 0 | -31302 | 782 | | | 524 | 197 | SLV 11 | 0.25 | No |
| fin. | 2 | 0 | 41417 | 126 | | | 524 | 197 | SLV 11 | 1.57 | Si |
| ini. | 2 | 0 | -39205 | 1019 | | | 524 | 197 | SLV 16 | 0.19 | No |
| fin. | 2 | 0 | 37964 | 439 | | | 524 | 197 | SLV 16 | 0.45 | No |
| ini. | 2 | 0 | 13918 | -93 | | | 524 | 197 | SLV 3 | 2.12 | Si |

| Sezione | γM | N | M | V | Vt | Vp | Vt fess. diag. | Vt,lim | Comb. | c.s. | Verifica |
|---|---|---|---|---|---|---|---|---|---|---|---|
| fin. | 2 | 0 | -14424 | -720 | | | 524 | 197 | SLV 3 | 0.27 | No |
| ini. | 2 | 0 | 23082 | -224 | | | 524 | 197 | SLV 1 | 0.88 | No |
| fin. | 2 | 0 | -33100 | -799 | | | 524 | 197 | SLV 1 | 0.25 | No |
| ini. | 2 | 0 | 13918 | -93 | | | 524 | 197 | SLV 4 | 2.12 | Si |
| fin. | 2 | 0 | -14424 | -720 | | | 524 | 197 | SLV 4 | 0.27 | No |
| ini. | 2 | 0 | 23082 | -224 | | | 524 | 197 | SLV 2 | 0.88 | No |
| fin. | 2 | 0 | -33100 | -799 | | | 524 | 197 | SLV 2 | 0.25 | No |
| ini. | 2 | 0 | -39205 | 1019 | | | 524 | 197 | SLV 15 | 0.19 | No |
| fin. | 2 | 0 | 37964 | 439 | | | 524 | 197 | SLV 15 | 0.45 | No |

### Tabella dei coefficienti di sicurezza minimi

| Stato limite | Coeff.s. | Comb. | Verifica |
|---|---|---|---|
| PF_SLV | 1.19 | SLV 11 | Si |
| V_SLV | 0.193 | SLV 15 | No |
| PF_SLU | 1.484 | SLU 78 | Si |
| V_SLU | 0.125 | SLU 78 | No |

## Trave di accoppiamento 178

Verifiche condotte secondo D.M. 17-01-18 (N.T.C.)

### Dati geometrici

| X ini. | Y ini. | Z ini.inf. | Z ini.sup. | H ini. | X fin. | Y fin. | Z fin.inf. | Z fin.sup | H fin. | Luce | Spessore | R. Trazione |
|---|---|---|---|---|---|---|---|---|---|---|---|---|
| -550.8 | -335.9 | 1248 | 1448 | 200 | -600.8 | -335.9 | 1248 | 1448 | 200 | 50 | 28 | 3500 |

### Caratteristiche del materiale

(Circolare 7 21-01-19 C8.5.I) Muratura in mattoni pieni e malta di calce LC2_Corti

| fb_ | fhk | fvk0 | fhmedio | τ0 | fv0 | μ | ϕ | fvk,lim | E | G | FC |
|---|---|---|---|---|---|---|---|---|---|---|---|
| 12 | | | 17.25 | 0.9 | 2 | 0.577 | 0.767 | 0.65 | 32000 | 12800 | 1.2 |

### Verifiche a pressoflessione delle travi in muratura in combinazioni non sismiche

| Sezione | γM | N | M | Mu | Comb. | c.s. | Verifica |
|---|---|---|---|---|---|---|---|
| ini. | 3 | -305 | 59812 | 296292 | SLU 80 | 4.95 | Si |
| fin. | 3 | -130 | 45333 | 296292 | SLU 80 | 6.54 | Si |
| ini. | 3 | -605 | 58619 | 296292 | SLU 75 | 5.05 | Si |
| fin. | 3 | -455 | 42281 | 296292 | SLU 75 | 7.01 | Si |
| ini. | 3 | -110 | 57765 | 296292 | SLU 35 | 5.13 | Si |
| fin. | 3 | 70 | 47313 | 296292 | SLU 35 | 6.26 | Si |
| ini. | 3 | -323 | 62203 | 296292 | SLU 83 | 4.76 | Si |
| fin. | 3 | -149 | 48654 | 296292 | SLU 83 | 6.09 | Si |
| ini. | 3 | -462 | 59479 | 296292 | SLU 74 | 4.98 | Si |
| fin. | 3 | -301 | 46092 | 296292 | SLU 74 | 6.43 | Si |
| ini. | 3 | -247 | 63410 | 296292 | SLU 77 | 4.67 | Si |
| fin. | 3 | -57 | 51137 | 296292 | SLU 77 | 5.79 | Si |
| ini. | 3 | -466 | 61343 | 296292 | SLU 84 | 4.83 | Si |
| fin. | 3 | -304 | 44843 | 296292 | SLU 84 | 6.61 | Si |
| ini. | 3 | -390 | 62550 | 296292 | SLU 78 | 4.74 | Si |
| fin. | 3 | -211 | 47326 | 296292 | SLU 78 | 6.26 | Si |
| ini. | 3 | -538 | 58271 | 296292 | SLU 81 | 5.08 | Si |
| fin. | 3 | -393 | 43609 | 296292 | SLU 81 | 6.79 | Si |
| ini. | 3 | -162 | 60672 | 296292 | SLU 79 | 4.88 | Si |
| fin. | 3 | 25 | 49144 | 296292 | SLU 79 | 6.03 | Si |

### Verifiche a taglio delle travi in muratura secondo §C8.7.1.3.1 in combinazioni non sismiche

| Sezione | γM | N | M | V | Vt | Vp | Vt fess. diag. | Vt,lim | Comb. | c.s. | Verifica |
|---|---|---|---|---|---|---|---|---|---|---|---|
| ini. | 3 | 0 | 51766 | -432 | | | 2157 | 812 | SLU 40 | 1.88 | Si |
| fin. | 3 | 0 | 35975 | -500 | | | 2157 | 812 | SLU 40 | 1.62 | Si |
| ini. | 3 | 0 | 59812 | -515 | | | 2157 | 812 | SLU 80 | 1.57 | Si |
| fin. | 3 | 0 | 45333 | -447 | | | 2157 | 812 | SLU 80 | 1.81 | Si |
| ini. | 3 | 0 | 57765 | -500 | | | 2157 | 812 | SLU 35 | 1.62 | Si |
| fin. | 3 | 0 | 47313 | -353 | | | 2157 | 812 | SLU 35 | 2.3 | Si |
| ini. | 3 | 0 | 56905 | -516 | | | 2157 | 812 | SLU 36 | 1.57 | Si |
| fin. | 3 | 0 | 43502 | -437 | | | 2157 | 812 | SLU 36 | 1.86 | Si |
| ini. | 3 | 0 | 55697 | -477 | | | 2157 | 812 | SLU 42 | 1.7 | Si |
| fin. | 3 | 0 | 41020 | -508 | | | 2157 | 812 | SLU 42 | 1.6 | Si |
| ini. | 3 | 0 | 61343 | -511 | | | 2157 | 812 | SLU 84 | 1.59 | Si |
| fin. | 3 | 0 | 44843 | -507 | | | 2157 | 812 | SLU 84 | 1.6 | Si |
| ini. | 3 | 0 | 58619 | -504 | | | 2157 | 812 | SLU 75 | 1.61 | Si |
| fin. | 3 | 0 | 42281 | -428 | | | 2157 | 812 | SLU 75 | 1.9 | Si |
| ini. | 3 | 0 | 62550 | -550 | | | 2157 | 812 | SLU 78 | 1.48 | Si |
| fin. | 3 | 0 | 47326 | -436 | | | 2157 | 812 | SLU 78 | 1.86 | Si |
| ini. | 3 | 0 | 63410 | -534 | | | 2157 | 812 | SLU 77 | 1.52 | Si |
| fin. | 3 | 0 | 51137 | -352 | | | 2157 | 812 | SLU 77 | 2.31 | Si |
| ini. | 3 | 0 | 60672 | -500 | | | 2157 | 812 | SLU 79 | 1.62 | Si |
| fin. | 3 | 0 | 49144 | -364 | | | 2157 | 812 | SLU 79 | 2.23 | Si |

### Verifiche a pressoflessione delle travi in muratura in combinazioni sismiche

| Sezione | γM | N | M | Mu | Comb. | c.s. | Verifica |
|---|---|---|---|---|---|---|---|
| ini. | 2 | -562 | 71629 | 314194 | SLV 12 | 4.39 | Si |
| fin. | 2 | 115 | 18137 | 314194 | SLV 12 | 17.32 | Si |
| ini. | 2 | -1697 | 127971 | 314194 | SLV 3 | 2.46 | Si |
| fin. | 2 | -1859 | -886 | 314194 | SLV 3 | 354.73 | Si |
| ini. | 2 | -1469 | 90924 | 314194 | SLV 2 | 3.46 | Si |
| fin. | 2 | -1920 | 6227 | 314194 | SLV 2 | 50.46 | Si |

| Sezione | γM | N | M | Mu | Comb. | c.s. | Verifica |
|---|---|---|---|---|---|---|---|
| ini. | 2 | -1023 | 73177 | 314194 | SLD 4 | 4.29 | Si |
| fin. | 2 | -1044 | 13321 | 314194 | SLD 4 | 23.59 | Si |
| ini. | 2 | -1469 | 90924 | 314194 | SLV 1 | 3.46 | Si |
| fin. | 2 | -1920 | 6227 | 314194 | SLV 1 | 50.46 | Si |
| ini. | 2 | -1697 | 127971 | 314194 | SLV 4 | 2.46 | Si |
| fin. | 2 | -1859 | -886 | 314194 | SLV 4 | 354.73 | Si |
| ini. | 2 | -1209 | 117581 | 314194 | SLV 8 | 2.67 | Si |
| fin. | 2 | -763 | 5528 | 314194 | SLV 8 | 56.84 | Si |
| ini. | 2 | -562 | 71629 | 314194 | SLV 11 | 4.39 | Si |
| fin. | 2 | 115 | 18137 | 314194 | SLV 11 | 17.32 | Si |
| ini. | 2 | -1023 | 73177 | 314194 | SLD 3 | 4.29 | Si |
| fin. | 2 | -1044 | 13321 | 314194 | SLD 3 | 23.59 | Si |
| ini. | 2 | -1209 | 117581 | 314194 | SLV 7 | 2.67 | Si |
| fin. | 2 | -763 | 5528 | 314194 | SLV 7 | 56.84 | Si |

### Verifiche a taglio delle travi in muratura secondo §C8.7.1.3.1 in combinazioni sismiche

| Sezione | γM | N | M | V | Vt | Vp | Vt fess. diag. | Vt,lim | Comb. | c.s. | Verifica |
|---|---|---|---|---|---|---|---|---|---|---|---|
| ini. | 2 | 0 | 71629 | -2114 | | | 3235 | 1217 | SLV 11 | 0.58 | No |
| fin. | 2 | 0 | 18137 | -2142 | | | 3235 | 1217 | SLV 11 | 0.57 | No |
| ini. | 2 | 0 | -62251 | 2544 | | | 3235 | 1217 | SLV 13 | 0.48 | No |
| fin. | 2 | 0 | 48259 | 3186 | | | 3235 | 1217 | SLV 13 | 0.38 | No |
| ini. | 2 | 0 | -62251 | 2544 | | | 3235 | 1217 | SLV 14 | 0.48 | No |
| fin. | 2 | 0 | 48259 | 3186 | | | 3235 | 1217 | SLV 14 | 0.38 | No |
| ini. | 2 | 0 | -51862 | 2844 | | | 3235 | 1217 | SLV 10 | 0.43 | No |
| fin. | 2 | 0 | 41846 | 3321 | | | 3235 | 1217 | SLV 10 | 0.37 | No |
| ini. | 2 | 0 | 127971 | -3045 | | | 3235 | 1217 | SLV 4 | 0.4 | No |
| fin. | 2 | 0 | -886 | -3529 | | | 3235 | 1217 | SLV 4 | 0.34 | No |
| ini. | 2 | 0 | -51862 | 2844 | | | 3235 | 1217 | SLV 9 | 0.43 | No |
| fin. | 2 | 0 | 41846 | 3321 | | | 3235 | 1217 | SLV 9 | 0.37 | No |
| ini. | 2 | 0 | 127971 | -3045 | | | 3235 | 1217 | SLV 3 | 0.4 | No |
| fin. | 2 | 0 | -886 | -3529 | | | 3235 | 1217 | SLV 3 | 0.34 | No |
| ini. | 2 | 0 | 71629 | -2114 | | | 3235 | 1217 | SLV 12 | 0.58 | No |
| fin. | 2 | 0 | 18137 | -2142 | | | 3235 | 1217 | SLV 12 | 0.57 | No |
| ini. | 2 | 0 | 117581 | -3344 | | | 3235 | 1217 | SLV 7 | 0.36 | No |
| fin. | 2 | 0 | 5528 | -3665 | | | 3235 | 1217 | SLV 7 | 0.33 | No |
| ini. | 2 | 0 | 117581 | -3344 | | | 3235 | 1217 | SLV 8 | 0.36 | No |
| fin. | 2 | 0 | 5528 | -3665 | | | 3235 | 1217 | SLV 8 | 0.33 | No |

### Tabella dei coefficienti di sicurezza minimi

| Stato limite | Coeff.s. | Comb. | Verifica |
|---|---|---|---|
| PF_SLV | 2.455 | SLV 3 | Si |
| V_SLV | 0.332 | SLV 7 | No |
| PF_SLU | 4.673 | SLU 77 | Si |
| V_SLU | 1.476 | SLU 78 | Si |

## Trave di accoppiamento 179

Verifiche condotte secondo D.M. 17-01-18 (N.T.C.)

### Dati geometrici

| X ini. | Y ini. | Z ini.inf. | Z ini.sup. | H ini. | X fin. | Y fin. | Z fin.inf. | Z fin.sup | H fin. | Luce | Spessore | R. Trazione |
|---|---|---|---|---|---|---|---|---|---|---|---|---|
| -550.8 | -335.9 | 1528 | 1566.5 | 38.5 | -600.8 | -335.9 | 1528 | 1566.5 | 38.5 | 50 | 28 | 3500 |

### Caratteristiche del materiale

(Circolare 7 21-01-19 C8.5.I) Muratura in mattoni pieni e malta di calce LC2_Corti

| fb_ | fhk | fvk0 | fhmedio | τ0 | fv0 | μ | ϕ | fvk,lim | E | G | FC |
|---|---|---|---|---|---|---|---|---|---|---|---|
| 12 | | | 17.25 | 0.9 | 2 | 0.577 | 0.767 | 0.65 | 32000 | 12800 | 1.2 |

### Verifiche a pressoflessione delle travi in muratura in combinazioni non sismiche

| Sezione | γM | N | M | Mu | Comb. | c.s. | Verifica |
|---|---|---|---|---|---|---|---|
| ini. | 3 | -403 | 4115 | 21041 | SLU 72 | 5.11 | Si |
| fin. | 3 | -406 | -10838 | 21081 | SLU 72 | 1.95 | Si |
| ini. | 3 | -371 | 4352 | 21041 | SLU 38 | 4.83 | Si |
| fin. | 3 | -374 | -10782 | 21081 | SLU 38 | 1.96 | Si |
| ini. | 3 | -513 | 3322 | 21041 | SLU 77 | 6.33 | Si |
| fin. | 3 | -516 | -10768 | 21081 | SLU 77 | 1.96 | Si |
| ini. | 3 | -377 | 3790 | 21041 | SLU 71 | 5.55 | Si |
| fin. | 3 | -379 | -10530 | 21081 | SLU 71 | 2 | Si |
| ini. | 3 | -472 | 4204 | 21041 | SLU 80 | 5 | Si |
| fin. | 3 | -475 | -11240 | 21081 | SLU 80 | 1.88 | Si |
| ini. | 3 | -438 | 3794 | 21041 | SLU 36 | 5.55 | Si |
| fin. | 3 | -441 | -10619 | 21081 | SLU 36 | 1.99 | Si |
| ini. | 3 | -539 | 3646 | 21041 | SLU 78 | 5.77 | Si |
| fin. | 3 | -542 | -11076 | 21081 | SLU 78 | 1.9 | Si |
| ini. | 3 | -344 | 4027 | 21041 | SLU 37 | 5.22 | Si |
| fin. | 3 | -347 | -10474 | 21081 | SLU 37 | 2.01 | Si |
| ini. | 3 | -470 | 3557 | 21041 | SLU 70 | 5.92 | Si |
| fin. | 3 | -473 | -10675 | 21081 | SLU 70 | 1.97 | Si |
| ini. | 3 | -446 | 3880 | 21041 | SLU 79 | 5.42 | Si |
| fin. | 3 | -449 | -10932 | 21081 | SLU 79 | 1.93 | Si |

### Verifiche a taglio delle travi in muratura secondo §C8.7.1.3.1 in combinazioni non sismiche

| Sezione | γM | N | M | V | Vt | Vp | Vt fess. diag. | Vt,lim | Comb. | c.s. | Verifica |
|---|---|---|---|---|---|---|---|---|---|---|---|
| ini. | 3 | 0 | 3646 | 127 | | | 319 | 120 | SLU 78 | 0.95 | No |

| Sezione | γM | N | M | V | Vt | Vp | Vt fess. diag. | Vt,lim | Comb. | c.s. | Verifica |
|---|---|---|---|---|---|---|---|---|---|---|---|
| fin. | 3 | 0 | -11076 | -463 | | | 320 | 120 | SLU 78 | 0.26 | No |
| ini. | 3 | 0 | 3322 | 145 | | | 319 | 120 | SLU 77 | 0.83 | No |
| fin. | 3 | 0 | -10768 | -452 | | | 320 | 120 | SLU 77 | 0.27 | No |
| ini. | 3 | 0 | 3880 | 94 | | | 319 | 120 | SLU 79 | 1.28 | Si |
| fin. | 3 | 0 | -10932 | -457 | | | 320 | 120 | SLU 79 | 0.26 | No |
| ini. | 3 | 0 | 3232 | 155 | | | 319 | 120 | SLU 69 | 0.78 | No |
| fin. | 3 | 0 | -10367 | -442 | | | 320 | 120 | SLU 69 | 0.27 | No |
| ini. | 3 | 0 | 3794 | 106 | | | 319 | 120 | SLU 36 | 1.14 | Si |
| fin. | 3 | 0 | -10619 | -438 | | | 320 | 120 | SLU 36 | 0.27 | No |
| ini. | 3 | 0 | 4204 | 76 | | | 319 | 120 | SLU 80 | 1.59 | Si |
| fin. | 3 | 0 | -11240 | -468 | | | 320 | 120 | SLU 80 | 0.26 | No |
| ini. | 3 | 0 | 3557 | 136 | | | 319 | 120 | SLU 70 | 0.88 | No |
| fin. | 3 | 0 | -10675 | -452 | | | 320 | 120 | SLU 70 | 0.27 | No |
| ini. | 3 | 0 | 3790 | 104 | | | 319 | 120 | SLU 71 | 1.16 | Si |
| fin. | 3 | 0 | -10530 | -447 | | | 320 | 120 | SLU 71 | 0.27 | No |
| ini. | 3 | 0 | 4352 | 55 | | | 319 | 120 | SLU 38 | 2.2 | Si |
| fin. | 3 | 0 | -10782 | -443 | | | 320 | 120 | SLU 38 | 0.27 | No |
| ini. | 3 | 0 | 4115 | 85 | | | 319 | 120 | SLU 72 | 1.41 | Si |
| fin. | 3 | 0 | -10838 | -457 | | | 320 | 120 | SLU 72 | 0.26 | No |

### Verifiche a pressoflessione delle travi in muratura in combinazioni sismiche

| Sezione | γM | N | M | Mu | Comb. | c.s. | Verifica |
|---|---|---|---|---|---|---|---|
| ini. | 2 | -658 | -23367 | 31561 | SLV 13 | 1.35 | Si |
| fin. | 2 | 159 | 191 | 31622 | SLV 13 | 165.65 | Si |
| ini. | 2 | -220 | 30258 | 31561 | SLV 8 | 1.04 | Si |
| fin. | 2 | -534 | -25997 | 31622 | SLV 8 | 1.22 | Si |
| ini. | 2 | -220 | 30258 | 31561 | SLV 7 | 1.04 | Si |
| fin. | 2 | -534 | -25997 | 31622 | SLV 7 | 1.22 | Si |
| ini. | 2 | -416 | 22602 | 31561 | SLV 3 | 1.4 | Si |
| fin. | 2 | -1235 | -7140 | 31622 | SLV 3 | 4.43 | Si |
| ini. | 2 | -854 | -31023 | 31561 | SLV 9 | 1.02 | Si |
| fin. | 2 | -542 | 19047 | 31622 | SLV 9 | 1.66 | Si |
| ini. | 2 | -854 | -31023 | 31561 | SLV 10 | 1.02 | Si |
| fin. | 2 | -542 | 19047 | 31622 | SLV 10 | 1.66 | Si |
| ini. | 2 | -237 | 21164 | 31561 | SLV 11 | 1.49 | Si |
| fin. | 2 | -73 | -28035 | 31622 | SLV 11 | 1.13 | Si |
| ini. | 2 | -237 | 21164 | 31561 | SLV 12 | 1.49 | Si |
| fin. | 2 | -73 | -28035 | 31622 | SLV 12 | 1.13 | Si |
| ini. | 2 | -416 | 22602 | 31561 | SLV 4 | 1.4 | Si |
| fin. | 2 | -1235 | -7140 | 31622 | SLV 4 | 4.43 | Si |
| ini. | 2 | -658 | -23367 | 31561 | SLV 14 | 1.35 | Si |
| fin. | 2 | 159 | 191 | 31622 | SLV 14 | 165.65 | Si |

### Verifiche a taglio delle travi in muratura secondo §C8.7.1.3.1 in combinazioni sismiche

| Sezione | γM | N | M | V | Vt | Vp | Vt fess. diag. | Vt,lim | Comb. | c.s. | Verifica |
|---|---|---|---|---|---|---|---|---|---|---|---|
| ini. | 2 | 0 | 30258 | -488 | | | 479 | 180 | SLV 7 | 0.37 | No |
| fin. | 2 | 0 | -25997 | -683 | | | 480 | 181 | SLV 7 | 0.26 | No |
| ini. | 2 | 0 | 21164 | -397 | | | 479 | 180 | SLV 12 | 0.45 | No |
| fin. | 2 | 0 | -28035 | -657 | | | 480 | 181 | SLV 12 | 0.27 | No |
| ini. | 2 | 0 | 21164 | -397 | | | 479 | 180 | SLV 11 | 0.45 | No |
| fin. | 2 | 0 | -28035 | -657 | | | 480 | 181 | SLV 11 | 0.27 | No |
| ini. | 2 | 0 | -31023 | 678 | | | 479 | 180 | SLV 9 | 0.27 | No |
| fin. | 2 | 0 | 19047 | 397 | | | 480 | 181 | SLV 9 | 0.45 | No |
| ini. | 2 | 0 | 30258 | -488 | | | 479 | 180 | SLV 8 | 0.37 | No |
| fin. | 2 | 0 | -25997 | -683 | | | 480 | 181 | SLV 8 | 0.26 | No |
| ini. | 2 | 0 | -31023 | 678 | | | 479 | 180 | SLV 10 | 0.27 | No |
| fin. | 2 | 0 | 19047 | 397 | | | 480 | 181 | SLV 10 | 0.45 | No |
| ini. | 2 | 0 | -23367 | 407 | | | 479 | 180 | SLV 13 | 0.44 | No |
| fin. | 2 | 0 | 191 | 59 | | | 480 | 181 | SLV 13 | 3.08 | Si |
| ini. | 2 | 0 | -21929 | 587 | | | 479 | 180 | SLV 5 | 0.31 | No |
| fin. | 2 | 0 | 21085 | 371 | | | 480 | 181 | SLV 5 | 0.49 | No |
| ini. | 2 | 0 | -23367 | 407 | | | 479 | 180 | SLV 14 | 0.44 | No |
| fin. | 2 | 0 | 191 | 59 | | | 480 | 181 | SLV 14 | 3.08 | Si |
| ini. | 2 | 0 | -21929 | 587 | | | 479 | 180 | SLV 6 | 0.31 | No |
| fin. | 2 | 0 | 21085 | 371 | | | 480 | 181 | SLV 6 | 0.49 | No |

### Tabella dei coefficienti di sicurezza minimi

| Stato limite | Coeff.s. | Comb. | Verifica |
|---|---|---|---|
| PF_SLV | 1.017 | SLV 9 | Si |
| V_SLV | 0.264 | SLV 7 | No |
| PF_SLU | 1.876 | SLU 80 | Si |
| V_SLU | 0.258 | SLU 80 | No |

## Trave di accoppiamento 180

Verifiche condotte secondo D.M. 17-01-18 (N.T.C.)

### Dati geometrici

| X ini. | Y ini. | Z ini.inf. | Z ini.sup. | H ini. | X fin. | Y fin. | Z fin.inf. | Z fin.sup | H fin. | Luce | Spessore | R. Trazione |
|---|---|---|---|---|---|---|---|---|---|---|---|---|
| -228.3 | -335.9 | 1248 | 1338 | 90 | -318.3 | -335.9 | 1248 | 1338 | 90 | 90 | 28 | 3500 |

### Caratteristiche del materiale

(Circolare 7 21-01-19 C8.5.I) Muratura in mattoni pieni e malta di calce LC2_Corti

| fb_ | fhk | fvk0 | fhmedio | τ0 | fv0 | μ | ϕ | fvk,lim | E | G | FC |
|---|---|---|---|---|---|---|---|---|---|---|---|
| 12 | | | 17.25 | 0.9 | 2 | 0.577 | 0.767 | 0.65 | 32000 | 12800 | 1.2 |

## Verifiche a pressoflessione delle travi in muratura in combinazioni non sismiche

| Sezione | γM | N | M | Mu | Comb. | c.s. | Verifica |
|---|---|---|---|---|---|---|---|
| ini. | 3 | 59 | -19699 | 103792 | SLU 67 | 5.27 | Si |
| fin. | 3 | -943 | 29096 | 103792 | SLU 67 | 3.57 | Si |
| ini. | 3 | -64 | -19675 | 103792 | SLU 65 | 5.28 | Si |
| fin. | 3 | -1105 | 30542 | 103792 | SLU 65 | 3.4 | Si |
| ini. | 3 | 93 | -23605 | 103792 | SLU 76 | 4.4 | Si |
| fin. | 3 | -1000 | 31582 | 103792 | SLU 76 | 3.29 | Si |
| ini. | 3 | -54 | -21396 | 103792 | SLU 73 | 4.85 | Si |
| fin. | 3 | -1125 | 32457 | 103792 | SLU 73 | 3.2 | Si |
| ini. | 3 | 69 | -21421 | 103792 | SLU 75 | 4.85 | Si |
| fin. | 3 | -963 | 31011 | 103792 | SLU 75 | 3.35 | Si |
| ini. | 3 | 83 | -21884 | 103792 | SLU 68 | 4.74 | Si |
| fin. | 3 | -979 | 29667 | 103792 | SLU 68 | 3.5 | Si |
| ini. | 3 | 80 | -22161 | 103792 | SLU 84 | 4.68 | Si |
| fin. | 3 | -936 | 30613 | 103792 | SLU 84 | 3.39 | Si |
| ini. | 3 | 223 | -23632 | 103792 | SLU 80 | 4.39 | Si |
| fin. | 3 | -802 | 28916 | 103792 | SLU 80 | 3.59 | Si |
| ini. | 3 | -68 | -19952 | 103792 | SLU 82 | 5.2 | Si |
| fin. | 3 | -1062 | 31488 | 103792 | SLU 82 | 3.3 | Si |
| ini. | 3 | 216 | -23630 | 103792 | SLU 78 | 4.39 | Si |
| fin. | 3 | -838 | 30135 | 103792 | SLU 78 | 3.44 | Si |

## Verifiche a taglio delle travi in muratura secondo §C8.7.1.3.1 in combinazioni non sismiche

| Sezione | γM | N | M | V | Vt | Vp | Vt fess. diag. | Vt,lim | Comb. | c.s. | Verifica |
|---|---|---|---|---|---|---|---|---|---|---|---|
| ini. | 3 | 0 | -23630 | 1097 | | | 970 | 365 | SLU 78 | 0.33 | No |
| fin. | 3 | 0 | 30135 | 1295 | | | 970 | 365 | SLU 78 | 0.28 | No |
| ini. | 3 | 0 | -23605 | 1182 | | | 970 | 365 | SLU 76 | 0.31 | No |
| fin. | 3 | 0 | 31582 | 1257 | | | 970 | 365 | SLU 76 | 0.29 | No |
| ini. | 3 | 0 | -21911 | 990 | | | 970 | 365 | SLU 72 | 0.37 | No |
| fin. | 3 | 0 | 27001 | 1231 | | | 970 | 365 | SLU 72 | 0.3 | No |
| ini. | 3 | 0 | -19675 | 1067 | | | 970 | 365 | SLU 65 | 0.34 | No |
| fin. | 3 | 0 | 30542 | 1205 | | | 970 | 365 | SLU 65 | 0.3 | No |
| ini. | 3 | 0 | -21908 | 989 | | | 970 | 365 | SLU 70 | 0.37 | No |
| fin. | 3 | 0 | 28220 | 1296 | | | 970 | 365 | SLU 70 | 0.28 | No |
| ini. | 3 | 0 | -21884 | 1075 | | | 970 | 365 | SLU 68 | 0.34 | No |
| fin. | 3 | 0 | 29667 | 1258 | | | 970 | 365 | SLU 68 | 0.29 | No |
| ini. | 3 | 0 | -21421 | 1088 | | | 970 | 365 | SLU 75 | 0.34 | No |
| fin. | 3 | 0 | 31011 | 1242 | | | 970 | 365 | SLU 75 | 0.29 | No |
| ini. | 3 | 0 | -23632 | 1097 | | | 970 | 365 | SLU 80 | 0.33 | No |
| fin. | 3 | 0 | 28916 | 1230 | | | 970 | 365 | SLU 80 | 0.3 | No |
| ini. | 3 | 0 | -19699 | 981 | | | 970 | 365 | SLU 67 | 0.37 | No |
| fin. | 3 | 0 | 29096 | 1243 | | | 970 | 365 | SLU 67 | 0.29 | No |
| ini. | 3 | 0 | -21396 | 1174 | | | 970 | 365 | SLU 73 | 0.31 | No |
| fin. | 3 | 0 | 32457 | 1204 | | | 970 | 365 | SLU 73 | 0.3 | No |

## Verifiche a pressoflessione delle travi in muratura in combinazioni sismiche

| Sezione | γM | N | M | Mu | Comb. | c.s. | Verifica |
|---|---|---|---|---|---|---|---|
| ini. | 2 | -1555 | 49964 | 121694 | SLV 4 | 2.44 | Si |
| fin. | 2 | 181 | -10833 | 121694 | SLV 4 | 11.23 | Si |
| ini. | 2 | 1226 | -59870 | 121694 | SLV 10 | 2.03 | Si |
| fin. | 2 | -882 | 40650 | 121694 | SLV 10 | 2.99 | Si |
| ini. | 2 | -1397 | 38636 | 121694 | SLV 8 | 3.15 | Si |
| fin. | 2 | -494 | -1235 | 121694 | SLV 8 | 98.55 | Si |
| ini. | 2 | -1397 | 38636 | 121694 | SLV 7 | 3.15 | Si |
| fin. | 2 | -494 | -1235 | 121694 | SLV 7 | 98.55 | Si |
| ini. | 2 | 1384 | -71198 | 121694 | SLV 13 | 1.71 | Si |
| fin. | 2 | -1557 | 50248 | 121694 | SLV 13 | 2.42 | Si |
| ini. | 2 | 810 | -50707 | 121694 | SLV 16 | 2.4 | Si |
| fin. | 2 | -1601 | 42481 | 121694 | SLV 16 | 2.86 | Si |
| ini. | 2 | 1384 | -71198 | 121694 | SLV 14 | 1.71 | Si |
| fin. | 2 | -1557 | 50248 | 121694 | SLV 14 | 2.42 | Si |
| ini. | 2 | 1226 | -59870 | 121694 | SLV 9 | 2.03 | Si |
| fin. | 2 | -882 | 40650 | 121694 | SLV 9 | 2.99 | Si |
| ini. | 2 | 810 | -50707 | 121694 | SLV 15 | 2.4 | Si |
| fin. | 2 | -1601 | 42481 | 121694 | SLV 15 | 2.86 | Si |
| ini. | 2 | -1555 | 49964 | 121694 | SLV 3 | 2.44 | Si |
| fin. | 2 | 181 | -10833 | 121694 | SLV 3 | 11.23 | Si |

## Verifiche a taglio delle travi in muratura secondo §C8.7.1.3.1 in combinazioni sismiche

| Sezione | γM | N | M | V | Vt | Vp | Vt fess. diag. | Vt,lim | Comb. | c.s. | Verifica |
|---|---|---|---|---|---|---|---|---|---|---|---|
| ini. | 2 | 0 | 49964 | -1681 | | | 1456 | 548 | SLV 3 | 0.33 | No |
| fin. | 2 | 0 | -10833 | -1382 | | | 1456 | 548 | SLV 3 | 0.4 | No |
| ini. | 2 | 0 | -71198 | 2944 | | | 1456 | 548 | SLV 13 | 0.19 | No |
| fin. | 2 | 0 | 50248 | 2867 | | | 1456 | 548 | SLV 13 | 0.19 | No |
| ini. | 2 | 0 | 49964 | -1681 | | | 1456 | 548 | SLV 4 | 0.33 | No |
| fin. | 2 | 0 | -10833 | -1382 | | | 1456 | 548 | SLV 4 | 0.4 | No |
| ini. | 2 | 0 | -59870 | 2106 | | | 1456 | 548 | SLV 10 | 0.26 | No |
| fin. | 2 | 0 | 40650 | 2225 | | | 1456 | 548 | SLV 10 | 0.25 | No |
| ini. | 2 | 0 | -36453 | 1619 | | | 1456 | 548 | SLD 13 | 0.34 | No |
| fin. | 2 | 0 | 32634 | 1647 | | | 1456 | 548 | SLD 13 | 0.33 | No |
| ini. | 2 | 0 | -59870 | 2106 | | | 1456 | 548 | SLV 9 | 0.26 | No |
| fin. | 2 | 0 | 40650 | 2225 | | | 1456 | 548 | SLV 9 | 0.25 | No |
| ini. | 2 | 0 | -36453 | 1619 | | | 1456 | 548 | SLD 14 | 0.34 | No |
| fin. | 2 | 0 | 32634 | 1647 | | | 1456 | 548 | SLD 14 | 0.33 | No |

| Sezione | γM | N | M | V | Vt | Vp | Vt fess. diag. | Vt,lim | Comb. | c.s. | Verifica |
|---|---|---|---|---|---|---|---|---|---|---|---|
| ini. | 2 | 0 | -71198 | 2944 | | | 1456 | 548 | SLV 14 | 0.19 | No |
| fin. | 2 | 0 | 50248 | 2867 | | | 1456 | 548 | SLV 14 | 0.19 | No |
| ini. | 2 | 0 | -50707 | 2430 | | | 1456 | 548 | SLV 16 | 0.23 | No |
| fin. | 2 | 0 | 42481 | 2310 | | | 1456 | 548 | SLV 16 | 0.24 | No |
| ini. | 2 | 0 | -50707 | 2430 | | | 1456 | 548 | SLV 15 | 0.23 | No |
| fin. | 2 | 0 | 42481 | 2310 | | | 1456 | 548 | SLV 15 | 0.24 | No |

### Tabella dei coefficienti di sicurezza minimi

| Stato limite | Coeff.s. | Comb. | Verifica |
|---|---|---|---|
| PF_SLV | 1.709 | SLV 13 | Si |
| V_SLV | 0.186 | SLV 13 | No |
| PF_SLU | 3.198 | SLU 73 | Si |
| V_SLU | 0.282 | SLU 70 | No |

## Trave di accoppiamento 181

Verifiche condotte secondo D.M. 17-01-18 (N.T.C.)

### Dati geometrici

| X ini. | Y ini. | Z ini.inf. | Z ini.sup. | H ini. | X fin. | Y fin. | Z fin.inf. | Z fin.sup | H fin. | Luce | Spessore | R. Trazione |
|---|---|---|---|---|---|---|---|---|---|---|---|---|
| -228.3 | -335.9 | 1518 | 1566.2 | 48.2 | -318.3 | -335.9 | 1518 | 1566.3 | 48.3 | 90 | 28 | 3500 |

### Caratteristiche del materiale

(Circolare 7 21-01-19 C8.5.I) Muratura in mattoni pieni e malta di calce LC2_Corti

| fb_ | fhk | fvk0 | fhmedio | τ0 | fv0 | μ | ϕ | fvk,lim | E | G | FC |
|---|---|---|---|---|---|---|---|---|---|---|---|
| 12 | | | 17.25 | 0.9 | 2 | 0.577 | 0.767 | 0.65 | 32000 | 12800 | 1.2 |

### Verifiche a pressoflessione delle travi in muratura in combinazioni non sismiche

| Sezione | γM | N | M | Mu | Comb. | c.s. | Verifica |
|---|---|---|---|---|---|---|---|
| ini. | 3 | -634 | -15153 | 33064 | SLU 65 | 2.18 | Si |
| fin. | 3 | -636 | 8262 | 33157 | SLU 65 | 4.01 | Si |
| ini. | 3 | -588 | -14867 | 33064 | SLU 31 | 2.22 | Si |
| fin. | 3 | -590 | 8702 | 33157 | SLU 31 | 3.81 | Si |
| ini. | 3 | -539 | -16406 | 33064 | SLU 76 | 2.02 | Si |
| fin. | 3 | -543 | 9614 | 33157 | SLU 76 | 3.45 | Si |
| ini. | 3 | -673 | -16202 | 33064 | SLU 75 | 2.04 | Si |
| fin. | 3 | -676 | 8057 | 33157 | SLU 75 | 4.12 | Si |
| ini. | 3 | -700 | -16680 | 33064 | SLU 73 | 1.98 | Si |
| fin. | 3 | -702 | 9369 | 33157 | SLU 73 | 3.54 | Si |
| ini. | 3 | -512 | -15928 | 33064 | SLU 78 | 2.08 | Si |
| fin. | 3 | -517 | 8303 | 33157 | SLU 78 | 3.99 | Si |
| ini. | 3 | -597 | -16042 | 33064 | SLU 84 | 2.06 | Si |
| fin. | 3 | -600 | 8941 | 33157 | SLU 84 | 3.71 | Si |
| ini. | 3 | -473 | -14879 | 33064 | SLU 68 | 2.22 | Si |
| fin. | 3 | -477 | 8508 | 33157 | SLU 68 | 3.9 | Si |
| ini. | 3 | -408 | -15113 | 33064 | SLU 80 | 2.19 | Si |
| fin. | 3 | -413 | 8712 | 33157 | SLU 80 | 3.81 | Si |
| ini. | 3 | -758 | -16315 | 33064 | SLU 82 | 2.03 | Si |
| fin. | 3 | -759 | 8696 | 33157 | SLU 82 | 3.81 | Si |

### Verifiche a taglio delle travi in muratura secondo §C8.7.1.3.1 in combinazioni non sismiche

| Sezione | γM | N | M | V | Vt | Vp | Vt fess. diag. | Vt,lim | Comb. | c.s. | Verifica |
|---|---|---|---|---|---|---|---|---|---|---|---|
| ini. | 3 | 0 | -14401 | 682 | | | 347 | 131 | SLU 70 | 0.19 | No |
| fin. | 3 | 0 | 7196 | -228 | | | 347 | 131 | SLU 70 | 0.57 | No |
| ini. | 3 | 0 | -15928 | 711 | | | 347 | 131 | SLU 78 | 0.18 | No |
| fin. | 3 | 0 | 8303 | -199 | | | 347 | 131 | SLU 78 | 0.66 | No |
| ini. | 3 | 0 | -14673 | 633 | | | 347 | 131 | SLU 74 | 0.21 | No |
| fin. | 3 | 0 | 6336 | -196 | | | 347 | 131 | SLU 74 | 0.67 | No |
| ini. | 3 | 0 | -14399 | 687 | | | 347 | 131 | SLU 77 | 0.19 | No |
| fin. | 3 | 0 | 6582 | -262 | | | 347 | 131 | SLU 77 | 0.5 | No |
| ini. | 3 | 0 | -13584 | 634 | | | 347 | 131 | SLU 79 | 0.21 | No |
| fin. | 3 | 0 | 6991 | -217 | | | 347 | 131 | SLU 79 | 0.6 | No |
| ini. | 3 | 0 | -13713 | 639 | | | 347 | 131 | SLU 57 | 0.2 | No |
| fin. | 3 | 0 | 7133 | -197 | | | 347 | 131 | SLU 57 | 0.66 | No |
| ini. | 3 | 0 | -15113 | 658 | | | 347 | 131 | SLU 80 | 0.2 | No |
| fin. | 3 | 0 | 8712 | -154 | | | 347 | 131 | SLU 80 | 0.85 | No |
| ini. | 3 | 0 | -14115 | 633 | | | 347 | 131 | SLU 36 | 0.21 | No |
| fin. | 3 | 0 | 7636 | -173 | | | 347 | 131 | SLU 36 | 0.75 | No |
| ini. | 3 | 0 | -12872 | 658 | | | 347 | 131 | SLU 69 | 0.2 | No |
| fin. | 3 | 0 | 5475 | -292 | | | 347 | 131 | SLU 69 | 0.45 | No |
| ini. | 3 | 0 | -16202 | 657 | | | 347 | 131 | SLU 75 | 0.2 | No |
| fin. | 3 | 0 | 8057 | -133 | | | 347 | 131 | SLU 75 | 0.98 | No |

### Verifiche a pressoflessione delle travi in muratura in combinazioni sismiche

| Sezione | γM | N | M | Mu | Comb. | c.s. | Verifica |
|---|---|---|---|---|---|---|---|
| ini. | 2 | -1610 | 19864 | 48622 | SLV 3 | 2.45 | Si |
| fin. | 2 | -2200 | -22566 | 48740 | SLV 3 | 2.16 | Si |
| ini. | 2 | 1475 | -26159 | 48622 | SLV 9 | 1.86 | Si |
| fin. | 2 | 1688 | 26982 | 48740 | SLV 9 | 1.81 | Si |
| ini. | 2 | -1610 | 19864 | 48622 | SLV 4 | 2.45 | Si |
| fin. | 2 | -2200 | -22566 | 48740 | SLV 4 | 2.16 | Si |
| ini. | 2 | -80 | -22170 | 48622 | SLD 14 | 2.19 | Si |
| fin. | 2 | 169 | 15602 | 48740 | SLD 14 | 3.12 | Si |
| ini. | 2 | -590 | -34103 | 48622 | SLV 16 | 1.43 | Si |

| Sezione | γM | N | M | Mu | Comb. | c.s. | Verifica |
|---|---|---|---|---|---|---|---|
| fin. | 2 | -26 | 21262 | 48740 | SLV 16 | 2.29 | Si |
| ini. | 2 | 528 | -39154 | 48622 | SLV 13 | 1.24 | Si |
| fin. | 2 | 1116 | 30982 | 48740 | SLV 13 | 1.57 | Si |
| ini. | 2 | 528 | -39154 | 48622 | SLV 14 | 1.24 | Si |
| fin. | 2 | 1116 | 30982 | 48740 | SLV 14 | 1.57 | Si |
| ini. | 2 | -590 | -34103 | 48622 | SLV 15 | 1.43 | Si |
| fin. | 2 | -26 | 21262 | 48740 | SLV 15 | 2.29 | Si |
| ini. | 2 | 1475 | -26159 | 48622 | SLV 10 | 1.86 | Si |
| fin. | 2 | 1688 | 26982 | 48740 | SLV 10 | 1.81 | Si |
| ini. | 2 | -80 | -22170 | 48622 | SLD 13 | 2.19 | Si |
| fin. | 2 | 169 | 15602 | 48740 | SLD 13 | 3.12 | Si |

### Verifiche a taglio delle travi in muratura secondo §C8.7.1.3.1 in combinazioni sismiche

| Sezione | γM | N | M | V | Vt | Vp | Vt fess. diag. | Vt,lim | Comb. | c.s. | Verifica |
|---|---|---|---|---|---|---|---|---|---|---|---|
| ini. | 2 | 0 | 19864 | -136 | | | 520 | 196 | SLV 4 | 1.44 | Si |
| fin. | 2 | 0 | -22566 | -764 | | | 521 | 196 | SLV 4 | 0.26 | No |
| ini. | 2 | 0 | 6869 | -42 | | | 520 | 196 | SLV 8 | 4.64 | Si |
| fin. | 2 | 0 | -18566 | -621 | | | 521 | 196 | SLV 8 | 0.32 | No |
| ini. | 2 | 0 | 6869 | -42 | | | 520 | 196 | SLV 7 | 4.64 | Si |
| fin. | 2 | 0 | -18566 | -621 | | | 521 | 196 | SLV 7 | 0.32 | No |
| ini. | 2 | 0 | -34103 | 709 | | | 520 | 196 | SLV 15 | 0.28 | No |
| fin. | 2 | 0 | 21262 | 383 | | | 521 | 196 | SLV 15 | 0.51 | No |
| ini. | 2 | 0 | -39154 | 882 | | | 520 | 196 | SLV 13 | 0.22 | No |
| fin. | 2 | 0 | 30982 | 605 | | | 521 | 196 | SLV 13 | 0.32 | No |
| ini. | 2 | 0 | -34103 | 709 | | | 520 | 196 | SLV 16 | 0.28 | No |
| fin. | 2 | 0 | 21262 | 383 | | | 521 | 196 | SLV 16 | 0.51 | No |
| ini. | 2 | 0 | -26159 | 789 | | | 520 | 196 | SLV 9 | 0.25 | No |
| fin. | 2 | 0 | 26982 | 462 | | | 521 | 196 | SLV 9 | 0.42 | No |
| ini. | 2 | 0 | -26159 | 789 | | | 520 | 196 | SLV 10 | 0.25 | No |
| fin. | 2 | 0 | 26982 | 462 | | | 521 | 196 | SLV 10 | 0.42 | No |
| ini. | 2 | 0 | -39154 | 882 | | | 520 | 196 | SLV 14 | 0.22 | No |
| fin. | 2 | 0 | 30982 | 605 | | | 521 | 196 | SLV 14 | 0.32 | No |
| ini. | 2 | 0 | 19864 | -136 | | | 520 | 196 | SLV 3 | 1.44 | Si |
| fin. | 2 | 0 | -22566 | -764 | | | 521 | 196 | SLV 3 | 0.26 | No |

### Tabella dei coefficienti di sicurezza minimi

| Stato limite | Coeff.s. | Comb. | Verifica |
|---|---|---|---|
| PF_SLV | 1.242 | SLV 13 | Si |
| V_SLV | 0.222 | SLV 13 | No |
| PF_SLU | 1.982 | SLU 73 | Si |
| V_SLU | 0.183 | SLU 78 | No |

## Trave di accoppiamento 182

Verifiche condotte secondo D.M. 17-01-18 (N.T.C.)

### Dati geometrici

| X ini. | Y ini. | Z ini.inf. | Z ini.sup. | H ini. | X fin. | Y fin. | Z fin.inf. | Z fin.sup | H fin. | Luce | Spessore | R. Trazione |
|---|---|---|---|---|---|---|---|---|---|---|---|---|
| -1314.3 | -485.9 | 350 | 373 | 23 | -1174.3 | -485.9 | 350 | 373 | 23 | 140 | 30 | 3500 |

### Caratteristiche del materiale

(Circolare 7 21-01-19 C8.5.I) Muratura in mattoni pieni e malta di calce LC2_Corti

| fb_ | fhk | fvk0 | fhmedio | τ0 | fv0 | μ | ϕ | fvk,lim | E | G | FC |
|---|---|---|---|---|---|---|---|---|---|---|---|
| 12 | | | 17.25 | 0.9 | 2 | 0.577 | 0.767 | 0.65 | 32000 | 12800 | 1.2 |

### Verifiche a pressoflessione delle travi in muratura in combinazioni non sismiche

| Sezione | γM | N | M | Mu | Comb. | c.s. | Verifica |
|---|---|---|---|---|---|---|---|
| ini. | 3 | -740 | -22655 | 8052 | SLU 76 | 0.36 | No |
| fin. | 3 | -1 | -11101 | 8052 | SLU 76 | 0.73 | No |
| ini. | 3 | -712 | -22481 | 8052 | SLU 82 | 0.36 | No |
| fin. | 3 | -7 | -11437 | 8052 | SLU 82 | 0.7 | No |
| ini. | 3 | -756 | -23248 | 8052 | SLU 78 | 0.35 | No |
| fin. | 3 | 36 | -11032 | 8052 | SLU 78 | 0.73 | No |
| ini. | 3 | -723 | -23075 | 8052 | SLU 83 | 0.35 | No |
| fin. | 3 | 40 | -11326 | 8052 | SLU 83 | 0.71 | No |
| ini. | 3 | -752 | -23397 | 8052 | SLU 84 | 0.34 | No |
| fin. | 3 | 25 | -11391 | 8052 | SLU 84 | 0.71 | No |
| ini. | 3 | -761 | -23356 | 8052 | SLU 80 | 0.34 | No |
| fin. | 3 | 41 | -11011 | 8052 | SLU 80 | 0.73 | No |
| ini. | 3 | -712 | -22289 | 8052 | SLU 63 | 0.36 | No |
| fin. | 3 | 4 | -11108 | 8052 | SLU 63 | 0.72 | No |
| ini. | 3 | -726 | -22925 | 8052 | SLU 77 | 0.35 | No |
| fin. | 3 | 51 | -10967 | 8052 | SLU 77 | 0.73 | No |
| ini. | 3 | -731 | -23033 | 8052 | SLU 79 | 0.35 | No |
| fin. | 3 | 57 | -10946 | 8052 | SLU 79 | 0.74 | No |
| ini. | 3 | -716 | -22332 | 8052 | SLU 75 | 0.36 | No |
| fin. | 3 | 4 | -11078 | 8052 | SLU 75 | 0.73 | No |

### Verifiche a taglio delle travi in muratura secondo §C8.7.1.3.1 in combinazioni non sismiche

| Sezione | γM | N | M | V | Vt | Vp | Vt fess. diag. | Vt,lim | Comb. | c.s. | Verifica |
|---|---|---|---|---|---|---|---|---|---|---|---|
| ini. | 3 | 0 | -22289 | 914 | | | 177 | 67 | SLU 63 | 0.07 | No |
| fin. | 3 | 0 | -11108 | -504 | | | 177 | 67 | SLU 63 | 0.13 | No |
| ini. | 3 | 0 | -22481 | 922 | | | 177 | 67 | SLU 82 | 0.07 | No |
| fin. | 3 | 0 | -11437 | -517 | | | 177 | 67 | SLU 82 | 0.13 | No |

| Sezione | γM | N | M | V | Vt | Vp | Vt fess. diag. | Vt,lim | Comb. | c.s. | Verifica |
|---|---|---|---|---|---|---|---|---|---|---|---|
| ini. | 3 | 0 | -22332 | 916 | | | 177 | 67 | SLU 75 | 0.07 | No |
| fin. | 3 | 0 | -11078 | -502 | | | 177 | 67 | SLU 75 | 0.13 | No |
| ini. | 3 | 0 | -23356 | 954 | | | 177 | 67 | SLU 80 | 0.07 | No |
| fin. | 3 | 0 | -11011 | -502 | | | 177 | 67 | SLU 80 | 0.13 | No |
| ini. | 3 | 0 | -22925 | 939 | | | 177 | 67 | SLU 77 | 0.07 | No |
| fin. | 3 | 0 | -10967 | -501 | | | 177 | 67 | SLU 77 | 0.13 | No |
| ini. | 3 | 0 | -23033 | 943 | | | 177 | 67 | SLU 79 | 0.07 | No |
| fin. | 3 | 0 | -10946 | -501 | | | 177 | 67 | SLU 79 | 0.13 | No |
| ini. | 3 | 0 | -22655 | 927 | | | 177 | 67 | SLU 76 | 0.07 | No |
| fin. | 3 | 0 | -11101 | -503 | | | 177 | 67 | SLU 76 | 0.13 | No |
| ini. | 3 | 0 | -23075 | 945 | | | 177 | 67 | SLU 83 | 0.07 | No |
| fin. | 3 | 0 | -11326 | -515 | | | 177 | 67 | SLU 83 | 0.13 | No |
| ini. | 3 | 0 | -23397 | 957 | | | 177 | 67 | SLU 84 | 0.07 | No |
| fin. | 3 | 0 | -11391 | -517 | | | 177 | 67 | SLU 84 | 0.13 | No |
| ini. | 3 | 0 | -23248 | 950 | | | 177 | 67 | SLU 78 | 0.07 | No |
| fin. | 3 | 0 | -11032 | -503 | | | 177 | 67 | SLU 78 | 0.13 | No |

### Verifiche a pressoflessione delle travi in muratura in combinazioni sismiche

| Sezione | γM | N | M | Mu | Comb. | c.s. | Verifica |
|---|---|---|---|---|---|---|---|
| ini. | 2 | -4584 | -78257 | 12078 | SLV 4 | 0.15 | No |
| fin. | 2 | 3832 | 49550 | 12078 | SLV 4 | 0.24 | No |
| ini. | 2 | 4588 | 61654 | 12078 | SLV 16 | 0.2 | No |
| fin. | 2 | -4462 | -72311 | 12078 | SLV 16 | 0.17 | No |
| ini. | 2 | 3673 | 48287 | 12078 | SLV 14 | 0.25 | No |
| fin. | 2 | -3889 | -65657 | 12078 | SLV 14 | 0.18 | No |
| ini. | 2 | -4584 | -78257 | 12078 | SLV 3 | 0.15 | No |
| fin. | 2 | 3832 | 49550 | 12078 | SLV 3 | 0.24 | No |
| ini. | 2 | -3357 | -58250 | 12078 | SLV 6 | 0.21 | No |
| fin. | 2 | 2172 | 21314 | 12078 | SLV 6 | 0.57 | No |
| ini. | 2 | -5499 | -91624 | 12078 | SLV 1 | 0.13 | No |
| fin. | 2 | 4406 | 56203 | 12078 | SLV 1 | 0.21 | No |
| ini. | 2 | -3357 | -58250 | 12078 | SLV 5 | 0.21 | No |
| fin. | 2 | 2172 | 21314 | 12078 | SLV 5 | 0.57 | No |
| ini. | 2 | -5499 | -91624 | 12078 | SLV 2 | 0.13 | No |
| fin. | 2 | 4406 | 56203 | 12078 | SLV 2 | 0.21 | No |
| ini. | 2 | 4588 | 61654 | 12078 | SLV 15 | 0.2 | No |
| fin. | 2 | -4462 | -72311 | 12078 | SLV 15 | 0.17 | No |
| ini. | 2 | 3673 | 48287 | 12078 | SLV 13 | 0.25 | No |
| fin. | 2 | -3889 | -65657 | 12078 | SLV 13 | 0.18 | No |

### Verifiche a taglio delle travi in muratura secondo §C8.7.1.3.1 in combinazioni sismiche

| Sezione | γM | N | M | V | Vt | Vp | Vt fess. diag. | Vt,lim | Comb. | c.s. | Verifica |
|---|---|---|---|---|---|---|---|---|---|---|---|
| ini. | 2 | 0 | -91624 | 3423 | | | 266 | 100 | SLV 2 | 0.03 | No |
| fin. | 2 | 0 | 56203 | 1712 | | | 266 | 100 | SLV 2 | 0.06 | No |
| ini. | 2 | 0 | 61654 | -2183 | | | 266 | 100 | SLV 16 | 0.05 | No |
| fin. | 2 | 0 | -72311 | -2441 | | | 266 | 100 | SLV 16 | 0.04 | No |
| ini. | 2 | 0 | -58250 | 2184 | | | 266 | 100 | SLV 5 | 0.05 | No |
| fin. | 2 | 0 | 21314 | -57 | | | 266 | 100 | SLV 5 | 1.76 | Si |
| ini. | 2 | 0 | -91624 | 3423 | | | 266 | 100 | SLV 1 | 0.03 | No |
| fin. | 2 | 0 | 56203 | 1712 | | | 266 | 100 | SLV 1 | 0.06 | No |
| ini. | 2 | 0 | 48287 | -1706 | | | 266 | 100 | SLV 13 | 0.06 | No |
| fin. | 2 | 0 | -65657 | -2649 | | | 266 | 100 | SLV 13 | 0.04 | No |
| ini. | 2 | 0 | 48287 | -1706 | | | 266 | 100 | SLV 14 | 0.06 | No |
| fin. | 2 | 0 | -65657 | -2649 | | | 266 | 100 | SLV 14 | 0.04 | No |
| ini. | 2 | 0 | -58250 | 2184 | | | 266 | 100 | SLV 6 | 0.05 | No |
| fin. | 2 | 0 | 21314 | -57 | | | 266 | 100 | SLV 6 | 1.76 | Si |
| ini. | 2 | 0 | -78257 | 2947 | | | 266 | 100 | SLV 4 | 0.03 | No |
| fin. | 2 | 0 | 49550 | 1920 | | | 266 | 100 | SLV 4 | 0.05 | No |
| ini. | 2 | 0 | -78257 | 2947 | | | 266 | 100 | SLV 3 | 0.03 | No |
| fin. | 2 | 0 | 49550 | 1920 | | | 266 | 100 | SLV 3 | 0.05 | No |
| ini. | 2 | 0 | 61654 | -2183 | | | 266 | 100 | SLV 15 | 0.05 | No |
| fin. | 2 | 0 | -72311 | -2441 | | | 266 | 100 | SLV 15 | 0.04 | No |

### Tabella dei coefficienti di sicurezza minimi

| Stato limite | Coeff.s. | Comb. | Verifica |
|---|---|---|---|
| PF_SLV | 0.132 | SLV 1 | No |
| V_SLV | 0.029 | SLV 1 | No |
| PF_SLU | 0.344 | SLU 84 | No |
| V_SLU | 0.07 | SLU 84 | No |

## Trave di accoppiamento 183

Verifiche condotte secondo D.M. 17-01-18 (N.T.C.)

### Dati geometrici

| X ini. | Y ini. | Z ini.inf. | Z ini.sup. | H ini. | X fin. | Y fin. | Z fin.inf. | Z fin.sup | H fin. | Luce | Spessore | R. Trazione |
|---|---|---|---|---|---|---|---|---|---|---|---|---|
| -1293.3 | -485.9 | 373 | 468 | 95 | -1193.3 | -485.9 | 373 | 468 | 95 | 100 | 30 | 3500 |

### Caratteristiche del materiale

(Circolare 7 21-01-19 C8.5.I) Muratura in mattoni pieni e malta di calce LC2_Corti

| fb_ | fhk | fvk0 | fhmedio | τ0 | fv0 | μ | ϕ | fvk,lim | E | G | FC |
|---|---|---|---|---|---|---|---|---|---|---|---|
| 12 | | | 17.25 | 0.9 | 2 | 0.577 | 0.767 | 0.65 | 32000 | 12800 | 1.2 |

## Verifiche a pressoflessione delle travi in muratura in combinazioni non sismiche

| Sezione | γM | N | M | Mu | Comb. | c.s. | Verifica |
|---|---|---|---|---|---|---|---|
| ini. | 3 | -628 | -5434 | 116122 | SLU 80 | 21.37 | Si |
| fin. | 3 | -1430 | 45067 | 116122 | SLU 80 | 2.58 | Si |
| ini. | 3 | -665 | -4177 | 116122 | SLU 76 | 27.8 | Si |
| fin. | 3 | -1405 | 41873 | 116122 | SLU 76 | 2.77 | Si |
| ini. | 3 | -636 | -5155 | 116122 | SLU 78 | 22.53 | Si |
| fin. | 3 | -1428 | 44648 | 116122 | SLU 78 | 2.6 | Si |
| ini. | 3 | -618 | -4580 | 116122 | SLU 79 | 25.36 | Si |
| fin. | 3 | -1406 | 45066 | 116122 | SLU 79 | 2.58 | Si |
| ini. | 3 | -635 | -4009 | 116122 | SLU 57 | 28.96 | Si |
| fin. | 3 | -1365 | 41510 | 116122 | SLU 57 | 2.8 | Si |
| ini. | 3 | -617 | -3435 | 116122 | SLU 58 | 33.81 | Si |
| fin. | 3 | -1344 | 41928 | 116122 | SLU 58 | 2.77 | Si |
| ini. | 3 | -660 | -4489 | 116122 | SLU 84 | 25.87 | Si |
| fin. | 3 | -1437 | 44188 | 116122 | SLU 84 | 2.63 | Si |
| ini. | 3 | -650 | -3636 | 116122 | SLU 83 | 31.94 | Si |
| fin. | 3 | -1413 | 44187 | 116122 | SLU 83 | 2.63 | Si |
| ini. | 3 | -627 | -4288 | 116122 | SLU 59 | 27.08 | Si |
| fin. | 3 | -1368 | 41930 | 116122 | SLU 59 | 2.77 | Si |
| ini. | 3 | -626 | -4301 | 116122 | SLU 77 | 27 | Si |
| fin. | 3 | -1404 | 44647 | 116122 | SLU 77 | 2.6 | Si |

## Verifiche a taglio delle travi in muratura secondo §C8.7.1.3.1 in combinazioni non sismiche

| Sezione | γM | N | M | V | Vt | Vp | Vt fess. diag. | Vt,lim | Comb. | c.s. | Verifica |
|---|---|---|---|---|---|---|---|---|---|---|---|
| ini. | 3 | 0 | -5155 | 749 | | | 1043 | 392 | SLU 78 | 0.52 | No |
| fin. | 3 | 0 | 44648 | 770 | | | 1043 | 392 | SLU 78 | 0.51 | No |
| ini. | 3 | 0 | -5434 | 758 | | | 1043 | 392 | SLU 80 | 0.52 | No |
| fin. | 3 | 0 | 45067 | 783 | | | 1043 | 392 | SLU 80 | 0.5 | No |
| ini. | 3 | 0 | -3344 | 716 | | | 1043 | 392 | SLU 63 | 0.55 | No |
| fin. | 3 | 0 | 41051 | 638 | | | 1043 | 392 | SLU 63 | 0.62 | No |
| ini. | 3 | 0 | -4580 | 752 | | | 1043 | 392 | SLU 79 | 0.52 | No |
| fin. | 3 | 0 | 45066 | 763 | | | 1043 | 392 | SLU 79 | 0.51 | No |
| ini. | 3 | 0 | -4489 | 774 | | | 1043 | 392 | SLU 84 | 0.51 | No |
| fin. | 3 | 0 | 44188 | 712 | | | 1043 | 392 | SLU 84 | 0.55 | No |
| ini. | 3 | 0 | -2663 | 714 | | | 1043 | 392 | SLU 82 | 0.55 | No |
| fin. | 3 | 0 | 40993 | 616 | | | 1043 | 392 | SLU 82 | 0.64 | No |
| ini. | 3 | 0 | -4301 | 743 | | | 1043 | 392 | SLU 77 | 0.53 | No |
| fin. | 3 | 0 | 44647 | 751 | | | 1043 | 392 | SLU 77 | 0.52 | No |
| ini. | 3 | 0 | -3376 | 578 | | | 1043 | 392 | SLU 72 | 0.68 | No |
| fin. | 3 | 0 | 39662 | 724 | | | 1043 | 392 | SLU 72 | 0.54 | No |
| ini. | 3 | 0 | -3636 | 769 | | | 1043 | 392 | SLU 83 | 0.51 | No |
| fin. | 3 | 0 | 44187 | 693 | | | 1043 | 392 | SLU 83 | 0.57 | No |
| ini. | 3 | 0 | -3097 | 568 | | | 1043 | 392 | SLU 70 | 0.69 | No |
| fin. | 3 | 0 | 39243 | 711 | | | 1043 | 392 | SLU 70 | 0.55 | No |

## Verifiche a pressoflessione delle travi in muratura in combinazioni sismiche

| Sezione | γM | N | M | Mu | Comb. | c.s. | Verifica |
|---|---|---|---|---|---|---|---|
| ini. | 2 | -4616 | 262003 | 132831 | SLV 13 | 0.51 | No |
| fin. | 2 | 3109 | -235851 | 132831 | SLV 13 | 0.56 | No |
| ini. | 2 | 3572 | -260937 | 132831 | SLV 4 | 0.51 | No |
| fin. | 2 | -5008 | 288744 | 132831 | SLV 4 | 0.46 | No |
| ini. | 2 | -4616 | 262003 | 132831 | SLV 14 | 0.51 | No |
| fin. | 2 | 3109 | -235851 | 132831 | SLV 14 | 0.56 | No |
| ini. | 2 | 1491 | -157954 | 132831 | SLV 5 | 0.84 | No |
| fin. | 2 | -3519 | 203767 | 132831 | SLV 5 | 0.65 | No |
| ini. | 2 | -5048 | 306066 | 132831 | SLV 16 | 0.43 | No |
| fin. | 2 | 3853 | -290143 | 132831 | SLV 16 | 0.46 | No |
| ini. | 2 | 1491 | -157954 | 132831 | SLV 6 | 0.84 | No |
| fin. | 2 | -3519 | 203767 | 132831 | SLV 6 | 0.65 | No |
| ini. | 2 | 3572 | -260937 | 132831 | SLV 3 | 0.51 | No |
| fin. | 2 | -5008 | 288744 | 132831 | SLV 3 | 0.46 | No |
| ini. | 2 | 4004 | -304999 | 132831 | SLV 2 | 0.44 | No |
| fin. | 2 | -5752 | 343037 | 132831 | SLV 2 | 0.39 | No |
| ini. | 2 | -5048 | 306066 | 132831 | SLV 15 | 0.43 | No |
| fin. | 2 | 3853 | -290143 | 132831 | SLV 15 | 0.46 | No |
| ini. | 2 | 4004 | -304999 | 132831 | SLV 1 | 0.44 | No |
| fin. | 2 | -5752 | 343037 | 132831 | SLV 1 | 0.39 | No |

## Verifiche a taglio delle travi in muratura secondo §C8.7.1.3.1 in combinazioni sismiche

| Sezione | γM | N | M | V | Vt | Vp | Vt fess. diag. | Vt,lim | Comb. | c.s. | Verifica |
|---|---|---|---|---|---|---|---|---|---|---|---|
| ini. | 2 | 0 | -304999 | 9837 | | | 1564 | 589 | SLV 1 | 0.06 | No |
| fin. | 2 | 0 | 343037 | 10269 | | | 1564 | 589 | SLV 1 | 0.06 | No |
| ini. | 2 | 0 | -157954 | 5484 | | | 1564 | 589 | SLV 6 | 0.11 | No |
| fin. | 2 | 0 | 203767 | 4789 | | | 1564 | 589 | SLV 6 | 0.12 | No |
| ini. | 2 | 0 | -304999 | 9837 | | | 1564 | 589 | SLV 2 | 0.06 | No |
| fin. | 2 | 0 | 343037 | 10269 | | | 1564 | 589 | SLV 2 | 0.06 | No |
| ini. | 2 | 0 | 306066 | -9067 | | | 1564 | 589 | SLV 15 | 0.06 | No |
| fin. | 2 | 0 | -290143 | -9479 | | | 1564 | 589 | SLV 15 | 0.06 | No |
| ini. | 2 | 0 | -260937 | 8345 | | | 1564 | 589 | SLV 4 | 0.07 | No |
| fin. | 2 | 0 | 288744 | 9325 | | | 1564 | 589 | SLV 4 | 0.06 | No |
| ini. | 2 | 0 | 262003 | -7575 | | | 1564 | 589 | SLV 14 | 0.08 | No |
| fin. | 2 | 0 | -235851 | -8535 | | | 1564 | 589 | SLV 14 | 0.07 | No |
| ini. | 2 | 0 | -260937 | 8345 | | | 1564 | 589 | SLV 3 | 0.07 | No |
| fin. | 2 | 0 | 288744 | 9325 | | | 1564 | 589 | SLV 3 | 0.06 | No |
| ini. | 2 | 0 | 262003 | -7575 | | | 1564 | 589 | SLV 13 | 0.08 | No |
| fin. | 2 | 0 | -235851 | -8535 | | | 1564 | 589 | SLV 13 | 0.07 | No |
| ini. | 2 | 0 | -157954 | 5484 | | | 1564 | 589 | SLV 5 | 0.11 | No |

| Sezione | γM | N | M | V | Vt | Vp | Vt fess. diag. | Vt,lim | Comb. | c.s. | Verifica |
|---|---|---|---|---|---|---|---|---|---|---|---|
| fin. | 2 | 0 | 203767 | 4789 | | | 1564 | 589 | SLV 5 | 0.12 | No |
| ini. | 2 | 0 | 306066 | -9067 | | | 1564 | 589 | SLV 16 | 0.06 | No |
| fin. | 2 | 0 | -290143 | -9479 | | | 1564 | 589 | SLV 16 | 0.06 | No |

### Tabella dei coefficienti di sicurezza minimi

| Stato limite | Coeff.s. | Comb. | Verifica |
|---|---|---|---|
| PF_SLV | 0.387 | SLV 1 | No |
| V_SLV | 0.057 | SLV 1 | No |
| PF_SLU | 2.577 | SLU 80 | Si |
| V_SLU | 0.501 | SLU 80 | No |

## Trave di accoppiamento 184

Verifiche condotte secondo D.M. 17-01-18 (N.T.C.)

### Dati geometrici

| X ini. | Y ini. | Z ini.inf. | Z ini.sup. | H ini. | X fin. | Y fin. | Z fin.inf. | Z fin.sup | H fin. | Luce | Spessore | R. Trazione |
|---|---|---|---|---|---|---|---|---|---|---|---|---|
| -1293.3 | -485.9 | 668 | 718 | 50 | -1193.3 | -485.9 | 668 | 718 | 50 | 100 | 30 | 3500 |

### Caratteristiche del materiale

(Circolare 7 21-01-19 C8.5.I) Muratura in mattoni pieni e malta di calce LC2_Corti

| fb_ | fhk | fvk0 | fhmedio | τ0 | fv0 | μ | ϕ | fvk,lim | E | G | FC |
|---|---|---|---|---|---|---|---|---|---|---|---|
| 12 | | | 17.25 | 0.9 | 2 | 0.577 | 0.767 | 0.65 | 32000 | 12800 | 1.2 |

### Verifiche a pressoflessione delle travi in muratura in combinazioni non sismiche

| Sezione | γM | N | M | Mu | Comb. | c.s. | Verifica |
|---|---|---|---|---|---|---|---|
| ini. | 3 | -50 | -18279 | 38051 | SLU 83 | 2.08 | Si |
| fin. | 3 | 182 | -10457 | 38051 | SLU 83 | 3.64 | Si |
| ini. | 3 | -34 | -17231 | 38051 | SLU 58 | 2.21 | Si |
| fin. | 3 | 187 | -9815 | 38051 | SLU 58 | 3.88 | Si |
| ini. | 3 | -32 | -17564 | 38051 | SLU 76 | 2.17 | Si |
| fin. | 3 | 198 | -9846 | 38051 | SLU 76 | 3.86 | Si |
| ini. | 3 | -68 | -18718 | 38051 | SLU 80 | 2.03 | Si |
| fin. | 3 | 202 | -9768 | 38051 | SLU 80 | 3.9 | Si |
| ini. | 3 | -61 | -18515 | 38051 | SLU 78 | 2.06 | Si |
| fin. | 3 | 200 | -9829 | 38051 | SLU 78 | 3.87 | Si |
| ini. | 3 | -55 | -18498 | 38051 | SLU 84 | 2.06 | Si |
| fin. | 3 | 193 | -10217 | 38051 | SLU 84 | 3.72 | Si |
| ini. | 3 | -56 | -18296 | 38051 | SLU 77 | 2.08 | Si |
| fin. | 3 | 189 | -10069 | 38051 | SLU 77 | 3.78 | Si |
| ini. | 3 | -38 | -17449 | 38051 | SLU 59 | 2.18 | Si |
| fin. | 3 | 197 | -9575 | 38051 | SLU 59 | 3.97 | Si |
| ini. | 3 | -31 | -17247 | 38051 | SLU 57 | 2.21 | Si |
| fin. | 3 | 195 | -9636 | 38051 | SLU 57 | 3.95 | Si |
| ini. | 3 | -63 | -18499 | 38051 | SLU 79 | 2.06 | Si |
| fin. | 3 | 191 | -10008 | 38051 | SLU 79 | 3.8 | Si |

### Verifiche a taglio delle travi in muratura secondo §C8.7.1.3.1 in combinazioni non sismiche

| Sezione | γM | N | M | V | Vt | Vp | Vt fess. diag. | Vt,lim | Comb. | c.s. | Verifica |
|---|---|---|---|---|---|---|---|---|---|---|---|
| ini. | 3 | 0 | -17449 | 1189 | | | 385 | 145 | SLU 59 | 0.12 | No |
| fin. | 3 | 0 | -9575 | -866 | | | 385 | 145 | SLU 59 | 0.17 | No |
| ini. | 3 | 0 | -17199 | 1193 | | | 385 | 145 | SLU 82 | 0.12 | No |
| fin. | 3 | 0 | -10455 | -913 | | | 385 | 145 | SLU 82 | 0.16 | No |
| ini. | 3 | 0 | -18296 | 1234 | | | 385 | 145 | SLU 77 | 0.12 | No |
| fin. | 3 | 0 | -10069 | -897 | | | 385 | 145 | SLU 77 | 0.16 | No |
| ini. | 3 | 0 | -18279 | 1240 | | | 385 | 145 | SLU 83 | 0.12 | No |
| fin. | 3 | 0 | -10457 | -919 | | | 385 | 145 | SLU 83 | 0.16 | No |
| ini. | 3 | 0 | -18499 | 1243 | | | 385 | 145 | SLU 79 | 0.12 | No |
| fin. | 3 | 0 | -10008 | -896 | | | 385 | 145 | SLU 79 | 0.16 | No |
| ini. | 3 | 0 | -17564 | 1204 | | | 385 | 145 | SLU 76 | 0.12 | No |
| fin. | 3 | 0 | -9846 | -885 | | | 385 | 145 | SLU 76 | 0.16 | No |
| ini. | 3 | 0 | -18515 | 1247 | | | 385 | 145 | SLU 78 | 0.12 | No |
| fin. | 3 | 0 | -9829 | -891 | | | 385 | 145 | SLU 78 | 0.16 | No |
| ini. | 3 | 0 | -17216 | 1187 | | | 385 | 145 | SLU 75 | 0.12 | No |
| fin. | 3 | 0 | -10067 | -890 | | | 385 | 145 | SLU 75 | 0.16 | No |
| ini. | 3 | 0 | -18718 | 1256 | | | 385 | 145 | SLU 80 | 0.12 | No |
| fin. | 3 | 0 | -9768 | -890 | | | 385 | 145 | SLU 80 | 0.16 | No |
| ini. | 3 | 0 | -18498 | 1253 | | | 385 | 145 | SLU 84 | 0.12 | No |
| fin. | 3 | 0 | -10217 | -913 | | | 385 | 145 | SLU 84 | 0.16 | No |

### Verifiche a pressoflessione delle travi in muratura in combinazioni sismiche

| Sezione | γM | N | M | Mu | Comb. | c.s. | Verifica |
|---|---|---|---|---|---|---|---|
| ini. | 2 | -1840 | -76164 | 54081 | SLV 6 | 0.71 | No |
| fin. | 2 | 2040 | 54252 | 54081 | SLV 6 | 1 | No |
| ini. | 2 | -1840 | -76164 | 54081 | SLV 5 | 0.71 | No |
| fin. | 2 | 2040 | 54252 | 54081 | SLV 5 | 1 | No |
| ini. | 2 | -3457 | -121670 | 54081 | SLV 3 | 0.44 | No |
| fin. | 2 | 3851 | 100299 | 54081 | SLV 3 | 0.54 | No |
| ini. | 2 | -3917 | -139367 | 54081 | SLV 2 | 0.39 | No |
| fin. | 2 | 4289 | 116598 | 54081 | SLV 2 | 0.46 | No |
| ini. | 2 | -3457 | -121670 | 54081 | SLV 4 | 0.44 | No |
| fin. | 2 | 3851 | 100299 | 54081 | SLV 4 | 0.54 | No |
| ini. | 2 | 3550 | 100201 | 54081 | SLV 13 | 0.54 | No |
| fin. | 2 | -3597 | -115864 | 54081 | SLV 13 | 0.47 | No |

| Sezione | γM | N | M | Mu | Comb. | c.s. | Verifica |
|---|---|---|---|---|---|---|---|
| ini. | 2 | 4009 | 117897 | 54081 | SLV 16 | 0.46 | No |
| fin. | 2 | -4036 | -132163 | 54081 | SLV 16 | 0.41 | No |
| ini. | 2 | 4009 | 117897 | 54081 | SLV 15 | 0.46 | No |
| fin. | 2 | -4036 | -132163 | 54081 | SLV 15 | 0.41 | No |
| ini. | 2 | 3550 | 100201 | 54081 | SLV 14 | 0.54 | No |
| fin. | 2 | -3597 | -115864 | 54081 | SLV 14 | 0.47 | No |
| ini. | 2 | -3917 | -139367 | 54081 | SLV 1 | 0.39 | No |
| fin. | 2 | 4289 | 116598 | 54081 | SLV 1 | 0.46 | No |

### Verifiche a taglio delle travi in muratura secondo §C8.7.1.3.1 in combinazioni sismiche

| Sezione | γM | N | M | V | Vt | Vp | Vt fess. diag. | Vt,lim | Comb. | c.s. | Verifica |
|---|---|---|---|---|---|---|---|---|---|---|---|
| ini. | 2 | 0 | -76164 | 3419 | | | 578 | 217 | SLV 6 | 0.06 | No |
| fin. | 2 | 0 | 54252 | 1649 | | | 578 | 217 | SLV 6 | 0.13 | No |
| ini. | 2 | 0 | 100201 | -3712 | | | 578 | 217 | SLV 13 | 0.06 | No |
| fin. | 2 | 0 | -115864 | -4879 | | | 578 | 217 | SLV 13 | 0.04 | No |
| ini. | 2 | 0 | -121670 | 5280 | | | 578 | 217 | SLV 3 | 0.04 | No |
| fin. | 2 | 0 | 100299 | 3568 | | | 578 | 217 | SLV 3 | 0.06 | No |
| ini. | 2 | 0 | -76164 | 3419 | | | 578 | 217 | SLV 5 | 0.06 | No |
| fin. | 2 | 0 | 54252 | 1649 | | | 578 | 217 | SLV 5 | 0.13 | No |
| ini. | 2 | 0 | 100201 | -3712 | | | 578 | 217 | SLV 14 | 0.06 | No |
| fin. | 2 | 0 | -115864 | -4879 | | | 578 | 217 | SLV 14 | 0.04 | No |
| ini. | 2 | 0 | -139367 | 5988 | | | 578 | 217 | SLV 2 | 0.04 | No |
| fin. | 2 | 0 | 116598 | 4139 | | | 578 | 217 | SLV 2 | 0.05 | No |
| ini. | 2 | 0 | 117897 | -4420 | | | 578 | 217 | SLV 15 | 0.05 | No |
| fin. | 2 | 0 | -132163 | -5450 | | | 578 | 217 | SLV 15 | 0.04 | No |
| ini. | 2 | 0 | -121670 | 5280 | | | 578 | 217 | SLV 4 | 0.04 | No |
| fin. | 2 | 0 | 100299 | 3568 | | | 578 | 217 | SLV 4 | 0.06 | No |
| ini. | 2 | 0 | 117897 | -4420 | | | 578 | 217 | SLV 16 | 0.05 | No |
| fin. | 2 | 0 | -132163 | -5450 | | | 578 | 217 | SLV 16 | 0.04 | No |
| ini. | 2 | 0 | -139367 | 5988 | | | 578 | 217 | SLV 1 | 0.04 | No |
| fin. | 2 | 0 | 116598 | 4139 | | | 578 | 217 | SLV 1 | 0.05 | No |

### Tabella dei coefficienti di sicurezza minimi

| Stato limite | Coeff.s. | Comb. | Verifica |
|---|---|---|---|
| PF_SLV | 0.388 | SLV 1 | No |
| V_SLV | 0.036 | SLV 1 | No |
| PF_SLU | 2.033 | SLU 80 | Si |
| V_SLU | 0.115 | SLU 80 | No |

## Trave di accoppiamento 185

Verifiche condotte secondo D.M. 17-01-18 (N.T.C.)

### Dati geometrici

| X ini. | Y ini. | Z ini.inf. | Z ini.sup. | H ini. | X fin. | Y fin. | Z fin.inf. | Z fin.sup | H fin. | Luce | Spessore | R. Trazione |
|---|---|---|---|---|---|---|---|---|---|---|---|---|
| -1293.3 | -485.9 | 718 | 813 | 95 | -1193.3 | -485.9 | 718 | 813 | 95 | 100 | 30 | 3500 |

### Caratteristiche del materiale

(Circolare 7 21-01-19 C8.5.I) Muratura in mattoni pieni e malta di calce LC2_Corti

| fb_ | fhk | fvk0 | fhmedio | τ0 | fv0 | μ | ϕ | fvk,lim | E | G | FC |
|---|---|---|---|---|---|---|---|---|---|---|---|
| 12 | | | 17.25 | 0.9 | 2 | 0.577 | 0.767 | 0.65 | 32000 | 12800 | 1.2 |

### Verifiche a pressoflessione delle travi in muratura in combinazioni non sismiche

| Sezione | γM | N | M | Mu | Comb. | c.s. | Verifica |
|---|---|---|---|---|---|---|---|
| ini. | 3 | -199 | -8674 | 116122 | SLU 84 | 13.39 | Si |
| fin. | 3 | -447 | 3846 | 116122 | SLU 84 | 30.19 | Si |
| ini. | 3 | -110 | -8911 | 116122 | SLU 37 | 13.03 | Si |
| fin. | 3 | -360 | 4204 | 116122 | SLU 37 | 27.62 | Si |
| ini. | 3 | -132 | -8802 | 116122 | SLU 36 | 13.19 | Si |
| fin. | 3 | -389 | 4803 | 116122 | SLU 36 | 24.18 | Si |
| ini. | 3 | -181 | -8514 | 116122 | SLU 83 | 13.64 | Si |
| fin. | 3 | -413 | 3019 | 116122 | SLU 83 | 38.46 | Si |
| ini. | 3 | -128 | -9071 | 116122 | SLU 38 | 12.8 | Si |
| fin. | 3 | -394 | 5030 | 116122 | SLU 38 | 23.08 | Si |
| ini. | 3 | -114 | -8642 | 116122 | SLU 35 | 13.44 | Si |
| fin. | 3 | -355 | 3976 | 116122 | SLU 35 | 29.21 | Si |
| ini. | 3 | -182 | -9102 | 116122 | SLU 78 | 12.76 | Si |
| fin. | 3 | -443 | 4324 | 116122 | SLU 78 | 26.85 | Si |
| ini. | 3 | -164 | -8942 | 116122 | SLU 77 | 12.99 | Si |
| fin. | 3 | -409 | 3498 | 116122 | SLU 77 | 33.2 | Si |
| ini. | 3 | -178 | -9371 | 116122 | SLU 80 | 12.39 | Si |
| fin. | 3 | -448 | 4552 | 116122 | SLU 80 | 25.51 | Si |
| ini. | 3 | -160 | -9211 | 116122 | SLU 79 | 12.61 | Si |
| fin. | 3 | -415 | 3726 | 116122 | SLU 79 | 31.17 | Si |

### Verifiche a taglio delle travi in muratura secondo §C8.7.1.3.1 in combinazioni non sismiche

| Sezione | γM | N | M | V | Vt | Vp | Vt fess. diag. | Vt,lim | Comb. | c.s. | Verifica |
|---|---|---|---|---|---|---|---|---|---|---|---|
| ini. | 3 | 0 | -9211 | -169 | | | 1043 | 392 | SLU 79 | 2.32 | Si |
| fin. | 3 | 0 | 3726 | 622 | | | 1043 | 392 | SLU 79 | 0.63 | No |
| ini. | 3 | 0 | -9102 | -162 | | | 1043 | 392 | SLU 78 | 2.42 | Si |
| fin. | 3 | 0 | 4324 | 629 | | | 1043 | 392 | SLU 78 | 0.62 | No |
| ini. | 3 | 0 | -8802 | -99 | | | 1043 | 392 | SLU 36 | 3.98 | Si |
| fin. | 3 | 0 | 4803 | 571 | | | 1043 | 392 | SLU 36 | 0.69 | No |
| ini. | 3 | 0 | -9071 | -93 | | | 1043 | 392 | SLU 38 | 4.2 | Si |

| Sezione | γM | N | M | V | Vt | Vp | Vt fess. diag. | Vt,lim | Comb. | c.s. | Verifica |
|---|---|---|---|---|---|---|---|---|---|---|---|
| fin. | 3 | 0 | 5030 | 584 | | | 1043 | 392 | SLU 38 | 0.67 | No |
| ini. | 3 | 0 | -8942 | -175 | | | 1043 | 392 | SLU 77 | 2.25 | Si |
| fin. | 3 | 0 | 3498 | 609 | | | 1043 | 392 | SLU 77 | 0.64 | No |
| ini. | 3 | 0 | -8178 | -161 | | | 1043 | 392 | SLU 59 | 2.43 | Si |
| fin. | 3 | 0 | 3744 | 578 | | | 1043 | 392 | SLU 59 | 0.68 | No |
| ini. | 3 | 0 | -9371 | -157 | | | 1043 | 392 | SLU 80 | 2.5 | Si |
| fin. | 3 | 0 | 4552 | 641 | | | 1043 | 392 | SLU 80 | 0.61 | No |
| ini. | 3 | 0 | -8514 | -166 | | | 1043 | 392 | SLU 83 | 2.37 | Si |
| fin. | 3 | 0 | 3019 | 571 | | | 1043 | 392 | SLU 83 | 0.69 | No |
| ini. | 3 | 0 | -8674 | -153 | | | 1043 | 392 | SLU 84 | 2.56 | Si |
| fin. | 3 | 0 | 3846 | 591 | | | 1043 | 392 | SLU 84 | 0.66 | No |
| ini. | 3 | 0 | -7867 | -169 | | | 1043 | 392 | SLU 76 | 2.32 | Si |
| fin. | 3 | 0 | 3785 | 573 | | | 1043 | 392 | SLU 76 | 0.68 | No |

### Verifiche a pressoflessione delle travi in muratura in combinazioni sismiche

| Sezione | γM | N | M | Mu | Comb. | c.s. | Verifica |
|---|---|---|---|---|---|---|---|
| ini. | 2 | 1756 | -122045 | 132831 | SLV 6 | 1.09 | Si |
| fin. | 2 | -2149 | 117733 | 132831 | SLV 6 | 1.13 | Si |
| ini. | 2 | -3741 | 212103 | 132831 | SLV 13 | 0.63 | No |
| fin. | 2 | 3184 | -214182 | 132831 | SLV 13 | 0.62 | No |
| ini. | 2 | 1756 | -122045 | 132831 | SLV 5 | 1.09 | Si |
| fin. | 2 | -2149 | 117733 | 132831 | SLV 5 | 1.13 | Si |
| ini. | 2 | 3888 | -248513 | 132831 | SLV 1 | 0.53 | No |
| fin. | 2 | -4146 | 243579 | 132831 | SLV 1 | 0.55 | No |
| ini. | 2 | 3888 | -248513 | 132831 | SLV 2 | 0.53 | No |
| fin. | 2 | -4146 | 243579 | 132831 | SLV 2 | 0.55 | No |
| ini. | 2 | -4202 | 241886 | 132831 | SLV 16 | 0.55 | No |
| fin. | 2 | 3671 | -243642 | 132831 | SLV 16 | 0.55 | No |
| ini. | 2 | 3427 | -218730 | 132831 | SLV 4 | 0.61 | No |
| fin. | 2 | -3659 | 214119 | 132831 | SLV 4 | 0.62 | No |
| ini. | 2 | -4202 | 241886 | 132831 | SLV 15 | 0.55 | No |
| fin. | 2 | 3671 | -243642 | 132831 | SLV 15 | 0.55 | No |
| ini. | 2 | 3427 | -218730 | 132831 | SLV 3 | 0.61 | No |
| fin. | 2 | -3659 | 214119 | 132831 | SLV 3 | 0.62 | No |
| ini. | 2 | -3741 | 212103 | 132831 | SLV 14 | 0.63 | No |
| fin. | 2 | 3184 | -214182 | 132831 | SLV 14 | 0.62 | No |

### Verifiche a taglio delle travi in muratura secondo §C8.7.1.3.1 in combinazioni sismiche

| Sezione | γM | N | M | V | Vt | Vp | Vt fess. diag. | Vt,lim | Comb. | c.s. | Verifica |
|---|---|---|---|---|---|---|---|---|---|---|---|
| ini. | 2 | 0 | 115418 | -4108 | | | 1564 | 589 | SLV 12 | 0.14 | No |
| fin. | 2 | 0 | -117796 | -3146 | | | 1564 | 589 | SLV 12 | 0.19 | No |
| ini. | 2 | 0 | 241886 | -8334 | | | 1564 | 589 | SLV 16 | 0.07 | No |
| fin. | 2 | 0 | -243642 | -8026 | | | 1564 | 589 | SLV 16 | 0.07 | No |
| ini. | 2 | 0 | -218730 | 6982 | | | 1564 | 589 | SLV 3 | 0.08 | No |
| fin. | 2 | 0 | 214119 | 8007 | | | 1564 | 589 | SLV 3 | 0.07 | No |
| ini. | 2 | 0 | 241886 | -8334 | | | 1564 | 589 | SLV 15 | 0.07 | No |
| fin. | 2 | 0 | -243642 | -8026 | | | 1564 | 589 | SLV 15 | 0.07 | No |
| ini. | 2 | 0 | 212103 | -7361 | | | 1564 | 589 | SLV 14 | 0.08 | No |
| fin. | 2 | 0 | -214182 | -7398 | | | 1564 | 589 | SLV 14 | 0.08 | No |
| ini. | 2 | 0 | -248513 | 7955 | | | 1564 | 589 | SLV 2 | 0.07 | No |
| fin. | 2 | 0 | 243579 | 8634 | | | 1564 | 589 | SLV 2 | 0.07 | No |
| ini. | 2 | 0 | 212103 | -7361 | | | 1564 | 589 | SLV 13 | 0.08 | No |
| fin. | 2 | 0 | -214182 | -7398 | | | 1564 | 589 | SLV 13 | 0.08 | No |
| ini. | 2 | 0 | 115418 | -4108 | | | 1564 | 589 | SLV 11 | 0.14 | No |
| fin. | 2 | 0 | -117796 | -3146 | | | 1564 | 589 | SLV 11 | 0.19 | No |
| ini. | 2 | 0 | -248513 | 7955 | | | 1564 | 589 | SLV 1 | 0.07 | No |
| fin. | 2 | 0 | 243579 | 8634 | | | 1564 | 589 | SLV 1 | 0.07 | No |
| ini. | 2 | 0 | -218730 | 6982 | | | 1564 | 589 | SLV 4 | 0.08 | No |
| fin. | 2 | 0 | 214119 | 8007 | | | 1564 | 589 | SLV 4 | 0.07 | No |

### Tabella dei coefficienti di sicurezza minimi

| Stato limite | Coeff.s. | Comb. | Verifica |
|---|---|---|---|
| PF_SLV | 0.535 | SLV 1 | No |
| V_SLV | 0.068 | SLV 1 | No |
| PF_SLU | 12.392 | SLU 80 | Si |
| V_SLU | 0.612 | SLU 80 | No |

## Trave di accoppiamento 186

Verifiche condotte secondo D.M. 17-01-18 (N.T.C.)

### Dati geometrici

| X ini. | Y ini. | Z ini.inf. | Z ini.sup. | H ini. | X fin. | Y fin. | Z fin.inf. | Z fin.sup | H fin. | Luce | Spessore | R. Trazione |
|---|---|---|---|---|---|---|---|---|---|---|---|---|
| -1293.3 | -485.9 | 1013 | 1070 | 57 | -1193.3 | -485.9 | 1013 | 1070 | 57 | 100 | 30 | 3500 |

### Caratteristiche del materiale

(Circolare 7 21-01-19 C8.5.I) Muratura in mattoni pieni e malta di calce LC2_Corti

| fb_ | fhk | fvk0 | fhmedio | τ0 | fv0 | μ | ϕ | fvk,lim | E | G | FC |
|---|---|---|---|---|---|---|---|---|---|---|---|
| 12 | | | 17.25 | 0.9 | 2 | 0.577 | 0.767 | 0.65 | 32000 | 12800 | 1.2 |

### Verifiche a pressoflessione delle travi in muratura in combinazioni non sismiche

| Sezione | γM | N | M | Mu | Comb. | c.s. | Verifica |
|---|---|---|---|---|---|---|---|
| ini. | 3 | 185 | -10142 | 49452 | SLU 76 | 4.88 | Si |
| fin. | 3 | 239 | -6527 | 49452 | SLU 76 | 7.58 | Si |

| Sezione | γM | N | M | Mu | Comb. | c.s. | Verifica |
|---|---|---|---|---|---|---|---|
| ini. | 3 | 191 | -9992 | 49452 | SLU 57 | 4.95 | Si |
| fin. | 3 | 255 | -6213 | 49452 | SLU 57 | 7.96 | Si |
| ini. | 3 | 189 | -10838 | 49452 | SLU 78 | 4.56 | Si |
| fin. | 3 | 274 | -6300 | 49452 | SLU 78 | 7.85 | Si |
| ini. | 3 | 208 | -10559 | 49452 | SLU 77 | 4.68 | Si |
| fin. | 3 | 291 | -6269 | 49452 | SLU 77 | 7.89 | Si |
| ini. | 3 | 186 | -10201 | 49452 | SLU 59 | 4.85 | Si |
| fin. | 3 | 260 | -6124 | 49452 | SLU 59 | 8.07 | Si |
| ini. | 3 | 204 | -10769 | 49452 | SLU 79 | 4.59 | Si |
| fin. | 3 | 296 | -6180 | 49452 | SLU 79 | 8 | Si |
| ini. | 3 | 184 | -11047 | 49452 | SLU 80 | 4.48 | Si |
| fin. | 3 | 279 | -6211 | 49452 | SLU 80 | 7.96 | Si |
| ini. | 3 | 209 | -10351 | 49452 | SLU 83 | 4.78 | Si |
| fin. | 3 | 281 | -6477 | 49452 | SLU 83 | 7.63 | Si |
| ini. | 3 | 206 | -9923 | 49452 | SLU 58 | 4.98 | Si |
| fin. | 3 | 277 | -6094 | 49452 | SLU 58 | 8.12 | Si |
| ini. | 3 | 189 | -10630 | 49452 | SLU 84 | 4.65 | Si |
| fin. | 3 | 263 | -6508 | 49452 | SLU 84 | 7.6 | Si |

## Verifiche a taglio delle travi in muratura secondo §C8.7.1.3.1 in combinazioni non sismiche

| Sezione | γM | N | M | V | Vt | Vp | Vt fess. diag. | Vt,lim | Comb. | c.s. | Verifica |
|---|---|---|---|---|---|---|---|---|---|---|---|
| ini. | 3 | 0 | -10201 | 859 | | | 439 | 165 | SLU 59 | 0.19 | No |
| fin. | 3 | 0 | -6124 | -707 | | | 439 | 165 | SLU 59 | 0.23 | No |
| ini. | 3 | 0 | -10769 | 896 | | | 439 | 165 | SLU 79 | 0.18 | No |
| fin. | 3 | 0 | -6180 | -722 | | | 439 | 165 | SLU 79 | 0.23 | No |
| ini. | 3 | 0 | -11047 | 910 | | | 439 | 165 | SLU 80 | 0.18 | No |
| fin. | 3 | 0 | -6211 | -727 | | | 439 | 165 | SLU 80 | 0.23 | No |
| ini. | 3 | 0 | -10838 | 901 | | | 439 | 165 | SLU 78 | 0.18 | No |
| fin. | 3 | 0 | -6300 | -730 | | | 439 | 165 | SLU 78 | 0.23 | No |
| ini. | 3 | 0 | -10559 | 887 | | | 439 | 165 | SLU 77 | 0.19 | No |
| fin. | 3 | 0 | -6269 | -725 | | | 439 | 165 | SLU 77 | 0.23 | No |
| ini. | 3 | 0 | -9540 | 851 | | | 439 | 165 | SLU 82 | 0.19 | No |
| fin. | 3 | 0 | -6804 | -750 | | | 439 | 165 | SLU 82 | 0.22 | No |
| ini. | 3 | 0 | -9747 | 852 | | | 439 | 165 | SLU 75 | 0.19 | No |
| fin. | 3 | 0 | -6596 | -734 | | | 439 | 165 | SLU 75 | 0.23 | No |
| ini. | 3 | 0 | -10630 | 901 | | | 439 | 165 | SLU 84 | 0.18 | No |
| fin. | 3 | 0 | -6508 | -745 | | | 439 | 165 | SLU 84 | 0.22 | No |
| ini. | 3 | 0 | -10142 | 869 | | | 439 | 165 | SLU 76 | 0.19 | No |
| fin. | 3 | 0 | -6527 | -735 | | | 439 | 165 | SLU 76 | 0.22 | No |
| ini. | 3 | 0 | -10351 | 887 | | | 439 | 165 | SLU 83 | 0.19 | No |
| fin. | 3 | 0 | -6477 | -740 | | | 439 | 165 | SLU 83 | 0.22 | No |

## Verifiche a pressoflessione delle travi in muratura in combinazioni sismiche

| Sezione | γM | N | M | Mu | Comb. | c.s. | Verifica |
|---|---|---|---|---|---|---|---|
| ini. | 2 | 2870 | 81646 | 66331 | SLV 14 | 0.81 | No |
| fin. | 2 | -2186 | -92040 | 66331 | SLV 14 | 0.72 | No |
| ini. | 2 | 3218 | 94398 | 66331 | SLV 15 | 0.7 | No |
| fin. | 2 | -2575 | -101483 | 66331 | SLV 15 | 0.65 | No |
| ini. | 2 | -1246 | -55018 | 66331 | SLV 5 | 1.21 | Si |
| fin. | 2 | 1579 | 38021 | 66331 | SLV 5 | 1.74 | Si |
| ini. | 2 | -2839 | -105717 | 66331 | SLV 1 | 0.63 | No |
| fin. | 2 | 2908 | 91104 | 66331 | SLV 1 | 0.73 | No |
| ini. | 2 | -2839 | -105717 | 66331 | SLV 2 | 0.63 | No |
| fin. | 2 | 2908 | 91104 | 66331 | SLV 2 | 0.73 | No |
| ini. | 2 | -2491 | -92965 | 66331 | SLV 4 | 0.71 | No |
| fin. | 2 | 2519 | 81661 | 66331 | SLV 4 | 0.81 | No |
| ini. | 2 | 3218 | 94398 | 66331 | SLV 16 | 0.7 | No |
| fin. | 2 | -2575 | -101483 | 66331 | SLV 16 | 0.65 | No |
| ini. | 2 | -1246 | -55018 | 66331 | SLV 6 | 1.21 | Si |
| fin. | 2 | 1579 | 38021 | 66331 | SLV 6 | 1.74 | Si |
| ini. | 2 | -2491 | -92965 | 66331 | SLV 3 | 0.71 | No |
| fin. | 2 | 2519 | 81661 | 66331 | SLV 3 | 0.81 | No |
| ini. | 2 | 2870 | 81646 | 66331 | SLV 13 | 0.81 | No |
| fin. | 2 | -2186 | -92040 | 66331 | SLV 13 | 0.72 | No |

## Verifiche a taglio delle travi in muratura secondo §C8.7.1.3.1 in combinazioni sismiche

| Sezione | γM | N | M | V | Vt | Vp | Vt fess. diag. | Vt,lim | Comb. | c.s. | Verifica |
|---|---|---|---|---|---|---|---|---|---|---|---|
| ini. | 2 | 0 | 94398 | -3356 | | | 659 | 248 | SLV 15 | 0.07 | No |
| fin. | 2 | 0 | -101483 | -4419 | | | 659 | 248 | SLV 15 | 0.06 | No |
| ini. | 2 | 0 | 81646 | -2865 | | | 659 | 248 | SLV 13 | 0.09 | No |
| fin. | 2 | 0 | -92040 | -3956 | | | 659 | 248 | SLV 13 | 0.06 | No |
| ini. | 2 | 0 | -92965 | 3976 | | | 659 | 248 | SLV 3 | 0.06 | No |
| fin. | 2 | 0 | 81661 | 2871 | | | 659 | 248 | SLV 3 | 0.09 | No |
| ini. | 2 | 0 | -105717 | 4468 | | | 659 | 248 | SLV 1 | 0.06 | No |
| fin. | 2 | 0 | 91104 | 3335 | | | 659 | 248 | SLV 1 | 0.07 | No |
| ini. | 2 | 0 | 81646 | -2865 | | | 659 | 248 | SLV 14 | 0.09 | No |
| fin. | 2 | 0 | -92040 | -3956 | | | 659 | 248 | SLV 14 | 0.06 | No |
| ini. | 2 | 0 | -105717 | 4468 | | | 659 | 248 | SLV 2 | 0.06 | No |
| fin. | 2 | 0 | 91104 | 3335 | | | 659 | 248 | SLV 2 | 0.07 | No |
| ini. | 2 | 0 | -55018 | 2475 | | | 659 | 248 | SLV 5 | 0.1 | No |
| fin. | 2 | 0 | 38021 | 1324 | | | 659 | 248 | SLV 5 | 0.19 | No |
| ini. | 2 | 0 | -92965 | 3976 | | | 659 | 248 | SLV 4 | 0.06 | No |
| fin. | 2 | 0 | 81661 | 2871 | | | 659 | 248 | SLV 4 | 0.09 | No |
| ini. | 2 | 0 | 94398 | -3356 | | | 659 | 248 | SLV 16 | 0.07 | No |
| fin. | 2 | 0 | -101483 | -4419 | | | 659 | 248 | SLV 16 | 0.06 | No |
| ini. | 2 | 0 | -55018 | 2475 | | | 659 | 248 | SLV 6 | 0.1 | No |
| fin. | 2 | 0 | 38021 | 1324 | | | 659 | 248 | SLV 6 | 0.19 | No |

### Tabella dei coefficienti di sicurezza minimi

| Stato limite | Coeff.s. | Comb. | Verifica |
|---|---|---|---|
| PF_SLV | 0.627 | SLV 1 | No |
| V_SLV | 0.055 | SLV 1 | No |
| PF_SLU | 4.476 | SLU 80 | Si |
| V_SLU | 0.182 | SLU 80 | No |

## Trave di accoppiamento 187

Verifiche condotte secondo D.M. 17-01-18 (N.T.C.)

### Dati geometrici

| X ini. | Y ini. | Z ini.inf. | Z ini.sup. | H ini. | X fin. | Y fin. | Z fin.inf. | Z fin.sup | H fin. | Luce | Spessore | R. Trazione |
|---|---|---|---|---|---|---|---|---|---|---|---|---|
| -1293.3 | -485.9 | 1070 | 1165 | 95 | -1193.3 | -485.9 | 1070 | 1165 | 95 | 100 | 30 | 3500 |

### Caratteristiche del materiale

(Circolare 7 21-01-19 C8.5.I) Muratura in mattoni pieni e malta di calce LC2_Corti

| fb_ | fhk | fvk0 | fhmedio | τ0 | fv0 | μ | ϕ | fvk,lim | E | G | FC |
|---|---|---|---|---|---|---|---|---|---|---|---|
| 12 | | | 17.25 | 0.9 | 2 | 0.577 | 0.767 | 0.65 | 32000 | 12800 | 1.2 |

### Verifiche a pressoflessione delle travi in muratura in combinazioni non sismiche

| Sezione | γM | N | M | Mu | Comb. | c.s. | Verifica |
|---|---|---|---|---|---|---|---|
| ini. | 3 | -29 | -6689 | 116122 | SLU 29 | 17.36 | Si |
| fin. | 3 | -92 | 722 | 116122 | SLU 29 | 160.83 | Si |
| ini. | 3 | -98 | -6408 | 116122 | SLU 36 | 18.12 | Si |
| fin. | 3 | -204 | 3287 | 116122 | SLU 36 | 35.32 | Si |
| ini. | 3 | -77 | -7136 | 116122 | SLU 38 | 16.27 | Si |
| fin. | 3 | -192 | 3206 | 116122 | SLU 38 | 36.22 | Si |
| ini. | 3 | -134 | -6443 | 116122 | SLU 77 | 18.02 | Si |
| fin. | 3 | -217 | 3088 | 116122 | SLU 77 | 37.6 | Si |
| ini. | 3 | -73 | -6066 | 116122 | SLU 14 | 19.14 | Si |
| fin. | 3 | -155 | 2468 | 116122 | SLU 14 | 47.05 | Si |
| ini. | 3 | -50 | -5961 | 116122 | SLU 27 | 19.48 | Si |
| fin. | 3 | -103 | 804 | 116122 | SLU 27 | 144.49 | Si |
| ini. | 3 | -113 | -7171 | 116122 | SLU 79 | 16.19 | Si |
| fin. | 3 | -206 | 3007 | 116122 | SLU 79 | 38.62 | Si |
| ini. | 3 | -52 | -6794 | 116122 | SLU 16 | 17.09 | Si |
| fin. | 3 | -143 | 2386 | 116122 | SLU 16 | 48.66 | Si |
| ini. | 3 | -42 | -7646 | 116122 | SLU 35 | 15.19 | Si |
| fin. | 3 | -145 | 2652 | 116122 | SLU 35 | 43.78 | Si |
| ini. | 3 | -20 | -8374 | 116122 | SLU 37 | 13.87 | Si |
| fin. | 3 | -133 | 2571 | 116122 | SLU 37 | 45.17 | Si |

### Verifiche a taglio delle travi in muratura secondo §C8.7.1.3.1 in combinazioni non sismiche

| Sezione | γM | N | M | V | Vt | Vp | Vt fess. diag. | Vt,lim | Comb. | c.s. | Verifica |
|---|---|---|---|---|---|---|---|---|---|---|---|
| ini. | 3 | 0 | 3405 | -173 | | | 1043 | 392 | SLU 43 | 2.27 | Si |
| fin. | 3 | 0 | 2100 | -84 | | | 1043 | 392 | SLU 43 | 4.67 | Si |
| ini. | 3 | 0 | 1812 | -171 | | | 1043 | 392 | SLU 47 | 2.3 | Si |
| fin. | 3 | 0 | 2595 | -5 | | | 1043 | 392 | SLU 47 | 72.23 | Si |
| ini. | 3 | 0 | 3888 | -190 | | | 1043 | 392 | SLU 65 | 2.07 | Si |
| fin. | 3 | 0 | 3343 | -34 | | | 1043 | 392 | SLU 65 | 11.66 | Si |
| ini. | 3 | 0 | 1715 | -169 | | | 1043 | 392 | SLU 46 | 2.32 | Si |
| fin. | 3 | 0 | 2253 | -22 | | | 1043 | 392 | SLU 46 | 18.04 | Si |
| ini. | 3 | 0 | 5468 | -198 | | | 1043 | 392 | SLU 44 | 1.98 | Si |
| fin. | 3 | 0 | 3158 | -78 | | | 1043 | 392 | SLU 44 | 5.01 | Si |
| ini. | 3 | 0 | 1825 | -164 | | | 1043 | 392 | SLU 64 | 2.39 | Si |
| fin. | 3 | 0 | 2284 | -39 | | | 1043 | 392 | SLU 64 | 9.95 | Si |
| ini. | 3 | 0 | 232 | -162 | | | 1043 | 392 | SLU 68 | 2.42 | Si |
| fin. | 3 | 0 | 2779 | 39 | | | 1043 | 392 | SLU 68 | 10.02 | Si |
| ini. | 3 | 0 | -8374 | 14 | | | 1043 | 392 | SLU 37 | 27.86 | Si |
| fin. | 3 | 0 | 2571 | 172 | | | 1043 | 392 | SLU 37 | 2.29 | Si |
| ini. | 3 | 0 | -6408 | -10 | | | 1043 | 392 | SLU 36 | 40.39 | Si |
| fin. | 3 | 0 | 3287 | 161 | | | 1043 | 392 | SLU 36 | 2.44 | Si |
| ini. | 3 | 0 | -7136 | -1 | | | 1043 | 392 | SLU 38 | 308.63 | Si |
| fin. | 3 | 0 | 3206 | 175 | | | 1043 | 392 | SLU 38 | 2.24 | Si |

### Verifiche a pressoflessione delle travi in muratura in combinazioni sismiche

| Sezione | γM | N | M | Mu | Comb. | c.s. | Verifica |
|---|---|---|---|---|---|---|---|
| ini. | 2 | 2778 | -153985 | 132831 | SLV 2 | 0.86 | No |
| fin. | 2 | -2420 | 139929 | 132831 | SLV 2 | 0.95 | No |
| ini. | 2 | 2778 | -153985 | 132831 | SLV 1 | 0.86 | No |
| fin. | 2 | -2420 | 139929 | 132831 | SLV 1 | 0.95 | No |
| ini. | 2 | -2820 | 132530 | 132831 | SLV 13 | 1 | Si |
| fin. | 2 | 1898 | -115277 | 132831 | SLV 13 | 1.15 | Si |
| ini. | 2 | -3302 | 156524 | 132831 | SLV 15 | 0.85 | No |
| fin. | 2 | 1943 | -135440 | 132831 | SLV 15 | 0.98 | No |
| ini. | 2 | -3302 | 156524 | 132831 | SLV 16 | 0.85 | No |
| fin. | 2 | 1943 | -135440 | 132831 | SLV 16 | 0.98 | No |
| ini. | 2 | 2296 | -129991 | 132831 | SLV 4 | 1.02 | Si |
| fin. | 2 | -2375 | 119766 | 132831 | SLV 4 | 1.11 | Si |
| ini. | 2 | -2820 | 132530 | 132831 | SLV 14 | 1 | Si |
| fin. | 2 | 1898 | -115277 | 132831 | SLV 14 | 1.15 | Si |
| ini. | 2 | -1905 | 84237 | 132831 | SLV 12 | 1.58 | Si |
| fin. | 2 | 483 | -69641 | 132831 | SLV 12 | 1.91 | Si |
| ini. | 2 | -1905 | 84237 | 132831 | SLV 11 | 1.58 | Si |

| Sezione | γM | N | M | Mu | Comb. | c.s. | Verifica |
|---|---|---|---|---|---|---|---|
| fin. | 2 | 483 | -69641 | 132831 | SLV 11 | 1.91 | Si |
| ini. | 2 | 2296 | -129991 | 132831 | SLV 3 | 1.02 | Si |
| fin. | 2 | -2375 | 119766 | 132831 | SLV 3 | 1.11 | Si |

### Verifiche a taglio delle travi in muratura secondo §C8.7.1.3.1 in combinazioni sismiche

| Sezione | γM | N | M | V | Vt | Vp | Vt fess. diag. | Vt,lim | Comb. | c.s. | Verifica |
|---|---|---|---|---|---|---|---|---|---|---|---|
| ini. | 2 | 0 | 132530 | -4678 | | | 1564 | 589 | SLV 14 | 0.13 | No |
| fin. | 2 | 0 | -115277 | -4683 | | | 1564 | 589 | SLV 14 | 0.13 | No |
| ini. | 2 | 0 | -129991 | 4468 | | | 1564 | 589 | SLV 3 | 0.13 | No |
| fin. | 2 | 0 | 119766 | 4623 | | | 1564 | 589 | SLV 3 | 0.13 | No |
| ini. | 2 | 0 | -153985 | 5063 | | | 1564 | 589 | SLV 2 | 0.12 | No |
| fin. | 2 | 0 | 139929 | 5147 | | | 1564 | 589 | SLV 2 | 0.11 | No |
| ini. | 2 | 0 | 132530 | -4678 | | | 1564 | 589 | SLV 13 | 0.13 | No |
| fin. | 2 | 0 | -115277 | -4683 | | | 1564 | 589 | SLV 13 | 0.13 | No |
| ini. | 2 | 0 | -153985 | 5063 | | | 1564 | 589 | SLV 1 | 0.12 | No |
| fin. | 2 | 0 | 139929 | 5147 | | | 1564 | 589 | SLV 1 | 0.11 | No |
| ini. | 2 | 0 | 156524 | -5273 | | | 1564 | 589 | SLV 15 | 0.11 | No |
| fin. | 2 | 0 | -135440 | -5207 | | | 1564 | 589 | SLV 15 | 0.11 | No |
| ini. | 2 | 0 | 84237 | -2559 | | | 1564 | 589 | SLV 11 | 0.23 | No |
| fin. | 2 | 0 | -69641 | -2378 | | | 1564 | 589 | SLV 11 | 0.25 | No |
| ini. | 2 | 0 | -129991 | 4468 | | | 1564 | 589 | SLV 4 | 0.13 | No |
| fin. | 2 | 0 | 119766 | 4623 | | | 1564 | 589 | SLV 4 | 0.13 | No |
| ini. | 2 | 0 | 156524 | -5273 | | | 1564 | 589 | SLV 16 | 0.11 | No |
| fin. | 2 | 0 | -135440 | -5207 | | | 1564 | 589 | SLV 16 | 0.11 | No |
| ini. | 2 | 0 | 84237 | -2559 | | | 1564 | 589 | SLV 12 | 0.23 | No |
| fin. | 2 | 0 | -69641 | -2378 | | | 1564 | 589 | SLV 12 | 0.25 | No |

### Tabella dei coefficienti di sicurezza minimi

| Stato limite | Coeff.s. | Comb. | Verifica |
|---|---|---|---|
| PF_SLV | 0.849 | SLV 15 | No |
| V_SLV | 0.112 | SLV 15 | No |
| PF_SLU | 13.867 | SLU 37 | Si |
| V_SLU | 1.979 | SLU 44 | Si |

## Trave di accoppiamento 188

Verifiche condotte secondo D.M. 17-01-18 (N.T.C.)

### Dati geometrici

| X ini. | Y ini. | Z ini.inf. | Z ini.sup. | H ini. | X fin. | Y fin. | Z fin.inf. | Z fin.sup | H fin. | Luce | Spessore | R. Trazione |
|---|---|---|---|---|---|---|---|---|---|---|---|---|
| -1293.3 | -485.9 | 1365 | 1497.7 | 132.7 | -1193.3 | -485.9 | 1365 | 1497.6 | 132.6 | 100 | 30 | 3500 |

### Caratteristiche del materiale

(Circolare 7 21-01-19 C8.5.I) Muratura in mattoni pieni e malta di calce LC2_Corti

| fb_ | fhk | fvk0 | fhmedio | τ0 | fv0 | μ | ϕ | fvk,lim | E | G | FC |
|---|---|---|---|---|---|---|---|---|---|---|---|
| 12 | | | 17.25 | 0.9 | 2 | 0.577 | 0.767 | 0.65 | 32000 | 12800 | 1.2 |

### Verifiche a pressoflessione delle travi in muratura in combinazioni non sismiche

| Sezione | γM | N | M | Mu | Comb. | c.s. | Verifica |
|---|---|---|---|---|---|---|---|
| ini. | 3 | 5 | 6016 | 182133 | SLU 77 | 30.28 | Si |
| fin. | 3 | 3 | 23258 | 182002 | SLU 77 | 7.83 | Si |
| ini. | 3 | -23 | 4861 | 182133 | SLU 14 | 37.47 | Si |
| fin. | 3 | -25 | 21740 | 182002 | SLU 14 | 8.37 | Si |
| ini. | 3 | -20 | 10506 | 182133 | SLU 29 | 17.34 | Si |
| fin. | 3 | -22 | 22628 | 182002 | SLU 29 | 8.04 | Si |
| ini. | 3 | 3 | 5178 | 182133 | SLU 38 | 35.18 | Si |
| fin. | 3 | 1 | 24628 | 182002 | SLU 38 | 7.39 | Si |
| ini. | 3 | -43 | 5903 | 182133 | SLU 35 | 30.86 | Si |
| fin. | 3 | -45 | 26794 | 182002 | SLU 35 | 6.79 | Si |
| ini. | 3 | -37 | 5372 | 182133 | SLU 16 | 33.9 | Si |
| fin. | 3 | -39 | 24215 | 182002 | SLU 16 | 7.52 | Si |
| ini. | 3 | -9 | 6527 | 182133 | SLU 79 | 27.9 | Si |
| fin. | 3 | -12 | 25733 | 182002 | SLU 79 | 7.07 | Si |
| ini. | 3 | 52 | 5291 | 182133 | SLU 80 | 34.42 | Si |
| fin. | 3 | 49 | 21092 | 182002 | SLU 80 | 8.63 | Si |
| ini. | 3 | 18 | 4667 | 182133 | SLU 36 | 39.03 | Si |
| fin. | 3 | 16 | 22154 | 182002 | SLU 36 | 8.22 | Si |
| ini. | 3 | -57 | 6414 | 182133 | SLU 37 | 28.4 | Si |
| fin. | 3 | -60 | 29269 | 182002 | SLU 37 | 6.22 | Si |

### Verifiche a taglio delle travi in muratura secondo §C8.7.1.3.1 in combinazioni non sismiche

| Sezione | γM | N | M | V | Vt | Vp | Vt fess. diag. | Vt,lim | Comb. | c.s. | Verifica |
|---|---|---|---|---|---|---|---|---|---|---|---|
| ini. | 3 | 0 | 4974 | 969 | | | 1533 | 577 | SLU 56 | 0.6 | No |
| fin. | 3 | 0 | 18204 | -697 | | | 1533 | 577 | SLU 56 | 0.83 | No |
| ini. | 3 | 0 | 6527 | 1098 | | | 1533 | 577 | SLU 79 | 0.53 | No |
| fin. | 3 | 0 | 25733 | -726 | | | 1533 | 577 | SLU 79 | 0.79 | No |
| ini. | 3 | 0 | 5486 | 1007 | | | 1533 | 577 | SLU 58 | 0.57 | No |
| fin. | 3 | 0 | 20678 | -701 | | | 1533 | 577 | SLU 58 | 0.82 | No |
| ini. | 3 | 0 | 4249 | 977 | | | 1533 | 577 | SLU 59 | 0.59 | No |
| fin. | 3 | 0 | 16038 | -740 | | | 1533 | 577 | SLU 59 | 0.78 | No |
| ini. | 3 | 0 | 5291 | 1068 | | | 1533 | 577 | SLU 80 | 0.54 | No |
| fin. | 3 | 0 | 21092 | -765 | | | 1533 | 577 | SLU 80 | 0.75 | No |
| ini. | 3 | 0 | 4780 | 1030 | | | 1533 | 577 | SLU 78 | 0.56 | No |
| fin. | 3 | 0 | 18618 | -761 | | | 1533 | 577 | SLU 78 | 0.76 | No |

| Sezione | γM | N | M | V | Vt | Vp | Vt fess. diag. | Vt,lim | Comb. | c.s. | Verifica |
|---|---|---|---|---|---|---|---|---|---|---|---|
| ini. | 3 | 0 | 6414 | 1000 | | | 1533 | 577 | SLU 37 | 0.58 | No |
| fin. | 3 | 0 | 29269 | -574 | | | 1533 | 577 | SLU 37 | 1 | Si |
| ini. | 3 | 0 | 5178 | 970 | | | 1533 | 577 | SLU 38 | 0.6 | No |
| fin. | 3 | 0 | 24628 | -613 | | | 1533 | 577 | SLU 38 | 0.94 | No |
| ini. | 3 | 0 | 6016 | 1060 | | | 1533 | 577 | SLU 77 | 0.54 | No |
| fin. | 3 | 0 | 23258 | -722 | | | 1533 | 577 | SLU 77 | 0.8 | No |
| ini. | 3 | 0 | 10620 | 990 | | | 1533 | 577 | SLU 71 | 0.58 | No |
| fin. | 3 | 0 | 19092 | -833 | | | 1533 | 577 | SLU 71 | 0.69 | No |

## Verifiche a pressoflessione delle travi in muratura in combinazioni sismiche

| Sezione | γM | N | M | Mu | Comb. | c.s. | Verifica |
|---|---|---|---|---|---|---|---|
| ini. | 2 | 254 | 77942 | 198842 | SLV 15 | 2.55 | Si |
| fin. | 2 | -41 | -123005 | 198711 | SLV 15 | 1.62 | Si |
| ini. | 2 | -12 | -76551 | 198842 | SLV 2 | 2.6 | Si |
| fin. | 2 | 281 | 117666 | 198711 | SLV 2 | 1.69 | Si |
| ini. | 2 | 157 | -69278 | 198842 | SLV 5 | 2.87 | Si |
| fin. | 2 | 73 | 107725 | 198711 | SLV 5 | 1.84 | Si |
| ini. | 2 | -12 | -76551 | 198842 | SLV 1 | 2.6 | Si |
| fin. | 2 | 281 | 117666 | 198711 | SLV 1 | 1.69 | Si |
| ini. | 2 | 157 | -69278 | 198842 | SLV 6 | 2.87 | Si |
| fin. | 2 | 73 | 107725 | 198711 | SLV 6 | 1.84 | Si |
| ini. | 2 | 84 | 70669 | 198842 | SLV 12 | 2.81 | Si |
| fin. | 2 | 167 | -113064 | 198711 | SLV 12 | 1.76 | Si |
| ini. | 2 | 304 | 47085 | 198842 | SLV 14 | 4.22 | Si |
| fin. | 2 | -104 | -74020 | 198711 | SLV 14 | 2.68 | Si |
| ini. | 2 | 304 | 47085 | 198842 | SLV 13 | 4.22 | Si |
| fin. | 2 | -104 | -74020 | 198711 | SLV 13 | 2.68 | Si |
| ini. | 2 | 84 | 70669 | 198842 | SLV 11 | 2.81 | Si |
| fin. | 2 | 167 | -113064 | 198711 | SLV 11 | 1.76 | Si |
| ini. | 2 | 254 | 77942 | 198842 | SLV 16 | 2.55 | Si |
| fin. | 2 | -41 | -123005 | 198711 | SLV 16 | 1.62 | Si |

## Verifiche a taglio delle travi in muratura secondo §C8.7.1.3.1 in combinazioni sismiche

| Sezione | γM | N | M | V | Vt | Vp | Vt fess. diag. | Vt,lim | Comb. | c.s. | Verifica |
|---|---|---|---|---|---|---|---|---|---|---|---|
| ini. | 2 | 0 | -69278 | 2467 | | | 2300 | 866 | SLV 6 | 0.35 | No |
| fin. | 2 | 0 | 107725 | 1298 | | | 2299 | 865 | SLV 6 | 0.67 | No |
| ini. | 2 | 0 | 70669 | -1492 | | | 2300 | 866 | SLV 11 | 0.58 | No |
| fin. | 2 | 0 | -113064 | -2316 | | | 2299 | 865 | SLV 11 | 0.37 | No |
| ini. | 2 | 0 | -69278 | 2467 | | | 2300 | 866 | SLV 5 | 0.35 | No |
| fin. | 2 | 0 | 107725 | 1298 | | | 2299 | 865 | SLV 5 | 0.67 | No |
| ini. | 2 | 0 | 47085 | -612 | | | 2300 | 866 | SLV 14 | 1.41 | Si |
| fin. | 2 | 0 | -74020 | -1690 | | | 2299 | 865 | SLV 14 | 0.51 | No |
| ini. | 2 | 0 | 77942 | -1521 | | | 2300 | 866 | SLV 16 | 0.57 | No |
| fin. | 2 | 0 | -123005 | -2490 | | | 2299 | 865 | SLV 16 | 0.35 | No |
| ini. | 2 | 0 | -76551 | 2495 | | | 2300 | 866 | SLV 1 | 0.35 | No |
| fin. | 2 | 0 | 117666 | 1472 | | | 2299 | 865 | SLV 1 | 0.59 | No |
| ini. | 2 | 0 | 70669 | -1492 | | | 2300 | 866 | SLV 12 | 0.58 | No |
| fin. | 2 | 0 | -113064 | -2316 | | | 2299 | 865 | SLV 12 | 0.37 | No |
| ini. | 2 | 0 | 77942 | -1521 | | | 2300 | 866 | SLV 15 | 0.57 | No |
| fin. | 2 | 0 | -123005 | -2490 | | | 2299 | 865 | SLV 15 | 0.35 | No |
| ini. | 2 | 0 | -76551 | 2495 | | | 2300 | 866 | SLV 2 | 0.35 | No |
| fin. | 2 | 0 | 117666 | 1472 | | | 2299 | 865 | SLV 2 | 0.59 | No |
| ini. | 2 | 0 | 47085 | -612 | | | 2300 | 866 | SLV 13 | 1.41 | Si |
| fin. | 2 | 0 | -74020 | -1690 | | | 2299 | 865 | SLV 13 | 0.51 | No |

## Tabella dei coefficienti di sicurezza minimi

| Stato limite | Coeff.s. | Comb. | Verifica |
|---|---|---|---|
| PF_SLV | 1.615 | SLV 15 | Si |
| V_SLV | 0.347 | SLV 1 | No |
| PF_SLU | 6.218 | SLU 37 | Si |
| V_SLU | 0.526 | SLU 79 | No |